MISSOURI HIGHWAYS AND TRANSPORTATION COMMISSION
PLANS FOR PROPOSED
STATE HIGHWAY
CARROLL COUNTY

DESIGN DESIGNATION

A.A.D.T. - 2019 = 1778

V = 60 M.P.H.

FUNCTIONAL CLASSIFICATION
PRINCIPAL ARTERIAL

NO R/W ACQUISITION

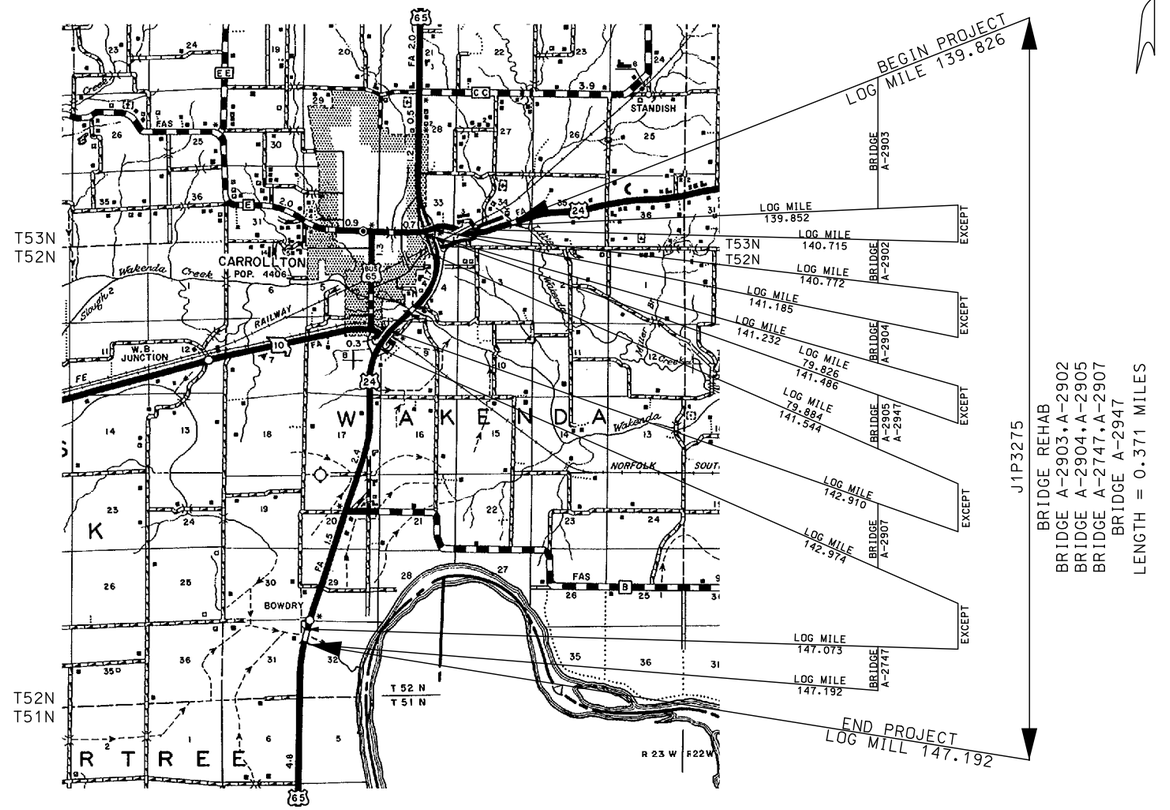

1 ½ 0 1 2 3 4

SCALE IN MILES

CONVENTIONAL SYMBOLS
(USED IN PLANS)

	EXISTING	NEW
BUILDINGS AND STRUCTURES		
GUARD RAIL		
GUARD CABLE		
CONCRETE RIGHT-OF-WAY MARKER		
STEEL RIGHT-OF-WAY MARKER		
LOCATION SURVEY MARKER		
UTILITIES		
FIBER OPTICS	-FO-	~~FO~~
OVERHEAD CABLE TV	-OTV-	~~OTV~~
UNDERGROUND CABLE TV	-UTV-	~~UTV~~
OVERHEAD TELEPHONE	-OT-	~~OT~~
UNDERGROUND TELEPHONE	-UT-	~~UT~~
OVERHEAD POWER	-OE-	~~OE~~
UNDERGROUND POWER	-UE-	~~UE~~
SANITARY SEWER	-S-	~~S~~
STORM SEWER	-SS-	~~SS~~
GAS	-G-	~~G~~
WATER	-W-	~~W~~
MANHOLE	SAN	
FIRE HYDRANT	HYD	
WATER VALVE	WV	
WATER METER	WM	
DROP INLET	DI	
DITCH BLOCK		
GROUND MOUNTED SIGN	SIGN	
LIGHT POLE		
H-FRAME POWER POLE		
TELEPHONE PEDESTAL	PED	
FENCE		
CHAIN LINK	-V-	
WOVEN WIRE	-X-	
GATE POST		
BENCHMARK	BM	

NOTE: DASHED OR OPEN SYMBOLS INDICATE EXISTING FEATURES

THE EXISTENCE AND APPROXIMATE LOCATION OF UTILITY FACILITIES KNOWN TO EXIST, AS SHOWN ON THE PLANS, ARE BASED ON THE BEST INFORMATION AVAILABLE TO THE COMMISSION AT THIS TIME. THIS INFORMATION IS PROVIDED BY THE COMMISSION "AS-IS" AND THE COMMISSION EXPRESSLY DISCLAIMS ANY REPRESENTATION OR WARRANTY AS TO THE COMPLETENESS, ACCURACY, OR SUITABILITY OF THE INFORMATION FOR ANY USE. RELIANCE UPON THIS INFORMATION IS DONE AT THE RISK AND PERIL OF THE USER, AND THE COMMISSION SHALL NOT BE LIABLE FOR ANY DAMAGES THAT MAY ARISE FROM ANY ERROR IN THE INFORMATION. IT IS, THEREFORE, THE RESPONSIBILITY OF THE CONTRACTOR TO VERIFY THE EXISTENCE, LOCATION AND STATUS OF ANY FACILITY. SUCH VERIFICATION INCLUDES DIRECT CONTACT WITH THE LISTED UTILITIES.

INDEX OF SHEETS

DESCRIPTION	SHEET NUMBER
TITLE SHEET	1
QUANTITIES (QU) (2 SHEETS)	2
SPECIAL SHEETS (SS)	3-4
TRAFFIC CONTROL SHEETS (TC)	5-11

BRIDGE DRAWINGS (B)

A27472	1-18
A29022	1-8
A29032	1-5
A29042	1-8
A29051	1-8
A29071	1-7
A29471	1-8

LENGTH OF PROJECT

BEGINNING OF PROJECT	LOG MILE	139.826	
END OF PROJECT	LOG MILE	147.192	
APPARENT LENGTH		7.366	MILES
EQUATIONS AND EXCEPTIONS:			
LOG MILE 139.852 TO LOG MILE 140.715		0.863	MILES
LOG MILE 140.772 TO LOG MILE 141.185		0.413	MILES
LOG MILE 141.232 TO LOG MILE 141.486		0.254	MILES
LOG MILE 141.544 TO LOG MILE 142.910		1.366	MILES
LOG MILE 142.974 TO LOG MILE 147.073		4.099	MILES
TOTAL CORRECTIONS		6.995	MILES
NET LENGTH OF PROJECT		0.371	MILES
STATE LENGTH		0.371	MILES
FOR INFORMATION ONLY ESTIMATED DISTURBED ACRES		0.0	ACRES

STATE OF MISSOURI
RICHARD W. ORR
NUMBER PE-2002003397
PROFESSIONAL ENGINEER
THIS SHEET HAS BEEN SIGNED, SEALED AND DATED ELECTRONICALLY.

DATE PREPARED	
8/24/2021	
ROUTE 65/24	STATE MO
DISTRICT NW	SHEET NO. 1
COUNTY CARROLL	
JOB NO. J1P3275	
CONTRACT ID.	
PROJECT NO.	
BRIDGE NO.	

DESCRIPTION	DATE

MISSOURI HIGHWAYS AND TRANSPORTATION COMMISSION
105 WEST CAPITOL
JEFFERSON CITY, MO 65102
1-888-ASK-MODOT (1-888-275-6636)

IF A SEAL IS PRESENT ON THIS SHEET IT HAS BEEN ELECTRONICALLY SEALED AND DATED.

PAVEMENT SUMMARY

LOCATION	LENGTH (FT.)	UBAWS-C WIDTH (FT.)	UBAWS-C UBAWS (SQ YD)	MODI COLDMILL DEPTH TRAN. COLDMILL (SQ YD)	RUMBLES STRIPS (STA.)	AREA (SQ. YD.)	TACK COAT FACTOR (G/SY)	TACK COAT (GAL.)
ROUTE 24/65								
24	250.00	44.000	1222.22	1222.22	2.50	1222.22		122
24	250.00	44.000	1222.22	1222.22	2.50	1222.22	0.10	122
24/65	250.00	68.000	1888.89	1888.89	2.50	1888.89	0.10	189
24/65	100.00	39.600	440.00	440.00	1.00	440.00	0.10	44
24/65	100.00	52.000	577.78	577.78	1.00	577.78	0.10	58
24/65	100.00	47.600	528.89	528.89	1.00	528.89	0.10	53
24/65	50.00	44.000	244.44	244.44	0.50	244.44	0.10	24
NBL & SBL	1100.00							
TOTALS			6124.44	6124.44	11.00			612
PAY TOTALS			6124	6124	11.00			612

PAVEMENT MARKING

BRIDGE NUMBER	LOC.	HIGH BUILD WATERBORNE PAVEMENT MARKING PAINT WITH TYPE L BEADS: 6" YELLOW SOLID L.F.	6" WHITE SOLID L.F.	6" WHITE INTERMITTENT L.F.
ROUTE 24/65				
A2902	24	1546.00	1296.00	
A2903	24	1000.00	984.00	
A2904	24/65	989.00	1002.00	50.00
A2905	24/65	505.00	505.00	90.00
A2907	24/65	1528.00	878.00	22.00
A2947	24/65	926.00	503.00	90.00
A2747	24/65	1242.00	1284.00	
TOTALS		7736.00	6452.00	252.00
			252.00	
PAY TOTALS		7736	6704	

PAVEMENT MARKING REMOVAL

BRIDGE NUMBER	LOC.	PAVEMENT MARKING REMOVAL: YELLOW SOLID L.F.	WHITE INTERMITTENT L.F.
ROUTE 24/65			
A2902	24	1546.00	
A2903	24	1000.00	
A2904	24/65	989.00	50.00
A2905	24/65		90.00
A2907	24/65	1528.00	22.00
A2947	24/65		90.00
A2747	24/65	1242.00	
TOTALS		6305.00	252.00
		252.00	
PAY TOTAL		6557	

TYPE 2 ROCK BLANKET

LOCATION	FURNISHING TYPE 2 ROCK BLANKET CU.YD.	PLACING TYPE 2 ROCK BLANKET CU.YD.	REMARKS
ROUTE 24/65			
24-A2903	97.78	97.78	44' X 30' AROUND PILING
65-A2905	111.11	111.11	30' X 50' SOUTHEAST END FOR SLOPE PROTECTION
65-A2907	222.22	222.22	2-30' X 50' AT NORTH END FOR SLOPE PROTECTION
65-A2907	111.11	111.11	20' X 30' AT SOUTH END FOR SLOPE PROTECTION
65-A2947	66.67	66.67	30' X 30' SOUTH END FOR SLOPE PROTECTION
65-A2747	97.78	97.78	44' X 30' AROUND PILING
TOTALS	707	707	
PAY TOTALS	707	707	

REMOVAL OF ACM

LOCATION	REMOVAL OF MISCELLANEOUS ACM (NON-FRIABLE) S.F.
ROUTE 24/65	
24	29.00
24	14.00
24/65	29.00
24/65	29.00
24/65	32.00
24/65	29.00
24/65	57.00
TOTAL	219
PAY TOTAL	219

TEMPORARY REMOVABLE PAVEMENT MARKING

BRIDGE NUMBER	LOC.	TEMPORARY REMOVABLE MARKING TAPE: 4" YELLOW SOLID L.F.	4" WHITE SOLID L.F.	24" WHITE SOLID L.F.
ROUTE 24/65				
A2902	24	2000.00	1166.00	48.00
A2903	24	2000.00	1054.00	48.00
A2904	24/65	3252.00	1554.00	
A2905	24/65		4373.00	
A2907	24/65	2000.00	1178.00	48.00
A2947	24/65		4366.00	
A2747	24/65	2000.00	1984.00	48.00
TOTALS		11252.00	15675.00	192.00
PAY TOTALS		11252	15675	192

DRAIN BASIN

BRIDGE NUMBER	LOCATION	DRAIN BASIN REPAIR EACH
ROUTE 24/65		
A2902	24	4
A2904	24/65	4
TOTAL		8
PAY TOTAL		8

GUARDRAIL

BRIDGE LOCATION	ROUTE & BRIDGE NUMBER	LOG MILE AT BRIDGE LOC	LENGTH L.F.	MGS GUARDRAIL L.F.	TYPE A CRASHWORTHY END TERMINAL (MASH) EACH	MGS BRIDGE APPROACH TRANSITION REG.NO CURB EACH	REMOVAL OF IMPROVEMENTS L.S.	SHAPING SLOPES CLASS 3 100 FT
NORTHWEST CORNER	A2902/RTE 24	80.476	87.500		1	1	REMOVE 68 LF OF GUARDRAIL	1.2
SOUTHWEST CORNER	A2902/RTE 24	80.469	150.000	62.5	1	1	REMOVE 144 LF OF GUARDRAIL	1.8
NORTHEAST CORNER	A2902/RTE 24	80.533	150.000	62.5	1	1	REMOVE 161 LF OF GUARDRAIL	1.8
SOUTHEAST CORNER	A2902/RTE 24	80.524	87.500		1	1	REMOVE 84 LF OF GUARDRAIL	1.2
NORTHWEST CORNER	A2903/RTE 24	81.412	87.500		1	1	REMOVE 72 LF OF GUARDRAIL	1.2
SOUTHWEST CORNER	A2903/RTE 24	81.410	150.000	62.5	1	1	REMOVE 132 LF OF GUARDRAIL	1.8
NORTHEAST CORNER	A2903/RTE 24	81.439	150.000	62.5	1	1	REMOVE 128 LF OF GUARDRAIL	1.8
SOUTHEAST CORNER	A2903/RTE 24	81.436	87.500		1	1	REMOVE 53 LF OF GUARDRAIL	1.2
NORTHWEST CORNER	A2904/RTE 65/24	0.233	87.500		1	1	REMOVE 108 LF OF GUARDRAIL	1.2
SOUTHWEST CORNER	A2904/RTE 65/24	0.233	112.500	25	1	1	REMOVE 109 LF OF GUARDRAIL	1.4
NORTHEAST CORNER	A2904/RTE 65/24	0.279	112.500	25	1	1	REMOVE 102 LF OF GUARDRAIL	1.4
SOUTHEAST CORNER	A2904/RTE 65/24	0.279	87.500		1	1	REMOVE 79 LF OF GUARDRAIL	1.2
SOUTHEAST CORNER	A2905/RTE 65	222.261	162.500	75	1	1	REMOVE 255 LF OF GUARDRAIL	1.9
SOUTHWEST CORNER	A2905/RTE 65	222.261	200.000	112.5	1	1	REMOVE 317 LF OF GUARDRAIL	2.3
NORTHEAST CORNER	A2947/RTE 65	90.797	112.500	25	1	1	REMOVE 299 LF OF GUARDRAIL	1.4
NORTHWEST CORNER	A2947/RTE 65	90.797	187.500	100	1	1	REMOVE 131 LF OF GUARDRAIL	2.2
NORTHWEST CORNER	A2907/RTE 65	92.223	162.500	75	1	1	REMOVE 282 LF OF GUARDRAIL	1.9
SOUTHWEST CORNER	A2907/RTE 65	92.287	87.500		1	1	REMOVE 134 LF OF GUARDRAIL	1.2
NORTHEAST CORNER	A2907/RTE 65	92.223	87.500		1	1	REMOVE 135 LF OF GUARDRAIL	1.2
SOUTHEAST CORNER	A2907/RTE 65	92.287	187.500	100	1	1	REMOVE 142 LF OF GUARDRAIL	2.2
NORTHWEST CORNER	A2747/RTE 65	96.391	162.500	75	1	1	REMOVE 157 LF OF GUARDRAIL	1.9
SOUTHWEST CORNER	A2747/RTE 65	96.508	87.500		1	1	REMOVE 128 LF OF GUARDRAIL	1.2
NORTHEAST CORNER	A2747/RTE 65	96.391	87.500		1	1	REMOVE 156 LF OF GUARDRAIL	1.2
SOUTHEAST CORNER	A2747/RTE 65	96.508	162.500	75	1	1	REMOVE 277 LF OF GUARDRAIL	1.9
		PAY TOTALS		938	24	24	LUMP SUM = 1	34

EROSION CONTROL

LOCATION	SILT FENCE L.F.	ROCK DITCH CHECK L.F.	SEDIMENT RMOVAL CU.YD.
ROUTE 24/65			
A2905	110	30	2
A2947	110	30	2
TOTAL	220	60	4
PAY TOTAL	220	60	4

SEE JOB SEPCIAL PROVISIONS FOR ADDED DETAIL

MOBILIZATION
LUMP SUM 1

SUMMARY OF QUANTITIES
SHEET 1 OF 2

STATE OF MISSOURI
RICHARD W. ORR
NUMBER PE-2002003397
PROFESSIONAL ENGINEER
THIS SHEET HAS BEEN SIGNED, SEALED AND DATED ELECTRONICALLY.

DATE PREPARED 9/22/2021
ROUTE 24/65 | STATE MO
DISTRICT NW | SHEET NO. 2
COUNTY CARROLL
JOB NO. J1P3275
CONTRACT ID.
PROJECT NO.
BRIDGE NO.

DESCRIPTION | DATE

IF A SEAL IS PRESENT ON THIS SHEET IT HAS BEEN ELECTRONICALLY SEALED AND DATED.

MISSOURI HIGHWAYS AND TRANSPORTATION COMMISSION
105 WEST CAPITOL
JEFFERSON CITY, MO 65102
1-888-ASK-MODOT (1-888-275-6636)

EFFECTIVE: 04-01-2021

SIGN	SIZE IN.	AREA SQ.FT.	QTY EACH	TOTAL AREA SQ.FT.	QTY RELOC EACH	TOTAL RELOC SQ.FT.	SIGN NUM.	DESCRIPTION
WARNING SIGNS								
W01-1L	48X48	16.00						TURN (SYMBOL LEFT ARROW)
W01-1R	48X48	16.00						TURN (SYMBOL RIGHT ARROW)
W01-2L	48X48	16.00						CURVE (SYMBOL LEFT ARROW)
W01-2R	48X48	16.00						CURVE (SYMBOL RIGHT ARROW)
W01-3L	48X48	16.00						REVERSE TURN (SYMBOL LEFT ARROW)
W01-3R	48X48	16.00						REVERSE TURN (SYMBOL RIGHT ARROW)
W01-4L	48X48	16.00						REVERSE CURVE (SYMBOL LEFT ARROW)
W01-4R	48X48	16.00						REVERSE CURVE (SYMBOL RIGHT ARROW)
W01-4bL	48X48	16.00	4	64			15	DOUBLE ARROW REVERSE CURVE (SYMBOL LT ARROWS)
W01-4bR	48X48	16.00	4	64			15	DOUBLE ARROW REVERSE CURVE (SYMBOL RT ARROWS)
W01-4cL	48X48	16.00						TRIPLE ARROW REVERSE CURVE (SYMBOL LT ARROWS)
W01-4cR	48X48	16.00						TRIPLE ARROW REVERSE CURVE (SYMBOL RT ARROWS)
W01-6	60X30	12.50						HORIZONTAL ARROW (SYMBOL)
W01-6a	72X36	18.00						HORIZ. ARROW (SYMBOL ON PERMANENT BARRICADE)
W01-7	60X30	12.50						DOUBLE HEAD HORIZONTAL ARROW (SYMBOL)
W01-7a	72X36	18.00						DOUBLE HEAD HORIZ. ARROW (SYMBOL ON PERM. BARR.)
W01-8	18X24	3.00						CHEVRON (SYMBOL)
W01-8a	30X36	7.50						CHEVRON (SYMBOL FOR DIVIDED HIGHWAYS)
W03-1	48X48	16.00						STOP AHEAD (SYMBOL)
W03-2	48X48	16.00						YIELD AHEAD (SYMBOL)
W03-3	48X48	16.00	4	64			12	SIGNAL AHEAD (SYMBOL)
W03-4	48X48	16.00						BE PREPARED TO STOP
W03-5	48X48	16.00						SPEED LIMIT AHEAD
W04-1L	48X48	16.00						MERGE (SYMBOL FROM LEFT)
W04-1R	48X48	16.00						MERGE (SYMBOL FROM RIGHT)
W04-1aL	48X48	16.00	2	32			6A	MERGE (ARROW SYMBOL)
W04-1aR	48X48	16.00	2	32			6A	MERGE (ARROW SYMBOL)
W05-1	48X48	16.00						ROAD/BRIDGE/RAMP NARROWS
W05-3	48X48	16.00						ONE LANE BRIDGE
W05-5	48X48	16.00	4	64			34	NARROW LANES
W06-1	48X48	16.00						DIVIDED HIGHWAY (SYMBOL)
W06-2	48X48	16.00						DIVIDED HIGHWAY END (SYMBOL)
W06-3	48X48	16.00						TWO WAY TRAFFIC (SYMBOL)
W07-3a	30X24	5.00						NEXT XX MILES (PLAQUE)
W08-1	48X48	16.00						BUMP
W08-2	48X48	16.00						DIP
W08-3	48X48	16.00						PAVEMENT ENDS
W08-4	48X48	16.00						SOFT SHOULDER
W08-5	48X48	16.00						SLIPPERY WHEN WET (SYMBOL)
W08-6	48X48	16.00						TRUCK CROSSING (WITH FLAGS)
W08-6c	48X48	16.00						TRUCK ENTRANCE
W08-7	36X36	9.00						LOOSE GRAVEL
W08-7a	36X36	9.00						FRESH OIL/LOOSE GRAVEL
W08-9	48X48	16.00						LOW SHOULDER
W08-11	48X48	16.00						UNEVEN LANES
W08-12	48X48	16.00						NO CENTER LINE
W08-15	48X48	16.00						GROOVED PAVEMENT
W08-15P	30X24	5.00						MOTORCYCLE (PLAQUE)
W08-17	48X48	16.00						SHOULDER DROP-OFF (SYMBOL)
W08-17P	30X24	5.00						SHOULDER DROP-OFF (PLAQUE)
W10-1	42RND.	9.62						RAILROAD CROSSING
W012-1	24X24	4.00						DOUBLE DOWN ARROW (SYMBOL)
W012-2	48X48	16.00						LOW CLEARANCE (SYMBOL)
W012-2X	24X18	3.00						LOW CLEARANCE (PLAQUE)
W012-2a	84X24	14.00						OVERHEAD LOW CLEARANCE (FEET AND INCHES)
W012-4	120X60	50.00						LOW CLEARANCE XX FT XX IN XX MILES AHEAD
W012-5	120X60	50.00						WIDTH RESTRICTION XX FT XX IN XX MILES AHEAD
W013-1	30X30	6.25						ADVISORY SPEED (PLAQUE)
W016-2	30X24	5.00						XXX FEET (PLAQUE)
W016-3	30X24	5.00						X MILE (PLAQUE)
W020-1	48X48	16.00	8	128			2 2A	ROAD/BRIDGE/RAMP WORK AHEAD
W020-2	48X48	16.00						DETOUR AHEAD
W020-3	48X48	16.00						ROAD CLOSED AHEAD
W020-4	48X48	16.00	8	128			7	ONE LANE ROAD AHEAD
W020-5	48X48	16.00	6	96			5	RIGHT/CENTER/LEFT LANE CLOSED AHEAD
W020-5a	48X48	16.00						2 RIGHT/CENTER/LEFT LANES CLOSED AHEAD
W020-6a	48X48	16.00	4	64			6	RIGHT/CENTER/LEFT LANE CLOSED
W020-7a	48X48	16.00						FLAGGER (SYMBOL, WITH FLAGS)
W021-2	36X36	9.00						FRESH OIL
W021-5	48X48	16.00						SHOULDER WORK AHEAD
W022-1	48X48	16.00						BLASTING ZONE AHEAD
W022-2	42X36	10.50						TURN OFF 2-WAY RADIO AND PHONE
W022-3	42X36	10.50						END BLASTING ZONE
G022-1	21X15	2.19	2	4.38			61	WET PAINT (ARROW PIVOTS)

SIGN	SIZE IN.	AREA SQ.FT.	QTY EACH	TOTAL SQ.FT.	QTY RELOC EACH	TOTAL RELOC SQ.FT.	SIGN NUM.	DESCRIPTION
GUIDE SIGNS								
E05-1	36X48	12.00						GORE EXIT
E05-2	48X36	12.00						EXIT OPEN
E05-2a	48X36	12.00						EXIT CLOSED
G020-1	60X24	10.00	2	20			1	ROAD WORK NEXT XX MILES
G020-2	48X24	8.00	2	16			26	END ROAD WORK
G020-4	36X18	4.50						PILOT CAR FOLLOW ME
G020-4a	42X30	8.75						PILOT CAR IN USE WAIT & FOLLOW
G020-4a	18X12	1.50						PILOT CAR IN USE WAIT & FOLLOW
G020-5aP	36X24	6.00	4	24			54	WORK ZONE (PLAQUE)
M04-8a	24X18	3.00						END DETOUR
M04-9L	48X36	12.00						DETOUR (LEFT ARROW)
M04-9R	48X36	12.00						DETOUR (RIGHT ARROW)
M04-9P	48X12	4.00						STREET NAME (PLAQUE)
M04-10L	48X18	6.00						DETOUR (ARROW LEFT)
M04-10R	48X18	6.00						DETOUR (ARROW RIGHT)
REGULATORY SIGNS								
R1-1	48X48	13.25						STOP
R1-2	48TRI.	6.93						YIELD
R1-2a	36X36	9.00						TO ONCOMING TRAFFIC (PLAQUE)
R1-3P	30X12	2.50						ALL WAY (PLAQUE)
R2-1	36X48	12.00	16	192			4 25	SPEED LIMIT 45,50,55,60
R3-1	48X48	16.00						NO RIGHT TURN (SYMBOL)
R3-2	48X48	16.00						NO LEFT TURN (SYMBOL)
R3-3	36X36	9.00						NO TURNS
R3-4	48X48	16.00						NO U-TURN (SYMBOL)
R3-7L	30X30	6.25						LEFT LANE MUST TURN LEFT
R3-7R	30X30	6.25						RIGHT LANE MUST TURN RIGHT
R4-1	36X48	12.00						DO NOT PASS
R4-2	36X48	12.00						PASS WITH CARE
R4-8a	36X48	12.00						KEEP LEFT (HORIZONTAL ARROW)
R4-7a	36X48	12.00						KEEP RIGHT (HORIZONTAL ARROW)
R5-1	30X30	6.25						DO NOT ENTER
R5-1a	36X24	6.00						WRONG WAY
R6-1L	54X18	6.75						ONE WAY ARROW (LEFT)
R6-1R	54X18	6.75						ONE WAY ARROW (RIGHT)
R6-2L	24X30	5.00						ONE WAY (LEFT)
R6-2R	24X30	5.00						ONE WAY (RIGHT)
R9-9	24X12	2.00						SIDEWALK CLOSED
R9-11L	24X18	3.00						SIDEWALK CLOSED AHEAD, (ARROW LEFT) CROSS HERE
R9-11R	24X18	3.00						SIDEWALK CLOSED AHEAD, (ARROW RIGHT) CROSS HERE
R10-6	24X36	6.00	4	24			47	STOP HERE ON RED (45° ARROW)
R11-2	48X30	10.00						ROAD CLOSED
R11-3a	60X30	12.50						ROAD CLOSED XX MILES AHEAD LOCAL TRAFFIC ONLY
R11-4	60X30	12.50						ROAD CLOSED TO THRU TRAFFIC
CONST-3A	60X48	20.00						FINE SIGN
CONST-3X	56X12	4.67						SPEEDING/PASSING (PLATE)
MISCELLANEOUS SIGNS								
CONST-5	48X36	12.00						POINT OF PRESENCE
CONST-5	96X48	32.00	2	64			59	POINT OF PRESENCE
CONST-7	48X24	8.00						RATE OUR WORK ZONE
CONST-7	72X36	18.00	2	36			56	RATE OUR WORK ZONE
CONST-8	48X36	12.00						WORK ZONE NO PHONE ZONE

616-10.05 CONSTRUCTION SIGNS	TOTAL	1116
616-10.10 RELOCATED SIGNS	TOTAL	0

ITEM NUMBER	TOTAL QTY	DESCRIPTION
6122008		IMPACT ATTENUATOR 40 MPH (SAND BARRELS)
6122009		IMPACT ATTENUATOR 45 MPH (SAND BARRELS)
6122010		IMPACT ATTENUATOR 50 MPH (SAND BARRELS)
6122012	2	IMPACT ATTENUATOR 55 MPH (SAND BARRELS)
6122014	2	IMPACT ATTENUATOR 60 MPH (SAND BARRELS)
6122017		IMPACT ATTENUATOR 65 MPH (SAND BARRELS)
6122019		IMPACT ATTENUATOR 70 MPH (SAND BARRELS)
6122020	2	REPLACEMENT SAND BARREL
6122030	5	IMPACT ATTENUATOR (RELOCATION)
6123000A	3	TRUCK OR TRAILER MOUNTED ATTENUATOR (TMA)
6161008	4	ADVANCED WARNING RAIL SYSTEM
6161012		BUOYS (BOATS KEEP OUT)
6161013		BUOYS (NO WAKE)
6161014		SPECIAL SIGN ASSEMBLY (BOATS KEEP OUT)
6161025	100	CHANNELIZER (TRIM LINE)
6161030	6	TYPE III MOVEABLE BARRICADE
6161033		DIRECTION INDICATOR BARRICADE
6161040	4	FLASHING ARROW PANEL
6161047		TYPE III OBJECT MARKER
6161051		WARNING LIGHT, TYPE A
6161052		WARNING LIGHT, TYPE B
6161053		WARNING LIGHT, TYPE C
6161055		SEQUENTIAL FLASHING WARNING LIGHT
6161070		TUBULAR MARKER
6161095		RADAR SPEED ADVISORY SYSTEM
6161096		CHANGEABLE MESSAGE SIGN, COMMISSION FURNISHED/RETAINED
6161098A	4	CHANGEABLE MESSAGE SIGN W/O COMM. INTERFACE, CONTRACTOR FURNISHED/RETAINED
6161099		CHANGEABLE MESSAGE SIGN WITH COMM. INTERFACE, CONTRACTOR FURNISHED/RETAINED
6162000A	4	WORK ZONE TRAFFIC SIGNAL SYSTEM
6162002	16	TEMPORARY LONG-TERM RUMBLE STRIPS
6162004		TEMPORARY SHORT-TERM RUMBLE STRIPS
6173600D	1536	TEMPORARY TRAFFIC BARRIER CONTRACTOR FURNISHED/RETAINED
6173602B		TEMPORARY TRAFFIC BARRIER CONTRACTOR FURNISHED/COMMISSION RETAINED
6174000A		TEMP. TRAFFIC BARRIER HEIGHT TRANSITION
6175010A	7680	RELOCATING TEMPORARY TRAFFIC BARRIER
6176000B		TEMPORARY TRAFFIC BARRIER COMMISSION FURNISHED/RETAINED
6177000B		TEMP. TRAFFIC BARRIER HEIGHT TRANSITION COMMISSION FURNISHED/RETAINED
6208064A		TEMPORARY RAISED PAVEMENT MARKER
9029400		TEMPORARY TRAFFIC SIGNALS
9029401		TEMPORARY TRAFFIC SIGNALS AND LIGHTING

SUMMARY OF QUANTITIES
SHEET 2 OF 2

STATE OF MISSOURI
RICHARD W. ORR
NUMBER PE-2002003397
PROFESSIONAL ENGINEER
THIS SHEET HAS BEEN SIGNED, SEALED AND DATED ELECTRONICALLY.

DATE PREPARED 8/23/2021
ROUTE 24/65 | STATE MO
DISTRICT NW | SHEET NO. 2
COUNTY CARROLL
JOB NO. J1P3275
CONTRACT ID.
PROJECT NO.
BRIDGE NO.

DESCRIPTION | DATE

MISSOURI HIGHWAYS AND TRANSPORTATION COMMISSION
105 WEST CAPITOL
JEFFERSON CITY, MO 65102
1-888-ASK-MODOT (1-888-275-6636)

IF A SEAL IS PRESENT ON THIS SHEET IT HAS BEEN ELECTRONICALLY SEALED AND DATED.

LEGEND

MODIFIED COLDMILLING

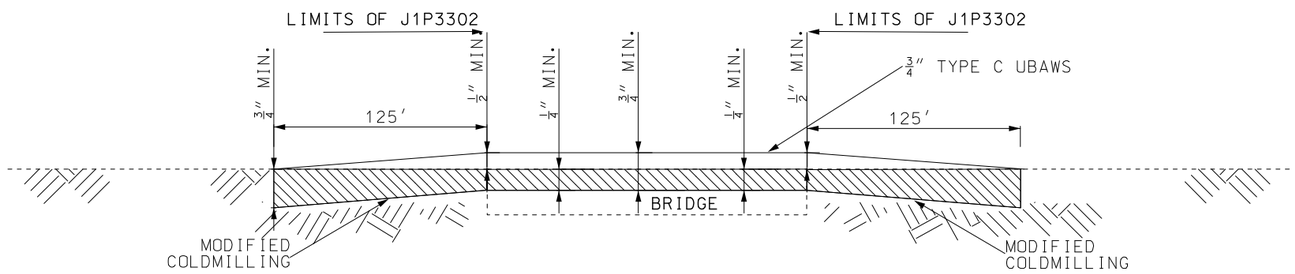

RTE 24/65 (ROADWAY TRANSITION PROVIDED BY CONTRACT J1P3302)

BRIDGE A2902 BRIDGE & ROADWAY WIDTH 44'
BRIDGE A2903 BRIDGE & ROADWAY WIDTH 44'
BRIDGE A2904 BRIDGE & ROADWAY WIDTH 68'

DEPTH TRANSITIONS

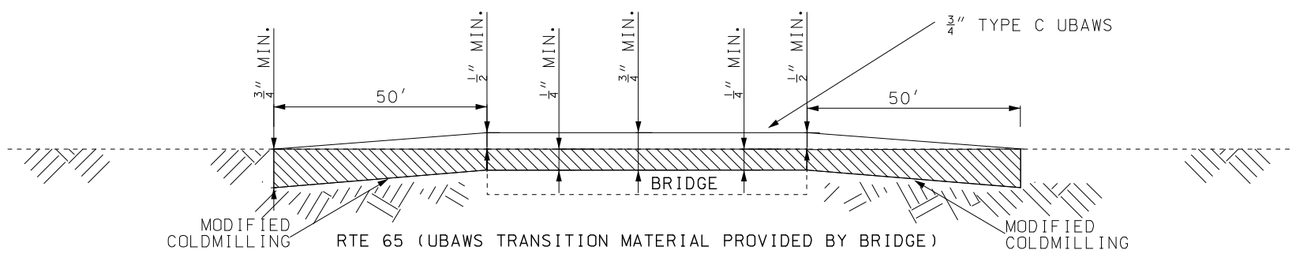

RTE 65 (UBAWS TRANSITION MATERIAL PROVIDED BY BRIDGE)

BRIDGE A2905 BRIDGE & ROADWAY WIDTH 39.6'
BRIDGE A2907 BRIDGE & ROADWAY WIDTH 52'
BRIDGE A2947 BRIDGE & ROADWAY WIDTH 47.6'

DEPTH TRANSITIONS

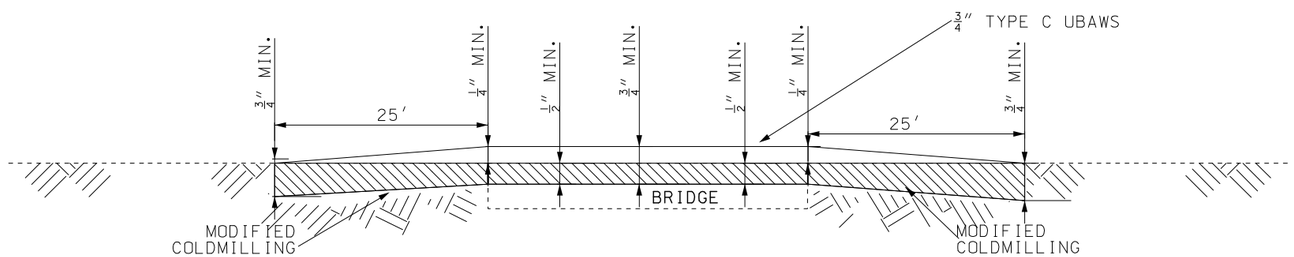

RTE 65 (UBAWS TRANSITION MATERIAL PROVIDED BY BRIDGE)

BRIDGE A2747 BRIDGE & ROADWAY WIDTH 44'

DEPTH TRANSITIONS

NOT TO SCALE

TRANSITIONS
SPECIAL SHEET 1 OF 2

STATE OF MISSOURI
RICHARD W. ORR
NUMBER PE-2002003397
PROFESSIONAL ENGINEER

THIS SHEET HAS BEEN SIGNED, SEALED AND DATED ELECTRONICALLY.

DATE PREPARED 8/19/2021	
ROUTE 24/65	STATE MO
DISTRICT NW	SHEET NO. 3
COUNTY CARROLL	
JOB NO. J1P3275	
CONTRACT ID.	
PROJECT NO.	
BRIDGE NO.	

DATE	DESCRIPTION

MISSOURI HIGHWAYS AND TRANSPORTATION COMMISSION

105 WEST CAPITOL
JEFFERSON CITY, MO 65102
1-888-ASK-MODOT (1-888-275-6636)

IF A SEAL IS PRESENT ON THIS SHEET IT HAS BEEN ELECTRONICALLY SEALED AND DATED.

REV.

NOTE: REFER TO SPECIAL PROVISIONS FOR
ADDITIONAL CONSTRUCTION DETAILS.

LEGEND

- CONCRETE
- TYPE 1 AGGREGATE

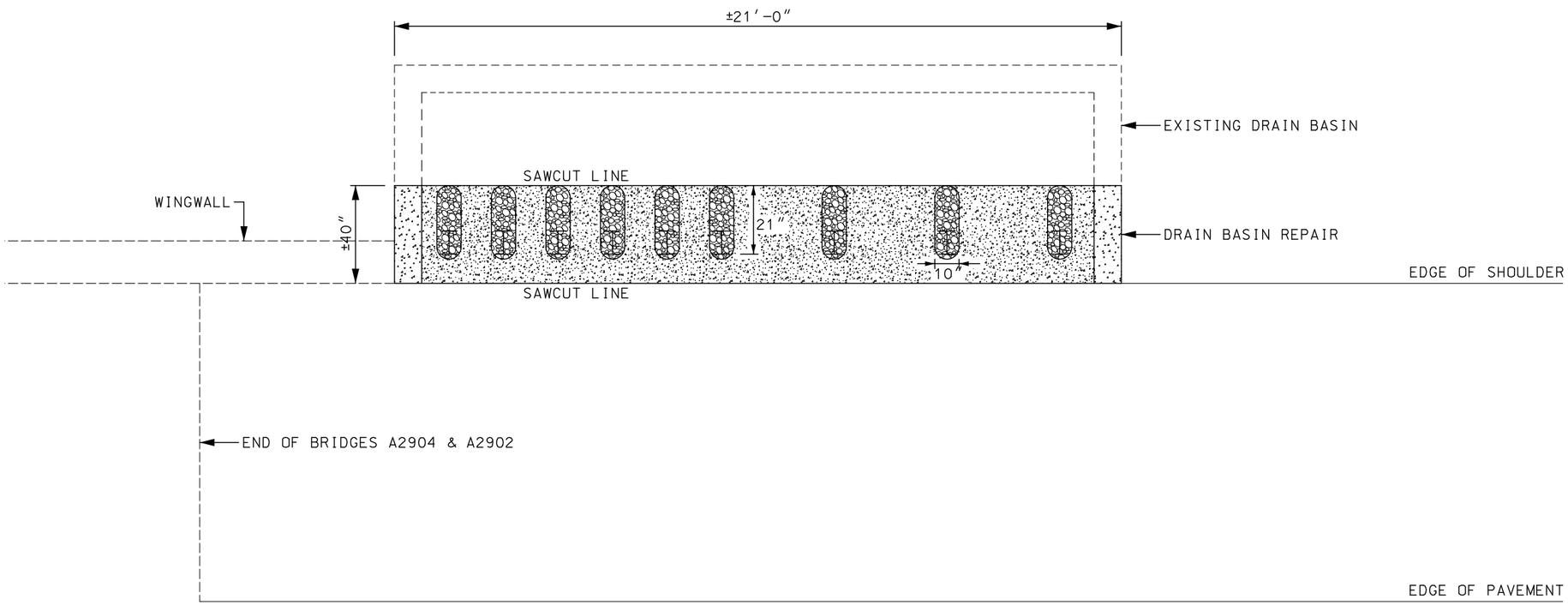

NOT TO SCALE

DRAIN BASIN REPAIR
SPECIAL SHEET 2 OF 2

STATE OF MISSOURI
RICHARD W. ORR
NUMBER PE-2002003397
PROFESSIONAL ENGINEER
THIS SHEET HAS BEEN SIGNED, SEALED AND DATED ELECTRONICALLY.

DATE PREPARED	
8/19/2021	
ROUTE	STATE
24/65	MO
DISTRICT	SHEET NO.
NW	4
COUNTY	
CARROLL	
JOB NO.	
J1P3275	
CONTRACT ID.	
PROJECT NO.	
BRIDGE NO.	

DATE	DESCRIPTION

MISSOURI HIGHWAYS AND TRANSPORTATION COMMISSION
105 WEST CAPITOL
JEFFERSON CITY, MO 65102
1-888-ASK-MODOT (1-888-275-6636)

IF A SEAL IS PRESENT ON THIS SHEET IT HAS BEEN ELECTRONICALLY SEALED AND DATED.

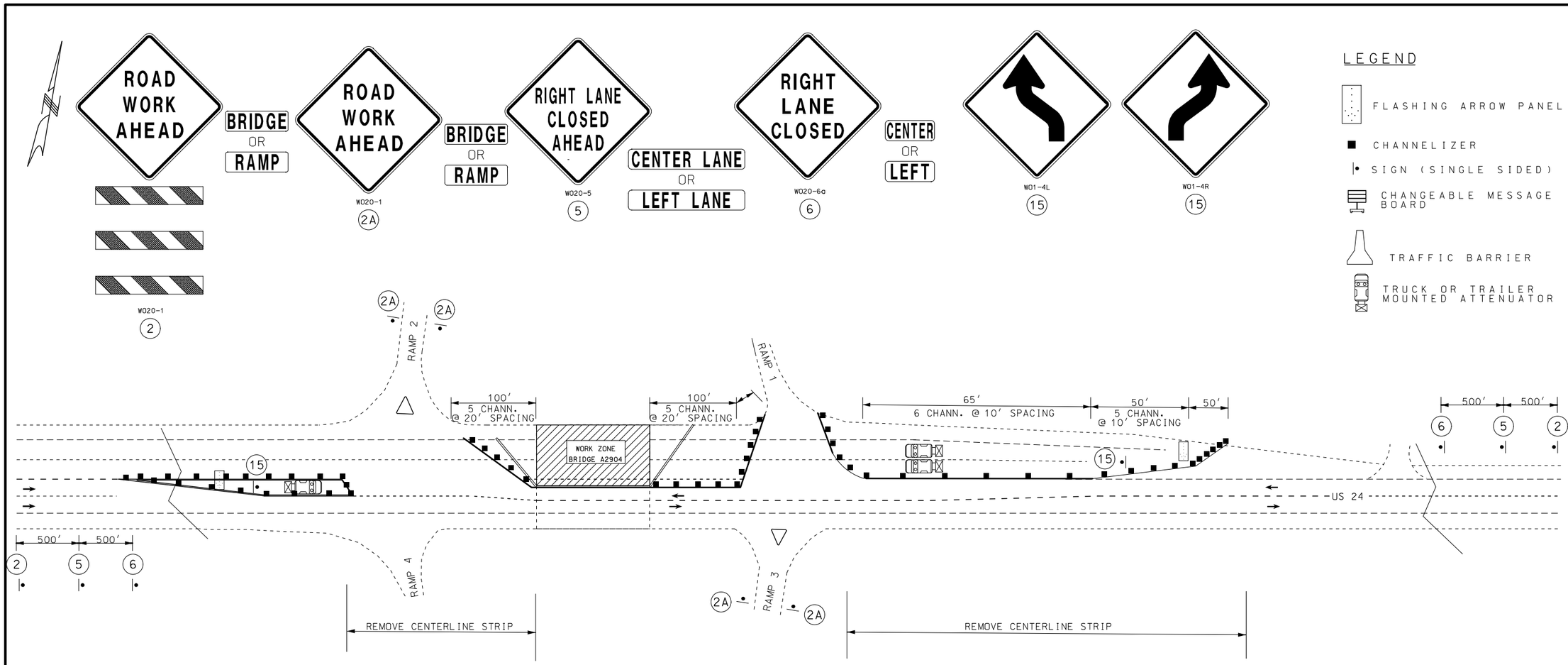

NOTE:
DISTANCE MAY BE ADJUSTED ACCORDING TO FIELD CONDITIONS

EXISTING SPEED LIMITS SIGNS WITHIN THE TEMPORARY TRAFFIC CONTROL ZONE SHALL BE COVERED.

STAGE 2 TRAFFIC CONTROL TO BE MIRRORED ABOUT CENTERLINE FOR E.B.L.

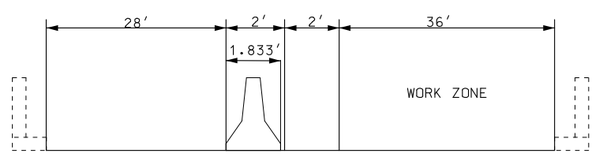

STAGE 1

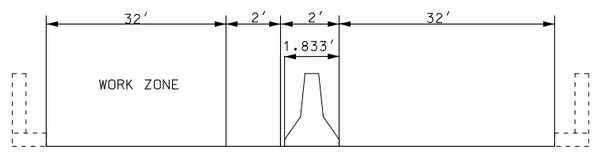

STAGE 2

SPEED	SIGN SPACING (FT)		TAPER LENGTH (FT)		OPTIONAL	CHANNELIZER SPACING (FT)	
NORMAL POSTED (MPH)	UNDIVIDED (S)	DIVIDED (S)	SHOULDER (1) (T1)	LANE (2) (T2)	BUFFER LENGTH (FT) (B)	TAPERS	BUFFER WORK AREA
0-35	200	200	70	245	280	35	40
40-45	350	500	150	540	400	40	80
50-55	500	1000	185	660	560	50	80
60-70	1000	SA-1000 SB-1500 SC-2640	235	840	840	60	120

1 SHOULDER TAPER LENGTH BASED ON 10 FT.(STANDARD SHOULDER WIDTH) OFFSET.
2 LANE TAPER LENGTH BASED ON 12 FT.(STANDARD LANE WIDTH) OFFSET

NOT TO SCALE

LANE CLOSURE WITH A TEMPORARY TRAFFIC BARRIER

TRAFFIC CONTROL
SHEET 1 OF 7

STATE OF MISSOURI
RICHARD W. ORR
NUMBER PE-2002003397
PROFESSIONAL ENGINEER
THIS SHEET HAS BEEN SIGNED, SEALED AND DATED ELECTRONICALLY.

DATE PREPARED	
8/19/2021	
ROUTE 24/65	STATE MO
DISTRICT NW	SHEET NO. 5
COUNTY CARROLL	
JOB NO. J1P3275	
CONTRACT ID.	
PROJECT NO.	
BRIDGE NO.	

DATE	DESCRIPTION

MISSOURI HIGHWAYS AND TRANSPORTATION COMMISSION
105 WEST CAPITOL
JEFFERSON CITY, MO 65102
1-888-ASK-MODOT (1-888-275-6636)

IF A SEAL IS PRESENT ON THIS SHEET IT HAS BEEN ELECTRONICALLY SEALED AND DATED.

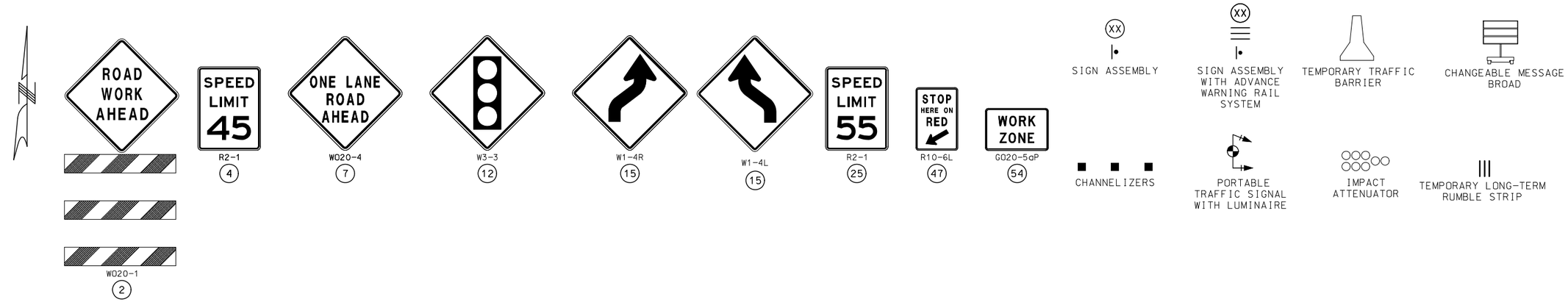

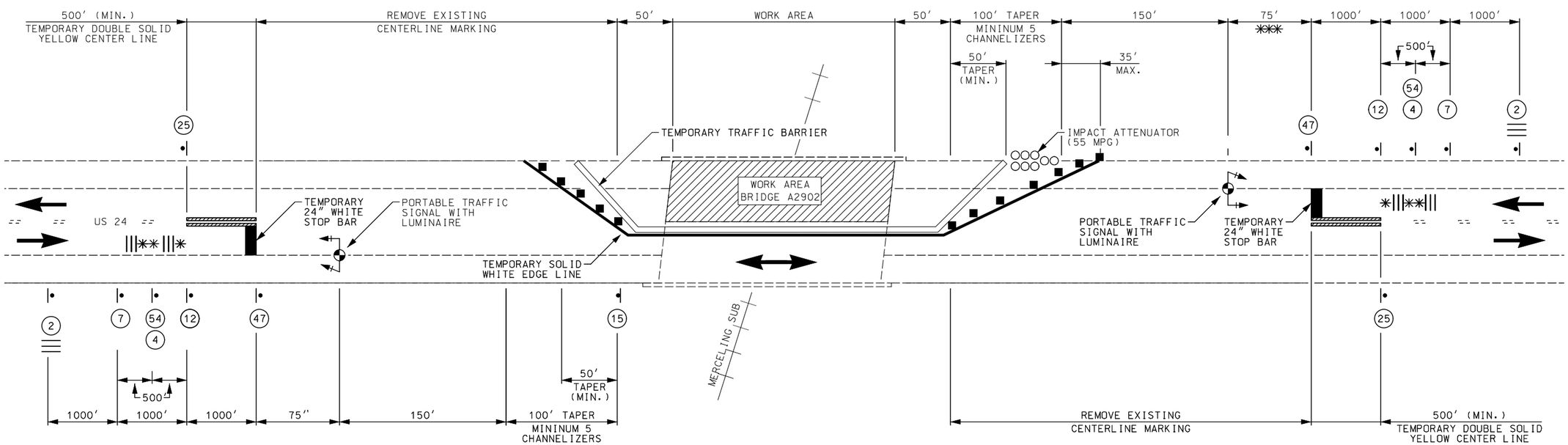

✳ FIRST SET OF TEMPORARY RUMBLE STRIPS TO BE PLACED 160' BEFORE SIGN (12)

✳✳ SECOND SET OF TEMPORARY RUMBLE STRIPS TO BE PLACED 160' BEFORE SIGN (54) (4)

✳✳✳ 75' RECOMMENDED SPACING. SPACING MAY BE BETWEEN 40' AND 150'.

EXISTING SPEED LIMITS SIGNS WITHIN THE TEMPORARY TRAFFIC CONTROL ZONE SHALL BE COVERED.

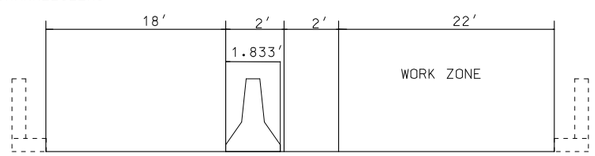

STAGE 1

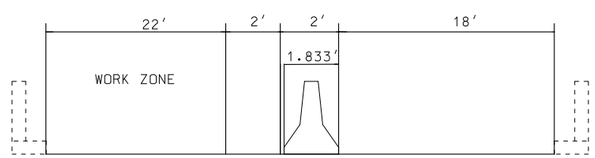

STAGE 2

NOTES:

STAGE 2
TRAFFIC CONTROL TO BE MIRRORED ABOUT CENTERLINE FOR E.B.L.

SEE TRAFFIC CONTROL SHEET 4 OF 7 TABLE FOR SIGN AND CHANNELIZER SPACING

NOT TO SCALE

ONE-LANE, TWO-WAY OPERATION WITH WORK ZONE TRAFFIC SIGNALS

TRAFFIC CONTROL
SHEET 2 OF 7

STATE OF MISSOURI
RICHARD W. ORR
NUMBER PE-2002003397
PROFESSIONAL ENGINEER
THIS SHEET HAS BEEN SIGNED, SEALED AND DATED ELECTRONICALLY.

DATE PREPARED 8/19/2021	
ROUTE 24	STATE MO
DISTRICT NW	SHEET NO. 6
COUNTY CARROLL	
JOB NO. J1P3275	
CONTRACT ID.	
PROJECT NO.	
BRIDGE NO.	

DESCRIPTION

DATE

MISSOURI HIGHWAYS AND TRANSPORTATION COMMISSION
105 WEST CAPITOL
JEFFERSON CITY, MO 65102
1-888-ASK-MODOT (1-888-275-6636)

IF A SEAL IS PRESENT ON THIS SHEET IT HAS BEEN ELECTRONICALLY SEALED AND DATED.

REV.

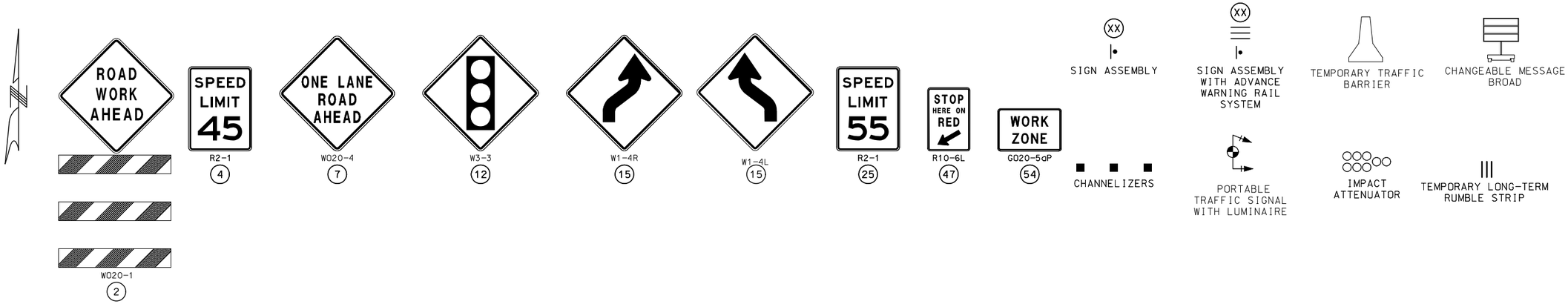

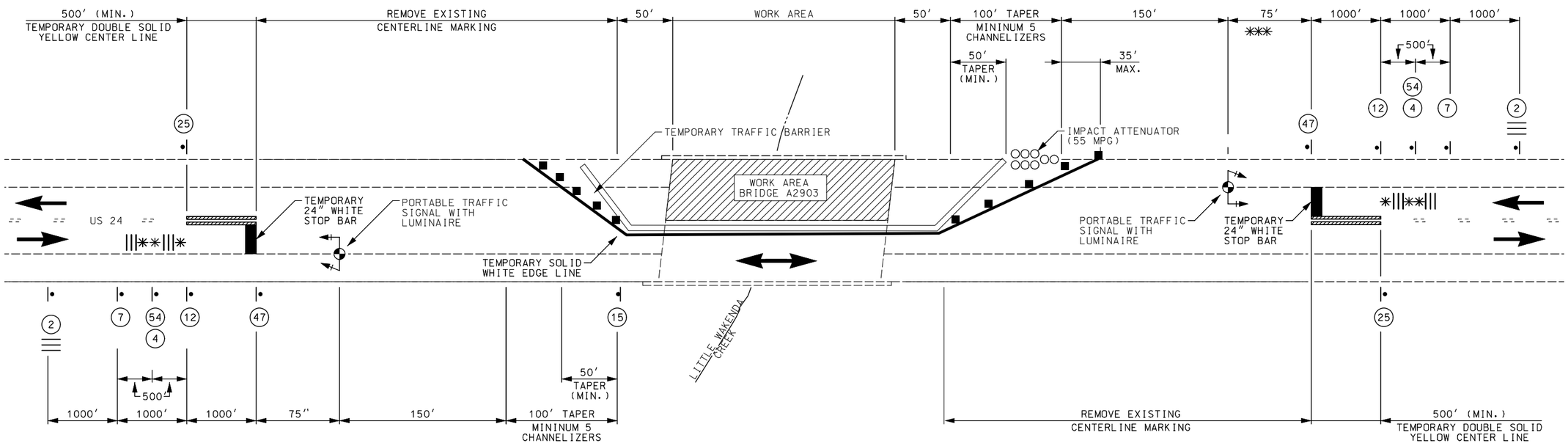

✳ FIRST SET OF TEMPORARY RUMBLE STRIPS TO BE PLACED 160′ BEFORE SIGN (12)

✳✳ SECOND SET OF TEMPORARY RUMBLE STRIPS TO BE PLACED 160′ BEFORE SIGN (54) (4)

✳✳✳ 75′ RECOMMENDED SPACING. SPACING MAY BE BETWEEN 40′ AND 150′.

EXISTING SPEED LIMITS SIGNS WITHIN THE TEMPORARY TRAFFIC CONTROL ZONE SHALL BE COVERED.

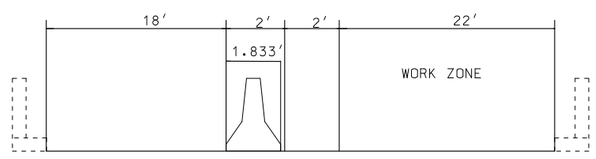

STAGE 1

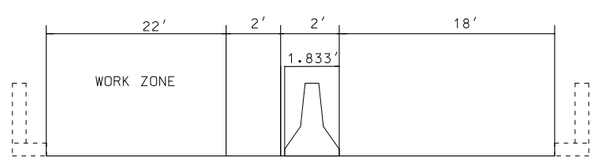

STAGE 2

NOTES:

STAGE 2

TRAFFIC CONTROL TO BE MIRRORED ABOUT CENTERLINE FOR E.B.L.

SEE TRAFFIC CONTROL SHEET 4 OF 7 TABLE FOR SIGN AND CHANNELIZER SPACING

NOT TO SCALE

ONE-LANE, TWO-WAY OPERATION WITH WORK ZONE TRAFFIC SIGNALS

TRAFFIC CONTROL
SHEET 3 OF 7

STATE OF MISSOURI
RICHARD W. ORR
NUMBER PE-2002003397
PROFESSIONAL ENGINEER

THIS SHEET HAS BEEN SIGNED, SEALED AND DATED ELECTRONICALLY.

DATE PREPARED	8/19/2021
ROUTE 24	STATE MO
DISTRICT NW	SHEET NO. 7
COUNTY	CARROLL
JOB NO.	J1P3275
CONTRACT ID.	
PROJECT NO.	
BRIDGE NO.	

DESCRIPTION | DATE

MISSOURI HIGHWAYS AND TRANSPORTATION COMMISSION
105 WEST CAPITOL
JEFFERSON CITY, MO 65102
1-888-ASK-MODOT (1-888-275-6636)

IF A SEAL IS PRESENT ON THIS SHEET IT HAS BEEN ELECTRONICALLY SEALED AND DATED.

REV.

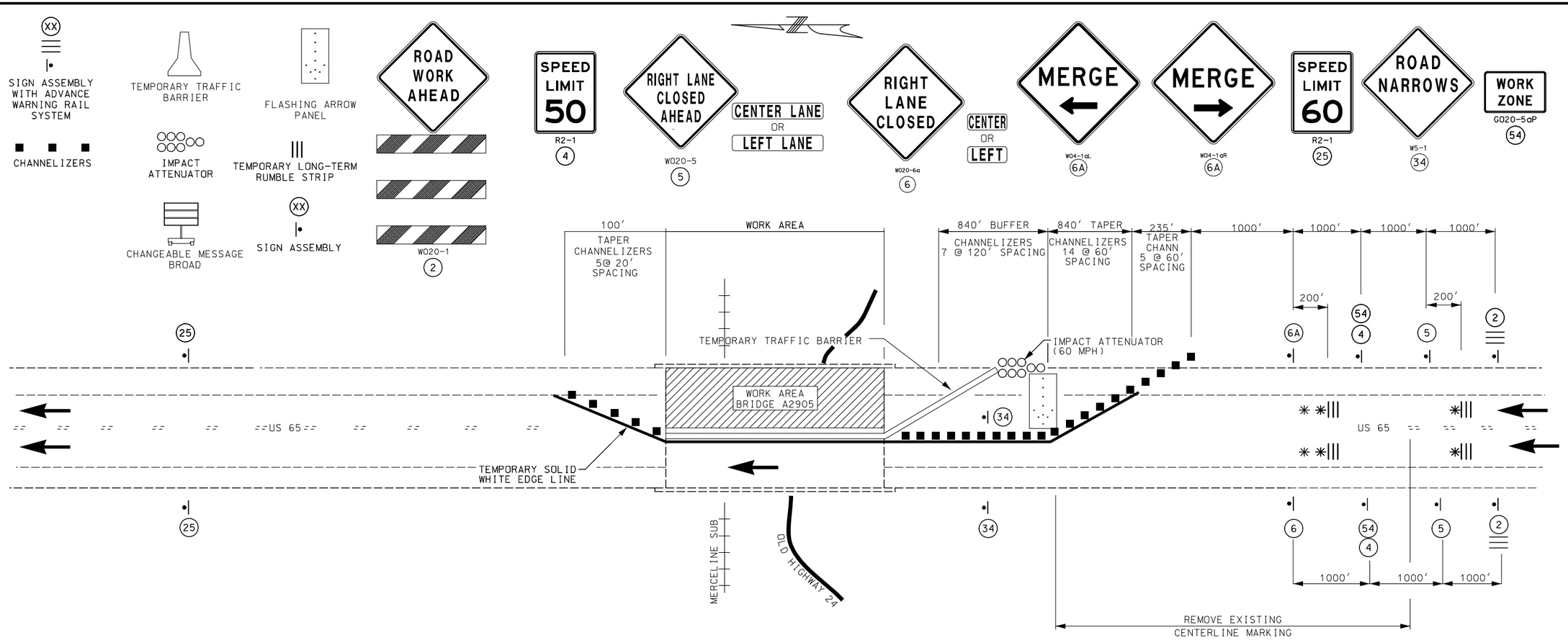

SPEED LIMIT[1] MPH	TAPER LENGTH[2] (FT)		CHANNELIZER SPACING[3] (FT)	
	SHOULDER[4] (T1)	LANE[5] (T2)	TAPERS	BUFFER WORK AREA
0–35	70	245	35[6]	40[6]
40–45	150	540	40[6]	80[6]
50–55	185	660	50[7]	80[7]
60–70	230	840	60[7]	120[7]

[1] SPEED LIMIT IS BASED ON POSTED LIMIT.
[2] TAPER LENGTHS MAY BE ADJUSTED TO ACCOMMODATE CROSSROADS, CURVES, INTERSECTIONS, RAMPS OR OTHER GEOMETRIC FEATURES.
[3] CHANNELIZER SPACING MAY BE REDUCED TO DISCOURAGE TRAFFIC ENCROACHMENT.
[4] BASED ON 10 FT. SHOULDER WIDTH.
[5] BASED ON 12 FT. LANE WIDTH.
[6] SPACING REDUCED TO ½ AT INTERSECTIONS.
[7] SPACING MAY BE REDUCED TO ½ AT INTERSECTIONS.

SHORT-TERM RUMBLE STRIPS		
SPEED MPH	DISTANCE (2)	SPACING (3)
0–45 (OPTIONAL)	120 FT	10 FT
50–55 (OPTIONAL)	160 FT	20 FT
60–70	200 FT	35 FT

SECOND SET OF TEMPORARY RUMBLES OPTIONAL

SPACING EXAMPLE

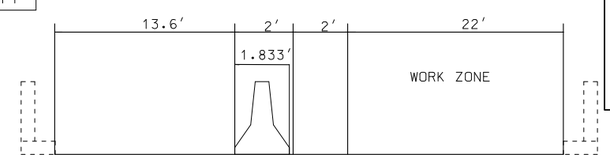

STAGE 1

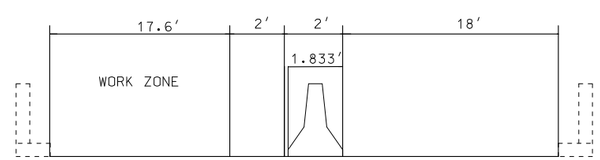

STAGE 2

✳ FIRST SET OF TEMPORARY RUMBLE STRIPS TO BE PLACED 200′ BEFORE SIGN (5)

✳✳ SECOND SET OF TEMPORARY RUMBLE STRIPS TO BE PLACED 200′ BEFORE SIGN (6A)

NOTES:

STAGE 2
TRAFFIC CONTROL TO BE MIRRORED ABOUT CENTERLINE FOR N.B.L.

EXISTING SPEED LIMITS SIGNS WITHIN THE TEMPORARY TRAFFIC CONTROL ZONE SHALL BE COVERED.

SPEED	SIGN SPACING (FT.) (1)		BUFFER SPACE
PERMANENT POSTED (MPH)	NON-DIVIDED HIGHWAYS (S)	DIVIDED HIGHWAYS (S)	BUFFER LENGTH (FT) (B)
0–35	200	200	280
40–45	350	500	400
50–55	500	1000	560
60–70	1000	SA- 1000 SB- 1500 SC- 2640	840

NOTES:

(1) SPACING BETWEEN SIGNS, BETWEEN LAST SIGN AND FLAGGER, BEGINNING OF TAPER OR SIGNED CONDITION.

SPACINGS MAY BE ADJUSTED AS NECESSARY TO MEET FIELD CONDITIONS.

NOT TO SCALE

LANE CLOSURE WITH LANE RESTRICTIONS AND TEMPORARY TRAFFIC BARRIER

TRAFFIC CONTROL
SHEET 4 OF 7

STATE OF MISSOURI
RICHARD W. ORR
NUMBER PE-2002003397
PROFESSIONAL ENGINEER
THIS SHEET HAS BEEN SIGNED, SEALED AND DATED ELECTRONICALLY.

DATE PREPARED	
8/19/2021	
ROUTE 24/65	STATE MO
DISTRICT NW	SHEET NO. 8
COUNTY CARROLL	
JOB NO. J1P3275	
CONTRACT ID.	
PROJECT NO.	
BRIDGE NO.	

DATE	DESCRIPTION

MISSOURI HIGHWAYS AND TRANSPORTATION COMMISSION
105 WEST CAPITOL
JEFFERSON CITY, MO 65102
1-888-ASK-MODOT (1-888-275-6636)

IF A SEAL IS PRESENT ON THIS SHEET IT HAS BEEN ELECTRONICALLY SEALED AND DATED.

REV.

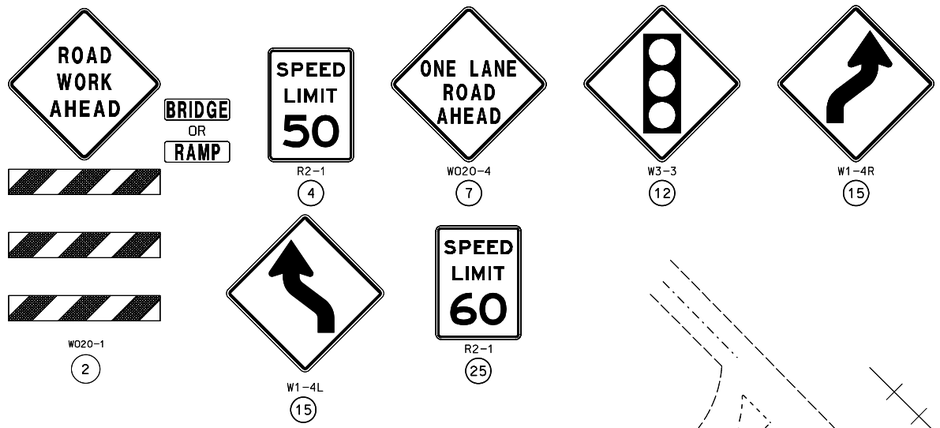

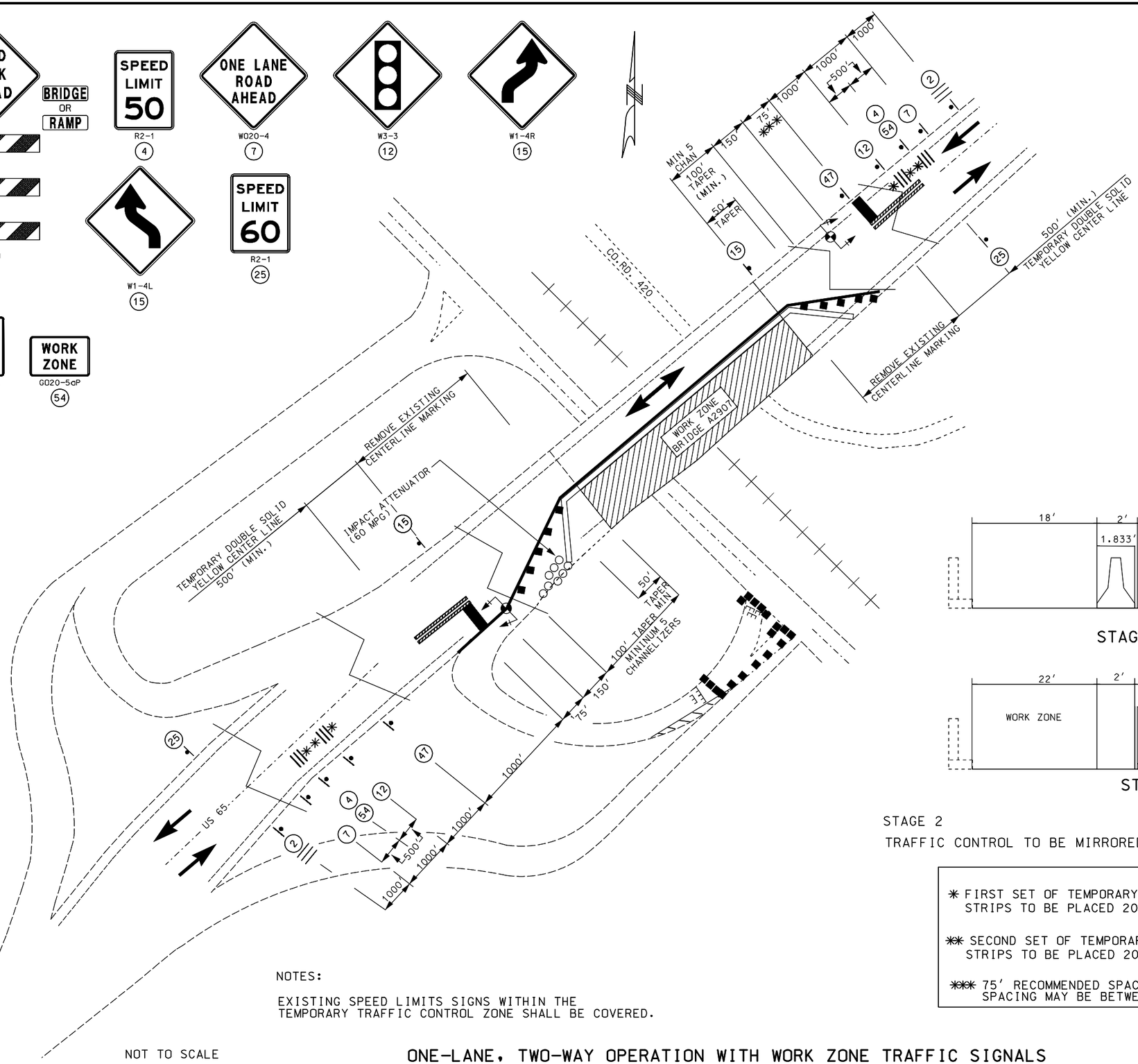

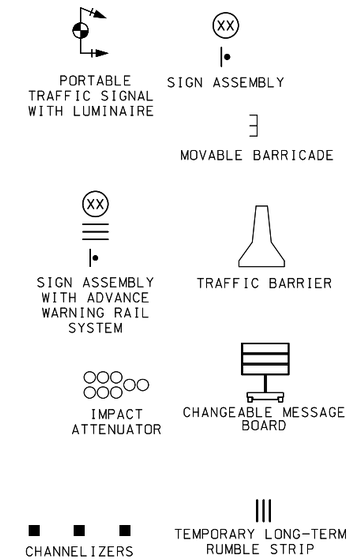

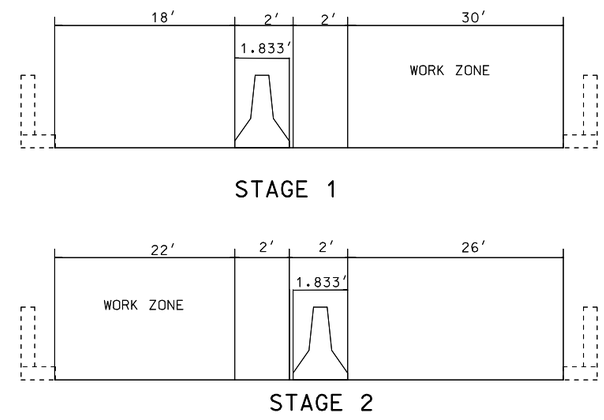

STAGE 2

TRAFFIC CONTROL TO BE MIRRORED ABOUT CENTERLINE FOR S.B.L.

✳ FIRST SET OF TEMPORARY RUMBLE STRIPS TO BE PLACED 200' BEFORE SIGN (12)

✳✳ SECOND SET OF TEMPORARY RUMBLE STRIPS TO BE PLACED 200' BEFORE SIGN (54) (4)

✳✳✳ 75' RECOMMENDED SPACING. SPACING MAY BE BETWEEN 40' AND 150'.

NOTES:

EXISTING SPEED LIMITS SIGNS WITHIN THE TEMPORARY TRAFFIC CONTROL ZONE SHALL BE COVERED.

NOT TO SCALE

ONE-LANE, TWO-WAY OPERATION WITH WORK ZONE TRAFFIC SIGNALS

TRAFFIC CONTROL
SHEET 5 OF 7

STATE OF MISSOURI
RICHARD W. ORR
NUMBER PE-2002003397
PROFESSIONAL ENGINEER
THIS SHEET HAS BEEN SIGNED, SEALED AND DATED ELECTRONICALLY.

DATE PREPARED	
8/19/2021	
ROUTE 24/65	STATE MO
DISTRICT NW	SHEET NO. 9
COUNTY CARROLL	
JOB NO. J1P3275	
CONTRACT ID.	
PROJECT NO.	
BRIDGE NO. A2907	

DATE	DESCRIPTION

MISSOURI HIGHWAYS AND TRANSPORTATION COMMISSION
105 WEST CAPITOL
JEFFERSON CITY, MO 65102
1-888-ASK-MODOT (1-888-275-6636)

IF A SEAL IS PRESENT ON THIS SHEET IT HAS BEEN ELECTRONICALLY SEALED AND DATED.

REV.

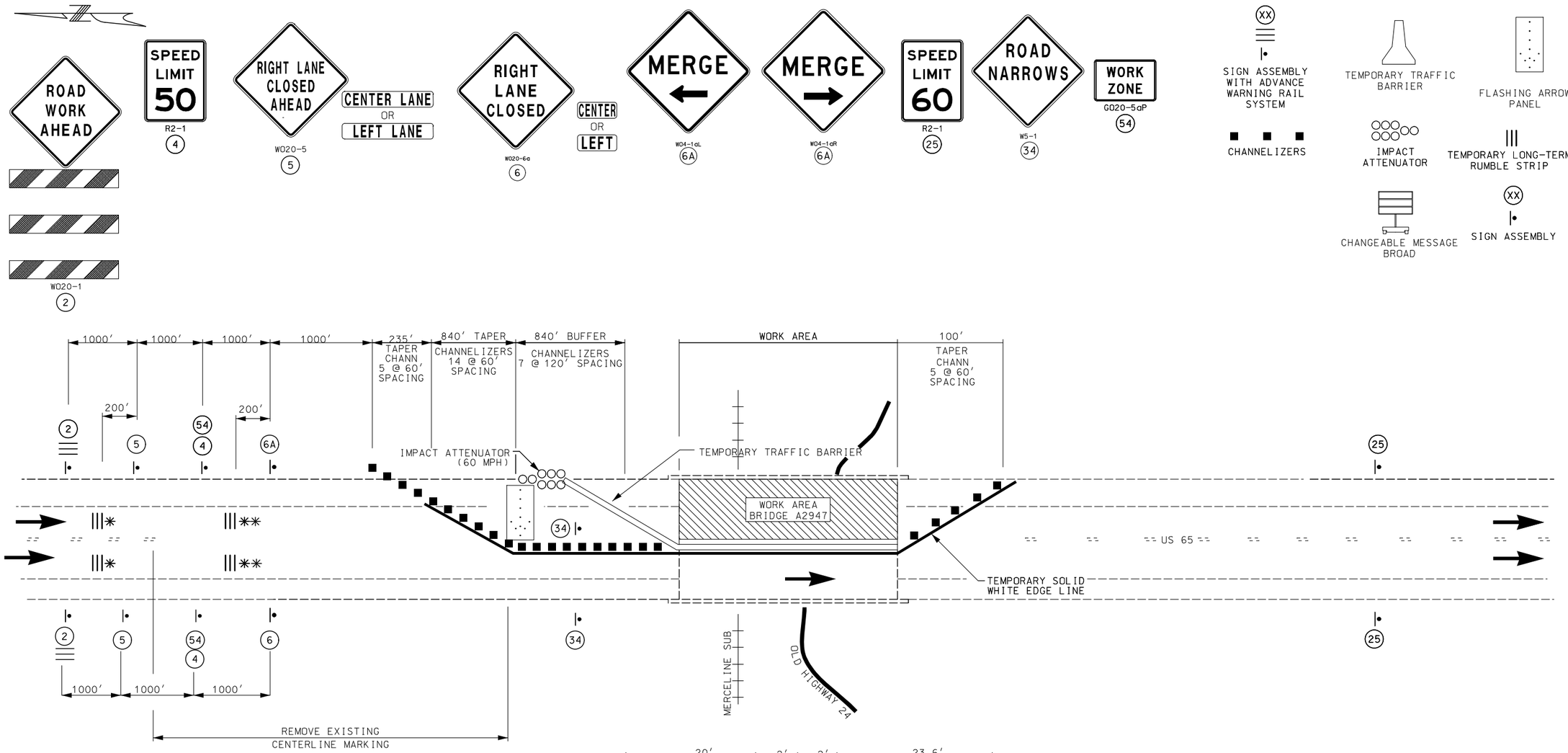

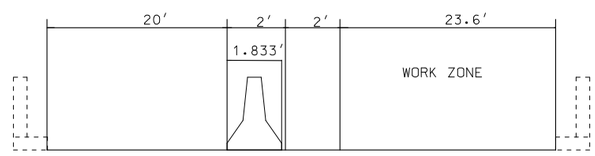

STAGE 1

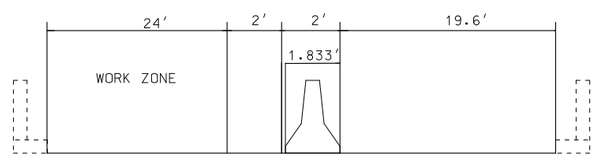

STAGE 2

✳ FIRST SET OF TEMPORARY RUMBLE STRIPS TO BE PLACED 200′ BEFORE SIGN (5)

✳✳ SECOND SET OF TEMPORARY RUMBLE STRIPS TO BE PLACED 200′ BEFORE SIGN (6A)

NOTES:

STAGE 2
TRAFFIC CONTROL TO BE MIRRORED ABOUT CENTERLINE FOR S.B.L.

EXISTING SPEED LIMITS SIGNS WITHIN THE TEMPORARY TRAFFIC CONTROL ZONE SHALL BE COVERED.

NOT TO SCALE

LANE CLOSURE WITH LANE RESTRICTIONS AND TEMPORARY TRAFFIC BARRIER

TRAFFIC CONTROL
SHEET 6 OF 7

STATE OF MISSOURI
RICHARD W. ORR
NUMBER PE-2002003397
PROFESSIONAL ENGINEER
THIS SHEET HAS BEEN SIGNED, SEALED AND DATED ELECTRONICALLY.

DATE PREPARED	
8/19/2021	
ROUTE 24/65	STATE MO
DISTRICT NW	SHEET NO. 10
COUNTY CARROLL	
JOB NO. J1P3275	
CONTRACT ID.	
PROJECT NO.	
BRIDGE NO.	

DATE	DESCRIPTION

MISSOURI HIGHWAYS AND TRANSPORTATION COMMISSION
105 WEST CAPITOL
JEFFERSON CITY, MO 65102
1-888-ASK-MODOT (1-888-275-6636)

IF A SEAL IS PRESENT ON THIS SHEET IT HAS BEEN ELECTRONICALLY SEALED AND DATED.

REV.

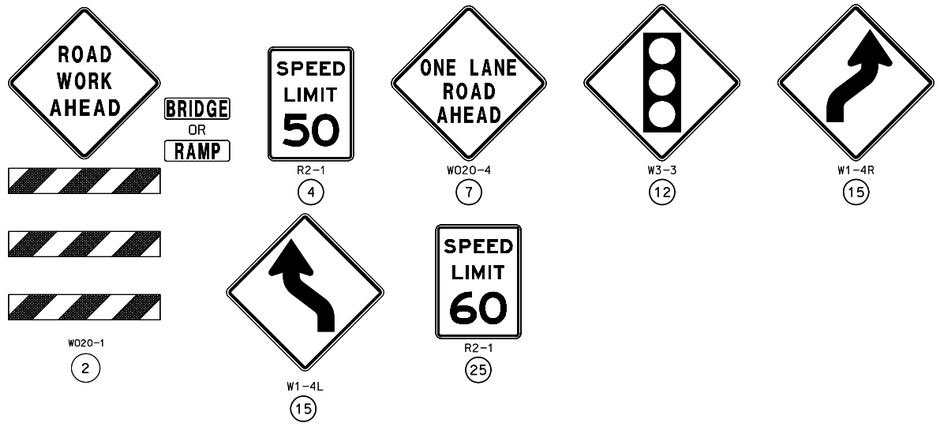

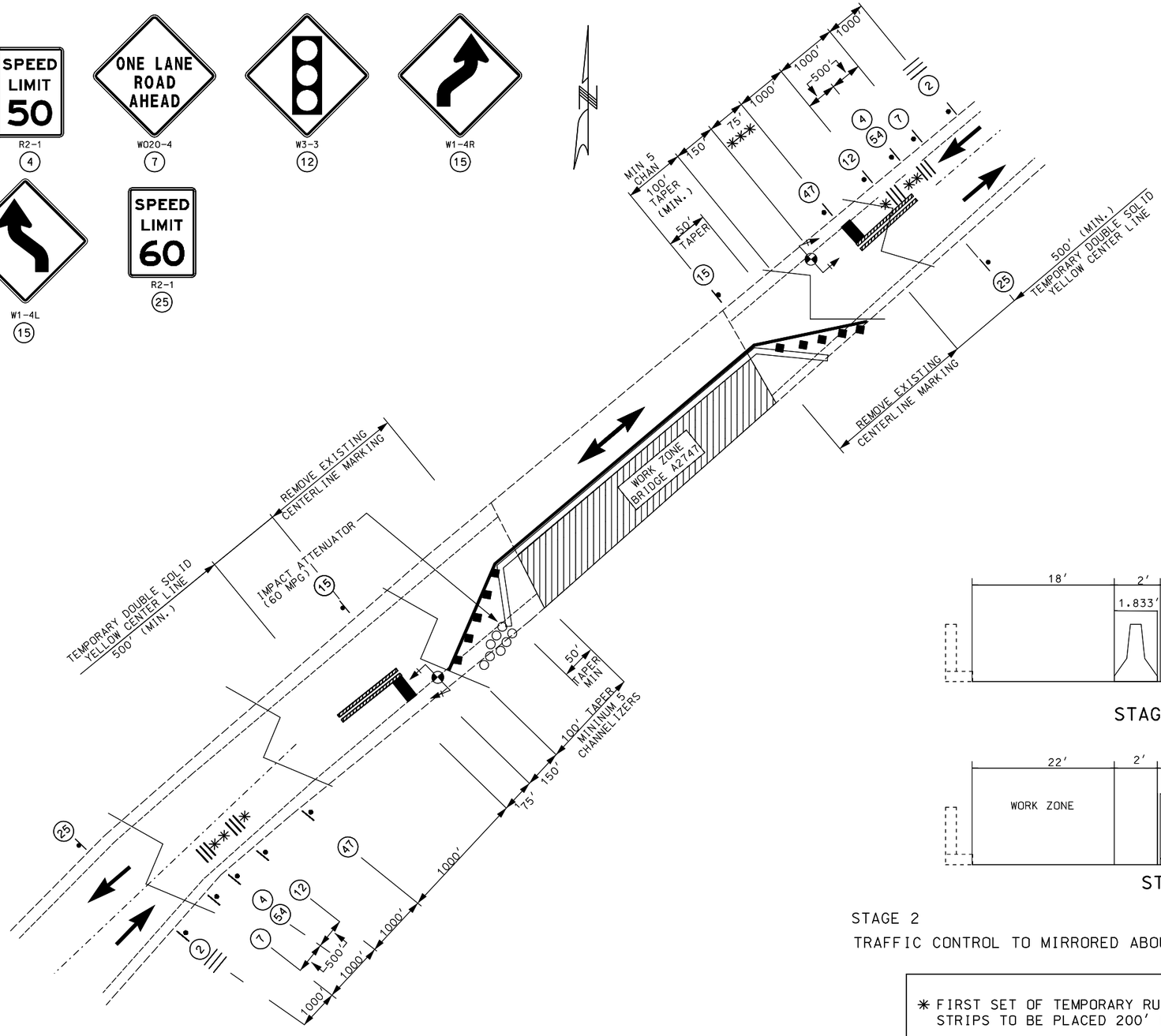

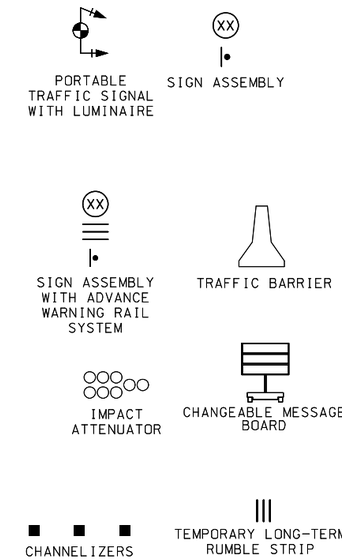

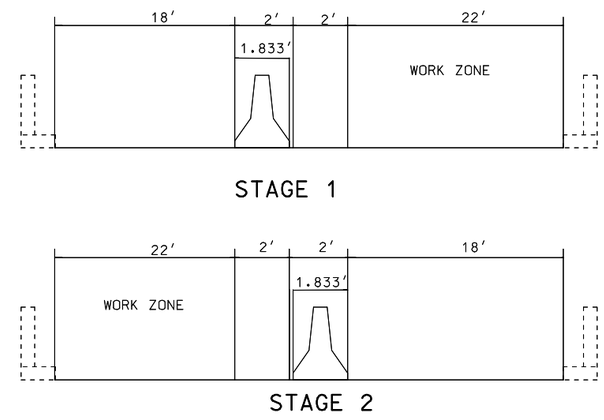

STAGE 2

TRAFFIC CONTROL TO MIRRORED ABOUT CENTERLINE FOR S.B.L.

* FIRST SET OF TEMPORARY RUMBLE STRIPS TO BE PLACED 200' BEFORE SIGN	12
** SECOND SET OF TEMPORARY RUMBLE STRIPS TO BE PLACED 200' BEFORE SIGN	54, 4
*** 75' RECOMMENDED SPACING. SPACING MAY BE BETWEEN 40' AND 150'.	

NOTES:

EXISTING SPEED LIMITS SIGNS WITHIN THE TEMPORARY TRAFFIC CONTROL ZONE SHALL BE COVERED.

NOT TO SCALE

ONE-LANE, TWO-WAY OPERATION WITH WORK ZONE TRAFFIC SIGNALS

TRAFFIC CONTROL
SHEET 7 OF 7

STATE OF MISSOURI
RICHARD W. ORR
NUMBER PE-2002003397
PROFESSIONAL ENGINEER
THIS SHEET HAS BEEN SIGNED, SEALED AND DATED ELECTRONICALLY.

DATE PREPARED	8/19/2021
ROUTE	24/65
STATE	MO
DISTRICT	NW
SHEET NO.	11
COUNTY	CARROLL
JOB NO.	J1P3275
CONTRACT ID.	
PROJECT NO.	
BRIDGE NO.	

DESCRIPTION

DATE

MISSOURI HIGHWAYS AND TRANSPORTATION COMMISSION
105 WEST CAPITOL
JEFFERSON CITY, MO 65102
1-888-ASK-MODOT (1-888-275-6636)

IF A SEAL IS PRESENT ON THIS SHEET IT HAS BEEN ELECTRONICALLY SEALED AND DATED.

REV.

SEC/SUR 32 TWP 52N RGE 23W

U.I.P. AND REHABILITATE EXISTING (40') SIMPLE WIDE FLANGE BEAM SPAN, (41'-54'-41') (31'-41'-41'-41'-41'-31') (31'-41'-41'-41'-41'-31') CONTINUOUS COMPOSITE CURVED WIDE FLANGE BEAM SPANS (SKEW: VARIES)

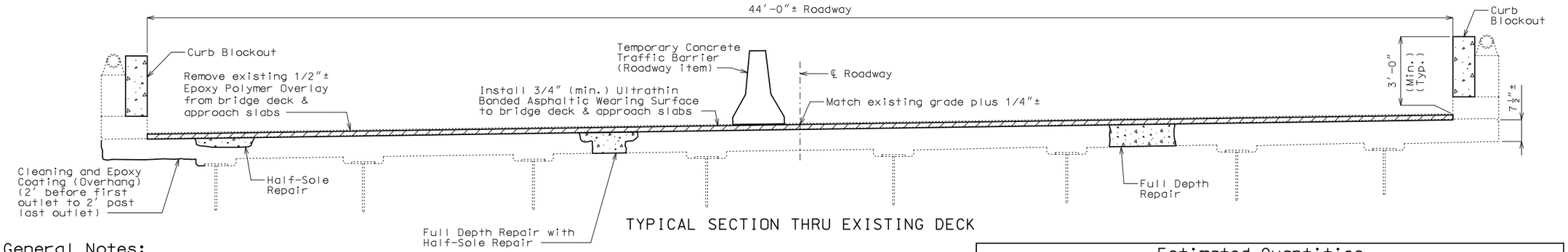

TYPICAL SECTION THRU EXISTING DECK

General Notes:

Design Specifications:

2002 AASTHO LFD (17th Ed.) Standard Specifications
Bridge Deck Rating = 5

Design Loading:

HS20-44 (AASHO 1973 and New Construction)

Design Unit Stresses:

Class B-2 Concrete (Superstructure, except Curb Blockout) f'c = 4,000 psi
Class B-1 Concrete (Curb Blockout) f'c = 4,000 psi
Reinforcing Steel (Grade 60) fy = 60,000 psi

Structural Steel Protective Coating:

Protective Coating: System G in accordance with Sec 1081.

Protective Coating Limits: The surface of all existing structural steel within a distance of not less than 10 feet from centerline of expansion joint at Int. Bents No. 1A, 4 & 10 and End Bent No. 16 shall be recoated with System G.

Surface Preparation: Surface preparation of the existing steel shall be in accordance with Sec 1081 for Recoating of Structural Steel (System G, H or I). The cost of surface preparation will be considered completely covered by the contract unit price per sq. foot for Surface Preparation for Recoating Structural Steel.

Prime Coat: The cost of the prime coat will be considered completely covered by the contract unit price per sq. foot for Field Application of Inorganic Zinc Primer. Tint of the prime coat for System G shall be similar to the color of the field coat to be used.

Field Coat: The color of the finish field coat shall be Gray (Federal Standard #26373). The cost of the intermediate field coat will be considered completely covered by the contract unit price per sq. foot for Intermediate Field Coat (System G). The cost of the finish field coat will be considered completely covered by the contract unit price per sq. foot for Finish Field Coat (System G).

Miscellaneous:

Roadway surfacing adjacent to bridge ends shall match new bridge wearing surface (roadway item).

All concrete repairs shall be in accordance with Sec 704, unless otherwise noted.

Outline of existing work is indicated by light dashed lines. Heavy lines indicate new work.

Contractor shall verify all dimensions in field before ordering new material.

In order to maintain grade and a minimum thickness of wearing surface as shown on plans it may be necessary to use additional quantities of wearing surface at various locations throughout the structure. The cost of furnishing and installing the wearing surface will be considered completely covered in the contract unit price, including all additional labor, materials or equipment for variations in thickness of wearing surface.

Traffic Handling:

Traffic to be maintained on structure during construction. See roadway plans for traffic control.

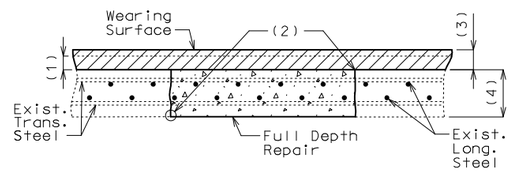

FULL DEPTH REPAIR

(1) Removal of existing 1/2"± epoxy polymer overlay

(2) 1" vertical side shall be established outside the deteriorated area.

(3) 3/4" minimum ultrathin bonded asphaltic wearing surface

(4) Original depth of deck

Estimated Quantities

Item		Total
Removal of Seal Coat or Polymer Wearing Surface	sq. foot	27,751
Removal of Existing Expansion Joint & Adjacent Concrete	linear foot	187
Removal of Existing Bearings	each	42
Remove and Replace Curb and Parapet	linear foot	36
Optional Ultrathin Bonded Asphalt Wearing Surface (Bridges)	sq. yard	3083
Class B-2 Concrete	cubic yard	29.6
Curb Blockout	linear foot	1298
Substructure Repair (Formed)	sq. foot	100
Half-Sole Repair	sq. foot	400
Full Depth Repair	sq. foot	50
Cleaning and Epoxy Coating	sq. foot	1917
Reinforcing Steel (Epoxy Coated)	pound	1240
Protective Coating - Concrete Bents and Piers (Epoxy)	lump sum	1
Surface Preparation for Recoating Structural Steel	sq. foot	2700
Field Application of Inorganic Zinc Primer (System G)	sq. foot	2700
Intermediate Field Coat System (System G)	sq. foot	2700
Finish Field Coat System (System G)	sq. foot	2700
Laminated Neoprene Bearing Pad Assembly	each	18
Type N PTFE Bearing	each	24
Strip Seal Expansion Joint System	linear foot	187

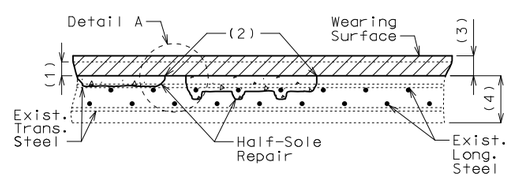

HALF-SOLE REPAIR

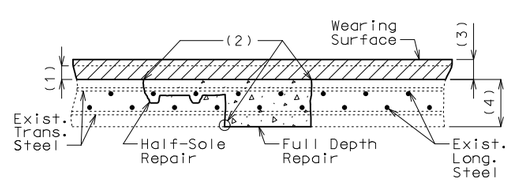

FULL DEPTH REPAIR WITH HALF-SOLE REPAIR

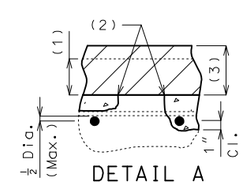

DETAIL A

Clearance around top bar and around bottom bar at the intersection of top bar shall be required when more than half the diameter of the top bar is exposed.

Designed June 2021
Detailed May 2021
Checked July 2021

Note: This drawing is not to scale. Follow dimensions.

REPAIRS TO BRIDGE: ROUTE 24 OVER MOSS CREEK

ROUTE 24 FROM ROUTE B TO ROUTE BB
ABOUT 1.7 MILES SOUTHWEST OF ROUTE B
BEG. STA. 229+86.07± (Match Existing)

STATE OF MISSOURI
TED S. KOESTER
NUMBER PE-2013000591
PROFESSIONAL ENGINEER
THIS SHEET HAS BEEN SIGNED, SEALED AND DATED ELECTRONICALLY.

DATE PREPARED 8/23/2021
ROUTE 24 | STATE MO
DISTRICT BR | SHEET NO. 1
COUNTY CARROLL
JOB NO. J1P3275
CONTRACT ID.
PROJECT NO.
BRIDGE NO. A27472

DATE | DESCRIPTION

IF A SEAL IS PRESENT ON THIS SHEET IT HAS BEEN ELECTRONICALLY SEALED AND DATED.

MISSOURI HIGHWAYS AND TRANSPORTATION COMMISSION
105 WEST CAPITOL
JEFFERSON CITY, MO 65102
1-888-ASK-MODOT (1-888-275-6636)

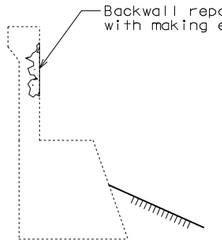

TYPICAL SECTION THRU
END BENT NO. 1 SHOWING
SUBSTRUCTURE REPAIR

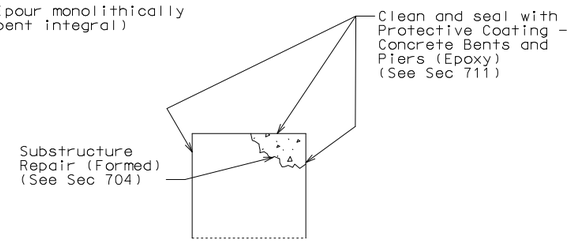

TYPICAL SECTION THRU
INT. BENTS NO. 1A & 10 SHOWING
PROTECTIVE COATING
& SUBSTRUCTURE REPAIR

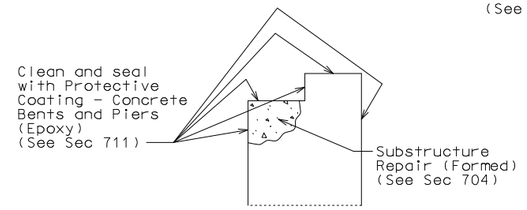

TYPICAL SECTION THRU
INT. BENT NO. 4 SHOWING
PROTECTIVE COATING
& SUBSTRUCTURE REPAIR

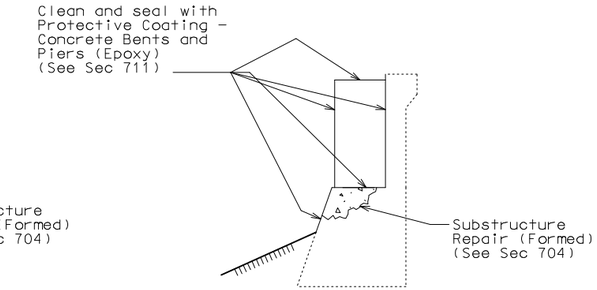

TYPICAL SECTION THRU
END BENT NO. 16 SHOWING
PROTECTIVE COATING
& SUBSTRUCTURE REPAIR

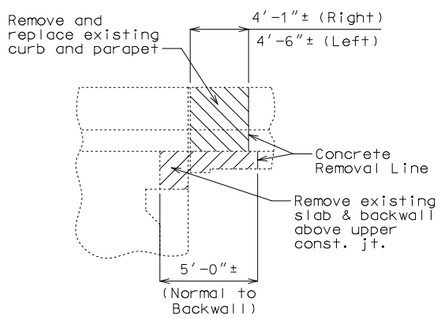

PART SECTION
AT END BENT NO. 1
SHOWING CONCRETE
REMOVAL

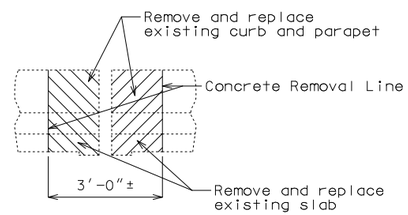

PART SECTION AT INT. BENTS
NO. 1A, 4 & 10
SHOWING CONCRETE REMOVAL

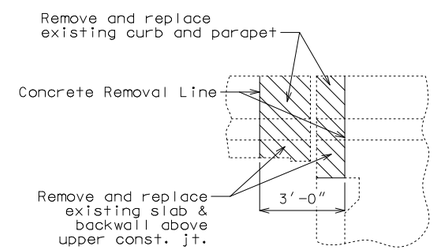

PART SECTION AT
END BENT NO. 16
SHOWING CONCRETE REMOVAL

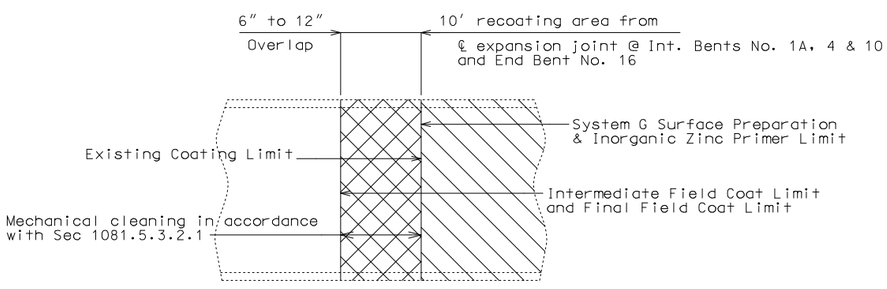

PART ELEVATION SHOWING LIMITS OF PAINT OVERLAP

(Vertical or horizontal paint limit. Horizontal limit shown)

Detailed May 2021
Checked July 2021

Note: This drawing is not to scale. Follow dimensions.

STATE OF MISSOURI
TED S. KOESTER
NUMBER PE-2013000591
PROFESSIONAL ENGINEER

THIS SHEET HAS BEEN SIGNED, SEALED AND DATED ELECTRONICALLY.

DATE PREPARED	8/23/2021
ROUTE 24	STATE MO
DISTRICT BR	SHEET NO. 2
COUNTY	CARROLL
JOB NO.	J1P3275
CONTRACT ID.	
PROJECT NO.	
BRIDGE NO.	A27472

DESCRIPTION

DATE

MISSOURI HIGHWAYS AND TRANSPORTATION COMMISSION

105 WEST CAPITOL
JEFFERSON CITY, MO 65102
1-888-ASK-MODOT (1-888-275-6636)

IF A SEAL IS PRESENT ON THIS SHEET IT HAS BEEN ELECTRONICALLY SEALED AND DATED.

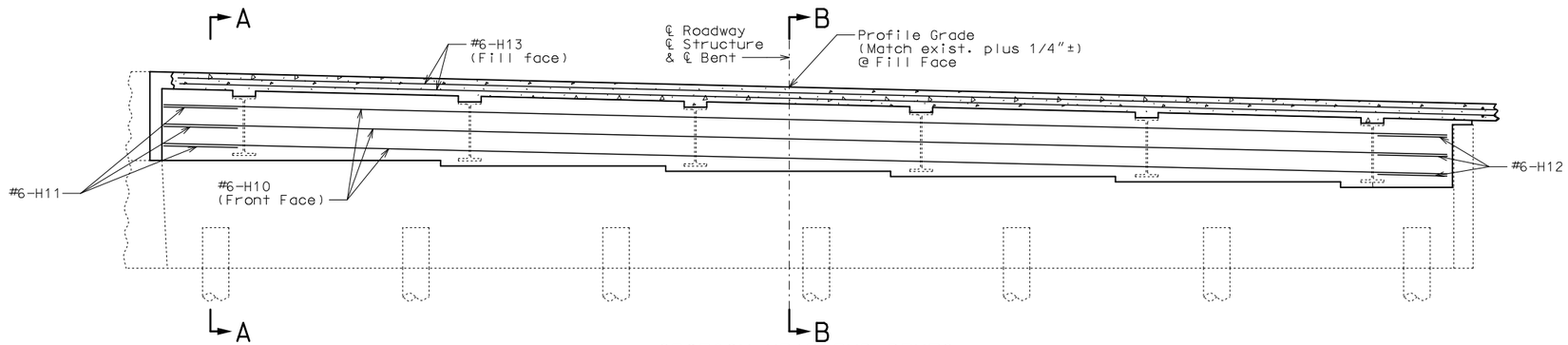

SECTION NEAR END BENTS

Existing steel end diaphragms not shown for clarity (leave in place).

Resin Anchors and U-bars not shown for clarity.

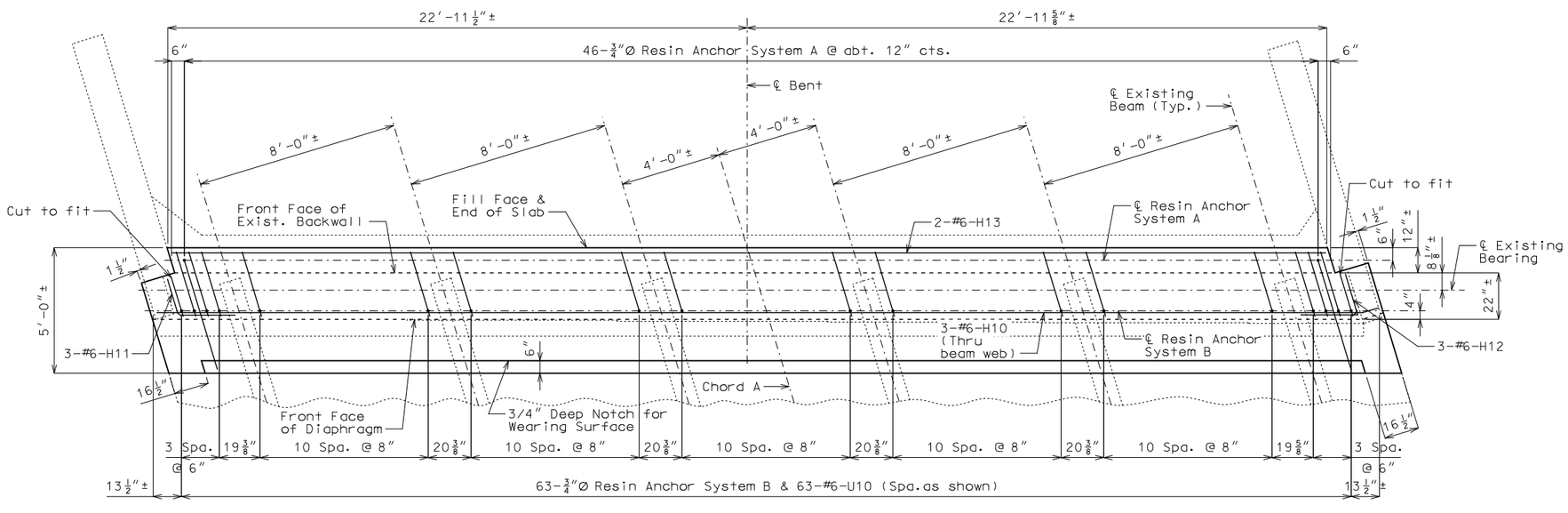

PART PLAN

Existing slab reinforcement (U.I.P.) not shown for clarity.

Note: Work this sheet with Sheet No. 4.

END BENT NO. 1

Detailed June 2021
Checked July 2021

Note: This drawing is not to scale. Follow dimensions.

STATE OF MISSOURI
TED S. KOESTER
NUMBER PE-2013000591
PROFESSIONAL ENGINEER

THIS SHEET HAS BEEN SIGNED, SEALED AND DATED ELECTRONICALLY.

DATE PREPARED	8/23/2021
ROUTE	24
STATE	MO
DISTRICT	BR
SHEET NO.	3
COUNTY	CARROLL
JOB NO.	J1P3275
CONTRACT ID.	
PROJECT NO.	
BRIDGE NO.	A27472

DESCRIPTION	DATE

IF A SEAL IS PRESENT ON THIS SHEET IT HAS BEEN ELECTRONICALLY SEALED AND DATED.

MISSOURI HIGHWAYS AND TRANSPORTATION COMMISSION

105 WEST CAPITOL
JEFFERSON CITY, MO 65102
1-888-ASK-MODOT (1-888-275-6636)

Notes:

Work this sheet with Sheet No. 3.

The contractor shall use one of the qualified resin anchor systems in accordance with Sec 1039.

Cost of furnishing and installing the resin anchor systems, complete in place, will be considered completely covered by the contract unit price for Class B-2 Concrete.

The minimum embedment depth in concrete with f'c = 4,000 psi for the resin anchor systems shall be that required to meet the minimum ultimate pullout strength in accordance with Sec 1039 but shall not be less than 5".

An epoxy coated #6 Grade 60 reinforcing bar shall be substituted for the 3/4"Ø threaded rod.

Cost of field drilling holes in existing wide flange beam webs will be considered completely covered by the contract unit price for Class B-2 Concrete.

The exposed and accessible surfaces of the existing structural steel and bearings that will be encased in concrete shall be cleaned with a minimum of SSPC-SP-3 surface preparation and coated with a minimum of one coat of gray epoxy-mastic primer (non-aluminum) in accordance with Sec 1081 to produce a dry film thickness of not less than 3 mils before concrete is poured. The surface preparation and coating for beams shall extend a minimum of one foot outside the face of the beam encasement. Payment for cleaning and coating steel to be encased in concrete will be considered completely covered by the contract unit price for Class B-2 Concrete.

The #6-H10 bars are segmented for ease of placement through beam web holes, and for staged construction. The #6-H13 bars are segmented for stage constuction. The total bar length for #6-H10 and H13 bars shown in the bill of reinforcing steel allows for one lap splice with a length of 3'-10". Actual bar segment lengths to be determined by contractor for ease of installing bars. The contractor may use a mechanical bar splice in lieu of a lap splice. When a mechanical bar splice is used, the actual bar segment length will be determined by the contractor to accommodate manufacturer's recommendations for installation and ease of construction. The cost of furnishing and installing the bar splices will be considered completely covered by the contract unit price for Reinforcing Steel (Epoxy Coated). No adjustment of the quantity of reinforcing steel will be allowed for the use of mechanical bar splices.

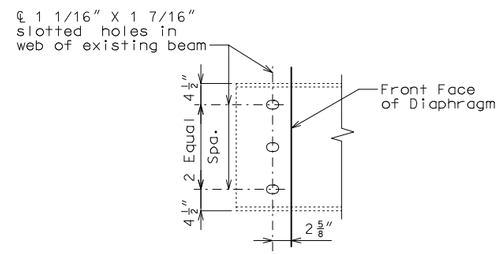

DETAIL OF WEB HOLES AT END BENTS

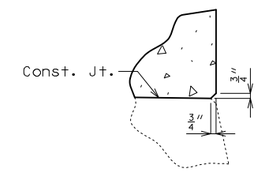

DETAIL A

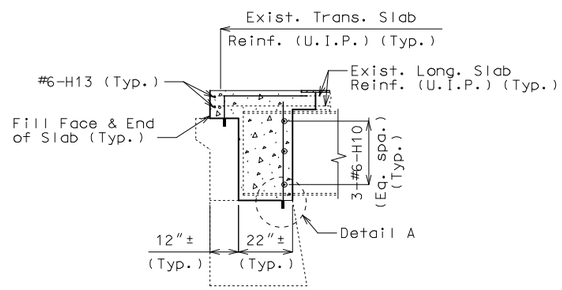

SECTION A-A
(Normal to Backwall)

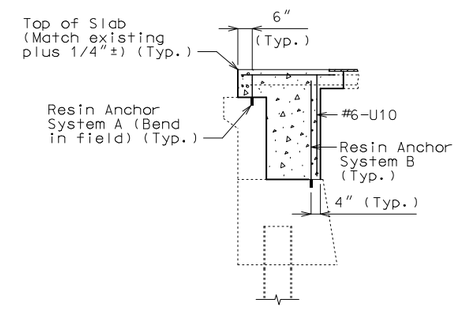

SECTION B-B
(Normal to Backwall)

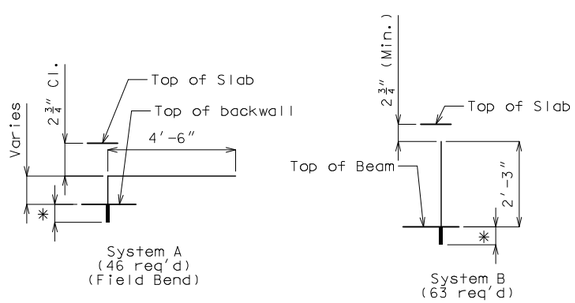

DETAILS OF RESIN ANCHOR SYSTEMS

* Manufacturer's recommended embedment length (5" min.)

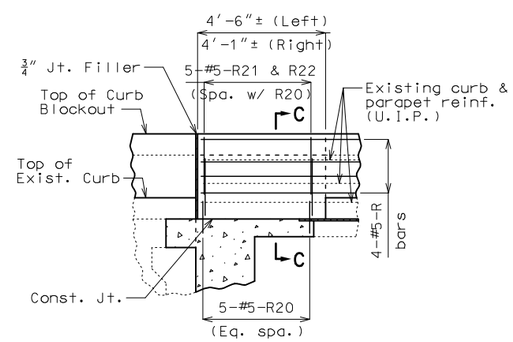

PART ELEVATION SHOWING CURB AND PARAPET REPLACEMENT

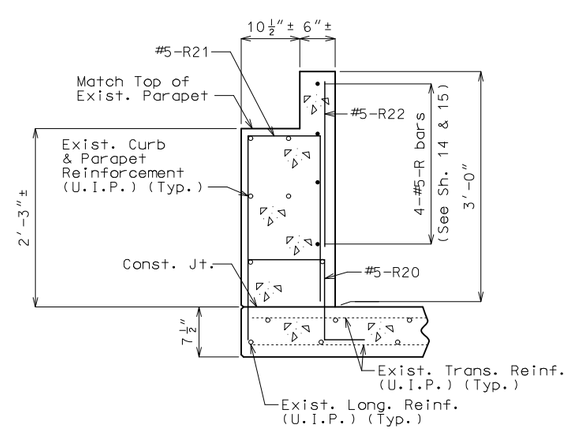

SECTION C-C

END BENT NO. 1

Detailed June 2021
Checked July 2021

Note: This drawing is not to scale. Follow dimensions.

STATE OF MISSOURI
TED S. KOESTER
NUMBER PE-2013000591
PROFESSIONAL ENGINEER
THIS SHEET HAS BEEN SIGNED, SEALED AND DATED ELECTRONICALLY.

DATE PREPARED 8/23/2021	
ROUTE 24/65	STATE MO
DISTRICT BR	SHEET NO. 4
COUNTY CARROLL	
JOB NO. J1P3275	
CONTRACT ID.	
PROJECT NO.	
BRIDGE NO. A27472	

DATE	DESCRIPTION

MISSOURI HIGHWAYS AND TRANSPORTATION COMMISSION
105 WEST CAPITOL
JEFFERSON CITY, MO 65102
1-888-ASK-MODOT (1-888-275-6636)

IF A SEAL IS PRESENT ON THIS SHEET IT HAS BEEN ELECTRONICALLY SEALED AND DATED.

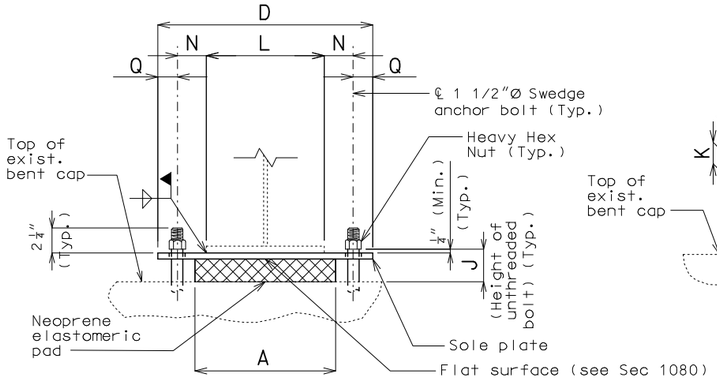

END VIEW

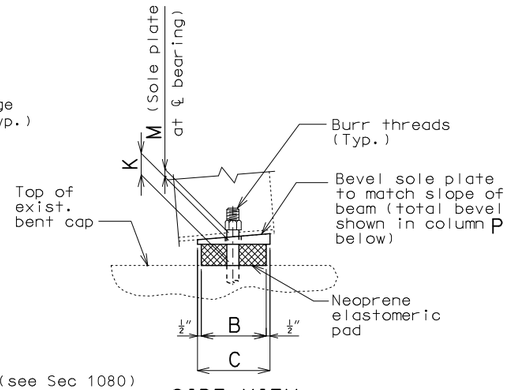

SIDE VIEW

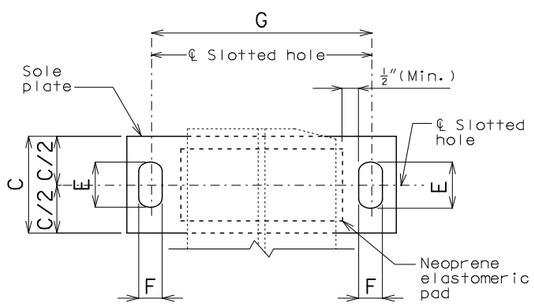

PART PLAN

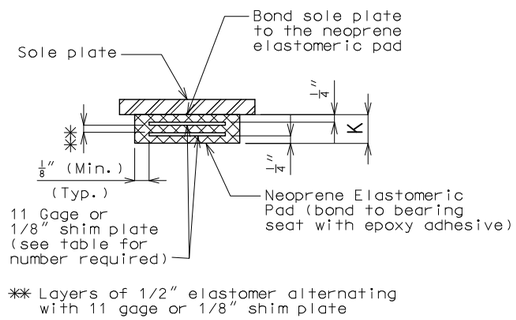

✳✳ Layers of 1/2" elastomer alternating with 11 gage or 1/8" shim plate

NEOPRENE ELASTOMERIC PAD

EXPANSION BEARINGS																	
BENT NO.	A	B	C	D	E	F	G	J	K	L	M	N	P	Q	R	NUMBER OF SHIM PLATES ✳	NUMBER REQUIRED
1AL	11	9	10	18 1/2	3 1/2	1 5/8	14	3 3/4	1 7/8	10	1 1/4	2	–	2 1/4	–	3	6
1AR	11	8	9	18 1/2	4	1 5/8	14	4	2 1/2	10	1 1/4	2	–	2 1/4	1/16"	4	6
																TOTAL BEARINGS	12

✳ The required shim plate shall be placed between layers of elastomer and molded together to form an integral unit.

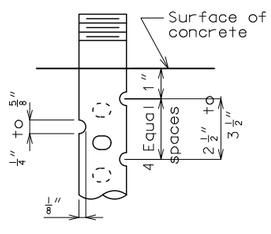

DETAIL OF 3/4"Ø THRU 2 1/2"Ø ANCHOR BOLTS

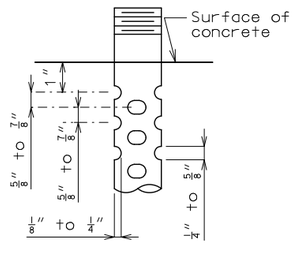

OPTIONAL DETAIL OF 1 3/8"Ø THRU 2 1/2"Ø ANCHOR BOLTS

SWEDGE ANCHOR BOLT DETAILS

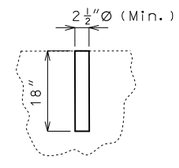

DETAIL OF ANCHOR BOLT WELLS

Shift new anchor bolt wells the min. extent necessary so as not to damage existing beam cap reinforcement.

For location of anchor bolt wells, see Sheet No. 9.

GENERAL NOTES:

Anchor bolts shall be 1 1/2" Ø ASTM F1554 Grade 55 swedged bolts and shall extend 15" into the concrete with ASTM A563 Grade A Heavy Hex nuts. Actual manufacturer's certified mill test reports (chemical and mechanical) shall be provided. Swedging shall be 1" less than extension into the concrete.

Anchor bolt shall be at the ℄ of slotted hole at 60°F. Bearing position shall be adjusted R for each 10° fall or rise in temperature at installation.

Anchor bolts and heavy hex nuts shall be coated with a minimum of two coats of inorganic zinc primer to provide a total dry film thickness of 4 mils minimum, 6 mils maximum, or galvanized in accordance with Sec 1081.

Neoprene elastomeric pads shall be 60 Durometer.

Structural steel for sole plate shall be ASTM A709 Grade 50 and shall be coated with a minimum of two coats of inorganic zinc primer to provide a total dry film thickness of 4 mils minimum, 6 mils maximum.

Laminated Neoprene Bearing Pad Assembly shall be in accordance with Sec 716.

Existing anchor bolts shall be removed one inch below top of existing concrete beam and the resulting holes shall be filled with an approved qualified special mortar.

Cost of anchor bolts, drilling, grouting and any incidental labor or materials, complete in place, will be considered completely covered by the contract unit price for Laminated Neoprene Bearing Pad Assembly.

LAMINATED NEOPRENE BEARING PAD ASSEMBLY

Detailed June 2021
Checked July 2021

Note: This drawing is not to scale. Follow dimensions.

STATE OF MISSOURI
TED S. KOESTER
NUMBER PE-2013000591
PROFESSIONAL ENGINEER
THIS SHEET HAS BEEN SIGNED, SEALED AND DATED ELECTRONICALLY.

DATE PREPARED 8/23/2021	
ROUTE 24	STATE MO
DISTRICT BR	SHEET NO. 5
COUNTY CARROLL	
JOB NO. J1P3275	
CONTRACT ID.	
PROJECT NO.	
BRIDGE NO. A27472	

DATE	DESCRIPTION

MISSOURI HIGHWAYS AND TRANSPORTATION COMMISSION
105 WEST CAPITOL
JEFFERSON CITY, MO 65102
1-888-ASK-MODOT (1-888-275-6636)

IF A SEAL IS PRESENT ON THIS SHEET IT HAS BEEN ELECTRONICALLY SEALED AND DATED.

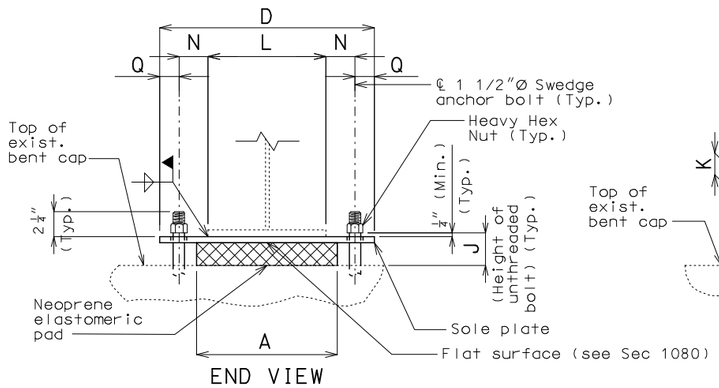

END VIEW

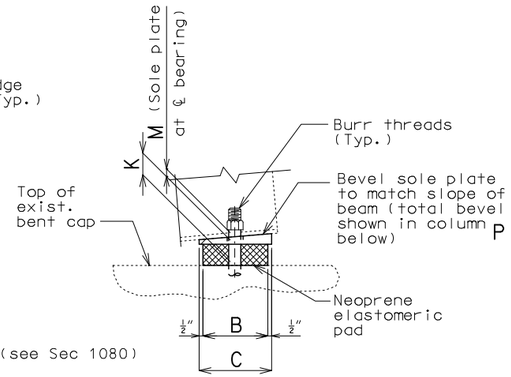

SIDE VIEW

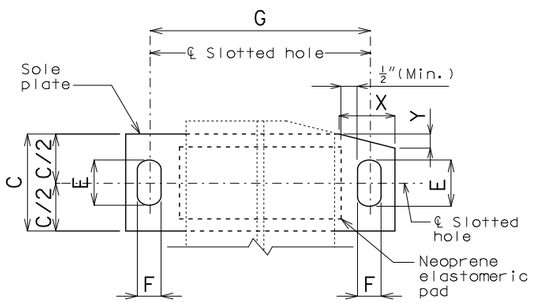

PART PLAN

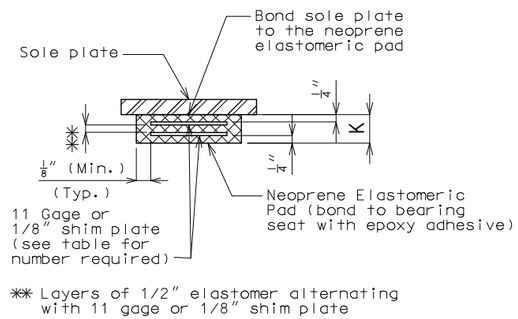

NEOPRENE ELASTOMERIC PAD

EXPANSION BEARINGS																			
BENT NO.	A	B	C	D	E	F	G	J	K	L	M	N	P	Q	R	X	Y	NUMBER OF SHIM PLATES ✳	NUMBER REQUIRED
4L	11	8	9	18 1/2	4	1 5/8	14	3 3/8	1 7/8	10	1 1/4	2	–	2 1/4	1/16"	3 7/8	1 1/4	3	6
																		TOTAL BEARINGS	6

✳ The required shim plate shall be placed between layers of elastomer and molded together to form an integral unit.

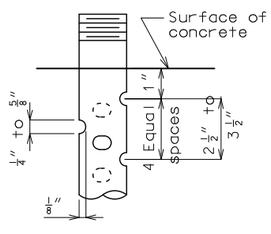

DETAIL OF 3/4"Ø THRU 2 1/2"Ø ANCHOR BOLTS

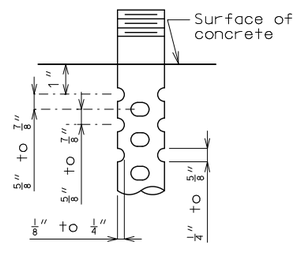

OPTIONAL DETAIL OF 1 3/8"Ø THRU 2 1/2"Ø ANCHOR BOLTS

SWEDGE ANCHOR BOLT DETAILS

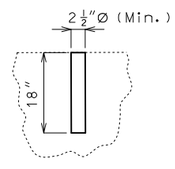

DETAIL OF ANCHOR BOLT WELLS

Shift new anchor bolt wells the min. extent necessary so as not to damage existing beam cap reinforcement.

For location of anchor bolt wells, see Sheet No. 9.

GENERAL NOTES:

Anchor bolts shall be 1 1/2" Ø ASTM F1554 Grade 55 swedged bolts and shall extend 15" into the concrete with ASTM A563 Grade A Heavy Hex nuts. Actual manufacturer's certified mill test reports (chemical and mechanical) shall be provided. Swedging shall be 1" less than extension into the concrete.

Anchor bolt shall be at the ℄ of slotted hole at 60°F. Bearing position shall be adjusted R for each 10° fall or rise in temperature at installation.

Anchor bolts and heavy hex nuts shall be coated with a minimum of two coats of inorganic zinc primer to provide a total dry film thickness of 4 mils minimum, 6 mils maximum, or galvanized in accordance with Sec 1081.

Neoprene elastomeric pads shall be 60 Durometer.

Structural steel for sole plate shall be ASTM A709 Grade 50 and shall be coated with a minimum of two coats of inorganic zinc primer to provide a total dry film thickness of 4 mils minimum, 6 mils maximum.

Laminated Neoprene Bearing Pad Assembly shall be in accordance with Sec 716.

Existing anchor bolts shall be removed one inch below top of existing concrete beam and the resulting holes shall be filled with an approved qualified special mortar.

Cost of anchor bolts, drilling, grouting and any incidental labor or materials, complete in place, will be considered completely covered by the contract unit price for Laminated Neoprene Bearing Pad Assembly.

LAMINATED NEOPRENE BEARING PAD ASSEMBLY

Detailed June 2021
Checked July 2021

Note: This drawing is not to scale. Follow dimensions.

STATE OF MISSOURI
TED S. KOESTER
NUMBER PE-2013000591
PROFESSIONAL ENGINEER
THIS SHEET HAS BEEN SIGNED, SEALED AND DATED ELECTRONICALLY.

DATE PREPARED 8/23/2021	
ROUTE 24	STATE MO
DISTRICT BR	SHEET NO. 6
COUNTY CARROLL	
JOB NO. J1P3275	
CONTRACT ID.	
PROJECT NO.	
BRIDGE NO. A27472	

DATE	DESCRIPTION

MISSOURI HIGHWAYS AND TRANSPORTATION COMMISSION
105 WEST CAPITOL
JEFFERSON CITY, MO 65102
1-888-ASK-MODOT (1-888-275-6636)

IF A SEAL IS PRESENT ON THIS SHEET IT HAS BEEN ELECTRONICALLY SEALED AND DATED.

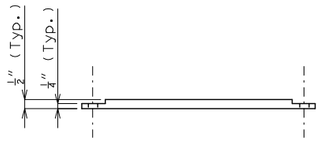

ELEVATION OF GALVANIZED STEEL STOPPER PLATE

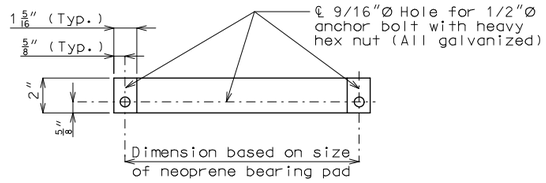

PLAN OF GALVANIZED STEEL STOPPER PLATE

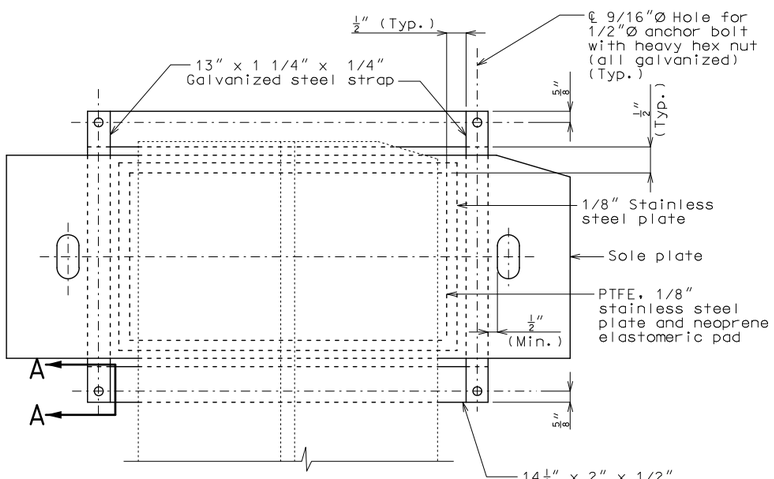

PART PLAN SHOWING STOPPER PLATE

Stopper plates and straps shall be provided to prevent loss of support due to creeping of PTFE bearings. Payment for fabricating and installing the stopper plates and straps will be considered completely covered by the contract unit price for Type N PTFE Bearing.

The bottom face of the 1/8" stainless steel plate that is welded to the sole plate shall be lubricated with a lubricant that is approved by the bearing manufacturer.

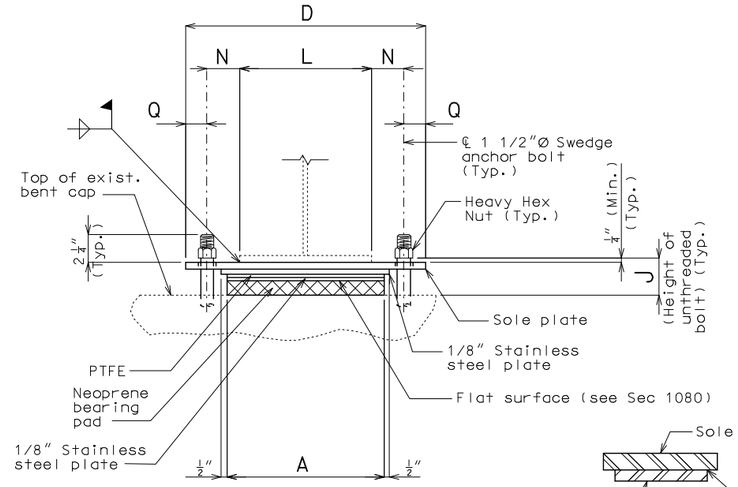

END VIEW

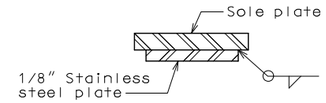

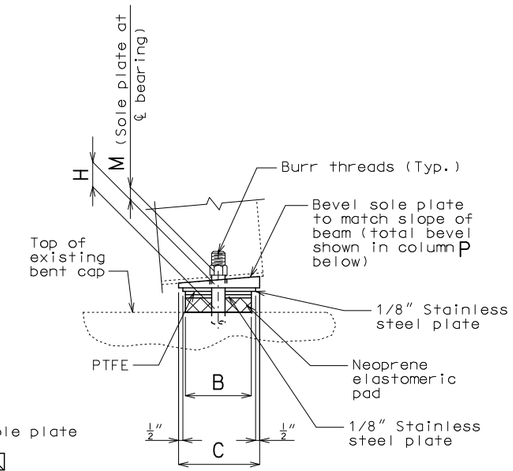

SIDE VIEW

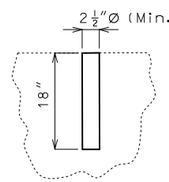

DETAIL OF ANCHOR BOLT WELLS

Shift new anchor bolt wells the min. extent necessary so as not to damage existing beam cap reinforcement.

For location of anchor bolt wells, see Sheet No. 9.

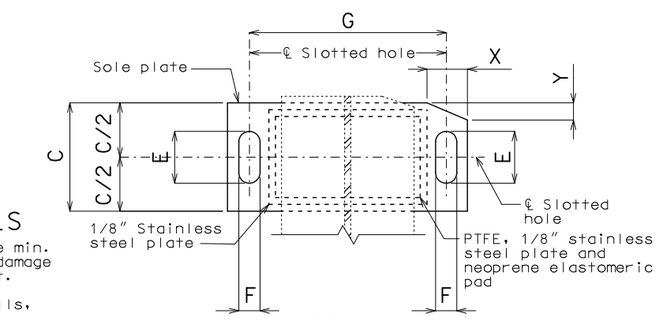

PART PLAN

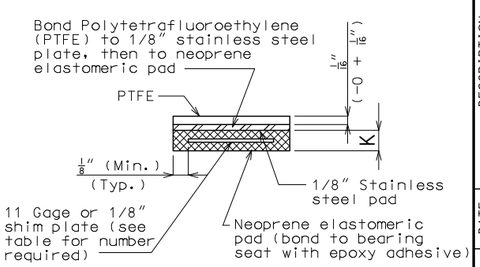

NEOPRENE ELASTOMERIC PAD

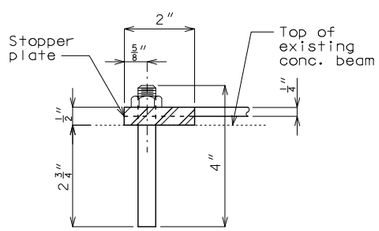

SECTION A-A

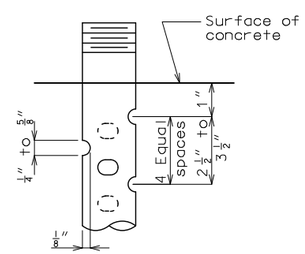

DETAIL FOR 3/4"Ø THRU 2 1/2"Ø ANCHOR BOLTS

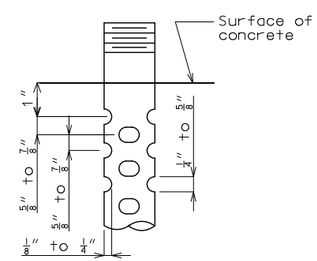

OPTIONAL DETAIL FOR 1 3/8"Ø THRU 2 1/2"Ø ANCHOR BOLTS

SWEDGE ANCHOR BOLT DETAILS

PTFE SLIDING BEARINGS																				
BENT NO.	A	B	C	D	E	F	G	H	J	K	L	M	N	P	Q	R	X	Y	NUMBER OF SHIM PLATES ✳	NUMBER REQUIRED
4R	11	8	11 3/4	19 1/2	5	1 5/8	15	1 9/16	2 7/8	1 1/4	9	1 5/16	2	–	2 1/4	1/16"	–	–	2	6
16	11	8	11 3/4	19 1/2	5	1 5/8	15	1 9/16	2 7/8	1 1/4	9	1 5/16	2 1/2	–	2 1/4	1/16"	3 5/8	1 1/2	2	6
																			TOTAL BEARINGS	12

✳ The required shim plate shall be placed between layers of elastomer and molded together to form an integral unit.

TYPE N PTFE BEARINGS

GENERAL NOTES:

Design coefficient of friction equals 0.06.

Anchor bolts shall be 1 1/2"Ø ASTM F1554 Grade 55 swedged bolts and shall extend 15" into the concrete with ASTM A563 Grade A Heavy Hex nuts. Actual manufacturer's certified mill test reports (chemical and mechanical) shall be provided. Swedging shall be 1" less than extension into the concrete.

Anchor bolts shall be at the ℄ of slotted hole at 60°F. Bearing position shall be adjusted R for each 10° fall or rise in temperature at installation.

Anchor bolts and heavy hex nuts shall be coated with a minimum of two coats of inorganic zinc primer to provide a total dry film thickness of 4 mils minimum, 6 mils maximum, or galvanized in accordance with Sec 1081.

Neoprene elastomeric pads shall be 60 Durometer.

Structural steel for sole plate shall be ASTM A709 Grade 50 and shall be coated with a minimum of two coats of inorganic zinc primer to provide a total dry film thickness of 4 mils minimum, 6 mils maximum. The stainless steel plate shall be protected from any coating.

Type N PTFE Bearings shall be in accordance with Sec 716.

PTFE surface shall be fabricated as a single piece. Splicing will not be permitted.

Existing anchor bolts shall be removed one inch below top of existing concrete beam and the resulting holes shall be filled with an approved qualified special mortar.

Cost of anchor bolts, drilling, grouting and any incidental labor or materials, complete in place, will be considered completely covered by the contract unit price for Type N PTFE Bearing.

STATE OF MISSOURI
TED S. KOESTER
NUMBER PE-2013000591
PROFESSIONAL ENGINEER
THIS SHEET HAS BEEN SIGNED, SEALED AND DATED ELECTRONICALLY.

DATE PREPARED	
8/23/2021	
ROUTE 24	STATE MO
DISTRICT BR	SHEET NO. 7
COUNTY CARROLL	
JOB NO. J1P3275	
CONTRACT ID.	
PROJECT NO.	
BRIDGE NO. A27472	

DATE	DESCRIPTION

IF A SEAL IS PRESENT ON THIS SHEET IT HAS BEEN ELECTRONICALLY SEALED AND DATED.

MISSOURI HIGHWAYS AND TRANSPORTATION COMMISSION
105 WEST CAPITOL
JEFFERSON CITY, MO 65102
1-888-ASK-MODOT (1-888-275-6636)

Detailed June 2021
Checked July 2021

Note: This drawing is not to scale. Follow dimensions.

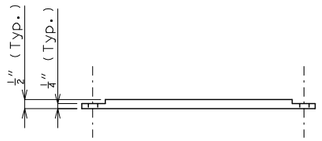

ELEVATION OF GALVANIZED STEEL STOPPER PLATE

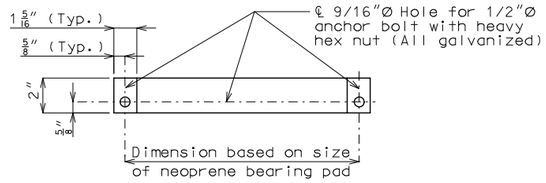

PLAN OF GALVANIZED STEEL STOPPER PLATE

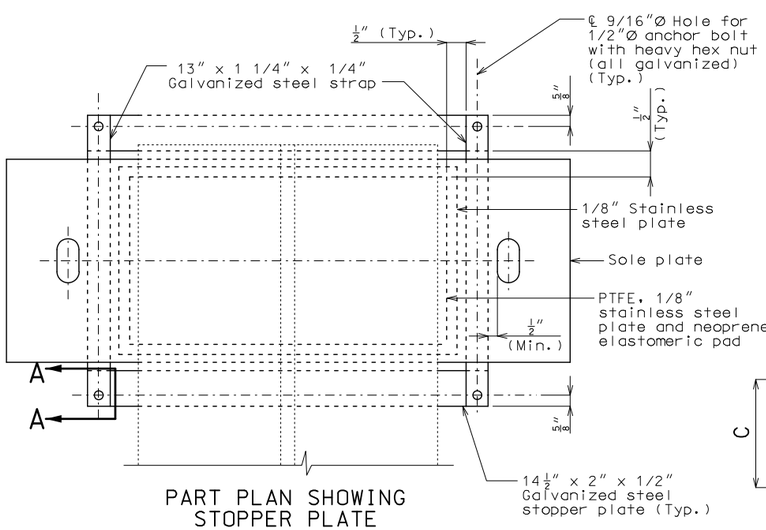

PART PLAN SHOWING STOPPER PLATE

Stopper plates and straps shall be provided to prevent loss of support due to creeping of PTFE bearings. Payment for fabricating and installing the stopper plates and straps will be considered completely covered by the contract unit price for Type N PTFE Bearing.

The bottom face of the 1/8" stainless steel plate that is welded to the sole plate shall be lubricated with a lubricant that is approved by the bearing manufacturer.

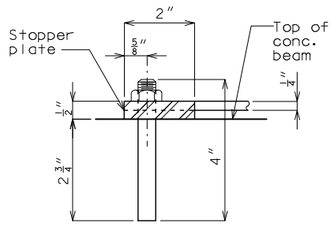

SECTION A-A

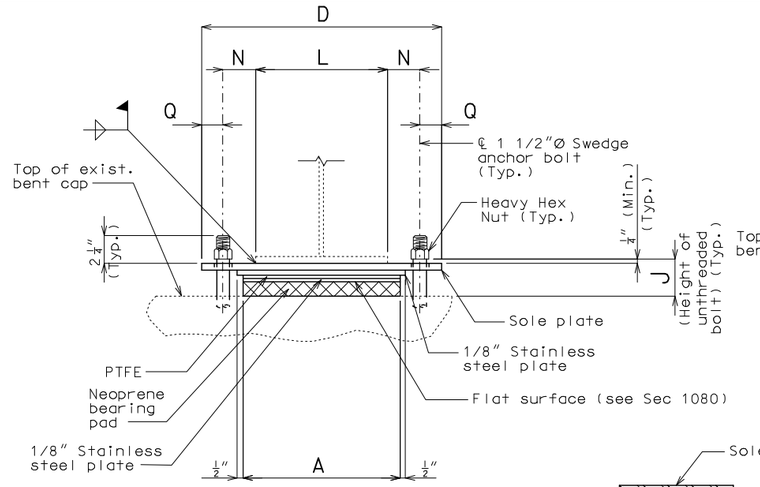

END VIEW

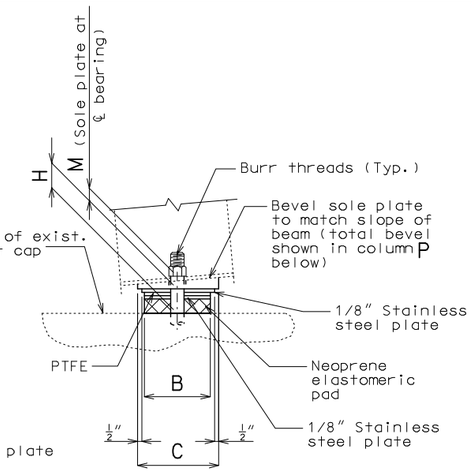

SIDE VIEW

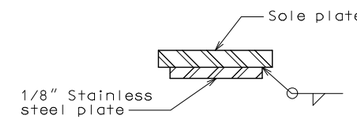

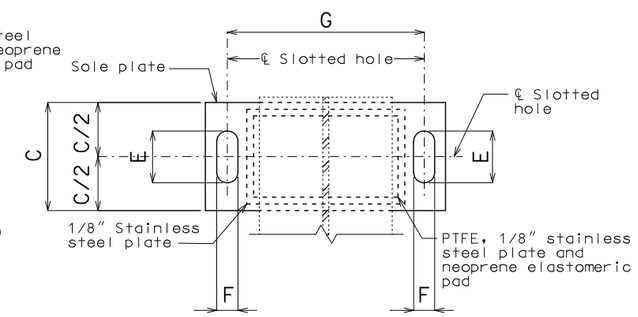

PART PLAN

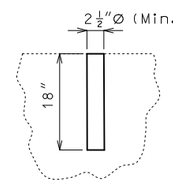

DETAIL OF ANCHOR BOLT WELLS

Shift new anchor bolt wells the min. extent necessary so as not to damage existing beam cap reinforcement.

For location of anchor bolt wells, see Sheet No. 9.

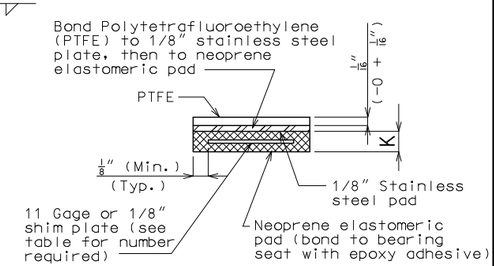

NEOPRENE ELASTOMERIC PAD

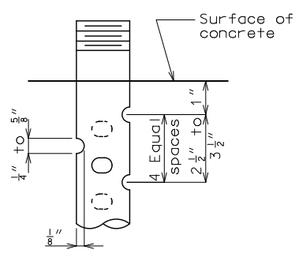

DETAIL FOR 3/4"Ø THRU 2 1/2"Ø ANCHOR BOLTS

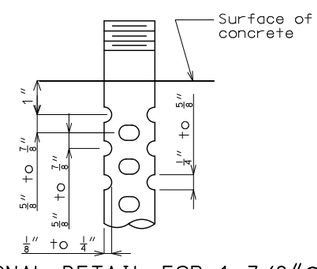

OPTIONAL DETAIL FOR 1 3/8"Ø THRU 2 1/2"Ø ANCHOR BOLTS

SWEDGE ANCHOR BOLT DETAILS

GENERAL NOTES:

Design coefficient of friction equals 0.06.

Anchor bolts shall be 1 1/2"Ø ASTM F1554 Grade 55 swedged bolts and shall extend 15" into the concrete with ASTM A563 Grade A Heavy Hex nuts. Actual manufacturer's certified mill test reports (chemical and mechanical) shall be provided. Swedging shall be 1" less than extension into the concrete.

Anchor bolts shall be at the ℄ of slotted hole at 60°F. Bearing position shall be adjusted R for each 10° fall or rise in temperature at installation.

Anchor bolts and heavy hex nuts shall be coated with a minimum of two coats of inorganic zinc primer to provide a total dry film thickness of 4 mils minimum, 6 mils maximum, or galvanized in accordance with Sec 1081.

Neoprene elastomeric pads shall be 60 Durometer.

Structural steel for sole plate shall be ASTM A709 Grade 50 and shall be coated with a minimum of two coats of inorganic zinc primer to provide a total dry film thickness of 4 mils minimum, 6 mils maximum. The stainless steel plate shall be protected from any coating.

Type N PTFE Bearings shall be in accordance with Sec 716.

PTFE surface shall be fabricated as a single piece. Splicing will not be permitted.

Existing anchor bolts shall be removed one inch below top of existing concrete beam and the resulting holes shall be filled with an approved qualified special mortar.

Cost of anchor bolts, drilling, grouting and any incidental labor or materials, complete in place, will be considered completely covered by the contract unit price for Type N PTFE Bearing.

PTFE SLIDING BEARINGS

BENT NO.	A	B	C	D	E	F	G	H	J	K	L	M	N	P	Q	R	NUMBER OF SHIM PLATES ✳	NUMBER REQUIRED
10L	11	8	11 3/4	19 1/2	5	1 5/8	15	1 9/16	2 7/8	1 1/4	9	1 5/16	2	–	2 1/4	1/16"	2	6
10R	11	8	11 3/4	19 1/2	5	1 5/8	15	1 9/16	2 7/8	1 1/4	9	1 5/16	2	–	2 1/4	1/16"	2	6
																	TOTAL BEARINGS	12

✳ The required shim plate shall be placed between layers of elastomer and molded together to form an integral unit.

TYPE N PTFE BEARINGS

Detailed June 2021
Checked July 2021

Note: This drawing is not to scale. Follow dimensions.

STATE OF MISSOURI
TED S. KOESTER
NUMBER PE-2013000591
PROFESSIONAL ENGINEER
THIS SHEET HAS BEEN SIGNED, SEALED AND DATED ELECTRONICALLY.

DATE PREPARED	
8/23/2021	
ROUTE 24	STATE MO
DISTRICT BR	SHEET NO. 8
COUNTY CARROLL	
JOB NO. J1P3275	
CONTRACT ID.	
PROJECT NO.	
BRIDGE NO. A27472	

DATE	DESCRIPTION

IF A SEAL IS PRESENT ON THIS SHEET IT HAS BEEN ELECTRONICALLY SEALED AND DATED.

MISSOURI HIGHWAYS AND TRANSPORTATION COMMISSION
105 WEST CAPITOL
JEFFERSON CITY, MO 65102
1-888-ASK-MODOT (1-888-275-6636)

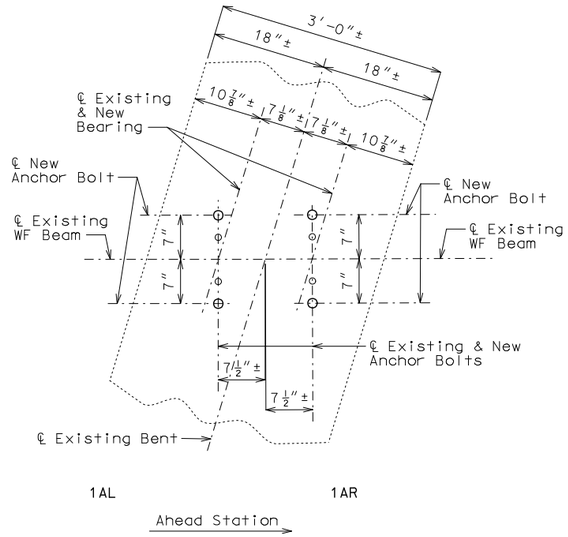

PART PLAN OF INT. BENT NO. 1A
SHOWING ANCHOR BOLT LOCATIONS

For details of bearings at 1A, see Sheet No. 5.

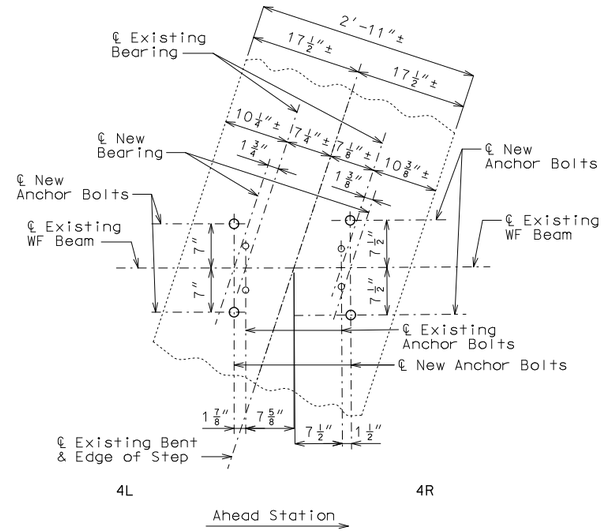

PART PLAN OF INT. BENT NO. 4
SHOWING ANCHOR BOLT LOCATIONS

For details of bearings at 4L, see Sheet No. 6.
For details of bearings at 4R, see Sheet No. 7.

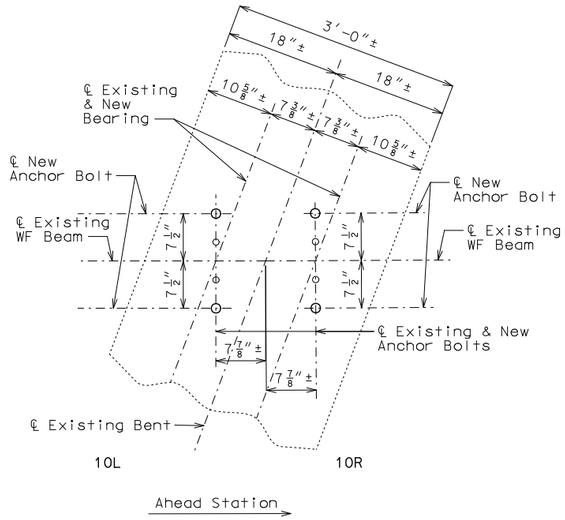

PART PLAN OF INT. BENT NO. 10
SHOWING ANCHOR BOLT LOCATIONS

For details of bearings at Bent No. 10, see Sheet No. 8.

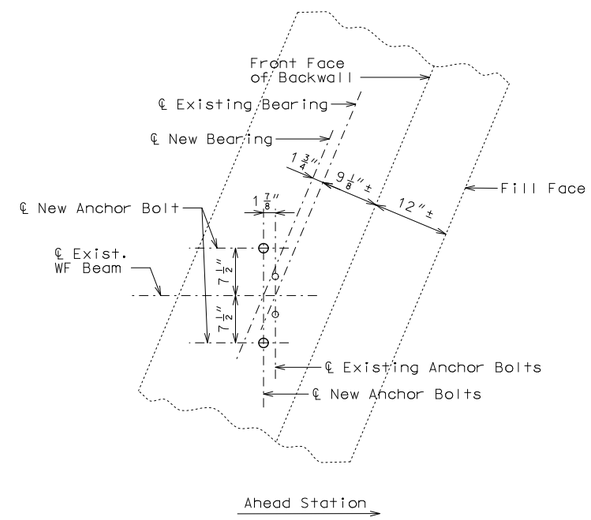

PART PLAN OF END BENT NO. 16
SHOWING ANCHOR BOLT LOCATIONS

For details of bearings at Bent No. 16, see Sheet No. 7.

BEARING LOCATIONS

Detailed Aug. 2021
Checked Aug. 2021

Note: This drawing is not to scale. Follow dimensions.

STATE OF MISSOURI
TED S. KOESTER
NUMBER PE-2013000591
PROFESSIONAL ENGINEER
THIS SHEET HAS BEEN SIGNED, SEALED AND DATED ELECTRONICALLY.

DATE PREPARED	
8/23/2021	
ROUTE 24	STATE MO
DISTRICT BR	SHEET NO. 9
COUNTY CARROLL	
JOB NO. J1P3275	
CONTRACT ID.	
PROJECT NO.	
BRIDGE NO. A27472	

DATE	DESCRIPTION

MISSOURI HIGHWAYS AND TRANSPORTATION COMMISSION
105 WEST CAPITOL
JEFFERSON CITY, MO 65102
1-888-ASK-MODOT (1-888-275-6636)

IF A SEAL IS PRESENT ON THIS SHEET IT HAS BEEN ELECTRONICALLY SEALED AND DATED.

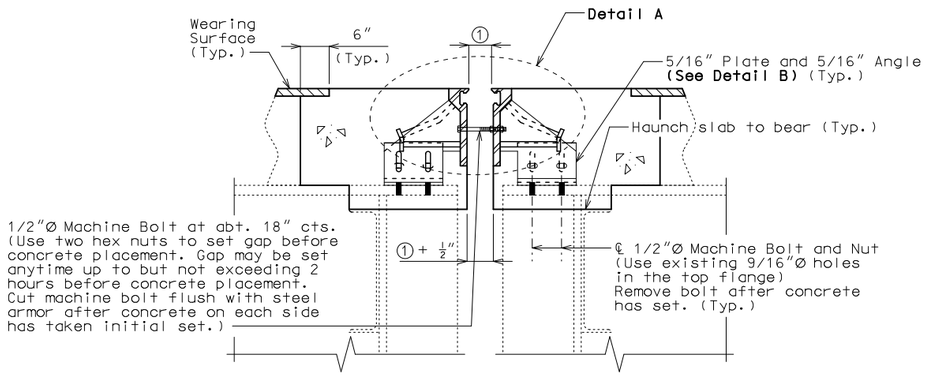

SECTION A-A

Strip seal gland and slab reinforcement not shown for clarity.

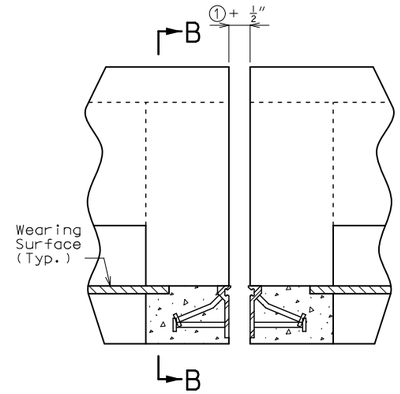

PART ELEVATION OF BARRIER

Strip seal gland not shown for clarity.

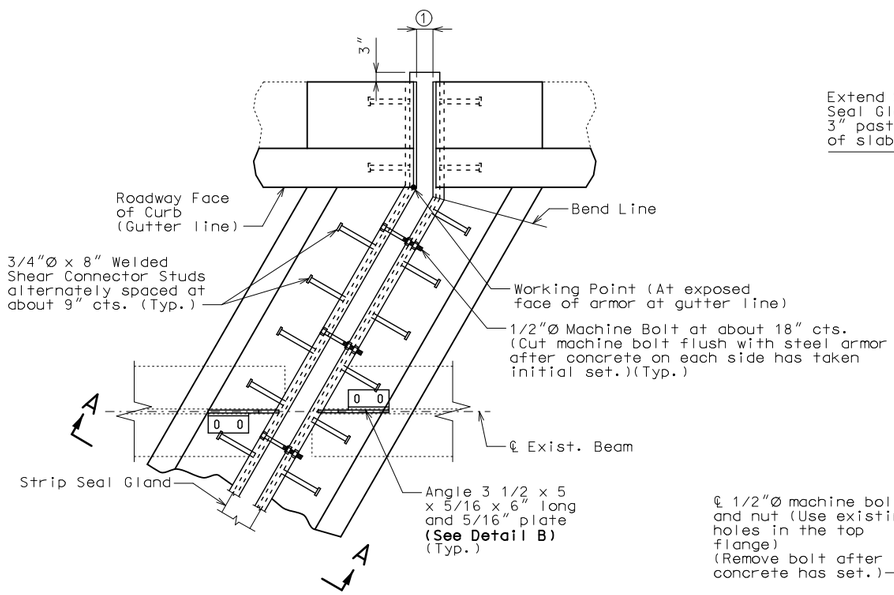

PART PLAN

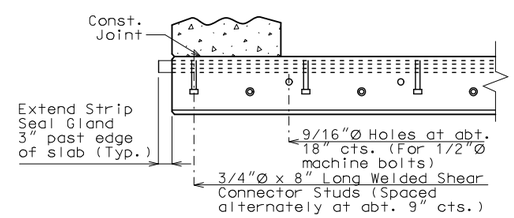

PART SECTION B-B

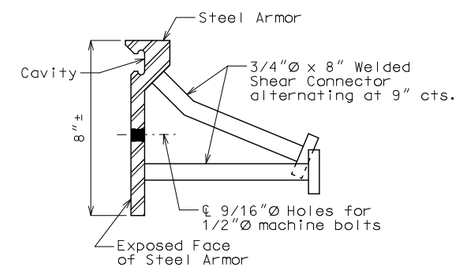

DETAIL OF JOINT ARMOR

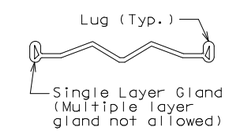

DETAIL OF GLAND

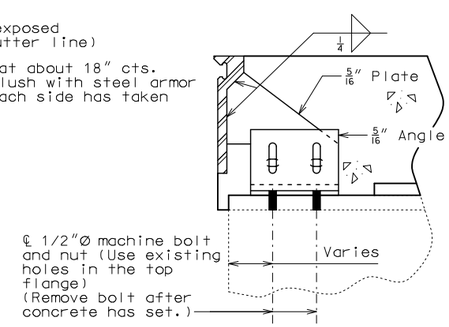

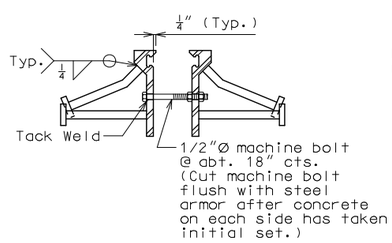

DETAIL A

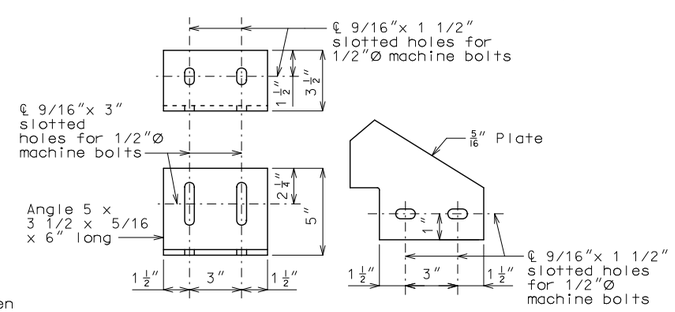

DETAIL B

GENERAL NOTES:

Expansion joint system shall be fabricated in one section, except for staged construction and when the length is over 50 feet. A complete joint penetration groove welded splice shall be required. Welds shall be ground flush to provide a smooth surface. The expansion joint system shall be fabricated and installed to the crown and grade of the roadway.

The strip seal gland shall be installed in joints in one continuous piece without field splices. Factory splicing will be permitted for joints in excess of 53 feet.

Structural steel for the expansion joint system shall be ASTM A709 Grade 36 except the steel armor may be ASTM A709 Grade 50W. Anchors for the expansion joint system shall be in accordance with Sec 1037. Strip seal expansion joint system shall be in accordance with Sec 717.

Structural steel for the expansion joint system shall be coated with a minimum of two coats of inorganic zinc primer to provide a total dry film thickness of 4 mils minimum, 6 mils maximum, or galvanized in accordance with ASTM A123. Anchors need not be protected from overspray.

Longitudinal reinforcing steel shall be cut/bent so that ends shall be 1" from the vertical leg of the steel armor at the expansion joint system.

Concrete shall be forced under and around steel armor and anchors. Proper consolidation of the concrete shall be achieved by localized internal vibration.

② The installation temperature shall be taken as the actual air temperature averaged over the 24-hour period immediately preceding installation.

③ MoDOT Construction personnel will indicate the strip seal expansion joint system installed.

Steel armor may also be referred to as extrusion or rail.

Work this sheet with Sheet No. 11.

Table of Allowed Transverse Strip Seal Expansion Joint System

	Manufacturer	Strip Seal System (Designated Name)	Movement Parallel to RDWY	① Allowed Installation Gap Normal to Joint at RDWY Surface @ Air/Surface Temperature ②						③
				@ 40°F	@ 50°F	@ 60°F	@ 70°F	@ 80°F	@ 90°F	
Bent 1A	D S Brown	Strip seal L2-400	15/16"	2 1/8"	2 1/16"	2"	1 15/16"	1 7/8"	1 13/16"	□
	D S Brown	Strip seal L2-500	15/16"	2 1/8"	2 1/16"	2"	1 15/16"	1 7/8"	1 13/16"	□
	Watson Bowman Acme (Wabo)	Strip seal SE-300	15/16"	2 1/8"	2 1/16"	2"	1 15/16"	1 7/8"	1 13/16"	□
	Watson Bowman Acme (Wabo)	Strip seal SE-400	15/16"	2 1/8"	2 1/16"	2"	1 15/16"	1 7/8"	1 13/16"	□
	Watson Bowman Acme (Wabo)	Strip seal SE-500	15/16"	2 1/8"	2 1/16"	2"	1 15/16"	1 7/8"	1 13/16"	□
Bent 4	D S Brown	Strip seal L2-400	2 9/16"	2 5/16"	2 3/16"	2"	1 13/16"	1 11/16"	1 1/2"	□
	D S Brown	Strip seal L2-500	2 9/16"	2 5/16"	2 3/16"	2"	1 13/16"	1 11/16"	1 1/2"	□
	Watson Bowman Acme (Wabo)	Strip seal SE-400	2 9/16"	2 5/16"	2 3/16"	2"	1 13/16"	1 11/16"	1 1/2"	□
Bent 10	D S Brown	Strip seal L2-500	3 3/16"	2 7/8"	2 11/16"	2 1/2"	2 5/16"	2 1/8"	1 7/8"	□

STRIP SEAL EXPANSION JOINT SYSTEM AT INTERMEDIATE BENTS NO. 1A, 4 & 10

Detailed June 2021
Checked July 2021

Note: This drawing is not to scale. Follow dimensions.

STATE OF MISSOURI
TED S. KOESTER
NUMBER PE-2013000591
PROFESSIONAL ENGINEER
THIS SHEET HAS BEEN SIGNED, SEALED AND DATED ELECTRONICALLY.

DATE PREPARED	
8/23/2021	
ROUTE 24	STATE MO
DISTRICT BR	SHEET NO. 10
COUNTY CARROLL	
JOB NO. J1P3275	
CONTRACT ID.	
PROJECT NO.	
BRIDGE NO. A27472	

DATE	DESCRIPTION

IF A SEAL IS PRESENT ON THIS SHEET IT HAS BEEN ELECTRONICALLY SEALED AND DATED.

MISSOURI HIGHWAYS AND TRANSPORTATION COMMISSION
105 WEST CAPITOL
JEFFERSON CITY, MO 65102
1-888-ASK-MODOT (1-888-275-6636)

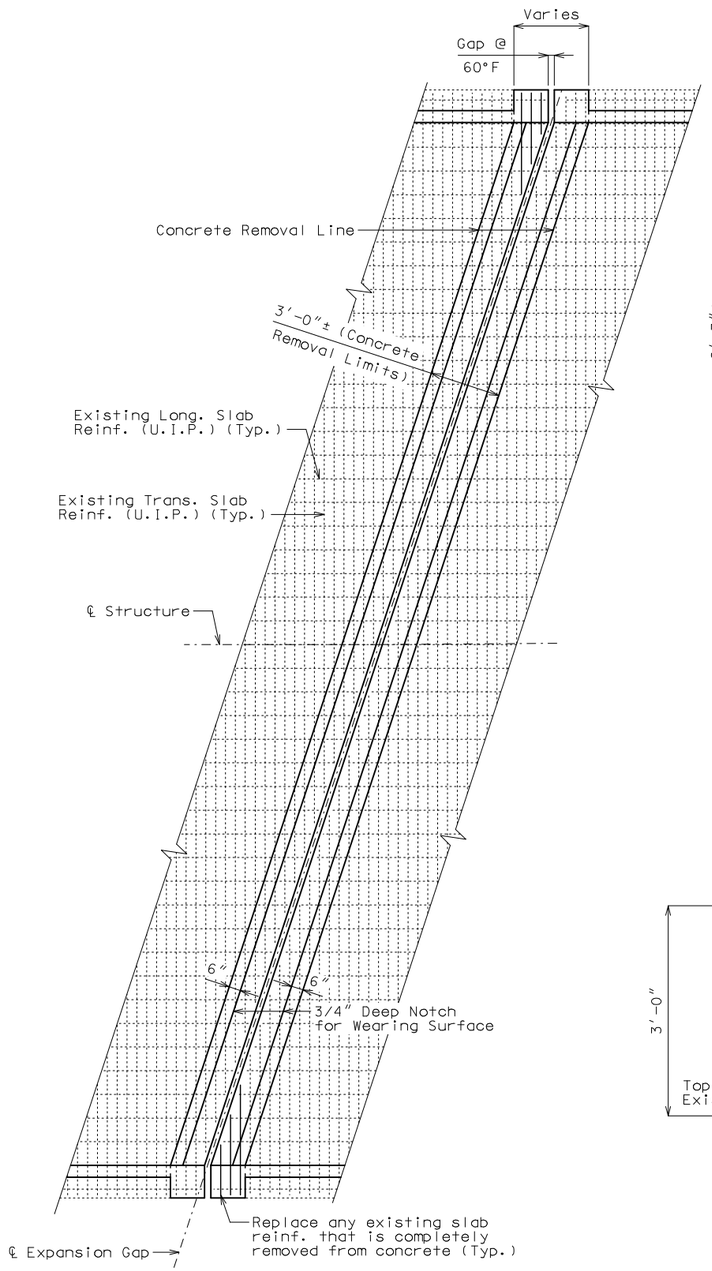

PART PLAN OF SLAB

Expansion device not shown for clarity.

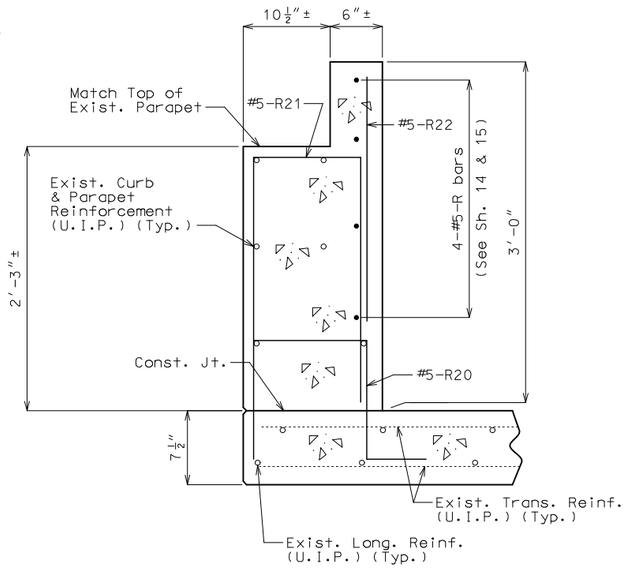

SECTION A-A

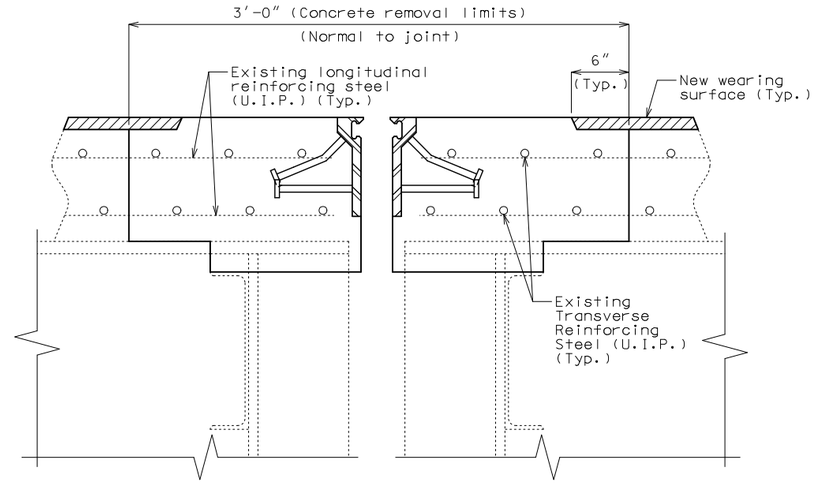

PART SECTION THRU SLAB AT INT. BENT

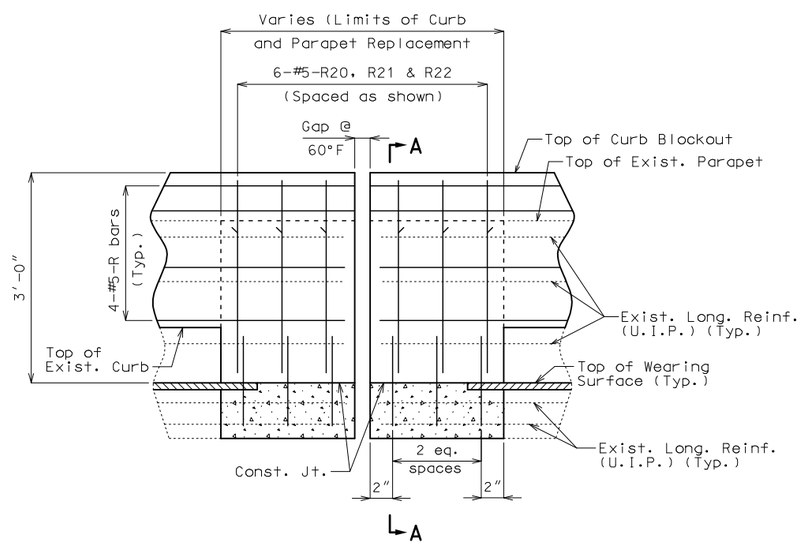

PART ELEVATION SHOWING CURB AND PARAPET REPLACEMENT

Expansion device not shown for clarity.

Notes:

Concrete in the curb blockout and parapet shall be Class B-1.

Slab concrete shall be Class B-2.

Payment for removal and replacement of all concrete and reinforcement in curb blockout and parapet in the limits shown, complete in place, will be considered completely covered by the contract unit price for Remove and Replace Curb and Parapet.

Existing reinforcement not embedded in concrete shall be removed and replaced within the limits shown.

Work this sheet with Sheet No. 10.

SLAB REPLACEMENT AT INT. BENTS NO. 1A, 4 & 10

Detailed Aug. 2021
Checked Aug. 2021

Note: This drawing is not to scale. Follow dimensions.

STATE OF MISSOURI
TED S. KOESTER
NUMBER PE-2013000591
PROFESSIONAL ENGINEER

THIS SHEET HAS BEEN SIGNED, SEALED AND DATED ELECTRONICALLY.

DATE PREPARED	
8/23/2021	
ROUTE 24	STATE MO
DISTRICT BR	SHEET NO. 11
COUNTY CARROLL	
JOB NO. J1P3275	
CONTRACT ID.	
PROJECT NO.	
BRIDGE NO. A27472	

DATE	DESCRIPTION

MISSOURI HIGHWAYS AND TRANSPORTATION COMMISSION
105 WEST CAPITOL
JEFFERSON CITY, MO 65102
1-888-ASK-MODOT (1-888-275-6636)

IF A SEAL IS PRESENT ON THIS SHEET IT HAS BEEN ELECTRONICALLY SEALED AND DATED.

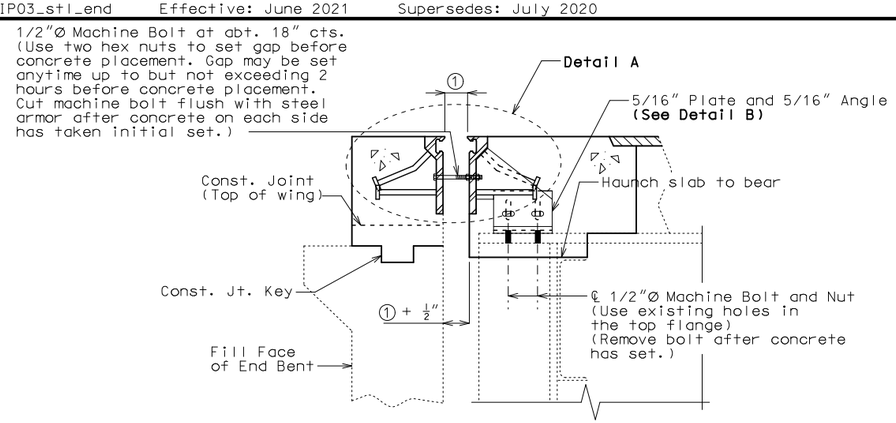

SECTION A-A

Strip seal gland and slab reinforcement not shown for clarity.

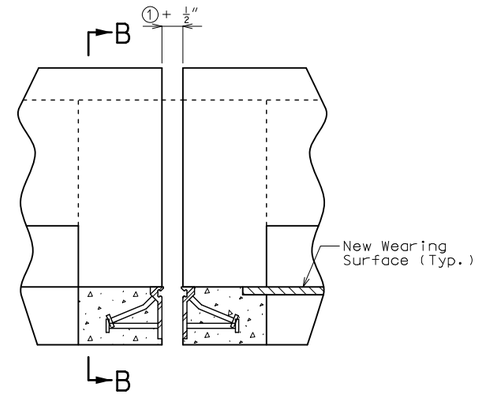

PART ELEVATION OF BARRIER

Strip seal gland not shown for clarity.

GENERAL NOTES:

Expansion joint system shall be fabricated in one section, except for staged construction and when the length is over 50 feet. A complete joint penetration groove welded splice shall be required. Welds shall be ground flush to provide a smooth surface. The expansion joint system shall be fabricated and installed to the crown and grade of the roadway.

The strip seal gland shall be installed in joints in one continuous piece without field splices. Factory splicing will be permitted for joints in excess of 53 feet.

Structural steel for the expansion joint system shall be ASTM A709 Grade 36 except the steel armor may be ASTM A709 Grade 50W. Anchors for the expansion joint system shall be in accordance with Sec 1037. Strip seal expansion joint system shall be in accordance with Sec 717.

Structural steel for the expansion joint system shall be coated with a minimum of two coats of inorganic zinc primer to provide a total dry film thickness of 4 mils minimum, 6 mils maximum, or galvanized in accordance with ASTM A123. Anchors need not be protected from overspray.

Longitudinal reinforcing steel shall be cut/bent so that ends shall be 1" from the vertical leg of the steel armor at the expansion joint system.

Concrete shall be forced under and around steel armor and anchors. Proper consolidation of the concrete shall be achieved by localized internal vibration.

② The installation temperature shall be taken as the actual air temperature averaged over the 24-hour period immediately preceding installation.

③ MoDOT Construction personnel will indicate the strip seal expansion joint system installed.

Steel armor may also be referred to as extrusion or rail.

Work this sheet with Sheet No. 13.

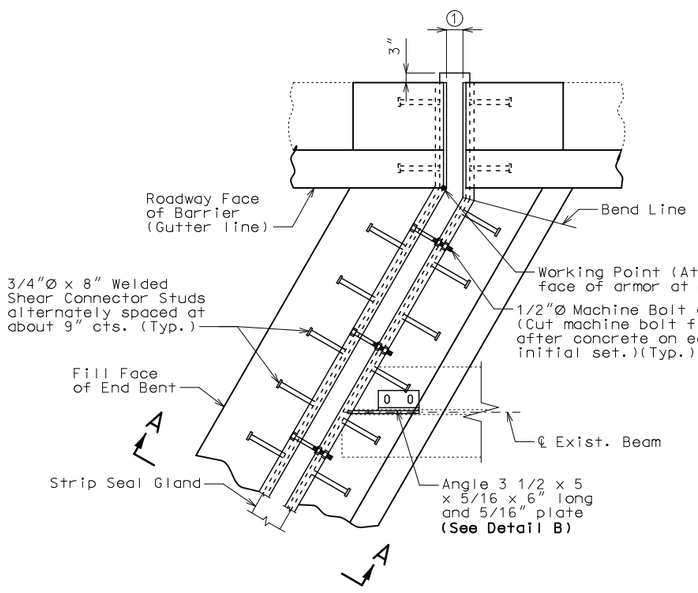

PART PLAN

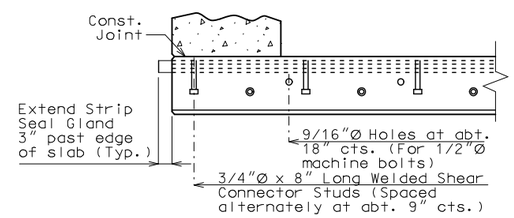

PART SECTION B-B

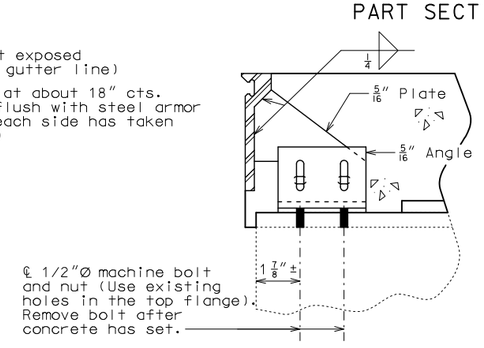

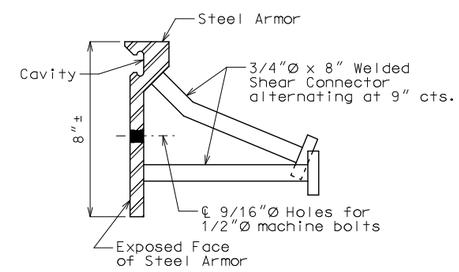

DETAIL OF JOINT ARMOR

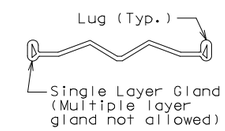

DETAIL OF GLAND

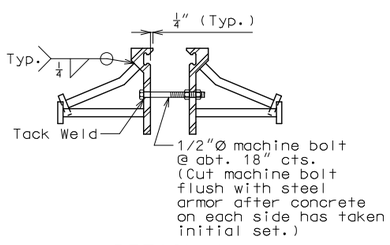

DETAIL A

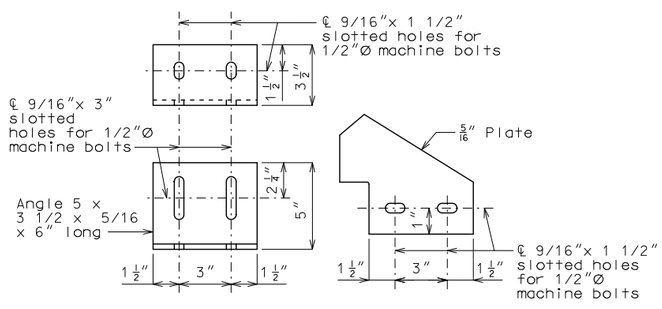

DETAIL B

Table of Allowed Transverse Strip Seal Expansion Joint System

Manufacturer	Strip Seal System (Designated Name)	Movement Parallel to RDWY	Allowed Installation Gap ① Normal to Joint at RDWY Surface @ Air/Surface Temperature ②						③
			@ 40°F	@ 50°F	@ 60°F	@ 70°F	@ 80°F	@ 90°F	
D S Brown	Strip seal L2-400	1 9/16"	2 3/16"	2 1/8"	2"	1 7/8"	1 13/16"	1 11/16"	□
D S Brown	Strip seal L2-500	1 9/16"	2 3/16"	2 1/8"	2"	1 7/8"	1 13/16"	1 11/16"	□
Watson Bowman Acme (Wabo)	Strip seal SE-300	1 9/16"	2 3/16"	2 1/8"	2"	1 7/8"	1 13/16"	1 11/16"	□
Watson Bowman Acme (Wabo)	Strip seal SE-400	1 9/16"	2 3/16"	2 1/8"	2"	1 7/8"	1 13/16"	1 11/16"	□
Watson Bowman Acme (Wabo)	Strip seal SE-500	1 9/16"	2 3/16"	2 1/8"	2"	1 7/8"	1 13/16"	1 11/16"	□

STRIP SEAL EXPANSION JOINT SYSTEM AT END BENT NO. 16

Detailed June 2021
Checked July 2021

Note: This drawing is not to scale. Follow dimensions.

STATE OF MISSOURI
TED S. KOESTER
NUMBER PE-2013000591
PROFESSIONAL ENGINEER
THIS SHEET HAS BEEN SIGNED, SEALED AND DATED ELECTRONICALLY.

DATE PREPARED	
8/23/2021	
ROUTE 24	STATE MO
DISTRICT BR	SHEET NO. 12
COUNTY CARROLL	
JOB NO. J1P3275	
CONTRACT ID.	
PROJECT NO.	
BRIDGE NO. A27472	

DATE	DESCRIPTION

IF A SEAL IS PRESENT ON THIS SHEET IT HAS BEEN ELECTRONICALLY SEALED AND DATED.

MISSOURI HIGHWAYS AND TRANSPORTATION COMMISSION
105 WEST CAPITOL
JEFFERSON CITY, MO 65102
1-888-ASK-MODOT (1-888-275-6636)

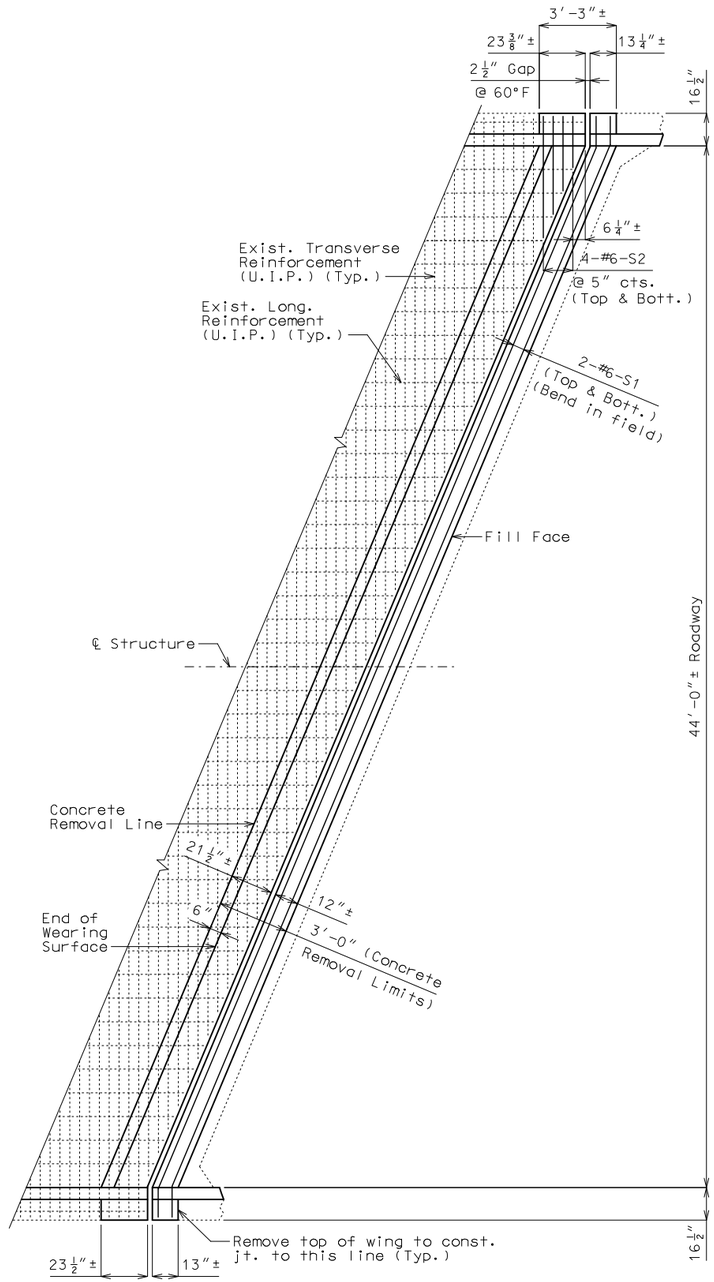

PART PLAN OF SLAB
SHOWING SLAB REINFORCEMENT

Expansion device not shown for clarity.

Notes:

The #6-S1 bars to be segmented to accommodate stage construction. The total bar length for #6-S1 bars shown in Bill of Reinforcing Steel allows for one lap splice with a length of 3'-10". Actual bar segment lengths to be determined by contractor. The contractor may use a mechanical bar splice in lieu of a lap splice. When a mechanical bar splice is used, the actual bar segment length will be determined by contractor to accommodate manufacturer's recommendations for installation and stage construction. The cost of furnishing and installing the bar splices will be considered completely covered by the contract unit price for Reinforcing Steel (Epoxy Coated). No adjustment of the quantity of reinforcing steel will be allowed for the use of mechanical bar splices.

Concrete in the curb blockout and parapet shall be Class B-1.

Slab concrete shall be Class B-2.

Payment for removal and replacement of all concrete and reinforcement in curb blockout and parapet in the limits shown, complete in place, will be considered completely covered by the contract unit price for Remove and Replace Curb and Parapet.

Existing reinforcement not embedded in concrete shall be removed and replaced within the limits shown.

Top of backwall for end bents shall be formed to the crown and grade of the roadway.

Work this sheet with Sheet No. 12.

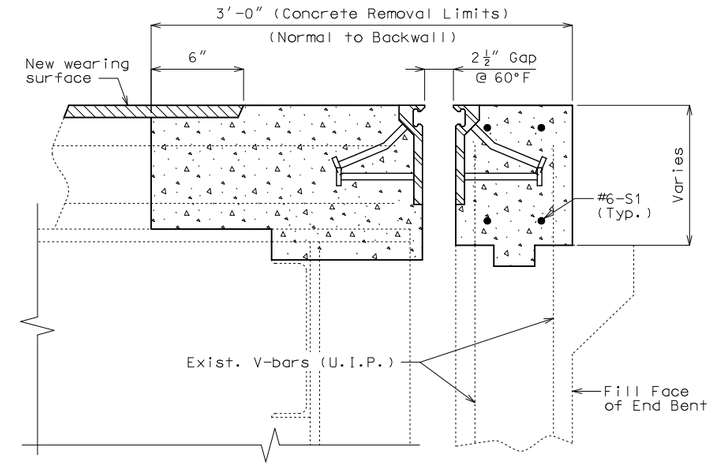

PART SECTION THRU SLAB
SHOWING REINFORCEMENT

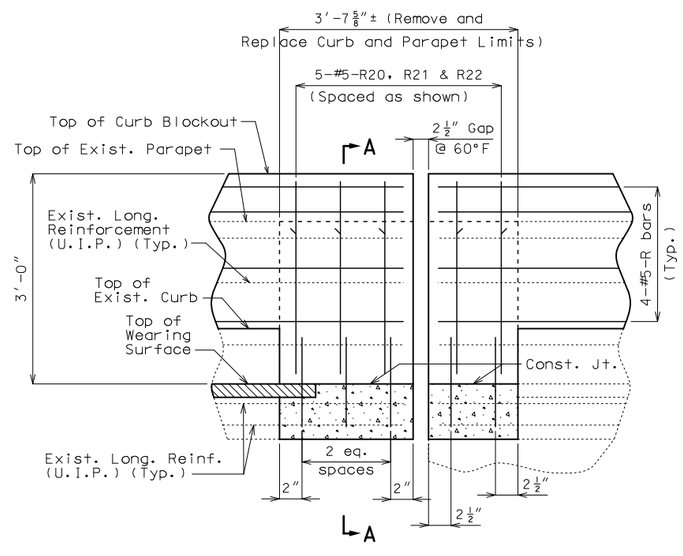

PART ELEVATION OF CURB
BLOCKOUT AND PARAPET

Expansion device and #6-S bars not shown for clarity.

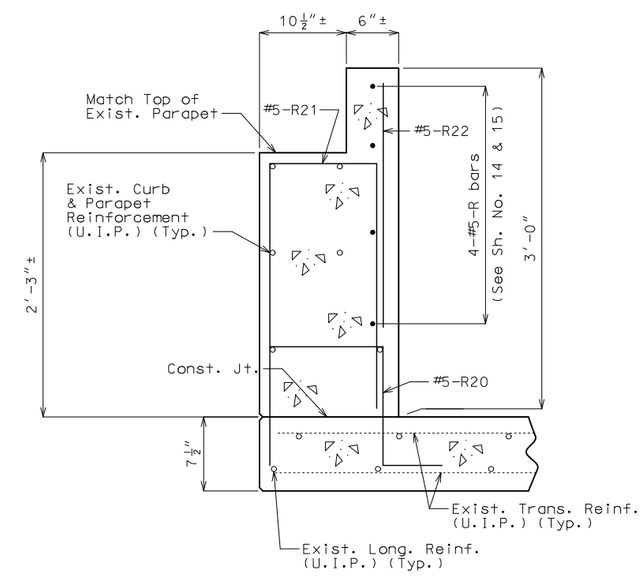

SECTION A-A

SLAB REPLACEMENT AT END BENT NO. 16

Detailed Aug. 2021
Checked Aug. 2021

Note: This drawing is not to scale. Follow dimensions.

STATE OF MISSOURI
TED S. KOESTER
NUMBER
PE-2013000591
PROFESSIONAL ENGINEER

THIS SHEET HAS BEEN SIGNED, SEALED AND DATED ELECTRONICALLY.

DATE PREPARED	8/23/2021
ROUTE	24
STATE	MO
DISTRICT	BR
SHEET NO.	13
COUNTY	CARROLL
JOB NO.	J1P3275
CONTRACT ID.	
PROJECT NO.	
BRIDGE NO.	A27472

DATE	DESCRIPTION

MISSOURI HIGHWAYS AND TRANSPORTATION COMMISSION
105 WEST CAPITOL
JEFFERSON CITY, MO 65102
1-888-ASK-MODOT (1-888-275-6636)

IF A SEAL IS PRESENT ON THIS SHEET IT HAS BEEN ELECTRONICALLY SEALED AND DATED.

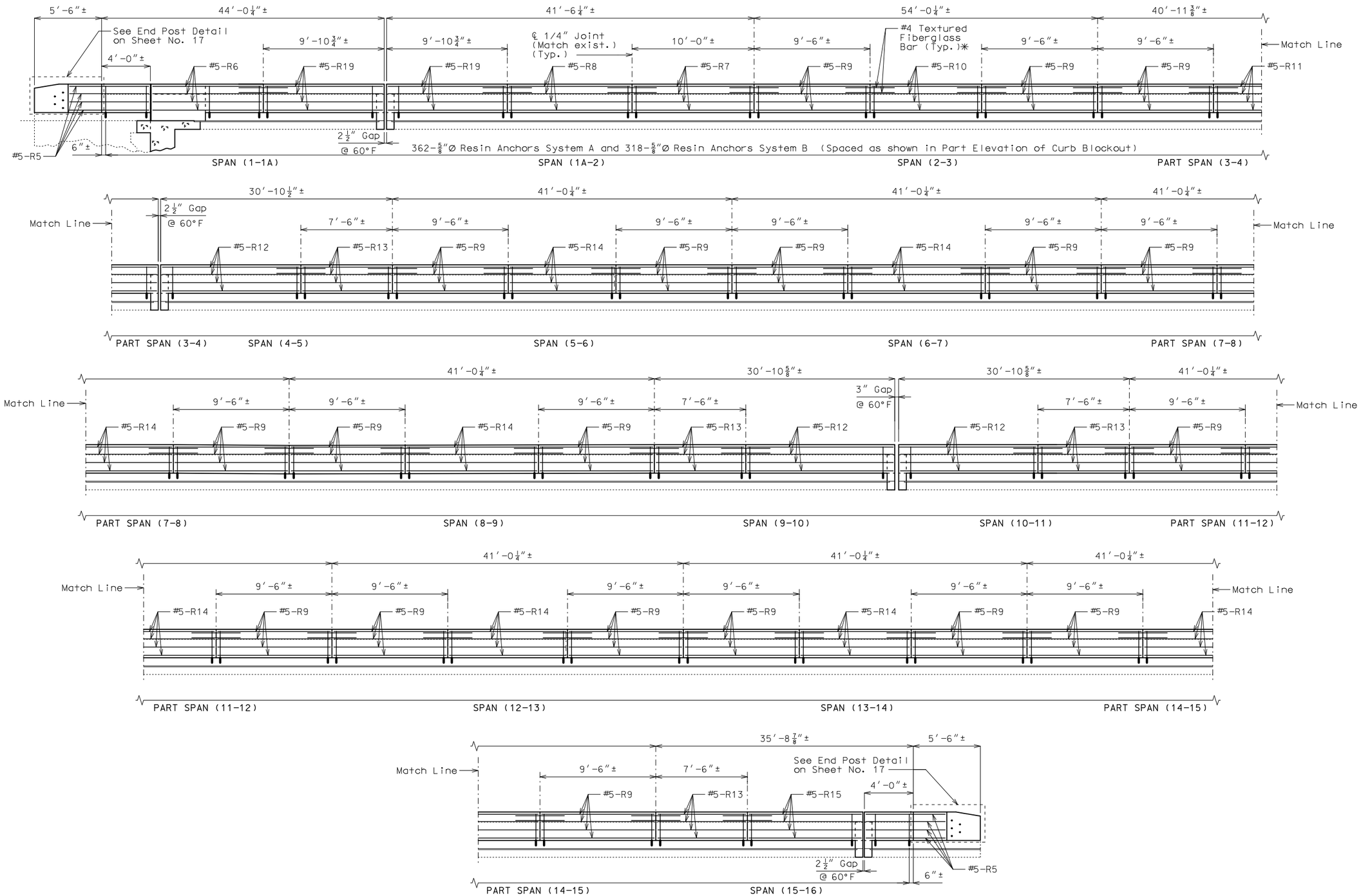

ELEVATION OF LEFT CURB BLOCKOUT

CURB BLOCKOUT

Detailed June 2021
Checked July 2021

Note: This drawing is not to scale. Follow dimensions.

STATE OF MISSOURI
TED S. KOESTER
NUMBER PE-2013000591
PROFESSIONAL ENGINEER
THIS SHEET HAS BEEN SIGNED, SEALED AND DATED ELECTRONICALLY.

DATE PREPARED	
8/23/2021	
ROUTE 24	STATE MO
DISTRICT BR	SHEET NO. 14
COUNTY CARROLL	
JOB NO. J1P3275	
CONTRACT ID.	
PROJECT NO.	
BRIDGE NO. A27472	

DATE	DESCRIPTION

MISSOURI HIGHWAYS AND TRANSPORTATION COMMISSION
105 WEST CAPITOL
JEFFERSON CITY, MO 65102
1-888-ASK-MODOT (1-888-275-6636)

IF A SEAL IS PRESENT ON THIS SHEET IT HAS BEEN ELECTRONICALLY SEALED AND DATED.

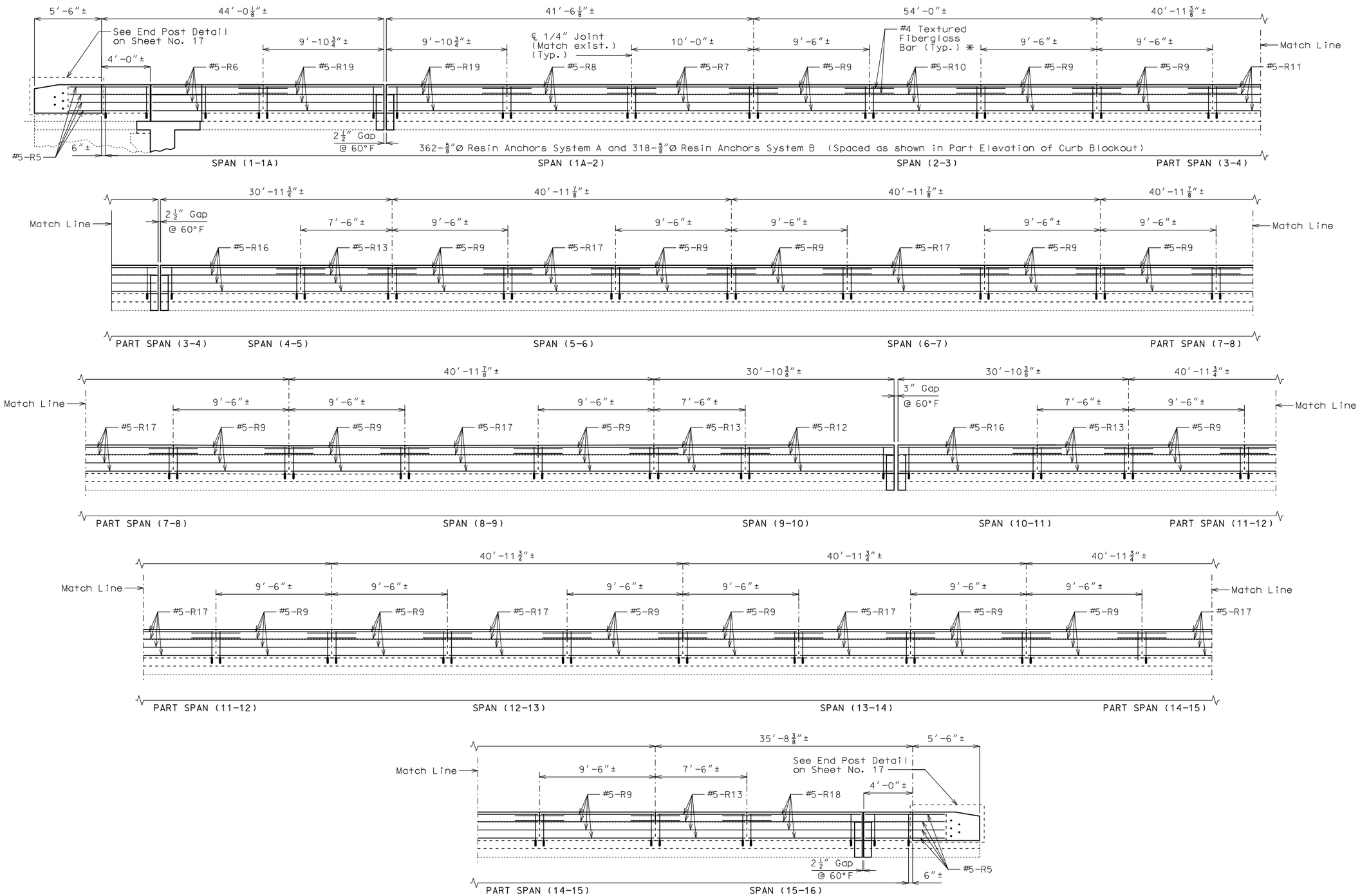

ELEVATION OF RIGHT CURB BLOCKOUT

CURB BLOCKOUT

Detailed June 2021
Checked July 2021

Note: This drawing is not to scale. Follow dimensions.

STATE OF MISSOURI
TED S. KOESTER
NUMBER PE-2013000591
PROFESSIONAL ENGINEER
THIS SHEET HAS BEEN SIGNED, SEALED AND DATED ELECTRONICALLY.

DATE PREPARED	
8/23/2021	
ROUTE 24	STATE MO
DISTRICT BR	SHEET NO. 15
COUNTY CARROLL	
JOB NO. J1P3275	
CONTRACT ID.	
PROJECT NO.	
BRIDGE NO. A27472	

DATE	DESCRIPTION

MISSOURI HIGHWAYS AND TRANSPORTATION COMMISSION
105 WEST CAPITOL
JEFFERSON CITY, MO 65102
1-888-ASK-MODOT (1-888-275-6636)

IF A SEAL IS PRESENT ON THIS SHEET IT HAS BEEN ELECTRONICALLY SEALED AND DATED.

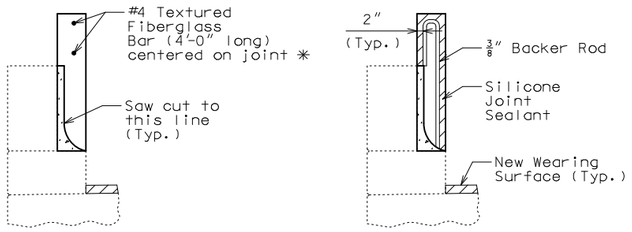

SECTION THRU SAW CUT JOINT

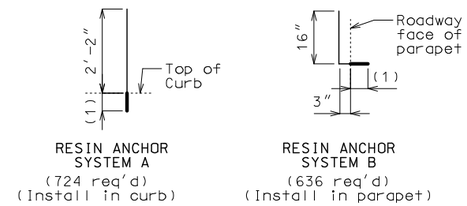

DETAILS OF RESIN ANCHORS

(1) Use manufacturer's embedment length (5" minimum embedment).

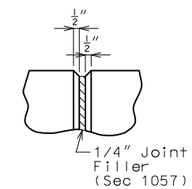

PART ELEVATION AT FORMED JOINT

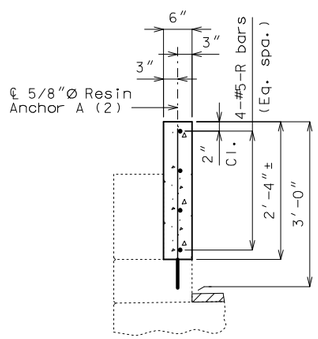

SECTION A-A

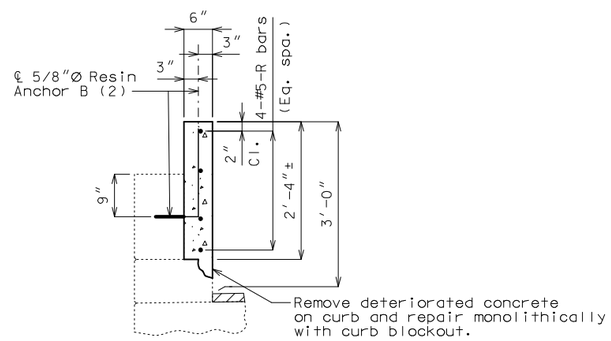

SECTION B-B

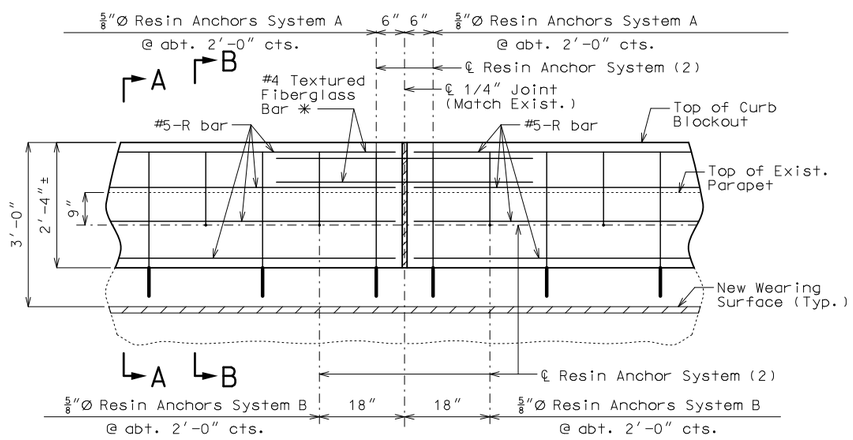

PART ELEVATION OF CURB BLOCKOUT

Notes:

✳ Slip-formed option only.

Conventional forming or slip forming may be used. Saw cut joints may be used with conventional forming.

Bridge rail not shown for clarity.

Concrete in curb blockout shall be Class B-1.

Measurement of curb blockout is to the nearest linear foot, measured at the top outside edge of parapet. (Match existing curb and parapet)

All exposed edges of curb blockout shall have either a 1/2-inch radius or 3/8-inch bevel, unless otherwise noted.

Payment for concrete, reinforcement, resin anchor systems and any other work incidental to the curb blockout, complete in place, will be considered completely covered by the contract unit price for Curb Blockout per linear foot.

Cost of any concrete curb or parapet repair will be considered completely covered by the contract unit price for Curb Blockout.

All curb blockout reinforcement shall be epoxy coated.

(2) Shift resin anchors where necessary to clear existing anchor bolts for bridge rail, miss curb outlets (if present) and clear existing reinforcement.

Use a minimum lap of 3'-1" for #5 horizontal curb blockout bars.

Concrete traffic barrier delineators shall be placed on top of the curb blockout similarly as shown on Missouri Standard Plans 617.10 and in accordance with Sec 617. Delineators on bridges with two-lane, two-way traffic shall have retroflective sheeting on both sides. Concrete traffic barrier delineators will be considered completely covered by the contract unit price for Curb Blockout.

The contractor shall use one of the qualified resin anchor systems in accordance with Sec 1039.

The minimum embedment depth in concrete with f'c = 4,000 psi for the resin anchor system shall be that required to meet the minimum ultimate pullout strength in accordance with Sec 1039 but shall not be less than 5 inches.

An epoxy coated #5 Grade 60 reinforcing bar shall be substituted for the 5/8"Ø threaded rod.

For slip-formed option, both sides of the curb blockout shall have a vertically broomed finish and the top shall have a transversely broomed finish.

Work this sheet with Sheet No. 17.

CURB BLOCKOUT

Detailed June 2021
Checked July 2021

Note: This drawing is not to scale. Follow dimensions.

STATE OF MISSOURI
TED S. KOESTER
NUMBER PE-2013000591
PROFESSIONAL ENGINEER
THIS SHEET HAS BEEN SIGNED, SEALED AND DATED ELECTRONICALLY.

DATE PREPARED	
8/23/2021	
ROUTE 24	STATE MO
DISTRICT BR	SHEET NO. 16
COUNTY CARROLL	
JOB NO. J1P3275	
CONTRACT ID.	
PROJECT NO.	
BRIDGE NO. A27472	

DATE	DESCRIPTION

IF A SEAL IS PRESENT ON THIS SHEET IT HAS BEEN ELECTRONICALLY SEALED AND DATED.

MISSOURI HIGHWAYS AND TRANSPORTATION COMMISSION
105 WEST CAPITOL
JEFFERSON CITY, MO 65102
1-888-ASK-MODOT (1-888-275-6636)

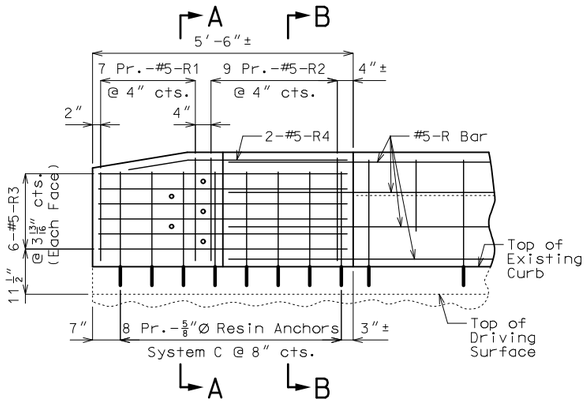

ELEVATION SHOWING REINFORCEMENT

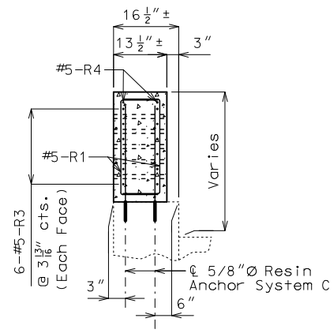

SECTION A-A

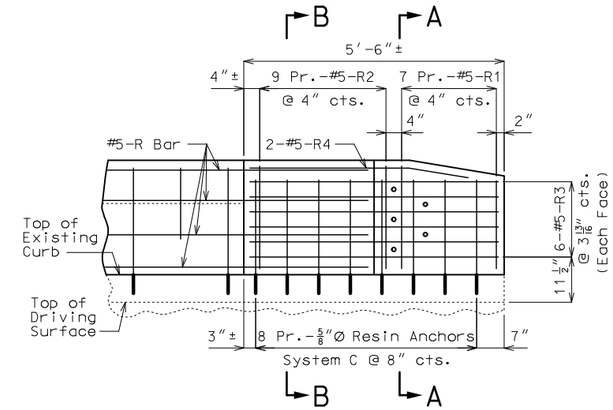

ELEVATION SHOWING REINFORCEMENT

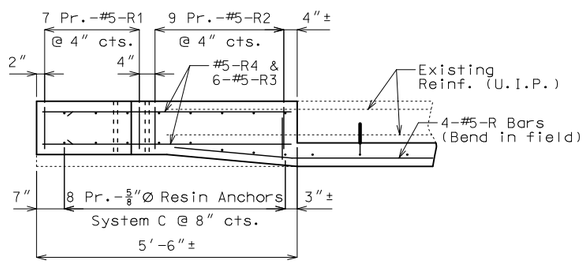

PLAN SHOWING REINFORCEMENT

LEFT END POST AT END BENT NO. 1

(Right End Post at End Bent No. 16 similar)

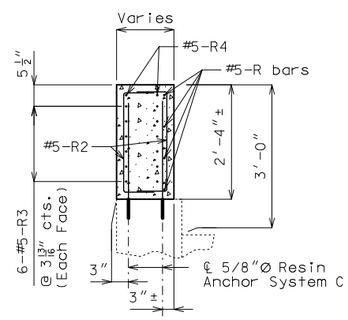

SECTION B-B

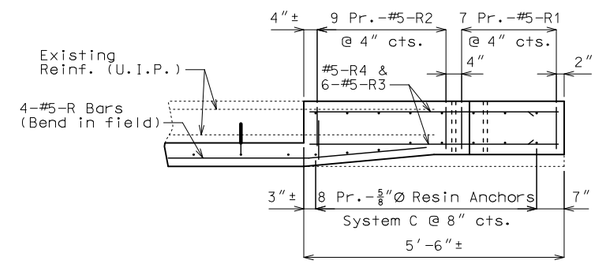

PLAN SHOWING REINFORCEMENT

LEFT END POST AT END BENT NO. 16

(Right End Post at End Bent No. 1 similar)

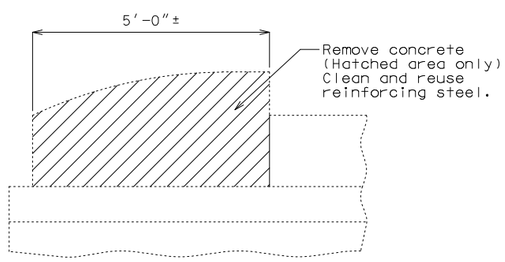

PART ELEVATION SHOWING END POST CONCRETE REMOVAL

Cost of removing existing end posts will be considered completely covered by the contract unit price for Curb Blockout.

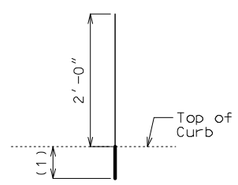

RESIN ANCHOR SYSTEM C

(64 req'd)

DETAILS OF RESIN ANCHORS

(1) Use manufacturer's embedment length (5″ minimum embedment).

Notes:

Work this sheet with Sheet No. 14, 15 & 16.

Resin anchors shall be shifted or bent in field to clear one-inch diameter holes by at least 1/2 inch.

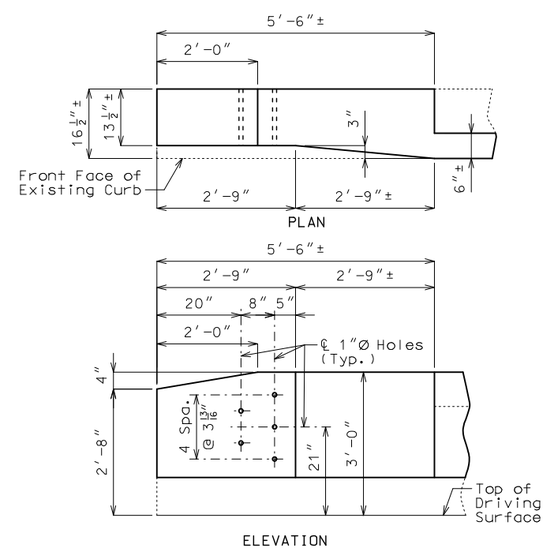

DETAILS OF END POST AND GUARD RAIL ATTACHMENT

CURB BLOCKOUT AT END BENTS

Detailed June 2021
Checked July 2021

Note: This drawing is not to scale. Follow dimensions.

STATE OF MISSOURI
TED S. KOESTER
NUMBER PE-2013000591
PROFESSIONAL ENGINEER
THIS SHEET HAS BEEN SIGNED, SEALED AND DATED ELECTRONICALLY.

DATE PREPARED	
8/23/2021	
ROUTE 24	STATE MO
DISTRICT BR	SHEET NO. 17
COUNTY CARROLL	
JOB NO. J1P3275	
CONTRACT ID.	
PROJECT NO.	
BRIDGE NO. A27472	

DATE	DESCRIPTION

MISSOURI HIGHWAYS AND TRANSPORTATION COMMISSION
105 WEST CAPITOL
JEFFERSON CITY, MO 65102
1-888-ASK-MODOT (1-888-275-6636)

IF A SEAL IS PRESENT ON THIS SHEET IT HAS BEEN ELECTRONICALLY SEALED AND DATED.

BILL OF REINFORCING STEEL

NO. REQ'D.	MARK NO. SIZE	MARK NO. MARK	LOCATION	EPOXY (E)	SHAPE NO.	STIRRUP (S)	SUBSTR. (X)	VARIES (V)	NO. EACH	B FT.	B IN.	C FT.	C IN.	D FT.	D IN.	E FT.	E IN.	F FT.	F IN.	H FT.	H IN.	K FT.	K IN.	NOMINAL LENGTH FT.	NOMINAL LENGTH IN.	ACTUAL LENGTH FT.	ACTUAL LENGTH IN.	WEIGHT LBS.
			END BENT 1																									
3	6	H10	DIAPHRAGM	E	20					52	5.000													52	5	52	5	236
3	6	H11	DIAPHRAGM	E	15	S					17.750	2	3.000							17.000	5.000			3	9	3	8	17
3	6	H12	DIAPHRAGM	E	21	S					17.750	2	3.000							17.000	5.000			3	9	3	6	16
2	6	H13	DIAPHRAGM	E	20					49	6.000													49	6	49	6	149
63	6	U10	DIAPHRAGM	E	19	S				2	7.000	2	7.000											5	2	5	0	473
			SLAB AT																									
			BENT 16																									
4	6	S1	SLAB	E	20					50	1.000													50	1	50	1	301
8	6	S2	SLAB	E	20			V	2	5	1.000													5	1	5	1	
			INCREMENT =							2	2.000													2	2	2	2	44
			11.625 INCH																									
			CURB																									
			BLOCKOUT																									
56	5	R1	BLOCKOUT	E	10	S		V	8			10.500		21.000										3	6	3	4	
			INCREMENT =									10.500		2	0.000									3	9	3	7	202
			0.500 INCH																									
72	5	R2	BLOCKOUT	E	10	S						10.500		2	0.000									3	9	3	7	269
48	5	R3	BLOCKOUT	E	20					5	3.000													5	3	5	3	263
8	5	R4	BLOCKOUT	E	23	S					16.250	3	4.000							2.625	16.000			4	8	4	8	39
16	5	R5	BLOCKOUT	E	20					6	6.000													6	6	6	6	108
8	5	R6	BLOCKOUT	E	20					29	9.000													29	9	29	9	248
8	5	R7	BLOCKOUT	E	20					9	9.000													9	9	9	9	81
8	5	R8	BLOCKOUT	E	20					21	4.000													21	4	21	4	178
152	5	R9	BLOCKOUT	E	20					9	3.000													9	3	9	3	1466
8	5	R10	BLOCKOUT	E	20					34	9.000													34	9	34	9	290
8	5	R11	BLOCKOUT	E	20					31	2.000													31	2	31	2	260
4	5	R12	BLOCKOUT	E	20					23	1.000													23	1	23	1	96
32	5	R13	BLOCKOUT	E	20					7	3.000													7	3	7	3	242
32	5	R14	BLOCKOUT	E	20					21	9.000													21	9	21	9	726
4	5	R15	BLOCKOUT	E	20					23	9.000													23	9	23	9	99
4	5	R16	BLOCKOUT	E	20					23	2.000													23	2	23	2	97
32	5	R17	BLOCKOUT	E	20					21	8.000													21	8	21	8	723
4	5	R18	BLOCKOUT	E	20					23	8.000													23	8	23	8	99
16	5	R19	BLOCKOUT	E	20					9	7.000													9	7	9	7	160
56	5	R20	BLOCKOUT	E	28	S					12.750	13.500		12.750		12.000								4	3	3	11	229
56	5	R21	BLOCKOUT	E	10	S						22.000		13.500										4	10	4	7	268
56	5	R22	BLOCKOUT	E	20					2	4.000													2	4	2	4	136
			TOTALS																									
	5			E																								6279
	6			E																								1236
			TOTAL																									0
			TOTAL	E																								7515

BILL OF REINFORCING STEEL

NO. REQ'D.	MARK NO. SIZE	MARK NO. MARK	LOCATION	EPOXY (E)	SHAPE NO.	STIRRUP (S)	SUBSTR. (X)	VARIES (V)	NO. EACH	B FT.	B IN.	C FT.	C IN.	D FT.	D IN.	E FT.	E IN.	F FT.	F IN.	H FT.	H IN.	K FT.	K IN.	NOMINAL LENGTH FT.	NOMINAL LENGTH IN.	ACTUAL LENGTH FT.	ACTUAL LENGTH IN.	WEIGHT LBS.
			TOTAL																									7515

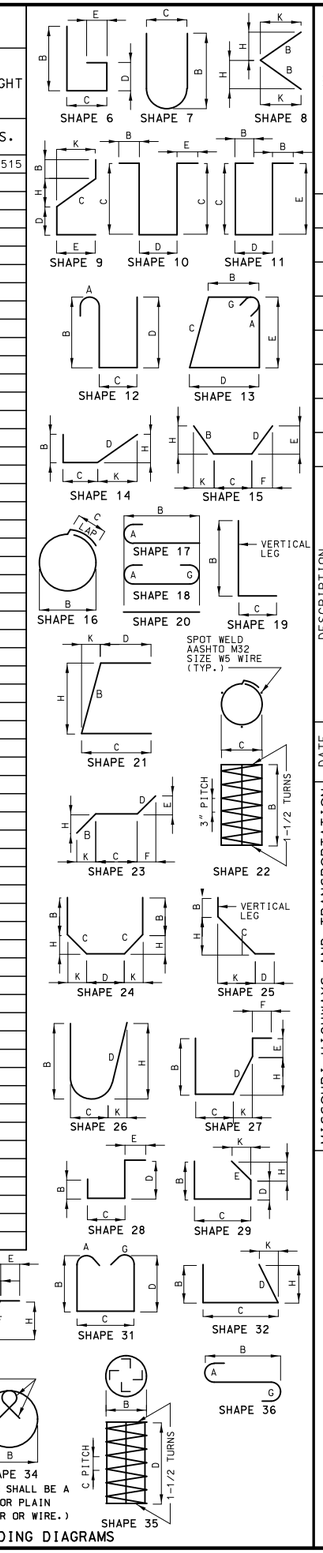

STATE OF MISSOURI
TED S. KOESTER
NUMBER PE-2013000591
PROFESSIONAL ENGINEER
THIS SHEET HAS BEEN SIGNED, SEALED AND DATED ELECTRONICALLY.

DATE PREPARED	8/23/2021
ROUTE	24
STATE	MO
DISTRICT	BR
SHEET NO.	18
COUNTY	CARROLL
JOB NO.	J1P3275
CONTRACT ID.	
PROJECT NO.	
BRIDGE NO.	A27472

DESCRIPTION

DATE

MISSOURI HIGHWAYS AND TRANSPORTATION COMMISSION

105 WEST CAPITOL
JEFFERSON CITY, MO 65102
1-888-ASK-MODOT (1-888-275-6636)

IF A SEAL IS PRESENT ON THIS SHEET IT HAS BEEN ELECTRONICALLY SEALED AND DATED.

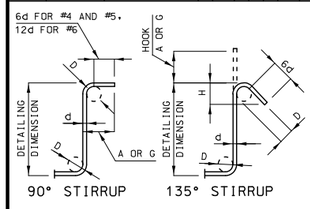

STIRRUP HOOK DIMENSIONS				
GRADES 40 - 50 - 60 KSI				
BAR SIZE	D (IN.)	90° HOOK	135° HOOK	
		HOOK A OR G	HOOK A OR G	APPROX. H
#4	2"	4 1/2"	4 1/2"	3"
#5	2 1/2"	6"	5 1/2"	3 3/4"
#6	4 1/2"	12"	8"	4 1/2"

NOTE: UNLESS OTHERWISE NOTED, DIAMETER "D" IS THE SAME FOR ALL BENDS AND HOOKS ON A BAR.

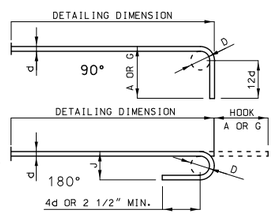

END HOOK DIMENSIONS				
BAR SIZE	D (IN.)	ALL GRADES		
		180° HOOKS		90° HOOKS
		A OR G	J	A OR G
#3	2 1/4"	5"	3"	6"
#4	3"	6"	4"	8"
#5	3 3/4"	7"	5"	10"
#6	4 1/2"	8"	6"	12"
#7	5 1/4"	10"	7"	14"
#8	6"	11"	8"	16"
#9	9 1/2"	15"	11 3/4"	19"
#10	10 3/4"	17"	13 1/4"	22"
#11	12"	19"	14 3/4"	2'-0"
#14	18 1/4"	2'-3"	21 3/4"	2'-7"

NOTE:
ALL STANDARD HOOKS AND BENDS OTHER THAN 180 DEGREE ARE TO BE BENT WITH SAME PROCEDURE AS FOR 90 DEGREE STANDARD HOOKS.

HOOKS AND BENDS SHALL BE IN ACCORDANCE WITH THE PROCEDURES AS SHOWN ON THIS SHEET.

E = EPOXY COATED REINFORCEMENT.
S = STIRRUP.
X = BAR IS INCLUDED IN SUBSTRUCTURE QUANTITIES.
V = BAR DIMENSIONS VARY IN EQUAL INCREMENTS BETWEEN DIMENSIONS SHOWN ON THIS LINE AND THE FOLLOWING LINE.
NO. EA. = NUMBER OF BARS OF EACH LENGTH.

NOMINAL LENGTHS ARE BASED ON OUT TO OUT DIMENSIONS SHOWN IN BENDING DIAGRAMS AND ARE LISTED FOR FABRICATORS USE. (NEAREST INCH)

ACTUAL LENGTHS ARE MEASURED ALONG CENTERLINE BAR TO THE NEAREST INCH.

PAYWEIGHTS ARE BASED ON ACTUAL LENGTHS.

FOUR ANGLE OR CHANNEL SPACERS ARE REQUIRED FOR EACH COLUMN SPIRAL. SPACERS ARE TO BE PLACED ON INSIDE OF SPIRALS. LENGTH AND WEIGHT OF COLUMN SPIRALS DO NOT INCLUDE SPLICES OR SPACERS.

REINFORCING STEEL (GRADE 60) FY = 60,000 PSI.

Detailed Aug. 2021
Checked Aug. 2021

Note: This drawing is not to scale. Follow dimensions.

SEC/SUR 34 TWP 53N RGE 23W

U.I.P. AND REHABILITATE EXISTING (46'-60'-74'-66'-50') CONTINUOUS COMPOSITE PLATE GIRDER SPANS (SKEW: 45°L.A.)

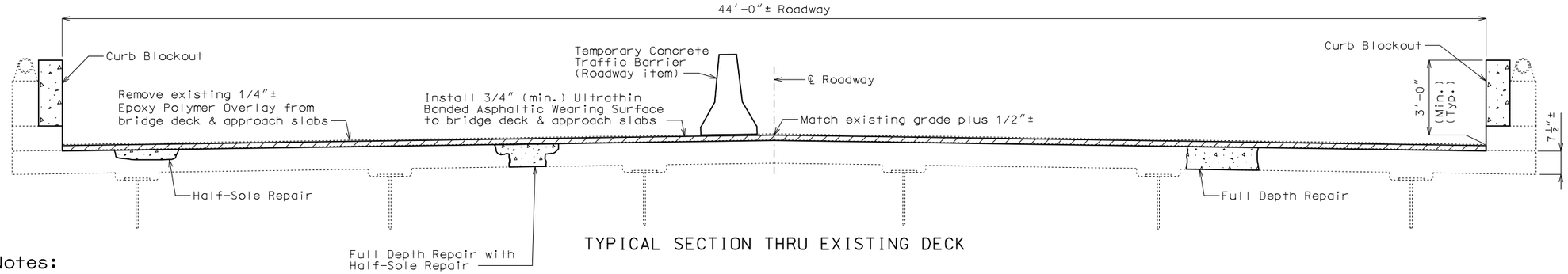

TYPICAL SECTION THRU EXISTING DECK

General Notes:

Design Specifications:

2002 AASTHO LFD (17th Ed.) Standard Specifications
Bridge Deck Rating = 7

Design Loading:

HS20-44 (AASHO 1973 and New Construction)

Design Unit Stresses:

Class B-2 Concrete (Superstructure, except Curb Blockout)	f'c = 4,000 psi
Class B-1 Concrete (Curb Blockout)	f'c = 4,000 psi
Reinforcing Steel (Grade 60)	fy = 60,000 psi

Structural Steel Protective Coating:

Protective Coating: System G in accordance with Sec 1081.

Protective Coating Limits: The surface of all existing structural steel within a distance of not less than 10 feet from ℄ of expansion joint at End Bents No. 1 & 6 shall be recoated with System G.

Surface Preparation: Surface preparation of the existing steel shall be in accordance with Sec 1081 for Recoating of Structural Steel (System G, H or I). The cost of surface preparation will be considered completely covered by the contract unit price per sq. foot for Surface Preparation for Recoating Structural Steel.

Prime Coat: The cost of the prime coat will be considered completely covered by the contract unit price per sq. foot for Field Application of Inorganic Zinc Primer. Tint of the prime coat for System G shall be similar to the color of the field coat to be used.

Field Coat: The color of the finish field coat shall be Gray (Federal Standard #26373). The cost of the intermediate field coat will be considered completely covered by the contract unit price per sq. foot for Intermediate Field Coat (System G). The cost of the finish field coat will be considered completely covered by the contract unit price per sq. foot for Finish Field Coat (System G).

Miscellaneous:

Roadway surfacing adjacent to bridge ends shall match new bridge wearing surface (roadway item).

All concrete repairs shall be in accordance with Sec 704, unless otherwise noted.

Outline of existing work is indicated by light dashed lines. Heavy lines indicate new work.

Contractor shall verify all dimensions in field before ordering new material.

In order to maintain grade and a minimum thickness of wearing surface as shown on plans it may be necessary to use additional quantities of wearing surface at various locations throughout the structure. The cost of furnishing and installing the wearing surface will be considered completely covered in the contract unit price, including all additional labor, materials or equipment for variations in thickness of wearing surface.

Traffic Handling:

Traffic to be maintained on structure during construction. See roadway plans for traffic control.

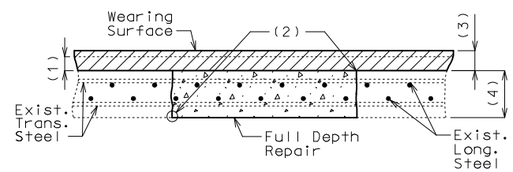

FULL DEPTH REPAIR

(1) Removal of existing 1/4"± epoxy polymer overlay

(2) 1" vertical side shall be established outside the deteriorated area.

(3) 3/4" minimum ultrathin bonded asphaltic wearing surface

(4) Original depth of deck

Estimated Quantities

Item		Total
Removal of Seal Coat or Polymer Wearing Surface	sq. foot	15,026
Removal of Existing Expansion Joint & Adjacent Concrete	linear foot	125
Remove and Replace Curb & Parapet	linear foot	17
Optional Ultrathin Bonded Asphalt Wearing Surface (Bridges)	sq. yard	1670
Curb Blockout	linear foot	659
Substructure Repair (Formed)	sq. foot	20
Half-Sole Repair	sq. foot	2000
Full Depth Repair	sq. foot	100
Protective Coating - Concrete Bents and Piers (Epoxy)	lump sum	1
Cleaning and Coating Existing Bearings	each	12
Surface Preparation for Recoating Structural Steel	sq. foot	1,100
Field Application of Inorganic Zinc Primer	sq. foot	1,100
Intermediate Field Coat System (System G)	sq. foot	1,100
Finish Field Coat System (System G)	sq. foot	1,100
Strip Seal Expansion Joint System	linear foot	125

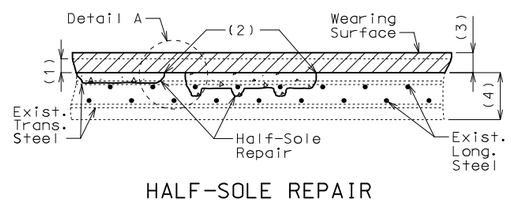

HALF-SOLE REPAIR

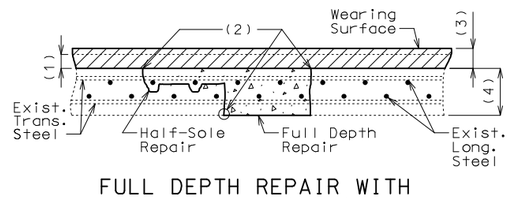

FULL DEPTH REPAIR WITH HALF-SOLE REPAIR

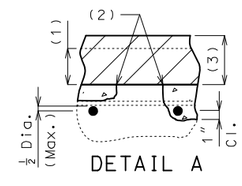

DETAIL A

Clearance around top bar and around bottom bar at the intersection of top bar shall be required when more than half the diameter of the top bar is exposed.

REPAIRS TO BRIDGE: ROUTE 24 OVER BNSF RR

ROUTE 24 FROM ROUTE 65 TO ROUTE MM
ABOUT 0.4 MILES EAST OF ROUTE 65
BEG. STA. 75+66.84± (Match Existing)

Detailed May 2021
Checked June 2021

Note: This drawing is not to scale. Follow dimensions.

STATE OF MISSOURI
TED S. KOESTER
NUMBER PE-2013000591
PROFESSIONAL ENGINEER
THIS SHEET HAS BEEN SIGNED, SEALED AND DATED ELECTRONICALLY.

DATE PREPARED	8/23/2021
ROUTE	24
STATE	MO
DISTRICT	BR
SHEET NO.	1
COUNTY	CARROLL
JOB NO.	J1P3275
CONTRACT ID.	
PROJECT NO.	
BRIDGE NO.	A29022

DESCRIPTION

DATE

MISSOURI HIGHWAYS AND TRANSPORTATION COMMISSION
105 WEST CAPITOL
JEFFERSON CITY, MO 65102
1-888-ASK-MODOT (1-888-275-6636)

IF A SEAL IS PRESENT ON THIS SHEET IT HAS BEEN ELECTRONICALLY SEALED AND DATED.

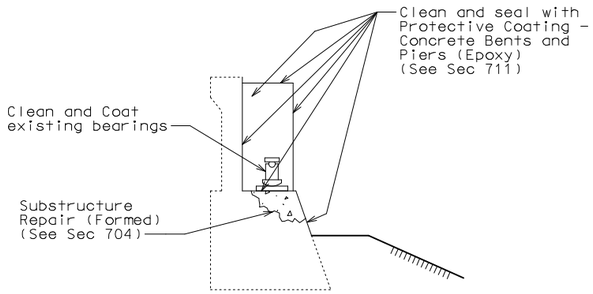

TYPICAL SECTION THRU
END BENT NO. 1 SHOWING
PROTECTIVE COATING
& SUBSTRUCTURE REPAIR

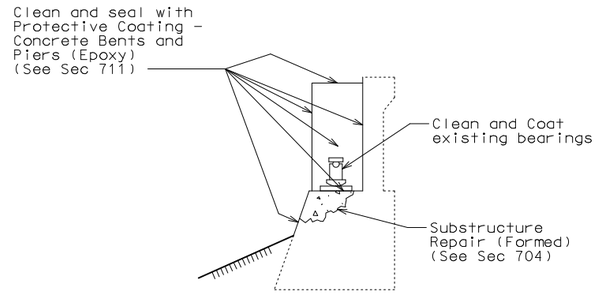

TYPICAL SECTION THRU
END BENT NO. 6 SHOWING
PROTECTIVE COATING
& SUBSTRUCTURE REPAIR

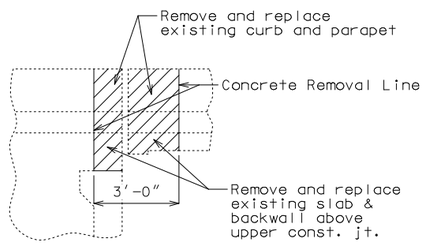

PART ELEVATION AT
END BENTS NO. 1 AND
6 SHOWING CONCRETE
REMOVAL

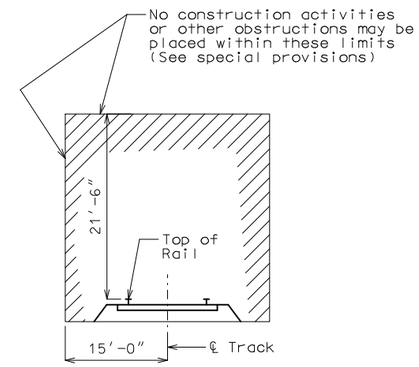

MINIMUM CONSTRUCTION
CLEARANCES
(Normal to railroad)
(Not to scale)

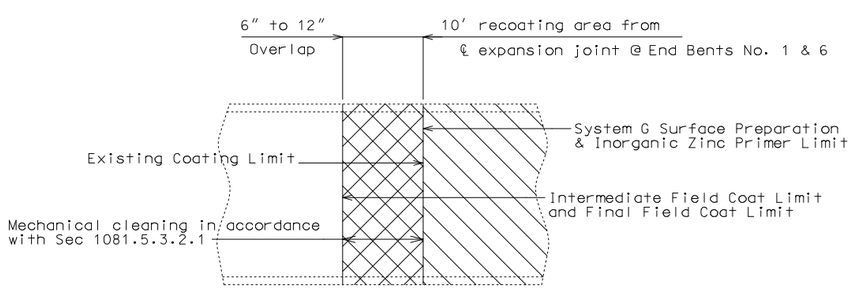

PART ELEVATION SHOWING LIMITS OF PAINT OVERLAP

(Vertical or horizontal paint limit.
Horizontal limit shown)

STATE OF MISSOURI
TED S. KOESTER
NUMBER
PE-2013000591
PROFESSIONAL ENGINEER

THIS SHEET HAS BEEN SIGNED, SEALED AND DATED ELECTRONICALLY.

DATE PREPARED	
8/23/2021	
ROUTE 24	STATE MO
DISTRICT BR	SHEET NO. 2
COUNTY CARROLL	
JOB NO. J1P3275	
CONTRACT ID.	
PROJECT NO.	
BRIDGE NO. A29022	

DATE	DESCRIPTION

MISSOURI HIGHWAYS AND TRANSPORTATION COMMISSION
105 WEST CAPITOL
JEFFERSON CITY, MO 65102
1-888-ASK-MODOT (1-888-275-6636)

IF A SEAL IS PRESENT ON THIS SHEET IT HAS BEEN ELECTRONICALLY SEALED AND DATED.

Detailed May 2021
Checked June 2021

Note: This drawing is not to scale. Follow dimensions.

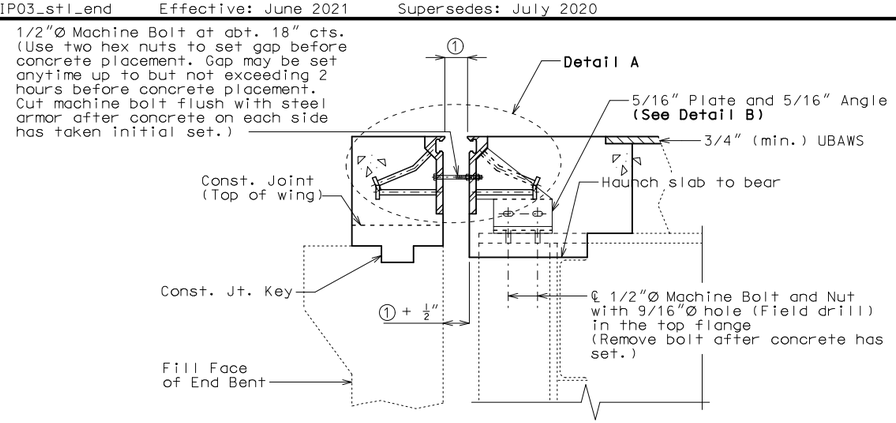

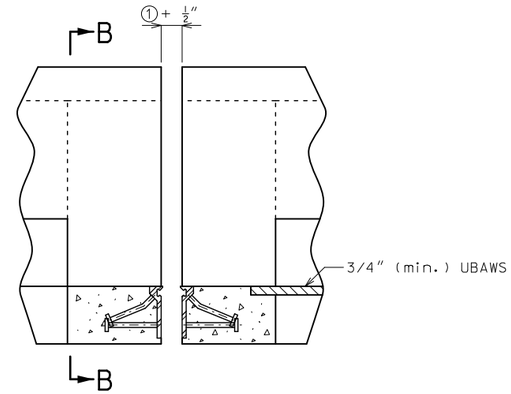

PART ELEVATION OF BARRIER

Strip seal gland not shown for clarity.

SECTION A-A

Notes:
Strip seal gland not shown for clarity.

Slab Reinforcement not shown for clarity.

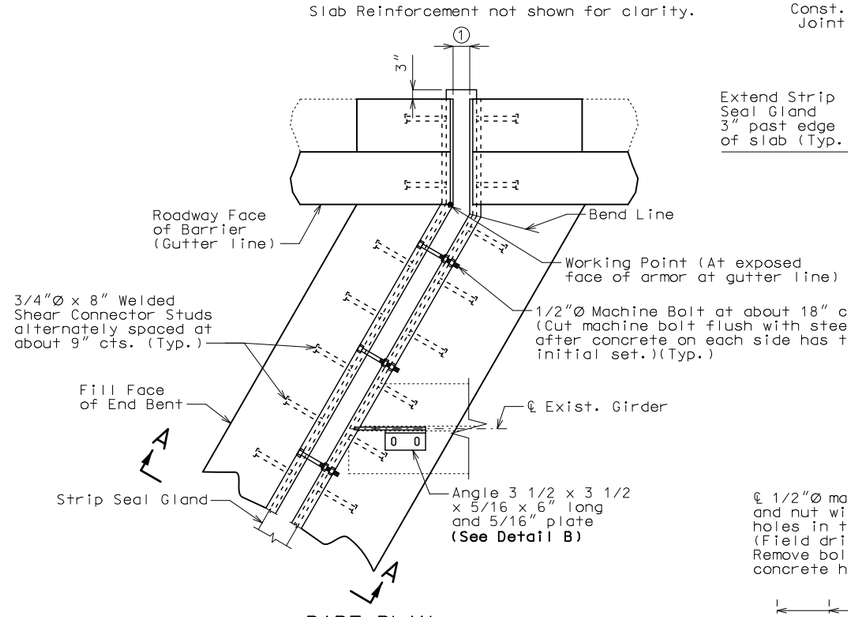

PART PLAN

Note: New wearing surface not shown for clarity.

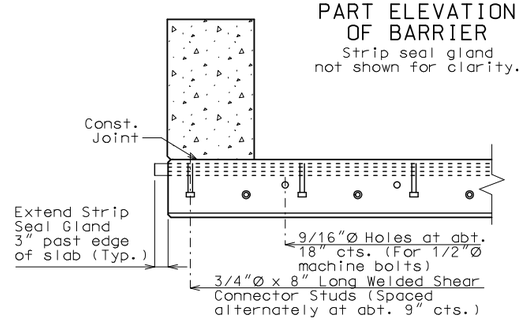

PART SECTION B-B

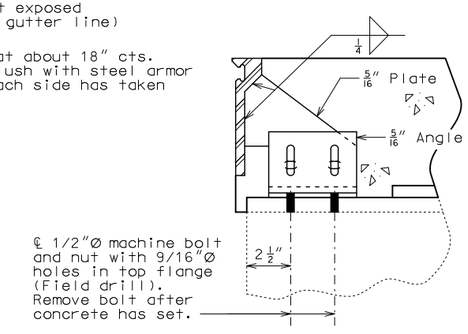

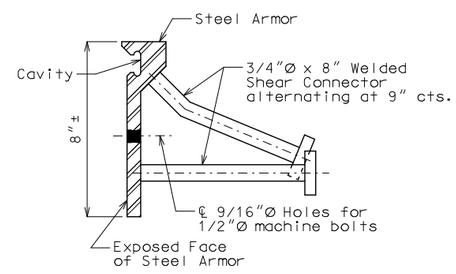

DETAIL OF JOINT ARMOR

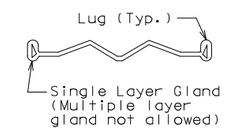

DETAIL OF GLAND

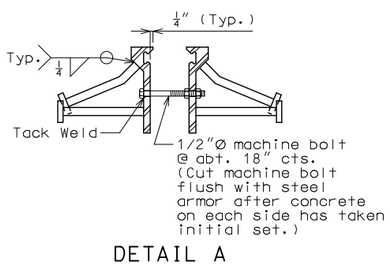

DETAIL A

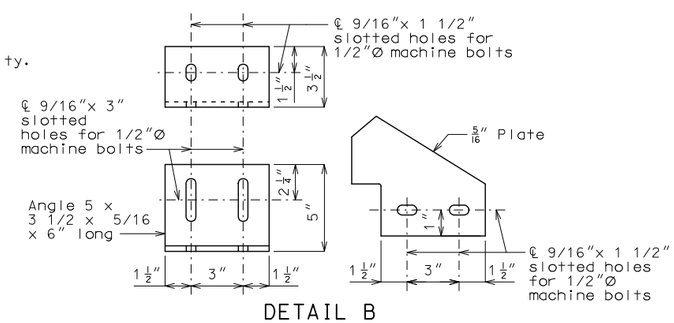

DETAIL B

GENERAL NOTES:

Expansion joint system shall be fabricated in one section, except for staged construction and when the length is over 50 feet. A complete joint penetration groove welded splice shall be required. Welds shall be ground flush to provide a smooth surface. The expansion joint system shall be fabricated and installed to the crown and grade of the roadway.

The strip seal gland shall be installed in joints in one continuous piece without field splices. Factory splicing will be permitted for joints in excess of 53 feet.

Structural steel for the expansion joint system shall be ASTM A709 Grade 36 except the steel armor may be ASTM A709 Grade 50W. Anchors for the expansion joint system shall be in accordance with Sec 1037. Strip seal expansion joint system shall be in accordance with Sec 717.

Structural steel for the expansion joint system shall be coated with a minimum of two coats of inorganic zinc primer to provide a total dry film thickness of 4 mils minimum, 6 mils maximum, or galvanized in accordance with ASTM A123. Anchors need not be protected from overspray.

Longitudinal reinforcing steel shall be cut/bent so that ends shall be 1" from the vertical leg of the steel armor at the expansion joint system.

Concrete shall be forced under and around steel armor and anchors. Proper consolidation of the concrete shall be achieved by localized internal vibration.

② The installation temperature shall be taken as the actual air temperature averaged over the 24-hour period immediately preceding installation.

③ MoDOT Construction personnel will indicate the strip seal expansion joint system installed.

Steel armor may also be referred to as extrusion or rail.

Work this sheet with Sheet No. 5.

Table of Allowed Transverse Strip Seal Expansion Joint System

Manufacturer	Strip Seal System (Designated Name)	Movement Parallel to RDWY	① Allowed Installation Gap Normal to Joint at RDWY Surface @ Air/Surface Temperature ②						③
			@ 40°F	@ 50°F	@ 60°F	@ 70°F	@ 80°F	@ 90°F	
D S Brown	Strip seal L2-400	1 1/4"	2 1/8"	2 1/16"	2"	1 15/16"	1 7/8"	1 13/16"	□
D S Brown	Strip seal L2-500	1 1/4"	2 1/8"	2 1/16"	2"	1 15/16"	1 7/8"	1 13/16"	□
Watson Bowman Acme (Wabo)	Strip seal SE-300	1 1/4"	2 1/8"	2 1/16"	2"	1 15/16"	1 7/8"	1 13/16"	□
Watson Bowman Acme (Wabo)	Strip seal SE-400	1 1/4"	2 1/8"	2 1/16"	2"	1 15/16"	1 7/8"	1 13/16"	□

STRIP SEAL EXPANSION JOINT SYSTEM AT END BENT NO. 1

Note: This drawing is not to scale. Follow dimensions.

Detailed May 2021
Checked June 2021

STATE OF MISSOURI
TED S. KOESTER
NUMBER PE-2013000591
PROFESSIONAL ENGINEER
THIS SHEET HAS BEEN SIGNED, SEALED AND DATED ELECTRONICALLY.

DATE PREPARED	
8/23/2021	
ROUTE 24	STATE MO
DISTRICT BR	SHEET NO. 3
COUNTY CARROLL	
JOB NO. J1P3275	
CONTRACT ID.	
PROJECT NO.	
BRIDGE NO. A29022	

DATE	DESCRIPTION

IF A SEAL IS PRESENT ON THIS SHEET IT HAS BEEN ELECTRONICALLY SEALED AND DATED.

MISSOURI HIGHWAYS AND TRANSPORTATION COMMISSION
105 WEST CAPITOL
JEFFERSON CITY, MO 65102
1-888-ASK-MODOT (1-888-275-6636)

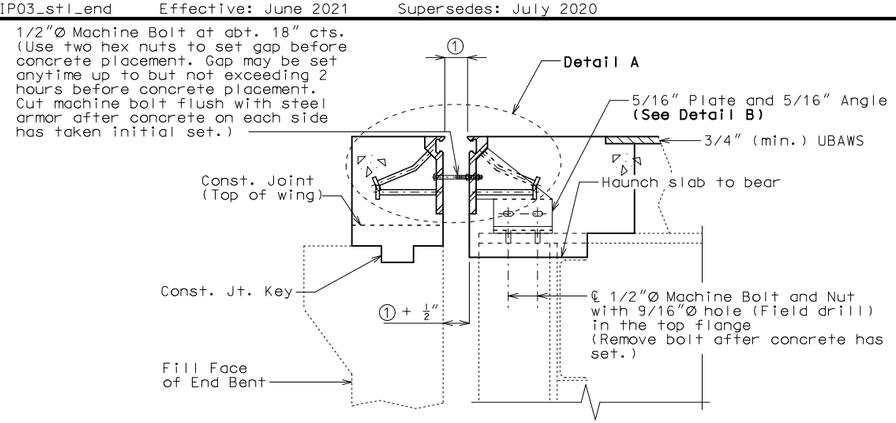

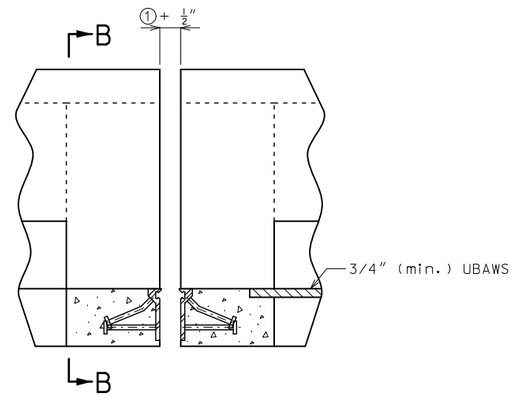

PART ELEVATION OF BARRIER

Strip seal gland not shown for clarity.

SECTION A-A

Notes:
Strip seal gland not shown for clarity.

Slab Reinforcement not shown for clarity.

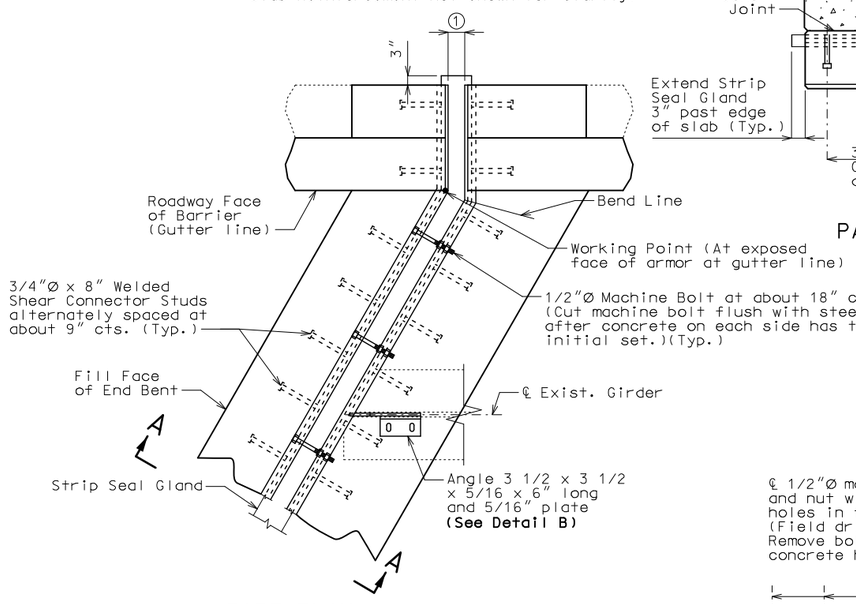

PART PLAN

New wearing surface not shown for clarity.

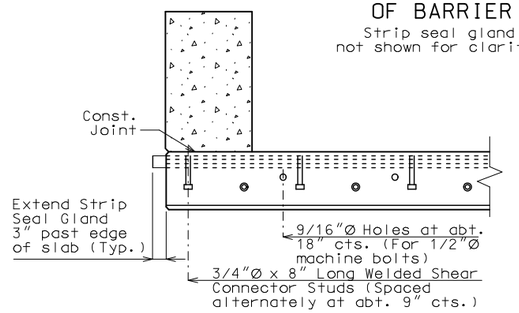

PART SECTION B-B

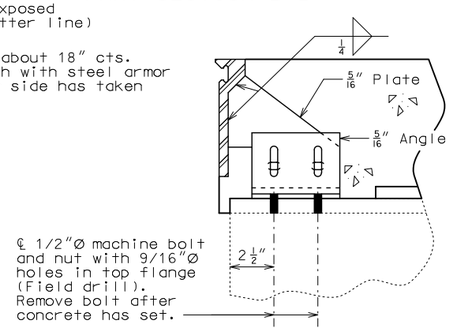

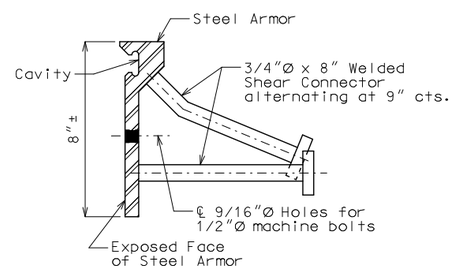

DETAIL OF JOINT ARMOR

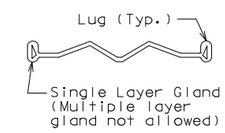

DETAIL OF GLAND

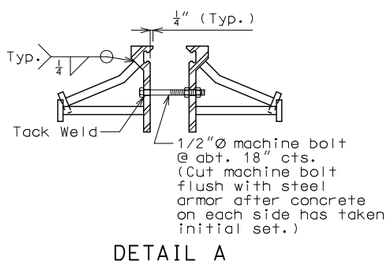

DETAIL A

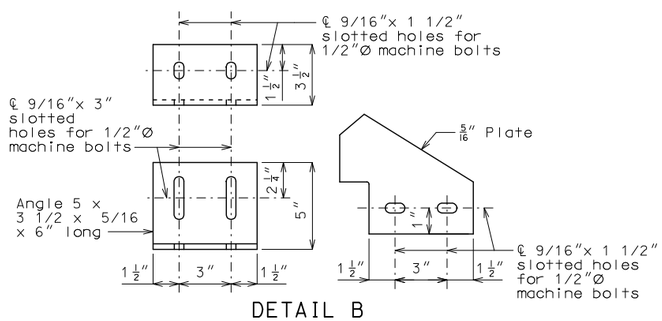

DETAIL B

GENERAL NOTES:

Expansion joint system shall be fabricated in one section, except for staged construction and when the length is over 50 feet. A complete joint penetration groove welded splice shall be required. Welds shall be ground flush to provide a smooth surface. The expansion joint system shall be fabricated and installed to the crown and grade of the roadway.

The strip seal gland shall be installed in joints in one continuous piece without field splices. Factory splicing will be permitted for joints in excess of 53 feet.

Structural steel for the expansion joint system shall be ASTM A709 Grade 36 except the steel armor may be ASTM A709 Grade 50W. Anchors for the expansion joint system shall be in accordance with Sec 1037. Strip seal expansion joint system shall be in accordance with Sec 717.

Structural steel for the expansion joint system shall be coated with a minimum of two coats of inorganic zinc primer to provide a total dry film thickness of 4 mils minimum, 6 mils maximum, or galvanized in accordance with ASTM A123. Anchors need not be protected from overspray.

Longitudinal reinforcing steel shall be cut/bent so that ends shall be 1" from the vertical leg of the steel armor at the expansion joint system.

Concrete shall be forced under and around steel armor and anchors. Proper consolidation of the concrete shall be achieved by localized internal vibration.

② The installation temperature shall be taken as the actual air temperature averaged over the 24-hour period immediately preceding installation.

③ MoDOT Construction personnel will indicate the strip seal expansion joint system installed.

Steel armor may also be referred to as extrusion or rail.

Work this sheet with Sheet No. 5.

Table of Allowed Transverse Strip Seal Expansion Joint System

Manufacturer	Strip Seal System (Designated Name)	Movement Parallel to RDWY	① Allowed Installation Gap Normal to Joint at RDWY Surface @ Air/Surface Temperature ②						③
			@ 40°F	@ 50°F	@ 60°F	@ 70°F	@ 80°F	@ 90°F	
D S Brown	Strip seal L2-500	2 1/4"	2 3/16"	2 1/8"	2"	1 7/8"	1 13/16"	1 11/16"	□
Watson Bowman Acme (Wabo)	Strip seal SE-300	2 1/4"	2 3/16"	2 1/8"	2"	1 7/8"	1 13/16"	1 11/16"	□
Watson Bowman Acme (Wabo)	Strip seal SE-400	2 1/4"	2 3/16"	2 1/8"	2"	1 7/8"	1 13/16"	1 11/16"	□

STRIP SEAL EXPANSION JOINT SYSTEM AT END BENT NO. 6

Detailed May 2021
Checked June 2021

Note: This drawing is not to scale. Follow dimensions.

STATE OF MISSOURI
TED S. KOESTER
NUMBER PE-2013000591
PROFESSIONAL ENGINEER
THIS SHEET HAS BEEN SIGNED, SEALED AND DATED ELECTRONICALLY.

DATE PREPARED	
8/23/2021	
ROUTE 24	STATE MO
DISTRICT BR	SHEET NO. 4
COUNTY CARROLL	
JOB NO. J1P3275	
CONTRACT ID.	
PROJECT NO.	
BRIDGE NO. A29022	

DATE	DESCRIPTION

IF A SEAL IS PRESENT ON THIS SHEET IT HAS BEEN ELECTRONICALLY SEALED AND DATED.

MISSOURI HIGHWAYS AND TRANSPORTATION COMMISSION
105 WEST CAPITOL
JEFFERSON CITY, MO 65102
1-888-ASK-MODOT (1-888-275-6636)

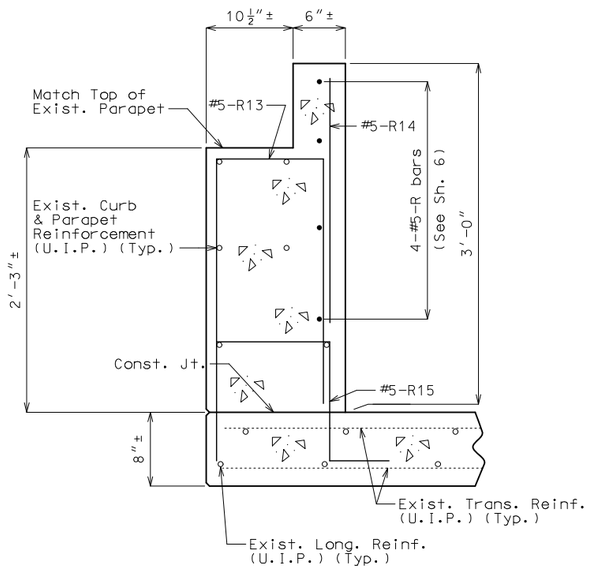

SECTION A-A

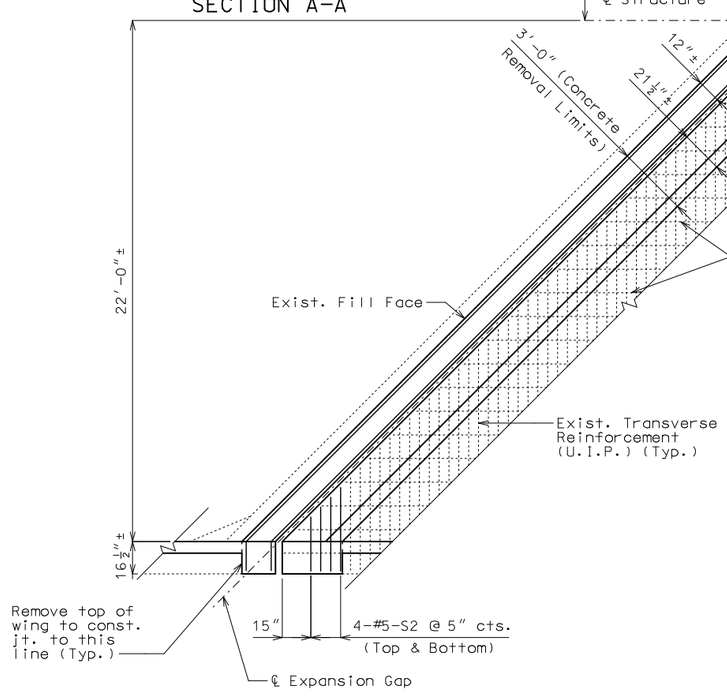

PART PLAN OF SLAB
AT END BENT NO. 1
SHOWING SLAB REINFORCEMENT

Note: Expansion device not shown for clarity.

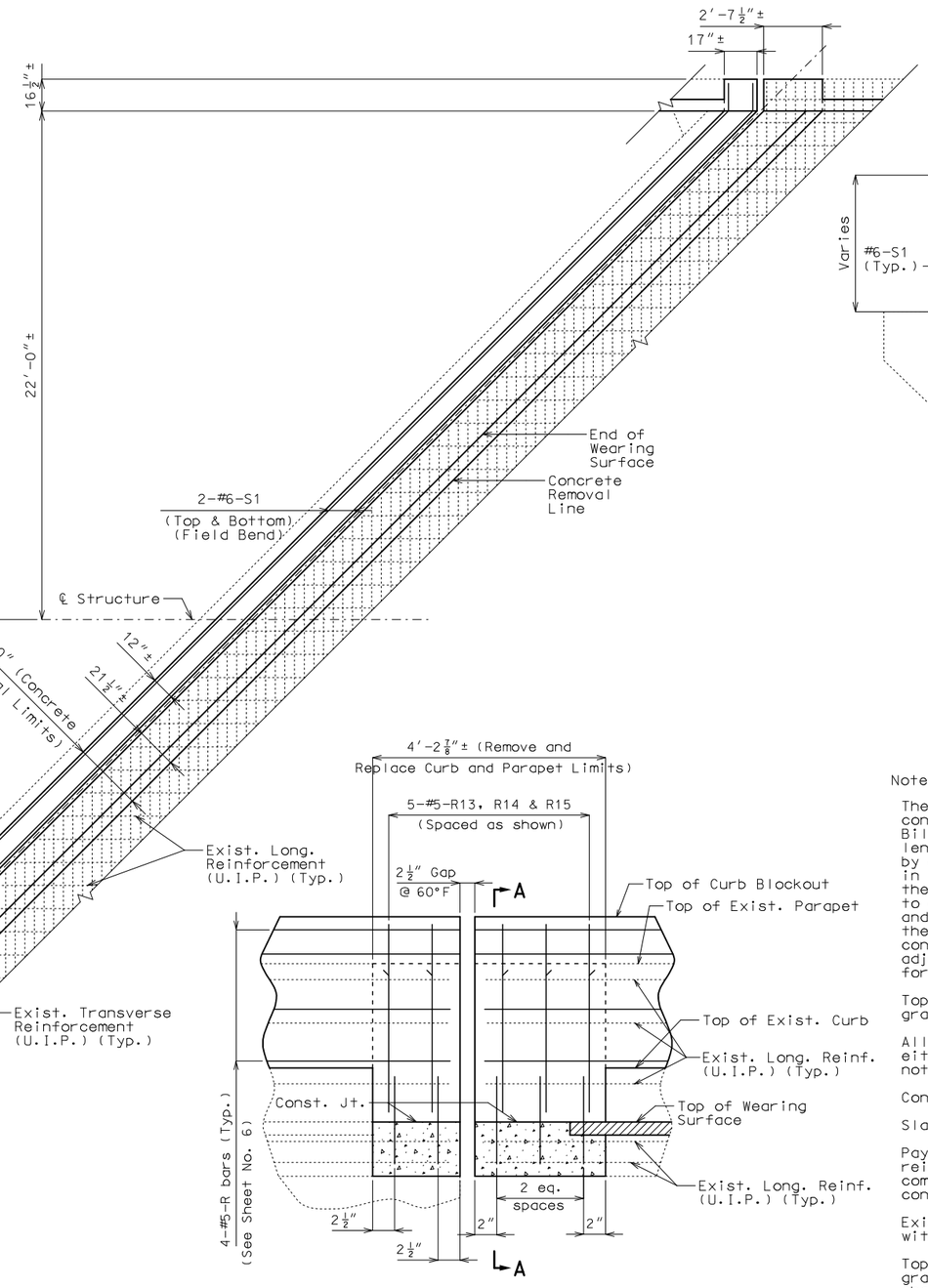

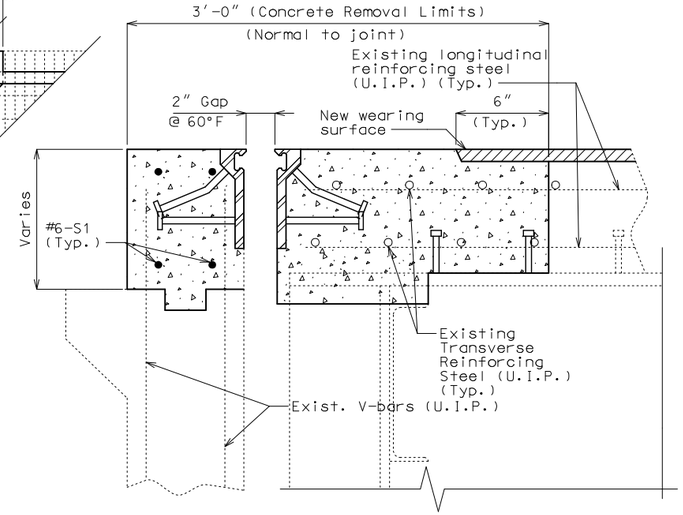

PART SECTION AT
END BENT NO. 1
THRU SLAB SHOWING
SLAB REINFORCEMENT

PART ELEVATION OF CURB
BLOCKOUT AND PARAPET

Note: Expansion device and #6-S bars not shown for clarity.

Notes:

The #6-S1 bars to be segmented to accommodate stage construction. The total bar length for #6-S1 bars shown in Bill of Reinforcing Steel allows for one lap splice with a length of 3'-10". Actual bar segment lengths to be determined by contractor. The contractor may use a mechanical bar splice in lieu of a lap splice. When a mechanical bar splice is used, the actual bar segment length will be determined by contractor to accommodate manufacturer's recommendations for installation and stage construction. The cost of furnishing and installing the bar splices will be considered completely covered by the contract unit price for Reinforcing Steel (Epoxy Coated). No adjustment of the quantity of reinforcing steel will be allowed for the use of mechanical bar splices.

Top of curb blockout and parapet shall be built parallel to grade with barrier curb joints normal to grade.

All exposed edges of curb blockout and parapet shall have either a 1/2-inch radius or a 3/8-inch bevel, unless otherwise noted.

Concrete in the curb blockout and parapet shall be Class B-1.

Slab concrete shall be Class B-2.

Payment for removal and replacement of all concrete and reinforcement in curb blockout and parapet in the limits shown, complete in place, will be considered completely covered by the contract unit price for Remove and Replace Curb and Parapet.

Existing stirrups not embedded in concrete shall be removed within the limits shown.

Top of backwall for End Bents shall be formed to the crown and grade of the roadway. Backwall above upper construction joint shall not be poured until the superstructure slab has been poured in the adjacent span.

Work this sheet with Sheets No. 3 & 4.

SLAB REPLACEMENT DETAILS AT END BENTS NO. 1 AND 6

(End Bent No. 1 shown, End Bent No. 6 similar)

Detailed May 2021
Checked July 2021

Note: This drawing is not to scale. Follow dimensions.

STATE OF MISSOURI
TED S. KOESTER
NUMBER PE-2013000591
PROFESSIONAL ENGINEER

THIS SHEET HAS BEEN SIGNED, SEALED AND DATED ELECTRONICALLY.

DATE PREPARED	8/23/2021
ROUTE	24
STATE	MO
DISTRICT	BR
SHEET NO.	5
COUNTY	CARROLL
JOB NO.	J1P3275
CONTRACT ID.	
PROJECT NO.	
BRIDGE NO.	A29022

DATE	DESCRIPTION

MISSOURI HIGHWAYS AND TRANSPORTATION COMMISSION
105 WEST CAPITOL
JEFFERSON CITY, MO 65102
1-888-ASK-MODOT (1-888-275-6636)

IF A SEAL IS PRESENT ON THIS SHEET IT HAS BEEN ELECTRONICALLY SEALED AND DATED.

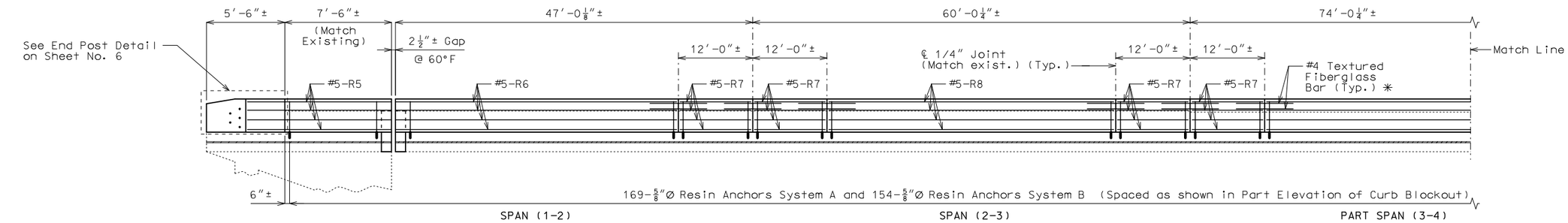

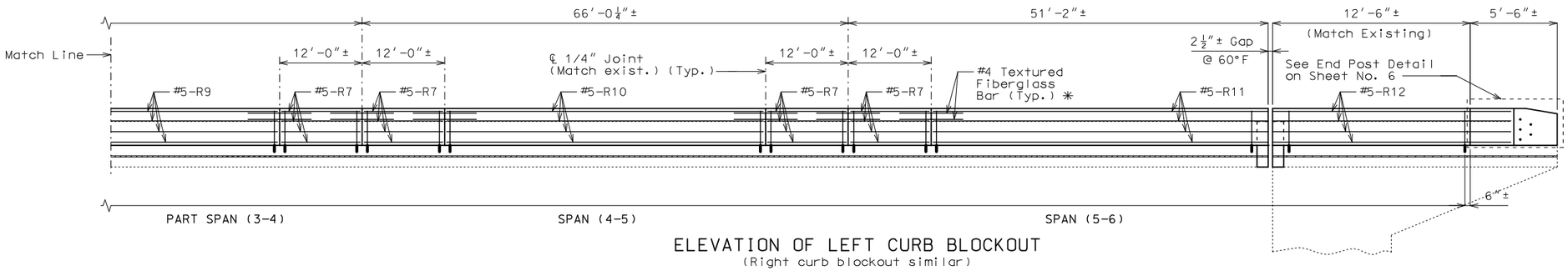

ELEVATION OF LEFT CURB BLOCKOUT

(Right curb blockout similar)

Longitudinal dimensions are along grade and are taken at top outside edge of parapet.

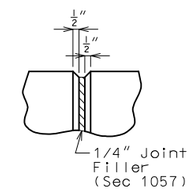

PART ELEVATION AT FORMED JOINT

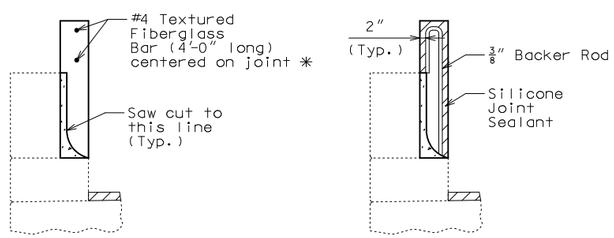

SECTION THRU SAW CUT JOINT

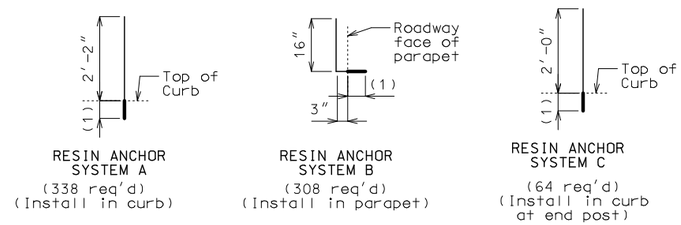

(1) Use manufacturer's embedment length (5" minimum embedment).

DETAILS OF RESIN ANCHORS

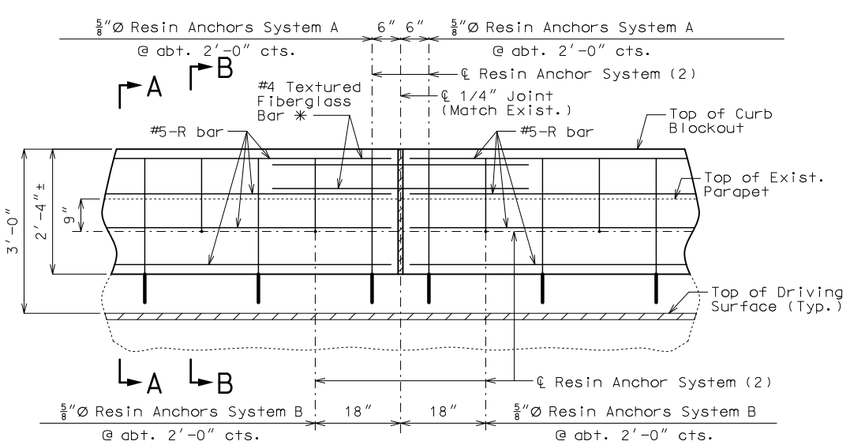

PART ELEVATION OF CURB BLOCKOUT

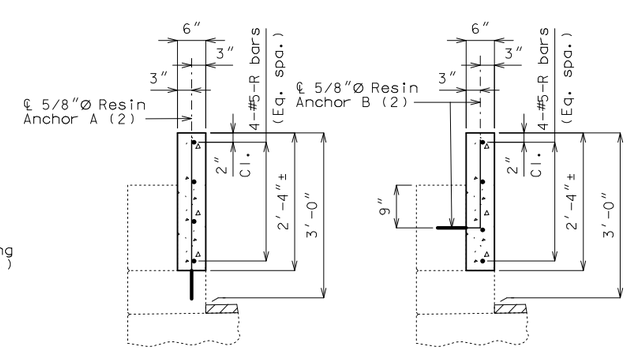

SECTION A-A SECTION B-B

CURB BLOCKOUT

Notes:

✳ Slip-formed option only.

Conventional forming or slip forming may be used. Saw cut joints may be used with conventional forming.

Bridge rail not shown for clarity.

Concrete in curb blockout shall be Class B-1.

Measurement of curb blockout is to the nearest linear foot, measured at the top outside edge of parapet. (Match existing curb and parapet)

All exposed edges of curb blockout shall have either a 1/2-inch radius or 3/8-inch bevel, unless otherwise noted.

Payment for concrete, reinforcement, resin anchor systems and any other work incidental to the curb blockout, complete in place, will be considered completely covered by the contract unit price for Curb Blockout per linear foot.

Cost of any concrete curb or parapet repair will be considered completely covered by the contract unit price for Curb Blockout.

All curb blockout reinforcement shall be epoxy coated.

(2) Shift resin anchors where necessary to clear existing anchor bolts for bridge rail, miss curb outlets (if present) and clear existing reinforcement.

Use a minimum lap of 3'-1" for #5 horizontal curb blockout bars.

Concrete traffic barrier delineators shall be placed on top of the curb blockout similarly as shown on Missouri Standard Plans 617.10 and in accordance with Sec 617. Delineators on bridges with two-lane, two-way traffic shall have retroflective sheeting on both sides. Concrete traffic barrier delineators will be considered completely covered by the contract unit price for Curb Blockout.

The contractor shall use one of the qualified resin anchor systems in accordance with Sec 1039.

The minimum embedment depth in concrete with f'c = 4,000 psi for the resin anchor system shall be that required to meet the minimum ultimate pullout strength in accordance with Sec 1039 but shall not be less than 5 inches.

An epoxy coated #5 Grade 60 reinforcing bar shall be substituted for the 5/8"Ø threaded rod.

For slip-formed option, both sides of the curb blockout shall have a vertically broomed finish and the top shall have a transversely broomed finish.

STATE OF MISSOURI
TED S. KOESTER
NUMBER PE-2013000591
PROFESSIONAL ENGINEER
THIS SHEET HAS BEEN SIGNED, SEALED AND DATED ELECTRONICALLY.

DATE PREPARED	
8/23/2021	
ROUTE 24	STATE MO
DISTRICT BR	SHEET NO. 6
COUNTY CARROLL	
JOB NO. J1P3275	
CONTRACT ID.	
PROJECT NO.	
BRIDGE NO. A29022	

DESCRIPTION

DATE

IF A SEAL IS PRESENT ON THIS SHEET IT HAS BEEN ELECTRONICALLY SEALED AND DATED.

MISSOURI HIGHWAYS AND TRANSPORTATION COMMISSION
105 WEST CAPITOL
JEFFERSON CITY, MO 65102
1-888-ASK-MODOT (1-888-275-6636)

Detailed May 2021
Checked June 2021

Note: This drawing is not to scale. Follow dimensions.

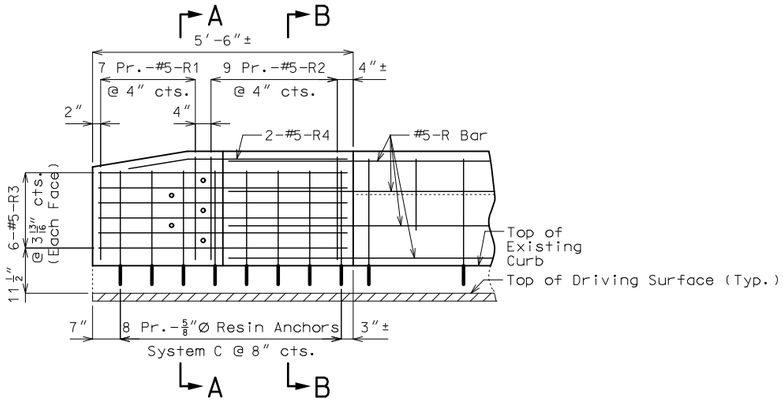

ELEVATION SHOWING REINFORCEMENT

(Right End Post at End Bent No. 6 similar)

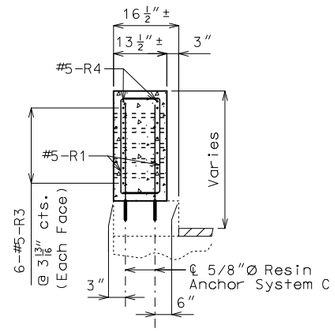

SECTION A-A

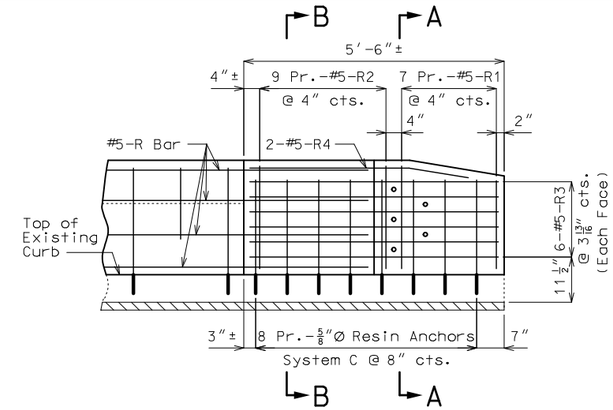

ELEVATION SHOWING REINFORCEMENT

(Right End Post at End Bent No. 1 similar)

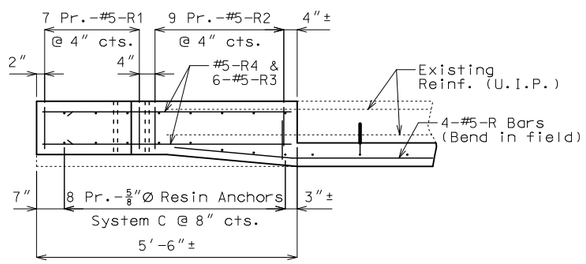

PLAN SHOWING REINFORCEMENT

LEFT END POST AT END BENT NO. 1

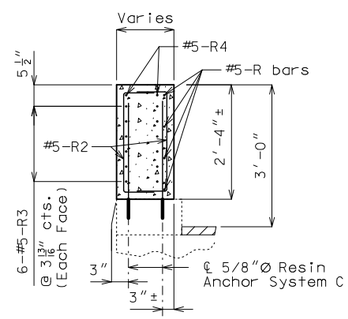

SECTION B-B

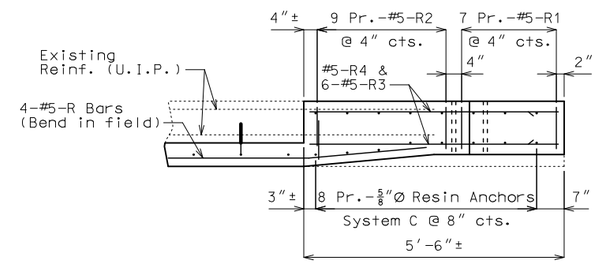

PLAN SHOWING REINFORCEMENT

LEFT END POST AT END BENT NO. 6

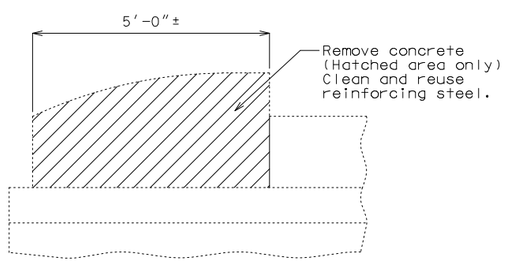

PART ELEVATION SHOWING END POST CONCRETE REMOVAL

Cost of removing existing end posts will be considered completely covered by the contract unit price for Curb Blockout.

Notes:

Work this sheet with Sheet No. 6.

For details of resin anchors, see Sheet No. 6.

Resin anchors shall be shifted or bent in field to clear one-inch diameter holes by at least 1/2 inch.

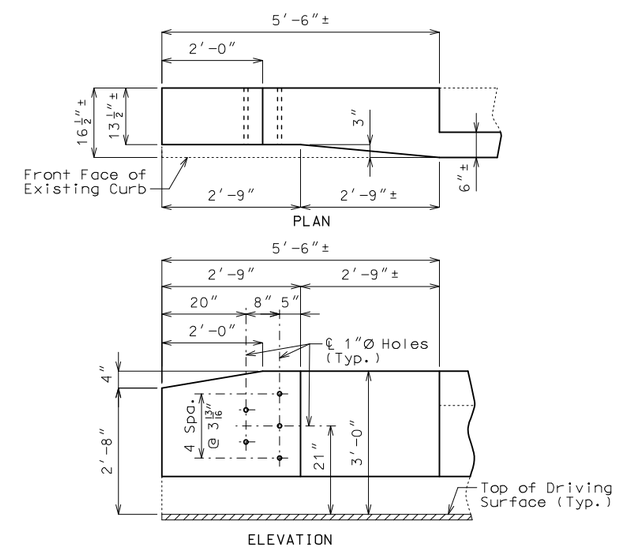

DETAILS OF END POST AND GUARD RAIL ATTACHMENT

CURB BLOCKOUT AT END BENTS

Detailed May 2021
Checked June 2021

Note: This drawing is not to scale. Follow dimensions.

STATE OF MISSOURI
TED S. KOESTER
NUMBER PE-2013000591
PROFESSIONAL ENGINEER
THIS SHEET HAS BEEN SIGNED, SEALED AND DATED ELECTRONICALLY.

DATE PREPARED	
8/23/2021	
ROUTE 24	STATE MO
DISTRICT BR	SHEET NO. 7
COUNTY CARROLL	
JOB NO. J1P3275	
CONTRACT ID.	
PROJECT NO.	
BRIDGE NO. A29022	

DATE	DESCRIPTION

MISSOURI HIGHWAYS AND TRANSPORTATION COMMISSION
105 WEST CAPITOL
JEFFERSON CITY, MO 65102
1-888-ASK-MODOT (1-888-275-6636)

IF A SEAL IS PRESENT ON THIS SHEET IT HAS BEEN ELECTRONICALLY SEALED AND DATED.

BILL OF REINFORCING STEEL

NO. REQ'D.	MARK NO. SIZE	MARK NO. MARK	LOCATION	EPOXY (E)	SHAPE NO.	STIRRUP (S)	SUBSTR. (X)	VARIES (V)	NO. EACH	B FT. IN.	C FT. IN.	D FT. IN.	E FT. IN.	F FT. IN.	H FT. IN.	K FT. IN.	NOMINAL LENGTH FT. IN.	ACTUAL LENGTH FT. IN.	WEIGHT LBS.
			SLAB																
8	6	S1	SLAB	E	20					64 9.000							64 9	64 9	778
16	5	S2	SLAB	E	20			V	4	2 2.000							2 2	2 2	
			INCREMENT =							3 5.000							3 5	3 5	47
			5.000 INCH																
			CURB BLOKOUT																
56	5	R1	BARRIER CURB	E	10	S		V	8		10.500	21.000					3 6	3 4	
			INCREMENT =								10.500	2 0.000					3 9	3 7	202
			0.500 INCH																
72	5	R2	BARRIER CURB	E	10	S		V	8		10.500	2 0.000					3 9	3 7	
			INCREMENT =								13.500	2 0.000					4 3	4 1	288
			0.750 INCH																
48	5	R3	BARRIER CURB	E	20					5 3.000							5 3	5 3	263
8	5	R4	BARRIER CURB	E	23	S				16.250	3 4.000				2.625	16.000	4 8	4 8	39
8	5	R5	BARRIER CURB	E	20					10 0.000							10 0	10 0	83
8	5	R6	BARRIER CURB	E	20					34 9.000							34 9	34 9	290
64	5	R7	BARRIER CURB	E	20					11 9.000							11 9	11 9	784
8	5	R8	BARRIER CURB	E	20					35 9.000							35 9	35 9	298
8	5	R9	BARRIER CURB	E	20					49 9.000							49 9	49 9	415
8	5	R10	BARRIER CURB	E	20					41 9.000							41 9	41 9	348
8	5	R11	BARRIER CURB	E	20					38 11.000							38 11	38 11	325
8	5	R12	BARRIER CURB	E	20					15 0.000							15 0	15 0	125
20	5	R13	BARRIER CURB	E	10	S					23.500	13.500					5 1	4 10	101
20	5	R14	BARRIER CURB	E	20					2 4.000							2 4	2 4	49
20	5	R15	BARRIER CURB	E	28	S				13.000	13.500	13.000	12.000				4 4	4 0	83
			TOTALS																
	5			E															3740
	6			E															778
			TOTAL																0
			TOTAL	E															4518
			Slab on Girder																
	5			E															47
	6			E															778
			TOTAL																825
			Safety Barrier Curb																
	5			E															3693
			TOTAL																3693

BILL OF REINFORCING STEEL

NO. REQ'D.	MARK NO. SIZE	MARK NO. MARK	LOCATION	EPOXY (E)	SHAPE NO.	STIRRUP (S)	SUBSTR. (X)	VARIES (V)	NO. EACH	B FT. IN.	C FT. IN.	D FT. IN.	E FT. IN.	F FT. IN.	H FT. IN.	K FT. IN.	NOMINAL LENGTH FT. IN.	ACTUAL LENGTH FT. IN.	WEIGHT LBS.

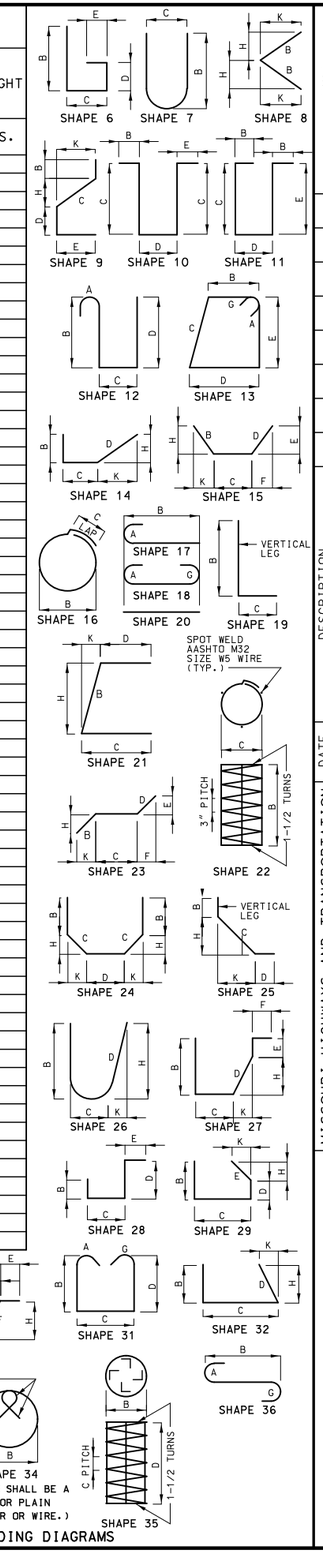

STATE OF MISSOURI
TED S. KOESTER
NUMBER PE-2013000591
PROFESSIONAL ENGINEER
THIS SHEET HAS BEEN SIGNED, SEALED AND DATED ELECTRONICALLY.

DATE PREPARED 8/23/2021
ROUTE 24 | STATE MO
DISTRICT BR | SHEET NO. 8
COUNTY CARROLL
JOB NO. J1P3275
CONTRACT ID.
PROJECT NO.
BRIDGE NO. A29022

DESCRIPTION | DATE

MISSOURI HIGHWAYS AND TRANSPORTATION COMMISSION
105 WEST CAPITOL
JEFFERSON CITY, MO 65102
1-888-ASK-MODOT (1-888-275-6636)

IF A SEAL IS PRESENT ON THIS SHEET IT HAS BEEN ELECTRONICALLY SEALED AND DATED.

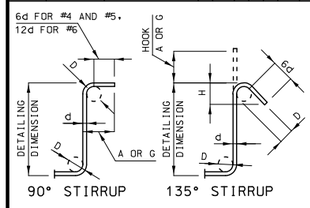

STIRRUP HOOK DIMENSIONS				
GRADES 40 - 50 - 60 KSI				
BAR SIZE	D (IN.)	90° HOOK	135° HOOK	
		HOOK A OR G	HOOK A OR G	APPROX. H
#4	2"	4 1/2"	4 1/2"	3"
#5	2 1/2"	6"	5 1/2"	3 3/4"
#6	4 1/2"	12"	8"	4 1/2"

NOTE: UNLESS OTHERWISE NOTED, DIAMETER "D" IS THE SAME FOR ALL BENDS AND HOOKS ON A BAR.

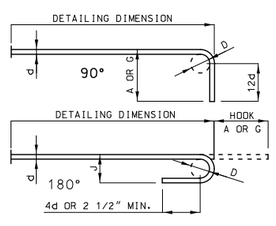

END HOOK DIMENSIONS				
BAR SIZE	D (IN.)	ALL GRADES		
		180° HOOKS		90° HOOKS
		A OR G	J	A OR G
#3	2 1/4"	5"	3"	6"
#4	3"	6"	4"	8"
#5	3 3/4"	7"	5"	10"
#6	4 1/2"	8"	6"	12"
#7	5 1/4"	10"	7"	14"
#8	6"	11"	8"	16"
#9	9 1/2"	15"	11 3/4"	19"
#10	10 3/4"	17"	13 1/4"	22"
#11	12"	19"	14 3/4"	2'-0"
#14	18 1/4"	2'-3"	21 3/4"	2'-7"

NOTE:
ALL STANDARD HOOKS AND BENDS OTHER THAN 180 DEGREE ARE TO BE BENT WITH SAME PROCEDURE AS FOR 90 DEGREE STANDARD HOOKS.

HOOKS AND BENDS SHALL BE IN ACCORDANCE WITH THE PROCEDURES AS SHOWN ON THIS SHEET.

E = EPOXY COATED REINFORCEMENT.
S = STIRRUP.
X = BAR IS INCLUDED IN SUBSTRUCTURE QUANTITIES.
V = BAR DIMENSIONS VARY IN EQUAL INCREMENTS BETWEEN DIMENSIONS SHOWN ON THIS LINE AND THE FOLLOWING LINE.
NO. EA. = NUMBER OF BARS OF EACH LENGTH.

NOMINAL LENGTHS ARE BASED ON OUT TO OUT DIMENSIONS SHOWN IN BENDING DIAGRAMS AND ARE LISTED FOR FABRICATORS USE. (NEAREST INCH)

ACTUAL LENGTHS ARE MEASURED ALONG CENTERLINE BAR TO THE NEAREST INCH.

PAYWEIGHTS ARE BASED ON ACTUAL LENGTHS.

FOUR ANGLE OR CHANNEL SPACERS ARE REQUIRED FOR EACH COLUMN SPIRAL. SPACERS ARE TO BE PLACED ON INSIDE OF SPIRALS. LENGTH AND WEIGHT OF COLUMN SPIRALS DO NOT INCLUDE SPLICES OR SPACERS.

REINFORCING STEEL (GRADE 60) FY = 60,000 PSI.

Detailed May 2021
Checked July 2021

Note: This drawing is not to scale. Follow dimensions.

SEC/SUR 34 TWP 53N RGE 23W

U.I.P. AND REHABILITATE EXISTING (30'-40'-40'-30') CONTINUOUS COMPOSITE WIDE FLANGE BEAM SPANS (SKEW: 20°L.A.)

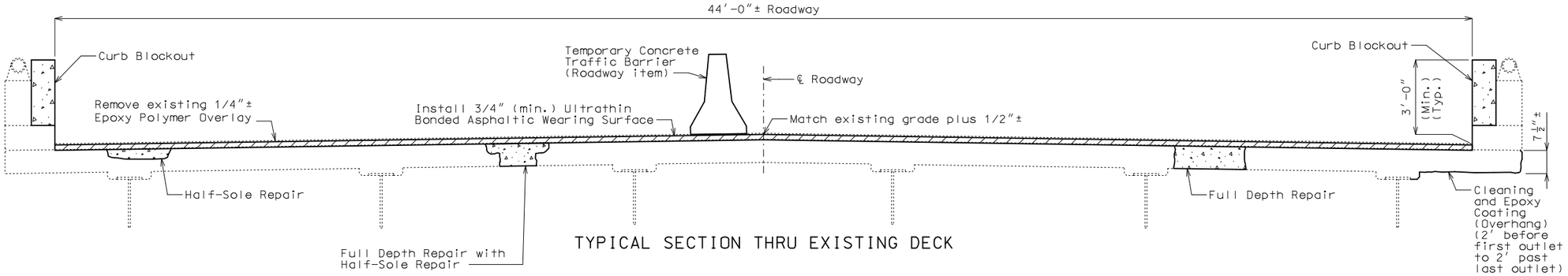

TYPICAL SECTION THRU EXISTING DECK

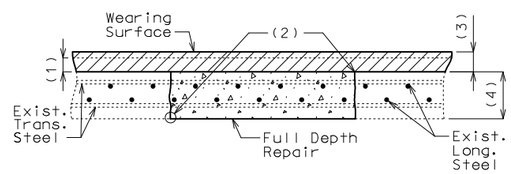

FULL DEPTH REPAIR

(1) Removal of existing 1/4"± epoxy polymer overlay

(2) 1" vertical side shall be established outside the deteriorated area.

(3) 3/4" minimum ultrathin bonded asphaltic wearing surface

(4) Original depth of deck

Estimated Quantities

Item		Total
Removal of Seal Coat or Polymer Wearing Surface	sq. foot	7134
Removal of Existing Approach Slab	sq. feet	1938
Optional Ultrathin Bonded Asphalt Wearing Surface (Bridges)	sq. yard	793
Bridge Approach Slab (Major)	sq. yard	215
Curb Blockout	linear foot	319
Half-Sole Repair	sq. foot	2000
Full Depth Repair	sq. foot	100
Cleaning and Epoxy Coating	sq. foot	364

General Notes:

Design Specifications:

2002 AASTHO LFD (17th Ed.) Standard Specifications
Bridge Deck Rating = 7

Design Loading:

HS20-44 (AASHO 1973 and New Construction)

Design Unit Stresses:

Class B-2 Concrete (Superstructure, except Curb Blockout) f'c = 4,000 psi
Class B-1 Concrete (Curb Blockout) f'c = 4,000 psi
Reinforcing Steel (Grade 60) fy = 60,000 psi

Miscellaneous:

Roadway surfacing adjacent to bridge ends shall match new bridge wearing surface (roadway item).

All concrete repairs shall be in accordance with Sec 704, unless otherwise noted.

Outline of existing work is indicated by light dashed lines. Heavy lines indicate new work.

Contractor shall verify all dimensions in field before ordering new material.

In order to maintain grade and a minimum thickness of wearing surface as shown on plans it may be necessary to use additional quantities of wearing surface at various locations throughout the structure. The cost of furnishing and installing the wearing surface will be considered completely covered in the contract unit price, including all additional labor, materials or equipment for variations in thickness of wearing surface.

Traffic Handling:

Traffic to be maintained on structure during construction. See roadway plans for traffic control.

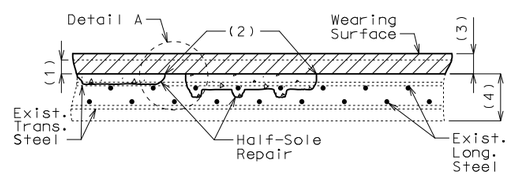

HALF-SOLE REPAIR

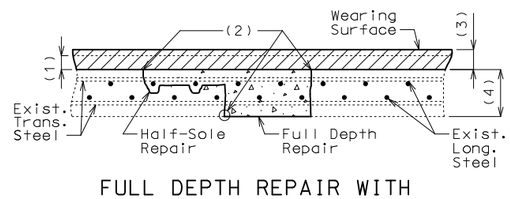

FULL DEPTH REPAIR WITH HALF-SOLE REPAIR

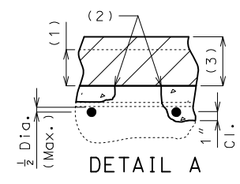

DETAIL A

Clearance around top bar and around bottom bar at the intersection of top bar shall be required when more than half the diameter of the top bar is exposed.

REPAIRS TO BRIDGE: ROUTE 24 OVER LITTLE WAKENDA CREEK

ROUTE 24 FROM ROUTE 65 TO ROUTE MM
ABOUT 1.4 MILES EAST OF ROUTE 65
BEG. STA. 125+33.00± (Match Existing)

Detailed May 2021
Checked June 2021

Note: This drawing is not to scale. Follow dimensions.

STATE OF MISSOURI
TED S. KOESTER
NUMBER PE-2013000591
PROFESSIONAL ENGINEER
THIS SHEET HAS BEEN SIGNED, SEALED AND DATED ELECTRONICALLY.

DATE PREPARED 8/23/2021
ROUTE 24 | STATE MO
DISTRICT BR | SHEET NO. 1
COUNTY CARROLL
JOB NO. J1P3275
CONTRACT ID.
PROJECT NO.
BRIDGE NO. A29032

DESCRIPTION	DATE

IF A SEAL IS PRESENT ON THIS SHEET IT HAS BEEN ELECTRONICALLY SEALED AND DATED.

MISSOURI HIGHWAYS AND TRANSPORTATION COMMISSION
105 WEST CAPITOL
JEFFERSON CITY, MO 65102
1-888-ASK-MODOT (1-888-275-6636)

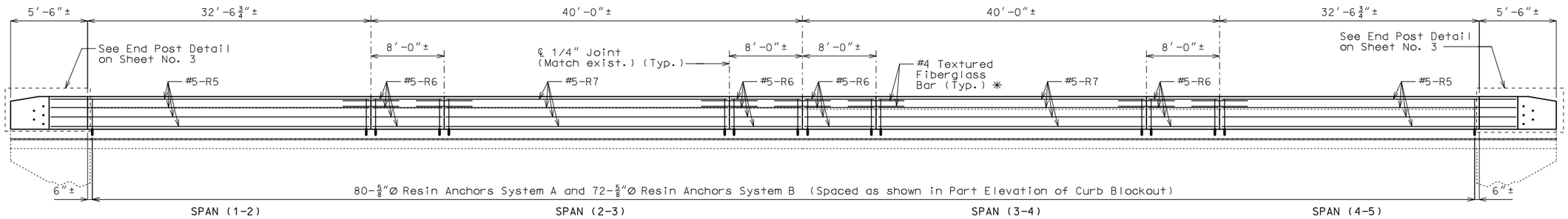

ELEVATION OF LEFT CURB BLOCKOUT

(Right curb blockout similar)

Longitudinal dimensions are along grade and are taken at top outside edge of parapet.

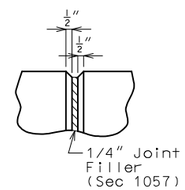

PART ELEVATION AT FORMED JOINT

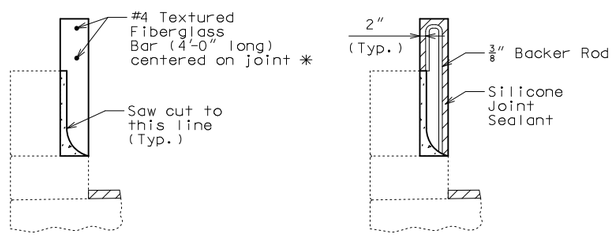

SECTION THRU SAW CUT JOINT

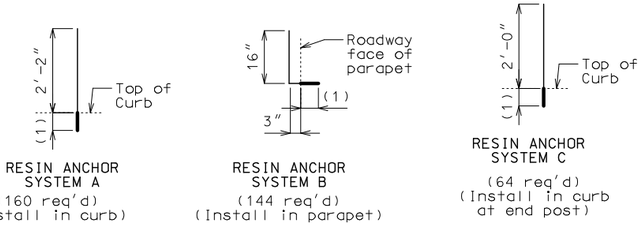

(1) Use manufacturer's embedment length (5" minimum embedment).

DETAILS OF RESIN ANCHORS

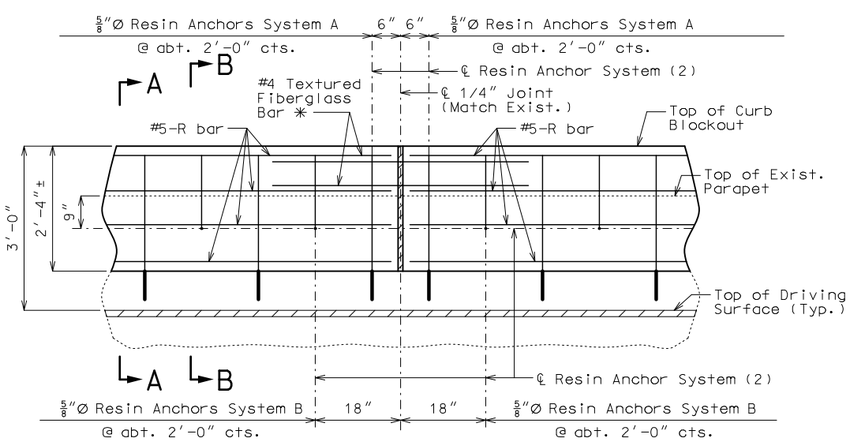

PART ELEVATION OF CURB BLOCKOUT

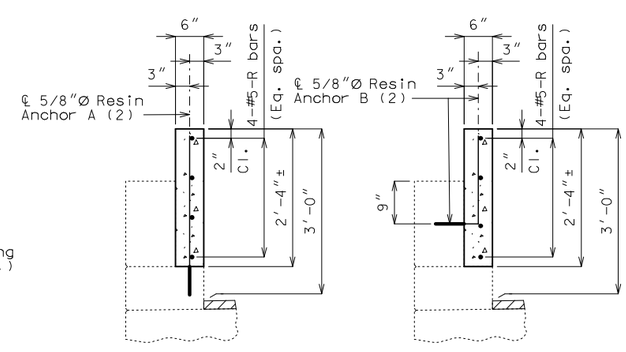

SECTION A-A SECTION B-B

CURB BLOCKOUT

Notes:

✳ Slip-formed option only.

Conventional forming or slip forming may be used. Saw cut joints may be used with conventional forming.

Bridge rail not shown for clarity.

Concrete in curb blockout shall be Class B-1.

Measurement of curb blockout is to the nearest linear foot, measured at the top outside edge of parapet. (Match existing curb and parapet)

All exposed edges of curb blockout shall have either a 1/2-inch radius or 3/8-inch bevel, unless otherwise noted.

Payment for concrete, reinforcement, resin anchor systems and any other work incidental to the curb blockout, complete in place, will be considered completely covered by the contract unit price for Curb Blockout per linear foot.

Cost of any concrete curb or parapet repair will be considered completely covered by the contract unit price for Curb Blockout.

All curb blockout reinforcement shall be epoxy coated.

(2) Shift resin anchors where necessary to clear existing anchor bolts for bridge rail, miss curb outlets (if present) and clear existing reinforcement.

Use a minimum lap of 3'-1" for #5 horizontal curb blockout bars.

Concrete traffic barrier delineators shall be placed on top of the curb blockout similarly as shown on Missouri Standard Plans 617.10 and in accordance with Sec 617. Delineators on bridges with two-lane, two-way traffic shall have retroflective sheeting on both sides. Concrete traffic barrier delineators will be considered completely covered by the contract unit price for Curb Blockout.

The contractor shall use one of the qualified resin anchor systems in accordance with Sec 1039.

The minimum embedment depth in concrete with f'c = 4,000 psi for the resin anchor system shall be that required to meet the minimum ultimate pullout strength in accordance with Sec 1039 but shall not be less than 5 inches.

An epoxy coated #5 Grade 60 reinforcing bar shall be substituted for the 5/8"Ø threaded rod.

For slip-formed option, both sides of the curb blockout shall have a vertically broomed finish and the top shall have a transversely broomed finish.

STATE OF MISSOURI
TED S. KOESTER
NUMBER PE-2013000591
PROFESSIONAL ENGINEER
THIS SHEET HAS BEEN SIGNED, SEALED AND DATED ELECTRONICALLY.

DATE PREPARED	
8/23/2021	
ROUTE 24	STATE MO
DISTRICT BR	SHEET NO. 2
COUNTY CARROLL	
JOB NO. J1P3275	
CONTRACT ID.	
PROJECT NO.	
BRIDGE NO. A29032	

DATE	DESCRIPTION

IF A SEAL IS PRESENT ON THIS SHEET IT HAS BEEN ELECTRONICALLY SEALED AND DATED.

MISSOURI HIGHWAYS AND TRANSPORTATION COMMISSION
105 WEST CAPITOL
JEFFERSON CITY, MO 65102
1-888-ASK-MODOT (1-888-275-6636)

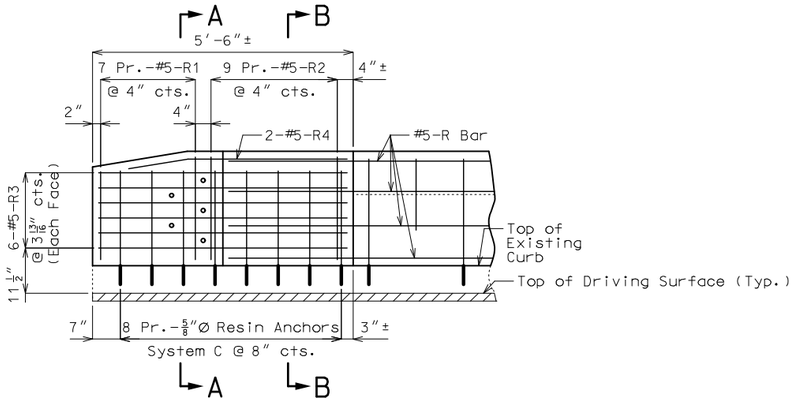

ELEVATION SHOWING REINFORCEMENT

(Right End Post at End Bent No. 5 similar)

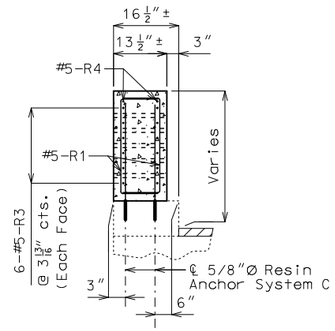

SECTION A-A

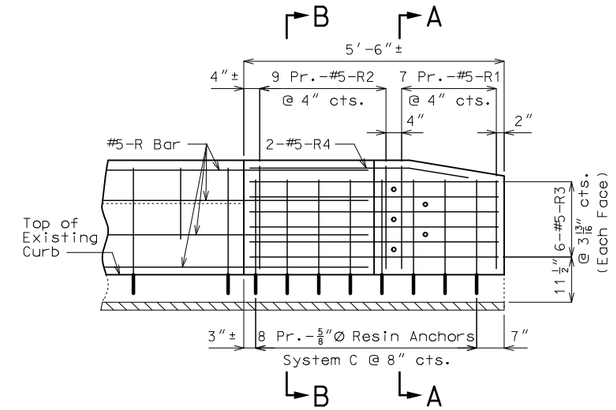

ELEVATION SHOWING REINFORCEMENT

(Right End Post at End Bent No. 1 similar)

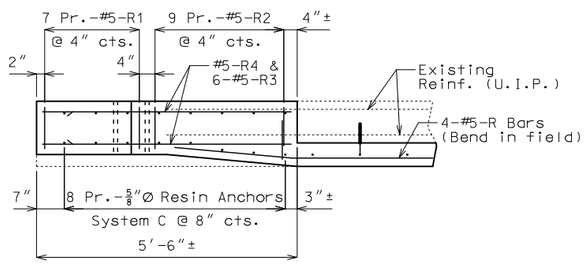

PLAN SHOWING REINFORCEMENT

LEFT END POST AT END BENT NO. 1

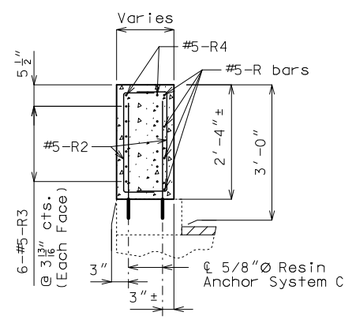

SECTION B-B

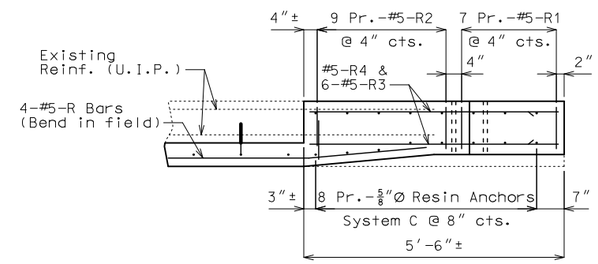

PLAN SHOWING REINFORCEMENT

LEFT END POST AT END BENT NO. 5

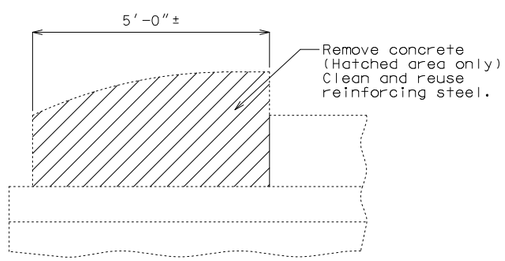

PART ELEVATION SHOWING END POST CONCRETE REMOVAL

Cost of removing existing end posts will be considered completely covered by the contract unit price for Curb Blockout.

Notes:

Work this sheet with Sheet No. 2.

For details of resin anchors, see Sheet No. 2.

Resin anchors shall be shifted or bent in field to clear one-inch diameter holes by at least 1/2 inch.

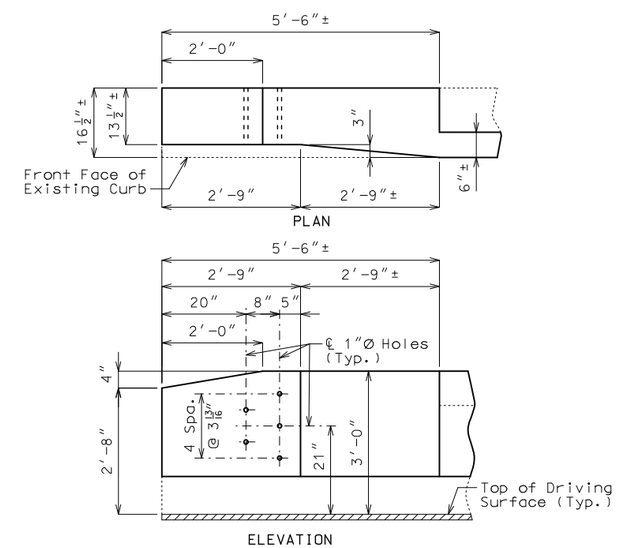

DETAILS OF END POST AND GUARD RAIL ATTACHMENT

CURB BLOCKOUT AT END BENTS

Detailed May 2021
Checked June 2021

Note: This drawing is not to scale. Follow dimensions.

STATE OF MISSOURI
TED S. KOESTER
NUMBER PE-2013000591
PROFESSIONAL ENGINEER
THIS SHEET HAS BEEN SIGNED, SEALED AND DATED ELECTRONICALLY.

DATE PREPARED	
8/23/2021	
ROUTE 24	STATE MO
DISTRICT BR	SHEET NO. 3
COUNTY CARROLL	
JOB NO. J1P3275	
CONTRACT ID.	
PROJECT NO.	
BRIDGE NO. A29032	

DATE	DESCRIPTION

MISSOURI HIGHWAYS AND TRANSPORTATION COMMISSION
105 WEST CAPITOL
JEFFERSON CITY, MO 65102
1-888-ASK-MODOT (1-888-275-6636)

IF A SEAL IS PRESENT ON THIS SHEET IT HAS BEEN ELECTRONICALLY SEALED AND DATED.

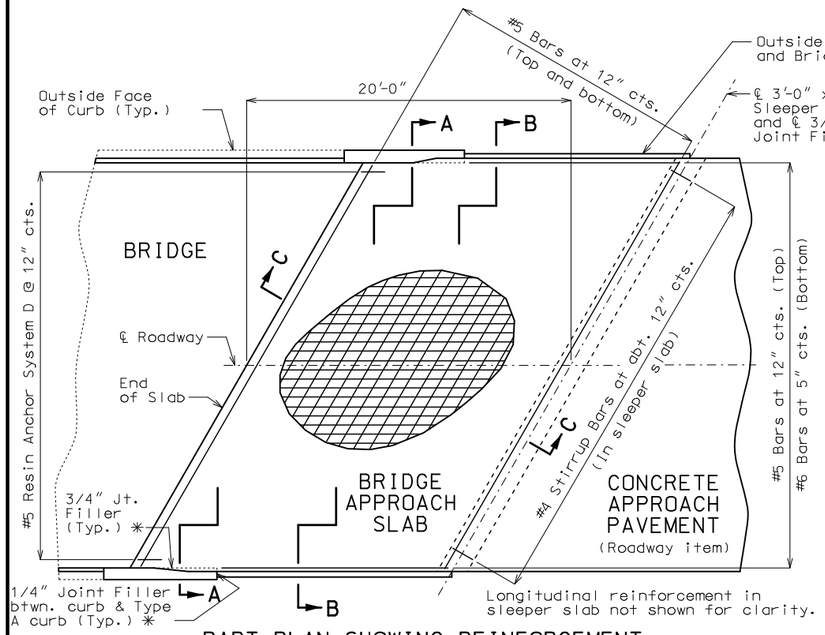

PART PLAN SHOWING REINFORCEMENT

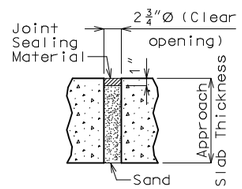

UNDERSEAL ACCESS HOLE DETAIL

(If required)

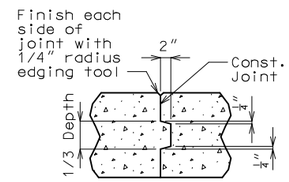

CONSTRUCTION JOINT DETAIL

General Notes:

All concrete for the bridge approach slab and sleeper slab shall be in accordance with Sec 503 (f'c = 4,000 psi).

The reinforcing steel in the bridge approach slab and the sleeper slab shall be epoxy coated Grade 60 with fy = 60,000 psi.

Drain pipe may be either 6" diameter corrugated metallic-coated pipe underdrain, 4" diameter corrugated polyvinyl chloride (PVC) drain pipe, or 4" diameter corrugated polyethylene (PE) drain pipe.

Minimum clearance to reinforcing steel shall be 1 1/2", unless otherwise shown.

The reinforcing steel in the bridge approach slab and the sleeper slab shall be continuous. The transverse reinforcing steel may be made continuous by lap splicing the #5 bars 29" or by mechanical bar splice.

Mechanical bar splices shall be in accordance with Sec 710.(Estimated 44 splices per slab)

All joint filler shall be in accordance with Sec 1057 for preformed fiber expansion joint filler except as noted.

The contractor shall pour and satisfactorily finish the bridge slab before placing the bridge approach slab.

Longitudinal construction joints in approach slab and sleeper slab shall be aligned with longitudinal construction joints in bridge slab.

For concrete approach pavement details, see roadway plans.

See Missouri Standard Plan 609.00 for details of Type A curb.

Payment for furnishing all materials, labor and excavation necessary to construct the approach slab, including the timber header, sleeper slab, underdrain, Type 5 aggregate base, joint filler and all other appurtenances and incidental work as shown on this sheet, complete in place, will be considered completely covered by the contract unit price for Bridge Approach Slab (Major) per square yard.

✳ Seal joint between vertical face of approach slab and wing with sealant in accordance with Sec 717 for silicone joint sealant for saw cut and formed joints.

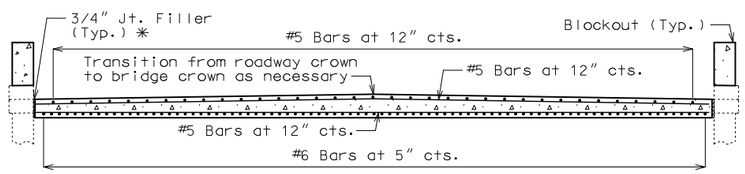

SECTION A-A

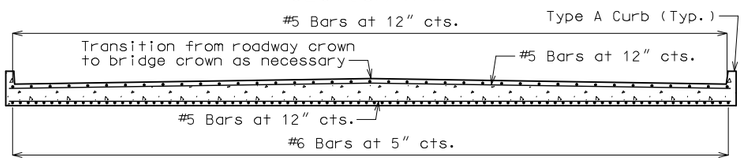

SECTION B-B

With the approval of the engineer, the contractor may crown the bottom of the approach slab to match the crown of the roadway surface.

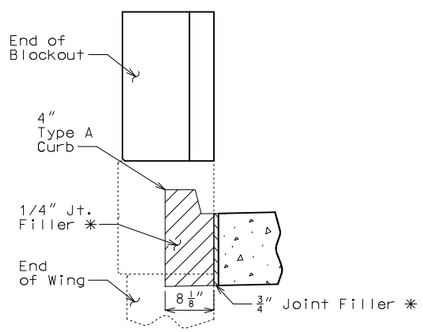

SECTION BETWEEN CURB AND BARRIER

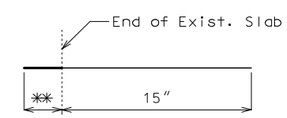

DETAIL OF RESIN ANCHOR SYSTEM

(44 required per bent)

✳✳ Manufacturer's recommended embedment length (5" min.)

For Resin Anchor Notes, see Sheet No. 2.

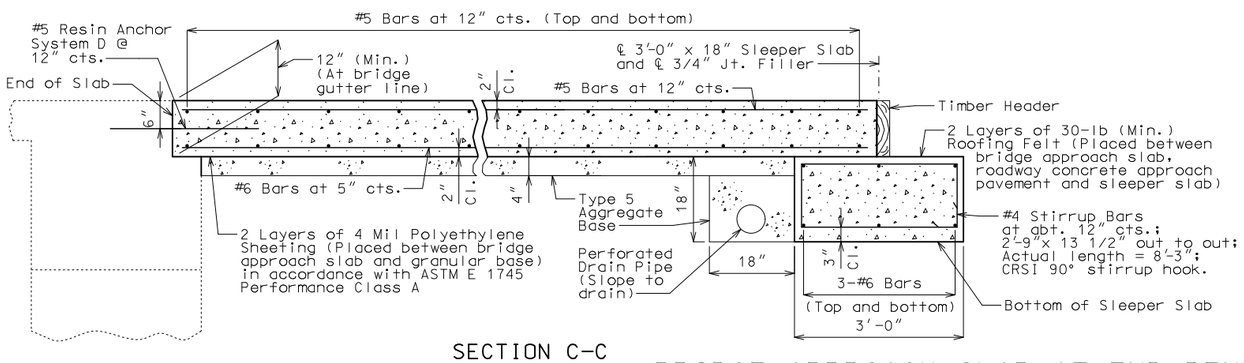

SECTION C-C

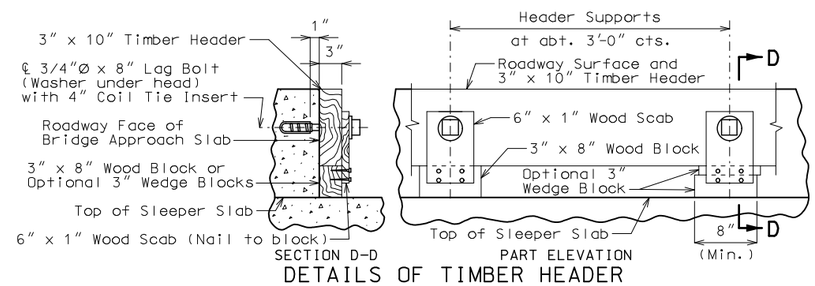

SECTION D-D PART ELEVATION

DETAILS OF TIMBER HEADER

Remove timber header when concrete pavement is placed.

BRIDGE APPROACH SLAB AT END BENT NO. 5 (MAJOR)

Detailed May 2021
Checked June 2021

Note: This drawing is not to scale. Follow dimensions.

STATE OF MISSOURI
TED S. KOESTER
NUMBER PE-2013000591
PROFESSIONAL ENGINEER
THIS SHEET HAS BEEN SIGNED, SEALED AND DATED ELECTRONICALLY.

DATE PREPARED	
8/23/2021	
ROUTE 24	STATE MO
DISTRICT BR	SHEET NO. 4
COUNTY CARROLL	
JOB NO. J1P3275	
CONTRACT ID.	
PROJECT NO.	
BRIDGE NO. A29032	

DATE	DESCRIPTION

IF A SEAL IS PRESENT ON THIS SHEET IT HAS BEEN ELECTRONICALLY SEALED AND DATED.

MISSOURI HIGHWAYS AND TRANSPORTATION COMMISSION
105 WEST CAPITOL
JEFFERSON CITY, MO 65102
1-888-ASK-MODOT (1-888-275-6636)

BILL OF REINFORCING STEEL

NO. REQ'D.	MARK NO. SIZE	MARK NO. MARK	LOCATION	EPOXY (E)	SHAPE NO.	STIRRUP (S)	SUBSTR. (X)	VARIES (V)	NO. EACH	B FT. IN.	C FT. IN.	D FT. IN.	E FT. IN.	F FT. IN.	H FT. IN.	K FT. IN.	NOMINAL LENGTH FT. IN.	ACTUAL LENGTH FT. IN.	WEIGHT LBS.
			CURB BLOKOUT																
56	5	R1	CURB BLOKOUT	E	10	S		V	8		10.500	21.000					3 6	3 4	
			INCREMENT =								10.500	2 0.000					3 9	3 7	202
			0.500 INCH																
72	5	R2	CURB BLOKOUT	E	10	S		V	8		10.500	2 0.000					3 9	3 7	
			INCREMENT =								13.500	2 0.000					4 3	4 1	288
			0.750 INCH																
48	5	R3	CURB BLOKOUT	E	20					5 3.000							5 3	5 3	263
8	5	R4	CURB BLOKOUT	E	23	S				16.500	3 4.000				2.625	16.250	4 9	4 8	39
16	5	R5	CURB BLOKOUT	E	20					35 1.000							35 0	35 0	584
32	5	R6	CURB BLOKOUT	E	20					7 9.000							7 9	7 9	259
16	5	R7	CURB BLOKOUT	E	20					23 9.000							23 9	23 9	396
			TOTALS																
	5			E															2031
			TOTAL																0
			TOTAL	E															2031
			Safety																
			Barrier																
			Curb																
	5			E															2031
			TOTAL																2031

BILL OF REINFORCING STEEL

NO. REQ'D.	MARK NO. SIZE	MARK NO. MARK	LOCATION	EPOXY (E)	SHAPE NO.	STIRRUP (S)	SUBSTR. (X)	VARIES (V)	NO. EACH	B FT. IN.	C FT. IN.	D FT. IN.	E FT. IN.	F FT. IN.	H FT. IN.	K FT. IN.	NOMINAL LENGTH FT. IN.	ACTUAL LENGTH FT. IN.	WEIGHT LBS.

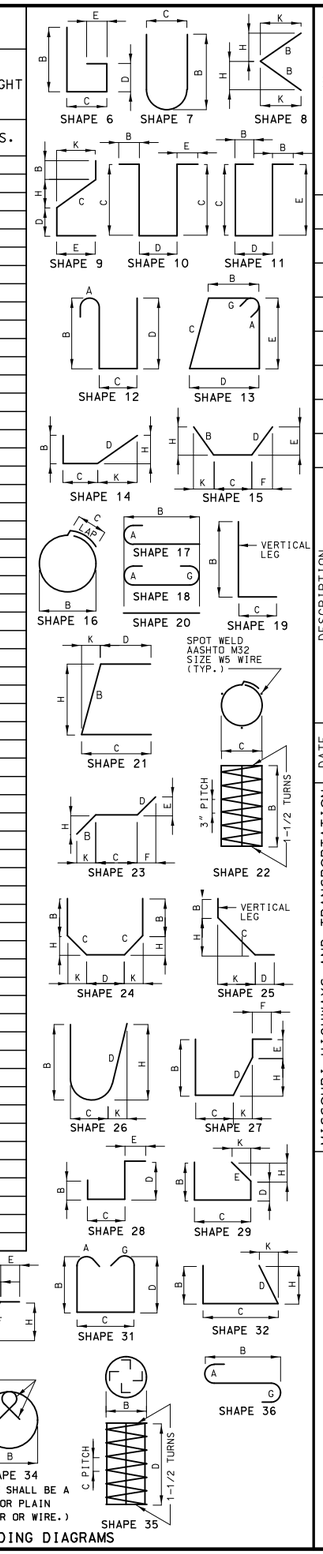

BENDING DIAGRAMS

STATE OF MISSOURI
TED S. KOESTER
NUMBER PE-2013000591
PROFESSIONAL ENGINEER

THIS SHEET HAS BEEN SIGNED, SEALED AND DATED ELECTRONICALLY.

DATE PREPARED	8/23/2021
ROUTE 24	STATE MO
DISTRICT BR	SHEET NO. 5
COUNTY	CARROLL
JOB NO.	J1P3275
CONTRACT ID.	
PROJECT NO.	
BRIDGE NO.	A29032

DESCRIPTION	DATE

MISSOURI HIGHWAYS AND TRANSPORTATION COMMISSION

105 WEST CAPITOL
JEFFERSON CITY, MO 65102
1-888-ASK-MODOT (1-888-275-6636)

IF A SEAL IS PRESENT ON THIS SHEET IT HAS BEEN ELECTRONICALLY SEALED AND DATED.

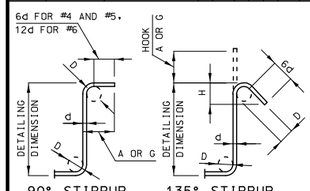

STIRRUP HOOK DIMENSIONS				
GRADES 40 - 50 - 60 KSI				
BAR SIZE	D (IN.)	90° HOOK	135° HOOK	
		HOOK A OR G	HOOK A OR G	APPROX. H
#4	2"	4 1/2"	4 1/2"	3"
#5	2 1/2"	6"	5 1/2"	3 3/4"
#6	4 1/2"	12"	8"	4 1/2"

NOTE: UNLESS OTHERWISE NOTED, DIAMETER "D" IS THE SAME FOR ALL BENDS AND HOOKS ON A BAR.

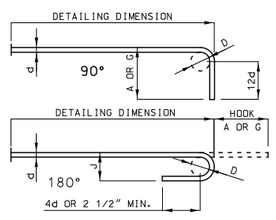

END HOOK DIMENSIONS				
BAR SIZE	D (IN.)	ALL GRADES		
		180° HOOKS		90° HOOKS
		A OR G	J	A OR G
#3	2 1/4"	5"	3"	6"
#4	3"	6"	4"	8"
#5	3 3/4"	7"	5"	10"
#6	4 1/2"	8"	6"	12"
#7	5 1/4"	10"	7"	14"
#8	6"	11"	8"	16"
#9	9 1/2"	15"	11 3/4"	19"
#10	10 3/4"	17"	13 1/4"	22"
#11	12"	19"	14 3/4"	2'-0"
#14	18 1/4"	2'-3"	21 3/4"	2'-7"

NOTE:
ALL STANDARD HOOKS AND BENDS OTHER THAN 180 DEGREE ARE TO BE BENT WITH SAME PROCEDURE AS FOR 90 DEGREE STANDARD HOOKS.

HOOKS AND BENDS SHALL BE IN ACCORDANCE WITH THE PROCEDURES AS SHOWN ON THIS SHEET.

E = EPOXY COATED REINFORCEMENT.
S = STIRRUP.
X = BAR IS INCLUDED IN SUBSTRUCTURE QUANTITIES.
V = BAR DIMENSIONS VARY IN EQUAL INCREMENTS BETWEEN DIMENSIONS SHOWN ON THIS LINE AND THE FOLLOWING LINE.
NO. EA. = NUMBER OF BARS OF EACH LENGTH.

NOMINAL LENGTHS ARE BASED ON OUT TO OUT DIMENSIONS SHOWN IN BENDING DIAGRAMS AND ARE LISTED FOR FABRICATORS USE. (NEAREST INCH)

ACTUAL LENGTHS ARE MEASURED ALONG CENTERLINE BAR TO THE NEAREST INCH.

PAYWEIGHTS ARE BASED ON ACTUAL LENGTHS.

FOUR ANGLE OR CHANNEL SPACERS ARE REQUIRED FOR EACH COLUMN SPIRAL. SPACERS ARE TO BE PLACED ON INSIDE OF SPIRALS. LENGTH AND WEIGHT OF COLUMN SPIRALS DO NOT INCLUDE SPLICES OR SPACERS.

REINFORCING STEEL (GRADE 60) FY = 60,000 PSI.

Detailed May 2021
Checked July 2021

Note: This drawing is not to scale. Follow dimensions.

SEC/SUR 33 TWP 53N RGE 23W

U.I.P. AND REHABILITATE EXISTING (47'-86'-86'-2.5') CONTINUOUS COMPOSITE PLATE GIRDER SPANS (29') SIMPLE NON-COMPOSITE PLATE GIRDER SPAN (SKEW: 5°R.A.)

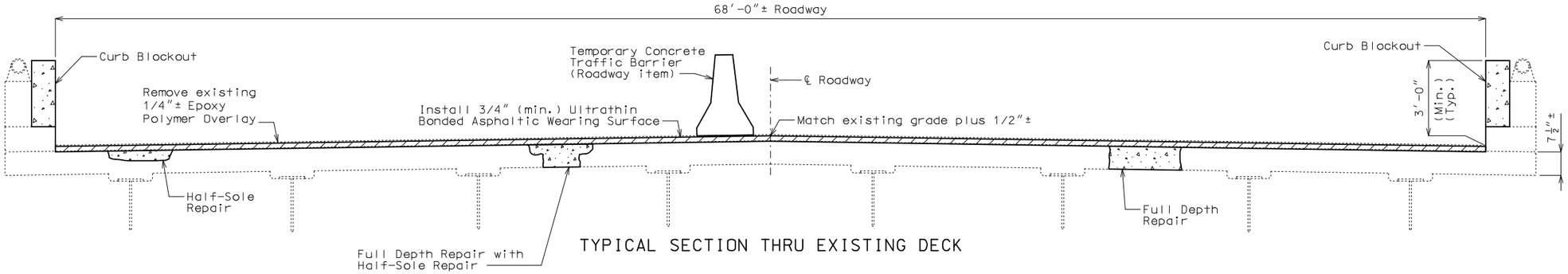

TYPICAL SECTION THRU EXISTING DECK

General Notes:

Design Specifications:

2002 AASTHO LFD (17th Ed.) Standard Specifications
Bridge Deck Rating = 7

Design Loading:

HS20-44 (AASHO 1973 and New Construction)

Design Unit Stresses:

Class B-2 Concrete (Superstructure, except Curb Blockout) f'c = 4,000 psi
Class B-1 Concrete (Curb Blockout) f'c = 4,000 psi
Reinforcing Steel (Grade 60) fy = 60,000 psi

Structural Steel Protective Coating:

Protective Coating: System G in accordance with Sec 1081.

Protective Coating Limits: The surface of all existing structural steel within a distance of not less than 10 feet from ℄ of expansion joint at End Bents No. 1 & 5 and Int. Bent No. 4 shall be recoated with System G.

Surface Preparation: Surface preparation of the existing steel shall be in accordance with Sec 1081 for Recoating of Structural Steel (System G, H or I). The cost of surface preparation will be considered completely covered by the contract unit price per sq. foot for Surface Preparation for Recoating Structural Steel.

Prime Coat: The cost of the prime coat will be considered completely covered by the contract unit price per sq. foot for Field Application of Inorganic Zinc Primer. Tint of the prime coat for System G shall be similar to the color of the field coat to be used.

Field Coat: The color of the finish field coat shall be Gray (Federal Standard #26373). The cost of the intermediate field coat will be considered completely covered by the contract unit price per sq. foot for Intermediate Field Coat (System G). The cost of the finish field coat will be considered completely covered by the contract unit price per sq. foot for Finish Field Coat (System G).

Miscellaneous:

Roadway surfacing adjacent to bridge ends shall match new bridge wearing surface (roadway item).

All concrete repairs shall be in accordance with Sec 704, unless otherwise noted.

Outline of existing work is indicated by light dashed lines. Heavy lines indicate new work.

Contractor shall verify all dimensions in field before ordering new material.

In order to maintain grade and a minimum thickness of wearing surface as shown on plans it may be necessary to use additional quantities of wearing surface at various locations throughout the structure. The cost of furnishing and installing the wearing surface will be considered completely covered in the contract unit price, including all additional labor, materials or equipment for variations in thickness of wearing surface.

Traffic Handling:

Traffic to be maintained on structure during construction. See roadway plans for traffic control.

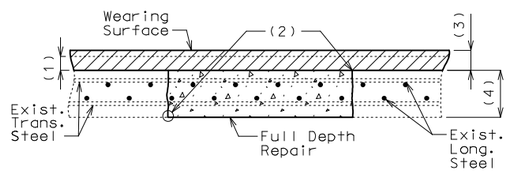

FULL DEPTH REPAIR

(1) Removal of existing 1/4"± epoxy polymer overlay

(2) 1" vertical side shall be established outside the deteriorated area.

(3) 3/4" minimum ultrathin bonded asphaltic wearing surface

(4) Original depth of deck

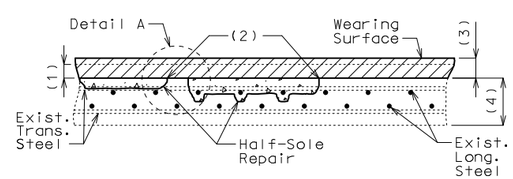

HALF-SOLE REPAIR

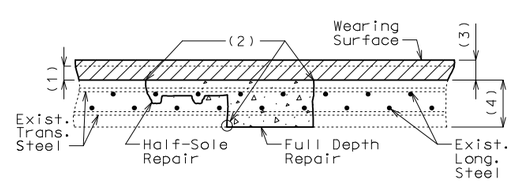

FULL DEPTH REPAIR WITH HALF-SOLE REPAIR

Estimated Quantities

Item		Total
Removal of Seal Coat or Polymer Wearing Surface	sq. foot	17,117
Removal of Existing Expansion Joint & Adjacent Concrete	linear foot	137
Remove and Replace Curb & Parapet	linear foot	12
Optional Ultrathin Bonded Asphalt Wearing Surface (Bridges)	sq. yard	1902
Curb Blockout	linear foot	578
Substructure Repair (Formed)	sq. foot	410
Half-Sole Repair	sq. foot	3500
Full Depth Repair	sq. foot	1750
Protective Coating - Concrete Bents and Piers (Epoxy)	lump sum	1
Cleaning and Coating Existing Bearings	each	16
Surface Preparation for Recoating Structural Steel	sq. foot	3000
Field Application of Inorganic Zinc Primer	sq. foot	3000
Intermediate Field Coat System (System G)	sq. foot	3000
Finish Field Coat System (System G)	sq. foot	3000
Strip Seal Expansion Joint System	linear foot	137

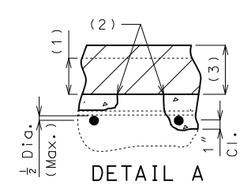

DETAIL A

Clearance around top bar and around bottom bar at the intersection of top bar shall be required when more than half the diameter of the top bar is exposed.

REPAIRS TO BRIDGE: ROUTE 24 OVER ROUTE 65

ROUTE 24 FROM ROUTE MM TO ROUTE 10
ABOUT 1.7 MILES NORTH OF ROUTE 10
BEG. STA. 51+66.56± (Match Existing)

Detailed May 2021
Checked June 2021

Note: This drawing is not to scale. Follow dimensions.

STATE OF MISSOURI
TED S. KOESTER
NUMBER PE-2013000591
PROFESSIONAL ENGINEER
THIS SHEET HAS BEEN SIGNED, SEALED AND DATED ELECTRONICALLY.

DATE PREPARED 8/23/2021
ROUTE 24 | STATE MO
DISTRICT BR | SHEET NO. 1
COUNTY CARROLL
JOB NO. J1P3275
CONTRACT ID.
PROJECT NO.
BRIDGE NO. A29042

DESCRIPTION | DATE

IF A SEAL IS PRESENT ON THIS SHEET IT HAS BEEN ELECTRONICALLY SEALED AND DATED.

MISSOURI HIGHWAYS AND TRANSPORTATION COMMISSION
105 WEST CAPITOL
JEFFERSON CITY, MO 65102
1-888-ASK-MODOT (1-888-275-6636)

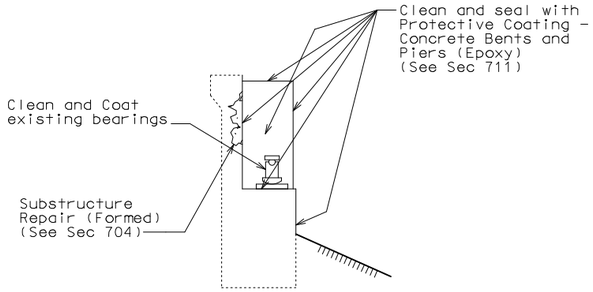

TYPICAL SECTION THRU
END BENT NO. 1 SHOWING
PROTECTIVE COATING
& SUBSTRUCTURE REPAIR

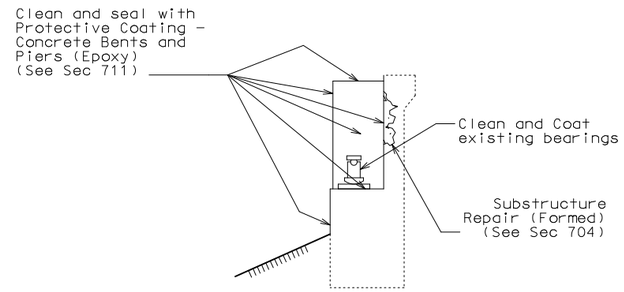

TYPICAL SECTION THRU
END BENT NO. 5 SHOWING
PROTECTIVE COATING
& SUBSTRUCTURE REPAIR

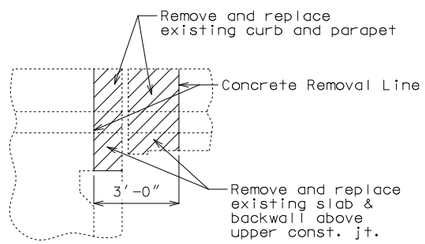

PART ELEVATION AT
END BENTS NO. 1 AND 5
SHOWING CONCRETE
REMOVAL

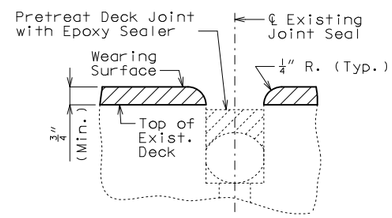

SECTION THRU JOINT
INT. BENT NO. 4

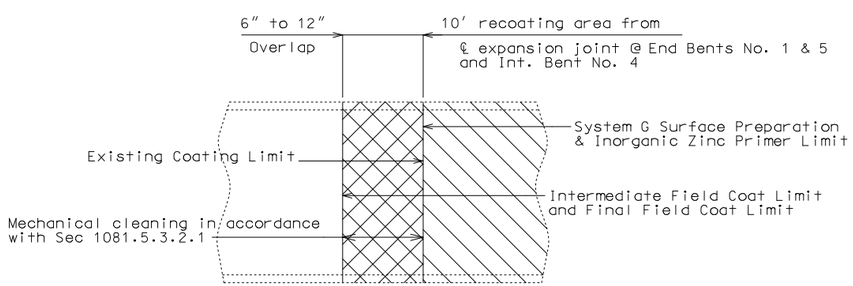

PART ELEVATION SHOWING LIMITS OF PAINT OVERLAP

(Vertical or horizontal paint limit.Horizontal
limit shown)

Detailed May 2021
Checked June 2021

Note: This drawing is not to scale. Follow dimensions.

STATE OF MISSOURI
TED S. KOESTER
NUMBER
PE-2013000591
PROFESSIONAL ENGINEER

THIS SHEET HAS BEEN SIGNED, SEALED AND DATED ELECTRONICALLY.

DATE PREPARED	8/23/2021
ROUTE	24
STATE	MO
DISTRICT	BR
SHEET NO.	2
COUNTY	CARROLL
JOB NO.	J1P3275
CONTRACT ID.	
PROJECT NO.	
BRIDGE NO.	A29042

DATE	DESCRIPTION

MISSOURI HIGHWAYS AND TRANSPORTATION COMMISSION

105 WEST CAPITOL
JEFFERSON CITY, MO 65102
1-888-ASK-MODOT (1-888-275-6636)

IF A SEAL IS PRESENT ON THIS SHEET IT HAS BEEN ELECTRONICALLY SEALED AND DATED.

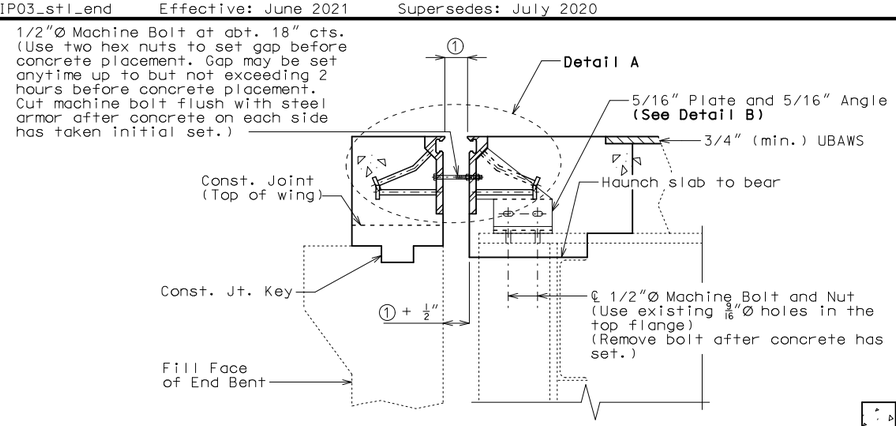

SECTION A-A

Notes:
Strip seal gland not shown for clarity.

Slab Reinforcement not shown for clarity.

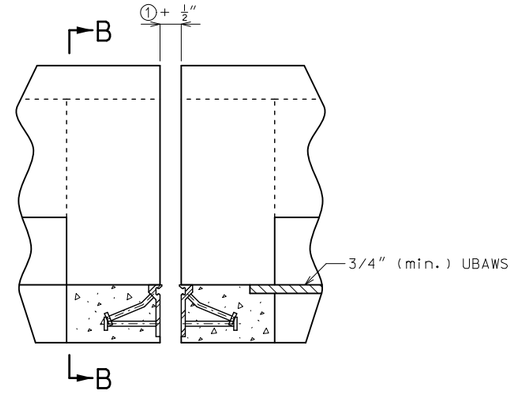

PART ELEVATION OF BARRIER

Strip seal gland not shown for clarity.

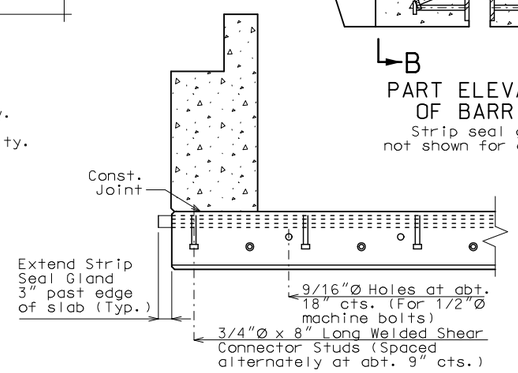

PART SECTION B-B

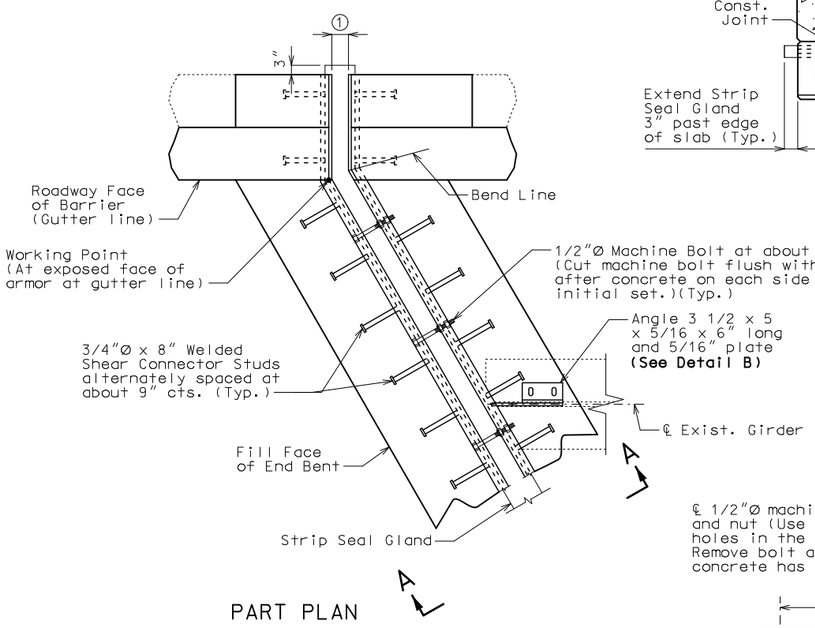

PART PLAN

New wearing surface not shown for clarity.

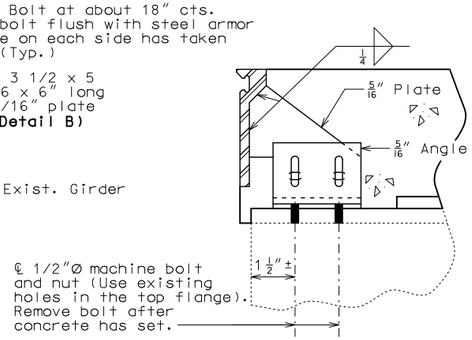

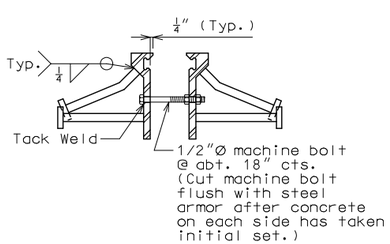

DETAIL A

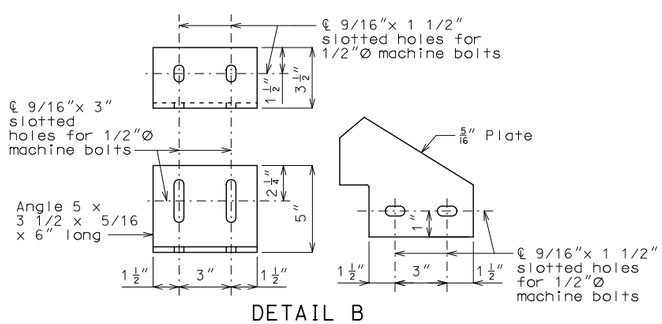

DETAIL B

GENERAL NOTES:

Expansion joint system shall be fabricated in one section, except for staged construction and when the length is over 50 feet. A complete joint penetration groove welded splice shall be required. Welds shall be ground flush to provide a smooth surface. The expansion joint system shall be fabricated and installed to the crown and grade of the roadway.

The strip seal gland shall be installed in joints in one continuous piece without field splices. Factory splicing will be permitted for joints in excess of 53 feet.

Structural steel for the expansion joint system shall be ASTM A709 Grade 36 except the steel armor may be ASTM A709 Grade 50W. Anchors for the expansion joint system shall be in accordance with Sec 1037. Strip seal expansion joint system shall be in accordance with Sec 717.

Structural steel for the expansion joint system shall be coated with a minimum of two coats of inorganic zinc primer to provide a total dry film thickness of 4 mils minimum, 6 mils maximum, or galvanized in accordance with ASTM A123. Anchors need not be protected from overspray.

Longitudinal reinforcing steel shall be cut/bent so that ends shall be 1" from the vertical leg of the steel armor at the expansion joint system.

Concrete shall be forced under and around steel armor and anchors. Proper consolidation of the concrete shall be achieved by localized internal vibration.

② The installation temperature shall be taken as the actual air temperature averaged over the 24-hour period immediately preceding installation.

③ MoDOT Construction personnel will indicate the strip seal expansion joint system installed.

Steel armor may also be referred to as extrusion or rail.

Work this sheet with Sheet No. 5.

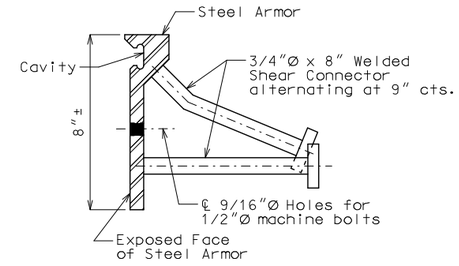

DETAIL OF JOINT ARMOR

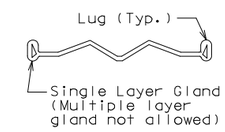

DETAIL OF GLAND

Table of Allowed Transverse Strip Seal Expansion Joint System

Manufacturer	Strip Seal System (Designated Name)	Movement Parallel to RDWY	Allowed Installation Gap ① Normal to Joint at RDWY Surface @ Air/Surface Temperature ②						③
			@ 40°F	@ 50°F	@ 60°F	@ 70°F	@ 80°F	@ 90°F	
D S Brown	Strip seal L2-400	1 9/16"	2 3/16"	2 1/8"	2"	1 7/8"	1 13/16"	1 11/16"	□
D S Brown	Strip seal L2-500	1 9/16"	2 3/16"	2 1/8"	2"	1 7/8"	1 13/16"	1 11/16"	□
Watson Bowman Acme (Wabo)	Strip seal SE-300	1 9/16"	2 3/16"	2 1/8"	2"	1 7/8"	1 13/16"	1 11/16"	□
Watson Bowman Acme (Wabo)	Strip seal SE-400	1 9/16"	2 3/16"	2 1/8"	2"	1 7/8"	1 13/16"	1 11/16"	□
Watson Bowman Acme (Wabo)	Strip seal SE-500	1 9/16"	2 3/16"	2 1/8"	2"	1 7/8"	1 13/16"	1 11/16"	□

STRIP SEAL EXPANSION JOINT SYSTEM AT END BENT NO. 1

Detailed May 2021
Checked June 2021

Note: This drawing is not to scale. Follow dimensions.

STATE OF MISSOURI
TED S. KOESTER
NUMBER PE-2013000591
PROFESSIONAL ENGINEER
THIS SHEET HAS BEEN SIGNED, SEALED AND DATED ELECTRONICALLY.

DATE PREPARED	
8/23/2021	
ROUTE 24	STATE MO
DISTRICT BR	SHEET NO. 3
COUNTY CARROLL	
JOB NO. J1P3275	
CONTRACT ID.	
PROJECT NO.	
BRIDGE NO. A29042	

DATE	DESCRIPTION

IF A SEAL IS PRESENT ON THIS SHEET IT HAS BEEN ELECTRONICALLY SEALED AND DATED.

MISSOURI HIGHWAYS AND TRANSPORTATION COMMISSION
105 WEST CAPITOL
JEFFERSON CITY, MO 65102
1-888-ASK-MODOT (1-888-275-6636)

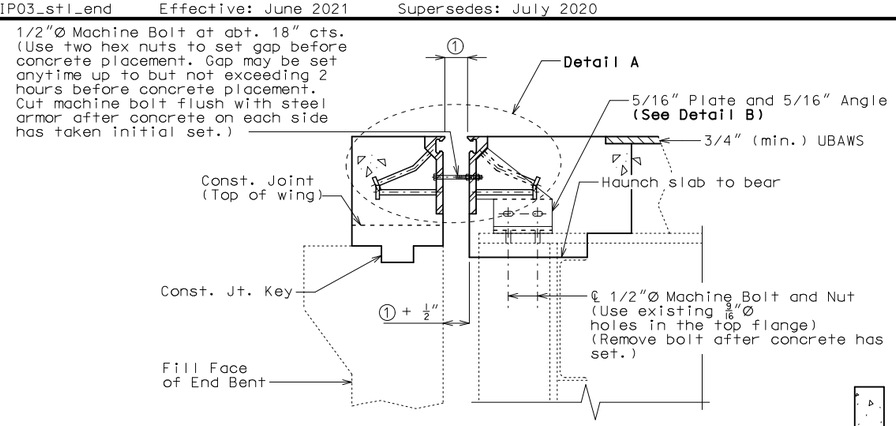

SECTION A-A

Note:
Strip seal gland not shown for clarity.

Slab Reinforcement not shown for clarity.

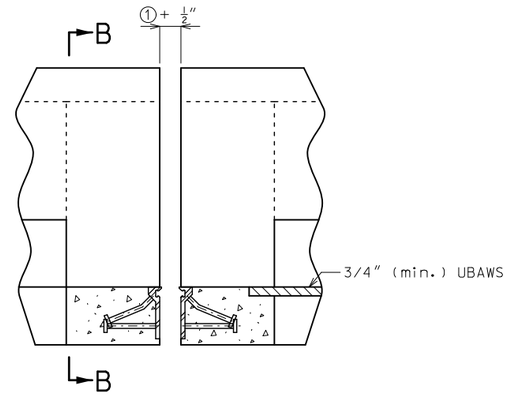

PART ELEVATION OF BARRIER

Strip seal gland not shown for clarity.

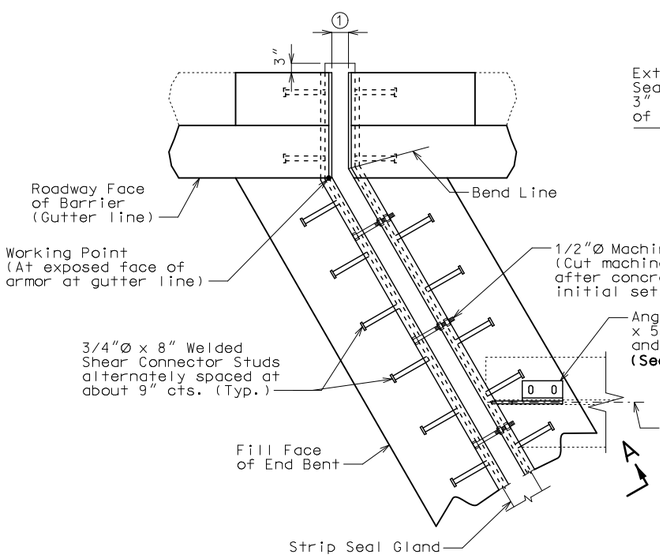

PART PLAN

New wearing surface not shown for clarity.

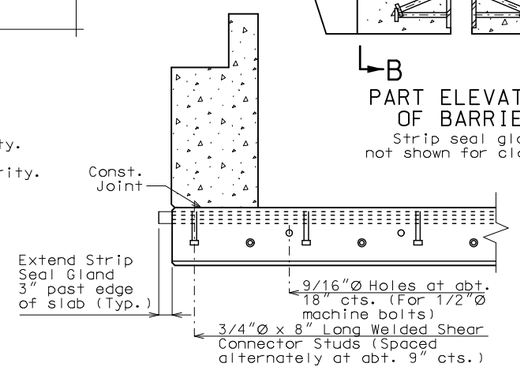

PART SECTION B-B

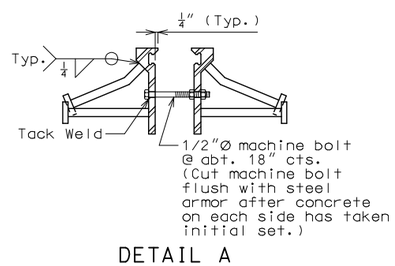

DETAIL A

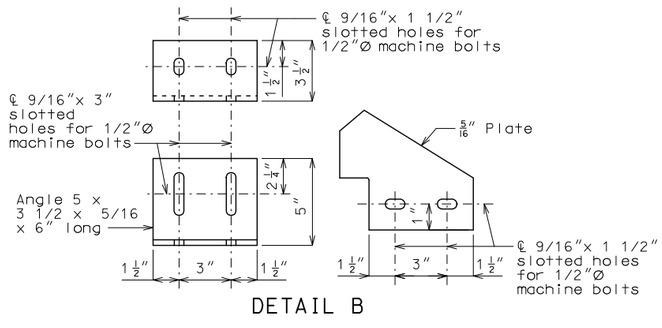

DETAIL B

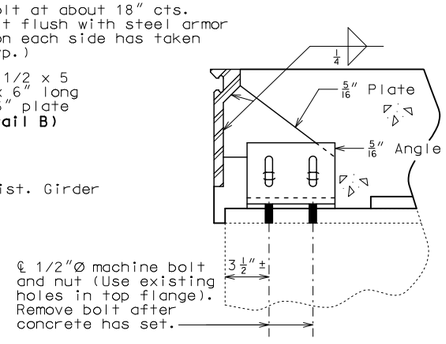

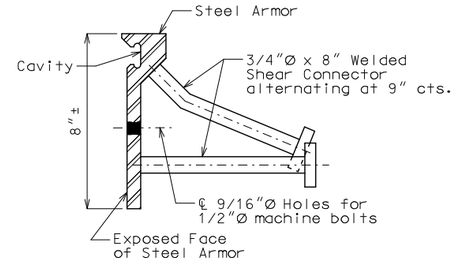

DETAIL OF JOINT ARMOR

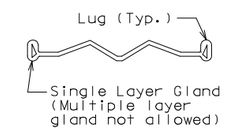

DETAIL OF GLAND

GENERAL NOTES:

Expansion joint system shall be fabricated in one section, except for staged construction and when the length is over 50 feet. A complete joint penetration groove welded splice shall be required. Welds shall be ground flush to provide a smooth surface. The expansion joint system shall be fabricated and installed to the crown and grade of the roadway.

The strip seal gland shall be installed in joints in one continuous piece without field splices. Factory splicing will be permitted for joints in excess of 53 feet.

Structural steel for the expansion joint system shall be ASTM A709 Grade 36 except the steel armor may be ASTM A709 Grade 50W. Anchors for the expansion joint system shall be in accordance with Sec 1037. Strip seal expansion joint system shall be in accordance with Sec 717.

Structural steel for the expansion joint system shall be coated with a minimum of two coats of inorganic zinc primer to provide a total dry film thickness of 4 mils minimum, 6 mils maximum, or galvanized in accordance with ASTM A123. Anchors need not be protected from overspray.

Longitudinal reinforcing steel shall be cut/bent so that ends shall be 1" from the vertical leg of the steel armor at the expansion joint system.

Concrete shall be forced under and around steel armor and anchors. Proper consolidation of the concrete shall be achieved by localized internal vibration.

② The installation temperature shall be taken as the actual air temperature averaged over the 24-hour period immediately preceding installation.

③ MoDOT Construction personnel will indicate the strip seal expansion joint system installed.

Steel armor may also be referred to as extrusion or rail.

Work this sheet with Sheet No. 5.

Table of Allowed Transverse Strip Seal Expansion Joint System

Manufacturer	Strip Seal System (Designated Name)	Movement Parallel to RDWY	Allowed Installation Gap ① Normal to Joint at RDWY Surface @ Air/Surface Temperature ②						③
			@ 40°F	@ 50°F	@ 60°F	@ 70°F	@ 80°F	@ 90°F	
D S Brown	Strip seal L2-400	1 3/8"	2 3/16"	2 1/16"	2"	1 15/16"	1 13/16"	1 3/4"	□
D S Brown	Strip seal L2-500	1 3/8"	2 3/16"	2 1/16"	2"	1 15/16"	1 13/16"	1 3/4"	□
Watson Bowman Acme (Wabo)	Strip seal SE-300	1 3/8"	2 3/16"	2 1/16"	2"	1 15/16"	1 13/16"	1 3/4"	□
Watson Bowman Acme (Wabo)	Strip seal SE-400	1 3/8"	2 3/16"	2 1/16"	2"	1 15/16"	1 13/16"	1 3/4"	□
Watson Bowman Acme (Wabo)	Strip seal SE-500	1 3/8"	2 3/16"	2 1/16"	2"	1 15/16"	1 13/16"	1 3/4"	□

STRIP SEAL EXPANSION JOINT SYSTEM AT END BENT NO. 5

Detailed May 2021
Checked June 2021

Note: This drawing is not to scale. Follow dimensions.

STATE OF MISSOURI
TED S. KOESTER
NUMBER PE-2013000591
PROFESSIONAL ENGINEER
THIS SHEET HAS BEEN SIGNED, SEALED AND DATED ELECTRONICALLY.

DATE PREPARED	
8/23/2021	
ROUTE 24	STATE MO
DISTRICT BR	SHEET NO. 4
COUNTY CARROLL	
JOB NO. J1P3275	
CONTRACT ID.	
PROJECT NO.	
BRIDGE NO. A29042	

DATE	DESCRIPTION

IF A SEAL IS PRESENT ON THIS SHEET IT HAS BEEN ELECTRONICALLY SEALED AND DATED.

MISSOURI HIGHWAYS AND TRANSPORTATION COMMISSION
105 WEST CAPITOL
JEFFERSON CITY, MO 65102
1-888-ASK-MODOT (1-888-275-6636)

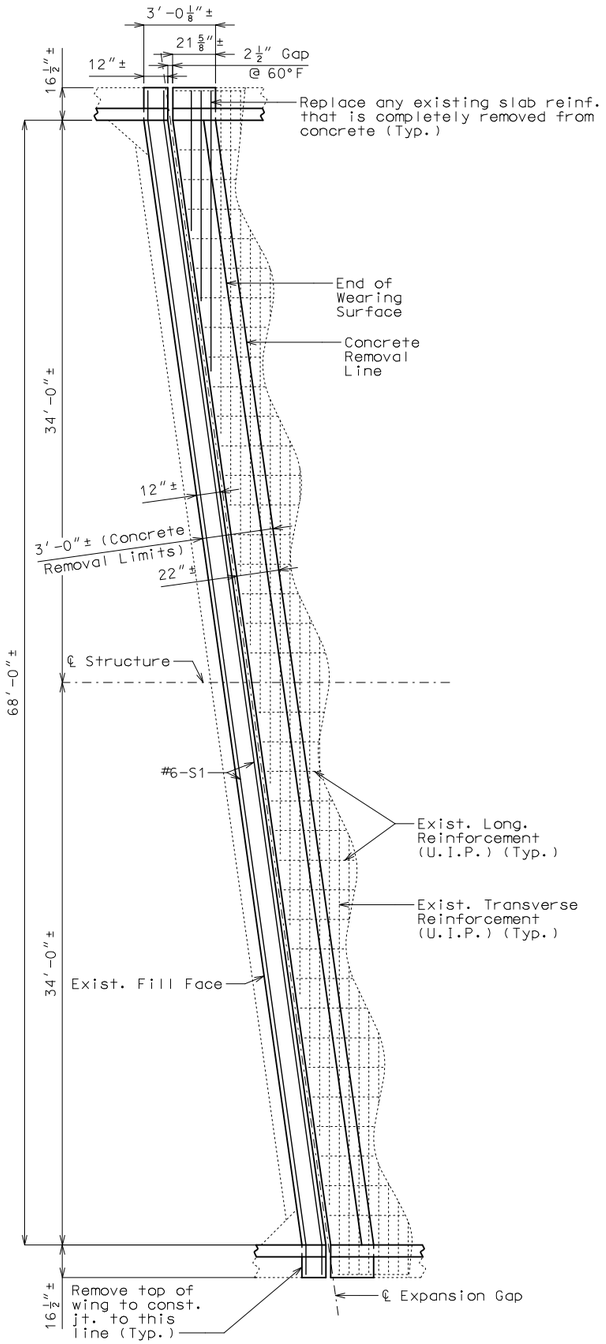

PART PLAN OF SLAB
AT END BENT NO. 1
SHOWING SLAB REINFORCEMENT

Note: Expansion device not shown for clarity.

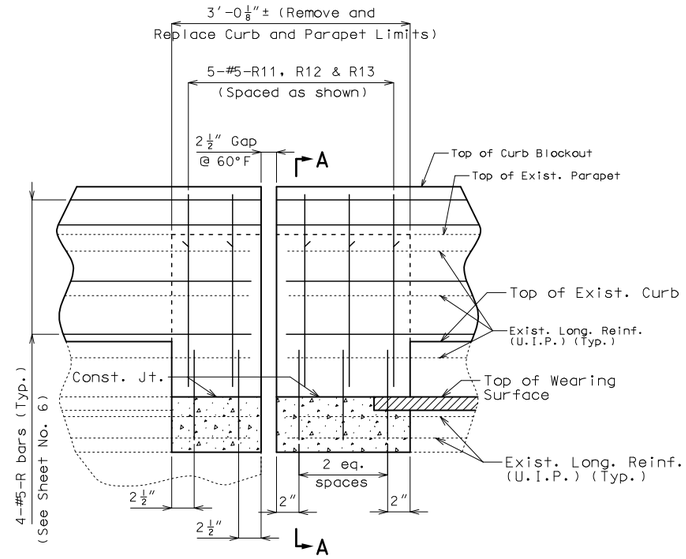

PART ELEVATION OF CURB
BLOCKOUT AND PARAPET

Note: Expansion device and #6-S bars not shown for clarity.

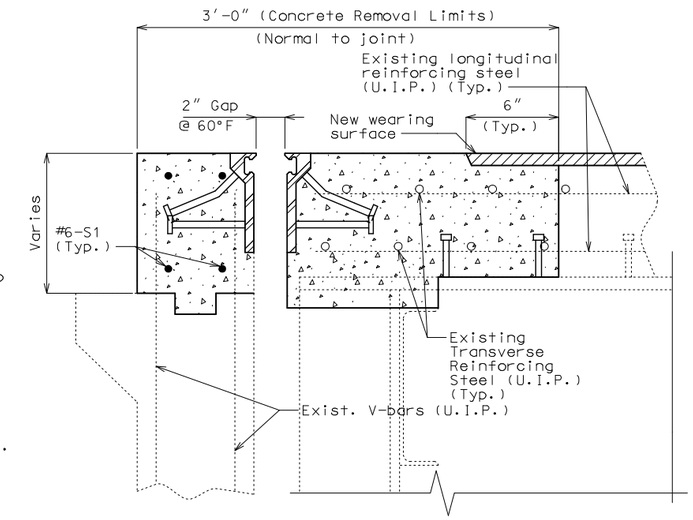

PART SECTION AT
END BENT NO. 1
THRU SLAB SHOWING
SLAB REINFORCEMENT

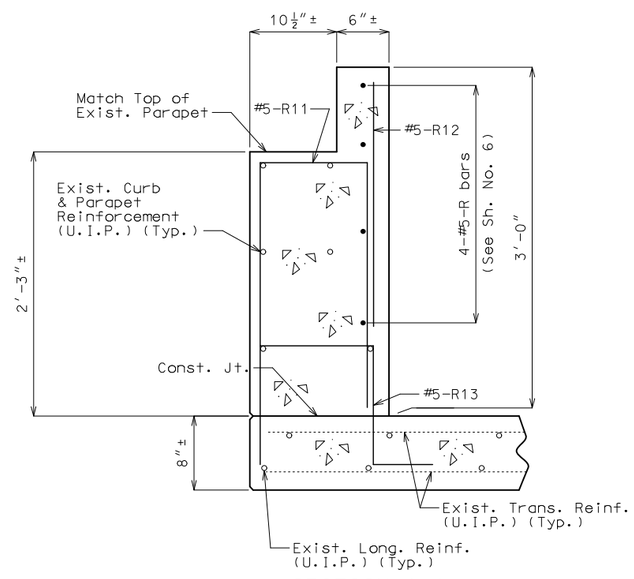

SECTION A-A

Notes:

The #6-S1 bars to be segmented to accommodate stage construction. The total bar length for #6-S1 bars shown in Bill of Reinforcing Steel allows for one lap splice with a length of 3′-10″. Actual bar segment lengths to be determined by contractor. The contractor may use a mechanical bar splice in lieu of a lap splice. When a mechanical bar splice is used, the actual bar segment length will be determined by contractor to accommodate manufacturer's recommendations for installation and stage construction. The cost of furnishing and installing the bar splices will be considered completely covered by the contract unit price for Reinforcing Steel (Epoxy Coated). No adjustment of the quantity of reinforcing steel will be allowed for the use of mechanical bar splices.

Top of curb blockout and parapet shall be built parallel to grade with barrier curb joints normal to grade.

All exposed edges of curb blockout and parapet shall have either a 1/2-inch radius or a 3/8-inch bevel, unless otherwise noted.

Concrete in the curb blockout and parapet shall be Class B-1.

Slab concrete shall be Class B-2.

Payment for removal and replacement of all concrete and reinforcement in curb blockout and parapet in the limits shown, complete in place, will be considered completely covered by the contract unit price for Remove and Replace Curb and Parapet.

Existing stirrups not embedded in concrete shall be removed within the limits shown.

Top of backwall for End Bents shall be formed to the crown and grade of the roadway. Backwall above upper construction joint shall not be poured until the superstructure slab has been poured in the adjacent span.

Work this shee with Sheets No. 3 & 4.

SLAB REPLACEMENT DETAILS AT END BENTS NO. 1 AND 5

(End Bent No. 1 shown, End Bent No. 5 similar)

Detailed May 2021
Checked July 2021

Note: This drawing is not to scale. Follow dimensions.

STATE OF MISSOURI
TED S. KOESTER
NUMBER PE-2013000591
PROFESSIONAL ENGINEER

THIS SHEET HAS BEEN SIGNED, SEALED AND DATED ELECTRONICALLY.

DATE PREPARED	
8/23/2021	
ROUTE 24	STATE MO
DISTRICT BR	SHEET NO. 5
COUNTY CARROLL	
JOB NO. J1P3275	
CONTRACT ID.	
PROJECT NO.	
BRIDGE NO. A29042	

DATE	DESCRIPTION

MISSOURI HIGHWAYS AND TRANSPORTATION COMMISSION
105 WEST CAPITOL
JEFFERSON CITY, MO 65102
1-888-ASK-MODOT (1-888-275-6636)

IF A SEAL IS PRESENT ON THIS SHEET IT HAS BEEN ELECTRONICALLY SEALED AND DATED.

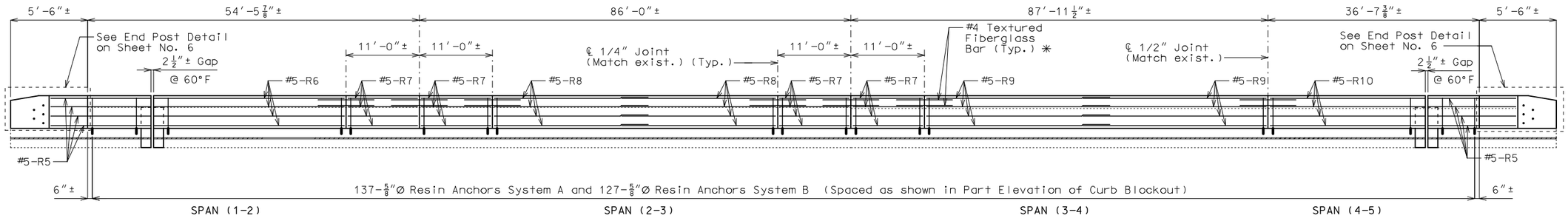

ELEVATION OF LEFT CURB BLOCKOUT

(Right curb blockout similar)

Longitudinal dimensions are along grade and are taken at top outside edge of parapet.

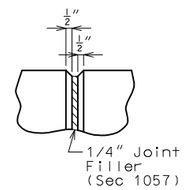

PART ELEVATION AT FORMED JOINT

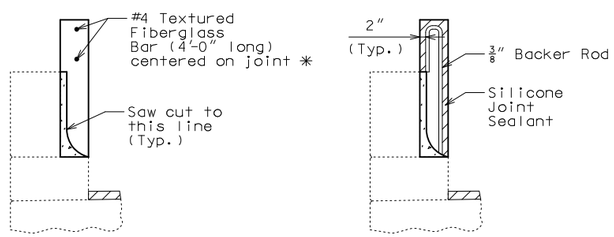

SECTION THRU SAW CUT JOINT

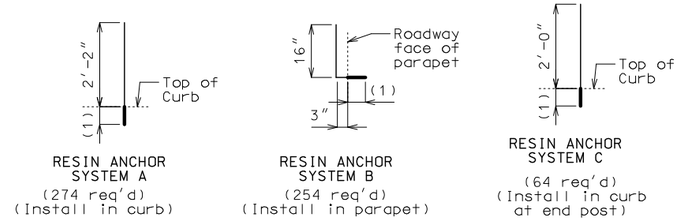

(1) Use manufacturer's embedment length (5" minimum embedment).

DETAILS OF RESIN ANCHORS

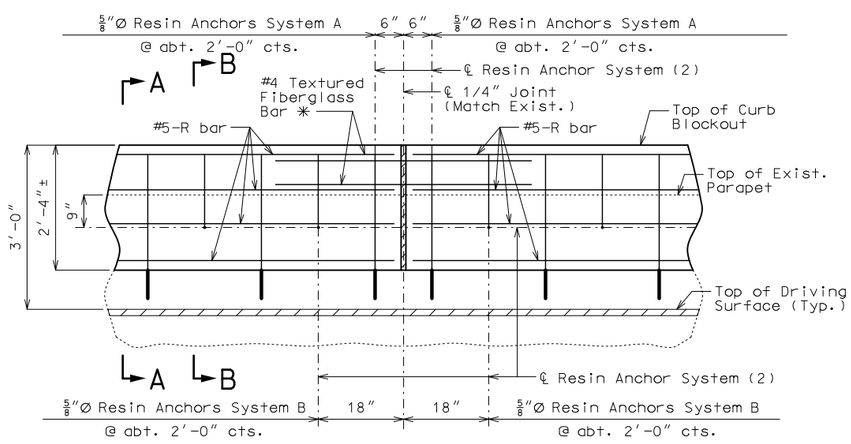

PART ELEVATION OF CURB BLOCKOUT

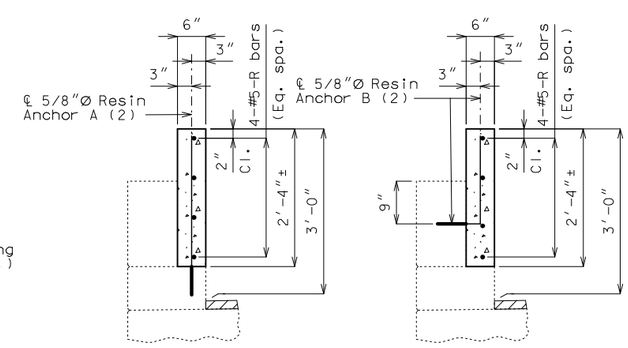

SECTION A-A SECTION B-B

CURB BLOCKOUT

Notes:

✳ Slip-formed option only.

Conventional forming or slip forming may be used. Saw cut joints may be used with conventional forming.

Bridge rail not shown for clarity.

Concrete in curb blockout shall be Class B-1.

Measurement of curb blockout is to the nearest linear foot, measured at the top outside edge of parapet. (Match existing curb and parapet)

All exposed edges of curb blockout shall have either a 1/2-inch radius or 3/8-inch bevel, unless otherwise noted.

Payment for concrete, reinforcement, resin anchor systems and any other work incidental to the curb blockout, complete in place, will be considered completely covered by the contract unit price for Curb Blockout per linear foot.

Cost of any concrete curb or parapet repair will be considered completely covered by the contract unit price for Curb Blockout.

All curb blockout reinforcement shall be epoxy coated.

(2) Shift resin anchors where necessary to clear existing anchor bolts for bridge rail, miss curb outlets (if present) and clear existing reinforcement.

Use a minimum lap of 3'-1" for #5 horizontal curb blockout bars.

Concrete traffic barrier delineators shall be placed on top of the curb blockout similarly as shown on Missouri Standard Plans 617.10 and in accordance with Sec 617. Delineators on bridges with two-lane, two-way traffic shall have retroflective sheeting on both sides. Concrete traffic barrier delineators will be considered completely covered by the contract unit price for Curb Blockout.

The contractor shall use one of the qualified resin anchor systems in accordance with Sec 1039.

The minimum embedment depth in concrete with f'c = 4,000 psi for the resin anchor system shall be that required to meet the minimum ultimate pullout strength in accordance with Sec 1039 but shall not be less than 5 inches.

An epoxy coated #5 Grade 60 reinforcing bar shall be substituted for the 5/8"Ø threaded rod.

For slip-formed option, both sides of the curb blockout shall have a vertically broomed finish and the top shall have a transversely broomed finish.

STATE OF MISSOURI
TED S. KOESTER
NUMBER PE-2013000591
PROFESSIONAL ENGINEER
THIS SHEET HAS BEEN SIGNED, SEALED AND DATED ELECTRONICALLY.

DATE PREPARED	
8/23/2021	
ROUTE 24	STATE MO
DISTRICT BR	SHEET NO. 6
COUNTY CARROLL	
JOB NO. J1P3275	
CONTRACT ID.	
PROJECT NO.	
BRIDGE NO. A29042	

DATE	DESCRIPTION

MISSOURI HIGHWAYS AND TRANSPORTATION COMMISSION
105 WEST CAPITOL
JEFFERSON CITY, MO 65102
1-888-ASK-MODOT (1-888-275-6636)

IF A SEAL IS PRESENT ON THIS SHEET IT HAS BEEN ELECTRONICALLY SEALED AND DATED.

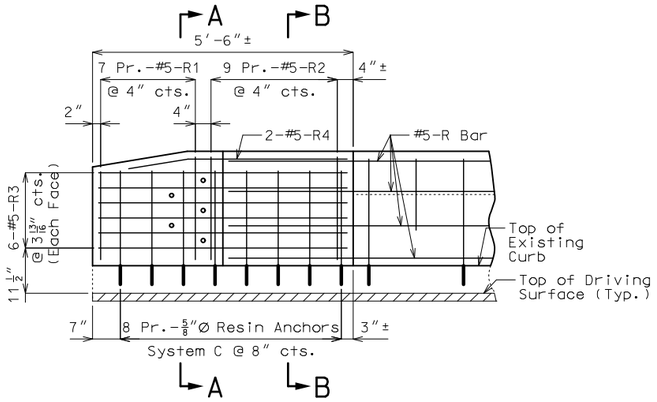

ELEVATION SHOWING REINFORCEMENT

(Right End Post at End Bent No. 6 similar)

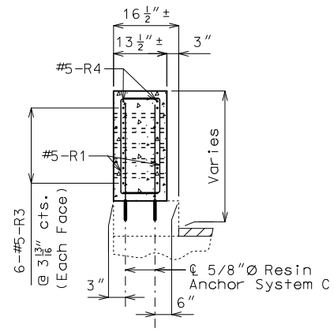

SECTION A-A

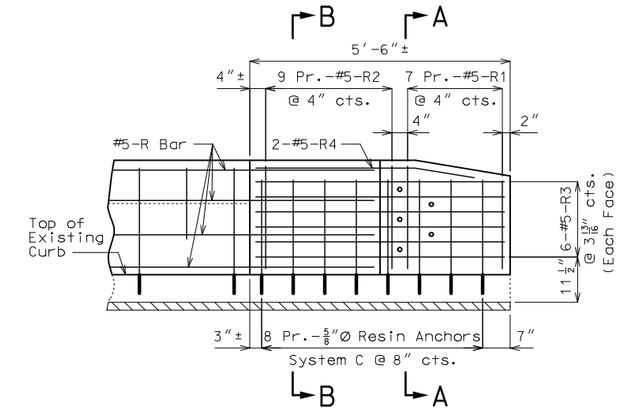

ELEVATION SHOWING REINFORCEMENT

(Right End Post at End Bent No. 1 similar)

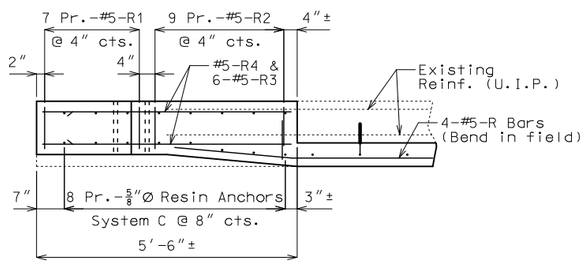

PLAN SHOWING REINFORCEMENT

LEFT END POST AT END BENT NO. 1

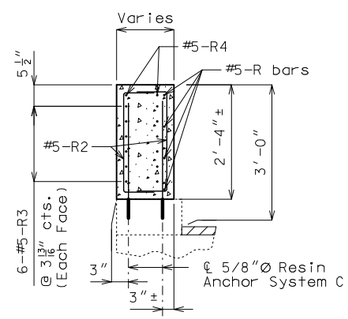

SECTION B-B

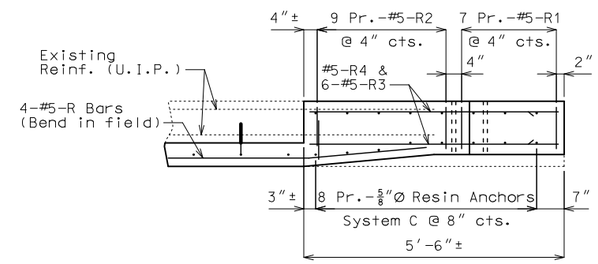

PLAN SHOWING REINFORCEMENT

LEFT END POST AT END BENT NO. 6

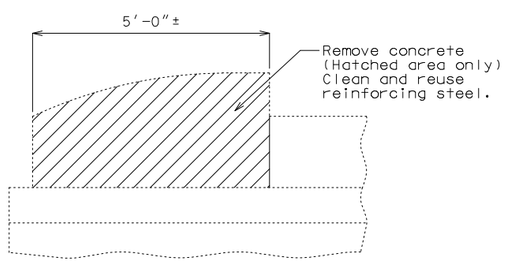

PART ELEVATION SHOWING END POST CONCRETE REMOVAL

Cost of removing existing end posts will be considered completely covered by the contract unit price for Curb Blockout.

Notes:

Work this sheet with Sheet No. 6.

For details of resin anchors, see Sheet No. 6.

Resin anchors shall be shifted or bent in field to clear one-inch diameter holes by at least 1/2 inch.

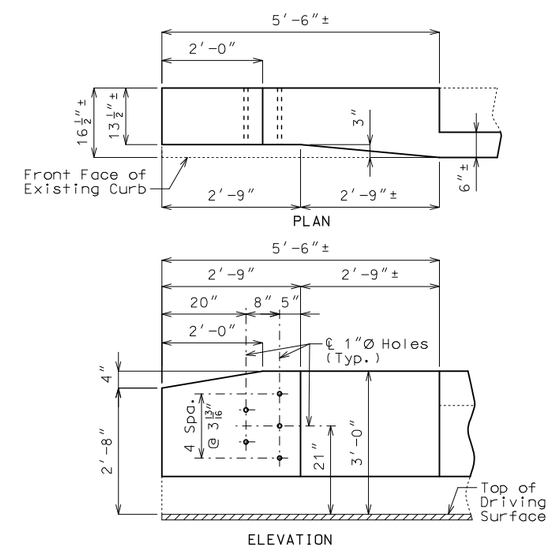

DETAILS OF END POST AND GUARD RAIL ATTACHMENT

CURB BLOCKOUT AT END BENTS

Detailed May 2021
Checked June 2021

Note: This drawing is not to scale. Follow dimensions.

STATE OF MISSOURI
TED S. KOESTER
NUMBER PE-2013000591
PROFESSIONAL ENGINEER

THIS SHEET HAS BEEN SIGNED, SEALED AND DATED ELECTRONICALLY.

DATE PREPARED	
8/23/2021	
ROUTE 24	STATE MO
DISTRICT BR	SHEET NO. 7
COUNTY CARROLL	
JOB NO. J1P3275	
CONTRACT ID.	
PROJECT NO.	
BRIDGE NO. A29042	

DATE	DESCRIPTION

MISSOURI HIGHWAYS AND TRANSPORTATION COMMISSION

105 WEST CAPITOL
JEFFERSON CITY, MO 65102
1-888-ASK-MODOT (1-888-275-6636)

IF A SEAL IS PRESENT ON THIS SHEET IT HAS BEEN ELECTRONICALLY SEALED AND DATED.

BILL OF REINFORCING STEEL

NO. REQ'D.	MARK NO. SIZE	MARK NO. MARK	LOCATION	EPOXY (E)	SHAPE NO.	STIRRUP (S)	SUBSTR. (X)	VARIES (V)	NO. EACH	B FT. IN.	C FT. IN.	D FT. IN.	E FT. IN.	F FT. IN.	H FT. IN.	K FT. IN.	NOMINAL LENGTH FT. IN.	ACTUAL LENGTH FT. IN.	WEIGHT LBS.
			SLAB																
8	6	S1	SLAB	E	20					70 9.000							70 9	70 9	852
			CURB BLOKOUT																
56	5	R1	CURB BLOKOUT	E	10	S		V	8		10.500	21.000					3 6	3 4	
			INCREMENT =								10.500	2 0.000					3 9	3 7	202
			0.500 INCH																
72	5	R2	CURB BLOKOUT	E	10	S		V	8		10.500	2 0.000					3 9	3 7	
			INCREMENT =								13.500	2 0.000					4 3	4 1	288
			0.750 INCH																
48	5	R3	CURB BLOKOUT	E	20					5 3.000							5 3	5 3	263
8	5	R4	CURB BLOKOUT	E	23	S				16.250	3 4.000				2.625	16.000	4 8	4 8	39
16	5	R5	CURB BLOKOUT	E	20					8 9.000							8 9	8 9	146
8	5	R6	CURB BLOKOUT	E	20					36 8.500							36 9	36 9	307
32	5	R7	CURB BLOKOUT	E	20					10 9.000							10 9	10 9	359
16	5	R8	CURB BLOKOUT	E	20					33 8.000							33 8	33 8	562
16	5	R9	CURB BLOKOUT	E	20					35 7.500							35 8	35 8	595
8	5	R10	CURB BLOKOUT	E	20					29 10.375							29 10	29 10	249
20	5	R11	CURB BLOKOUT	E	10	S					23.250	13.500					5 0	4 10	101
20	5	R12	CURB BLOKOUT	E	20					2 4.000							2 4	2 4	49
20	5	R13	CURB BLOKOUT	E	28	S				13.000	13.500	13.000	12.000				4 4	4 0	83
			TOTALS																
	5			E															3243
	6			E															852
			TOTAL																0
			TOTAL	E															4128
			Slab on Girder																
	6			E															852
			TOTAL																852
			Safety Barrier Curb																
	5			E															3243
			TOTAL																3243

BILL OF REINFORCING STEEL

NO. REQ'D.	MARK NO. SIZE	MARK NO. MARK	LOCATION	EPOXY (E)	SHAPE NO.	STIRRUP (S)	SUBSTR. (X)	VARIES (V)	NO. EACH	B FT. IN.	C FT. IN.	D FT. IN.	E FT. IN.	F FT. IN.	H FT. IN.	K FT. IN.	NOMINAL LENGTH FT. IN.	ACTUAL LENGTH FT. IN.	WEIGHT LBS.

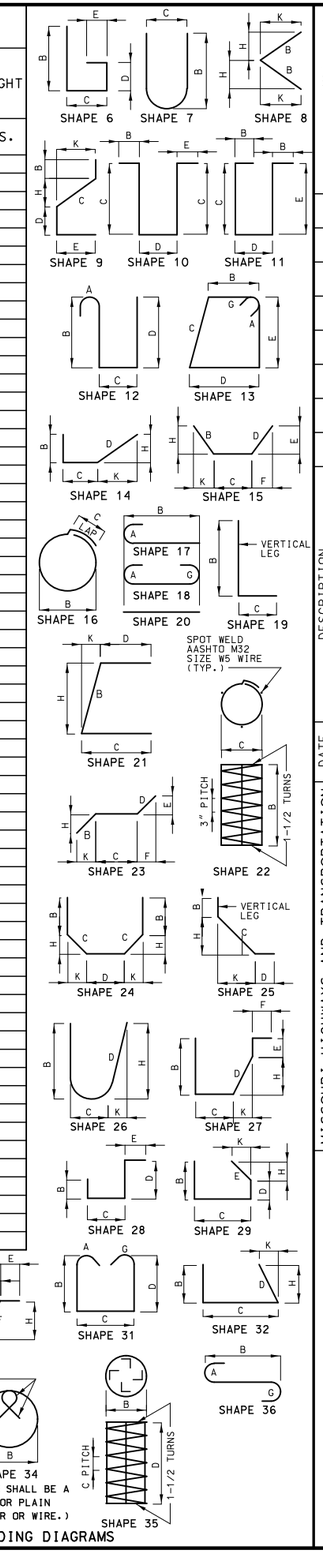

STATE OF MISSOURI
TED S. KOESTER
NUMBER PE-2013000591
PROFESSIONAL ENGINEER
THIS SHEET HAS BEEN SIGNED, SEALED AND DATED ELECTRONICALLY.

DATE PREPARED	8/23/2021
ROUTE	24
STATE	MO
DISTRICT	BR
SHEET NO.	8
COUNTY	CARROLL
JOB NO.	J1P3275
CONTRACT ID.	
PROJECT NO.	
BRIDGE NO.	A29042

DESCRIPTION

DATE

MISSOURI HIGHWAYS AND TRANSPORTATION COMMISSION

105 WEST CAPITOL
JEFFERSON CITY, MO 65102
1-888-ASK-MODOT (1-888-275-6636)

IF A SEAL IS PRESENT ON THIS SHEET IT HAS BEEN ELECTRONICALLY SEALED AND DATED.

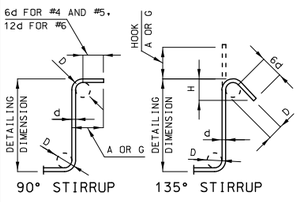

STIRRUP HOOK DIMENSIONS				
GRADES 40 - 50 - 60 KSI				
BAR SIZE	D (IN.)	90° HOOK	135° HOOK	
		HOOK A OR G	HOOK A OR G	APPROX. H
#4	2"	4 1/2"	4 1/2"	3"
#5	2 1/2"	6"	5 1/2"	3 3/4"
#6	4 1/2"	12"	8"	4 1/2"

NOTE: UNLESS OTHERWISE NOTED, DIAMETER "D" IS THE SAME FOR ALL BENDS AND HOOKS ON A BAR.

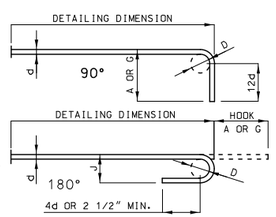

END HOOK DIMENSIONS				
BAR SIZE	D (IN.)	ALL GRADES		
		180° HOOKS		90° HOOKS
		A OR G	J	A OR G
#3	2 1/4"	5"	3"	6"
#4	3"	6"	4"	8"
#5	3 3/4"	7"	5"	10"
#6	4 1/2"	8"	6"	12"
#7	5 1/4"	10"	7"	14"
#8	6"	11"	8"	16"
#9	9 1/2"	15"	11 3/4"	19"
#10	10 3/4"	17"	13 1/4"	22"
#11	12"	19"	14 3/4"	2'-0"
#14	18 1/4"	2'-3"	21 3/4"	2'-7"

NOTE:
ALL STANDARD HOOKS AND BENDS OTHER THAN 180 DEGREE ARE TO BE BENT WITH SAME PROCEDURE AS FOR 90 DEGREE STANDARD HOOKS.

HOOKS AND BENDS SHALL BE IN ACCORDANCE WITH THE PROCEDURES AS SHOWN ON THIS SHEET.

E = EPOXY COATED REINFORCEMENT.
S = STIRRUP.
X = BAR IS INCLUDED IN SUBSTRUCTURE QUANTITIES.
V = BAR DIMENSIONS VARY IN EQUAL INCREMENTS BETWEEN DIMENSIONS SHOWN ON THIS LINE AND THE FOLLOWING LINE.
NO. EA. = NUMBER OF BARS OF EACH LENGTH.

NOMINAL LENGTHS ARE BASED ON OUT TO OUT DIMENSIONS SHOWN IN BENDING DIAGRAMS AND ARE LISTED FOR FABRICATORS USE. (NEAREST INCH)

ACTUAL LENGTHS ARE MEASURED ALONG CENTERLINE BAR TO THE NEAREST INCH.

PAYWEIGHTS ARE BASED ON ACTUAL LENGTHS.

FOUR ANGLE OR CHANNEL SPACERS ARE REQUIRED FOR EACH COLUMN SPIRAL. SPACERS ARE TO BE PLACED ON INSIDE OF SPIRALS. LENGTH AND WEIGHT OF COLUMN SPIRALS DO NOT INCLUDE SPLICES OR SPACERS.

REINFORCING STEEL (GRADE 60) FY = 60,000 PSI.

Detailed May 2021
Checked July 2021

Note: This drawing is not to scale. Follow dimensions.

SEC/SUR 33 TWP 53N RGE 23W

U.I.P. AND REHABILITATE EXISTING (35'-45'-60'-60'-60'-44') CONTINUOUS COMPOSITE WIDE FLANGE BEAM SPANS (SKEW: 8°R.A.)

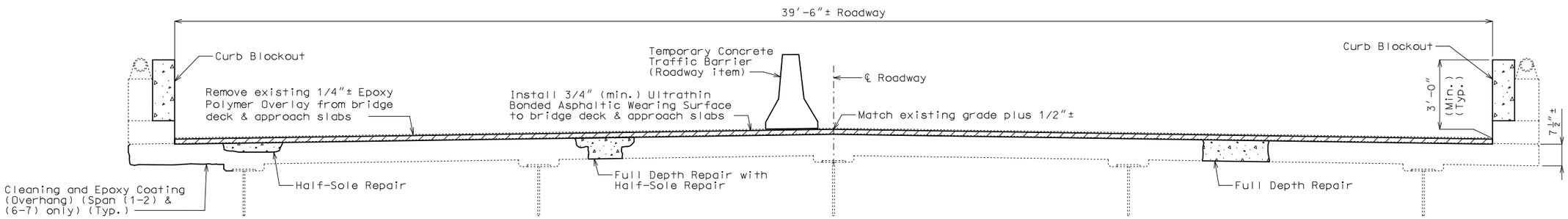

TYPICAL SECTION THRU EXISTING DECK

General Notes:

Design Specifications:

2002 AASTHO LFD (17th Ed.) Standard Specifications
Bridge Deck Rating = 7

Design Loading:

HS20-44 (AASHO 1973 and New Construction)

Design Unit Stresses:

Class B-2 Concrete (Superstructure, except Curb Blockout)	f'c = 4,000 psi
Class B-1 Concrete (Curb Blockout)	f'c = 4,000 psi
Reinforcing Steel (Grade 60)	fy = 60,000 psi

Structural Steel Protective Coating:

Protective Coating: System G in accordance with Sec 1081.

Protective Coating Limits: The surface of all existing structural steel within a distance of not less than 10 feet from ℄ of expansion joint at End Bents No. 1 & 7 shall be recoated with System G.

Surface Preparation: Surface preparation of the existing steel shall be in accordance with Sec 1081 for Recoating of Structural Steel (System G, H or I). The cost of surface preparation will be considered completely covered by the contract unit price per sq. foot for Surface Preparation for Recoating Structural Steel.

Prime Coat: The cost of the prime coat will be considered completely covered by the contract unit price per sq. foot for Field Application of Inorganic Zinc Primer. Tint of the prime coat for System G shall be similar to the color of the field coat to be used.

Field Coat: The color of the finish field coat shall be Gray (Federal Standard #26373). The cost of the intermediate field coat will be considered completely covered by the contract unit price per sq. foot for Intermediate Field Coat (System G). The cost of the finish field coat will be considered completely covered by the contract unit price per sq. foot for Finish Field Coat (System G).

Miscellaneous:

Roadway surfacing adjacent to bridge ends shall match new bridge wearing surface (roadway item).

All concrete repairs shall be in accordance with Sec 704, unless otherwise noted.

Outline of existing work is indicated by light dashed lines. Heavy lines indicate new work.

Contractor shall verify all dimensions in field before ordering new material.

In order to maintain grade and a minimum thickness of wearing surface as shown on plans it may be necessary to use additional quantities of wearing surface at various locations throughout the structure. The cost of furnishing and installing the wearing surface will be considered completely covered in the contract unit price, including all additional labor, materials or equipment for variations in thickness of wearing surface.

Traffic Handling:

Traffic to be maintained on structure during construction. See roadway plans for traffic control.

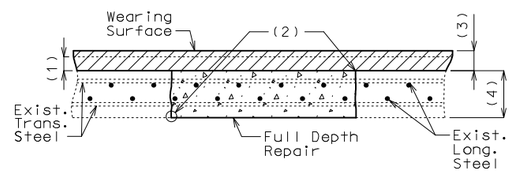

FULL DEPTH REPAIR

(1) Removal of existing 1/4"± epoxy polymer overlay

(2) 1" vertical side shall be established outside the deteriorated area.

(3) 3/4" minimum ultrathin bonded asphaltic wearing surface

(4) Original depth of deck

Estimated Quantities

Item		Total
Removal of Seal Coat or Polymer Wearing Surface	sq. foot	13,628
Removal of Existing Expansion Joint & Adjacent Concrete	linear foot	80
Remove and Replace Curb and Parapet	linear foot	12
Optional Ultrathin Bonded Asphalt Wearing Surface (Bridges)	sq. yard	1514
Curb Blockout	linear foot	647
Substructure Repair (Formed)	sq. foot	280
Half-Sole Repair	sq. foot	100
Full Depth Repair	sq. foot	25
Cleaning and Epoxy Coating	sq. foot	550
Protective Coating - Concrete Bents and Piers (Epoxy)	lump sum	1
Cleaning and Coating Existing Bearings	each	10
Surface Preparation for Recoating Structural Steel	sq. foot	800
Field Application of Inorganic Zinc Primer	sq. foot	800
Intermediate Field Coat System (System G)	sq. foot	800
Finish Field Coat System (System G)	sq. foot	800
Strip Seal Expansion Joint System	linear foot	80

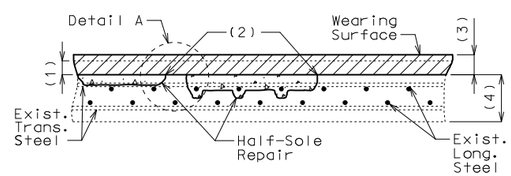

HALF-SOLE REPAIR

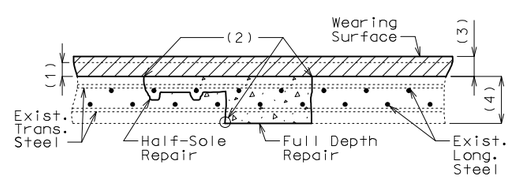

FULL DEPTH REPAIR WITH HALF-SOLE REPAIR

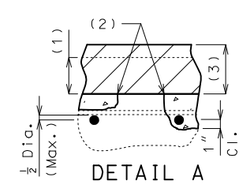

DETAIL A

Clearance around top bar and around bottom bar at the intersection of top bar shall be required when more than half the diameter of the top bar is exposed.

REPAIRS TO BRIDGE: ROUTE 24
OVER BNSF RR & OLD ROUTE 24

ROUTE 24 FROM ROUTE 10 TO ROUTE MM
ABOUT 1.5 MILES NORTH OF ROUTE 10
BEG. STA. 772+52.60± (Match Existing)

STATE OF MISSOURI
TED S. KOESTER
NUMBER PE-2013000591
PROFESSIONAL ENGINEER
THIS SHEET HAS BEEN SIGNED, SEALED AND DATED ELECTRONICALLY.

DATE PREPARED 8/23/2021
ROUTE 24 | STATE MO
DISTRICT BR | SHEET NO. 1
COUNTY CARROLL
JOB NO. J1P3275
CONTRACT ID.
PROJECT NO.
BRIDGE NO. A29051

DESCRIPTION | DATE

MISSOURI HIGHWAYS AND TRANSPORTATION COMMISSION
105 WEST CAPITOL
JEFFERSON CITY, MO 65102
1-888-ASK-MODOT (1-888-275-6636)

IF A SEAL IS PRESENT ON THIS SHEET IT HAS BEEN ELECTRONICALLY SEALED AND DATED.

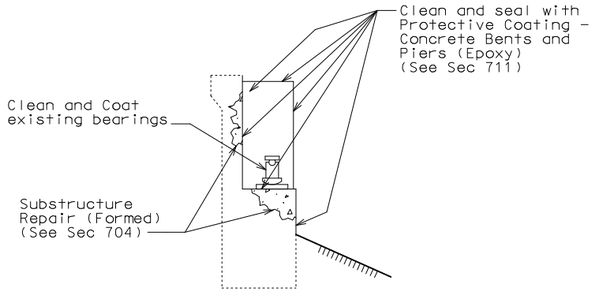

TYPICAL SECTION THRU
END BENT NO. 1 SHOWING
PROTECTIVE COATING
& SUBSTRUCTURE REPAIR

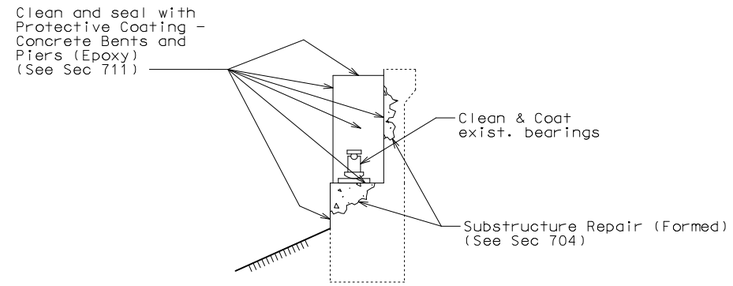

TYPICAL SECTION THRU
END BENT NO. 7 SHOWING
PROTECTIVE COATING
& SUBSTRUCTURE REPAIR

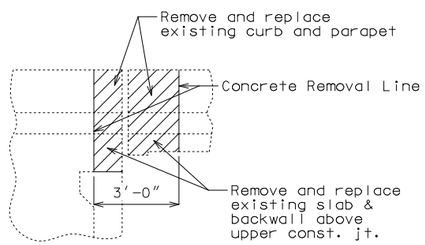

PART ELEVATION AT
END BENTS NO. 1 AND 7
SHOWING CONCRETE
REMOVAL

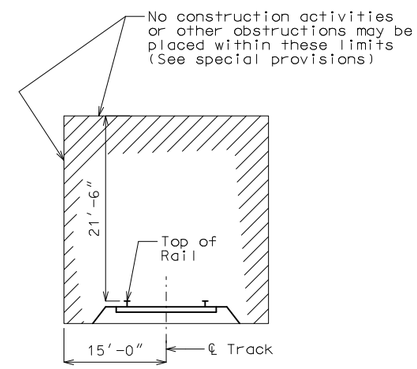

MINIMUM CONSTRUCTION
CLEARANCES
(Normal to railroad)
(Not to scale)

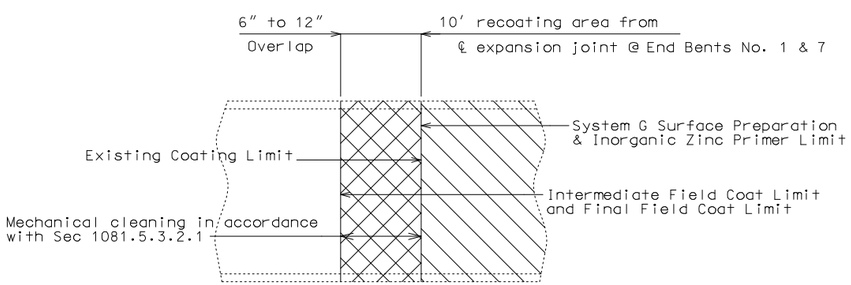

PART ELEVATION SHOWING LIMITS OF PAINT OVERLAP
(Vertical or horizontal paint limit. Horizontal limit shown)

STATE OF MISSOURI
TED S. KOESTER
NUMBER PE-2013000591
PROFESSIONAL ENGINEER
THIS SHEET HAS BEEN SIGNED, SEALED AND DATED ELECTRONICALLY.

DATE PREPARED 8/23/2021	
ROUTE 24	STATE MO
DISTRICT BR	SHEET NO. 2
COUNTY CARROLL	
JOB NO. J1P3275	
CONTRACT ID.	
PROJECT NO.	
BRIDGE NO. A29051	

DATE	DESCRIPTION

IF A SEAL IS PRESENT ON THIS SHEET IT HAS BEEN ELECTRONICALLY SEALED AND DATED.

MISSOURI HIGHWAYS AND TRANSPORTATION COMMISSION
105 WEST CAPITOL
JEFFERSON CITY, MO 65102
1-888-ASK-MODOT (1-888-275-6636)

Detailed May 2021
Checked June 2021

Note: This drawing is not to scale. Follow dimensions.

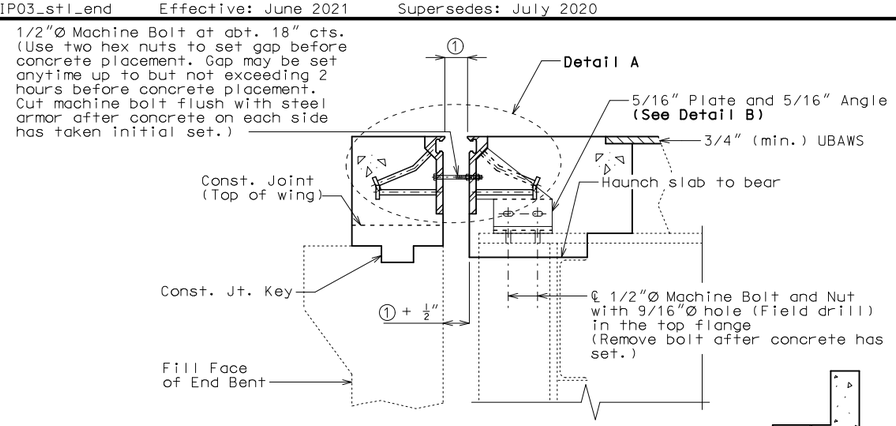

SECTION A-A

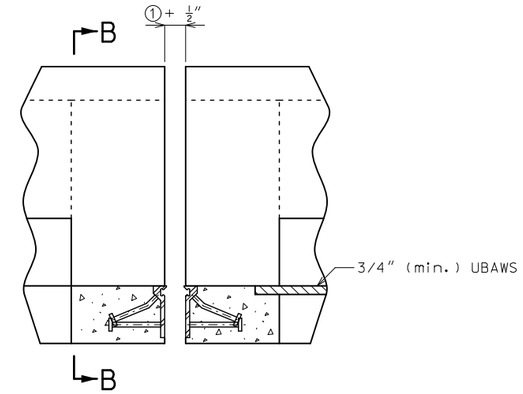

PART ELEVATION OF BARRIER

Strip seal gland not shown for clarity.

Notes:
Strip seal gland not shown for clarity.

Slab Reinforcement not shown for clarity.

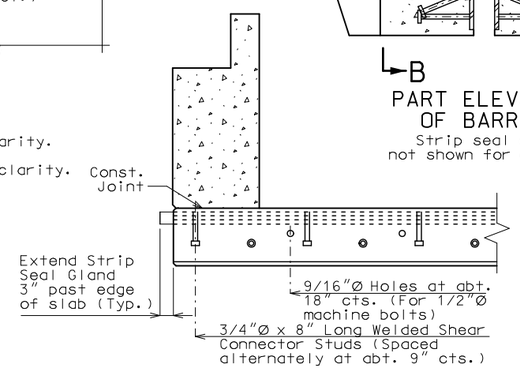

PART SECTION B-B

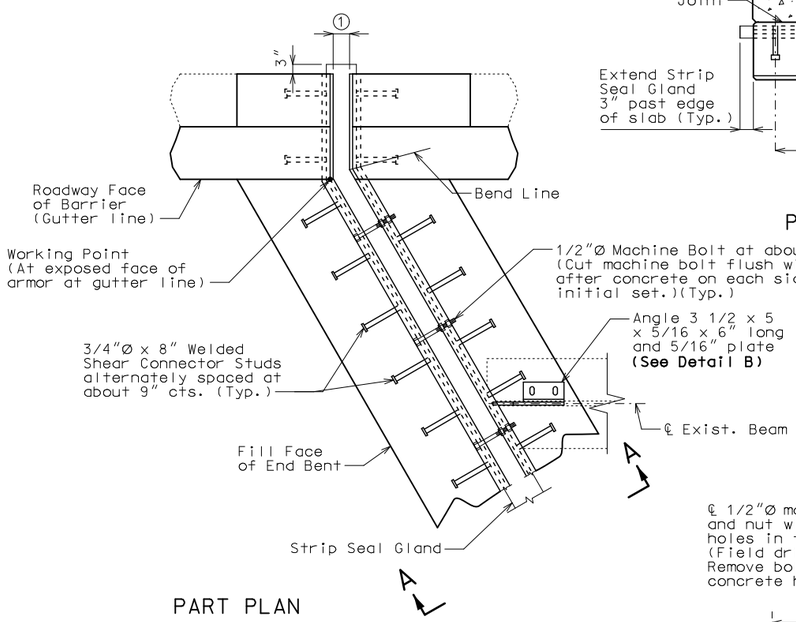

PART PLAN

New wearing surface not shown for clarity.

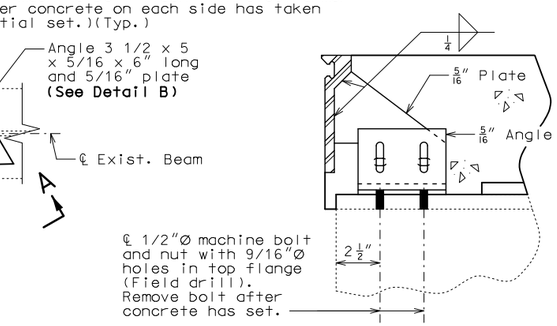

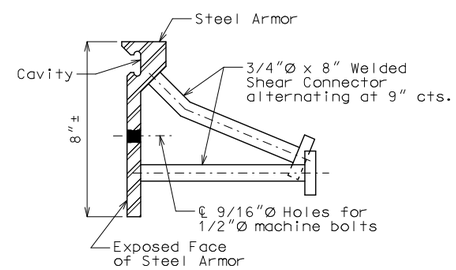

DETAIL OF JOINT ARMOR

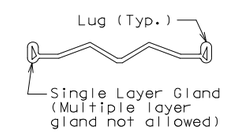

DETAIL OF GLAND

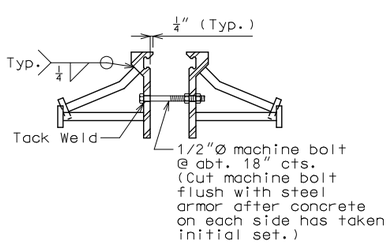

DETAIL A

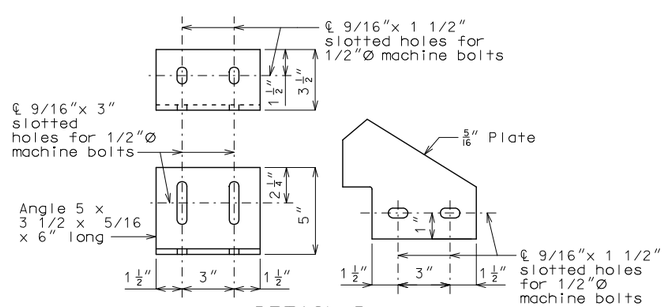

DETAIL B

GENERAL NOTES:

Expansion joint system shall be fabricated in one section, except for staged construction and when the length is over 50 feet. A complete joint penetration groove welded splice shall be required. Welds shall be ground flush to provide a smooth surface. The expansion joint system shall be fabricated and installed to the crown and grade of the roadway.

The strip seal gland shall be installed in joints in one continuous piece without field splices. Factory splicing will be permitted for joints in excess of 53 feet.

Structural steel for the expansion joint system shall be ASTM A709 Grade 36 except the steel armor may be ASTM A709 Grade 50W. Anchors for the expansion joint system shall be in accordance with Sec 1037. Strip seal expansion joint system shall be in accordance with Sec 717.

Structural steel for the expansion joint system shall be coated with a minimum of two coats of inorganic zinc primer to provide a total dry film thickness of 4 mils minimum, 6 mils maximum, or galvanized in accordance with ASTM A123. Anchors need not be protected from overspray.

Longitudinal reinforcing steel shall be cut/bent so that ends shall be 1" from the vertical leg of the steel armor at the expansion joint system.

Concrete shall be forced under and around steel armor and anchors. Proper consolidation of the concrete shall be achieved by localized internal vibration.

② The installation temperature shall be taken as the actual air temperature averaged over the 24-hour period immediately preceding installation.

③ MoDOT Construction personnel will indicate the strip seal expansion joint system installed.

Steel armor may also be referred to as extrusion or rail.

Work this sheet with Sheet No. 5.

Table of Allowed Transverse Strip Seal Expansion Joint System

Manufacturer	Strip Seal System (Designated Name)	Movement Parallel to RDWY	① Allowed Installation Gap Normal to Joint at RDWY Surface @ Air/Surface Temperature ②						③
			@ 40°F	@ 50°F	@ 60°F	@ 70°F	@ 80°F	@ 90°F	
D S Brown	Strip seal L2-400	1 5/8"	2 3/16"	2 1/8"	2"	1 7/8"	1 13/16"	1 11/16"	□
D S Brown	Strip seal L2-500	1 5/8"	2 3/16"	2 1/8"	2"	1 7/8"	1 13/16"	1 11/16"	□
Watson Bowman Acme (Wabo)	Strip seal SE-300	1 5/8"	2 3/16"	2 1/8"	2"	1 7/8"	1 13/16"	1 11/16"	□
Watson Bowman Acme (Wabo)	Strip seal SE-400	1 5/8"	2 3/16"	2 1/8"	2"	1 7/8"	1 13/16"	1 11/16"	□
Watson Bowman Acme (Wabo)	Strip seal SE-500	1 5/8"	2 3/16"	2 1/8"	2"	1 7/8"	1 13/16"	1 11/16"	□

STRIP SEAL EXPANSION JOINT SYSTEM AT END BENT NO. 1

Detailed May 2021
Checked June 2021

Note: This drawing is not to scale. Follow dimensions.

STATE OF MISSOURI
TED S. KOESTER
NUMBER PE-2013000591
PROFESSIONAL ENGINEER
THIS SHEET HAS BEEN SIGNED, SEALED AND DATED ELECTRONICALLY.

DATE PREPARED	
8/23/2021	
ROUTE 24	STATE MO
DISTRICT BR	SHEET NO. 3
COUNTY CARROLL	
JOB NO. J1P3275	
CONTRACT ID.	
PROJECT NO.	
BRIDGE NO. A29051	

DATE	DESCRIPTION

IF A SEAL IS PRESENT ON THIS SHEET IT HAS BEEN ELECTRONICALLY SEALED AND DATED.

MISSOURI HIGHWAYS AND TRANSPORTATION COMMISSION
105 WEST CAPITOL
JEFFERSON CITY, MO 65102
1-888-ASK-MODOT (1-888-275-6636)

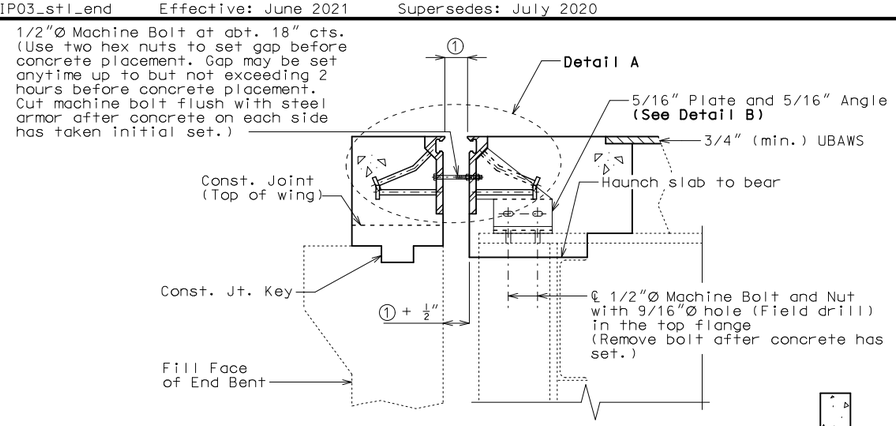

SECTION A-A

Notes:
Strip seal gland not shown for clarity.

Slab Reinforcement not shown for clarity.

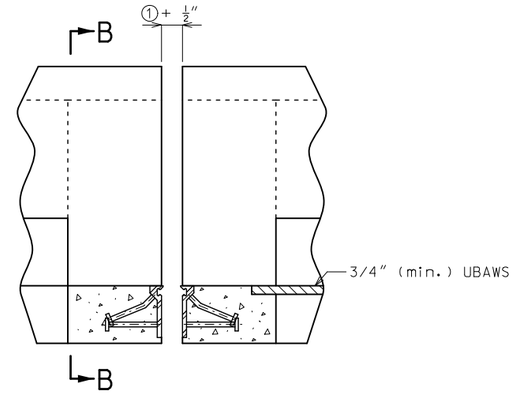

PART ELEVATION OF BARRIER

Strip seal gland not shown for clarity.

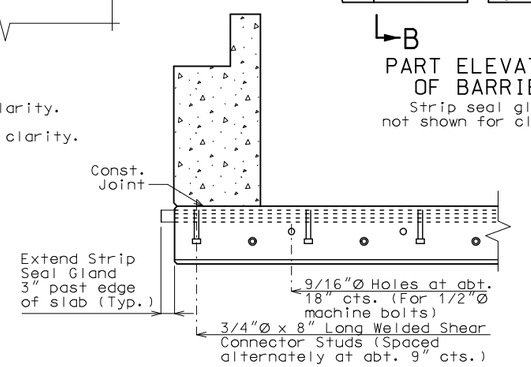

PART SECTION B-B

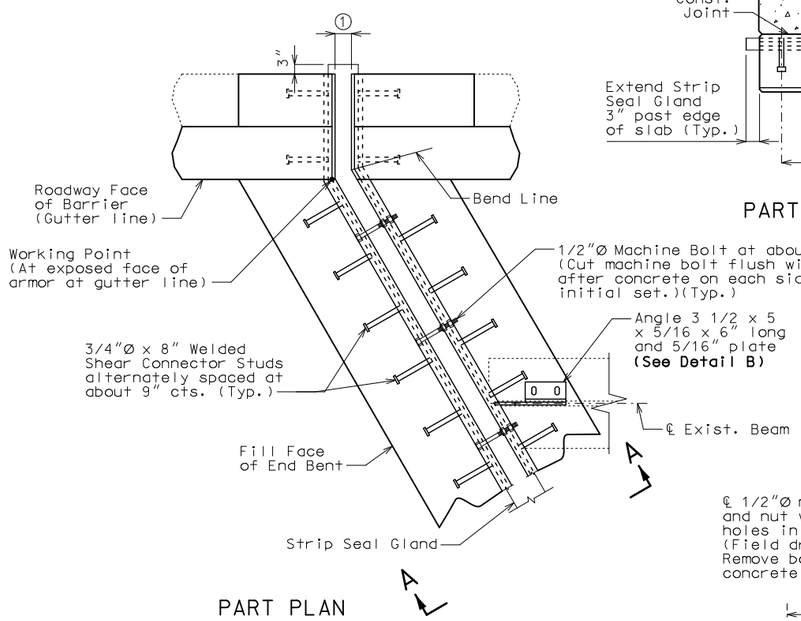

PART PLAN

New wearing surface not shown for clarity.

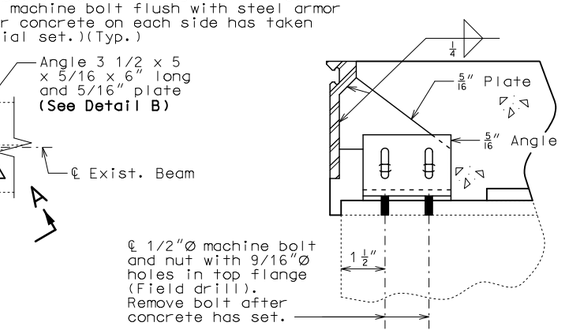

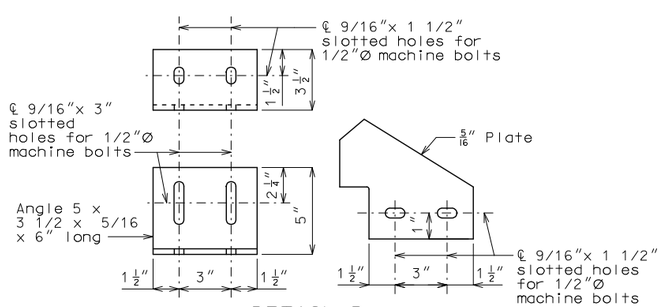

DETAIL B

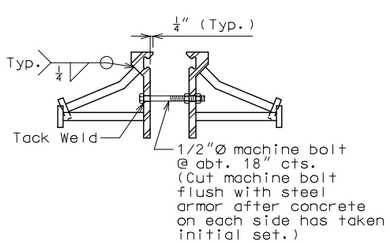

DETAIL A

GENERAL NOTES:

Expansion joint system shall be fabricated in one section, except for staged construction and when the length is over 50 feet. A complete joint penetration groove welded splice shall be required. Welds shall be ground flush to provide a smooth surface. The expansion joint system shall be fabricated and installed to the crown and grade of the roadway.

The strip seal gland shall be installed in joints in one continuous piece without field splices. Factory splicing will be permitted for joints in excess of 53 feet.

Structural steel for the expansion joint system shall be ASTM A709 Grade 36 except the steel armor may be ASTM A709 Grade 50W. Anchors for the expansion joint system shall be in accordance with Sec 1037. Strip seal expansion joint system shall be in accordance with Sec 717.

Structural steel for the expansion joint system shall be coated with a minimum of two coats of inorganic zinc primer to provide a total dry film thickness of 4 mils minimum, 6 mils maximum, or galvanized in accordance with ASTM A123. Anchors need not be protected from overspray.

Longitudinal reinforcing steel shall be cut/bent so that ends shall be 1" from the vertical leg of the steel armor at the expansion joint system.

Concrete shall be forced under and around steel armor and anchors. Proper consolidation of the concrete shall be achieved by localized internal vibration.

② The installation temperature shall be taken as the actual air temperature averaged over the 24-hour period immediately preceding installation.

③ MoDOT Construction personnel will indicate the strip seal expansion joint system installed.

Steel armor may also be referred to as extrusion or rail.

Work this sheet with Sheet No. 5.

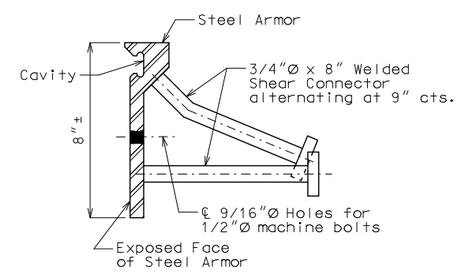

DETAIL OF JOINT ARMOR

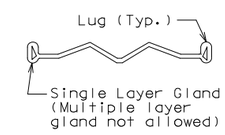

DETAIL OF GLAND

Table of Allowed Transverse Strip Seal Expansion Joint System

Manufacturer	Strip Seal System (Designated Name)	Movement Parallel to RDWY	① Allowed Installation Gap Normal to Joint at RDWY Surface @ Air/Surface Temperature ②						③
			@ 40°F	@ 50°F	@ 60°F	@ 70°F	@ 80°F	@ 90°F	
D S Brown	Strip seal L2-400	1 15/16"	2 1/4"	2 1/8"	2"	1 7/8"	1 3/4"	1 5/8"	□
D S Brown	Strip seal L2-500	1 15/16"	2 1/4"	2 1/8"	2"	1 7/8"	1 3/4"	1 5/8"	□
Watson Bowman Acme (Wabo)	Strip seal SE-400	1 15/16"	2 1/4"	2 1/8"	2"	1 7/8"	1 3/4"	1 5/8"	□
Watson Bowman Acme (Wabo)	Strip seal SE-500	1 15/16"	2 1/4"	2 1/8"	2"	1 7/8"	1 3/4"	1 5/8"	□

STRIP SEAL EXPANSION JOINT SYSTEM AT END BENT NO. 7

Detailed May 2021
Checked June 2021

Note: This drawing is not to scale. Follow dimensions.

STATE OF MISSOURI
TED S. KOESTER
NUMBER PE-2013000591
PROFESSIONAL ENGINEER
THIS SHEET HAS BEEN SIGNED, SEALED AND DATED ELECTRONICALLY.

DATE PREPARED	
8/23/2021	
ROUTE 24	STATE MO
DISTRICT BR	SHEET NO. 4
COUNTY CARROLL	
JOB NO. J1P3275	
CONTRACT ID.	
PROJECT NO.	
BRIDGE NO. A29051	

DATE	DESCRIPTION

IF A SEAL IS PRESENT ON THIS SHEET IT HAS BEEN ELECTRONICALLY SEALED AND DATED.

MISSOURI HIGHWAYS AND TRANSPORTATION COMMISSION
105 WEST CAPITOL
JEFFERSON CITY, MO 65102
1-888-ASK-MODOT (1-888-275-6636)

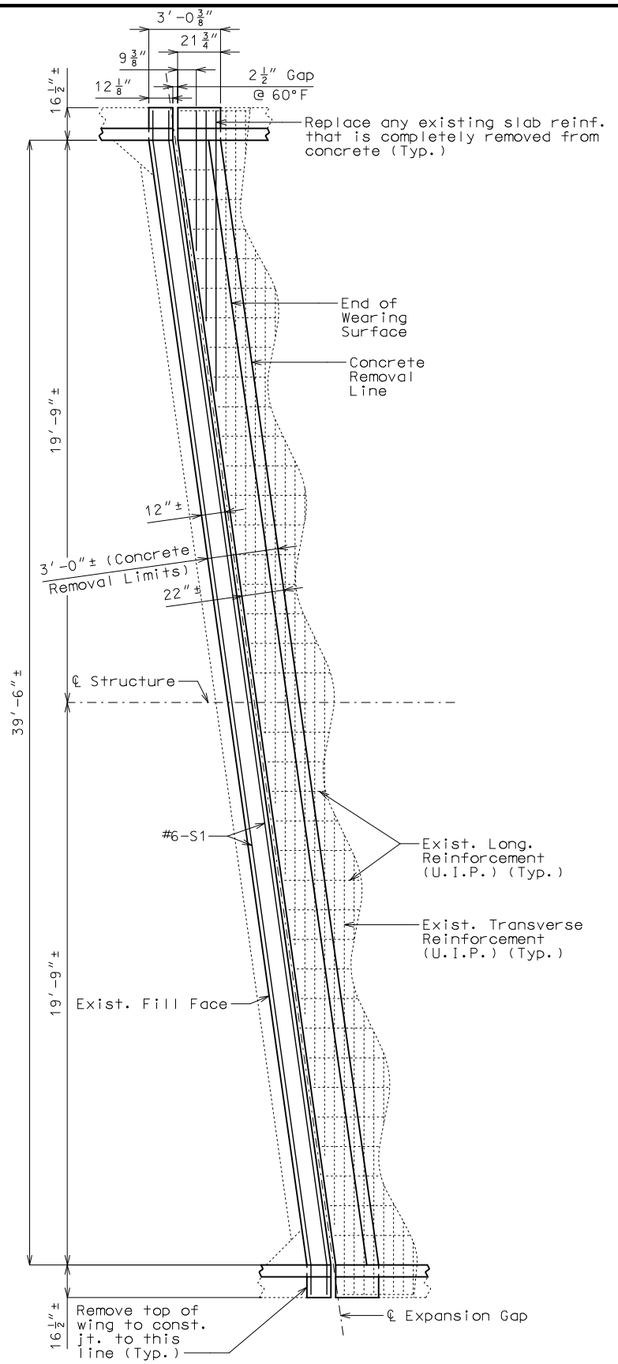

PART PLAN OF SLAB
AT END BENT NO. 1
SHOWING SLAB REINFORCEMENT

Note: Expansion device not shown for clarity.

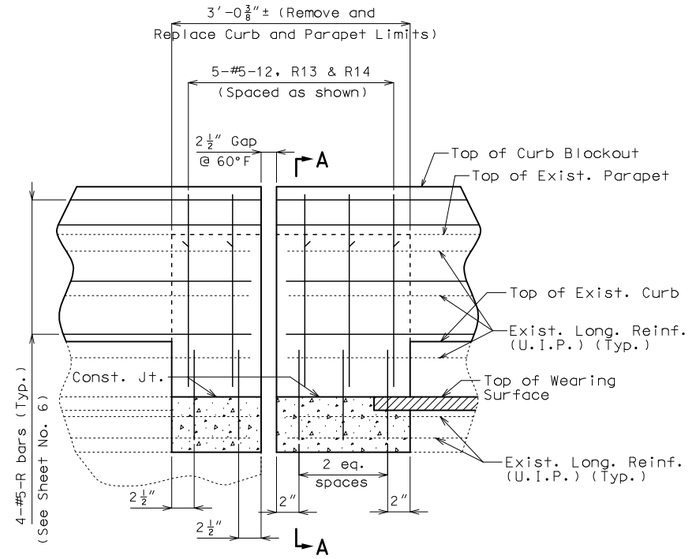

PART ELEVATION OF CURB
BLOCKOUT AND PARAPET

Note: Expansion device and #6-S bars not shown for clarity.

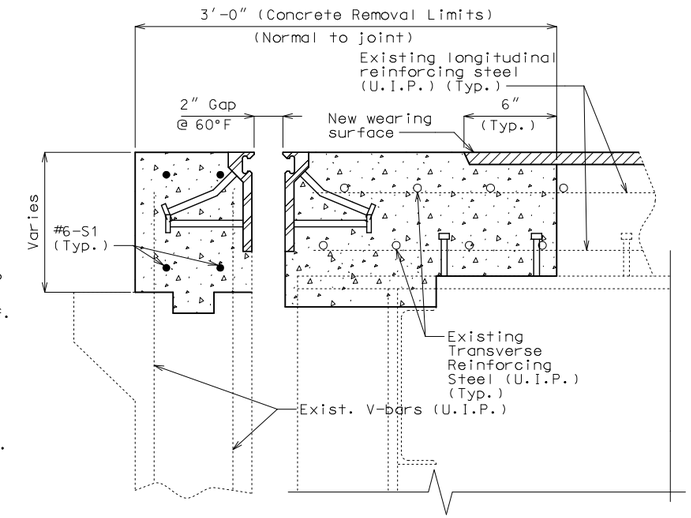

PART SECTION AT
END BENT NO. 1
THRU SLAB SHOWING
SLAB REINFORCEMENT

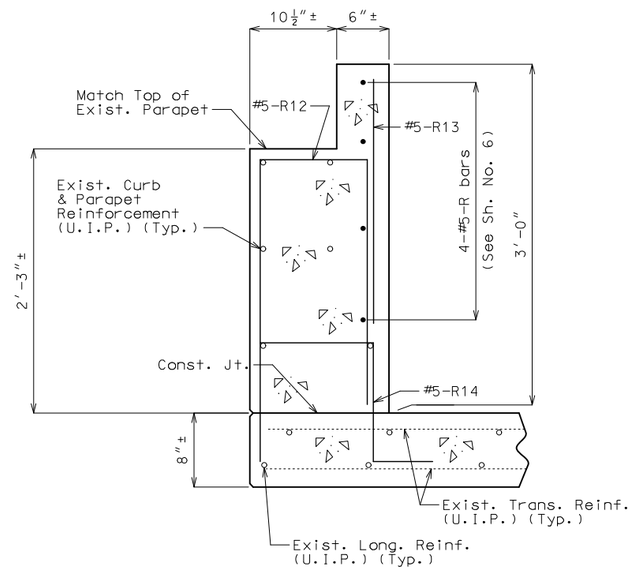

SECTION A-A

Notes:

The #6-S1 bars to be segmented to accommodate stage construction. The total bar length for #6-S1 bars shown in Bill of Reinforcing Steel allows for one lap splice with a length of 3′-10″. Actual bar segment lengths to be determined by contractor. The contractor may use a mechanical bar splice in lieu of a lap splice. When a mechanical bar splice is used, the actual bar segment length will be determined by contractor to accommodate manufacturer's recommendations for installation and stage construction. The cost of furnishing and installing the bar splices will be considered completely covered by the contract unit price for Reinforcing Steel (Epoxy Coated). No adjustment of the quantity of reinforcing steel will be allowed for the use of mechanical bar splices.

Top of curb blockout and parapet shall be built parallel to grade with barrier curb joints normal to grade.

All exposed edges of curb blockout and parapet shall have either a 1/2-inch radius or a 3/8-inch bevel, unless otherwise noted.

Concrete in the curb blockout and parapet shall be Class B-1.

Slab concrete shall be Class B-2.

Payment for removal and replacement of all concrete and reinforcement in curb blockout and parapet in the limits shown, complete in place, will be considered completely covered by the contract unit price for Remove and Replace Curb and Parapet.

Existing stirrups not embedded in concrete shall be removed within the limits shown.

Top of backwall for End Bents shall be formed to the crown and grade of the roadway. Backwall above upper construction joint shall not be poured until the superstructure slab has been poured in the adjacent span.

Work this sheet with Sheets No. 3 & 4.

SLAB REPLACEMENT DETAILS AT END BENTS NO. 1 AND 7

(End Bent No. 1 shown, End Bent No. 7 similar)

Detailed May 2021
Checked July 2021

Note: This drawing is not to scale. Follow dimensions.

STATE OF MISSOURI
TED S. KOESTER
NUMBER PE-2013000591
PROFESSIONAL ENGINEER

THIS SHEET HAS BEEN SIGNED, SEALED AND DATED ELECTRONICALLY.

DATE PREPARED	8/23/2021
ROUTE	24
STATE	MO
DISTRICT	BR
SHEET NO.	5
COUNTY	CARROLL
JOB NO.	J1P3275
CONTRACT ID.	
PROJECT NO.	
BRIDGE NO.	A29051

DATE	DESCRIPTION

MISSOURI HIGHWAYS AND TRANSPORTATION COMMISSION
105 WEST CAPITOL
JEFFERSON CITY, MO 65102
1-888-ASK-MODOT (1-888-275-6636)

IF A SEAL IS PRESENT ON THIS SHEET IT HAS BEEN ELECTRONICALLY SEALED AND DATED.

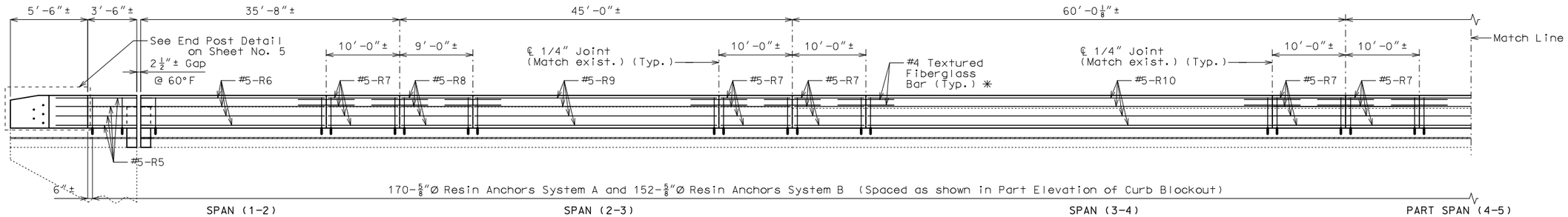

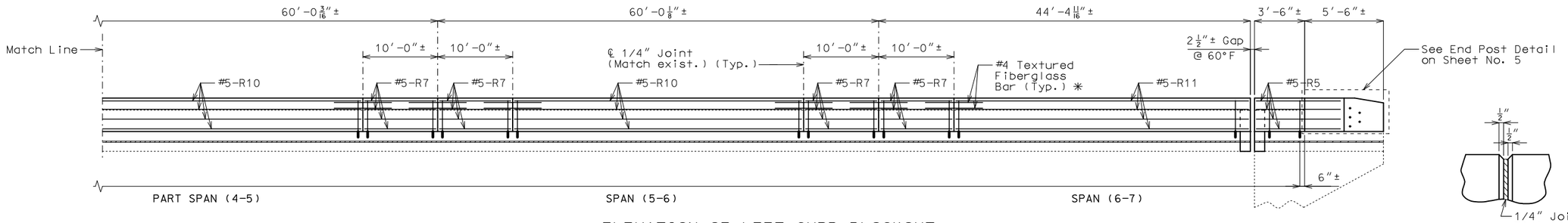

ELEVATION OF LEFT CURB BLOCKOUT

(Right curb blockout similar)

Longitudinal dimensions are along grade and are taken at top outside edge of parapet.

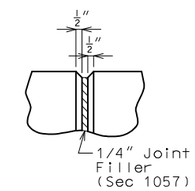

PART ELEVATION AT FORMED JOINT

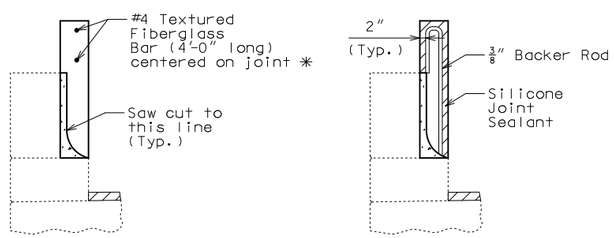

SECTION THRU SAW CUT JOINT

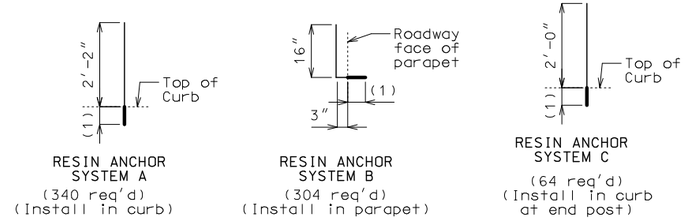

(1) Use manufacturer's embedment length (5" minimum embedment).

DETAILS OF RESIN ANCHORS

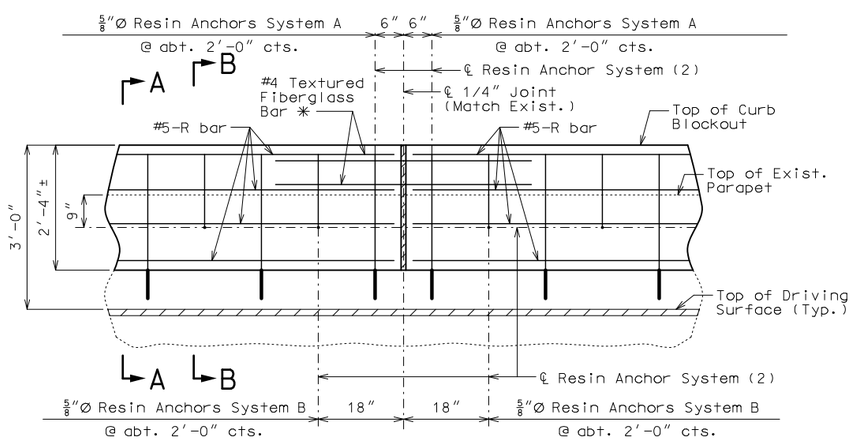

PART ELEVATION OF CURB BLOCKOUT

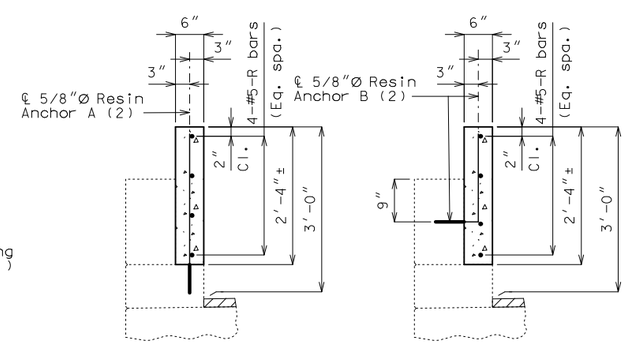

SECTION A-A SECTION B-B

CURB BLOCKOUT

Notes:

✳ Slip-formed option only.

Conventional forming or slip forming may be used. Saw cut joints may be used with conventional forming.

Bridge rail not shown for clarity.

Concrete in curb blockout shall be Class B-1.

Measurement of curb blockout is to the nearest linear foot, measured at the top outside edge of parapet. (Match existing curb and parapet)

All exposed edges of curb blockout shall have either a 1/2-inch radius or 3/8-inch bevel, unless otherwise noted.

Payment for concrete, reinforcement, resin anchor systems and any other work incidental to the curb blockout, complete in place, will be considered completely covered by the contract unit price for Curb Blockout per linear foot.

Cost of any concrete curb or parapet repair will be considered completely covered by the contract unit price for Curb Blockout.

All curb blockout reinforcement shall be epoxy coated.

(2) Shift resin anchors where necessary to clear existing anchor bolts for bridge rail, miss curb outlets (if present) and clear existing reinforcement.

Use a minimum lap of 3'-1" for #5 horizontal curb blockout bars.

Concrete traffic barrier delineators shall be placed on top of the curb blockout similarly as shown on Missouri Standard Plans 617.10 and in accordance with Sec 617. Delineators on bridges with two-lane, two-way traffic shall have retroflective sheeting on both sides. Concrete traffic barrier delineators will be considered completely covered by the contract unit price for Curb Blockout.

The contractor shall use one of the qualified resin anchor systems in accordance with Sec 1039.

The minimum embedment depth in concrete with f'c = 4,000 psi for the resin anchor system shall be that required to meet the minimum ultimate pullout strength in accordance with Sec 1039 but shall not be less than 5 inches.

An epoxy coated #5 Grade 60 reinforcing bar shall be substituted for the 5/8"Ø threaded rod.

For slip-formed option, both sides of the curb blockout shall have a vertically broomed finish and the top shall have a transversely broomed finish.

STATE OF MISSOURI
TED S. KOESTER
NUMBER PE-2013000591
PROFESSIONAL ENGINEER
THIS SHEET HAS BEEN SIGNED, SEALED AND DATED ELECTRONICALLY.

DATE PREPARED	
8/23/2021	
ROUTE 24	STATE MO
DISTRICT BR	SHEET NO. 6
COUNTY CARROLL	
JOB NO. J1P3275	
CONTRACT ID.	
PROJECT NO.	
BRIDGE NO. A29051	

DESCRIPTION

DATE

IF A SEAL IS PRESENT ON THIS SHEET IT HAS BEEN ELECTRONICALLY SEALED AND DATED.

MISSOURI HIGHWAYS AND TRANSPORTATION COMMISSION
105 WEST CAPITOL
JEFFERSON CITY, MO 65102
1-888-ASK-MODOT (1-888-275-6636)

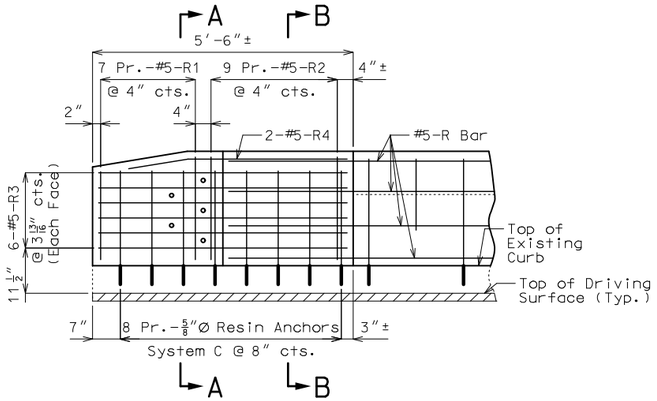

ELEVATION SHOWING REINFORCEMENT

(Right End Post at End Bent No. 7 similar)

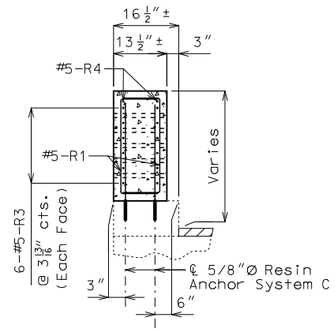

SECTION A-A

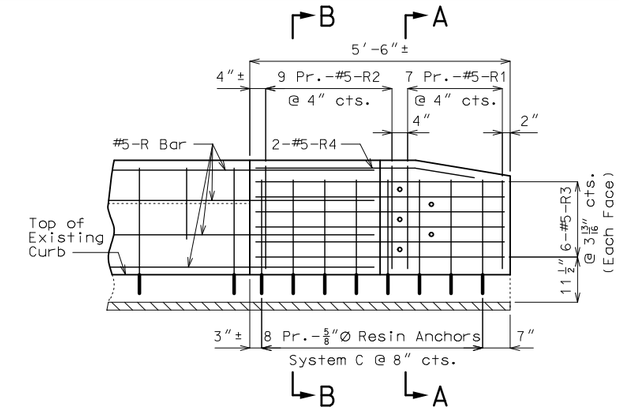

ELEVATION SHOWING REINFORCEMENT

(Right End Post at End Bent No. 1 similar)

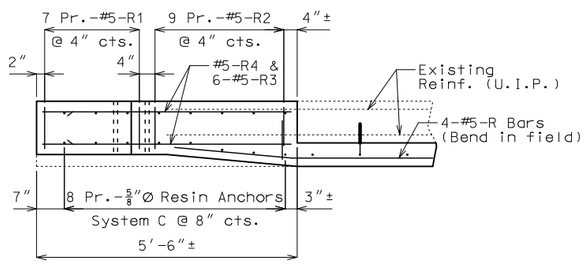

PLAN SHOWING REINFORCEMENT

LEFT END POST AT END BENT NO. 1

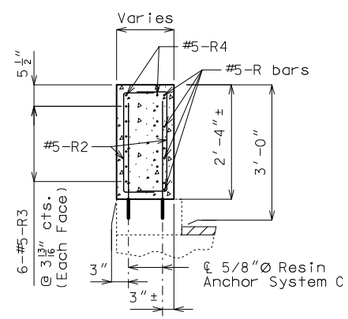

SECTION B-B

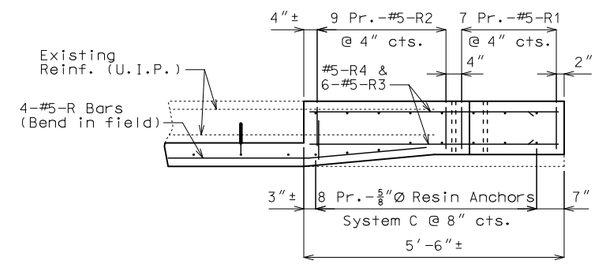

PLAN SHOWING REINFORCEMENT

LEFT END POST AT END BENT NO. 7

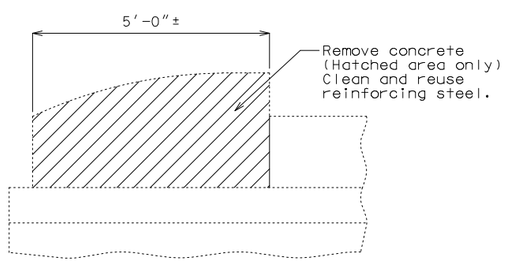

PART ELEVATION SHOWING END POST CONCRETE REMOVAL

Cost of removing existing end posts will be considered completely covered by the contract unit price for Curb Blockout.

Notes:

Work this sheet with Sheet No. 6.

For details of resin anchors, see Sheet No. 6.

Resin anchors shall be shifted or bent in field to clear one-inch diameter holes by at least 1/2 inch.

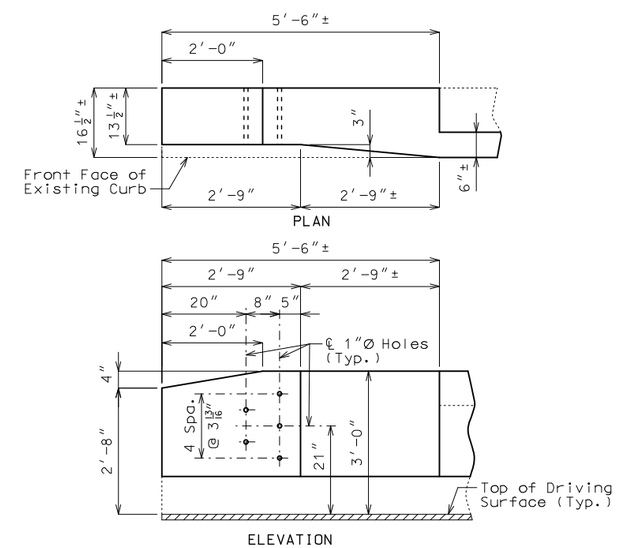

DETAILS OF END POST AND GUARD RAIL ATTACHMENT

CURB BLOCKOUT AT END BENTS

Detailed May 2021
Checked June 2021

Note: This drawing is not to scale. Follow dimensions.

STATE OF MISSOURI
TED S. KOESTER
NUMBER PE-2013000591
PROFESSIONAL ENGINEER

THIS SHEET HAS BEEN SIGNED, SEALED AND DATED ELECTRONICALLY.

DATE PREPARED	
8/23/2021	
ROUTE 24	STATE MO
DISTRICT BR	SHEET NO. 7
COUNTY CARROLL	
JOB NO. J1P3275	
CONTRACT ID.	
PROJECT NO.	
BRIDGE NO. A29051	

DATE	DESCRIPTION

MISSOURI HIGHWAYS AND TRANSPORTATION COMMISSION

105 WEST CAPITOL
JEFFERSON CITY, MO 65102
1-888-ASK-MODOT (1-888-275-6636)

IF A SEAL IS PRESENT ON THIS SHEET IT HAS BEEN ELECTRONICALLY SEALED AND DATED.

BILL OF REINFORCING STEEL

NO. REQ'D.	MARK NO. SIZE	MARK NO. MARK	LOCATION	EPOXY (E)	SHAPE NO.	STIRRUP (S)	SUBSTR. (X)	VARIES (V)	NO. EACH	B FT. IN.	C FT. IN.	D FT. IN.	E FT. IN.	F FT. IN.	H FT. IN.	K FT. IN.	NOMINAL LENGTH FT. IN.	ACTUAL LENGTH FT. IN.	WEIGHT LBS.
			SLAB																
8	6	S1	SLAB	E	20					42 5.000							42 5	42 5	509
			CURB BLOKOUT																
56	5	R1	CURB BLOKOUT	E	10	S		V	8		10.500	21.000					3 6	3 4	
			INCREMENT =								10.500	2 0.000					3 9	3 7	202
			0.500 INCH																
72	5	R2	CURB BLOKOUT	E	10	S		V	8		10.500	2 0.000					3 9	3 7	
			INCREMENT =								13.500	2 0.000					4 3	4 1	288
			0.750 INCH																
48	5	R3	CURB BLOKOUT	E	20					5 3.000							5 3	5 3	263
8	5	R4	CURB BLOKOUT	E	23	S				16.250	3 4.000				2.625	16.000	4 8	4 8	39
16	5	R5	CURB BLOKOUT	E	20					6 0.000							6 0	6 0	100
8	5	R6	CURB BLOKOUT	E	20					25 5.000							25 5	25 5	212
72	5	R7	CURB BLOKOUT	E	20					9 9.000							9 9	9 9	732
8	5	R8	CURB BLOKOUT	E	20					8 9.000							8 9	8 9	73
8	5	R9	CURB BLOKOUT	E	20					25 9.000							25 9	25 9	215
24	5	R10	CURB BLOKOUT	E	20					39 9.000							39 9	39 9	995
8	5	R11	CURB BLOKOUT	E	20					34 1.000							34 1	34 1	285
20	5	R12	CURB BLOKOUT	E	10	S					23.250	13.500					5 0	4 10	101
20	5	R13	CURB BLOKOUT	E	20					2 4.000							2 4	2 4	49
20	5	R14	CURB BLOKOUT	E	28	S				13.000	13.500	13.000	12.000				4 4	4 0	83
			TOTALS																
	5			E															3637
	6			E															509
			TOTAL																0
			TOTAL	E															4146
			Slab on Girder																
	6			E															509
			TOTAL																509
			Safety Barrier Curb																
	5			E															3637
			TOTAL																3637

BILL OF REINFORCING STEEL

NO. REQ'D.	MARK NO. SIZE	MARK NO. MARK	LOCATION	EPOXY (E)	SHAPE NO.	STIRRUP (S)	SUBSTR. (X)	VARIES (V)	NO. EACH	B FT. IN.	C FT. IN.	D FT. IN.	E FT. IN.	F FT. IN.	H FT. IN.	K FT. IN.	NOMINAL LENGTH FT. IN.	ACTUAL LENGTH FT. IN.	WEIGHT LBS.

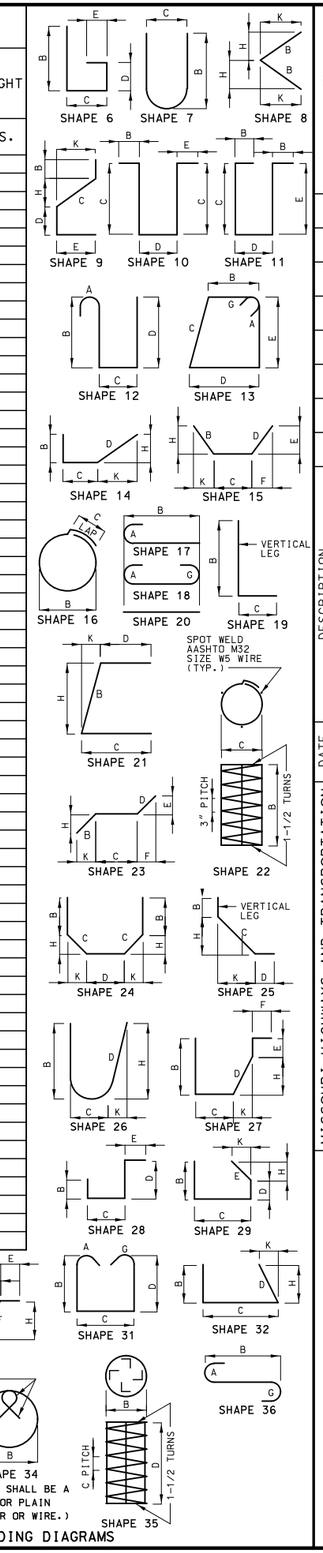

STATE OF MISSOURI
TED S. KOESTER
NUMBER PE-2013000591
PROFESSIONAL ENGINEER
THIS SHEET HAS BEEN SIGNED, SEALED AND DATED ELECTRONICALLY.

DATE PREPARED	
8/23/2021	
ROUTE 24	STATE MO
DISTRICT BR	SHEET NO. 8
COUNTY CARROLL	
JOB NO. J1P3275	
CONTRACT ID.	
PROJECT NO.	
BRIDGE NO. A29051	

DESCRIPTION	DATE

IF A SEAL IS PRESENT ON THIS SHEET IT HAS BEEN ELECTRONICALLY SEALED AND DATED.

MISSOURI HIGHWAYS AND TRANSPORTATION COMMISSION
105 WEST CAPITOL
JEFFERSON CITY, MO 65102
1-888-ASK-MODOT (1-888-275-6636)

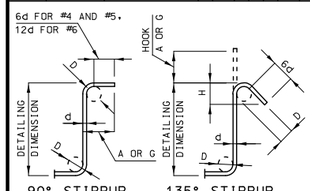

STIRRUP HOOK DIMENSIONS				
GRADES 40 - 50 - 60 KSI				
BAR SIZE	D (IN.)	90° HOOK	135° HOOK	
		HOOK A OR G	HOOK A OR G	APPROX. H
#4	2"	4 1/2"	4 1/2"	3"
#5	2 1/2"	6"	5 1/2"	3 3/4"
#6	4 1/2"	12"	8"	4 1/2"

NOTE: UNLESS OTHERWISE NOTED, DIAMETER "D" IS THE SAME FOR ALL BENDS AND HOOKS ON A BAR.

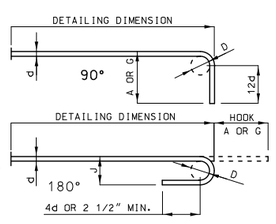

END HOOK DIMENSIONS				
BAR SIZE	D (IN.)	ALL GRADES		
		180° HOOKS		90° HOOKS
		A OR G	J	A OR G
#3	2 1/4"	5"	3"	6"
#4	3"	6"	4"	8"
#5	3 3/4"	7"	5"	10"
#6	4 1/2"	8"	6"	12"
#7	5 1/4"	10"	7"	14"
#8	6"	11"	8"	16"
#9	9 1/2"	15"	11 3/4"	19"
#10	10 3/4"	17"	13 1/4"	22"
#11	12"	19"	14 3/4"	2'-0"
#14	18 1/4"	2'-3"	21 3/4"	2'-7"

NOTE:
ALL STANDARD HOOKS AND BENDS OTHER THAN 180 DEGREE ARE TO BE BENT WITH SAME PROCEDURE AS FOR 90 DEGREE STANDARD HOOKS.

HOOKS AND BENDS SHALL BE IN ACCORDANCE WITH THE PROCEDURES AS SHOWN ON THIS SHEET.

E = EPOXY COATED REINFORCEMENT.
S = STIRRUP.
X = BAR IS INCLUDED IN SUBSTRUCTURE QUANTITIES.
V = BAR DIMENSIONS VARY IN EQUAL INCREMENTS BETWEEN DIMENSIONS SHOWN ON THIS LINE AND THE FOLLOWING LINE.
NO. EA. = NUMBER OF BARS OF EACH LENGTH.

NOMINAL LENGTHS ARE BASED ON OUT TO OUT DIMENSIONS SHOWN IN BENDING DIAGRAMS AND ARE LISTED FOR FABRICATORS USE. (NEAREST INCH)

ACTUAL LENGTHS ARE MEASURED ALONG CENTERLINE BAR TO THE NEAREST INCH.

PAYWEIGHTS ARE BASED ON ACTUAL LENGTHS.

FOUR ANGLE OR CHANNEL SPACERS ARE REQUIRED FOR EACH COLUMN SPIRAL. SPACERS ARE TO BE PLACED ON INSIDE OF SPIRALS. LENGTH AND WEIGHT OF COLUMN SPIRALS DO NOT INCLUDE SPLICES OR SPACERS.

REINFORCING STEEL (GRADE 60) FY = 60,000 PSI.

Detailed May 2021
Checked July 2021

Note: This drawing is not to scale. Follow dimensions.

SEC/SUR 9 TWP 52N RGE 23W

U.I.P. AND REHABILITATE EXISTING (47′-75′-79′-87′-48′) CONTINUOUS COMPOSITE PLATE GIRDER SPANS

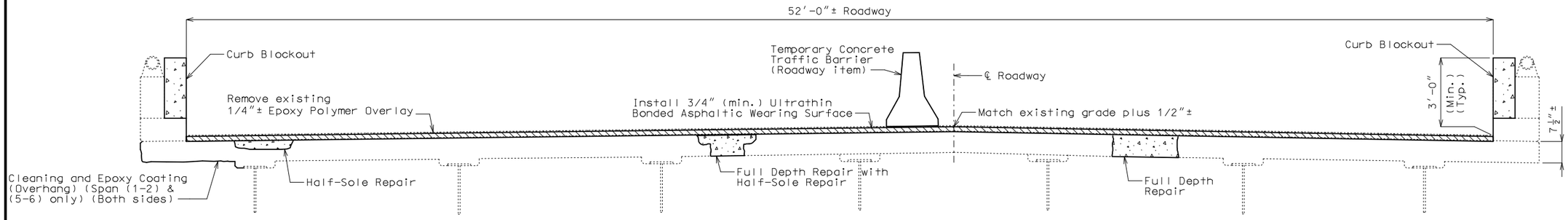

TYPICAL SECTION THRU EXISTING DECK

General Notes:

Design Specifications:

2002 AASTHO LFD (17th Ed.) Standard Specifications
Bridge Deck Rating = 6

Design Loading:

HS20-44 (AASHO 1973 and New Construction)

Design Unit Stresses:

Class B-2 Concrete (Superstructure, except Curb Blockout) f′c = 4,000 psi
Class B-1 Concrete (Curb Blockout) f′c = 4,000 psi
Reinforcing Steel (Grade 60) fy = 60,000 psi

Structural Steel Protective Coating:

Protective Coating: System G in accordance with Sec 1081.

Protective Coating Limits: The surface of all existing structural steel within a distance of not less than 10 feet from ℄ of expansion joint at End Bents No. 1 & 6 shall be recoated with System G.

Surface Preparation: Surface preparation of the existing steel shall be in accordance with Sec 1081 for Recoating of Structural Steel (System G, H or I). The cost of surface preparation will be considered completely covered by the contract unit price per sq. foot for Surface Preparation for Recoating Structural Steel.

Prime Coat: The cost of the prime coat will be considered completely covered by the contract unit price per sq. foot for Field Application of Inorganic Zinc Primer. Tint of the prime coat for System G shall be similar to the color of the field coat to be used.

Field Coat: The color of the finish field coat shall be Gray (Federal Standard #26373). The cost of the intermediate field coat will be considered completely covered by the contract unit price per sq. foot for Intermediate Field Coat (System G). The cost of the finish field coat will be considered completely covered by the contract unit price per sq. foot for Finish Field Coat (System G).

Miscellaneous:

Roadway surfacing adjacent to bridge ends shall match new bridge wearing surface (roadway item).

All concrete repairs shall be in accordance with Sec 704, unless otherwise noted.

Outline of existing work is indicated by light dashed lines. Heavy lines indicate new work.

Contractor shall verify all dimensions in field before ordering new material.

In order to maintain grade and a minimum thickness of wearing surface as shown on plans it may be necessary to use additional quantities of wearing surface at various locations throughout the structure. The cost of furnishing and installing the wearing surface will be considered completely covered in the contract unit price, including all additional labor, materials or equipment for variations in thickness of wearing surface.

Traffic Handling:

Traffic to be maintained on structure during construction. See roadway plans for traffic control.

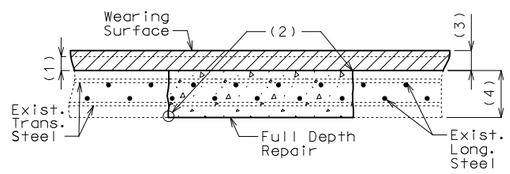

FULL DEPTH REPAIR

(1) Removal of existing 1/4″± epoxy polymer overlay

(2) 1″ vertical side shall be established outside the deteriorated area.

(3) 3/4″ minimum ultrathin bonded asphaltic wearing surface

(4) Original depth of deck

Estimated Quantities

Item		Total
Removal of Seal Coat or Polymer Wearing Surface	sq. foot	17,513
Removal of Existing Expansion Joint & Adjacent Concrete	linear foot	52
Removal of Existing Expansion Joint Seal or Sealant	linear foot	52
Remove and Replace Curb and Parapet	linear foot	6
Optional Ultrathin Bonded Asphalt Wearing Surface (Bridges)	sq. yard	1946
Curb Blockout	linear foot	748
Substructure Repair (Formed)	sq. foot	30
Half-Sole Repair	sq. foot	1000
Full Depth Repair	sq. foot	1000
Cleaning and Epoxy Coating	sq. foot	655
Protective Coating - Concrete Bents and Piers (Epoxy)	lump sum	1
Cleaning and Coating Existing Bearings	each	14
Surface Preparation for Recoating Structural Steel	sq. foot	1200
Field Application of Inorganic Zinc Primer	sq. foot	1200
Intermediate Field Coat System (System G)	sq. foot	1200
Finish Field Coat System (System G)	sq. foot	1200
Strip Seal Expansion Joint System	linear foot	52
Open Cell Foam Joint Seal	linear foot	52

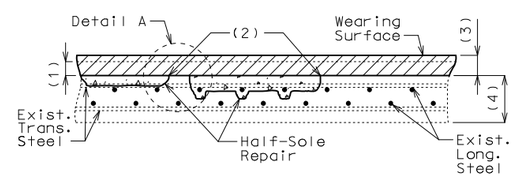

HALF-SOLE REPAIR

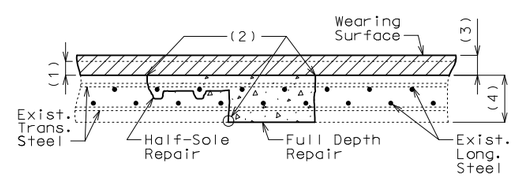

FULL DEPTH REPAIR WITH HALF-SOLE REPAIR

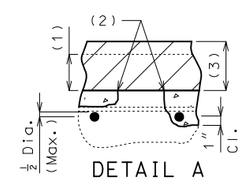

DETAIL A

Clearance around top bar and around bottom bar at the intersection of top bar shall be required when more than half the diameter of the top bar is exposed.

REPAIRS TO BRIDGE: ROUTE 24/65
OVER ROUTE 10, OUTER ROAD 24 & NS RR

ROUTE 24/65 FROM ROUTE CC TO ROUTE B
ABOUT 2.4 MILES NORTH OF ROUTE B
BEG. STA. 847+53.12± (Match Existing)

Detailed May 2021
Checked June 2021

Note: This drawing is not to scale. Follow dimensions.

STATE OF MISSOURI
TED S. KOESTER
NUMBER PE-2013000591
PROFESSIONAL ENGINEER
THIS SHEET HAS BEEN SIGNED, SEALED AND DATED ELECTRONICALLY.

DATE PREPARED 8/23/2021
ROUTE 24 | STATE MO
DISTRICT BR | SHEET NO. 1
COUNTY CARROLL
JOB NO. J1P3275
CONTRACT ID.
PROJECT NO.
BRIDGE NO. A29071

DESCRIPTION
DATE

IF A SEAL IS PRESENT ON THIS SHEET IT HAS BEEN ELECTRONICALLY SEALED AND DATED.

MISSOURI HIGHWAYS AND TRANSPORTATION COMMISSION
105 WEST CAPITOL
JEFFERSON CITY, MO 65102
1-888-ASK-MODOT (1-888-275-6636)

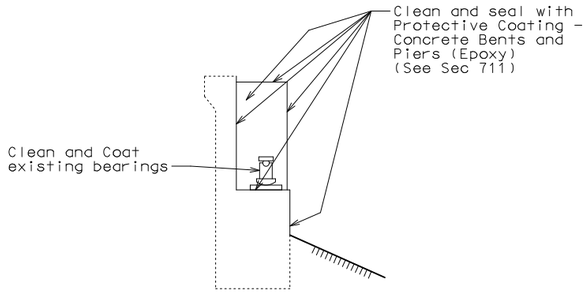

TYPICAL SECTION THRU
END BENT NO. 1 SHOWING
PROTECTIVE COATING

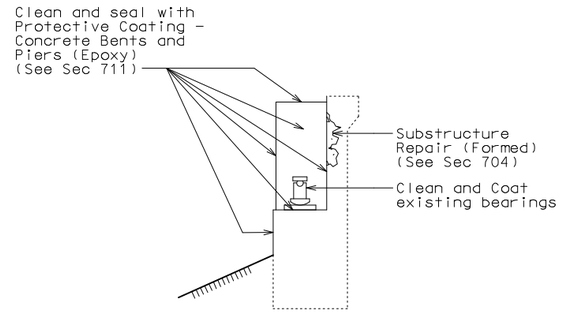

TYPICAL SECTION THRU
END BENT NO. 6 SHOWING
PROTECTIVE COATING
& SUBSTRUCTURE REPAIR

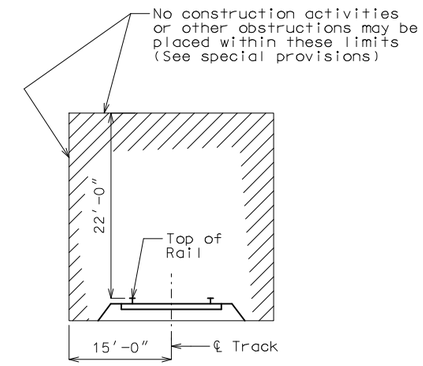

MINIMUM CONSTRUCTION
CLEARANCES
(Normal to railroad)
(Not to scale)

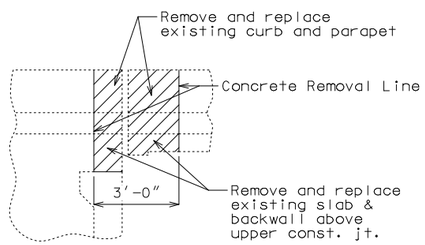

PART ELEVATION AT
END BENT NO. 1
SHOWING CONCRETE
REMOVAL

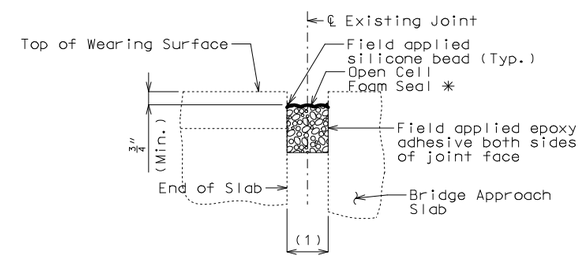

PART SECTION THRU JOINT AT END
OF BRIDGE APPROACH SLAB
AT END BENT NO. 6

✳ Manufacturer's recommended size

Extend seal full width of approach slab.

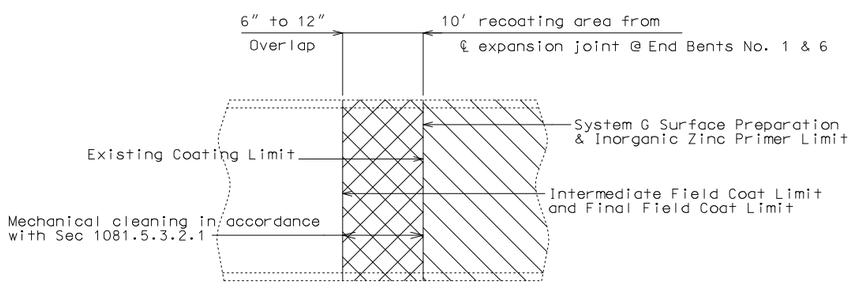

PART ELEVATION SHOWING LIMITS OF PAINT OVERLAP

(Vertical or horizontal paint limit. Horizontal
limit shown)

General Notes:

The seal size (width and depth) shall be determined by the manufacturer. Manufacturer recommended seal size shall meet the movement and installation gap requirements and skew effect.

The seal shall be installed according to the manufacturer's recommendations.

The installation temperature shall be taken as the actual air temperature averaged over the 24-hour period immediately preceding installation.

(1) Allowed installation gap (±) normal to joint at roadway surface (see table)

Expansion Joint	Movement Parallel to Rdwy	Movement Normal to Joint	Allowed Installation Gap (±) Normal to Joint at Roadway Surface at Air/Surface Temperature						Manufacturer	Seal Name
			@ 40°F	@ 50°F	@ 60°F	@ 70°F	@ 80°F	@ 90°F		
End Bent No. 1	$1\frac{7}{8}$"	$1\frac{7}{8}$"	$2\frac{1}{2}$"	$2\frac{3}{8}$"	$2\frac{1}{4}$"	$2\frac{1}{8}$"	2"	$1\frac{7}{8}$"		

MoDOT construction personnel will record the manufacturer and seal name that was used.

Detailed May 2021
Checked June 2021

Note: This drawing is not to scale. Follow dimensions.

STATE OF MISSOURI
TED S. KOESTER
NUMBER
PE-2013000591
PROFESSIONAL ENGINEER

THIS SHEET HAS BEEN SIGNED, SEALED AND DATED ELECTRONICALLY.

DATE PREPARED	
9/14/2021	
ROUTE 24	STATE MO
DISTRICT BR	SHEET NO. 2
COUNTY CARROLL	
JOB NO. J1P3275	
CONTRACT ID.	
PROJECT NO.	
BRIDGE NO. A29071	

DATE	DESCRIPTION

MISSOURI HIGHWAYS AND TRANSPORTATION COMMISSION
105 WEST CAPITOL
JEFFERSON CITY, MO 65102
1-888-ASK-MODOT (1-888-275-6636)

IF A SEAL IS PRESENT ON THIS SHEET IT HAS BEEN ELECTRONICALLY SEALED AND DATED.

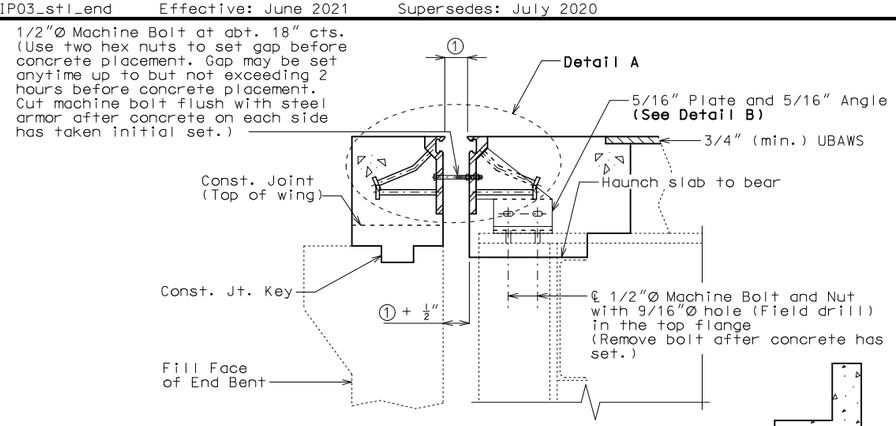

SECTION A-A

Notes:
Strip seal gland not shown for clarity.

Slab Reinforcement not shown for clarity.

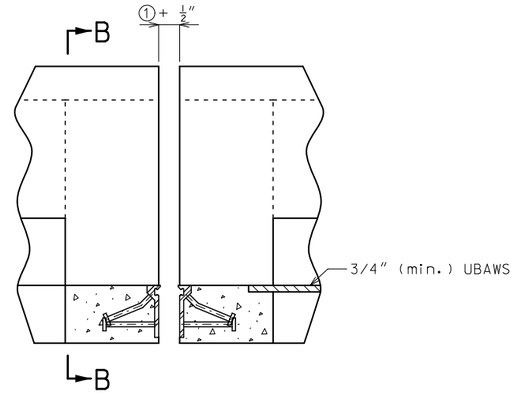

PART ELEVATION OF BARRIER

Strip seal gland not shown for clarity.

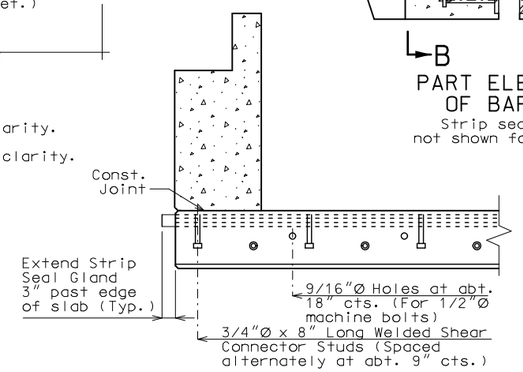

PART SECTION B-B

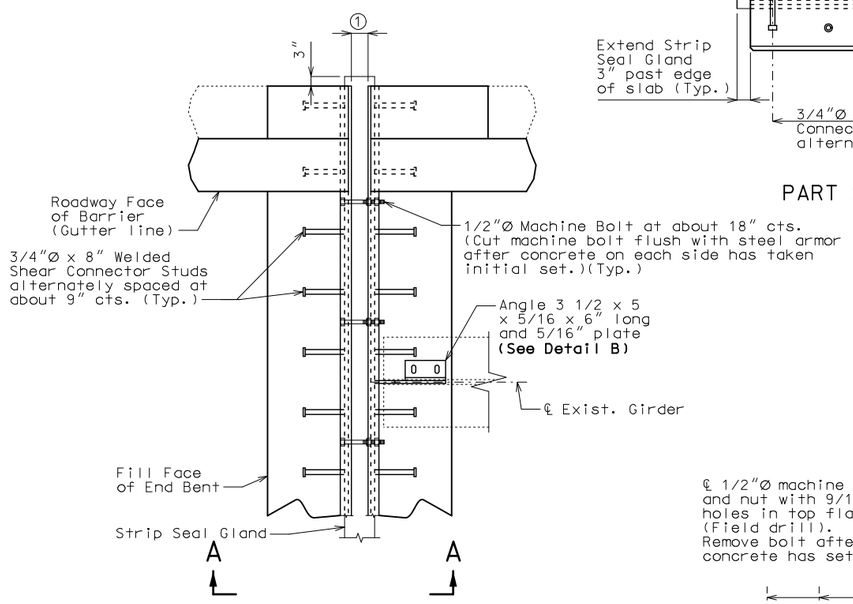

PART PLAN

Wearing Surface not shown for clarity.

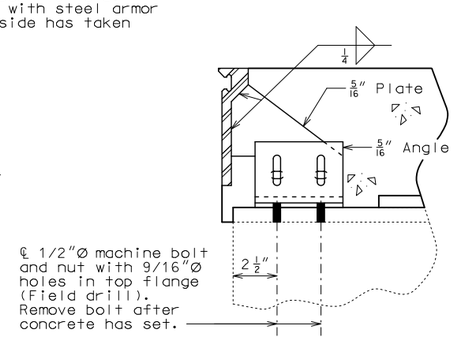

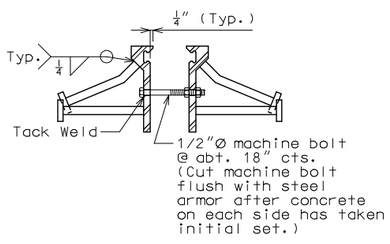

DETAIL A

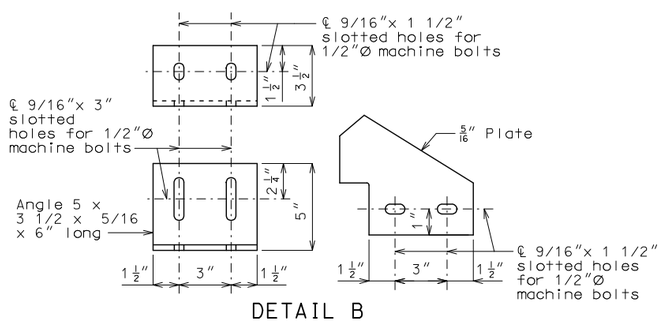

DETAIL B

GENERAL NOTES:

Expansion joint system shall be fabricated in one section, except for staged construction and when the length is over 50 feet. A complete joint penetration groove welded splice shall be required. Welds shall be ground flush to provide a smooth surface. The expansion joint system shall be fabricated and installed to the crown and grade of the roadway.

The strip seal gland shall be installed in joints in one continuous piece without field splices. Factory splicing will be permitted for joints in excess of 53 feet.

Structural steel for the expansion joint system shall be ASTM A709 Grade 36 except the steel armor may be ASTM A709 Grade 50W. Anchors for the expansion joint system shall be in accordance with Sec 1037. Strip seal expansion joint system shall be in accordance with Sec 717.

Structural steel for the expansion joint system shall be coated with a minimum of two coats of inorganic zinc primer to provide a total dry film thickness of 4 mils minimum, 6 mils maximum, or galvanized in accordance with ASTM A123. Anchors need not be protected from overspray.

Longitudinal reinforcing steel shall be cut/bent so that ends shall be 1" from the vertical leg of the steel armor at the expansion joint system.

Concrete shall be forced under and around steel armor and anchors. Proper consolidation of the concrete shall be achieved by localized internal vibration.

② The installation temperature shall be taken as the actual air temperature averaged over the 24-hour period immediately preceding installation.

③ MoDOT Construction personnel will indicate the strip seal expansion joint system installed.

Steel armor may also be referred to as extrusion or rail.

Work this sheet with Sheet No. 4.

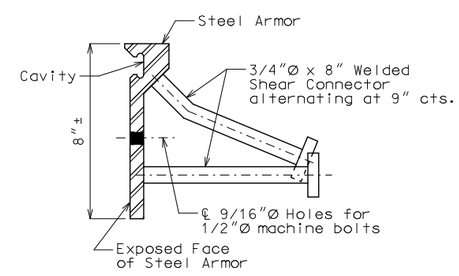

DETAIL OF JOINT ARMOR

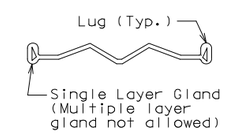

DETAIL OF GLAND

Table of Allowed Transverse Strip Seal Expansion Joint System

Manufacturer	Strip Seal System (Designated Name)	Movement Parallel to RDWY	Allowed Installation Gap ① Normal to Joint at RDWY Surface @ Air/Surface Temperature ②						③
			@ 40°F	@ 50°F	@ 60°F	@ 70°F	@ 80°F	@ 90°F	
D S Brown	Strip seal L2-400	2 3/8"	2 5/16"	2 3/16"	2"	1 13/16"	1 11/16"	1 1/2"	□
D S Brown	Strip seal L2-500	2 3/8"	2 5/16"	2 3/16"	2"	1 13/16"	1 11/16"	1 1/2"	□
Watson Bowman Acme (Wabo)	Strip seal SE-400	2 3/8"	2 5/16"	2 3/16"	2"	1 13/16"	1 11/16"	1 1/2"	□
Watson Bowman Acme (Wabo)	Strip seal SE-500	2 3/8"	2 5/16"	2 3/16"	2"	1 13/16"	1 11/16"	1 1/2"	□

STRIP SEAL EXPANSION JOINT SYSTEM AT END BENT NO. 1

Detailed May 2021
Checked June 2021

Note: This drawing is not to scale. Follow dimensions.

STATE OF MISSOURI
TED S. KOESTER
NUMBER PE-2013000591
PROFESSIONAL ENGINEER
THIS SHEET HAS BEEN SIGNED, SEALED AND DATED ELECTRONICALLY.

DATE PREPARED	
8/23/2021	
ROUTE 24	STATE MO
DISTRICT BR	SHEET NO. 3
COUNTY CARROLL	
JOB NO. J1P3275	
CONTRACT ID.	
PROJECT NO.	
BRIDGE NO. A29071	

DATE	DESCRIPTION

IF A SEAL IS PRESENT ON THIS SHEET IT HAS BEEN ELECTRONICALLY SEALED AND DATED.

MISSOURI HIGHWAYS AND TRANSPORTATION COMMISSION
105 WEST CAPITOL
JEFFERSON CITY, MO 65102
1-888-ASK-MODOT (1-888-275-6636)

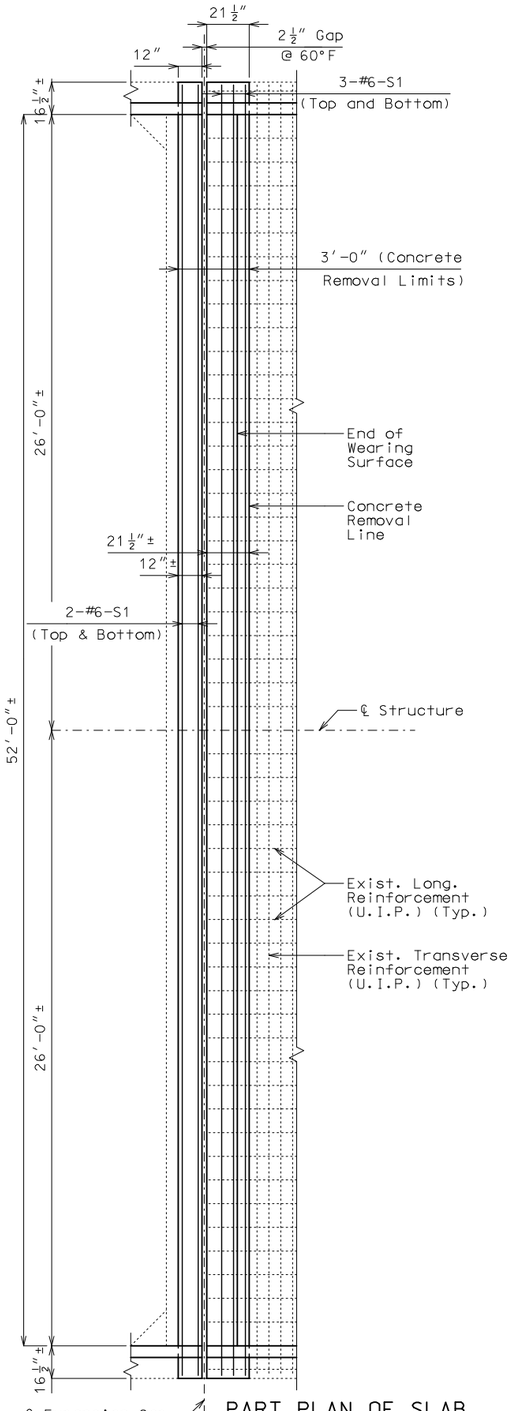

PART PLAN OF SLAB
AT END BENT NO. 1
SHOWING SLAB REINFORCEMENT

Note: Expansion device not shown for clarity.

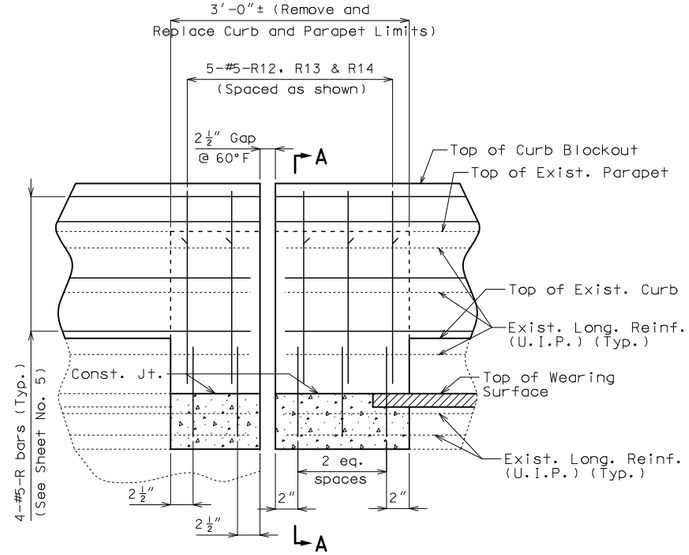

PART ELEVATION OF CURB
BLOCKOUT AND PARAPET

Note: Expansion device and #6-S bars not shown for clarity.

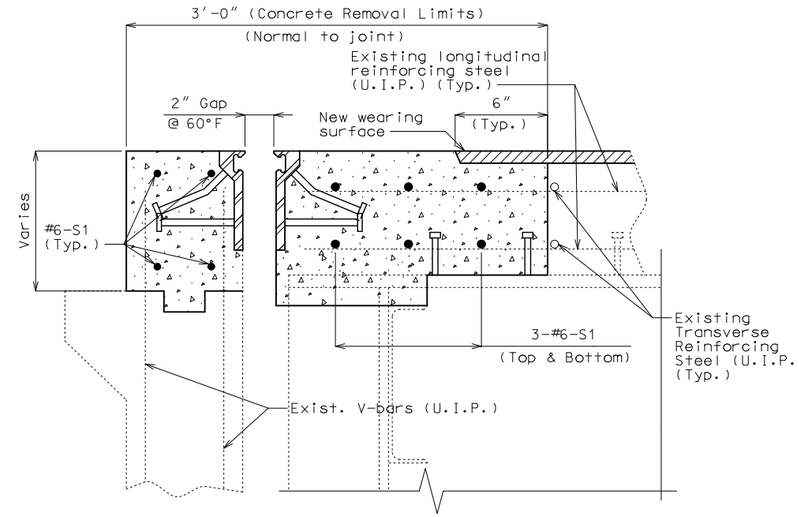

PART SECTION AT
END BENT NO. 1
THRU SLAB SHOWING
SLAB REINFORCEMENT

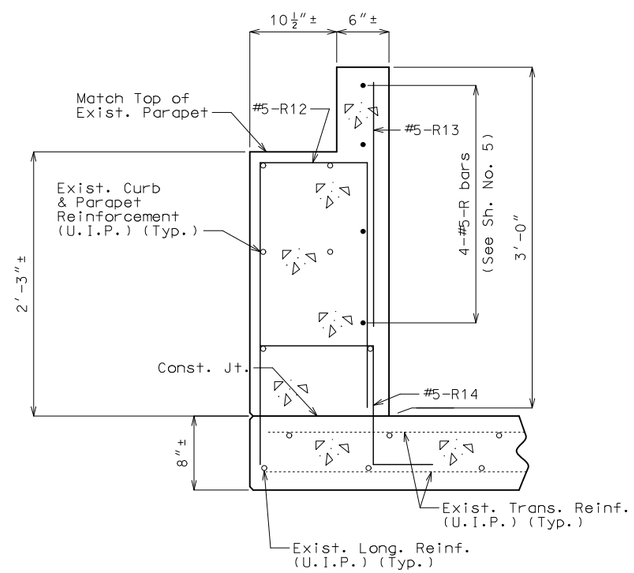

SECTION A-A

Notes:

The #6-S1 bars to be segmented to accommodate stage construction. The total bar length for #6-S1 bars shown in Bill of Reinforcing Steel allows for one lap splice with a length of 3'-10". Actual bar segment lengths to be determined by contractor. The contractor may use a mechanical bar splice in lieu of a lap splice. When a mechanical bar splice is used, the actual bar segment length will be determined by contractor to accommodate manufacturer's recommendations for installation and stage construction. The cost of furnishing and installing the bar splices will be considered completely covered by the contract unit price for Reinforcing Steel (Epoxy Coated). No adjustment of the quantity of reinforcing steel will be allowed for the use of mechanical bar splices.

Top of curb blockout and parapet shall be built parallel to grade with barrier curb joints normal to grade.

All exposed edges of curb blockout and parapet shall have either a 1/2-inch radius or a 3/8-inch bevel, unless otherwise noted.

Concrete in the curb blockout and parapet shall be Class B-1.

Slab concrete shall be Class B-2.

Payment for removal and replacement of all concrete and reinforcement in curb blockout and parapet in the limits shown, complete in place, will be considered completely covered by the contract unit price for Remove and Replace Curb and Parapet.

Existing stirrups not embedded in concrete shall be removed within the limits shown.

Top of backwall for End Bents shall be formed to the crown and grade of the roadway. Backwall above upper construction joint shall not be poured until the superstructure slab has been poured in the adjacent span.

Work this sheet with Sheet No. 3.

SLAB REPLACEMENT DETAILS AT END BENT NO. 1

Detailed May 2021
Checked July 2021

Note: This drawing is not to scale. Follow dimensions.

STATE OF MISSOURI
TED S. KOESTER
NUMBER PE-2013000591
PROFESSIONAL ENGINEER
THIS SHEET HAS BEEN SIGNED, SEALED AND DATED ELECTRONICALLY.

DATE PREPARED	
8/23/2021	
ROUTE 24	STATE MO
DISTRICT BR	SHEET NO. 4
COUNTY CARROLL	
JOB NO. J1P3275	
CONTRACT ID.	
PROJECT NO.	
BRIDGE NO. A29071	

DATE	DESCRIPTION

MISSOURI HIGHWAYS AND TRANSPORTATION COMMISSION
105 WEST CAPITOL
JEFFERSON CITY, MO 65102
1-888-ASK-MODOT (1-888-275-6636)

IF A SEAL IS PRESENT ON THIS SHEET IT HAS BEEN ELECTRONICALLY SEALED AND DATED.

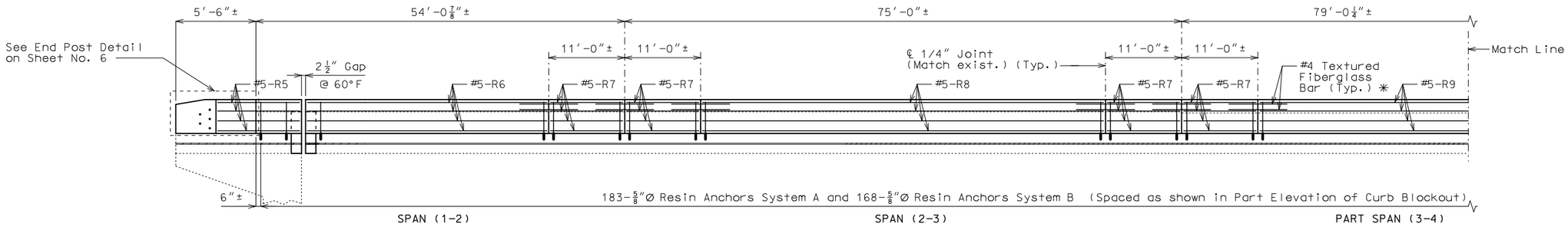

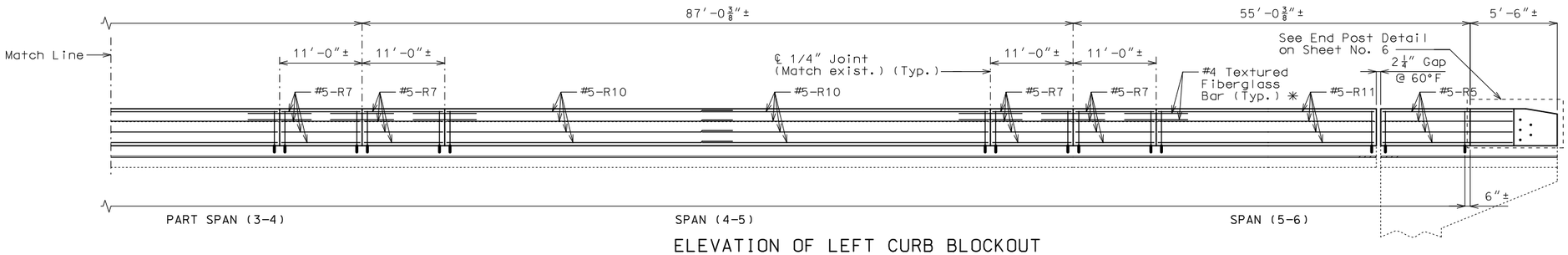

ELEVATION OF LEFT CURB BLOCKOUT

(Right curb blockout similar)

Longitudinal dimensions are along grade and are taken at top outside edge of parapet.

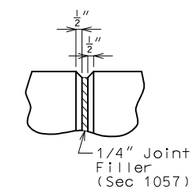

PART ELEVATION AT FORMED JOINT

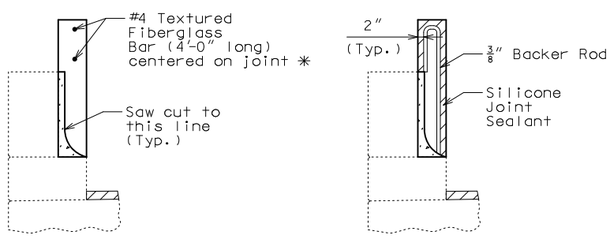

SECTION THRU SAW CUT JOINT

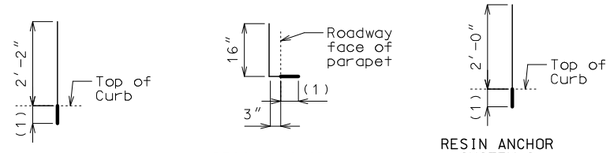

(1) Use manufacturer's embedment length (5" minimum embedment).

DETAILS OF RESIN ANCHORS

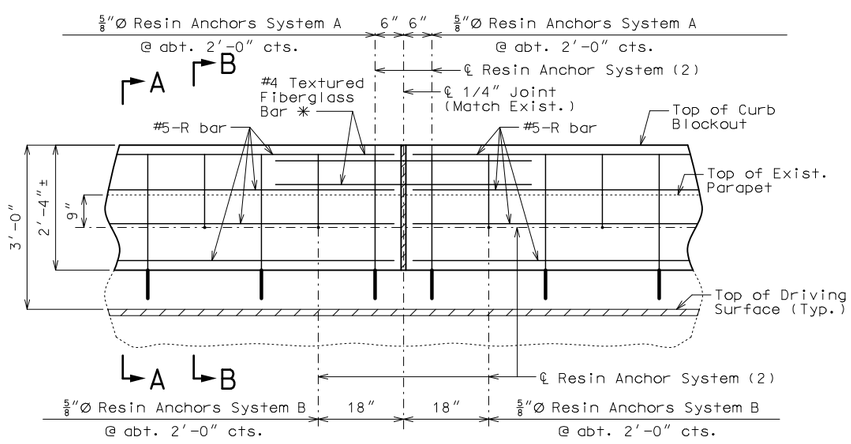

PART ELEVATION OF CURB BLOCKOUT

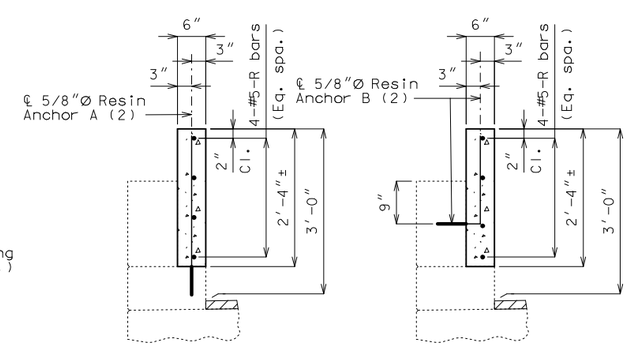

SECTION A-A SECTION B-B

CURB BLOCKOUT

Notes:

✳ Slip-formed option only.

Conventional forming or slip forming may be used. Saw cut joints may be used with conventional forming.

Bridge rail not shown for clarity.

Concrete in curb blockout shall be Class B-1.

Measurement of curb blockout is to the nearest linear foot, measured at the top outside edge of parapet. (Match existing curb and parapet)

All exposed edges of curb blockout shall have either a 1/2-inch radius or 3/8-inch bevel, unless otherwise noted.

Payment for concrete, reinforcement, resin anchor systems and any other work incidental to the curb blockout, complete in place, will be considered completely covered by the contract unit price for Curb Blockout per linear foot.

Cost of any concrete curb or parapet repair will be considered completely covered by the contract unit price for Curb Blockout.

All curb blockout reinforcement shall be epoxy coated.

(2) Shift resin anchors where necessary to clear existing anchor bolts for bridge rail, miss curb outlets (if present) and clear existing reinforcement.

Use a minimum lap of 3'-1" for #5 horizontal curb blockout bars.

Concrete traffic barrier delineators shall be placed on top of the curb blockout similarly as shown on Missouri Standard Plans 617.10 and in accordance with Sec 617. Delineators on bridges with two-lane, two-way traffic shall have retroflective sheeting on both sides. Concrete traffic barrier delineators will be considered completely covered by the contract unit price for Curb Blockout.

The contractor shall use one of the qualified resin anchor systems in accordance with Sec 1039.

The minimum embedment depth in concrete with f'c = 4,000 psi for the resin anchor system shall be that required to meet the minimum ultimate pullout strength in accordance with Sec 1039 but shall not be less than 5 inches.

An epoxy coated #5 Grade 60 reinforcing bar shall be substituted for the 5/8"Ø threaded rod.

For slip-formed option, both sides of the curb blockout shall have a vertically broomed finish and the top shall have a transversely broomed finish.

STATE OF MISSOURI
TED S. KOESTER
NUMBER PE-2013000591
PROFESSIONAL ENGINEER
THIS SHEET HAS BEEN SIGNED, SEALED AND DATED ELECTRONICALLY.

DATE PREPARED	8/23/2021
ROUTE	24
STATE	MO
DISTRICT	BR
SHEET NO.	5
COUNTY	CARROLL
JOB NO.	J1P3275
CONTRACT ID.	
PROJECT NO.	
BRIDGE NO.	A29071

DESCRIPTION

DATE

IF A SEAL IS PRESENT ON THIS SHEET IT HAS BEEN ELECTRONICALLY SEALED AND DATED.

MISSOURI HIGHWAYS AND TRANSPORTATION COMMISSION
105 WEST CAPITOL
JEFFERSON CITY, MO 65102
1-888-ASK-MODOT (1-888-275-6636)

Detailed May 2021
Checked June 2021

Note: This drawing is not to scale. Follow dimensions.

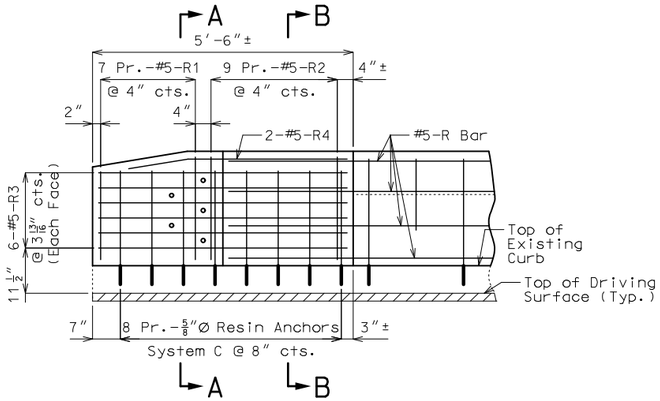

ELEVATION SHOWING REINFORCEMENT

(Right End Post at End Bent No. 6 similar)

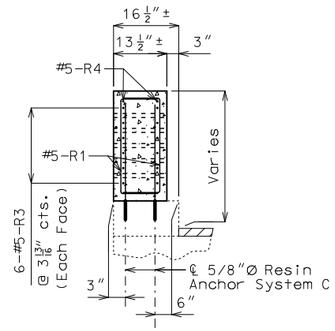

SECTION A-A

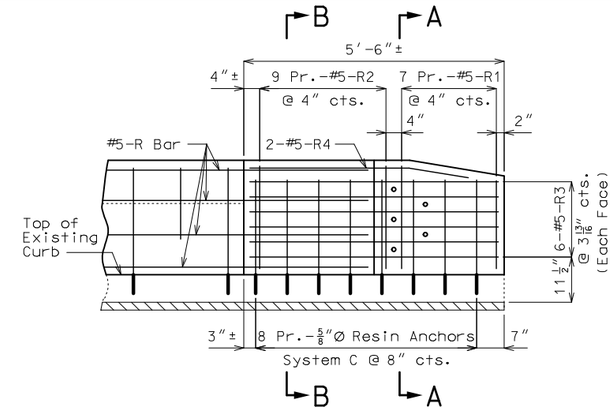

ELEVATION SHOWING REINFORCEMENT

(Right End Post at End Bent No. 1 similar)

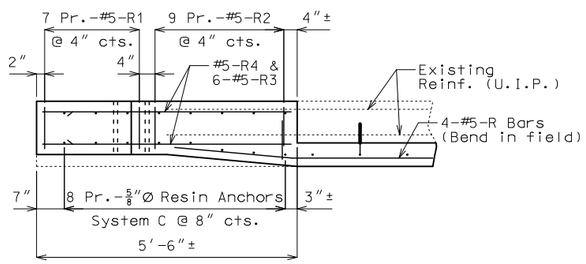

PLAN SHOWING REINFORCEMENT

LEFT END POST AT END BENT NO. 1

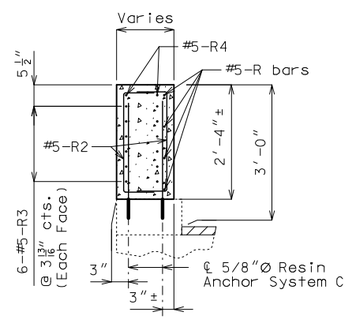

SECTION B-B

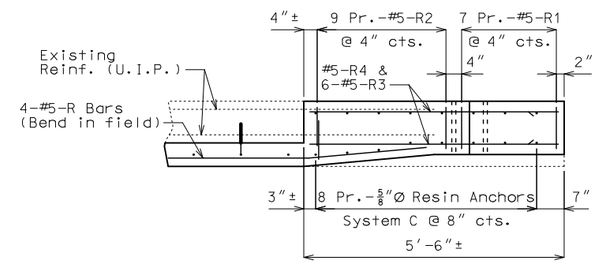

PLAN SHOWING REINFORCEMENT

LEFT END POST AT END BENT NO. 6

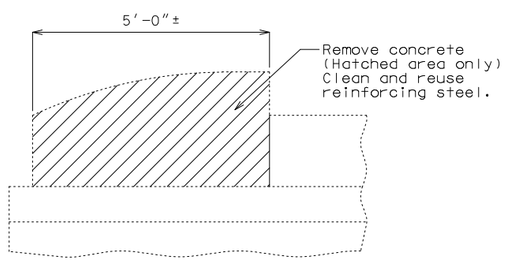

PART ELEVATION SHOWING END POST CONCRETE REMOVAL

Cost of removing existing end posts will be considered completely covered by the contract unit price for Curb Blockout.

Notes:

Work this sheet with Sheet No. 5.

For details of resin anchors, see Sheet No. 5.

Resin anchors shall be shifted or bent in field to clear one-inch diameter holes by at least 1/2 inch.

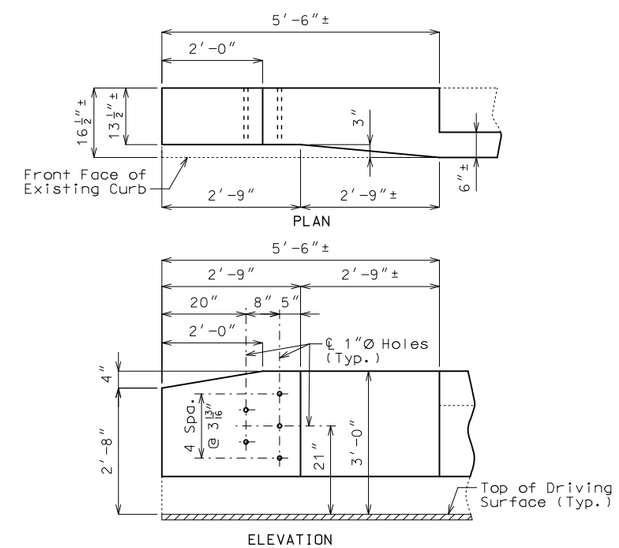

DETAILS OF END POST AND GUARD RAIL ATTACHMENT

CURB BLOCKOUT AT END BENTS

Detailed May 2021
Checked June 2021

Note: This drawing is not to scale. Follow dimensions.

STATE OF MISSOURI
TED S. KOESTER
NUMBER PE-2013000591
PROFESSIONAL ENGINEER
THIS SHEET HAS BEEN SIGNED, SEALED AND DATED ELECTRONICALLY.

DATE PREPARED	
8/23/2021	
ROUTE 24	STATE MO
DISTRICT BR	SHEET NO. 6
COUNTY CARROLL	
JOB NO. J1P3275	
CONTRACT ID.	
PROJECT NO.	
BRIDGE NO. A29071	

DATE	DESCRIPTION

MISSOURI HIGHWAYS AND TRANSPORTATION COMMISSION
105 WEST CAPITOL
JEFFERSON CITY, MO 65102
1-888-ASK-MODOT (1-888-275-6636)

IF A SEAL IS PRESENT ON THIS SHEET IT HAS BEEN ELECTRONICALLY SEALED AND DATED.

BILL OF REINFORCING STEEL

NO. REQ'D.	MARK NO. SIZE	MARK NO. MARK	LOCATION	EPOXY (E)	SHAPE NO.	STIRRUP (S)	SUBSTR. (X)	VARIES (V)	NO. EACH	B FT. IN.	C FT. IN.	D FT. IN.	E FT. IN.	F FT. IN.	H FT. IN.	K FT. IN.	NOMINAL LENGTH FT. IN.	ACTUAL LENGTH FT. IN.	WEIGHT LBS.
			SLAB																
10	6	S1	SLAB	E	20					54 6.000							54 6	54 6	819
			CURB BLOCKOUT																
56	5	R1	BARRIER CURB	E	10	S		V	8		10.500	21.000					3 6	3 4	
			INCREMENT = 0.500 INCH								10.500	2 0.000					3 9	3 7	202
72	5	R2	BARRIER CURB	E	10	S		V	8		10.500	2 0.000					3 9	3 7	
			INCREMENT = 0.750 INCH								13.500	2 0.000					4 3	4 1	288
48	5	R3	BARRIER CURB	E	20					5 3.000							5 3	5 3	263
8	5	R4	BARRIER CURB	E	23	S				16.250	3 4.000				2.625	16.000	4 8	4 8	39
16	5	R5	BARRIER CURB	E	20					9 0.000							9 0	9 0	150
8	5	R6	BARRIER CURB	E	20					36 1.000							36 1	36 1	301
64	5	R7	BARRIER CURB	E	20					10 9.000							10 9	10 9	718
8	5	R8	BARRIER CURB	E	20					52 9.000							52 9	52 9	440
8	5	R9	BARRIER CURB	E	20					56 9.000							56 9	56 9	474
16	5	R10	BARRIER CURB	E	20					33 11.000							33 11	33 11	566
8	5	R11	BARRIER CURB	E	20					37 0.000							37 0	37 0	309
10	5	R12	BARRIER CURB	E	10	S					23.250	13.500					5 0	4 10	50
10	5	R13	BARRIER CURB	E	20					2 4.000							2 4	2 4	24
10	5	R14	BARRIER CURB	E	28	S				13.000	13.500	13.000	12.000				4 4	4 0	42
			TOTALS																
	5			E															3866
	6			E															819
			TOTAL																0
			TOTAL	E															4685
			Slab on Girder																
	6			E															819
			TOTAL																819
			Safety Barrier Curb																
	5			E															3866
			TOTAL																3866

BILL OF REINFORCING STEEL

NO. REQ'D.	MARK NO. SIZE	MARK NO. MARK	LOCATION	EPOXY (E)	SHAPE NO.	STIRRUP (S)	SUBSTR. (X)	VARIES (V)	NO. EACH	B FT. IN.	C FT. IN.	D FT. IN.	E FT. IN.	F FT. IN.	H FT. IN.	K FT. IN.	NOMINAL LENGTH FT. IN.	ACTUAL LENGTH FT. IN.	WEIGHT LBS.

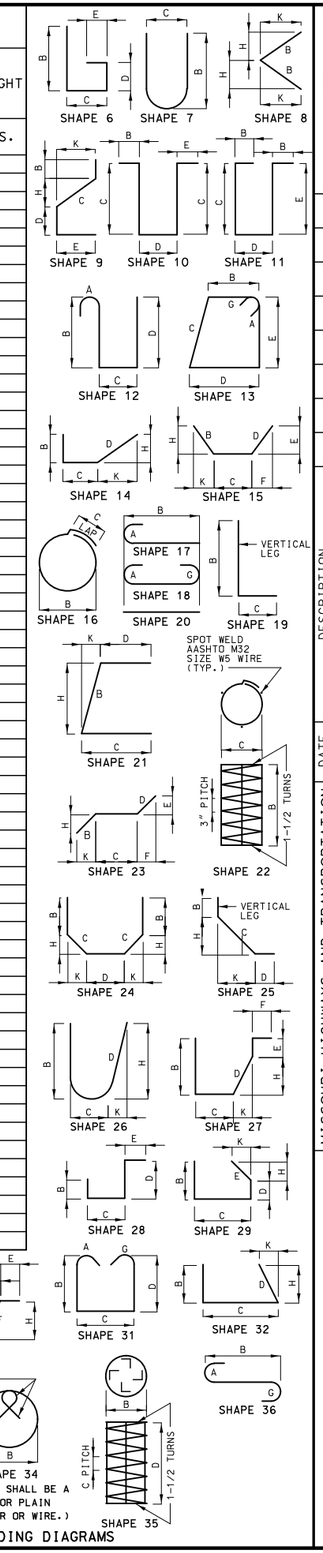

STATE OF MISSOURI
TED S. KOESTER
NUMBER PE-2013000591
PROFESSIONAL ENGINEER
THIS SHEET HAS BEEN SIGNED, SEALED AND DATED ELECTRONICALLY.

DATE PREPARED 8/23/2021
ROUTE 24 | STATE MO
DISTRICT BR | SHEET NO. 7
COUNTY CARROLL
JOB NO. J1P3275
CONTRACT ID.
PROJECT NO.
BRIDGE NO. A29071

DESCRIPTION | DATE

MISSOURI HIGHWAYS AND TRANSPORTATION COMMISSION
105 WEST CAPITOL
JEFFERSON CITY, MO 65102
1-888-ASK-MODOT (1-888-275-6636)

IF A SEAL IS PRESENT ON THIS SHEET IT HAS BEEN ELECTRONICALLY SEALED AND DATED.

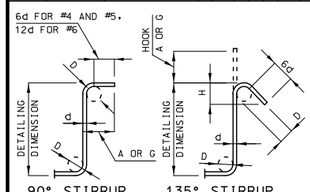

STIRRUP HOOK DIMENSIONS				
GRADES 40 - 50 - 60 KSI				
BAR SIZE	D (IN.)	90° HOOK: HOOK A OR G	135° HOOK: HOOK A OR G	135° HOOK: APPROX. H
#4	2"	4 1/2"	4 1/2"	3"
#5	2 1/2"	6"	5 1/2"	3 3/4"
#6	4 1/2"	12"	8"	4 1/2"

NOTE: UNLESS OTHERWISE NOTED, DIAMETER "D" IS THE SAME FOR ALL BENDS AND HOOKS ON A BAR.

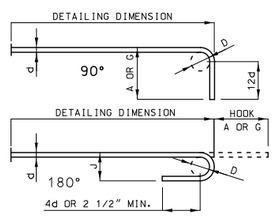

END HOOK DIMENSIONS				
		ALL GRADES		
BAR SIZE	D (IN.)	180° HOOKS A OR G	180° HOOKS J	90° HOOKS A OR G
#3	2 1/4"	5"	3"	6"
#4	3"	6"	4"	8"
#5	3 3/4"	7"	5"	10"
#6	4 1/2"	8"	6"	12"
#7	5 1/4"	10"	7"	14"
#8	6"	11"	8"	16"
#9	9 1/2"	15"	11 3/4"	19"
#10	10 3/4"	17"	13 1/4"	22"
#11	12"	19"	14 3/4"	2'-0"
#14	18 1/4"	2'-3"	21 3/4"	2'-7"

NOTE:
ALL STANDARD HOOKS AND BENDS OTHER THAN 180 DEGREE ARE TO BE BENT WITH SAME PROCEDURE AS FOR 90 DEGREE STANDARD HOOKS.

HOOKS AND BENDS SHALL BE IN ACCORDANCE WITH THE PROCEDURES AS SHOWN ON THIS SHEET.

E = EPOXY COATED REINFORCEMENT.
S = STIRRUP.
X = BAR IS INCLUDED IN SUBSTRUCTURE QUANTITIES.
V = BAR DIMENSIONS VARY IN EQUAL INCREMENTS BETWEEN DIMENSIONS SHOWN ON THIS LINE AND THE FOLLOWING LINE.
NO. EA. = NUMBER OF BARS OF EACH LENGTH.

NOMINAL LENGTHS ARE BASED ON OUT TO OUT DIMENSIONS SHOWN IN BENDING DIAGRAMS AND ARE LISTED FOR FABRICATORS USE. (NEAREST INCH)

ACTUAL LENGTHS ARE MEASURED ALONG CENTERLINE BAR TO THE NEAREST INCH.

PAYWEIGHTS ARE BASED ON ACTUAL LENGTHS.

FOUR ANGLE OR CHANNEL SPACERS ARE REQUIRED FOR EACH COLUMN SPIRAL. SPACERS ARE TO BE PLACED ON INSIDE OF SPIRALS. LENGTH AND WEIGHT OF COLUMN SPIRALS DO NOT INCLUDE SPLICES OR SPACERS.

REINFORCING STEEL (GRADE 60) FY = 60,000 PSI.

Detailed May 2021
Checked July 2021

Note: This drawing is not to scale. Follow dimensions.

SEC/SUR 33 TWP 53N RGE 23W

U.I.P. AND REHABILITATE EXISTING (34'-45'-60'-60'-60'-43') CONTINUOUS COMPOSITE WIDE FLANGE BEAM SPANS (SKEW: 8°R.A.)

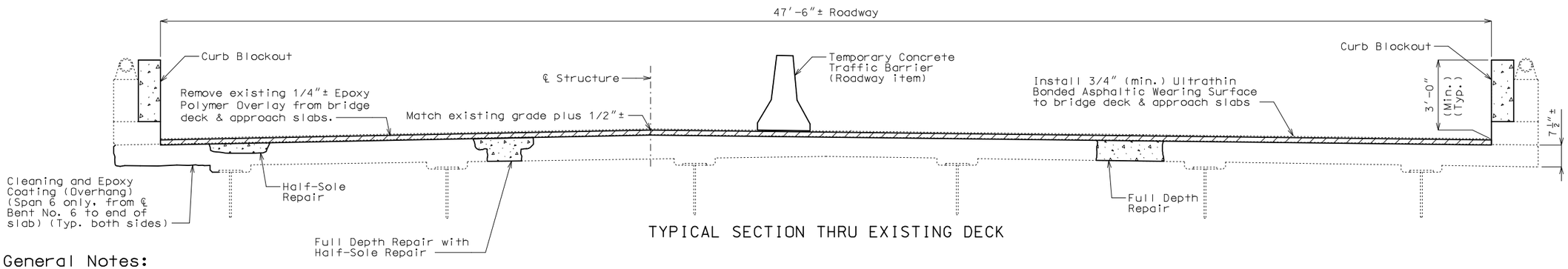

TYPICAL SECTION THRU EXISTING DECK

General Notes:

Design Specifications:

2002 AASTHO LFD (17th Ed.) Standard Specifications
Bridge Deck Rating = 6

Design Loading:

HS20-44 (AASHO 1973 and New Construction)

Design Unit Stresses:

Class B-2 Concrete (Superstructure, except Curb Blockout) f'c = 4,000 psi
Class B-1 Concrete (Curb Blockout) f'c = 4,000 psi
Reinforcing Steel (Grade 60) fy = 60,000 psi

Structural Steel Protective Coating:

Protective Coating: System G in accordance with Sec 1081.

Protective Coating Limits: The surface of all existing structural steel within a distance of not less than 10 feet from ℄ of expansion joint at End Bents No. 1 & 7 shall be recoated with System G.

Surface Preparation: Surface preparation of the existing steel shall be in accordance with Sec 1081 for Recoating of Structural Steel (System G, H or I). The cost of surface preparation will be considered completely covered by the contract unit price per sq. foot for Surface Preparation for Recoating Structural Steel.

Prime Coat: The cost of the prime coat will be considered completely covered by the contract unit price per sq. foot for Field Application of Inorganic Zinc Primer. Tint of the prime coat for System G shall be similar to the color of the field coat to be used.

Field Coat: The color of the finish field coat shall be Gray (Federal Standard #26373). The cost of the intermediate field coat will be considered completely covered by the contract unit price per sq. foot for Intermediate Field Coat (System G). The cost of the finish field coat will be considered completely covered by the contract unit price per sq. foot for Finish Field Coat (System G).

Miscellaneous:

Roadway surfacing adjacent to bridge ends shall match new bridge wearing surface (roadway item).

All concrete repairs shall be in accordance with Sec 704, unless otherwise noted.

Outline of existing work is indicated by light dashed lines. Heavy lines indicate new work.

Contractor shall verify all dimensions in field before ordering new material.

In order to maintain grade and a minimum thickness of wearing surface as shown on plans it may be necessary to use additional quantities of wearing surface at various locations throughout the structure. The cost of furnishing and installing the wearing surface will be considered completely covered in the contract unit price, including all additional labor, materials or equipment for variations in thickness of wearing surface.

Traffic Handling:

Traffic to be maintained on structure during construction. See roadway plans for traffic control.

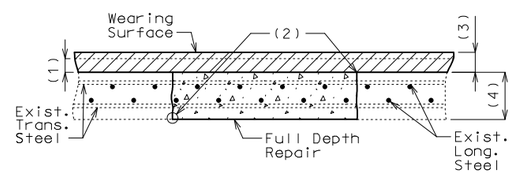

FULL DEPTH REPAIR

(1) Removal of existing 1/4"± epoxy polymer overlay

(2) 1" vertical side shall be established outside the deteriorated area.

(3) 3/4" minimum ultrathin bonded asphaltic wearing surface

(4) Original depth of deck

Estimated Quantities

Item		Total
Removal of Seal Coat or Polymer Wearing Surface	sq. foot	16,295
Removal of Existing Expansion Joint & Adjacent Concrete	linear foot	96
Remove and Replace Curb & Parapet	linear foot	12
Optional Ultrathin Bonded Asphalt Wearing Surface (Bridges)	sq. yard	1811
Curb Blockout	linear foot	643
Substructure Repair (Formed)	sq. foot	250
Half-Sole Repair	sq. foot	100
Full Depth Repair	sq. foot	50
Cleaning and Epoxy Coating	sq. foot	240
Protective Coating - Concrete Bents and Piers (Epoxy)	lump sum	1
Cleaning and Coating Existing Bearings	each	6
Rehabilitate Bearing	each	6
Surface Preparation for Recoating Structural Steel	sq. foot	1000
Field Application of Inorganic Zinc Primer	sq. foot	1000
Intermediate Field Coat System (System G)	sq. foot	1000
Finish Field Coat System (System G)	sq. foot	1000
Strip Seal Expansion Joint System	linear foot	96

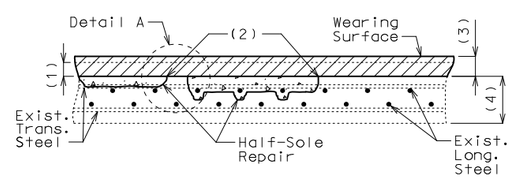

HALF-SOLE REPAIR

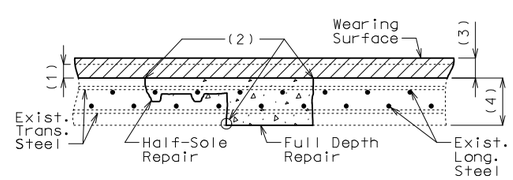

FULL DEPTH REPAIR WITH HALF-SOLE REPAIR

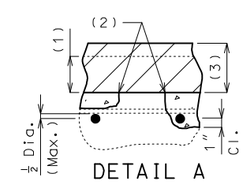

DETAIL A

Clearance around top bar and around bottom bar at the intersection of top bar shall be required when more than half the diameter of the top bar is exposed.

REPAIRS TO BRIDGE: ROUTE 24
OVER BNSF RR & OLD ROUTE 24

ROUTE 24 FROM ROUTE CC TO ROUTE 10
ABOUT 1.5 MILES NORTHEAST OF ROUTE 10
BEG. STA. 772+65.06± (Match Existing)

Detailed May 2021
Checked July 2021

Note: This drawing is not to scale. Follow dimensions.

STATE OF MISSOURI
TED S. KOESTER
NUMBER PE-2013000591
PROFESSIONAL ENGINEER
THIS SHEET HAS BEEN SIGNED, SEALED AND DATED ELECTRONICALLY.

DATE PREPARED 8/23/2021
ROUTE 24 | STATE MO
DISTRICT BR | SHEET NO. 1
COUNTY CARROLL
JOB NO. J1P3275
CONTRACT ID.
PROJECT NO.
BRIDGE NO. A29471

DESCRIPTION | DATE

MISSOURI HIGHWAYS AND TRANSPORTATION COMMISSION
105 WEST CAPITOL
JEFFERSON CITY, MO 65102
1-888-ASK-MODOT (1-888-275-6636)

IF A SEAL IS PRESENT ON THIS SHEET IT HAS BEEN ELECTRONICALLY SEALED AND DATED.

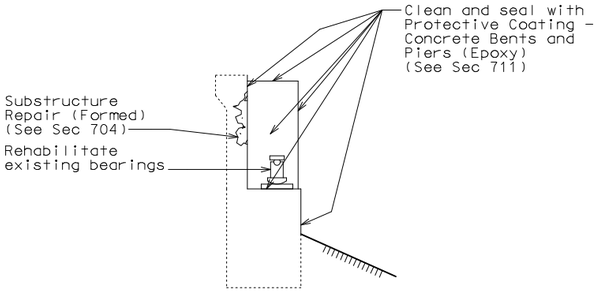

TYPICAL SECTION THRU
END BENT NO. 1 SHOWING
PROTECTIVE COATING
& SUBSTRUCTURE REPAIR

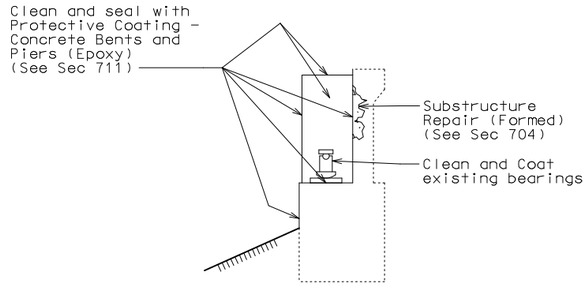

TYPICAL SECTION THRU
END BENT NO. 7 SHOWING
PROTECTIVE COATING
& SUBSTRUCTURE REPAIR

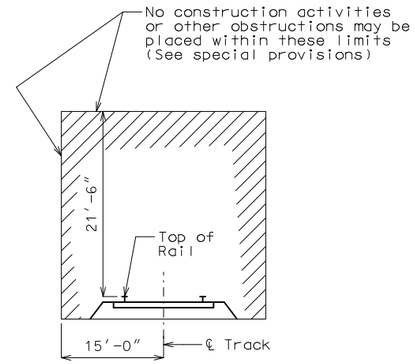

MINIMUM CONSTRUCTION
CLEARANCES
(Normal to railroad)
(Not to scale)

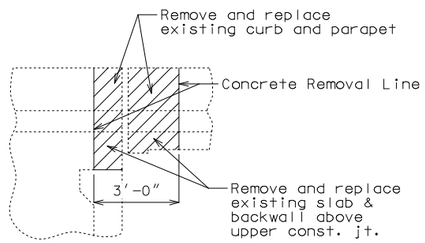

PART ELEVATION AT
END BENTS NO. 1 AND 7
SHOWING CONCRETE
REMOVAL

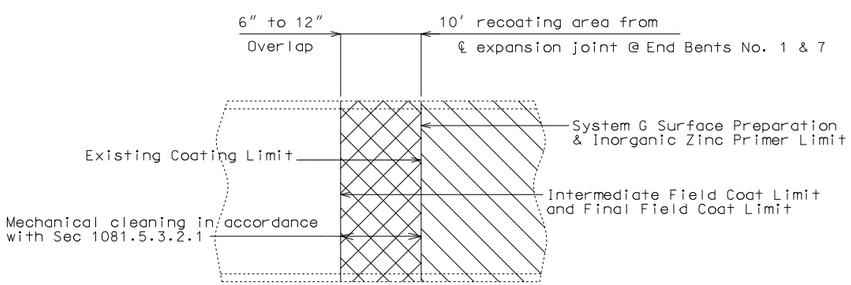

PART ELEVATION SHOWING LIMITS OF PAINT OVERLAP
(Vertical or horizontal paint limit. Horizontal
limit shown)

STATE OF MISSOURI
TED S. KOESTER
NUMBER
PE-2013000591
PROFESSIONAL ENGINEER

THIS SHEET HAS BEEN SIGNED, SEALED AND DATED ELECTRONICALLY.

DATE PREPARED	
8/23/2021	
ROUTE 24	STATE MO
DISTRICT BR	SHEET NO. 2
COUNTY CARROLL	
JOB NO. J1P3275	
CONTRACT ID.	
PROJECT NO.	
BRIDGE NO. A29471	

DATE	DESCRIPTION

MISSOURI HIGHWAYS AND TRANSPORTATION COMMISSION
105 WEST CAPITOL
JEFFERSON CITY, MO 65102
1-888-ASK-MODOT (1-888-275-6636)

IF A SEAL IS PRESENT ON THIS SHEET IT HAS BEEN ELECTRONICALLY SEALED AND DATED.

Detailed May 2021
Checked July 2021

Note: This drawing is not to scale. Follow dimensions.

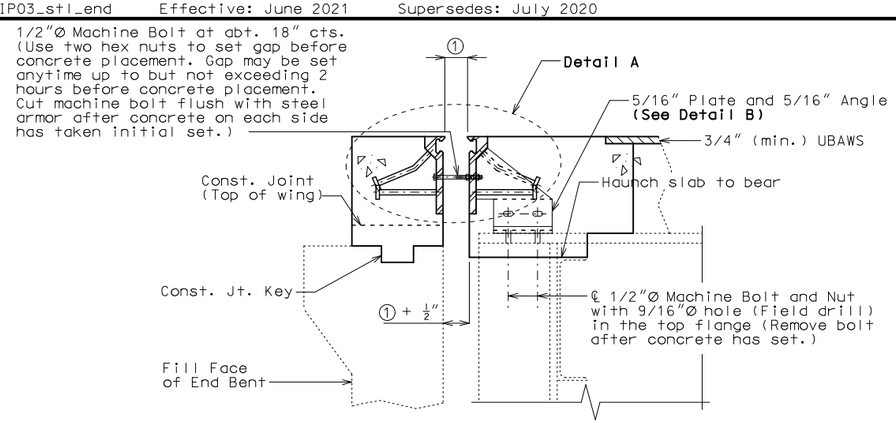

SECTION A-A

Notes:
Strip seal gland not shown for clarity.

Slab Reinforcement not shown for clarity.

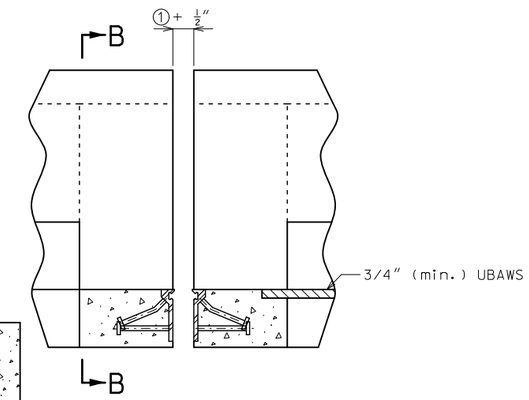

PART ELEVATION OF BARRIER

Strip seal gland not shown for clarity.

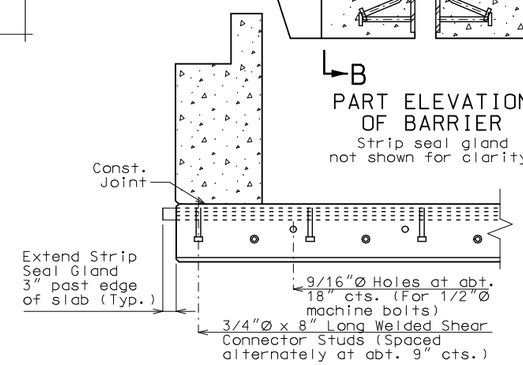

PART SECTION B-B

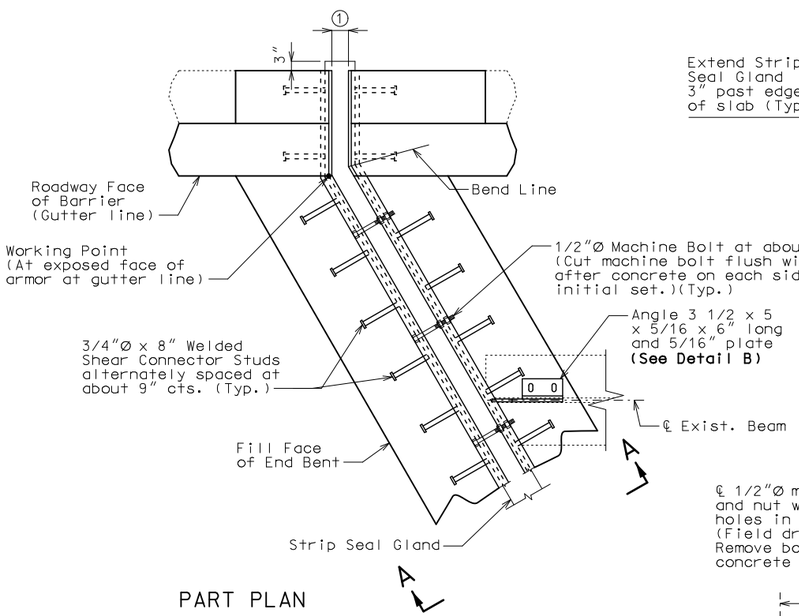

PART PLAN

Wearing Surface not shown for clarity.

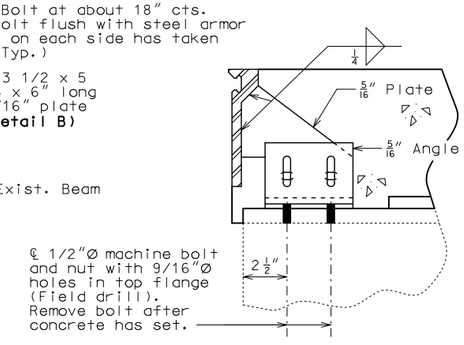

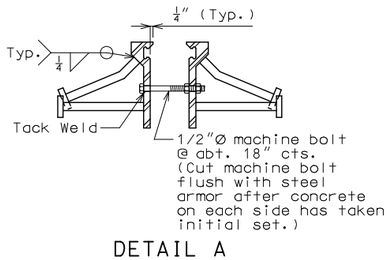

DETAIL A

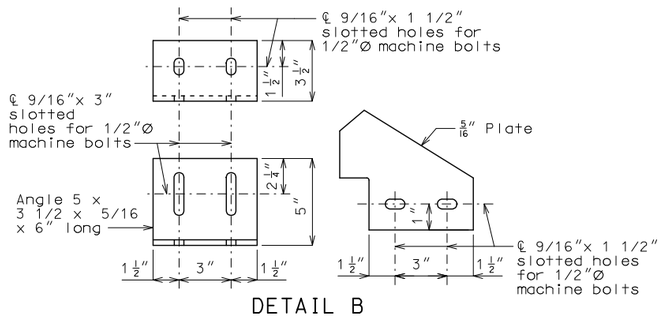

DETAIL B

GENERAL NOTES:

Expansion joint system shall be fabricated in one section, except for staged construction and when the length is over 50 feet. A complete joint penetration groove welded splice shall be required. Welds shall be ground flush to provide a smooth surface. The expansion joint system shall be fabricated and installed to the crown and grade of the roadway.

The strip seal gland shall be installed in joints in one continuous piece without field splices. Factory splicing will be permitted for joints in excess of 53 feet.

Structural steel for the expansion joint system shall be ASTM A709 Grade 36 except the steel armor may be ASTM A709 Grade 50W. Anchors for the expansion joint system shall be in accordance with Sec 1037. Strip seal expansion joint system shall be in accordance with Sec 717.

Structural steel for the expansion joint system shall be coated with a minimum of two coats of inorganic zinc primer to provide a total dry film thickness of 4 mils minimum, 6 mils maximum, or galvanized in accordance with ASTM A123. Anchors need not be protected from overspray.

Longitudinal reinforcing steel shall be cut/bent so that ends shall be 1" from the vertical leg of the steel armor at the expansion joint system.

Concrete shall be forced under and around steel armor and anchors. Proper consolidation of the concrete shall be achieved by localized internal vibration.

② The installation temperature shall be taken as the actual air temperature averaged over the 24-hour period immediately preceding installation.

③ MoDOT Construction personnel will indicate the strip seal expansion joint system installed.

Steel armor may also be referred to as extrusion or rail.

Work this sheet with Sheet No. 5.

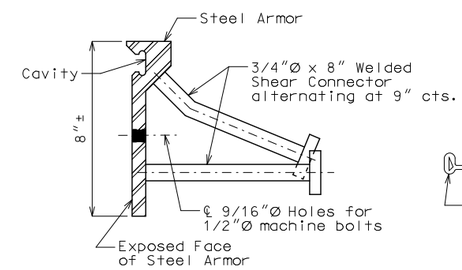

DETAIL OF JOINT ARMOR

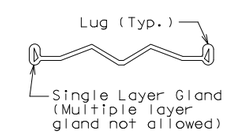

DETAIL OF GLAND

Table of Allowed Transverse Strip Seal Expansion Joint System

Manufacturer	Strip Seal System (Designated Name)	Movement Parallel to RDWY	Allowed Installation Gap ① Normal to Joint at RDWY Surface @ Air/Surface Temperature ②						③
			@ 40°F	@ 50°F	@ 60°F	@ 70°F	@ 80°F	@ 90°F	
D S Brown	Strip seal L2-400	1 5/8"	2 3/16"	2 1/8"	2"	1 7/8"	1 13/16"	1 11/16"	□
D S Brown	Strip seal L2-500	1 5/8"	2 3/16"	2 1/8"	2"	1 7/8"	1 13/16"	1 11/16"	□
Watson Bowman Acme (Wabo)	Strip seal SE-300	1 5/8"	2 3/16"	2 1/8"	2"	1 7/8"	1 13/16"	1 11/16"	□
Watson Bowman Acme (Wabo)	Strip seal SE-400	1 5/8"	2 3/16"	2 1/8"	2"	1 7/8"	1 13/16"	1 11/16"	□
Watson Bowman Acme (Wabo)	Strip seal SE-500	1 5/8"	2 3/16"	2 1/8"	2"	1 7/8"	1 13/16"	1 11/16"	□

STRIP SEAL EXPANSION JOINT SYSTEM AT END BENT NO. 1

Detailed May 2021
Checked July 2021

Note: This drawing is not to scale. Follow dimensions.

STATE OF MISSOURI
TED S. KOESTER
NUMBER PE-2013000591
PROFESSIONAL ENGINEER
THIS SHEET HAS BEEN SIGNED, SEALED AND DATED ELECTRONICALLY.

DATE PREPARED	
8/23/2021	
ROUTE 24	STATE MO
DISTRICT BR	SHEET NO. 3
COUNTY CARROLL	
JOB NO. J1P3275	
CONTRACT ID.	
PROJECT NO.	
BRIDGE NO. A29471	

DATE	DESCRIPTION

IF A SEAL IS PRESENT ON THIS SHEET IT HAS BEEN ELECTRONICALLY SEALED AND DATED.

MISSOURI HIGHWAYS AND TRANSPORTATION COMMISSION
105 WEST CAPITOL
JEFFERSON CITY, MO 65102
1-888-ASK-MODOT (1-888-275-6636)

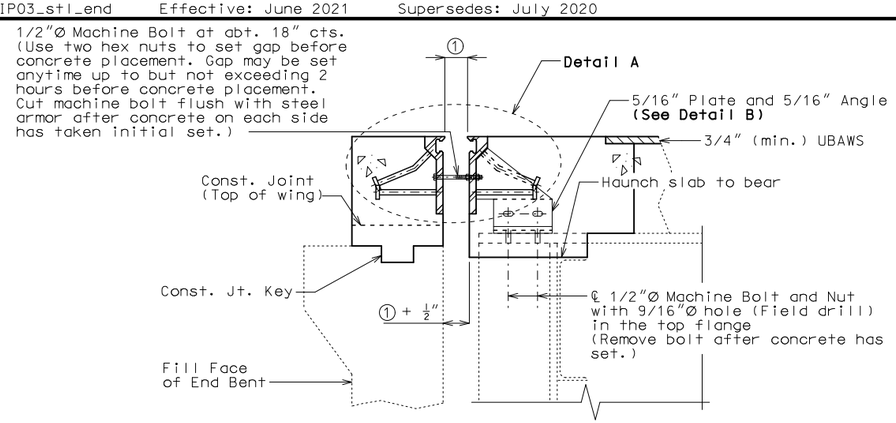

SECTION A-A

Note: Strip seal gland not shown for clarity.

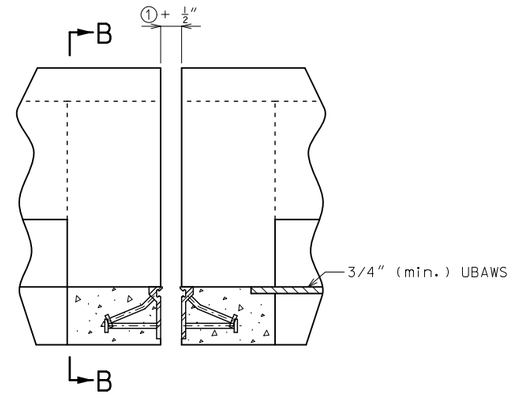

PART ELEVATION OF BARRIER

Strip seal gland not shown for clarity.

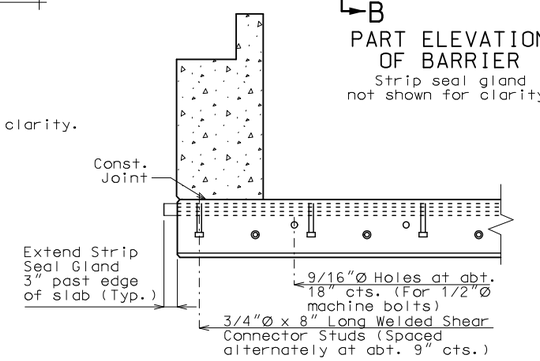

PART SECTION B-B

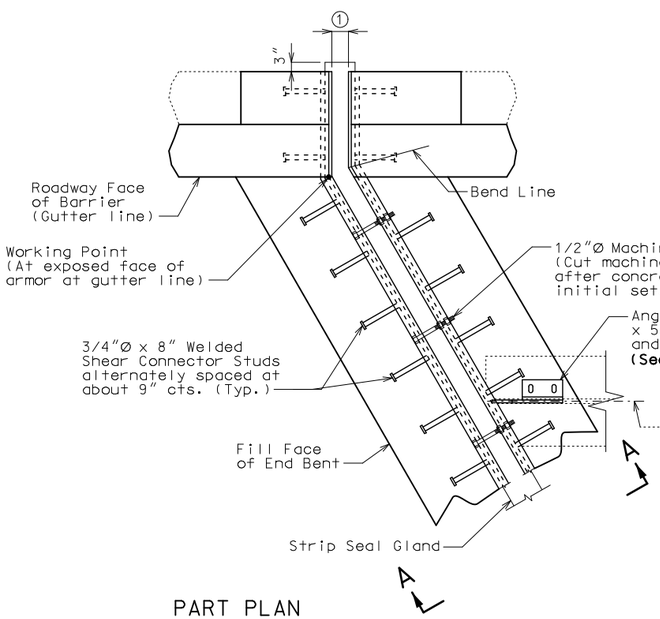

PART PLAN

Wearing Surface not shown for clarity.

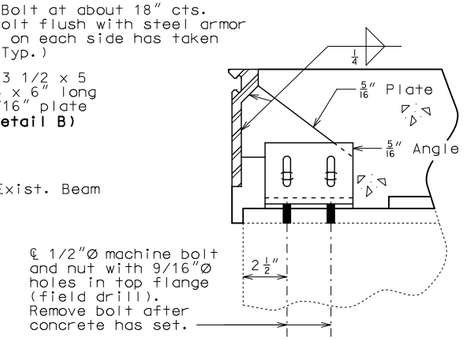

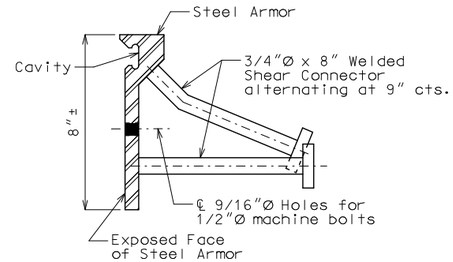

DETAIL OF JOINT ARMOR

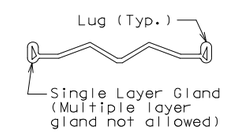

DETAIL OF GLAND

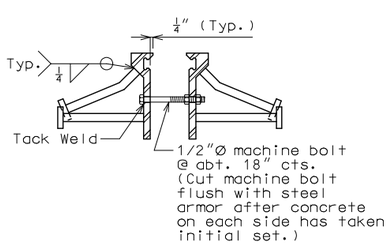

DETAIL A

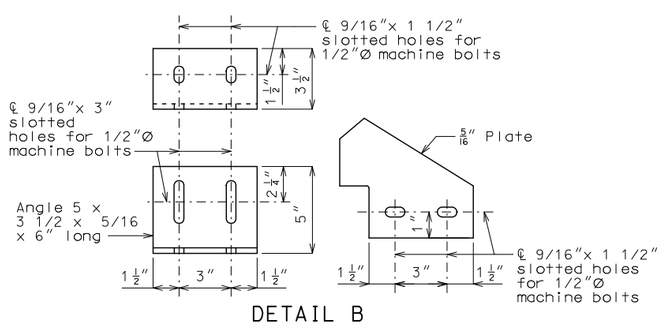

DETAIL B

GENERAL NOTES:

Expansion joint system shall be fabricated in one section, except for staged construction and when the length is over 50 feet. A complete joint penetration groove welded splice shall be required. Welds shall be ground flush to provide a smooth surface. The expansion joint system shall be fabricated and installed to the crown and grade of the roadway.

The strip seal gland shall be installed in joints in one continuous piece without field splices. Factory splicing will be permitted for joints in excess of 53 feet.

Structural steel for the expansion joint system shall be ASTM A709 Grade 36 except the steel armor may be ASTM A709 Grade 50W. Anchors for the expansion joint system shall be in accordance with Sec 1037. Strip seal expansion joint system shall be in accordance with Sec 717.

Structural steel for the expansion joint system shall be coated with a minimum of two coats of inorganic zinc primer to provide a total dry film thickness of 4 mils minimum, 6 mils maximum, or galvanized in accordance with ASTM A123. Anchors need not be protected from overspray.

Longitudinal reinforcing steel shall be cut/bent so that ends shall be 1" from the vertical leg of the steel armor at the expansion joint system.

Concrete shall be forced under and around steel armor and anchors. Proper consolidation of the concrete shall be achieved by localized internal vibration.

② The installation temperature shall be taken as the actual air temperature averaged over the 24-hour period immediately preceding installation.

③ MoDOT Construction personnel will indicate the strip seal expansion joint system installed.

Steel armor may also be referred to as extrusion or rail.

Work this sheet with Sheet No. 5.

Table of Allowed Transverse Strip Seal Expansion Joint System

Manufacturer	Strip Seal System (Designated Name)	Movement Parallel to RDWY	① Allowed Installation Gap Normal to Joint at RDWY Surface @ Air/Surface Temperature ②						③
			@ 40°F	@ 50°F	@ 60°F	@ 70°F	@ 80°F	@ 90°F	
D S Brown	Strip seal L2-400	1 15/16"	2 1/4"	2 1/8"	2"	1 7/8"	1 3/4"	1 5/8"	□
D S Brown	Strip seal L2-500	1 15/16"	2 1/4"	2 1/8"	2"	1 7/8"	1 3/4"	1 5/8"	□
Watson Bowman Acme (Wabo)	Strip seal SE-400	1 15/16"	2 1/4"	2 1/8"	2"	1 7/8"	1 3/4"	1 5/8"	□
Watson Bowman Acme (Wabo)	Strip seal SE-500	1 15/16"	2 1/4"	2 1/8"	2"	1 7/8"	1 3/4"	1 5/8"	□

STRIP SEAL EXPANSION JOINT SYSTEM AT END BENT NO. 7

Detailed May 2021
Checked July 2021

Note: This drawing is not to scale. Follow dimensions.

STATE OF MISSOURI
TED S. KOESTER
NUMBER PE-2013000591
PROFESSIONAL ENGINEER
THIS SHEET HAS BEEN SIGNED, SEALED AND DATED ELECTRONICALLY.

DATE PREPARED	
8/23/2021	
ROUTE 24	STATE MO
DISTRICT BR	SHEET NO. 4
COUNTY CARROLL	
JOB NO. J1P3275	
CONTRACT ID.	
PROJECT NO.	
BRIDGE NO. A29471	

DATE	DESCRIPTION

IF A SEAL IS PRESENT ON THIS SHEET IT HAS BEEN ELECTRONICALLY SEALED AND DATED.

MISSOURI HIGHWAYS AND TRANSPORTATION COMMISSION
105 WEST CAPITOL
JEFFERSON CITY, MO 65102
1-888-ASK-MODOT (1-888-275-6636)

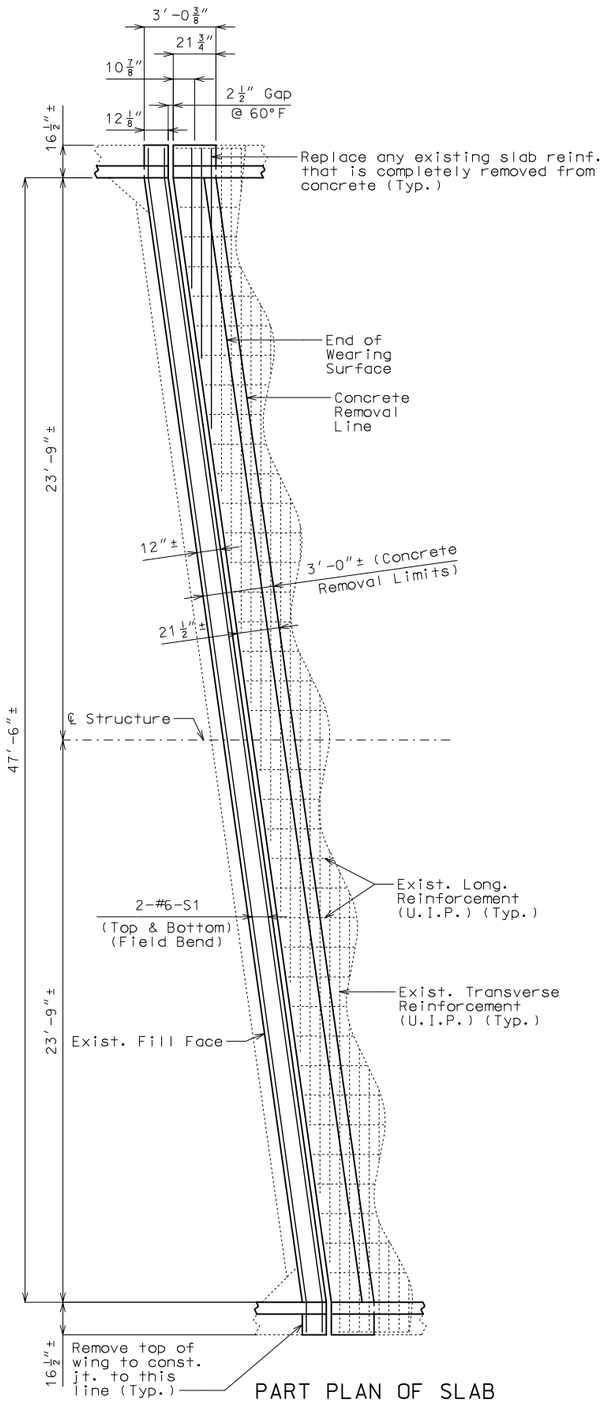

PART PLAN OF SLAB
AT END BENT NO. 1
SHOWING SLAB REINFORCEMENT

Note: Expansion device not shown for clarity.

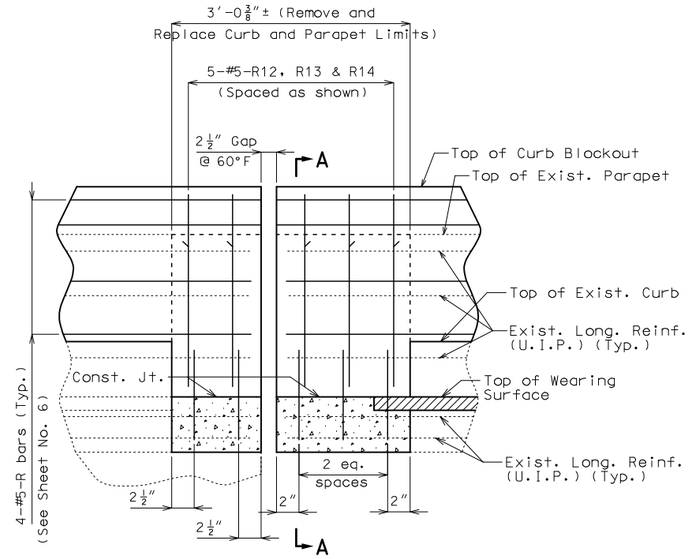

PART ELEVATION OF CURB
BLOCKOUT AND PARAPET

Note: Expansion device and #6-S bars not shown for clarity.

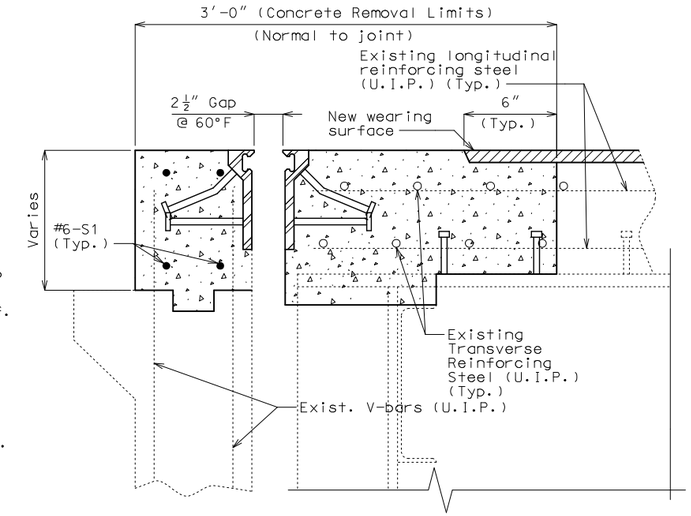

PART SECTION AT
END BENT NO. 1
THRU SLAB SHOWING
SLAB REINFORCEMENT

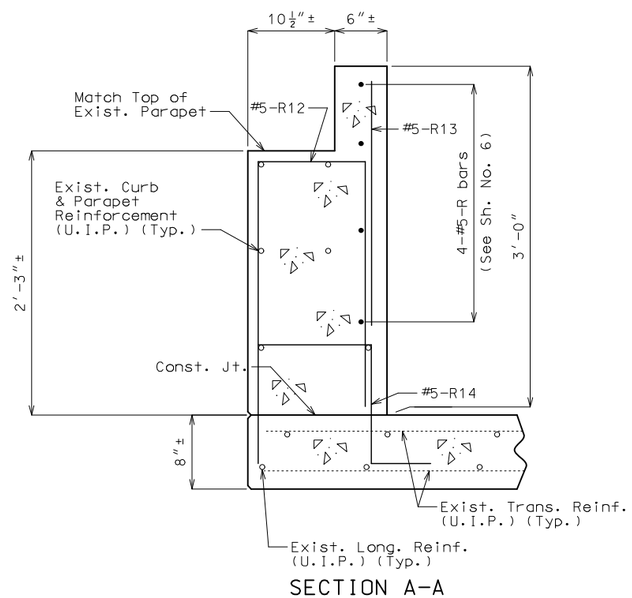

SECTION A-A

Notes:

The #6-S1 bars to be segmented to accommodate stage construction. The total bar length for #6-S1 bars shown in Bill of Reinforcing Steel allows for one lap splice with a length of 3′-10″. Actual bar segment lengths to be determined by contractor. The contractor may use a mechanical bar splice in lieu of a lap splice. When a mechanical bar splice is used, the actual bar segment length will be determined by contractor to accommodate manufacturer's recommendations for installation and stage construction. The cost of furnishing and installing the bar splices will be considered completely covered by the contract unit price for Reinforcing Steel (Epoxy Coated). No adjustment of the quantity of reinforcing steel will be allowed for the use of mechanical bar splices.

Top of curb blockout and parapet shall be built parallel to grade with barrier curb joints normal to grade.

All exposed edges of curb blockout and parapet shall have either a 1/2-inch radius or a 3/8-inch bevel, unless otherwise noted.

Concrete in the curb blockout and parapet shall be Class B-1.

Slab concrete shall be Class B-2.

Payment for removal and replacement of all concrete and reinforcement in curb blockout and parapet in the limits shown, complete in place, will be considered completely covered by the contract unit price for Remove and Replace Curb and Parapet.

Existing stirrups not embedded in concrete shall be removed within the limits shown.

Top of backwall for End Bents shall be formed to the crown and grade of the roadway. Backwall above upper construction joint shall not be poured until the superstructure slab has been poured in the adjacent span.

Work this shee with Sheets No. 3 & 4.

SLAB REPLACEMENT DETAILS AT END BENTS NO. 1 AND 7

(End Bent No. 1 shown, End Bent No. 7 similar)

Detailed May 2021
Checked July 2021

Note: This drawing is not to scale. Follow dimensions.

STATE OF MISSOURI
TED S. KOESTER
NUMBER PE-2013000591
PROFESSIONAL ENGINEER
THIS SHEET HAS BEEN SIGNED, SEALED AND DATED ELECTRONICALLY.

DATE PREPARED	
8/23/2021	
ROUTE 24	STATE MO
DISTRICT BR	SHEET NO. 5
COUNTY CARROLL	
JOB NO. J1P3275	
CONTRACT ID.	
PROJECT NO.	
BRIDGE NO. A29471	

DATE	DESCRIPTION

MISSOURI HIGHWAYS AND TRANSPORTATION COMMISSION
105 WEST CAPITOL
JEFFERSON CITY, MO 65102
1-888-ASK-MODOT (1-888-275-6636)

IF A SEAL IS PRESENT ON THIS SHEET IT HAS BEEN ELECTRONICALLY SEALED AND DATED.

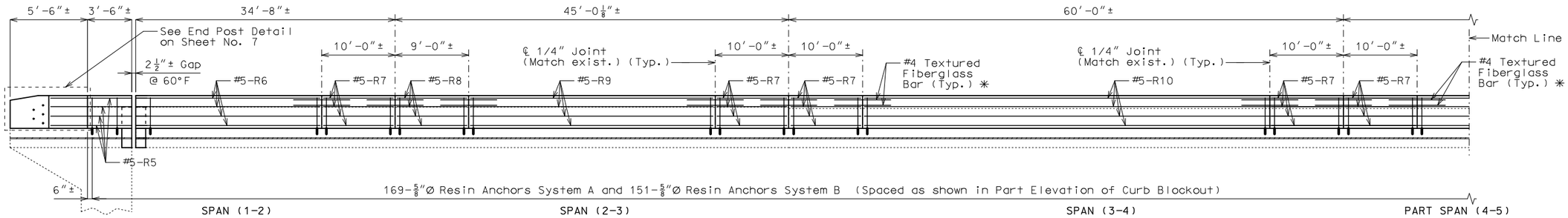

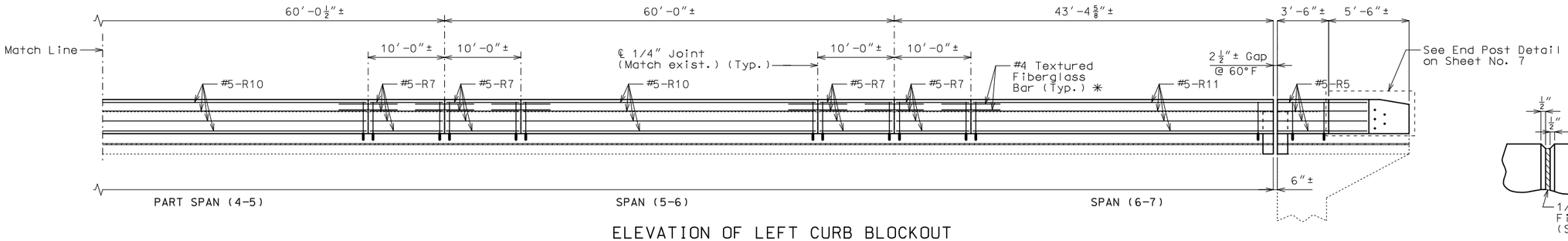

ELEVATION OF LEFT CURB BLOCKOUT

(Right curb blockout similar)

Longitudinal dimensions are along grade and are taken at top outside edge of parapet.

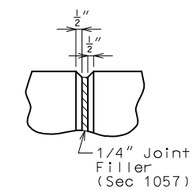

PART ELEVATION AT FORMED JOINT

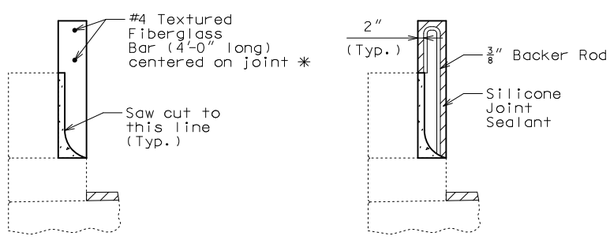

SECTION THRU SAW CUT JOINT

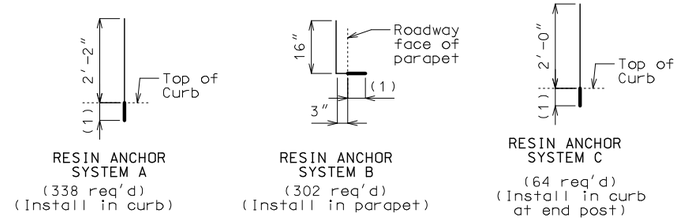

(1) Use manufacturer's embedment length (5" minimum embedment).

DETAILS OF RESIN ANCHORS

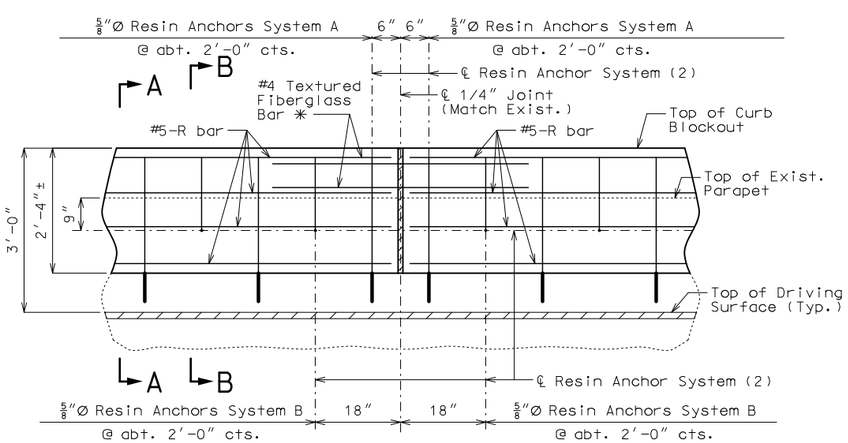

PART ELEVATION OF CURB BLOCKOUT

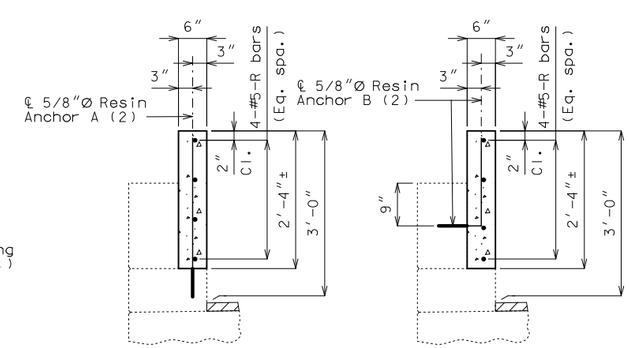

SECTION A-A SECTION B-B

CURB BLOCKOUT

Notes:

✳ Slip-formed option only.

Conventional forming or slip forming may be used. Saw cut joints may be used with conventional forming.

Bridge rail not shown for clarity.

Concrete in curb blockout shall be Class B-1.

Measurement of curb blockout is to the nearest linear foot, measured at the top outside edge of parapet. (Match existing curb and parapet)

All exposed edges of curb blockout shall have either a 1/2-inch radius or 3/8-inch bevel, unless otherwise noted.

Payment for concrete, reinforcement, resin anchor systems and any other work incidental to the curb blockout, complete in place, will be considered completely covered by the contract unit price for Curb Blockout per linear foot.

Cost of any concrete curb or parapet repair will be considered completely covered by the contract unit price for Curb Blockout.

All curb blockout reinforcement shall be epoxy coated.

(2) Shift resin anchors where necessary to clear existing anchor bolts for bridge rail, miss curb outlets (if present) and clear existing reinforcement.

Use a minimum lap of 3'-1" for #5 horizontal curb blockout bars.

Concrete traffic barrier delineators shall be placed on top of the curb blockout similarly as shown on Missouri Standard Plans 617.10 and in accordance with Sec 617. Delineators on bridges with two-lane, two-way traffic shall have retroflective sheeting on both sides. Concrete traffic barrier delineators will be considered completely covered by the contract unit price for Curb Blockout.

The contractor shall use one of the qualified resin anchor systems in accordance with Sec 1039.

The minimum embedment depth in concrete with f'c = 4,000 psi for the resin anchor system shall be that required to meet the minimum ultimate pullout strength in accordance with Sec 1039 but shall not be less than 5 inches.

An epoxy coated #5 Grade 60 reinforcing bar shall be substituted for the 5/8"Ø threaded rod.

For slip-formed option, both sides of the curb blockout shall have a vertically broomed finish and the top shall have a transversely broomed finish.

STATE OF MISSOURI
TED S. KOESTER
NUMBER PE-2013000591
PROFESSIONAL ENGINEER
THIS SHEET HAS BEEN SIGNED, SEALED AND DATED ELECTRONICALLY.

DATE PREPARED	
8/23/2021	
ROUTE 24	STATE MO
DISTRICT BR	SHEET NO. 6
COUNTY CARROLL	
JOB NO. J1P3275	
CONTRACT ID.	
PROJECT NO.	
BRIDGE NO. A29471	

DATE	DESCRIPTION

IF A SEAL IS PRESENT ON THIS SHEET IT HAS BEEN ELECTRONICALLY SEALED AND DATED.

MISSOURI HIGHWAYS AND TRANSPORTATION COMMISSION
105 WEST CAPITOL
JEFFERSON CITY, MO 65102
1-888-ASK-MODOT (1-888-275-6636)

Detailed May 2021
Checked July 2021

Note: This drawing is not to scale. Follow dimensions.

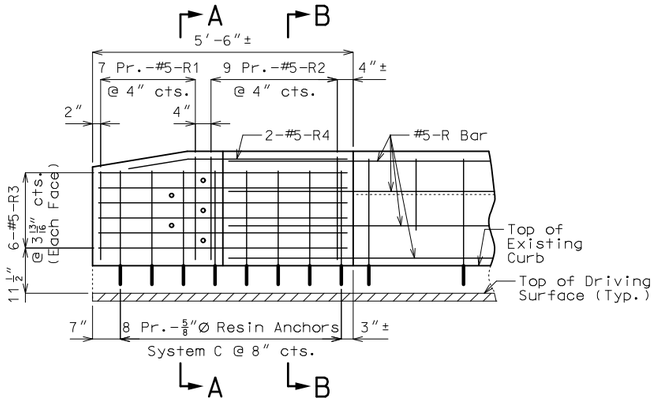

ELEVATION SHOWING REINFORCEMENT

(Right End Post at End Bent No. 7 similar)

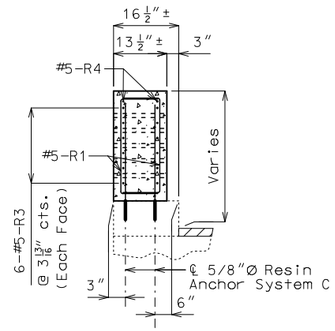

SECTION A-A

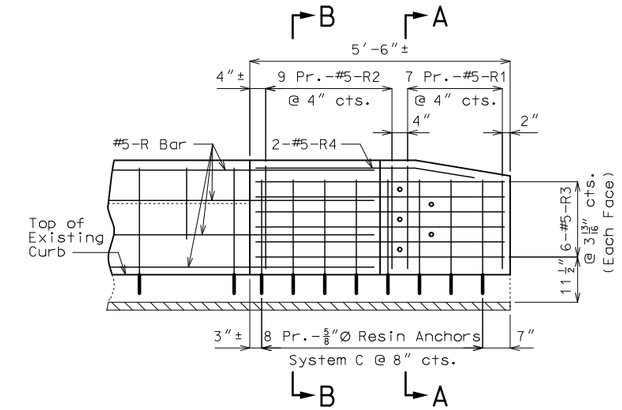

ELEVATION SHOWING REINFORCEMENT

(Right End Post at End Bent No. 1 similar)

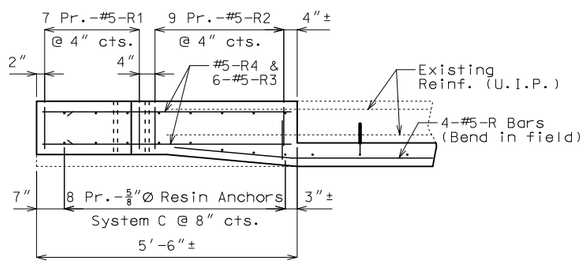

PLAN SHOWING REINFORCEMENT

LEFT END POST AT END BENT NO. 1

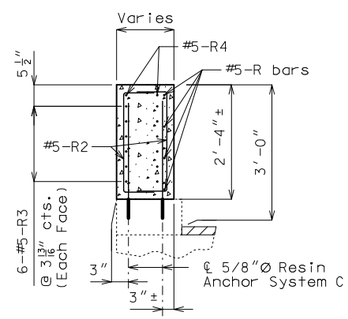

SECTION B-B

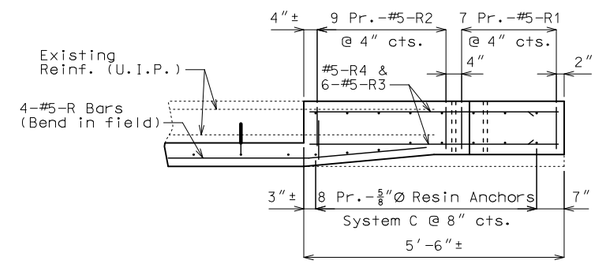

PLAN SHOWING REINFORCEMENT

LEFT END POST AT END BENT NO. 7

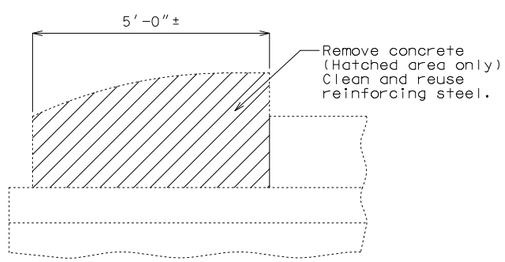

PART ELEVATION SHOWING END POST CONCRETE REMOVAL

Cost of removing existing end posts will be considered completely covered by the contract unit price for Curb Blockout.

Notes:

Work this sheet with Sheet No. 6.

For details of resin anchors, see Sheet No. 6.

Resin anchors shall be shifted or bent in field to clear one-inch diameter holes by at least 1/2 inch.

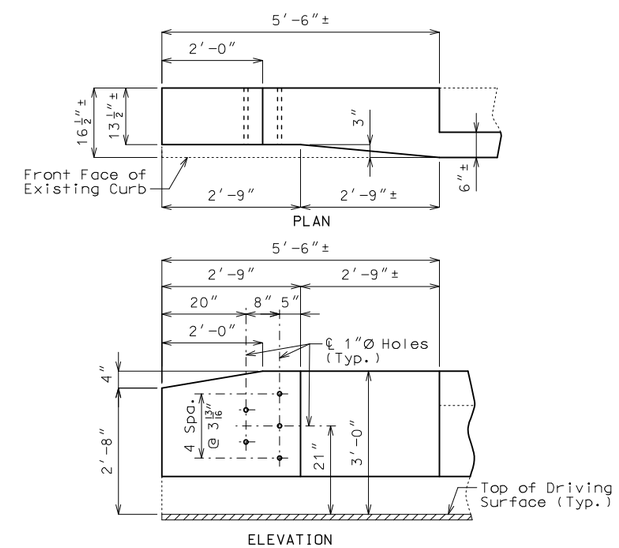

DETAILS OF END POST AND GUARD RAIL ATTACHMENT

CURB BLOCKOUT AT END BENTS

Detailed May 2021
Checked July 2021

Note: This drawing is not to scale. Follow dimensions.

STATE OF MISSOURI
TED S. KOESTER
NUMBER PE-2013000591
PROFESSIONAL ENGINEER

THIS SHEET HAS BEEN SIGNED, SEALED AND DATED ELECTRONICALLY.

DATE PREPARED	
8/23/2021	
ROUTE 24	STATE MO
DISTRICT BR	SHEET NO. 7
COUNTY CARROLL	
JOB NO. J1P3275	
CONTRACT ID.	
PROJECT NO.	
BRIDGE NO. A29471	

DATE	DESCRIPTION

MISSOURI HIGHWAYS AND TRANSPORTATION COMMISSION

105 WEST CAPITOL
JEFFERSON CITY, MO 65102
1-888-ASK-MODOT (1-888-275-6636)

IF A SEAL IS PRESENT ON THIS SHEET IT HAS BEEN ELECTRONICALLY SEALED AND DATED.

BILL OF REINFORCING STEEL

NO. REQ'D.	MARK NO. SIZE	MARK NO. MARK	LOCATION	EPOXY (E)	SHAPE NO.	STIRRUP (S)	SUBSTR. (X)	VARIES (V)	NO. EACH	B FT. IN.	C FT. IN.	D FT. IN.	E FT. IN.	F FT. IN.	H FT. IN.	K FT. IN.	NOMINAL LENGTH FT. IN.	ACTUAL LENGTH FT. IN.	WEIGHT LBS.
			SLAB																
8	6	S1	SLAB	E	20					54 4.000							54 4	54 4	653
			CURB BLOKOUT																
56	5	R1	BARRIER CURB	E	10	S		V	8		10.500	21.000					3 6	3 4	
			INCREMENT =								10.500	2 0.000					3 9	3 7	202
			0.500 INCH																
72	5	R2	BARRIER CURB	E	10	S		V	8		10.500	2 0.000					3 9	3 7	
			INCREMENT =								13.500	2 0.000					4 3	4 1	288
			0.750 INCH																
48	5	R3	BARRIER CURB	E	20					5 3.000							5 3	5 3	263
8	5	R4	BARRIER CURB	E	23	S				16.250	3 4.000				2.625	16.000	4 8	4 8	39
16	5	R5	BARRIER CURB	E	20					6 0.000							6 0	6 0	100
8	5	R6	BARRIER CURB	E	20					24 5.000							24 5	24 5	204
72	5	R7	BARRIER CURB	E	20					9 9.000							9 9	9 9	732
8	5	R8	BARRIER CURB	E	20					8 9.000							8 9	8 9	73
8	5	R9	BARRIER CURB	E	20					25 9.000							25 9	25 9	215
24	5	R10	BARRIER CURB	E	20					39 9.000							39 9	39 9	995
8	5	R11	BARRIER CURB	E	20					33 1.000							33 1	33 1	276
20	5	R12	BARRIER CURB	E	10	S					23.250	13.500					5 0	4 10	101
20	5	R13	BARRIER CURB	E	20					2 4.000							2 4	2 4	49
20	5	R14	BARRIER CURB	E	28	S				13.000	13.500	13.000	12.000				4 4	4 0	83
			TOTALS																
	5			E															3620
	6			E															653
			TOTAL																0
			TOTAL	E															4273
			Slab on Girder																
	6			E															653
			TOTAL																653
			Safety Barrier Curb																
	5			E															3620
			TOTAL																3620

BILL OF REINFORCING STEEL

NO. REQ'D.	MARK NO. SIZE	MARK NO. MARK	LOCATION	EPOXY (E)	SHAPE NO.	STIRRUP (S)	SUBSTR. (X)	VARIES (V)	NO. EACH	B FT. IN.	C FT. IN.	D FT. IN.	E FT. IN.	F FT. IN.	H FT. IN.	K FT. IN.	NOMINAL LENGTH FT. IN.	ACTUAL LENGTH FT. IN.	WEIGHT LBS.

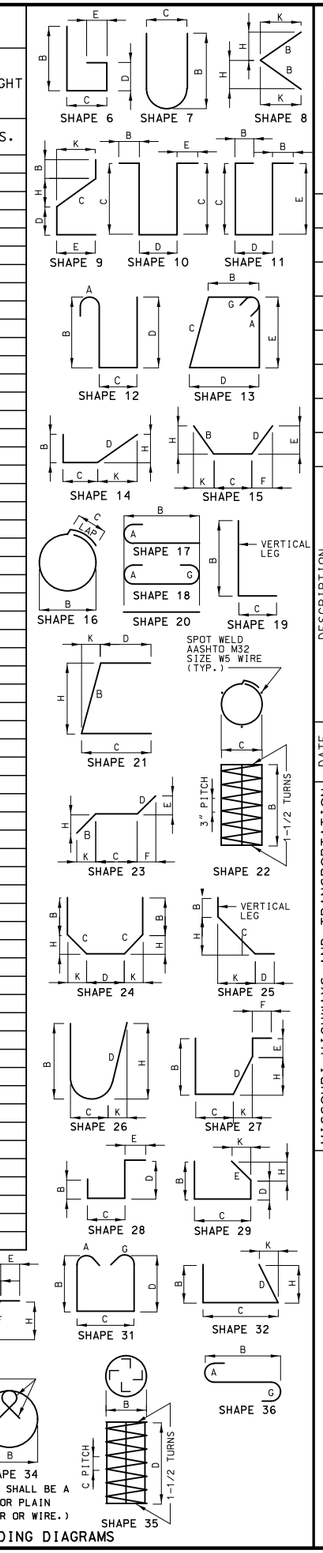

STATE OF MISSOURI
TED S. KOESTER
NUMBER PE-2013000591
PROFESSIONAL ENGINEER

THIS SHEET HAS BEEN SIGNED, SEALED AND DATED ELECTRONICALLY.

DATE PREPARED 8/23/2021	
ROUTE 24	STATE MO
DISTRICT BR	SHEET NO. 8
COUNTY CARROLL	
JOB NO. J1P3275	
CONTRACT ID.	
PROJECT NO.	
BRIDGE NO. A29471	

DATE	DESCRIPTION

MISSOURI HIGHWAYS AND TRANSPORTATION COMMISSION
105 WEST CAPITOL
JEFFERSON CITY, MO 65102
1-888-ASK-MODOT (1-888-275-6636)

IF A SEAL IS PRESENT ON THIS SHEET IT HAS BEEN ELECTRONICALLY SEALED AND DATED.

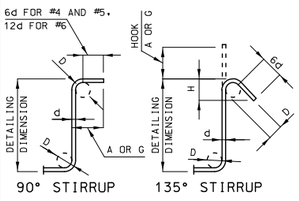

STIRRUP HOOK DIMENSIONS				
GRADES 40 - 50 - 60 KSI				
BAR SIZE	D (IN.)	90° HOOK	135° HOOK	
		HOOK A OR G	HOOK A OR G	APPROX. H
#4	2"	4 1/2"	4 1/2"	3"
#5	2 1/2"	6"	5 1/2"	3 3/4"
#6	4 1/2"	12"	8"	4 1/2"

NOTE: UNLESS OTHERWISE NOTED, DIAMETER "D" IS THE SAME FOR ALL BENDS AND HOOKS ON A BAR.

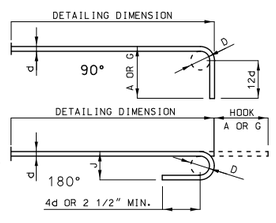

END HOOK DIMENSIONS				
BAR SIZE	D (IN.)	ALL GRADES		
		180° HOOKS		90° HOOKS
		A OR G	J	A OR G
#3	2 1/4"	5"	3"	6"
#4	3"	6"	4"	8"
#5	3 3/4"	7"	5"	10"
#6	4 1/2"	8"	6"	12"
#7	5 1/4"	10"	7"	14"
#8	6"	11"	8"	16"
#9	9 1/2"	15"	11 3/4"	19"
#10	10 3/4"	17"	13 1/4"	22"
#11	12"	19"	14 3/4"	2'-0"
#14	18 1/4"	2'-3"	21 3/4"	2'-7"

NOTE:
ALL STANDARD HOOKS AND BENDS OTHER THAN 180 DEGREE ARE TO BE BENT WITH SAME PROCEDURE AS FOR 90 DEGREE STANDARD HOOKS.

HOOKS AND BENDS SHALL BE IN ACCORDANCE WITH THE PROCEDURES AS SHOWN ON THIS SHEET.

E = EPOXY COATED REINFORCEMENT.
S = STIRRUP.
X = BAR IS INCLUDED IN SUBSTRUCTURE QUANTITIES.
V = BAR DIMENSIONS VARY IN EQUAL INCREMENTS BETWEEN DIMENSIONS SHOWN ON THIS LINE AND THE FOLLOWING LINE.
NO. EA. = NUMBER OF BARS OF EACH LENGTH.

NOMINAL LENGTHS ARE BASED ON OUT TO OUT DIMENSIONS SHOWN IN BENDING DIAGRAMS AND ARE LISTED FOR FABRICATORS USE. (NEAREST INCH)

ACTUAL LENGTHS ARE MEASURED ALONG CENTERLINE BAR TO THE NEAREST INCH.

PAYWEIGHTS ARE BASED ON ACTUAL LENGTHS.

FOUR ANGLE OR CHANNEL SPACERS ARE REQUIRED FOR EACH COLUMN SPIRAL. SPACERS ARE TO BE PLACED ON INSIDE OF SPIRALS. LENGTH AND WEIGHT OF COLUMN SPIRALS DO NOT INCLUDE SPLICES OR SPACERS.

REINFORCING STEEL (GRADE 60) FY = 60,000 PSI.

Detailed May 2021
Checked July 2021

Note: This drawing is not to scale. Follow dimensions.

MISSOURI HIGHWAYS AND TRANSPORTATION COMMISSION
PLANS FOR PROPOSED
STATE HIGHWAY

CARROLL COUNTY

DESIGN DESIGNATION

A.A.D.T. - 2021 = 1619
A.A.D.T. - 2041 = 1789
D.H.V. = 8.74%
T = 24.29%
V = 55 M.P.H.

FUNCTIONAL CLASSIFICATION- PRINCIPAL ARTERIAL

NO R/W ACQUISITON

CONVENTIONAL SYMBOLS
(USED IN PLANS)

	EXISTING	NEW
BUILDINGS AND STRUCTURES		
GUARD RAIL		
GUARD CABLE		
CONCRETE RIGHT-OF-WAY MARKER		
STEEL RIGHT-OF-WAY MARKER		
LOCATION SURVEY MARKER		
UTILITIES		
FIBER OPTICS	-FO-	~~FO~~
OVERHEAD CABLE TV	-OTV-	~~OTV~~
UNDERGROUND CABLE TV	-UTV-	~~UTV~~
OVERHEAD TELEPHONE	-OT-	~~OT~~
UNDERGROUND TELEPHONE	-UT-	~~UT~~
OVERHEAD POWER	-OE-	~~OE~~
UNDERGROUND POWER	-UE-	~~UE~~
SANITARY SEWER	-S-	~~S~~
STORM SEWER	-SS-	~~SS~~
GAS	-G-	~~G~~
WATER	-W-	~~W~~
MANHOLE	SAN	
FIRE HYDRANT	HYD	
WATER VALVE	WV	
WATER METER	WM	
DROP INLET	DI	
DITCH BLOCK		
GROUND MOUNTED SIGN	SIGN	
LIGHT POLE		
H-FRAME POWER POLE		
TELEPHONE PEDESTAL	PED	
FENCE		
CHAIN LINK	-V-	
WOVEN WIRE	-X-	
GATE POST		
BENCHMARK	BM	

NOTE: DASHED OR OPEN SYMBOLS INDICATE EXISTING FEATURES

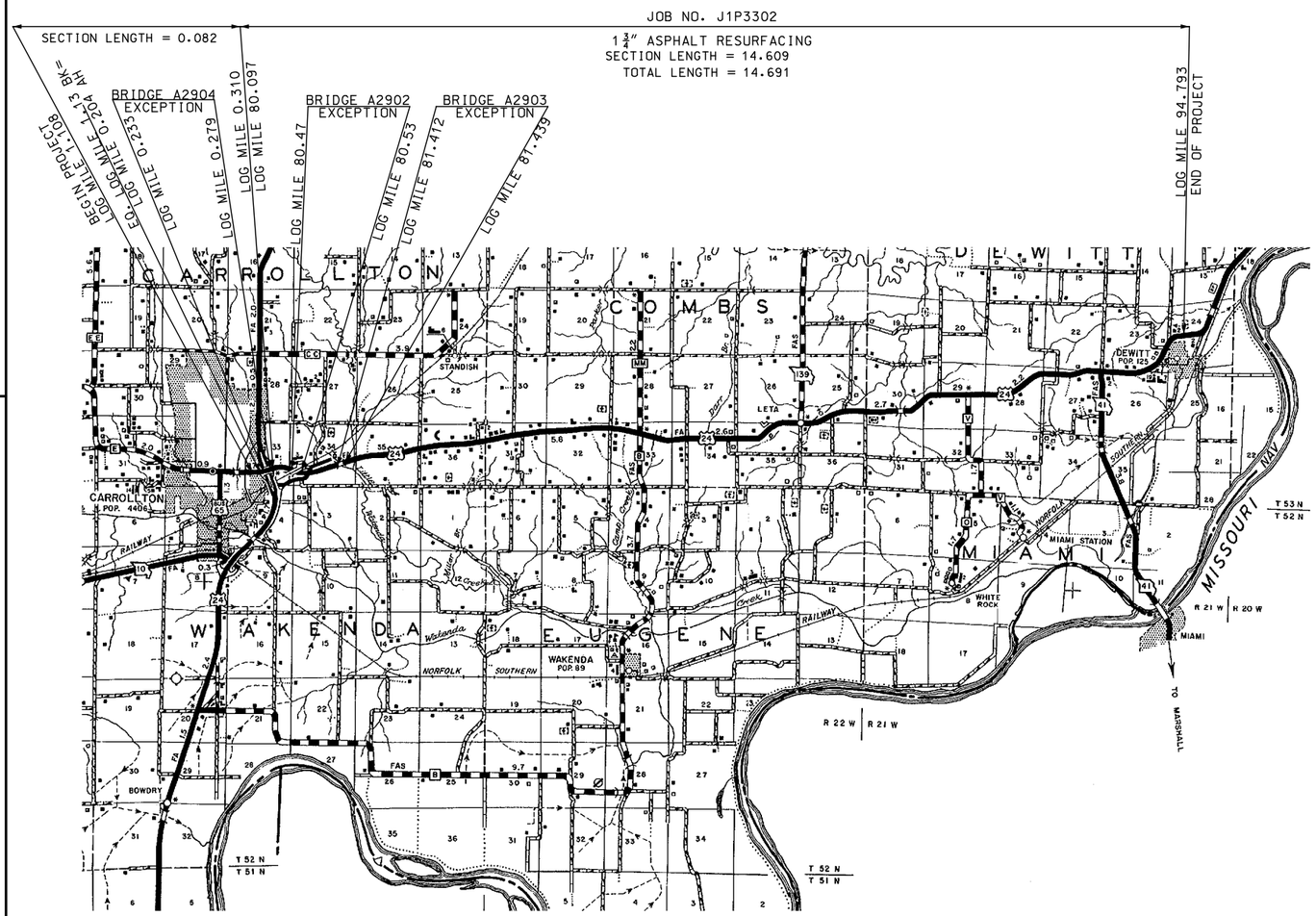

THE EXISTENCE AND APPROXIMATE LOCATION OF UTILITY FACILITIES KNOWN TO EXIST, AS SHOWN ON THE PLANS, ARE BASED ON THE BEST INFORMATION AVAILABLE TO THE COMMISSION AT THIS TIME. THIS INFORMATION IS PROVIDED BY THE COMMISSION "AS-IS" AND THE COMMISSION EXPRESSLY DISCLAIMS ANY REPRESENTATION OR WARRANTY AS TO THE COMPLETENESS, ACCURACY, OR SUITABILITY OF THE INFORMATION FOR ANY USE. RELIANCE UPON THIS INFORMATION IS DONE AT THE RISK AND PERIL OF THE USER, AND THE COMMISSION SHALL NOT BE LIABLE FOR ANY DAMAGES THAT MAY ARISE FROM ANY ERROR IN THE INFORMATION. IT IS, THEREFORE, THE RESPONSIBILITY OF THE CONTRACTOR TO VERIFY THE EXISTENCE, LOCATION AND STATUS OF ANY FACILITY. SUCH VERIFICATION INCLUDES DIRECT CONTACT WITH THE LISTED UTILITIES.

INDEX OF SHEETS

DESCRIPTION	SHEET NUMBER
TITLE SHEET	1
TYPICAL SECTIONS (TS) (3 SHEETS)	2
QUANTITIES (QU) (4 SHEETS)	3
SPECIAL SHEETS (SS)	4-6
TRAFFIC CONTROL SHEETS (TC)	7-8

LENGTH OF PROJECT

BEGINNING OF PROJECT	LOG MILE 1.108	
END OF PROJECT	LOG MILE 94.793	
APPARENT LENGTH	14.824	MILES
EQUATIONS AND EXCEPTIONS:		
BRIDGE A2902	.060	MILE
BRIDGE A2903	.027	MILE
BRIDGE A2904	.046	MILE
TOTAL CORRECTIONS	.133	MILE
NET LENGTH OF PROJECT	14.691	MILES
STATE LENGTH	14.691	MILES
FOR INFORMATION ONLY ESTIMATED DISTURBED ACRES	0	ACRES

STATE OF MISSOURI
RICHARD W. ORR
NUMBER PE-2002003397
PROFESSIONAL ENGINEER
THIS SHEET HAS BEEN SIGNED, SEALED AND DATED ELECTRONICALLY.

DATE PREPARED	
8/19/2021	
ROUTE 24	STATE MO
DISTRICT NW	SHEET NO. 1
COUNTY CARROLL	
JOB NO. J1P3302	
CONTRACT ID.	
PROJECT NO.	
BRIDGE NO.	

DESCRIPTION	DATE

IF A SEAL IS PRESENT ON THIS SHEET IT HAS BEEN ELECTRONICALLY SEALED AND DATED.

MISSOURI HIGHWAYS AND TRANSPORTATION COMMISSION
105 WEST CAPITOL
JEFFERSON CITY, MO 65102
1-888-ASK-MODOT (1-888-275-6636)

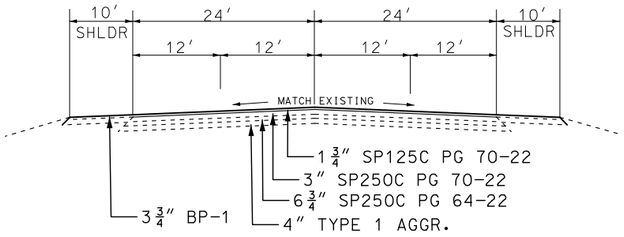

EXISTING SECTION ON TANGENT

LOG MILE 80.097 TO LOG MILE 80.13

ROUTE 24

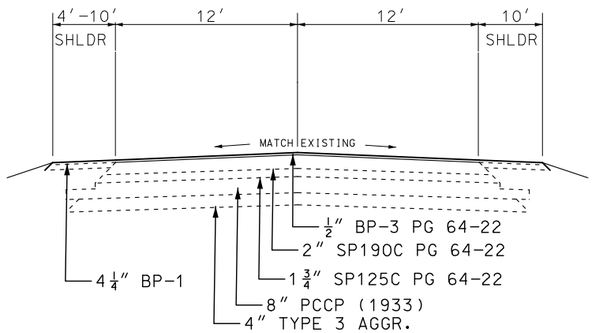

EXISTING SECTION ON TANGENT

LOG MILE 80.13 TO LOG MILE 81.46

ROUTE 24

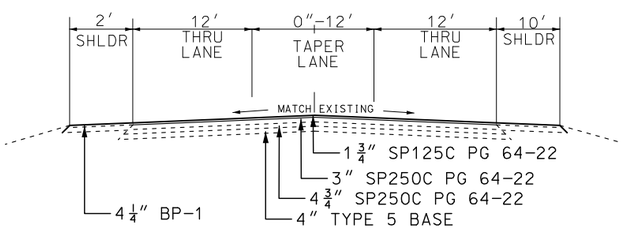

EXISTING SECTION ON TANGENT

LOG MILE 81.46 TO LOG MILE 81.62

ROUTE 24

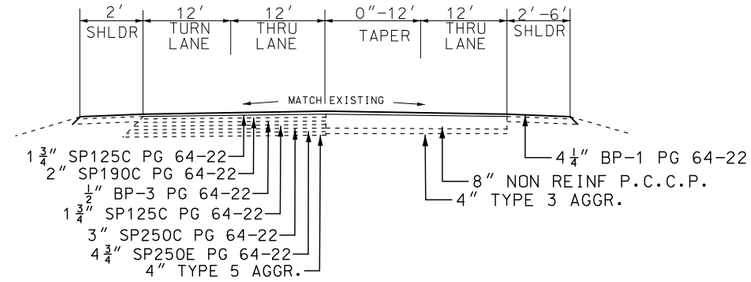

EXISTING SECTION ON TANGENT

LOG MILE 81.62 TO LOG MILE 81.74

ROUTE 24

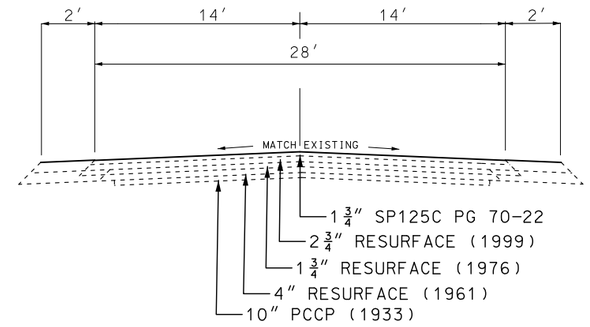

EXISTING SECTION ON TANGENT

LOG MILE 81.74 TO LOG MILE 94.793

ROUTE 24

NOT TO SCALE

TYPICAL SECTION

SHEET 1 OF 3

STATE OF MISSOURI
RICHARD W. ORR
NUMBER PE-2002003397
PROFESSIONAL ENGINEER

THIS SHEET HAS BEEN SIGNED, SEALED AND DATED ELECTRONICALLY.

DATE PREPARED	8/19/2021
ROUTE	24
STATE	MO
DISTRICT	NW
SHEET NO.	2
COUNTY	CARROLL
JOB NO.	J1P3302
CONTRACT ID.	
PROJECT NO.	
BRIDGE NO.	

DATE	DESCRIPTION

MISSOURI HIGHWAYS AND TRANSPORTATION COMMISSION

105 WEST CAPITOL
JEFFERSON CITY, MO 65102
1-888-ASK-MODOT (1-888-275-6636)

IF A SEAL IS PRESENT ON THIS SHEET IT HAS BEEN ELECTRONICALLY SEALED AND DATED.

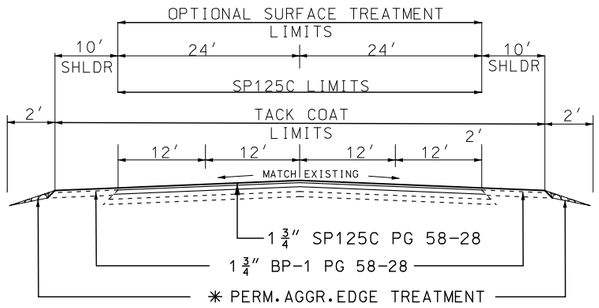

PROPOSED SECTION ON TANGENT

LOG MILE 1.108 TO LOG MILE 1.13
LOG MILE 0.204 TO LOG MILE 0.233
LOG MILE 0.279 TO LOG MILE 0.310
✳ LOG MILE 80.097 TO LOG MILE 80.13
ROUTE 24

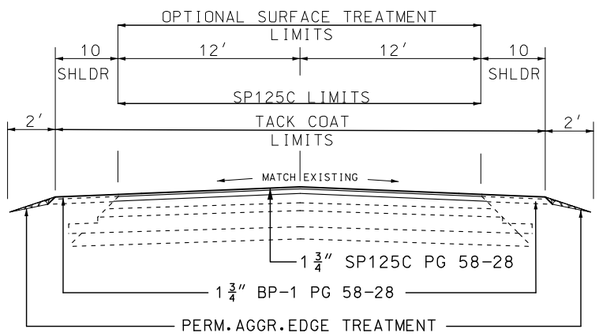

PROPOSE SECTION ON TANGENT

LOG MILE 80.13 TO LOG MILE 80.46 (BRIDGE A2902)
LOG MILE 80.51(BRIDGE A2902) TO LOG MILE 81.402 (BRIDGE A2903)
ROUTE 24

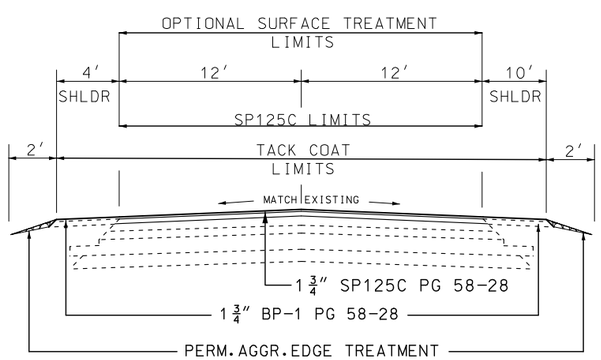

PROPOSE SECTION ON TANGENT

LOG MILE 81.428 (BRIDGE A2903) TO LOG MILE 81.46
ROUTE 24

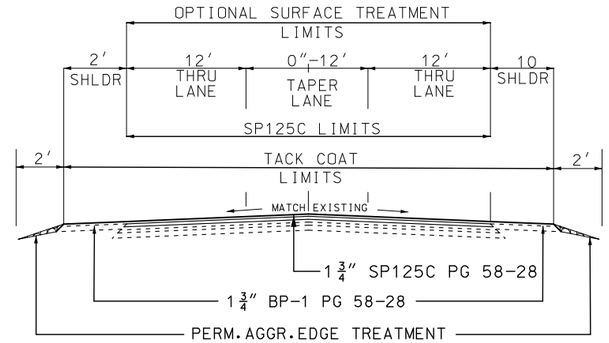

PROPOSE SECTION ON TANGENT

LOG MILE 81.46 TO LOG MILE 81.48
ROUTE 24

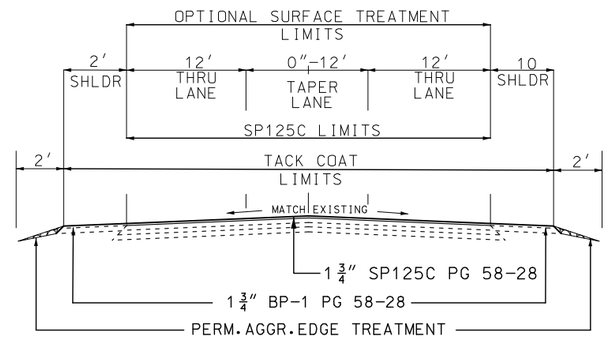

PROPOSE SECTION ON TANGENT

LOG MILE 81.46 TO LOG MILE 81.62
ROUTE 24

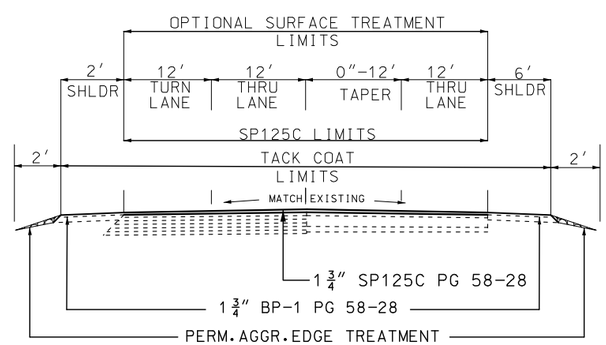

PROPOSE SECTION ON TANGENT

LOG MILE 81.62 TO LOG MILE 81.70
ROUTE 24

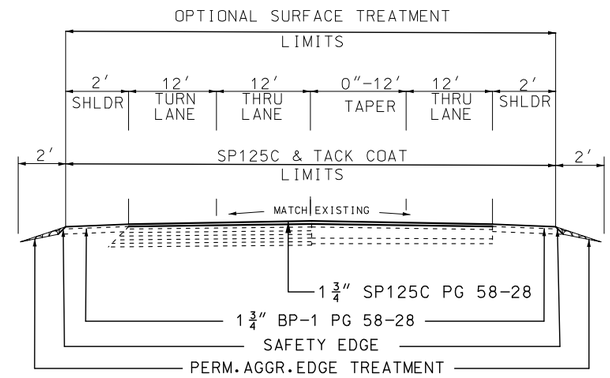

PROPOSE SECTION ON TANGENT

LOG MILE 81.70 TO LOG MILE 81.74
ROUTE 24

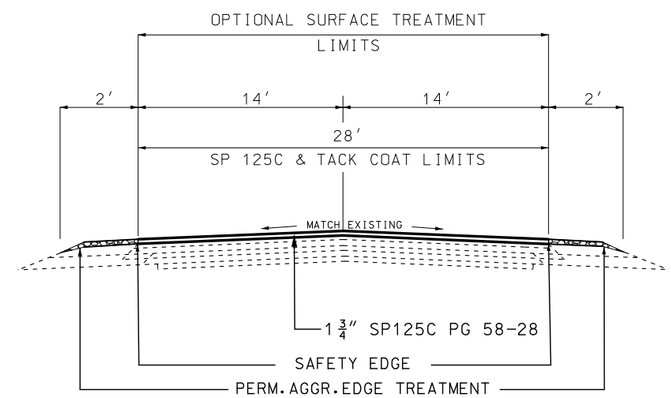

PROPOSE SECTION ON TANGENT

LOG MILE 81.74 TO LOG MILE 94.793
ROUTE 24

ESTIMATE FACTORS ✳✳

ITEM	DESCRIPTION	FACTOR
304-99.10	PERMANENT AGGREGATE EDGE TREATMENT	1.60 TONS/CU. YD.
401-12.31	BITUMINOUS PAVEMENT MIXTURE PG58-28 (BP-1)	1.98 TONS/CU. YD.
403-01.06	ASPHALTIC CONCRETE MIXTURE PG58-28 (SP125C MIX)	1.95 TONS/CU. YD.
407-10.05	TACK COAT - ON EXISTING ASPHALT OR MILLED ASPHALT	0.10 GAL./SQ. YD.
413-99.12	OPTIONAL SURFACE TREATMENT	0.25 GAL./SQ. YD.

✳✳ FOR INFORMATION PURPOSES ONLY

NOT TO SCALE

TYPICAL SECTION

SHEET 2 OF 3

STATE OF MISSOURI
RICHARD W. ORR
NUMBER PE-2002003397
PROFESSIONAL ENGINEER
THIS SHEET HAS BEEN SIGNED, SEALED AND DATED ELECTRONICALLY.

DATE PREPARED	
9/22/2021	
ROUTE 24	STATE MO
DISTRICT NW	SHEET NO. 2
COUNTY CARROLL	
JOB NO. J1P3302	
CONTRACT ID.	
PROJECT NO.	
BRIDGE NO.	

DATE	DESCRIPTION

MISSOURI HIGHWAYS AND TRANSPORTATION COMMISSION
105 WEST CAPITOL
JEFFERSON CITY, MO 65102
1-888-ASK-MODOT (1-888-275-6636)

IF A SEAL IS PRESENT ON THIS SHEET IT HAS BEEN ELECTRONICALLY SEALED AND DATED.

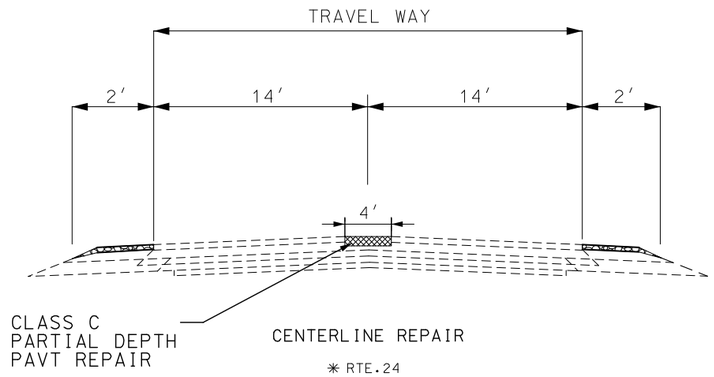

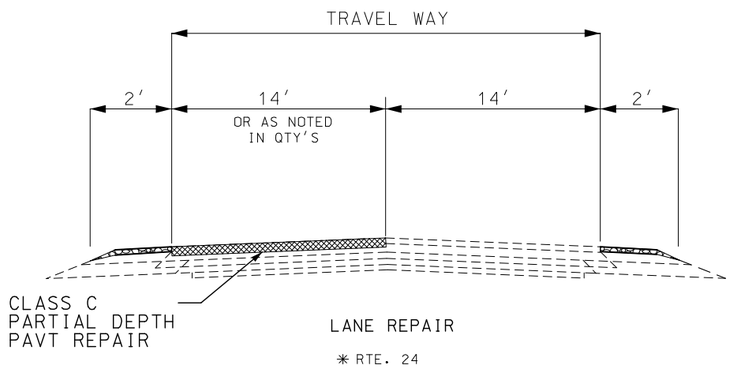

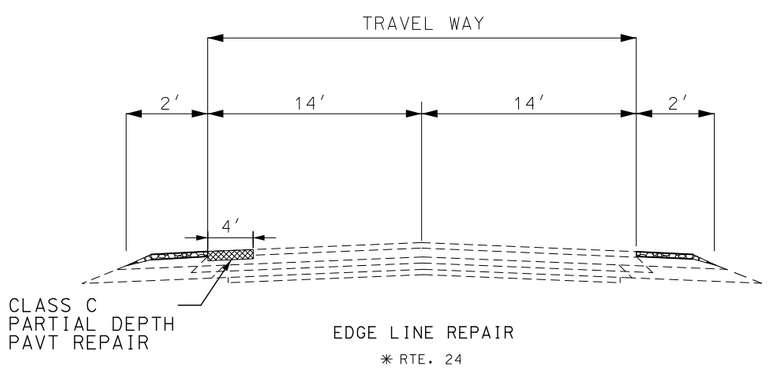

✳ SEE QUANITY SHEETS FOR DEPTHS

COLDMILL AND REPAIR SECTIONS

NOT TO SCALE

TYPICAL SECTIONS
SHEET 3 OF 3

STATE OF MISSOURI
RICHARD W. ORR
NUMBER PE-2002003397
PROFESSIONAL ENGINEER

THIS SHEET HAS BEEN SIGNED, SEALED AND DATED ELECTRONICALLY.

DATE PREPARED	
8/19/2021	
ROUTE 24	STATE MO
DISTRICT NW	SHEET NO. 2
COUNTY CARROLL	
JOB NO. J1P3302	
CONTRACT ID.	
PROJECT NO.	
BRIDGE NO.	

DATE	DESCRIPTION

MISSOURI HIGHWAYS AND TRANSPORTATION COMMISSION

105 WEST CAPITOL
JEFFERSON CITY, MO 65102
1-888-ASK-MODOT (1-888-275-6636)

IF A SEAL IS PRESENT ON THIS SHEET IT HAS BEEN ELECTRONICALLY SEALED AND DATED.

PAVEMENT MARKING

LOG MILE	LOG MILE	LOC.	LENGTH FT.	HIGH BUILD WATERBORNE PVMNT. MARKING PAINT WITH TYPE L BEADS: 6 IN. WHITE EDGE LINE L.F.	6 IN. YELLOW SOLID L.F.	6 IN. YELLOW INTERMITTENT L.F.
80.097	80.120	SBL & NBL	121.44	311.60	242.88	
80.120	80.820	SBL & NBL	3696.00	7392.00	7392.00	
80.820	80.980	SBL & NBL	844.80	1689.60	844.80	211.20
80.980	81.240	SBL & NBL	1372.80	2745.60		343.20
81.240	81.420	SBL & NBL	950.40	1900.80	950.40	237.60
81.420	81.460	SBL & NBL	211.20	422.40	422.40	
81.460	81.520	SBL & NBL	316.80	633.60	1267.20	
81.520	81.620	SBL & NBL	528.00	1584.00	2112.00	
81.620	81.740	SBL & NBL	633.60	1267.20	2534.40	
81.740	82.519	SBL & NBL	4113.12	8226.24	8226.24	
82.519	82.858	SBL & NBL	1789.92	3579.84	1789.92	447.48
82.858	83.578	SBL & NBL	3801.60	7603.20	7603.20	
83.578	83.738	SBL & NBL	844.80	1689.60	844.80	211.20
83.738	83.878	SBL & NBL	739.20	1478.40		184.80
83.878	84.057	SBL & NBL	945.12	1890.24	945.12	236.28
84.057	84.997	SBL & NBL	4963.20	9926.40	9926.40	
84.997	85.277	SBL & NBL	1478.40	2956.80	1478.40	369.60
85.277	85.517	SBL & NBL	1267.20	2534.40	2534.40	
85.517	86.258	SBL & NBL	3912.48	7824.96	3912.48	978.12
86.258	86.318	SBL & NBL	316.80	633.60	633.60	
86.318	86.698	SBL & NBL	2006.40	4012.80	2006.40	501.60
86.698	88.357	SBL & NBL	8759.52	17519.04	17519.04	
88.357	88.697	SBL & NBL	1795.20	3590.40	1795.20	448.80
88.697	88.759	SBL & NBL	327.36	654.72	654.72	
88.759	88.790	SBL & NBL	163.68	327.36	163.68	40.92
88.790	88.939	SBL & NBL	786.72	1573.44	1573.44	
88.939	89.059	SBL & NBL	633.60	1267.20	633.60	158.40
89.059	89.138	SBL & NBL	417.12	834.24	834.24	
89.138	89.518	SBL & NBL	2006.40	4012.80	2006.40	501.60
89.518	89.738	SBL & NBL	1161.60	2323.20	2323.20	
89.738	89.918	SBL & NBL	950.40	1900.80	950.40	237.60
89.918	89.958	SBL & NBL	211.20	422.40		52.80
89.958	90.119	SBL & NBL	850.08	1700.16	850.08	212.52
90.119	90.178	SBL & NBL	311.52	623.04	623.04	
90.178	91.037	SBL & NBL	4535.52	9071.04	4535.52	1133.88
91.037	91.177	SBL & NBL	739.20	1478.40	1478.40	
91.177	91.358	SBL & NBL	955.68	1911.36	955.68	238.92
91.358	91.517	SBL & NBL	839.52	1679.04		209.88
91.517	93.277	SBL & NBL	9292.80	18585.60	18585.60	
93.277	93.597	SBL & NBL	1689.60	3379.20	1689.60	422.40
93.597	94.793	SBL & NBL	6314.88	12629.76	12629.76	
			TOTALS	155786.48	125468.64	7378.80
					7378.80	
			PAY TOTALS	155786	132847	

PREFORMED THERMOPLASTIC PAVEMENT MARKING, LEFT/RIGHT ARROWS

BEGINNING LOG MILE	ENDING LOG MILE	LOCATION	RIGHT ARROW EACH	LEFT ARROW EACH	REMARKS
81.542	81.582	US 24 TURN LANE		2	LEFT ARROWS
81.634	81.697	US 24 TURN LANE	3		RIGHT ARROWS
		SUB TOTALS	3	2	
			2		
		PAY TOTAL	5		

PREFORMED THERMOPLASTIC PAVEMENT MARKING, 24 IN. YELLOW

BEGINNING LOG MILE	ENDING LOG MILE	LOCATION	LENGTH L.F.	REMARKS
81.626	81.75	US 24	160	MEDIAN
		PAY TOTAL	160	

MOBILIZATION

LUMP SUM 1

PAVER-MOUNTED THERMAL PROFILES

LUMP SUM 1

INTELLIGENT COMPACTION

LUMP SUM 1

RUMBLE STRIPS

LOG MILE	LOG MILE	LOCATION	LENGTH (FT.)	BITUMINOUS RUMBLE STRIP: CENTERLINE (STA.)	EB SHOULDER (STA.)	WB SHOULDER (STA.)	REMARKS
ROUTE 24							
80.120	81.452	RTE 24	7032.96	70.33	70.33	70.33	BEGIN RUMBLE TO BRIDGE A2902
80.460	80.540	RTE 24	-422.4	-4.22	-4.22	-4.22	BRIDGE A2902
80.540	81.409	RTE 24	4588.32	45.88	45.88	45.88	FROM BRIDGE A2902 TO BRIDGE A2903
81.409	81.442	RTE 24	-174.24	-1.74	-1.74	-1.74	FROM BRIDGE A2903
81.442	81.452	RTE 24	52.8	0.53	0.53	0.53	TO BEGIN TAPER
81.452	81.746	RTE 24	1552.32		15.52		FROM BEGIN LEFT & RIGHT TURN LANE
81.746	93.826	RTE 24	63782.4	637.82	637.82	637.82	FROM TURN LANE TO CITY LIMITS (DEWITT)
93.826	94.561	RTE 24	3880.8	0.00	0.00	0.00	INSIDE CITY (DEWITT)
94.561	94.793	RTE 24	1224.96	12.25	12.25	12.25	FROM CITY LIMITS (DEWITT) TO END OF JOB
80.120	94.793	RTE 24	-16101				DEDUCTIONS FOR CO.ROADS,STATE ROADS, ENTERANCES
TOTALS				760.9	776.4	760.9	
					760.9		
PAY TOTALS				760.9	1537.3		

SUMMARY OF QUANTITIES
SHEET 1 OF 4

STATE OF MISSOURI
RICHARD W. ORR
NUMBER PE-2002003397
PROFESSIONAL ENGINEER
THIS SHEET HAS BEEN SIGNED, SEALED AND DATED ELECTRONICALLY.

DATE PREPARED 8/23/2021
ROUTE 24 | STATE MO
DISTRICT NW | SHEET NO. 3
COUNTY CARROLL
JOB NO. J1P3302
CONTRACT ID.
PROJECT NO.
BRIDGE NO.

DESCRIPTION | DATE

MISSOURI HIGHWAYS AND TRANSPORTATION COMMISSION
105 WEST CAPITOL
JEFFERSON CITY, MO 65102
1-888-ASK-MODOT (1-888-275-6636)

IF A SEAL IS PRESENT ON THIS SHEET IT HAS BEEN ELECTRONICALLY SEALED AND DATED.

CLASS C PARTIAL DEPTH PAVEMENT REPAIR

LOG MILE	LOG MILE	LENGTH	CLASS C REPAIR WIDTH IN.	CLASS C REPAIR DEPTH FT	CLASS C VOLUME CU.YD.	FURNISHING AND PLACING BITUMIONUS MATERIAL FOR CLASS C PARTIAL DEPTH PAVEMENT REPAIR TON	REMOVAL FOR CLASS C PARTIAL DEPTH PAVEMENT REPAIR SY	REMARKS
EAST BOUND								
80.114	80.155	220.000	18	0.17	24.9	49.3	440.0	LANE REPAIR
80.155	80.211	296.000	4	0.17	7.5	14.9	131.6	EDGELINE REPAIR
80.342	80.357	82.000	14	0.17	7.2	14.3	127.6	LANE REPAIR
80.371	80.385	75.000	14	0.17	6.6	13.1	116.7	LANE REPAIR
80.779	80.797	98.000	4	0.17	2.5	5.0	43.6	EDGELINE REPAIR
81.063	81.083	108.000	4	0.17	2.7	5.3	48.0	EDGELINE REPAIR
81.132	81.171	203.000	14	0.17	17.9	35.4	315.8	LANE REPAIR
81.555	81.662	564.000	14	0.17	49.7	98.4	877.3	LANE REPAIR
82.008	82.044	190.000	4	0.17	4.8	9.5	84.4	EDGE LINE REPAIR
82.368	82.424	295.000	4	0.17	7.4	14.7	131.1	EDGE LINE REPAIR
82.701	82.727	139.000	4	0.17	3.5	6.9	61.8	EDGE LINE REPAIR
82.999	83.028	155.000	4	0.17	3.9	7.7	68.9	EDGE LINE REPAIR
83.789	83.819	159.000	4	0.17	4.0	7.9	70.7	EDGE LINE REPAIR
85.245	85.263	95.000	4	0.17	2.4	4.8	42.2	EDGE LINE REPAIR
86.163	86.205	219.000	14	0.17	19.304	38.2	340.7	LANE REPAIR
87.198	87.226	146.000	4	0.17	3.7	7.3	64.9	EDGE LINE REPAIR
89.368	89.376	39.000	4	0.17	1.0	2.0	17.3	EDGE LINE REPAIR
79.926	79.961	182.000	4	0.17	4.6	9.1	80.9	EDGE LINE REPAIR
82.024	82.044	107.000	14	0.17	9.4	18.6	166.4	LANE REPAIR
VARIOUS	VARIOUS	0.000		0.17	0.0	36.2	323.0	MISC. LOCATIONS
					SUB TOTALS	398.600	3552.9	
					SEE WESTBOUND FOR PAY TOTALS			

CLASS C PARTIAL DEPTH PAVEMENT REPAIR

LOG MILE	LOG MILE	LENGTH	CLASS C REPAIR WIDTH IN.	CLASS C REPAIR DEPTH FT	CLASS C VOLUME CU.YD.	FURNISHING AND PLACING BITUMIONUS MATERIAL FOR CLASS C PARTIAL DEPTH PAVEMENT REPAIR TON	REMOVAL FOR CLASS C PARTIAL DEPTH PAVEMENT REPAIR SY	REMARKS
WEST BOUND								
127.059	127.076	90.000	4	0.17	2.3	4.6	40.0	CENTERLINE REPAIR
127.356	127.379	117.000	14	0.17	10.3	20.4	182.0	LANE REPAIR
128.477	128.500	122.000	4	0.17	3.1	6.1	54.2	CENTERLINE REPAIR
128.971	129.081	582.000	4	0.17	14.7	29.1	258.7	CENTERLINE REPAIR
130.120	130.132	67.000	14	0.17	5.9	11.7	104.2	LANE REPAIR
132.462	132.492	158.000	14	0.17	13.9	27.5	245.8	LANE REPAIR
132.515	132.555	214.000	14	0.17	18.9	37.4	332.9	LANE REPAIR
132.614	132.639	135.000	14	0.17	11.9	23.6	210.0	LANE REPAIR
133.458	133.496	204.000	4	0.17	5.1	10.1	90.7	CENTERLINE REPAIR
133.839	133.857	91.000	14	0.17	8.0	15.8	141.6	LANE REPAIR
134.159	134.198	206.000	14	0.17	18.2	36.0	320.4	LANE REPAIR
134.561	134.572	62.000	4	0.17	1.6	3.2	27.6	CENTERLINE REPAIR
134.572	134.610	200.000	14	0.17	17.6	34.8	311.1	LANE REPAIR
135.669	135.682	68.000	4	0.17	1.7	3.4	30.2	EDGE LINE REPAIR
135.733	135.830	510.000	4	0.17	12.8	25.3	226.7	CENTERLINE REPAIR
139.126	139.181	291.000	4	0.17	7.3	14.5	129.3	CENTERLINE REPAIR
139.289	139.308	100.000	4	0.17	2.5	5.0	44.4	CENTERLINE REPAIR
139.354	139.377	124.000	4	0.17	3.1	6.1	55.1	EDGE LINE REPAIR
139.369	139.383	70.000	4	0.17	1.8	3.6	31.1	CENTERLINE REPAIR
139.454	139.468	73.000	14	0.17	6.4	12.7	113.6	LANE REPAIR
139.760	139.832	384.000	4	0.17	9.7	19.2	170.7	EDGE LINE REPAIR
140.091	140.119	150.000	4	0.17	3.8	7.5	66.7	EDGE LINE REPAIR
140.263	140.280	93.000	4	0.17	2.3	4.6	41.3	EDGE LINE REPAIR
140.732	140.754	118.000	4	0.17	3.0	5.9	52.4	EDGE LINE REPAIR
141.411	141.429	96.000	4	0.17	2.4	4.8	42.7	EDGE LINE REPAIR
141.875	141.898	125.000	4	0.17	3.1	6.1	55.6	EDGE LINE REPAIR
142.495	142.565	372.000	18	0.17	42.2	83.6	744.0	LANE REPAIR
142.733	142.769	188.000	4	0.17	4.7	9.3	83.6	CENTERLINE REPAIR
143.011	143.045	181.000	4	0.17	4.6	9.1	80.4	EDGE LINE REPAIR
143.404	143.463	312.000	4	0.17	7.9	15.6	138.7	EDGE LINE REPAIR
VARIOUS	VARIOUS	0.000		0.17	0.0	49.7	442.6	MISC. LOCATIONS
					SUB TOTALS	546.300	4868.3	
					SUB TOTALS FROM EASTBOUND	398.600	3552.9	
					TOTALS	944.900	8421.200	
					PAY TOTALS	944.9	8421.2	

SUMMARY OF QUANTITIES
SHEET 2 OF 4

STATE OF MISSOURI
RICHARD W. ORR
NUMBER PE-2002003397
PROFESSIONAL ENGINEER
THIS SHEET HAS BEEN SIGNED, SEALED AND DATED ELECTRONICALLY.

DATE PREPARED 8/23/2021
ROUTE 24 | STATE MO
DISTRICT NW | SHEET NO. 3
COUNTY CARROLL
JOB NO. J1P3302
CONTRACT ID.
PROJECT NO.
BRIDGE NO.

DESCRIPTION	DATE

IF A SEAL IS PRESENT ON THIS SHEET IT HAS BEEN ELECTRONICALLY SEALED AND DATED.

MISSOURI HIGHWAYS AND TRANSPORTATION COMMISSION
105 WEST CAPITOL
JEFFERSON CITY, MO 65102
1-888-ASK-MODOT (1-888-275-6636)

ASPHALT AND AGGREGATE QUANTITIES

LOG MILE	LOG MILE	2.75" AGG DEPTH IN.	AGG WIDTH FT	1.75" RESURFACING DEPTH FT.	PAY SHLDR. WIDTH FT	PAY LANE WIDTH FT.	LENGTH FT.	TACK S.Y.	SHLDR VOLUME CU.YD.	AGG VOLUME CU.YD.	SP125C LANE VOLUME CU.YD.	TACK COAT GAL	OPTIONAL SURFACE TREATMENT GAL	BP-1 PG 58-28 TONS	PERMANENT EDGE TREATMENT AGG TONS	ASPHALT CONCRETE MIX SP125C PG 58-28 TONS	REMARKS
1.108	1.130			0.146	20	48	116.2	877.96	12.57		30.160	87.796	154.9	24.889		59.72	CITY STREET TO RAMP INTERSECTION
0.204	0.233			0.146	20	48	153.1	1156.76	16.56		39.738	115.676	204.1	32.789		78.68	RAMP TO BRIDGE A2904
0.279	0.310			0.146	20	48	163.7	1236.84	17.70		42.489	123.684	218.3	35.046		84.13	FROM BRIDGE (A2904) TO RAMP
80.097	80.130	0.2292	4	0.146	20	48	174.2	1316.18	18.84	5.915	45.215	131.618	232.3	37.303	9.464	89.53	
80.130	80.470	0.2292	4	0.146	20	24	1795.2	8776.53	194.15	60.957	232.977	877.653	1196.8	384.417	97.531	461.29	TO BRIDGE A2902
80.530	81.412	0.2292	4	0.146	20	24	4657.0	22767.56	503.65	158.131	604.375	2276.756	3104.7	997.227	253.010	1196.66	BRIDGE (A2902) TO BRIDGE (A2903)
81.439	81.460	0.2292	4	0.146	14	24	110.9	468.24	8.40	3.766	14.392	46.824	73.9	16.632	6.026	28.50	FROM BRIDGE (A2903)
81.460	81.480	0.2292	4	0.146	12	33	105.6	528.00	6.85	3.586	18.844	52.800	96.8	13.563	5.738	37.31	TAPER
81.480	81.620	0.2292	4	0.146	12	40	739.2	4270.93	47.97	25.100	159.886	427.093	821.3	94.981	40.160	316.57	
81.620	81.690	0.2292	4	0.146	12	50	369.6	2546.13	23.98	12.550	99.929	254.613	513.3	47.480	20.080	197.86	
81.690	81.700	0.2292	4	0.146	12	46	52.8	340.27	3.43	1.793	13.134	34.027	67.5	6.791	2.869	26.01	
81.700	81.740	0.2292	4	0.146	4	46	211.2	1173.33	4.57	7.171	52.534	117.333	269.9	9.049	11.474	104.02	
81.740	93.273	0.2292	4	0.146		28	60894.2	189448.62		2067.696	9219.833	18944.862	47362.2		3308.314	18255.27	
93.273	93.310	0.2292	4	0.146		34	195.4	738.18		6.635	35.925	73.818	184.5		10.616	71.13	
93.300	94.793	0.2292	4	0.146		28	7883.0	24524.89		267.672	1193.545	2452.489	6131.2		428.275	2363.22	
81.740	94.793			0.146			68919.8									413.792	SAFETY EDGE
																3398.000	940 TON(RUT) & 2458 TON (SHLDR IRR.)
																7.338	STATE ROUTES & CITY STREET
								SUBTOTLS				26017.042	60631.700	1700.167	4193.557	27189.03	
								PAY TOTALS				26017	60632	1700.2	4193.6	27189.0	

COLDMILLING

LOG MILE	LOG MILE	LENGTH FT	RTE 24 LOCATION	MODIFIED COLDMILL MILES	WIDTH FT	VOLUME SY	LENGTH FT.	MODIFIED COLDMILL SQ.YD.	3" OR LESS COLDMILL SQ.YD.
1.1080	1.1300	116	BEG OF JOB TO RAMP INTERSECTION	0.022	68	877.653	116.160		877.65
0.2040	0.2330	153	FROM RAMP INTERSECTION TO BRIDGE	0.029	68	1156.907	153.120		1156.91
0.2790	0.3100	164	MODIFY FROM BRIDGE TO RAMP INTERSECTION	0.031	44	800.213	163.680	800.213	
80.2040	80.2290	132	MODIFY ROAD TO CONCRETE DRIVEWAY	0.025	44	645.333	132.000	645.33	
80.4085	80.4511	225	MODIFIED TO APPROACH OF A2902	0.043	44	1109.973	227.040	1109.97	
80.4511	80.4700	100	COLDMILL TO APPROACH OF A2902	0.019	44	490.453	100.320		490.45
80.5300	80.5489	100	COLDMILL FROM APPROACH OF A2902	0.019	44	490.453	100.320		490.45
80.5489	80.5915	225	MODIFIED FROM APPROACH OF A2902	0.043	44	1109.973	227.040	1109.97	
81.3505	81.3931	225	MODIFIED TO APPROACH OF A2903	0.043	44	1109.973	227.040	1109.97	
81.3931	81.4120	100	COLDMILL TO APPROACH OF A2903	0.019	44	490.453	100.320		490.45
81.4320	81.4509	100	COLDMILL FROM APPROACH OF A2903	0.019	44	490.453	100.320		490.45
81.4509	81.4935	225	MODIFIED FROM APPROACH OF A2903	0.043	44	1109.973	227.040	1109.97	
81.6100	81.6280	95	MODIFIED ETHANOL ENTRANCE	0.018	6	63.360	95.040	63.360	
82.5400	82.5490	48	MODIFY ROAD TO CONCRETE DRIVEWAY	0.009	28	147.840	47.520	147.840	
85.8830	85.9010	95	MODIFIED RTE B	0.018	6	63.360	95.040	63.360	
85.8730	85.9020	153	MODIFIED RTE MM	0.029	6	102.080	153.120	102.080	
88.4370	88.4650	148	MODIFIED RTE 139	0.028	6	98.560	147.840	98.560	
91.1180	91.1440	137	MODIFIED RTE V	0.026	6	91.520	137.280	91.520	
93.2730	93.3100	195	MODIFIED RTE 41	0.037	8	173.653	195.360	173.653	
94.2140	94.2290	79	MODIFY MISSOURI STREET	0.015	6	52.800	79.200	52.800	
94.2390	94.2620	121	MODIFY JEFFERSON STREET	0.023	6	80.960	121.440	80.960	
94.7504	94.7930	225	MODIFIED END OF PROJECT	0.043	28	706.347	227.040	706.347	
					TOTALS			7465.903	3996.360
					PAY TOTALS			7466	3996

SUMMARY OF QUANTITIES
SHEET 3 OF 4

STATE OF MISSOURI
RICHARD W. ORR
NUMBER PE-2002003397
PROFESSIONAL ENGINEER
THIS SHEET HAS BEEN SIGNED, SEALED AND DATED ELECTRONICALLY.

DATE PREPARED 8/23/2021
ROUTE 24 | STATE MO
DISTRICT NW | SHEET NO. 3
COUNTY CARROLL
JOB NO. J1P3302
CONTRACT ID.
PROJECT NO.
BRIDGE NO.

DATE	DESCRIPTION

MISSOURI HIGHWAYS AND TRANSPORTATION COMMISSION
105 WEST CAPITOL
JEFFERSON CITY, MO 65102
1-888-ASK-MODOT (1-888-275-6636)

IF A SEAL IS PRESENT ON THIS SHEET IT HAS BEEN ELECTRONICALLY SEALED AND DATED.

EFFECTIVE: 04-01-2021

SIGN	SIZE IN.	AREA SQ.FT.	QTY EACH	TOTAL AREA SQ.FT.	QTY RELOC EACH	TOTAL RELOC SQ.FT.	SIGN NUM.	DESCRIPTION
WARNING SIGNS								
W01-1L	48X48	16.00						TURN (SYMBOL LEFT ARROW)
W01-1R	48X48	16.00						TURN (SYMBOL RIGHT ARROW)
W01-2L	48X48	16.00						CURVE (SYMBOL LEFT ARROW)
W01-2R	48X48	16.00						CURVE (SYMBOL RIGHT ARROW)
W01-3L	48X48	16.00						REVERSE TURN (SYMBOL LEFT ARROW)
W01-3R	48X48	16.00						REVERSE TURN (SYMBOL RIGHT ARROW)
W01-4L	48X48	16.00						REVERSE CURVE (SYMBOL LEFT ARROW)
W01-4R	48X48	16.00						REVERSE CURVE (SYMBOL RIGHT ARROW)
W01-4bL	48X48	16.00						DOUBLE ARROW REVERSE CURVE (SYMBOL LT ARROWS)
W01-4bR	48X48	16.00						DOUBLE ARROW REVERSE CURVE (SYMBOL RT ARROWS)
W01-4cL	48X48	16.00						TRIPLE ARROW REVERSE CURVE (SYMBOL LT ARROWS)
W01-4cR	48X48	16.00						TRIPLE ARROW REVERSE CURVE (SYMBOL RT ARROWS)
W01-6	60X30	12.50						HORIZONTAL ARROW (SYMBOL)
W01-6a	72X36	18.00						HORIZ. ARROW (SYMBOL ON PERMANENT BARRICADE)
W01-7	60X30	12.50						DOUBLE HEAD HORIZONTAL ARROW (SYMBOL)
W01-7a	72X36	18.00						DOUBLE HEAD HORIZ. ARROW (SYMBOL ON PERM. BARR.)
W01-8	18X24	3.00						CHEVRON (SYMBOL)
W01-8a	30X36	7.50						CHEVRON (SYMBOL FOR DIVIDED HIGHWAYS)
W03-1	48X48	16.00						STOP AHEAD (SYMBOL)
W03-2	48X48	16.00						YIELD AHEAD (SYMBOL)
W03-3	48X48	16.00						SIGNAL AHEAD (SYMBOL)
W03-4	48X48	16.00	6	96			11	BE PREPARED TO STOP
W03-5	48X48	16.00						SPEED LIMIT AHEAD
W04-1L	48X48	16.00						MERGE (SYMBOL FROM LEFT)
W04-1R	48X48	16.00						MERGE (SYMBOL FROM RIGHT)
W04-1aL	48X48	16.00						MERGE (ARROW SYMBOL)
W04-1aR	48X48	16.00						MERGE (ARROW SYMBOL)
W05-1	48X48	16.00	1	16			43	ROAD/BRIDGE/RAMP NARROWS
W05-3	48X48	16.00						ONE LANE BRIDGE
W05-5	48X48	16.00						NARROW LANES
W06-1	48X48	16.00						DIVIDED HIGHWAY (SYMBOL)
W06-2	48X48	16.00						DIVIDED HIGHWAY END (SYMBOL)
W06-3	48X48	16.00						TWO WAY TRAFFIC (SYMBOL)
W07-3a	30X24	5.00	1	16			44A	NEXT XX MILES (PLAQUE)
W08-1	48X48	16.00						BUMP
W08-2	48X48	16.00						DIP
W08-3	48X48	16.00						PAVEMENT ENDS
W08-4	48X48	16.00						SOFT SHOULDER
W08-5	48X48	16.00						SLIPPERY WHEN WET (SYMBOL)
W08-6	48X48	16.00						TRUCK CROSSING (WITH FLAGS)
W08-6c	48X48	16.00						TRUCK ENTRANCE
W08-7	36X36	9.00						LOOSE GRAVEL
W08-7a	36X36	9.00						FRESH OIL/LOOSE GRAVEL
W08-9	48X48	16.00						LOW SHOULDER
W08-11	48X48	16.00	3	48			36	UNEVEN LANES
W08-12	48X48	16.00	3	48			35	NO CENTER LINE
W08-15	48X48	16.00						GROOVED PAVEMENT
W08-15P	30X24	5.00						MOTORCYCLE (PLAQUE)
W08-17	48X48	16.00	12	192			23	SHOULDER DROP-OFF (SYMBOL)
W08-17P	30X24	5.00						SHOULDER DROP-OFF (PLAQUE)
W10-1	42RND.	9.62						RAILROAD CROSSING
W012-1	24X24	4.00						DOUBLE DOWN ARROW (SYMBOL)
W012-2	48X48	16.00						LOW CLEARANCE (SYMBOL)
W012-2X	24X18	3.00						LOW CLEARANCE (PLAQUE)
W012-2a	84X24	14.00						OVERHEAD LOW CLEARANCE (FEET AND INCHES)
W012-4	120X60	50.00						LOW CLEARANCE XX FT XX IN XX MILES AHEAD
W012-5	120X60	50.00						WIDTH RESTRICTION XX FT XX IN XX MILES AHEAD
W013-1	30X30	6.25						ADVISORY SPEED (PLAQUE)
W016-2	30X24	5.00						XXX FEET (PLAQUE)
W016-3	30X24	5.00						X MILE (PLAQUE)
W020-1	48X48	16.00	7	112			2	ROAD/BRIDGE/RAMP WORK AHEAD
W020-2	48X48	16.00						DETOUR AHEAD
W020-3	48X48	16.00						ROAD CLOSED AHEAD
W020-4	48X48	16.00	3	48			7	ONE LANE ROAD AHEAD
W020-5	48X48	16.00						RIGHT/CENTER/LEFT LANE CLOSED AHEAD
W020-5a	48X48	16.00						2 RIGHT/CENTER/LEFT LANES CLOSED AHEAD
W020-6a	48X48	16.00						RIGHT/CENTER/LEFT LANE CLOSED
W020-7a	48X48	16.00	8	128			8	FLAGGER (SYMBOL, WITH FLAGS)
W021-2	36X36	9.00						FRESH OIL
W021-5	48X48	16.00	1	16			21	SHOULDER WORK AHEAD
W022-1	48X48	16.00						BLASTING ZONE AHEAD
W022-2	42X36	10.50						TURN OFF 2-WAY RADIO AND PHONE
W022-3	42X36	10.50						END BLASTING ZONE
G022-1	21X15	2.19	2	4.38			59	WET PAINT (ARROW PIVOTS)

SIGN	SIZE IN.	AREA SQ.FT.	QTY EACH	TOTAL SQ.FT.	QTY RELOC EACH	TOTAL RELOC SQ.FT.	SIGN NUM.	DESCRIPTION
GUIDE SIGNS								
E05-1	36X48	12.00						GORE EXIT
E05-2	48X36	12.00						EXIT OPEN
E05-2a	48X36	12.00						EXIT CLOSED
G020-1	60X24	10.00	2	20			1	ROAD WORK NEXT 15 MILES
G020-2	48X24	8.00	2	16			26	END ROAD WORK
G020-4	36X18	4.50	1	4.5			57	PILOT CAR FOLLOW ME
G020-4a	42X30	8.75	9	78.75			58	PILOT CAR IN USE WAIT & FOLLOW
G020-4a	18X12	1.50						PILOT CAR IN USE WAIT & FOLLOW
G020-5aP	36X24	6.00	1	6			54	WORK ZONE (PLAQUE)
M04-8a	24X18	3.00						END DETOUR
M04-9L	48X36	12.00						DETOUR (LEFT ARROW)
M04-9R	48X36	12.00						DETOUR (RIGHT ARROW)
M04-9P	48X12	4.00						STREET NAME (PLAQUE)
M04-10L	48X18	6.00						DETOUR (ARROW LEFT)
M04-10R	48X18	6.00						DETOUR (ARROW RIGHT)
REGULATORY SIGNS								
R1-1	48X48	13.25						STOP
R1-2	48TRI.	6.93						YIELD
R1-2a	36X36	9.00						TO ONCOMING TRAFFIC (PLAQUE)
R1-3P	30X12	2.50						ALL WAY (PLAQUE)
R2-1	36X48	12.00	2	24			4& 25	SPEED LIMIT #4@ 45,#25@ 55
R3-1	48X48	16.00						NO RIGHT TURN (SYMBOL)
R3-2	48X48	16.00						NO LEFT TURN (SYMBOL)
R3-3	36X36	9.00						NO TURNS
R3-4	48X48	16.00						NO U-TURN (SYMBOL)
R3-7L	30X30	6.25						LEFT LANE MUST TURN LEFT
R3-7R	30X30	6.25						RIGHT LANE MUST TURN RIGHT
R4-1	36X48	12.00						DO NOT PASS
R4-2	36X48	12.00						PASS WITH CARE
R4-8a	36X48	12.00						KEEP LEFT (HORIZONTAL ARROW)
R4-7a	36X48	12.00						KEEP RIGHT (HORIZONTAL ARROW)
R5-1	30X30	6.25						DO NOT ENTER
R5-1a	36X24	6.00						WRONG WAY
R6-1L	54X18	6.75						ONE WAY ARROW (LEFT)
R6-1R	54X18	6.75						ONE WAY ARROW (RIGHT)
R6-2L	24X30	5.00						ONE WAY (LEFT)
R6-2R	24X30	5.00						ONE WAY (RIGHT)
R9-9	24X12	2.00						SIDEWALK CLOSED
R9-11L	24X18	3.00						SIDEWALK CLOSED AHEAD, (ARROW LEFT) CROSS HERE
R9-11R	24X18	3.00						SIDEWALK CLOSED AHEAD, (ARROW RIGHT) CROSS HERE
R10-6	24X36	6.00						STOP HERE ON RED (45° ARROW)
R11-2	48X30	10.00	2	20			29	ROAD CLOSED
R11-3a	60X30	12.50						ROAD CLOSED XX MILES AHEAD LOCAL TRAFFIC ONLY
R11-4	60X30	12.50						ROAD CLOSED TO THRU TRAFFIC
CONST-3A	60X48	20.00						FINE SIGN
CONST-3X	56X12	4.67						SPEEDING/PASSING (PLATE)
MISCELLANEOUS SIGNS								
CONST-5	48X36	12.00						POINT OF PRESENCE
CONST-5	96X48	32.00	2	64			70	POINT OF PRESENCE
CONST-7	48X24	8.00						RATE OUR WORK ZONE
CONST-7	72X36	18.00	2	36			60	RATE OUR WORK ZONE
CONST-8	48X36	12.00	2	24			61	WORK ZONE NO PHONE ZONE

	TOTAL
616-10.05 CONSTRUCTION SIGNS	1018
616-10.10 RELOCATED SIGNS	0

ITEM NUMBER	TOTAL QTY	DESCRIPTION
6122008		IMPACT ATTENUATOR 40 MPH (SAND BARRELS)
6122009		IMPACT ATTENUATOR 45 MPH (SAND BARRELS)
6122010		IMPACT ATTENUATOR 50 MPH (SAND BARRELS)
6122012		IMPACT ATTENUATOR 55 MPH (SAND BARRELS)
6122014		IMPACT ATTENUATOR 60 MPH (SAND BARRELS)
6122017		IMPACT ATTENUATOR 65 MPH (SAND BARRELS)
6122019		IMPACT ATTENUATOR 70 MPH (SAND BARRELS)
6122020		REPLACEMENT SAND BARREL
6122030		IMPACT ATTENUATOR (RELOCATION)
6123000A	2	TRUCK OR TRAILER MOUNTED ATTENUATOR (TMA)
6161008		ADVANCED WARNING RAIL SYSTEM
6161012		BUOYS (BOATS KEEP OUT)
6161013		BUOYS (NO WAKE)
6161014		SPECIAL SIGN ASSEMBLY (BOATS KEEP OUT)
6161025	568	CHANNELIZER (TRIM LINE)
6161030	6	TYPE III MOVEABLE BARRICADE
6161033		DIRECTION INDICATOR BARRICADE
6161040		FLASHING ARROW PANEL
6161047		TYPE III OBJECT MARKER
6161051		WARNING LIGHT, TYPE A
6161052		WARNING LIGHT, TYPE B
6161053		WARNING LIGHT, TYPE C
6161055		SEQUENTIAL FLASHING WARNING LIGHT
6161070		TUBULAR MARKER
6161095		RADAR SPEED ADVISORY SYSTEM
6161096		CHANGEABLE MESSAGE SIGN, COMMISSION FURNISHED/RETAINED
6161098A	2	CHANGEABLE MESSAGE SIGN W/O COMM. INTERFACE, CONTRACTOR FURNISHED/RETAINED
6161099		CHANGEABLE MESSAGE SIGN WITH COMM. INTERFACE, CONTRACTOR FURNISHED/RETAINED
6162000A		WORK ZONE TRAFFIC SIGNAL SYSTEM
6162002		TEMPORARY LONG-TERM RUMBLE STRIPS
6162004	4	TEMPORARY SHORT-TERM RUMBLE STRIPS
6173600D		TEMPORARY TRAFFIC BARRIER CONTRACTOR FURNISHED/RETAINED
6173602B		TEMPORARY TRAFFIC BARRIER CONTRACTOR FURNISHED/COMMISSION RETAINED
6174000A		TEMP. TRAFFIC BARRIER HEIGHT TRANSITION
6175010A		RELOCATING TEMPORARY TRAFFIC BARRIER
6176000B		TEMPORARY TRAFFIC BARRIER COMMISSION FURNISHED/RETAINED
6177000B		TEMP. TRAFFIC BARRIER HEIGHT TRANSITION COMMISSION FURNISHED/RETAINED
6208064A		TEMPORARY RAISED PAVEMENT MARKER
9029400		TEMPORARY TRAFFIC SIGNALS
9029401		TEMPORARY TRAFFIC SIGNALS AND LIGHTING

SUMMARY OF QUANTITIES
SHEET 4 OF 4

STATE OF MISSOURI
RICHARD W. ORR
NUMBER PE-2002003397
PROFESSIONAL ENGINEER
THIS SHEET HAS BEEN SIGNED, SEALED AND DATED ELECTRONICALLY.

DATE PREPARED 8/19/2021
ROUTE 24 | STATE MO
DISTRICT NW | SHEET NO. 3
COUNTY CARROLL
JOB NO. J1P3302
CONTRACT ID.
PROJECT NO.
BRIDGE NO.

DESCRIPTION | DATE

MISSOURI HIGHWAYS AND TRANSPORTATION COMMISSION
105 WEST CAPITOL
JEFFERSON CITY, MO 65102
1-888-ASK-MODOT (1-888-275-6636)

IF A SEAL IS PRESENT ON THIS SHEET IT HAS BEEN ELECTRONICALLY SEALED AND DATED.

LEGEND

MODIFIED COLDMILLING

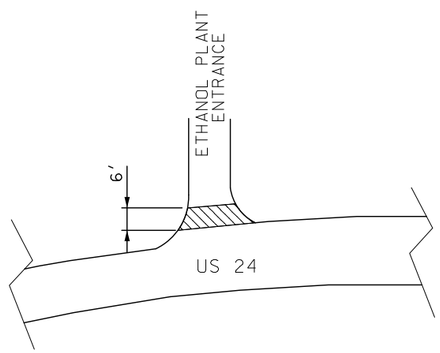

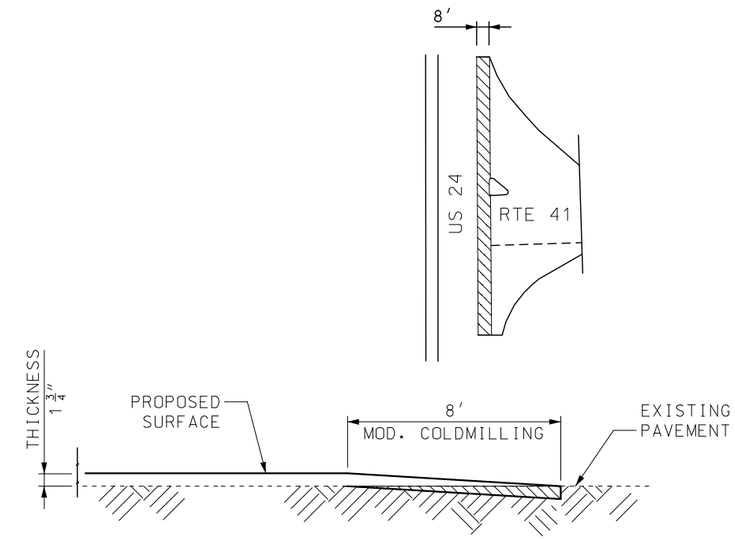

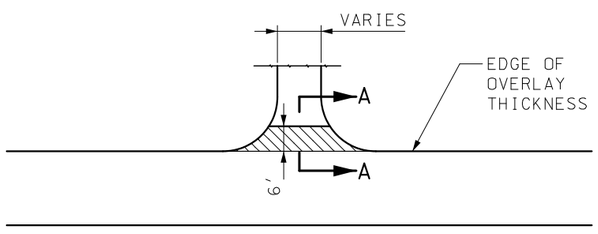

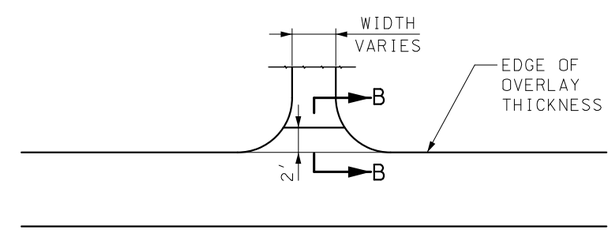

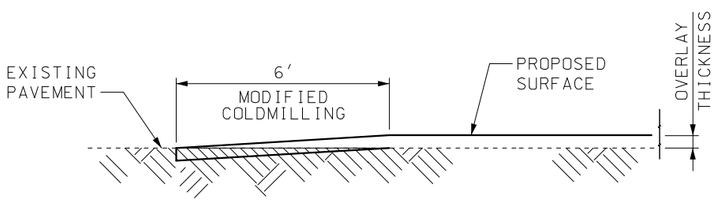

SECTION A-A
STATE ROAD INSTERSECTION
(MODIFIED COLDMILLED TRANSITION)

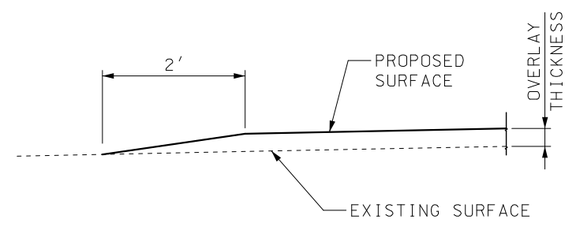

SECTION B-B
TYPICAL ENTRANCE
(FIELD ENTRANCE, DRIVEWAY, PRIVATE OR COUNTY ROAD)

NOT TO SCALE

TRANSITIONS
SPECIAL SHEET 1 OF 3

STATE OF MISSOURI
RICHARD W. ORR
NUMBER PE-2002003397
PROFESSIONAL ENGINEER

THIS SHEET HAS BEEN SIGNED, SEALED AND DATED ELECTRONICALLY.

DATE PREPARED	8/19/2021
ROUTE	24
STATE	MO
DISTRICT	NW
SHEET NO.	4
COUNTY	CARROLL
JOB NO.	J1P3302
CONTRACT ID.	
PROJECT NO.	
BRIDGE NO.	

DESCRIPTION	DATE

MISSOURI HIGHWAYS AND TRANSPORTATION COMMISSION

105 WEST CAPITOL
JEFFERSON CITY, MO 65102
1-888-ASK-MODOT (1-888-275-6636)

IF A SEAL IS PRESENT ON THIS SHEET IT HAS BEEN ELECTRONICALLY SEALED AND DATED.

REV.

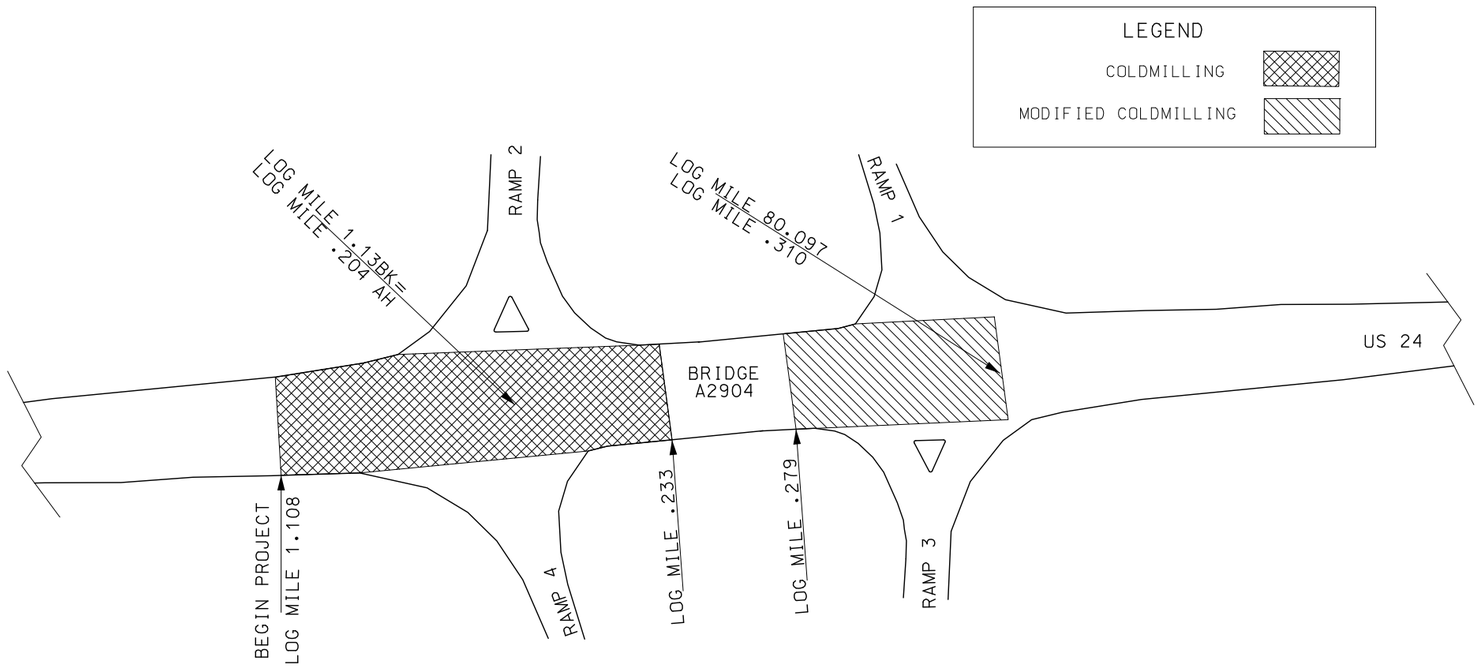

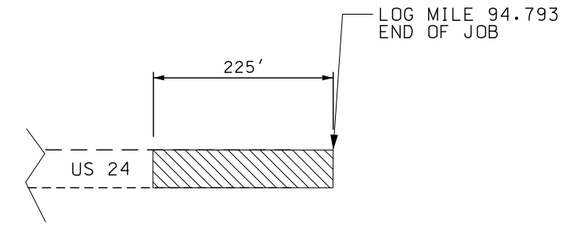

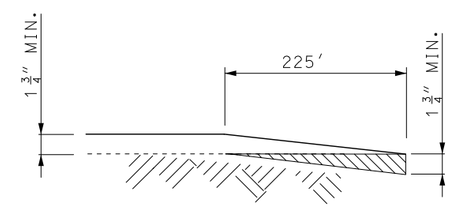

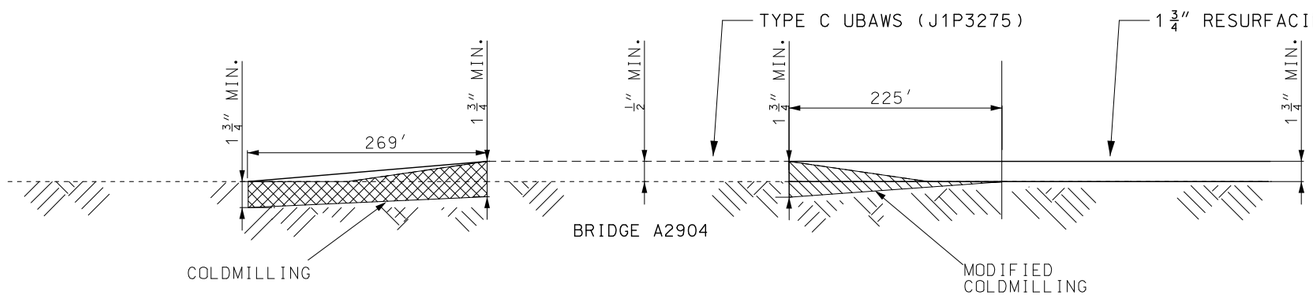

DEPTH TRANSITIONS

BEGINNING OF PROJECT

DEPTH TRANSITIONS

END OF PROJECT

NOT TO SCALE

TRANSITIONS
SPECIAL SHEET 2 OF 3

STATE OF MISSOURI
RICHARD W. ORR
NUMBER PE-2002003397
PROFESSIONAL ENGINEER

THIS SHEET HAS BEEN SIGNED, SEALED AND DATED ELECTRONICALLY.

DATE PREPARED	8/19/2021
ROUTE	24
STATE	MO
DISTRICT	NW
SHEET NO.	5
COUNTY	CARROLL
JOB NO.	J1P3302
CONTRACT ID.	
PROJECT NO.	
BRIDGE NO.	

DATE	DESCRIPTION

MISSOURI HIGHWAYS AND TRANSPORTATION COMMISSION

105 WEST CAPITOL
JEFFERSON CITY, MO 65102
1-888-ASK-MODOT (1-888-275-6636)

IF A SEAL IS PRESENT ON THIS SHEET IT HAS BEEN ELECTRONICALLY SEALED AND DATED.

REV.

LEGEND

MODIFIED COLDMILLING	
COLDMILLING	

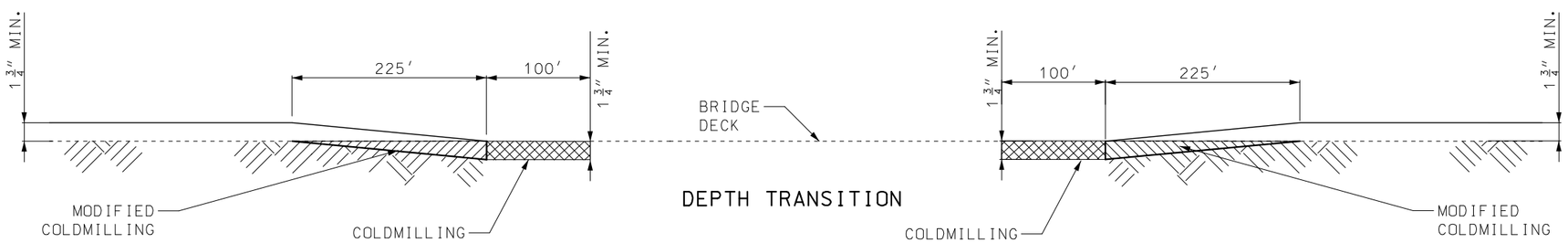

DEPTH TRANSITION

NOT TO SCALE

TRANSITIONS
SPECIAL SHEET 3 OF 3

STATE OF MISSOURI
RICHARD W. ORR
NUMBER PE-2002003397
PROFESSIONAL ENGINEER

THIS SHEET HAS BEEN SIGNED, SEALED AND DATED ELECTRONICALLY.

DATE PREPARED	8/19/2021
ROUTE	24
STATE	MO
DISTRICT	NW
SHEET NO.	6
COUNTY	CARROLL
JOB NO.	J1P3302
CONTRACT ID.	
PROJECT NO.	
BRIDGE NO.	

DATE	DESCRIPTION

MISSOURI HIGHWAYS AND TRANSPORTATION COMMISSION

105 WEST CAPITOL
JEFFERSON CITY, MO 65102
1-888-ASK-MODOT (1-888-275-6636)

IF A SEAL IS PRESENT ON THIS SHEET IT HAS BEEN ELECTRONICALLY SEALED AND DATED.

COUNTY ROAD AND CITY STREET INTERSECTIONS

SUPPLIMENT TO STANDARD PLANS 616.20

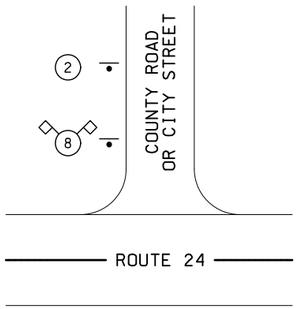

SIGN 2 IS REQUIRED FOR ALL PUBLIC ROAD APPROACHES TO THE PROJECT.

WHEN THE PILOT VEHICLE IS IN OPERATION, SIGN 58 IS REQUIRED AT ALL PUBLIC ROAD APPROACHES (WITHIN THE LIMITS OF THE LANE CLOSURE) THAT ARE OPEN TO TRAFFIC.

TYPICAL CHANNELIZER LAYOUT FOR RESURFACING

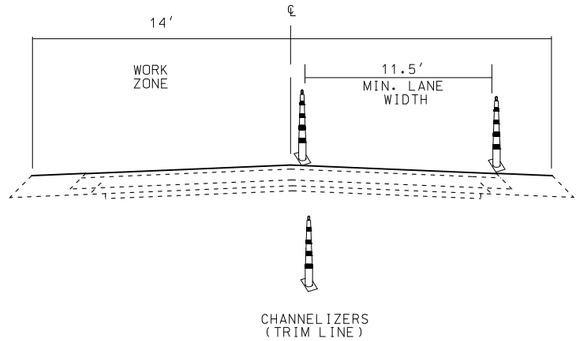

STATE HIGHWAY INTERSECTIONS

SUPPLIMENT TO STANDARD PLANS 616.20

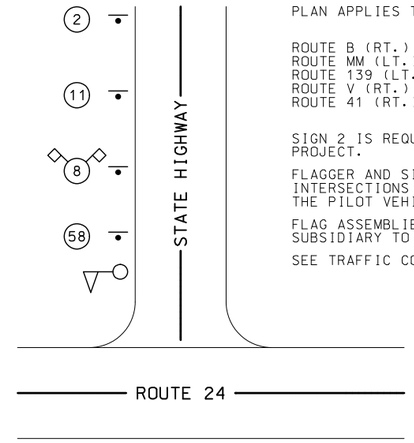

PLAN APPLIES TO THE FOLLOWING STATE HIGHWAYS:

ROUTE B (RT.)
ROUTE MM (LT.)
ROUTE 139 (LT.)
ROUTE V (RT.)
ROUTE 41 (RT.)

SIGN 2 IS REQUIRED FOR ALL PUBLIC ROAD APPROACHES TO THE PROJECT.

FLAGGER AND SIGNS 8 AND 11 ONLY REQUIRED AT STATE HIGHWAY INTERSECTIONS WITHIN THE LIMITS OF THE LANE CLOSURE WHILE THE PILOT VEHICLE IS IN OPERATION.

FLAG ASSEMBLIES FOR SIGN 8 (W020-7a.) ARE CONSIDERED SUBSIDIARY TO THE SIGN.

SEE TRAFFIC CONTROL SHEET 2 OF 6 FOR SIGN SPACING.

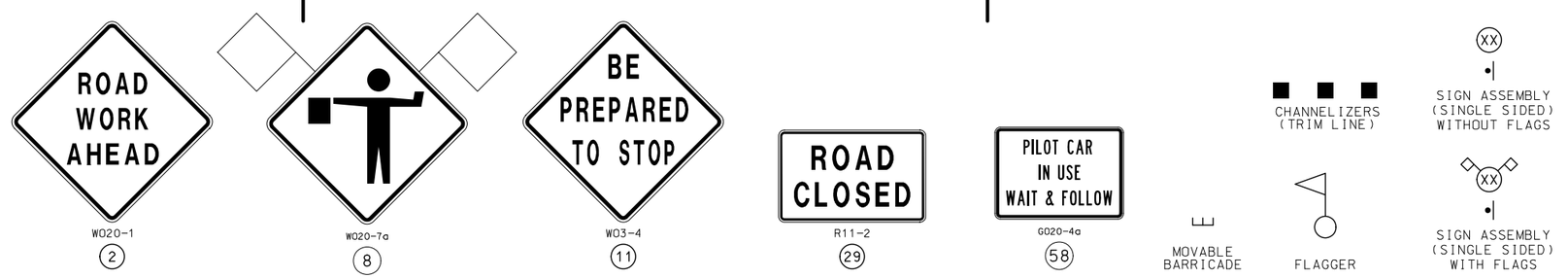

SPEED	SIGN SPACING (FT)	TAPER LENGTHS (FT)		OPTIONAL	CHANNELIZER SPACING (FT)	
NORMAL POSTED (MPH)	UNDIVIDED S	LANE T2	SHOULDER T1	BUFFER LENGTHS (FT) B	TAPER	BUFFER WORK AREA
≤ 35	200	245	70	280	35	40
40-45	350	540	150	400	40	80
50-55	500	660	185	560	50	80
60-70	1000	840	235	840	60	120

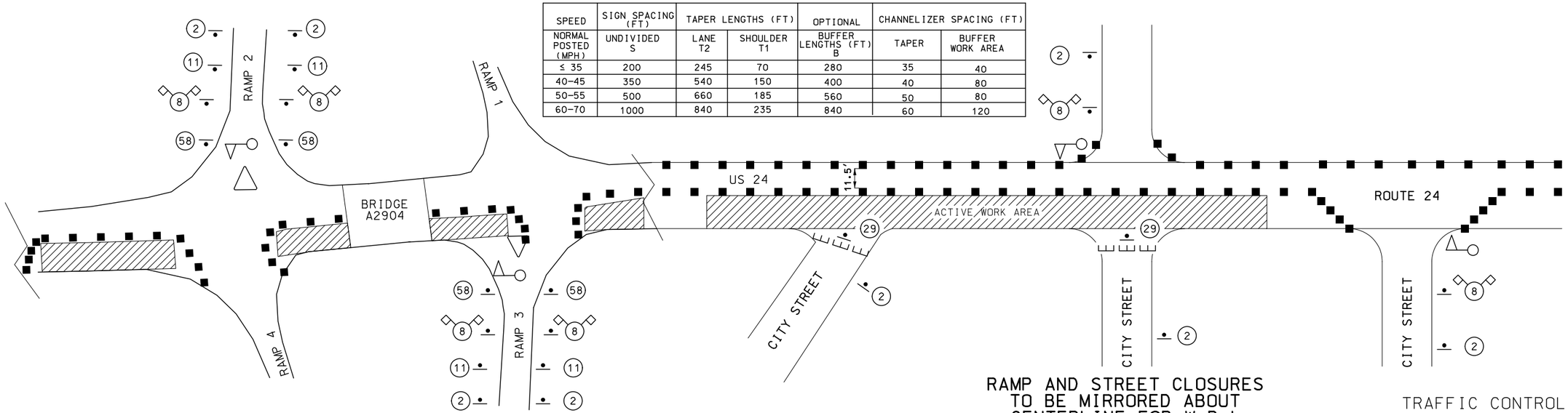

NOTES:
SEE STANDARD PLANS 616.20 TEMPORARY TRAFFIC CONTROL PLANS FOR SIGN AND CHANNELIZER SPACING.

NOT TO SCALE

RAMP AND STREET CLOSURES TO BE MIRRORED ABOUT CENTERLINE FOR W.B.L.

SUPPLIMENT TO STANDARD PLANS 616.20

TRAFFIC CONTROL SHEET 1 OF 2

STATE OF MISSOURI
RICHARD W. ORR
NUMBER PE-2002003397
PROFESSIONAL ENGINEER
THIS SHEET HAS BEEN SIGNED, SEALED AND DATED ELECTRONICALLY.

DATE PREPARED	
8/19/2021	
ROUTE 24	STATE MO
DISTRICT NW	SHEET NO. 7
COUNTY CARROLL	
JOB NO. J1P3302	
CONTRACT ID.	
PROJECT NO.	
BRIDGE NO.	

DATE	DESCRIPTION

IF A SEAL IS PRESENT ON THIS SHEET IT HAS BEEN ELECTRONICALLY SEALED AND DATED.

MISSOURI HIGHWAYS AND TRANSPORTATION COMMISSION
105 WEST CAPITOL
JEFFERSON CITY, MO 65102
1-888-ASK-MODOT (1-888-275-6636)

REV.

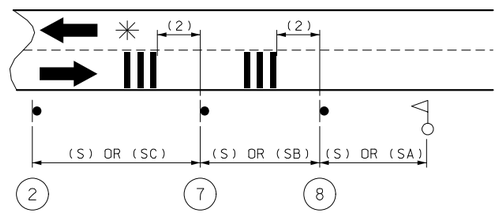

SHORT-TERM RUMBLE STRIPS		
PERMANENT POSTED (MPH)	DISTANCE (2)	SPACING (3)
0-45 (OPTIONAL)	120 FT	10 FT
50-55 (OPTIONAL)	160 FT	20 FT
60-70	200 FT	35 FT

✳ SECOND SET OF TEMPORARY RUMBLES OPTIONAL

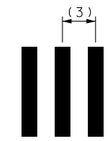

SPACING EXAMPLE

TEMPORARY RUMBLE STRIP MODIFICATION TO STANDARD 616.20

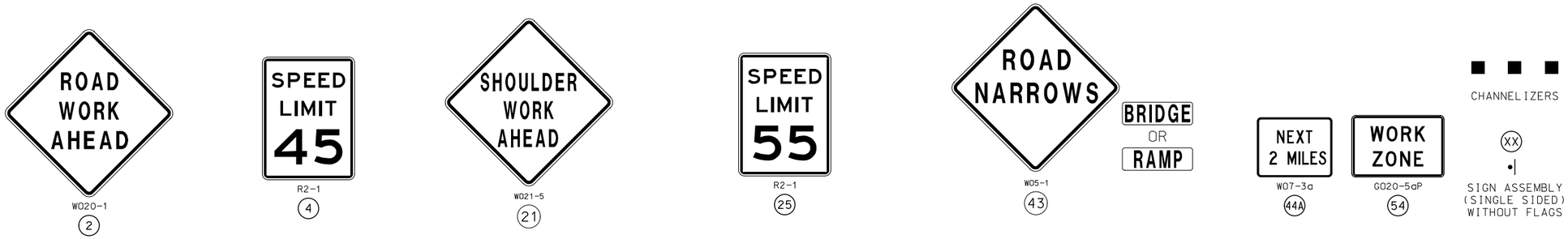

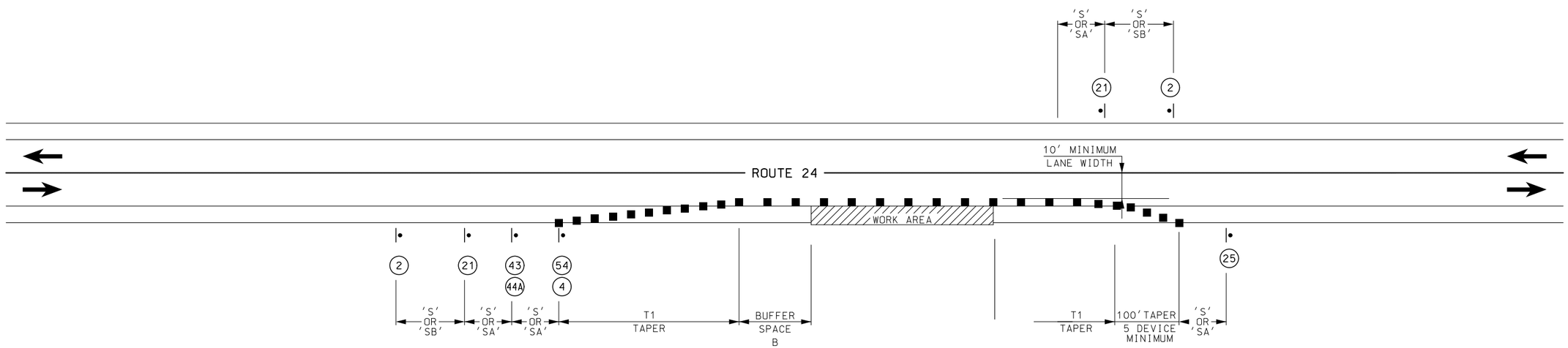

SPEED	SIGN SPACING (FT)	TAPER LENGTHS (FT)		OPTIONAL	CHANNELIZER SPACING (FT)	
NORMAL[1] POSTED (MPH)	UNDIVIDED (S)	LANE (T2)	SHOULDER (T1)	BUFFER LENGTHS (FT) (B)	TAPER	BUFFER WORK AREA
≤ 35	200	245	70	280	35	40
40-45	350	540	150	400	40	80
50-55	500	660	185	560	50	80
60-70	1000	840	235	840	60	120

NOTES:

[1] POSTED SPEED LIMIT PRIOR TO CONSTRUCTION.

SIGN NO. 2 IS NOT NEEDED IF SHOULDER WORK IS LOCATED WITHIN THE LIMITS OF AN ACTIVITY AREA WHERE ANOTHER SIGN NO. 2 IS ALREADY USED.

SIGN NO. 44A IS NOT REQUIRED FOR NARROW LANE SECTIONS LESS THAN ONE MILE.

MAXIMUM LENGTH OF SHOULDER WORK SHALL BE 2 MILES.

QUANTITIES ARE PROVIDED FOR 2-SHOULDER WORK OPERATIONS.

SEE TRAFFIC CONTROL SHEET 2 OF 6 FOR SIGN AND CHANNELIZER SPACING.

NOT TO SCALE

SHOULDER WORK ON UNDIVIDED HIGHWAY
SUPPLIMENT TO STANDARD PLAN 616.20

TRAFFIC CONTROL
SHEET 2 OF 2

STATE OF MISSOURI
RICHARD W. ORR
NUMBER PE-2002003397
PROFESSIONAL ENGINEER

THIS SHEET HAS BEEN SIGNED, SEALED AND DATED ELECTRONICALLY.

DATE PREPARED 9/28/2021	
ROUTE 24	STATE MO
DISTRICT NW	SHEET NO. 8
COUNTY CARROLL	
JOB NO. J1P3302	
CONTRACT ID.	
PROJECT NO.	
BRIDGE NO.	

DATE	DESCRIPTION

MISSOURI HIGHWAYS AND TRANSPORTATION COMMISSION
105 WEST CAPITOL
JEFFERSON CITY, MO 65102
1-888-ASK-MODOT (1-888-275-6636)

IF A SEAL IS PRESENT ON THIS SHEET IT HAS BEEN ELECTRONICALLY SEALED AND DATED.

REV.