DESIGN DESIGNATION

A.A.D.T. - 2022 = 15,602
A.A.D.T. - 2042 = 17,307
D.H.V. = 8.82%
T = 17.8%
V = 55 M.P.H.
D = 50.2%

FUNCTIONAL CLASSIFICATION - PRINCIPAL ARTERIAL

NO RIGHT-OF-WAY ACQUISITION

MISSOURI HIGHWAYS AND TRANSPORTATION COMMISSION

PLANS FOR PROPOSED STATE HIGHWAY

BUCHANAN COUNTY, MO AND DONIPHAN COUNTY, KS

JOB. NO. J1P3295
US-36 OVER
MISSOURI RIVER
BRIDGE IMPROVEMENTS,
LOW-SLUMP OVERLAY, AND
GUARDRAIL REPLACEMENT
LENGTH = 0.504 MILES

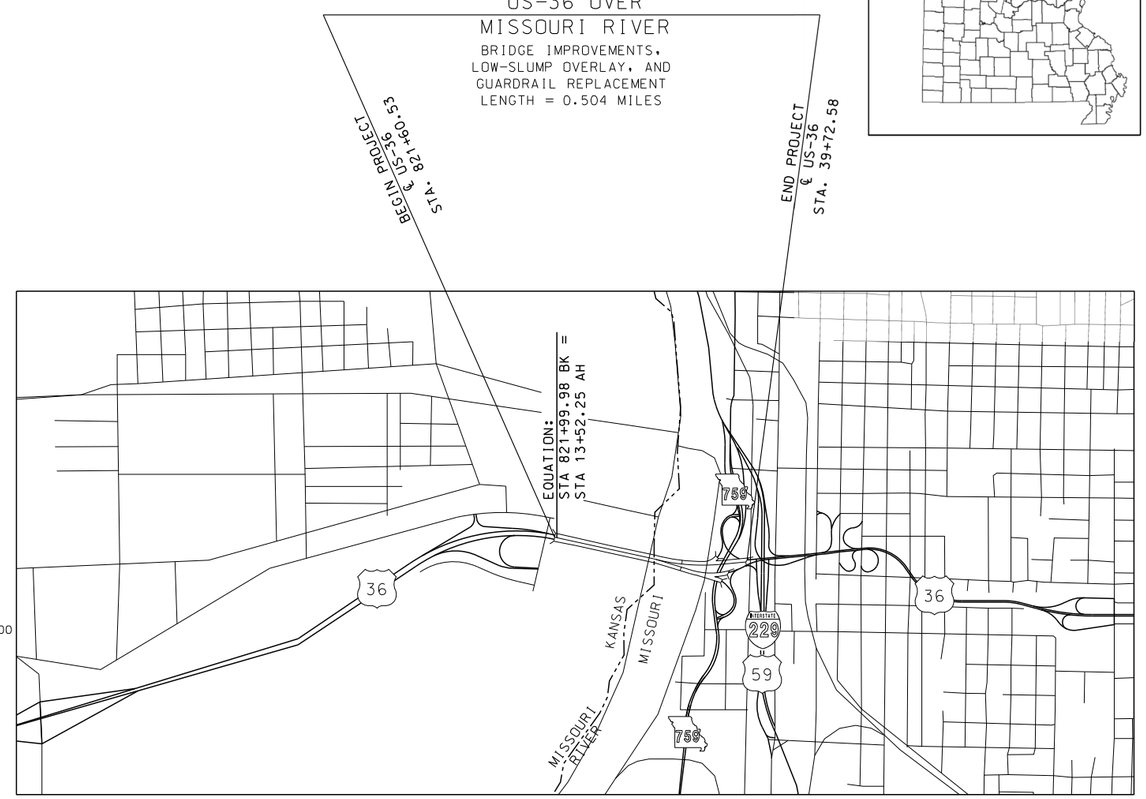

CONVENTIONAL SYMBOLS

(USED IN PLANS)

	EXISTING	NEW
BUILDINGS AND STRUCTURES		
GUARD RAIL		
GUARD CABLE		
CONCRETE RIGHT-OF-WAY MARKER		
STEEL RIGHT-OF-WAY MARKER		
LOCATION SURVEY MARKER		
UTILITIES		
FIBER OPTICS	-FO-	FO
OVERHEAD CABLE TV	-OTV-	OTV
UNDERGROUND CABLE TV	-UTV-	UTV
OVERHEAD TELEPHONE	-OT-	OT
UNDERGROUND TELEPHONE	-UT-	UT
OVERHEAD POWER	-OE-	OE
UNDERGROUND POWER	-UE-	UE
SANITARY SEWER	-S-	S
STORM SEWER	-SS-	SS
GAS	-G-	G
WATER	-W-	W
MANHOLE		SAN
FIRE HYDRANT		HYD
WATER VALVE		WV
WATER METER		WM
DROP INLET		DI
DITCH BLOCK		
GROUND MOUNTED SIGN		SIGN
LIGHT POLE		
H-FRAME POWER POLE		
TELEPHONE PEDESTAL		PED
FENCE		
CHAIN LINK	-V-	
WOVEN WIRE	-X-	
GATE POST		
BENCHMARK		BM

NOTE: DASHED OR OPEN SYMBOLS INDICATE EXISTING FEATURES

THE EXISTENCE AND APPROXIMATE LOCATION OF UTILITY FACILITIES KNOWN TO EXIST, AS SHOWN ON THE PLANS, ARE BASED ON THE BEST INFORMATION AVAILABLE TO THE COMMISSION AT THIS TIME. THIS INFORMATION IS PROVIDED BY THE COMMISSION "AS-IS" AND THE COMMISSION EXPRESSLY DISCLAIMS ANY REPRESENTATION OR WARRANTY AS TO THE COMPLETENESS, ACCURACY, OR SUITABILITY OF THE INFORMATION FOR ANY USE. RELIANCE UPON THIS INFORMATION IS DONE AT THE RISK AND PERIL OF THE USER, AND THE COMMISSION SHALL NOT BE LIABLE FOR ANY DAMAGES THAT MAY ARISE FROM ANY ERROR IN THE INFORMATION. IT IS, THEREFORE, THE RESPONSIBILITY OF THE CONTRACTOR TO VERIFY THE EXISTENCE, LOCATION AND STATUS OF ANY FACILITY. SUCH VERIFICATION INCLUDES DIRECT CONTACT WITH THE LISTED UTILITIES.

THIS PROJECT HAS NOT BEEN SURVEYED. THE INFORMATION SHOWN ON THE PLANS IS BASED ON AERIAL IMAGERY AND AS-BUILT PLANS. THIS INFORMATION IS PROVIDED BY THE COMMISSION "AS-IS" AND THE COMMISSION EXPRESSLY DISCLAIMS ANY REPRESENTATION OR WARRANTY AS TO THE COMPLETENESS, ACCURACY, OR SUITABILITY OF THE INFORMATION FOR ANY USE. RELIANCE UPON THIS INFORMATION IS DONE AT THE RISK AND PERIL OF THE USER, AND THE COMMISSION SHALL NOT BE LIABLE FOR ANY DAMAGES THAT MAY ARISE FROM ANY ERROR IN THE INFORMATION.

INDEX OF SHEETS

DESCRIPTION	SHEET NUMBER
TITLE SHEET	1
TYPICAL SECTIONS (TS)	2
QUANTITIES (QU) (4 SHEETS)	3
SPECIAL SHEETS (SS)	4 - 8
TRAFFIC CONTROL SHEETS (TC)	9 - 35
BRIDGE DRAWINGS (B)	
A36643	1 - 9
A36644	1 - 9
A36652	1 - 8
A36663	1 - 8
A38481	1 - 3

LENGTH OF PROJECT

BEGINNING OF PROJECT	STA. 821+60.53 (℄ US-36)
END OF PROJECT	STA. 39+72.58 (℄ US-36)
APPARENT LENGTH	-78,187.95 FEET
EQUATIONS AND EXCEPTIONS:	
℄ US-36 STA. 821+99.98 BK = STA. 13+52.25 AHD	80,847.73 FEET
TOTAL CORRECTIONS	+80,847.73 FEET
NET LENGTH OF PROJECT	2,659.78 FEET
STATE LENGTH	0.504 MILES
FOR INFORMATION ONLY ESTIMATED DISTURBED ACRES	0.04 ACRES

STATE OF MISSOURI
JOSHUA CASTOR
NUMBER PE-2004000772
PROFESSIONAL ENGINEER

THIS SHEET HAS BEEN SIGNED, SEALED AND DATED ELECTRONICALLY.

DATE PREPARED
9/19/2021

ROUTE	STATE
36	MO

DISTRICT	SHEET NO.
NW	1

COUNTY
BUCHANAN

JOB NO.
J1P3295

CONTRACT ID.

PROJECT NO.

BRIDGE NO.

DESCRIPTION	DATE

MISSOURI HIGHWAYS AND TRANSPORTATION COMMISSION
105 WEST CAPITOL
JEFFERSON CITY, MO 65102
1-888-ASK-MODOT (1-888-275-6636)

Hg Consult Inc engineers planners
9111 NE 79th Street K.C. MO 64158: (816)912-4720
Hg CONSULT, INC.
PRO. ENGINEER 2010005873

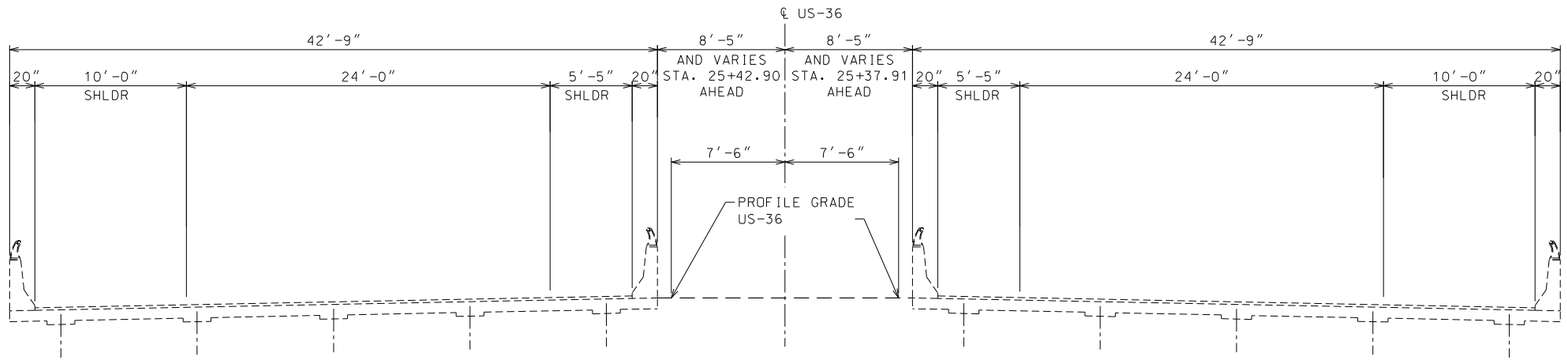

WEST BOUND LANES
(WBL)
STA. 13+52.25 TO STA. 25+42.91 ℄ US-36
(STA. 25+42.91 ℄ US-36 = STA. 18+53.26 ℄ WBL)
STA. 18+53.26 TO STA. 4+81.96 ℄ WBL
(STA. 4+81.96 ℄ WBL = STA. 39+18.61 ℄ US-36)

EXISTING TYPICAL SECTION

EAST BOUND LANES
(EBL)
STA. 13+52.25 TO STA. 25+37.91 ℄ US-36
(STA. 25+37.91 ℄ US-36 = STA. 7+53.20 ℄ EBL)
STA. 7+53.20 TO STA. 20+32.78 ℄ EBL
(STA. 20+32.78 ℄ EBL = STA. 37+97.14 ℄ US-36)

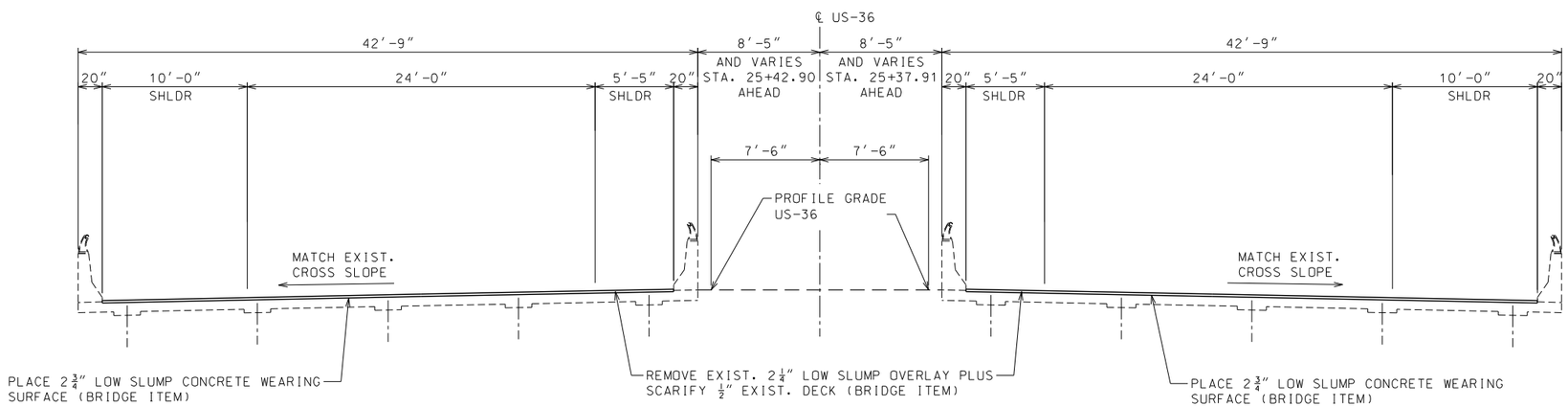

WEST BOUND LANES
(WBL)
STA. 13+52.25 TO STA. 25+42.91 ℄ US-36
(STA. 25+42.91 ℄ US-36 = STA. 18+53.26 ℄ WBL)
STA. 18+53.26 TO STA. 4+81.96 ℄ WBL
(STA. 4+81.96 ℄ WBL = STA. 39+18.61 ℄ US-36)

PROPOSED TYPICAL SECTION

EAST BOUND LANES
(EBL)
STA. 13+52.25 TO STA. 25+37.91 ℄ US-36
(STA. 25+37.91 ℄ US-36 = STA. 7+53.20 ℄ EBL)
STA. 7+53.20 TO STA. 20+32.78 ℄ EBL
(STA. 20+32.78 ℄ EBL = STA. 37+97.14 ℄ US-36)

NOT TO SCALE

TYPICAL SECTION

STATE OF MISSOURI
JOSHUA CASTOR
NUMBER PE-2004000772
PROFESSIONAL ENGINEER

THIS SHEET HAS BEEN SIGNED, SEALED AND DATED ELECTRONICALLY.

DATE PREPARED	
9/19/2021	
ROUTE	STATE
36	MO
DISTRICT	SHEET NO.
NW	2
COUNTY	
BUCHANAN	
JOB NO.	
J1P3295	
CONTRACT ID.	
PROJECT NO.	
BRIDGE NO.	

DATE	DESCRIPTION

MISSOURI HIGHWAYS AND TRANSPORTATION COMMISSION
105 WEST CAPITOL
JEFFERSON CITY, MO 65102
1-888-ASK-MODOT (1-888-275-6636)

Hg Consult Inc engineers planners
9111 NE 79th Street1 K.C. MO 64158 (816)912-4720
Hg CONSULT, INC.
PRO. ENGINEER 2010005873

G:\My Drive\Hg Projects\2021\21.017 Route 36 Bridge Rehab (Garver)\Civil\Sheet_Files\002_TYP_01_J1P3295_i5.dgn 4:21:02 PM 9/19/2021

MISSOURI HIGHWAYS AND TRANSPORTATION COMMISSION

REMOVAL OF IMPROVEMENTS

STATION	STATION	LOCATION	OFFSET	DESCRIPTION	UNITS	QUANTITY
4+86.18	4+19.18	WB US-36, BRIDGE A3665	CL	CONCRETE PAVEMENT	S.Y.	481
20+32.78	21+00.91	EB US-36, BRIDGE A3666	CL	CONCRETE PAVEMENT	S.Y.	269
821+66.95	821+99.95	WB US-36, BRIDGE A3664	LT	CONCRETE PAVEMENT	S.Y.	145
821+67.01	821+99.98	EB US-36, BRIDGE A3664	RT	CONCRETE PAVEMENT	S.Y.	146
817+77.87	821+89.84	NW QUAD BR. A3664	LT	GUARDRAIL, 2-TRANS. SECTIONS ✳	LF	412.5
817+67.26	821+89.84	SW QUAD BR. A3664	RT	GUARDRAIL, 2-TRANS. SECTIONS ✳	LF	425
4+28.81	5+48.19	CL RAMP 1	RT	GUARDRAIL, 1 TRANS. SECTION, END SECTION	LF	125
9+41.32	2+81.41	CL RAMP 4	RT	GUARDRAIL, END SECTION	LF	550
821+59.03	821+90.00	NW QUAD BR. A3664	LT	CONC. TRAFFIC BARRIER	LF	31
20+67.72	21+06.59	EB US-36, BRIDGE A3666	LT	CONC. TRAFFIC BARRIER	LF	50
4+66.18	4+29.21	WB US-36, BRIDGE A3665	LT	CONC. TRAFFIC BARRIER	LF	78
0+93+23	1+14.18	RAMP 3, BRIDGE A3850	RT	CONC. TRAFFIC BARRIER	LF	37
AS DIRECTED BY THE ENGINEER				CONCRETE SLOPE PROTECTION	SY	100
821+79.30	821+79.30	US-36	LT	CONCRETE GUTTER INLET	EA	1
821+79.57	821+79.57	US-36	RT	CONCRETE GUTTER INLET	EA	1
821+79.44	821+79.44	US-36	CL	15" PIPE	LF	250
						1 LUMP SUM

✳ TO REMAIN PROPERTY OF KDOT, SEE JOB SPECIAL PROVISIONS

SEEDING, COOL SEASON MIX

STATION	STATION	LOCATION	SEEDING (AC)
821+64	821+87	WEST BRIDGE APPROACH	0.01
821+64	821+87	EAST BRIDGE APPROACH	0.03
		SUBTOTAL	0.04
		TOTAL	0.1

ADDITIONAL MOBILIZATION FOR SEEDING
2 EACH

CLEARING AND GRUBBING
1 ACRE

MOBILIZATION
1 LUMP SUM

SHAPING SLOPES

STATION	STATION	LOCATION	SIDE	SHAPING SLOPES CLASS III
				100F
3+93.43	4+73.88	CL RAMP 1	RT	0.8
5+10.97	5+48.22	CL RAMP 1	RT	0.4
2+53.50	3+25.65	CL RAMP 4	RT	0.7
			TOTAL	2

RAILROAD PLAN SUBMITTAL
1 LUMP SUM

GUARDRAIL

BRIDGE	QUADRANT	LOCATION	SIDE	MGS VERTICAL CONCRETE BARRIER TRANSITION	MGS GUARDRAIL	MGS GUARDRAIL (8' POSTS)	TYPE A CRASHWORTHY END TERMINAL (MASH)
				(EA)	(LIN. FT.)	(LIN. FT.)	(EA)
A3664	NW	℄ US-36	LT	2	337.5		
A3664	SW	℄ US-36	RT	2	350.0		
A3848	NW	℄ RAMP 1	RT	1		37.5	1
		℄ RAMP 4	RT			500	1
			SUBTOTAL	5	687.5	537.5	2
			TOTALS	5	688	538	2

ROCK FILL

STATION	STATION	LOCATION	FURNISHING ROCK FILL (CU. YD.)	PLACING ROCK FILL (CU. YD.)	REMARKS
105+55	107+85	MO-759 NBL	67	67	TO BE USED TO REPLACE CONCRETE SLOPE PROTECTION AS DIRECTED BY THE ENGINEER
		TOTALS	67	67	

PAVEMENT APPROACH

STATION	STATION	LOCATION	CONCRETE APPROACH PAVEMENT (SQ. YD.)	REMARKS
821+66.95	821+86.95	WB US-36	87.6	BRIDGE A3664
821+67.01	821+87.01	EB US-36	87.6	BRIDGE A3664
4+66.18	4+29.21	WB US-36	265.8	BRIDGE A3665
20+52.74	21+03.28	EB US-36	191.3	BRIDGE A3666
		TOTAL	632.3	

FLUME INLETS AND SLOPE DRAINS

STATION	STATION	LOCATION	SIDE	FLUME INLET	SLOPE DRAIN (STONE)
				(EA)	(LIN. FT.)
821+67.12	821+87.12	CL US-36	LT	1	40
821+67.12	821+87.12	CL US-36	RT	1	140
			TOTALS	2	180

CONCRETE BARRIER

FROM STATION	TO STATION	LOCATION	TYPE A CONCRETE BARRIER	TYPE B CONCRETE TRAFFIC BARRIER (MODIFIED)	REMARKS
			(LIN. FT.)	(LIN. FT.)	
821+59.03	821+90.00	CL US-36	31.0		BRIDGE A3664
20+51.40	21+03.13	BL EB US-36		50.0	BRIDGE A3666
5+06.67	4+29.21	BL WB US-36		77.5	BRIDGE A3665
0+93.23	1+31.01	BL RAMP 3		36.4	BRIDGE A3850
		TOTALS	31	164	

REMOVE AND REPLACE BARRIER CURB

STATION	STATION	ALIGN	LOCATION	LIN. FT.	REMARKS
817+58.10	817+66.03	CL US-36	EB ROSEPORT RD BRIDGE	7.8	SEE SPECIAL SHEET 5 OF 5 FOR DETAILS
817+72.28	817+79.87	CL US-36	WB ROSEPORT RD BRIDGE	7.8	SEE SPECIAL SHEET 5 OF 5 FOR DETAILS
			TOTAL	16	

SUMMARY OF QUANTITIES
SHEET 1 OF 4

STATE OF MISSOURI
JOSHUA CASTOR
NUMBER PE-2004000772
PROFESSIONAL ENGINEER

THIS SHEET HAS BEEN SIGNED, SEALED AND DATED ELECTRONICALLY.

DATE PREPARED 9/19/2021

ROUTE	STATE
36	MO
DISTRICT	SHEET NO.
NW	3

COUNTY: BUCHANAN
JOB NO.: J1P3295
CONTRACT ID.:
PROJECT NO.:
BRIDGE NO.:

DATE	DESCRIPTION

MISSOURI HIGHWAYS AND TRANSPORTATION COMMISSION
105 WEST CAPITOL
JEFFERSON CITY, MO 65102
1-888-ASK-MODOT (1-888-275-6636)

Hg Consult Inc engineers planners
9111 NE 79th Street K.C. MO 64158: (816)912-4720
Hg CONSULT, INC.
PRO. ENGINEER 2010005873

REV.

MISSOURI HIGHWAYS AND TRANSPORTATION COMMISSION

PERMANENT PAVEMENT MARKING

FROM STATION	ALIGNMENT	TO STATION	ALIGNMENT	LOCATION	HIGH BUILD WATERBORNE PAVEMENT MARKING PAINT, 6", WHITE TYPE L BEADS	HIGH BUILD WATERBORNE PAVEMENT MARKING PAINT, 6", WHITE TYPE L BEADS	HIGH BUILD WATERBORNE PAVEMENT MARKING PAINT, 6", WHITE TYPE L BEADS	HIGH BUILD WATERBORNE PAVEMENT MARKING PAINT, 4", YELLOW TYPE L BEADS	HIGH BUILD WATERBORNE PAVEMENT MARKING PAINT, 12", WHITE TYPE L BEADS	HIGH BUILD WATERBORNE PAVEMENT MARKING PAINT, 12", WHITE TYPE L BEADS	PREFORMED THERMOPLASTIC PAVEMENT MARKING		EXISTING PM REMOVAL BEFORE TC PHASES
											WHITE 24"	ARROW LT./RT.	
					SOLID	INTERMITTENT	DOTTED	SOLID	SOLID (GORE)	DOTTED	SOLID		(STRIPING)
					(LF)	(LF)	(LF)	(LF)	(LF)	(LF)	(LF)	(EA)	(LF)
818+00	CL US-36	820+96	CL US-36	WB US-36		74							
818+00	CL US-36	9+38	BL WB US-36	WB US-36	2503								1856
818+00	CL US-36	1+76	BL WB US-36	WB US-36				3276					734
818+00	CL US-36	59+60	CL US-36	WB US-36		1841							697
10+72	BL WB US-36	8+77	BL WB US-36	WB US-36			49						49
10+97	BL WB US-36	9+80	BL WB US-36	RAMP 1	117				63				21
8+77	BL WB US-36	3+90	BL WB US-36	WB US-36	424				63				487
3+31	BL WB US-36	45+81	CL US-36	WB US-36	519							1	
1+04	BL WB US-36	0+00	BL WB US-36	WB US-36	104						12		
44+62	CL US-36	46+25	CL US-36	WB US-36	165						36	1	
45+81	CL US-36	53+73	CL US-36	WB US-36						201			
45+94	CL US-36	53+72	CL US-36	WB US-36	789							2	
53+73	CL US-36	58+12	CL US-36	WB US-36	446								
25+88	BL EB US-36	44+17	CL US-36	MEDIAN US-36				259					
44+60	CL US-36	59+60	CL US-36	MEDIAN US-36				3073					
798+63	CL US-36	812+30	CL US-36	EB US-36	1342								
798+63	CL US-36	25+19	BL EB US-36	EB US-36				5612					3173
798+63	CL US-36	59+60	CL US-36	EB US-36		1844							
812+30	CL US-36	821+04	CL US-36	EB US-36		216							320
812+30	CL US-36	15+99	BL EB US-36	EB US-36	2990								340
0+00	BL RAMP 2	2+50	BL RAMP 2	RAMP 2	295				101				
14+51	BL EB US-36	17+02	BL EB US-36	EB US-36			63						
17+02	BL EB US-36	21+35	BL EB US-36	EB US-36	333				101				100
21+35	BL EB US-36	24+14	BL EB US-36	EB US-36						70			
21+61	BL EB US-36	23+92	BL EB US-36	EB US-36	232							1	
24+14	BL EB US-36	25+19	BL EB US-36	EB US-36	105						24		
25+57	BL EB US-36	44+51	CL US-36	EB US-36	183						24		
45+07	CL US-36	50+62	CL US-36	EB US-36	587								
50+62	CL US-36	57+26	CL US-36	EB US-36			169						
51+60	CL US-36	57+96	CL US-36	EB US-36	648								
104+37	BL MO-759	112+02	BL MO-759	MO-759	744	188		760					
SUBTOTAL					12,526	4163	280	12,980	328	271	96	5	7777
TOTAL					16,969			12,980	599		96	5	7777

SUMMARY OF QUANTITIES
SHEET 2 OF 4

STATE OF MISSOURI
JOSHUA CASTOR
NUMBER PE-2004000772
PROFESSIONAL ENGINEER

THIS SHEET HAS BEEN SIGNED, SEALED AND DATED ELECTRONICALLY.

DATE PREPARED 9/19/2021

ROUTE	STATE
36	MO
DISTRICT	SHEET NO.
NW	3

COUNTY: BUCHANAN

JOB NO. J1P3295

CONTRACT ID.

PROJECT NO.

BRIDGE NO.

DATE	DESCRIPTION

MISSOURI HIGHWAYS AND TRANSPORTATION COMMISSION
105 WEST CAPITOL
JEFFERSON CITY, MO 65102
1-888-ASK-MODOT (1-888-275-6636)

Hg Consult Inc engineers planners
9111 NE 79th Street K.C. MO 64158: (816)912-4720
Hg CONSULT, INC.
PRO. ENGINEER 2010005873

REV.

MISSOURI HIGHWAYS AND TRANSPORTATION COMMISSION

TEMPORARY TRAFFIC BARRIER								
FROM STATION	TO STATION	LOCATION	TEMPORARY TRAFFIC BARRIER CONTRACTOR FURNISHED/ RETAINED	RELOCATING TEMPORARY TRAFFIC BARRIER	IMPACT ATTEN. (45 MPH)	IMPACT ATTEN. (55 MPH)	RELOC. IMPACT ATTEN.	PHASE
			(LIN. FT.)	(LIN. FT.)	(EA.)	(EA.)	(EA.)	
821+60.5	2+12.6	WB US-36	2875		1			1
819+85.8	21+06.6	EB US-36	2747			1		1
821+60.5	2+13.8	WB US-36		2877			1	2
819+85.1	20+37.7	EB US-36		2681			1	2
TOTALS			5,622	5,558	1	1	2	

TEMPORARY PAVEMENT MARKING								
STAGE	FROM STATION	ALIGNMENT	TO STATION	ALIGNMENT	LOCATION	4" WHITE SOLID	4" YELLOW SOLID	REMOVAL AFTER PHASE
						(LF)	(LF)	(LF)
Phase 1	820+58	CL US-36	821+60	CL US-36	WB US-36	102		102
Phase 1	820+62	CL US-36	821+60	CL US-36	WB US-36		100	100
Phase 1	821+60	CL US-36	13+30	BL WB US-36	WB US-36	1754		
Phase 1	821+60	CL US-36	3+88	BL WB US-36	WB US-36		2698	
Phase 1	8+57	BL WB US-36	4+10	BL WB US-36	WB US-36	446		
Phase 1	3+88	BL WB US-36	3+11	BL WB US-36	WB US-36		77	77
Phase 1	3+11	BL WB US-36	0+00	BL WB US-36	WB US-36		311	311
Phase 1	1+76	BL WB US-36	1+04	BL WB US-36	WB US-36	71		71
Phase 1	0+00	BL WB US-36	0+00	BL WB US-36	WB US-36	12		12
Phase 1	44+60	CL US-36	48+82	CL US-36	WB US-36	869		869
Phase 1	49+18	CL US-36	59+43	CL US-36	WB US-36		1041	1041
Phase 1	798+63	CL US-36	813+07	CL US-36	EB US-36	1423		1423
Phase 1	812+21	CL US-36	813+07	CL US-36	EB US-36	85		85
Phase 1	812+35	CL US-36	818+64	CL US-36	EB US-36	620		620
Phase 1	818+64	CL US-36	821+61	CL US-36	EB US-36	297		297
Phase 1	818+64	CL US-36	821+61	CL US-36	EB US-36		296	296
Phase 1	821+61	CL US-36	21+00	BL EB US-36	EB US-36		2649	
Phase 1	821+61	CL US-36	21+00	BL EB US-36	EB US-36	2665		
Phase 1	21+00	BL EB US-36	25+19	BL EB US-36	EB US-36	418		418
Phase 1	21+00	BL EB US-36	22+19	BL EB US-36	EB US-36		115	115
Phase 1	22+19	BL EB US-36	24+20	BL EB US-36	EB US-36		202	202
Phase 1	104+49	BL MO-759	105+50	BL MO-759	MO-759	100		100
Phase 1	105+50	BL MO-759	107+91	BL MO-759	MO-759	236		236
Phase 1	107+91	BL MO-759	113+38	BL MO-759	MO-759	540		540
Phase 2	820+61	CL US-36	821+61	CL US-36	WB US-36		100	100
Phase 2	820+62	CL US-36	821+61	CL US-36	WB US-36	100		100
Phase 2	821+61	CL US-36	3+52	BL WB US-36	WB US-36	2737		2737
Phase 2	821+61	CL US-36	1+76	BL WB US-36	WB US-36		2916	2916
Phase 2	3+52	BL WB US-36	45+81	CL US-36	WB US-36	540		540
Phase 2	44+62	CL US-36	49+16	CL US-36	WB US-36	461		461
Phase 2	804+66	CL US-36	813+15	CL US-36	EB US-36	840		840
Phase 2	813+15	CL US-36	818+64	CL US-36	EB US-36	544		544
Phase 2	818+64	CL US-36	821+04	CL US-36	EB US-36	240		240
Phase 2	818+64	CL US-36	821+61	CL US-36	EB US-36		296	296
Phase 2	821+04	CL US-36	13+53	BL EB US-36	EB US-36	1881		1881
Phase 2	821+61	CL US-36	20+36	BL EB US-36	EB US-36		2506	2506
Phase 2	17+38	BL EB US-36	20+36	BL EB US-36	EB US-36	300		300
Phase 2	20+36	BL EB US-36	21+35	BL EB US-36	EB US-36	99		99
Phase 2	20+36	BL EB US-36	21+40	BL EB US-36	EB US-36		102	102
SUBTOTAL						17,380	13,409	20,577
TOTAL						30,789		20,577

SUMMARY OF QUANTITIES
SHEET 3 OF 4

STATE OF MISSOURI
JOSHUA CASTOR
NUMBER PE-2004000772
PROFESSIONAL ENGINEER

THIS SHEET HAS BEEN SIGNED, SEALED AND DATED ELECTRONICALLY.

DATE PREPARED 9/19/2021
ROUTE 36 | STATE MO
DISTRICT NW | SHEET NO. 3
COUNTY BUCHANAN
JOB NO. J1P3295
CONTRACT ID.
PROJECT NO.
BRIDGE NO.

DESCRIPTION | DATE

MISSOURI HIGHWAYS AND TRANSPORTATION COMMISSION
105 WEST CAPITOL
JEFFERSON CITY, MO 65102
1-888-ASK-MODOT (1-888-275-6636)

Hg Consult Inc engineers planners
9111 NE 79th Street K.C. MO 64158; (816)912-4720
Hg CONSULT, INC.
PRO. ENGINEER 2010005873

REV.

G:\My Drive\Hg Projects\2021\21.017 Route 36 Bridge Rehab (Garver)\Civil\Sheet_Files\003_QU_03_J1P3295_i1.dgn 4:21:06 PM 9/19/2021

EFFECTIVE: 04-01-2021

SIGN	SIZE IN.	AREA SQ.FT.	QTY EACH	TOTAL AREA SQ.FT.	QTY RELOC EACH	TOTAL RELOC SQ.FT.	SIGN NUM.	DESCRIPTION
WARNING SIGNS								
W01-1L	48X48	16.00						TURN (SYMBOL LEFT ARROW)
W01-1R	48X48	16.00						TURN (SYMBOL RIGHT ARROW)
W01-2L	48X48	16.00						CURVE (SYMBOL LEFT ARROW)
W01-2R	48X48	16.00						CURVE (SYMBOL RIGHT ARROW)
W01-3L	48X48	16.00	1	16.00			15	REVERSE TURN (SYMBOL LEFT ARROW)
W01-3R	48X48	16.00	1	16.00			15	REVERSE TURN (SYMBOL RIGHT ARROW)
W01-4L	48X48	16.00						REVERSE CURVE (SYMBOL LEFT ARROW)
W01-4R	48X48	16.00						REVERSE CURVE (SYMBOL RIGHT ARROW)
W01-4bL	48X48	16.00						DOUBLE ARROW REVERSE CURVE (SYMBOL LT ARROWS)
W01-4bR	48X48	16.00						DOUBLE ARROW REVERSE CURVE (SYMBOL RT ARROWS)
W01-4cL	48X48	16.00						TRIPLE ARROW REVERSE CURVE (SYMBOL LT ARROWS)
W01-4cR	48X48	16.00						TRIPLE ARROW REVERSE CURVE (SYMBOL RT ARROWS)
W01-6	60X30	12.50						HORIZONTAL ARROW (SYMBOL)
W01-6a	72X36	18.00						HORIZ. ARROW (SYMBOL ON PERMANENT BARRICADE)
W01-7	60X30	12.50						DOUBLE HEAD HORIZONTAL ARROW (SYMBOL)
W01-7a	72X36	18.00						DOUBLE HEAD HORIZ. ARROW (SYMBOL ON PERM. BARR.)
W01-8	18X24	3.00						CHEVRON (SYMBOL)
W01-8a	30X36	7.50						CHEVRON (SYMBOL FOR DIVIDED HIGHWAYS)
W03-1	48X48	16.00						STOP AHEAD (SYMBOL)
W03-2	48X48	16.00						YIELD AHEAD (SYMBOL)
W03-3	48X48	16.00						SIGNAL AHEAD (SYMBOL)
W03-4	48X48	16.00	1	16.00			11	BE PREPARED TO STOP
W03-5	48X48	16.00						SPEED LIMIT AHEAD
W04-1L	48X48	16.00						MERGE (SYMBOL FROM LEFT)
W04-1R	48X48	16.00						MERGE (SYMBOL FROM RIGHT)
W04-1aL	48X48	16.00	2	32.00			6A	MERGE (ARROW SYMBOL)
W04-1aR	48X48	16.00	1	16.00			6A	MERGE (ARROW SYMBOL)
W05-1	48X48	16.00						ROAD/BRIDGE/RAMP NARROWS
W05-3	48X48	16.00						ONE LANE BRIDGE
W05-5	48X48	16.00						NARROW LANES
W06-1	48X48	16.00						DIVIDED HIGHWAY (SYMBOL)
W06-2	48X48	16.00						DIVIDED HIGHWAY END (SYMBOL)
W06-3	48X48	16.00						TWO WAY TRAFFIC (SYMBOL)
W07-3a	30X24	5.00						NEXT XX MILES (PLAQUE)
W08-1	48X48	16.00						BUMP
W08-2	48X48	16.00						DIP
W08-3	48X48	16.00						PAVEMENT ENDS
W08-4	48X48	16.00						SOFT SHOULDER
W08-5	48X48	16.00						SLIPPERY WHEN WET (SYMBOL)
W08-6	48X48	16.00						TRUCK CROSSING (WITH FLAGS)
W08-6c	48X48	16.00						TRUCK ENTRANCE
W08-7	36X36	9.00						LOOSE GRAVEL
W08-7a	36X36	9.00						FRESH OIL/LOOSE GRAVEL
W08-9	48X48	16.00						LOW SHOULDER
W08-11	48X48	16.00						UNEVEN LANES
W08-12	48X48	16.00						NO CENTER LINE
W08-15	48X48	16.00						GROOVED PAVEMENT
W08-15P	30X24	5.00						MOTORCYCLE (PLAQUE)
W08-17	48X48	16.00						SHOULDER DROP-OFF (SYMBOL)
W08-17P	30X24	5.00						SHOULDER DROP-OFF (PLAQUE)
W10-1	42RND.	9.62						RAILROAD CROSSING
W012-1	24X24	4.00						DOUBLE DOWN ARROW (SYMBOL)
W012-2	48X48	16.00						LOW CLEARANCE (SYMBOL)
W012-2X	24X18	3.00						LOW CLEARANCE (PLAQUE)
W012-2a	84X24	14.00						OVERHEAD LOW CLEARANCE (FEET AND INCHES)
W012-4	120X60	50.00						LOW CLEARANCE XX FT XX IN XX MILES AHEAD
W012-5	120X60	50.00						WIDTH RESTRICTION XX FT XX IN XX MILES AHEAD
W013-1	30X30	6.25						ADVISORY SPEED (PLAQUE)
W016-2	30X24	5.00						XXX FEET (PLAQUE)
W016-3	30X24	5.00						X MILE (PLAQUE)
W020-1	48X48	16.00	8	128.00			2	ROAD/BRIDGE/RAMP WORK AHEAD
W020-2	48X48	16.00	3	48.00			18	DETOUR AHEAD
W020-3	48X48	16.00	4	64.00			20	ROAD CLOSED AHEAD
W020-4	48X48	16.00						ONE LANE ROAD AHEAD
W020-5	48X48	16.00	6	96.00			5	RIGHT/CENTER/LEFT LANE CLOSED AHEAD
W020-5a	48X48	16.00						2 RIGHT/CENTER/LEFT LANES CLOSED AHEAD
W020-6a	48X48	16.00	3	48.00			6	RIGHT/CENTER/LEFT LANE CLOSED
W020-7a	48X48	16.00						FLAGGER (SYMBOL, WITH FLAGS)
W021-2	36X36	9.00						FRESH OIL
W021-5	48X48	16.00						SHOULDER WORK AHEAD
W022-1	48X48	16.00						BLASTING ZONE AHEAD
W022-2	42X36	10.50						TURN OFF 2-WAY RADIO AND PHONE
W022-3	42X36	10.50						END BLASTING ZONE
G022-1	21X15	2.19						WET PAINT (ARROW PIVOTS)

SIGN	SIZE IN.	AREA SQ.FT.	QTY EACH	TOTAL SQ.FT.	QTY RELOC EACH	TOTAL RELOC SQ.FT.	SIGN NUM.	DESCRIPTION
GUIDE SIGNS								
E05-1	36X48	12.00						GORE EXIT
E05-2	48X36	12.00						EXIT OPEN
E05-2a	48X36	12.00						EXIT CLOSED
G020-1	60X24	10.00	5	50.00			1	ROAD WORK NEXT XX MILES
G020-2	48X24	8.00	4	32.00			26	END ROAD WORK
G020-4	36X18	4.50						PILOT CAR FOLLOW ME
G020-4a	42X30	8.75						PILOT CAR IN USE WAIT & FOLLOW
G020-4a	18X12	1.50						PILOT CAR IN USE WAIT & FOLLOW
G020-5aP	36X24	6.00	3	18.00			54	WORK ZONE (PLAQUE)
M04-8a	24X18	3.00	2	6.00			52	END DETOUR
M04-9L	48X36	12.00						DETOUR (LEFT ARROW)
M04-9R	48X36	12.00						DETOUR (RIGHT ARROW)
M04-9P	48X12	4.00						STREET NAME (PLAQUE)
M04-10L	48X18	6.00						DETOUR (ARROW LEFT)
M04-10R	48X18	6.00						DETOUR (ARROW RIGHT)
"G"	84X24	14.00	3	42.00			G	CLOSED (PLAQUE)
REGULATORY SIGNS								
R1-1	48X48	13.25						STOP
R1-2	48TRI.	6.93						YIELD
R1-2a	36X36	9.00						TO ONCOMING TRAFFIC (PLAQUE)
R1-3P	30X12	2.50						ALL WAY (PLAQUE)
R2-1	36X48	12.00						SPEED LIMIT XX
R3-1	48X48	16.00	1	16.00			57	NO RIGHT TURN (SYMBOL)
R3-2	48X48	16.00	3	48.00			56	NO LEFT TURN (SYMBOL)
R3-3	36X36	9.00						NO TURNS
R3-4	48X48	16.00						NO U-TURN (SYMBOL)
R3-7L	30X30	6.25	2	12.5			55	LEFT LANE MUST TURN LEFT
R3-7R	30X30	6.25						RIGHT LANE MUST TURN RIGHT
R4-1	36X48	12.00						DO NOT PASS
R4-2	36X48	12.00						PASS WITH CARE
R4-8a	36X48	12.00						KEEP LEFT (HORIZONTAL ARROW)
R4-7a	36X48	12.00						KEEP RIGHT (HORIZONTAL ARROW)
R5-1	30X30	6.25						DO NOT ENTER
R5-1a	36X24	6.00						WRONG WAY
R6-1L	54X18	6.75						ONE WAY ARROW (LEFT)
R6-1R	54X18	6.75						ONE WAY ARROW (RIGHT)
R6-2L	24X30	5.00						ONE WAY (LEFT)
R6-2R	24X30	5.00						ONE WAY (RIGHT)
R9-11L	24X18	3.00						SIDEWALK CLOSED AHEAD, (ARROW LEFT) CROSS HERE
R9-11R	24X18	3.00						SIDEWALK CLOSED AHEAD, (ARROW RIGHT) CROSS HERE
R10-6	24X36	6.00						STOP HERE ON RED (45° ARROW)
R11-2	48X30	10.00	10	100.00			29	ROAD CLOSED
R11-3a	60X30	12.50						ROAD CLOSED XX MILES AHEAD LOCAL TRAFFIC ONLY
R11-4	60X30	12.50						ROAD CLOSED TO THRU TRAFFIC
CONST-3A	60X48	20.00						FINE SIGN
CONST-3X	56X12	4.67						SPEEDING/PASSING (PLATE)
MISCELLANEOUS SIGNS								
W020-3A	48X48	16.00	2	64.00			20A	ROAD CLOSED 500 FT
CONST-5	96X48	32.00	3	96.00				POINT OF PRESENCE
CONST-7	72X36	18.00	3	54.00				RATE OUR WORK ZONE
SPECIAL	36X78	19.50	9	175.50			50A	DETOUR 759 STRAIGHT
SPECIAL	36X78	19.50	2	39.00			50B	DETOUR 759 LEFT
SPECIAL	36X78	19.50	2	39.00			50C	DETOUR 759 45 DEG RIGHT
SPECIAL	36X78	19.50	2	39.00			50D	DETOUR 759 LEFT AHEAD
SPECIAL	36X78	19.50	7	136.50			51A	DETOUR 229 STRAIGHT
SPECIAL	36X78	19.50	1	19.50			51B	DETOUR 229 45 DEG RIGHT
SPECIAL	36X78	19.50	3	58.50			51C	DETOUR 229 LEFT
SPECIAL	36X78	19.50	3	58.50			51D	DETOUR 229 LEFT AHEAD
SPECIAL	36X78	19.50	5	97.50			52A	DETOUR WEST 36 STRAIGHT
SPECIAL	36X78	19.50	3	58.50			52B	DETOUR WEST 36 LEFT
SPECIAL	36X78	19.50	3	58.50			52C	DETOUR WEST 36 LEFT AHEAD
SPECIAL	36X78	19.50	1	19.50			52D	DETOUR WEST 36 RIGHT
SPECIAL	36X78	19.50	1	19.50			52E	DETOUR WEST 36 RIGHT AHEAD
SPECIAL	36X78	19.50	1	19.50			52F	DETOUR WEST 36 45 DEG RIGHT
SPECIAL	36X78	19.50	6	117.00			53A	DETOUR NORTH 229 STRAIGHT
SPECIAL	36X78	19.50	2	39.00			53B	DETOUR NORTH 229 LEFT
SPECIAL	36X78	19.50	2	39.00			53C	DETOUR NORTH 229 RIGHT AHEAD
SPECIAL	36X78	19.50	1	19.50			53D	DETOUR NORTH 229 LEFT AHEAD

616-10.05 CONSTRUCTION SIGNS	TOTAL	2072
616-10.10 RELOCATED SIGNS	TOTAL	0

ITEM NUMBER	TOTAL QTY	DESCRIPTION
6122008		IMPACT ATTENUATOR 40 MPH (SAND BARRELS)
6122009	*	IMPACT ATTENUATOR 45 MPH (SAND BARRELS)
6122010		IMPACT ATTENUATOR 50 MPH (SAND BARRELS)
6122012	*	IMPACT ATTENUATOR 55 MPH (SAND BARRELS)
6122014		IMPACT ATTENUATOR 60 MPH (SAND BARRELS)
6122017		IMPACT ATTENUATOR 65 MPH (SAND BARRELS)
6122019		IMPACT ATTENUATOR 70 MPH (SAND BARRELS)
6122020	4	REPLACEMENT SAND BARREL
6122030	*	IMPACT ATTENUATOR (RELOCATION)
6123000A		TRUCK OR TRAILER MOUNTED ATTENUATOR (TMA)
6161008	6	ADVANCED WARNING RAIL SYSTEM
6161012		BUOYS (BOATS KEEP OUT)
6161013		BUOYS (NO WAKE)
6161014		SPECIAL SIGN ASSEMBLY (BOATS KEEP OUT)
6161025	151	CHANNELIZER (TRIM LINE)
6161030	10	TYPE III MOVEABLE BARRICADE
6161033		DIRECTION INDICATOR BARRICADE
6161040	3	FLASHING ARROW PANEL
6161047		TYPE III OBJECT MARKER
6161051		WARNING LIGHT, TYPE A
6161052		WARNING LIGHT, TYPE B
6161053		WARNING LIGHT, TYPE C
6161055		SEQUENTIAL FLASHING WARNING LIGHT
6161070	10	TUBULAR MARKER
6161095		RADAR SPEED ADVISORY SYSTEM
6161096		CHANGEABLE MESSAGE SIGN, COMMISSION FURNISHED/RETAINED
6161098A	4	CHANGEABLE MESSAGE SIGN W/O COMM. INTERFACE, CONTRACTOR FURNISHED/RETAINED
6161099		CHANGEABLE MESSAGE SIGN WITH COMM. INTERFACE, CONTRACTOR FURNISHED/RETAINED
6162000A		WORK ZONE TRAFFIC SIGNAL SYSTEM
6162002	16	TEMPORARY LONG-TERM RUMBLE STRIPS
6162004		TEMPORARY SHORT-TERM RUMBLE STRIPS
6173600D	*	TEMPORARY TRAFFIC BARRIER CONTRACTOR FURNISHED/RETAINED
6173602B		TEMPORARY TRAFFIC BARRIER CONTRACTOR FURNISHED/COMMISSION RETAINED
6174000A		TEMP. TRAFFIC BARRIER HEIGHT TRANSITION
6175010A	*	RELOCATING TEMPORARY TRAFFIC BARRIER
6176000B		TEMPORARY TRAFFIC BARRIER COMMISSION FURNISHED/RETAINED
6177000B		TEMP. TRAFFIC BARRIER HEIGHT TRANSITION COMMISSION FURNISHED/RETAINED
6208064A		TEMPORARY RAISED PAVEMENT MARKER
9029400		TEMPORARY TRAFFIC SIGNALS
9029401		TEMPORARY TRAFFIC SIGNALS AND LIGHTING

* SEE QUANTITY SHEET 3 OF 4

NOTE:
NO DIRECT PAYMENT TO BE PAID FOR RELOCATED SIGNS.

SUMMARY OF QUANTITIES
SHEET 4 OF 4

STATE OF MISSOURI
JOSHUA CASTOR
NUMBER PE-2004000772
PROFESSIONAL ENGINEER

THIS SHEET HAS BEEN SIGNED, SEALED AND DATED ELECTRONICALLY.

DATE PREPARED 9/19/2021
ROUTE 36 | STATE MO
DISTRICT NW | SHEET NO. 3
COUNTY BUCHANAN
JOB NO. J1P3295
CONTRACT ID.
PROJECT NO.
BRIDGE NO.

DESCRIPTION | DATE

MISSOURI HIGHWAYS AND TRANSPORTATION COMMISSION
105 WEST CAPITOL
JEFFERSON CITY, MO 65102
1-888-ASK-MODOT (1-888-275-6636)

Hg Consult Inc engineers planners
9111 NE 79th Street K.C. MO 64158; (816)912-4720
Hg CONSULT, INC.
PRO. ENGINEER 2010005873

REV.

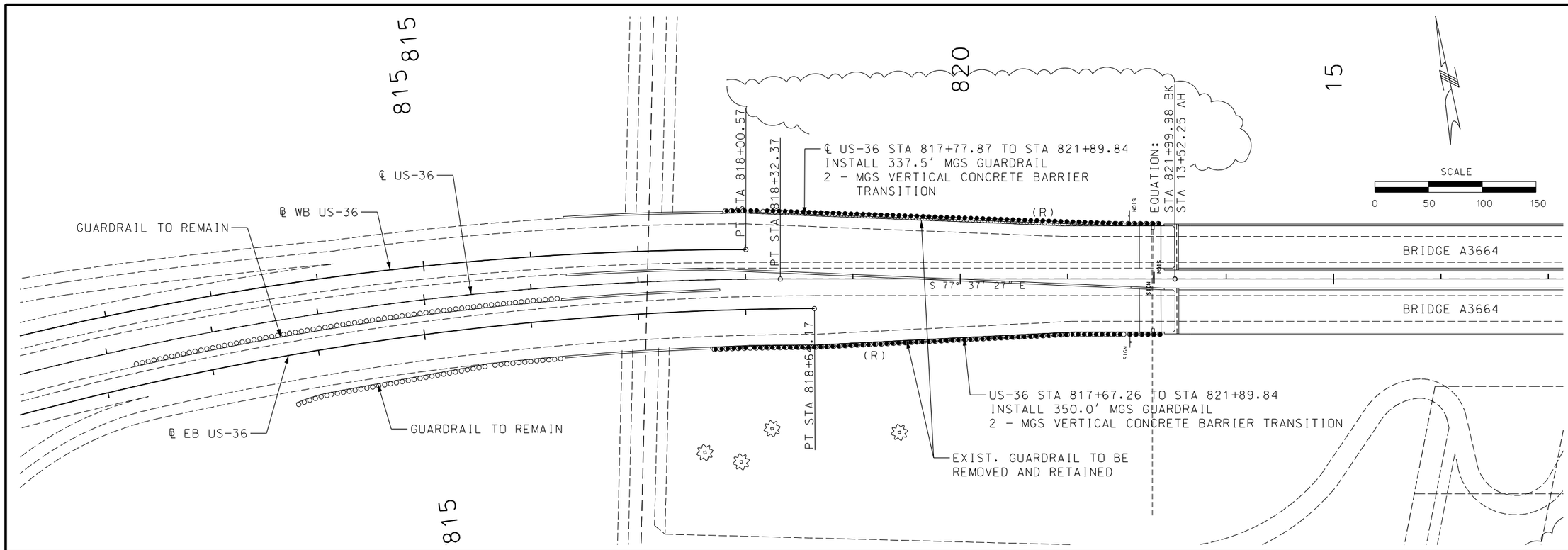

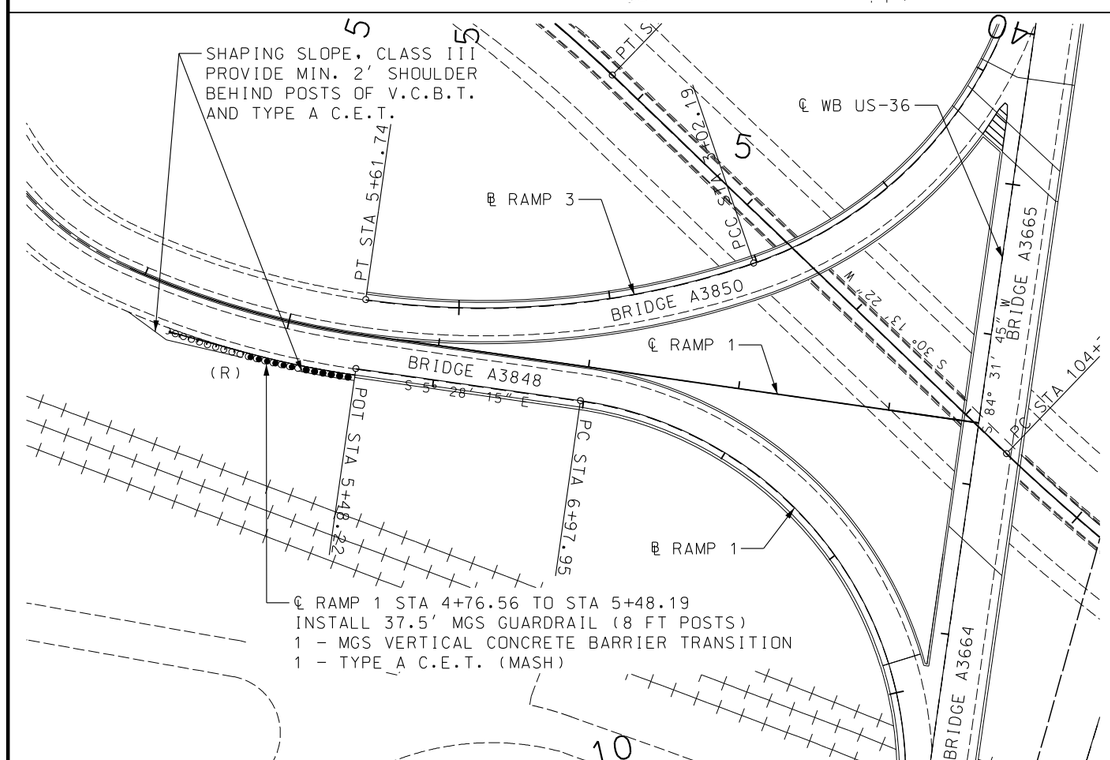

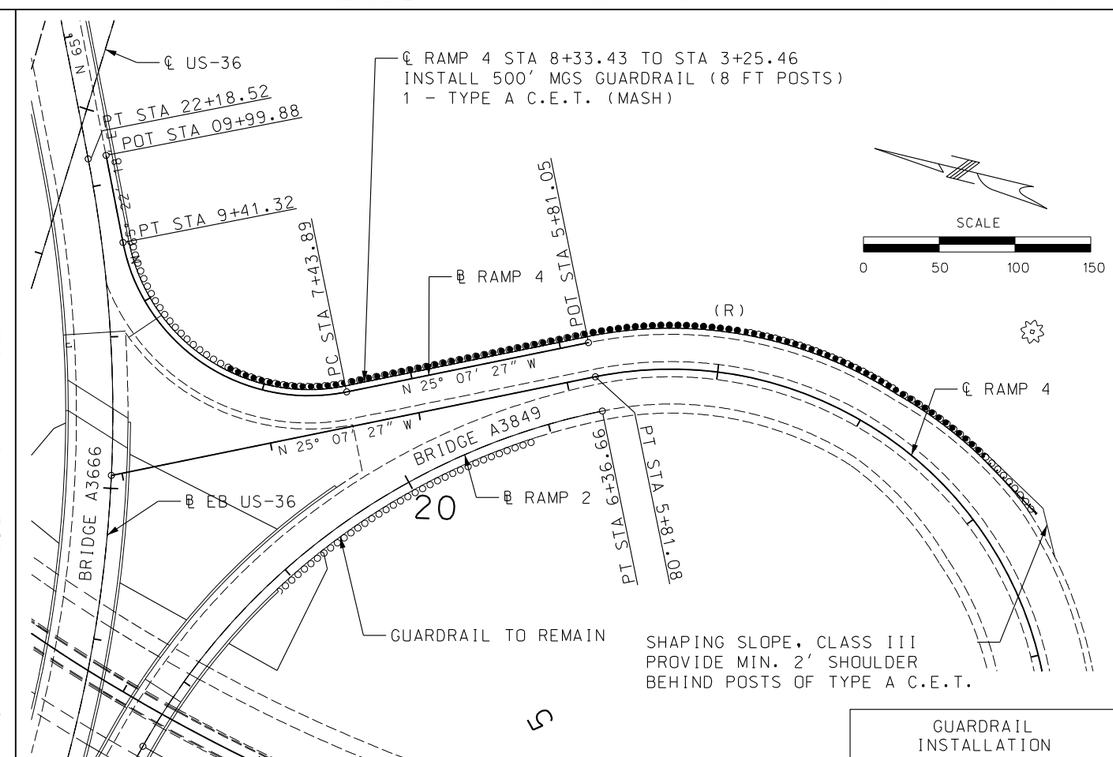

GUARDRAIL
INSTALLATION
SPECIAL SHEET 1 OF 5

STATE OF MISSOURI
JOSHUA CASTOR
NUMBER PE-2004000772
PROFESSIONAL ENGINEER

THIS SHEET HAS BEEN SIGNED, SEALED AND DATED ELECTRONICALLY.

DATE PREPARED	
9/19/2021	
ROUTE	STATE
36	MO
DISTRICT	SHEET NO.
NW	4
COUNTY	
BUCHANAN	
JOB NO.	
J1P3295	
CONTRACT ID.	
PROJECT NO.	
BRIDGE NO.	

DATE	DESCRIPTION

MISSOURI HIGHWAYS AND TRANSPORTATION COMMISSION
105 WEST CAPITOL
JEFFERSON CITY, MO 65102
1-888-ASK-MODOT (1-888-275-6636)

Hg Consult Inc engineers planners
9111 NE 79th Street; K.C. MO 64158; (816)912-4720
Hg CONSULT, INC.
PRO. ENGINEER 2010005873

G:\My Drive\Hg Projects\2021\21.017 Route 36 Bridge Rehab (Garver)\Civil\Sheet_Files\004_SS_01_J1P3295_i50.dgn 4:21:13 PM 9/19/2021

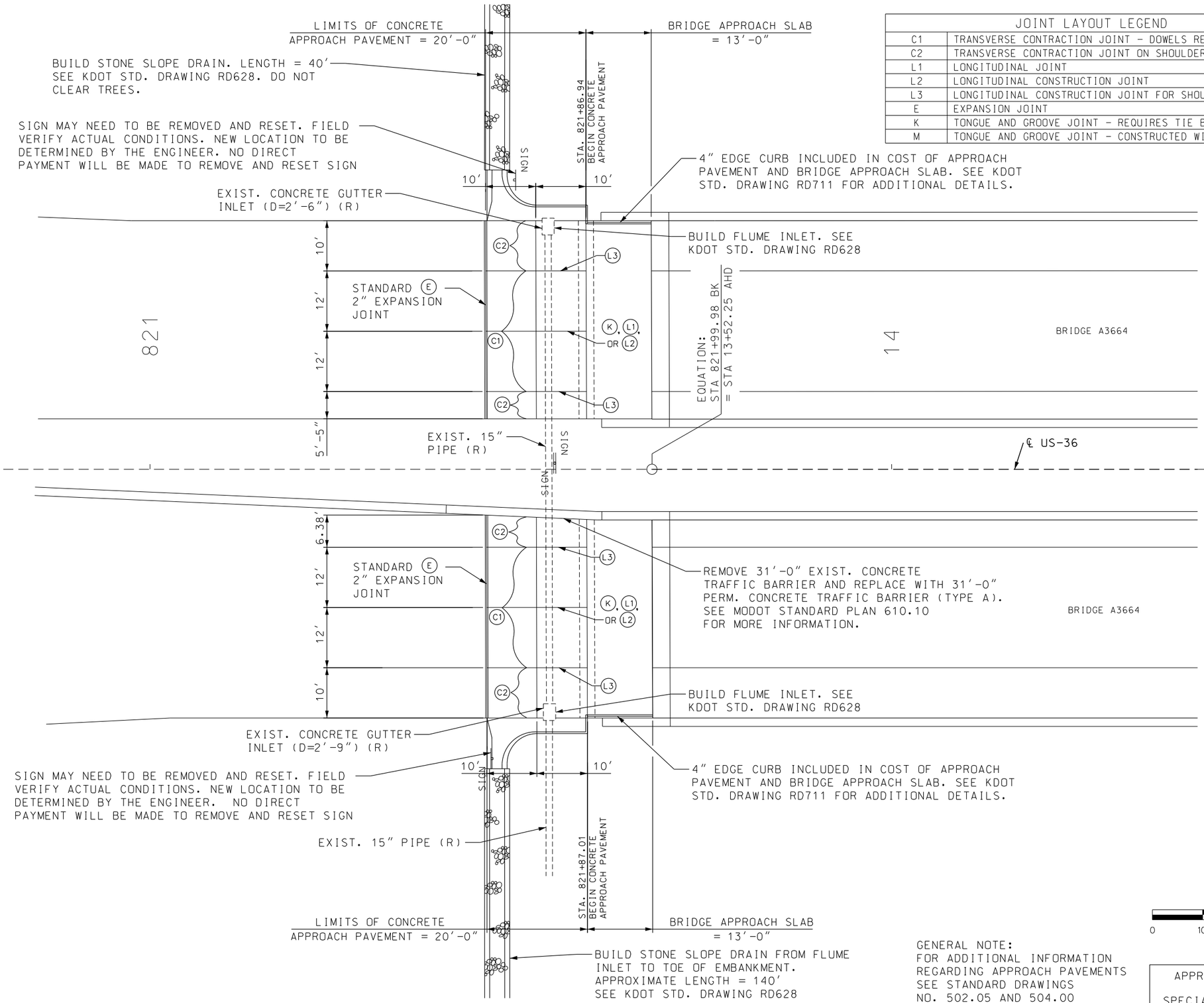

JOINT LAYOUT LEGEND	
C1	TRANSVERSE CONTRACTION JOINT - DOWELS REQUIRED
C2	TRANSVERSE CONTRACTION JOINT ON SHOULDERS
L1	LONGITUDINAL JOINT
L2	LONGITUDINAL CONSTRUCTION JOINT
L3	LONGITUDINAL CONSTRUCTION JOINT FOR SHOULDER
E	EXPANSION JOINT
K	TONGUE AND GROOVE JOINT - REQUIRES TIE BAR
M	TONGUE AND GROOVE JOINT - CONSTRUCTED WITHOUT TIE BARS

GENERAL NOTE:
FOR ADDITIONAL INFORMATION
REGARDING APPROACH PAVEMENTS
SEE STANDARD DRAWINGS
NO. 502.05 AND 504.00

APPROACH PAVEMENT
LAYOUT
SPECIAL SHEET 2 OF 5

STATE OF MISSOURI
JOSHUA CASTOR
NUMBER PE-2004000772
PROFESSIONAL ENGINEER

THIS SHEET HAS BEEN SIGNED, SEALED AND DATED ELECTRONICALLY.

DATE PREPARED	
9/19/2021	
ROUTE	STATE
36	MO
DISTRICT	SHEET NO.
NW	5
COUNTY	
BUCHANAN	
JOB NO.	
J1P3295	
CONTRACT ID.	
PROJECT NO.	
BRIDGE NO.	

DESCRIPTION

DATE

MISSOURI HIGHWAYS AND TRANSPORTATION COMMISSION
105 WEST CAPITOL
JEFFERSON CITY, MO 65102
1-888-ASK-MODOT (1-888-275-6636)

Hg Consult Inc engineers planners
9111 NE 79th Street1 K.C. MO 64158 (816)912-4720
Hg CONSULT, INC.
PRO. ENGINEER 2010005873

G:\My Drive\Hg Projects\2021\21.017 Route 36 Bridge Rehab (Garver)\Civil\Sheet_Files\005_SS_02_J1P3295_i10.dgn 4:21:15 PM 9/19/2021

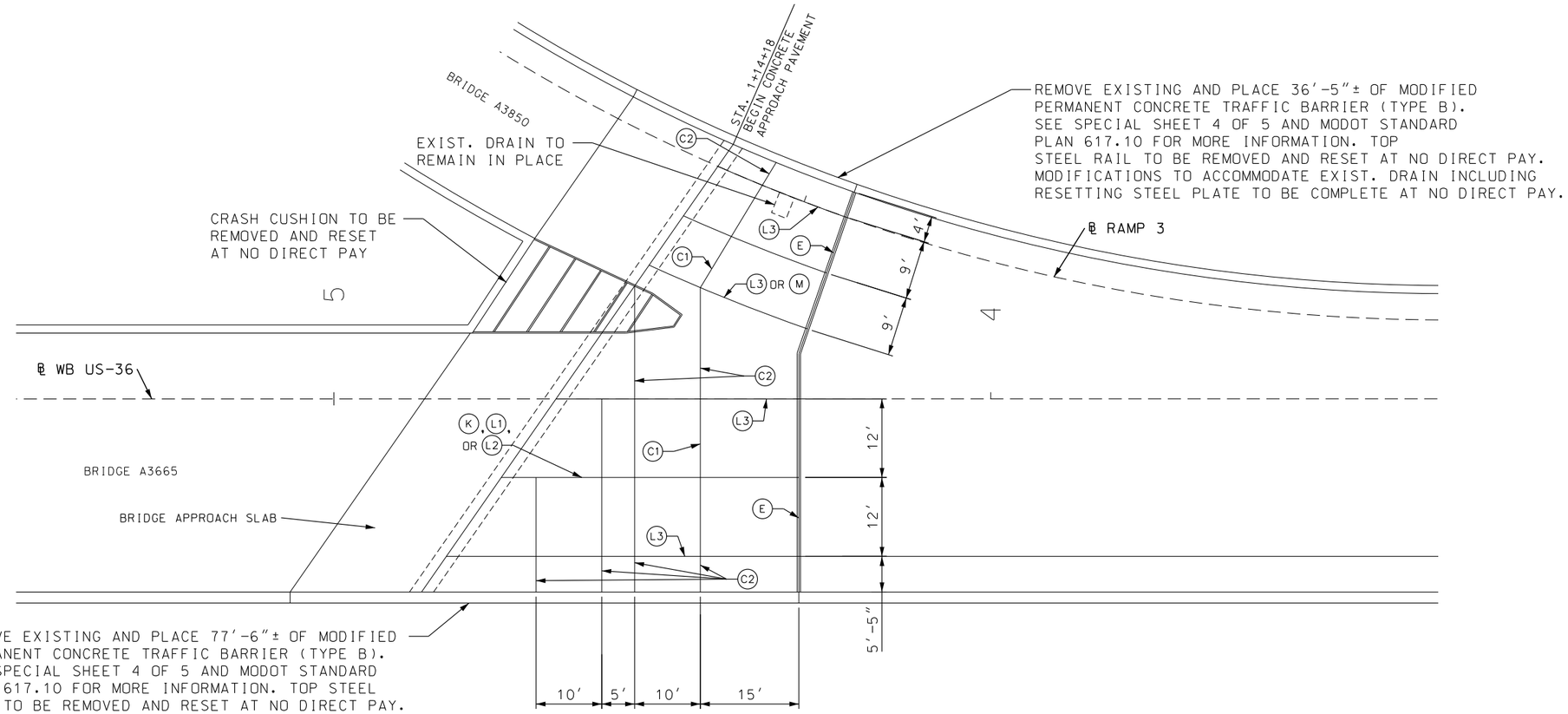

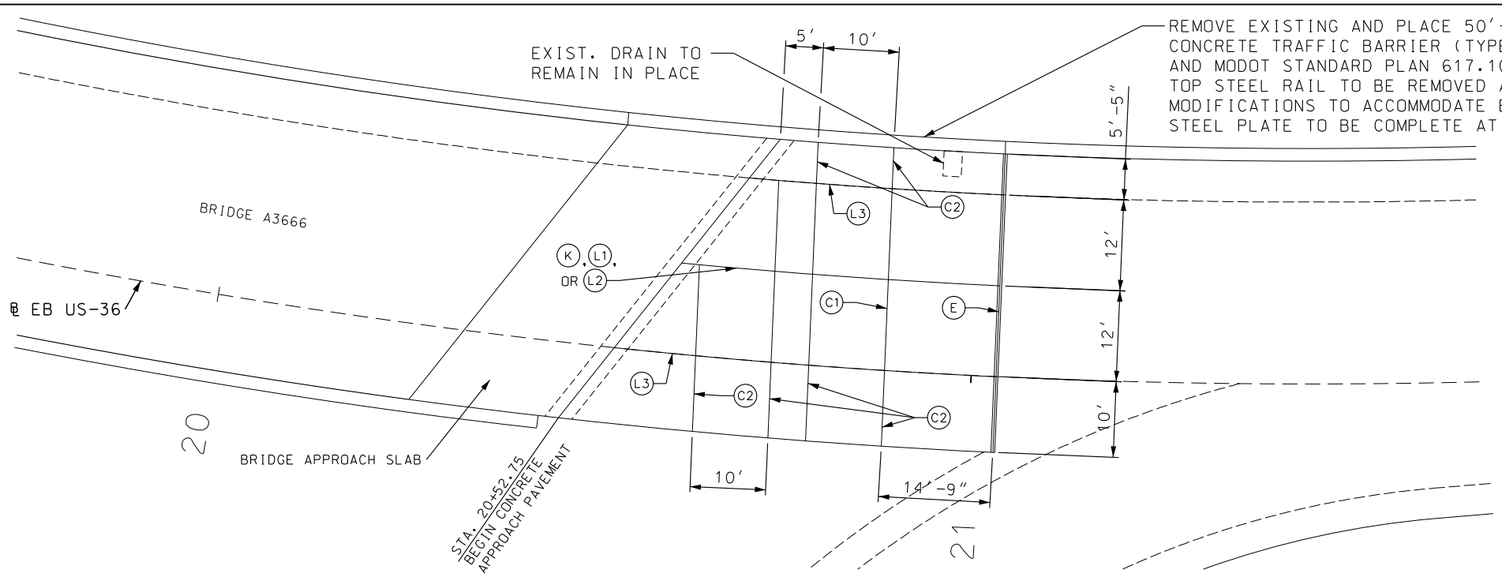

JOINT LAYOUT LEGEND	
C1	TRANSVERSE CONTRACTION JOINT - DOWELS REQUIRED
C2	TRANSVERSE CONTRACTION JOINT ON SHOULDERS
L1	LONGITUDINAL JOINT
L2	LONGITUDINAL CONSTRUCTION JOINT
L3	LONGITUDINAL CONSTRUCTION JOINT FOR SHOULDER
E	EXPANSION JOINT
K	TONGUE AND GROOVE JOINT - REQUIRES TIE BAR
M	TONGUE AND GROOVE JOINT - CONSTRUCTED WITHOUT TIE BARS

APPROACH PAVEMENT
LAYOUT
SPECIAL SHEET 3 OF 5

STATE OF MISSOURI
JOSHUA CASTOR
NUMBER PE-2004000772
PROFESSIONAL ENGINEER

THIS SHEET HAS BEEN SIGNED, SEALED AND DATED ELECTRONICALLY.

DATE PREPARED	9/19/2021
ROUTE	36
STATE	MO
DISTRICT	NW
SHEET NO.	6
COUNTY	BUCHANAN
JOB NO.	J1P3295
CONTRACT ID.	
PROJECT NO.	
BRIDGE NO.	

DESCRIPTION

DATE

MISSOURI HIGHWAYS AND TRANSPORTATION COMMISSION
105 WEST CAPITOL
JEFFERSON CITY, MO 65102
1-888-ASK-MODOT (1-888-275-6636)

Hg Consult Inc engineers planners
9111 NE 79th Street; K.C. MO 64158; (816)912-4720
Hg CONSULT, INC.
PRO. ENGINEER 2010005873

G:\My Drive\Hg Projects\2021\21.017 Route 36 Bridge Rehab (Garver)\Civil\Sheet_Files\006_SS_03_J1P3295_i10.dgn 4:21:16 PM 9/19/2021

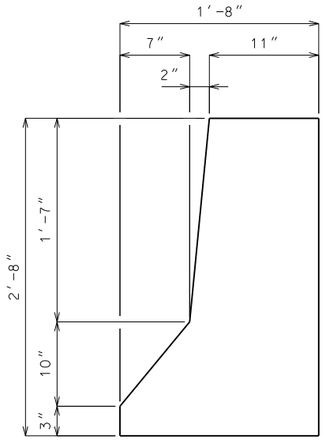

TYPE B (MODIFIED)
TYPIC AL SECTION

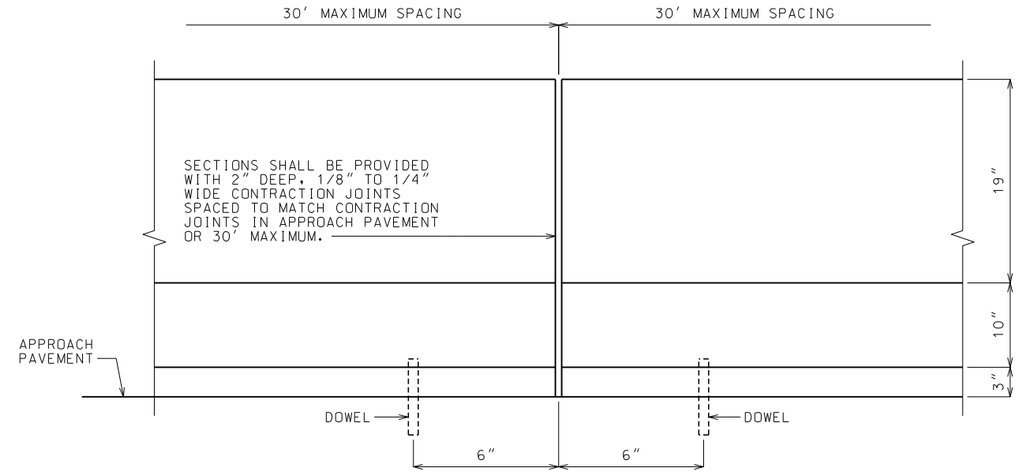

PART ELEVATION
(REINFORCEMENT NOT SHOWN FOR CLARITY)

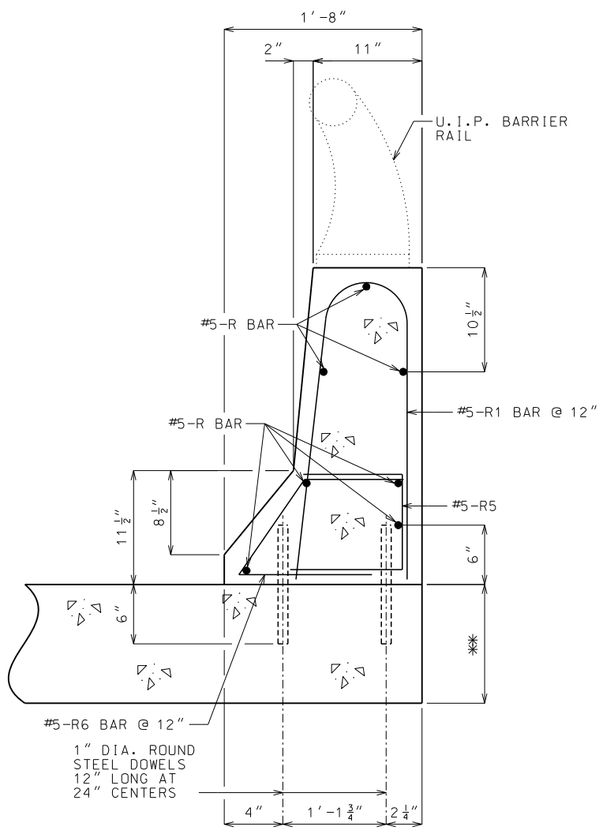

PART SECTION
THROUGH BARRIER
(MATCH EXISTING BARRIER DIMENSIONS)

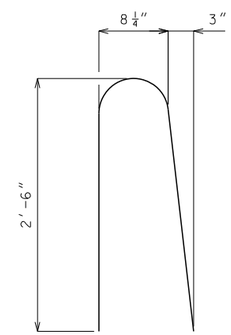

#5-R1

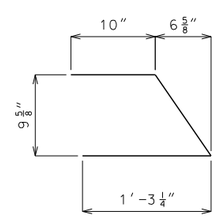

#5-R6

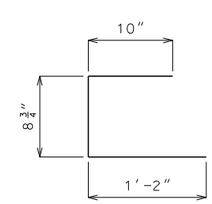

#5-R5

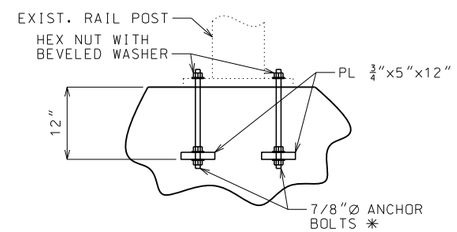

BASE PLATE REPLACEMENT DETAIL

* MATCH HOLES IN EXIST. BASE PLATE.

NOTES:

ALL REINFORCEMENT SHALL BE GRADE 60 EPOXY COATED.

NO DIRECT PAYMENT WILL BE MADE FOR REINFORCING STEEL.

NO DIRECT PAYMENT WILL BE MADE FOR RESETTING EXISTING RAIL POSTS.

MINIMUM CLEARANCE TO REINFORCING STEEL SHALL BE 1 1/2", UNLESS OTHERWISE SHOWN.

#8 REINFORCING BARS WITH AN EPOXY ANCHOR SYSTEM MAY BE SUBSTITUTED FOR SMOOTH 1" DIAMETER ROUND STEEL DOWELS.

BARRIER REPLACEMENT LOCATIONS ARE AT BRIDGE A3665 AND A3666 APPROACH SLABS.

CONCRETE SHALL BE CLASS B-1.

APPROACH SLAB
BARRIER DETAILS
SPECIAL SHEET 4 OF 5

STATE OF MISSOURI
DEREK S. SUTLER
NUMBER PE-2016009528
PROFESSIONAL ENGINEER

THIS SHEET HAS BEEN SIGNED, SEALED AND DATED ELECTRONICALLY

DATE PREPARED	
9/16/2021	
ROUTE	STATE
36	MO
DISTRICT	SHEET NO.
NW	7
COUNTY	
BUCHANAN	
JOB NO.	
J1P3295	
CONTRACT ID.	
PROJECT NO.	
BRIDGE NO.	

DATE	DESCRIPTION

MISSOURI HIGHWAYS AND TRANSPORTATION COMMISSION
105 WEST CAPITOL
JEFFERSON CITY, MO 65102
1-888-ASK-MODOT (1-888-275-6636)

GARVER, LLC.
7509 NW TIFFANY SPRINGS PARKWAY, SUITE 200
KANSAS CITY, MO 64153
PHONE: (816) 298-6465
CERTIFICATE OF AUTHORITY NO. 2008013090

L:\2021\21T04000 - MoDOT NW Route 36 Bridge Rehab\Drawings\BRIDGE\Roadway\007_SS_04_J1P3295_iX.dgn 4:25:19 PM 9/16/2021

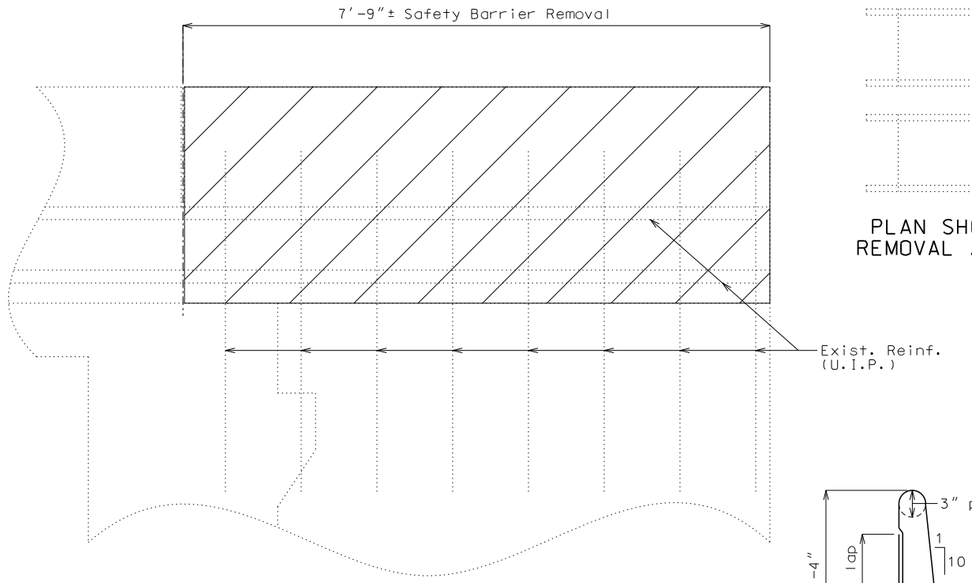

REMOVAL ELEVATION
(North Barrier of WB Bridge shown,
South Barrier of EB Bridge similar)

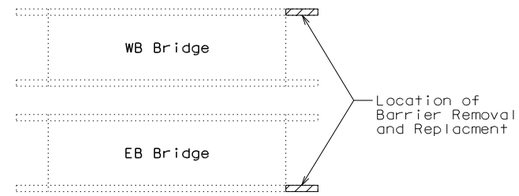

PLAN SHOWING BARRIER
REMOVAL AND REPLACMENT

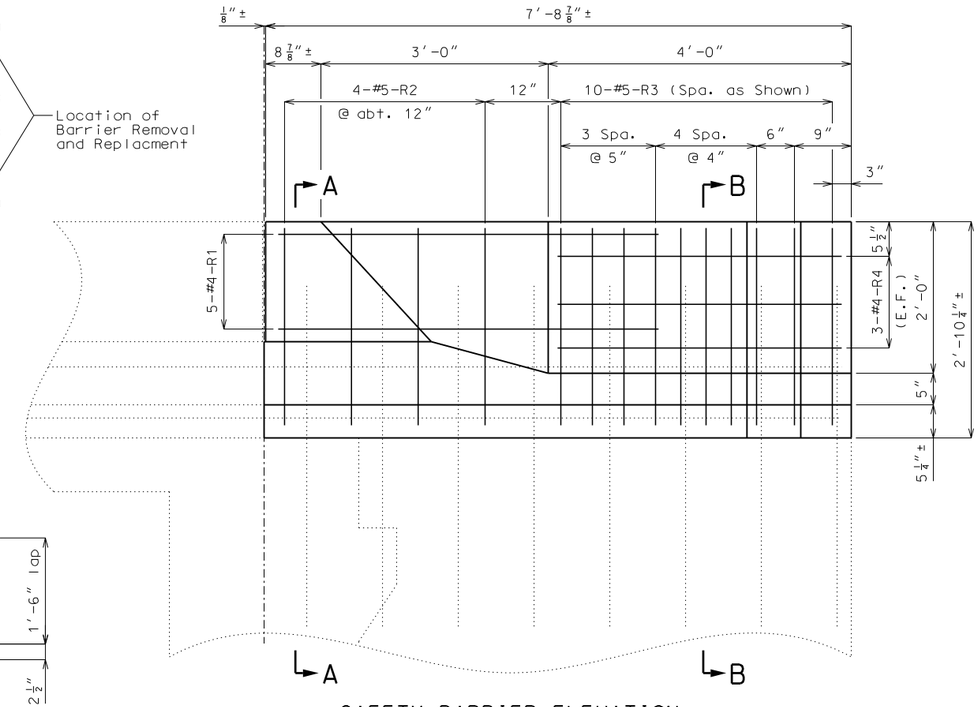

SAFETY BARRIER ELEVATION
(North Barrier of WB Bridge shown,
South Barrier of EB Bridge similar)

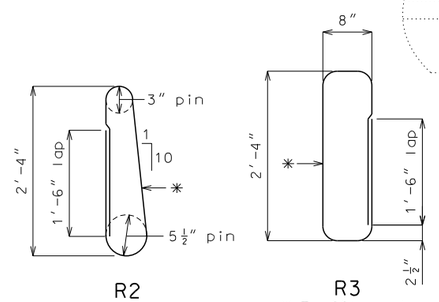

R2
(L = 6'-6")

R3
* Traffic side
(L = 7'-6")

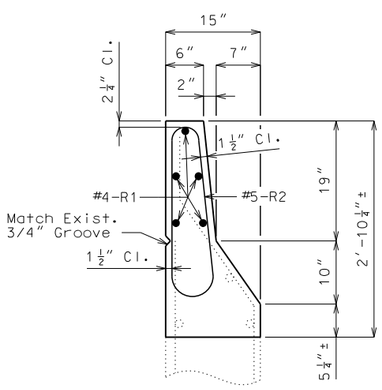

SECTION A-A

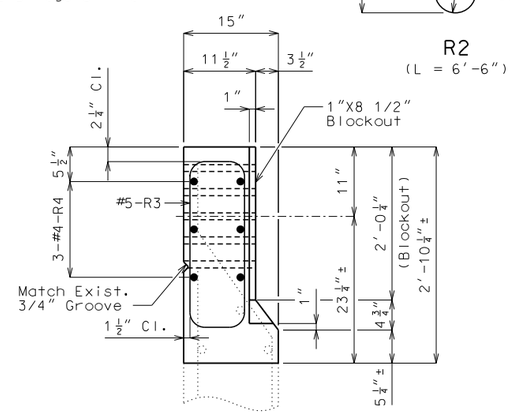

SECTION B-B

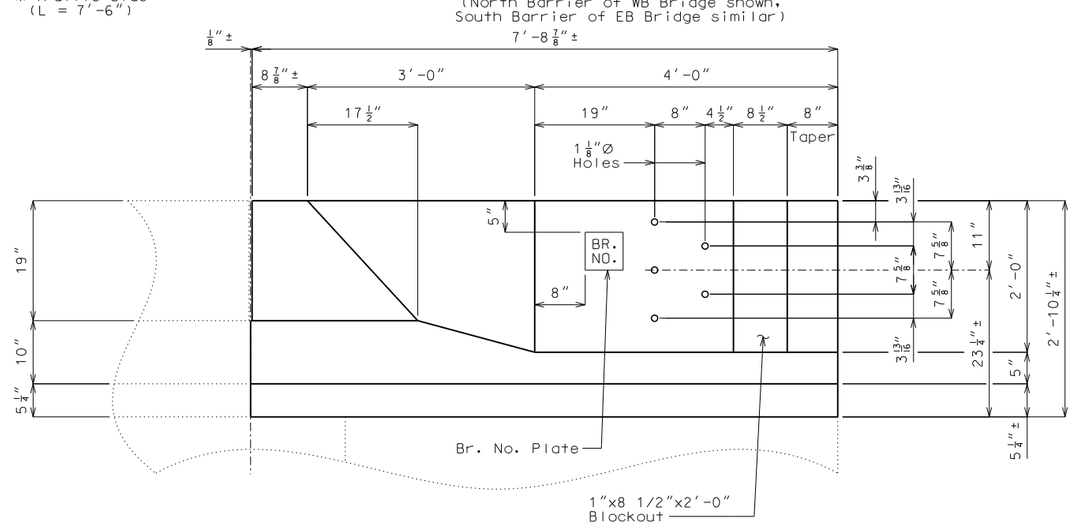

ELEVATION OF GUARDRAIL ATTACHMENT
(North Barrier of WB Bridge shown,
South Barrier of EB Bridge similar)

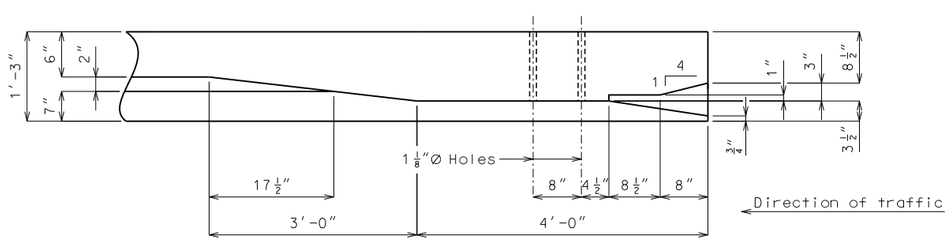

PLAN OF GUARDRAIL ATTACHMENT

Notes:

Remove existing stirrups within limits of Safety Barrier Curb Removal.

Payment for all concrete and reinforcement, complete-in-place will be considered completely covered by the contract unit price for Remove and Replace Barrier Curb.

Concrete in the barrier curb shall be Grade 4.0(AE)(SA).

All exposed edges of new barrier curb shall match existing barrier curb.

KS BR. NO. 36-22-27.67
BARRIER REPLACEMENT
SPECIAL SHEET 5 OF 5

STATE OF MISSOURI
DEREK S. BUTLER
NUMBER PE-2016009828
PROFESSIONAL ENGINEER

THIS SHEET HAS BEEN SIGNED, SEALED AND DATED ELECTRONICALLY

DATE PREPARED	
9/16/2021	
ROUTE	STATE
36	MO
DISTRICT	SHEET NO.
NW	8
COUNTY	
BUCHANAN	
JOB NO.	
J1P3295	
CONTRACT ID.	
PROJECT NO.	
BRIDGE NO.	

DESCRIPTION	DATE

MISSOURI HIGHWAYS AND TRANSPORTATION COMMISSION
105 WEST CAPITOL
JEFFERSON CITY, MO 65102
1-888-ASK-MODOT (1-888-275-6636)

GARVER, LLC.
7509 NW TIFFANY SPRINGS
PARKWAY, SUITE 200
KANSAS CITY, MO 64153
PHONE: (816) 298-6465
CERTIFICATE OF AUTHORITY
NO. 2008013090

L:\2021\21T04000 - MoDOT NW Route 36 Bridge Rehab\Drawings\BRIDGE\Roadway\008_SS_05_J1P3295_iX.dgn 4:25:49 PM 9/16/2021

WORK ZONE SPEED LIMIT GUIDELINES AND SPACING AND TAPER LENGTHS FOR WORK ZONE SIGNS, CHANNELIZERS AND CONCRETE BARRIER

SIGN SPACING FOR ADVANCE SIGN SERIES (1) (2)		
PERMANENT POSTED SPEED MPH	UNDIVIDED HIGHWAYS (S)	DIVIDED HIGHWAYS (S)
0-35	200′	200′
40-45	350′	500′
50-55	500′	1000′
60-70	1000′	SA - 1000′ SB - 1500′ SC - 2640′

NOTE:

(1) SPACING BETWEEN SIGNS AND SPACING BETWEEN LAST SIGN AND FLAGGER, BEGINNING OF TAPER, OF SIGNED CONDITION.

(2) SPACING MAY BE ADJUSTED AS NECESSARY TO MEET FIELD CONDITIONS.

(3) TAPER LENGTHS SHOWN INCLUDE LENGTH REQUIRED FOR LANE AND 10' SHOULDER

(4) CONCRETE BARRIER MAY BE INSTALLED AT 8:1 FLARE RATE FROM THE SHOULDER POINT OF THE LIMITS OF THE CLEAR ZONE WHERE THE SIDE SLOPE IS 6:1 OR FLATTER

TAPER LENGTHS AND END TREATMENTS FOR CONCRETE BARRIER				
PERMANENT POSTED SPEED MPH	MINIMUM LANE TAPER LENGTH (3)			END TREATMENT (4)
	10′	11′	12′	
< 40	160′	168′	176′	BARRIER HEIGHT TRANSITION
> 40	160′	168′	176′	APPROVED CRASH CUSHION

TAPER LENGTHS AND SPACING FOR CHANNELIZERS							
PERMANENT POSTED SPEED MPH	MINIMUM LANE TAPER LENGTH (3) (T2)			MINIMUM SHOULDER TAPER LENGTH (T1) BASED ON 10′ SHOULDER	BUFFER (B) LENGTH FT	MAXIMUM CHANNELIZER SPACING	
	10′	11′	12′			THROUGH TAPER	THROUGH WORK AREA
0-35	205′	225′	245′	70′	280′	35′	40′
40-45	450′	495′	540′	150′	400′	40′	80′
50-55	550′	605′	660′	185′	560′	50′	80′
60-70	700′	770′	840′	235′	840′	60′	120′

RECOMMENDED MAXIMUM SPEED REDUCTIONS	
ACTIVITY (I.E. WORKERS, EQUIPMENT OR MATERIAL) LOCATION	RECOMMENDED WORK ZONE SPEED REDUCTION (WHEN APPLICABLE)
10 FT. BEYOND EDGE OF TRAVELWAY TO EDGE OF RIGHT OF WAY	NO SPEED REDUCTION
IN TRAFFIC LANE OR WITHIN 10 FT. OF THE TRAFFIC LANE	10 MPH
HEAD-TO-HEAD ON MULTILANE	10 MPH
SPECIAL CIRCUMSTANCES WITHIN A TEMPORARY TRAFFIC CONTROL WORK ZONE MAY WARRANT A LOWER SPEED LIMIT THAN RECOMMENDED ABOVE. ALL SPEED LIMIT REDUCTIONS GREATER THAN 10 MPH SHALL BE DOCUMENTED. SUBMITTED TO AND APPROVED BY THE DISTRICT WORK ZONE COORDINATOR.	

TRAFFIC CONTROL
SHEET 1 OF 27

STATE OF MISSOURI
JOSHUA CASTOR
NUMBER PE-2004000772
PROFESSIONAL ENGINEER

THIS SHEET HAS BEEN SIGNED, SEALED AND DATED ELECTRONICALLY.

DATE PREPARED 9/19/2021

ROUTE	STATE
36	MO
DISTRICT	SHEET NO.
NW	9

COUNTY BUCHANAN

JOB NO. J1P3295

CONTRACT ID.

PROJECT NO.

BRIDGE NO.

DESCRIPTION

DATE

MISSOURI HIGHWAYS AND TRANSPORTATION COMMISSION

105 WEST CAPITOL
JEFFERSON CITY, MO 65102
1-888-ASK-MODOT (1-888-275-6636)

Hg Consult Inc engineers planners
9111 NE 79th Street; K.C. MO 64158; (816)912-4720

Hg CONSULT, INC.
PRO. ENGINEER 2010005873

REV.

G:\My Drive\Hg Projects\2021\21.017 Route 36 Bridge Rehab (Garver)\Civil\Sheet_Files\009_TC_01_J1P3295_i1_TA-51_Device_Spacing.dgn 4:21:17 PM

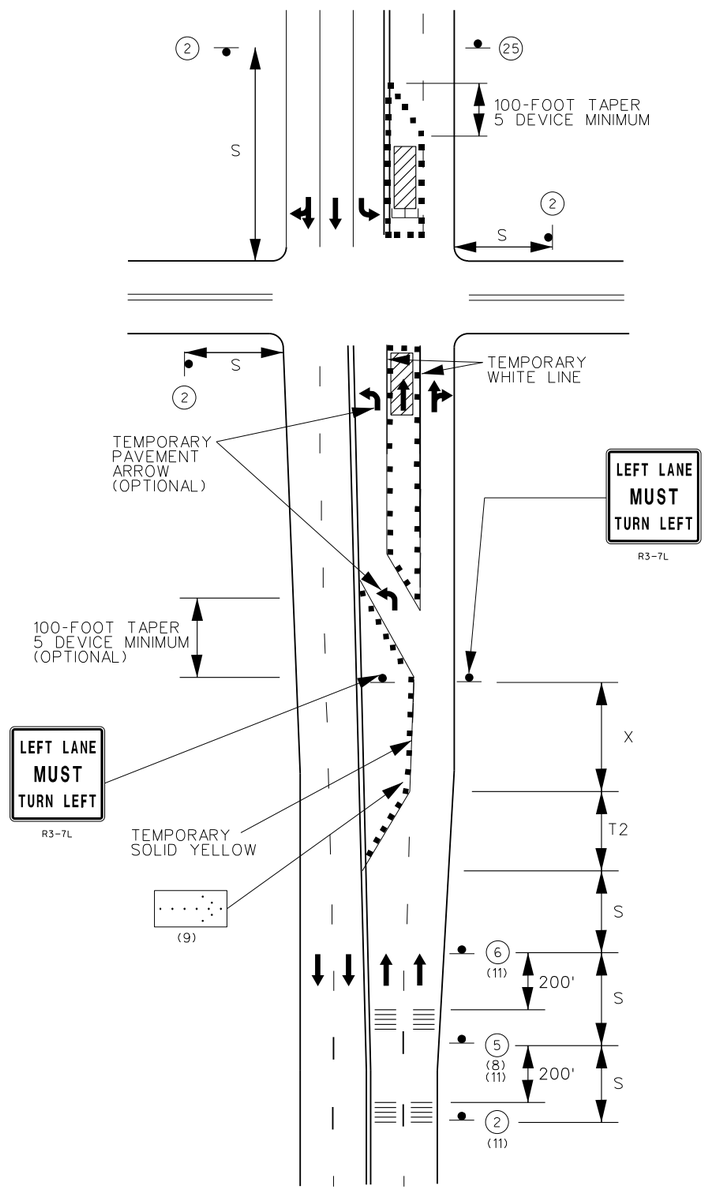

TA-23
LEFT LANE CLOSURE
AT INTERSECTION

NOTE:

(1) SEE TEMPORARY TRAFFIC CONTROL SHEET 1 FOR WORK ZONE SPEED LIMIT GUIDELINES.

(2) SEE TEMPORARY TRAFFIC CONTROL SHEET 1 FOR SIGN SPACING, DEVICE SPACING AND CHANNELIZING TAPER LENGTHS.

(3) FOR SIGNALIZED INTERSECTIONS, ADJUSTMENTS MAY NEED TO BE MADE TO SIGNAL PHASING, TIMING, INDICATIONS OR DETECTOR SETTINGS.

(4) REMOVE AND/OR MODIFY EXISTING PAVEMENT MARKINGS AS NEEDED.

(5) PAVEMENT MARKING AND BARRICADES OPTIONAL FOR SHORT TERM OPERATIONS.

(6) TEMPORARY PAVEMENT MARKING REQUIRED WITH LONG TERM LANE CLOSURES.

(7) FOR SHORT TERM OPERATION, WHERE IT IS NOT FEASIBLE TO MODIFY PAVEMENT MARKING, A 10-FEET DEVICE SPACING IS USED WHERE TRAFFIC IS GUIDED ACROSS DOUBLE YELLOW LINES OR OTHER CONFLICTING PAVEMENT MARKING. ALL OTHER SPACING ARE ONE-HALF OF THE SPACING.

(8) "LEFT LANE CLOSED AHEAD" SIGN MAY BE OMITTED IN LOW SPEED URBAN AREAS WHERE THERE IS NOT SUFFICIENT SPACE FOR THE FULL SIGN SERIES.

(9) THE FLASHING ARROW BOARD SHOULD BE LOCATED AT THE BEGINNING OF THE MERGING TAPER WHEN MEDIAN WIDTH ALLOW THIS PLACEMENT.

(10) IF RUMBLE STRIPS ARE USED, REVIEW 616.6.87 RUMBLE STRIPS.

(11) SIGN MAY ALSO BE PLACED IN THE MEDIAN OF THE ROADWAY IF THERE IS SUFFICENT ROOM BETWEEN EASTBOUND AND WESTBOUND LANES.

FOR FLAGS AND ADVANCE WARNING RAIL SYSTEMS, REFER TO EPG 616.6.2.2 FLAGS AND ADVANCED WARNING RAIL SYSTEM

MOVEABLE BARRICADE

FLASHING ARROW PANEL

CHANNELIZERS

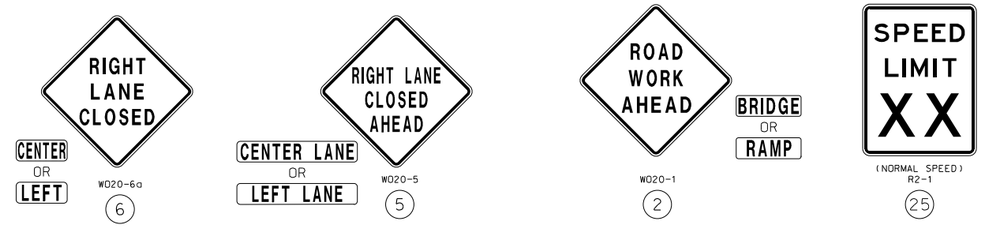

TEMPORARY LONG-TERM RUMBLE STRIPS FOR ALL LANE CLOSURE OPERATIONS THROUGHOUT ALL TRAFFIC CONTROL PLAN LAYOUTS

TRAFFIC CONTROL
LEFT LANE CLOSURE AT
INTERSECTION
WORK ON FAR SIDE ONLY
SHEET 2 OF 27

STATE OF MISSOURI
JOSHUA CASTOR
NUMBER PE-2004000772
PROFESSIONAL ENGINEER

THIS SHEET HAS BEEN SIGNED, SEALED AND DATED ELECTRONICALLY.

DATE PREPARED	
9/19/2021	
ROUTE	STATE
36	MO
DISTRICT	SHEET NO.
NW	10
COUNTY	
BUCHANAN	
JOB NO.	
J1P3295	
CONTRACT ID.	
PROJECT NO.	
BRIDGE NO.	

DESCRIPTION	DATE

MISSOURI HIGHWAYS AND TRANSPORTATION COMMISSION
105 WEST CAPITOL
JEFFERSON CITY, MO 65102
1-888-ASK-MODOT (1-888-275-6636)

Hg Consult Inc engineers planners
9111 NE 79th Street K.C. MO 64158: (816)912-4720
Hg CONSULT, INC.
PRO. ENGINEER 2010005873

REV.

G:\My Drive\Hg Projects\2021\21.017 Route 36 Bridge Rehab (Garver)\Civil\Sheet_Files\010_TC_02_J1P3295_i1_TA-33_TC_Left_Lane_Closure_at_Intersection.dgn 4:21:19 PM 9/19/2021

EFFECTIVE: 02-01-2009

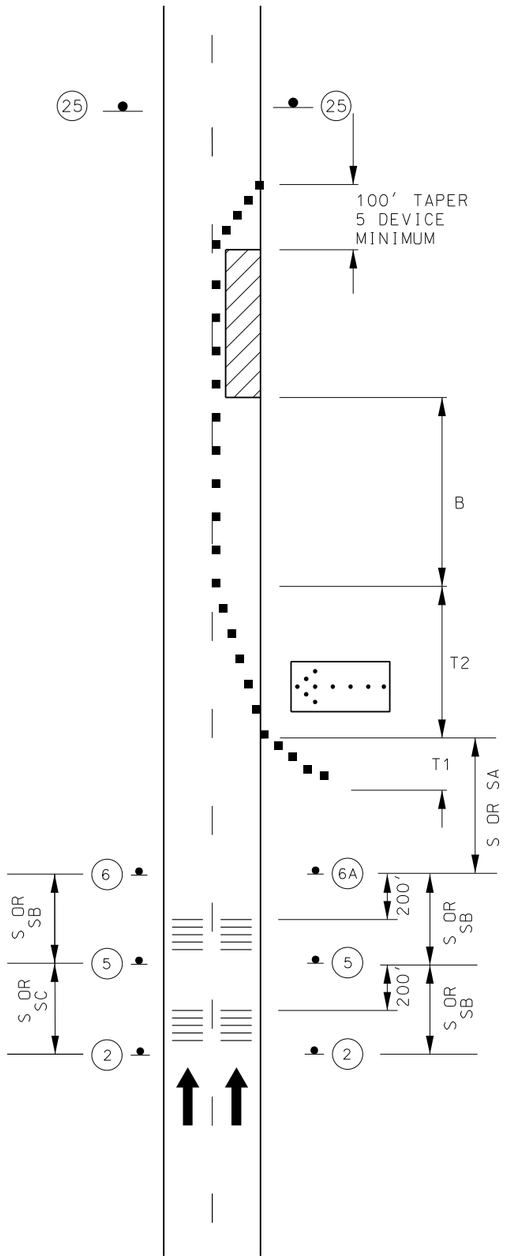

TWO-LANE DIVIDED HIGHWAY

NOTES:

(1) SEE TEMPORARY TRAFFIC CONTROL SHEET 1 FOR WORK ZONE SPEED LIMIT GUIDELINES.

(2) SEE TEMPORARY TRAFFIC CONTROL SHEET 1 FOR SIGN SPACING, DEVICE SPACING AND CHANNELIZING TAPER LENGTHS.

(3) REMOVE AND/OR MODIFY ANY EXISTING PAVEMENT MARKING AS NEEDED.

(4) TEMPORARY PAVEMENT MARKING REQUIRED WITH LONG TERM CLOSURES.

(5) THIS INFORMATION ALSO SHALL BE USED WHEN WORK IS BEING PREFORMED IN THE LANE ADJACENT TO THE MEDIAN ON A DIVIDED HIGHWAY. IN THIS CASE, THE LEFT LANDE CLOSED SIGNS AND THE CORRESPONDING MERGE OR LANE ENDS SIGN SHALL BE SUBSTITUTED.

(6) WHEN A SIDE ROAD INTERSECTS THE HIGHWAY WITHIN THE TTC ZONE ADDITIONAL TTC DEVICES SHALL BE PLACED AS NEEDED.

(7) TEMPORARY TRAFFIC BARRIERS, IF USED SHALL COMPLY WITH THE PROVISIONS IN EPG 616.6.85 TEMPORARY TRAFFIC BARRIER AND REVIEW TA-34 LANE CLOSURE WITH A TEMPORARY TRAFFIC BARRIER.

(8) REVIEW EPG TA-34a LANE CLOSURE WITH WIDTH AND LANE RESTRICTIONS DE/CM FOR A LANE CLOSURE WITH WIDTH RESTRICTIONS.

(9) AN ARROW BOARD SHALL BE USED WHEN A FREEWAY LANE IS CLOSED. WHEN MORE THAN ONE FREEWAY LANE IS CLOSED, A SEPARATE ARROW BOARD SHALL BE USED FOR EACH CLOSED LANE.

(10) REVIEW EPG 616.6.83 WARNING LIGHTS WHEN SEQUENTIAL OR WARNING LIGHTS SHOULD BE USED ON NIGHTTIME OPERATIONS.

(11) IF RUMBLE STRIPS ARE USED, REVIEW EPG 616.6.87 RUMBLE STRIPS.

(12) FOR FLAGS AND ADVANCE WARNING RAIL SYSTEM, REFER TO EPG 616.6.2.2 FLAG AND ADVANCE WARNING RAIL SYSTEM.

(13) REVIEW EPG 616.6.63 CHANNELIZING DEVICES FOR DIFFERENT TYPES AND GUIDELINES FOR THE DEVICES

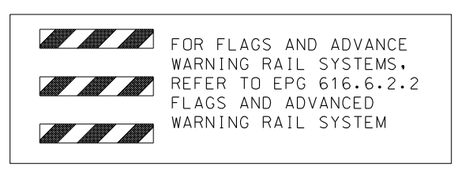

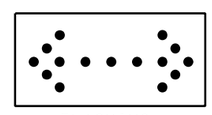

FLASHING
ARROW PANEL

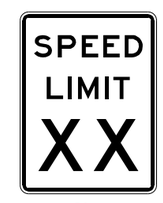

R2-1
NORMAL SPEED
25

CHANNELIZERS

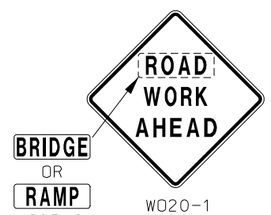

BRIDGE
OR
RAMP
W025-6

W020-1
2

LEFT
OR
RIGHT

W020-5
5

CENTER
OR
LEFT

W020-6a
6

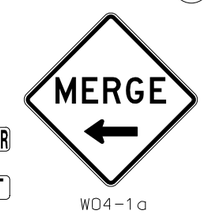

W04-1a
6A

TEMPORARY LONG-TERM
RUMBLE STRIPS FOR
ALL LANE CLOSURE
OPERATIONS THROUGHOUT
ALL TRAFFIC CONTROL
PLAN LAYOUTS

TRAFFIC CONTROL
STATIONARY LANE CLOSURE
ON DIVIDED HIGHWAY
SHEET 3 OF 27

STATE OF MISSOURI
JOSHUA CASTOR
NUMBER PE-2004000772
PROFESSIONAL ENGINEER

THIS SHEET HAS BEEN SIGNED, SEALED AND DATED ELECTRONICALLY.

DATE PREPARED	
9/19/2021	
ROUTE	STATE
36	MO
DISTRICT	SHEET NO.
NW	11
COUNTY	
BUCHANAN	
JOB NO.	
J1P3295	
CONTRACT ID.	
PROJECT NO.	
BRIDGE NO.	

DESCRIPTION	DATE

MISSOURI HIGHWAYS AND TRANSPORTATION COMMISSION
105 WEST CAPITOL
JEFFERSON CITY, MO 65102
1-888-ASK-MODOT (1-888-275-6636)

Hg Consult Inc engineers planners
9111 NE 79th Street; K.C. MO 64158; (816)912-4720
Hg CONSULT, INC.
PRO. ENGINEER 2010005873

REV.

G:\My Drive\Hg Projects\2021\21.017 Route 36 Bridge Rehab (Garver)\Civil\Sheet_Files\011_TC_03_J1P3295_i1_TA-33_TC_Lane_Closure_Divided_Highway.dgn 4:21:19 PM 9/19/2021

EFFECTIVE: 02-01-2009

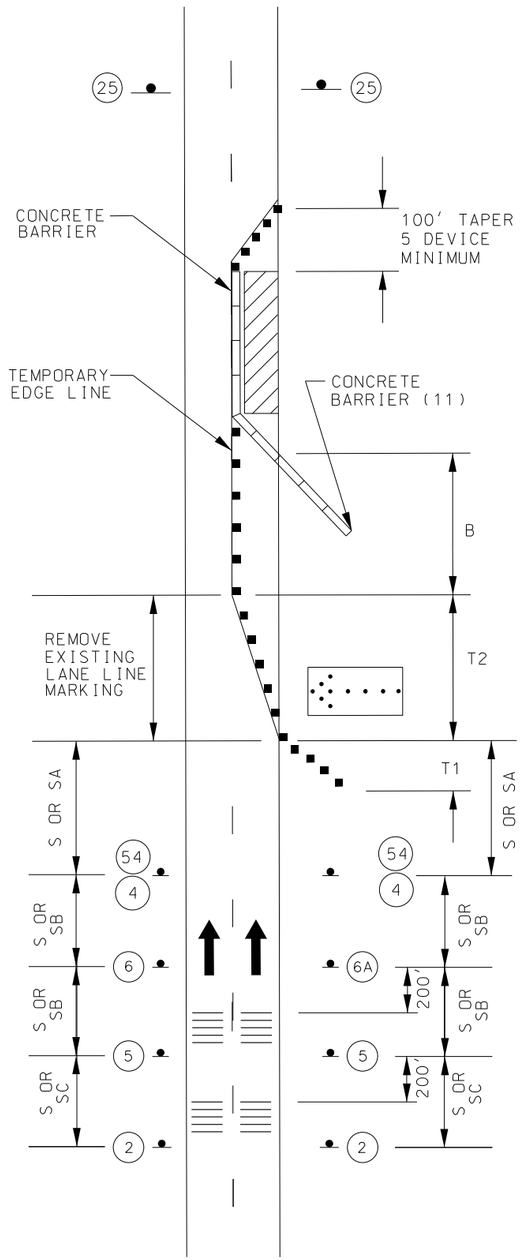

TWO-LANE DIVIDED HIGHWAY
WITH BARRIER

NOTES:

(1) SEE TEMPORARY TRAFFIC CONTROL SHEET 1 FOR WORK ZONE SPEED LIMIT GUIDELINES.

(2) SEE TEMPORARY TRAFFIC CONTROL SHEET 1 FOR SIGN SPACING, DEVICE SPACING AND CHANNELIZING TAPER LENGTHS.

(3) REMOVE AND/OR MODIFY ANY EXISTING PAVEMENT MARKING AS NEEDED.

(4) TEMPORARY PAVEMENT MARKING REQUIRED WITH LONG TERM CLOSURES.

(5) REVIEW TA-33 STATIONARY LANE CLOSURE.

(6) SEE SHEET FIGURE TA-34A, LANE CLOSURE WITH WIDTH AND LANE RESTRICTION-DE/CM FOR A LANE CLOSURE WITH WIDTH RESTRICTION.

(7) TEMPORARY TRAFFIC BARRIERS, IF USED SHALL COMPLY WITH THE PROVISIONS IN EPG 616.6.85 TEMPORARY TRAFFIC BARRIERS.

(8) FOR NIGHTTIME OPERATIONS, REVIEW EPG 616.6.83 WARNING LIGHTS FOR USE OF SEQUENTIAL LIGHTS.

(9) IF RUMBLE STRIPS ARE USED, REVIEW EPG 616.6.87 RUMBLE STRIPS.

(10) REVIEW EPG 616.6.63 CHANNELIZING DEVICES FOR DIFFERENT TYPES AND GUIDELINES FOR THE DEVICES.

(11) FLARE BARRIER TO EXTEND BEYOND CLEAR ZONE OR FLARE BARRIER TO THE EDGE LINE AND USE APPROVED END TREATMENT.

(12) CONCRETE BARRIER SHALL BE INSTALLED AT AN 8:1 FLARE RATE WITHIN THE TRAVEL LANES.

(13) CONCRETE BARRIER MAY BE INSTALLED AT AN 8:1 FLARE RATE FROM THE SHOULDER POINT TO THE LIMITS OF THE CLEAR ZONE WHERE THE SIDE SLOPE IS 6:1 OR FLATTER.

(14) APPROVED CRASH CUSHION ARE TO BE USED WHEN THE POSTED SPEED LIMIT PRIOR TO ROAD WORK IS GREATER THAN OR EQUAL TO 40 MPH.

(15) BARRIER HEIGHT TRANSITION MAY BE USED WHEN THE POSTED SPEED LIMIT PRIOR TO ROAD WORK IS LESS THAN 40 MPH.

FOR FLAGS AND ADVANCE WARNING RAIL SYSTEMS, REFER TO EPG 616.6.2.2 FLAGS AND ADVANCED WARNING RAIL SYSTEM

FLASHING ARROW PANEL

CHANNELIZERS

WORK ZONE
G020-5aP
54

SPEED LIMIT XX
R2-1
4

SPEED LIMIT XX
R2-1
NORMAL SPEED
25

BRIDGE OR RAMP
W025-6

ROAD WORK AHEAD
W020-1
2

CENTER LANE CLOSED AHEAD
LEFT OR RIGHT
W020-5
5

RIGHT LANE CLOSED
CENTER OR LEFT
W020-6a
6

MERGE
W04-1a
6A

TEMPORARY LONG-TERM RUMBLE STRIPS FOR ALL LANE CLOSURE OPERATIONS THROUGHOUT ALL TRAFFIC CONTROL PLAN LAYOUTS

TRAFFIC CONTROL
LANE CLOSURE WITH
TEMPORARY TRAFFIC BARRIER
SHEET 4 OF 27

STATE OF MISSOURI
JOSHUA CASTOR
NUMBER PE-2004000772
PROFESSIONAL ENGINEER

THIS SHEET HAS BEEN SIGNED, SEALED AND DATED ELECTRONICALLY.

DATE PREPARED	
9/19/2021	
ROUTE	STATE
36	MO
DISTRICT	SHEET NO.
NW	12
COUNTY	
BUCHANAN	
JOB NO.	
J1P3295	
CONTRACT ID.	
PROJECT NO.	
BRIDGE NO.	

DATE	DESCRIPTION

MISSOURI HIGHWAYS AND TRANSPORTATION COMMISSION
105 WEST CAPITOL
JEFFERSON CITY, MO 65102
1-888-ASK-MODOT (1-888-275-6636)

Hg Consult Inc engineers planners
9111 NE 79th Street K.C. MO 64158; (816)912-4720
Hg CONSULT, INC.
PRO. ENGINEER 2010005873

REV.

G:\My Drive\Hg Projects\2021\21.017 Route 36 Bridge Rehab (Garver)\Civil\Sheet_Files\012_TC_04_J1P3295_i1_TA-33_TC_Lane_Closure_Traffic_Barrier.dgn 4:21:20 PM 9/19/2021

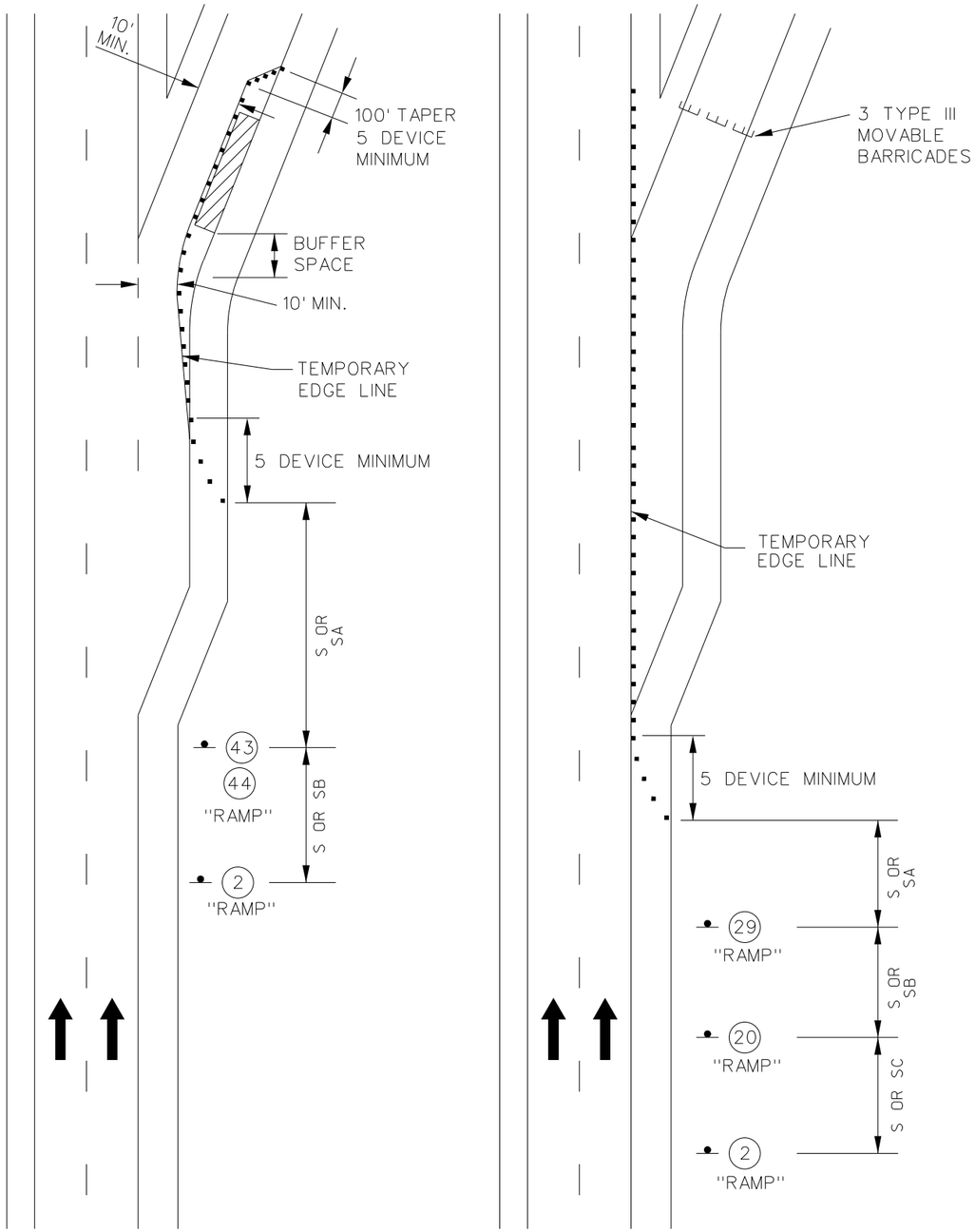

PARTIAL LANE

ENTIRE RAMP

LANE CLOSURE
PARTIAL AND TOTAL RAMP CLOSURE

NOTES:

(1) SEE TEMPORARY TRAFFIC CONTROL SHEET 1 FOR WORK ZONE SPEED LIMIT GUIDELINES.

(2) SEE TEMPORARY TRAFFIC CONTROL SHEET 1 FOR SIGN SPACING, DEVICE SPACING AND CHANNELIZING TAPER LENGTHS.

(3) TEMPORARY PAVEMENT MARKING OPTIONAL FOR SHORT TERM OPERATIONS.

(4) IF RUMBLE STRIPS ARE USED, REVIEW EPG 616.6.87 RUMBLE STRIPS.

(5) REVIEW EPG 616.6.63 CHANNELIZING DEVICES FOR DIFFERENT TYPES AND AND GUIDELINES FOR THE DEVICE.

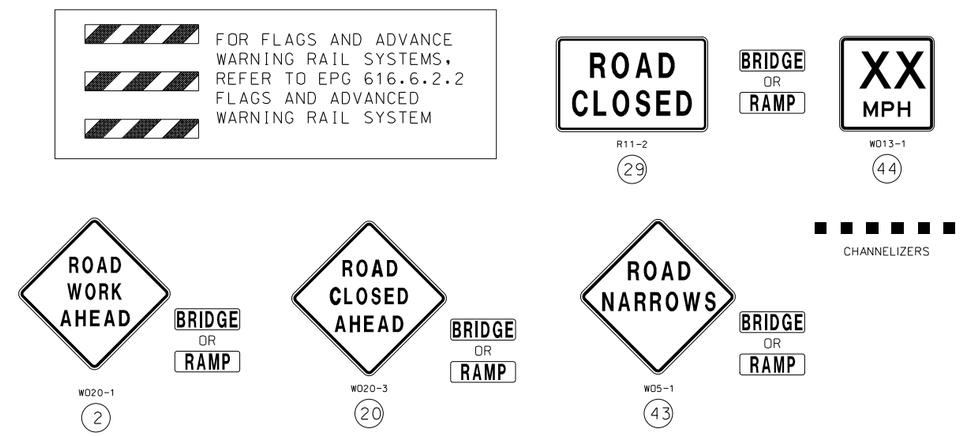

TRAFFIC CONTROL
PARTIAL OR TOTAL
EXIT RAMP CLOSURE
SHEET 5 OF 27

STATE OF MISSOURI
JOSHUA CASTOR
NUMBER PE-2004000772
PROFESSIONAL ENGINEER

THIS SHEET HAS BEEN SIGNED, SEALED AND DATED ELECTRONICALLY.

DATE PREPARED	
9/19/2021	
ROUTE	STATE
36	MO
DISTRICT	SHEET NO.
NW	13
COUNTY	
BUCHANAN	
JOB NO.	
J1P3295	
CONTRACT ID.	
PROJECT NO.	
BRIDGE NO.	

DESCRIPTION

DATE

MISSOURI HIGHWAYS AND TRANSPORTATION COMMISSION
105 WEST CAPITOL
JEFFERSON CITY, MO 65102
1-888-ASK-MODOT (1-888-275-6636)

Hg Consult Inc engineers planners
9111 NE 79th Street K.C. MO 64158; (816)912-4720
Hg CONSULT, INC.
PRO. ENGINEER 2010005873

G:\My Drive\Hg Projects\2021\21.017 Route 36 Bridge Rehab (Garver)\Civil\Sheet_Files\013_TC_05_J1P3295_i1_TA-43A_TC_Partial_and_Full_Closure_Ramp.dgn 4:21:22 PM 9/19/2021

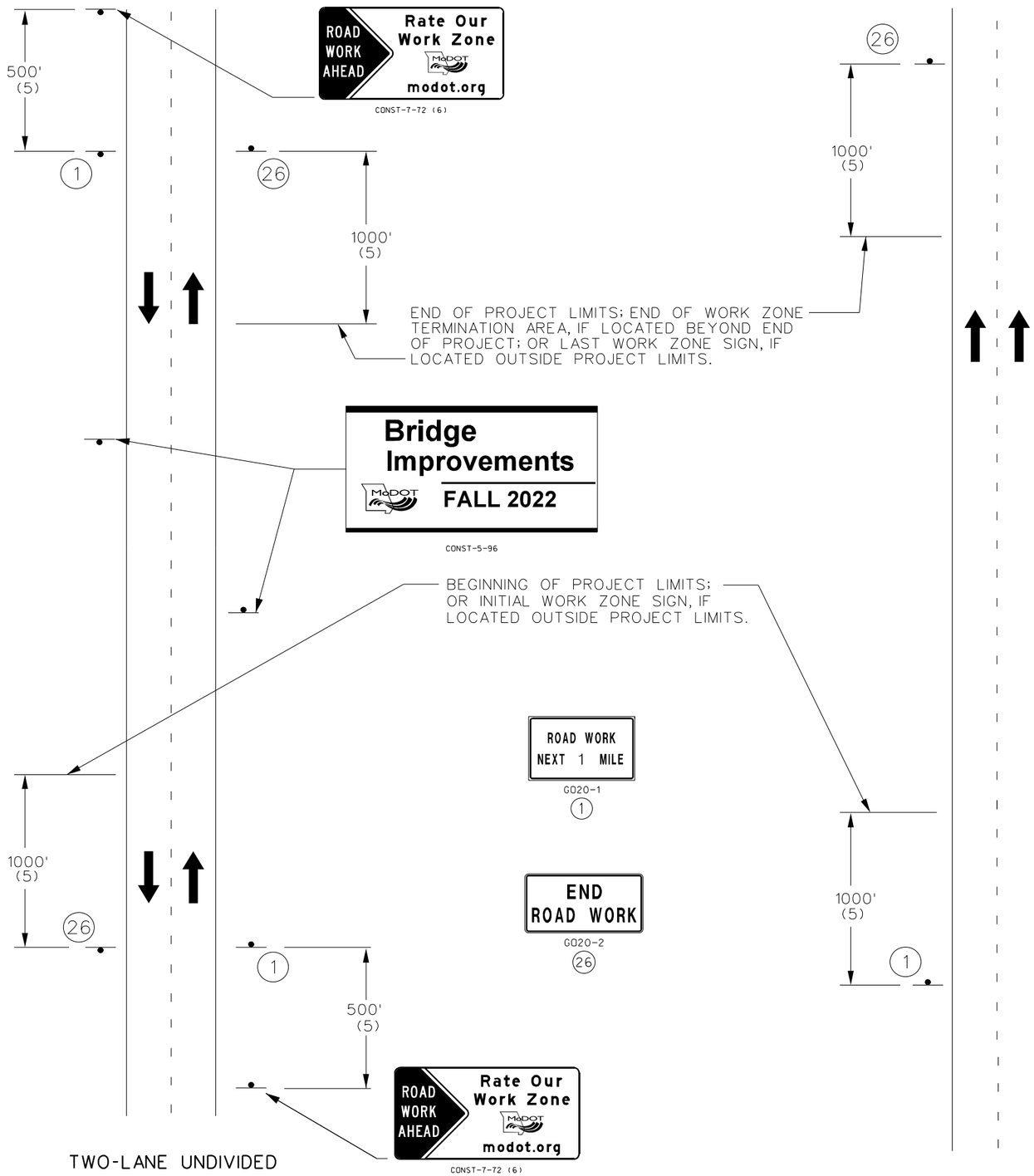

TWO-LANE UNDIVIDED

BEGIN/END OF PROJECT SIGNING
(FOR USE ON ALL PROJECTS)

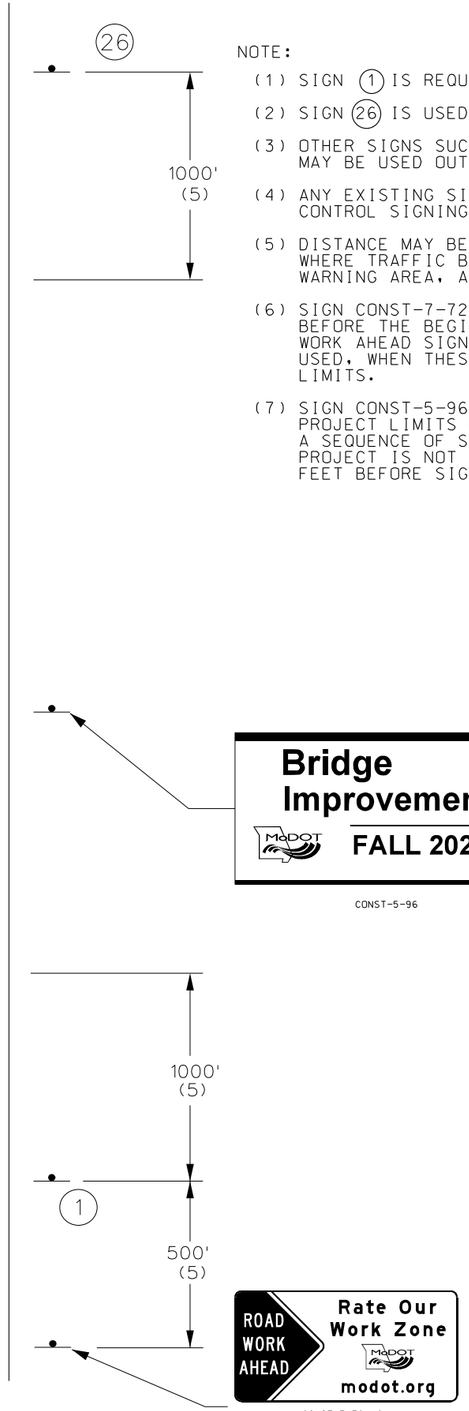

MULTI-LANE DIVIDED

NOTE:

(1) SIGN (1) IS REQUIRED PER EPG 616.2.3.

(2) SIGN (26) IS USED ON ALL PROJECTS WHERE SIGN (1) IS USED.

(3) OTHER SIGNS SUCH AS DETOUR OR ALTERNATE ROUTE SIGNING MAY BE USED OUTSIDE THE PROJECT LIMITS.

(4) ANY EXISTING SIGNING THAT CONFLICTS WITH THE TRAFFIC CONTROL SIGNING SHALL BE COMPLETELY COVERED OR REMOVED.

(5) DISTANCE MAY BE ADJUSTED ACCORDING TO FIELD CONDITIONS. WHERE TRAFFIC BACKUPS ARE EXPECTED BEYOND THE ADVANCE WARNING AREA, ADDITIONAL SIGNING MAY BE NEEDED.

(6) SIGN CONST-7-72 OR CONST-7-48 IS PLACED 500 FEET BEFORE THE BEGINNING OF PROJECT LIMITS OR THE ROAD WORK AHEAD SIGN OR ROAD WORK NEXT XX MILES SIGN, IF USED, WHEN THESE SIGNS ARE LOCATED OUTSIDE THE PROJECT LIMITS.

(7) SIGN CONST-5-96 IS PLACED IN A VISIBLE AREA WITHIN THE PROJECT LIMITS PROVIDED ITS PLACEMENT DOES NOT DISRUPT A SEQUENCE OF SIGNS. IF A VISIBLE LOCATION WITHIN THE PROJECT IS NOT AVAILABLE, THE SIGN MAY BE PLACED 500 FEET BEFORE SIGN CONST-7-72 OR CONST-7-48.

STATE OF MISSOURI
JOSHUA CASTOR
NUMBER PE-2004000772
PROFESSIONAL ENGINEER

THIS SHEET HAS BEEN SIGNED, SEALED AND DATED ELECTRONICALLY.

DATE PREPARED	9/19/2021
ROUTE	36
STATE	MO
DISTRICT	NW
SHEET NO.	14
COUNTY	BUCHANAN
JOB NO.	J1P3295
CONTRACT ID.	
PROJECT NO.	
BRIDGE NO.	

DATE	DESCRIPTION

MISSOURI HIGHWAYS AND TRANSPORTATION COMMISSION
105 WEST CAPITOL
JEFFERSON CITY, MO 65102
1-888-ASK-MODOT (1-888-275-6636)

Hg Consult Inc engineers planners
9111 NE 79th Street K.C. MO 64158; (816)912-4720
Hg CONSULT, INC.
PRO. ENGINEER 2010005873

TRAFFIC CONTROL
BEGIN/END SIGNING
SHEET 6 OF 27

J1P3295, ROUTE 36
STAGED CONSTRUCTION WRITEUP

PHASE 1

BEGIN CONSTRUCTION INTERIOR LANE WESTBOUND US-36.
CLOSE INTERIOR LANE AND PROVIDE EXTERIOR WESTBOUND LANE FOR TRAFFIC.
BARRIERS SHALL BE UTILIZED FOR SEPARATION.

BEGIN CONSTRUCTION EXTERIOR LANE EASTBOUND US-36.
CLOSE EXTERIOR LANE AND PROVIDE INTERIOR EASTBOUND LANE FOR TRAFFIC.
BARRIERS SHALL BE UTILIZED FOR SEPARATION.

EASTBOUND US-36 EXIT RAMP TO MO-759 TO BE CLOSED. SEE DETOUR PLANS FOR MORE INFORMATION. MO-759 ENTRANCE RAMP TO US-36 SHALL REMAIN OPEN.

EASTBOUND US-36 RAMP TO SB I-229 SHALL BE CLOSED TO US-36 TRAFFIC BUT REMAIN OPEN TO MO-759 ENTRANCE RAMP TRAFFIC. TRAFFIC SHOULD FOLLOW DETOUR TO ACCESS SB I-229.

BEGIN SLOPE PROTECTION CONSTRUCTION. CLOSE EXTERIOR LANE NORTHBOUND MO-759.
INTERIOR LANE NORTHBOUND MO-759 TO REMAIN OPEN FOR TRAFFIC.
CHANNELIZERS SHALL BE UTILIZED FOR SEPARATION.

PHASE 2

UPON COMPLETION OF CONSTRUCTION IN PHASE 1, US-36 TRAFFIC SHALL BE TRANSFERRED TO THE NEW LANES.

BEGIN CONSTRUCTION EXTERIOR LANE WESTBOUND US-36. CLOSE EXTERIOR LANE AND PROVIDE INTERIOR WESTBOUND LANE FOR TRAFFIC.
BARRIERS SHALL BE UTILIZED FOR SEPARATION.

RAMPS CONNECTING WESTBOUND US-36 TO MO-759 TO BE CLOSED. SEE DETOUR PLANS FOR MORE INFORMATION.

BEGIN CONSTRUCTION INTERIOR LANE EASTBOUND US-36.
CLOSE INTERIOR LANE AND PROVIDE EXTERIOR EASTBOUND LANE FOR TRAFFIC.
BARRIERS SHALL BE UTILIZED FOR SEPARATION.

TRAFFIC CONTROL
STAGED CONSTRUCTION
WRITEUP
SHEET 7 OF 27

STATE OF MISSOURI
JOSHUA CASTOR
NUMBER PE-2004000772
PROFESSIONAL ENGINEER

THIS SHEET HAS BEEN SIGNED, SEALED AND DATED ELECTRONICALLY.

DATE PREPARED	9/19/2021
ROUTE	36
STATE	MO
DISTRICT	NW
SHEET NO.	15
COUNTY	BUCHANAN
JOB NO.	J1P3295
CONTRACT ID.	
PROJECT NO.	
BRIDGE NO.	

DATE	DESCRIPTION

MISSOURI HIGHWAYS AND TRANSPORTATION COMMISSION
105 WEST CAPITOL
JEFFERSON CITY, MO 65102
1-888-ASK-MODOT (1-888-275-6636)

Hg Consult Inc engineers planners
9111 NE 79th Street K.C. MO 64158; (816)912-4720
Hg CONSULT, INC.
PRO. ENGINEER 2010005873

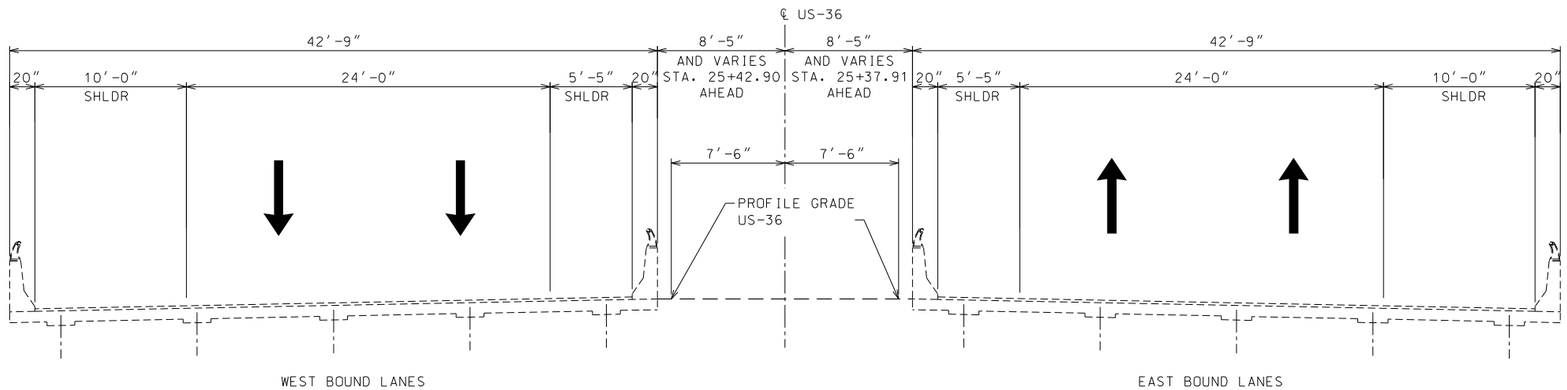

EXISTING CONFIGURATION

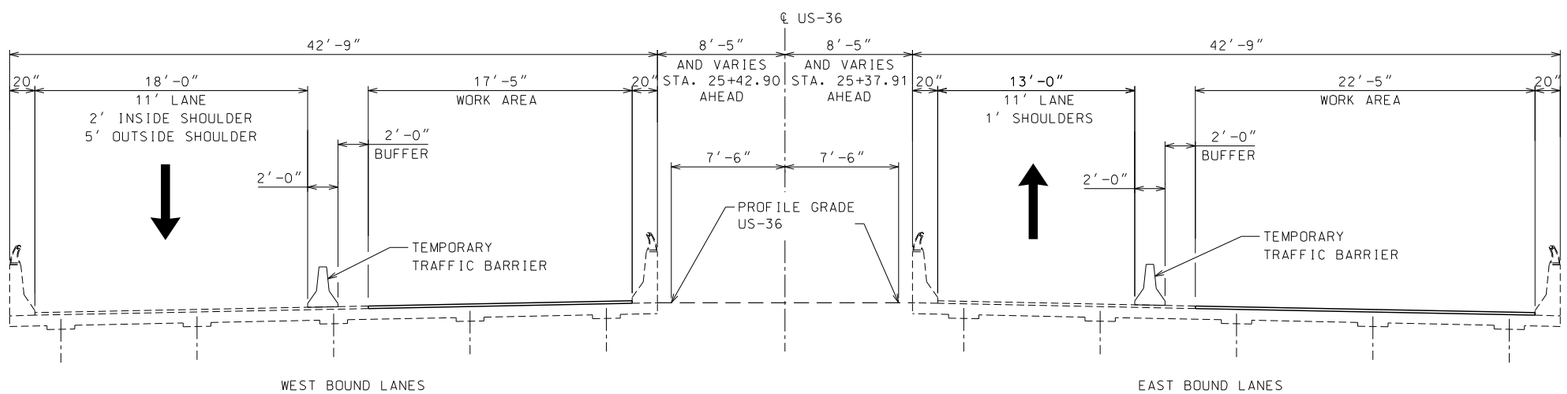

PHASE 1 CONSTRUCTION

CONSTRUCTION PHASING - PHASE 1

TRAFFIC CONTROL
TYPICAL SECTION
PHASE 1
SHEET 8 OF 27

STATE OF MISSOURI
JOSHUA CASTOR
NUMBER PE-2004000772
PROFESSIONAL ENGINEER

THIS SHEET HAS BEEN SIGNED, SEALED AND DATED ELECTRONICALLY.

DATE PREPARED	
9/19/2021	
ROUTE	STATE
36	MO
DISTRICT	SHEET NO.
NW	16
COUNTY	
BUCHANAN	
JOB NO.	
J1P3295	
CONTRACT ID.	
PROJECT NO.	
BRIDGE NO.	

DATE	DESCRIPTION

MISSOURI HIGHWAYS AND TRANSPORTATION COMMISSION
105 WEST CAPITOL
JEFFERSON CITY, MO 65102
1-888-ASK-MODOT (1-888-275-6636)

Hg Consult Inc engineers planners
9111 NE 79th Street1 K.C. MO 64158 (816)912-4720
Hg CONSULT, INC.
PRO. ENGINEER 2010005873

G:\My Drive\Hg Projects\2021\21.017 Route 36 Bridge Rehab (Garver)\Civil\Sheet_Files\016_TC_08_J1P3295_i50_TYP_Opt1_TempBarrier.dgn 4:21:26 PM 9/19/2021

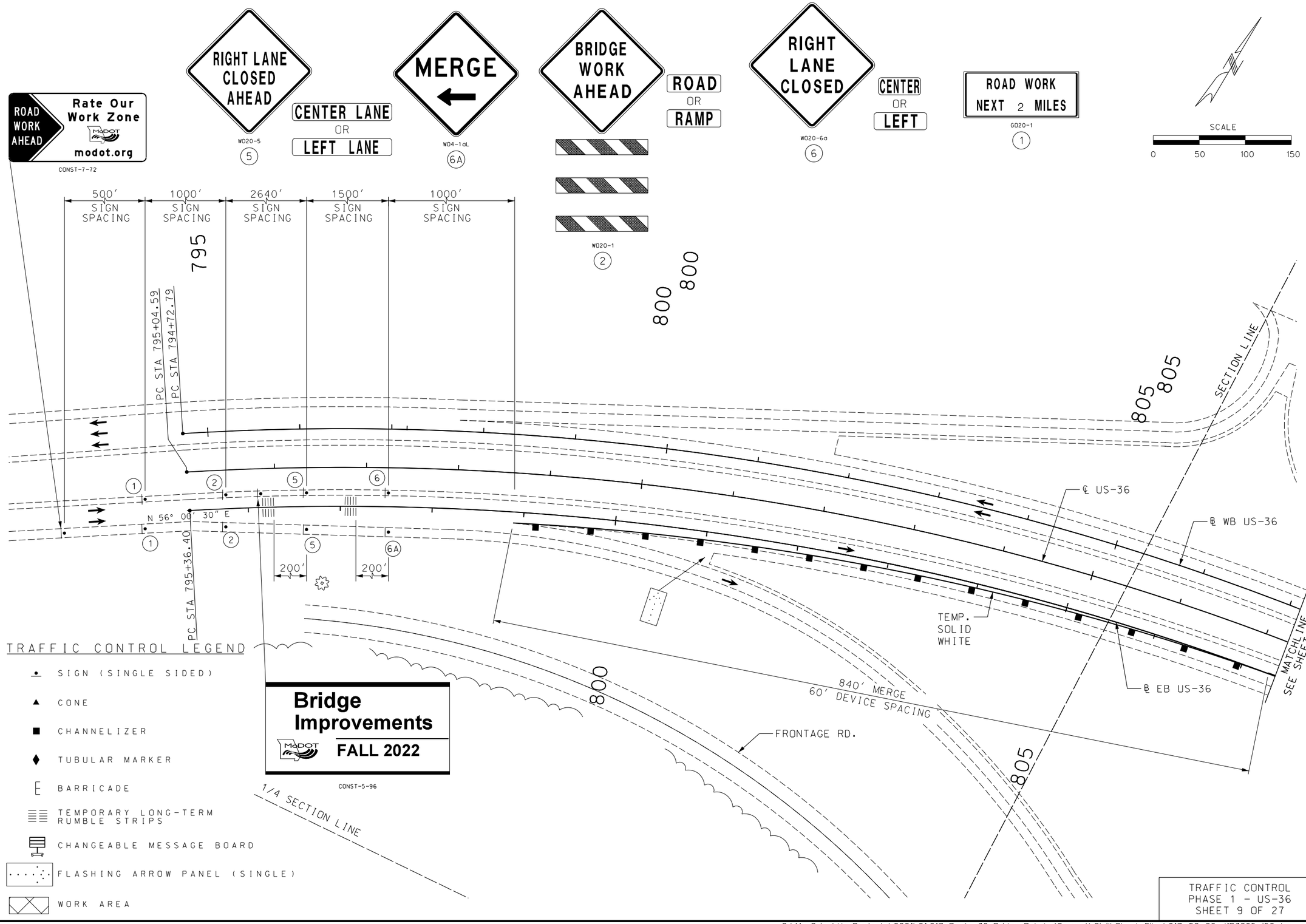

TRAFFIC CONTROL
PHASE 1 - US-36
SHEET 9 OF 27

STATE OF MISSOURI
JOSHUA CASTOR
NUMBER PE-2004000772
PROFESSIONAL ENGINEER

THIS SHEET HAS BEEN SIGNED, SEALED AND DATED ELECTRONICALLY.

DATE PREPARED	9/19/2021
ROUTE 36	STATE MO
DISTRICT NW	SHEET NO. 17
COUNTY	BUCHANAN
JOB NO.	J1P3295
CONTRACT ID.	
PROJECT NO.	
BRIDGE NO.	

DATE	DESCRIPTION

MISSOURI HIGHWAYS AND TRANSPORTATION COMMISSION
105 WEST CAPITOL
JEFFERSON CITY, MO 65102
1-888-ASK-MODOT (1-888-275-6636)

Hg Consult Inc engineers planners
9111 NE 79th Streets K.C. MO 64158: (816)912-4720
Hg CONSULT, INC.
PRO. ENGINEER 2010005873

G:\My Drive\Hg Projects\2021\21.017 Route 36 Bridge Rehab (Garver)\Civil\Sheet_Files\017_TC_09_J1P3295_i50.dgn 4:21:29 PM 9/19/2021

TRAFFIC CONTROL LEGEND

- SIGN (SINGLE SIDED)
- CONE
- CHANNELIZER
- TUBULAR MARKER
- BARRICADE
- TEMPORARY LONG-TERM RUMBLE STRIPS
- CHANGEABLE MESSAGE BOARD
- FLASHING ARROW PANEL (SINGLE)
- WORK AREA

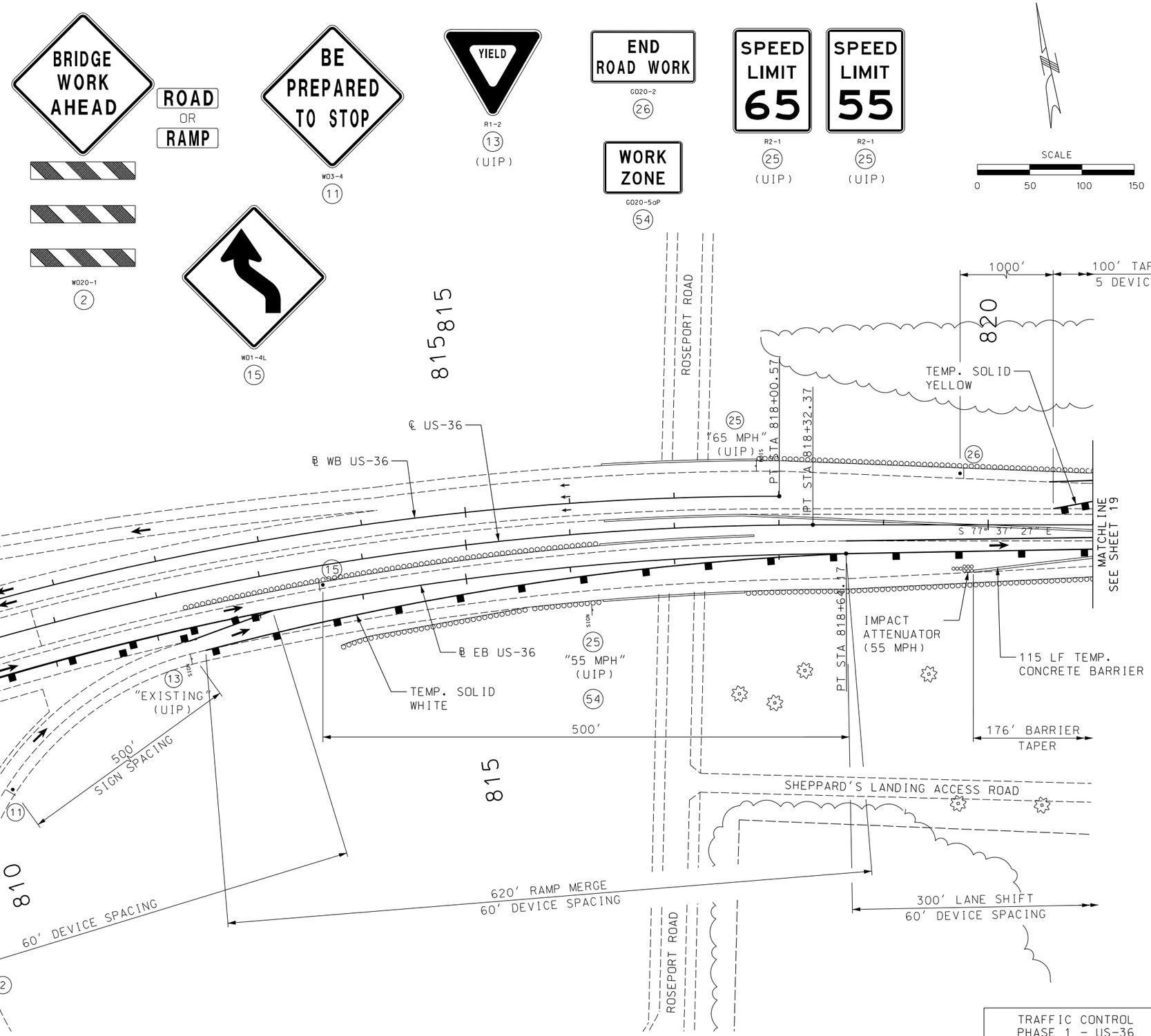

TRAFFIC CONTROL
PHASE 1 - US-36
SHEET 10 OF 27

STATE OF MISSOURI
JOSHUA CASTOR
NUMBER PE-2004000772
PROFESSIONAL ENGINEER

THIS SHEET HAS BEEN SIGNED, SEALED AND DATED ELECTRONICALLY.

DATE PREPARED	
9/19/2021	
ROUTE	STATE
36	MO
DISTRICT	SHEET NO.
NW	18
COUNTY	
BUCHANAN	
JOB NO.	
J1P3295	
CONTRACT ID.	
PROJECT NO.	
BRIDGE NO.	

DESCRIPTION	DATE

MISSOURI HIGHWAYS AND TRANSPORTATION COMMISSION
105 WEST CAPITOL
JEFFERSON CITY, MO 65102
1-888-ASK-MODOT (1-888-275-6636)

Hg Consult Inc engineers planners
9111 NE 79th Street K.C. MO 641581 (816)912-4720
Hg CONSULT, INC.
PRO. ENGINEER 2010005873

G:\My Drive\Hg Projects\2021\21.017 Route 36 Bridge Rehab (Garver)\Civil\Sheet_Files\018_TC_10_J1P3295_i50.dgn 4:21:30 PM 9/19/2021

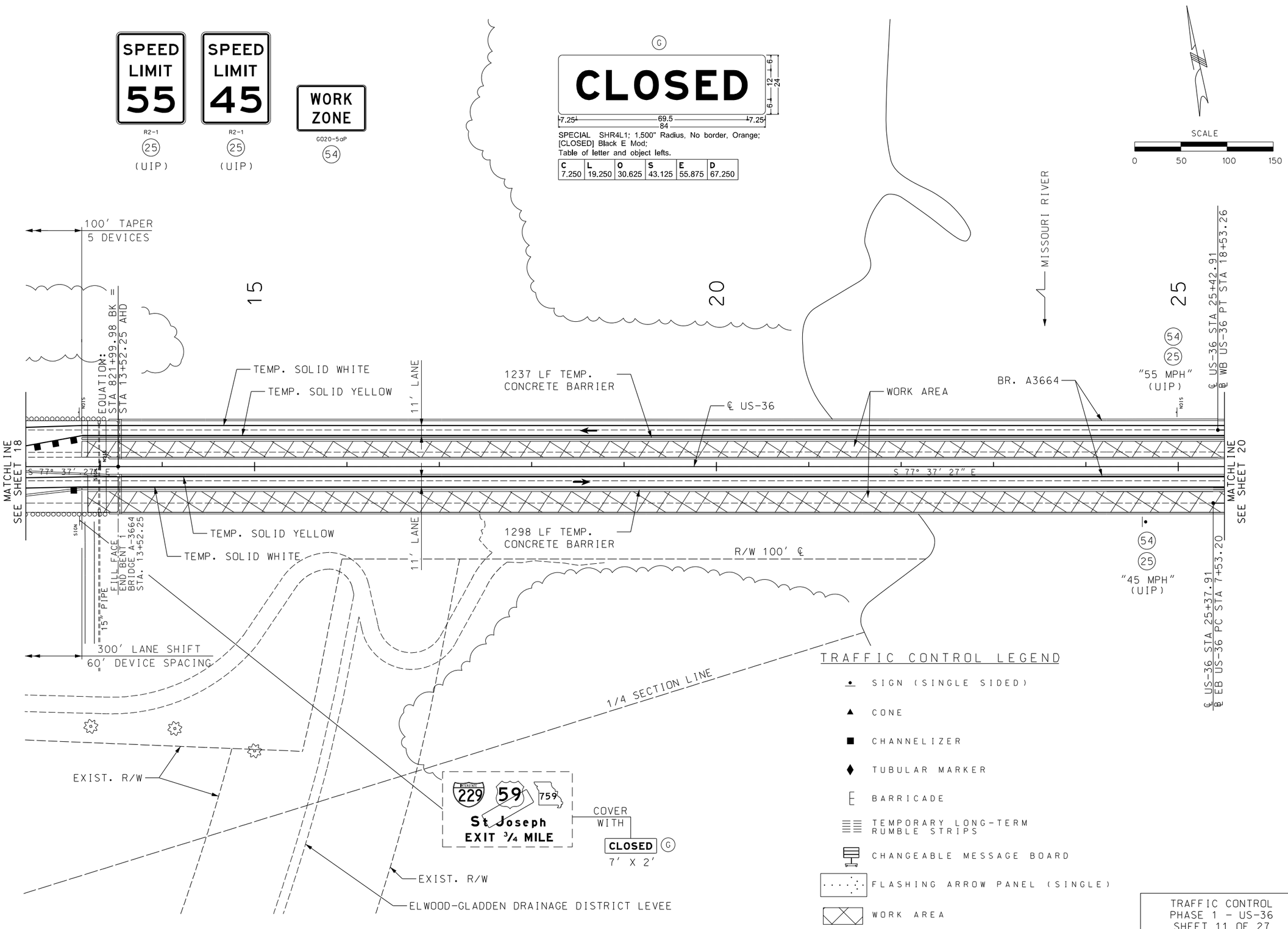

TRAFFIC CONTROL
PHASE 1 - US-36
SHEET 11 OF 27

STATE OF MISSOURI
JOSHUA CASTOR
NUMBER PE-2004000772
PROFESSIONAL ENGINEER

THIS SHEET HAS BEEN SIGNED, SEALED AND DATED ELECTRONICALLY.

DATE PREPARED	9/19/2021
ROUTE	36
STATE	MO
DISTRICT	NW
SHEET NO.	19
COUNTY	BUCHANAN
JOB NO.	J1P3295
CONTRACT ID.	
PROJECT NO.	
BRIDGE NO.	

DESCRIPTION

DATE

MISSOURI HIGHWAYS AND TRANSPORTATION COMMISSION

105 WEST CAPITOL
JEFFERSON CITY, MO 65102
1-888-ASK-MODOT (1-888-275-6636)

Hg Consult Inc engineers planners
9111 NE 79th Street1 K.C. MO 64158 (816)912-4720
Hg CONSULT, INC.
PRO. ENGINEER 2010005873

G:\My Drive\Hg Projects\2021\21.017 Route 36 Bridge Rehab (Garver)\Civil\Sheet_Files\019_TC_11_J1P3295_i50.dgn 4:21:31 PM 9/19/2021

TRAFFIC CONTROL LEGEND

- SIGN (SINGLE SIDED)
- CONE
- CHANNELIZER
- TUBULAR MARKER
- BARRICADE
- TEMPORARY LONG-TERM RUMBLE STRIPS
- CHANGEABLE MESSAGE BOARD
- FLASHING ARROW PANEL (SINGLE)
- WORK AREA

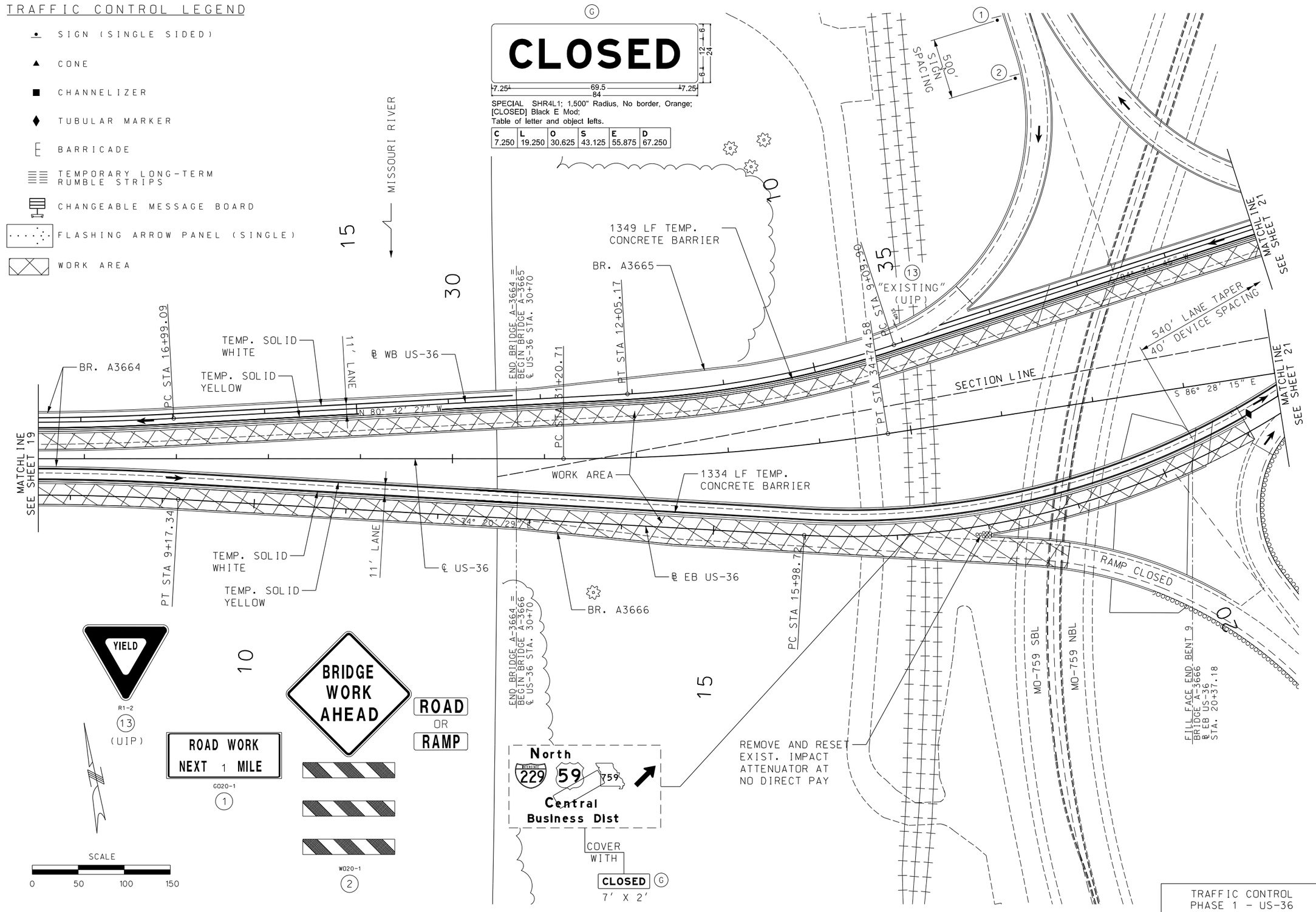

TRAFFIC CONTROL
PHASE 1 - US-36
SHEET 12 OF 27

STATE OF MISSOURI
JOSHUA CASTOR
NUMBER PE-2004000772
PROFESSIONAL ENGINEER

THIS SHEET HAS BEEN SIGNED, SEALED AND DATED ELECTRONICALLY.

DATE PREPARED	
9/19/2021	
ROUTE 36	STATE MO
DISTRICT NW	SHEET NO. 20
COUNTY BUCHANAN	
JOB NO. J1P3295	
CONTRACT ID.	
PROJECT NO.	
BRIDGE NO.	

DESCRIPTION

DATE

MISSOURI HIGHWAYS AND TRANSPORTATION COMMISSION
105 WEST CAPITOL
JEFFERSON CITY, MO 65102
1-888-ASK-MODOT (1-888-275-6636)

Hg Consult Inc engineers planners
9111 NE 79th Street K.C. MO 64158: (816)912-4720
Hg CONSULT, INC.
PRO. ENGINEER 2010005873

G:\My Drive\Hg Projects\2021\21.017 Route 36 Bridge Rehab (Garver)\Civil\Sheet_Files\020_TC_12_J1P3295_i50.dgn 4:21:32 PM 9/19/2021

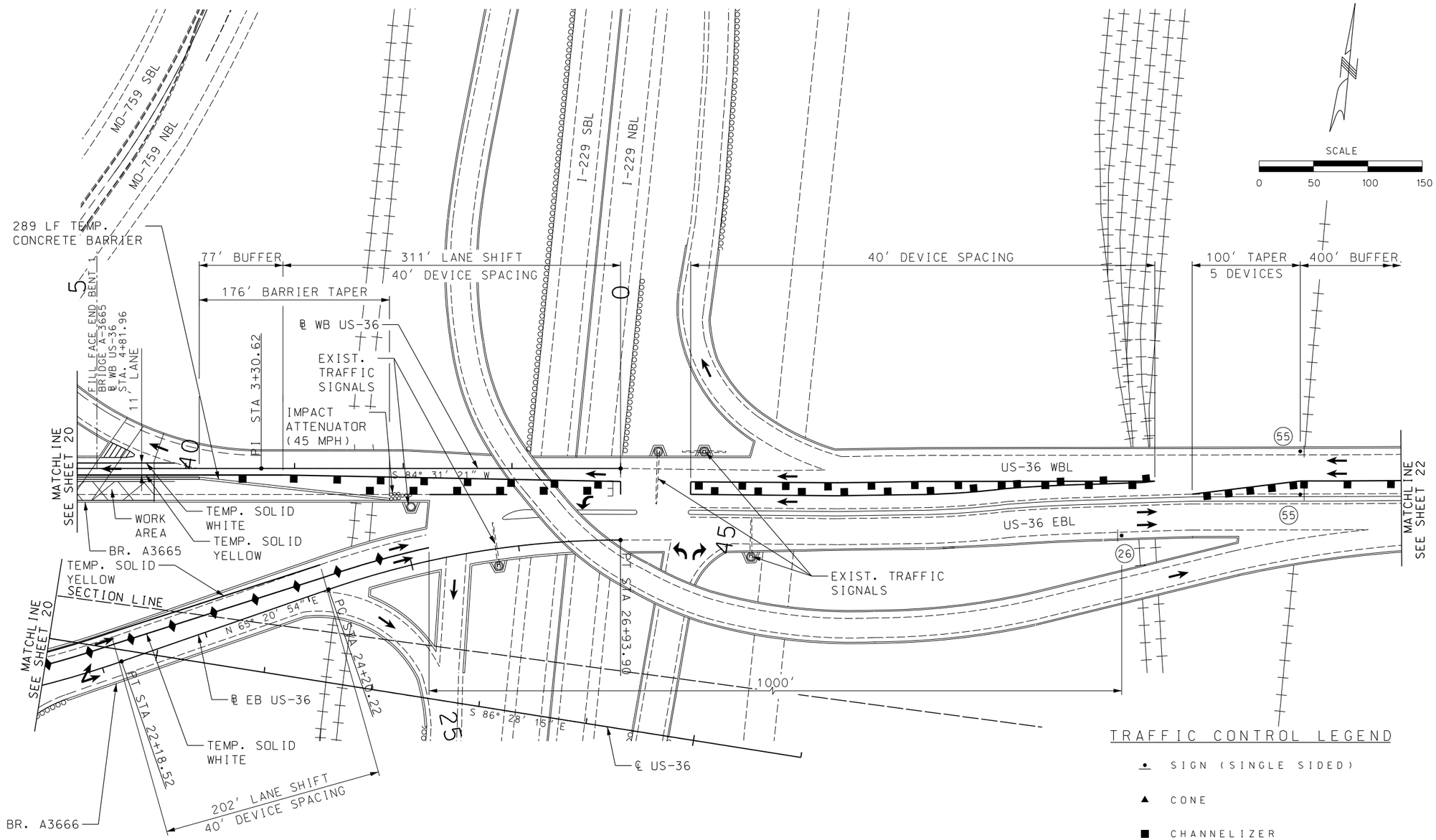

TRAFFIC CONTROL LEGEND

- SIGN (SINGLE SIDED)
- CONE
- CHANNELIZER
- TUBULAR MARKER
- BARRICADE
- TEMPORARY LONG-TERM RUMBLE STRIPS
- CHANGEABLE MESSAGE BOARD
- FLASHING ARROW PANEL (SINGLE)
- WORK AREA

LEFT LANE MUST TURN LEFT
R3-7L
55

END ROAD WORK
G020-2
26

TRAFFIC CONTROL
PHASE 1 - US-36
SHEET 13 OF 27

STATE OF MISSOURI
JOSHUA CASTOR
NUMBER PE-2004000772
PROFESSIONAL ENGINEER

THIS SHEET HAS BEEN SIGNED, SEALED AND DATED ELECTRONICALLY.

DATE PREPARED	
9/19/2021	
ROUTE	STATE
36	MO
DISTRICT	SHEET NO.
NW	21
COUNTY	
BUCHANAN	
JOB NO.	
J1P3295	
CONTRACT ID.	
PROJECT NO.	
BRIDGE NO.	

DESCRIPTION

DATE

MISSOURI HIGHWAYS AND TRANSPORTATION COMMISSION
105 WEST CAPITOL
JEFFERSON CITY, MO 65102
1-888-ASK-MODOT (1-888-275-6636)

Hg Consult Inc engineers planners
9111 NE 79th Street K.C. MO 64158 (816)912-4720
Hg CONSULT. INC.
PRO. ENGINEER 2010005873

G:\My Drive\Hg Projects\2021\21.017 Route 36 Bridge Rehab (Garver)\Civil\Sheet_Files\021_TC_13_J1P3295_i50.dgn 4:21:33 PM 9/19/2021

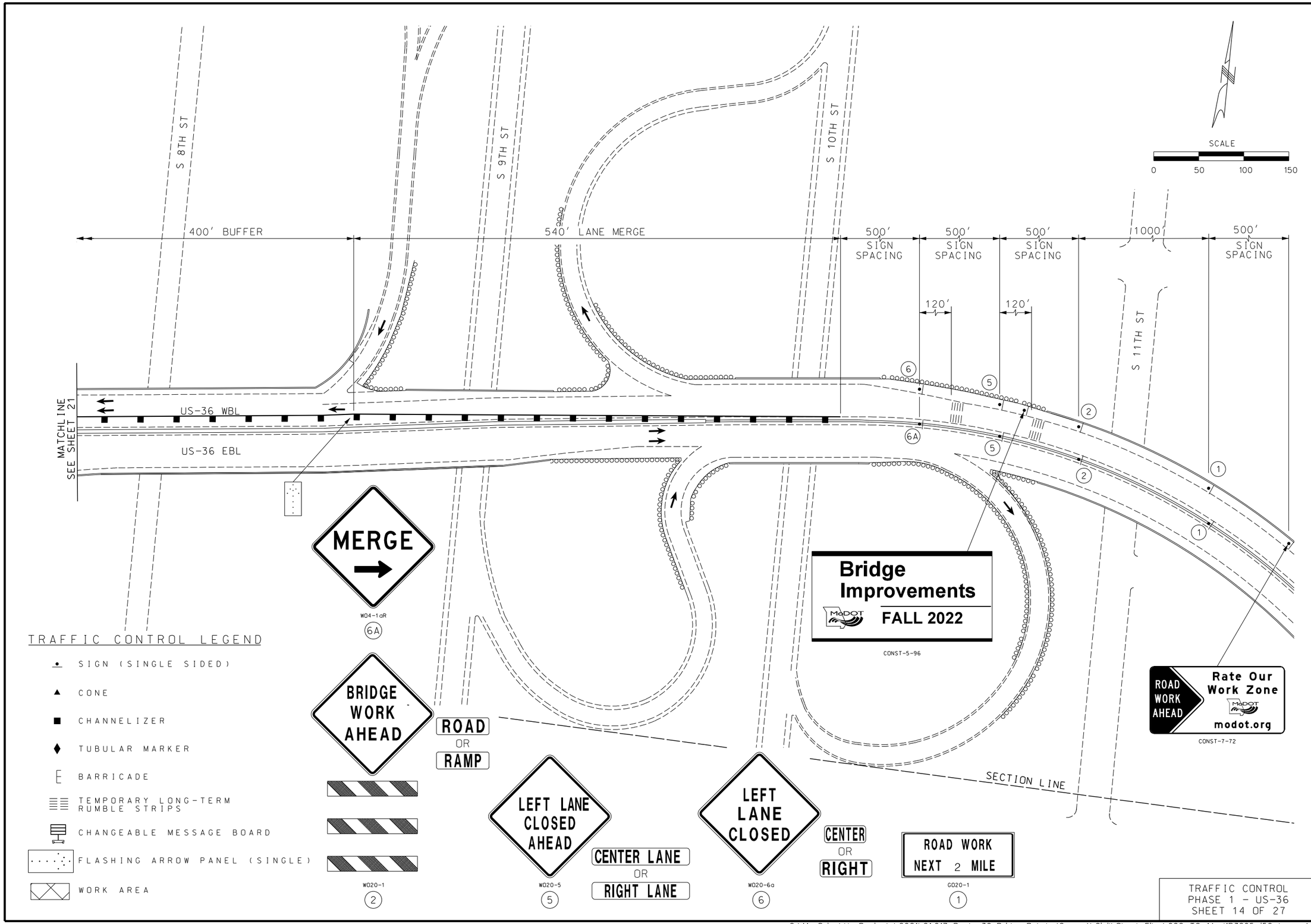

TRAFFIC CONTROL
PHASE 1 - US-36
SHEET 14 OF 27

STATE OF MISSOURI
JOSHUA CASTOR
NUMBER PE-2004000772
PROFESSIONAL ENGINEER

THIS SHEET HAS BEEN SIGNED, SEALED AND DATED ELECTRONICALLY.

DATE PREPARED	
9/19/2021	
ROUTE	STATE
36	MO
DISTRICT	SHEET NO.
NW	22
COUNTY	
BUCHANAN	
JOB NO.	
J1P3295	
CONTRACT ID.	
PROJECT NO.	
BRIDGE NO.	

DATE	DESCRIPTION

MISSOURI HIGHWAYS AND TRANSPORTATION COMMISSION
105 WEST CAPITOL
JEFFERSON CITY, MO 65102
1-888-ASK-MODOT (1-888-275-6636)

Hg Consult Inc engineers planners
9111 NE 79th Street K.C. MO 64158; (816)912-4720
Hg CONSULT, INC.
PRO. ENGINEER 2010005873

G:\My Drive\Hg Projects\2021\21.017 Route 36 Bridge Rehab (Garver)\Civil\Sheet_Files\022_TC_14_J1P3295_i50.dgn 4:21:34 PM 9/19/2021

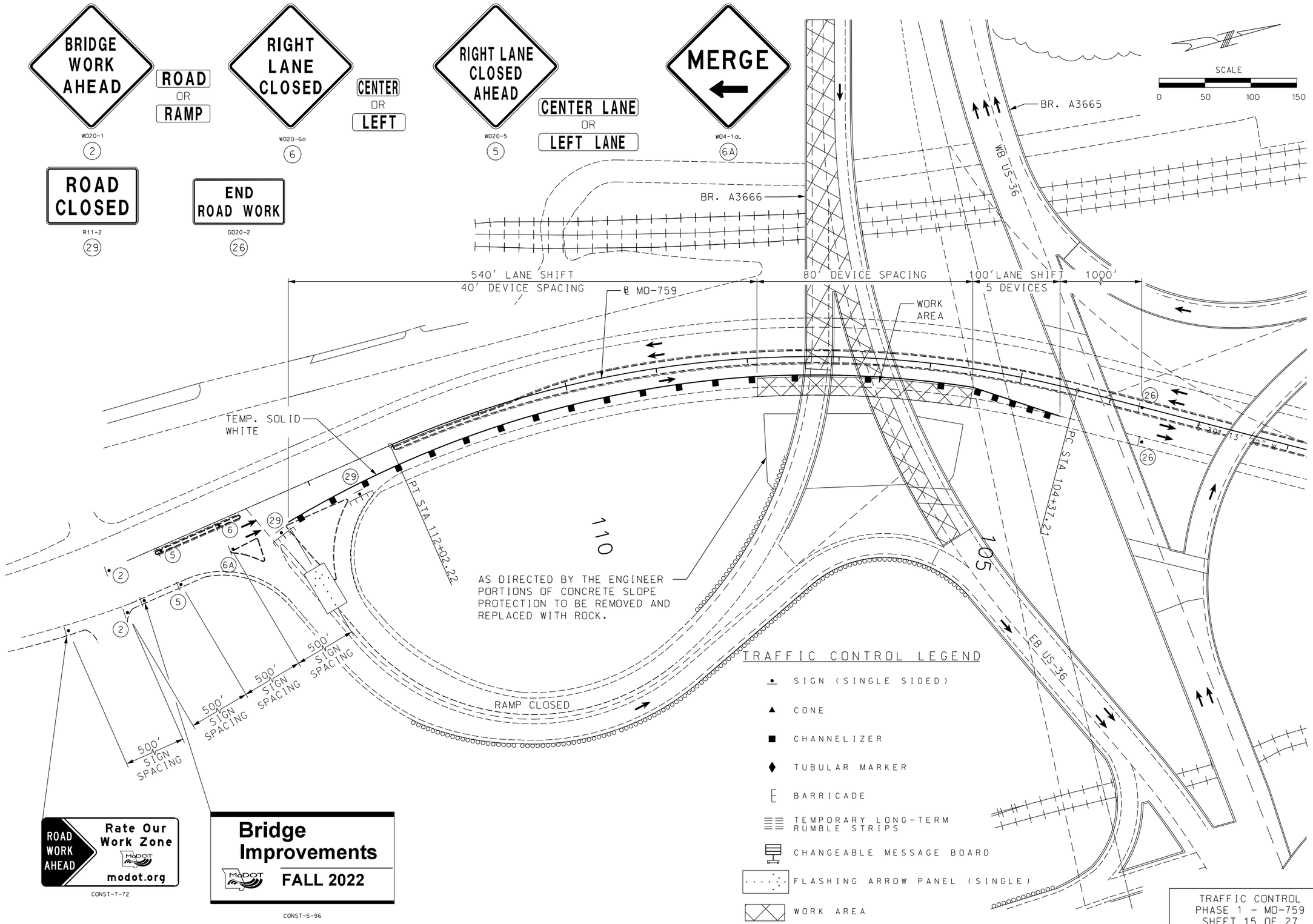

TRAFFIC CONTROL
PHASE 1 - MO-759
SHEET 15 OF 27

STATE OF MISSOURI
JOSHUA CASTOR
NUMBER PE-2004000772
PROFESSIONAL ENGINEER

THIS SHEET HAS BEEN SIGNED, SEALED AND DATED ELECTRONICALLY.

DATE PREPARED	9/19/2021
ROUTE	36
STATE	MO
DISTRICT	NW
SHEET NO.	23
COUNTY	BUCHANAN
JOB NO.	J1P3295
CONTRACT ID.	
PROJECT NO.	
BRIDGE NO.	

DESCRIPTION

DATE

MISSOURI HIGHWAYS AND TRANSPORTATION COMMISSION
105 WEST CAPITOL
JEFFERSON CITY, MO 65102
1-888-ASK-MODOT (1-888-275-6636)

Hg Consult, Inc. engineers planners
9111 NE 79th Street K.C. MO 64158; (816)912-4720
Hg CONSULT, INC.
PRO. ENGINEER 2010005873

G:\My Drive\Hg Projects\2021\21.017 Route 36 Bridge Rehab (Garver)\Civil\Sheet_Files\023_TC_15_J1P3295_i50.dgn 4:21:35 PM 9/19/2021

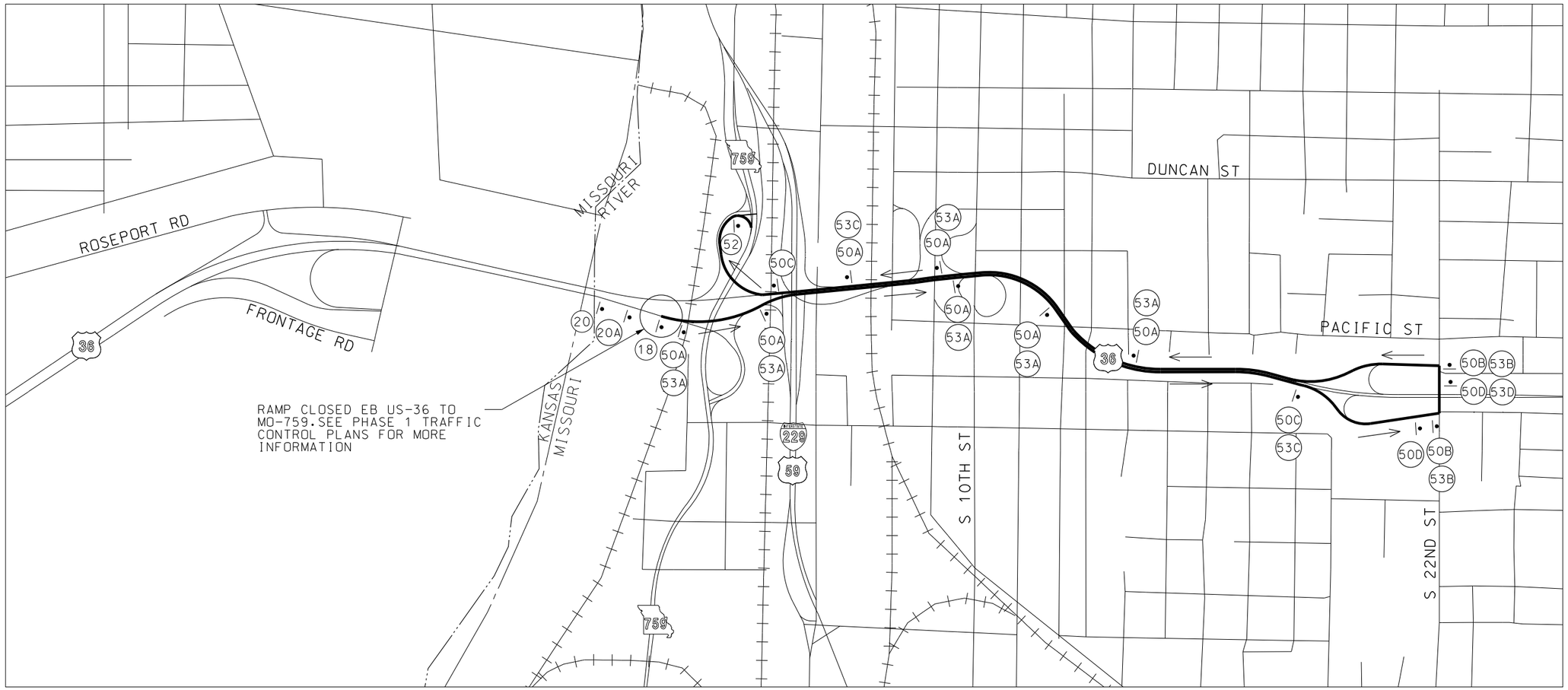

N.T.S.

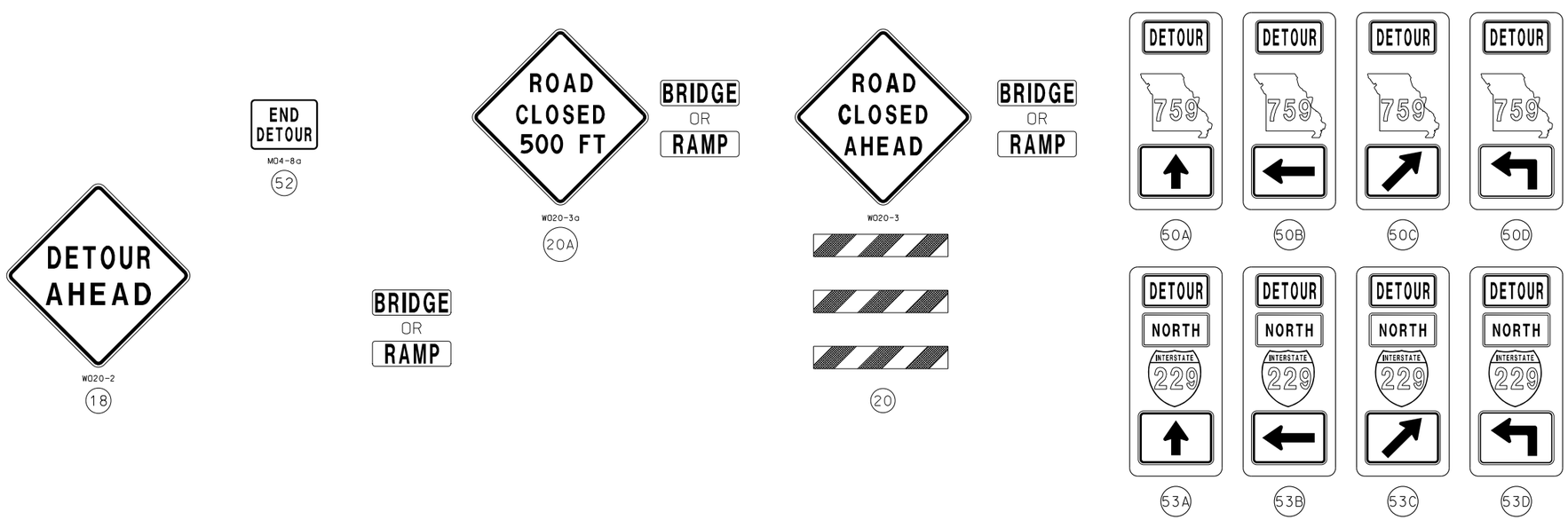

TRAFFIC CONTROL
PHASE 1 - DETOUR PLAN
SHEET 16 OF 27

STATE OF MISSOURI
JOSHUA CASTOR
NUMBER PE-2004000772
PROFESSIONAL ENGINEER

THIS SHEET HAS BEEN SIGNED, SEALED AND DATED ELECTRONICALLY.

DATE PREPARED	
9/19/2021	
ROUTE	STATE
36	MO
DISTRICT	SHEET NO.
NW	24
COUNTY	
BUCHANAN	
JOB NO.	
J1P3295	
CONTRACT ID.	
PROJECT NO.	
BRIDGE NO.	

DATE	DESCRIPTION

MISSOURI HIGHWAYS AND TRANSPORTATION COMMISSION
105 WEST CAPITOL
JEFFERSON CITY, MO 65102
1-888-ASK-MODOT (1-888-275-6636)

Hg Consult Inc engineers planners
9111 NE 79th Street; K.C. MO 64158; (816)912-4720
Hg CONSULT, INC.
PRO. ENGINEER 2010005873

G:\My Drive\Hg Projects\2021\21.017 Route 36 Bridge Rehab (Garver)\Civil\Sheet_Files\024_TC_16_J1P3295_i50_Detour.dgn 4:21:37 PM 9/19/2021

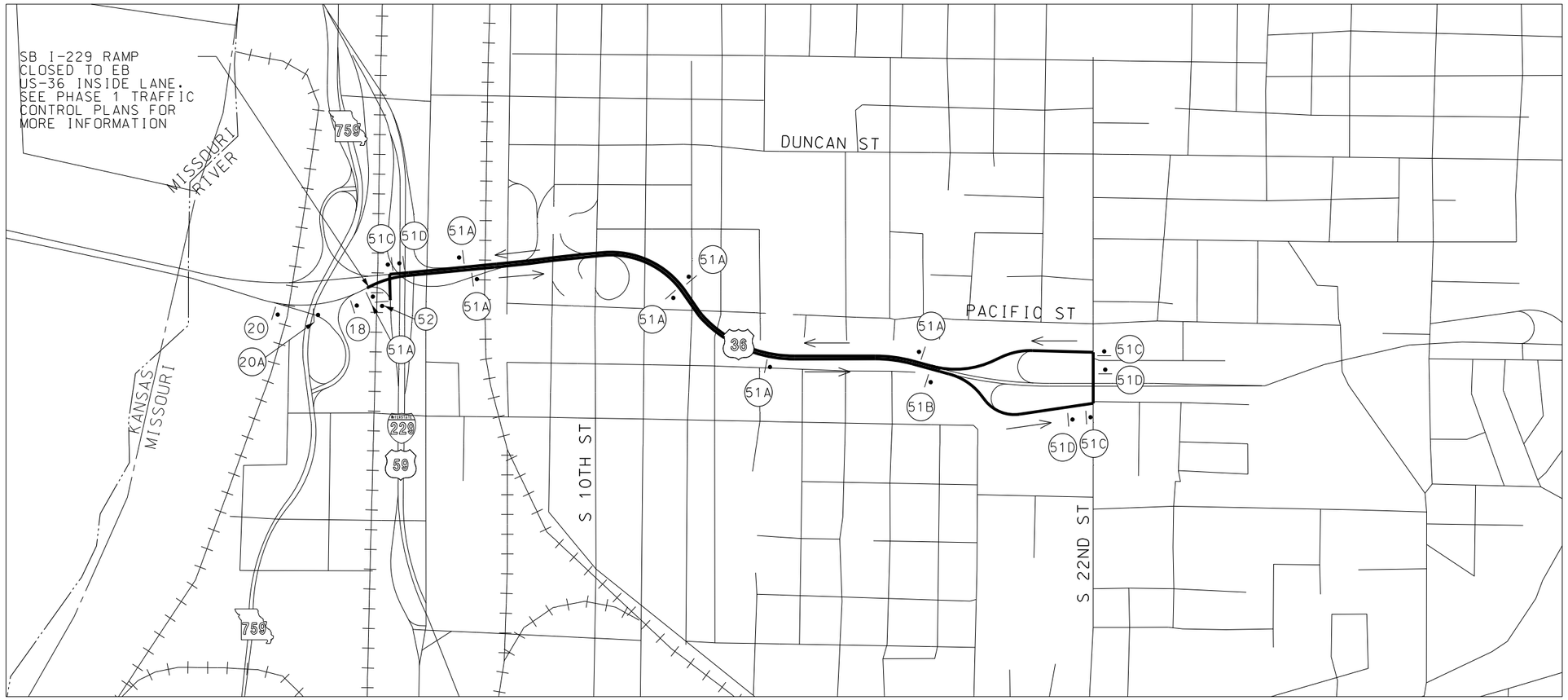

N.T.S.

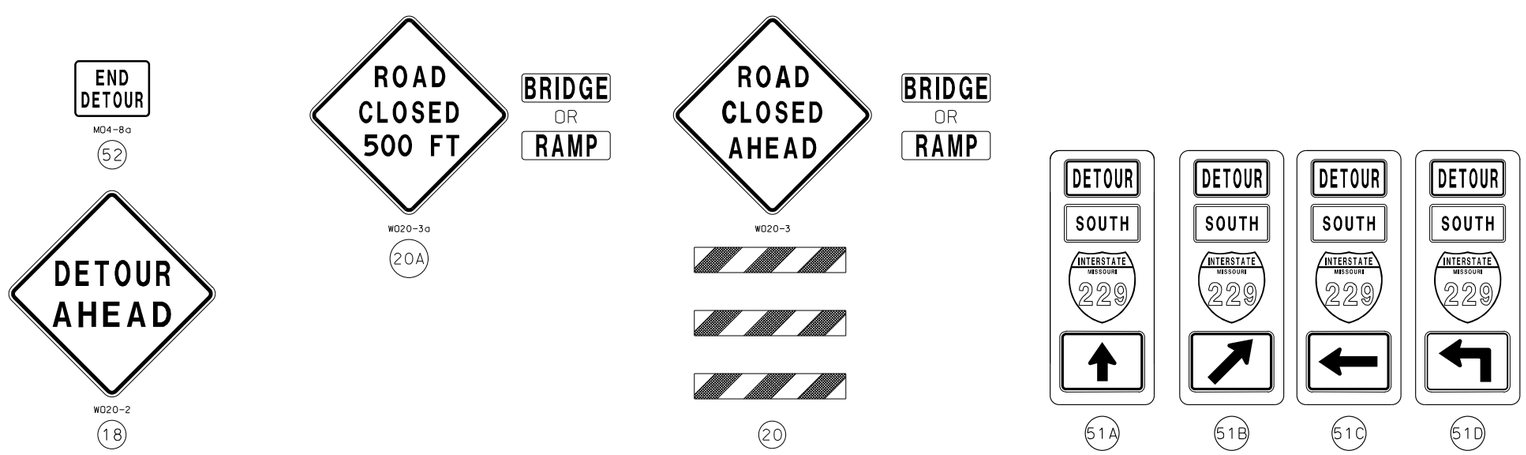

TRAFFIC CONTROL
PHASE 1 - DETOUR PLAN
SHEET 17 OF 27

STATE OF MISSOURI
JOSHUA CASTOR
NUMBER PE-2004000772
PROFESSIONAL ENGINEER

THIS SHEET HAS BEEN SIGNED, SEALED AND DATED ELECTRONICALLY.

DATE PREPARED	9/19/2021
ROUTE	36
STATE	MO
DISTRICT	NW
SHEET NO.	25
COUNTY	BUCHANAN
JOB NO.	J1P3295
CONTRACT ID.	
PROJECT NO.	
BRIDGE NO.	

DESCRIPTION

DATE

MISSOURI HIGHWAYS AND TRANSPORTATION COMMISSION
105 WEST CAPITOL
JEFFERSON CITY, MO 65102
1-888-ASK-MODOT (1-888-275-6636)

Hg Consult Inc engineers planners
9111 NE 79th Streets K.C. MO 64158: (816)912-4720
Hg CONSULT, INC.
PRO. ENGINEER 2010005873

G:\My Drive\Hg Projects\2021\21.017 Route 36 Bridge Rehab (Garver)\Civil\Sheet_Files\025_TC_17_J1P3295_i50_Detour.dgn 4:21:38 PM 9/19/2021

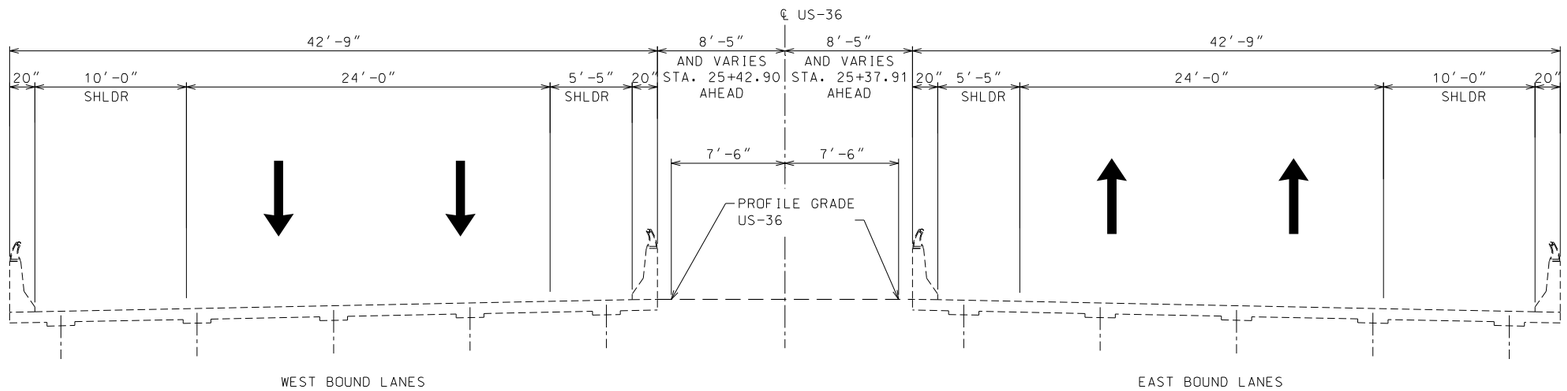

EXISTING CONFIGURATION

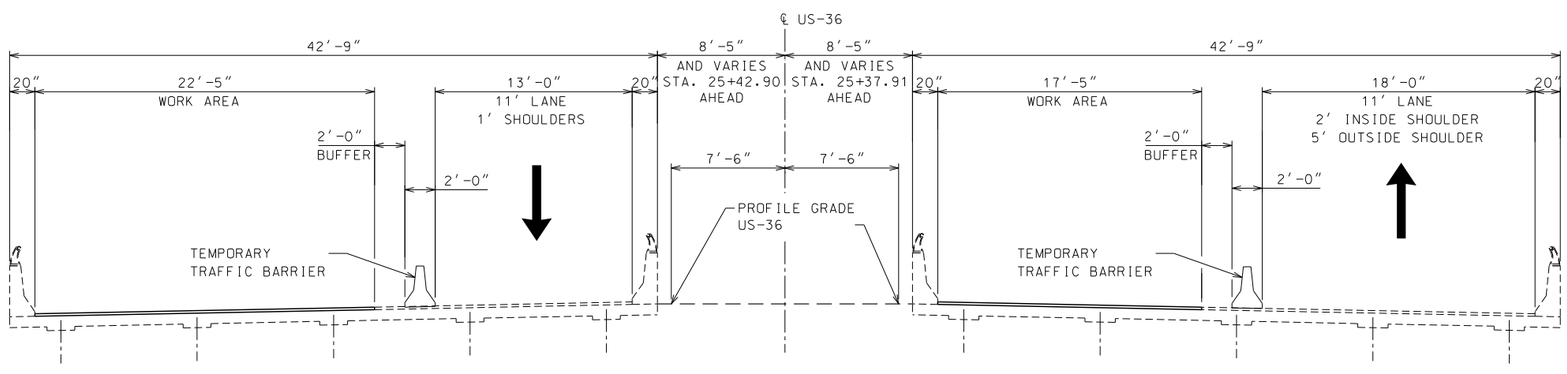

PHASE 2 CONSTRUCTION

CONSTRUCTION PHASING - PHASE 2

TRAFFIC CONTROL
TYPICAL SECTION
PHASE 2
SHEET 18 OF 27

STATE OF MISSOURI
JOSHUA CASTOR
NUMBER PE-2004000772
PROFESSIONAL ENGINEER

THIS SHEET HAS BEEN SIGNED, SEALED AND DATED ELECTRONICALLY.

DATE PREPARED	9/19/2021
ROUTE	36
STATE	MO
DISTRICT	NW
SHEET NO.	26
COUNTY	BUCHANAN
JOB NO.	J1P3295
CONTRACT ID.	
PROJECT NO.	
BRIDGE NO.	

DESCRIPTION	DATE

MISSOURI HIGHWAYS AND TRANSPORTATION COMMISSION
105 WEST CAPITOL
JEFFERSON CITY, MO 65102
1-888-ASK-MODOT (1-888-275-6636)

Hg Consult Inc engineers planners
9111 NE 79th Street; K.C. MO 64158; (816)912-4720
Hg CONSULT, INC.
PRO. ENGINEER 2010005873

G:\My Drive\Hg Projects\2021\21.017 Route 36 Bridge Rehab (Garver)\Civil\Sheet_Files\026_TC_18_J1P3295_i50_TYP_Opt1_TempBarrier.dgn 4:21:40 PM 9/19/2021

TRAFFIC CONTROL LEGEND

- SIGN (SINGLE SIDED)
- CONE
- CHANNELIZER
- TUBULAR MARKER
- BARRICADE
- TEMPORARY LONG-TERM RUMBLE STRIPS
- CHANGEABLE MESSAGE BOARD
- FLASHING ARROW PANEL (SINGLE)
- WORK AREA

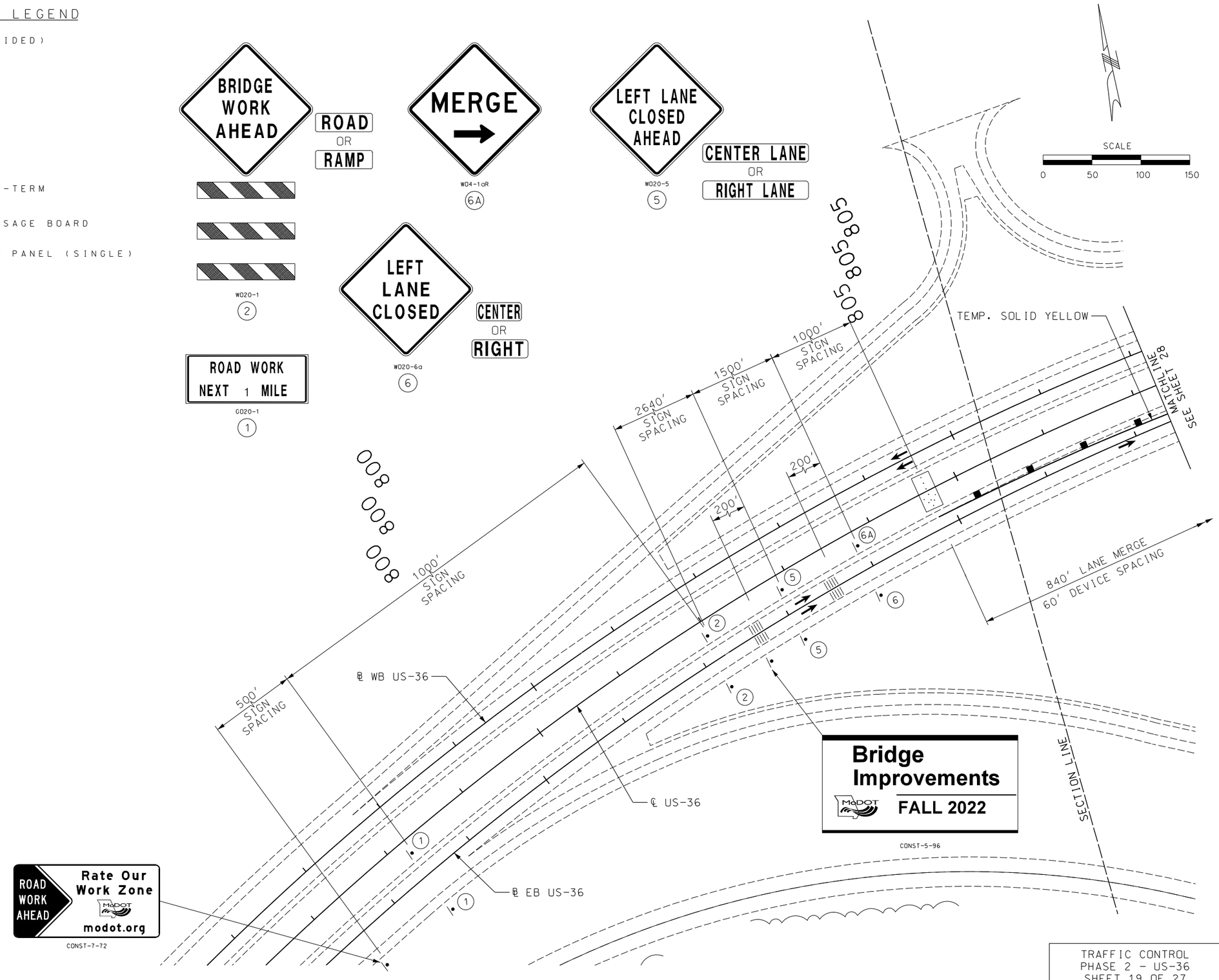

TRAFFIC CONTROL
PHASE 2 - US-36
SHEET 19 OF 27

STATE OF MISSOURI
JOSHUA CASTOR
NUMBER PE-2004000772
PROFESSIONAL ENGINEER

THIS SHEET HAS BEEN SIGNED, SEALED AND DATED ELECTRONICALLY.

DATE PREPARED	9/19/2021
ROUTE	36
STATE	MO
DISTRICT	NW
SHEET NO.	27
COUNTY	BUCHANAN
JOB NO.	J1P3295
CONTRACT ID.	
PROJECT NO.	
BRIDGE NO.	

DESCRIPTION

DATE

MISSOURI HIGHWAYS AND TRANSPORTATION COMMISSION
105 WEST CAPITOL
JEFFERSON CITY, MO 65102
1-888-ASK-MODOT (1-888-275-6636)

Hg Consult Inc engineers planners
9111 NE 79th Street; K.C. MO 64158; (816)912-4720
Hg CONSULT, INC.
PRO. ENGINEER 2010005873

G:\My Drive\Hg Projects\2021\21.017 Route 36 Bridge Rehab (Garver)\Civil\Sheet_Files\027_TC_19_J1P3295_i50.dgn 4:21:43 PM 9/19/2021

TRAFFIC CONTROL LEGEND

- SIGN (SINGLE SIDED)
- CONE
- CHANNELIZER
- TUBULAR MARKER
- BARRICADE
- TEMPORARY LONG-TERM RUMBLE STRIPS
- CHANGEABLE MESSAGE BOARD
- FLASHING ARROW PANEL (SINGLE)
- WORK AREA

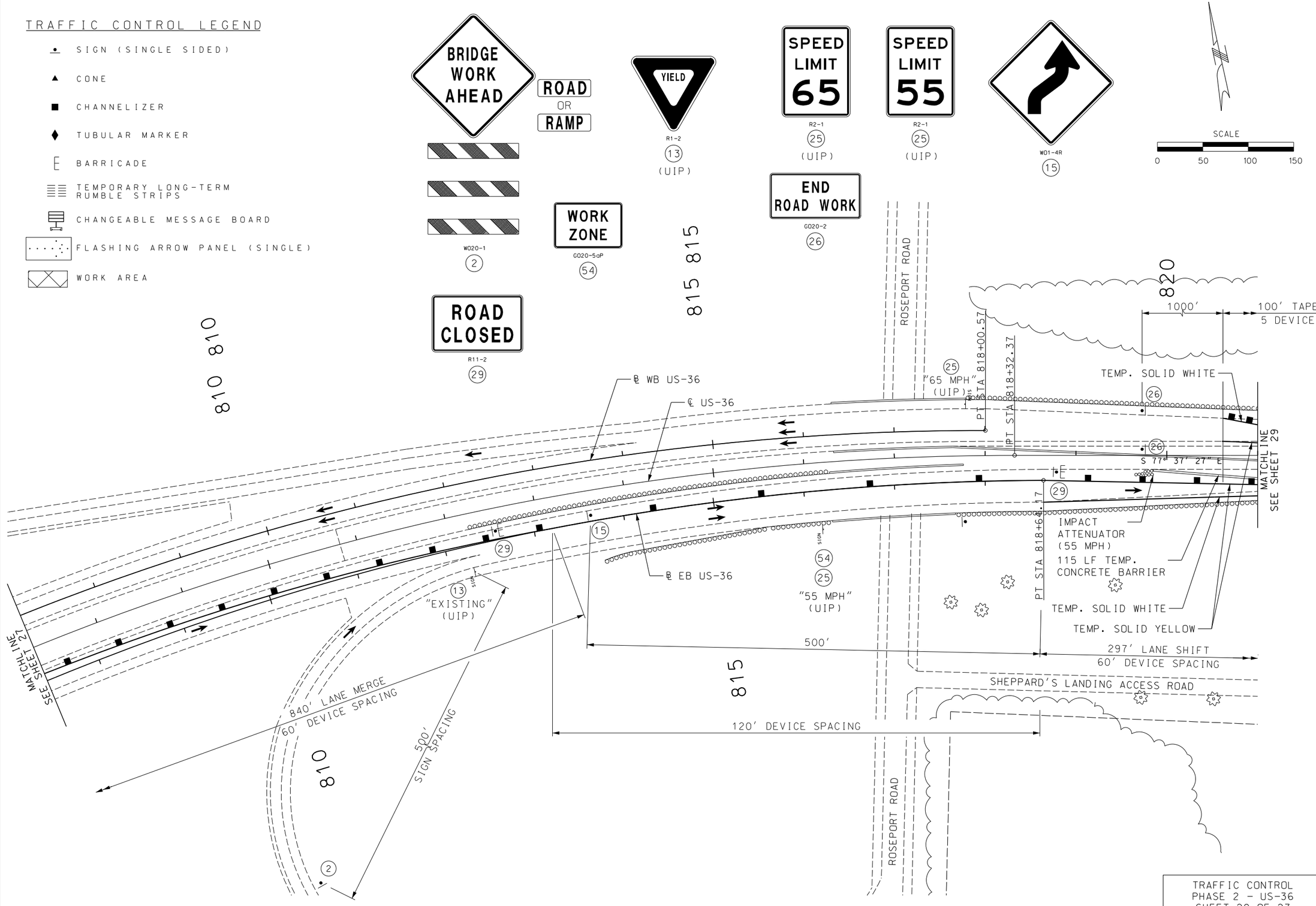

TRAFFIC CONTROL
PHASE 2 - US-36
SHEET 20 OF 27

STATE OF MISSOURI
JOSHUA CASTOR
NUMBER PE-2004000772
PROFESSIONAL ENGINEER

THIS SHEET HAS BEEN SIGNED, SEALED AND DATED ELECTRONICALLY.

DATE PREPARED	9/19/2021
ROUTE	36
STATE	MO
DISTRICT	NW
SHEET NO.	28
COUNTY	BUCHANAN
JOB NO.	J1P3295
CONTRACT ID.	
PROJECT NO.	
BRIDGE NO.	

DESCRIPTION | DATE

MISSOURI HIGHWAYS AND TRANSPORTATION COMMISSION
105 WEST CAPITOL
JEFFERSON CITY, MO 65102
1-888-ASK-MODOT (1-888-275-6636)

Hg Consult Inc engineers planners
9111 NE 79th Street K.C. MO 641581 (816)912-4720
Hg CONSULT, INC.
PRO. ENGINEER 2010005873

G:\My Drive\Hg Projects\2021\21.017 Route 36 Bridge Rehab (Garver)\Civil\Sheet_Files\028_TC_20_J1P3295_i50.dgn 4:21:44 PM 9/19/2021

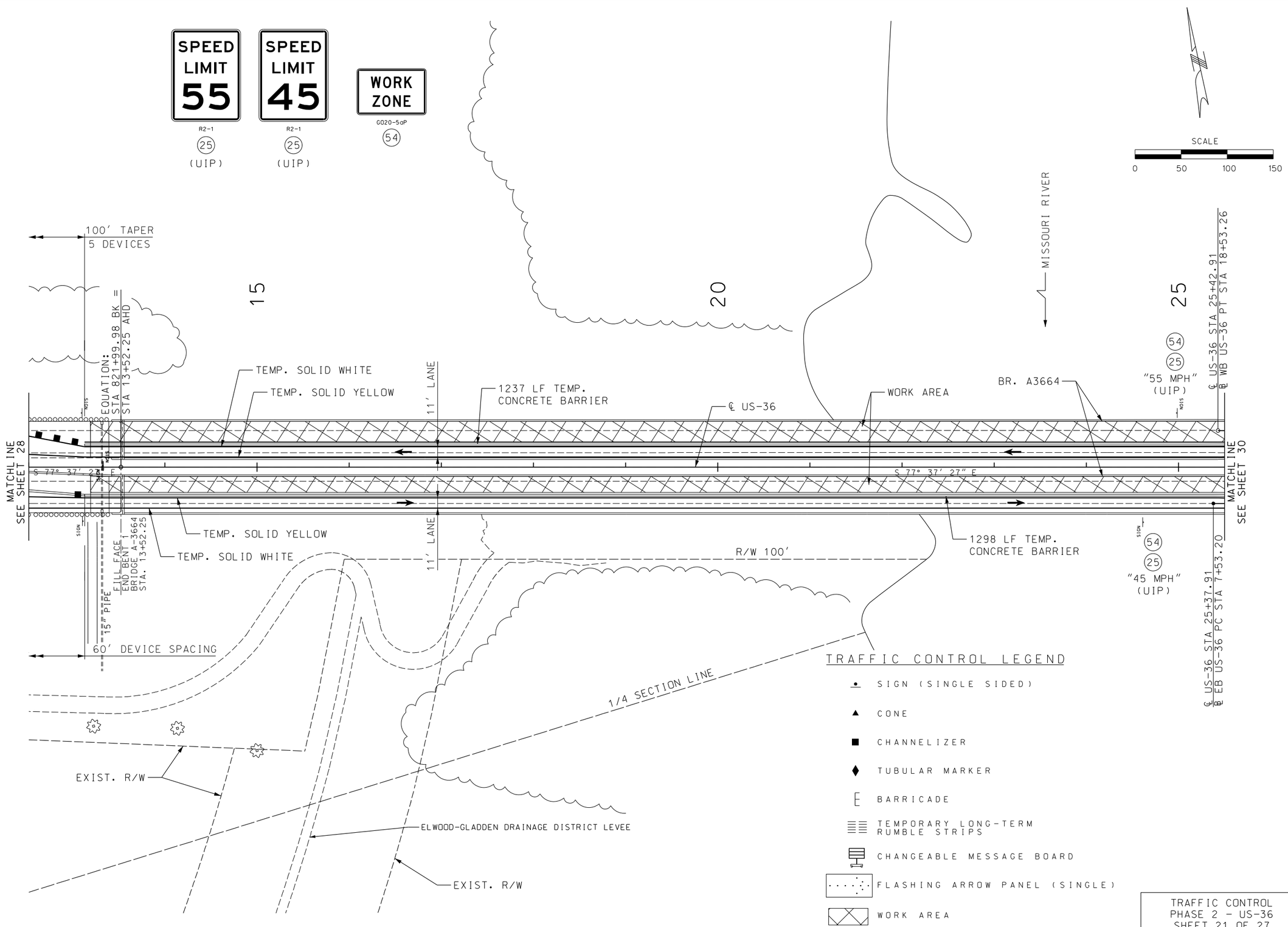

TRAFFIC CONTROL
PHASE 2 - US-36
SHEET 21 OF 27

STATE OF MISSOURI
JOSHUA CASTOR
NUMBER PE-2004000772
PROFESSIONAL ENGINEER

THIS SHEET HAS BEEN SIGNED, SEALED AND DATED ELECTRONICALLY.

DATE PREPARED	
9/19/2021	
ROUTE	STATE
36	MO
DISTRICT	SHEET NO.
NW	29
COUNTY	
BUCHANAN	
JOB NO.	
J1P3295	
CONTRACT ID.	
PROJECT NO.	
BRIDGE NO.	

DATE	DESCRIPTION

MISSOURI HIGHWAYS AND TRANSPORTATION COMMISSION
105 WEST CAPITOL
JEFFERSON CITY, MO 65102
1-888-ASK-MODOT (1-888-275-6636)

Hg Consult Inc engineers planners
9111 NE 79th Street; K.C. MO 64158; (816)912-4720
Hg CONSULT, INC.
PRO. ENGINEER 2010005873

G:\My Drive\Hg Projects\2021\21.017 Route 36 Bridge Rehab (Garver)\Civil\Sheet_Files\029_TC_21_J1P3295_i50.dgn 4:21:46 PM 9/19/2021

TRAFFIC CONTROL LEGEND

- SIGN (SINGLE SIDED)
- CONE
- CHANNELIZER
- TUBULAR MARKER
- BARRICADE
- TEMPORARY LONG-TERM RUMBLE STRIPS
- CHANGEABLE MESSAGE BOARD
- FLASHING ARROW PANEL (SINGLE)
- WORK AREA

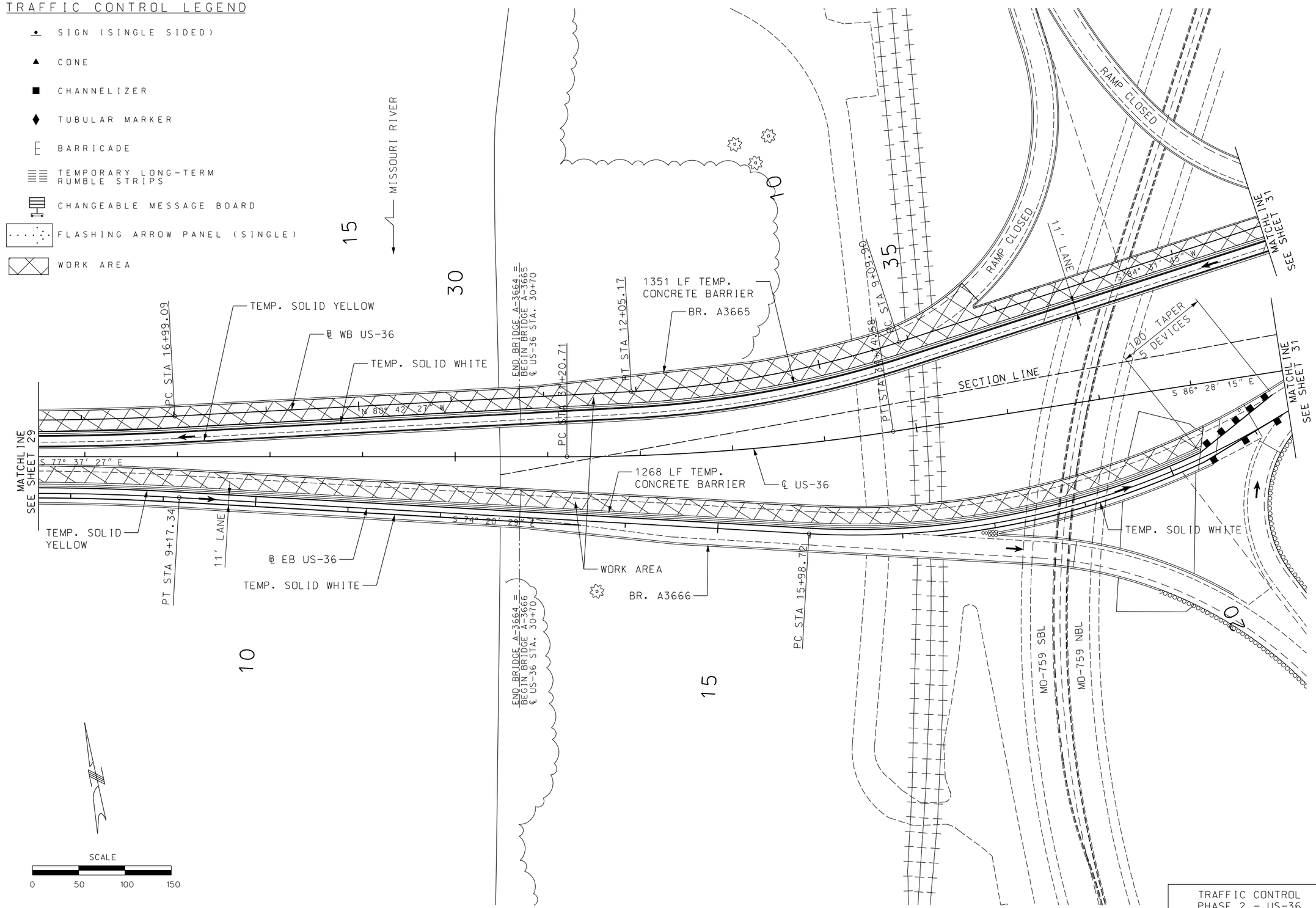

TRAFFIC CONTROL
PHASE 2 - US-36
SHEET 22 OF 27

STATE OF MISSOURI
JOSHUA CASTOR
NUMBER PE-2004000772
PROFESSIONAL ENGINEER

THIS SHEET HAS BEEN SIGNED, SEALED AND DATED ELECTRONICALLY.

DATE PREPARED	9/19/2021
ROUTE	36
STATE	MO
DISTRICT	NW
SHEET NO.	30
COUNTY	BUCHANAN
JOB NO.	J1P3295
CONTRACT ID.	
PROJECT NO.	
BRIDGE NO.	

DATE	DESCRIPTION

MISSOURI HIGHWAYS AND TRANSPORTATION COMMISSION
105 WEST CAPITOL
JEFFERSON CITY, MO 65102
1-888-ASK-MODOT (1-888-275-6636)

Hg Consult Inc engineers planners
9111 NE 79th Street: K.C. MO 64158: (816)912-4720
Hg CONSULT, INC.
PRO. ENGINEER 2010005873

G:\My Drive\Hg Projects\2021\21.017 Route 36 Bridge Rehab (Garver)\Civil\Sheet_Files\030_TC_22_J1P3295_i50.dgn 4:21:47 PM 9/19/2021

TRAFFIC CONTROL LEGEND

- SIGN (SINGLE SIDED)
- CONE
- CHANNELIZER
- TUBULAR MARKER
- BARRICADE
- TEMPORARY LONG-TERM RUMBLE STRIPS
- CHANGEABLE MESSAGE BOARD
- FLASHING ARROW PANEL (SINGLE)
- WORK AREA

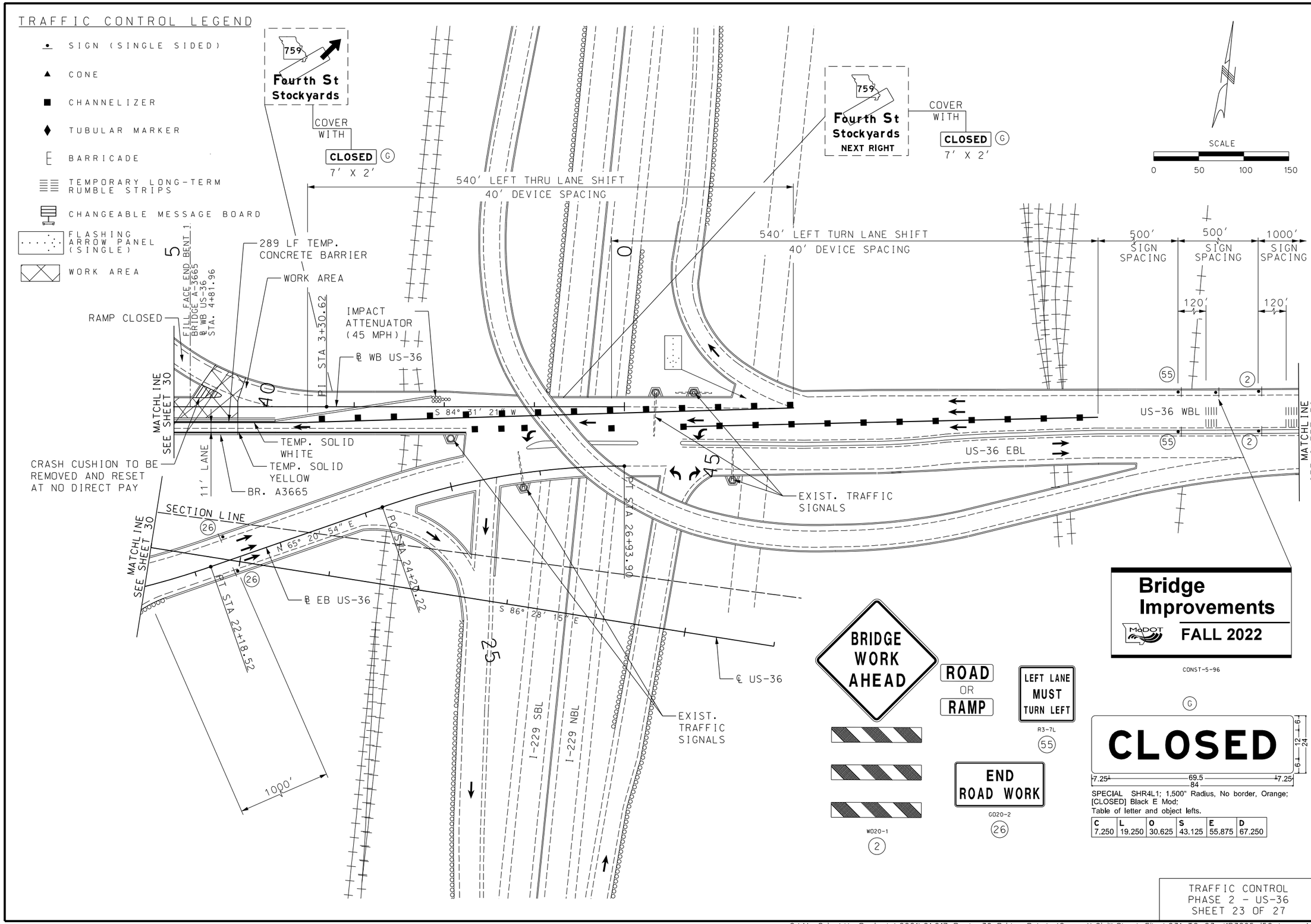

TRAFFIC CONTROL
PHASE 2 - US-36
SHEET 23 OF 27

STATE OF MISSOURI
JOSHUA CASTOR
NUMBER PE-2004000772
PROFESSIONAL ENGINEER

THIS SHEET HAS BEEN SIGNED, SEALED AND DATED ELECTRONICALLY.

DATE PREPARED	
9/19/2021	
ROUTE 36	STATE MO
DISTRICT NW	SHEET NO. 31
COUNTY BUCHANAN	
JOB NO. J1P3295	
CONTRACT ID.	
PROJECT NO.	
BRIDGE NO.	

DESCRIPTION

DATE

MISSOURI HIGHWAYS AND TRANSPORTATION COMMISSION
105 WEST CAPITOL
JEFFERSON CITY, MO 65102
1-888-ASK-MODOT (1-888-275-6636)

Hg Consult Inc engineers planners
9111 NE 79th Street K.C. MO 64158: (816)912-4720
Hg CONSULT. INC.
PRO. ENGINEER 2010005873

G:\My Drive\Hg Projects\2021\21.017 Route 36 Bridge Rehab (Garver)\Civil\Sheet_Files\031_TC_23_J1P3295_i50.dgn 4:21:48 PM 9/19/2021

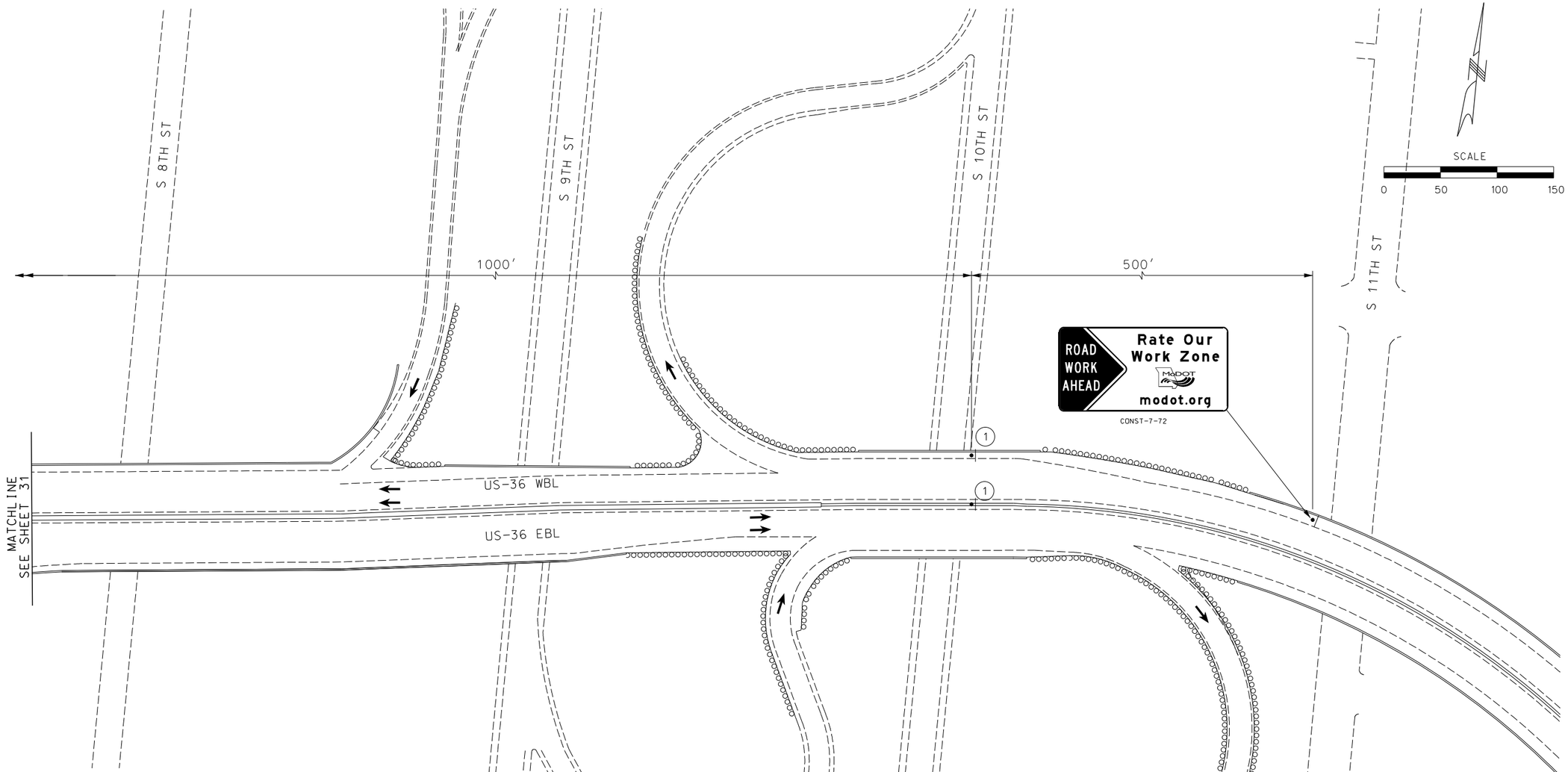

TRAFFIC CONTROL LEGEND

- SIGN (SINGLE SIDED)
- CONE
- CHANNELIZER
- TUBULAR MARKER
- BARRICADE
- TEMPORARY LONG-TERM RUMBLE STRIPS
- CHANGEABLE MESSAGE BOARD
- FLASHING ARROW PANEL (SINGLE)
- WORK AREA

ROAD WORK
NEXT 2 MILE

G020-1

1

TRAFFIC CONTROL
PHASE 2 - US-36
SHEET 24 OF 27

STATE OF MISSOURI
JOSHUA CASTOR
NUMBER PE-2004000772
PROFESSIONAL ENGINEER

THIS SHEET HAS BEEN SIGNED, SEALED AND DATED ELECTRONICALLY.

DATE PREPARED	
9/19/2021	
ROUTE	STATE
36	MO
DISTRICT	SHEET NO.
NW	32
COUNTY	
BUCHANAN	
JOB NO.	
J1P3295	
CONTRACT ID.	
PROJECT NO.	
BRIDGE NO.	

DATE	DESCRIPTION

MISSOURI HIGHWAYS AND TRANSPORTATION COMMISSION
105 WEST CAPITOL
JEFFERSON CITY, MO 65102
1-888-ASK-MODOT (1-888-275-6636)

Hg Consult, Inc. engineers planners
9111 NE 79th Street K.C. MO 64158 (816)912-4720
Hg CONSULT, INC.
PRO. ENGINEER 2010005873

G:\My Drive\Hg Projects\2021\21.017 Route 36 Bridge Rehab (Garver)\Civil\Sheet_Files\032_TC_24_J1P3295_i50.dgn 4:21:50 PM 9/19/2021

TRAFFIC CONTROL LEGEND

- SIGN (SINGLE SIDED)
- CONE
- CHANNELIZER
- TUBULAR MARKER
- BARRICADE
- TEMPORARY LONG-TERM RUMBLE STRIPS
- CHANGEABLE MESSAGE BOARD
- FLASHING ARROW PANEL (SINGLE)
- WORK AREA

ROAD
OR
RAMP

BRIDGE
OR
RAMP

BRIDGE
OR
RAMP

SPECIAL SHR4L1; 1.500" Radius, No border, Orange; [CLOSED] Black E Mod;
Table of letter and object lefts.

C	L	O	S	E	D
7.250	19.250	30.625	43.125	55.875	67.250

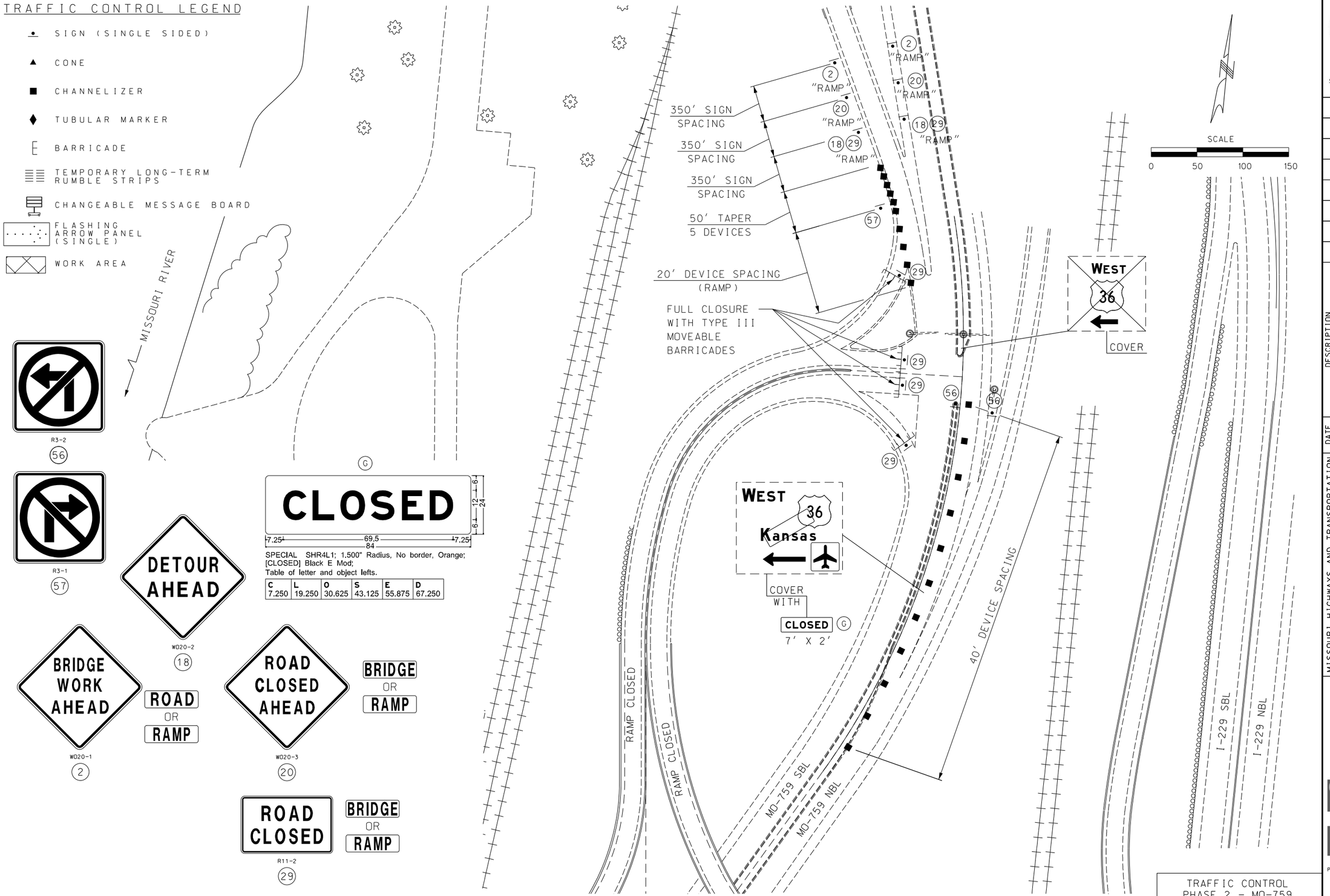

TRAFFIC CONTROL
PHASE 2 - MO-759
SHEET 25 OF 27

STATE OF MISSOURI
JOSHUA CASTOR
NUMBER PE-2004000772
PROFESSIONAL ENGINEER

THIS SHEET HAS BEEN SIGNED, SEALED AND DATED ELECTRONICALLY.

DATE PREPARED	
9/19/2021	
ROUTE 36	STATE MO
DISTRICT NW	SHEET NO. 33
COUNTY BUCHANAN	
JOB NO. J1P3295	
CONTRACT ID.	
PROJECT NO.	
BRIDGE NO.	

DATE	DESCRIPTION

MISSOURI HIGHWAYS AND TRANSPORTATION COMMISSION
105 WEST CAPITOL
JEFFERSON CITY, MO 65102
1-888-ASK-MODOT (1-888-275-6636)

Hg Consult, Inc. engineers planners
9111 NE 79th Street1 K.C. MO 64158\ (816)912-4720
Hg CONSULT, INC.
PRO. ENGINEER 2010005873

G:\My Drive\Hg Projects\2021\21.017 Route 36 Bridge Rehab (Garver)\Civil\Sheet_Files\033_TC_25_J1P3295_i50.dgn 4:21:51 PM 9/19/2021

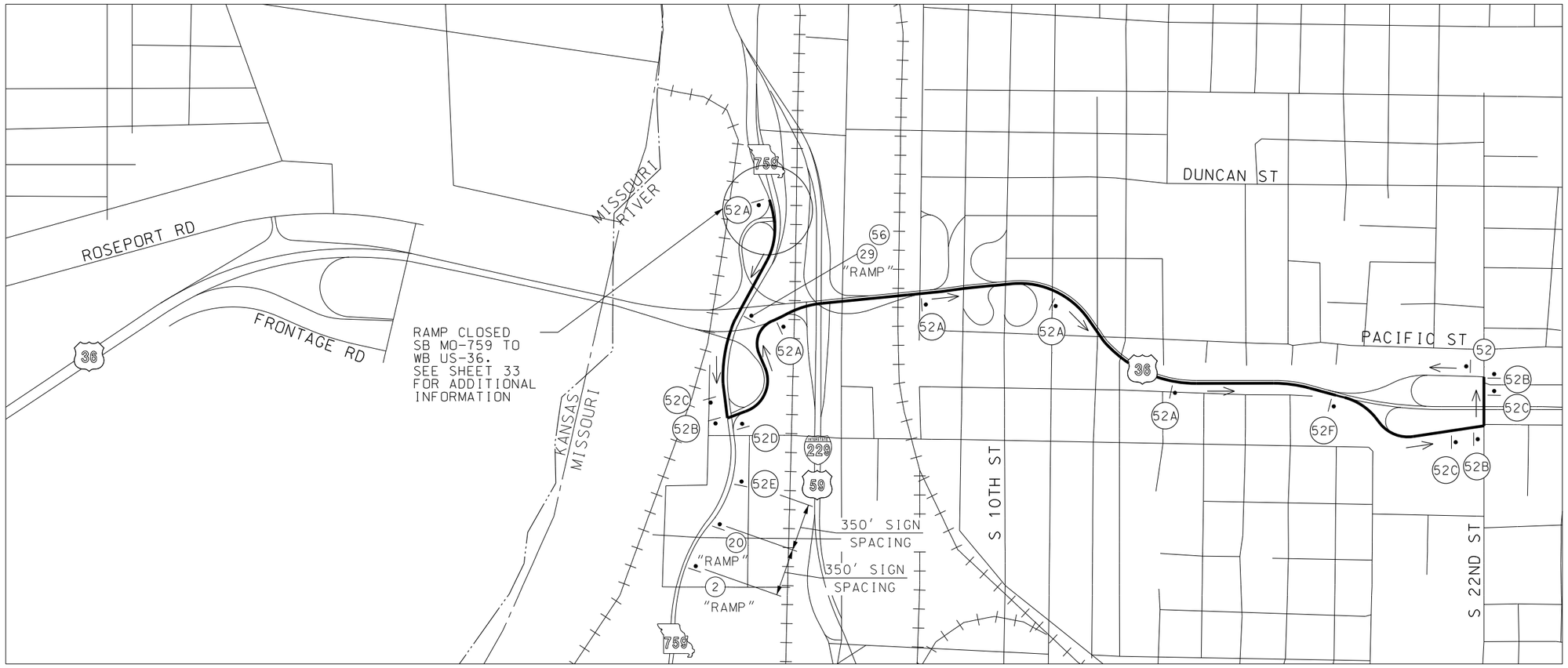

N.T.S.

R3-2

56

R11-2

29

M04-8a

52

W020-3

20

W020-2

18

W020-1

2

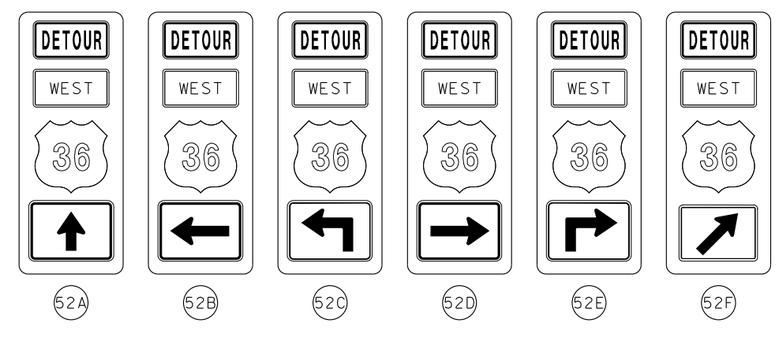

52A 52B 52C 52D 52E 52F

TRAFFIC CONTROL
PHASE 2 - DETOUR PLAN
SHEET 26 OF 27

STATE OF MISSOURI
JOSHUA CASTOR
NUMBER PE-2004000772
PROFESSIONAL ENGINEER

THIS SHEET HAS BEEN SIGNED, SEALED AND DATED ELECTRONICALLY.

DATE PREPARED	
9/19/2021	
ROUTE	STATE
36	MO
DISTRICT	SHEET NO.
NW	34
COUNTY	
BUCHANAN	
JOB NO.	
J1P3295	
CONTRACT ID.	
PROJECT NO.	
BRIDGE NO.	

DATE	DESCRIPTION

MISSOURI HIGHWAYS AND TRANSPORTATION COMMISSION
105 WEST CAPITOL
JEFFERSON CITY, MO 65102
1-888-ASK-MODOT (1-888-275-6636)

Hg Consult Inc engineers planners
9111 NE 79th Street K.C. MO 641581 (816)912-4720
Hg CONSULT, INC.
PRO. ENGINEER 2010005873

G:\My Drive\Hg Projects\2021\21.017 Route 36 Bridge Rehab (Garver)\Civil\Sheet_Files\034_TC_26_J1P3295_i50_Detour.dgn 4:21:52 PM 9/19/2021

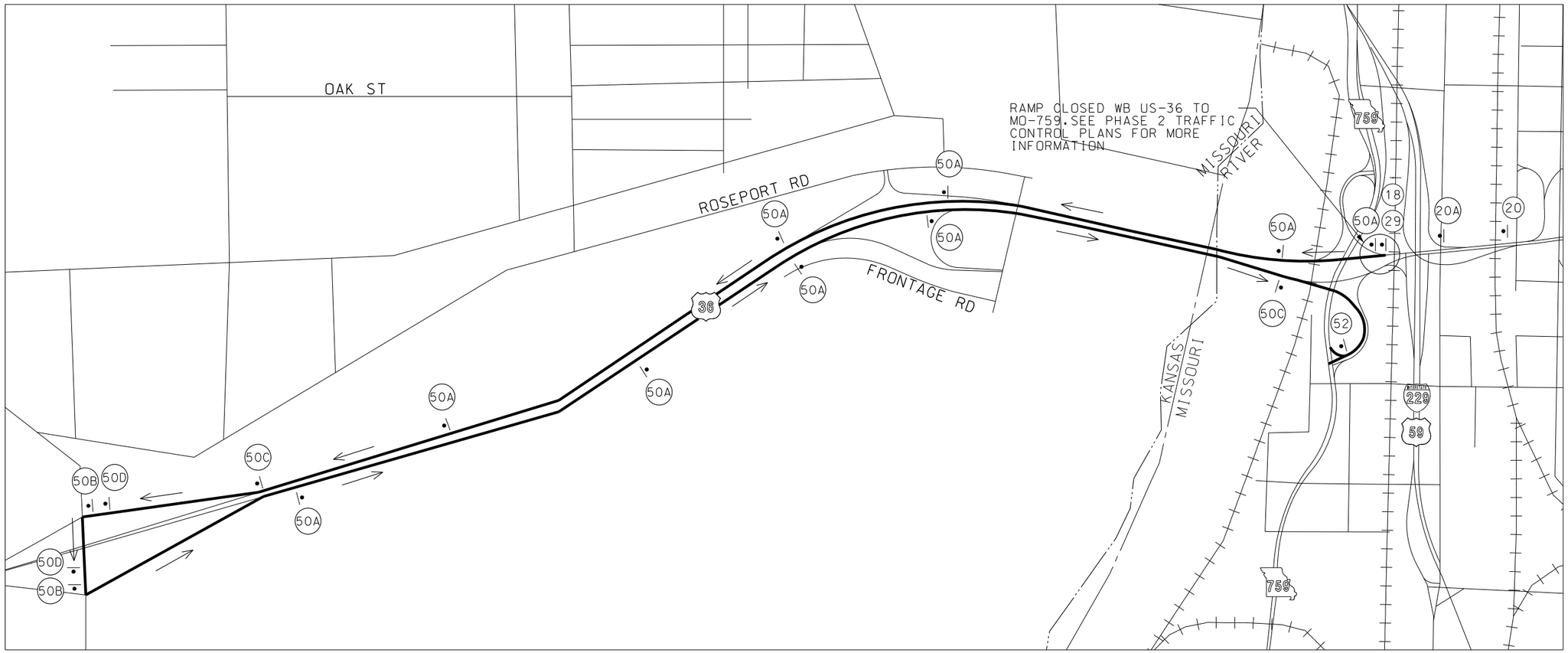

N.T.S.

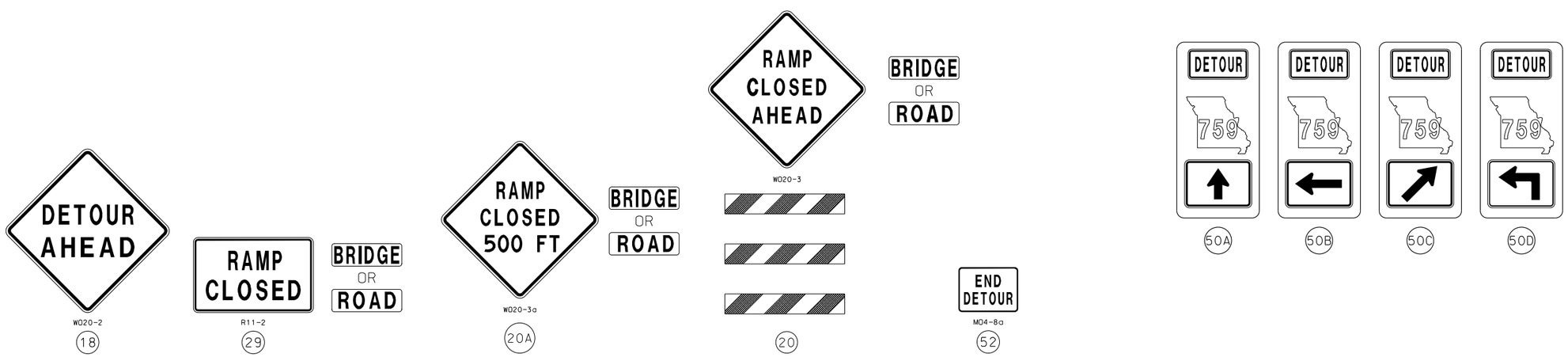

TRAFFIC CONTROL
PHASE 2 - DETOUR PLAN
SHEET 27 OF 27

STATE OF MISSOURI
JOSHUA CASTOR
NUMBER PE-2004000772
PROFESSIONAL ENGINEER

THIS SHEET HAS BEEN SIGNED, SEALED AND DATED ELECTRONICALLY.

DATE PREPARED	
9/19/2021	
ROUTE	STATE
36	MO
DISTRICT	SHEET NO.
NW	35
COUNTY	
BUCHANAN	
JOB NO.	
J1P3295	
CONTRACT ID.	
PROJECT NO.	
BRIDGE NO.	

DATE	DESCRIPTION

MISSOURI HIGHWAYS AND TRANSPORTATION COMMISSION
105 WEST CAPITOL
JEFFERSON CITY, MO 65102
1-888-ASK-MODOT (1-888-275-6636)

Hg Consult Inc engineers planners
9111 NE 79th Street K.C. MO 64158; (816)912-4720
Hg CONSULT, INC.
PRO. ENGINEER 2010005873

G:\My Drive\Hg Projects\2021\21.017 Route 36 Bridge Rehab (Garver)\Civil\Sheet_Files\035_TC_27_J1P3295_i50_Detour.dgn 4:21:54 PM 9/19/2021

SEC/SUR 19 TWP 57N RGE 35W

U.I.P. AND REHABILITATE EXISTING (63'-63') CONTINUOUS COMPOSITE WIDE FLANGE BEAM SPANS, (4'-100'-125'-100')(15'-155'-170'-145') (25'-301'-425'-25') CONTINUOUS COMPOSITE PLATE GIRDER SPANS

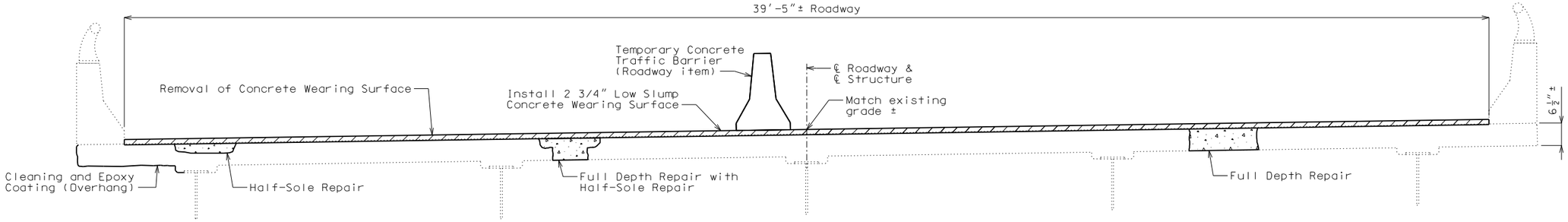

TYPICAL SECTION THRU EXISTING DECK

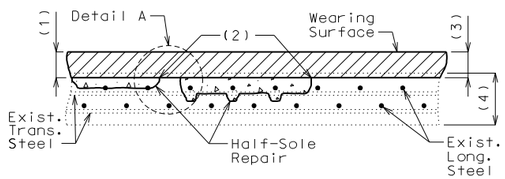

HALF-SOLE REPAIR

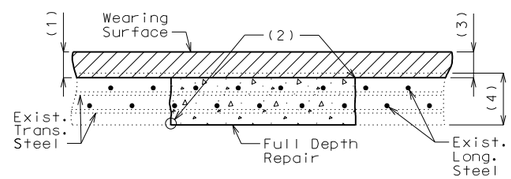

FULL DEPTH REPAIR

(1) Removal of existing 2 1/4"± low slump concrete wearing surface plus 1/2" of existing deck

(2) 1" vertical side shall be established outside the deteriorated area.

(3) 2 3/4" minimum low slump concrete wearing surface

(4) Original depth of deck minus previous scarification

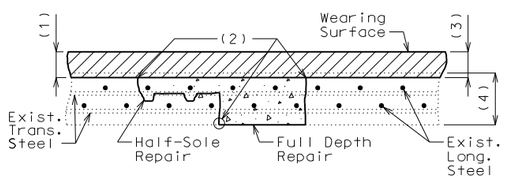

FULL DEPTH REPAIR WITH HALF-SOLE REPAIR

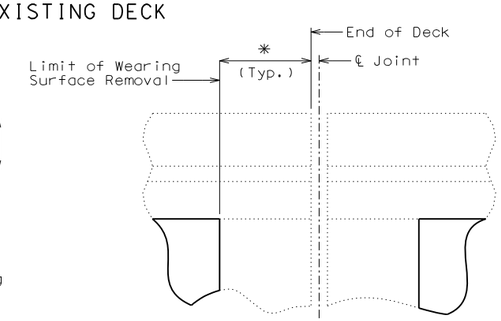

PART PLAN SHOWING WEARING SURFACE REMOVAL AT EXPANSION JOINTS USED IN PLACE

✳3'-0" ± at joint near Bent No. 3
4'-0" ± at joints near Bents. No. 6, 9 & 11

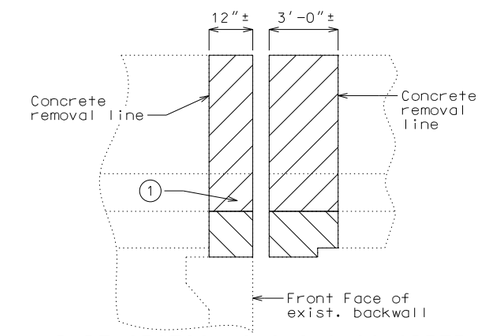

PART SECTION SHOWING CONCRETE REMOVAL FOR EXPANSION DEVICE REPLACEMENT AT END BENT NO. 1 SOUTH BARRIER

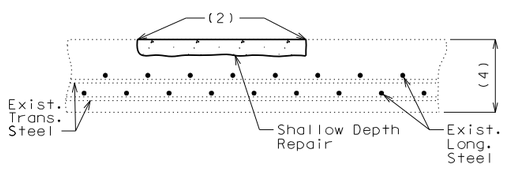

SHALLOW DEPTH REPAIR NEAR FINGER JOINTS ONLY

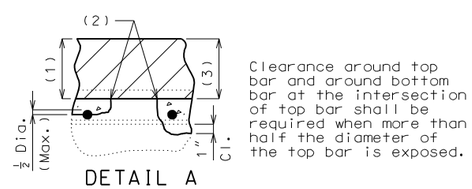

DETAIL A

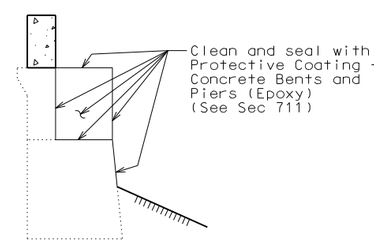

TYPICAL SECTION THRU END BENT NO. 1 SHOWING PROTECTIVE COATING

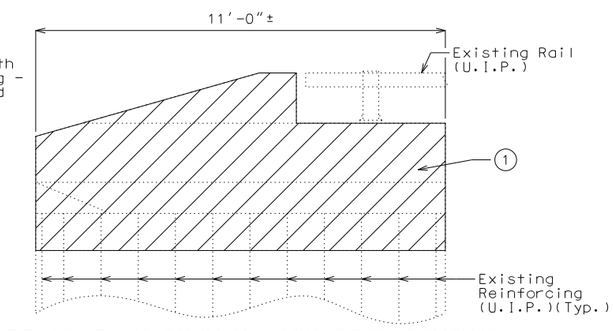

PART SECTION SHOWING CONCRETE REMOVAL FOR BARRIER AND EXPANSION DEVICE REPLACEMENT AT END BENT NO. 1 NORTH BARRIER

(1) Remove existing barrier concrete to top of existing wing. Remove existing backwall concrete to construction joint at top of approach notch.

Cost of removal of existing barrier for expansion device replacement will be considered completely covered by the contract unit price for Remove and Replace Barrier.

Cost of removal of existing slab and backwall concrete for expansion device replacement will be considered completely covered by the contract unit price for Removal of Existing Expansion Joints & Adjacent Concrete.

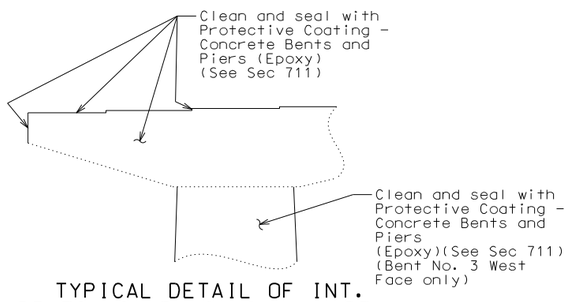

TYPICAL DETAIL OF INT. BENTS NO. 3, 6, 9 & 11 BEAM SHOWING PROTECTIVE COATING

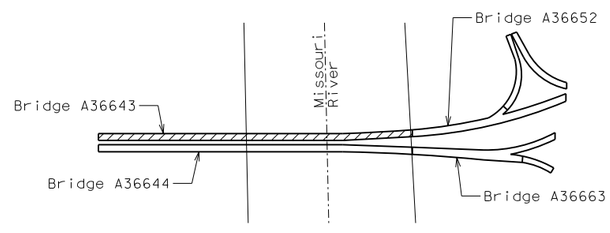

LOCATION SKETCH

REPAIRS TO BRIDGE: ROUTE 36 WB OVER MISSOURI RIVER

ROUTE 36 FROM STATE LINE TO ROUTE I-229
AT STATE LINE
BEG. STA. 13+52.20± (Match Existing)

Detailed Jun. 2021
Checked Jul. 2021

Note: This drawing is not to scale. Follow dimensions.

STATE OF MISSOURI — DEREK S. BUTLER — NUMBER PE-2016006828 — PROFESSIONAL ENGINEER

THIS SHEET HAS BEEN SIGNED, SEALED AND DATED ELECTRONICALLY

DATE PREPARED	
9/2/2021	
ROUTE 36	STATE MO
DISTRICT BR	SHEET NO. 1
COUNTY BUCHANAN	
JOB NO. J1P3295	
CONTRACT ID.	
PROJECT NO.	
BRIDGE NO. A36643	

DATE	DESCRIPTION
.	.
.	.
.	.
.	.
.	.
.	.

IF A SEAL IS PRESENT ON THIS SHEET IT HAS BEEN ELECTRONICALLY SEALED AND DATED.

MISSOURI HIGHWAYS AND TRANSPORTATION COMMISSION
105 WEST CAPITOL
JEFFERSON CITY, MO 65102
1-888-ASK-MODOT (1-888-275-6636)

GARVER, LLC.
7509 NW TIFFANY SPRINGS PARKWAY, SUITE 200
KANSAS CITY, MO 64153
PHONE: (816) 298-6465
CERTIFICATE OF AUTHORITY NO. 2008013090

L:\2021\21T04000 - MoDOT NW Route 36 Bridge Rehab\Drawings\BRIDGE\A36643\B_A36643_001_J1P3295_DeckRehab.dgn 2:09:52 PM 9/2/2021

General Notes:

Design Specifications:

2002 AASHTO LFD (17th Ed.) Standard Specifications
Bridge Deck Rating = 6

Design Loading:

HS20-44 Modified (1977) and Military 24,000 lb Tandem Axle (1977)

Design Unit Stresses:

Class B-1 Concrete (Safety Barrier Curb)	f'c = 4,000 psi
Class B-2 Concrete (Half-Sole and Full Depth Repair and Superstructure except Saftey Barrier Curb)	f'c = 4,000 psi
Reinforcing Steel (Grade 60)	fy = 60,000 psi

Miscellaneous:

Roadway surfacing adjacent to bridge ends shall match new bridge wearing surface (roadway item).

All concrete repairs shall be in accordance with Sec 704, unless otherwise noted.

Outline of old work is indicated by light dashed lines. Heavy lines indicate new work.

Contractor shall verify all dimensions in field before ordering new material.

Bars bonded in existing concrete not removed shall be cleanly stripped and embedded into new concrete where possible. If length is available, existing bars shall extend into new concrete at least 40 diameters for plain bars and 30 diameters for deformed bars, unless otherwise noted.

In order to maintain grade and a minimum thickness of wearing surface as shown on plans it may be necessary to use additional quantities of wearing surface at various locations throughout the structure. The cost of furnishing and installing the wearing surface will be considered completely covered in the contract unit price, including all additional labor, materials or equipment for variations in thickness of wearing surface.

Traffic Handling:

Traffic to be maintained on structure during construction. See roadway plans for traffic control.

Recoating Existing Steel:

Protective Coating: System G in accordance with Sec 1081.

Surface Preparation: Surface preparation of the existing steel shall be in accordance with Sec 1081 for Recoating of Structural Steel (System G). The cost of surface preparation will be considered completely covered by the contract unit price per sq. foot for Surface Preparation for Recoating Structural Steel.

Prime Coat: The cost of the prime coat will be considered completely covered by the contract unit price per sq. foot for Field Application of Inorganic Zinc Primer. Tint of the prime coat for System G shall be similar to the color of the field coat to be used.

Field Coat(s): The color of the field coat(s) shall be Green (Federal Standard #24260). The cost of the intermediate field coat will be considered completely covered by the contract unit price per sq. foot for Intermediate Field Coat (System G). The cost of the finish field coat will be considered completely covered by the contract unit price per sq. foot for Finish Field Coat (System G).

Coating Limits: All existing structural steel within 10 feet of CL expansion joint at End Bent No. 1, within 10 feet of CL expansion joint near Bent No. 3, from CL Bent No. 5 to 10 feet past CL Bent No. 6, from 10 feet from CL expansion joint near Bent No. 9 to 10 feet past CL Bent No. 9 and 10 feet from CL Bent No. 11 to CL expansion joint near Bent No. 11. Within these limits, items to be recoated include girders, stringers, diaphragms, stiffeners, bearings and miscellaneous structural steel items. Additional spot painting shall be provided as described in Table for Spot Painting.

Sec 1081.10.4.6 shall be modified such that the word "RECOATED" is replaced by the words "RECOATED-SYSTEM G-GIRDER ENDS ONLY", or "RECOATED-SYSTEM G-EXPANSION AREAS ONLY".

Abbreviations:

U.I.P. denotes Use In Place

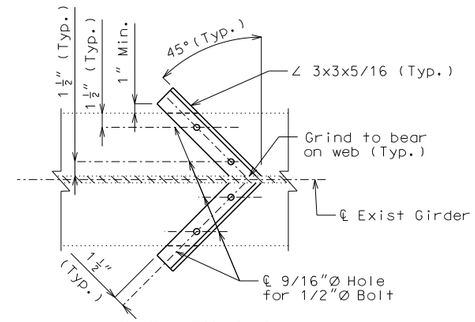

SECTION A-A

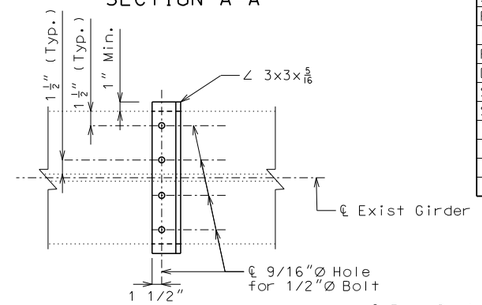

SECTION B-B

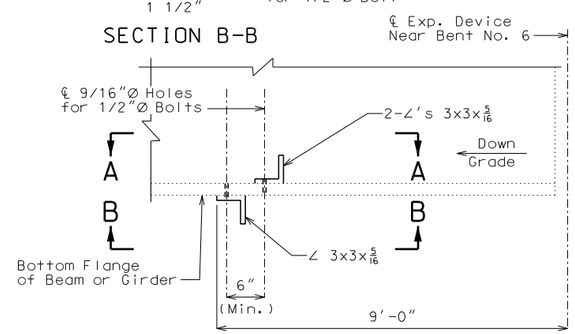

DRIP ANGLES DETAIL
(Both Sides of Exp. Device, 10 Required)

Estimated Quantities

Item		Total
Removal of Concrete Wearing Surface	sq. foot	67,298
Removal of Existing Expansion Joint & Adjacent Concrete	linear foot	40
Remove and Replace Barrier Curb	linear foot	18
Bridge Approach Slab (Major Road)	sq. yard	62
Low Slump Concrete Wearing Surface	sq. yard	7,478
Class B-2 Concrete	cu. yard	4.2
Substructure Repair (Formed)	sq. foot	818
Substructure Repair (Unformed)	sq. foot	90
Half-Sole Repair	sq. foot	300
Full Depth Repair	sq. foot	150
Cleaning and Epoxy Coating	sq. foot	180
Shallow Deck Repair	sq. foot	30
Shell Repair	sq. foot	650
Reinforcing Steel (Epoxy Coated)	pound	960
Protective Coating - Concrete Bents and Piers (Epoxy)	lump sum	1
Surface Preparation for Recoating Structural Steel	sq. foot	18,700
Field Application of Inorganic Zinc Primer	sq. foot	18,700
Intermediate Field Coat (System G)	sq. foot	18,700
Finish Field Coat (System G)	sq. foot	18,700
Drip Angles	each	10
Strip Seal Expansion Joint System	linear foot	40
Strip Seal	linear foot	40

Table For Spot Painting

Location	Description
Span 2-3 Girder 1	Splice 2 Bottom Flange Splice Plates
Span 3-4 Girder 5	Splice 3 Bottom Flange Splice Plates
Span 4-5 Girder 5	Splice 4 Bottom Flange Splice Plates
Span 6-7 Girder 5	Splice 7 Bottom Flange Splice Plates
Span 8-9 Girder 5	Splice 11 Bottom Flange Splice Plates
Span 9-10 Girder 3	Splice 13 Bottom Flange Splice Plates
Span 9-10 Girder 3	Splice 14 Bottom Flange Splice Plates

Note:

Drip angles shall be caulked with dark brown caulking against flange, web and fillet welds.

Drip angles shall be same grade as bottom flange.

Use 1/2"Ø ASTM F3125 Grade A325 Type 3 for bolted connection.

Cost of furnishing and installing drip angles, complete in place, shall be considered completely covered by the contract unit price for Drip Angles.

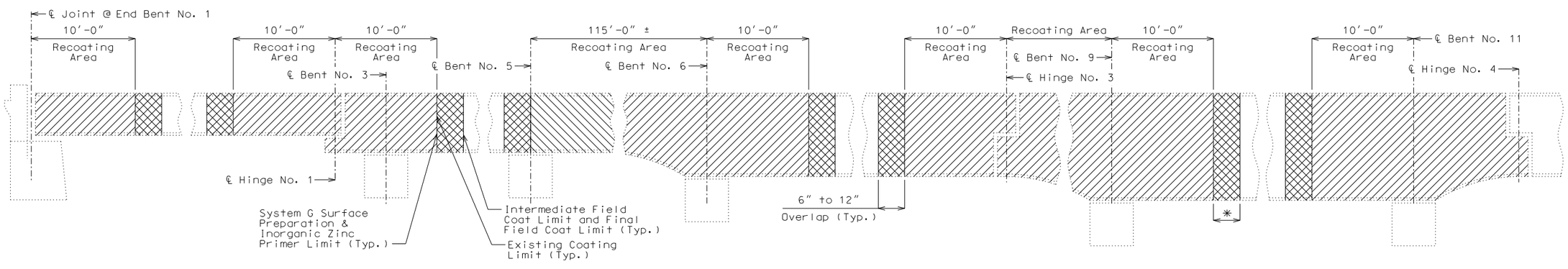

ELEVATION SHOWING LIMITS OF PAINT

* Mechanical cleaning in accordance to Sec 1081.5.4.2.1 (Typ.)

Detailed Jun. 2021
Checked Jul. 2021

Note: This drawing is not to scale. Follow dimensions.

STATE OF MISSOURI
DEREK S. BUTLER
NUMBER PE-2016006828
PROFESSIONAL ENGINEER

THIS SHEET HAS BEEN SIGNED, SEALED AND DATED ELECTRONICALLY

DATE PREPARED	
9/2/2021	
ROUTE 36	STATE MO
DISTRICT BR	SHEET NO. 2
COUNTY BUCHANAN	
JOB NO. J1P3295	
CONTRACT ID.	
PROJECT NO.	
BRIDGE NO. A36643	

DESCRIPTION	DATE

IF A SEAL IS PRESENT ON THIS SHEET IT HAS BEEN ELECTRONICALLY SEALED AND DATED.

MISSOURI HIGHWAYS AND TRANSPORTATION COMMISSION
105 WEST CAPITOL
JEFFERSON CITY, MO 65102
1-888-ASK-MODOT (1-888-275-6636)

GARVER, LLC.
7509 NW TIFFANY SPRINGS PARKWAY, SUITE 200
KANSAS CITY, MO 64153
PHONE: (816) 298-6465
CERTIFICATE OF AUTHORITY NO. 2008013090

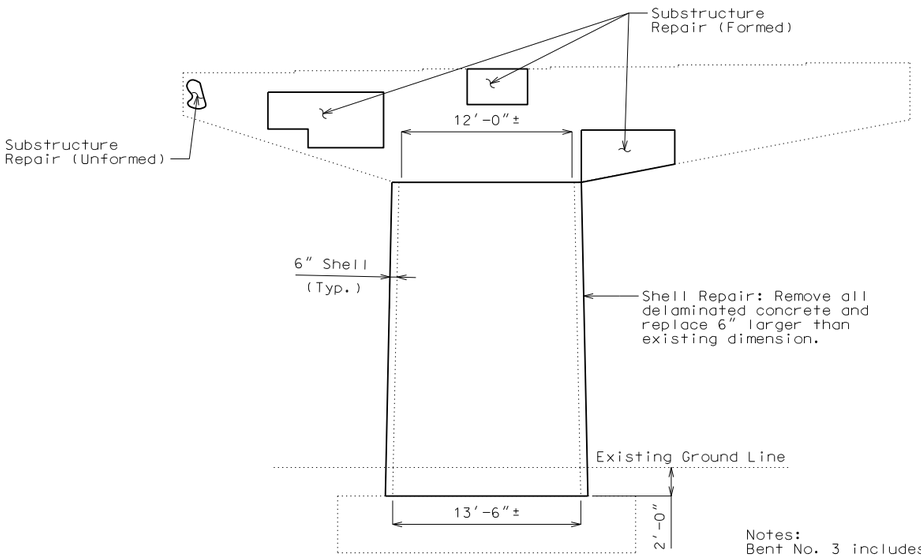

ELEVATION OF SHELL REPAIR
AT BENT NO. 3 WEST FACE

Notes:
Bent No. 3 includes ±650 sq.ft. Shell Repair included in the Estimated Quantities on Sheet No. 2.

Bent No. 3 includes ±188 pounds Welded Wire Reinforcement. Cost of Welded Wire Reinforcement shall be considered completely covered by the contract unit price for Shell Repair.

Shell Repair Shall meet the requirements of MoDOT Standard Specifications Sec 704 Substructure Repair (Formed). All other applicable sections from Sec 704 "Concrete Masonry Repair" shall be required.

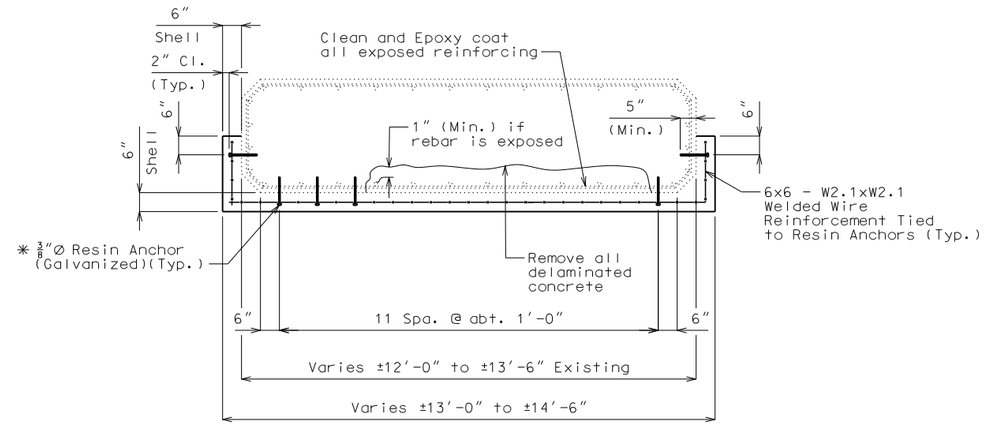

TYPICAL SECTION THRU COLUMN
AT BENT NO. 3

Notes:
The contractor shall use one of the qualified resin anchor systems in accordence with Sec 1039.

Cost of furnishing and installing the resin anchor systems complete in place, will be considered completely covered by the contract unit price for Shell Repair.

The minimum embedment depth in concrete with fc'=4,000 psi for the resin anchor systems shall be that required to meet the minimum ulitmate pullout strength in accordence with Sec 1039 but shall not be less than 5" in sound concrete.

* Resin anchors (Galvanized) shall be used at 12" (horizontal and vertical) spacing in undamaged areas if less than 25% of reinforcing steel is exposed after removing delaminated concrete.

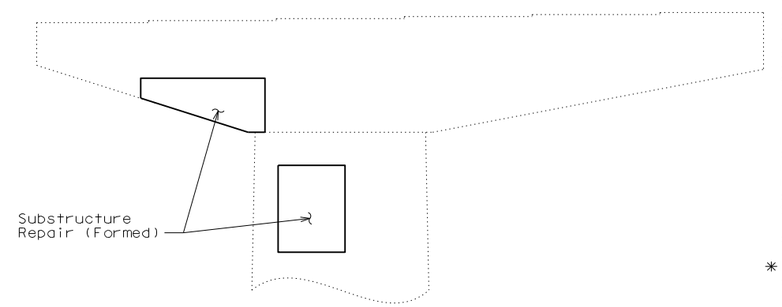

DETAIL OF SUBSTRUCTURE REPAIR
AT BENT NO. 4

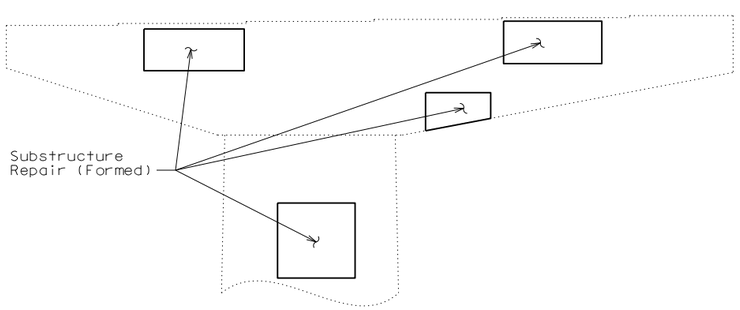

DETAIL OF SUBSTRUCTURE REPAIR
AT BENT NO. 6

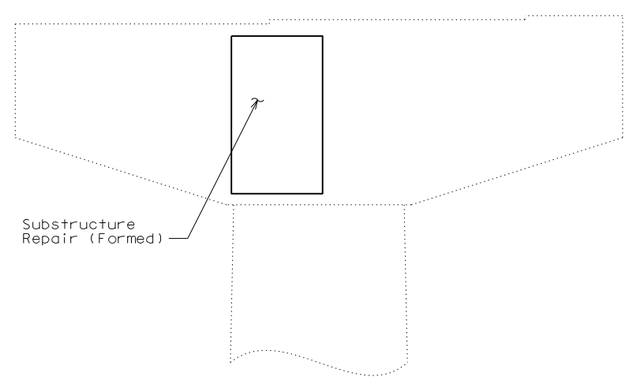

DETAIL OF SUBSTRUCTURE REPAIR
AT BENT NO. 11

SUBSTRUCTURE REPAIRS

Detailed Jun. 2021
Checked Jul. 2021

Note: This drawing is not to scale. Follow dimensions.

STATE OF MISSOURI
DEREK S. BUTLER
NUMBER PE-2016009828
PROFESSIONAL ENGINEER

THIS SHEET HAS BEEN SIGNED, SEALED AND DATED ELECTRONICALLY

DATE PREPARED	9/2/2021
ROUTE	36
STATE	MO
DISTRICT	BR
SHEET NO.	3
COUNTY	BUCHANAN
JOB NO.	J1P3295
CONTRACT ID.	
PROJECT NO.	
BRIDGE NO.	A36643

DATE	DESCRIPTION
.	.
.	.
.	.
.	.
.	.
.	.
.	.

IF A SEAL IS PRESENT ON THIS SHEET IT HAS BEEN ELECTRONICALLY SEALED AND DATED.

MISSOURI HIGHWAYS AND TRANSPORTATION COMMISSION
105 WEST CAPITOL
JEFFERSON CITY, MO 65102
1-888-ASK-MODOT (1-888-275-6636)

GARVER, LLC.
7509 NW TIFFANY SPRINGS PARKWAY, SUITE 200
KANSAS CITY, MO 64153
PHONE: (816) 298-6465
CERTIFICATE OF AUTHORITY NO. 2008013090

L:\2021\21T04000 - MoDOT NW Route 36 Bridge Rehab\Drawings\BRIDGE\A36643\B_A36643_003_J1P3295_SubRepair.dgn 2:09:55 PM 9/2/2021

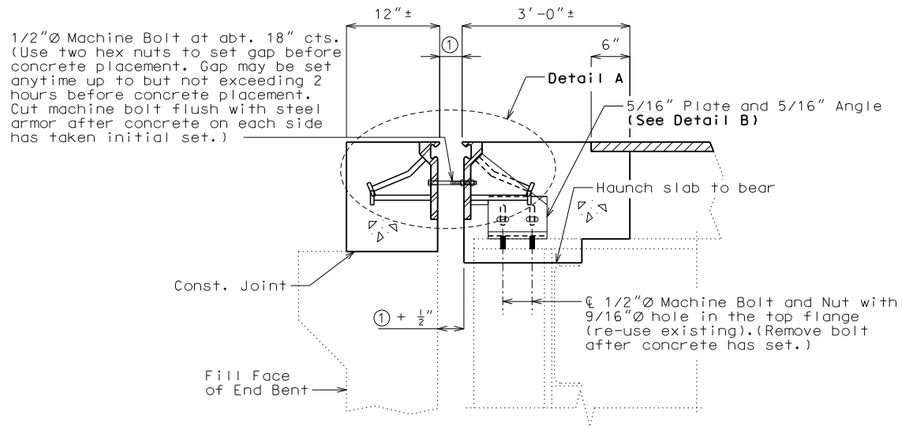

SECTION A-A

Note: Strip seal gland not shown for clarity.

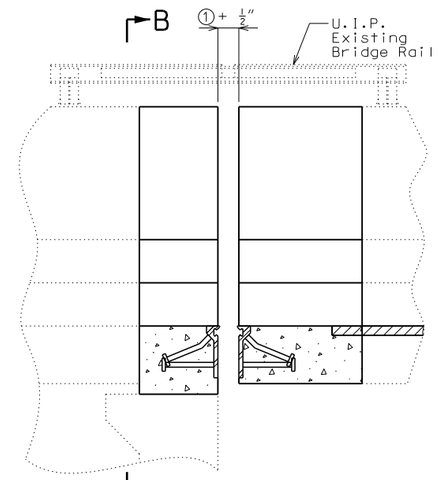

PART ELEVATION OF BARRIER

Strip seal gland not shown for clarity.

GENERAL NOTES:

Expansion joint system shall be fabricated in one section, except for staged construction and when the length is over 50 feet. A complete joint penetration groove welded splice shall be required. Welds shall be ground flush to provide a smooth surface. The expansion joint system shall be fabricated and installed to the crown and grade of the roadway.

The strip seal gland shall be installed in joints in one continuous piece without field splices. Factory splicing will be permitted for joints in excess of 53 feet.

Structural steel for the expansion joint system shall be ASTM A709 Grade 36 except the steel armor may be ASTM A709 Grade 50W. Anchors for the expansion joint system shall be in accordance with Sec 1037. Strip seal expansion joint system shall be in accordance with Sec 717.

Structural steel for the expansion joint system shall be coated with a minimum of two coats of inorganic zinc primer to provide a total dry film thickness of 4 mils minimum, 6 mils maximum, or galvanized in accordance with ASTM A123. Anchors need not be protected from overspray.

Concrete shall be forced under and around steel armor and anchors. Proper consolidation of the concrete shall be achieved by localized internal vibration.

② The installation temperature shall be taken as the actual air temperature averaged over the 24-hour period immediately preceding installation.

③ MoDOT Construction personnel will indicate the strip seal expansion joint system installed.

Steel armor may also be referred to as extrusion or rail.

All concrete above the upper construction joint in the backwall and in slab shall be Class B-2.

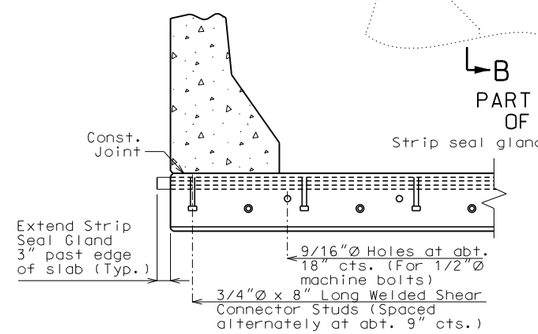

PART SECTION B-B

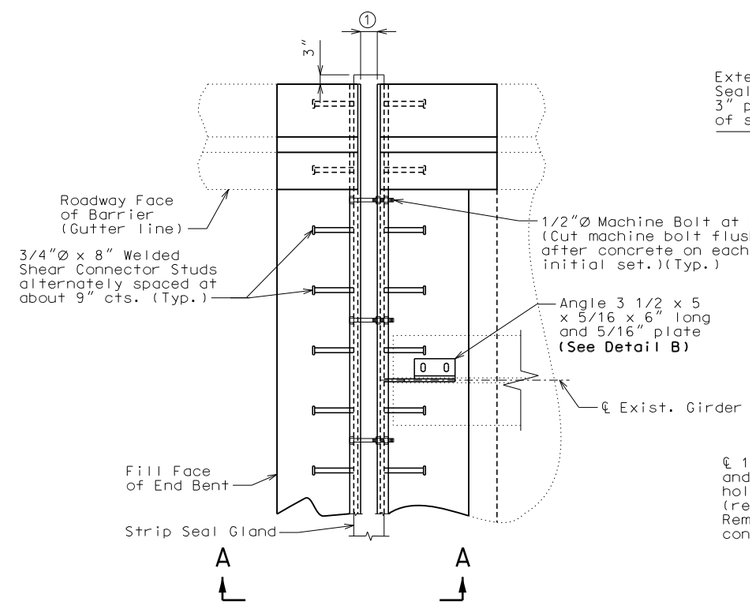

PART PLAN

See Sheet No. 6 for reinforcement

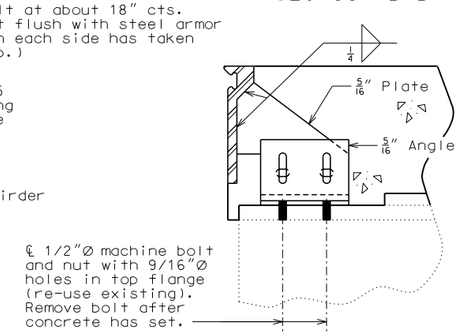

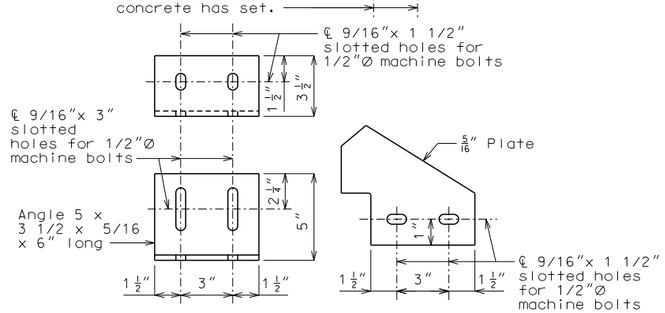

DETAIL B

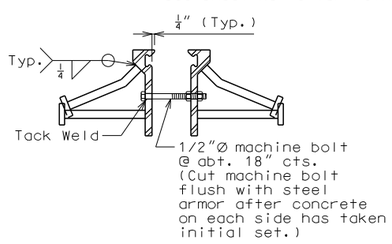

DETAIL A

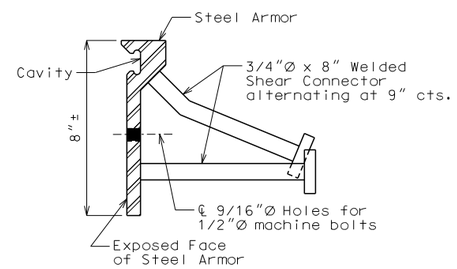

DETAIL OF JOINT ARMOR

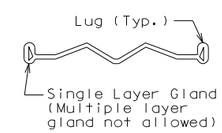

DETAIL OF GLAND

Table of Allowed Transverse Strip Seal Expansion Joint System

Manufacturer	Strip Seal System (Designated Name)	Movement Parallel to RDWY	Allowed Installation Gap ① Normal to Joint at RDWY Surface @ Air/Surface Temperature ②						③
			@ 40°F	@ 50°F	@ 60°F	@ 70°F	@ 80°F	@ 90°F	
D S Brown	Strip seal L2-400	1 7/8"	2 1/4"	2 1/8"	2"	1 7/8"	1 3/4"	1 5/8"	□
D S Brown	Strip seal L2-500	1 7/8"	2 1/4"	2 1/8"	2"	1 7/8"	1 3/4"	1 5/8"	□
Watson Bowman Acme (Wabo)	Strip seal SE-400	1 7/8"	2 1/4"	2 1/8"	2"	1 7/8"	1 3/4"	1 5/8"	□
Watson Bowman Acme (Wabo)	Strip seal SE-500	1 7/8"	2 1/4"	2 1/8"	2"	1 7/8"	1 3/4"	1 5/8"	□

STRIP SEAL EXPANSION JOINT SYSTEM AT END BENT NO. 1

Detailed Jun. 2021
Checked Jul. 2021

Note: This drawing is not to scale. Follow dimensions.

Sheet No. 4 of 9

STATE OF MISSOURI DEREK S. BUTLER NUMBER PE-2016006828 PROFESSIONAL ENGINEER

THIS SHEET HAS BEEN SIGNED, SEALED AND DATED ELECTRONICALLY

DATE PREPARED	
9/2/2021	
ROUTE 36	STATE MO
DISTRICT BR	SHEET NO. 4
COUNTY BUCHANAN	
JOB NO. J1P3295	
CONTRACT ID.	
PROJECT NO.	
BRIDGE NO. A36643	

DATE	DESCRIPTION
. . . . .	. . . . .

IF A SEAL IS PRESENT ON THIS SHEET IT HAS BEEN ELECTRONICALLY SEALED AND DATED.

MISSOURI HIGHWAYS AND TRANSPORTATION COMMISSION

105 WEST CAPITOL
JEFFERSON CITY, MO 65102
1-888-ASK-MODOT (1-888-275-6636)

GARVER, LLC.
7509 NW TIFFANY SPRINGS PARKWAY, SUITE 200
KANSAS CITY, MO 64153
PHONE: (816) 298-6465
CERTIFICATE OF AUTHORITY NO. 2008013090

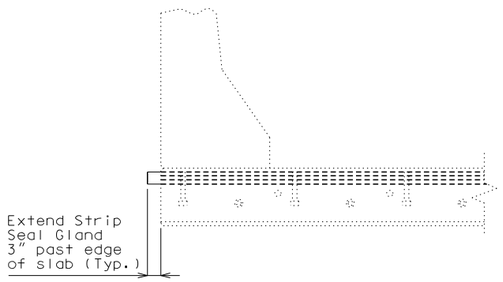

PART SECTION SHOWING EXTENSION
OF GLAND PAST EDGE OF SLAB

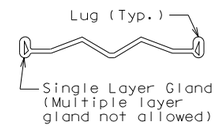

DETAIL OF GLAND

GENERAL NOTES:

The strip seal gland shall be installed in joints in one continuous piece without field splices. Factory splicing will be permitted for joints in excess of 53 feet.

(1) MoDOT Construction personnel will indicate the strip seal expansion joint system installed.

Removal of existing gland and replacement of new gland shall be considered completely covered by the unit price for Strip Seal.

Table of Allowed Transverse Strip Seal Expansion Joint Gland

Manufacturer	Strip Seal System (Designated Name)	(1)
D S Brown	Strip seal L2-400	☐
D S Brown	Strip seal L2-500	☐
Watson Bowman Acme (Wabo)	Strip seal SE-400	☐
Watson Bowman Acme (Wabo)	Strip seal SE-500	☐

STATE OF MISSOURI
DEREK S. BUTLER
NUMBER PE-2016006828
PROFESSIONAL ENGINEER

THIS SHEET HAS BEEN SIGNED, SEALED AND DATED ELECTRONICALLY

DATE PREPARED 9/2/2021

ROUTE	STATE
36	MO
DISTRICT	SHEET NO.
BR	5

COUNTY BUCHANAN

JOB NO. J1P3295

CONTRACT ID.

PROJECT NO.

BRIDGE NO. A36643

DESCRIPTION	DATE

IF A SEAL IS PRESENT ON THIS SHEET IT HAS BEEN ELECTRONICALLY SEALED AND DATED.

MISSOURI HIGHWAYS AND TRANSPORTATION COMMISSION
105 WEST CAPITOL
JEFFERSON CITY, MO 65102
1-888-ASK-MODOT (1-888-275-6636)

GARVER, LLC.
7509 NW TIFFANY SPRINGS
PARKWAY, SUITE 200
KANSAS CITY, MO 64153
PHONE: (816) 298-6465
CERTIFICATE OF AUTHORITY
NO. 2008013090

STRIP SEAL GLAND REPLACEMENT NEAR INTERMEDIATE BENT NO. 3

Detailed Jun. 2021
Checked Jul. 2021

Note: This drawing is not to scale. Follow dimensions.

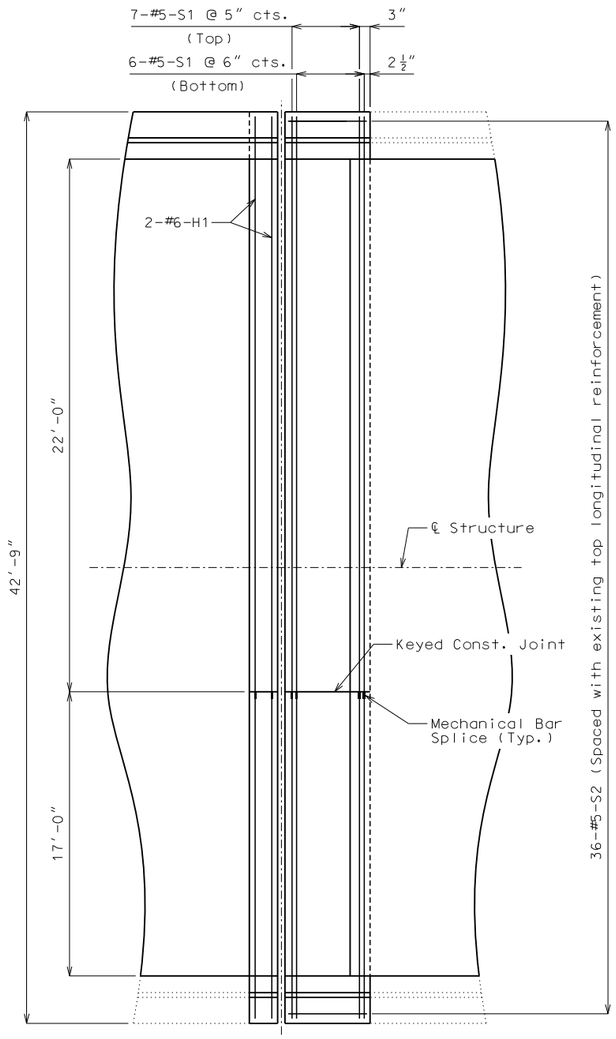

PLAN OF SLAB SHOWING REINFORCEMENT AT END BENT NO. 1

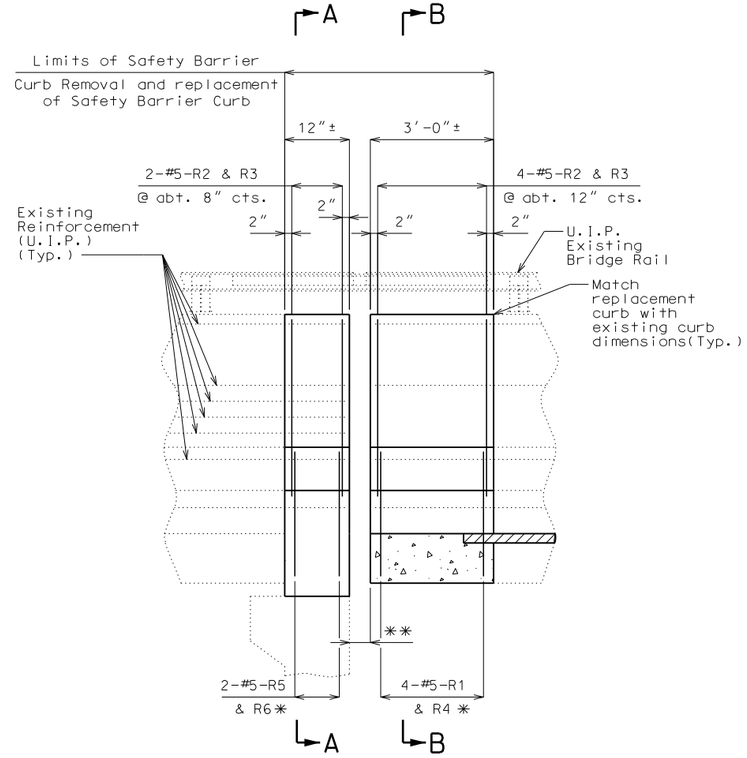

ELEVATION SHOWING SOUTH BARRIER CURB REINFORCEMENT AT END BENT NO. 1

*Spaced with #5-R2 & R3

**For gap width see Sheet No. 4

Notes:

Remove existing transverse reinforcement within limits of Removal of Existing Expansion Joints and Adjacent Concrete.

The total length for #6-H1 and #5-S1 bars are based on placing the bar the entire width of the deck. The bars shall be field cut to accommodate the construction joint. Bars shall be spliced using mechanical bar splices. Mechanical bar splices shall be completely covered by the contract unit price for Reinforcing Steel (Epoxy Coated) and shall be in accordance with Sec 706. No additional payment will be made for any additional bar lengths required for the mechanical bar splice.

Remove existing stirrups within limits of Safety Barrier Curb Removal.

Top of safety barrier curb shall be built parallel to the grade with safety barrier curb joints normal to grade.

All exposed edges of safety barrier curb shall have either a 1/2" radius or a 3/8" bevel, unless otherwise noted.

Payment for all concrete and reinforcement in Safety Barrier Curb, complete-in-place will be considered completely covered by the contract unit price for Remove and Replace Barrier Curb.

Concrete in safety barrier curb shall be Class B-1.

Measurement of Remove and Replace Barrier Curb is to the nearest linear foot for each structure, measured along the outside top slab.

All exposed edges of new safety barrier curb shall match existing safety barrier curb.

Existing rail posts that fall within the area of barrier curb removal at Exp. Joints shall be reinstalled in new safety barrier curb. Provide 2-7/8"Ø x 12" steel anchor bolts with hex head, hex nuts and washers for attachment of existing rail post to new barrier curb. Payment for this work will be considered completely covered by the contract unit price for Remove and Replace Barrier Curb.

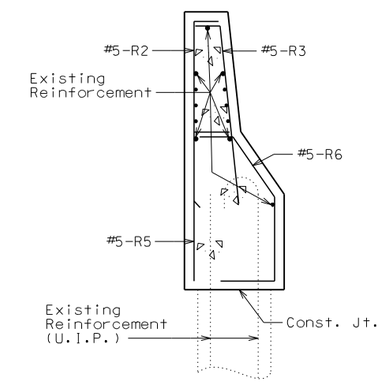

SECTION A-A

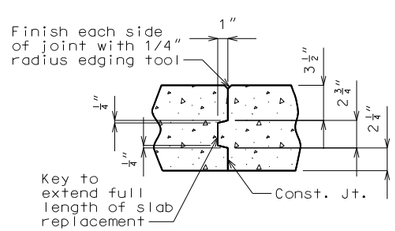

KEYED CONSTRUCTION JOINT DETAILS

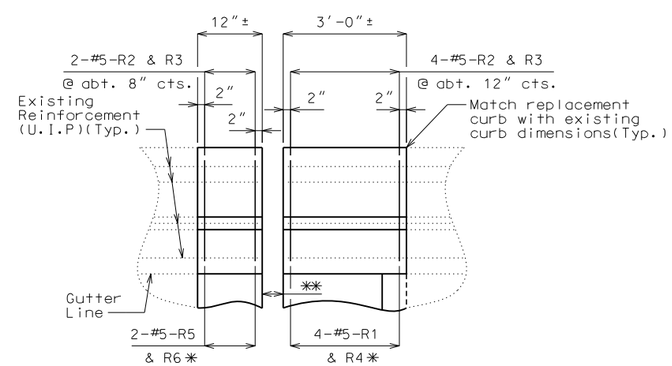

PART PLAN SHOWING SOUTH BARRIER CURB REINFORCEMENT AT END BENT NO. 1

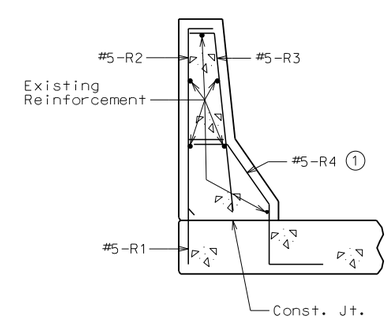

SECTION B-B

(1) Field cut or bend bottom leg of R4 bar to maintain 1 1/2" (min.) conc. cover when necessary.

DETAILS OF SAFETY BARRIER CURB REMOVAL & REPLACEMENT AT END BENT NO. 1

Detailed Jun. 2021
Checked Jul. 2021

Note: This drawing is not to scale. Follow dimensions.

STATE OF MISSOURI
DEREK S. BUTLER
NUMBER PE-2016006828
PROFESSIONAL ENGINEER

THIS SHEET HAS BEEN SIGNED, SEALED AND DATED ELECTRONICALLY

DATE PREPARED	
9/2/2021	
ROUTE 36	STATE MO
DISTRICT BR	SHEET NO. 6
COUNTY BUCHANAN	
JOB NO. J1P3295	
CONTRACT ID.	
PROJECT NO.	
BRIDGE NO. A36643	

DATE	DESCRIPTION
. . . . .	. . . . .

MISSOURI HIGHWAYS AND TRANSPORTATION COMMISSION
105 WEST CAPITOL
JEFFERSON CITY, MO 65102
1-888-ASK-MODOT (1-888-275-6636)

GARVER, LLC.
7509 NW TIFFANY SPRINGS PARKWAY, SUITE 200
KANSAS CITY, MO 64153
PHONE: (816) 298-6465
CERTIFICATE OF AUTHORITY NO. 2008013090

IF A SEAL IS PRESENT ON THIS SHEET IT HAS BEEN ELECTRONICALLY SEALED AND DATED.

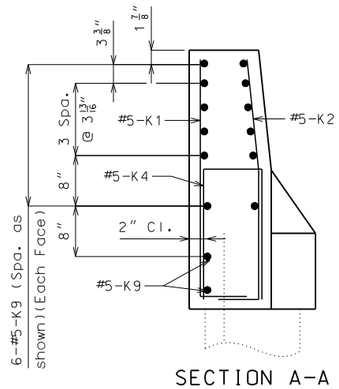

SECTION A-A

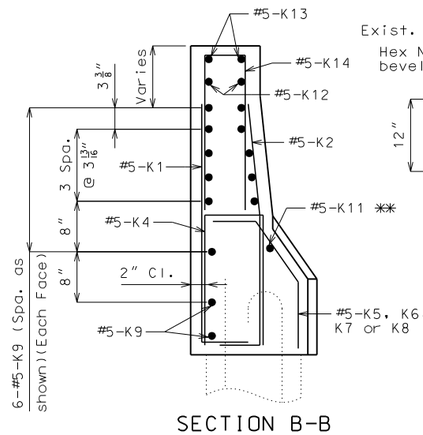

SECTION B-B

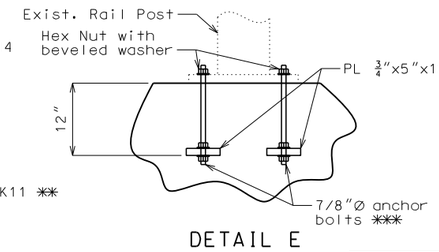

DETAIL E

✱✱✱ Match holes in exist. base plate.

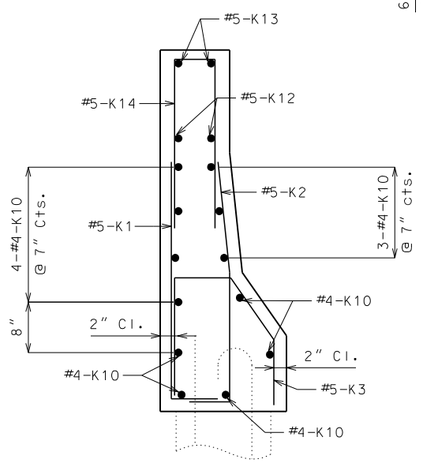

SECTION C-C

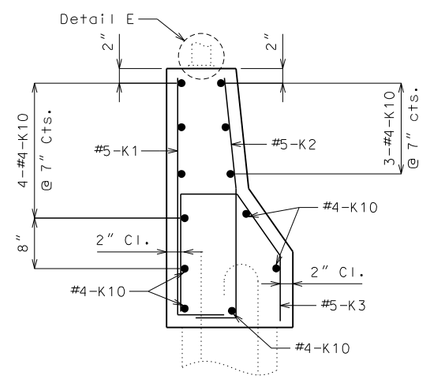

SECTION D-D

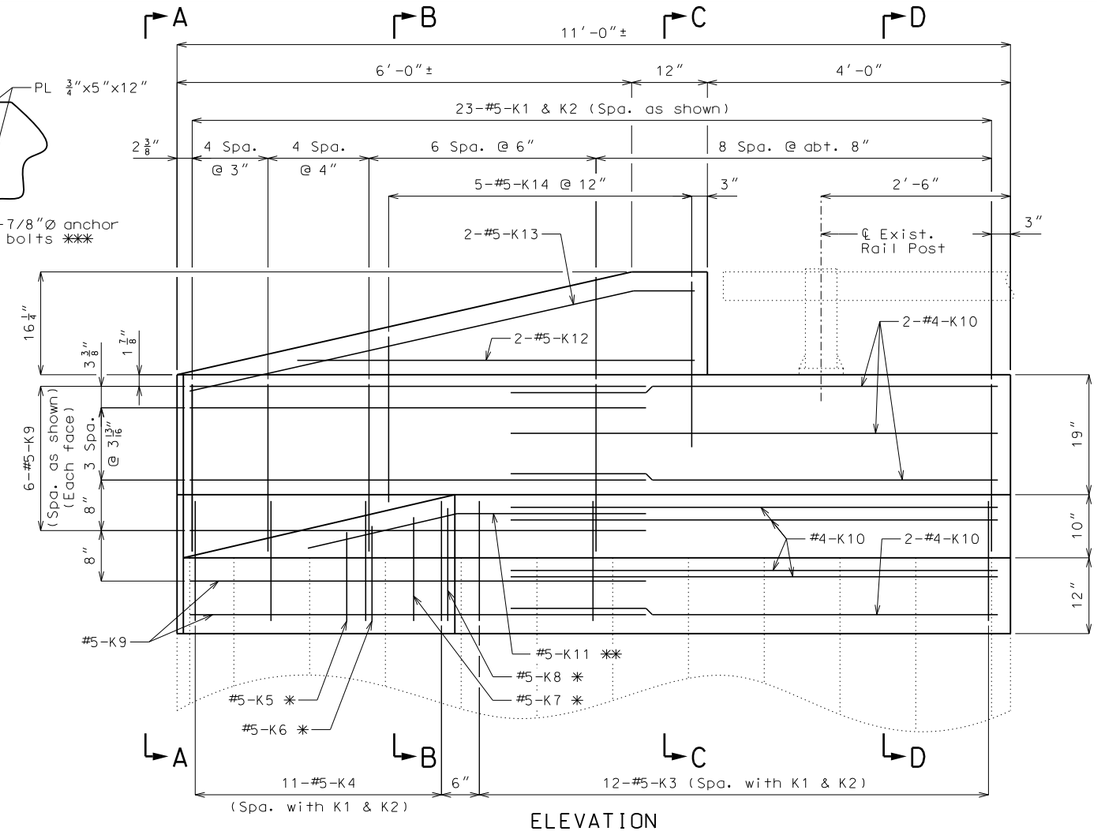

ELEVATION

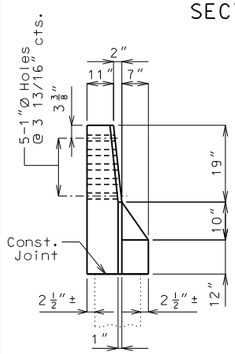

ELEVATION F-F

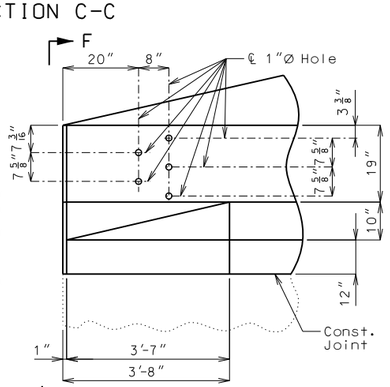

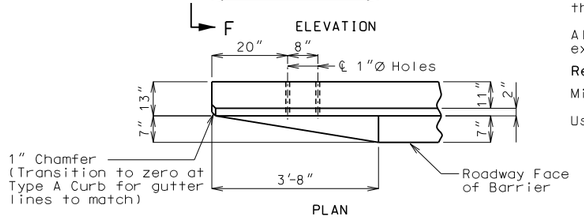

DETAILS OF GUARD RAIL ATTACHMENT

General Notes:

Concrete traffic barrier delineators shall be placed on top of the barrier as shown on Missouri Standard Plan 617.10 and in accordance with Sec 617. Delineators on bridges with two-lane, two-way traffic shall have retroreflective sheeting on both sides. Concrete traffic barrier delineators will be considered completely covered by the contract unit price for Remove and Replace Barrier.

Remove existing stirrups within limits of Safety Barrier Curb Removal. See Sheet No. 1 for removal limits.

Top of safety barrier curb shall be built parallel to the grade with safety barrier curb joints normal to grade.

All exposed edges of safety barrier curb shall have either a 1/2" radius or a 3/8" bevel, unless otherwise noted.

Payment for all concrete and reinforcement, complete-in-place will be considered completely covered by the contract unit price for Remove and Replace Barrier Curb.

Concrete in the safety barrier curb shall be Class B-1.

Measurement of Remove and Replace Barrier Curb is to the nearest linear foot for each structure, measured along the outside top of slab.

All exposed edges of new safety barrier curb shall match existing safety barrier curb.

Reinforcing Steel:

Minimum clearance to reinforcing steel shall be 1 1/2".

Use a minimum lap of 2'-7" between K9 and K10.

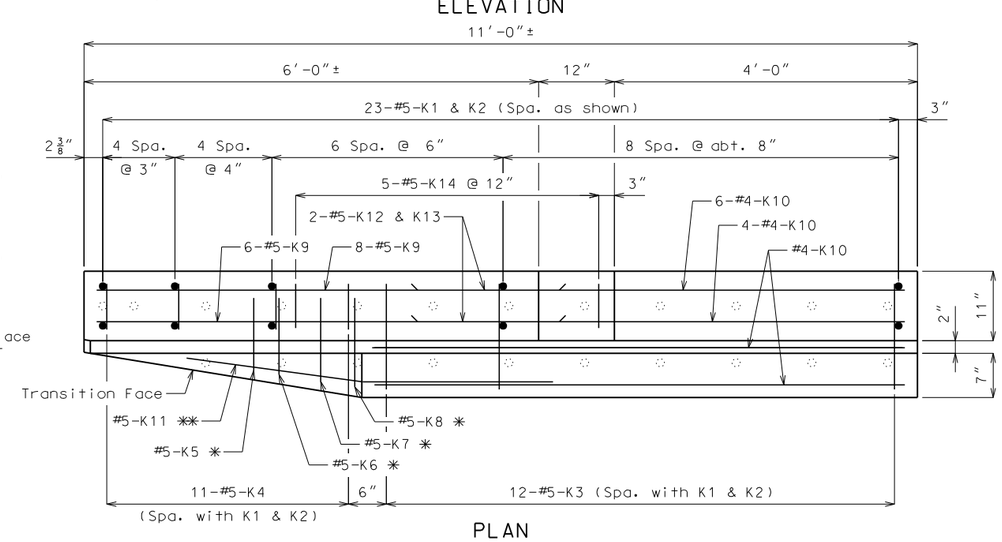

PLAN

✱ Spaced with #5-K4 bars.

✱✱ Fit bar to follow transition face of barrier.

END BENT NO. 1 NORTH BARRIER REPLACEMENT DETAILS

Detailed Jul. 2021
Checked Jul. 2021

Note: This drawing is not to scale. Follow dimensions.

STATE OF MISSOURI
DEREK S. BUTLER
NUMBER PE-2016006828
PROFESSIONAL ENGINEER

THIS SHEET HAS BEEN SIGNED, SEALED AND DATED ELECTRONICALLY

DATE PREPARED	
9/2/2021	
ROUTE 36	STATE MO
DISTRICT BR	SHEET NO. 7
COUNTY BUCHANAN	
JOB NO. J1P3295	
CONTRACT ID.	
PROJECT NO.	
BRIDGE NO. A36643	

DATE	DESCRIPTION
.	.
.	.
.	.
.	.
.	.
.	.

IF A SEAL IS PRESENT ON THIS SHEET IT HAS BEEN ELECTRONICALLY SEALED AND DATED.

MISSOURI HIGHWAYS AND TRANSPORTATION COMMISSION
105 WEST CAPITOL
JEFFERSON CITY, MO 65102
1-888-ASK-MODOT (1-888-275-6636)

GARVER, LLC.
7509 NW TIFFANY SPRINGS PARKWAY, SUITE 200
KANSAS CITY, MO 64153
PHONE: (816) 298-6465
CERTIFICATE OF AUTHORITY NO. 2008013090

L:\2021\21T04000 - MoDOT NW Route 36 Bridge Rehab\Drawings\BRIDGE\A36643\B_A36643_007_J1P3295_Barriers2.dgn 2:13:44 PM 9/2/2021

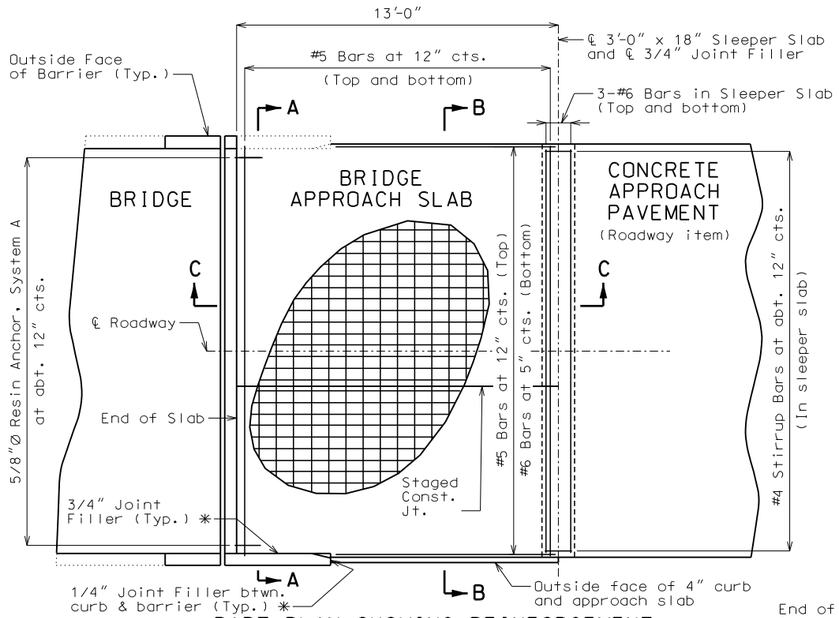

PART PLAN SHOWING REINFORCEMENT

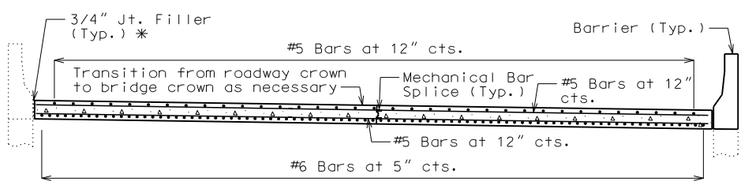

SECTION A-A

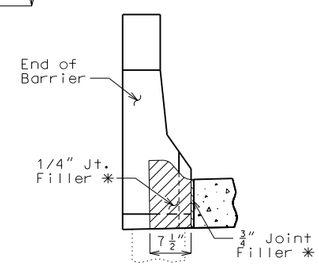

SECTION BETWEEN BARRIER AND CURB

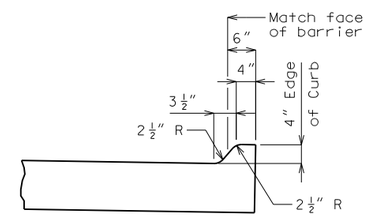

4" CURB DETAIL

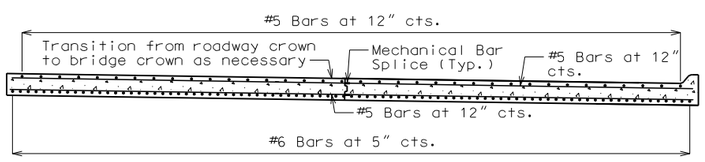

SECTION B-B

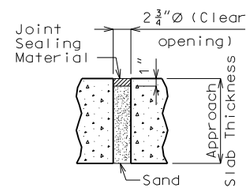

UNDERSEAL ACCESS HOLE DETAIL
(If required)

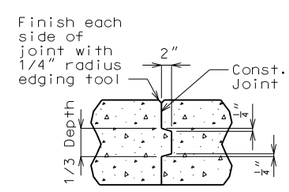

CONSTRUCTION JOINT DETAIL

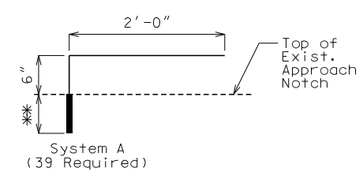

DETAILS OF RESIN ANCHOR SYSTEM

Notes:
The contractor shall use one of the qualified resin anchor systems in accordence with Sec 1039.

Cost of furnishing and installing the resin anchor systems complete-in-place will be considered completely covered by the constract unit proce for Bridge Approach Slab (Major).

The minimum embedment depth in concrete with fc'=3,000 psi for the resin anchor systems shall be required to meet the minimum ulitmate pullout strength in accordence with Sec 1039 but shall not be less than 5".

✱✱ Manufacturer's recommended embedment length (5" min.)

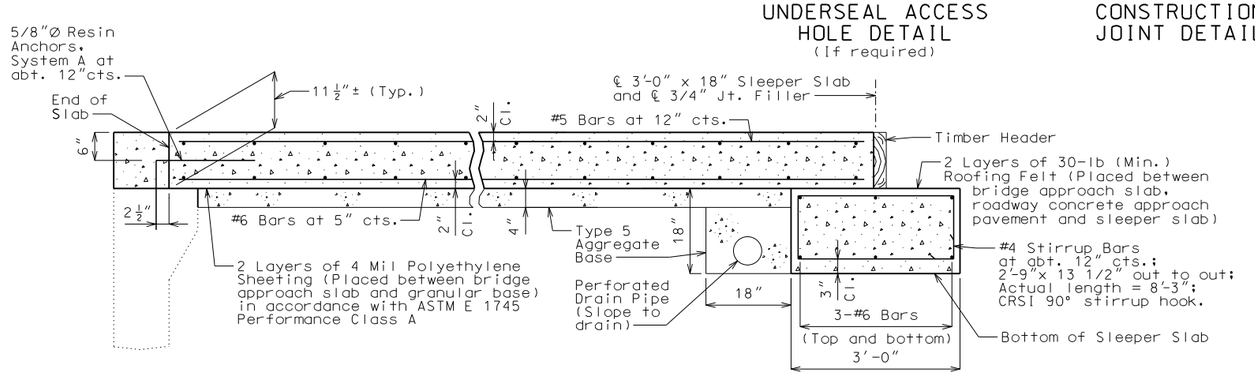

SECTION C-C

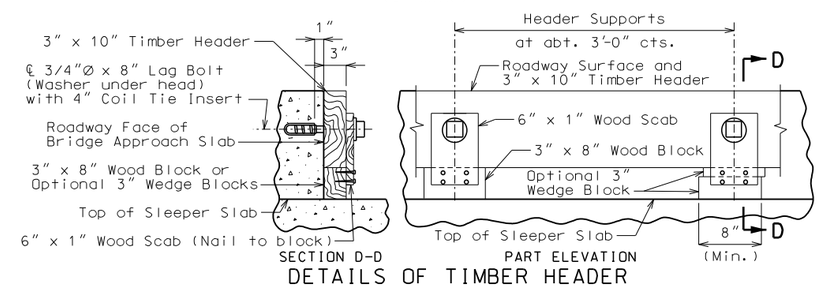

DETAILS OF TIMBER HEADER
Remove timber header when concrete pavement is placed.

BRIDGE APPROACH SLAB (MAJOR ROAD)

Detailed Jun. 2021
Checked Jul. 2021

Note: This drawing is not to scale. Follow dimensions.

Sheet No. 8 of 9

General Notes:

All concrete for the bridge approach slab and sleeper slab shall be in accordance with Sec 503 (f'c = 4,000 psi).

The reinforcing steel in the bridge approach slab and the sleeper slab shall be epoxy coated Grade 60 with fy = 60,000 psi.

Drain pipe may be either 6" diameter corrugated metallic-coated pipe underdrain, 4" diameter corrugated polyvinyl chloride (PVC) drain pipe, or 4" diameter corrugated polyethylene (PE) drain pipe.

Minimum clearance to reinforcing steel shall be 1 1/2", unless otherwise shown.

The reinforcing steel in the bridge approach slab and the sleeper slab shall be continuous. The transverse reinforcing steel may be made continuous by lap splicing the #5 bars 29" or by mechanical bar splice.

Mechanical bar splices shall be in accordance with Sec 710. Estimated 32 splices per slab.

All joint filler shall be in accordance with Sec 1057 for preformed fiber expansion joint filler except as noted.

The contractor shall pour and satisfactorily finish the bridge slab before placing the bridge approach slab.

Longitudinal construction joints in approach slab and sleeper slab shall be aligned with longitudinal construction joints in bridge slab.

For concrete approach pavement details, see roadway plans.

Payment for furnishing all materials, labor and excavation necessary to construct the approach slab, including the timber header, sleeper slab, underdrain, Type 5 aggregate base, joint filler and all other appurtenances and incidental work as shown on this sheet, complete in place, will be considered completely covered by the contract unit price for Bridge Approach Slab (Major Road) per square yard.

✱ Seal joint between vertical face of approach slab and wing wall with sealant in accordance with Sec 717 for silicone joint sealant for saw cut and formed joints.

STATE OF MISSOURI
DEREK S. BUTLER
NUMBER PE-2016006828
THIS SHEET HAS BEEN SIGNED, SEALED AND DATED ELECTRONICALLY

DATE PREPARED	
9/2/2021	
ROUTE 36	STATE MO
DISTRICT BR	SHEET NO. 8
COUNTY BUCHANAN	
JOB NO. J1P3295	
CONTRACT ID.	
PROJECT NO.	
BRIDGE NO. A36643	

DATE	DESCRIPTION
. . . . .	

IF A SEAL IS PRESENT ON THIS SHEET IT HAS BEEN ELECTRONICALLY SEALED AND DATED.

MISSOURI HIGHWAYS AND TRANSPORTATION COMMISSION
105 WEST CAPITOL
JEFFERSON CITY, MO 65102
1-888-ASK-MODOT (1-888-275-6636)

GARVER, LLC.
7509 NW TIFFANY SPRINGS PARKWAY, SUITE 200
KANSAS CITY, MO 64153
PHONE: (816) 298-6465
CERTIFICATE OF AUTHORITY NO. 2008013090

L:\2021\21T04000 - MoDOT NW Route 36 Bridge Rehab\Drawings\BRIDGE\A36643\B_A36643_008_J1P3295_ApprSlab.dgn 2:13:45 PM 9/2/2021

BILL OF REINFORCING STEEL

NO. REQ'D.	MARK NO. SIZE	MARK NO. MARK	LOCATION	EPOXY (E)	SHAPE NO.	STIRRUP (S)	SUBSTR. (X)	VARIES (V)	NO. EACH	B FT. IN.	C FT. IN.	D FT. IN.	E FT. IN.	F FT. IN.	H FT. IN.	K FT. IN.	NOMINAL LENGTH FT. IN.	ACTUAL LENGTH FT. IN.	WEIGHT LBS.
			BENT NO. 3																
	W2.1		COLUMN				X												188
			SLAB																
4	6	H1	SLAB	E	20					42 5.000							42 5	42 5	255
13	5	S1	SLAB	E	20					42 5.000							42 5	42 5	576
36	5	S2	SLAB	E	17					2 8.000							3 3	3 3	122
			BARRIER CURB																
8	5	R1	BARRIER CURB	E	19	S				17.000	10.000						2 3	2 2	18
10	5	R2	BARRIER CURB	E	19	S				2 6.000	7.500						3 2	3 0	32
10	5	R3	BARRIER CURB	E	15	S				2 6.125	7.500				2 6.000	3.000	3 2	3 1	33
8	5	R4	BARRIER CURB	E	27	S					10.000	11.250	7.000	12.000	9.250	6.375	3 4	3 2	27
2	5	R5	BARRIER CURB	E	19	S				17.000	9.000						2 2	2 1	5
2	5	R6	BARRIER CURB	E	27	S				12.000	10.000	11.125	9.000		6.375	9.125	3 6	3 4	7
23	5	K1	BARRIER CURB	E	19	S				3 1.500	9.125						3 11	3 9	90
23	5	K2	BARRIER CURB	E	14	S				9.125	19.625	18.000			2.000	17.875	3 11	3 9	90
12	5	K3	BARRIER CURB	E	27	S				20.000	9.125	12.000	10.125		9.875	6.875	4 3	3 11	50
11	5	K4	BARRIER CURB	E	10	S					20.000	9.500					4 2	3 11	45
1	5	K5	BARRIER CURB	E	25	S				10.000	6.750	8.375			5.500	4.000	2 2	2 0	3
1	5	K6	BARRIER CURB	E	25	S				10.000	7.875	8.375			6.500	4.500	2 3	2 1	3
1	5	K7	BARRIER CURB	E	25	S				10.000	9.625	8.375			7.875	5.500	2 4	2 3	3
1	5	K8	BARRIER CURB	E	25	S				10.000	11.250	8.375			9.250	6.500	2 6	2 4	3
14	5	K9	BARRIER CURB	E	20					6 3.000							6 3	6 3	92
12	4	K10	BARRIER CURB	E	20					7 1.000							7 1	7 1	57
1	5	K11	BARRIER CURB	E	8					2 2.125					2 2.000	2.375	4 5	4 5	5
2	5	K12	BARRIER CURB	E	20					5 10.000							5 10	5 10	13
2	5	K13	BARRIER CURB	E	14						9.750	6 0.000			15.875	5 10.250	6 10	6 10	15
5	5	K14	BARRIER CURB	E	10	S					2 0.500	9.125					4 11	4 7	24
			TOTALS																
	4			E															57
	5			E															1256
	6			E															255
	W2.1																		188
			TOTAL																188
			TOTAL	E															1568
			SLAB ON GIRDER																
	5			E															698
	6			E															255
			TOTAL	E															953
			SAFETY BARRIER CURB																
	4			E															57
	5			E															558
			TOTAL	E															615

BILL OF REINFORCING STEEL

NO. REQ'D.	MARK NO. SIZE	MARK NO. MARK	LOCATION	EPOXY (E)	SHAPE NO.	STIRRUP (S)	SUBSTR. (X)	VARIES (V)	NO. EACH	B FT. IN.	C FT. IN.	D FT. IN.	E FT. IN.	F FT. IN.	H FT. IN.	K FT. IN.	NOMINAL LENGTH FT. IN.	ACTUAL LENGTH FT. IN.	WEIGHT LBS.

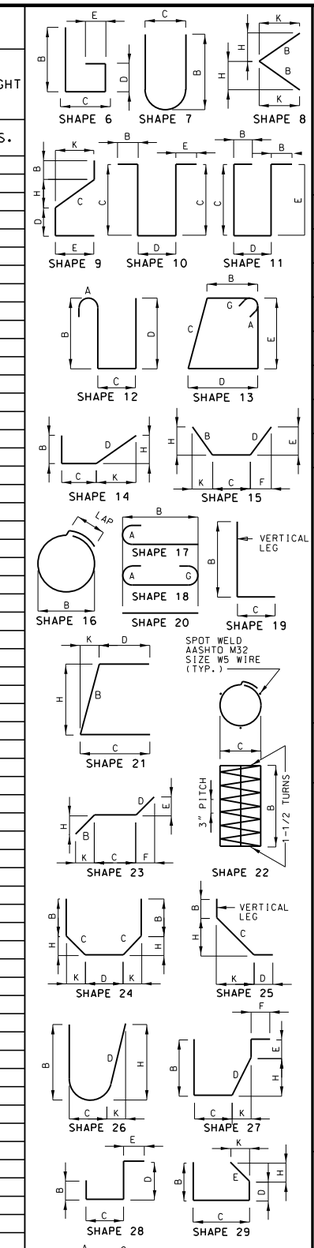

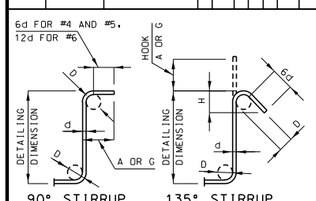

STIRRUP HOOK DIMENSIONS				
GRADES 40 - 50 - 60 KSI				
BAR SIZE	D (IN.)	90° HOOK	135° HOOK	
		HOOK A OR G	HOOK A OR G	APPROX. H
#4	2"	4 1/2"	4 1/2"	3"
#5	2 1/2"	6"	5 1/2"	3 3/4"
#6	4 1/2"	12"	8"	4 1/2"

NOTE: UNLESS OTHERWISE NOTED, DIAMETER "D" IS THE SAME FOR ALL BENDS AND HOOKS ON A BAR.

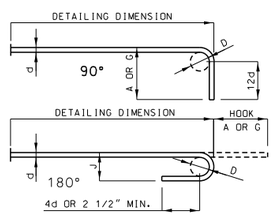

END HOOK DIMENSIONS				
BAR SIZE	D (IN.)	ALL GRADES		
		180° HOOKS		90° HOOKS
		A OR G	J	A OR G
#3	2 1/4"	5"	3"	6"
#4	3"	6"	4"	8"
#5	3 3/4"	7"	5"	10"
#6	4 1/2"	8"	6"	12"
#7	5 1/4"	10"	7"	14"
#8	6"	11"	8"	16"
#9	9 1/2"	15"	11 3/4"	19"
#10	10 3/4"	17"	13 1/4"	22"
#11	12"	19"	14 3/4"	2'-0"
#14	18 1/4"	2'-3"	21 3/4"	2'-7"

NOTE:
ALL STANDARD HOOKS AND BENDS OTHER THAN 180 DEGREE ARE TO BE BENT WITH SAME PROCEDURE AS FOR 90 DEGREE STANDARD HOOKS.
HOOKS AND BENDS SHALL BE IN ACCORDANCE WITH THE PROCEDURES AS SHOWN ON THIS SHEET.
E = EPOXY COATED REINFORCEMENT.
S = STIRRUP.
X = BAR IS INCLUDED IN SUBSTRUCTURE QUANTITIES.
V = BAR DIMENSIONS VARY IN EQUAL INCREMENTS BETWEEN DIMENSIONS SHOWN ON THIS LINE AND THE FOLLOWING LINE.
NO. EA. = NUMBER OF BARS OF EACH LENGTH.
NOMINAL LENGTHS ARE BASED ON OUT TO OUT DIMENSIONS SHOWN IN BENDING DIAGRAMS AND ARE LISTED FOR FABRICATORS USE. (NEAREST INCH)
ACTUAL LENGTHS ARE MEASURED ALONG CENTERLINE BAR TO THE NEAREST INCH.
PAYWEIGHTS ARE BASED ON ACTUAL LENGTHS.
FOUR ANGLE OR CHANNEL SPACERS ARE REQUIRED FOR EACH COLUMN SPIRAL. SPACERS ARE TO BE PLACED ON INSIDE OF SPIRALS. LENGTH AND WEIGHT OF COLUMN SPIRALS DO NOT INCLUDE SPLICES OR SPACERS.
REINFORCING STEEL (GRADE 60) FY = 60,000 PSI.

STATE OF MISSOURI
DEREK S. BUTLER
NUMBER PE-2016006828
PROFESSIONAL ENGINEER

THIS SHEET HAS BEEN SIGNED, SEALED AND DATED ELECTRONICALLY

DATE PREPARED 9/2/2021

ROUTE	STATE
36	MO
DISTRICT	SHEET NO.
BR	9

COUNTY: BUCHANAN
JOB NO.: J1P3295
CONTRACT ID.:
PROJECT NO.:
BRIDGE NO.: A36643

DATE	DESCRIPTION

MISSOURI HIGHWAYS AND TRANSPORTATION COMMISSION
105 WEST CAPITOL
JEFFERSON CITY, MO 65102
1-888-ASK-MODOT (1-888-275-6636)

GARVER, LLC.
7509 NW TIFFANY SPRINGS PARKWAY, SUITE 200
KANSAS CITY, MO 64153
PHONE: (816) 298-6465
CERTIFICATE OF AUTHORITY NO. 2008013090

IF A SEAL IS PRESENT ON THIS SHEET IT HAS BEEN ELECTRONICALLY SEALED AND DATED.

Detailed Jun. 2021
Checked Jul. 2021

Note: This drawing is not to scale. Follow dimensions.

SEC/SUR 19 TWP 57N RGE 35W

U.I.P. AND REHABILITATE EXISTING (63'-63') CONTINUOUS COMPOSITE WIDE FLANGE BEAM SPANS. (4'-100'-125'-100')(15'-155'-170'-145') (25'-301'-425'-25') CONTINUOUS COMPOSITE PLATE GIRDER SPANS

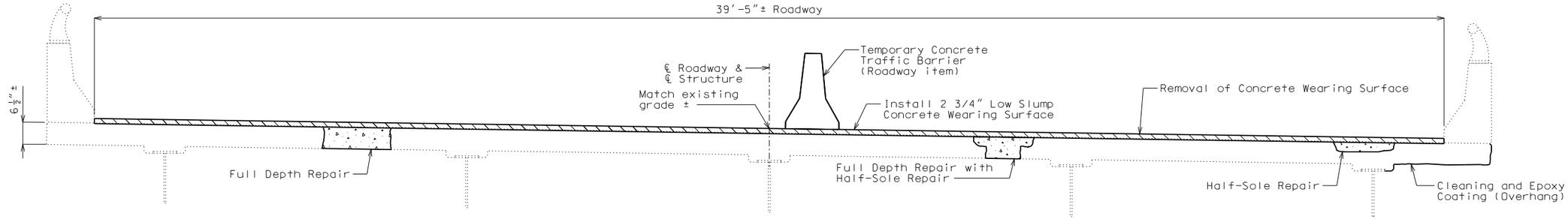

TYPICAL SECTION THRU EXISTING DECK

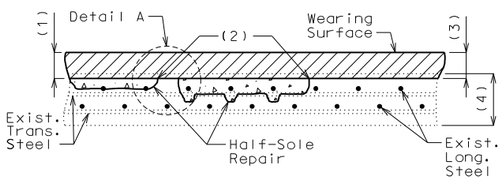

HALF-SOLE REPAIR

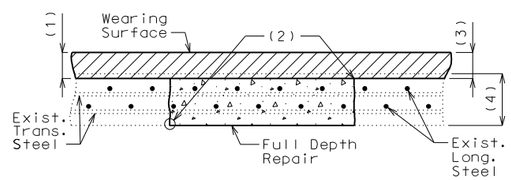

FULL DEPTH REPAIR

(1) Removal of existing 2 1/4"± low slump concrete wearing surface plus 1/2" of existing deck

(2) 1" vertical side shall be established outside the deteriorated area.

(3) 2 3/4" minimum low slump concrete wearing surface

(4) Original depth of deck minus previous scarification

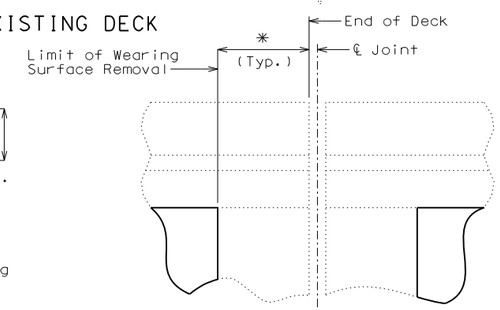

PART PLAN SHOWING WEARING SURFACE REMOVAL AT EXPANSION JOINTS USED IN PLACE

3'-0" ± at joint near Bent No. 3
*4'-0" ± at joints near Bents. No. 6, 9 & 11

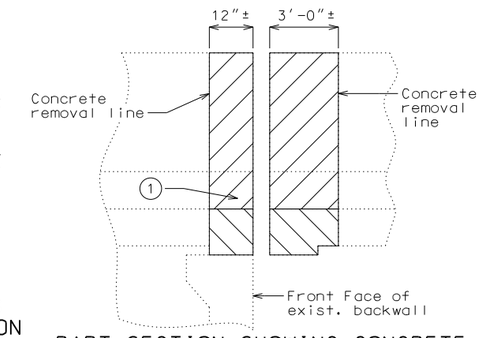

PART SECTION SHOWING CONCRETE REMOVAL FOR EXPANSION DEVICE REPLACEMENT AT END BENT NO. 1 NORTH BARRIER

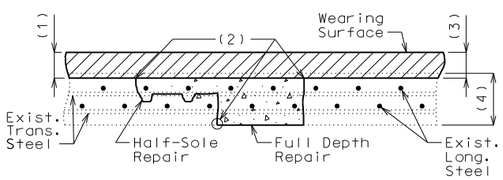

FULL DEPTH REPAIR WITH HALF-SOLE REPAIR

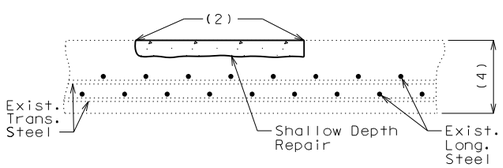

SHALLOW DEPTH REPAIR NEAR FINGER JOINTS ONLY

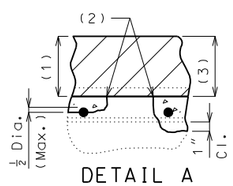

DETAIL A

Clearance around top bar and around bottom bar at the intersection of top bar shall be required when more than half the diameter of the top bar is exposed.

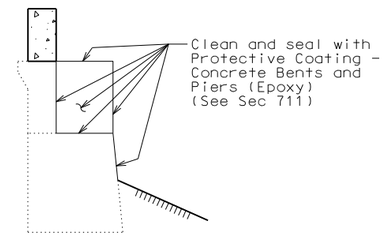

TYPICAL SECTION THRU END BENT NO. 1 SHOWING PROTECTIVE COATING

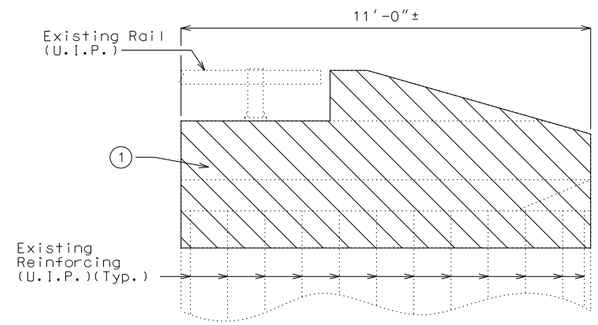

PART SECTION SHOWING CONCRETE REMOVAL FOR BARRIER AND EXPANSION DEVICE REPLACEMENT AT END BENT NO. 1 SOUTH BARRIER

(1) Remove existing barrier concrete to top of existing wing. Remove existing backwall concrete to construction joint at top of approach notch.

Cost of removal of existing barrier for expansion device replacement will be considered completely covered by the contract unit price for Remove and Replace Barrier.

Cost of removal of existing slab and backwall concrete for expansion device replacement will be considered completely covered by the contract unit price for Removal of Existing Expansion Joints & Adjacent Concrete.

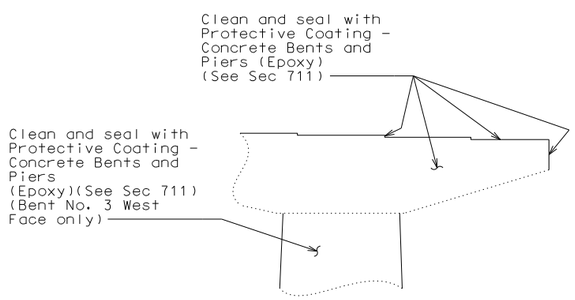

TYPICAL DETAIL OF INT. BENTS NO. 3, 6, 9 & 11 BEAM SHOWING PROTECTIVE COATING

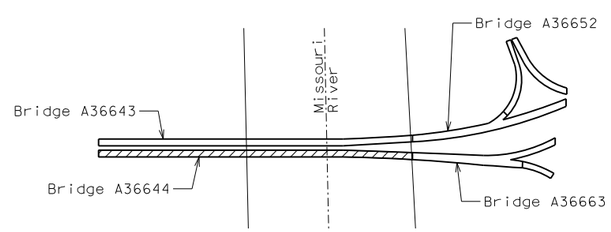

LOCATION SKETCH

REPAIRS TO BRIDGE: ROUTE 36 EB OVER MISSOURI RIVER

ROUTE 36 FROM STATE LINE TO ROUTE I-229

AT STATE LINE

BEG. STA. 13+52.20± (Match Existing)

Detailed Jun. 2021
Checked Jul. 2021

Note: This drawing is not to scale. Follow dimensions.

STATE OF MISSOURI — DEREK S. BUTLER — NUMBER PE-2016006828 — PROFESSIONAL ENGINEER

THIS SHEET HAS BEEN SIGNED, SEALED AND DATED ELECTRONICALLY

DATE PREPARED	
9/2/2021	
ROUTE 36	STATE MO
DISTRICT BR	SHEET NO. 1
COUNTY BUCHANAN	
JOB NO. J1P3295	
CONTRACT ID.	
PROJECT NO.	
BRIDGE NO. A36644	

DATE	DESCRIPTION
.	.
.	.
.	.
.	.
.	.
.	.

IF A SEAL IS PRESENT ON THIS SHEET IT HAS BEEN ELECTRONICALLY SEALED AND DATED.

MISSOURI HIGHWAYS AND TRANSPORTATION COMMISSION
105 WEST CAPITOL
JEFFERSON CITY, MO 65102
1-888-ASK-MODOT (1-888-275-6636)

GARVER, LLC.
7509 NW TIFFANY SPRINGS PARKWAY, SUITE 200
KANSAS CITY, MO 64153
PHONE: (816) 298-6465
CERTIFICATE OF AUTHORITY NO. 2008013090

L:\2021\21T04000 - MoDOT NW Route 36 Bridge Rehab\Drawings\BRIDGE\A36644\B_A36644_001_J1P3295_DeckRehab.dgn 2:09:14 PM 9/2/2021

General Notes:

Design Specifications:

2002 AASHTO LFD (17th Ed.) Standard Specifications
Bridge Deck Rating = 6

Design Loading:

HS20-44 Modified (1977) and Military 24,000 lb Tandem Axle (1977)

Design Unit Stresses:

Class B-1 Concrete (Safety Barrier Curb)	f'c = 4,000 psi
Class B-2 Concrete (Half-Sole and Full Depth Repair and Superstructure except Saftey Barrier Curb)	f'c = 4,000 psi
Reinforcing Steel (Grade 60)	fy = 60,000 psi

Miscellaneous:

Roadway surfacing adjacent to bridge ends shall match new bridge wearing surface (roadway item).

All concrete repairs shall be in accordance with Sec 704, unless otherwise noted.

Outline of old work is indicated by light dashed lines. Heavy lines indicate new work.

Contractor shall verify all dimensions in field before ordering new material.

Bars bonded in existing concrete not removed shall be cleanly stripped and embedded into new concrete where possible. If length is available, existing bars shall extend into new concrete at least 40 diameters for plain bars and 30 diameters for deformed bars, unless otherwise noted.

In order to maintain grade and a minimum thickness of wearing surface as shown on plans it may be necessary to use additional quantities of wearing surface at various locations throughout the structure. The cost of furnishing and installing the wearing surface will be considered completely covered in the contract unit price, including all additional labor, materials or equipment for variations in thickness of wearing surface.

Traffic Handling:

Traffic to be maintained on structure during construction. See roadway plans for traffic control.

Recoating Existing Steel:

Protective Coating: System G in accordance with Sec 1081.

Surface Preparation: Surface preparation of the existing steel shall be in accordance with Sec 1081 for Recoating of Structural Steel (System G). The cost of surface preparation will be considered completely covered by the contract unit price per sq. foot for Surface Preparation for Recoating Structural Steel.

Prime Coat: The cost of the prime coat will be considered completely covered by the contract unit price per sq. foot for Field Application of Inorganic Zinc Primer. Tint of the prime coat for System G shall be similar to the color of the field coat to be used.

Field Coat(s): The color of the field coat(s) shall be Green (Federal Standard #24260). The cost of the intermediate field coat will be considered completely covered by the contract unit price per sq. foot for Intermediate Field Coat (System G). The cost of the finish field coat will be considered completely covered by the contract unit price per sq. foot for Finish Field Coat (System G).

Coating Limits: All existing structural steel within 10 feet of CL expansion joint at End Bent No. 1, within 10 feet of CL expansion joint near Bent No. 3, from 10 feet from CL expansion joint near Bent No. 6 to 10 feet past CL Bent No. 6, from 10 feet from CL expansion joint near Bent No. 9 to 10 feet past CL Bent No. 9 and 10 feet from CL Bent No. 11 to CL expansion joint near Bent No. 11. Within these limits, items to be recoated include girders, stringers, diaphragms, stiffeners, bearings and miscellaneous structural steel items. Additional spot painting shall be provided as described in Table for Spot Painting.

Sec 1081.10.4.6 shall be modified such that the word "RECOATED" is replaced by the words "RECOATED-SYSTEM G-GIRDER ENDS ONLY", or "RECOATED-SYSTEM G-EXPANSION AREAS ONLY".

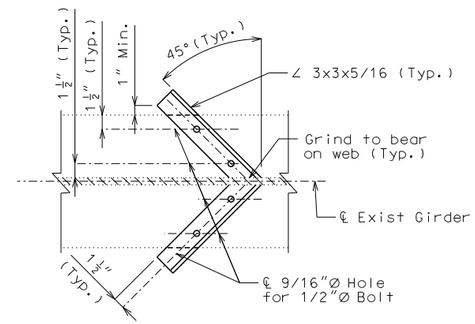

SECTION A-A

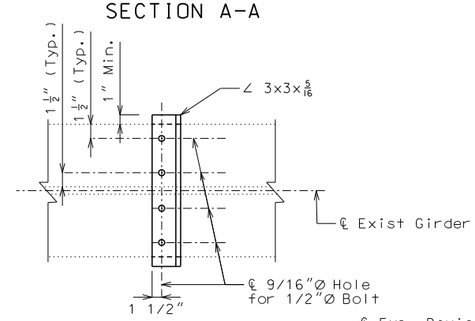

SECTION B-B

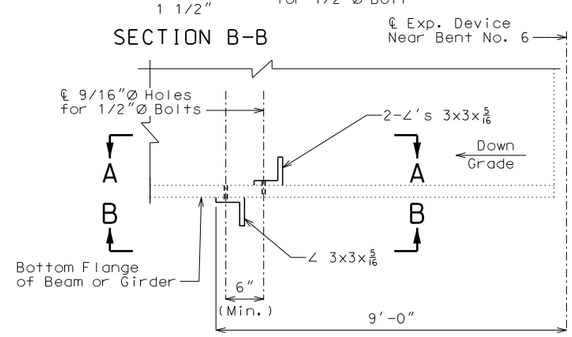

DRIP ANGLES DETAIL
(Both Sides of Exp. Device, 10 Required)

Estimated Quantities

Item		Total
Removal of Concrete Wearing Surface	sq. foot	67,298
Removal of Existing Expansion Joint & Adjacent Concrete	linear foot	40
Remove and Replace Barrier Curb	linear foot	18
Bridge Approach Slab (Major Road)	sq. yard	62
Low Slump Concrete Wearing Surface	sq. yard	7,478
Class B-2 Concrete	cu. yard	4.2
Substructure Repair (Formed)	sq. foot	260
Substructure Repair (Unformed)	sq. foot	30
Half-Sole Repair	sq. foot	600
Full Depth Repair	sq. foot	450
Cleaning and Epoxy Coating	sq. foot	359
Shallow Deck Repair	sq. foot	40
Shell Repair	sq. foot	650
Reinforcing Steel (Epoxy Coated)	pound	960
Protective Coating - Concrete Bents and Piers (Epoxy)	lump sum	1
Surface Preparation for Recoating Structural Steel	sq. foot	12,600
Field Application of Inorganic Zinc Primer	sq. foot	12,600
Intermediate Field Coat (System G)	sq. foot	12,600
Finish Field Coat (System G)	sq. foot	12,600
Drip Angles	each	10
Strip Seal Expansion Joint System	linear foot	40
Strip Seal	linear foot	40

Table For Spot Painting

Location	Description
Span 3-4 Girder 1	Splice 3 Bottom Flange Splice Plates
Span 4-5 Girder 1	Splice 4 Bottom Flange Splice Plates
Span 4-5 Girder 1	Splice 5 Bottom Flange Splice Plates
Span 5-6 Girder 3	Bottom 2 feet of web and all around bottom flange for approx. 50 feet near midspan
Span 6-7 Girder 1	Splice 7 Bottom Flange Splice Plates
Span 8-9 Girder 1 and 5	Splice 11 Bottom Flange Splice Plates plus 2 feet all around bottom flange beyond splice plates.
Span 10-11 Girder 1	Splice 15 Bottom Flange Splice Plates

Note:

Drip angles shall be caulked with dark brown caulking against flange, web and fillet welds.

Drip angles shall be same grade as bottom flange.

Use 1/2"Ø ASTM F3125 Grade A325 Type 3 for bolted connection.

Cost of furnishing and installing drip angles, complete in place, shall be considered completely covered by the contract unit price for Drip Angles.

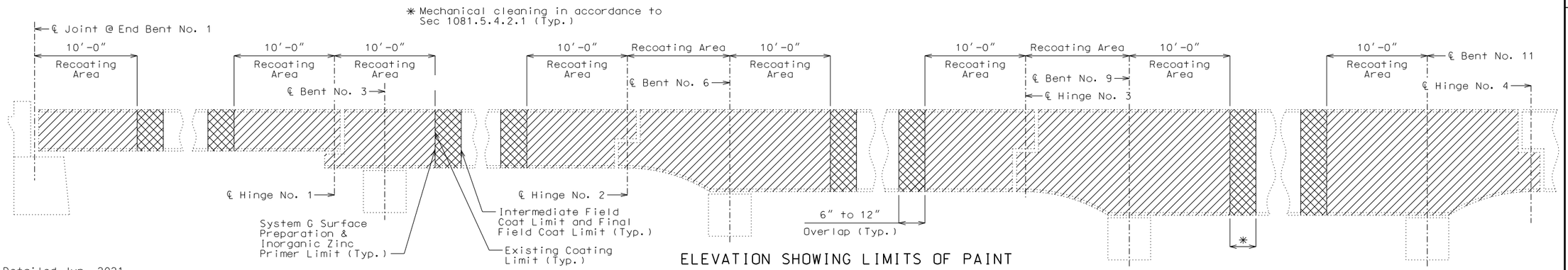

ELEVATION SHOWING LIMITS OF PAINT

Detailed Jun. 2021
Checked Jul. 2021

Note: This drawing is not to scale. Follow dimensions.

STATE OF MISSOURI
DEREK S. BUTLER
NUMBER PE-2016006828
THIS SHEET HAS BEEN SIGNED, SEALED AND DATED ELECTRONICALLY

DATE PREPARED	
9/2/2021	
ROUTE 36	STATE MO
DISTRICT BR	SHEET NO. 2
COUNTY BUCHANAN	
JOB NO. J1P3295	
CONTRACT ID.	
PROJECT NO.	
BRIDGE NO. A36644	

DATE	DESCRIPTION
.	.
.	.
.	.
.	.
.	.
.	.

IF A SEAL IS PRESENT ON THIS SHEET IT HAS BEEN ELECTRONICALLY SEALED AND DATED.

MISSOURI HIGHWAYS AND TRANSPORTATION COMMISSION
105 WEST CAPITOL
JEFFERSON CITY, MO 65102
1-888-ASK-MODOT (1-888-275-6636)

GARVER, LLC.
7509 NW TIFFANY SPRINGS PARKWAY, SUITE 200
KANSAS CITY, MO 64153
PHONE: (816) 298-6465
CERTIFICATE OF AUTHORITY NO. 2008013090

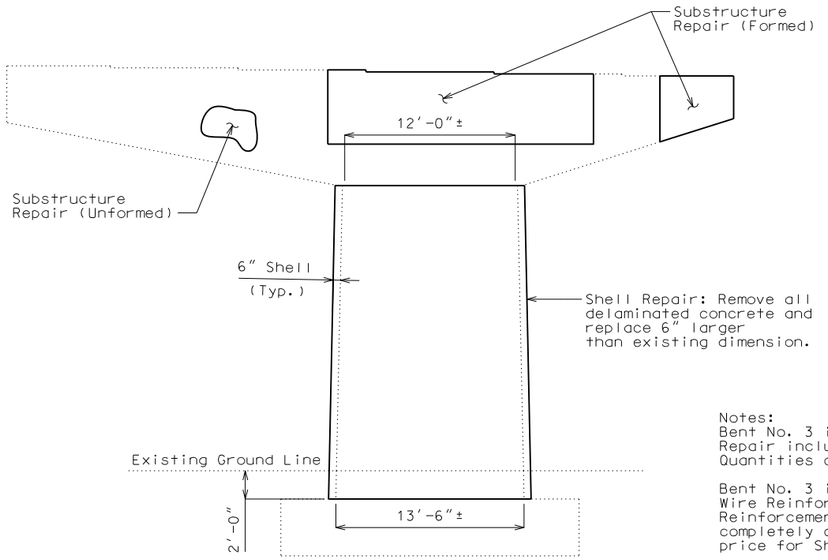

ELEVATION OF SHELL REPAIR
AT BENT NO. 3 WEST FACE

Notes:
Bent No. 3 includes ±650 sq.ft. Shell Repair included in the Estimated Quantities on Sheet No. 2.

Bent No. 3 includes ±188 pounds Welded Wire Reinforcement. Cost of Welded Wire Reinforcement shall be considered completely covered by the contract unit price for Shell Repair.

Shell Repair Shall meet the requirements of MoDOT Standard Specifications Sec 704 Substructure Repair (Formed). All other applicable sections from Sec 704 "Concrete Masonry Repair" shall be required.

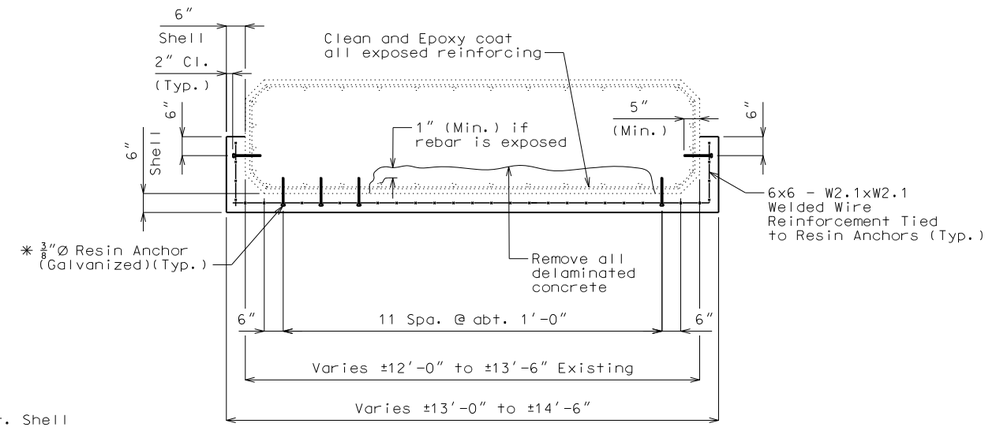

TYPICAL SECTION THRU COLUMN
AT BENT NO. 3

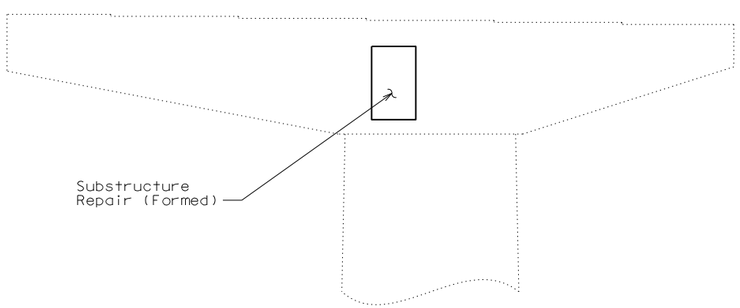

DETAIL OF SUBSTRUCTURE REPAIR
AT BENT NO. 6

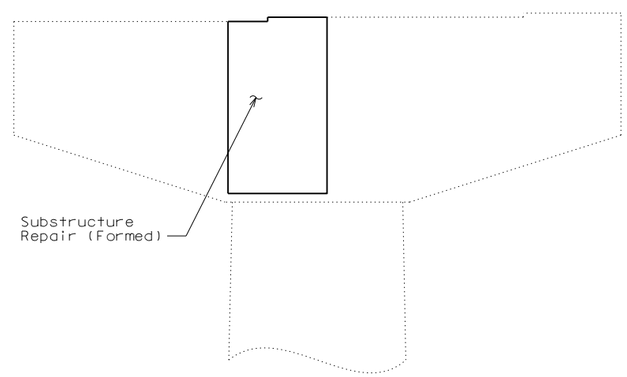

DETAIL OF SUBSTRUCTURE REPAIR
AT BENT NO. 11

Notes:
The contractor shall use one of the qualified resin anchor systems in accordence with Sec 1039.

Cost of furnishing and installing the resin anchor systems complete in place, will be considered completely covered by the contract unit price for Shell Repair.

The minimum embedment depth in concrete with fc'=4,000 psi for the resin anchor systems shall be that required to meet the minimum ultimate pullout strength in accordence with Sec 1039 but shall not be less than 5" in sound concrete.

* Resin anchors (Galvanized) shall be used at 12" (horizontal and vertical) spacing in undamaged areas if less than 25% of reinforcing steel is exposed after removing delaminated concrete.

SUBSTRUCTURE REPAIRS

Detailed Jun. 2021
Checked Jul. 2021

Note: This drawing is not to scale. Follow dimensions.

STATE OF MISSOURI
DEREK S. BUTLER
NUMBER PE-2016006828
PROFESSIONAL ENGINEER

THIS SHEET HAS BEEN SIGNED, SEALED AND DATED ELECTRONICALLY

DATE PREPARED	
9/2/2021	
ROUTE 36	STATE MO
DISTRICT BR	SHEET NO. 3
COUNTY BUCHANAN	
JOB NO. J1P3295	
CONTRACT ID.	
PROJECT NO.	
BRIDGE NO. A36644	

DATE	DESCRIPTION
.	.
.	.
.	.
.	.
.	.
.	.

IF A SEAL IS PRESENT ON THIS SHEET IT HAS BEEN ELECTRONICALLY SEALED AND DATED.

MISSOURI HIGHWAYS AND TRANSPORTATION COMMISSION
MoDOT
105 WEST CAPITOL
JEFFERSON CITY, MO 65102
1-888-ASK-MODOT (1-888-275-6636)

GARVER, LLC.
7509 NW TIFFANY SPRINGS
PARKWAY, SUITE 200
KANSAS CITY, MO 64153
PHONE: (816) 298-6465
CERTIFICATE OF AUTHORITY
NO. 2008013090

GARVER

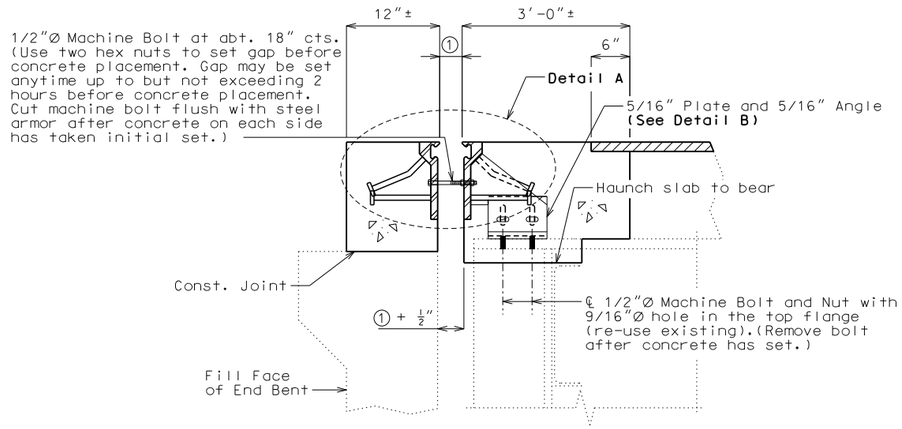

SECTION A-A

Note: Strip seal gland not shown for clarity.

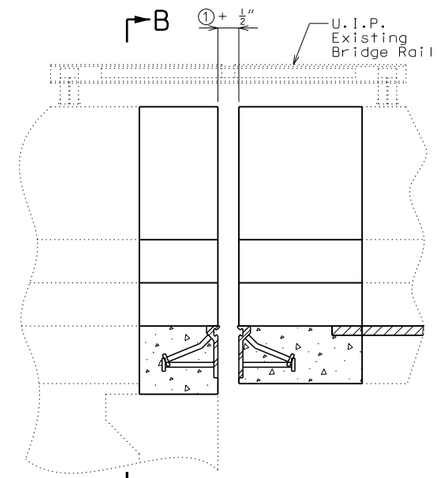

PART ELEVATION OF BARRIER

Strip seal gland not shown for clarity.

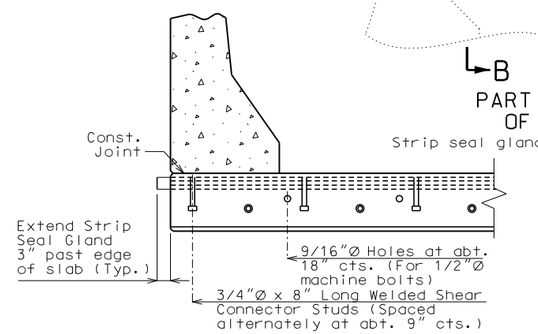

PART SECTION B-B

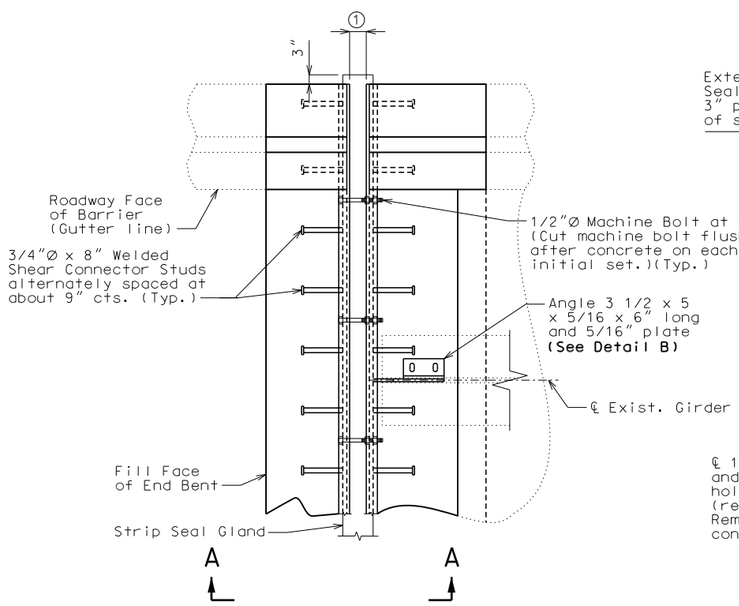

PART PLAN

See Sheet No. 6 for reinforcement

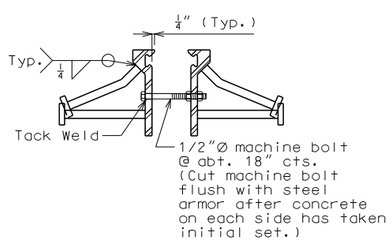

DETAIL A

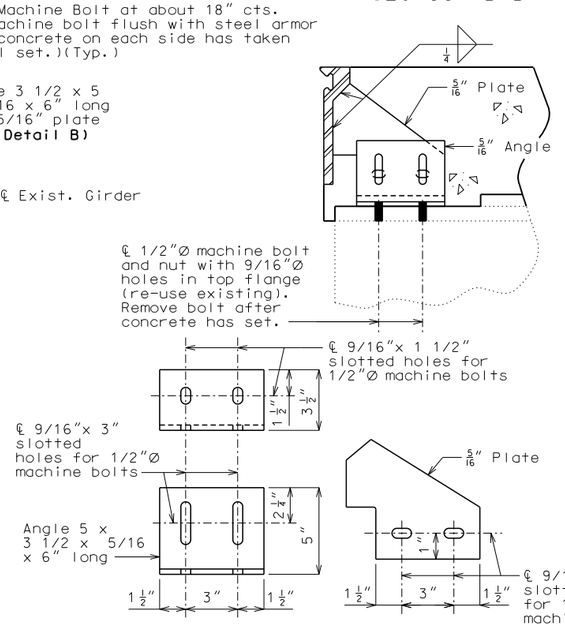

DETAIL B

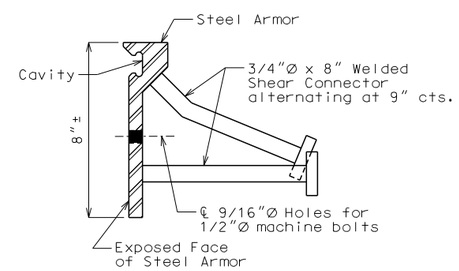

DETAIL OF JOINT ARMOR

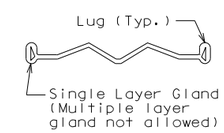

DETAIL OF GLAND

GENERAL NOTES:

Expansion joint system shall be fabricated in one section, except for staged construction and when the length is over 50 feet. A complete joint penetration groove welded splice shall be required. Welds shall be ground flush to provide a smooth surface. The expansion joint system shall be fabricated and installed to the crown and grade of the roadway.

The strip seal gland shall be installed in joints in one continuous piece without field splices. Factory splicing will be permitted for joints in excess of 53 feet.

Structural steel for the expansion joint system shall be ASTM A709 Grade 36 except the steel armor may be ASTM A709 Grade 50W. Anchors for the expansion joint system shall be in accordance with Sec 1037. Strip seal expansion joint system shall be in accordance with Sec 717.

Structural steel for the expansion joint system shall be coated with a minimum of two coats of inorganic zinc primer to provide a total dry film thickness of 4 mils minimum, 6 mils maximum, or galvanized in accordance with ASTM A123. Anchors need not be protected from overspray.

Concrete shall be forced under and around steel armor and anchors. Proper consolidation of the concrete shall be achieved by localized internal vibration.

② The installation temperature shall be taken as the actual air temperature averaged over the 24-hour period immediately preceding installation.

③ MoDOT Construction personnel will indicate the strip seal expansion joint system installed.

Steel armor may also be referred to as extrusion or rail.

All concrete above the upper construction joint in the backwall and in slab shall be Class B-2.

Table of Allowed Transverse Strip Seal Expansion Joint System

Manufacturer	Strip Seal System (Designated Name)	Movement Parallel to RDWY	① Allowed Installation Gap Normal to Joint at RDWY Surface @ Air/Surface Temperature ②						③
			@ 40°F	@ 50°F	@ 60°F	@ 70°F	@ 80°F	@ 90°F	
D S Brown	Strip seal L2-400	1 7/8"	2 1/4"	2 1/8"	2"	1 7/8"	1 3/4"	1 5/8"	□
D S Brown	Strip seal L2-500	1 7/8"	2 1/4"	2 1/8"	2"	1 7/8"	1 3/4"	1 5/8"	□
Watson Bowman Acme (Wabo)	Strip seal SE-400	1 7/8"	2 1/4"	2 1/8"	2"	1 7/8"	1 3/4"	1 5/8"	□
Watson Bowman Acme (Wabo)	Strip seal SE-500	1 7/8"	2 1/4"	2 1/8"	2"	1 7/8"	1 3/4"	1 5/8"	□

STRIP SEAL EXPANSION JOINT SYSTEM AT END BENT NO. 1

Detailed Jun. 2021
Checked Jul. 2021

Note: This drawing is not to scale. Follow dimensions.

Sheet No. 4 of 9

STATE OF MISSOURI DEREK S. BUTLER NUMBER PE-2016006828 PROFESSIONAL ENGINEER

THIS SHEET HAS BEEN SIGNED, SEALED AND DATED ELECTRONICALLY

DATE PREPARED	
9/2/2021	
ROUTE 36	STATE MO
DISTRICT BR	SHEET NO. 4
COUNTY BUCHANAN	
JOB NO. J1P3295	
CONTRACT ID.	
PROJECT NO.	
BRIDGE NO. A36644	

DATE	DESCRIPTION
. . . . .	. . . . .

IF A SEAL IS PRESENT ON THIS SHEET IT HAS BEEN ELECTRONICALLY SEALED AND DATED.

MISSOURI HIGHWAYS AND TRANSPORTATION COMMISSION

MoDOT

105 WEST CAPITOL
JEFFERSON CITY, MO 65102
1-888-ASK-MODOT (1-888-275-6636)

GARVER, LLC.
7509 NW TIFFANY SPRINGS PARKWAY, SUITE 200
KANSAS CITY, MO 64153
PHONE: (816) 298-6465
CERTIFICATE OF AUTHORITY NO. 2008013090

GARVER

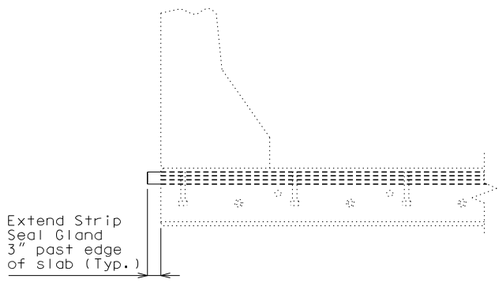

PART SECTION SHOWING EXTENSION
OF GLAND PAST EDGE OF SLAB

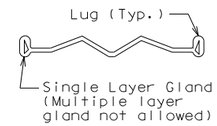

DETAIL OF GLAND

GENERAL NOTES:

The strip seal gland shall be installed in joints in one continuous piece without field splices. Factory splicing will be permitted for joints in excess of 53 feet.

(1) MoDOT Construction personnel will indicate the strip seal expansion joint system installed.

Removal of existing gland and replacement of new gland shall be considered completely covered by the unit price for Strip Seal.

Table of Allowed Transverse Strip Seal Expansion Joint Gland

Manufacturer	Strip Seal System (Designated Name)	(1)
D S Brown	Strip seal L2-400	☐
D S Brown	Strip seal L2-500	☐
Watson Bowman Acme (Wabo)	Strip seal SE-400	☐
Watson Bowman Acme (Wabo)	Strip seal SE-500	☐

STATE OF MISSOURI
DEREK S. BUTLER
NUMBER PE-2016006828
PROFESSIONAL ENGINEER

THIS SHEET HAS BEEN SIGNED, SEALED AND DATED ELECTRONICALLY

DATE PREPARED 9/2/2021

ROUTE	STATE
36	MO
DISTRICT	SHEET NO.
BR	5

COUNTY: BUCHANAN
JOB NO.: J1P3295
CONTRACT ID.:
PROJECT NO.:
BRIDGE NO.: A36644

DATE	DESCRIPTION
.	.
.	.
.	.
.	.
.	.
.	.
.	.

IF A SEAL IS PRESENT ON THIS SHEET IT HAS BEEN ELECTRONICALLY SEALED AND DATED.

MISSOURI HIGHWAYS AND TRANSPORTATION COMMISSION
105 WEST CAPITOL
JEFFERSON CITY, MO 65102
1-888-ASK-MODOT (1-888-275-6636)

GARVER, LLC.
7509 NW TIFFANY SPRINGS PARKWAY, SUITE 200
KANSAS CITY, MO 64153
PHONE: (816) 298-6465
CERTIFICATE OF AUTHORITY NO. 2008013090

STRIP SEAL GLAND REPLACEMENT NEAR INTERMEDIATE BENT NO. 3

Detailed Jun. 2021
Checked Jul. 2021

Note: This drawing is not to scale. Follow dimensions.

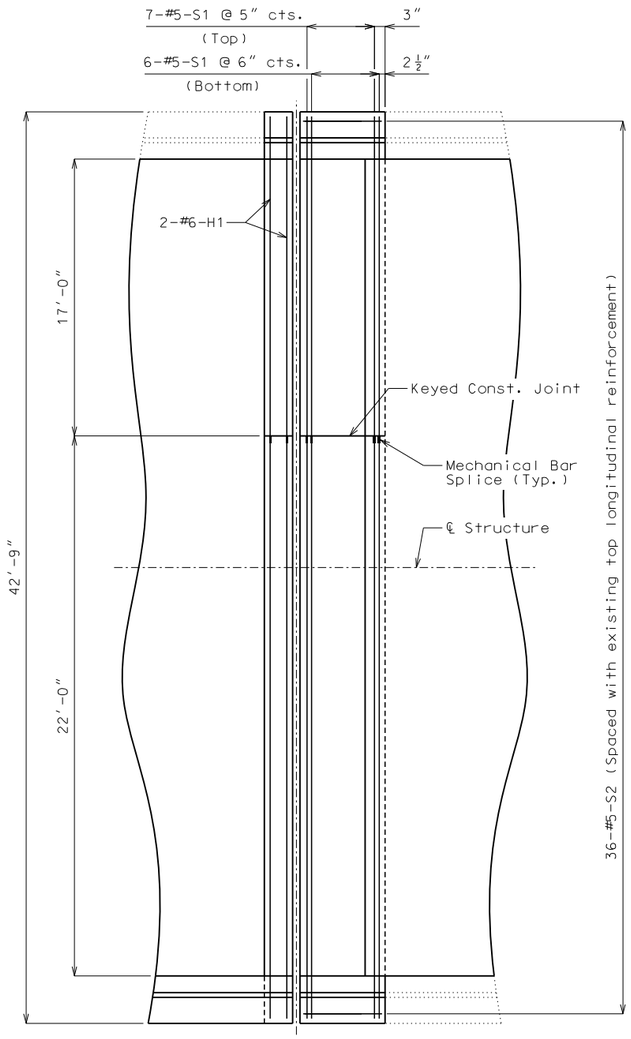

PLAN OF SLAB SHOWING REINFORCEMENT AT END BENT NO. 1

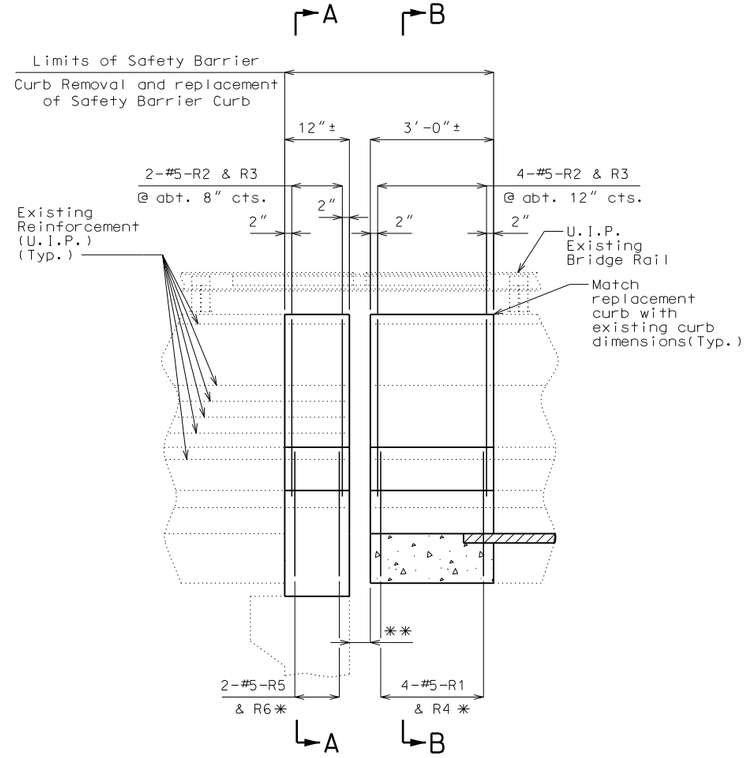

ELEVATION SHOWING NORTH BARRIER CURB REINFORCEMENT AT END BENT NO. 1

*Spaced with #5-R2 & R3

**For gap width see Sheet No. 4

Notes:

Remove existing transverse reinforcement within limits of Removal of Existing Expansion Joints and Adjacent Concrete.

The total length for #6-H1 and #5-S1 bars are based on placing the bar the entire width of the deck. The bars shall be field cut to accommodate the construction joint. Bars shall be spliced using mechanical bar splices. Mechanical bar splices shall be completely covered by the contract unit price for Reinforcing Steel (Epoxy Coated) and shall be in accordance with Sec 706. No additional payment will be made for any additional bar lengths required for the mechanical bar splice.

Remove existing stirrups within limits of Safety Barrier Curb Removal.

Top of safety barrier curb shall be built parallel to the grade with safety barrier curb joints normal to grade.

All exposed edges of safety barrier curb shall have either a 1/2" radius or a 3/8" bevel, unless otherwise noted.

Payment for all concrete and reinforcement in Safety Barrier Curb, complete-in-place will be considered completely covered by the contract unit price for Remove and Replace Barrier Curb.

Concrete in safety barrier curb shall be Class B-1.

Measurement of Remove and Replace Barrier Curb is to the nearest linear foot for each structure, measured along the outside top slab.

All exposed edges of new safety barrier curb shall match existing safety barrier curb.

Existing rail posts that fall within the area of barrier curb removal at Exp. Joints shall be reinstalled in new safety barrier curb. Provide 2-7/8"Ø x 12" steel anchor bolts with hex head, hex nuts and washers for attachment of existing rail post to new barrier curb. Payment for this work will be considered completely covered by the contract unit price for Remove and Replace Barrier Curb.

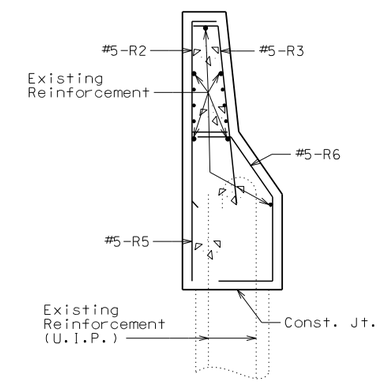

SECTION A-A

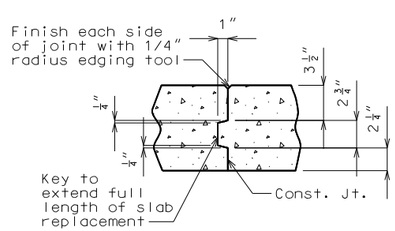

KEYED CONSTRUCTION JOINT DETAILS

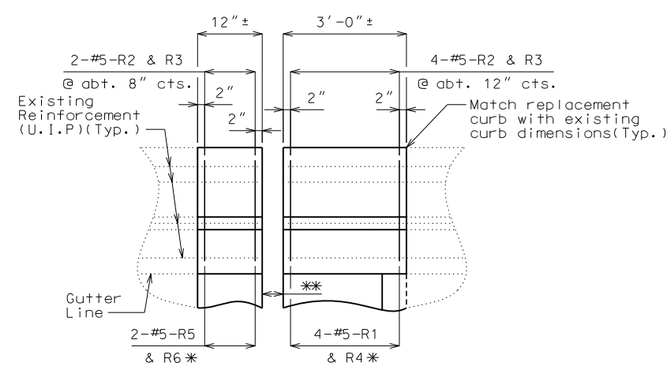

PART PLAN SHOWING NORTH BARRIER CURB REINFORCEMENT AT END BENT NO. 1

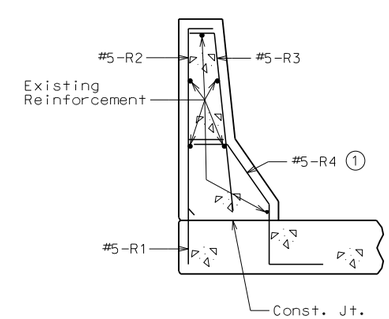

SECTION B-B

(1) Field cut or bend bottom leg of R4 bar to maintain 1 1/2" (min.) conc. cover when necessary.

DETAILS OF SAFETY BARRIER CURB REMOVAL & REPLACEMENT AT END BENT NO. 1

Detailed Jun. 2021
Checked Jul. 2021

Note: This drawing is not to scale. Follow dimensions.

STATE OF MISSOURI — DEREK S. BUTLER — NUMBER PE-2016006828 — PROFESSIONAL ENGINEER

THIS SHEET HAS BEEN SIGNED, SEALED AND DATED ELECTRONICALLY

DATE PREPARED 9/2/2021	
ROUTE 36	STATE MO
DISTRICT BR	SHEET NO. 6
COUNTY BUCHANAN	
JOB NO. J1P3295	
CONTRACT ID.	
PROJECT NO.	
BRIDGE NO. A36644	

DATE	DESCRIPTION
.	.
.	.
.	.
.	.
.	.
.	.

IF A SEAL IS PRESENT ON THIS SHEET IT HAS BEEN ELECTRONICALLY SEALED AND DATED.

MISSOURI HIGHWAYS AND TRANSPORTATION COMMISSION

105 WEST CAPITOL
JEFFERSON CITY, MO 65102
1-888-ASK-MODOT (1-888-275-6636)

GARVER, LLC.
7509 NW TIFFANY SPRINGS PARKWAY, SUITE 200
KANSAS CITY, MO 64153
PHONE: (816) 298-6465
CERTIFICATE OF AUTHORITY NO. 2008013090

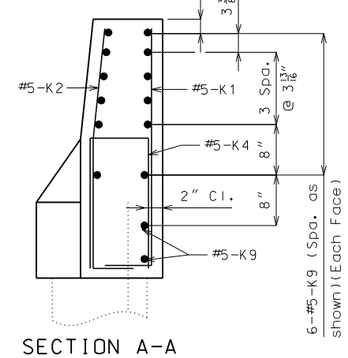

SECTION A-A

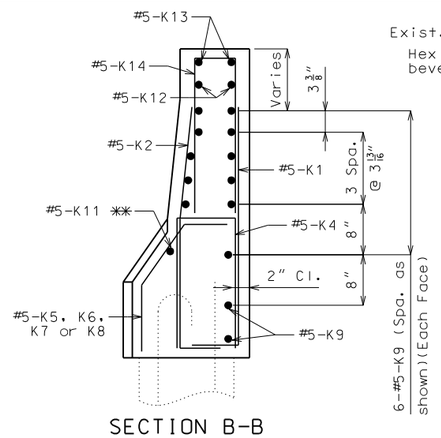

SECTION B-B

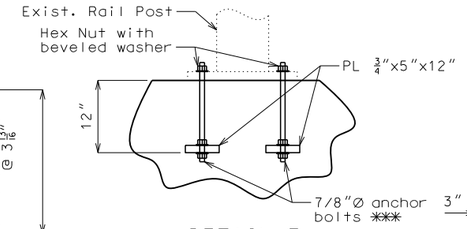

DETAIL E

✱✱✱ Match holes in exist. base plate.

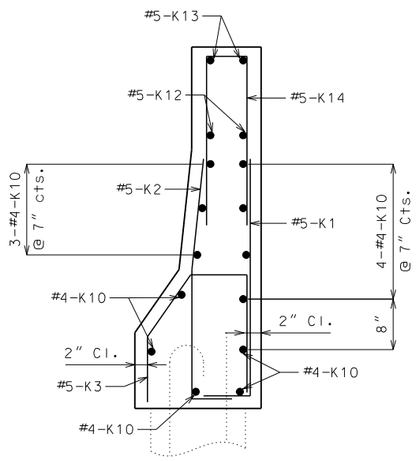

SECTION C-C

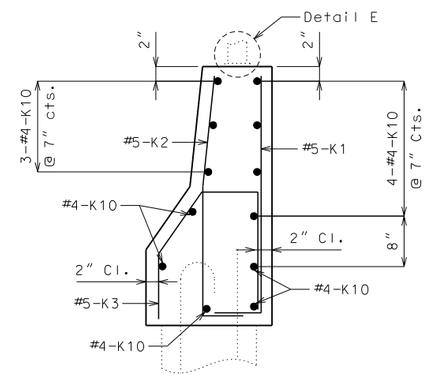

SECTION D-D

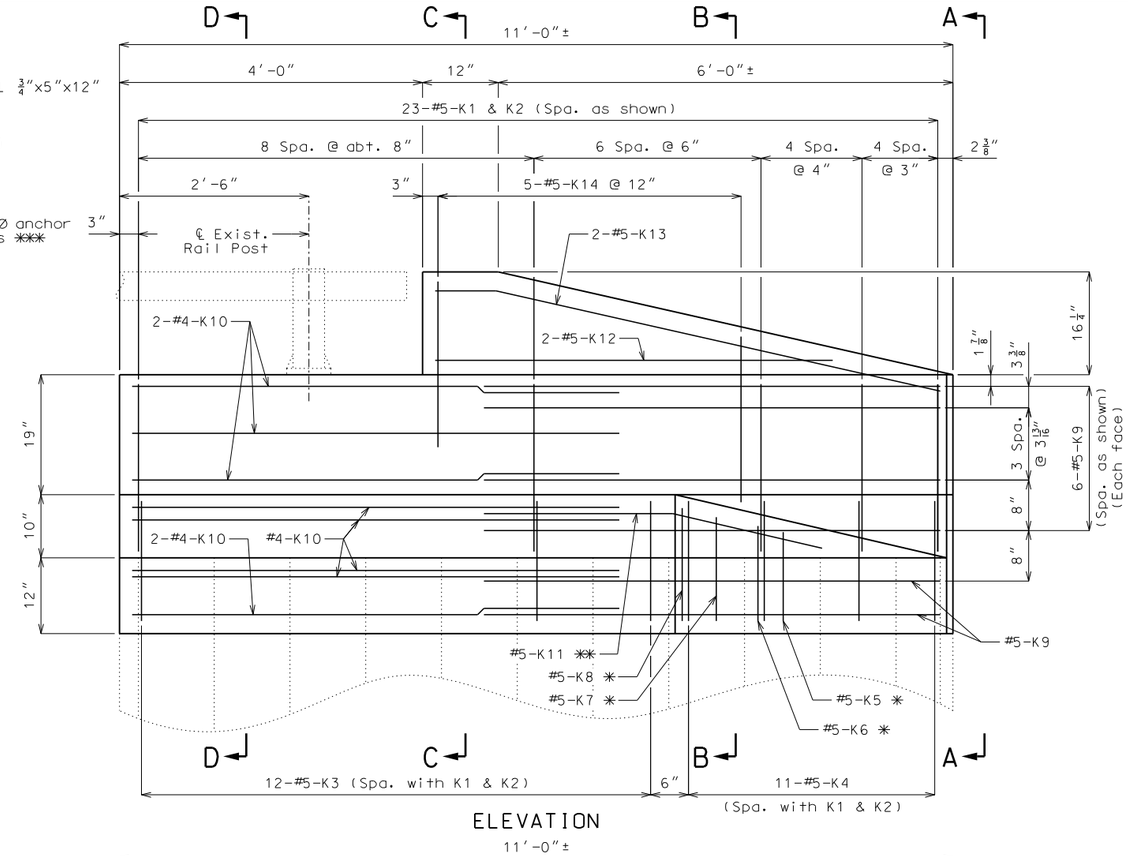

ELEVATION

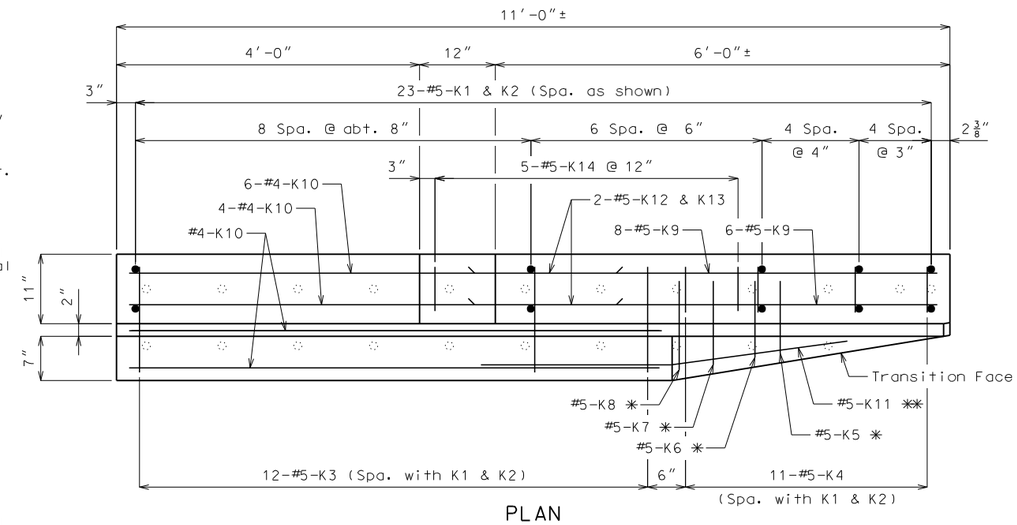

PLAN

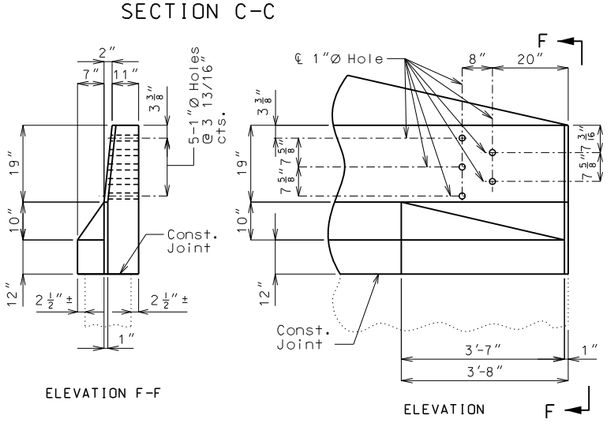

ELEVATION F-F

ELEVATION

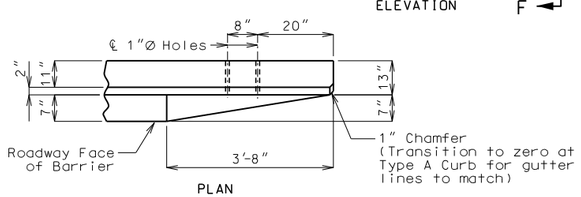

PLAN

DETAILS OF GUARD RAIL ATTACHMENT

General Notes:

Concrete traffic barrier delineators shall be placed on top of the barrier as shown on Missouri Standard Plan 617.10 and in accordance with Sec 617. Delineators on bridges with two-lane, two-way traffic shall have retroreflective sheeting on both sides. Concrete traffic barrier delineators will be considered completely covered by the contract unit price for Remove and Replace Barrier.

Remove existing stirrups within limits of Safety Barrier Curb Removal. See Sheet No. 1 for removal limits.

Top of safety barrier curb shall be built parallel to the grade with safety barrier curb joints normal to grade.

All exposed edges of safety barrier curb shall have either a 1/2" radius or a 3/8" bevel, unless otherwise noted.

Payment for all concrete and reinforcement, complete-in-place will be considered completely covered by the contract unit price for Remove and Replace Barrier Curb.

Concrete in the safety barrier curb shall be Class B-1.

Measurement of Remove and Replace Barrier Curb is to the nearest linear foot for each structure, measured along the outside top of slab.

All exposed edges of new safety barrier curb shall match existing safety barrier curb.

Reinforcing Steel:

Minimum clearance to reinforcing steel shall be 1 1/2".

Use a minimum lap of 2'-7" between K9 and K10.

✱ Spaced with #5-K4 bars.

✱✱ Fit bar to follow transition face of barrier.

END BENT NO. 1 SOUTH BARRIER REPLACEMENT DETAILS

Detailed Jul. 2021
Checked Jul. 2021

Note: This drawing is not to scale. Follow dimensions.

STATE OF MISSOURI — DEREK S. BUTLER — NUMBER PE-2016006828 — PROFESSIONAL ENGINEER

THIS SHEET HAS BEEN SIGNED, SEALED AND DATED ELECTRONICALLY

DATE PREPARED	
9/2/2021	
ROUTE 36	STATE MO
DISTRICT BR	SHEET NO. 7
COUNTY BUCHANAN	
JOB NO. J1P3295	
CONTRACT ID.	
PROJECT NO.	
BRIDGE NO. A36644	

DATE	DESCRIPTION
.	.
.	.
.	.
.	.
.	.
.	.

IF A SEAL IS PRESENT ON THIS SHEET IT HAS BEEN ELECTRONICALLY SEALED AND DATED.

MISSOURI HIGHWAYS AND TRANSPORTATION COMMISSION
105 WEST CAPITOL
JEFFERSON CITY, MO 65102
1-888-ASK-MODOT (1-888-275-6636)

GARVER, LLC.
7509 NW TIFFANY SPRINGS PARKWAY, SUITE 200
KANSAS CITY, MO 64153
PHONE: (816) 298-6465
CERTIFICATE OF AUTHORITY NO. 2008013090

L:\2021\21T04000 - MoDOT NW Route 36 Bridge Rehab\Drawings\BRIDGE\A36644\B_A36644_007_J1P3295_Barriers2.dgn 2:09:21 PM 9/2/2021

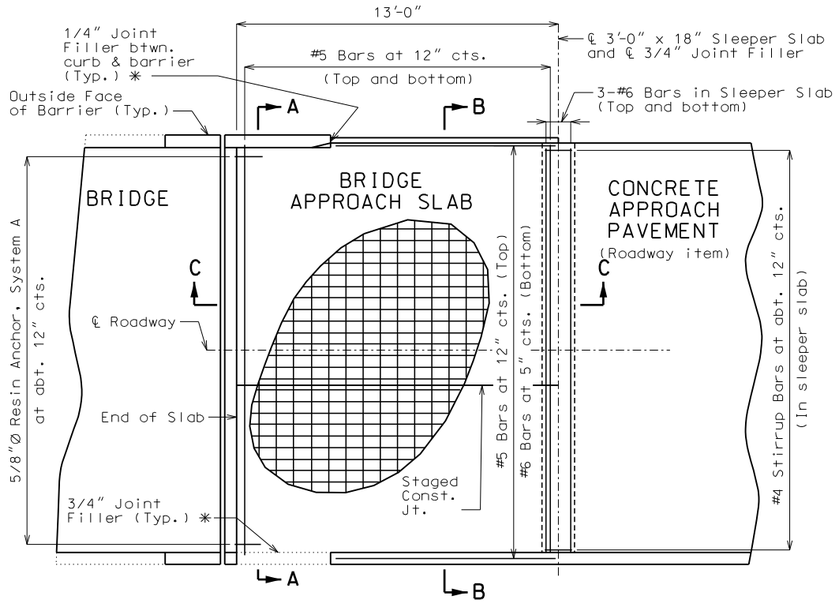

PART PLAN SHOWING REINFORCEMENT

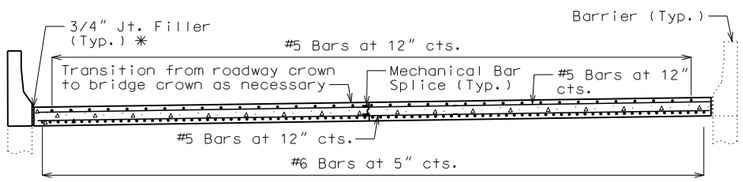

SECTION A-A

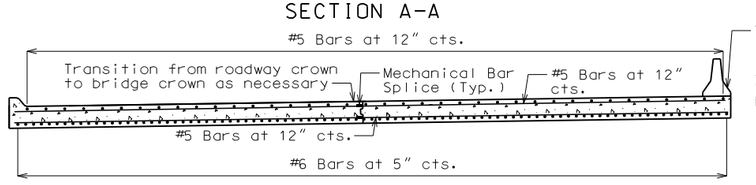

SECTION B-B

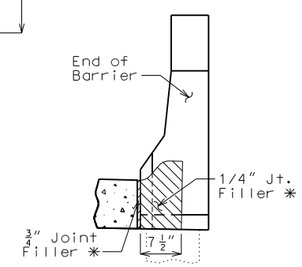

SECTION BETWEEN BARRIER AND CURB

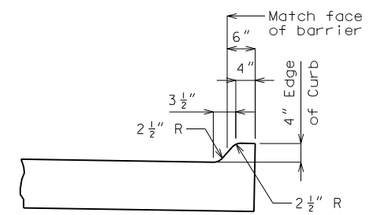

4" CURB DETAIL

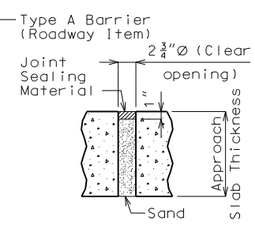

UNDERSEAL ACCESS HOLE DETAIL
(If required)

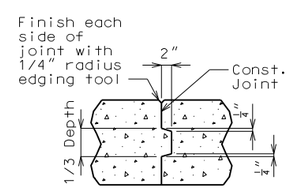

CONSTRUCTION JOINT DETAIL

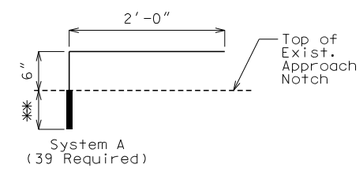

DETAILS OF RESIN ANCHOR SYSTEM

Notes:
The contractor shall use one of the qualified resin anchor systems in accordence with Sec 1039.

Cost of furnishing and installing the resin anchor systems complete-in-place will be considered completely covered by the constract unit proce for Bridge Approach Slab (Major).

The minimum embedment depth in concrete with fc'=3,000 psi for the resin anchor systems shall be required to meet the minimum ulitmate pullout strength in accordence with Sec 1039 but shall not be less than 5".

✱✱ Manufacturer's recommended embedment length (5" min.)

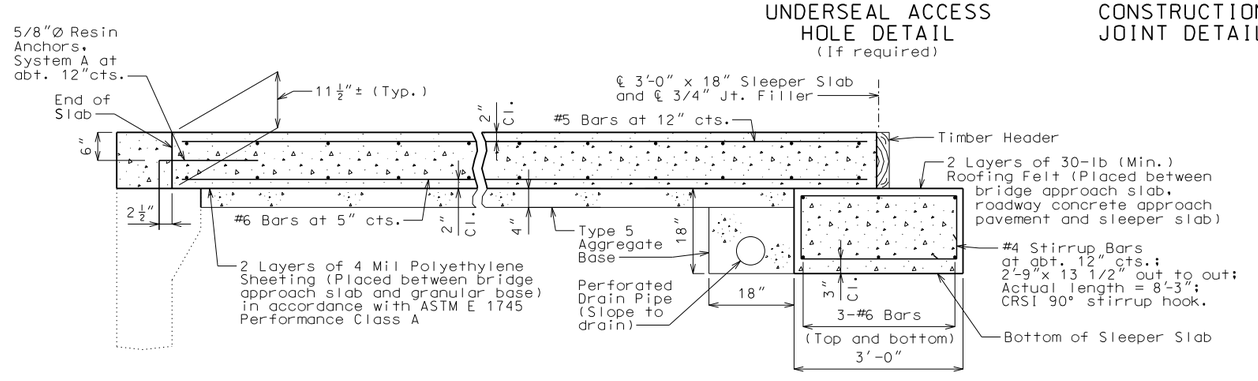

SECTION C-C

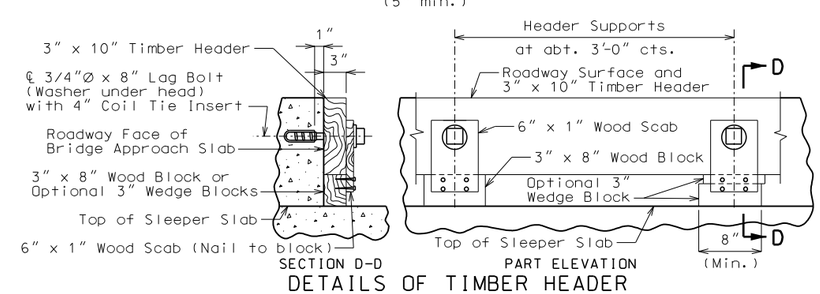

DETAILS OF TIMBER HEADER
Remove timber header when concrete pavement is placed.

General Notes:

All concrete for the bridge approach slab and sleeper slab shall be in accordance with Sec 503 (f'c = 4,000 psi).

The reinforcing steel in the bridge approach slab and the sleeper slab shall be epoxy coated Grade 60 with fy = 60,000 psi.

Drain pipe may be either 6" diameter corrugated metallic-coated pipe underdrain, 4" diameter corrugated polyvinyl chloride (PVC) drain pipe, or 4" diameter corrugated polyethylene (PE) drain pipe.

Minimum clearance to reinforcing steel shall be 1 1/2", unless otherwise shown.

The reinforcing steel in the bridge approach slab and the sleeper slab shall be continuous. The transverse reinforcing steel may be made continuous by lap splicing the #5 bars 29" or by mechanical bar splice.

Mechanical bar splices shall be in accordance with Sec 710. Estimated 32 splices per slab.

All joint filler shall be in accordance with Sec 1057 for preformed fiber expansion joint filler except as noted.

The contractor shall pour and satisfactorily finish the bridge slab before placing the bridge approach slab.

Longitudinal construction joints in approach slab and sleeper slab shall be aligned with longitudinal construction joints in bridge slab.

For concrete approach pavement details, see roadway plans.

Payment for furnishing all materials, labor and excavation necessary to construct the approach slab, including the timber header, sleeper slab, underdrain, Type 5 aggregate base, joint filler and all other appurtenances and incidental work as shown on this sheet, complete in place, will be considered completely covered by the contract unit price for Bridge Approach Slab (Major Road) per square yard.

✱ Seal joint between vertical face of approach slab and wing wall with sealant in accordance with Sec 717 for silicone joint sealant for saw cut and formed joints.

STATE OF MISSOURI
DEREK S. BUTLER
NUMBER PE-2016006828
PROFESSIONAL ENGINEER

THIS SHEET HAS BEEN SIGNED, SEALED AND DATED ELECTRONICALLY

DATE PREPARED	
9/2/2021	
ROUTE 36	STATE MO
DISTRICT BR	SHEET NO. 8
COUNTY BUCHANAN	
JOB NO. J1P3295	
CONTRACT ID.	
PROJECT NO.	
BRIDGE NO. A36644	

DATE	DESCRIPTION
. . . . .	

IF A SEAL IS PRESENT ON THIS SHEET IT HAS BEEN ELECTRONICALLY SEALED AND DATED.

MISSOURI HIGHWAYS AND TRANSPORTATION COMMISSION
105 WEST CAPITOL
JEFFERSON CITY, MO 65102
1-888-ASK-MODOT (1-888-275-6636)

GARVER, LLC.
7509 NW TIFFANY SPRINGS PARKWAY, SUITE 200
KANSAS CITY, MO 64153
PHONE: (816) 298-6465
CERTIFICATE OF AUTHORITY NO. 2008013090

Detailed Jun. 2021
Checked Jul. 2021

BRIDGE APPROACH SLAB (MAJOR ROAD)

Note: This drawing is not to scale. Follow dimensions.

BILL OF REINFORCING STEEL

NO. REQ'D.	MARK NO. SIZE	MARK NO. MARK	LOCATION	EPOXY (E)	SHAPE NO.	STIRRUP (S)	SUBSTR. (X)	VARIES (V)	NO. EACH	B FT. IN.	C FT. IN.	D FT. IN.	E FT. IN.	F FT. IN.	H FT. IN.	K FT. IN.	NOMINAL LENGTH FT. IN.	ACTUAL LENGTH FT. IN.	WEIGHT LBS.
			BENT NO. 3																
	W2.1		COLUMN				X												188
			SLAB																
4	6	H1	SLAB	E	20					42 5.000							42 5	42 5	255
13	5	S1	SLAB	E	20					42 5.000							42 5	42 5	576
36	5	S2	SLAB	E	17					2 8.000							3 3	3 3	122
			BARRIER CURB																
8	5	R1	BARRIER CURB	E	19	S				17.000	10.000						2 3	2 2	18
10	5	R2	BARRIER CURB	E	19	S				2 6.000	7.500						3 2	3 0	32
10	5	R3	BARRIER CURB	E	15	S				2 6.125	7.500				2 6.000	3.000	3 2	3 1	33
8	5	R4	BARRIER CURB	E	27	S					10.000	11.250	7.000	12.000	9.250	6.375	3 4	3 2	27
2	5	R5	BARRIER CURB	E	19	S				17.000	9.000						2 2	2 1	5
2	5	R6	BARRIER CURB	E	27	S				12.000	10.000	11.125	9.000		6.375	9.125	3 6	3 4	7
23	5	K1	BARRIER CURB	E	19	S				3 1.500	9.125						3 11	3 9	90
23	5	K2	BARRIER CURB	E	14	S				9.125	19.625	18.000			2.000	17.875	3 11	3 9	90
12	5	K3	BARRIER CURB	E	27	S				20.000	9.125	12.000	10.125		9.875	6.875	4 3	3 11	50
11	5	K4	BARRIER CURB	E	10	S					20.000	9.500					4 2	3 11	45
1	5	K5	BARRIER CURB	E	25	S				10.000	6.750	8.375			5.500	4.000	2 2	2 0	3
1	5	K6	BARRIER CURB	E	25	S				10.000	7.875	8.375			6.500	4.500	2 3	2 1	3
1	5	K7	BARRIER CURB	E	25	S				10.000	9.625	8.375			7.875	5.500	2 4	2 3	3
1	5	K8	BARRIER CURB	E	25	S				10.000	11.250	8.375			9.250	6.500	2 6	2 4	3
14	5	K9	BARRIER CURB	E	20					6 3.000							6 3	6 3	92
12	4	K10	BARRIER CURB	E	20					7 1.000							7 1	7 1	57
1	5	K11	BARRIER CURB	E	8					2 2.125					2 2.000	2.375	4 5	4 5	5
2	5	K12	BARRIER CURB	E	20					5 10.000							5 10	5 10	13
2	5	K13	BARRIER CURB	E	14						9.750	6 0.000			15.875	5 10.250	6 10	6 10	15
5	5	K14	BARRIER CURB	E	10	S					2 0.500	9.125					4 11	4 7	24
			TOTALS																
	4			E															57
	5			E															1256
	6			E															255
	W2.1																		188
			TOTAL																188
			TOTAL	E															1568
			SLAB ON GIRDER																
	5			E															698
	6			E															255
			TOTAL	E															953
			SAFETY BARRIER CURB																
	4			E															57
	5			E															558
			TOTAL	E															615

BILL OF REINFORCING STEEL

NO. REQ'D.	MARK NO. SIZE	MARK NO. MARK	LOCATION	EPOXY (E)	SHAPE NO.	STIRRUP (S)	SUBSTR. (X)	VARIES (V)	NO. EACH	B FT. IN.	C FT. IN.	D FT. IN.	E FT. IN.	F FT. IN.	H FT. IN.	K FT. IN.	NOMINAL LENGTH FT. IN.	ACTUAL LENGTH FT. IN.	WEIGHT LBS.

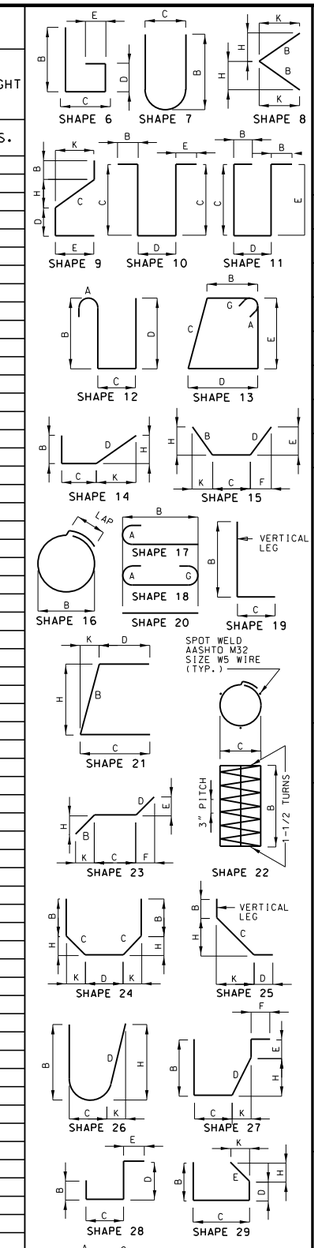

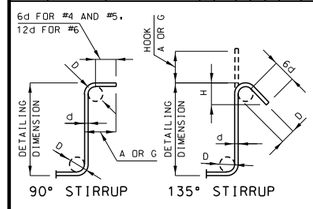

STIRRUP HOOK DIMENSIONS

GRADES 40 - 50 - 60 KSI

BAR SIZE	D (IN.)	90° HOOK: HOOK A OR G	135° HOOK: HOOK A OR G	135° HOOK: APPROX. H
#4	2"	4 1/2"	4 1/2"	3"
#5	2 1/2"	6"	5 1/2"	3 3/4"
#6	4 1/2"	12"	8"	4 1/2"

NOTE: UNLESS OTHERWISE NOTED, DIAMETER "D" IS THE SAME FOR ALL BENDS AND HOOKS ON A BAR.

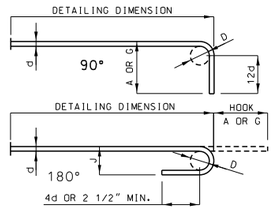

END HOOK DIMENSIONS

BAR SIZE	D (IN.)	ALL GRADES: 180° HOOKS A OR G	180° HOOKS J	90° HOOKS A OR G
#3	2 1/4"	5"	3"	6"
#4	3"	6"	4"	8"
#5	3 3/4"	7"	5"	10"
#6	4 1/2"	8"	6"	12"
#7	5 1/4"	10"	7"	14"
#8	6"	11"	8"	16"
#9	9 1/2"	15"	11 3/4"	19"
#10	10 3/4"	17"	13 1/4"	22"
#11	12"	19"	14 3/4"	2'-0"
#14	18 1/4"	2'-3"	21 3/4"	2'-7"

NOTE:
ALL STANDARD HOOKS AND BENDS OTHER THAN 180 DEGREE ARE TO BE BENT WITH SAME PROCEDURE AS FOR 90 DEGREE STANDARD HOOKS.
HOOKS AND BENDS SHALL BE IN ACCORDANCE WITH THE PROCEDURES AS SHOWN ON THIS SHEET.
E = EPOXY COATED REINFORCEMENT.
S = STIRRUP.
X = BAR IS INCLUDED IN SUBSTRUCTURE QUANTITIES.
V = BAR DIMENSIONS VARY IN EQUAL INCREMENTS BETWEEN DIMENSIONS SHOWN ON THIS LINE AND THE FOLLOWING LINE.
NO. EA. = NUMBER OF BARS OF EACH LENGTH.
NOMINAL LENGTHS ARE BASED ON OUT TO OUT DIMENSIONS SHOWN IN BENDING DIAGRAMS AND ARE LISTED FOR FABRICATORS USE. (NEAREST INCH)
ACTUAL LENGTHS ARE MEASURED ALONG CENTERLINE BAR TO THE NEAREST INCH.
PAYWEIGHTS ARE BASED ON ACTUAL LENGTHS.
FOUR ANGLE OR CHANNEL SPACERS ARE REQUIRED FOR EACH COLUMN SPIRAL. SPACERS ARE TO BE PLACED ON INSIDE OF SPIRALS. LENGTH AND WEIGHT OF COLUMN SPIRALS DO NOT INCLUDE SPLICES OR SPACERS.
REINFORCING STEEL (GRADE 60) FY = 60,000 PSI.

STATE OF MISSOURI
DEREK S. BUTLER
NUMBER PE-2016006828
PROFESSIONAL ENGINEER

THIS SHEET HAS BEEN SIGNED, SEALED AND DATED ELECTRONICALLY

DATE PREPARED 9/2/2021
ROUTE 36 | STATE MO
DISTRICT BR | SHEET NO. 9
COUNTY BUCHANAN
JOB NO. J1P3295
CONTRACT ID.
PROJECT NO.
BRIDGE NO. A36644

DATE	DESCRIPTION

MISSOURI HIGHWAYS AND TRANSPORTATION COMMISSION
105 WEST CAPITOL
JEFFERSON CITY, MO 65102
1-888-ASK-MODOT (1-888-275-6636)

GARVER, LLC.
7509 NW TIFFANY SPRINGS PARKWAY, SUITE 200
KANSAS CITY, MO 64153
PHONE: (816) 298-6465
CERTIFICATE OF AUTHORITY NO. 2008013090

IF A SEAL IS PRESENT ON THIS SHEET IT HAS BEEN ELECTRONICALLY SEALED AND DATED.

Detailed Jun. 2021
Checked Jul. 2021

Note: This drawing is not to scale. Follow dimensions.

Sheet No. 9 of 9

SEC/SUR 20 TWP 57N RGE 35W

U.I.P. AND REHABILITATE EXISTING (82'-95'-82'-4.2')(74'-90'-70')(4'-85'-85'-85') CONTINUOUS COMPOSITE PLATE GIRDER SPANS

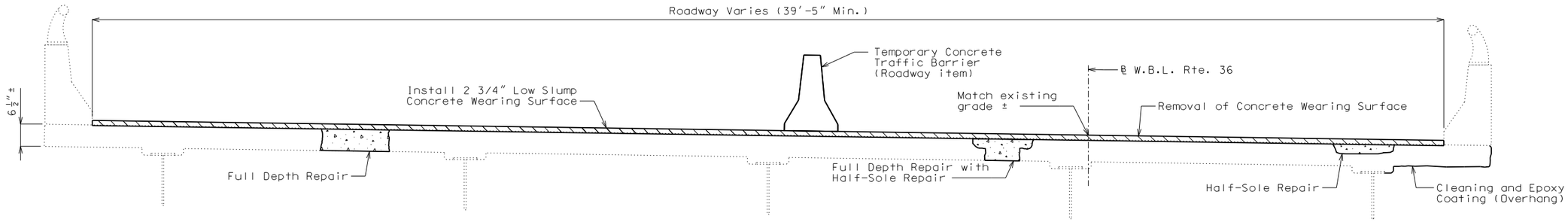

TYPICAL SECTION THRU EXISTING DECK

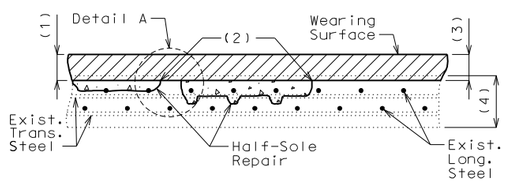

HALF-SOLE REPAIR

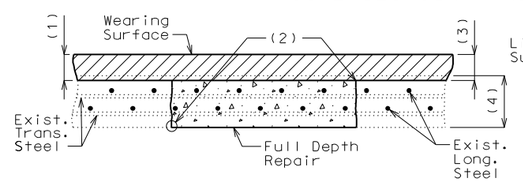

FULL DEPTH REPAIR

(1) Removal of existing 2 1/4"± low slump concrete wearing surface plus 1/2" of existing deck

(2) 1" vertical side shall be established outside the deteriorated area.

(3) 2 3/4" minimum low slump concrete wearing surface

(4) Original depth of deck minus previous scarification

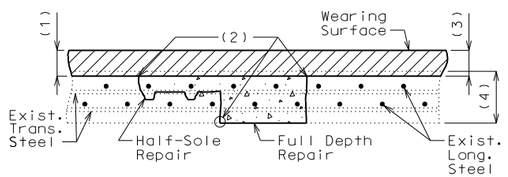

FULL DEPTH REPAIR WITH HALF-SOLE REPAIR

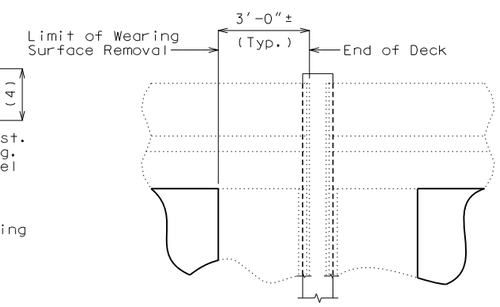

PART PLAN SHOWING WEARING SURFACE REMOVAL AT EXPANSION JOINTS USED IN PLACE

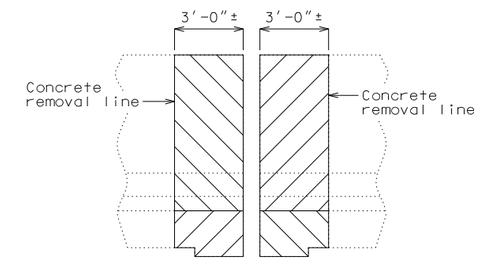

PART SECTION SHOWING CONCRETE REMOVAL FOR EXPANSION DEVICE REPLACEMENT NEAR BENT NO. 5A

Cost of removal of existing barrier for expansion device replacement will be considered completely covered by the contract unit price for Remove and Replace Barrier.

Cost of removal of existing slab concrete for expansion device replacement will be considered completely covered by the contract unit price for Removal of Existing Expansion Joints & Adjacent Concrete.

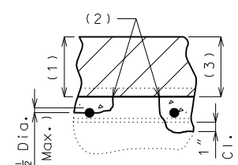

DETAIL A

Clearance around top bar and around bottom bar at the intersection of top bar shall be required when more than half the diameter of the top bar is exposed.

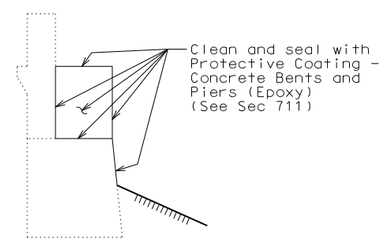

TYPICAL SECTION THRU END BENT NO. 1 SHOWING PROTECTIVE COATING

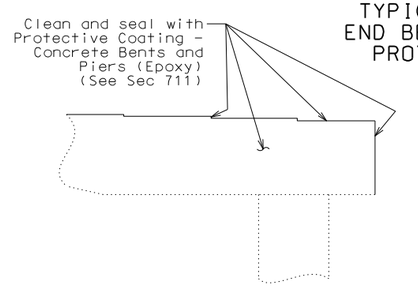

TYPICAL DETAIL OF INT. BENTS NO. 4, 5A & 7 BEAM SHOWING PROTECTIVE COATING

Estimated Quantities

	Item		Total
	Removal of Concrete Wearing Surface	sq. foot	37,215
	Removal of Existing Expansion Joint & Adjacent Concrete	linear foot	25
	Remove and Replace Barrier Curb	linear foot	12
	Bridge Approach Slab (Major Road)	sq. yard	180
	Low Slump Concrete Wearing Surface	sq. yard	4,135
	Class B-2 Concrete	cu. yard	4.0
	Substructure Repair (Formed)	sq. foot	110
	Substructure Repair (Unformed)	sq. foot	15
	Half-Sole Repair	sq. foot	1,000
*	Full Depth Repair	sq. foot	750
	Cleaning and Epoxy Coating	sq. foot	734
	Reinforcing Steel (Epoxy Coated)	pound	910
	Protective Coating - Concrete Bents and Piers (Epoxy)	lump sum	1
	Surface Preparation for Recoating Structural Steel	sq. foot	10,100
	Field Application of Inorganic Zinc Primer	sq. foot	10,100
	Intermediate Field Coat (System G)	sq. foot	10,100
	Finish Field Coat (System G)	sq. foot	10,100
	Strip Seal Expansion Joint System	linear foot	25
	Strip Seal	linear foot	150

* No Full Depth Repair will be permitted over railroad right of way.

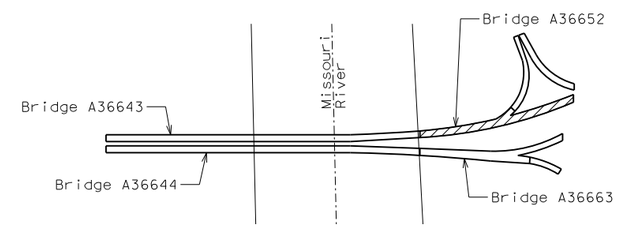

LOCATION SKETCH

REPAIRS TO BRIDGE: ROUTE 36 WB OVER RTE. 759 & BNSF RR

ROUTE 36 FROM STATE LINE TO ROUTE I-229

AT STATE LINE

BEG. STA. 4+81.96± (Match Existing)

Detailed Jun. 2021
Checked Jul. 2021

Note: This drawing is not to scale. Follow dimensions.

STATE OF MISSOURI
DEREK S. BUTLER
NUMBER PE-2016009828
PROFESSIONAL ENGINEER

THIS SHEET HAS BEEN SIGNED, SEALED AND DATED ELECTRONICALLY

DATE PREPARED	
9/2/2021	
ROUTE 36	STATE MO
DISTRICT BR	SHEET NO. 1
COUNTY BUCHANAN	
JOB NO. J1P3295	
CONTRACT ID.	
PROJECT NO.	
BRIDGE NO. A36652	

DATE	DESCRIPTION
.	.
.	.
.	.
.	.
.	.
.	.

IF A SEAL IS PRESENT ON THIS SHEET IT HAS BEEN ELECTRONICALLY SEALED AND DATED.

MISSOURI HIGHWAYS AND TRANSPORTATION COMMISSION
105 WEST CAPITOL
JEFFERSON CITY, MO 65102
1-888-ASK-MODOT (1-888-275-6636)

GARVER, LLC.
7509 NW TIFFANY SPRINGS PARKWAY, SUITE 200
KANSAS CITY, MO 64153
PHONE: (816) 298-6465
CERTIFICATE OF AUTHORITY NO. 2008013090

L:\2021\21T04000 - MoDOT NW Route 36 Bridge Rehab\Drawings\BRIDGE\A36652\B_A36652_001_J1P3295_DeckRehab.dgn 2:08:59 PM 9/2/2021

General Notes:

Design Specifications:

2002 AASHTO LFD (17th Ed.) Standard Specifications
Bridge Deck Rating = 6

Design Loading:

HS20-44 Modified (1977) and Military 24,000 lb Tandem Axle (1977)

Design Unit Stresses:

Class B-1 Concrete (Safety Barrier Curb)	f'c = 4,000 psi
Class B-2 Concrete (Half-Sole and Full Depth Repair and Superstructure except Saftey Barrier Curb)	f'c = 4,000 psi
Reinforcing Steel (Grade 60)	fy = 60,000 psi

Miscellaneous:

Roadway surfacing adjacent to bridge ends shall match new bridge wearing surface (roadway item).

All concrete repairs shall be in accordance with Sec 704, unless otherwise noted.

Outline of old work is indicated by light dashed lines. Heavy lines indicate new work.

Contractor shall verify all dimensions in field before ordering new material.

Bars bonded in existing concrete not removed shall be cleanly stripped and embedded into new concrete where possible. If length is available, existing bars shall extend into new concrete at least 40 diameters for plain bars and 30 diameters for deformed bars, unless otherwise noted.

In order to maintain grade and a minimum thickness of wearing surface as shown on plans it may be necessary to use additional quantities of wearing surface at various locations throughout the structure. The cost of furnishing and installing the wearing surface will be considered completely covered in the contract unit price, including all additional labor, materials or equipment for variations in thickness of wearing surface.

Traffic Handling:

Traffic to be maintained on structure during construction. See roadway plans for traffic control.

Abbreviations:

U.I.P. denotes Use In Place

Recoating Existing Steel:

Protective Coating: System G in accordance with Sec 1081.

Surface Preparation: Surface preparation of the existing steel shall be in accordance with Sec 1081 for Recoating of Structural Steel (System G). The cost of surface preparation will be considered completely covered by the contract unit price per sq. foot for Surface Preparation for Recoating Structural Steel.

Prime Coat: The cost of the prime coat will be considered completely covered by the contract unit price per sq. foot for Field Application of Inorganic Zinc Primer. Tint of the prime coat for System G shall be similar to the color of the field coat to be used.

Field Coat(s): The color of the field coat(s) shall be Green (Federal Standard #24260). The cost of the intermediate field coat will be considered completely covered by the contract unit price per sq. foot for Intermediate Field Coat (System G). The cost of the finish field coat will be considered completely covered by the contract unit price per sq. foot for Finish Field Coat (System G).

Coating Limits: All existing structural steel within 10 feet of CL expansion joint at End Bent No. 1, within 10 feet of CL expansion joint near Bents No. 4, 5A and 7 and within 10 feet from CL expansion joint with Bridge A36643. Within these limits, items to be recoated include girders, diaphragms, stiffeners, bearings and miscellaneous structural steel items. South exterior girder shall have bottom of top exterior flange, top of bottom exterior flange, exterior web area, exterior face of bottom flange and bottom of bottom flange recoated for entire girder length.

Sec 1081.10.4.6 shall be modified such that the word "RECOATED" is replaced by the words "RECOATED-SYSTEM G-GIRDER END ONLY", or "RECOATED-SYSTEM G-EXPANSION AREAS ONLY".

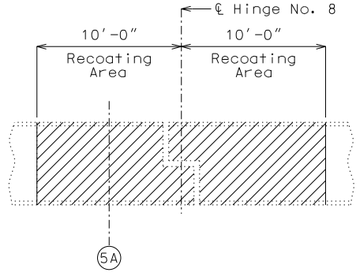

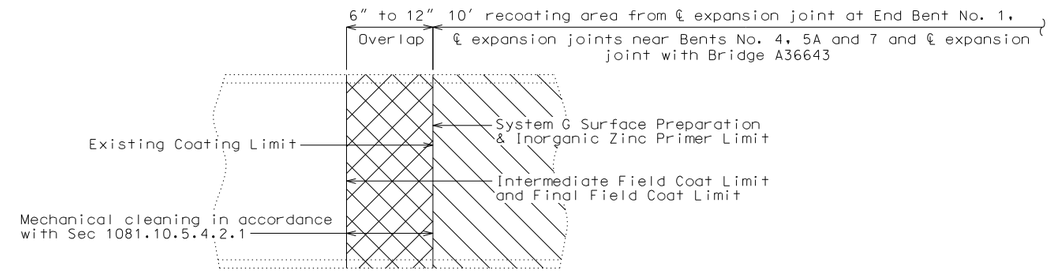

PART ELEVATION SHOWING LIMITS OF PAINT OVERLAP

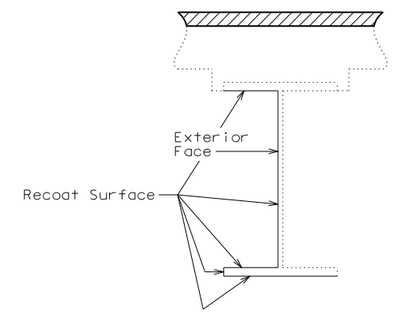

SOUTH EXTERIOR BEAM PAINT LIMITS

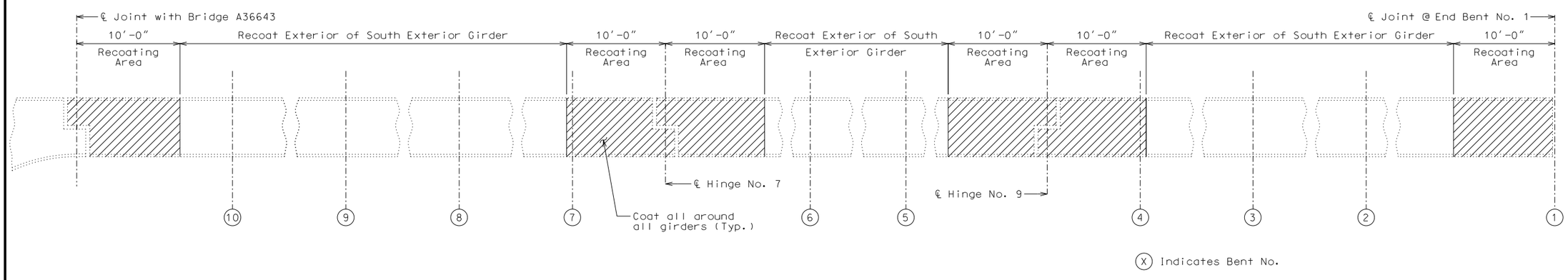

(X) Indicates Bent No.

ELEVATION SHOWING LIMITS OF PAINT

Detailed Jun. 2021
Checked Jul. 2021

Note: This drawing is not to scale. Follow dimensions.

STATE OF MISSOURI
DEREK S. BUTLER

THIS SHEET HAS BEEN SIGNED, SEALED AND DATED ELECTRONICALLY

DATE PREPARED	
9/2/2021	
ROUTE 36	STATE MO
DISTRICT BR	SHEET NO. 2
COUNTY BUCHANAN	
JOB NO. J1P3295	
CONTRACT ID.	
PROJECT NO.	
BRIDGE NO. A36652	

DATE	DESCRIPTION
.	.
.	.
.	.
.	.
.	.
.	.
.	.

IF A SEAL IS PRESENT ON THIS SHEET IT HAS BEEN ELECTRONICALLY SEALED AND DATED.

MISSOURI HIGHWAYS AND TRANSPORTATION COMMISSION
105 WEST CAPITOL
JEFFERSON CITY, MO 65102
1-888-ASK-MODOT (1-888-275-6636)

GARVER, LLC.
7509 NW TIFFANY SPRINGS PARKWAY, SUITE 200
KANSAS CITY, MO 64153
PHONE: (816) 298-6465
CERTIFICATE OF AUTHORITY NO. 2008013090

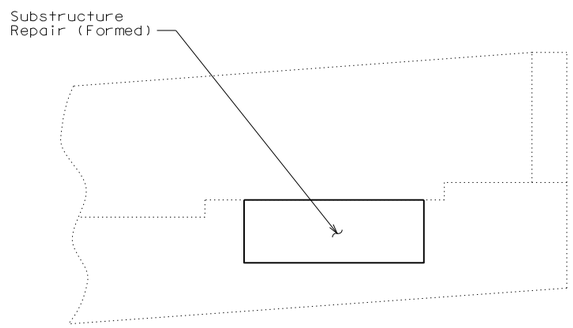

DETAIL OF SUBSTRUCTURE REPAIR
AT END BENT NO. 1

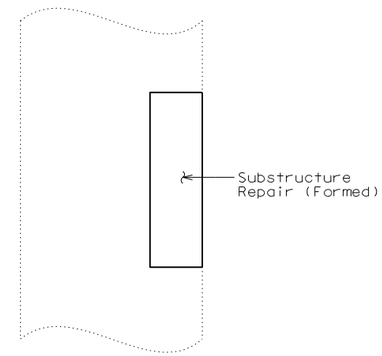

DETAIL OF SUBSTRUCTURE REPAIR
AT BENT NO. 3

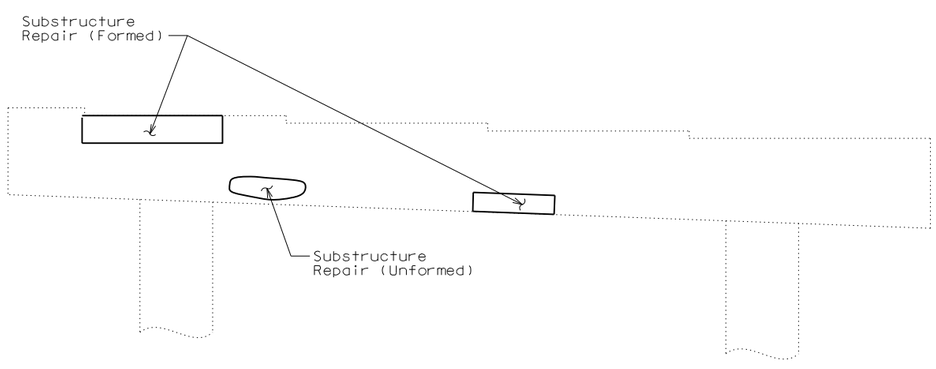

DETAIL OF SUBSTRUCTURE REPAIR
AT BENT NO. 4

SUBSTRUCTURE REPAIRS

Detailed Jun. 2021
Checked Jul. 2021

Note: This drawing is not to scale. Follow dimensions.

STATE OF MISSOURI
DEREK S. BUTLER
NUMBER PE-2016006828
PROFESSIONAL ENGINEER

THIS SHEET HAS BEEN SIGNED, SEALED AND DATED ELECTRONICALLY

DATE PREPARED	
9/2/2021	
ROUTE 36	STATE MO
DISTRICT BR	SHEET NO. 3
COUNTY BUCHANAN	
JOB NO. J1P3295	
CONTRACT ID.	
PROJECT NO.	
BRIDGE NO. A36652	

DATE	DESCRIPTION
.	.
.	.
.	.
.	.
.	.
.	.
.	.

MISSOURI HIGHWAYS AND TRANSPORTATION COMMISSION
105 WEST CAPITOL
JEFFERSON CITY, MO 65102
1-888-ASK-MODOT (1-888-275-6636)

GARVER, LLC.
7509 NW TIFFANY SPRINGS
PARKWAY, SUITE 200
KANSAS CITY, MO 64153
PHONE: (816) 298-6465
CERTIFICATE OF AUTHORITY
NO. 2008013090

IF A SEAL IS PRESENT ON THIS SHEET IT HAS BEEN ELECTRONICALLY SEALED AND DATED.

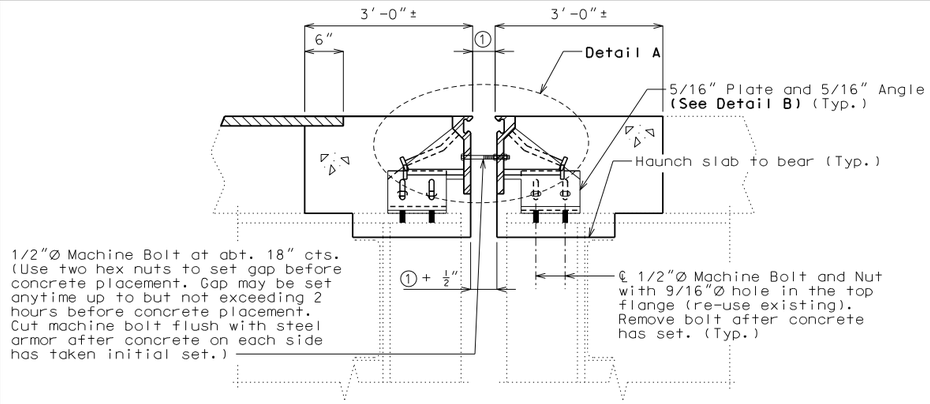

SECTION A-A

Note: Strip seal gland not shown for clarity.

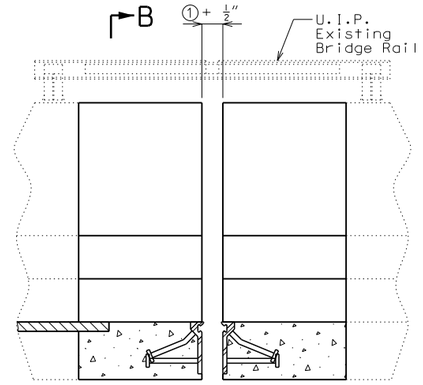

PART ELEVATION OF BARRIER

Strip seal gland not shown for clarity.

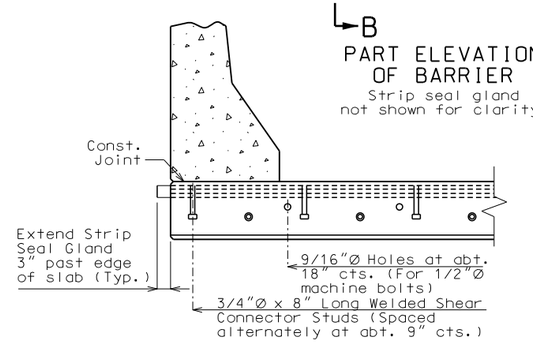

PART SECTION B-B

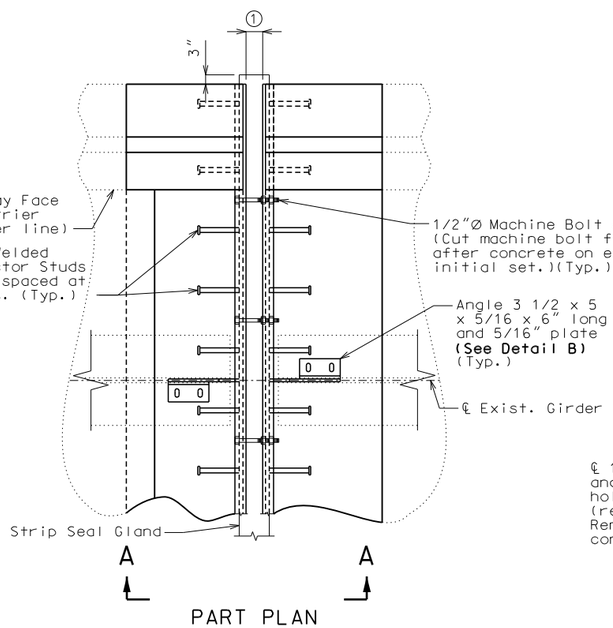

PART PLAN

See Sheet No. 6 for reinforcement

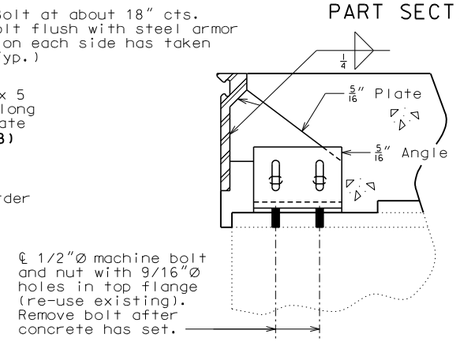

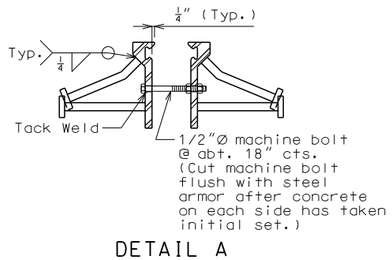

DETAIL A

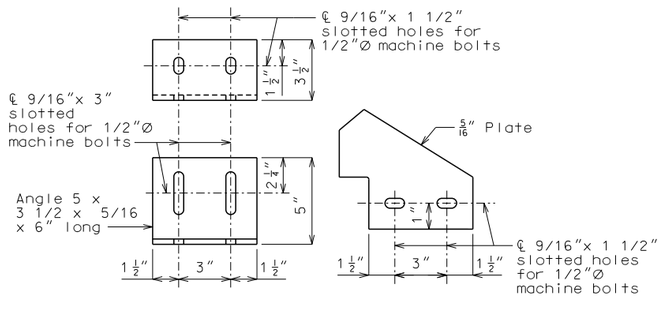

DETAIL B

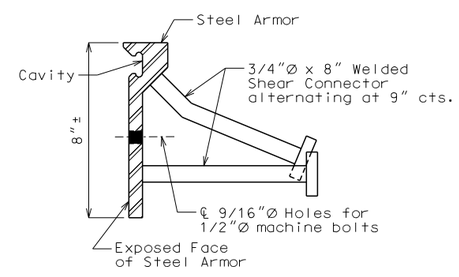

DETAIL OF JOINT ARMOR

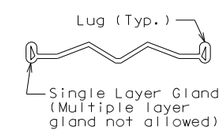

DETAIL OF GLAND

GENERAL NOTES:

Expansion joint system shall be fabricated in one section, except for staged construction and when the length is over 50 feet. A complete joint penetration groove welded splice shall be required. Welds shall be ground flush to provide a smooth surface. The expansion joint system shall be fabricated and installed to the crown and grade of the roadway.

The strip seal gland shall be installed in joints in one continuous piece without field splices. Factory splicing will be permitted for joints in excess of 53 feet.

Structural steel for the expansion joint system shall be ASTM A709 Grade 36 except the steel armor may be ASTM A709 Grade 50W. Anchors for the expansion joint system shall be in accordance with Sec 1037. Strip seal expansion joint system shall be in accordance with Sec 717.

Structural steel for the expansion joint system shall be coated with a minimum of two coats of inorganic zinc primer to provide a total dry film thickness of 4 mils minimum, 6 mils maximum, or galvanized in accordance with ASTM A123. Anchors need not be protected from overspray.

Concrete shall be forced under and around steel armor and anchors. Proper consolidation of the concrete shall be achieved by localized internal vibration.

② The installation temperature shall be taken as the actual air temperature averaged over the 24-hour period immediately preceding installation.

③ MoDOT Construction personnel will indicate the strip seal expansion joint system installed.

Steel armor may also be referred to as extrusion or rail.

All concrete in slab shall be Class B-2.

Table of Allowed Transverse Strip Seal Expansion Joint System

Manufacturer	Strip Seal System (Designated Name)	Movement Parallel to RDWY	① Allowed Installation Gap Normal to Joint at RDWY Surface @ Air/Surface Temperature ②						③
			@ 40°F	@ 50°F	@ 60°F	@ 70°F	@ 80°F	@ 90°F	
D S Brown	Strip seal L2-400	$2\frac{13}{16}$"	$2\frac{3}{8}$"	$2\frac{3}{16}$"	2"	$1\frac{13}{16}$"	$1\frac{5}{8}$"	$1\frac{7}{16}$"	□
D S Brown	Strip seal L2-500	$2\frac{13}{16}$"	$2\frac{3}{8}$"	$2\frac{3}{16}$"	2"	$1\frac{13}{16}$"	$1\frac{5}{8}$"	$1\frac{7}{16}$"	□
Watson Bowman Acme (Wabo)	Strip seal SE-400	$2\frac{13}{16}$"	$2\frac{3}{8}$"	$2\frac{3}{16}$"	2"	$1\frac{13}{16}$"	$1\frac{5}{8}$"	$1\frac{7}{16}$"	□
Watson Bowman Acme (Wabo)	Strip seal SE-500	$2\frac{13}{16}$"	$2\frac{3}{8}$"	$2\frac{3}{16}$"	2"	$1\frac{13}{16}$"	$1\frac{5}{8}$"	$1\frac{7}{16}$"	□

STRIP SEAL EXPANSION JOINT SYSTEM NEAR INTERMEDIATE BENT NO. 5A

Detailed Jun. 2021
Checked Jul. 2021

Note: This drawing is not to scale. Follow dimensions.

Sheet No. 4 of 8

STATE OF MISSOURI — DEREK S. BUTLER — NUMBER PE-2016006828 — PROFESSIONAL ENGINEER

THIS SHEET HAS BEEN SIGNED, SEALED AND DATED ELECTRONICALLY

DATE PREPARED	
9/2/2021	
ROUTE 36	STATE MO
DISTRICT BR	SHEET NO. 4
COUNTY BUCHANAN	
JOB NO. J1P3295	
CONTRACT ID.	
PROJECT NO.	
BRIDGE NO. A36652	

DATE	DESCRIPTION

IF A SEAL IS PRESENT ON THIS SHEET IT HAS BEEN ELECTRONICALLY SEALED AND DATED.

MISSOURI HIGHWAYS AND TRANSPORTATION COMMISSION

105 WEST CAPITOL
JEFFERSON CITY, MO 65102
1-888-ASK-MODOT (1-888-275-6636)

GARVER, LLC.
15009 NW TIFFANY SPRINGS PARKWAY, SUITE 200
KANSAS CITY, MO 64153
PHONE: (816) 298-6465
CERTIFICATE OF AUTHORITY NO. 2008013090

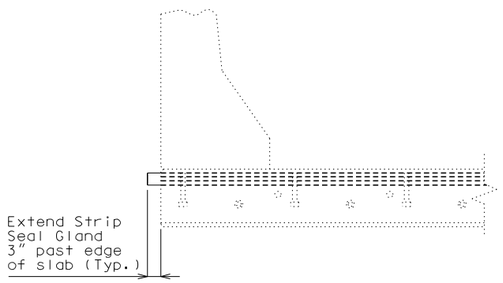

PART SECTION SHOWING EXTENSION
OF GLAND PAST EDGE OF SLAB

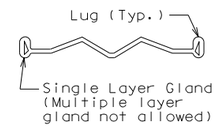

DETAIL OF GLAND

GENERAL NOTES:

The strip seal gland shall be installed in joints in one continuous piece without field splices. Factory splicing will be permitted for joints in excess of 53 feet.

(1) MoDOT Construction personnel will indicate the strip seal expansion joint system installed.

Removal of existing gland and replacement of new gland shall be considered completely covered by the unit price for Strip Seal.

Table of Allowed Transverse
Strip Seal Expansion Joint Gland

Manufacturer	Strip Seal System (Designated Name)	End Bent No. 1	Bent No. 4	Bent No. 7
		(1)	(1)	(1)
D S Brown	Strip seal L2-400	□	□	□
D S Brown	Strip seal L2-500	□	□	□
Watson Bowman Acme (Wabo)	Strip seal SE-400	□	□	□
Watson Bowman Acme (Wabo)	Strip seal SE-500	□	□	□

STRIP SEAL GLAND REPLACEMENT AT END BENT NO. 1 AND NEAR INTERMEDIATE BENTS NO. 4 & 7

Detailed Jun. 2021
Checked Jul. 2021

Note: This drawing is not to scale. Follow dimensions.

STATE OF MISSOURI
DEREK S. BUTLER
NUMBER PE-2016006828
PROFESSIONAL ENGINEER

THIS SHEET HAS BEEN SIGNED, SEALED AND DATED ELECTRONICALLY

DATE PREPARED	
9/2/2021	
ROUTE 36	STATE MO
DISTRICT BR	SHEET NO. 5
COUNTY BUCHANAN	
JOB NO. J1P3295	
CONTRACT ID.	
PROJECT NO.	
BRIDGE NO. A36652	

DATE	DESCRIPTION
.	.
.	.
.	.
.	.
.	.
.	.
.	.

MISSOURI HIGHWAYS AND TRANSPORTATION COMMISSION
105 WEST CAPITOL
JEFFERSON CITY, MO 65102
1-888-ASK-MODOT (1-888-275-6636)

GARVER, LLC.
7509 NW TIFFANY SPRINGS
PARKWAY, SUITE 200
KANSAS CITY, MO 64153
PHONE: (816) 298-6465
CERTIFICATE OF AUTHORITY
NO. 2008013090

IF A SEAL IS PRESENT ON THIS SHEET IT HAS BEEN ELECTRONICALLY SEALED AND DATED.

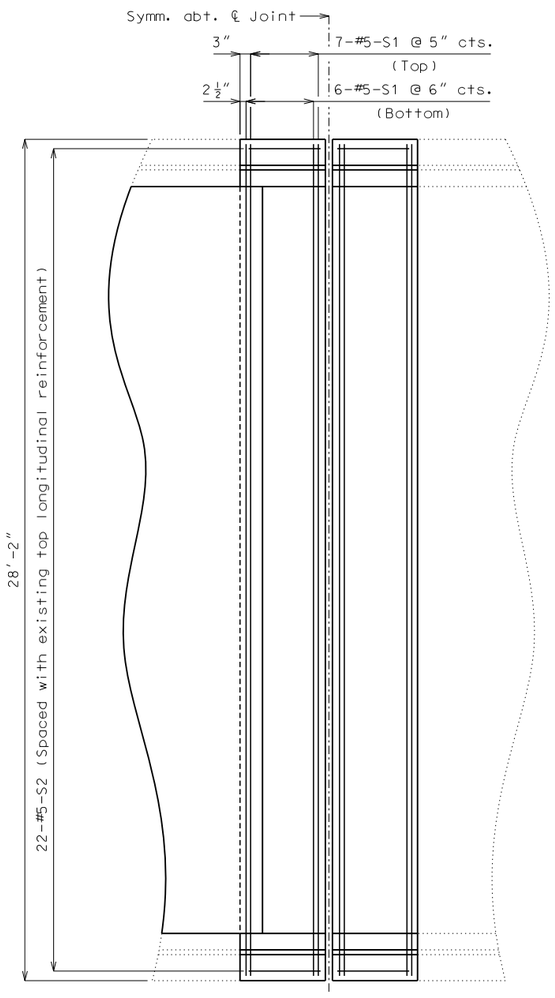

PLAN OF SLAB SHOWING REINFORCEMENT
AT JOINT NEAR BENT NO. 5A

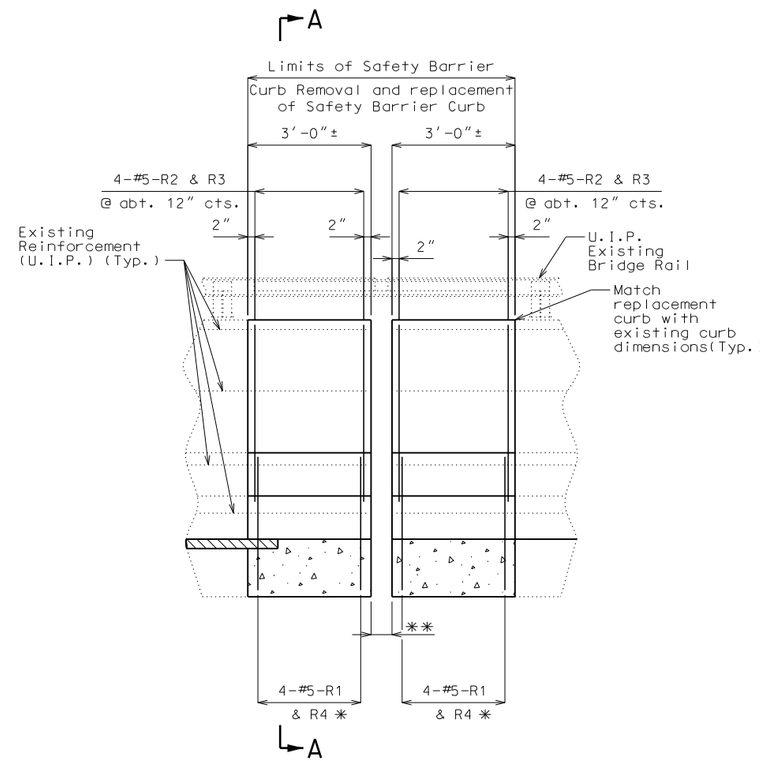

ELEVATION SHOWING BARRIER CURB REINFORCEMENT
AT JOINT NEAR BENT NO. 5A

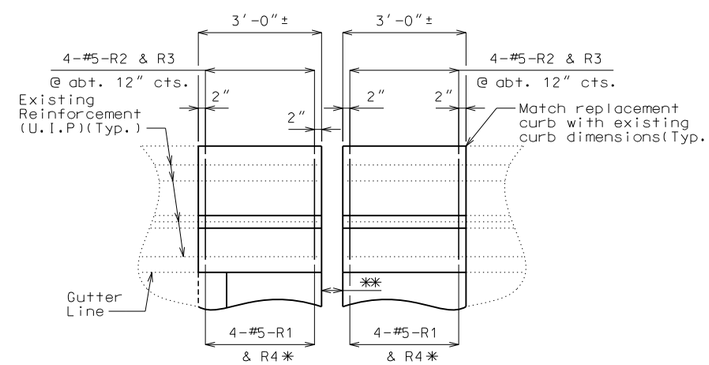

PART PLAN SHOWING BARRIER CURB REINFORCEMENT
AT JOINT NEAR BENT NO. 5A

Notes:

Remove existing transverse reinforcement within limits of Removal of Existing Expansion Joints and Adjacent Concrete.

Remove existing stirrups within limits of Safety Barrier Curb Removal.

Top of safety barrier curb shall be built parallel to the grade with safety barrier curb joints normal to grade.

All exposed edges of safety barrier curb shall have either a 1/2" radius or a 3/8" bevel, unless otherwise noted.

Payment for all concrete and reinforcement in Safety Barrier Curb, complete-in-place will be considered completely covered by the contract unit price for Remove and Replace Barrier Curb.

Concrete in safety barrier curb shall be Class B-1.

Measurement of Remove and Replace Barrier Curb is to the nearest linear foot for each structure, measured along the outside top slab.

All exposed edges of new safety barrier curb shall match existing safety barrier curb.

Existing rail posts that fall within the area of barrier curb removal at Exp. Joints shall be reinstalled in new safety barrier curb. Provide 2-7/8"Ø x 12" steel anchor bolts with hex head, hex nuts and washers for attachment of existing rail post to new barrier curb. Payment for this work will be considered completely covered by the contract unit price for Remove and Replace Barrier Curb.

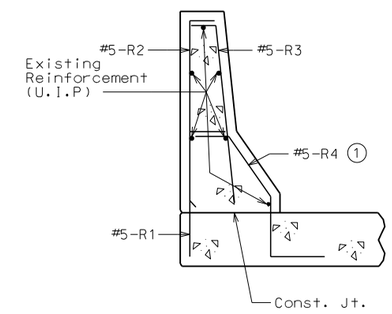

SECTION A-A

(1) Field cut or bend bottom leg of R4 bar to maintain 1 1/2" (min.) conc. cover when necessary.

* Spaced with #5-R2 & R3

** For gap width see Sheet No. 4

DETAILS OF SAFETY BARRIER CURB REMOVAL & REPLACEMENT AT JOINT NEAR BENT NO. 5A

Detailed Jun. 2021
Checked Jul. 2021

Note: This drawing is not to scale. Follow dimensions.

Sheet No. 6 of 8

STATE OF MISSOURI
DEREK S. BUTLER
NUMBER PE-2016006828
PROFESSIONAL ENGINEER

THIS SHEET HAS BEEN SIGNED, SEALED AND DATED ELECTRONICALLY

DATE PREPARED	
9/2/2021	
ROUTE 36	STATE MO
DISTRICT BR	SHEET NO. 6
COUNTY BUCHANAN	
JOB NO. J1P3295	
CONTRACT ID.	
PROJECT NO.	
BRIDGE NO. A36652	

DATE	DESCRIPTION
.	.
.	.
.	.
.	.
.	.
.	.

IF A SEAL IS PRESENT ON THIS SHEET IT HAS BEEN ELECTRONICALLY SEALED AND DATED.

MISSOURI HIGHWAYS AND TRANSPORTATION COMMISSION
105 WEST CAPITOL
JEFFERSON CITY, MO 65102
1-888-ASK-MODOT (1-888-275-6636)

GARVER, LLC.
7509 NW TIFFANY SPRINGS
PARKWAY, SUITE 200
KANSAS CITY, MO 64153
PHONE: (816) 298-6465
CERTIFICATE OF AUTHORITY
NO. 2008013090

L:\2021\21T04000 - MoDOT NW Route 36 Bridge Rehab\Drawings\BRIDGE\A36652\B_A36652_006_J1P3295_Barriers.dgn 2:09:03 PM 9/2/2021

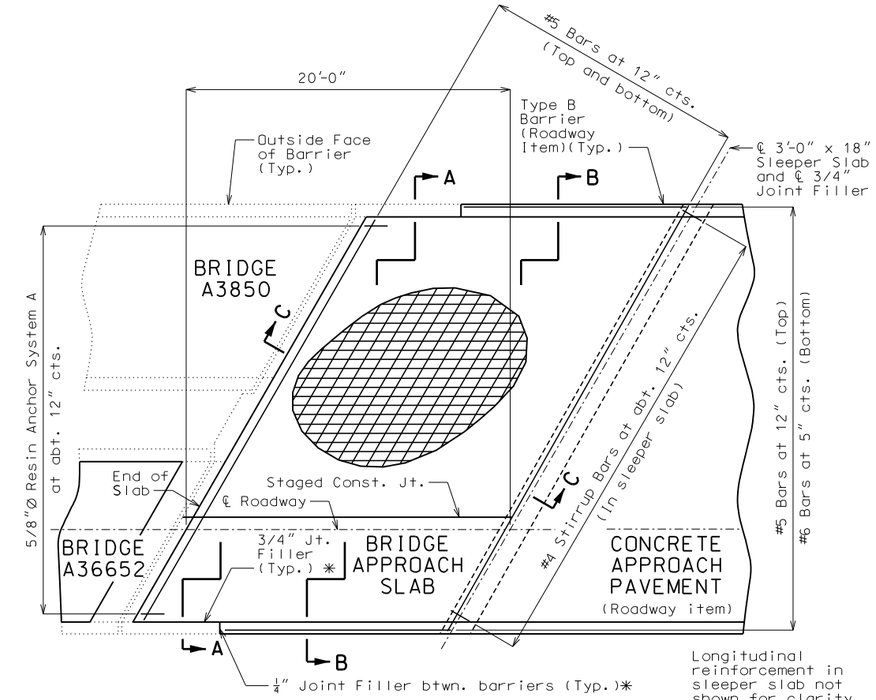

Longitudinal reinforcement in sleeper slab not shown for clarity.

PART PLAN SHOWING REINFORCEMENT

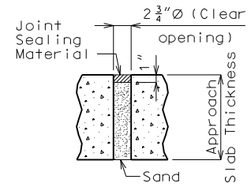

UNDERSEAL ACCESS HOLE DETAIL

(If required)

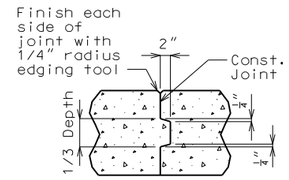

CONSTRUCTION JOINT DETAIL

General Notes:

All concrete for the bridge approach slab and sleeper slab shall be in accordance with Sec 503 (f'c = 4,000 psi).

The reinforcing steel in the bridge approach slab and the sleeper slab shall be epoxy coated Grade 60 with fy = 60,000 psi.

Drain pipe may be either 6" diameter corrugated metallic-coated pipe underdrain, 4" diameter corrugated polyvinyl chloride (PVC) drain pipe, or 4" diameter corrugated polyethylene (PE) drain pipe.

Minimum clearance to reinforcing steel shall be 1 1/2", unless otherwise shown.

The reinforcing steel in the bridge approach slab and the sleeper slab shall be continuous. The transverse reinforcing steel may be made continuous by lap splicing the #5 bars 29" or by mechanical bar splice.

Mechanical bar splices shall be in accordance with Sec 710. Estimated 46 splices per slab.

All joint filler shall be in accordance with Sec 1057 for preformed fiber expansion joint filler except as noted.

The contractor shall pour and satisfactorily finish the bridge slab before placing the bridge approach slab.

Longitudinal construction joints in approach slab and sleeper slab shall be aligned with longitudinal construction joints in bridge slab.

For concrete approach pavement details, see roadway plans.

Payment for furnishing all materials, labor and excavation necessary to construct the approach slab, including the timber header, sleeper slab, underdrain, Type 5 aggregate base, joint filler and all other appurtenances and incidental work as shown on this sheet, complete in place, will be considered completely covered by the contract unit price for Bridge Approach Slab (Major Road) per square yard.

✱ Seal joint between vertical face of approach slab and wing wall with sealant in accordance with Sec 717 for silicone joint sealant for saw cut and formed joints.

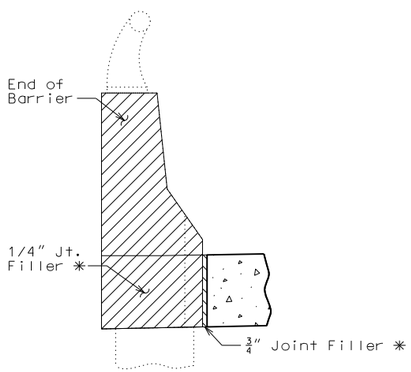

SECTION BETWEEN BARRIERS

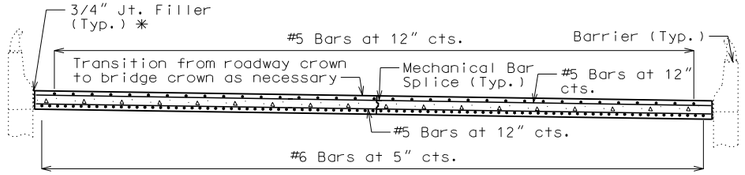

SECTION A-A

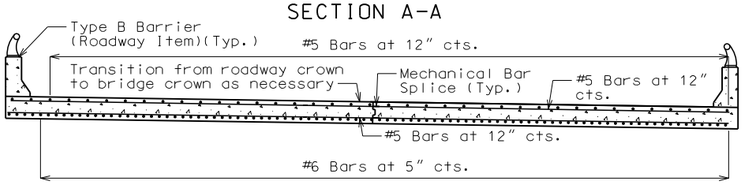

SECTION B-B

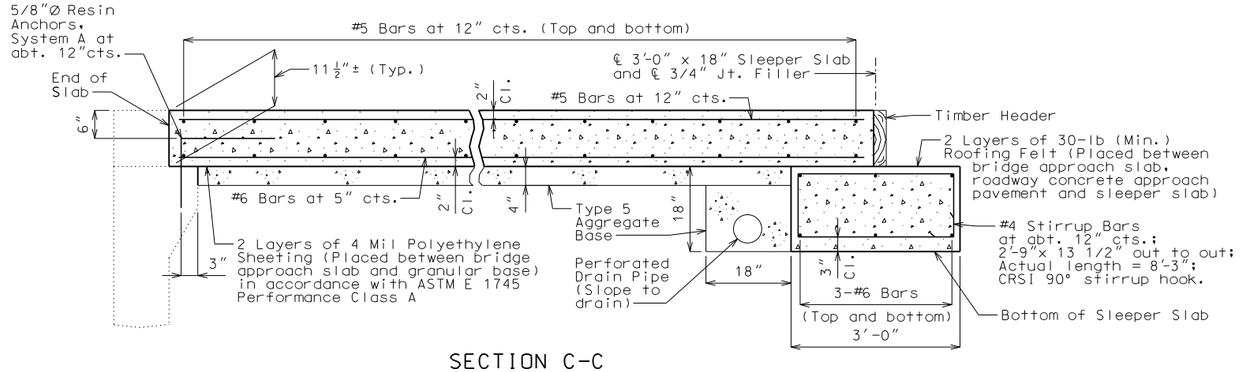

SECTION C-C

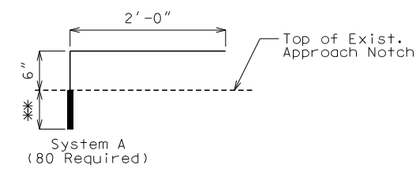

DETAILS OF RESIN ANCHOR SYSTEM

Notes:
The contractor shall use one of the qualified resin anchor systems in accordence with Sec 1039.

Cost of furnishing and installing the resin anchor systems complete-in-place will be considered completely covered by the constract unit proce for Bridge Approach Slab (Major).

The minimum embedment depth in concrete with fc'=3,000 psi for the resin anchor systems shall be required to meet the minimum ulitmate pullout strength in accordence with Sec 1039 but shall not be less than 5".

✱✱ Manufacturer's recommended embedment length (5" min.)

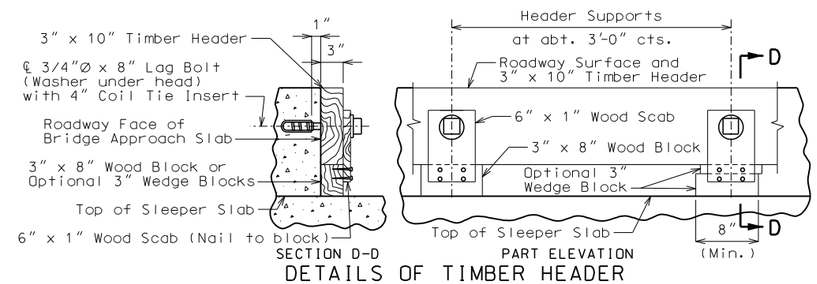

DETAILS OF TIMBER HEADER

Remove timber header when concrete pavement is placed.

BRIDGE APPROACH SLAB (MAJOR ROAD)

Detailed Jun. 2021
Checked Jul. 2021

Note: This drawing is not to scale. Follow dimensions.

Sheet No. 7 of 8

STATE OF MISSOURI — DEREK S. BUTLER — NUMBER PE-2016006828 — PROFESSIONAL ENGINEER

THIS SHEET HAS BEEN SIGNED, SEALED AND DATED ELECTRONICALLY

DATE PREPARED	
9/2/2021	
ROUTE 36	STATE MO
DISTRICT BR	SHEET NO. 7
COUNTY BUCHANAN	
JOB NO. J1P3295	
CONTRACT ID.	
PROJECT NO.	
BRIDGE NO. A36652	

DATE	DESCRIPTION

IF A SEAL IS PRESENT ON THIS SHEET IT HAS BEEN ELECTRONICALLY SEALED AND DATED.

MISSOURI HIGHWAYS AND TRANSPORTATION COMMISSION
105 WEST CAPITOL
JEFFERSON CITY, MO 65102
1-888-ASK-MODOT (1-888-275-6636)

GARVER, LLC.
7509 NW TIFFANY SPRINGS PARKWAY, SUITE 200
KANSAS CITY, MO 64153
PHONE: (816) 298-6465
CERTIFICATE OF AUTHORITY NO. 2008013090

L:\2021\21T04000 - MoDOT NW Route 36 Bridge Rehab\Drawings\BRIDGE\A36652\B_A36652_007_J1P3295_ApprSlab.dgn 2:09:04 PM 9/2/2021

BILL OF REINFORCING STEEL

NO. REQ'D.	MARK NO. SIZE	MARK NO. MARK	LOCATION	EPOXY (E)	SHAPE NO.	STIRRUP (S)	SUBSTR. (X)	VARIES (V)	NO. EACH	B FT. IN.	C FT. IN.	D FT. IN.	E FT. IN.	F FT. IN.	H FT. IN.	K FT. IN.	NOMINAL LENGTH FT. IN.	ACTUAL LENGTH FT. IN.	WEIGHT LBS.
			SLAB																
26	5	S1	SLAB	E	20					27 10.000							27 10	27 10	755
44	5	S2	SLAB	E	17					2 8.000							3 3	3 3	150
			BARRIER CURB																
16	5	R1	BARRIER CURB	E	19	S				17.000	10.000						2 3	2 2	37
16	5	R2	BARRIER CURB	E	19	S				2 6.000	7.500						3 2	3 0	50
16	5	R3	BARRIER CURB	E	15	S				2 6.125	7.500				2 6.000	3.000	3 2	3 1	52
16	5	R4	BARRIER CURB	E	27	S					10.000	11.250	7.000	12.000	9.250	6.375	3 4	3 2	53
			TOTALS																
	5			E															1097
			TOTAL	E															1097
			SLAB ON GIRDER																
	5			E															905
			TOTAL	E															905
			SAFETY BARRIER CURB																
	5			E															192
			TOTAL	E															192

BILL OF REINFORCING STEEL

NO. REQ'D.	MARK NO. SIZE	MARK NO. MARK	LOCATION	EPOXY (E)	SHAPE NO.	STIRRUP (S)	SUBSTR. (X)	VARIES (V)	NO. EACH	B FT. IN.	C FT. IN.	D FT. IN.	E FT. IN.	F FT. IN.	H FT. IN.	K FT. IN.	NOMINAL LENGTH FT. IN.	ACTUAL LENGTH FT. IN.	WEIGHT LBS.

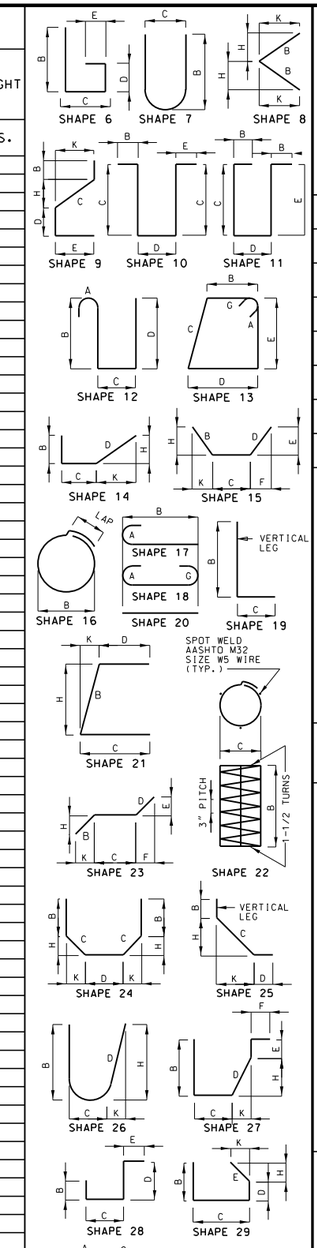

BENDING DIAGRAMS

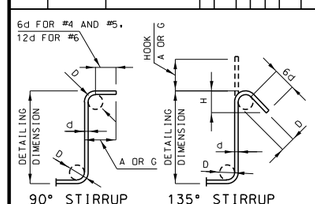

STIRRUP HOOK DIMENSIONS				
GRADES 40 - 50 - 60 KSI				
BAR SIZE	D (IN.)	90° HOOK	135° HOOK	
		HOOK A OR G	HOOK A OR G	APPROX. H
#4	2"	4 1/2"	4 1/2"	3"
#5	2 1/2"	6"	5 1/2"	3 3/4"
#6	4 1/2"	12"	8"	4 1/2"

NOTE: UNLESS OTHERWISE NOTED, DIAMETER "D" IS THE SAME FOR ALL BENDS AND HOOKS ON A BAR.

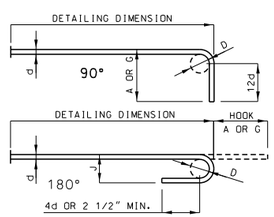

END HOOK DIMENSIONS				
BAR SIZE	D (IN.)	ALL GRADES		
		180° HOOKS		90° HOOKS
		A OR G	J	A OR G
#3	2 1/4"	5"	3"	6"
#4	3"	6"	4"	8"
#5	3 3/4"	7"	5"	10"
#6	4 1/2"	8"	6"	12"
#7	5 1/4"	10"	7"	14"
#8	6"	11"	8"	16"
#9	9 1/2"	15"	11 3/4"	19"
#10	10 3/4"	17"	13 1/4"	22"
#11	12"	19"	14 3/4"	2'-0"
#14	18 1/4"	2'-3"	21 3/4"	2'-7"

NOTE:
ALL STANDARD HOOKS AND BENDS OTHER THAN 180 DEGREE ARE TO BE BENT WITH SAME PROCEDURE AS FOR 90 DEGREE STANDARD HOOKS.
HOOKS AND BENDS SHALL BE IN ACCORDANCE WITH THE PROCEDURES AS SHOWN ON THIS SHEET.
E = EPOXY COATED REINFORCEMENT.
S = STIRRUP.
X = BAR IS INCLUDED IN SUBSTRUCTURE QUANTITIES.
V = BAR DIMENSIONS VARY IN EQUAL INCREMENTS BETWEEN DIMENSIONS SHOWN ON THIS LINE AND THE FOLLOWING LINE.
NO. EA. = NUMBER OF BARS OF EACH LENGTH.
NOMINAL LENGTHS ARE BASED ON OUT TO OUT DIMENSIONS SHOWN IN BENDING DIAGRAMS AND ARE LISTED FOR FABRICATORS USE. (NEAREST INCH)
ACTUAL LENGTHS ARE MEASURED ALONG CENTERLINE BAR TO THE NEAREST INCH.
PAYWEIGHTS ARE BASED ON ACTUAL LENGTHS.
FOUR ANGLE OR CHANNEL SPACERS ARE REQUIRED FOR EACH COLUMN SPIRAL. SPACERS ARE TO BE PLACED ON INSIDE OF SPIRALS. LENGTH AND WEIGHT OF COLUMN SPIRALS DO NOT INCLUDE SPLICES OR SPACERS.
REINFORCING STEEL (GRADE 60) FY = 60,000 PSI.

Detailed Jun. 2021
Checked Jul. 2021

Note: This drawing is not to scale. Follow dimensions.

Sheet No. 8 of 8

STATE OF MISSOURI
DEREK S. BUTLER
NUMBER PE-2016006828
THIS SHEET HAS BEEN SIGNED, SEALED AND DATED ELECTRONICALLY

DATE PREPARED	9/2/2021
ROUTE 36	STATE MO
DISTRICT BR	SHEET NO. 8
COUNTY	BUCHANAN
JOB NO.	J1P3295
CONTRACT ID.	
PROJECT NO.	
BRIDGE NO.	A36652

DESCRIPTION	DATE

MISSOURI HIGHWAYS AND TRANSPORTATION COMMISSION
105 WEST CAPITOL
JEFFERSON CITY, MO 65102
1-888-ASK-MODOT (1-888-275-6636)

GARVER, LLC.
7509 NW TIFFANY SPRINGS PARKWAY, SUITE 200
KANSAS CITY, MO 64153
PHONE: (816) 298-6465
CERTIFICATE OF AUTHORITY NO. 2008013090

IF A SEAL IS PRESENT ON THIS SHEET IT HAS BEEN ELECTRONICALLY SEALED AND DATED.

SEC/SUR 20 TWP 57N RGE 35W

U.I.P. AND REHABILITATE EXISTING (85'-85'-85'-85'-3.9')(73'-88'-88'-88'-68') CONTINUOUS COMPOSITE PLATE GIRDER SPANS

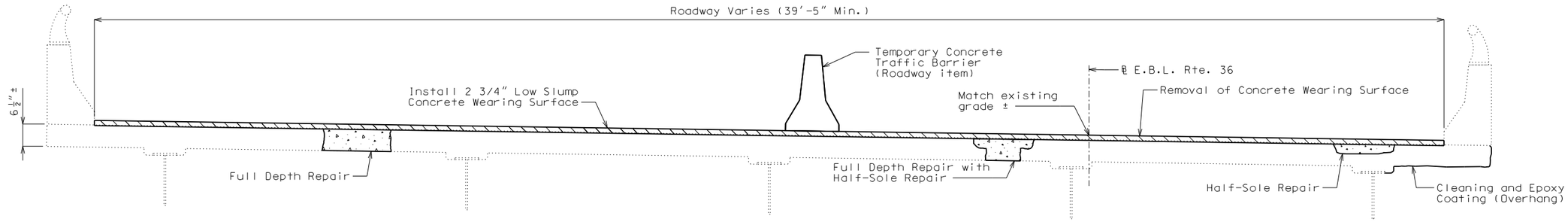

TYPICAL SECTION THRU EXISTING DECK

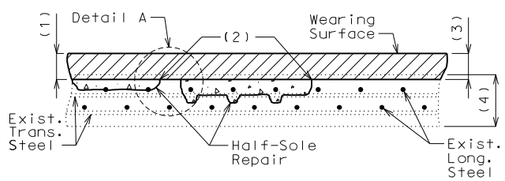

HALF-SOLE REPAIR

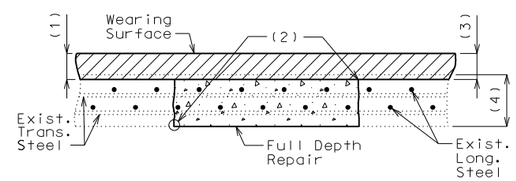

FULL DEPTH REPAIR

(1) Removal of existing 2 1/4"± low slump concrete wearing surface plus 1/2" of existing deck

(2) 1" vertical side shall be established outside the deteriorated area.

(3) 2 3/4" minimum low slump concrete wearing surface

(4) Original depth of deck minus previous scarification

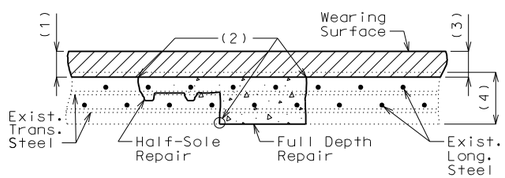

FULL DEPTH REPAIR WITH HALF-SOLE REPAIR

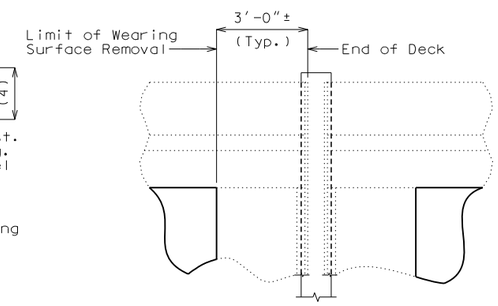

PART PLAN SHOWING WEARING SURFACE REMOVAL AT EXPANSION JOINTS USED IN PLACE

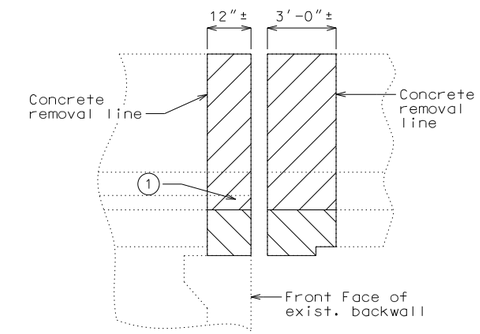

PART SECTION SHOWING CONCRETE REMOVAL FOR EXPANSION DEVICE REPLACEMENT AT END BENT NO. 9

(1) Remove existing barrier concrete to top of existing wing. Remove existing backwall concrete to construction joint at top of approach notch.

Cost of removal of existing barrier for expansion device replacement will be considered completely covered by the contract unit price for Remove and Replace Barrier.

Cost of removal of existing slab and backwall concrete for expansion device replacement will be considered completely covered by the contract unit price for Removal of Existing Expansion Joints & Adjacent Concrete.

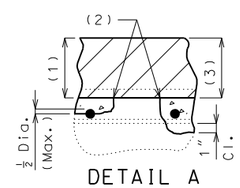

DETAIL A

Clearance around top bar and around bottom bar at the intersection of top bar shall be required when more than half the diameter of the top bar is exposed.

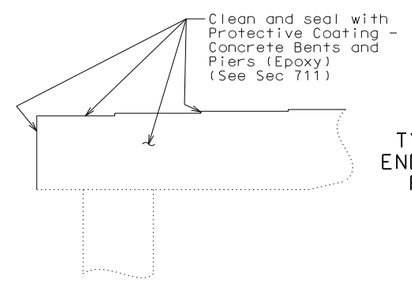

DETAIL OF INT. BENT NO. 4 BEAM SHOWING PROTECTIVE COATING

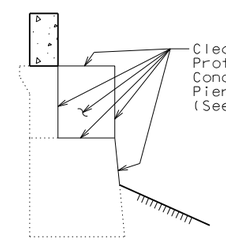

TYPICAL SECTION THRU END BENT NO. 9 SHOWING PROTECTIVE COATING

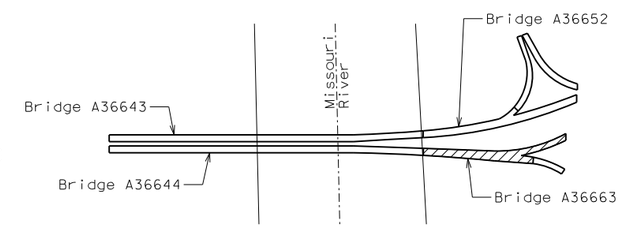

LOCATION SKETCH

Estimated Quantities

	Item		Total
	Removal of Concrete Wearing Surface	sq. foot	36,891
	Removal of Existing Expansion Joint & Adjacent Concrete	linear foot	47
	Remove and Replace Barrier Curb	linear foot	8
	Bridge Approach Slab (Major Road)	sq. yard	95
	Low Slump Concrete Wearing Surface	sq. yard	4,099
	Class B-2 Concrete	cu. yard	4.9
	Substructure Repair (Formed)	sq. foot	55
	Substructure Repair (Unformed)	sq. foot	5
	Half-Sole Repair	sq. foot	300
*	Full Depth Repair	sq. foot	60
	Cleaning and Epoxy Coating	sq. foot	367
	Reinforcing Steel (Epoxy Coated)	pound	310
	Protective Coating - Concrete Bents and Piers (Epoxy)	lump sum	1
	Surface Preparation for Recoating Structural Steel	sq. foot	8,000
	Field Application of Inorganic Zinc Primer	sq. foot	8,000
	Intermediate Field Coat (System G)	sq. foot	8,000
	Finish Field Coat (System G)	sq. foot	8,000
	Strip Seal Expansion Joint System	linear foot	47
	Strip Seal	linear foot	48

* No Full Depth Repair will be permitted over railroad right of way.

REPAIRS TO BRIDGE: ROUTE 36 EB OVER RTE. 759 & BNSF RR

ROUTE 36 FROM STATE LINE TO ROUTE I-229

AT STATE LINE

BEG. STA. 12+85.99± (Match Existing)

Detailed Jun. 2021
Checked Jul. 2021

Note: This drawing is not to scale. Follow dimensions.

STATE OF MISSOURI DEREK S. BUTLER NUMBER PE-2010000225 PROFESSIONAL ENGINEER

THIS SHEET HAS BEEN SIGNED, SEALED AND DATED ELECTRONICALLY

DATE PREPARED	
9/2/2021	
ROUTE 36	STATE MO
DISTRICT BR	SHEET NO. 1
COUNTY BUCHANAN	
JOB NO. J1P3295	
CONTRACT ID.	
PROJECT NO.	
BRIDGE NO. A36663	

DATE	DESCRIPTION
.	.
.	.
.	.
.	.
.	.
.	.

MISSOURI HIGHWAYS AND TRANSPORTATION COMMISSION

105 WEST CAPITOL
JEFFERSON CITY, MO 65102
1-888-ASK-MODOT (1-888-275-6636)

GARVER, LLC.
7509 NW TIFFANY SPRINGS PARKWAY, SUITE 200
KANSAS CITY, MO 64153
PHONE: (816) 298-6465
CERTIFICATE OF AUTHORITY NO. 2008013090

IF A SEAL IS PRESENT ON THIS SHEET IT HAS BEEN ELECTRONICALLY SEALED AND DATED.

General Notes:

Design Specifications:

2002 AASHTO LFD (17th Ed.) Standard Specifications
Bridge Deck Rating = 6

Design Loading:

HS20-44 Modified (1977) and Military 24,000 lb Tandem Axle (1977)

Design Unit Stresses:

Class B-1 Concrete (Safety Barrier Curb)	f'c = 4,000 psi
Class B-2 Concrete (Half-Sole and Full Depth Repair and Superstructure except Saftey Barrier Curb)	f'c = 4,000 psi
Reinforcing Steel (Grade 60)	fy = 60,000 psi

Miscellaneous:

Roadway surfacing adjacent to bridge ends shall match new bridge wearing surface (roadway item).

All concrete repairs shall be in accordance with Sec 704, unless otherwise noted.

Outline of old work is indicated by light dashed lines. Heavy lines indicate new work.

Contractor shall verify all dimensions in field before ordering new material.

Bars bonded in existing concrete not removed shall be cleanly stripped and embedded into new concrete where possible. If length is available, existing bars shall extend into new concrete at least 40 diameters for plain bars and 30 diameters for deformed bars, unless otherwise noted.

In order to maintain grade and a minimum thickness of wearing surface as shown on plans it may be necessary to use additional quantities of wearing surface at various locations throughout the structure. The cost of furnishing and installing the wearing surface will be considered completely covered in the contract unit price, including all additional labor, materials or equipment for variations in thickness of wearing surface.

Traffic Handling:

Traffic to be maintained on structure during construction. See roadway plans for traffic control.

Abbreviations:

U.I.P. denotes Use In Place

Recoating Existing Steel:

Protective Coating: System G in accordance with Sec 1081.

Surface Preparation: Surface preparation of the existing steel shall be in accordance with Sec 1081 for Recoating of Structural Steel (System G). The cost of surface preparation will be considered completely covered by the contract unit price per sq. foot for Surface Preparation for Recoating Structural Steel.

Prime Coat: The cost of the prime coat will be considered completely covered by the contract unit price per sq. foot for Field Application of Inorganic Zinc Primer. Tint of the prime coat for System G shall be similar to the color of the field coat to be used.

Field Coat(s): The color of the field coat(s) shall be Green (Federal Standard #24260). The cost of the intermediate field coat will be considered completely covered by the contract unit price per sq. foot for Intermediate Field Coat (System G). The cost of the finish field coat will be considered completely covered by the contract unit price per sq. foot for Finish Field Coat (System G).

Coating Limits: All existing structural steel within 10 feet of CL expansion joint at End Bent No. 9, from 10' west of Hinge No. 5 (near Bent No. 4) to centerline of Bent No. 5 and within 10 feet from CL expansion joint with Bridge A36644. Within these limits, items to be recoated include girders, diaphragms, stiffeners, bearings and miscellaneous structural steel items.

Sec 1081.10.4.6 shall be modified such that the word "RECOATED" is replaced by the words "RECOATED-SYSTEM G-GIRDER END ONLY", or "RECOATED-SYSTEM G-EXPANSION AREAS ONLY".

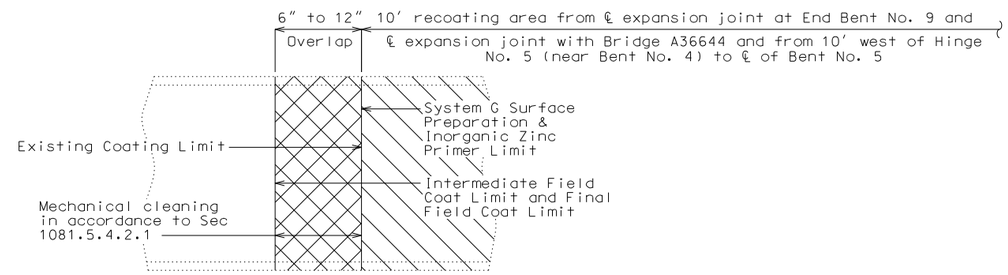

PART ELEVATION SHOWING LIMITS OF PAINT OVERLAP

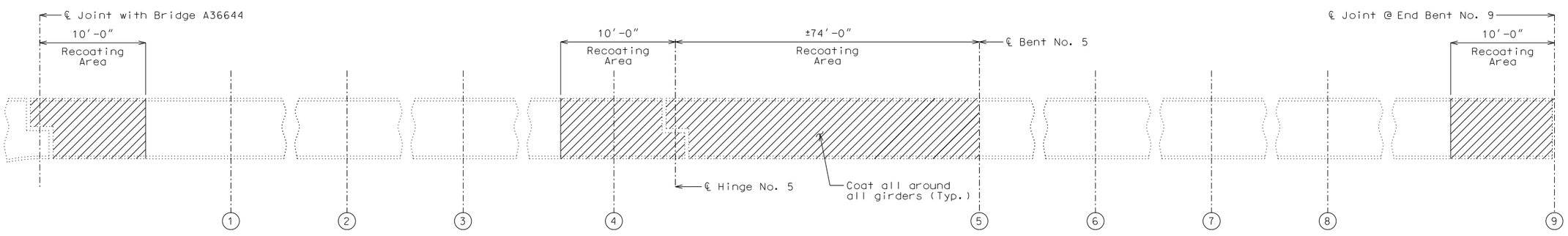

(X) Indicates Bent No.

ELEVATION SHOWING LIMITS OF PAINT

Detailed Jun. 2021
Checked Jul. 2021

Note: This drawing is not to scale. Follow dimensions.

STATE OF MISSOURI
DEREK S. BUTLER
NUMBER PE-2016006828
PROFESSIONAL ENGINEER

THIS SHEET HAS BEEN SIGNED, SEALED AND DATED ELECTRONICALLY

DATE PREPARED 9/2/2021

ROUTE	STATE
36	MO
DISTRICT	SHEET NO.
BR	2

COUNTY: BUCHANAN
JOB NO.: J1P3295
CONTRACT ID.:
PROJECT NO.:
BRIDGE NO.: A36663

DATE	DESCRIPTION

IF A SEAL IS PRESENT ON THIS SHEET IT HAS BEEN ELECTRONICALLY SEALED AND DATED.

MISSOURI HIGHWAYS AND TRANSPORTATION COMMISSION
105 WEST CAPITOL
JEFFERSON CITY, MO 65102
1-888-ASK-MODOT (1-888-275-6636)

GARVER, LLC.
7509 NW TIFFANY SPRINGS PARKWAY, SUITE 200
KANSAS CITY, MO 64153
PHONE: (816) 298-6465
CERTIFICATE OF AUTHORITY NO. 2008013090

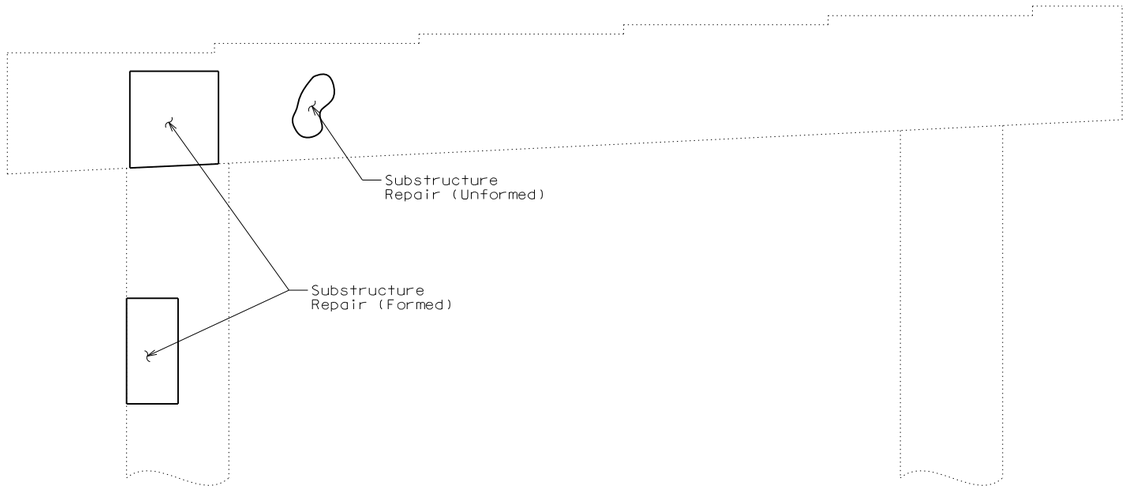

DETAIL OF SUBSTRUCTURE REPAIR
AT BENT NO. 4

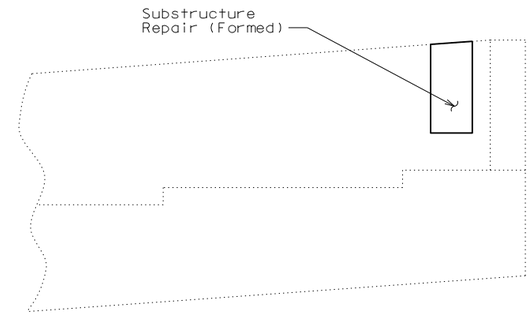

DETAIL OF SUBSTRUCTURE REPAIR
AT END BENT NO. 9

SUBSTRUCTURE REPAIRS

Detailed Jun. 2021
Checked Jul. 2021

Note: This drawing is not to scale. Follow dimensions.

STATE OF MISSOURI
DEREK S. BUTLER
NUMBER PE-2016006828
PROFESSIONAL ENGINEER

THIS SHEET HAS BEEN SIGNED, SEALED AND DATED ELECTRONICALLY

DATE PREPARED	
9/2/2021	
ROUTE 36	STATE MO
DISTRICT BR	SHEET NO. 3
COUNTY BUCHANAN	
JOB NO. J1P3295	
CONTRACT ID.	
PROJECT NO.	
BRIDGE NO. A36663	

DATE	DESCRIPTION
.	.
.	.
.	.
.	.
.	.
.	.
.	.

MISSOURI HIGHWAYS AND TRANSPORTATION COMMISSION
105 WEST CAPITOL
JEFFERSON CITY, MO 65102
1-888-ASK-MODOT (1-888-275-6636)

GARVER, LLC.
7509 NW TIFFANY SPRINGS
PARKWAY, SUITE 200
KANSAS CITY, MO 64153
PHONE: (816) 298-6465
CERTIFICATE OF AUTHORITY
NO. 2008013090

IF A SEAL IS PRESENT ON THIS SHEET IT HAS BEEN ELECTRONICALLY SEALED AND DATED.

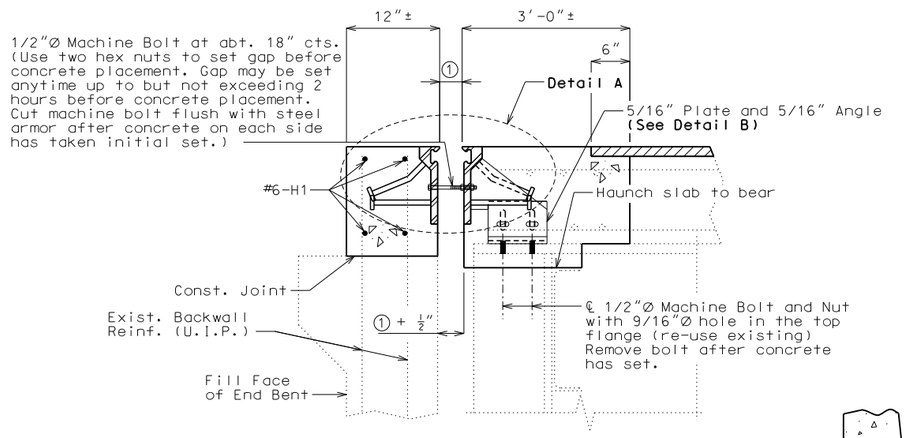

SECTION A-A

Note: Strip seal gland not shown for clarity.

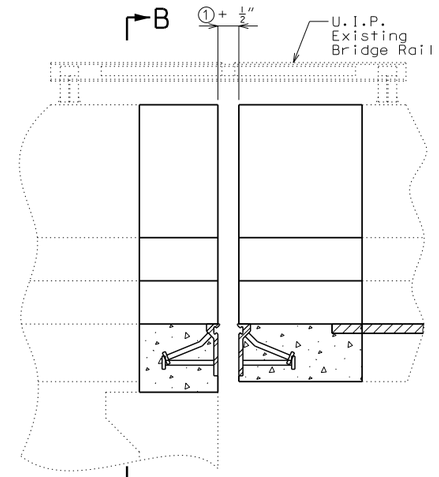

PART ELEVATION OF BARRIER

Strip seal gland not shown for clarity.

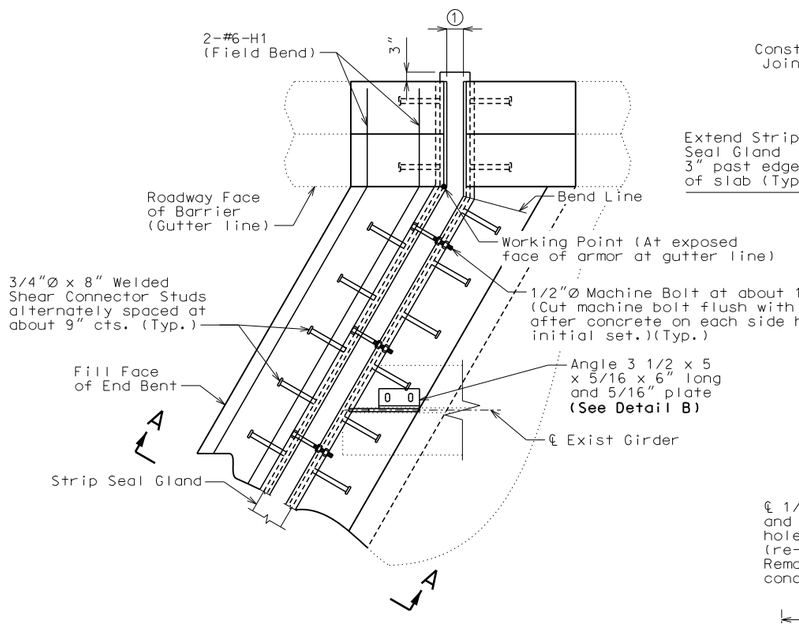

PART PLAN

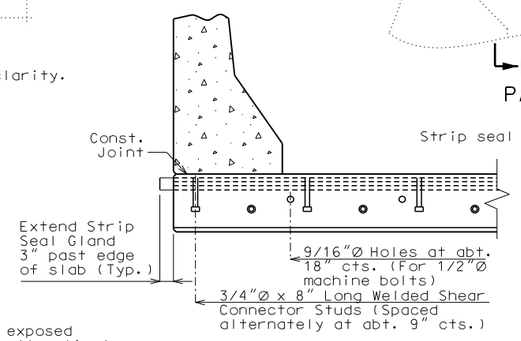

PART SECTION B-B

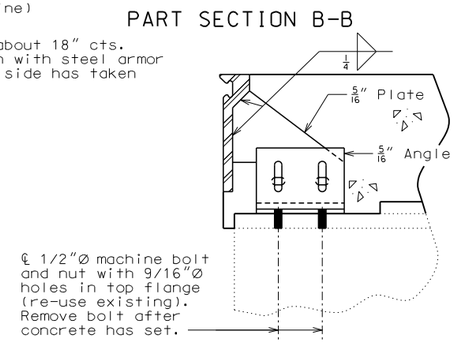

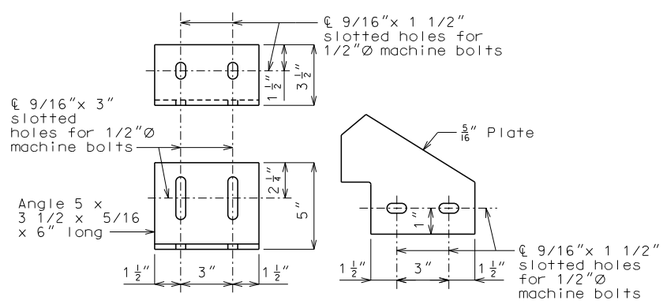

DETAIL B

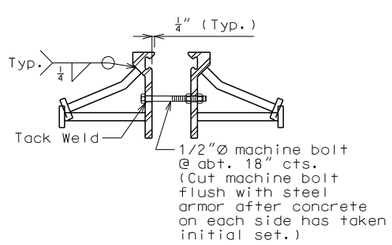

DETAIL A

GENERAL NOTES:

Expansion joint system shall be fabricated in one section, except for staged construction and when the length is over 50 feet. A complete joint penetration groove welded splice shall be required. Welds shall be ground flush to provide a smooth surface. The expansion joint system shall be fabricated and installed to the crown and grade of the roadway.

The strip seal gland shall be installed in joints in one continuous piece without field splices. Factory splicing will be permitted for joints in excess of 53 feet.

Structural steel for the expansion joint system shall be ASTM A709 Grade 36 except the steel armor may be ASTM A709 Grade 50W. Anchors for the expansion joint system shall be in accordance with Sec 1037. Strip seal expansion joint system shall be in accordance with Sec 717.

Structural steel for the expansion joint system shall be coated with a minimum of two coats of inorganic zinc primer to provide a total dry film thickness of 4 mils minimum, 6 mils maximum, or galvanized in accordance with ASTM A123. Anchors need not be protected from overspray.

Concrete shall be forced under and around steel armor and anchors. Proper consolidation of the concrete shall be achieved by localized internal vibration.

② The installation temperature shall be taken as the actual air temperature averaged over the 24-hour period immediately preceding installation.

③ MoDOT Construction personnel will indicate the strip seal expansion joint system installed.

Steel armor may also be referred to as extrusion or rail.

All concrete above the upper construction joint in the backwall and in slab shall be Class B-2.

Any reinforcing steel removed that was to remain in place shall be replaced with bars of like size and shape, Grade 60 epoxy coated, in accordence with Sec 710. Mechanical splices shall be used at staged construction joints. Any reinforcing steel replaced that was to remain in place or mechanical bar splices shall be considered completely covered by the contract unit price for Removal of Existing Expansion Joint and Adjacent Concrete.

The total length for #6-H1 bars are based on placing the bar the entire width of the deck. The bars shall be field cut to accommodate the construction joint. Bars shall be spliced using mechanical bar splices. Mechanical bar splices shall be completely covered by the contract unit price for Reinforcing Steel (Epoxy Coated) and shall be in accordance with Sec 706. No additional payment will be made for any additional bar lengths required for the mechanical bar splice.

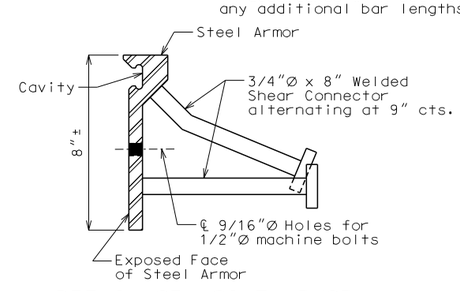

DETAIL OF JOINT ARMOR

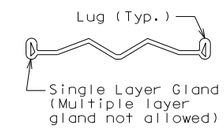

DETAIL OF GLAND

Table of Allowed Transverse Strip Seal Expansion Joint System

Manufacturer	Strip Seal System (Designated Name)	Movement Parallel to RDWY	Allowed Installation Gap ① Normal to Joint at RDWY Surface @ Air/Surface Temperature ②						③
			@ 40°F	@ 50°F	@ 60°F	@ 70°F	@ 80°F	@ 90°F	
D S Brown	Strip seal L2-400	15/16"	2 1/8"	2 1/16"	2"	1 15/16"	1 7/8"	1 13/16"	□
D S Brown	Strip seal L2-500	15/16"	2 1/8"	2 1/16"	2"	1 15/16"	1 7/8"	1 13/16"	□
Watson Bowman Acme (Wabo)	Strip seal SE-300	15/16"	2 1/8"	2 1/16"	2"	1 15/16"	1 7/8"	1 13/16"	□
Watson Bowman Acme (Wabo)	Strip seal SE-400	15/16"	2 1/8"	2 1/16"	2"	1 15/16"	1 7/8"	1 13/16"	□
Watson Bowman Acme (Wabo)	Strip seal SE-500	15/16"	2 1/8"	2 1/16"	2"	1 15/16"	1 7/8"	1 13/16"	□

STRIP SEAL EXPANSION JOINT SYSTEM AT END BENT NO. 9

Detailed Jun. 2021
Checked Jul. 2021

Note: This drawing is not to scale. Follow dimensions.

STATE OF MISSOURI DEREK S. BUTLER NUMBER PE-2016006828 PROFESSIONAL ENGINEER

THIS SHEET HAS BEEN SIGNED, SEALED AND DATED ELECTRONICALLY

DATE PREPARED	
9/2/2021	
ROUTE 36	STATE MO
DISTRICT BR	SHEET NO. 4
COUNTY BUCHANAN	
JOB NO. J1P3295	
CONTRACT ID.	
PROJECT NO.	
BRIDGE NO. A36663	

DATE	DESCRIPTION
. . . . .	. . . . .

MISSOURI HIGHWAYS AND TRANSPORTATION COMMISSION
105 WEST CAPITOL
JEFFERSON CITY, MO 65102
1-888-ASK-MODOT (1-888-275-6636)

GARVER, LLC.
7509 NW TIFFANY SPRINGS PARKWAY, SUITE 200
KANSAS CITY, MO 64153
PHONE: (816) 298-6465
CERTIFICATE OF AUTHORITY NO. 2008013090

IF A SEAL IS PRESENT ON THIS SHEET IT HAS BEEN ELECTRONICALLY SEALED AND DATED.

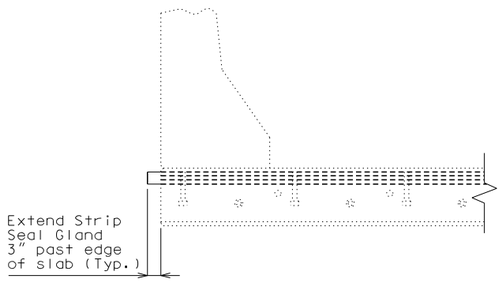

PART SECTION SHOWING EXTENSION
OF GLAND PAST EDGE OF SLAB

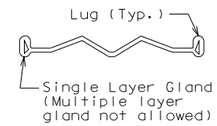

DETAIL OF GLAND

GENERAL NOTES:

The strip seal gland shall be installed in joints in one continuous piece without field splices. Factory splicing will be permitted for joints in excess of 53 feet.

(1) MoDOT Construction personnel will indicate the strip seal expansion joint system installed.

Removal of existing gland and replacement of new gland shall be considered completely covered by the unit price for Strip Seal.

Table of Allowed Transverse Strip Seal Expansion Joint Gland		
Manufacturer	Strip Seal System (Designated Name)	(1)
D S Brown	Strip seal L2-500	□
Watson Bowman Acme (Wabo)	Strip seal SE-500	□

STRIP SEAL GLAND REPLACEMENT NEAR INTERMEDIATE BENT NO. 4

Note: This drawing is not to scale. Follow dimensions.

Detailed Jun. 2021
Checked Jul. 2021

STATE OF MISSOURI
DEREK S. BUTLER
NUMBER PE-2016006828
PROFESSIONAL ENGINEER

THIS SHEET HAS BEEN SIGNED, SEALED AND DATED ELECTRONICALLY

DATE PREPARED	
9/2/2021	
ROUTE 36	STATE MO
DISTRICT BR	SHEET NO. 5
COUNTY BUCHANAN	
JOB NO. J1P3295	
CONTRACT ID.	
PROJECT NO.	
BRIDGE NO. A36663	

DATE	DESCRIPTION
.	.
.	.
.	.
.	.
.	.
.	.
.	.

IF A SEAL IS PRESENT ON THIS SHEET IT HAS BEEN ELECTRONICALLY SEALED AND DATED.

MISSOURI HIGHWAYS AND TRANSPORTATION COMMISSION
105 WEST CAPITOL
JEFFERSON CITY, MO 65102
1-888-ASK-MODOT (1-888-275-6636)

GARVER, LLC.
7509 NW TIFFANY SPRINGS
PARKWAY, SUITE 200
KANSAS CITY, MO 64153
PHONE: (816) 298-6465
CERTIFICATE OF AUTHORITY
NO. 2008013090

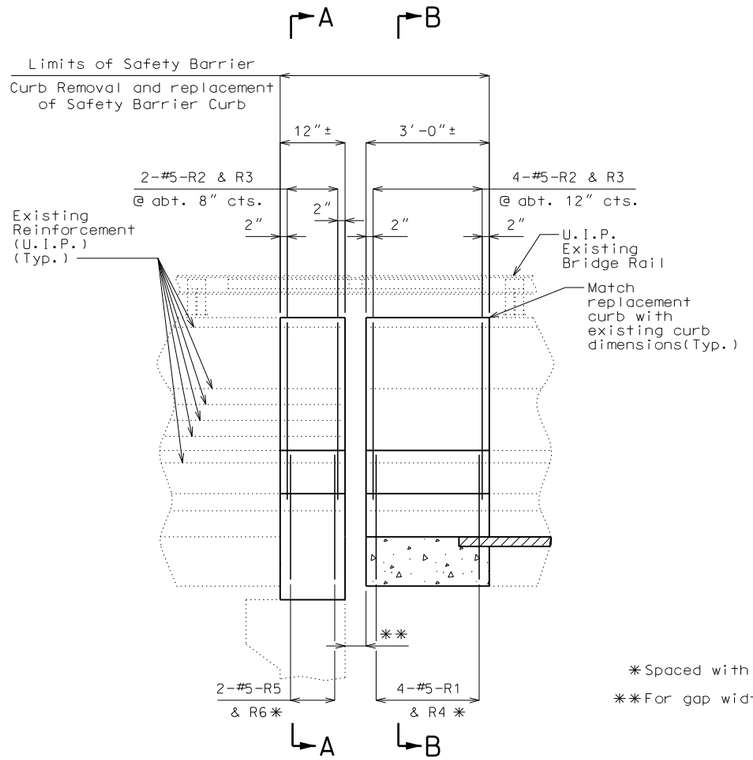

*Spaced with #5-R2 & R3

**For gap width see Sheet No. 4

ELEVATION SHOWING BARRIER CURB REINFORCEMENT AT END BENT NO. 9

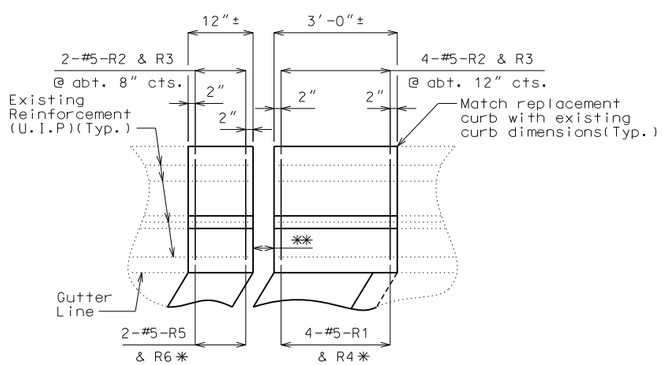

PART PLAN SHOWING BARRIER CURB REINFORCEMENT AT END BENT NO. 9

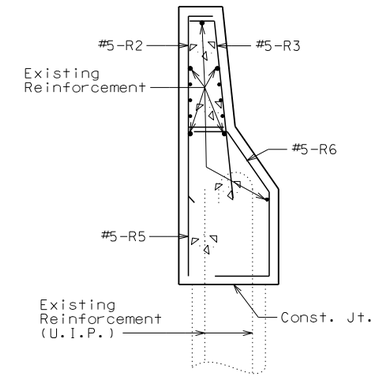

SECTION A-A

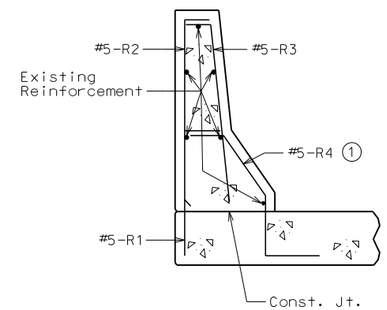

SECTION B-B

(1) Field cut or bend bottom leg of R4 bar to maintain 1 1/2" (min.) conc. cover when necessary.

Notes:

Remove existing stirrups within limits of Safety Barrier Curb Removal.

Top of safety barrier curb shall be built parallel to the grade with safety barrier curb joints normal to grade.

All exposed edges of saftey barrier curb shall have either a 1/2" radius or a 3/8" bevel, unless otherwise noted.

Payment for all concrete and reinforcement, complete-in-place will be considered completely covered by the contract unit price for Remove and Replace Barrier Curb.

Concrete in safety barrier curb shall be Class B-1.

Measurement of Remove and Replace Barrier Curb is to the nearest linear foot for each structure, measured along the outside top slab.

All exposed edges of new safety barrier curb shall match existing safety barrier curb.

Existing rail posts that fall within the area of barrier curb removal at Exp. Joints shall be reinstalled in new safety barrier curb. Provide 2-7/8"Ø x 12" steel anchor bolts with hex head, hex nuts and washers for attachment of existing rail post to new barrier curb. Payment for this work will be considered completely covered by the contract unit price for Remove and Replace Barrier Curb.

Exiting drain at north fascia shall be used in place. If exiting anchorage conflicts with barrier removal, install a new resin anchor system with 1/2"Ø threaded road with flat washer and heavy hex nut. All hardware for resin anchor system shall be galvanized in accordance with ASTM A153. Payment for this work will be considered completely covered by the contract unit price for Remove and Replace Barrier Curb.

DETAILS OF SAFETY BARRIER CURB REMOVAL & REPLACEMENT AT END BENT NO. 9

Detailed Jun. 2021
Checked Jul. 2021

Note: This drawing is not to scale. Follow dimensions.

STATE OF MISSOURI
DEREK S. BUTLER
NUMBER PE-2016006828
PROFESSIONAL ENGINEER

THIS SHEET HAS BEEN SIGNED, SEALED AND DATED ELECTRONICALLY

DATE PREPARED	
9/2/2021	
ROUTE 36	STATE MO
DISTRICT BR	SHEET NO. 6
COUNTY BUCHANAN	
JOB NO. J1P3295	
CONTRACT ID.	
PROJECT NO.	
BRIDGE NO. A36663	

DATE	DESCRIPTION
.	.
.	.
.	.
.	.
.	.
.	.

MISSOURI HIGHWAYS AND TRANSPORTATION COMMISSION
105 WEST CAPITOL
JEFFERSON CITY, MO 65102
1-888-ASK-MODOT (1-888-275-6636)

GARVER, LLC.
7509 NW TIFFANY SPRINGS PARKWAY, SUITE 200
KANSAS CITY, MO 64153
PHONE: (816) 298-6465
CERTIFICATE OF AUTHORITY NO. 2008013090

IF A SEAL IS PRESENT ON THIS SHEET IT HAS BEEN ELECTRONICALLY SEALED AND DATED.

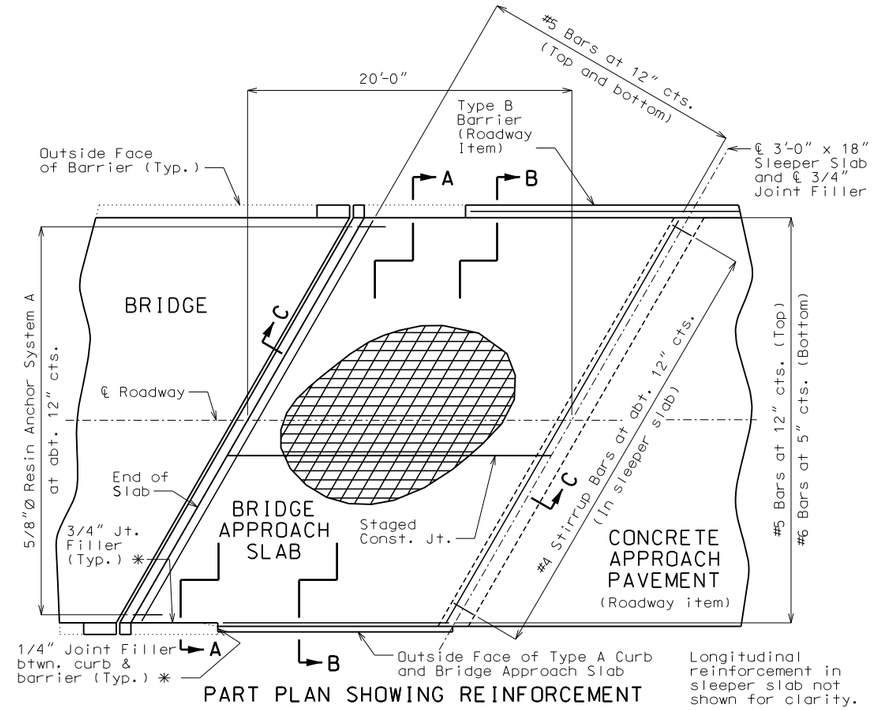

PART PLAN SHOWING REINFORCEMENT

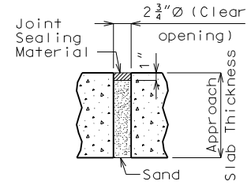

UNDERSEAL ACCESS HOLE DETAIL

(If required)

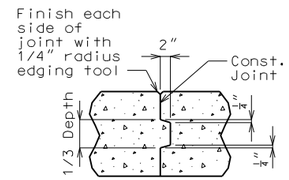

CONSTRUCTION JOINT DETAIL

General Notes:

All concrete for the bridge approach slab and sleeper slab shall be in accordance with Sec 503 (f'c = 4,000 psi).

The reinforcing steel in the bridge approach slab and the sleeper slab shall be epoxy coated Grade 60 with fy = 60,000 psi.

Drain pipe may be either 6" diameter corrugated metallic-coated pipe underdrain, 4" diameter corrugated polyvinyl chloride (PVC) drain pipe, or 4" diameter corrugated polyethylene (PE) drain pipe.

Minimum clearance to reinforcing steel shall be 1 1/2", unless otherwise shown.

The reinforcing steel in the bridge approach slab and the sleeper slab shall be continuous. The transverse reinforcing steel may be made continuous by lap splicing the #5 bars 29" or by mechanical bar splice.

Mechanical bar splices shall be in accordance with Sec 710. Estimated 46 splices per slab.

All joint filler shall be in accordance with Sec 1057 for preformed fiber expansion joint filler except as noted.

The contractor shall pour and satisfactorily finish the bridge slab before placing the bridge approach slab.

Longitudinal construction joints in approach slab and sleeper slab shall be aligned with longitudinal construction joints in bridge slab.

For concrete approach pavement details, see roadway plans.

See Missouri Standard Plan 609.00 for details of Type A curb.

Payment for furnishing all materials, labor and excavation necessary to construct the approach slab, including the timber header, sleeper slab, underdrain, Type 5 aggregate base, joint filler and all other appurtenances and incidental work as shown on this sheet, complete in place, will be considered completely covered by the contract unit price for Bridge Approach Slab (Major Road) per square yard.

✱ Seal joint between vertical face of approach slab and wing wall with sealant in accordance with Sec 717 for silicone joint sealant for saw cut and formed joints.

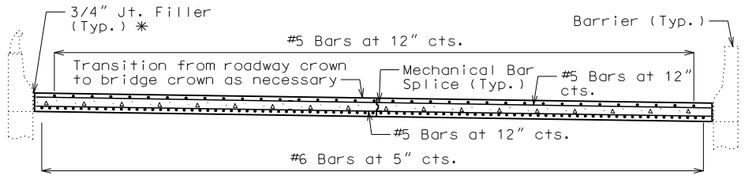

SECTION A-A

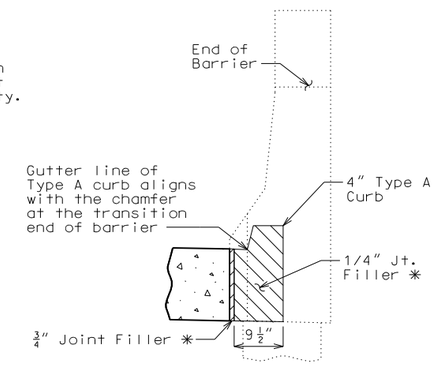

SECTION BETWEEN BARRIER AND CURB

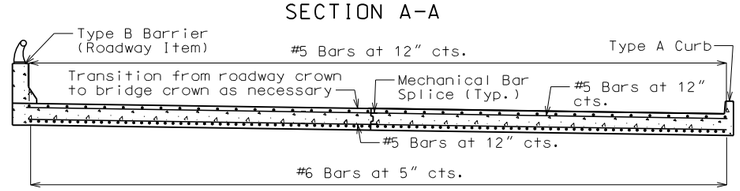

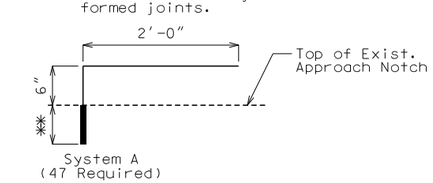

DETAILS OF RESIN ANCHOR SYSTEM

Notes:
The contractor shall use one of the qualified resin anchor systems in accordence with Sec 1039.

Cost of furnishing and installing the resin anchor systems complete-in-place will be considered completely covered by the constract unit proce for Bridge Approach Slab (Major).

The minimum embedment depth in concrete with fc'=3,000 psi for the resin anchor systems shall be required to meet the minimum ulitmate pullout strength in accordence with Sec 1039 but shall not be less than 5".

✱✱ Manufacturer's recommended embedment length (5" min.)

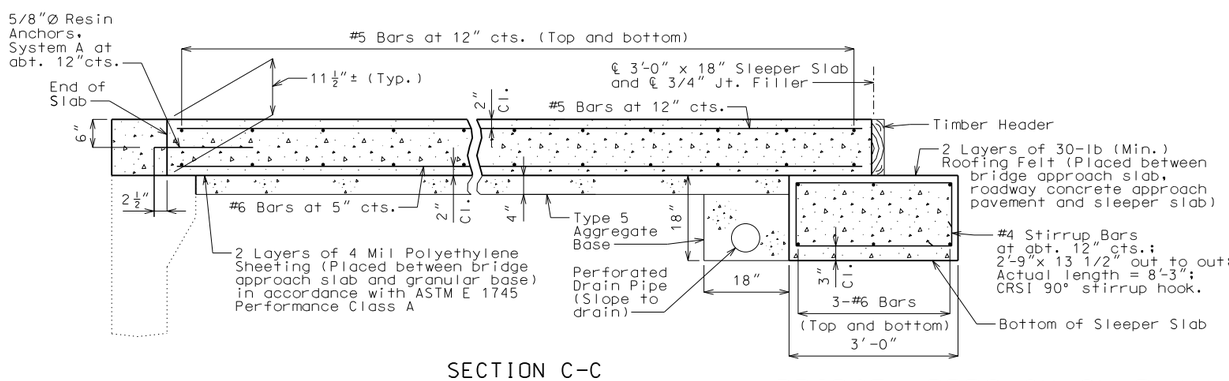

SECTION C-C

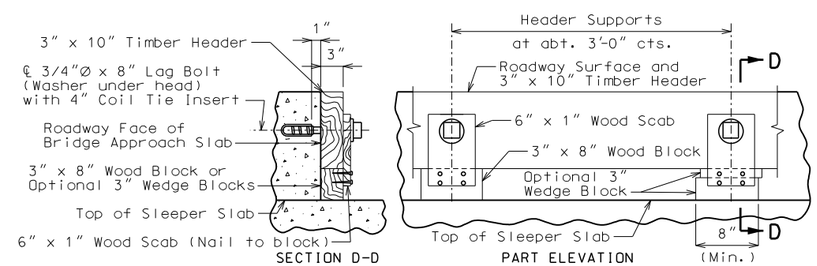

SECTION D-D PART ELEVATION

DETAILS OF TIMBER HEADER

Remove timber header when concrete pavement is placed.

BRIDGE APPROACH SLAB (MAJOR ROAD)

Detailed Jun. 2021
Checked Jul. 2021

Note: This drawing is not to scale. Follow dimensions.

Sheet No. 7 of 8

STATE OF MISSOURI — DEREK S. BUTLER — NUMBER PE-2016006828 — PROFESSIONAL ENGINEER

THIS SHEET HAS BEEN SIGNED, SEALED AND DATED ELECTRONICALLY

DATE PREPARED	
9/2/2021	
ROUTE 36	STATE MO
DISTRICT BR	SHEET NO. 7
COUNTY BUCHANAN	
JOB NO. J1P3295	
CONTRACT ID.	
PROJECT NO.	
BRIDGE NO. A36663	

DATE	DESCRIPTION

IF A SEAL IS PRESENT ON THIS SHEET IT HAS BEEN ELECTRONICALLY SEALED AND DATED.

MISSOURI HIGHWAYS AND TRANSPORTATION COMMISSION
105 WEST CAPITOL
JEFFERSON CITY, MO 65102
1-888-ASK-MODOT (1-888-275-6636)

GARVER, LLC.
7509 NW TIFFANY SPRINGS PARKWAY, SUITE 200
KANSAS CITY, MO 64153
PHONE: (816) 298-6465
CERTIFICATE OF AUTHORITY NO. 2008013090

L:\2021\21T04000 - MoDOT NW Route 36 Bridge Rehab\Drawings\BRIDGE\A36663\B_A36663_007_J1P3295_ApprSlab.dgn 2:08:40 PM 9/2/2021

BILL OF REINFORCING STEEL

NO. REQ'D.	MARK NO. SIZE	MARK NO. MARK	LOCATION	EPOXY (E)	SHAPE NO.	STIRRUP (S)	SUBSTR. (X)	VARIES (V)	NO. EACH	B FT. IN.	C FT. IN.	D FT. IN.	E FT. IN.	F FT. IN.	H FT. IN.	K FT. IN.	NOMINAL LENGTH FT. IN.	ACTUAL LENGTH FT. IN.	WEIGHT LBS.
			SLAB																
4	6	H1	SLAB	E	20					50 0.000							50 0	50 0	301
			BARRIER CURB																
8	5	R1	BARRIER CURB	E	19	S				17.000	10.000						2 3	2 2	18
12	5	R2	BARRIER CURB	E	19	S				2 6.000	7.500						3 2	3 0	38
12	5	R3	BARRIER CURB	E	15	S				2 6.125	7.500				2 6.000	3.000	3 2	3 1	39
8	5	R4	BARRIER CURB	E	27	S					10.000	11.250	7.000	12.000	9.250	6.375	3 4	3 2	27
4	5	R5	BARRIER CURB	E	19	S				17.000	9.000						2 2	2 1	9
4	5	R6	BARRIER CURB	E	27	S				12.000	10.000	11.125	9.000		6.375	9.125	3 6	3 4	14
			TOTALS																
	5			E															145
	6			E															301
			TOTAL	E															446
			SLAB ON GIRDER																
	6			E															301
			TOTAL	E															301
			SAFETY BARRIER CURB																
	5			E															145
			TOTAL	E															145

BILL OF REINFORCING STEEL

NO. REQ'D.	MARK NO. SIZE	MARK NO. MARK	LOCATION	EPOXY (E)	SHAPE NO.	STIRRUP (S)	SUBSTR. (X)	VARIES (V)	NO. EACH	B FT. IN.	C FT. IN.	D FT. IN.	E FT. IN.	F FT. IN.	H FT. IN.	K FT. IN.	NOMINAL LENGTH FT. IN.	ACTUAL LENGTH FT. IN.	WEIGHT LBS.

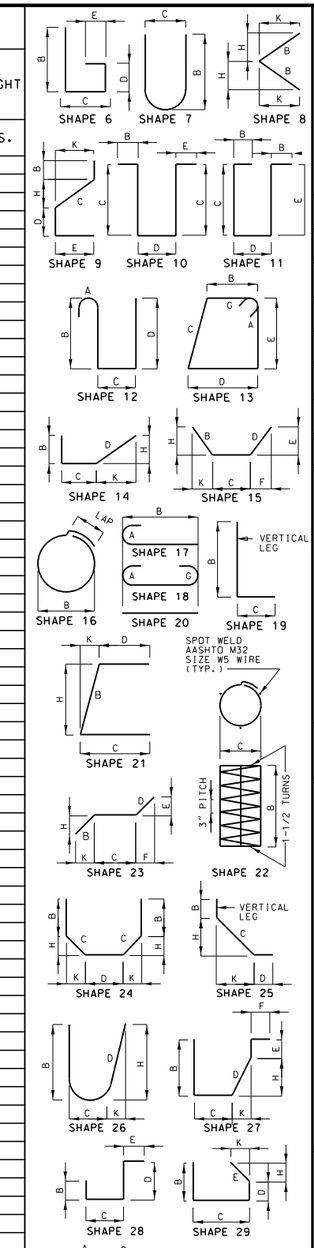

BENDING DIAGRAMS

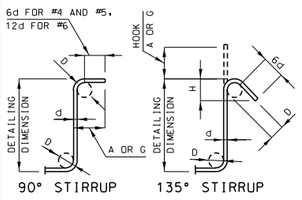

STIRRUP HOOK DIMENSIONS				
GRADES 40 - 50 - 60 KSI				
BAR SIZE	D (IN.)	90° HOOK	135° HOOK	
		HOOK A OR G	HOOK A OR G	APPROX. H
#4	2"	4 1/2"	4 1/2"	3"
#5	2 1/2"	6"	5 1/2"	3 3/4"
#6	4 1/2"	12"	8"	4 1/2"

NOTE: UNLESS OTHERWISE NOTED, DIAMETER "D" IS THE SAME FOR ALL BENDS AND HOOKS ON A BAR.

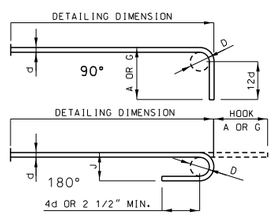

END HOOK DIMENSIONS				
BAR SIZE	D (IN.)	ALL GRADES		
		180° HOOKS		90° HOOKS
		A OR G	J	A OR G
#3	2 1/4"	5"	3"	6"
#4	3"	6"	4"	8"
#5	3 3/4"	7"	5"	10"
#6	4 1/2"	8"	6"	12"
#7	5 1/4"	10"	7"	14"
#8	6"	11"	8"	16"
#9	9 1/2"	15"	11 3/4"	19"
#10	10 3/4"	17"	13 1/4"	22"
#11	12"	19"	14 3/4"	2'-0"
#14	18 1/4"	2'-3"	21 3/4"	2'-7"

NOTE:
ALL STANDARD HOOKS AND BENDS OTHER THAN 180 DEGREE ARE TO BE BENT WITH SAME PROCEDURE AS FOR 90 DEGREE STANDARD HOOKS.
HOOKS AND BENDS SHALL BE IN ACCORDANCE WITH THE PROCEDURES AS SHOWN ON THIS SHEET.
E = EPOXY COATED REINFORCEMENT.
S = STIRRUP.
X = BAR IS INCLUDED IN SUBSTRUCTURE QUANTITIES.
V = BAR DIMENSIONS VARY IN EQUAL INCREMENTS BETWEEN DIMENSIONS SHOWN ON THIS LINE AND THE FOLLOWING LINE.
NO. EA. = NUMBER OF BARS OF EACH LENGTH.
NOMINAL LENGTHS ARE BASED ON OUT TO OUT DIMENSIONS SHOWN IN BENDING DIAGRAMS AND ARE LISTED FOR FABRICATORS USE. (NEAREST INCH)
ACTUAL LENGTHS ARE MEASURED ALONG CENTERLINE BAR TO THE NEAREST INCH.
PAYWEIGHTS ARE BASED ON ACTUAL LENGTHS.
FOUR ANGLE OR CHANNEL SPACERS ARE REQUIRED FOR EACH COLUMN SPIRAL. SPACERS ARE TO BE PLACED ON INSIDE OF SPIRALS. LENGTH AND WEIGHT OF COLUMN SPIRALS DO NOT INCLUDE SPLICES OR SPACERS.
REINFORCING STEEL (GRADE 60) FY = 60,000 PSI.

Detailed Jun. 2021
Checked Jul. 2021

Note: This drawing is not to scale. Follow dimensions.

Sheet No. 8 of 8

STATE OF MISSOURI
DEREK S. BUTLER
NUMBER PE-2016006828
PROFESSIONAL ENGINEER

THIS SHEET HAS BEEN SIGNED, SEALED AND DATED ELECTRONICALLY

DATE PREPARED 9/2/2021

ROUTE	STATE
36	MO
DISTRICT	SHEET NO.
BR	8

COUNTY: BUCHANAN
JOB NO.: J1P3295
CONTRACT ID.
PROJECT NO.
BRIDGE NO.: A36663

DATE	DESCRIPTION

MISSOURI HIGHWAYS AND TRANSPORTATION COMMISSION
105 WEST CAPITOL
JEFFERSON CITY, MO 65102
1-888-ASK-MODOT (1-888-275-6636)

GARVER, LLC.
7509 NW TIFFANY SPRINGS PARKWAY, SUITE 200
KANSAS CITY, MO 64153
PHONE: (816) 298-6465
CERTIFICATE OF AUTHORITY NO. 2008013090

IF A SEAL IS PRESENT ON THIS SHEET IT HAS BEEN ELECTRONICALLY SEALED AND DATED.

U.I.P. AND REHABILITATE EXISTING
(58'-79'-66'-4')(68'-70'-68')
CONTINUOUS COMPOSITE PLATE GIRDER SPANS

SEC/SUR 17 TWP 57N RGE 35W

General Notes:

Design Specifications:

2002 AASHTO LFD (17th Ed.) Standard Specifications

Design Loading:

HS20-44 Modified (1977) and Military 24,000 lb Tandem Axle (1977)

Design Unit Stresses:

Class B-1 Concrete (Safety Barrier Curb) f'c = 4,000 psi

Reinforcing Steel:

Minimum clearance to reinforcing steel shall be 1 1/2", unless otherwise noted.

Miscellaneous:

All joint filler shall be in accordance with Sec 1057 for preformed sponge rubber expansion and partition joint filler, except as noted.

Miscellaneous:

All concrete repairs shall be in accordance with Sec 704, unless otherwise noted.

Outline of old work is indicated by light dashed lines. Heavy lines indicate new work.

Contractor shall verify all dimensions in field before ordering new material.

Bars bonded in existing concrete not removed shall be cleanly stripped and embedded into new concrete where possible. If length is available, existing bars shall extend into new concrete at least 40 diameters for plain bars and 30 diameters for deformed bars, unless otherwise noted.

Traffic Handling:

Structure to be closed during construction. Traffic to be maintained on other routes during construction. See roadway plans for traffic control.

Abbreviations:

U.I.P. denotes Use In Place

Estimated Quantities

Item		Total
Remove and Replace Barrier Curb	linear foot	11

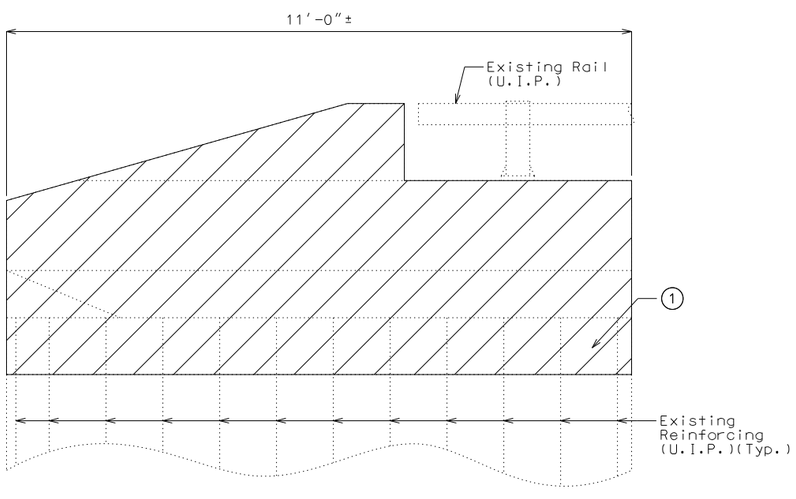

PART SECTION SHOWING CONCRETE REMOVAL AT END BENT
NO. 1 WEST BARRIER

(1) Remove existing barrier concrete to top of existing wing.

Cost of removal of existing barrier will be considered completely covered by the contract unit price for Remove and Replace Barrier.

REPAIRS TO BRIDGE: ROUTE 36 WB RAMP

ROUTE 36 RAMP FROM ROUTE 759 TO ROUTE 36 WB
ABOUT 3.0 MILES N OF ROUTE U
BEG. STA. 5+65.10± (Match Existing)

Detailed Jul. 2021
Checked Jul. 2021

Note: This drawing is not to scale. Follow dimensions.

STATE OF MISSOURI
DEREK S. BUTLER
NUMBER PE-2016006828
PROFESSIONAL ENGINEER

THIS SHEET HAS BEEN SIGNED, SEALED AND DATED ELECTRONICALLY

DATE PREPARED 9/2/2021
ROUTE 36 | STATE MO
DISTRICT BR | SHEET NO. 1
COUNTY BUCHANAN
JOB NO. J1P3295
CONTRACT ID.
PROJECT NO.
BRIDGE NO. A38481

DESCRIPTION	DATE

MISSOURI HIGHWAYS AND TRANSPORTATION COMMISSION
105 WEST CAPITOL
JEFFERSON CITY, MO 65102
1-888-ASK-MODOT (1-888-275-6636)

GARVER, LLC.
7509 NW TIFFANY SPRINGS PARKWAY, SUITE 200
KANSAS CITY, MO 64153
PHONE: (816) 298-6465
CERTIFICATE OF AUTHORITY NO. 2008013090

IF A SEAL IS PRESENT ON THIS SHEET IT HAS BEEN ELECTRONICALLY SEALED AND DATED.

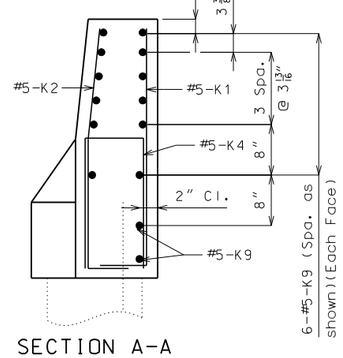

SECTION A-A

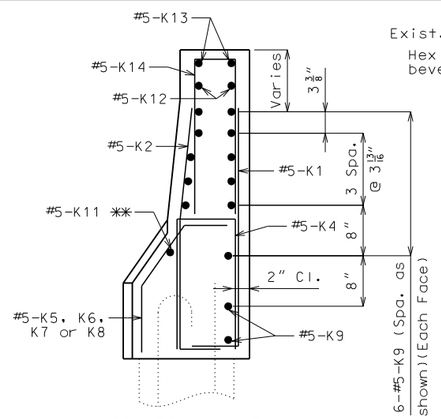

SECTION B-B

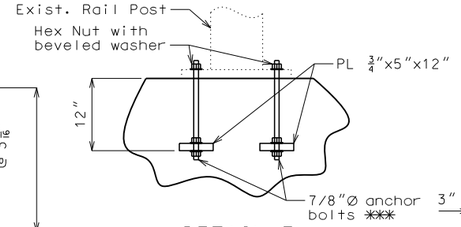

DETAIL E

✱✱✱ Match holes in exist. base plate.

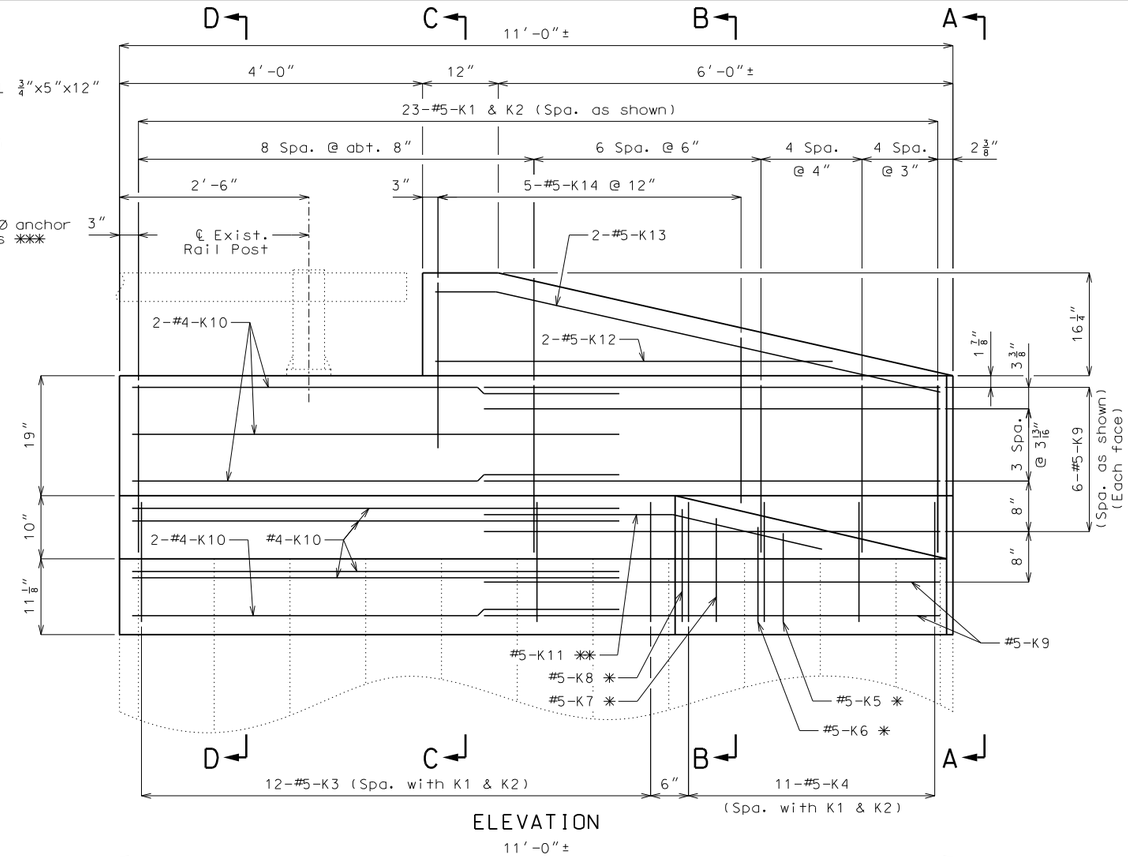

ELEVATION

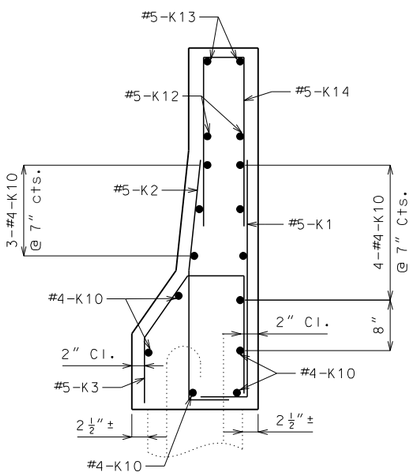

SECTION C-C

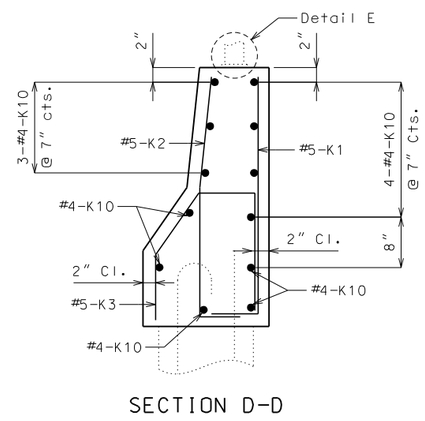

SECTION D-D

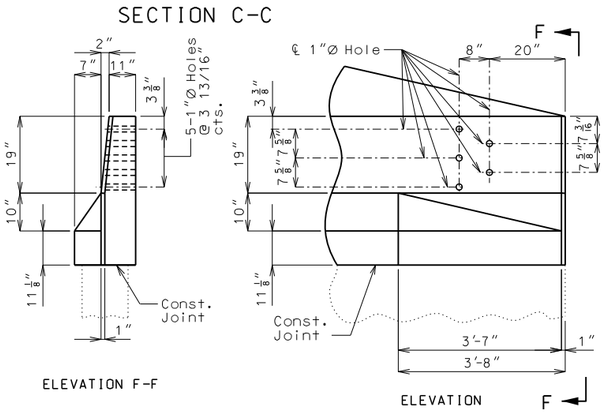

ELEVATION F-F

ELEVATION

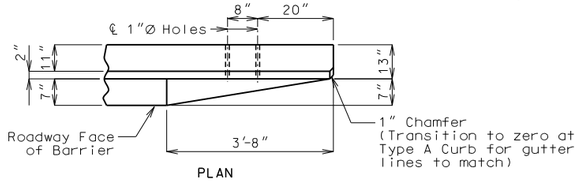

PLAN

DETAILS OF GUARD RAIL ATTACHMENT

General Notes:

Concrete traffic barrier delineators shall be placed on top of the barrier as shown on Missouri Standard Plan 617.10 and in accordance with Sec 617. Delineators on bridges with two-lane, two-way traffic shall have retroreflective sheeting on both sides. Concrete traffic barrier delineators will be considered completely covered by the contract unit price for Remove and Replace Barrier.

Remove existing stirrups within limits of Safety Barrier Curb Removal.

Top of safety barrier curb shall be built parallel to the grade with safety barrier curb joints normal to grade.

All exposed edges of safety barrier curb shall have either a 1/2" radius or a 3/8" bevel, unless otherwise noted.

Payment for all concrete and reinforcement, complete-in-place will be considered completely covered by the contract unit price for Remove and Replace Barrier Curb.

Concrete in the safety barrier curb shall be Class B-1.

Measurement of Remove and Replace Barrier Curb is to the nearest linear foot for each structure, measured along the outside top of slab.

All exposed edges of new safety barrier curb shall match existing safety barrier curb.

Reinforcing Steel:

Minimum clearance to reinforcing steel shall be 1 1/2".

Use a minimum lap of 2'-7" between K9 and K10.

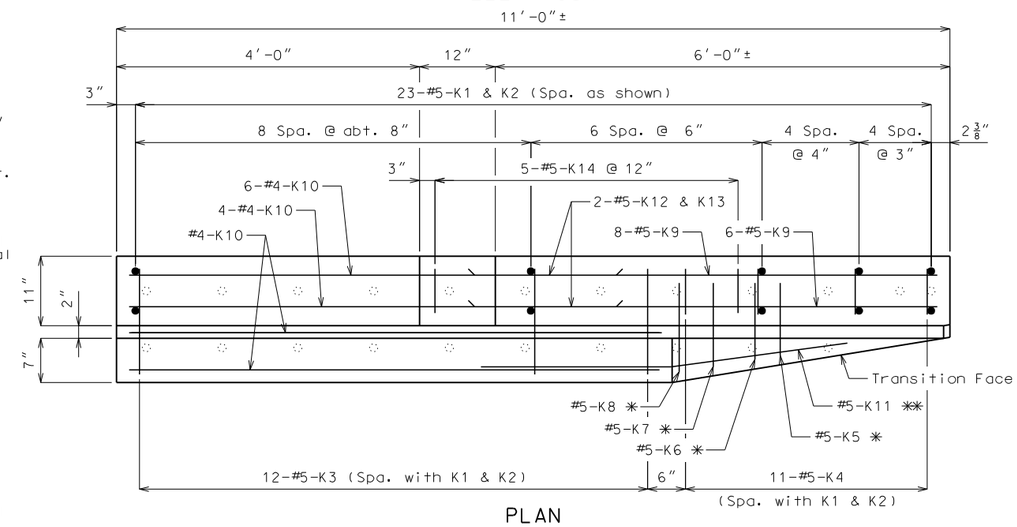

PLAN

✱ Spaced with #5-K4 bars.

✱✱ Fit bar to follow transition face of barrier.

END BENT NO. 1 WEST BARRIER REPLACEMENT DETAILS

Detailed Jul. 2021
Checked Jul. 2021

Note: This drawing is not to scale. Follow dimensions.

Sheet No. 2 of 3

STATE OF MISSOURI — DEREK S. BUTLER — NUMBER PE-2016006828 — PROFESSIONAL ENGINEER

THIS SHEET HAS BEEN SIGNED, SEALED AND DATED ELECTRONICALLY

DATE PREPARED	
9/2/2021	
ROUTE 36	STATE MO
DISTRICT BR	SHEET NO. 2
COUNTY BUCHANAN	
JOB NO. J1P3295	
CONTRACT ID.	
PROJECT NO.	
BRIDGE NO. A38481	

DATE	DESCRIPTION
.	.
.	.
.	.
.	.
.	.
.	.

IF A SEAL IS PRESENT ON THIS SHEET IT HAS BEEN ELECTRONICALLY SEALED AND DATED.

MISSOURI HIGHWAYS AND TRANSPORTATION COMMISSION
105 WEST CAPITOL
JEFFERSON CITY, MO 65102
1-888-ASK-MODOT (1-888-275-6636)

GARVER, LLC.
7509 NW TIFFANY SPRINGS PARKWAY, SUITE 200
KANSAS CITY, MO 64153
PHONE: (816) 298-6465
CERTIFICATE OF AUTHORITY NO. 2008013090

L:\2021\21T04000 - MoDOT NW Route 36 Bridge Rehab\Drawings\BRIDGE\A38481\B_A38481_002_J1P3295_Barriers.dgn 2:09:34 PM 9/2/2021

BILL OF REINFORCING STEEL

NO. REQ'D.	MARK NO. SIZE	MARK NO. MARK	LOCATION	EPOXY (E)	SHAPE NO.	STIRRUP (S)	SUBSTR. (X)	VARIES (V)	NO. EACH	B FT. IN.	C FT. IN.	D FT. IN.	E FT. IN.	F FT. IN.	H FT. IN.	K FT. IN.	NOMINAL LENGTH FT. IN.	ACTUAL LENGTH FT. IN.	WEIGHT LBS.
			BARRIER																
			BENT NO. 3																
23	W2.1	K1	BARRIER CURB	E	19	S	X			3 0.500	9.125						3 10	3 8	188
23	5	K2	BARRIER CURB	E	14	S				9.125	18.625	18.000			2.000	17.875	3 10	3 8	88
12	5	K3	BARRIER CURB	E	27	S				19.000	9.125	12.000	9.125		9.875	6.875	4 1	3 9	47
11	5	K4	BARRIER CURB	E	10	S					19.000	9.500					4 0	3 9	44
1	5	K5	BARRIER CURB	E	25	S				9.000	6.750	8.375			5.500	4.000	2 1	23	2
4	6	K6	BARRIER CURB	E	26	S				42 9.000	7.875	8.375			6.500	4.500	42 8	42 6	255
13	5	K7	BARRIER CURB	E	26	S				42 9.000	9.625	8.375			7.875	5.500	42 5	42 8	536
36	5	K8	BARRIER CURB	E	26	S				2 9.000	11.250	8.375			9.250	6.500	3 5	3 3	122
14	5	K9	BARRIER CURB	E	20					6 3.000							6 3	6 3	92
12	4	K10	BARRIER CURB	E	20					7 1.000							7 1	7 1	57
1	5	K11	BARRIER CURB	E	8					2 2.125					2 2.000	2.375	4 5	4 5	5
2	5	K12	BARRIER CURB	E	20					5 10.000							5 10	5 10	13
8	5	K13	BARRIER CURB	E	19	S				17.000	10.750	6 0.000			15.875	5 10.250	6 10	6 10	15
10	5	K14	BARRIER CURB	E	10	S				2 6.000	2 0.500	9.125					4 11	4 7	24
			TOTALS																
	4			E															57
	5			E															1256
	6			E															255
	W2.1																		188
			TOTAL																188
			TOTAL	E															1568
			SLAB ON GIRDER																
	5			E															698
	6			E															255
			TOTAL	E															953
			SAFETY BARRIER CURB																
	4			E															57
	5			E															558
			TOTAL	E															615

BILL OF REINFORCING STEEL

NO. REQ'D.	MARK NO. SIZE	MARK NO. MARK	LOCATION	EPOXY (E)	SHAPE NO.	STIRRUP (S)	SUBSTR. (X)	VARIES (V)	NO. EACH	B FT. IN.	C FT. IN.	D FT. IN.	E FT. IN.	F FT. IN.	H FT. IN.	K FT. IN.	NOMINAL LENGTH FT. IN.	ACTUAL LENGTH FT. IN.	WEIGHT LBS.

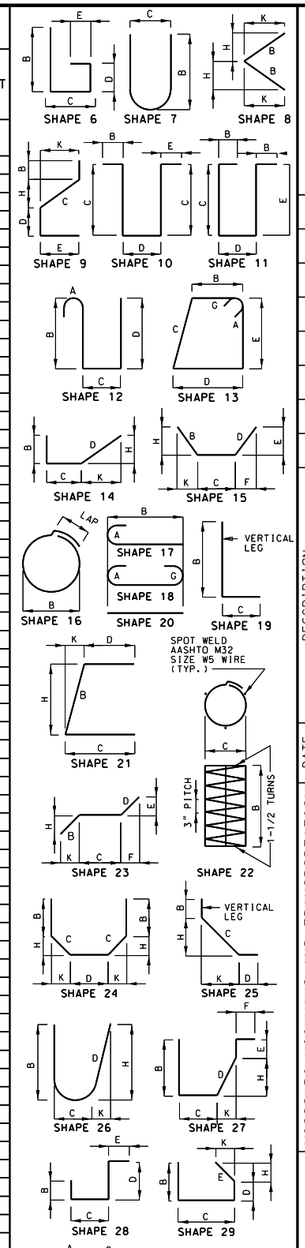

BENDING DIAGRAMS

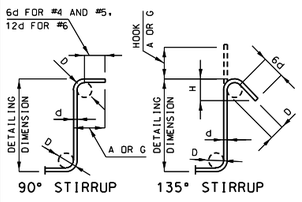

STIRRUP HOOK DIMENSIONS				
GRADES 40 - 50 - 60 KSI				
BAR SIZE	D (IN.)	90° HOOK	135° HOOK	
		HOOK A OR G	HOOK A OR G	APPROX. H
#4	2"	4 1/2"	4 1/2"	3"
#5	2 1/2"	6"	5 1/2"	3 3/4"
#6	4 1/2"	12"	8"	4 1/2"

NOTE: UNLESS OTHERWISE NOTED, DIAMETER "D" IS THE SAME FOR ALL BENDS AND HOOKS ON A BAR.

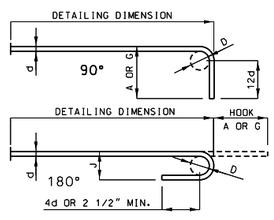

END HOOK DIMENSIONS				
BAR SIZE	D (IN.)	ALL GRADES		
		180° HOOKS		90° HOOKS
		A OR G	J	A OR G
#3	2 1/4"	5"	3"	6"
#4	3"	6"	4"	8"
#5	3 3/4"	7"	5"	10"
#6	4 1/2"	8"	6"	12"
#7	5 1/4"	10"	7"	14"
#8	6"	11"	8"	16"
#9	9 1/2"	15"	11 3/4"	19"
#10	10 3/4"	17"	13 1/4"	22"
#11	12"	19"	14 3/4"	2'-0"
#14	18 1/4"	2'-3"	21 3/4"	2'-7"

NOTE:
ALL STANDARD HOOKS AND BENDS OTHER THAN 180 DEGREE ARE TO BE BENT WITH SAME PROCEDURE AS FOR 90 DEGREE STANDARD HOOKS.
HOOKS AND BENDS SHALL BE IN ACCORDANCE WITH THE PROCEDURES AS SHOWN ON THIS SHEET.
E = EPOXY COATED REINFORCEMENT.
S = STIRRUP.
X = BAR IS INCLUDED IN SUBSTRUCTURE QUANTITIES.
V = BAR DIMENSIONS VARY IN EQUAL INCREMENTS BETWEEN DIMENSIONS SHOWN ON THIS LINE AND THE FOLLOWING LINE.
NO. EA. = NUMBER OF BARS OF EACH LENGTH.
NOMINAL LENGTHS ARE BASED ON OUT TO OUT DIMENSIONS SHOWN IN BENDING DIAGRAMS AND ARE LISTED FOR FABRICATORS USE. (NEAREST INCH)
ACTUAL LENGTHS ARE MEASURED ALONG CENTERLINE BAR TO THE NEAREST INCH.
PAYWEIGHTS ARE BASED ON ACTUAL LENGTHS.
FOUR ANGLE OR CHANNEL SPACERS ARE REQUIRED FOR EACH COLUMN SPIRAL. SPACERS ARE TO BE PLACED ON INSIDE OF SPIRALS. LENGTH AND WEIGHT OF COLUMN SPIRALS DO NOT INCLUDE SPLICES OR SPACERS.
REINFORCING STEEL (GRADE 60) FY = 60,000 PSI.

STATE OF MISSOURI
DEREK S. BUTLER
NUMBER PE-2016006828
THIS SHEET HAS BEEN SIGNED, SEALED AND DATED ELECTRONICALLY

DATE PREPARED 9/2/2021
ROUTE 36 | STATE MO
DISTRICT BR | SHEET NO. 9
COUNTY BUCHANAN
JOB NO. J1P3295
CONTRACT ID.
PROJECT NO.
BRIDGE NO. A38481

DESCRIPTION
DATE

IF A SEAL IS PRESENT ON THIS SHEET IT HAS BEEN ELECTRONICALLY SEALED AND DATED.

MISSOURI HIGHWAYS AND TRANSPORTATION COMMISSION
105 WEST CAPITOL
JEFFERSON CITY, MO 65102
1-888-ASK-MODOT (1-888-275-6636)

GARVER, LLC.
7509 NW TIFFANY SPRINGS PARKWAY, SUITE 200
KANSAS CITY, MO 64153
PHONE: (816) 298-6465
CERTIFICATE OF AUTHORITY NO. 2008013090

Detailed Jun. 2021
Checked Jul. 2021

Note: This drawing is not to scale. Follow dimensions.