MISSOURI HIGHWAYS AND TRANSPORTATION COMMISSION
PLANS FOR PROPOSED
STATE HIGHWAY
CLAY COUNTY

DESIGN DESIGNATION

A.A.D.T. - 2024 = 10,500
A.A.D.T. - 2044 = 10,500
D.H.V. = 1200
T = 3%
V = 40 M.P.H.
D = 50%

FUNCTIONAL CLASSIFICATION- COLLECTOR

TEMPORARY EASEMENT TO BE ACQUIRED

CONVENTIONAL SYMBOLS
(USED IN PLANS)

	EXISTING	NEW
BUILDINGS AND STRUCTURES		
GUARD RAIL		
GUARD CABLE		
CONCRETE RIGHT-OF-WAY MARKER		
STEEL RIGHT-OF-WAY MARKER		
LOCATION SURVEY MARKER		
UTILITIES		
FIBER OPTICS	-FO-	~~FO~~
OVERHEAD CABLE TV	-OTV-	~~OTV~~
UNDERGROUND CABLE TV	-UTV-	~~UTV~~
OVERHEAD TELEPHONE	-OT-	~~OT~~
UNDERGROUND TELEPHONE	-UT-	~~UT~~
OVERHEAD POWER	-OE-	~~OE~~
UNDERGROUND POWER	-UE-	~~UE~~
SANITARY SEWER	-S-	~~S~~
STORM SEWER	-SS-	~~SS~~
GAS	-G-	~~G~~
RECTANGULAR RAPID-FLASHING BEACON		RRFB
MANHOLE	SAN	
FIRE HYDRANT	HYD	
WATER VALVE	WV	
WATER METER	WM	
DROP INLET	DI	
DITCH BLOCK		
GROUND MOUNTED SIGN	SIGN	
LIGHT POLE		
H-FRAME POWER POLE		
TELEPHONE PEDESTAL	PED	
FENCE		
CHAIN LINK	-V-	
WOVEN WIRE	-X-	
GATE POST		
BENCHMARK	BM	

NOTE: DASHED OR OPEN SYMBOLS INDICATE EXISTING FEATURES

JOB NO. J4P3465
REMOVE EX. PED CROSSOVER BRIDGE K0742
AT US69 AND BUILD SIDEWALK ALONG
NORTH & SOUTHSIDE OF US69

BEGIN PROJECT
STA. 219+51.69
LOG MILE. 8.798

END PROJECT
STA. 256+98.65
LOG MILE.9.484

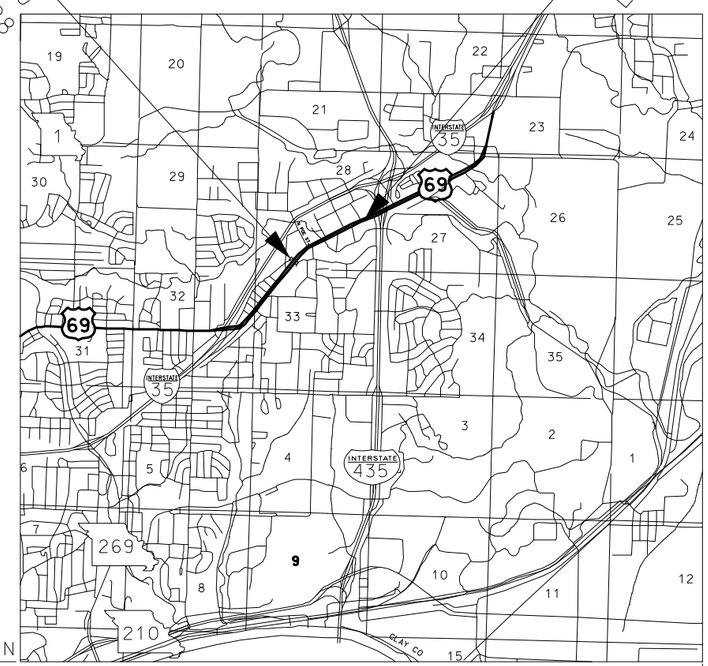

NOT TO SCALE

THE EXISTENCE AND APPROXIMATE LOCATION OF UTILITY FACILITIES KNOWN TO EXIST, AS SHOWN ON THE PLANS, ARE BASED ON THE BEST INFORMATION AVAILABLE TO THE COMMISSION AT THIS TIME. THIS INFORMATION IS PROVIDED BY THE COMMISSION "AS-IS" AND THE COMMISSION EXPRESSLY DISCLAIMS ANY REPRESENTATION OR WARRANTY AS TO THE COMPLETENESS, ACCURACY, OR SUITABILITY OF THE INFORMATION FOR ANY USE. RELIANCE UPON THIS INFORMATION IS DONE AT THE RISK AND PERIL OF THE USER, AND THE COMMISSION SHALL NOT BE LIABLE FOR ANY DAMAGES THAT MAY ARISE FROM ANY ERROR IN THE INFORMATION. IT IS, THEREFORE, THE RESPONSIBILITY OF THE CONTRACTOR TO VERIFY THE EXISTENCE, LOCATION AND STATUS OF ANY FACILITY. SUCH VERIFICATION INCLUDES DIRECT CONTACT WITH THE LISTED UTILITIES.

INDEX OF SHEETS

DESCRIPTION	SHEET NUMBER
TITLE SHEET	1
TYPICAL SECTIONS (TS) (1 SHEET)	2
QUANTITIES (QU) (3 SHEETS)	3
PLAN-PROFILE (PP)	4-18
RIGHT OF WAY (RW)	19-26
REFERENCE POINTS (RP)	27
COORDINATE POINTS (CP)	28
SPECIAL SHEETS (SS)	29-38
TRAFFIC CONTROL SHEETS (TC)	39-46
DRAINAGE SHEETS (DS)	47-48
EROSION CONTROL SHEETS (EC)	49-51
SIGNING (SN)	52-54
SIGNAL (SG)	55
LIGHTING (LT)	56-60
PAVEMENT MARKING (PM)	61
CROSS SECTIONS (CS)	62
CROSS SECTIONS (APPROACH PROFILE)	63-68

LENGTH OF PROJECT

BEGINNING OF PROJECT	STA. 219 + 51.69	
END OF PROJECT	STA. 256 + 98.65	
APPARENT LENGTH	3746.96	FEET

EQUATIONS AND EXCEPTIONS:

STA. 223+96.00 BK=
STA. 223+99.00 AH

STA. 230+33.23 BK=
STA. 230+27.50 AH

BRIDGE A5570	125.00	FEET
TOTAL CORRECTIONS	125.00	FEET
NET LENGTH OF PROJECT	3621.96	FEET
STATE LENGTH	00.686	MILES
FOR INFORMATION ONLY ESTIMATED DISTURBED AREA	00.450	ACRES

STATE OF MISSOURI
SEAN M. DOMINGO
NUMBER
PE-2022001607
PROFESSIONAL ENGINEER
08/15/2023 12:49:35 PM
SEAN M. DOMINGO - CIVIL
MO-PE-2022001607

DATE PREPARED	
8/15/2023	
ROUTE 69	STATE MO
DISTRICT KC	SHEET NO. 1
COUNTY CLAY	
JOB NO. J4P3465	
CONTRACT ID.	
PROJECT NO.	
BRIDGE NO.	

DESCRIPTION	DATE

IF A SEAL IS PRESENT ON THIS SHEET IT HAS BEEN ELECTRONICALLY SEALED AND DATED.

MISSOURI HIGHWAYS AND TRANSPORTATION COMMISSION
105 WEST CAPITOL
JEFFERSON CITY, MO 65102
1-888-ASK-MODOT (1-888-275-6636)

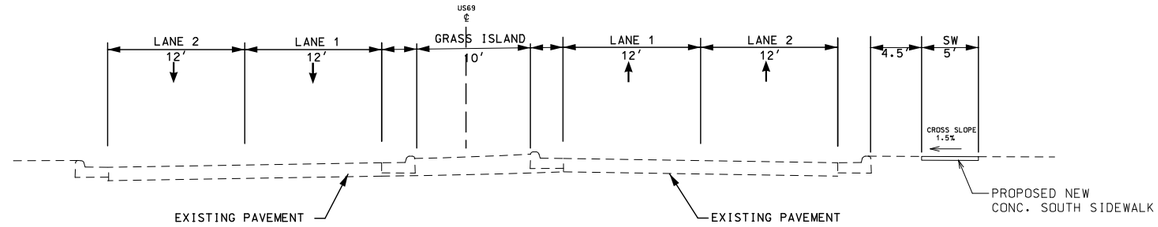

STATION 222+45.03 TO 223+71.16(SOUTH SIDEWALK)

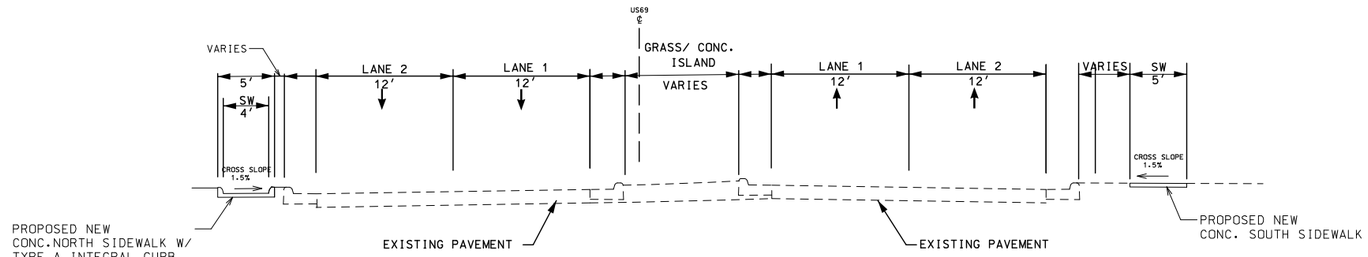

STATION 224+11.60 TO 225+51.89(SOUTH SIDEWALK)
STATION 224+33.21 TO 225+12.80(NORTH SIDEWALK)
STATION 225+58.08 TO 229+08.71(NORTH SIDEWALK)
(EXCLUDE ALL ENTRANCES)

ESTIMATE FACTORS	
TYPE 5 AGGREGATE	1.88 TON/CY

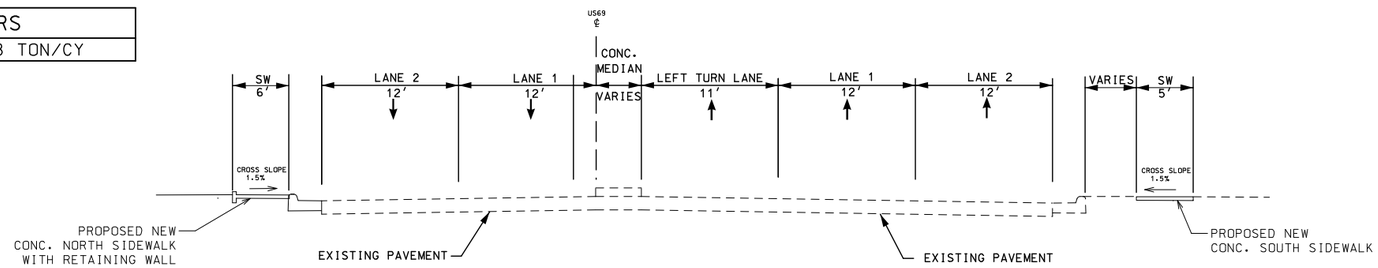

STATION 225+93.86 TO 228+95.85(SOUTH SIDEWALK)
229+83.92 TO 230+08.97 (NORTH SIDEWALK)
(EXCLUDE ALL ENTRANCES AND STREETS)

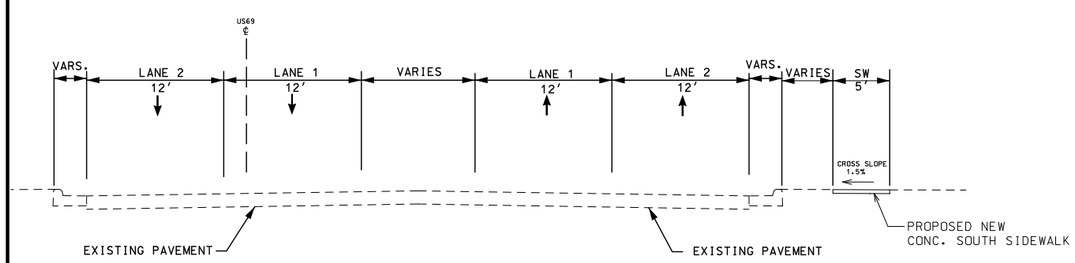

STATION 229+79.47 TO 235+44.14 (BL1-SOUTH SIDEWALK)
(EXCLUDE ALL ENTRANCES, STREETS)

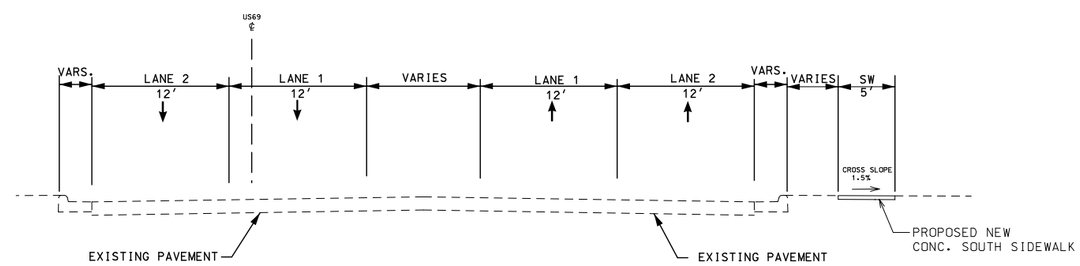

STATION 236+69.24 TO 256+98.65 (SOUTH SIDEWALK)
(EXCLUDE ALL ENTRANCES, STREETS)

NOTE:
ALL ENTRANCES, DRANINAGE STRUCTURES, SIGNS, SIGNAL, LIGHTNING AND PVM'T. MARKINGS ARE STATIONED OFF FROM RTE. 69 CENTER LINE (CL-US69)
SIDEWALK TIES TO THE RETAINING WALL IS STATION OFF FROM ROUTE 69 C/L
ALL SIDEWALKS EXCEPT THE SIDEWALK TIED TO THE RETAINING WALL ARE STATIONED OFF FROM THE SIDEWALK BASE LINE
(SSIDEWALK(BL1), NSIDEWALK8(BL2) & Drake2)

NOT TO SCALE

TYPICAL SECTION SHEET
SHEET 1 OF 1

STATE OF MISSOURI
SEAN M. DOMINGO
NUMBER
PE-2022001607
PROFESSIONAL ENGINEER
08/15/2023 12:52:18 PM
SEAN M. DOMINGO - CIVIL
MO-PE-2022001607

DATE PREPARED	
8/15/2023	
ROUTE 69	STATE MO
DISTRICT KC	SHEET NO. 2
COUNTY CLAY	
JOB NO. J4P3465	
CONTRACT ID.	
PROJECT NO.	
BRIDGE NO.	

DATE	DESCRIPTION

MISSOURI HIGHWAYS AND TRANSPORTATION COMMISSION
105 WEST CAPITOL
JEFFERSON CITY, MO 65102
1-888-ASK-MODOT (1-888-275-6636)

IF A SEAL IS PRESENT ON THIS SHEET IT HAS BEEN ELECTRONICALLY SEALED AND DATED.

CONCRETE SIDEWALK & CURB RAMP

BEG. STA.	END STA	LENGTH L.F	CONCRETE SIDEWALK, 4 IN. 4' WIDTH S.Y	5' WIDTH S.Y	6' WIDTH S.Y	CONC. RAMP S.Y	CONC. GUTTER TYPE B LF	CONC. INTEGRAL CURB TYPE A L.F	TRUNCATED DOMES S.F	REMARKS
NB 69 (STATIONS ARE REFERENCED TO SSIDEWALK B/L)										
222+45.03	223+71.16	126.13		62.29		7.78				NORTH OF FIRST ENTRANCE TO SOUTH OF SECOND ENTRANCE - FORD AUTO
224+11.60	224+63.56	51.96		21.09		7.78				BETWEEN AUTO SHOP 2ND ENTRANCE & MEXICAN REST. 1ST ENT.
225+05.98	225+51.89	45.91		17.73		7.78				BETWEEN AUTO SHOP 2ND ENTRANCE & MEXICAN REST. 1ST ENT.
225+93.86	227+66.13	172.27		87.37		8.33				BETWEEN 2ND ENT. - MEXICAN RESTAURENT & BROWN INDUSTRIES
228+00.26	230+45.82	245.56		128.09		16.67			10.0	BETWEEN BROWN INDUSTRIES & POLICE DEPT. ENTRANCES (INCLUDE CURB RAMP ON CROSSWALK)
230+82.57	231+44.02	61.45		25.81		8.33	15.00		10.0	BETWEEN POLICE DEPT. ENTRANCES & DRAKE AVE.
000+00.00	000+51.38	51.38		25.77		2.78	15.00			ALONG WEST SIDE OF DRAKE AVE. (Drake2)
231+86.00	232+71.24	85.24		36.24		11.11			10.0	BETWEEN DRAKE AVE. AND PINA STORE
233+10.87	233+83.79	72.92		26.62		13.89				BETWEEN PINA STORE AND COOPER AUTOMOTIVE
234+34.38	235+32.53	100.15		52.86		2.78				BETWEEN COOPER AUTOMOTIVE BRIDGE WEST END
236+57.54	237+40.30	82.76		41.12		4.86				BETWEEN BRIDGE EAST END AND APTARTMENT ENTRANCE
237+78.44	238+76.86	98.42		49.12		5.56				BETWEEN APARTMENT ENTRANCE AND AUTO SHOP 1ST ENTRANCE
239+20.14	239+90.62	70.48		32.21		6.94				BETWEEN 1ST AND 2ND ENTRANCES - AUTO SHOP
240+30.06	240+87.84	57.78		21.68		10.42				BETWEEN 2ND ENT. AUTO SHOP AND SUNRISE CAR WASH ENT.
241+41.34	242+63.96	122.62		57.01		11.11				BETWEEN SUNRISE CAR WASH AND GUN SHOP ENTRANCES
242+90.29	243+50.08	59.79		19.33		13.89	15.00		10.0	BETWEEN GUN SHOP ENTRANCE AND S. WHITNEY STREET
243+81.86	246+76.82	294.96		136.09		111.11	15.00		10.0	BETWEEN S. WHITNEY STREET AND S. BRYANT STREET
247+71.46	248+31.09	59.63		19.24		13.89	15.00		10.0	BETWEEN S. BRYANT STREET AND FIRST ENTRANCE VILLAGE STORE-IT
248+63.72	248+92.00	28.28		7.38		8.33				BETWEEN 1ST AND 2ND ENTRANCES AT VILLAGE STORE-IT
249+22.14	250+49.71	127.57		59.76		33.33	15.00		10.0	BETWEEN 2ND ENTRANCES AT VILLAGE STORE-IT AND S. MIRIAM ST.
250+86.56	251+94.64	108.08		51.71		8.33	15.00		10.0	BETWEEN S. MIRIAM ST. & PVT. ENTRANCE
252+11.84	254+88.64	276.80		143.78		10.00	30.00			BETWEEN PVT. ENTRANCE AND CLAYCOMO PLAZA 1ST ENTRANCE
255+17.64	255+27.77	10.13		5.63			30.00	10.00		BETWEEN TWO CLAYCOMO PLAZA ENTRANCES
256+57.96	256+98.65	40.69		12.61		20.00				BETWEEN CLAYCOMO PLAZA ENTRANCES
SUB-TOTAL 1			0.00	1140.53	0.00	345.00	165.00	10.00	80.00	
SB 69 (STATIONS ARE REFERENCED TO NSIDEWALK B/L)										
219+78.45	221+65.75	187.30					187.30			REMOVE AND REPLACE EX. CONCRETE C & G TYPE B - US69 SBL
223+28.35	223+39.87	11.52	5.12					30.00		BEG. OF PROJECT (FIRST CONC. SW)
223+95.67	224+18.08	22.41	4.63			6.67		32.00		SECOND CONC. SW (BETWEEN TWO ENTRANCES)
224+35.53	224+86.30	50.77	14.56			10.00		55.00		THIRD CONC. SW
225+35.34	225+98.78	63.44		27.47		7.78				FOURTH CONC. SW
226+42.61	226+65.96	23.35		5.75		7.22				FIFTH CONC. SW
227+09.74	228+40.87	196.00		100.56		8.33	15.00		10.0	CONC. SW _WEST OF POE ST
229+62.37	229+64.66	11.85		6.58						CONC. SW - NE QUADRANT OF POE ST. (UD69_C/L)
000+28.00	000+71.80	36.75			4.50	23.33			10.0	CONC. SW - NE QUADRANT OF POE ST. -TIED TO CONC. RETATINING WALL
229+62.37	230+08.96	15.00				3.33			10.0	CONC. SW - NE QUADRANT OF POE ST. (UD69_C/L)
229+59.48	230+08.96	68.70					68.70			CONC. C & G - NE QUADRANT OF POE ST. (US69_C/L)
SUB-TOTAL 2			24.31	140.36	4.50	66.67	271.00	117.00	30.00	
TOTAL			24.31	1280.89	4.50	411.67	436.00	127.00	110.00	
SUB TOTAL 3				1309.70		411.70	436.00	127.00	110.00	

CONCRETE MEDIAN STRIP AND SIDEWALK

BEG. STATION	END STATION	CONC. SIDEWALK, 4 IN. 5' WIDTH SQYD	TRUNCATED DOMES SQFT	6" CONCRETE MEDIAN STRIP SQYD	COMMENTS
229+94.04	230+31.60	8.31	20.00	30.64	NEW CONCRETE MEDIAN INFRONT OF POLICE STATION ON US 69
TOTAL		8.31	20.00	30.64	
SUB TOTAL 4		8.40	20.00		
PAY TOTAL				30.70	

OPTIONAL PAVEMENT

BEG. STATION	END STATION	AREA SQFT	4" TYPE 5 AGGR. BASE SQYD	7 INCH OPTIONAL PVM'T. SQYD	CONC. GUTTER TYPE B LF	COMMENTS
229+31.40	229+59.80	127.80	14.20	14.20		INSTALLING GROUP A PIPE BETWEEN DI. D-1 AND D-2 AT POE STREET
231+36.11	231+30.69	217.00	24.11	24.11		REMOVING EX. PARKING LOT (PARTIAL) AND ADJUST SLOPE TO NEW DI
231+39.11	231+33.69				30.00	REMOVING EX. PARKING LOT (PARTIAL) AND ADJUST SLOPE TO NEW DI
TOTAL		344.80	38.31	38.31	30.00	
SUB TOTAL 5					30.00	
PAY TOTAL			40.00	40.00		

CONCRETE SIDEWALK & CURB RAMP

BEG. STA.	CONC. SIDEWALK 4 IN S.Y	CONC. RAMP S.Y	CONC. GUTTER TYPE B LF	CONC. INTEGRAL CURB TYPE A L.F	TRUNCATED DOMES S.F	REMARKS
SUB TOTAL 3	1309.70	411.70	436.00	127.00	110.00	CONCRETE SIDEWALK AND CURB RAMP
SUB TOTAL 4	8.40				20.00	CONCRETE MEDIAN STRIP
SUB TOTAL 5			30.00			OPTONAL PAVEMENT (PARKING LOT)
PAY TOTAL	1318.10	411.70	466.00	127.00	130.00	

REMOVAL OF PEDESTRAIN BRIDGE

LOCATION	UNIT
STA. 220+41.62 (US69 C/L)	1.00
PAY TOTAL	ONE LUMP SUM

CONTRACTOR FURNISHED SURVEYING AND STACKING

ONE LUMP SUM

MOBILIZATION

ONE LUMP SUM

LINEAR GRADING

BEG. STA.	END STA	LENGTH L.F	LINEAR GRADING CL-1 SIDEWALK STA.	REMARKS
US69 NB (STATIONS REFERENCED TO SSIDEWALK B/L)				
222+45.03	223+71.16	126.13	1.26	NORTH OF FIRST ENTRANCE TO SOUTH OF SECOND ENTRANCE - FORD AUTO
224+11.60	224+63.56	51.96	0.52	BETWEEN AUTO SHOP 2ND ENTRANCE & MEXICAN REST. 1ST ENT.
224+89.75		20.00	0.20	ENTRANCE
225+05.98	225+51.89	45.91	0.46	BETWEEN AUTO SHOP 2ND ENTRANCE & MEXICAN REST. 1ST ENT.
225+80.99		20.00	0.20	ENTRANCE
225+93.86	227+66.13	172.27	1.72	BETWEEN 2ND ENT. - MEXICAN RESTAURENT & BROWN INDUSTRIES
227+95.87		47.60	0.48	ENTRANCE
228+00.26	230+45.82	245.56	2.46	BETWEEN BROWN INDUSTRIES & POLICE DEPT. ENTRANCES (INCLUDE CURB RAMP ON CROSSWALK)
230+80.57		32.10	0.32	ENTRANCE
230+82.57	231+44.02	61.45	0.61	BETWEEN POLICE DEPT. ENTRANCES & DRAKE AVE.
000+00.00	000+51.38	51.38	0.51	ALONG WEST SIDE OF DRAKE AVE. (Drake2)
231+86.00	232+71.24	85.24	0.85	BETWEEN DRAKE AVE. AND PINA STORE
233+06.64		30.00	0.30	ENTRANCE
233+10.87	233+83.79	72.92	0.73	BETWEEN PINA STORE AND COOPER AUTOMOTIVE
234+34.38	235+32.53	100.15	1.00	BETWEEN COOPER AUTOMOTIVE BRIDGE WEST END
236+57.54	237+40.30	82.76	0.83	BETWEEN BRIDGE EAST END AND APTARTMENT ENTRANCE
237+74.41		16.00	0.16	ENTRANCE
237+78.44	238+76.86	98.42	0.98	BETWEEN APARTMENT ENTRANCE AND AUTO SHOP 1ST ENTRANCE
239+12.71		16.80	0.17	ENTRANCE
239+20.14	239+90.62	70.48	0.70	BETWEEN 1ST AND 2ND ENTRANCES - AUTO SHOP
240+30.06	240+87.84	57.78	0.58	BETWEEN 2ND ENT. AUTO SHOP AND SUNRISE CAR WASH ENT.
241+41.34	242+63.96	122.62	1.23	BETWEEN SUNRISE CAR WASH AND GUN SHOP ENTRANCES
242+91.37		18.00	0.18	ENTRANCE
242+90.29	243+50.08	59.79	0.60	BETWEEN GUN SHOP ENTRANCE AND S. WHITNEY STREET
243+81.86	246+76.82	294.96	2.95	BETWEEN S. WHITNEY STREET AND S. BRYANT STREET
247+40.49		20.00	0.20	ENTRANCE
247+71.46	248+31.09	59.63	0.60	BETWEEN S. BRYANT STREET AND FIRST ENTRANCE VILLAGE STORE-IT
248+61.39		26.00	0.26	FIRST ENTRANCE - VILLAGE STORE-IT - ENTRANCE 14
248+63.72	248+92.00	28.28	0.28	BETWEEN 1ST AND 2ND ENTRANCES AT VILLAGE STORE-IT
249+21.13		26.00	0.26	ENTRANCE
249+22.14	250+49.71	127.57	1.28	BETWEEN 2ND ENTRANCES AT VILLAGE STORE-IT AND S. MIRIAM ST.
250+86.56	251+94.64	108.08	1.08	BETWEEN S. MIRIAM ST. & PVT. ENTRANCE
252+16.13		16.00	0.16	ENTRANCE
252+11.84	254+88.64	276.80	2.77	BETWEEN PVT. ENTRANCE AND CLAYCOMO PLAZA 1ST ENTRANCE
255+18.70		20.00	0.20	ENTRANCE
255+17.64	255+27.77	10.13	0.10	BETWEEN TWO CLAYCOMO PLAZA ENTRANCES
255+52.06		20.00	0.20	ENTRANCE
256+57.96	256+98.65	40.69	0.41	BETWEEN CLAYCOMO PLAZA ENTRANCES
219+78.45	256+98.65			SOUTH SIDEWALK - 480 CY CUT AND 80 CY FILL (FOR INFORMATION ONLY)
SUB-TOTAL 1			26.62	
US69 SB (STATIONS REFERENCED TO NSIDEWALK B/L)				
219+78.45	221+65.75	187.30	1.87	REMOVE AND REPLACE EX. CONCRETE C & G TYPE B - US69 SBL
223+28.35	223+39.87	11.52	0.12	CONCRETE SIDEWALK
224+62.23		21.80	0.22	ENTRANCE
225+31.15		18.00	0.18	ENTRANCE
223+95.67	224+18.08	22.41	0.22	CONCRETE SIDEWALK
224+35.53	224+86.30	50.77	0.51	CONCRETE SIDEWALK
226+06.44		18.00	0.18	ENTRANCE
225+35.34	225+98.78	63.44	0.63	CONCRETE SIDEWALK
227+14.83		10.00	0.10	ENTRANCE
226+42.61	226+65.96	23.35	0.23	CONCRETE SIDEWALK
227+82.10		10.00	0.10	FIFTH ENTRANCE FROM THE BEG. OF PROJECT - US69_C/L
227+09.74	228+40.87	196.00	1.96	CONC. SW _WEST OF POE ST
229+62.37	229+64.66	11.85	0.12	CONC. SW - NE QUADRANT OF POE ST. (UD69_C/L)
000+28.00	000+71.80	36.75	0.37	CONC. SW - NE QUADRANT OF POE ST. -TIED TO CONC. RETATINING WALL
229+62.37	230+08.96	15.00	0.15	CONC. SW - NE QUADRANT OF POE ST. (UD69_C/L)
229+59.48	230+08.96	68.70	0.69	CONC. C & G - NE QUADRANT OF POE ST. (US69_C/L)
223+28.35	228+40.87			NORTH SIDEWALK - 40 CY CUT AND 5 CY FILL (FOR INFORMATION ONLY)
SUB-TOTAL 2			7.65	
TOTAL			34.27	
PAY TOTAL			34.30	

CONCRETE APPROACH

BEG. STA.	LENGTH L.F	AREA SQFT	8" NON - REIN. CONC. APPROACH SY	REMARKS
NB 69 (STATIONS ARE REFERENCED TO US69 C/L)				
224+89.75	20.00	440.00	48.89	FIRST ENTRANCE OF RESTAURANT
225+80.99	20.00	425.00	47.22	SECOND ENTRANCE OF RESTAURANT
227+95.87	47.60	953.35	105.93	ENTRANCE - BROWN INDUSTRIES
230+80.57	32.10	605.00	67.22	ENTRANCE - POLICE DEPT.
233+06.64	30.00	570.00	63.33	ENTRANCE - PINA STORE
237+74.41	16.00	315.00	35.00	APTARTMENT ENTRANCE
239+12.71	16.80	365.00	40.56	AUTO SHOP 1ST ENTRANCE
242+91.37	18.00	145.00	16.11	GUN SHOP ENTRANCE
247+40.49	20.00	955.00	106.11	ENTRANCE - S. BRYANT STREET
248+61.39	26.00	425.00	47.22	FIRST ENTRANCE - VILLAGE STORE-IT
249+21.13	26.00	400.00	44.44	SECOND ENTRANCE - VILLAGE STORE-IT
252+16.13	16.00	150.00	16.67	PVT. ENTRANCE
255+18.70	20.00	313.00	34.78	CLAYCOMA PLAZA FIRST ENTRANCE
256+57.96	#REF!		0.00	CLAYCOMA PLAZA MEDIAN - BETWEEN 1ST AND 2ND ENTRANCES
255+40.42	#REF!	310.00	34.44	CLAYCOMA PLAZA 2ND ENTRANCE - EMTRANCE
255+52.06	20.00	313.00	34.78	CLAYCOMA PLAZASECOND ENTRANCE
SUB-TOTAL 1			742.71	
SB 69 (STATIONS ARE REFERENCED TO US69 C/L)				
224+62.23	21.80	550.00	61.11	FIRST ENTRANCES FROM THE BEG. OF PROJECT
225+31.15	18.00	375.00	41.67	SECOND ENTRANCES FROM THE BEG. OF PROJECT
226+06.44	18.00	390.00	43.33	THIRD ENTRANCE FROM THE BEG. OF PROJECT
227+14.83	10.00	220.00	24.44	FOURTH ENTRANCE FROM THE BEG. OF PROJECT
227+82.10	10.00	230.00	25.56	FIFTH ENTRANCE FROM THE BEG. OF PROJECT
SUB-TOTAL 2			196.11	
TOTAL			938.82	
PAY TOTAL			938.90	

QUANTITY SHEET
SHEET 1 OF 3

STATE OF MISSOURI
SEAN M. DOMINGO
NUMBER PE-2022001607
PROFESSIONAL ENGINEER
08/15/2023 1:04:44 PM
SEAN M. DOMINGO - CIVIL
MO-PE-2022001607

DATE PREPARED
8/15/2023

ROUTE	STATE
69	MO
DISTRICT	SHEET NO.
KC	3

COUNTY
CLAY

JOB NO.
J4P3465

CONTRACT ID.

PROJECT NO.

BRIDGE NO.

DATE	DESCRIPTION

IF A SEAL IS PRESENT ON THIS SHEET IT HAS BEEN ELECTRONICALLY SEALED AND DATED.

MISSOURI HIGHWAYS AND TRANSPORTATION COMMISSION
105 WEST CAPITOL
JEFFERSON CITY, MO 65102
1-888-ASK-MODOT (1-888-275-6636)

REMOVAL OF IMPROVEMENTS

BEG. STA.	END STA	CURB REMOVAL LF	SAW CUT LF	GUARDRAIL L.F	CONC. APPROACH SY	PARKING LOT SY	CMP LF	DI EA	PED. BRIDGE PLAQUE ES	REMARKS
US69 NB										
									1.00	DISPOSITION OF PEDESTRIAN BRIDGE PLAGUE
219+74.31	221+62.41			330.00						REMOVAL OF GUARDRAILS N US 69 AND NORTH OF E PARK AVE.
224+89.75			95.00		440.00					FIRST ENTRANCE OF RESTAURANT
225+80.99			110.00		425.00					SECOND ENTRANCE OF RESTAURANT
227+95.87			45.50		953.35					ENTRANCE - BROWN INDUSTRIES
229+94.04	230+31.60		50.00			350.00				REMOVE EX. ROADWAY TO BUILD NC. MEDIAN AND SIDEWALK
230+80.57			113.00		605.00					ENTRANCE - POLICE DEPT.
231+17.51	231+41.26						23.75			REMOVE EX. CMP
231+50.28								1.00		REMOVE EX. DI
000+16.17	000+46.08	30.00	39.00			217.00				REMOVING EX. PARKING LOT (PARTIAL) AND ADJUST SLOPE TO NEW DI
230+82.57	231+44.02	15.00								BETWEEN POLICE DEPT. ENTRANCES & DRAKE AVE.
000+00.00	000+51.38	15.00								ALONG WEST SIDE OF DRAKE AVE. (Drake2)
233+06.64			116.00		570.00					ENTRANCE - PINA STORE
237+74.41			97.00		315.00					APTARTMENT ENTRANCE
239+12.71			113.00		365.00					AUTO SHOP 1ST ENTRANCE
242+91.37			86.00		255.00					GUN SHOP ENTRANCE
242+90.29	243+50.08	15.00								BETWEEN GUN SHOP ENTRANCE AND S. WHITNEY STREET
243+81.86	246+76.82	15.00								BETWEEN S. WHITNEY STREET AND S. BRYANT STREET
247+71.46	248+31.09	15.00								BETWEEN S. BRYANT STREET AND FIRST ENTRANCE VILLAGE STORE-IT
247+40.49			225.00		955.00					ENTRANCE - S. BRYANT STREET
248+61.39			96.00		425.00					FIRST ENTRANCE - VILLAGE STORE-IT
249+21.13			92.00		400.00					SECOND ENTRANCE - VILLAGE STORE-IT
249+22.14	250+49.71	15.00								BETWEEN 2ND ENTRANCES AT VILLAGE STORE-IT AND S. MIRIAM ST.
250+86.56	251+94.64	15.00								BETWEEN S. MIRIAM ST. & PVT. ENTRANCE
252+16.13			38.00		150.00					PVT. ENTRANCE
252+11.84	254+88.64	30.00								BETWEEN PVT. ENTRANCE AND CLAYCOMO PLAZA 1ST ENTRANCE
256+57.96	255+40.42	30.00								CLAYCOMA PLAZA MEDIAN - BETWEEN 1ST AND 2ND ENTRANCES
255+18.70			70.00		652.00					CLAYCOMO PLAZA 2ND ENTRANCE - EMTRANCE 18
255+52.06			70.00		310.00					BETWEEN TWO CLAYCOMO PLAZA ENTRANCES
SUB TOTAL1		195.00	1455.50	330.00	6820.35	567.00	23.75	1.00	1.00	
US69 SB										
223+28.35	223+39.87	7.00	190.00							SAW CUT ASPHALT RESTORATIION AND CURB AND GUTTER ALONG US69 SB
219+78.45	221+65.75		190.00							SAW CUT ASPHALT RESTORATIION AND CURB AND GUTTER ALONG US69 SB
229+37.00	229+57.00		90.00							SAW CUT ACROSS POE STREET
229+56.74	230+08.96		75.00							SAW CUT ASPHALT RESTORATIION AND CURB AND GUTTER ALONG NE QUADRANT POE STREET
224+62.23			120.00		1370.00					FIRST ENTRANCES FROM THE BEG. OF PROJECT -US69_C/L
225+31.15			90.00							SECOND ENTRANCES FROM THE BEG. OF PROJECT-US69_C/
226+06.44			115.00		390.00					THIRD ENTRANCE FROM THE BEG. OF PROJECT
227+14.83			90.00		220.00					FOURTH ENTRANCE FROM THE BEG. OF PROJECT
227+82.10			95.00		230.00					FIFTH ENTRANCE FROM THE BEG. OF PROJECT
			60.00		375.00					CONC. SW - NE QUADRANT OF POE ST. (UD69_C/L)
SUB TOTAL2		7.00	1115.00	0.00	2585.00	0.00	0.00	0.00	0.00	
TOTAL		202.00	2570.50	330.00	9405.35	567.00	23.75	1.00	1.00	
PAY TOTAL		ONE LUMP SUM								

SIDEWALK HAND-RAILING

STATION	STATION	SIDEWALK HAND-RAILING WITH BALUSTERS LF	REMARKS
00+00.00	00+36.72	40.0	NORTHEAST QUADRANT OF POE STREET & US 69
PAY TOTAL		40.00	

ADJUST MANHOLE AND REPLACE COVER

STATION BEG.	OFFSET FT	ADJUSTING MANHOLE EA	REPLACE TYPE 1A ADA COMPLIANCE COVER EA	COMMENTS
247+02.61	57.55	1.00	1.00	US69 AND BRYANT ST
PAY TOTAL		1.00	1.00	

RECTANGULAR RAPID FLASHING BEACON (RRFB)

STATION	OFFSET FT	RRFB ASSEMBLY EA	COMMENTS
230+07.78	49.5 RT.	1.00	US 69 - SOUTH SIDE
230+07.56	17.9 RT.	1.00	US 69, CONC. MEDIAN - SOUTH SIDE
230+10.44	10.4 LT.	1.00	US 69, CONC. MEDIAN - NORTH SIDE
230+10.57	23.2 RT.	1.00	US 69 - NORTH SIDE
PAY TOTAL		4.00	

DRAINAGE - PRECAST CONC. DROP INLET & PIPE

STATION	STATION	OFFSET FT	PRECAST CONC. TYPE D DROP INLET 2' X 2' FT	18" GROUP A PIPE LF	CURVED VANE GRATE & FRAME 2' X 2' EA	CLASS 3 EXCAVATION CY	REMARKS
229+58.10		43.9 LT.	4.0		1.0	4.30	NEW DI(DI-2) AT POE STREET
229+37.26	229+56.31			20.0		16.60	GROUP A PIPE BETWEEN DI, D-1 AND D-2
231+35.75		80.9 RT	3.0		1.0	3.50	NEW DI(DI-3) AT PARKING LOT AND DRAKE STREET
231+37.28	231+54.60			18.0		9.60	GROUP A PIPE BETWEEN D-3 AND D-4
PAY TOTAL			7.00	38.00	2.00	34.00	

RELOCATE EXISTING SIGNS

STATION FROM	STATION TO	LOCATIONS	RELOCATE SIGNS EA	REMARKS
NB 69				
223+47.53	223+47.51	CLOSE TO 2ND ENTRANCE OF AUTO SHOP	1.0	RELOCATE SPEED LIMIT SIGN - R2-1
225+66.45	225+72.76	CLOSE TO CLAY CO ENGINE BUILDERS BLDG.	1.0	RELOCATE SIGN S- R5-1 & R5-1a
240+58.86	240+58.86	BEFORE SUNRISE CARWASH	1.0	RELOCATE SIGN - R3-9b
244+02.35	243+97.61	NORTH EAST QUADRANT OF WHITNEY STREET	1.0	RELOCATE SIGN - R1-1
244+06.27	244+06.27	NORTH EAST QUADRANT OF WHITNEY STREET	1.0	RELOCATE SIGNS - D3-1c (2#)
251+06.04	251+01.06	NORTH EAST QUADRANT OF MIRIAM STREET	1.0	RELOCATE SIGN - R1-1
253+38.83	253+38.83	BEFORE CLAYCOMO PLAZA ENTRANCE	1.0	RELOCATE SIGN - M1-1 (2#) & M2-1
SB 69				
225+66.45	225+72.76	INFRONT OF NORTHLAND FACILITY CARE	1.0	RELOCATE SIGN - R5-1 & 55-1a
229+20.46	229+23.90	WESTSIDE OF POE STREET & US69 INTERSECTION	1.0	RELOCATE SIGNS - D3-1c (2#)
PAY TOTAL			9.0	

PAVEMENT MARKINGS

BEG. STATION	END STATION	4" WATERBOURNE PVM'T. MARKINGS PAINT TYPE P BEADS LF	PREFORMED THERMOPLASTIC PVM'T. MARKING 30 IN. WHITE MIDBLOCK EA	PREFORMED THERMOPLASTIC PVM'T. MARKING 12 IN WHITE. YIELD LINE TRIANGLES EA	PREFORMED THERMOPLASTIC PVM'T. MARKING 24 IN. WHITE STOP BAR LF	COMMENTS
229+19.12				12		ROUTE 69 NB
229+32.15	229+44.15		7.00		12.00	POE STREET & RTE. 69 INTERSECTION
229+94.04	230+31.60	90.00				CONCRETE MEDIAN STRIP
230+02.62	230+15.00		20.00			ROUTE 69 NB & SB
230+68.65				12		ROUTE 69 SB
PAY TOTAL		90.00	27.00	24.00	12.00	

EROSION CONTROL

BEG. STATION	END STATION	LENGTH FT	AREA SQFT	TURF TYPE TALL FESCUE SODDING SQYD	SILT FENCE LF	CURB INLET CHECK EA	SEDIMENT REMOVAL CUYD	REMARKS
222+45.03	256+98.65	2468.26	14360.00	1595.56	2468.3	16.0	24.7	ROUTE 69 NB
219+78.45	221+65.75	187.30	725.00	80.56				ROUTE 69 SB MEDIAN GRASS
223+28.35	229+20.03	329.47	1385.00	153.89	1385.0	5.0	13.9	ROUTE 69 SB
TOTAL				1830.0	3853.3	21.0	38.5	
PAY TOTAL				1830.0	3853.0	21.0	39.0	

GUARDRAIL

BEG. STATION	END STATION	LOCATION	MGS GUARDRAIL 8 FEET POSTS 6' - 3" SPACING LF	MGS-MASH CRASHWORTHY END TERMINAL-TYPE A EA	MGS END ANCHOR EA	REMARKS
220+16.30	221+41.30	SOUTH OF EX. PED. BRIDGE	125.0	1.0	1.0	NORTH OF E. PARK AVE STREET
PAY TOTAL			125.0	1.0	1.0	

QUANTITY SHEET
SHEET 2 OF 3

STATE OF MISSOURI
SEAN M. DOMINGO
NUMBER PE-2022001607
PROFESSIONAL ENGINEER
08/15/2023 1:06:07 PM
SEAN M. DOMINGO - CIVIL
MO-PE-2022001607

DATE PREPARED 8/15/2023
ROUTE 69 | STATE MO
DISTRICT KC | SHEET NO. 3
COUNTY CLAY
JOB NO. J4P3465
CONTRACT ID.
PROJECT NO.
BRIDGE NO.

DESCRIPTION	DATE

MISSOURI HIGHWAYS AND TRANSPORTATION COMMISSION
105 WEST CAPITOL
JEFFERSON CITY, MO 65102
1-888-ASK-MODOT (1-888-275-6636)

IF A SEAL IS PRESENT ON THIS SHEET IT HAS BEEN ELECTRONICALLY SEALED AND DATED.

SIGN	SIZE IN.	AREA SQ.FT.	QTY EACH	TOTAL AREA SQ.FT.	QTY RELOC EACH	TOTAL RELOC SQ.FT.	SIGN NUM.	DESCRIPTION
WARNING SIGNS								
W01-1L	48X48	16.00						TURN (SYMBOL LEFT ARROW)
W01-1R	48X48	16.00						TURN (SYMBOL RIGHT ARROW)
W01-2L	48X48	16.00						CURVE (SYMBOL LEFT ARROW)
W01-2R	48X48	16.00						CURVE (SYMBOL RIGHT ARROW)
W01-3L	48X48	16.00						REVERSE TURN (SYMBOL LEFT ARROW)
W01-3R	48X48	16.00						REVERSE TURN (SYMBOL RIGHT ARROW)
W01-4L	48X48	16.00						REVERSE CURVE (SYMBOL LEFT ARROW)
W01-4R	48X48	16.00						REVERSE CURVE (SYMBOL RIGHT ARROW)
W01-4bL	48X48	16.00						DOUBLE ARROW REVERSE CURVE (SYMBOL LT ARROWS)
W01-4bR	48X48	16.00						DOUBLE ARROW REVERSE CURVE (SYMBOL RT ARROWS)
W01-4cL	48X48	16.00						TRIPLE ARROW REVERSE CURVE (SYMBOL LT ARROWS)
W01-4cR	48X48	16.00						TRIPLE ARROW REVERSE CURVE (SYMBOL RT ARROWS)
W01-6	60X30	12.50						HORIZONTAL ARROW (SYMBOL)
W01-6a	72X36	18.00						HORIZ. ARROW (SYMBOL ON PERMANENT BARRICADE)
W01-7	60X30	12.50						DOUBLE HEAD HORIZONTAL ARROW (SYMBOL)
W01-7a	72X36	18.00						DOUBLE HEAD HORIZ. ARROW (SYMBOL ON PERM. BARR.)
W01-8	18X24	3.00						CHEVRON (SYMBOL)
W01-8a	30X36	7.50						CHEVRON (SYMBOL FOR DIVIDED HIGHWAYS)
W03-1	48X48	16.00						STOP AHEAD (SYMBOL)
W03-2	48X48	16.00						YIELD AHEAD (SYMBOL)
W03-3	48X48	16.00						SIGNAL AHEAD (SYMBOL)
W03-4	48X48	16.00	5	80.00				BE PREPARED TO STOP
W03-5	48X48	16.00						SPEED LIMIT AHEAD
W04-1L	48X48	16.00						MERGE (SYMBOL FROM LEFT)
W04-1R	48X48	16.00						MERGE (SYMBOL FROM RIGHT)
W04-1aL	48X48	16.00						MERGE (ARROW SYMBOL)
W04-1aR	48X48	16.00						MERGE (ARROW SYMBOL)
W05-1	48X48	16.00						ROAD/BRIDGE/RAMP NARROWS
W05-3	48X48	16.00						ONE LANE BRIDGE
W05-5	48X48	16.00	2	32.00				NARROW LANES
W06-1	48X48	16.00						DIVIDED HIGHWAY (SYMBOL)
W06-2	48X48	16.00						DIVIDED HIGHWAY END (SYMBOL)
W06-3	48X48	16.00						TWO WAY TRAFFIC (SYMBOL)
W07-3a	30X24	5.00	7	35.00				NEXT XX MILES (PLAQUE)
W08-1	48X48	16.00						BUMP
W08-2	48X48	16.00						DIP
W08-3	48X48	16.00						PAVEMENT ENDS
W08-4	48X48	16.00						SOFT SHOULDER
W08-5	48X48	16.00						SLIPPERY WHEN WET (SYMBOL)
W08-6	48X48	16.00						TRUCK CROSSING (WITH FLAGS)
W08-6c	48X48	16.00						TRUCK ENTRANCE
W08-7	36X36	9.00						LOOSE GRAVEL
W08-7a	36X36	9.00						FRESH OIL/LOOSE GRAVEL
W08-9	48X48	16.00						LOW SHOULDER
W08-11	48X48	16.00						UNEVEN LANES
W08-12	48X48	16.00						NO CENTER LINE
W08-15	48X48	16.00						GROOVED PAVEMENT
W08-15P	30X24	5.00						MOTORCYCLE (PLAQUE)
W08-17	48X48	16.00						SHOULDER DROP-OFF (SYMBOL)
W08-17P	30X24	5.00						SHOULDER DROP-OFF (PLAQUE)
W10-1	42RND.	9.62						RAILROAD CROSSING
W012-1	24X24	4.00						DOUBLE DOWN ARROW (SYMBOL)
W012-2	48X48	16.00						LOW CLEARANCE (SYMBOL)
W012-2X	24X18	3.00						LOW CLEARANCE (PLAQUE)
W012-2a	84X24	14.00						OVERHEAD LOW CLEARANCE (FEET AND INCHES)
W012-4	120X60	50.00						LOW CLEARANCE XX FT XX IN XX MILES AHEAD
W012-5	120X60	50.00						WIDTH RESTRICTION XX FT XX IN XX MILES AHEAD
W013-1	30X30	6.25						ADVISORY SPEED (PLAQUE)
W016-2	30X24	5.00						XXX FEET (PLAQUE)
W016-3	30X24	5.00						X MILE (PLAQUE)
W020-1	48X48	16.00	5	80.00				ROAD/BRIDGE/RAMP WORK AHEAD
W020-2	48X48	16.00	4	64.00				DETOUR AHEAD
W020-3	48X48	16.00	2	32.00				ROAD CLOSED AHEAD
W020-4	48X48	16.00	3	48.00				ONE LANE ROAD AHEAD
W020-5	48X48	16.00	2	32.00				RIGHT/CENTER/LEFT LANE CLOSED AHEAD
W020-5a	48X48	16.00						2 RIGHT/CENTER/LEFT LANES CLOSED AHEAD
W020-6a	48X48	16.00	2	32.00				RIGHT/CENTER/LEFT LANE CLOSED
W020-7a	48X48	16.00						FLAGGER (SYMBOL, WITH FLAGS)
W021-2	36X36	9.00						FRESH OIL
W021-5	48X48	16.00	7	112.00				SHOULDER WORK AHEAD
W022-1	48X48	16.00						BLASTING ZONE AHEAD
W022-2	42X36	10.50						TURN OFF 2-WAY RADIO AND PHONE
W022-3	42X36	10.50						END BLASTING ZONE
G022-1	21X15	2.19						WET PAINT (ARROW PIVOTS)

SIGN	SIZE IN.	AREA SQ.FT.	QTY EACH	TOTAL SQ.FT.	QTY RELOC EACH	TOTAL RELOC SQ.FT.	SIGN NUM.	DESCRIPTION
GUIDE SIGNS								
E05-1	36X48	12.00						GORE EXIT
E05-2	48X36	12.00						EXIT OPEN
E05-2a	48X36	12.00						EXIT CLOSED
G020-1	60X24	10.00	7	70.00				ROAD WORK NEXT XX MILES
G020-2	48X24	8.00	7	56.00				END ROAD WORK
G020-4	36X18	4.50						PILOT CAR FOLLOW ME
G020-4a	42X30	8.75						PILOT CAR IN USE WAIT & FOLLOW
G020-4a	18X12	1.50						PILOT CAR IN USE WAIT & FOLLOW
G020-5aP	36X24	6.00	7	42.00				WORK ZONE (PLAQUE)
M04-8a	24X18	3.00						END DETOUR
M04-9L	48X36	12.00						DETOUR (LEFT ARROW)
M04-9R	48X36	12.00						DETOUR (RIGHT ARROW)
M04-9P	48X12	4.00						STREET NAME (PLAQUE)
M04-10L	48X18	6.00						DETOUR (ARROW LEFT)
M04-12	36x60	15.00	10	150.00				DETOUR
REGULATORY SIGNS								
R1-1	48X48	13.25						STOP
R1-2	48TRI.	6.93						YIELD
R1-2a	36X36	9.00						TO ONCOMING TRAFFIC (PLAQUE)
R1-3P	30X12	2.50						ALL WAY (PLAQUE)
R2-1	36X48	12.00	7	84.00				SPEED LIMIT XX
R3-1	48X48	16.00						NO RIGHT TURN (SYMBOL)
R3-2	48X48	16.00						NO LEFT TURN (SYMBOL)
R3-3	36X36	9.00						NO TURNS
R3-4	48X48	16.00						NO U-TURN (SYMBOL)
R3-7L	30X30	6.25						LEFT LANE MUST TURN LEFT
R3-7R	30X30	6.25						RIGHT LANE MUST TURN RIGHT
R4-1	36X48	12.00						DO NOT PASS
R4-2	36X48	12.00						PASS WITH CARE
R4-8a	36X48	12.00						KEEP LEFT (HORIZONTAL ARROW)
R4-7a	36X48	12.00	2	24.00				KEEP RIGHT (HORIZONTAL ARROW)
R5-1	30X30	6.25						DO NOT ENTER
R5-1a	36X24	6.00						WRONG WAY
R6-1L	54X18	6.75	2	13.50				ONE WAY ARROW (LEFT)
R6-1R	54X18	6.75	2	13.50				ONE WAY ARROW (RIGHT)
R6-2L	24X30	5.00						ONE WAY (LEFT)
R6-2R	24X30	5.00						ONE WAY (RIGHT)
R9-9	24X12	2.00	2	4.00				SIDEWALK CLOSED
R9-11L	24X18	3.00						SIDEWALK CLOSED AHEAD, (ARROW LEFT) CROSS HERE
R9-11R	24X18	3.00	2					SIDEWALK CLOSED AHEAD, (ARROW RIGHT) CROSS HERE
R10-6	24X36	6.00						STOP HERE ON RED (45° ARROW)
R11-2	48X30	10.00	2	20.00				ROAD CLOSED
R11-3a	60X30	12.50						ROAD CLOSED XX MILES AHEAD LOCAL TRAFFIC ONLY
R11-4	60X30	12.50	2	25.00				ROAD CLOSED TO THRU TRAFFIC
CONST-3A	60X48	20.00	6	120.00				FINE SIGN
CONST-3X	56X12	4.67						SPEEDING/PASSING (PLATE)
MISCELLANEOUS SIGNS								
CONST-5	48X36	12.00						POINT OF PRESENCE
CONST-5	96X48	32.00	2					POINT OF PRESENCE
CONST-7	48X24	8.00						RATE OUR WORK ZONE
CONST-7	72X36	18.00	2	36.00				RATE OUR WORK ZONE
CONST-8	48X36	12.00	2	24.00				WORK ZONE NO PHONE ZONE
CONST-9	96x84	56.00	6	336.00				DETOUR SIGNS
CONST-9	96x72	48.00	1	48.00				DETOUR SIGNS

	TOTAL
616-10.05 CONSTRUCTION SIGNS	1613
616-10.10 RELOCATED SIGNS	0

ITEM NUMBER	TOTAL QTY	DESCRIPTION
6122008		IMPACT ATTENUATOR 40 MPH (SAND BARRELS)
6122009		IMPACT ATTENUATOR 45 MPH (SAND BARRELS)
6122010		IMPACT ATTENUATOR 50 MPH (SAND BARRELS)
6122012		IMPACT ATTENUATOR 55 MPH (SAND BARRELS)
6122014		IMPACT ATTENUATOR 60 MPH (SAND BARRELS)
6122017		IMPACT ATTENUATOR 65 MPH (SAND BARRELS)
6122019		IMPACT ATTENUATOR 70 MPH (SAND BARRELS)
6122020		REPLACEMENT SAND BARREL
6122030		IMPACT ATTENUATOR (RELOCATION)
6123000A	2	TRUCK OR TRAILER MOUNTED ATTENUATOR (TMA)
6161008		ADVANCED WARNING RAIL SYSTEM
6161012		BUOYS (BOATS KEEP OUT)
6161013		BUOYS (NO WAKE)
6161014		SPECIAL SIGN ASSEMBLY (BOATS KEEP OUT)
6161025	140	CHANNELIZER (TRIM LINE)
6161030	12	TYPE III MOVEABLE BARRICADE
6161033		DIRECTION INDICATOR BARRICADE
6161040	2	FLASHING ARROW PANEL
6161047		TYPE III OBJECT MARKER
6161055		SEQUENTIAL FLASHING WARNING LIGHT
6161070		TUBULAR MARKER
6161095		RADAR SPEED ADVISORY SYSTEM
6161096		CHANGEABLE MESSAGE SIGN, COMMISSION FURNISHED/RETAINED
6161098A	2	CHANGEABLE MESSAGE SIGN W/O COMM. INTERFACE, CONTRACTOR FURNISHED/RETAINED
6161099		CHANGEABLE MESSAGE SIGN WITH COMM. INTERFACE, CONTRACTOR FURNISHED/RETAINED
6162000A		WORK ZONE TRAFFIC SIGNAL SYSTEM
6162002		TEMPORARY LONG-TERM RUMBLE STRIPS
6173600D		TEMPORARY TRAFFIC BARRIER CONTRACTOR FURNISHED/RETAINED
6173602B		TEMPORARY TRAFFIC BARRIER CONTRACTOR FURNISHED/COMMISSION RETAINED
6174000A		TEMP. TRAFFIC BARRIER HEIGHT TRANSITION
6175010A		RELOCATING TEMPORARY TRAFFIC BARRIER
6176000B		TEMPORARY TRAFFIC BARRIER COMMISSION FURNISHED/RETAINED
6177000B		TEMP. TRAFFIC BARRIER HEIGHT TRANSITION COMMISSION FURNISHED/RETAINED
6208064A		TEMPORARY RAISED PAVEMENT MARKER
9029400		TEMPORARY TRAFFIC SIGNALS
9029401		TEMPORARY TRAFFIC SIGNALS AND LIGHTING
6169902	4	MISC.(ADA COMPLIANT MOVEABLE BARRICADE)

QUANTITY SHEET
SHEET 3 OF 3

STATE OF MISSOURI
SEAN M. DOMINGO
NUMBER PE-2022001607
PROFESSIONAL ENGINEER
08:01:2023 1:15:38 PM
SEAN M. DOMINGO - CIVIL
MO-PE-2022001607

DATE PREPARED 8/1/2023

ROUTE	STATE
69	MO
DISTRICT	SHEET NO.
KC	3

COUNTY CLAY

JOB NO. J4P3465

CONTRACT ID.

PROJECT NO.

BRIDGE NO.

DESCRIPTION	DATE

IF A SEAL IS PRESENT ON THIS SHEET IT HAS BEEN ELECTRONICALLY SEALED AND DATED.

MISSOURI HIGHWAYS AND TRANSPORTATION COMMISSION
105 WEST CAPITOL
JEFFERSON CITY, MO 65102
1-888-ASK-MODOT (1-888-275-6636)

NOTE:
THE STA. TO STA. ON ALL ADA CURB RAMP BUILT NOTES
ARE NOT INTENDED TO BE THE ACTUAL LENGTH OF THE CURB RAMPS.
THE INTENT IS TO GIVE THE CONTRACTOR THE GENERAL LOCATION OF THE
ADA CURB RAMP AND EACH CURB RAMP MAY BE LONGER OR SHORTER DEPENDING
ON SITE CONDITIONS.

NOTE:
ALL ENTRANCES, DRAINAGE STRUCTURES, SIGNS, SIGNAL, LIGHTNING AND PVM'T. MARKINGS
ARE STATIONED OFF FROM RTE. 69 CENTER LINE (CL-US69)
SIDEWALK TIED TO THE RETAINING WALL AT POE STREET IS STATIONED OFF FROM ROUTE 69 C/L
ALL SIDEWALKS EXCEPT THE SIDEWALK TIED TO THE RETAINING WALL AT POET STREET
ARE STATIONED OFF FROM THE SIDEWALK BASE LINE
(BL1 - SSIDEWALK, BL2- NSIDEWALK8, Drake2)

NOTE:
REMOVE THE MIDDLE BENT 3' BELOW THE EXISTING GROUND LEVEL AND
FILL WITH SUITABLE MATERIAL, AND COVER WITH TOP SOIL AND SODDING
AS PER THE ENGINEER'S APPROVAL. NO DIRECT PAYMENT FOR SUITABLE
MATERIAL.

KEEP THE END BENTS IN PLACE.

LITTRELL
RAYMOND
CHRISTOPHER

(2)
SEE SHEET 20

(1)
KMS ENTERPRISES LLC.
TEMP. ESM'T.: 1531 SQFT
REMAINING: 14375 SQFT

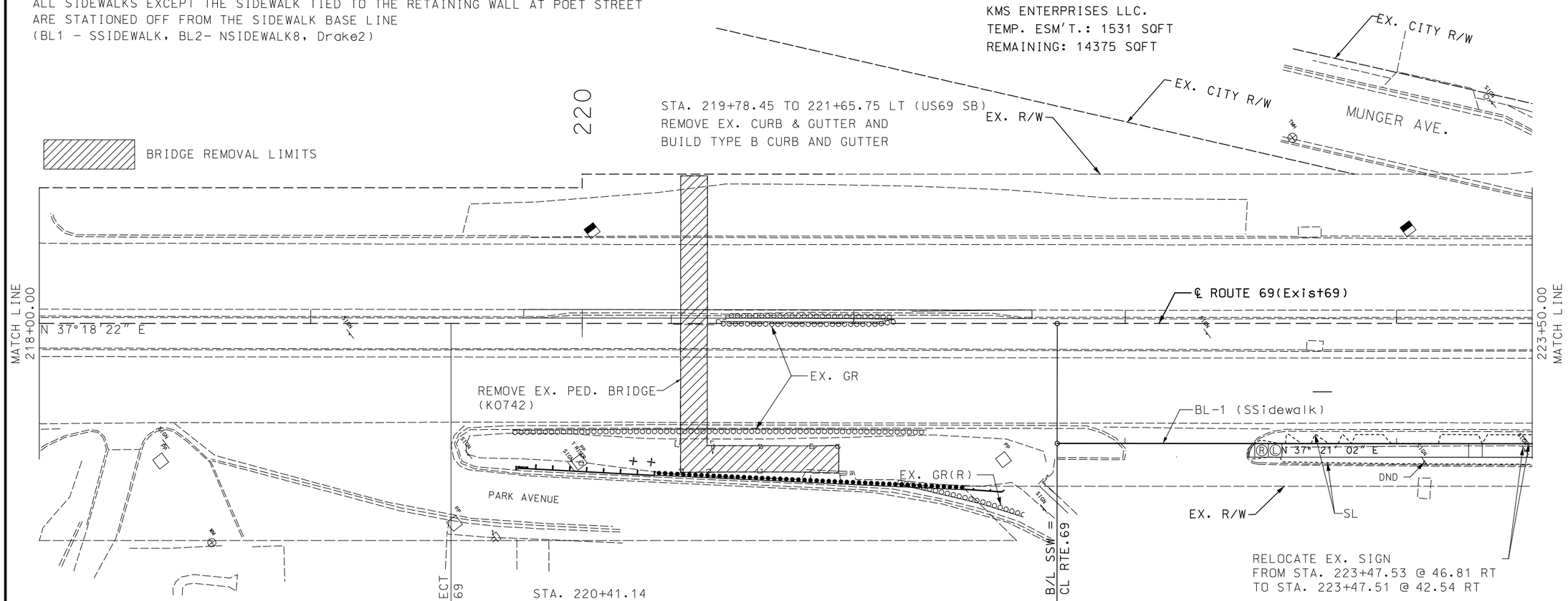

RELOCATE EX. SIGN
FROM STA. 223+47.53 @ 46.81 RT
TO STA. 223+47.51 @ 42.54 RT

STA. 222+45.00 TO 223+71.16 (BL1)
BUILD ADA COMPLIANT
5' CONC. SIDEWALK, LANDING
AND CURB RAMPS

STA. 220+41.14
REMOVE EX. PED. BRIDGE

STA. 219+74.31 - 221+26.73
ROUTE 69 NB, RIGHT LANE
REMOVE EX. GUARDRAIL

STA. 220+50.79 - 221+14.90
ROUTE 69 NB & SB, LEFT LANE
REMOVE EX. GUARDRAIL

REMOVE EX. GUARDRAIL,
STA.220+16.30 TO 221+41.30
BUILD MGS GUARDRAIL, 8' POSTS, 6'-3" SPACING
TYPE A CET(MASH)(WEST SIDE)
1 END ANCHOR (EAST SIDE)

ANY WORK INDICATED ON THE PLANS THAT
EXTENDS BEYOND THE PROJECT LIMITS IS
CONSIDERED INCIDENTAL TO AND A PART OF
THE CONSTRUCTION OF THIS PROJECT

Ⓡ RAMP
Ⓛ LANDING

SCALE
0 20 40 60

PLAN/PROFILE SHEET
SHEET 1 OF 15

STATE OF MISSOURI
SEAN M. DOMINGO
NUMBER
PE-2022001607
PROFESSIONAL ENGINEER
08/15/2023 1:06:41 PM
SEAN M. DOMINGO - CIVIL
MO-PE-2022001607

DATE PREPARED	
8/15/2023	
ROUTE 69	STATE MO
DISTRICT KC	SHEET NO. 4
COUNTY CLAY	
JOB NO. J4P3465	
CONTRACT ID.	
PROJECT NO.	
BRIDGE NO.	

DATE	DESCRIPTION

IF A SEAL IS PRESENT ON THIS SHEET IT HAS BEEN ELECTRONICALLY SEALED AND DATED.

MISSOURI HIGHWAYS AND TRANSPORTATION COMMISSION
105 WEST CAPITOL
JEFFERSON CITY, MO 65102
1-888-ASK-MODOT (1-888-275-6636)

NOTE:
PROFILES FOR THE SIDEWALK IN THESE PLANS ARE FOR INFORMATION ONLY AND IS USED TO GET A GENERAL IDEA FOR THE EARTHWORK QUANTITIES AND THE LOCATION OF THE CONSTRUCTION LIMITS ONLY. THE VERTICAL ALIGNMENT OF THE SIDEWALK CAN VARY FROM THE PROFILES SHOWN IN THESE PLANS.

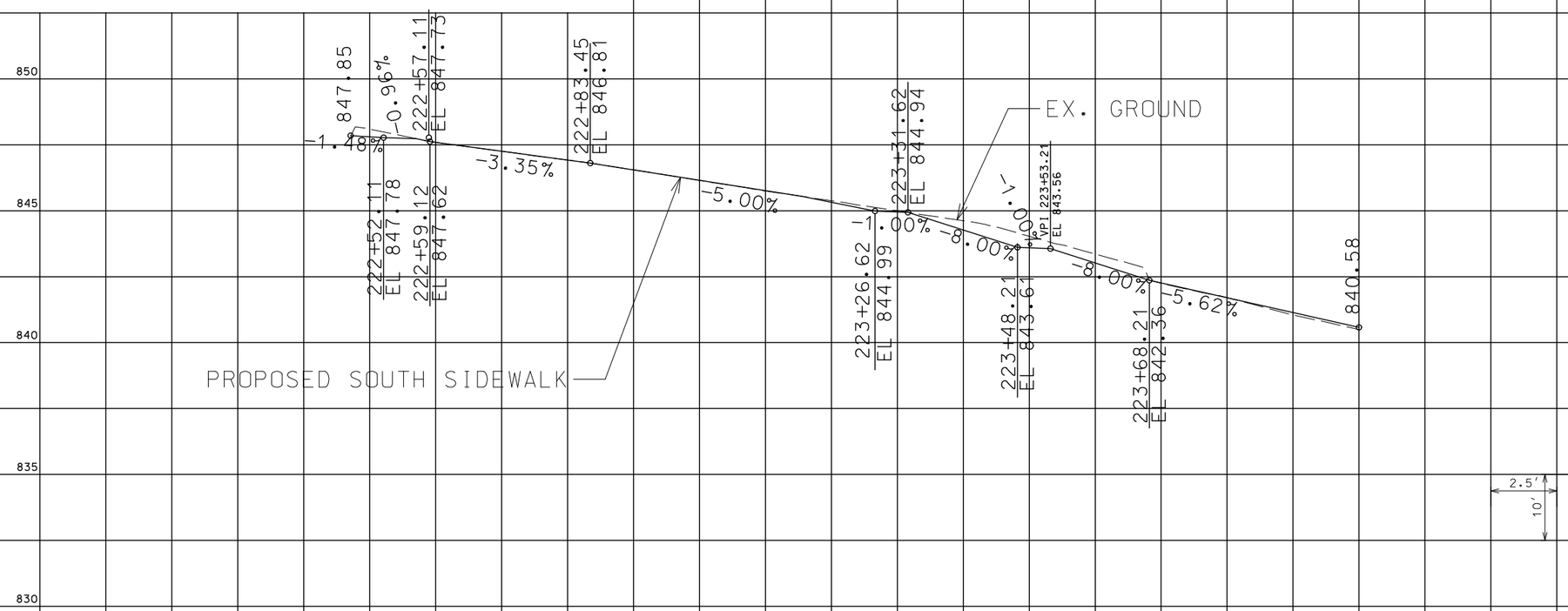

PLAN/PROFILE SHEET
SHEET 2 OF 15

STATE OF MISSOURI
SEAN M. DOMINGO
NUMBER
PE-2022001607
PROFESSIONAL ENGINEER

07/31/2023 2:34:27 PM
SEAN M. DOMINGO - CIVIL
MO-PE-2022001607

DATE PREPARED	
7/31/2023	
ROUTE	STATE
69	MO
DISTRICT	SHEET NO.
KC	5
COUNTY	
CLAY	
JOB NO.	
J4P3465	
CONTRACT ID.	
PROJECT NO.	
BRIDGE NO.	

DATE	DESCRIPTION

MISSOURI HIGHWAYS AND TRANSPORTATION COMMISSION
105 WEST CAPITOL
JEFFERSON CITY, MO 65102
1-888-ASK-MODOT (1-888-275-6636)

IF A SEAL IS PRESENT ON THIS SHEET IT HAS BEEN ELECTRONICALLY SEALED AND DATED.

STA. 223+28.35 TO 223+39.87 (BL2)
BUILD 4′ ADA COMPLIANT
CONC. SIDEWALK WITH
TYPE A INTEGRAL CURB

STA. 223+95.67 TO 224+18.08 (BL2)
BUILD 4′ ADA COMPLIANT
CONC. SIDEWALK WITH
TYPE A INTEGRAL CURB

STA. 224+35.53 TO 224+86.30 (BL2)
BUILD 4′ ADA COMPLIANT
CONC. SIDEWALK WITH CURB
LANDING AND CURB RAMPS WITH
TYPE A INTEGRAL CURB

STA. 225+35.34 TO 225+98.78 (BL2)
BUILD 5′ ADA COMPLIANT
CONC. SIDEWALK, LANDINGS
AND CURB RAMPS

STA. 226+42.61 TO 226+65.96 (BL2)
BUILD 5′ADA COMPLAINT
CONC. SIDEWALK, LANDINGS
AND CURB RAMPS

STA. 227+10.56 TO 228+35.54 (BL2)
BUILD 5′ ADA COMPLIANT
CONC. SIDEWALK, LANDINGS
CURB RAMPS
AND TRUNCATED DOMES

(2)
LITTRELL RAYMOND CHRISTOPHER
TEMP. ESM′T.: 1037 SQFT
REMAINING: 122839 SQFT

(3)
HALLMAN MANAGEMENT CORP.
TEMP. ESM′T.: 949 SQFT
REMAINING: 70132 SQFT

STA. 224+62.23 LT.
SAW CUT & REMOVE PARTIAL EX.APPR.,
REBUILD 8″ TCK. CONC. APPR.,
WITH 4′ ADA COMPLIANT SIDEWALK

STA. 225+31.15 LT.
SAW CUT & REMOVE PARTIAL EX.APPR.,
REBUILD 8″ TCK. CONC. APPR.,
WITH 4′ ADA COMPLIANT SIDEWALK

STA. 226+06.44 LT.
SAW CUT & REMOVE PARTIAL EX.APPR.,
REBUILD 8″ TCK. CONC. APPR.,
WITH 4′ ADA COMPLIANT SIDEWALK
AND CURB & GUTTER

STA. 227+14.83 LT.
SAW CUT & REMOVE PARTIAL EX. APPR.
AND REBUILD 8″ TCK. CONC. APPR.,
WITH 5′ ADA COMPLIANT SIDEWALK

STA. 227+82.10 LT.
SAW CUT & REMOVE PARTIAL EX.APPR.,
REBUILD 8″ TCK. CONC. APPR.,
WITH 5′ ADA COMPLIANT SIDEWALK

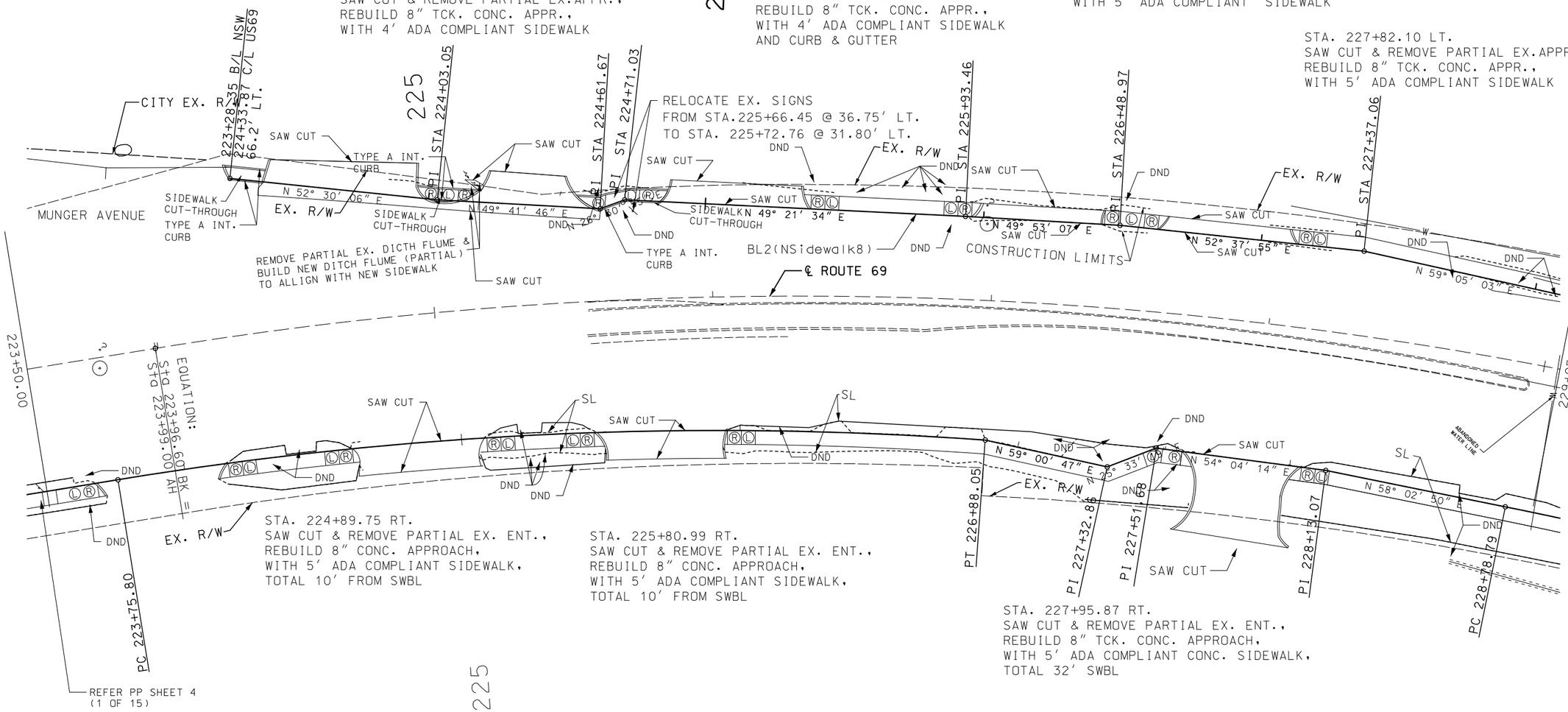

STA. 224+89.75 RT.
SAW CUT & REMOVE PARTIAL EX. ENT.,
REBUILD 8″ CONC. APPROACH,
WITH 5′ ADA COMPLIANT SIDEWALK,
TOTAL 10′ FROM SWBL

STA. 225+80.99 RT.
SAW CUT & REMOVE PARTIAL EX. ENT.,
REBUILD 8″ CONC. APPROACH,
WITH 5′ ADA COMPLIANT SIDEWALK,
TOTAL 10′ FROM SWBL

STA. 227+95.87 RT.
SAW CUT & REMOVE PARTIAL EX. ENT.,
REBUILD 8″ TCK. CONC. APPROACH,
WITH 5′ ADA COMPLIANT CONC. SIDEWALK,
TOTAL 32′ SWBL

CURVE SIDEWALK_3
PI 225+32.65
PC 223+75.80
PT 226+88.05
Δ 13° 28′ 16.8″ (RT)
D 4° 18′ 51.6″
L 312.25′
T 156.85′
R 1,328.03′

STA. 224+11.60 TO 224+63.56 (BL1)
BUILD 5′ ADA COMPLIANT
CONC. SIDEWALK , LANDINGS
AND CURB RAMPS

STA. 225+05.98 TO 225+51.89(BL1)
BUILD 5′ ADA COMPLIANT
CONC. SIDEWALK, LANDINGS
AND CURB RAMPS

HUSBENET JAMES D

(4)
BARRERA INC.
TEMP. ESM′T.: 647 SQFT
REMAINING: 37029 SQFT

STA. 225+93.86 TO 227+66.13 (BL1)
BUILD 5′ ADA COMPLIANT
CONC. SIDEWALK, LANDINGS
AND CURB RAMPS

(5)
R & B COMMERCIAL, LLC.
TEMP. ESM′T.: 1441 SQFT
REMAINING: 18731 SQFT

STA. 227+99.56 TO 230+45.82 (BL1)
BUILD 5′ ADA COMPLIANT
CONC. SIDEWALK, LANDINGS
AND CURB RAMPS

SCALE
0 20 40 60

PIAN/ PROFILE SHEET
SHEET 3 OF 15

STATE OF MISSOURI
SEAN M. DOMINGO
NUMBER
PE-2022001607
PROFESSIONAL ENGINEER
07/31/2023 2:36:27 PM
SEAN M. DOMINGO - CIVIL
MO-PE-2022001607

DATE PREPARED	
7/31/2023	
ROUTE 69	STATE MO
DISTRICT KC	SHEET NO. 6
COUNTY CLAY	
JOB NO. J4P3465	
CONTRACT ID.	
PROJECT NO.	
BRIDGE NO.	

DATE	DESCRIPTION

MISSOURI HIGHWAYS AND TRANSPORTATION COMMISSION
105 WEST CAPITOL
JEFFERSON CITY, MO 65102
1-888-ASK-MODOT (1-888-275-6636)

IF A SEAL IS PRESENT ON THIS SHEET IT HAS BEEN ELECTRONICALLY SEALED AND DATED.

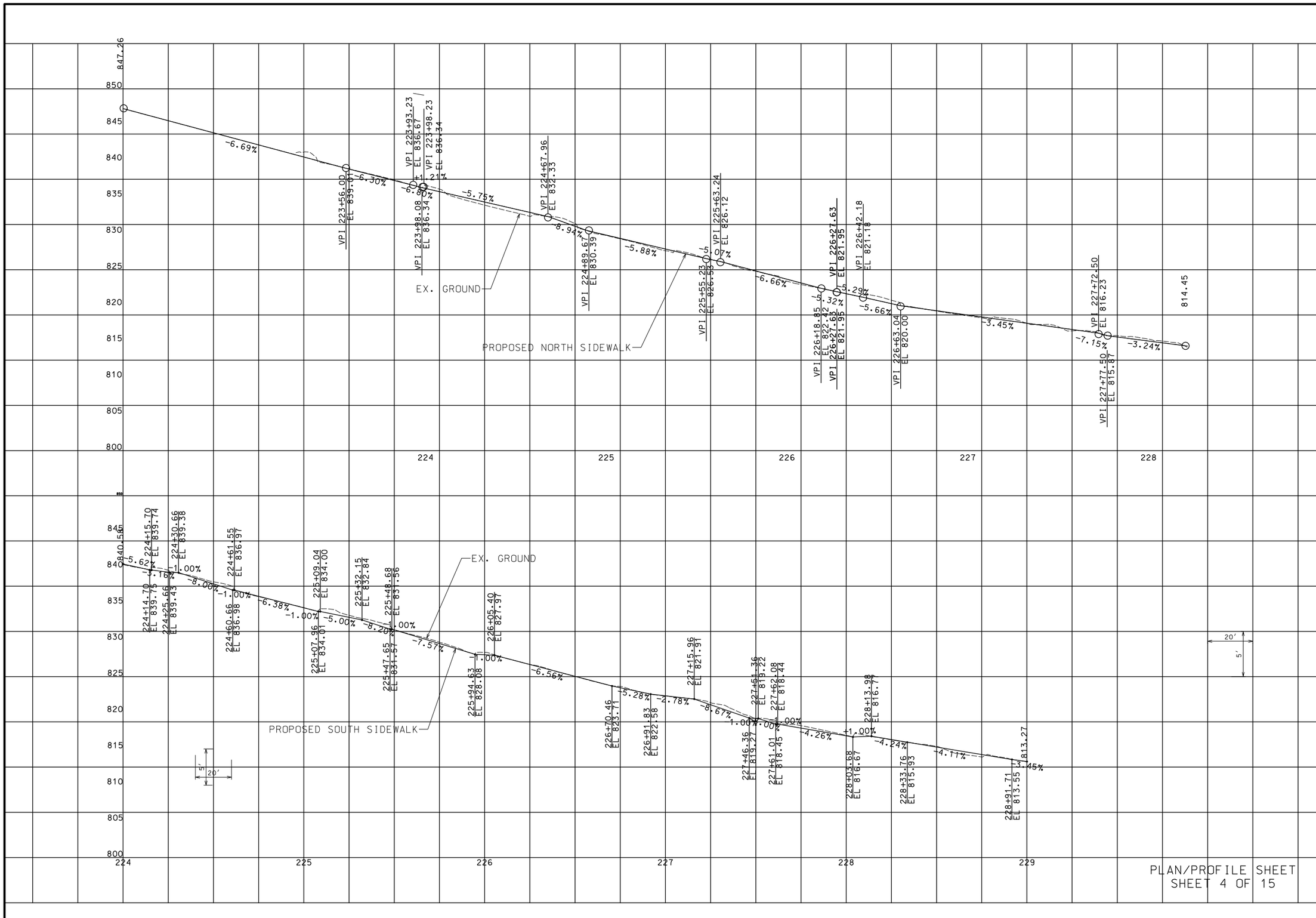

PLAN/PROFILE SHEET
SHEET 4 OF 15

STATE OF MISSOURI
SEAN M. DOMINGO
NUMBER
PE-2022001607
PROFESSIONAL ENGINEER

07-31/2023 2:38:00 PM
SEAN M. DOMINGO - CIVIL
MO-PE-2022001607

DATE PREPARED
7/31/2023

ROUTE	STATE
69	MO
DISTRICT	SHEET NO.
KC	7

COUNTY
CLAY

JOB NO.
J4P3465

CONTRACT ID.

PROJECT NO.

BRIDGE NO.

DATE	DESCRIPTION

MISSOURI HIGHWAYS AND TRANSPORTATION COMMISSION

105 WEST CAPITOL
JEFFERSON CITY, MO 65102
1-888-ASK-MODOT (1-888-275-6636)

IF A SEAL IS PRESENT ON THIS SHEET IT HAS BEEN ELECTRONICALLY SEALED AND DATED.

STA. 229+66.62 TO 229+99.13(US69 C/L)
TIE CONC. CLASS B-1 RET. WALL AND
HANDRAIL WITH BALUSTERS TO
CONC. SIDEWALK, LANDINGS AND
CURB RAMPS

RELOCATE EX. SIGN
STA. 229+20.46, 34.6′ LT.
STA.229+23.90, 31.8′ LT.

STA. 229+31.40 TO 229+59.80(US69 C/L)
SAW CUT & REMOVE
MARKED EX. ASPH. PVM′T.
REPLACE OPTIONAL PVM′T.

STA. 229+59.48 TO 230+06.96 (US69 C/L)
BUILD ADA COMPLIANT
CONC. SIDEWALK, LANDINGS
CURB RAMPS
AND TRUNCATED DOMES AND
CURB & GUTTER
TIE TO RETAINING WALL

CURVE TMPBL1_7
PI 0+41.53
PC 0+16.52
PT 0+56.49
Δ 87° 14′ 58.0″ (LT)
D 218° 16′ 10.7″
L 39.97′
T 25.02′
R 26.25′

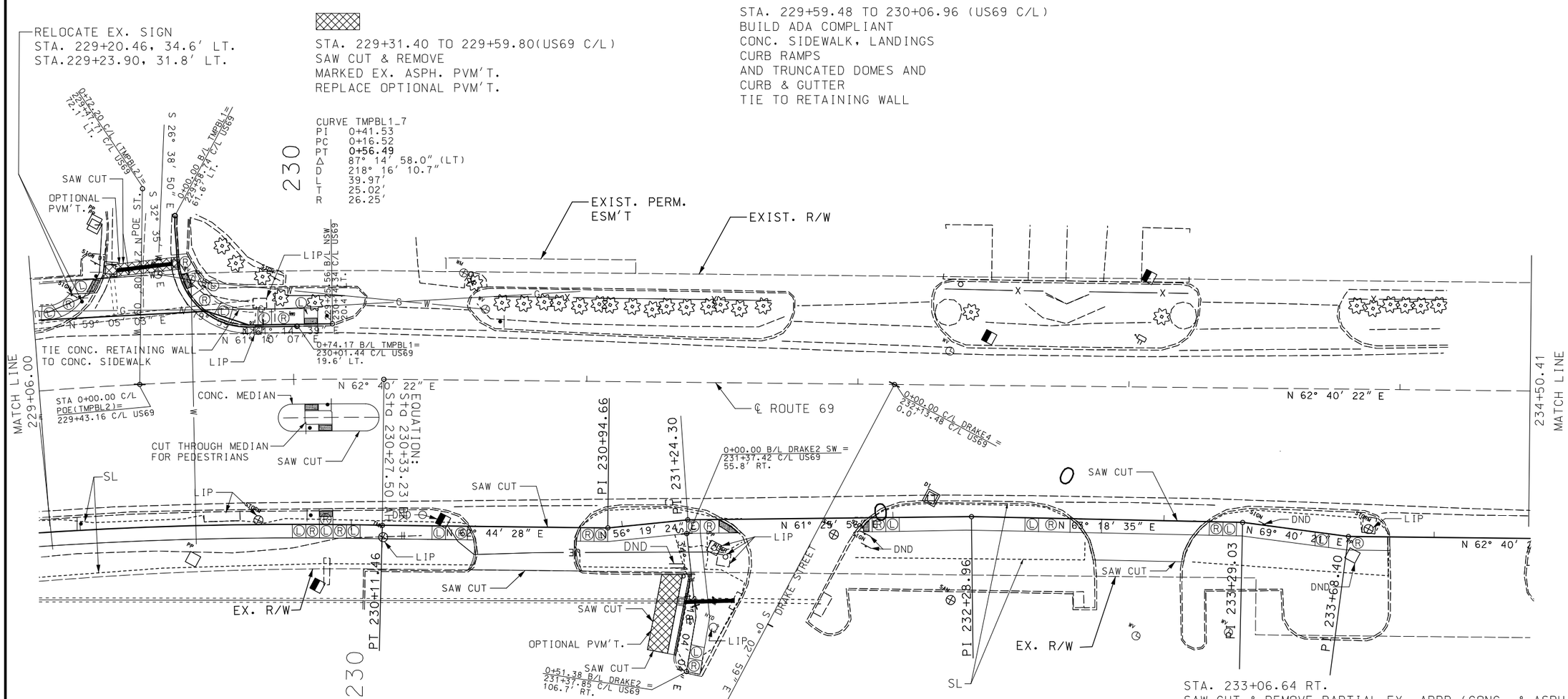

STA. 230+80.57 RT.
SAW CUT & REMOVE PARTIAL
EX. ENT.(CONC. & ASPH.),
REBUILD 8″ TCK. CONC.APPROACH
WITH 5′ ADA COMPLIANT CONC. SIDEWALK,
TOTAL 16′ FROM SWBL

STA. 231+39.11 TO 231+33.69(US69 C/L)
SAW CUT, REMOVE & REPLACE
EX. CURB & GUTTER TYPE B
SLOPE TO NEW DROP INLET

STA. 233+06.64 RT.
SAW CUT & REMOVE PARTIAL EX. APPR.(CONC. & ASPH.),
REBUILD 8″ TCK. CONC. APPROACH
WITH 5′ ADA COMPLIANT CONC. SIDEWALK,
TOTAL 15′ FROM SWBL

CURVE CL69
PI 227+21.40
PC 223+99.00
PT 230+33.23
Δ 25° 22′ 00.0″ (RT)
D 3° 59′ 58.5″
L 634.23′
T 322.40′
R 1,432.54′
S.E. 0.00%

6

CLAYCOMO VILLAGE OF
TEMP. ESM′T.: 2093 SQFT
REMAINING: 68389 SQFT

STA. 230+82.57 TO 231+44.02 (BL1)
BUILD 5′ ADA COMPLIANT
CONC. SIDEWALK, LANDINGS
CURB RAMPS
AND TRUNCATED DOMES

STA. 000+00.00 TO 000+51.38 (Drake2)
BUILD 5′ ADA COMPLIANT
CONC. SIDEWALK, LANDING
CURB RAMP

STA. 231+36.11 TO 231+30.69(US69 C/L)
SAW CUT & REMOVE
MARKED EX. PARKING LOT
REPLACE OPTIONAL PVM′T.
SLOPE TO NEW DROP INLET

STA. 231+86.00 TO 232+71.24(BL1)
BUILD 5′ ADA COMPLAINT
CONC. SIDEWALK, LANDINGS
CURB RAMPS
AND TRUNCATED DOMES

STA. 233+10.87 TO 233+83.79(BL1)
BUILD 5′ ADA COMPLAINT
CONC. SIDEWALK, LANDINGS
AND CURB RAMPS

SCALE
0 20 40 60

PLAN/PROFILE SHEET
SHEET 5 OF 15

STATE OF MISSOURI
SEAN M. DOMINGO
NUMBER PE-2022001607
PROFESSIONAL ENGINEER
08/09/2023 2:01:00 PM
SEAN M. DOMINGO - CIVIL
MO-PE-2022001607

DATE PREPARED	
8/9/2023	
ROUTE 69	STATE MO
DISTRICT KC	SHEET NO. 8
COUNTY CLAY	
JOB NO. J4P3465	
CONTRACT ID.	
PROJECT NO.	
BRIDGE NO.	

DATE	DESCRIPTION

MISSOURI HIGHWAYS AND TRANSPORTATION COMMISSION
105 WEST CAPITOL
JEFFERSON CITY, MO 65102
1-888-ASK-MODOT (1-888-275-6636)

IF A SEAL IS PRESENT ON THIS SHEET IT HAS BEEN ELECTRONICALLY SEALED AND DATED.

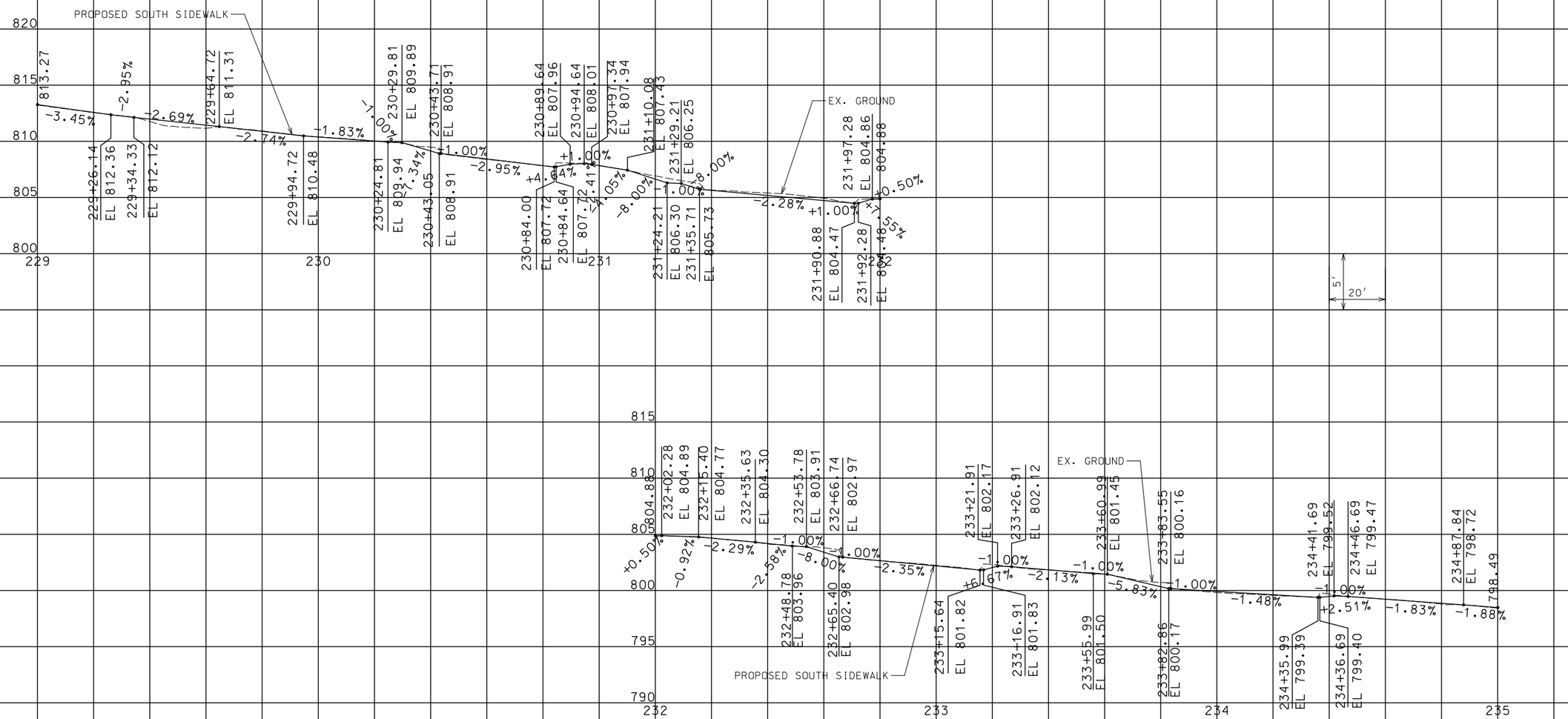

PLAN/PROFILE SHEET
SHEET 6 OF 15

STATE OF MISSOURI
SEAN M. DOMINGO
NUMBER
PE-2022001607
PROFESSIONAL ENGINEER

07-31/2023 2:40:10 PM
SEAN M. DOMINGO - CIVIL
MO-PE-2022001607

DATE PREPARED	
7/31/2023	
ROUTE 69	STATE MO
DISTRICT KC	SHEET NO. 9
COUNTY CLAY	
JOB NO. J4P3465	
CONTRACT ID.	
PROJECT NO.	
BRIDGE NO.	

DATE	DESCRIPTION

MISSOURI HIGHWAYS AND TRANSPORTATION COMMISSION

105 WEST CAPITOL
JEFFERSON CITY, MO 65102
1-888-ASK-MODOT (1-888-275-6636)

IF A SEAL IS PRESENT ON THIS SHEET IT HAS BEEN ELECTRONICALLY SEALED AND DATED.

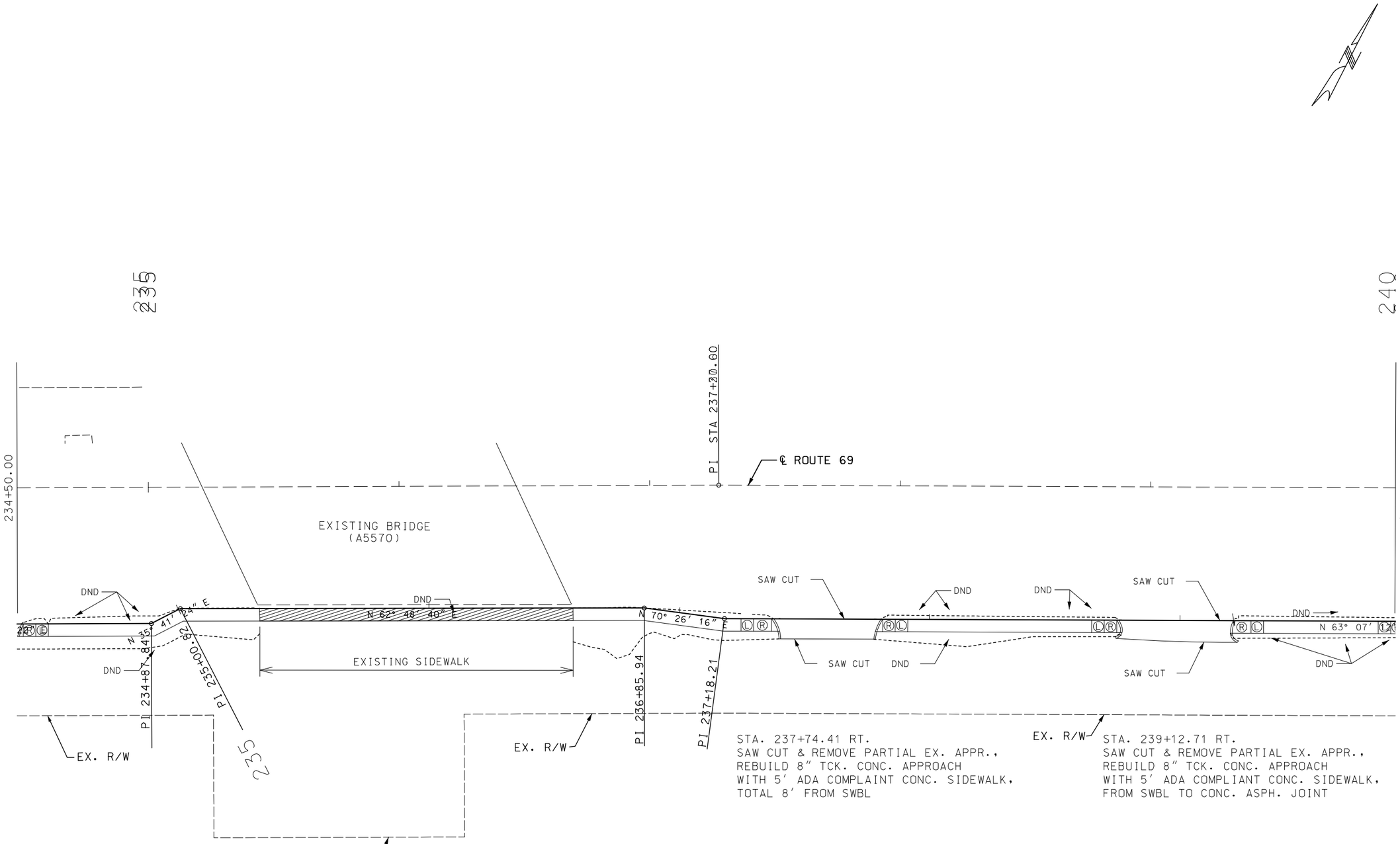

PLAN/PROFILE SHEET
SHEET 7 OF 15

STATE OF MISSOURI
SEAN M. DOMINGO
NUMBER
PE-2022001607
PROFESSIONAL ENGINEER

07-31/2023 2:41:28 PM
SEAN M. DOMINGO - CIVIL
MO-PE-2022001607

DATE PREPARED	
7/31/2023	
ROUTE 69	STATE MO
DISTRICT KC	SHEET NO. 10
COUNTY CLAY	
JOB NO. J4P3465	
CONTRACT ID.	
PROJECT NO.	
BRIDGE NO.	

DATE	DESCRIPTION

IF A SEAL IS PRESENT ON THIS SHEET IT HAS BEEN ELECTRONICALLY SEALED AND DATED.

MISSOURI HIGHWAYS AND TRANSPORTATION COMMISSION
105 WEST CAPITOL
JEFFERSON CITY, MO 65102
1-888-ASK-MODOT (1-888-275-6636)

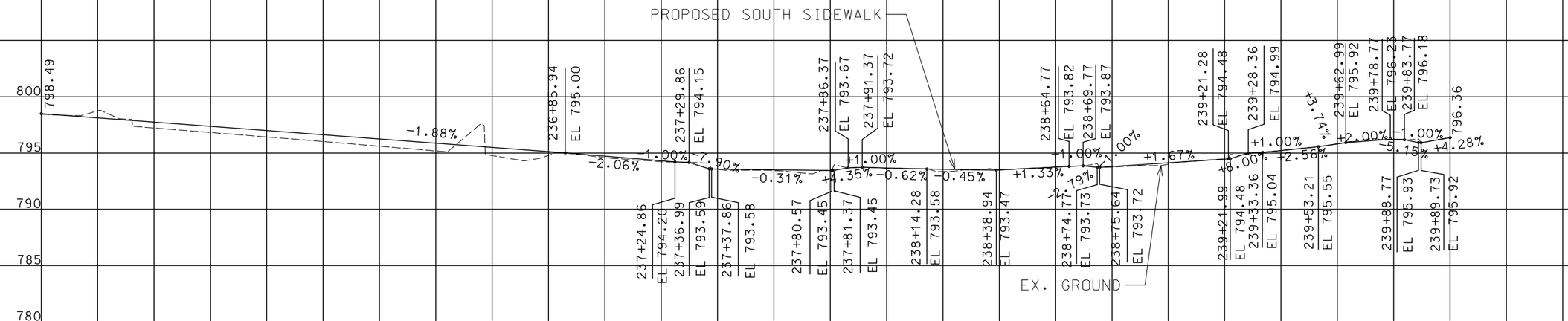

PLAN/PROFILE SHEET
SHEET 8 OF 15

STATE OF MISSOURI
SEAN M. DOMINGO
NUMBER
PE-2022001607
PROFESSIONAL ENGINEER

07-31/2023 2:43:06 PM
SEAN M. DOMINGO - CIVIL
MO-PE-2022001607

DATE PREPARED	
7/31/2023	
ROUTE	STATE
69	MO
DISTRICT	SHEET NO.
KC	11
COUNTY	
CLAY	
JOB NO.	
J4P3465	
CONTRACT ID.	
PROJECT NO.	
BRIDGE NO.	

DATE	DESCRIPTION

MISSOURI HIGHWAYS AND TRANSPORTATION COMMISSION

105 WEST CAPITOL
JEFFERSON CITY, MO 65102
1-888-ASK-MODOT (1-888-275-6636)

IF A SEAL IS PRESENT ON THIS SHEET IT HAS BEEN ELECTRONICALLY SEALED AND DATED.

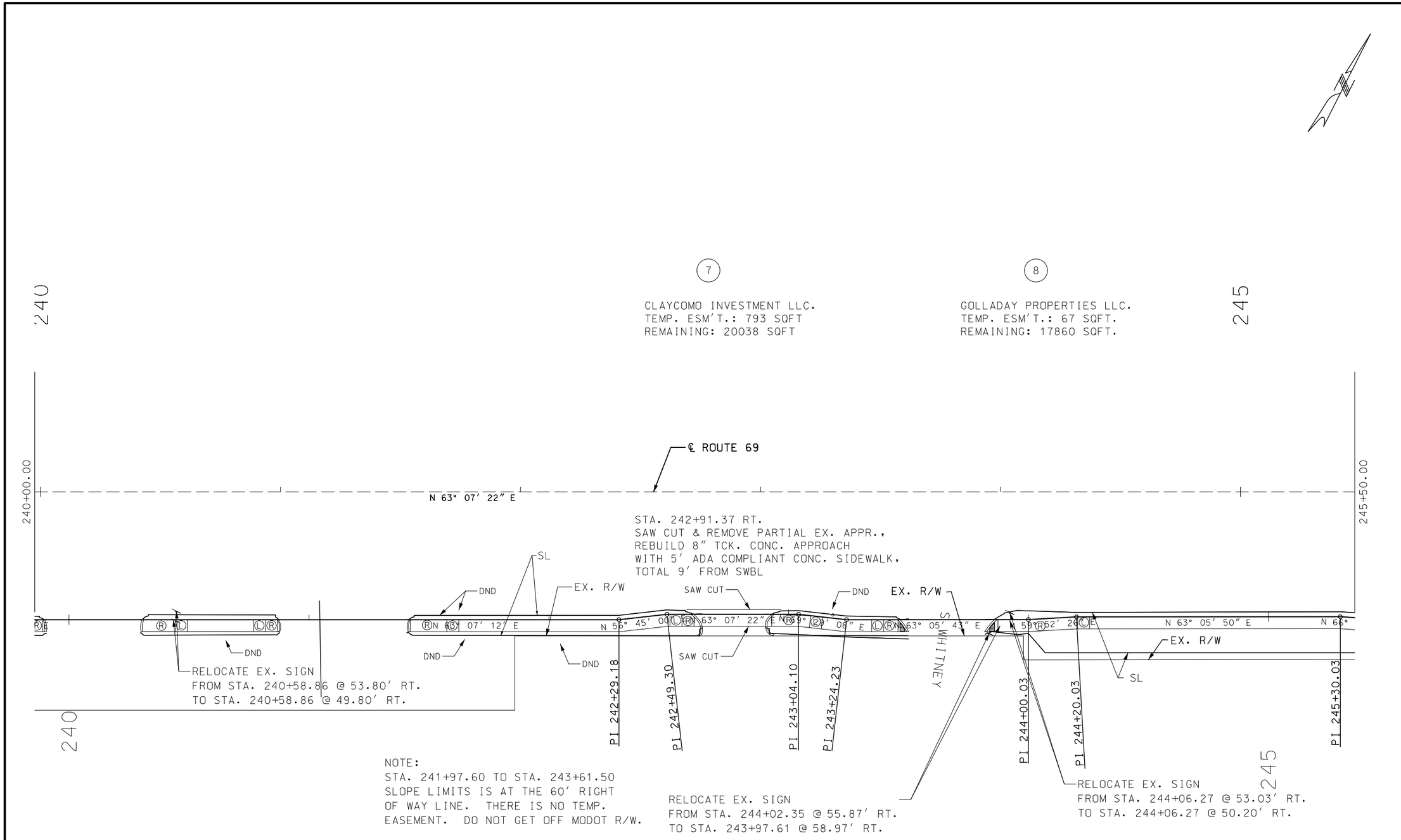

STA. 240+30.06 TO 240+87.84 (BL1)
BUILD 5' ADA COMPLIANT
CONC. SIDEWALK AND
CONC. CURB RAMPS

STA. 241+41.34 TO 242+63.96 (BL1)
BUILD 5' ADA COMPLIANT
CONC. SIDEWALK AND
CONC. CURB RAMPS

STA. 242+90.29 TO 243+50.08 (BL1)
BUILD 5' ADA COMPLIANT
CONC. SIDEWALK,
CONC. CURB RAMPS AND
TRUNCATED DOMES

STA. 243+81.86 TO 246+76.82 (BL1)
BUILD 5' ADA COMPLIANT
CONC. SIDEWALK, LANDINGS
CURB RAMPS
AND TRUNCATED DOMES

PLAN/PROFILE SHEET
SHEET 9 OF 15

STATE OF MISSOURI
SEAN M. DOMINGO
NUMBER
PE-2022001607
PROFESSIONAL ENGINEER

08/15/2023 1:16:32 PM
SEAN M. DOMINGO - CIVIL
MO-PE-2022001607

DATE PREPARED	
8/15/2023	
ROUTE 69	STATE MO
DISTRICT KC	SHEET NO. 12
COUNTY CLAY	
JOB NO. J4P3465	
CONTRACT ID.	
PROJECT NO.	
BRIDGE NO.	

DATE	DESCRIPTION

MISSOURI HIGHWAYS AND TRANSPORTATION COMMISSION
105 WEST CAPITOL
JEFFERSON CITY, MO 65102
1-888-ASK-MODOT (1-888-275-6636)

IF A SEAL IS PRESENT ON THIS SHEET IT HAS BEEN ELECTRONICALLY SEALED AND DATED.

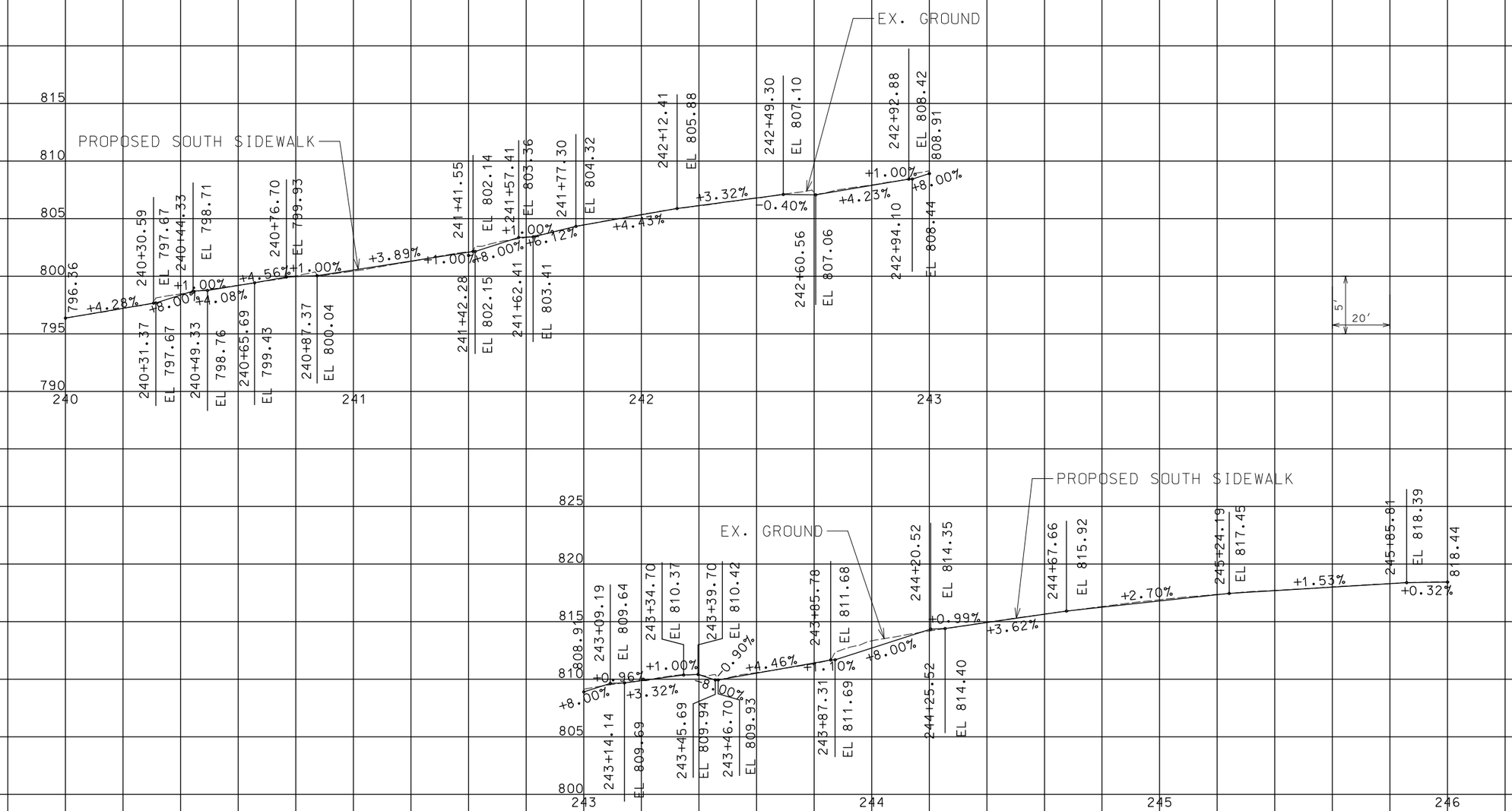

PLAN/PROFILE SHEET
SHEET 10 OF 15

STATE OF MISSOURI
SEAN M. DOMINGO
NUMBER
PE-2022001607
PROFESSIONAL ENGINEER

07/31/2023 2:45:46 PM
SEAN M. DOMINGO - CIVIL
MO-PE-2022001607

DATE PREPARED	
7/31/2023	
ROUTE 69	STATE MO
DISTRICT KC	SHEET NO. 13
COUNTY CLAY	
JOB NO. J4P3465	
CONTRACT ID.	
PROJECT NO.	
BRIDGE NO.	

DATE	DESCRIPTION

MISSOURI HIGHWAYS AND TRANSPORTATION COMMISSION

105 WEST CAPITOL
JEFFERSON CITY, MO 65102
1-888-ASK-MODOT (1-888-275-6636)

IF A SEAL IS PRESENT ON THIS SHEET IT HAS BEEN ELECTRONICALLY SEALED AND DATED.

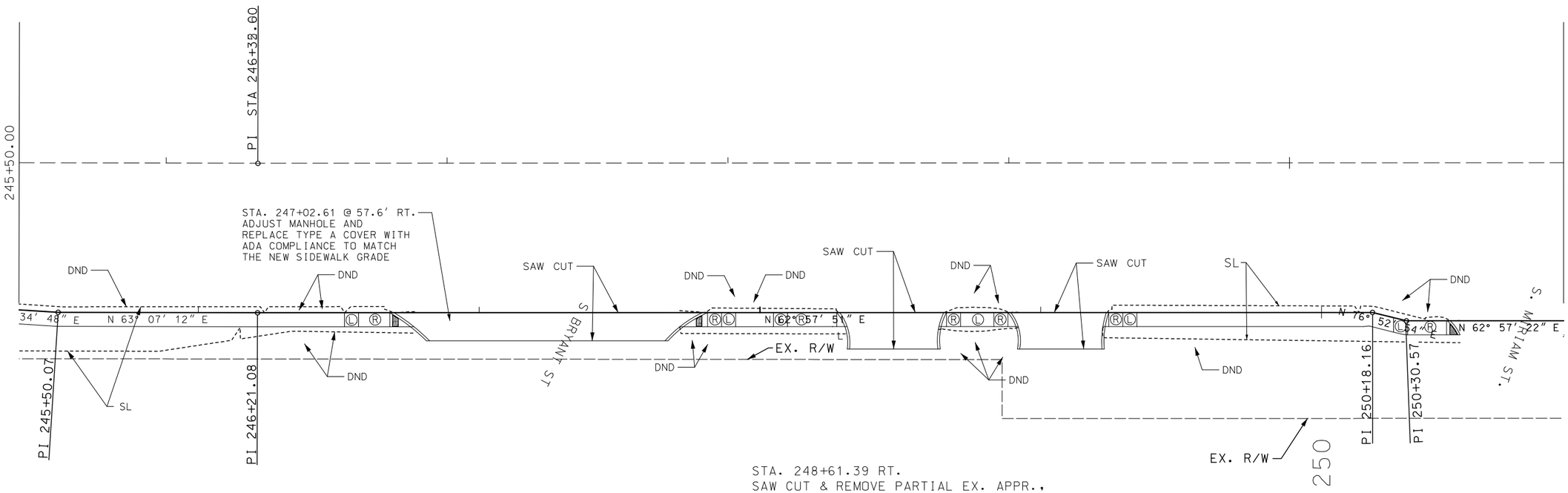

STA. 247+40.49 RT.
SAW CUT & REMOVE PARTIAL EX. ST.,
REBUILD 8" TCK. CONC. STREET
WITH 5' ADA COMPLIANT CONC. SIDEWALK,
TOTAL 10' FROM SWBL

STA. 248+61.39 RT.
SAW CUT & REMOVE PARTIAL EX. APPR.,
REBUILD 8" TCK. CONC. APPROACH
WITH 5' ADA COMPLIANT
CONC. SIDEWALK,
TOTAL 13' FROM SWBL

STA. 249+21.13 RT.
SAW CUT & REMOVE PARTIAL EX. APPR.,
REBUILD 8" TCK. CONC. APPROACH
WITH 5' ADA COMPLAINT CONC. SIDEWALK,
TOTAL 13' FROM SWBL

STA. 247+71.46 TO 248+31.09 (BL1)
BUILD 5' ADA COMPLIANT
CONC. SIDEWALK, LANDINGS
CURB RAMPS
AND TRUNCATED DOMES

STA. 248+63.72 TO 248+92.00 (BL1)
BUILD 5' ADA COMPLAINT
CONC. SIDEWALK, LANDING
AND CURB RAMPS

STA. 249+22.14 TO 250+49.71 (BL1)
BUILD 5' ADA COMPLIANT
CONC. SIDEWALK, LANDINGS
CURB RAMPS
AND TRUNCATED DOMES

SCALE
0 20 40 60

PLAN/PROFILE SHEET
SHEET 11 OF 15

STATE OF MISSOURI
SEAN M. DOMINGO
NUMBER
PE-2022001607
PROFESSIONAL ENGINEER

07/31/2023 2:46:38 PM
SEAN M. DOMINGO - CIVIL
MO-PE-2022001607

DATE PREPARED	
7/31/2023	
ROUTE 69	STATE MO
DISTRICT KC	SHEET NO. 14
COUNTY CLAY	
JOB NO. J4P3465	
CONTRACT ID.	
PROJECT NO.	
BRIDGE NO.	

DATE	DESCRIPTION

MISSOURI HIGHWAYS AND TRANSPORTATION COMMISSION
105 WEST CAPITOL
JEFFERSON CITY, MO 65102
1-888-ASK-MODOT (1-888-275-6636)

IF A SEAL IS PRESENT ON THIS SHEET IT HAS BEEN ELECTRONICALLY SEALED AND DATED.

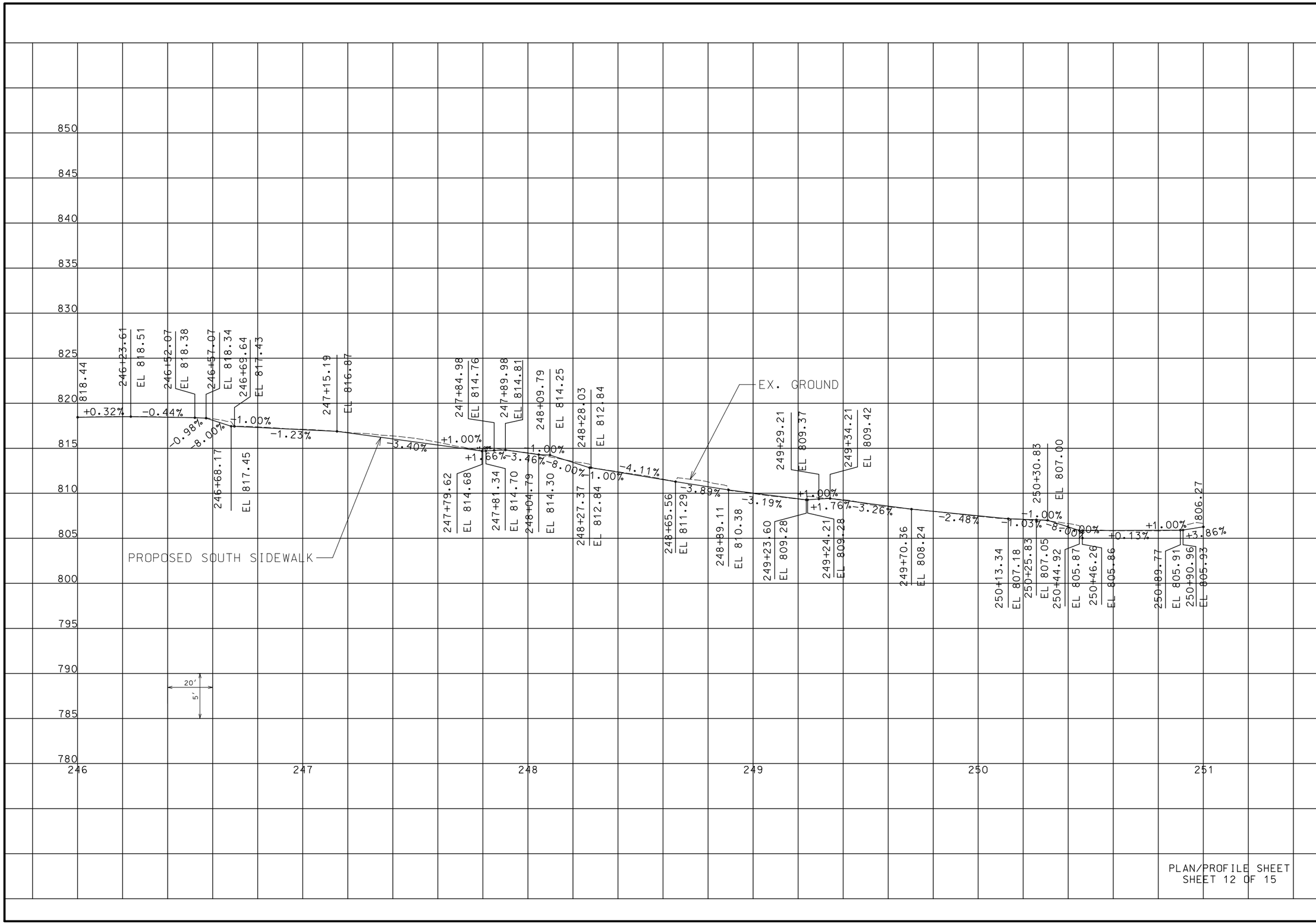

PLAN/PROFILE SHEET
SHEET 12 OF 15

STATE OF MISSOURI
SEAN M. DOMINGO
NUMBER
PE-2022001607
PROFESSIONAL ENGINEER

07/31/2023 2:47:11 PM
SEAN M. DOMINGO - CIVIL
MO-PE-2022001607

DATE PREPARED	
7/31/2023	
ROUTE	STATE
69	MO
DISTRICT	SHEET NO.
KC	15
COUNTY	
CLAY	
JOB NO.	
J4P3465	
CONTRACT ID.	
PROJECT NO.	
BRIDGE NO.	

DATE	DESCRIPTION

MISSOURI HIGHWAYS AND TRANSPORTATION COMMISSION

105 WEST CAPITOL
JEFFERSON CITY, MO 65102
1-888-ASK-MODOT (1-888-275-6636)

IF A SEAL IS PRESENT ON THIS SHEET IT HAS BEEN ELECTRONICALLY SEALED AND DATED.

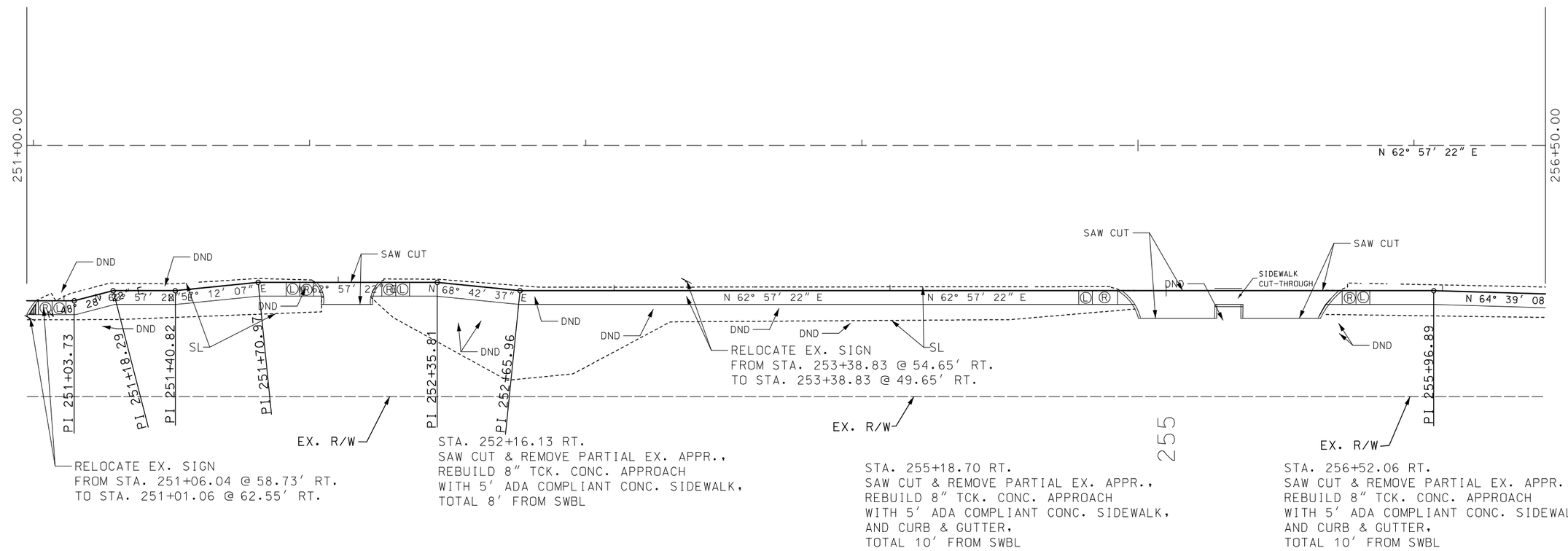

STA. 250+86.56 TO 251+94.64 (BL1)
BUILD 5′ ADA COMPLIANT
CONC. SIDEWALK, LANDINGS
CURB RAMPS
AND TRUNCATED DOMES

STA. 252+11.84 TO 254+88.64 (BL1)
BUILD 5′ ADA COMPLIANT
CONC. SIDEWALK, LANDINGS
AND CURB RAMPS

STA. 255+17.64 TO 255+27.17 (BL1)
BUILD 5′ ADA COMPLIANT
CONC. SIDEWALK

STA. 256+57.96 TO 256+98.65 (BL1)
BUILD 5′ ADA COMPLIANT
CONC. SIDEWALK, LANDINGS
AND CURB RAMPS

PLAN/PROFILE SHEET
SHEET 13 OF 15

STATE OF MISSOURI
SEAN M. DOMINGO
NUMBER
PE-2022001607
PROFESSIONAL ENGINEER

07/31/2023 2:47:50 PM
SEAN M. DOMINGO - CIVIL
MO-PE-2022001607

DATE PREPARED	
7/31/2023	
ROUTE 69	STATE MO
DISTRICT KC	SHEET NO. 16
COUNTY CLAY	
JOB NO. J4P3465	
CONTRACT ID.	
PROJECT NO.	
BRIDGE NO.	

DATE	DESCRIPTION

IF A SEAL IS PRESENT ON THIS SHEET IT HAS BEEN ELECTRONICALLY SEALED AND DATED.

MISSOURI HIGHWAYS AND TRANSPORTATION COMMISSION
105 WEST CAPITOL
JEFFERSON CITY, MO 65102
1-888-ASK-MODOT (1-888-275-6636)

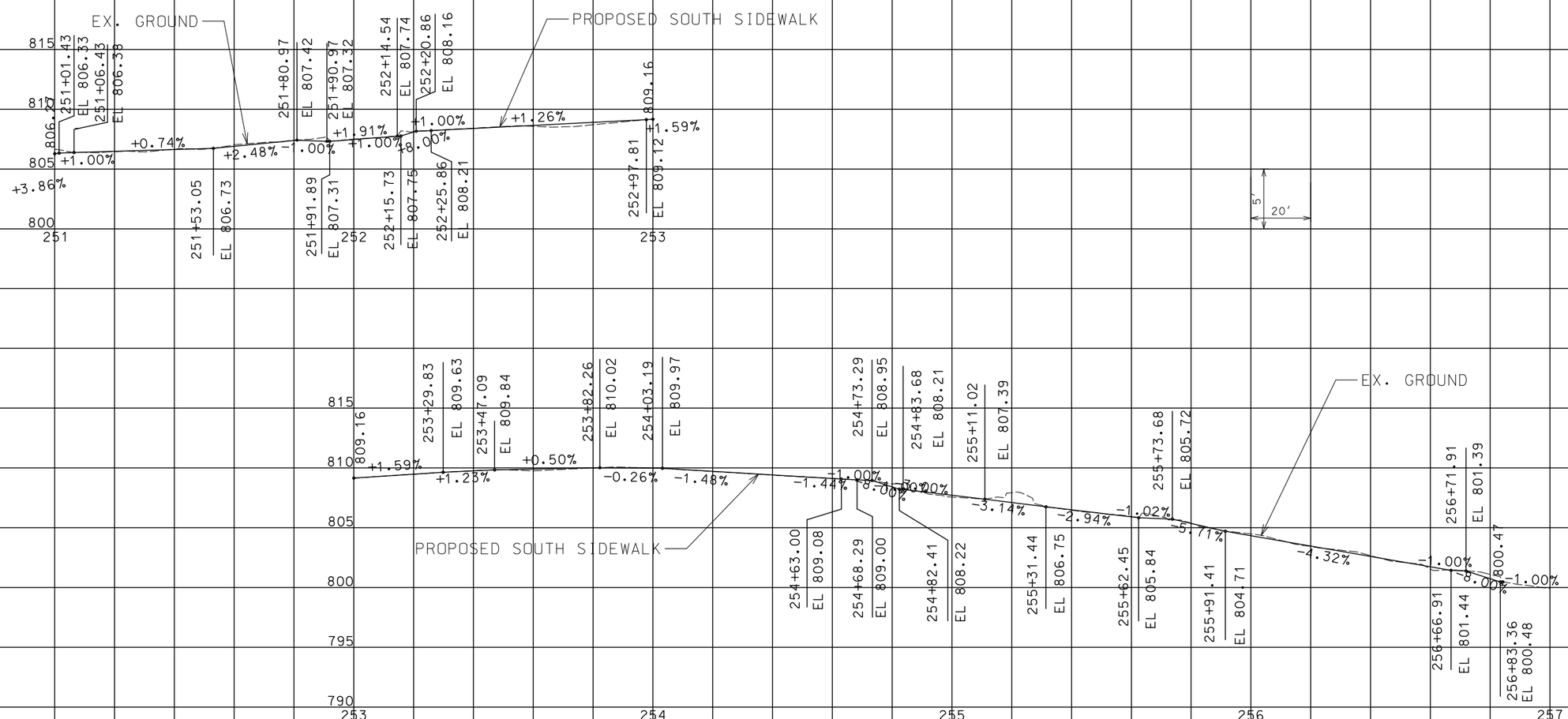

PLAN/PROFILE SHEET
SHEET 14 OF 15

STATE OF MISSOURI
SEAN M. DOMINGO
NUMBER
PE-2022001607
PROFESSIONAL ENGINEER

07/31/2023 2:45:17 PM
SEAN M. DOMINGO - CIVIL
MO-PE-2022001607

DATE PREPARED	
7/31/2023	
ROUTE	STATE
69	MO
DISTRICT	SHEET NO.
KC	17
COUNTY	
CLAY	
JOB NO.	
J4P3465	
CONTRACT ID.	
PROJECT NO.	
BRIDGE NO.	

DATE	DESCRIPTION

MISSOURI HIGHWAYS AND TRANSPORTATION COMMISSION

105 WEST CAPITOL
JEFFERSON CITY, MO 65102
1-888-ASK-MODOT (1-888-275-6636)

IF A SEAL IS PRESENT ON THIS SHEET IT HAS BEEN ELECTRONICALLY SEALED AND DATED.

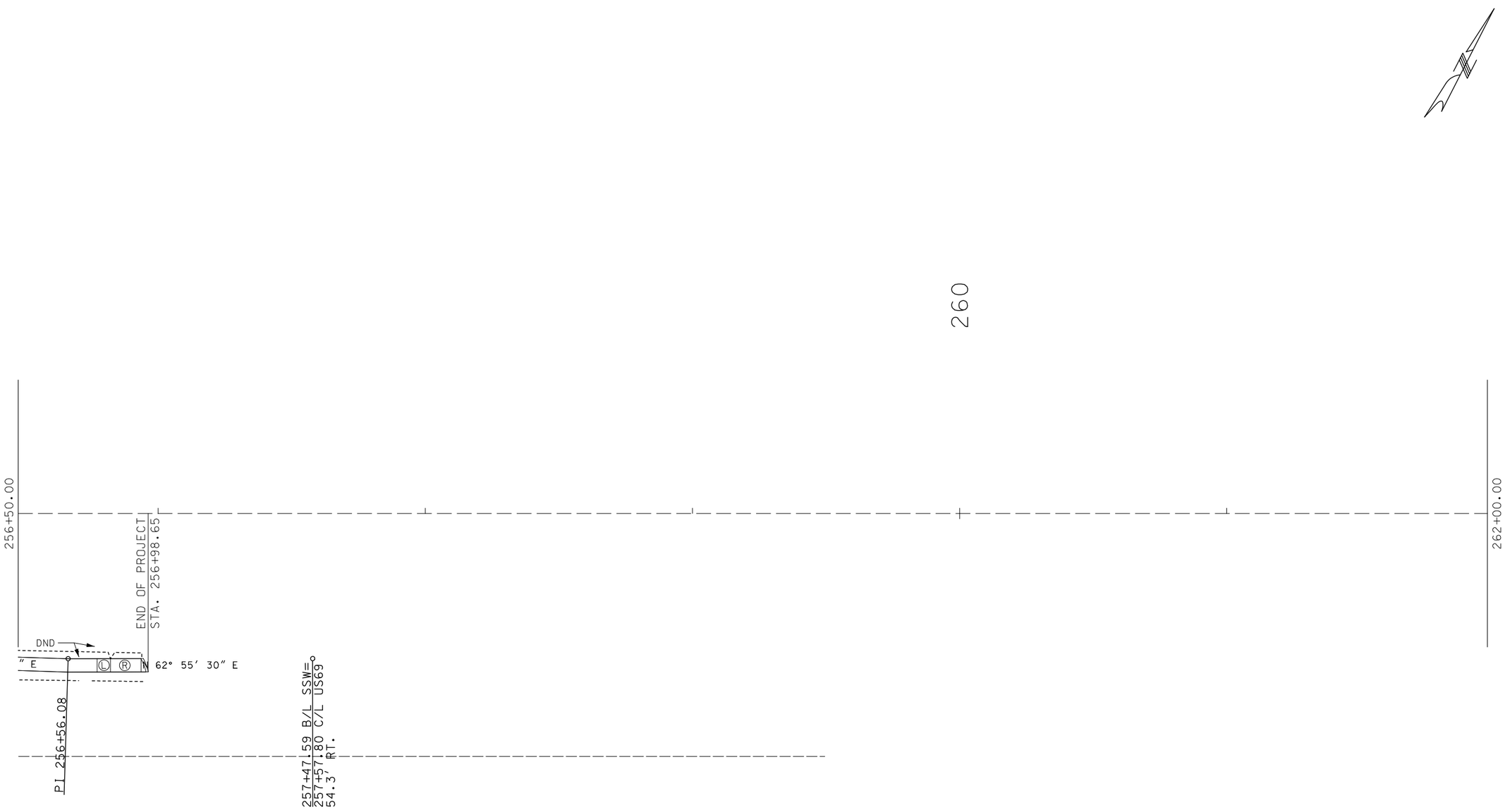

SCALE

0 20 40 60

PLAN/PROFILE SHEET
SHEET 15 OF 15

STATE OF MISSOURI
SEAN M. DOMINGO
NUMBER
PE-2022001607
PROFESSIONAL ENGINEER

08/15/2023 1:17:33 PM
SEAN M. DOMINGO - CIVIL
MO-PE-2022001607

DATE PREPARED	
8/15/2023	
ROUTE 69	STATE MO
DISTRICT KC	SHEET NO. 18
COUNTY CLAY	
JOB NO. J4P3465	
CONTRACT ID.	
PROJECT NO.	
BRIDGE NO.	

DATE	DESCRIPTION

IF A SEAL IS PRESENT ON THIS SHEET IT HAS BEEN ELECTRONICALLY SEALED AND DATED.

MISSOURI HIGHWAYS AND TRANSPORTATION COMMISSION

105 WEST CAPITOL
JEFFERSON CITY, MO 65102
1-888-ASK-MODOT (1-888-275-6636)

SW COR. SEC28 T51N R32W
N - 1102823.89, E - 2785617.55
DOC #: 600-94857 COTTON SPINDLE
PLS NO. 2013000045

℄ ROUTE 69

1572.17'
S77°20'54"W

STA. 219+51.69
BEG. OF PROJECT

SEC. 28 SW CORNER

SW ¼ SW ¼
SEC28 T51N R32W

LITTRELL
RAYMOND
CHRISTOPHER

2
SEE SHEET 20

1

KMS ENTERPRISES LLC.
TEMP. ESM'T.: 1531 SQFT
REMAINING: 14375 SQFT

+55.02
107.57 LT

+77.64
103.08 LT

TEMP. ESM'T.

+61.22
65.0' LT

+96.63
65.0' LT

+93.11
55.0' LT

+36.49
55.0' LT

220

EX. CITY R/W

BL2-NORTH SIDEWALK

EX. CITY R/W

MUNGER AVE.

EX. R/W

N37°18'22"E
340'

5/8" IRON PIN (1)

12.9'

23.2'

12.9'

BRIDGE REMOVAL LIMITS

WB RTE. 69

℄ ROUTE 69

MATCH LINE
218+00.00

N 37°18'22" E

223+50.00
MATCH LINE

EX. GUARDRAIL

EB RTE. 69

REMOVE EX. PED. BRIDGE
(K0742)

N 37° 21' 02" E

N37°18'22"E
256.60'

EX. R/W

SL

BEG. OF PROJECT
STA. 219+51.69

STA. 220+41.14
REMOVE EX. PED. BRIDGE

STA. 219+74.31 - 221+26.73
ROUTE 69 NB, RIGHT LANE
REMOVE EX. GUARDRAIL

STA. 220+50.79 - 221+14.90
ROUTE 69 NB & SB, LEFT LANE
REMOVE EX. GUARDRAIL

SW ¼ SW ¼
SEC28 T51N R32W

STA. 220+24.00 TO 221+62.50
REMOVE EX. GUARDRAIL AND
BUILD 50' MGS GR(8' POST 6'-3" SPACING)
1 TYPE A CET(MASH)(WEST SIDE)
1 TYPE A NCHRP 350 (EAST SIDE)

STA. 222+45.08 TO 223+71.16 (BL1)
BUILD ADA COMPLIANT
5' CONC. SIDEWALK, LANDING (L)
AND CURB RAMPS (R)

ANY WORK INDICATED ON THE PLANS THAT
EXTENDS BEYOND THE PROJECT LIMITS IS
CONSIDERED INCIDENTAL TO AND A PART OF
THE CONSTRUCTION OF THIS PROJECT

NOTE:
ALL ENTRANCES AND SIGN RELOCATIONS ARE STATIONED OFF ON RTE. 69 CENTER LINE (CL-US69)
ALL SIDEWALKS ARE STATIONED OFF OF THE SIDEWALK BASE LINE
(BL1 - SOUTH SIDEWALK & BL2- NORTH SIDEWALK)

SCALE
0 20 40 60

RIGHT OF WAY PLAN SHEET
FOR INFORMATION ONLY
SHEET 1 OF 8

STATE OF MISSOURI
SEAN M. DOMINGO
NUMBER
PE-2022001607
PROFESSIONAL ENGINEER
08/15/2023 1:18:35 PM
SEAN M. DOMINGO - CIVIL
MO-PE-2022001607

DATE PREPARED	
8/15/2023	
ROUTE 69	STATE MO
DISTRICT KC	SHEET NO. 19
COUNTY CLAY	
JOB NO. J4P3465	
CONTRACT ID.	
PROJECT NO.	
BRIDGE NO.	

DATE	DESCRIPTION

IF A SEAL IS PRESENT ON THIS SHEET IT HAS BEEN ELECTRONICALLY SEALED AND DATED.

MISSOURI HIGHWAYS AND TRANSPORTATION COMMISSION
105 WEST CAPITOL
JEFFERSON CITY, MO 65102
1-888-ASK-MODOT (1-888-275-6636)

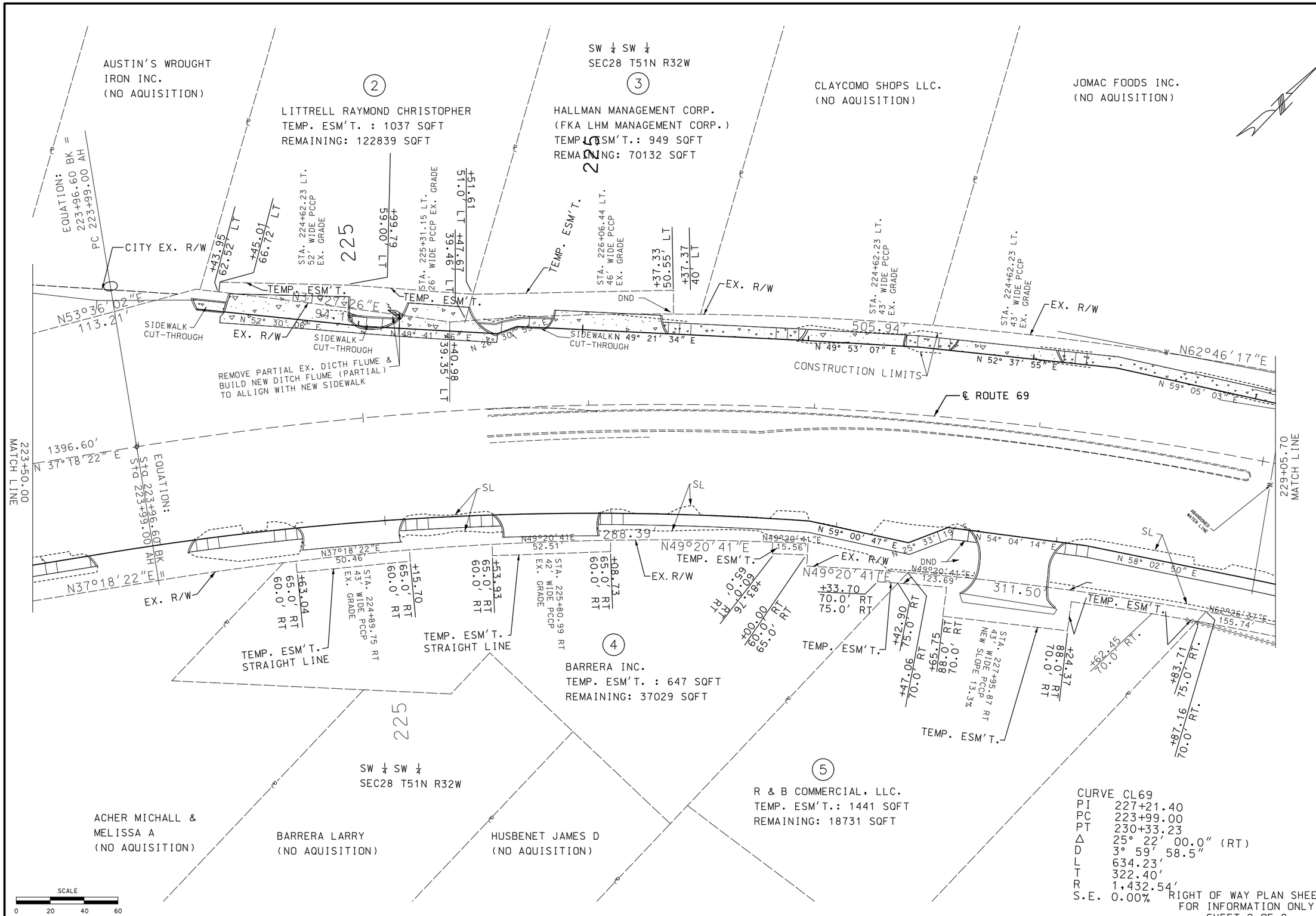

CURVE CL69

PI	227+21.40
PC	223+99.00
PT	230+33.23
Δ	25° 22' 00.0" (RT)
D	3° 59' 58.5"
L	634.23'
T	322.40'
R	1,432.54'
S.E.	0.00%

RIGHT OF WAY PLAN SHEET
FOR INFORMATION ONLY
SHEET 2 OF 8

STATE OF MISSOURI
SEAN M. DOMINGO
NUMBER PE-2022001607
PROFESSIONAL ENGINEER
08-15-2023 1:19:08 PM
SEAN M. DOMINGO - CIVIL
MO-PE-2022001607

DATE PREPARED	
8/15/2023	
ROUTE 69	STATE MO
DISTRICT KC	SHEET NO. 20
COUNTY CLAY	
JOB NO. J4P3465	
CONTRACT ID.	
PROJECT NO.	
BRIDGE NO.	

DATE	DESCRIPTION

MISSOURI HIGHWAYS AND TRANSPORTATION COMMISSION
105 WEST CAPITOL
JEFFERSON CITY, MO 65102
1-888-ASK-MODOT (1-888-275-6636)

IF A SEAL IS PRESENT ON THIS SHEET IT HAS BEEN ELECTRONICALLY SEALED AND DATED.

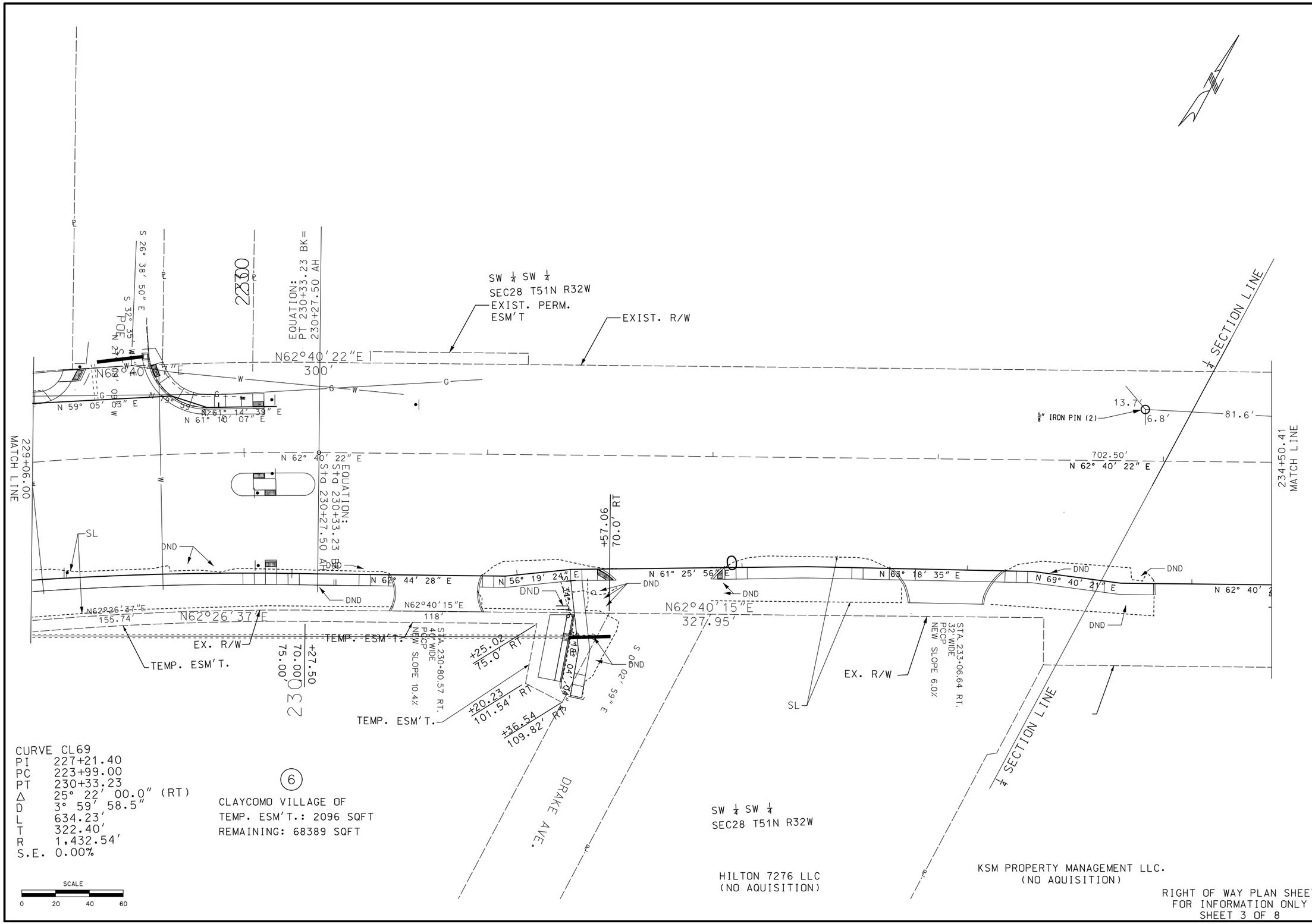

RIGHT OF WAY PLAN SHEET
FOR INFORMATION ONLY
SHEET 3 OF 8

STATE OF MISSOURI
SEAN M. DOMINGO
NUMBER
PE-2022001607
PROFESSIONAL ENGINEER

08/15/2023 1:19:55 PM
SEAN M. DOMINGO - CIVIL
MO-PE-2022001607

DATE PREPARED	
8/15/2023	
ROUTE 69	STATE MO
DISTRICT KC	SHEET NO. 21
COUNTY CLAY	
JOB NO. J4P3465	
CONTRACT ID.	
PROJECT NO.	
BRIDGE NO.	

DATE	DESCRIPTION

MISSOURI HIGHWAYS AND TRANSPORTATION COMMISSION

105 WEST CAPITOL
JEFFERSON CITY, MO 65102
1-888-ASK-MODOT (1-888-275-6636)

IF A SEAL IS PRESENT ON THIS SHEET IT HAS BEEN ELECTRONICALLY SEALED AND DATED.

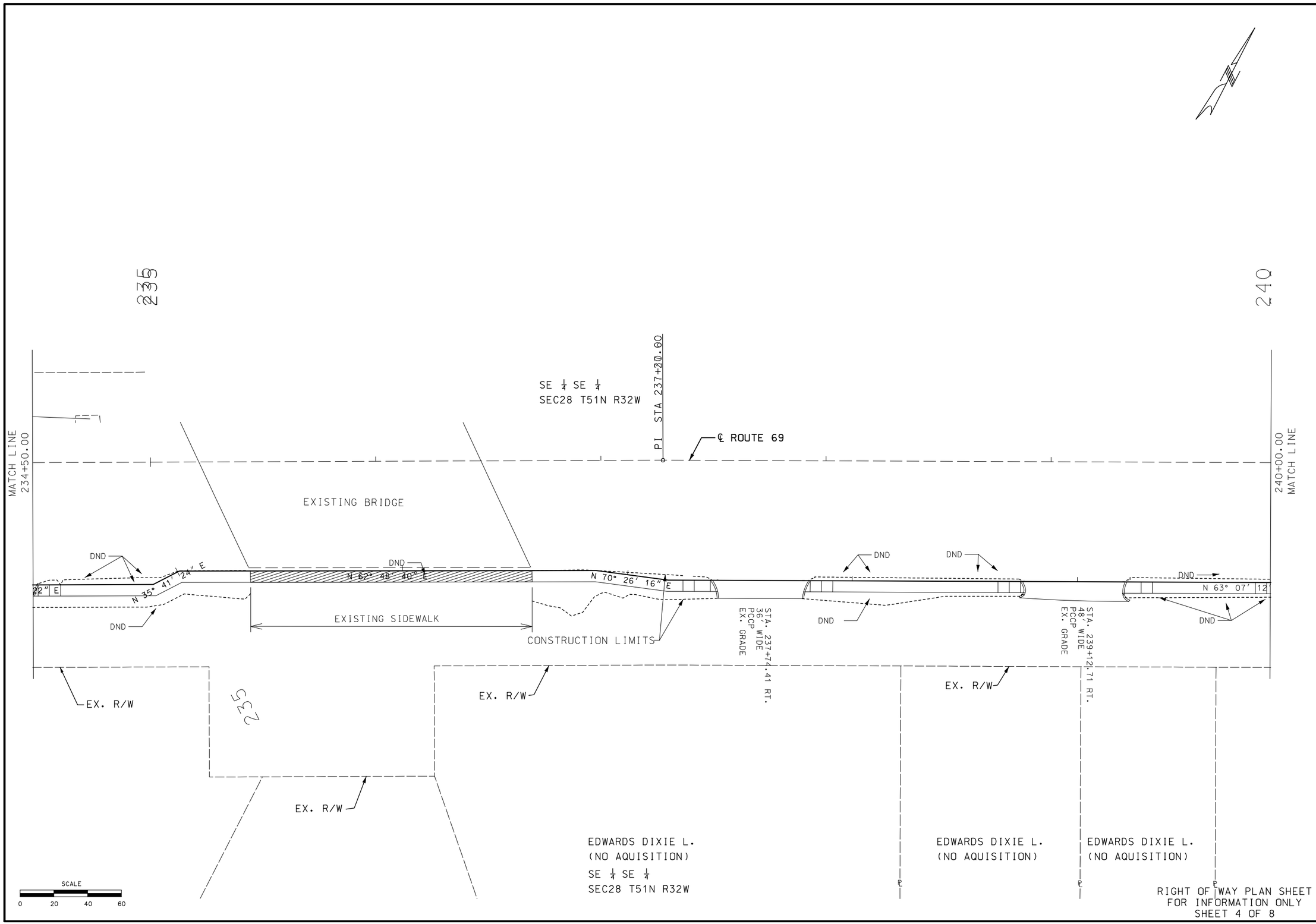

RIGHT OF WAY PLAN SHEET
FOR INFORMATION ONLY
SHEET 4 OF 8

STATE OF MISSOURI
SEAN M. DOMINGO
NUMBER
PE-2022001607
PROFESSIONAL ENGINEER

08/15/2023 1:20:31 PM
SEAN M. DOMINGO - CIVIL
MO-PE-2022001607

DATE PREPARED	
8/15/2023	
ROUTE 69	STATE MO
DISTRICT KC	SHEET NO. 22
COUNTY CLAY	
JOB NO. J4P3465	
CONTRACT ID.	
PROJECT NO.	
BRIDGE NO.	

DATE	DESCRIPTION

MISSOURI HIGHWAYS AND TRANSPORTATION COMMISSION
105 WEST CAPITOL
JEFFERSON CITY, MO 65102
1-888-ASK-MODOT (1-888-275-6636)

IF A SEAL IS PRESENT ON THIS SHEET IT HAS BEEN ELECTRONICALLY SEALED AND DATED.

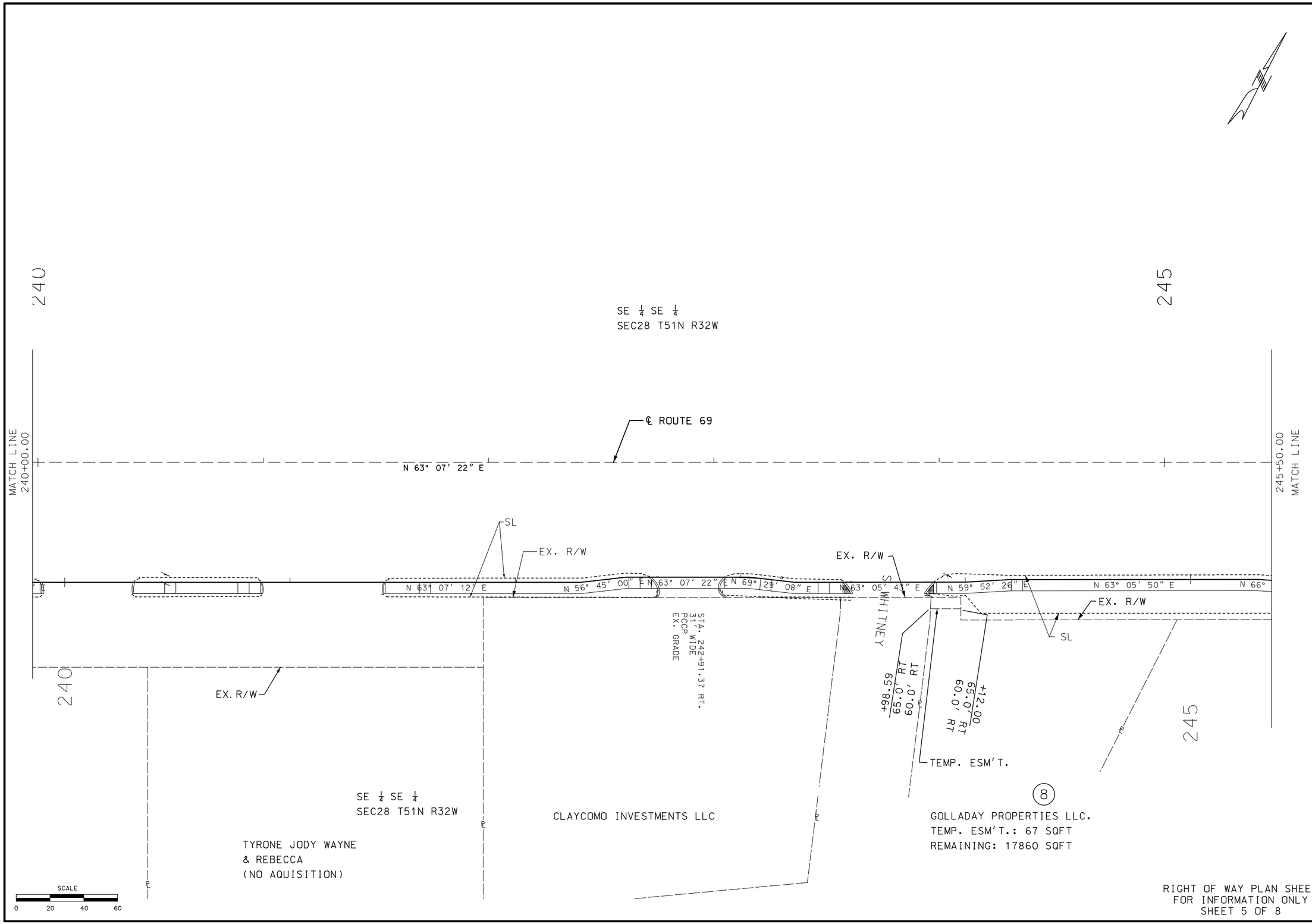

RIGHT OF WAY PLAN SHEET
FOR INFORMATION ONLY
SHEET 5 OF 8

STATE OF MISSOURI
SEAN M. DOMINGO
NUMBER
PE-2022001607
PROFESSIONAL ENGINEER

08/15/2023 1:21:09 PM
SEAN M. DOMINGO - CIVIL
MO-PE-2022001607

DATE PREPARED	8/15/2023
ROUTE	69
STATE	MO
DISTRICT	KC
SHEET NO.	23
COUNTY	CLAY
JOB NO.	J4P3465
CONTRACT ID.	
PROJECT NO.	
BRIDGE NO.	

DATE	DESCRIPTION

IF A SEAL IS PRESENT ON THIS SHEET IT HAS BEEN ELECTRONICALLY SEALED AND DATED.

MISSOURI HIGHWAYS AND TRANSPORTATION COMMISSION
105 WEST CAPITOL
JEFFERSON CITY, MO 65102
1-888-ASK-MODOT (1-888-275-6636)

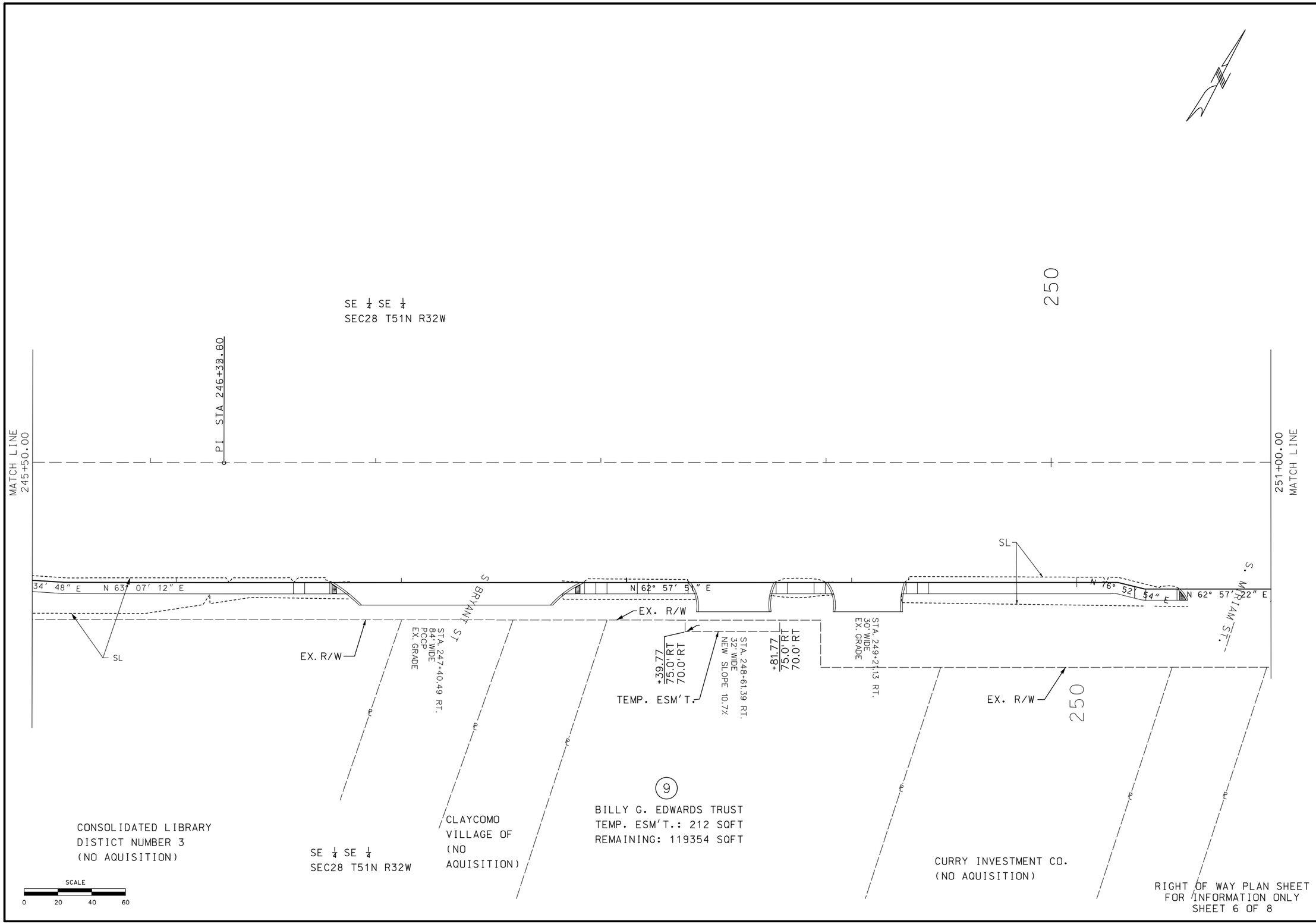

RIGHT OF WAY PLAN SHEET
FOR INFORMATION ONLY
SHEET 6 OF 8

STATE OF MISSOURI
SEAN M. DOMINGO
NUMBER
PE-2022001607
PROFESSIONAL ENGINEER

08-15/2023 1:21:50 PM
SEAN M. DOMINGO - CIVIL
MO-PE-2022001607

DATE PREPARED	
8/15/2023	
ROUTE 69	STATE MO
DISTRICT KC	SHEET NO. 24
COUNTY CLAY	
JOB NO. J4P3465	
CONTRACT ID.	
PROJECT NO.	
BRIDGE NO.	

DATE	DESCRIPTION

IF A SEAL IS PRESENT ON THIS SHEET IT HAS BEEN ELECTRONICALLY SEALED AND DATED.

MISSOURI HIGHWAYS AND TRANSPORTATION COMMISSION

105 WEST CAPITOL
JEFFERSON CITY, MO 65102
1-888-ASK-MODOT (1-888-275-6636)

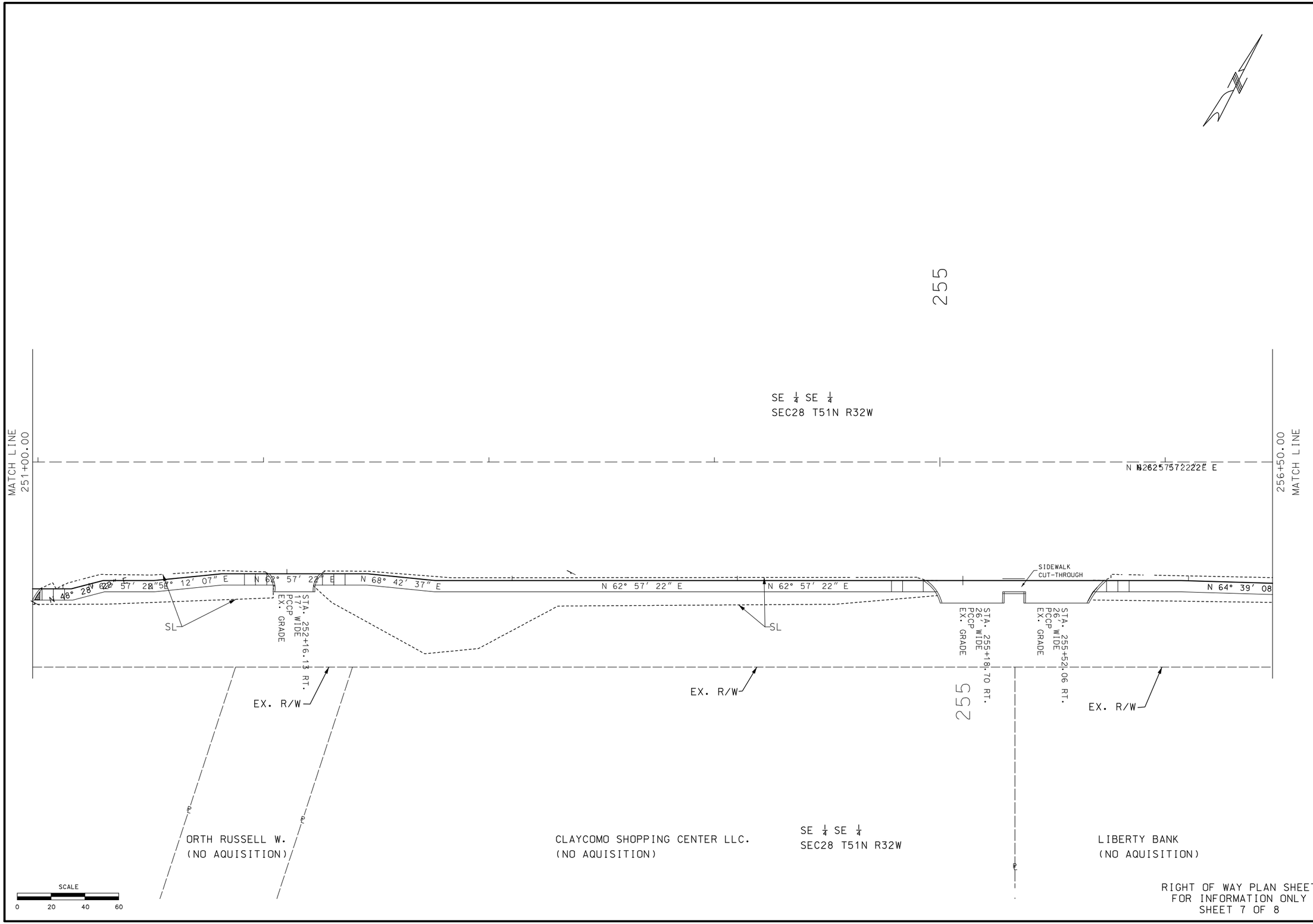

RIGHT OF WAY PLAN SHEET
FOR INFORMATION ONLY
SHEET 7 OF 8

STATE OF MISSOURI
SEAN M. DOMINGO
NUMBER
PE-2022001607
PROFESSIONAL ENGINEER

08/15/2023 1:23:08 PM
SEAN M. DOMINGO - CIVIL
MO-PE-2022001607

DATE PREPARED	
8/15/2023	
ROUTE 69	STATE MO
DISTRICT KC	SHEET NO. 25
COUNTY CLAY	
JOB NO. J4P3465	
CONTRACT ID.	
PROJECT NO.	
BRIDGE NO.	

DATE	DESCRIPTION

IF A SEAL IS PRESENT ON THIS SHEET IT HAS BEEN ELECTRONICALLY SEALED AND DATED.

MISSOURI HIGHWAYS AND TRANSPORTATION COMMISSION
105 WEST CAPITOL
JEFFERSON CITY, MO 65102
1-888-ASK-MODOT (1-888-275-6636)

SCALE

0 20 40 60

RIGHT OF WAY PLAN SHEET
FOR INFORMATION ONLY
SHEET 8 OF 8

STATE OF MISSOURI
SEAN M. DOMINGO
NUMBER
PE-2022001607
PROFESSIONAL ENGINEER

05-15/2023 1:33:47 PM
SEAN M. DOMINGO - CIVIL
MO-PE-2022001607

DATE PREPARED	
8/15/2023	
ROUTE	STATE
69	MO
DISTRICT	SHEET NO.
KC	26
COUNTY	
CLAY	
JOB NO.	
J4P3465	
CONTRACT ID.	
PROJECT NO.	
BRIDGE NO.	

DATE	DESCRIPTION

IF A SEAL IS PRESENT ON THIS SHEET IT HAS BEEN ELECTRONICALLY SEALED AND DATED.

MISSOURI HIGHWAYS AND TRANSPORTATION COMMISSION

105 WEST CAPITOL
JEFFERSON CITY, MO 65102
1-888-ASK-MODOT (1-888-275-6636)

STA. 222+63.35
OFF. 55.7′ LT.
5/8″ REBAR W/ ORANGE CAP
BURIED 0.5′ ± BELOW GROUND
NE OF CENTER DI MANHOLE COVER
ROUTE US 69

C.P. #1
(N) 1103449.863
(E) 2787296.162
ELEV.: 850.88

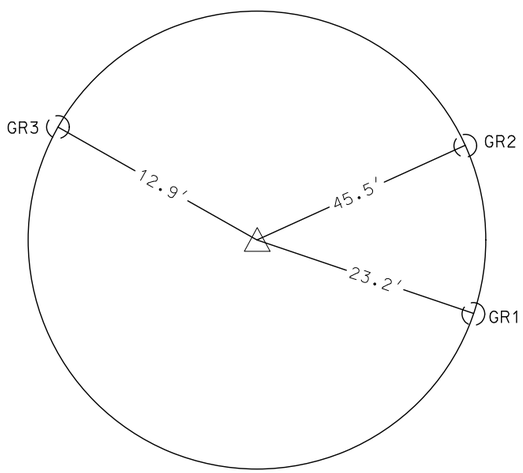

GR1: NW OF CENTER DI MAN HOLE COVER
GR2: SW CORNER PAINTED "+" ON LIGHT POLE
GR3: SE OF MAN HOLE ON MUNGER ROAD

STA. 223+94.12
OFF. 22.9′ LT.
5/8″ REBAR W/ ORANGE CAP
BURIED 0.5′ ± BELOW GROUND
NORTH OF EDGE OF CURB
ROUTE US 69
(BETWEEN EAST ENTRANCE
OF B & C LANDSCAPES AND
WEST OF EX. BRIDGE)

C.P. #2
(N) 1104115.194
(E) 2788218.209
ELEV.: 800.62

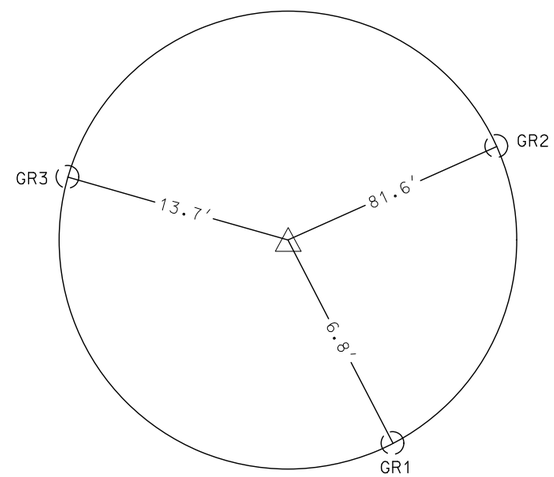

GR1: NW OF EDGE OF CURB
GR2: SW OF CENTER DI COVER
GR3: SE OF ROCK POST CORNER

STA. 246+32.97
OFF. 91.4′ RT.
5/8″ REBAR W/ ORANGE CAP
BURIED 0.5′ ± BELOW GROUND
ROUTE US 69
(BETWEEN LIBRARY AND
CLAYCOMO FIRE STATION)

C.P. #3
(N) 1104575.714
(E) 2789373.869
ELEV.: 817.92

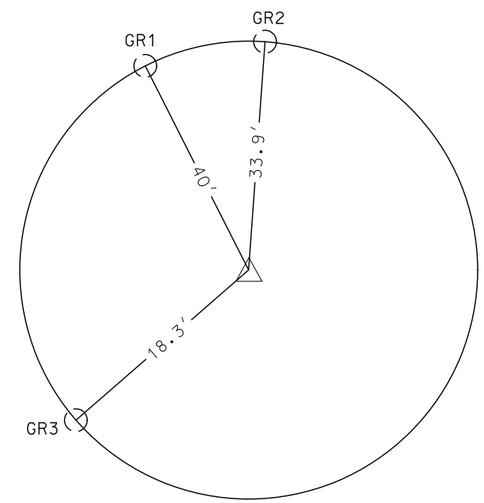

GR1: SW OF EDGE OF CURB
GR2: S. OF POWER POLE
GR3: NE OF GUY POWER POLE

REFERENCE POINTS SHEET
SHEET 1 OF 1

STATE OF MISSOURI
SEAN M. DOMINGO
NUMBER
PE-2022001607
PROFESSIONAL ENGINEER
07/31/2023 2:58:12 PM
SEAN M. DOMINGO - CIVIL
MO-PE-2022001607

DATE PREPARED	
7/31/2023	
ROUTE 69	STATE MO
DISTRICT KC	SHEET NO. 27
COUNTY CLAY	
JOB NO. J4P3465	
CONTRACT ID.	
PROJECT NO.	
BRIDGE NO.	

DATE	DESCRIPTION

MISSOURI HIGHWAYS AND TRANSPORTATION COMMISSION
105 WEST CAPITOL
JEFFERSON CITY, MO 65102
1-888-ASK-MODOT (1-888-275-6636)

IF A SEAL IS PRESENT ON THIS SHEET IT HAS BEEN ELECTRONICALLY SEALED AND DATED.

ALL PROJECT COORDINATES HAVE BEEN PROJECTED FROM THE MISSOURI STATE PLANE COORDINATE (SPC) SYSTEM OF 1983 USING AN AVERAGE PROJECT PROJECTION (GRID TO GROUND) FACTOR. TO GET BACK TO STATE PLANE COORDINATES, MULTIPY THE PROJECT COORDINATES BY THE AVERAGE GRID FACTOR AS SHOWN IN THE "REFERENCE CONTROL INFORMATION" PORTION OF THIS TABLE.

PROJECT COORDINATE INFORMATION	
COORDINATE SYSTEM	MODIFIED STATE PLANE(GROUND)
HORIZONTAL DATUM	NAD83
VERTICAL DATUM	NAVD88
GEOID MODEL	GEOID18
ELEVATIONS DETERMINED BY	GPS OBSERVATION
PROJECT PROJECTION FACTOR	1.00009590

REFERENCE CONTROL INFORMATION	
COORDINATE SYSTEM	MO COORDINATE SYSTEM OF 1983
CONTROL STATION	MO GEOGRAPHIC REFERENCE SYSTEM
DESIGNATION	CL-16
CORS_ID	XX
PID	47016
LATITUDE	39°11'58.17365"
LONGITUDE	094°31'15.54501
NORTHING (M)	336595.4550
EASTING (M)	848187.3910
ZONE	WEST
PROJECT AVERAGE GRID FACTOR	0.99990411

EXAMPLE OF PROJECT COORDINATE TO S.P.C.

PROJECT NORTHING X AVERAGE GRID FACTOR
= STATE PLANE NORTHING
PROJECT EASTING X AVERAGE GRID FACTOR
= STATE PLANE EASTING

EXAMPLE: CONTROL POINT #___
N 1103449.863 X 0.99990411 = N 1103344.053
E 2787296.162 X 0.99990411 = E 2787028.888

LINEAR UNIT CONVERSION

1 METER = 3.280833333 US SURVEY FEET (USFT)

COORDINATE POINT LISTING

SHEET NO	STATION	LOCATION	OFFSET (USFT)	MODIFIED STATE PLANE (GROUND) NORTHING (US SURVEY FT)	EASTING (US SURVEY FT)	ELEVATION (US SURVEY FT)	DESCRIPTION	GPK/ POINT ID
PROJECT CONTROL POINTS								
	222+63.35	C/L US 69	55.7 LT	1,103,449.863	2,787,296.162	850.88	5/8" IB w/ ORANGE MoDOT CONTROL CAP	465/ 1
4	223+94.12	C/L US 69	22.9 LT.	1,104,115.194	2,788,218.209	800.62	5/8" IN w/ ORANGE MoDOT CONTROL CAP	465/ 2
14	246+32.97	C/L US 69	91.4 RT.	1,104,575.714	2,789,373.869	817.92	5/8" IN w/ ORANGE MoDOT CONTROL CAP	465/ 3
ALIGNMENTS								
	210+00.00	C/L US 69	0	1,102,411.252	2,786,574.750	851.13	POT	465/ EXIST691
6	223+96.60	C/L US 69	0				EQUATION BK	465/ EXIST691
6	223+99.00	C/L US 69	0	1,103,522.120	2,787,421.192	841.88	EQUATION AH -PC	465/ EXIST691
6	227+21.40	C/L US 69	0	1,103,778.559	2,787,616.589	821.47	PI	465/ EXIST69_31
8	230+33.23	C/L US 69	0				EQUATION BK - PT	465/ EXIST691
8	230+27.50	C/L US 69	0	1,103,926.563	2,787,903.007	809.86	EQUATION AH - PC	465/ EXIST69_32
10	237+30.00	C/L US 69	0	1,104,249.063	2,788,527.110		PI	465/ EXIST696
14	246+35.00	C/L US 69	0	1,104,658.195	2,789,334.350			465/ EXIST698
	265+80.00	C/L US 69	0	1,105,542.534	2,791,066.680			465/ EXIST699
6	221+75.00	B/L SSW	0	1,103,319.043	2,787,322.019	847.85	C/L US69 (221+75.00, 64.2" RT.)	465/ SSIDEWALK1
6	223+75.80	B/L SSW	0	1,103,478.668	2,787,443.843	841.94	C/L US69	465/ SSIDEWALK
6	225+32.65	B/L SSW	0	1,103,603.558	2,787,538.728	832.80	C/L US69 (CURVE DATA)	465/ SSIDEWALK3
6	226+88.05	B/L SSW	0	1,103,702.908	2,787,660.096	822.78	C/L US69	465/ SSIDEWALK
6	227+32.86	B/L SSW	0	1,103,725.980	2,787,698.515	820.44	C/L US69	465/ SSIDEWALK6
6	227+51.68	B/L SSW	0	1,103,742.960	2,787,706.634	819.20	C/L US69	465/ SSIDEWALK8
6	228+13.07	B/L SSW	0	1,103,778.984	2,787,756.345	816.76	C/L US69	465/ SSIDEWALK10
6	228+78.79	B/L SSW	0	1,103,813.764	2,787,812.107	814.08	C/L US69	465/ SSIDEWALK
8	229+45.18	B/L SSW	0	1,103,848.983	2,787,868.381	811.83	C/L US69 (CURVE DATA)	465/ SSIDEWALK12
8	230+11.46	B/L SSW	0	1,103,878.684	2,787,927.751	810.18	C/L US69	465/ SSIDEWALK
8	230+94.66	B/L SSW	0	1,103,916.787	2,788,001.703	808.01	C/L US69	465/ SSIDEWALK15
8	231+24.30	B/L SSW	0	1,103,933.227	2,788,026.376	806.29	C/L US69	465/ SSIDEWALK17
8	232+28.96	B/L SSW	0	1,103,983.274	2,788,118.292	804.45	C/L US69	465/ SSIDEWALK19
8	233+29.03	B/L SSW	0	1,104,028.223	2,788,207.702	802.07	C/L US69	465/ SSIDEWALK21
8	233+68.40	B/L SSW	0	1,104,041.898	2,788,244.613	801.01	C/L US69	465/ SSIDEWALK23
10	234+87.84	B/L SSW	0	1,104,096.730	2,788,350.727	798.72	C/L US69	465/ SSIDEWALK25
10	235+00.82	B/L SSW	0	1,104,107.273	2,788,358.300	798.47	C/L US69	465/ SSIDEWALK27
10	236+85.94	B/L SSW	0	1,104,191.860	2,788,522.966	795.00	C/L US69	465/ SSIDEWALK29
10	237+18.21	B/L SSW	0	1,104,202.663	2,788,552.370	794.34	C/L US69	465/ SSIDEWALK31
12	242+29.18	B/L SSW	0	1,104,433.685	2,789,009.131	806.43	C/L US69	465SSIDEWALK33
12	242+49.30	B/L SSW	0	1,104,444.719	2,789,025.960	807.10	C/L US69	465/ SSIDEWALK35
12	243+04.10	B/L SSW	0	1,104,469.494	2,789,074.844	809.24	C/L US69	465/ SSIDEWALK37
12	243+24.23	B/L SSW	0	1,104,476.546	2,789,093.692	810.03	C/L US69	465/ SSIDEWALK39
12	244+00.03	B/L SSW	0	1,104,510.845	2,789,161.286	812.71	C/L US69	465/ SSIDEWALK41
12	244+20.03	B/L SSW	0	1,104,520.886	2,789,178.588	814.31	C/L US69	465/ SSIDEWALK43
12	245+30.03	B/L SSW	0	1,104,570.659	2,789,276.684	817.54	C/L US69	465/ SSIDEWALK45
14	245+50.07	B/L SSW	0	1,104,578.623	2,789,295.070	817.85	C/L US69	465/ SSIDEWALK47
14	246+21.08	B/L SSW	0	1,104,610.728	2,789,358.407	818.50	C/L US69	465/ SSIDEWALK49
14	250+18.16	B/L SSW	0	1,104,791.222	2,789,712.101	807.13	C/L US69	465/ SSIDEWALK51
14	250+30.57	B/L SSW	0	1,104,794.047	2,789,724.179	807.00	C/L US69	465/ SSIDEWALK53
16	251+03.73	B/L SSW	0	1,104,827.301	2,789,789.342	806.35	C/L US69	465/ SSIDEWALK55
16	251+18.29	B/L SSW	0	1,104,836.953	2,789,800.241	806.47	C/L US69	465/ SSIDEWALK57
16	251+40.82	B/L SSW	0	1,104,847.197	2,789,820.308	806.63	C/L US69	465/ SSIDEWALK59
16	251+70.97	B/L SSW	0	1,104,863.530	2,789,845.653	807.17	C/L US69	465/ SSIDEWALK61
16	252+35.81	B/L SSW	0	1,104,893.012	2,789,903.405	808.34	C/L US69	465/ SSIDEWALK63
16	252+65.96	B/L SSW	0	1,104,903.959	2,789,931.499	808.72	C/L US69	465/ SSIDEWALK65
16	255+96.89	B/L SSW	0	1,105,054.425	2,790,226.246	807.81	C/L US69	465/ SSIDEWALK67
18	256+56.08	B/L SSW	0	1,105,079.761	2,790,279.730	801.91	C/L US69	465/ SSIDEWALK69
18	257+47.59	B/L SSW	0	1,105,121.413	2,790,361.213	800.47	C/L US69 (257+57.80, 54.3' RT.)	465/ SSIDEWALK70
6	223+28.35	B/L NSW	0	1,103,584.784	2,787,398.790	840.86	C/L US69 (224+33.87, 66.2' LT.)	465/ NSIDEWALK81
6	224+03.05	B/L NSW	0	1,103,630.258	2,787,458.056	835.97	C/L US69	465/ NSIDEWALK83
6	224+61.67	B/L NSW	0	1,103,668.180	2,787,502.767	832.71	C/L US69	465/ NSIDEWALK85
6	224+71.03	B/L NSW	0	1,103,676.548	2,787,506.941	832.08	C/L US69	465/ NSIDEWALK87
6	225+93.46	B/L NSW	0	1,103,756.292	2,787,599.847	824.11	C/L US69	465/ NSIDEWALK89
6	226+48.97	B/L NSW	0	1,103,792.057	2,787,642.298	820.80	C/L US69	4665/ NSIDEWALK811
6	227+37.06	B/L NSW	0	1,103,845.525	2,787,712.311	817.45	C/L US69	465/ NSIDEWALK813
6	228+12.25	B/L NSW	0	1,103,884.151	2,787,776.811	814.75	C/L US69	465/ NSIDEWALK815
8	228+78.39	B/L NSW	0	1,103,918.135	2,787,833.558	814.45	C/L US69	465/ NSIDEWALK817
8	228+94.78	B/L NSW	0	1,103,920.983	2,787,849.702		C/L US69	465/ NSIDEWALK819
8	229+25.56	B/L NSW	0	1,103,935.787	2,787,876.679		C/L US69(230+14.34, 20.4' LT.)	465/ NSIDEWALK820
8	0+00.00	B/L SW & WALL	0	1,103,943.835	2,787,806.675	811.81	C/L US69 - 229+58.74, 61.6' LT.)	465/ TMPBL11
8	0+04.06	B/L SW & WALL	0	1,103,940.210	2,787,808.494		C/L US69	465/ TMPBL13
8	0+12.46	B/L SW & WALL	0	1,103,933.132	2,787,813.020		C/L US69	465/ TMPBL15
8	0+16.52	B/L SW & WALL	0	1,103,929.620	2,787,815.054	811.60	C/L US69	465/ TMPBL1
8	0+41.53	B/L SW & WALL	0	1,103,908.290	2,787,828.129	812.16	C/L US69 (CURVE DATA)	465/ TMPBL1_7
8	0+56.49	B/L SW & WALL	0	1,103,943.339	2,787,837.435	811.83	C/L US69	465/ TMPBL1
8	0+74.17	B/L SW & WALL	0	1,103,928.851	2,787,865.550	811.72	C/L US69 - 230+01.44, 19.6' LT.	465/ TMPBL19
8	0+00.00	C/L POE	0	1,103,940.499	2,787,809.266	812.14	C/L US69 - 229+43.16, 0.0')	465/ TMPBL21
8	0+72.20	C/L POE	0	1,103,946.982	2,787,791.405	812.30	C/L US69 - 229+47.71, 72.1' LT.)	465/ TMPBL22
8	0+00.00	B/L SW	0	1,103,928.568	2,788,028.402	806.30	C/L US69 - 231+37.42, 55.8' RT.)	465/ DRAKE2 1
8	0+30.86	B/L SW	0	1,103,903.069	2,788,045.782	808.07	C/L US69 - 231+41.16, 86.4' RT.)	465/ DRAKE23
8	0+51.38	B/L SW	0	1,103,883.563	2,788,052.146	808.67	C/L US69 - 231+37.85, 106.7' RT.)	465/ DRAKE24
8	0+00.00	C/L DRAKE	0	1,104,013.044	2,788,070.364	804.69	C/L US69 - 232+13.48, 00')	465/ DRAKE41
8	1+57.16	C/L DRAKE	0	1,103,855.88	2,788,070.50	807.98	C/L US69 - 231+41.45, 139.7' RT.	465/ DRAKE42

STATE OF MISSOURI
SEAN M. DOMINGO
NUMBER
PE-2022001607
PROFESSIONAL ENGINEER

07/31/2023 2:59:03 PM
SEAN M. DOMINGO - CIVIL
MO-PE-2022001607

DATE PREPARED
7/31/2023

ROUTE	STATE
69	MO
DISTRICT	SHEET NO.
KC	28

COUNTY
CLAY

JOB NO.
J4P3465

CONTRACT ID.

PROJECT NO.

BRIDGE NO.

DATE	DESCRIPTION

MISSOURI HIGHWAYS AND TRANSPORTATION COMMISSION

105 WEST CAPITOL
JEFFERSON CITY, MO 65102
1-888-ASK-MODOT (1-888-275-6636)

IF A SEAL IS PRESENT ON THIS SHEET IT HAS BEEN ELECTRONICALLY SEALED AND DATED.

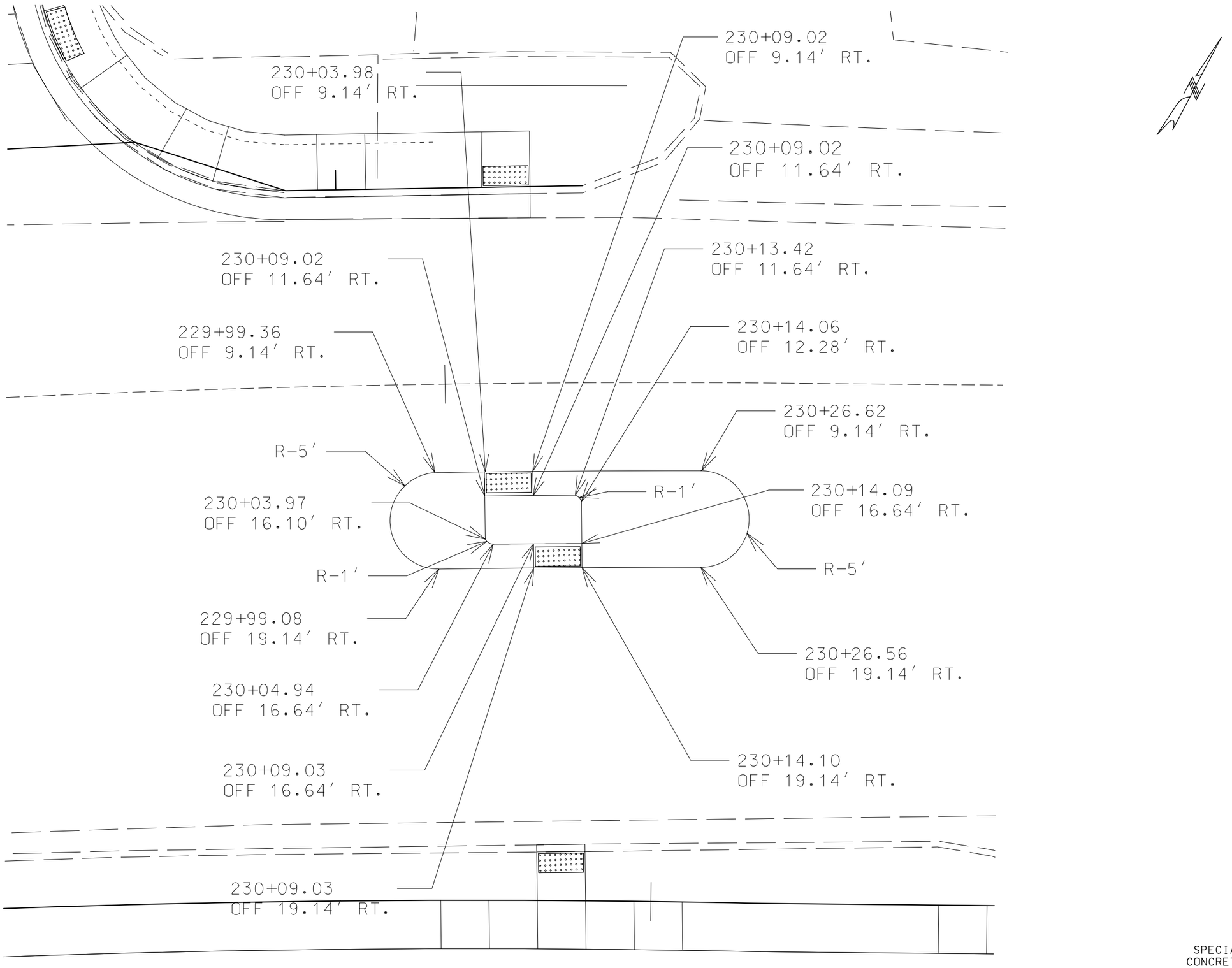

SPECIAL SHEET
CONCRETE MEDIAN
SHEET 1 OF 10

STATE OF MISSOURI
SEAN M. DOMINGO
NUMBER
PE-2022001607
PROFESSIONAL ENGINEER

07/31/2023 3:00:13 PM
SEAN M. DOMINGO - CIVIL
MO-PE-2022001607

DATE PREPARED	
7/31/2023	
ROUTE 69	STATE MO
DISTRICT KC	SHEET NO. 29
COUNTY CLAY	
JOB NO. J4P3465	
CONTRACT ID.	
PROJECT NO.	
BRIDGE NO.	

DATE	DESCRIPTION

MISSOURI HIGHWAYS AND TRANSPORTATION COMMISSION
105 WEST CAPITOL
JEFFERSON CITY, MO 65102
1-888-ASK-MODOT (1-888-275-6636)

IF A SEAL IS PRESENT ON THIS SHEET IT HAS BEEN ELECTRONICALLY SEALED AND DATED.

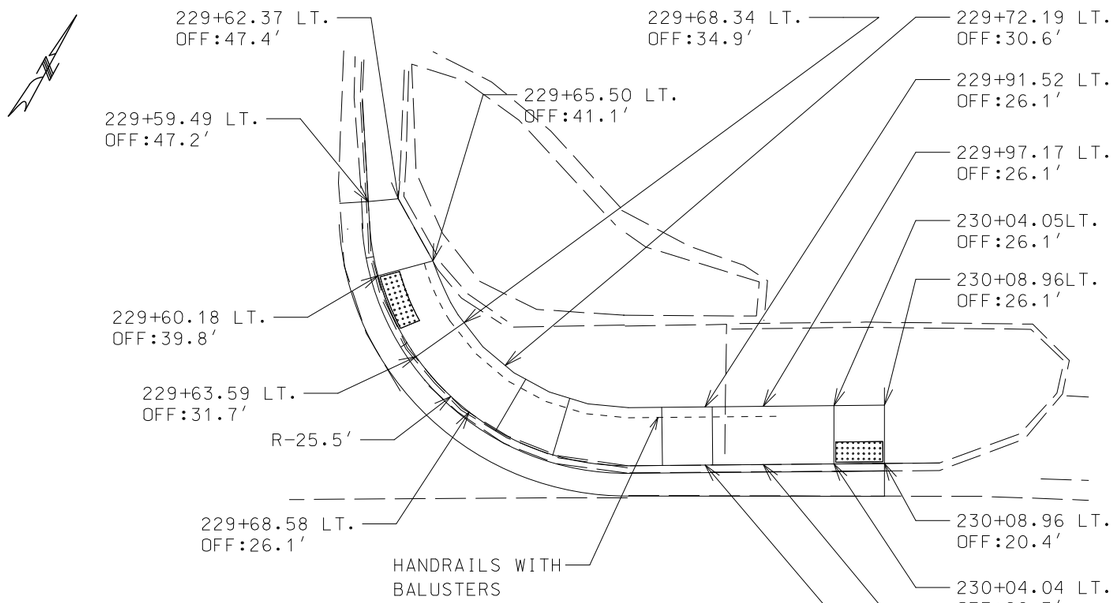

BUILD ADA COMPLIANT
CONC. SIDEWALK, CURB RAMPS
AND TRUNCATED DOMES

BUILD CONC. TYPE B CURB AND GUTTER
AT NE QUADRANT OF POE STREET

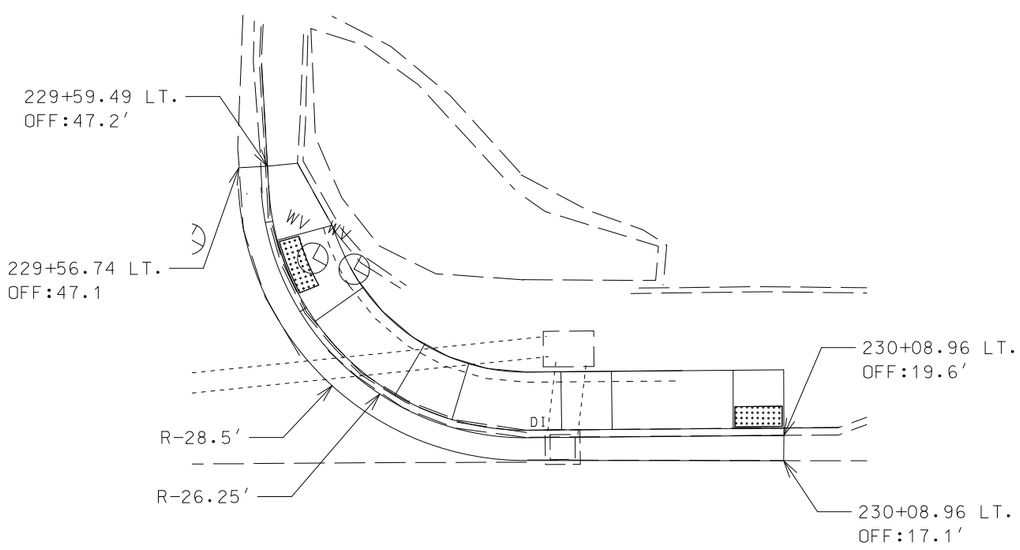

NOT TO SCALE

REMOVE AND BUILD PARKING LOT
6″ BITUMINOUS PAVEMENT AND
TYPE B CURB AND GUTTER

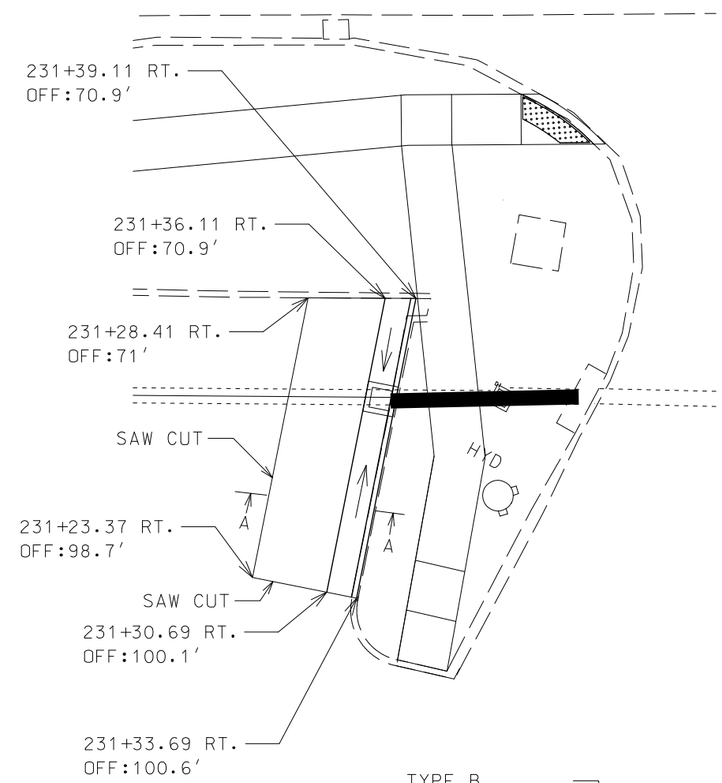

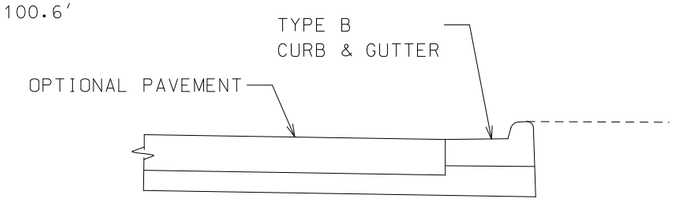

SECTION A-A

NOTE:
OPTIONA PAVEMENT OVER
4″ TYPE 5 AGGREGATE
OR
6″ BIT. PAVEMENT OVER
4″ TYPE 5 AGGREGATE

SPECIAL SHEET
SIDEWALK, RETAINING WALL, HAND-RAILING
AND PARKING LOT
SHEET 2 OF 10

STATE OF MISSOURI
SEAN M. DOMINGO
NUMBER
PE-2022001607
PROFESSIONAL ENGINEER
07/31/2023 3:05:56 PM
SEAN M. DOMINGO - CIVIL
MO-PE-2022001607

DATE PREPARED	
7/31/2023	
ROUTE 69	STATE MO
DISTRICT KC	SHEET NO. 30
COUNTY CLAY	
JOB NO. J4P3465	
CONTRACT ID.	
PROJECT NO.	
BRIDGE NO.	

DATE	DESCRIPTION

MISSOURI HIGHWAYS AND TRANSPORTATION COMMISSION
105 WEST CAPITOL
JEFFERSON CITY, MO 65102
1-888-ASK-MODOT (1-888-275-6636)

IF A SEAL IS PRESENT ON THIS SHEET IT HAS BEEN ELECTRONICALLY SEALED AND DATED.

SEC/SUR 28 TWP 51 N RGE 32 W

(36'-8⅞") CAST-IN-PLACE CONCRETE RETAINING WALL

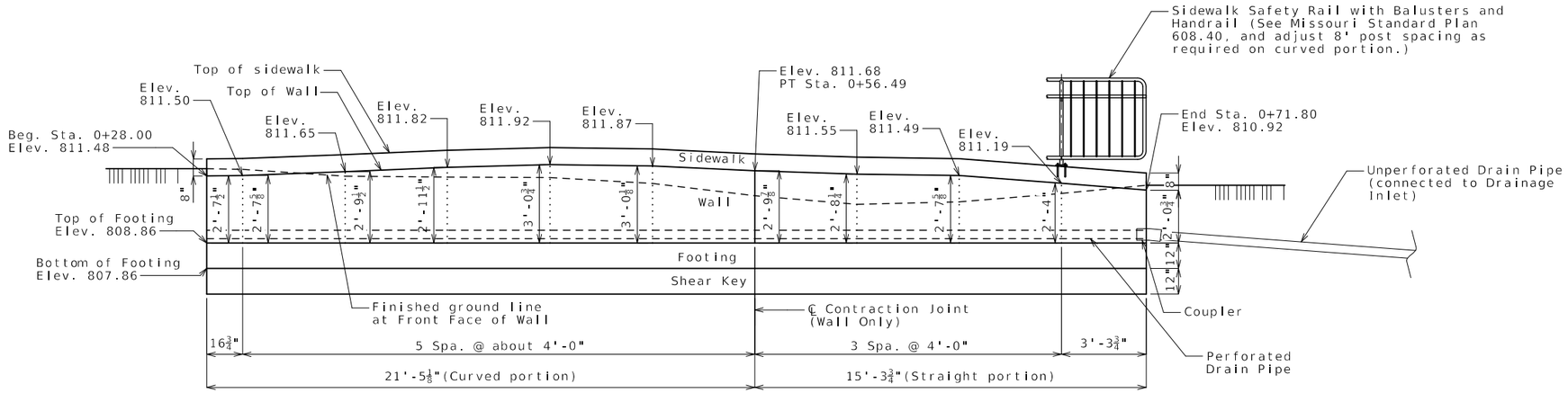

DEVELOPED ELEVATION (LOOKING NORTHWARD)
(Dimensions along Front Face of Wall)

Note: Curb and Bottom of Sidewalk not shown for clarity

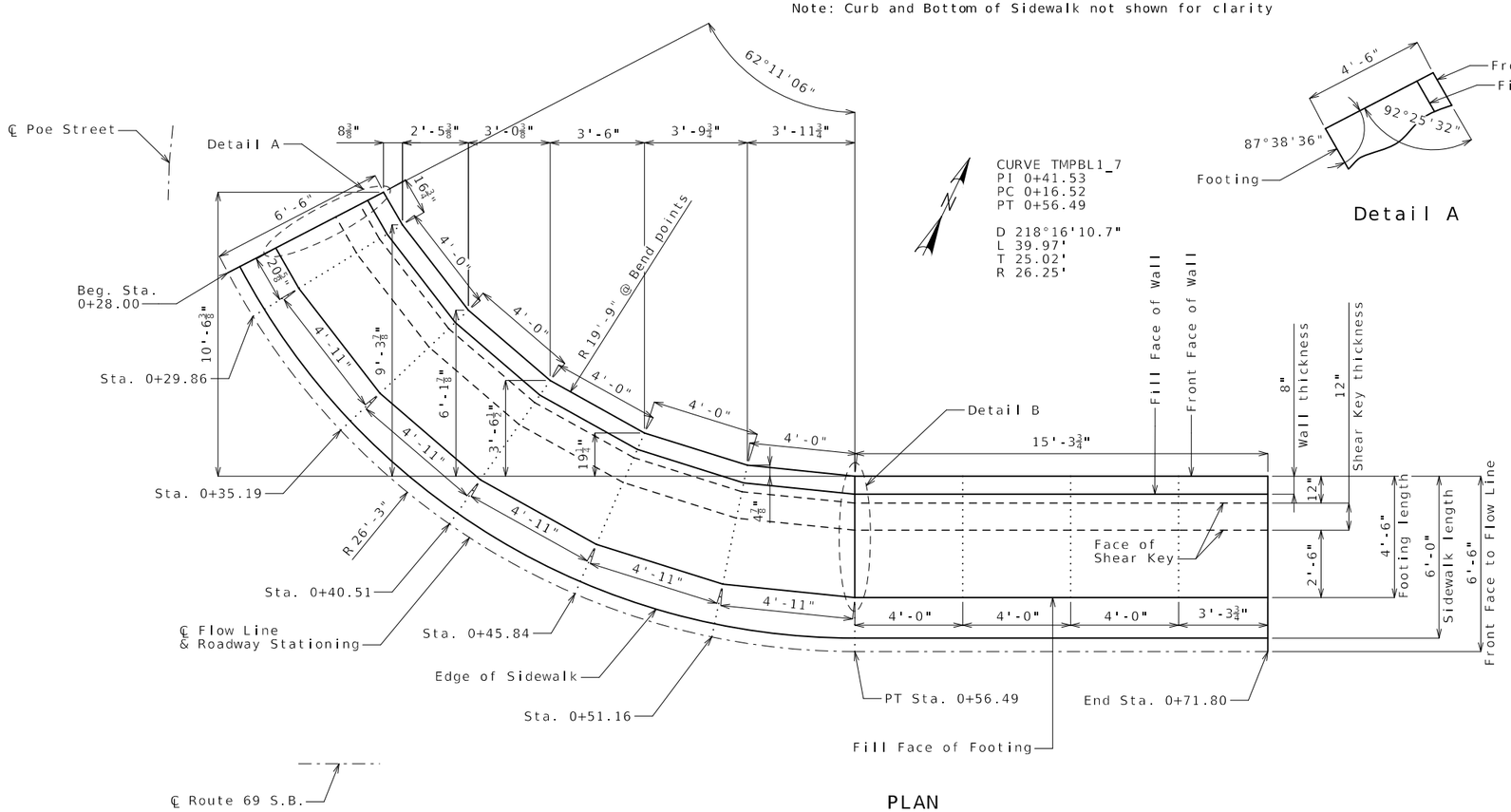

PLAN

Note: Perforated Drain Pipe and Handrails not shown for clarity.

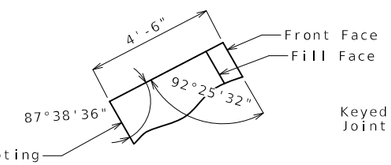

Detail A

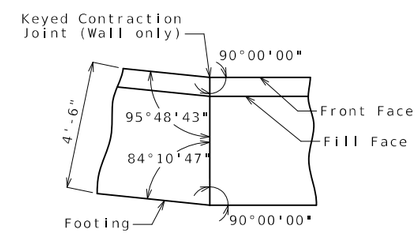

Detail B

Notes:

For General Notes, Estimated Quantities & Footing Data, See Sheet No. 2.

Longitudinal dimensions shown are horizontal.

Stationing for the wall is along the Flow Line on the east side of Poe Street. See Section B-B on Sheet No. 2.

Footing & Wall may be constructed in chords, as shown, or in curved arc lines.

B.M. "C.P. #2" ELEV. 800.62 ROUTE 69 S.B. STA. 223+94.12, OFF. 22.9' LT. 5/8" REBAR W/ ORANGE CAP BURIED 0.5'± BELOW GROUND NORTH OF EDGE OF CURB ROUTE US 69 (BETWEEN EAST ENTRANCE OF B&C LANDSCAPES AND WEST OF EX.BRIDGE)(N)1104115.194(E)2788218.209

RETAINING WALL AT THE NORTH CORNER OF ROUTE 69 S.B. AND NORTH POE STREET

ROUTE 69 S.B. FROM ROUTE 435 TO ROUTE 35
ABOUT 0.7 MILES WEST OF ROUTE 435
BEGINNING STATION 0+28.00

RETAINING WALL SPECIAL SHEET 3 OF 10

Designed May 2023
Detailed July 2023
Checked July 2023

Note: This drawing is not to scale. Follow dimensions.

STATE OF MISSOURI
TED S. KOESTER
NUMBER PE-2013000591
PROFESSIONAL ENGINEER

THIS SHEET HAS BEEN SIGNED, SEALED AND DATED ELECTRONICALLY.

DATE PREPARED	7/31/2023
ROUTE	69
STATE	MO
DISTRICT	KC
SHEET NO.	31
COUNTY	CLAY
JOB NO.	J4P3465
CONTRACT ID.	
PROJECT NO.	
BRIDGE NO.	KC-0127

DESCRIPTION	DATE

IF A SEAL IS PRESENT ON THIS SHEET IT HAS BEEN ELECTRONICALLY SEALED AND DATED.

MISSOURI HIGHWAYS AND TRANSPORTATION COMMISSION
105 WEST CAPITOL
JEFFERSON CITY, MO 65102
1-888-ASK-MODOT (1-888-275-6636)

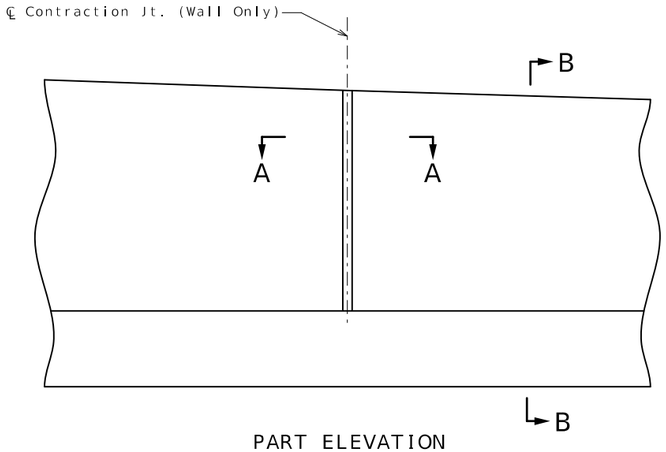

PART ELEVATION

Note: Construction joint keys, sidewalk, shear key, underdrain, and porous backfill, not shown for clarity.

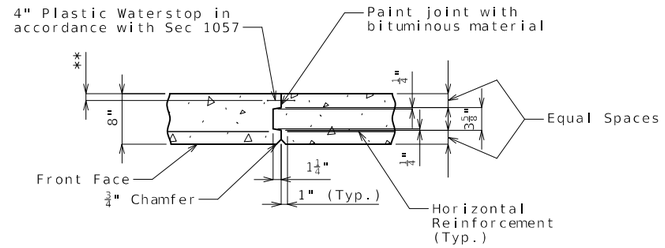

SECTION A-A
(Contraction Joint)

Note: Cost of plastic waterstop, complete-in-place, will be considered completely covered by the contract unit price for Class B Concrete (Retaining Walls).

** Use 4" (Max.) adjust for "L" walls or minimum stem thickness (2" min.).

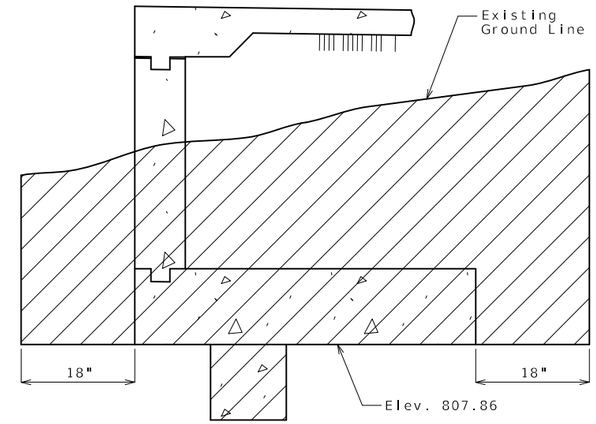

LIMITS OF CLASS 1 EXCAVATION

General Notes:

Design Specifications:
2002 AASHTO LFD (17th Ed.), Standard Specifications
Seismic Performance Category A

Design Loading:
Ø = 27° (Retained Material and Foundation Material)
Earth - 120 #/Cu. ft.
Equivalent Fluid Pressure 45#/cu. ft.

Design Unit Stresses:
Class B Concrete (Retaining Walls) f'c = 3,000 psi
Reinforcing Steel (Grade 60) fy = 60,000 psi

Joint Filler:
All joint filler shall be in accordance with Sec. 1057 for preformed sponge rubber expansion and partition joint filler, except as noted.

Reinforcing Steel:
Minimum clearance to reinforcing steel shall be 1-1/2", unless otherwise shown.

Miscellaneous:
The cost of the underdrain, including porous backfill, pipe and all other incidental work, complete in place, will be considered completely covered by the contract unit price for Class B Concrete (Retaining Walls).

Pipe may be either 4" diameter corrugated metallic-coated steel pipe underdrain, 4" diameter corrugated polyvinyl chloride (PVC) drain pipe, or 4" diameter corrugated polyethylene (PE) drain pipe and shall be in accordance with Sec 724.

* Except vary from 2'-0" (Min.) at Sta. 0+64.49 to 16" (Min.) at Sta. 0+71.80.

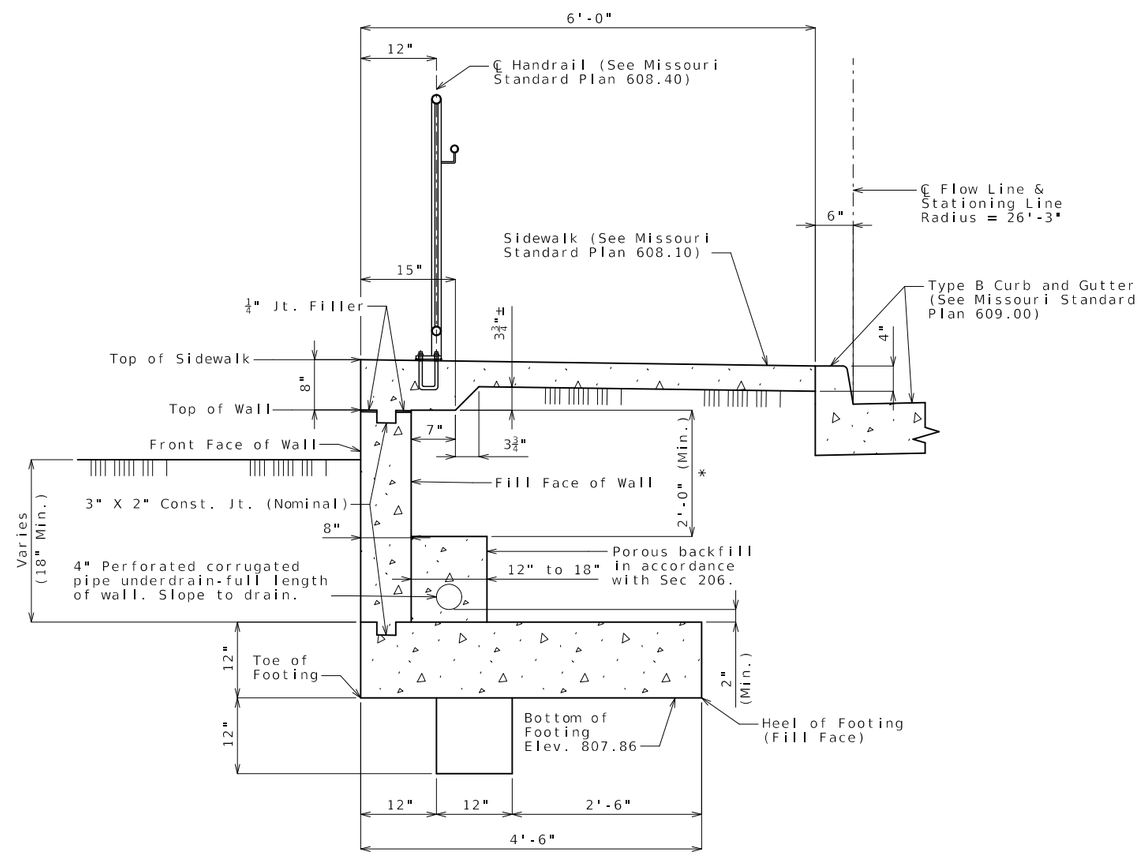

SECTION B-B

Estimated Quantities

Item		Total
Class 1 Excavation	cu. yard	45
Class B Concrete (Retaining Walls)	cu. yard	10.4
Reinforcing Steel (Epoxy Coated)	pound	1320

Foundation Data

Spread Footing		
	Foundation Material	Soil
	Design Bearing ksf	1.8

Detailed July 2023
Checked July 2023

Note: This drawing is not to scale. Follow dimensions.

Sheet No. 2 of 4

RETAINING WALL SPECIAL SHEET 4 OF 10

STATE OF MISSOURI
TED S. KOESTER
NUMBER PE-2013000591
PROFESSIONAL ENGINEER

THIS SHEET HAS BEEN SIGNED, SEALED AND DATED ELECTRONICALLY.

DATE PREPARED	
7/31/2023	
ROUTE 69	STATE MO
DISTRICT KC	SHEET NO. 32
COUNTY CLAY	
JOB NO. J4P3465	
CONTRACT ID.	
PROJECT NO.	
BRIDGE NO. KC-0127	

DATE	DESCRIPTION

MISSOURI HIGHWAYS AND TRANSPORTATION COMMISSION
105 WEST CAPITOL
JEFFERSON CITY, MO 65102
1-888-ASK-MODOT (1-888-275-6636)

IF A SEAL IS PRESENT ON THIS SHEET IT HAS BEEN ELECTRONICALLY SEALED AND DATED.

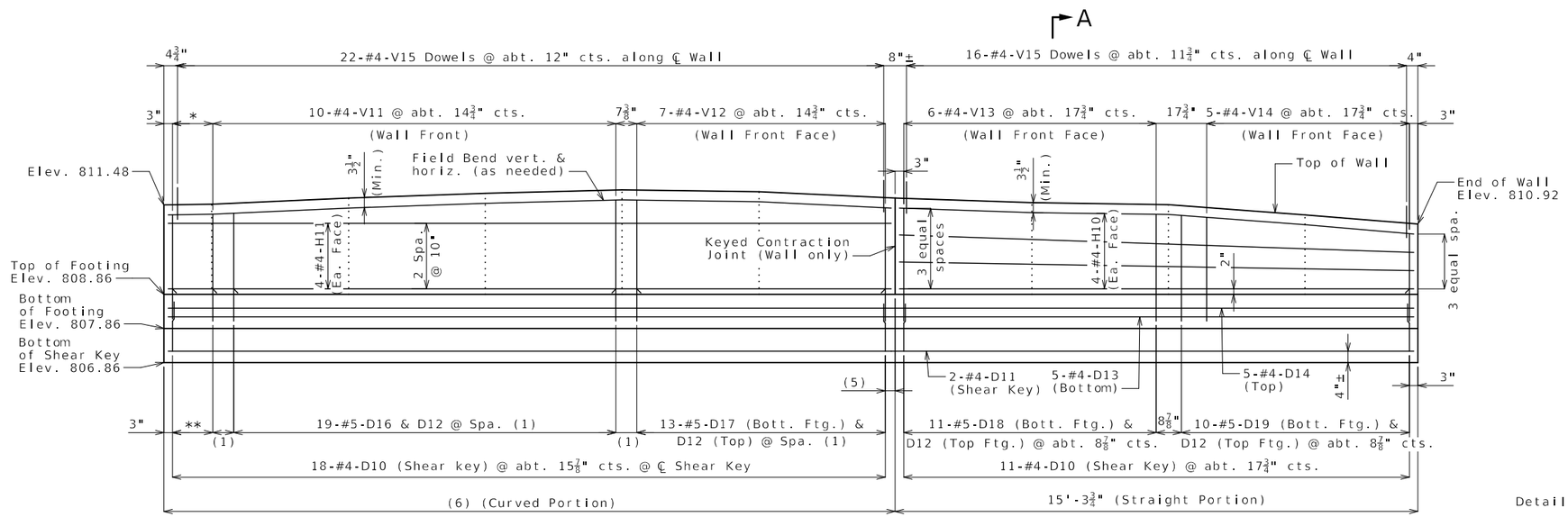

DEVELOPED ELEVATION SHOWING REINFORCEMENT

(Looking North, Dimensions along Front Face of Wall)

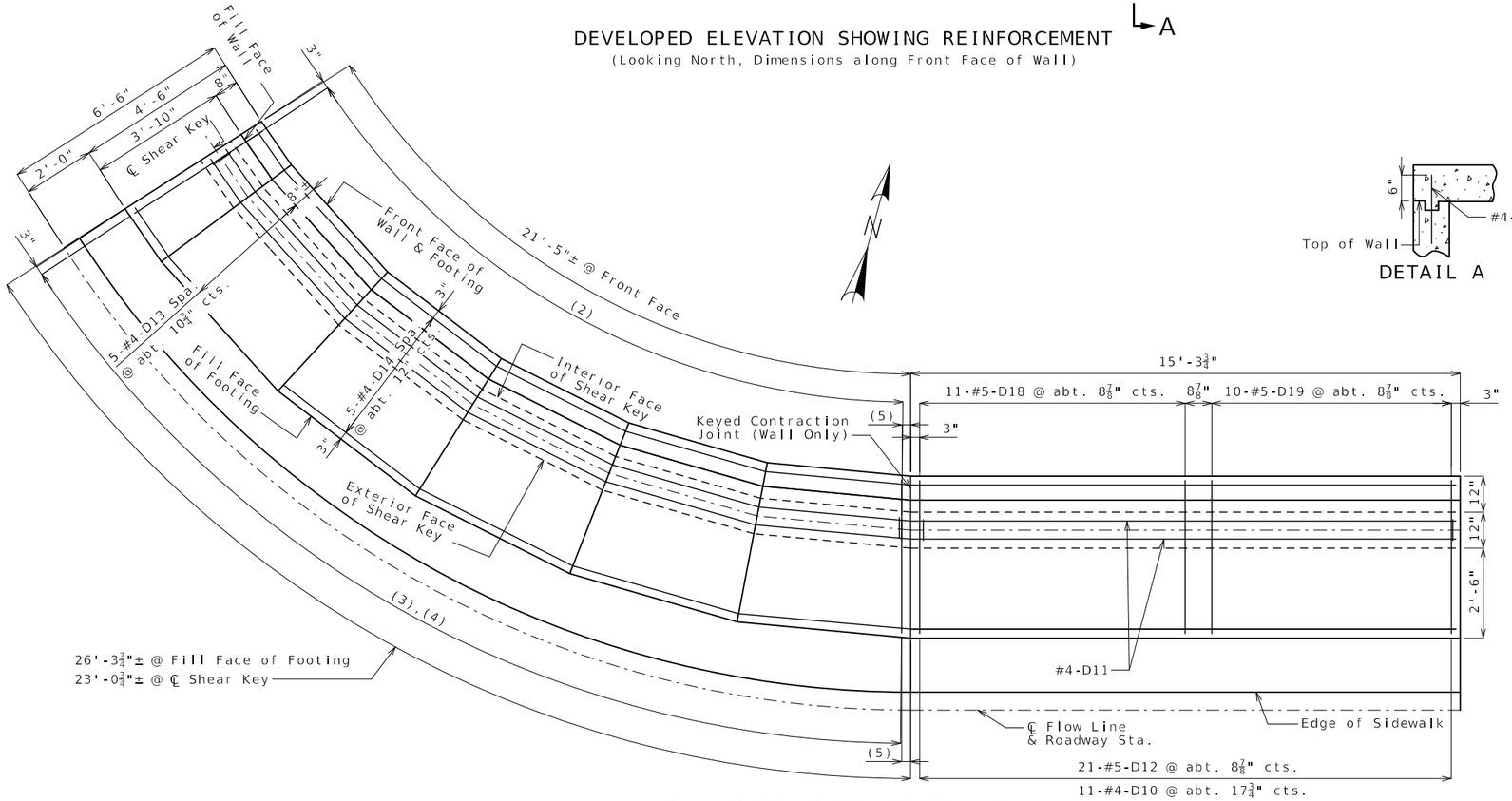

PLAN SHOWING REINFORCEMENT

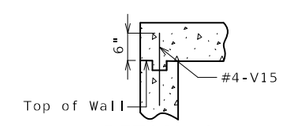

DETAIL A

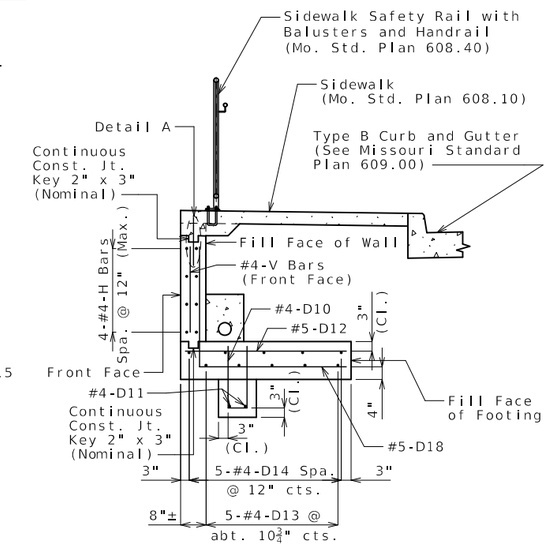

SECTION A-A

Notes:

Field bending required on D11, D13, D14, and H11 bars. Longitudinal bar lengths in the bar list are slightly longer than required; cut as required after field-bending.

All transverse footing bars shall be placed radially.

Work this sheet with sheet No. 2.

(1) 7⅜" cts. (Along Front Face of Wall) and 9" cts. (Along Fill Face of Footing)

(2) 35-#5-D12, D16, D17, D18 & D19 Spa. @ 7⅜" cts. (Along Front Face of Wall)

(3) 35-#5-D12, D16, D17, D18 & D19 Spa. @ 9" cts. (Along Fill Face of Footing)

(4) 18-#4-D10 Spa. @ 15⅞" cts. (Along ℄ Shear Key)

(5) 3½" (Front Face of Wall)
4½" (Fill Face of Footing)

(6) 21'-5"± (Front Face), 22'-1⅞"± (Fill Face of Wall), 26'-3⅞"± (Fill Face of Footing), & 23'-0¾"± (℄ Shear Key)

* 2-#4-V10 @ abt. 14⅛" cts. (Wall Front)

** 3-#5-D15 & D12 (Top) @ abt. (1)

RETAINING WALL SPECIAL SHEET 5 OF 10

DETAILS OF REINFORCEMENT

Detailed July 2023
Checked July 2023

Note: This drawing is not to scale. Follow dimensions.

Sheet No. 3 of 4

STATE OF MISSOURI
TED S. KOESTER
NUMBER PE-2013000591
PROFESSIONAL ENGINEER

THIS SHEET HAS BEEN SIGNED, SEALED AND DATED ELECTRONICALLY.

DATE PREPARED	
7/31/2023	
ROUTE 69	STATE MO
DISTRICT KC	SHEET NO. 33
COUNTY CLAY	
JOB NO. J4P3465	
CONTRACT ID.	
PROJECT NO.	
BRIDGE NO. KC-0127	

DATE	DESCRIPTION

MISSOURI HIGHWAYS AND TRANSPORTATION COMMISSION

105 WEST CAPITOL
JEFFERSON CITY, MO 65102
1-888-ASK-MODOT (1-888-275-6636)

IF A SEAL IS PRESENT ON THIS SHEET IT HAS BEEN ELECTRONICALLY SEALED AND DATED.

BILL OF REINFORCING STEEL

NO. REQ'D.	MARK NO. SIZE	MARK NO. MARK	LOCATION	EPOXY (E)	SHAPE NO.	STIRRUP (S)	SUBSTR. (X)	VARIES (V)	NO. EACH	B FT. IN.	C FT. IN.	D FT. IN.	E FT. IN.	F FT. IN.	H FT. IN.	K FT. IN.	NOMINAL LENGTH FT. IN.	ACTUAL LENGTH FT. IN.	WEIGHT LBS.
			C.I.P. Wall																
29	4	D10	SHEAR KEY	E	10	S					19.000	6.000					3 8	3 6	68
2	4	D11	SHEAR KEY	E	20					39 0.000							39 0	39 0	52
56	5	D12	FOOTING	E	20					4 2.000							4 2	4 2	243
5	4	D13	FOOTING	E	20			V	1	37 6.000							37 6	37 6	
			INCREMENT =							41 5.000							41 5	41 5	132
			11.750 INCH																
5	4	D14	FOOTING	E	20			V	1	37 1.000							37 1	37 1	
			INCREMENT =							41 5.000							41 5	41 5	131
			13.000 INCH																
3	5	D15	FOOTING	E	19	S				3 0.000	3 10.000						6 10	6 9	21
19	5	D16	FOOTING	E	19	S		V	1	3 0.000	3 10.000						6 10	6 9	
			INCREMENT =							3 5.000	3 10.000						7 3	7 2	138
			0.250 INCH																
13	5	D17	FOOTING	E	19	S		V	1	3 5.000	3 10.000						7 3	7 2	
			INCREMENT =							3 2.000	3 10.000						7 0	6 11	95
			0.250 INCH																
11	5	D18	FOOTING	E	19	S		V	1	3 1.000	3 10.000						6 11	6 10	
			INCREMENT =							2 11.000	3 10.000						6 9	6 8	77
			0.250 INCH																
10	5	D19	FOOTING	E	19	S		V	1	2 11.000	3 10.000						6 9	6 8	
			INCREMENT =							2 5.000	3 10.000						6 3	6 2	67
			0.625 INCH																
8	4	H10	WALL	E	20					15 0.000							15 0	15 0	80
8	4	H11	WALL	E	20			V	2	21 7.000							21 7	21 7	
			INCREMENT =							21 10.000							21 10	21 10	116
			1.000 INCH																
2	4	V10	WALL	E	20					2 2.000							2 2	2 2	3
10	4	V11	WALL	E	20			V	1	2 3.000							2 3	2 3	
			INCREMENT =							2 7.000							2 7	2 7	16
			0.500 INCH																
7	4	V12	WALL	E	20			V	1	2 7.000							2 7	2 7	
			INCREMENT =							2 5.000							2 5	2 5	12
			0.375 INCH																
6	4	V13	WALL	E	20			V	1	2 4.000							2 4	2 4	
			INCREMENT =							2 2.000							2 2	2 2	9
			0.375 INCH																
5	4	V14	WALL	E	20			V	1	2 1.000							2 1	2 1	
			INCREMENT =							20.000							0 20	0 20	6
			1.250 INCH																
38	4	V15	WALL	E	20					2 0.000							2 0	2 0	51
			TOTALS																
	4			E															676
	5			E															641
			TOTAL																0
			TOTAL	E															1317
			Slab on																

BILL OF REINFORCING STEEL

NO. REQ'D.	MARK NO. SIZE	MARK NO. MARK	LOCATION	EPOXY (E)	SHAPE NO.	STIRRUP (S)	SUBSTR. (X)	VARIES (V)	NO. EACH	B FT. IN.	C FT. IN.	D FT. IN.	E FT. IN.	F FT. IN.	H FT. IN.	K FT. IN.	NOMINAL LENGTH FT. IN.	ACTUAL LENGTH FT. IN.	WEIGHT LBS.
			Girder																
	4			E															676
	5			E															641
			TOTAL																1317

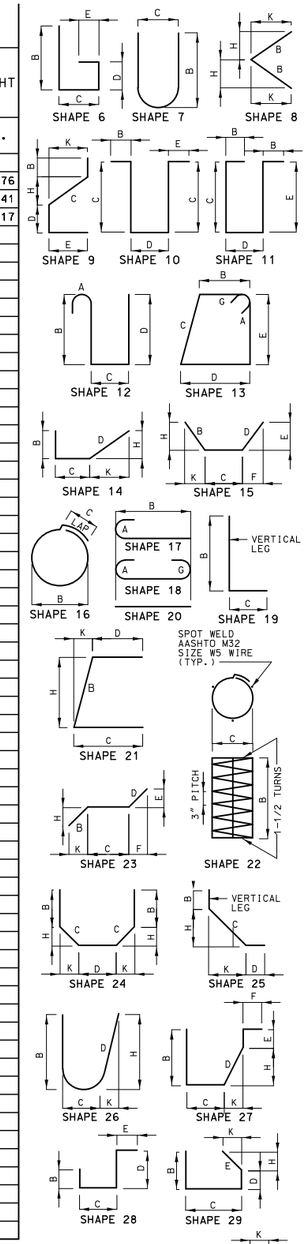

STATE OF MISSOURI
TED S. KOESTER
NUMBER PE-2013000591
PROFESSIONAL ENGINEER

THIS SHEET HAS BEEN SIGNED, SEALED AND DATED ELECTRONICALLY.

DATE PREPARED	7/31/2023
ROUTE 69	STATE MO
DISTRICT KC	SHEET NO. 34
COUNTY	CLAY
JOB NO.	J4P3465
CONTRACT ID.	
PROJECT NO.	
BRIDGE NO.	KC0127

DESCRIPTION

DATE

MISSOURI HIGHWAYS AND TRANSPORTATION COMMISSION

105 WEST CAPITOL
JEFFERSON CITY, MO 65102
1-888-ASK-MODOT (1-888-275-6636)

IF A SEAL IS PRESENT ON THIS SHEET IT HAS BEEN ELECTRONICALLY SEALED AND DATED.

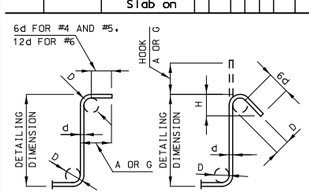

STIRRUP HOOK DIMENSIONS				
GRADES 40 - 50 - 60 KSI				
BAR SIZE	D (IN.)	90° HOOK: HOOK A OR G	135° HOOK: HOOK A OR G	135° HOOK: APPROX. H
#4	2"	4 1/2"	4 1/2"	3"
#5	2 1/2"	6"	5 1/2"	3 3/4"
#6	4 1/2"	12"	8"	4 1/2"

NOTE: UNLESS OTHERWISE NOTED, DIAMETER "D" IS THE SAME FOR ALL BENDS AND HOOKS ON A BAR.

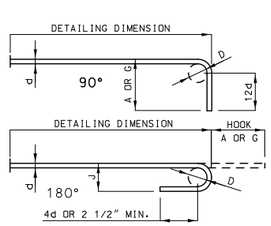

END HOOK DIMENSIONS				
BAR SIZE	D (IN.)	ALL GRADES: 180° HOOKS A OR G	ALL GRADES: 180° HOOKS J	ALL GRADES: 90° HOOKS A OR G
#3	2 1/4"	5"	3"	6"
#4	3"	6"	4"	8"
#5	3 3/4"	7"	5"	10"
#6	4 1/2"	8"	6"	12"
#7	5 1/4"	10"	7"	14"
#8	6"	11"	8"	16"
#9	9 1/2"	15"	11 3/4"	19"
#10	10 3/4"	17"	13 1/4"	22"
#11	12"	19"	14 3/4"	2'-0"
#14	18 1/4"	2'-3"	21 3/4"	2'-7"

NOTE:
ALL STANDARD HOOKS AND BENDS OTHER THAN 180 DEGREE ARE TO BE BENT WITH SAME PROCEDURE AS FOR 90 DEGREE STANDARD HOOKS.

HOOKS AND BENDS SHALL BE IN ACCORDANCE WITH THE PROCEDURES AS SHOWN ON THIS SHEET.

E = EPOXY COATED REINFORCEMENT.
S = STIRRUP.
X = BAR IS INCLUDED IN SUBSTRUCTURE QUANTITIES.
V = BAR DIMENSIONS VARY IN EQUAL INCREMENTS BETWEEN DIMENSIONS SHOWN ON THIS LINE AND THE FOLLOWING LINE.
NO. EA. = NUMBER OF BARS OF EACH LENGTH.

NOMINAL LENGTHS ARE BASED ON OUT TO OUT DIMENSIONS SHOWN IN BENDING DIAGRAMS AND ARE LISTED FOR FABRICATORS USE. (NEAREST INCH)

ACTUAL LENGTHS ARE MEASURED ALONG CENTERLINE BAR TO THE NEAREST INCH.

PAYWEIGHTS ARE BASED ON ACTUAL LENGTHS.

FOUR ANGLE OR CHANNEL SPACERS ARE REQUIRED FOR EACH COLUMN SPIRAL. SPACERS ARE TO BE PLACED ON INSIDE OF SPIRALS. LENGTH AND WEIGHT OF COLUMN SPIRALS DO NOT INCLUDE SPLICES OR SPACERS.

REINFORCING STEEL (GRADE 60) FY = 60,000 PSI.

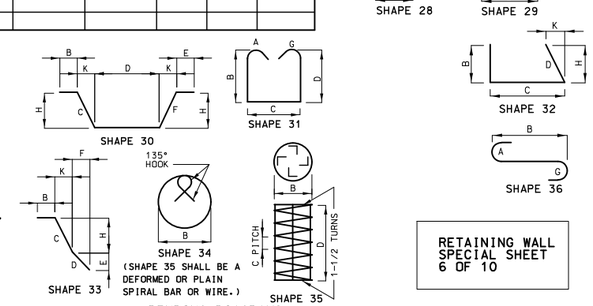

BENDING DIAGRAMS

RETAINING WALL SPECIAL SHEET 6 OF 10

Detailed July 2023
Checked July 2023

Note: This drawing is not to scale. Follow dimensions.

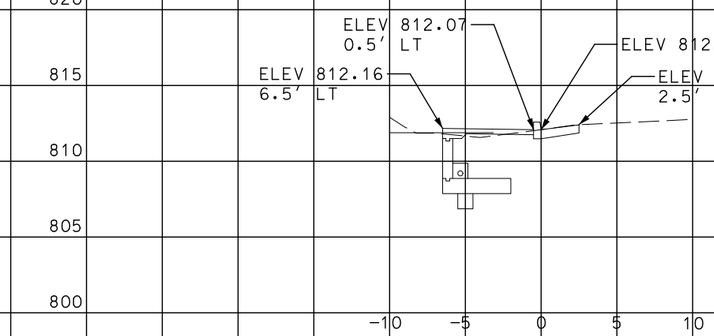

Sta. 0+29.86

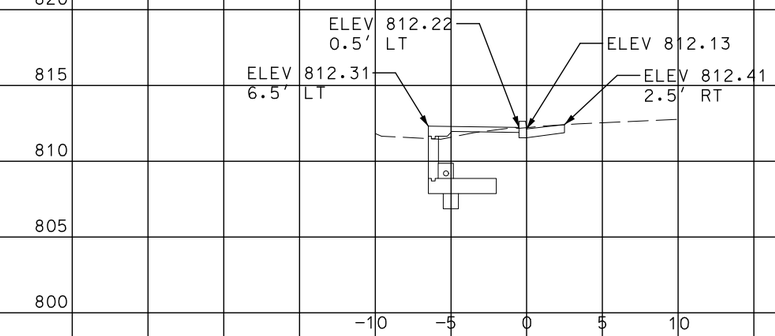

Sta. 0+35.19

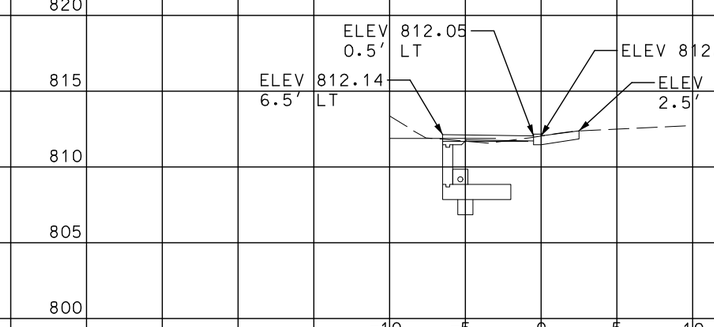

Sta. 0+28.00

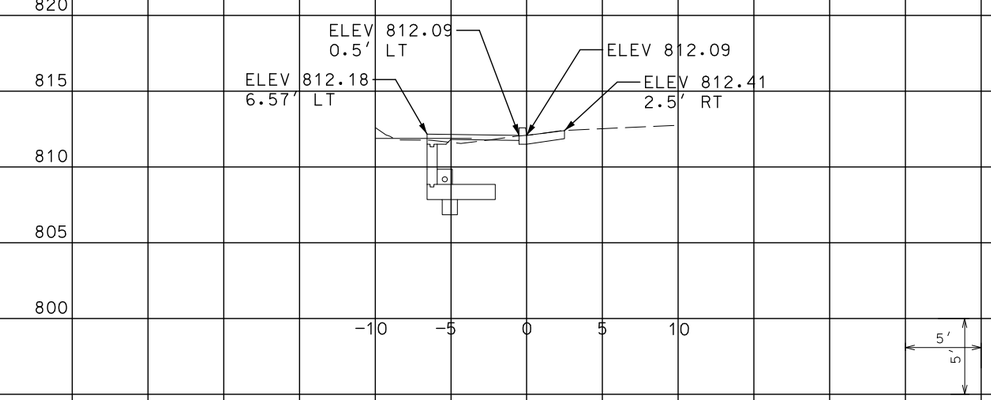

Sta. 0+31.15

RETAINING WALL/ SIDEWALK
SPECIAL SHEET
SHEET 7 OF 10

STATE OF MISSOURI
SEAN M. DOMINGO
NUMBER
PE-2022001607
PROFESSIONAL ENGINEER

07/31/2023 3:06:56 PM
SEAN.M.DOMINGO - CIVIL
MO-PE-2022001607

DATE PREPARED	
7/31/2023	
ROUTE 69	STATE MO
DISTRICT KC	SHEET NO. 35
COUNTY CLAY	
JOB NO. J4P3465	
CONTRACT ID.	
PROJECT NO.	
BRIDGE NO.	

DATE	DESCRIPTION

MISSOURI HIGHWAYS AND TRANSPORTATION COMMISSION

105 WEST CAPITOL
JEFFERSON CITY, MO 65102
1-888-ASK-MODOT (1-888-275-6636)

IF A SEAL IS PRESENT ON THIS SHEET IT HAS BEEN ELECTRONICALLY SEALED AND DATED.

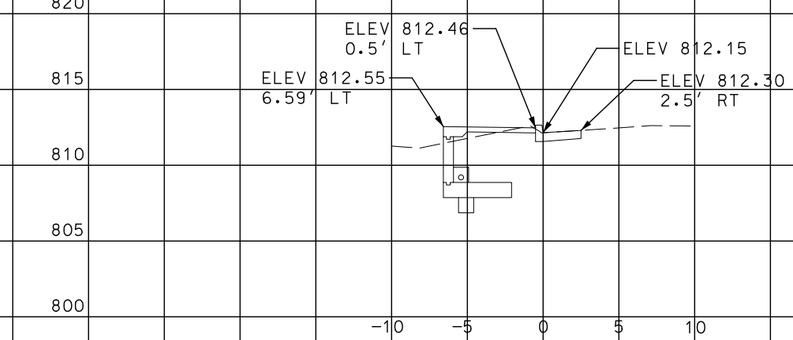

Sta. 0+42.29

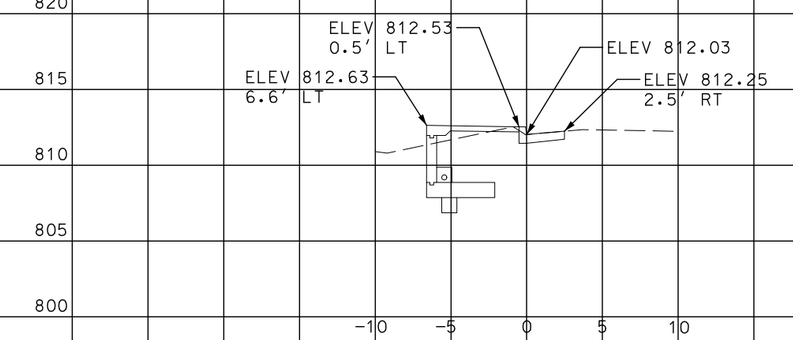

Sta. 0+48.64

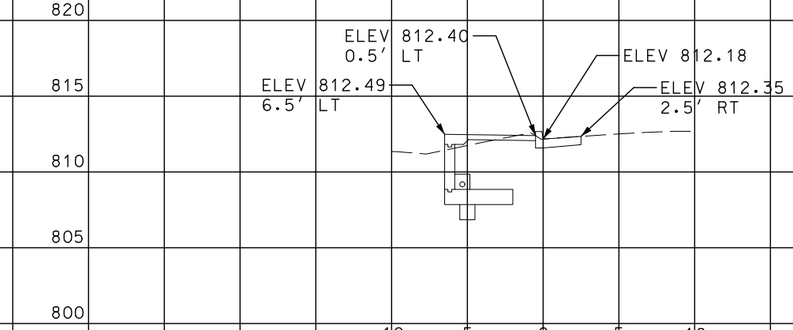

Sta. 0+40.51

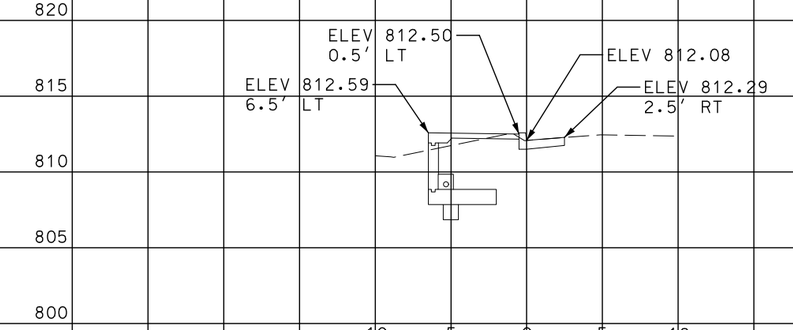

Sta. 0+45.84

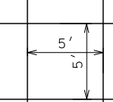

RETAINING WALL/ SIDEWALK
SPECIAL SHEET
SHEET 8 OF 10

STATE OF MISSOURI
SEAN M. DOMINGO
NUMBER
PE-2022001607
PROFESSIONAL ENGINEER

07-31/2023 3:07:42 PM
SEAN M. DOMINGO - CIVIL
MO-PE-2022001607

DATE PREPARED	
7/31/2023	
ROUTE 69	STATE MO
DISTRICT KC	SHEET NO. 36
COUNTY CLAY	
JOB NO. J4P3465	
CONTRACT ID.	
PROJECT NO.	
BRIDGE NO.	

DESCRIPTION	DATE

MISSOURI HIGHWAYS AND TRANSPORTATION COMMISSION

105 WEST CAPITOL
JEFFERSON CITY, MO 65102
1-888-ASK-MODOT (1-888-275-6636)

IF A SEAL IS PRESENT ON THIS SHEET IT HAS BEEN ELECTRONICALLY SEALED AND DATED.

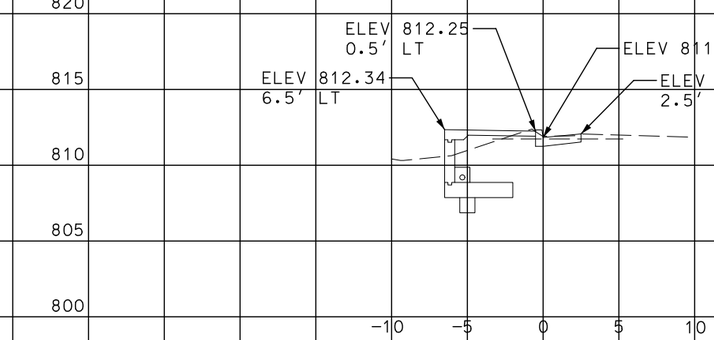

Sta. 0+56.49

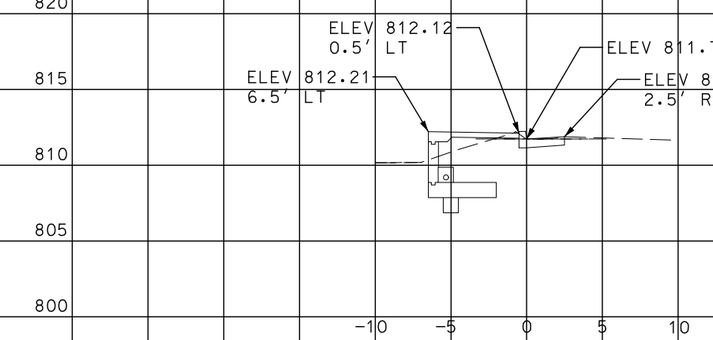

Sta. 0+60.49

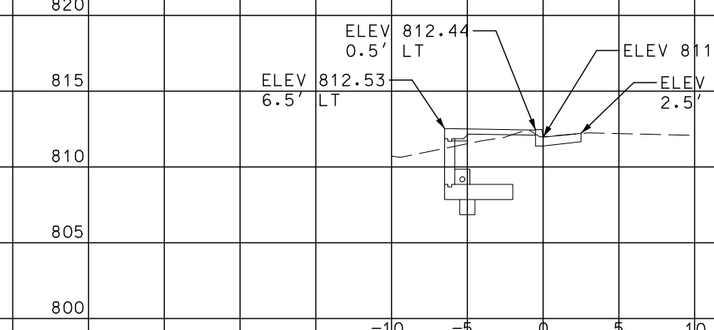

Sta. 0+51.16

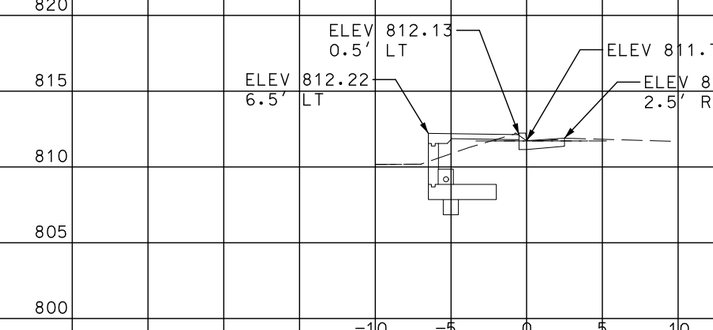

Sta. 0+59.81

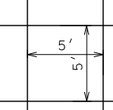

RETAINING WALL/ SIDEWALK
SPECIAL SHEET
SHEET 9 OF 10

STATE OF MISSOURI
SEAN M. DOMINGO
NUMBER
PE-2022001607
PROFESSIONAL ENGINEER

07-31-2023 3:10:08 PM
SEAN M. DOMINGO - CIVIL
MO-PE-2022001607

DATE PREPARED	
7/31/2023	
ROUTE 69	STATE MO
DISTRICT KC	SHEET NO. 37
COUNTY CLAY	
JOB NO. J4P3465	
CONTRACT ID.	
PROJECT NO.	
BRIDGE NO.	

DATE	DESCRIPTION

MISSOURI HIGHWAYS AND TRANSPORTATION COMMISSION

105 WEST CAPITOL
JEFFERSON CITY, MO 65102
1-888-ASK-MODOT (1-888-275-6636)

IF A SEAL IS PRESENT ON THIS SHEET IT HAS BEEN ELECTRONICALLY SEALED AND DATED.

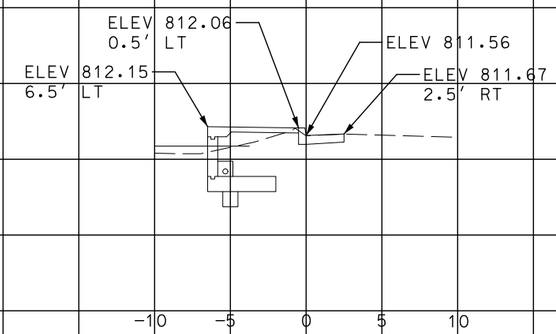

Sta. 0+64.81

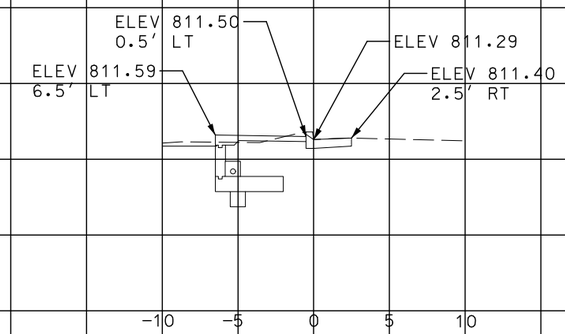

Sta. 0+71.80

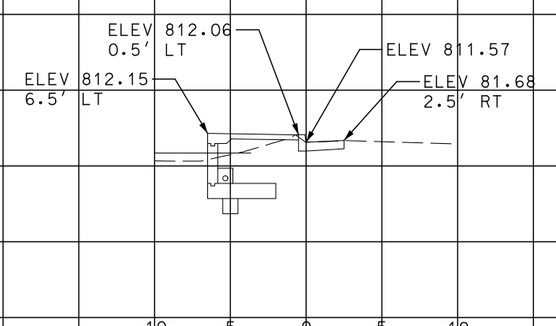

Sta. 0+64.49

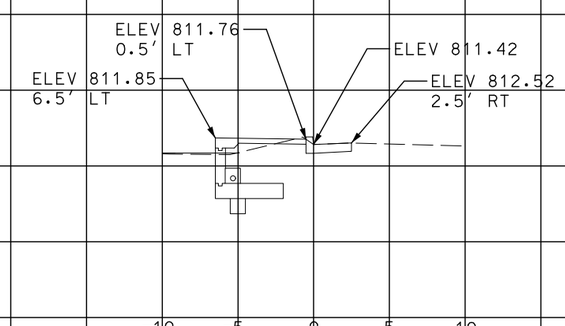

Sta. 0+68.49

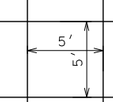

RETAINING WALL/ SIDEWALK
SPECIAL SHEET
SHEET 10 OF 10

STATE OF MISSOURI
SEAN M. DOMINGO
NUMBER
PE-2022001607
PROFESSIONAL ENGINEER

07/31/2023 3:10:41 PM
SEAN M. DOMINGO - CIVIL
MO-PE-2022001607

DATE PREPARED	
7/31/2023	
ROUTE 69	STATE MO
DISTRICT KC	SHEET NO. 38
COUNTY CLAY	
JOB NO. J4P3465	
CONTRACT ID.	
PROJECT NO.	
BRIDGE NO.	

DATE	DESCRIPTION

MISSOURI HIGHWAYS AND TRANSPORTATION COMMISSION

105 WEST CAPITOL
JEFFERSON CITY, MO 65102
1-888-ASK-MODOT (1-888-275-6636)

IF A SEAL IS PRESENT ON THIS SHEET IT HAS BEEN ELECTRONICALLY SEALED AND DATED.

Traffic Control Legend, Sign Spacing, Device Spacing, Channelizing Taper Lengths And Recommended Maximum Speed Reductions

SPEED	SIGN SPACING (ft.)		TAPER LENGTH (ft.)		OPTIONAL	CHANNELIZER SPACING (ft.)	
PERMANENT POSTED SPEED MPH	UNDIVIDED (S)	DIVIDED (S)	SHOULDER (1) (T1)	LANE (2) (T2)	BUFFER LENGTH (ft.) (B)	TAPERS	BUFFER LENGTH (ft.)
0-35	—	200	70	245	280	35	40
40-45	—	500	150	540	400	40	80
50-55	—	1000	185	660	560	50	80
60-70	—	SA-1000 SB-1500 SC-2640	235	840	840	60	120

1. SHOULDER TAPER LENGTH BASED ON 10 FT. (STANDARD SHOULDER WIDTH) OFFSET. 2. LANE TAPER LENGTH BASED ON 12 FT. (STANDARD LANE WIDTH) OFFSET.

SPEED	SIGN SPACING (ft.)		TAPER LENGTH (ft.)		OPTIONAL	CHANNELIZER SPACING (ft.)	
PERMANENT POSTED SPEED MPH	UNDIVIDED (S)	DIVIDED (S)	SHOULDER (1) (T1)	LANE (2) (T2)	BUFFER LENGTH (ft.) (B)	TAPERS	BUFFER LENGTH (ft.)
0-35	200	—	70	245	280	35	40
40-45	350	—	150	540	400	40	80
50-55	500	—	185	660	560	50	80
60-70	1000	—	235	840	840	60	120

1. SHOULDER TAPER LENGTH BASED ON 10 FT. (STANDARD SHOULDER WIDTH) OFFSET.
2. LANE TAPER LENGTH BASED ON 12 FT. (STANDARD LANE WIDTH) OFFSET.

** THE SA DIMENSION IS THE DISTANCE FROM THE TRANSITION OR POINT OF RESTRICTION TO THE FIRST SIGN.

THE SB DIMENSION IS THE DISTANCE BETWEEN THE FIRST AND SECOND SIGNS.

THE SC DIMENSION IS THE DISTANCE BETWEEN THE SECOND AND THIRD SIGNS.

(THE "FIRST SIGN" IS THE SIGN IN A THREE-SIGN SERIES THAT IS CLOSEST TO THE TEMPORARY TRAFFIC CONTROL ZONE. THE "THIRD SIGN" IS THE SIGN THAT IS FURTHEST UPSTREAM FROM THE TEMPORARY TRAFFIC CONTROL ZONE)

DETAILS NOTES:

(1) SPACING BETWEEN SIGNS AND SPACING BETWEEN LAST SIGN AND FLAGGER, BEGINNING OF TAPER, OF SIGNED CONDITION.

(2) SPACING MAY BE ADJUSTED AS NECESSARY TO MEET FIELD CONDITIONS.

(3) TAPER LENGTHS SHOWN INCLUDE LENGTH REQUIRED FOR LANE AND 10' SHOULDER

(4) CONCRETE BARRIER MAY BE INSTALLED AT 8:1 FLARE RATE FROM THE SHOULDER POINT OF THE LIMITS OF THE CLEAR ZONE WHERE THE SIDE SLOPE IS 6:1 OR FLATTER

TAPER LENGTH (L)

L = W X P FOR 40 MPH OR MORE

$L = \frac{WP^2}{60}$ FOR 35 MPH OR LESS

L = TAPER LENGTH IN FEET

W = LATERAL SHIFT IN FEET

P = POSTED SPEED PRIOR TO ROAD WORK IN MPH

TRAFFIC CONTROL LEGEND

- SIGN (SINGLE SIDED)
- FLAGGER
- CHANNELIZER
- PROTECTIVE VEHICLE WITH WORK SIGN, FLASHING ARROW PANEL AND REAR-MOUNTED IMPACT ATTENUATOR UNIT.
- FLASHING ARROW PANEL
- CHANGEABLE MESSAGE BOARD
- BARRICADE
- TUBULAR MARKERS

LEGEND NOTE:

THE PROTECTIVE VEHICLE SIGN SHALL BE MOUNTED AT A RECOMMENDED HEIGHT OF 48 IN. ABOVE THE ROAD SURFACE.

GENERAL NOTES:

1. SEE STANDARD PLAN 616.10 FOR DETAILS AND ITEMS NOT SHOWN.
2. EXISTING SIGNS SHALL BE COVERED DURING WORKING HOURS ONLY IF IN CONFLICT WITH TRAFFIC CONTROL PLANS.
3. NO DIRECT PAYMENT WILL BE MADE FOR RELOCATING, COVERING, UNCOVERING OR REMOVING SIGNS.
4. CONES ALLOWABLE FOR DAYTIME OPERATIONS ONLY.
5. LOCATE FLASHING ARROW PANEL AT BEGINNING OF TAPER WHEN FEASIBLE, ARROW PANELS ARE ALWAYS LOCATED BEHIND CHANNELIZERS OR CONES.

EPG TABLE 616.12 RECOMMENDED MAXIMUM SPEED REDUCTIONS	
ACTIVITY (I.E. WORKERS, EQUIPMENT OR MATERIAL) LOCATION	RECOMMENDED WORK ZONE SPEED REDUCTION (WHEN APPLICABLE)
10 FT. BEYOND EDGE OF TRAVELWAY TO EDGE OF RIGHT OF WAY	NO SPEED REDUCTION
IN TRAFFIC LANE OR WITHIN 10FT. OF THE TRAFFIC LANE	10 MPH
HEAD-TO-HEAD ON MULTILANE	10 MPH
SPECIAL CIRCUMSTANCES WITHIN A TEMPORARY TRAFFIC CONTROL WORK ZONE MAY WARRANT A LOWER SPEED LIMIT THAN RECOMMENDED ABOVE. ALL SPEED LIMIT REDUCTIONS GREATER THAN 10 MPH SHALL BE DOCUMENTED, SUBMITTED TO AND APPROVED BY THE DISTRICT WORK ZONE COORDINATOR.	

SPACING
TEMPORARY
TRAFFIC CONTROL
SHEET 1 OF 8

STATE OF MISSOURI
SEAN M. DOMINGO
NUMBER
PE-2022001607
PROFESSIONAL ENGINEER
07/31/2023 3:11:23 PM
SEAN M. DOMINGO - CIVIL
MO-PE-2022001607

DATE PREPARED 7/31/2023

ROUTE	STATE
69	MO
DISTRICT	SHEET NO.
KC	39

COUNTY CLAY

JOB NO. J4P3465

CONTRACT ID.

PROJECT NO.

BRIDGE NO.

DATE	DESCRIPTION

IF A SEAL IS PRESENT ON THIS SHEET IT HAS BEEN ELECTRONICALLY SEALED AND DATED.

MISSOURI HIGHWAYS AND TRANSPORTATION COMMISSION
105 WEST CAPITOL
JEFFERSON CITY, MO 65102
1-888-ASK-MODOT (1-888-275-6636)

REV.

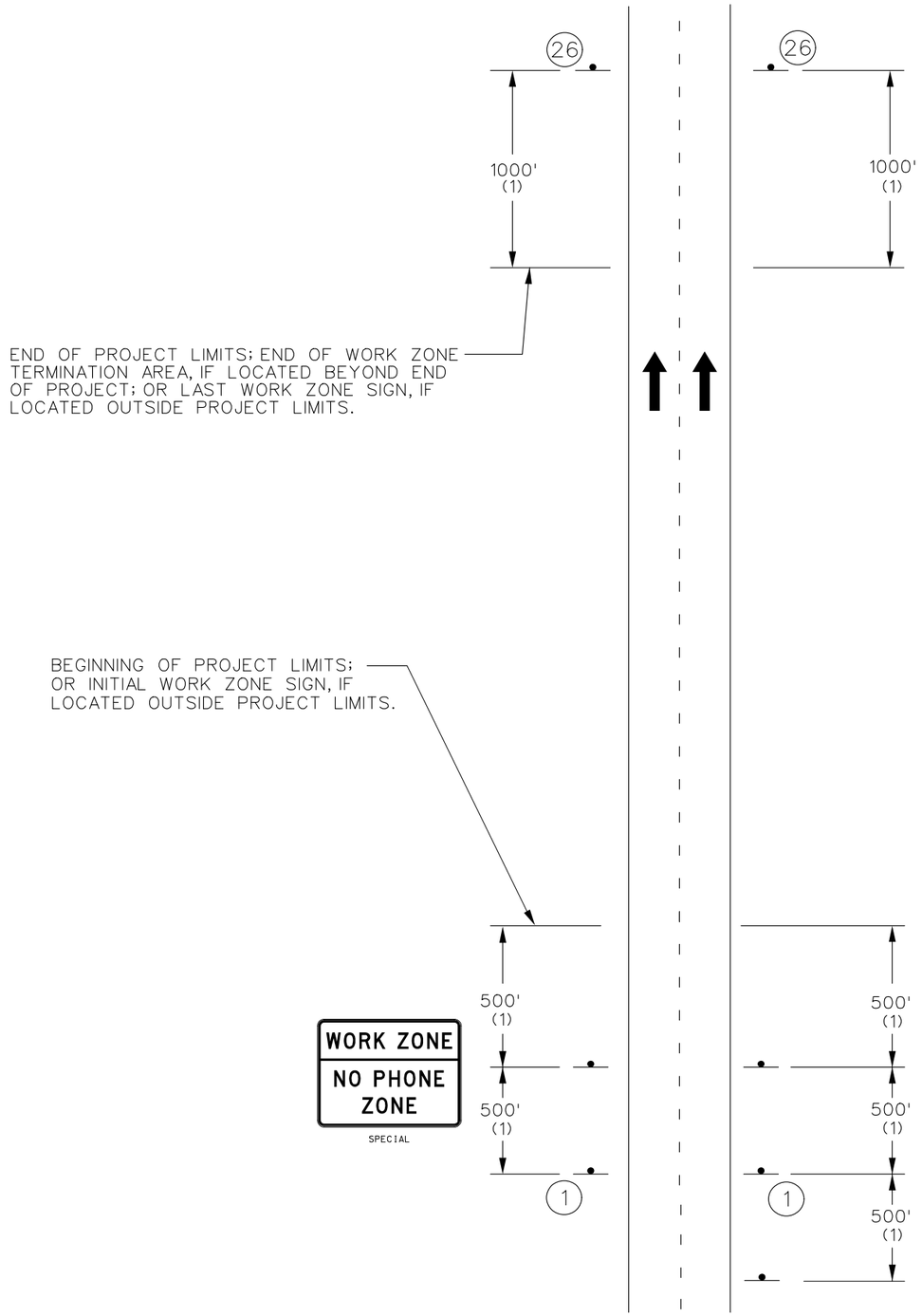

MULTI-LANE DIVIDED
BEGIN/END OF PROJECT SIGNING
(FOR USE ON ALL PROJECTS)

NOTES:

SIGN G020-1 IS REQUIRED PER EPG 616.6.56.

SIGN G020-2 IS USED ON ALL PROJECTS WHERE SIGN G020-1 IS USED.

OTHER SIGNS SUCH AS DETOUR OR ALTERNATE ROUTE SIGNING MAY BE USED OUTSIDE THE PROJECT LIMITS.

ANY EXISTING SIGNING THAT CONFLICTS WITH THE TRAFFIC CONTROL SIGNING SHALL BE COMPLETELY COVERED OR REMOVED.

(1) DISTANCE MAY BE ADJUSTED ACCORDING TO FIELD CONDITIONS. WHERE TRAFFIC BACKUPS ARE EXPECTED BEYOND THE ADVANCE WARNING AREA, ADDITIONAL SIGNING MAY BE NEEDED.

(2) SIGN CONST-7-48 OR CONST-7-72 IS PLACED 500 FEET BEFORE THE BEGINNING OF PROJECT LIMITS OR THE ROAD WORK AHEAD SIGN OR ROAD WORK NEXT XX MILES SIGN, IF USED, WHEN THESE SIGNS ARE LOCATED OUTSIDE THE PROJECT LIMITS.

(3) SIGN CONST-5-96 OR CONST-5-48 IS PLACED IN A VISIBLE AREA WITHIN THE PROJECT LIMITS PROVIDED ITS PLACEMENT DOES NOT DISRUPT A SEQUENCE OF SIGNS. IF A VISIBLE LOCATION WITHIN THE PROJECT IS NOT AVAILABLE, THE SIGN MAY BE PLACED 500 FEET BEFORE SIGN CONST-7-48 OR CONST-7-72.

(4) THE "RATE OUR WORK ZONE" SIGN IS AVAILABLE IN TWO SIZES DEPENDING ON ROADWAY CONDITIONS. THE 48 IN. X 24 IN. SIGN IS USED ON LOW VOLUME ROUTES THAT CARRY 400 AADT OR LESS.ON PROJECTS THAT HAVE A DURATION OF 4 WEEKS OR LESS OR IN URBAN AREAS WHERE THERE IS INSUFFICIENT RIGHT OF WAY FOR A SIX FOOT WIDE SIGN. THE 72 IN. X 36 IN. VERSION OF THE SIGN IS USED IN ALL OTHER APPLICATIONS. BUT CAN ALSO BE USED IN PLACE OF THE 48 IN. X 24 IN. SIGN IF ADDED EMPHASIS IS DEEMED NECESSARY.

(5) THE "POINT OF PRESENCE" SIGN IS AVAILABLE IN TWO SIZES DEPENDING ON ROADWAY CONDITION. THE 48 IN. X 36 IN. SIGN IS USED ON LOW VOLUME ROUTES THAT CARRY 400 AADT OR LESS, ON PROJECTS THAT HAVE A DURATION OF 4 WEEKS OR LESS OR IN URBAN AREAS WHERE THERE IS INSUFFICIENT RIGHT OF WAY FOR AN EIGHT FOOT WIDE SIGN. THE 96IN. X 48 IN. VERSION OF THE SIGN IS USED IN ALL OTHER APPLICATIONS. BUT CAN ALSO BE USED IN PLACE OF THE 48 IN. X 36 IN. SIGN IF ADDED EMPHASIS IS DEEMED NECESSARY.

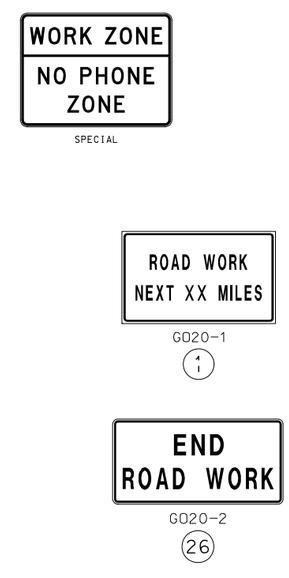

BEGIN/END
TEMPORARY
TRAFFIC CONTROL
SHEET 2 OF 8

STATE OF MISSOURI
SEAN M. DOMINGO
NUMBER
PE-2022001607
PROFESSIONAL ENGINEER
07/31/2023 3:12:05 PM
SEAN M. DOMINGO - CIVIL
MO-PE-2022001607

DATE PREPARED	
7/31/2023	
ROUTE 69	STATE MO
DISTRICT KC	SHEET NO. 40
COUNTY CLAY	
JOB NO. J4P3465	
CONTRACT ID.	
PROJECT NO.	
BRIDGE NO.	

DATE	DESCRIPTION

MISSOURI HIGHWAYS AND TRANSPORTATION COMMISSION
105 WEST CAPITOL
JEFFERSON CITY, MO 65102
1-888-ASK-MODOT (1-888-275-6636)

IF A SEAL IS PRESENT ON THIS SHEET IT HAS BEEN ELECTRONICALLY SEALED AND DATED.

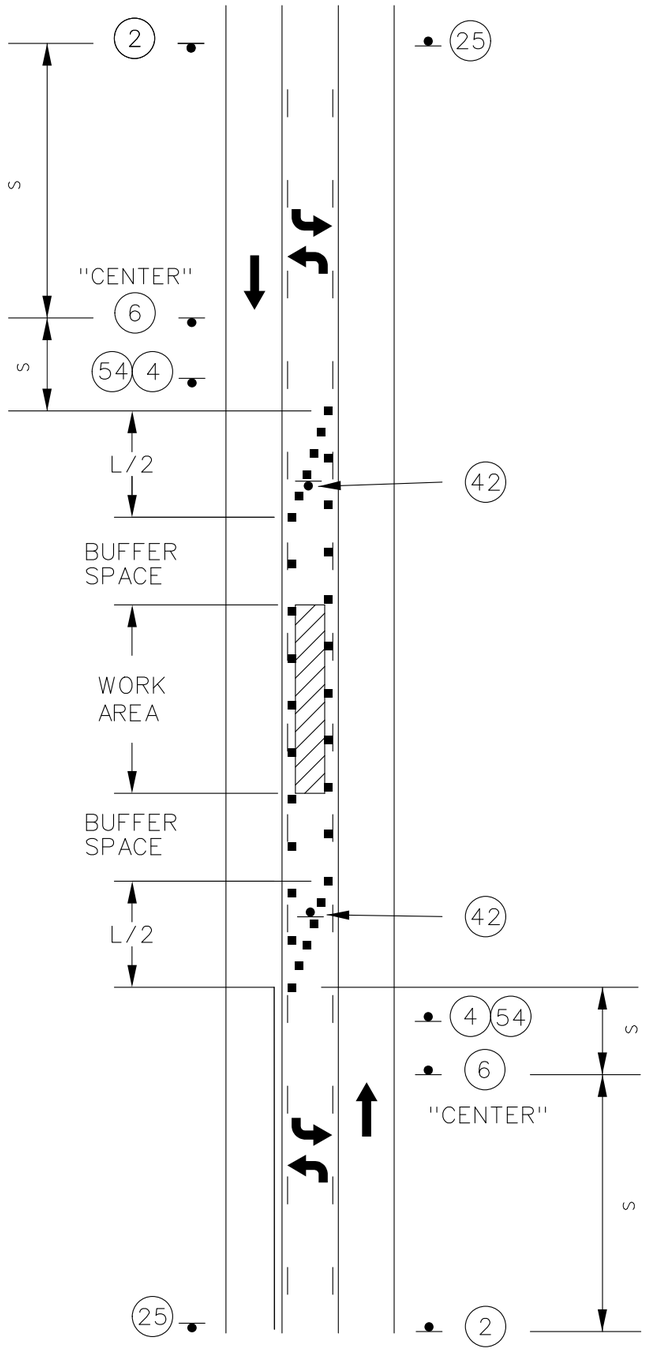

CENTER TURN LANE
LANE CLOSURE

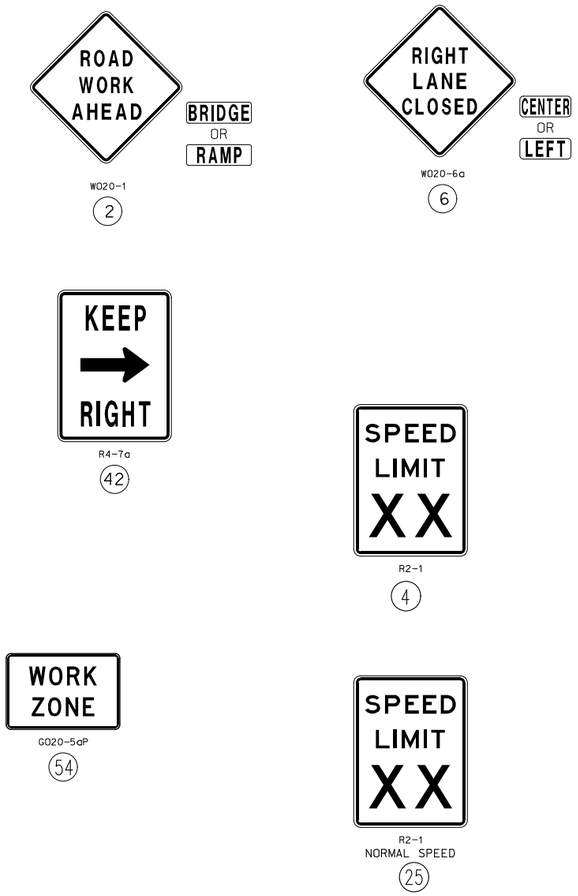

NOTES:

(1). SEE TRAFFIC CONTROL SHEET 1 FOR WORK ZONE SPEED LIMIT GUIDELINES.

(2). SEE TRAFFIC CONTROL SHEET 1 FOR SIGN SPACING, DEVICE SPACING AND CHANNELIZING TAPER LENGTHS.

CENTER TURN LANE
LANE CLOSURE
TEMPORARY
TRAFFIC CONTROL
SHEET 3 OF 8

STATE OF MISSOURI
SEAN M. DOMINGO
NUMBER
PE-2022001607
PROFESSIONAL ENGINEER

07/31/2023 3:13:07 PM
SEAN M. DOMINGO - CIVIL
MO-PE-2022001607

DATE PREPARED	
7/31/2023	
ROUTE 69	STATE MO
DISTRICT KC	SHEET NO. 41
COUNTY CLAY	
JOB NO. J4P3465	
CONTRACT ID.	
PROJECT NO.	
BRIDGE NO.	

DATE	DESCRIPTION

MISSOURI HIGHWAYS AND TRANSPORTATION COMMISSION
105 WEST CAPITOL
JEFFERSON CITY, MO 65102
1-888-ASK-MODOT (1-888-275-6636)

IF A SEAL IS PRESENT ON THIS SHEET IT HAS BEEN ELECTRONICALLY SEALED AND DATED.

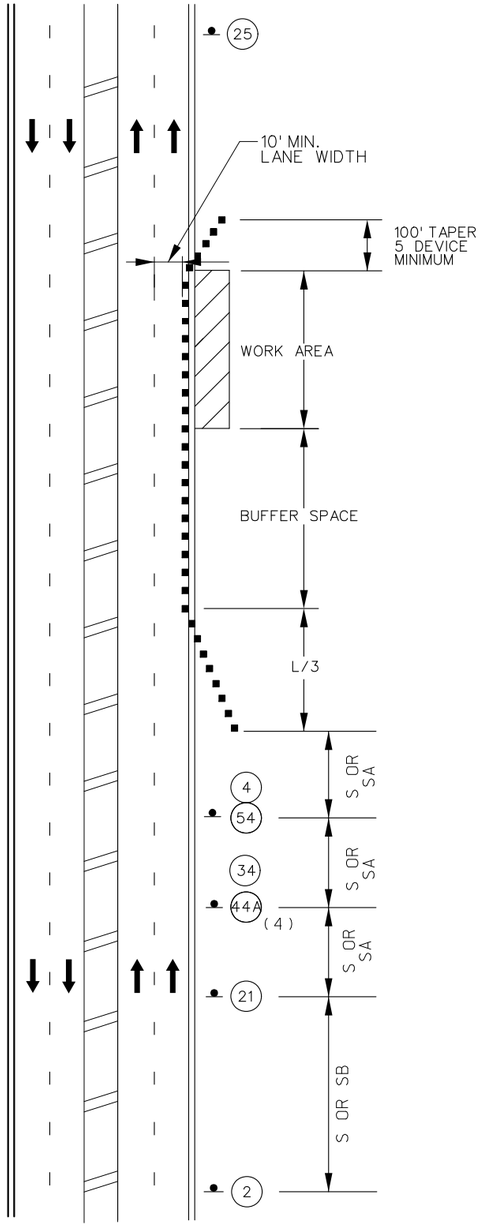

SHOULDER WORK
MINOR TRAVELWAY ENCROACHMENT
TWO-LANE UNDIVIDED HIGHWAY

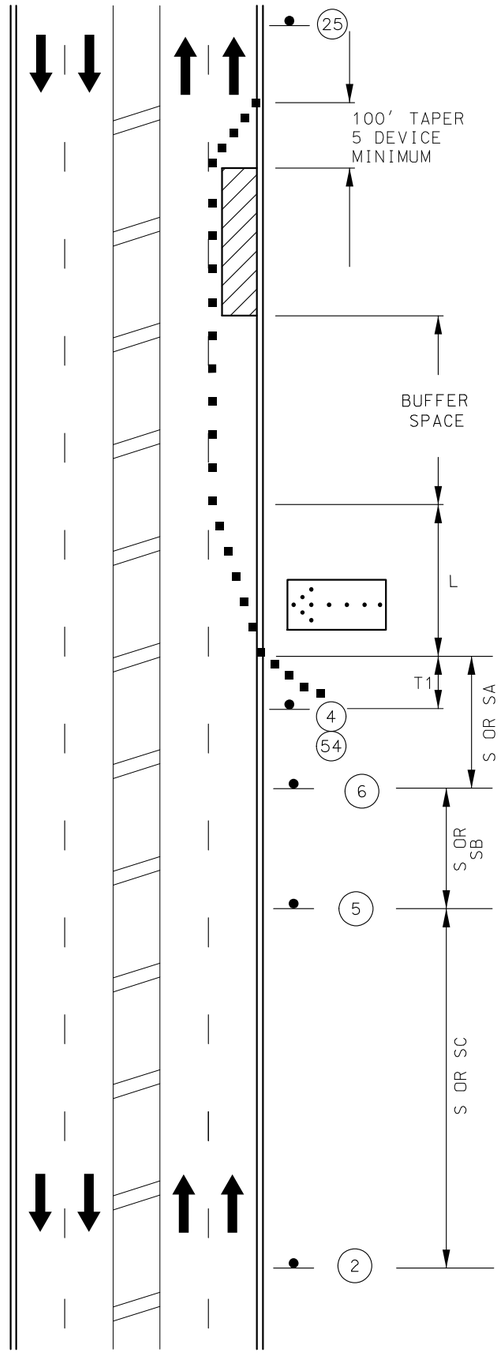

LANE CLOSURE
TWO-LANE UNDIVIDED HIGHWAY

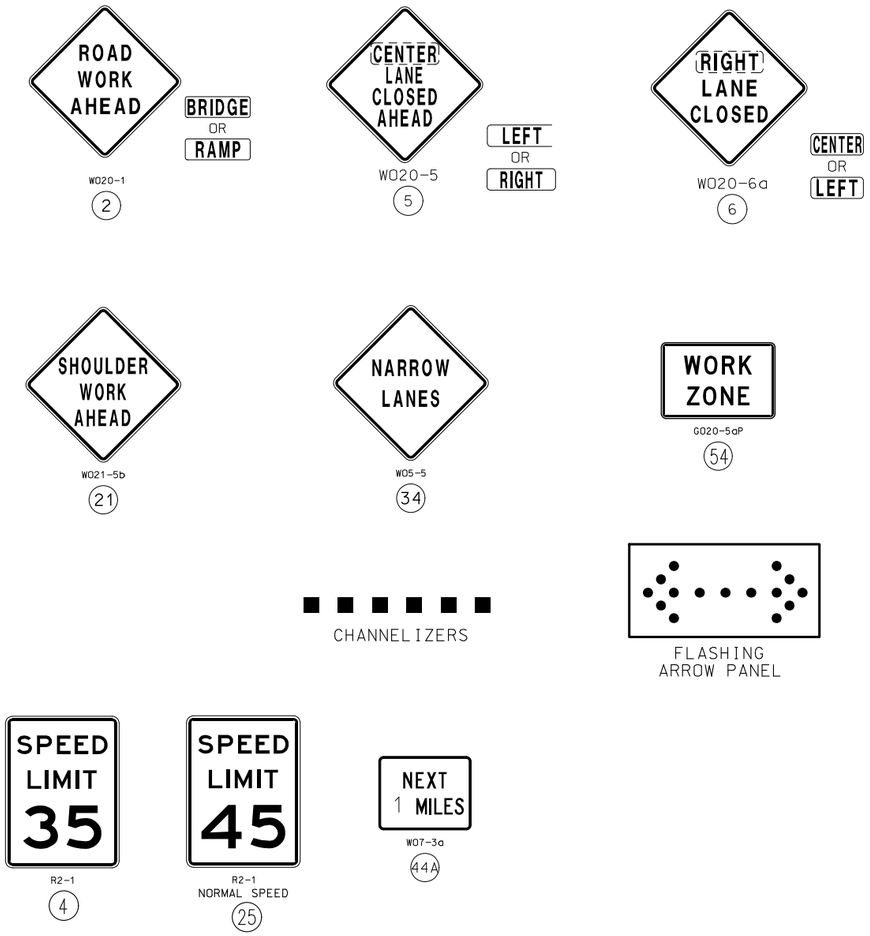

GENERAL NOTES:

(1). SEE TRAFFIC CONTROL SHEET 1 FOR WORK ZONE SPEED LIMIT GUIDELINES.

(2). SEE TRAFFIC CONTROL SHEET 1 FOR SIGN SPACING, DEVICE SPACING AND CHANNELIZING TAPER LENGTHS.

(3). SIGN 2 NOT REQUIRED IF SHOULDER WORK IS LOCATED WITHIN THE LIMITS OF AN ACTIVITY AREA WHERE ANOTHER SIGN 2 IS ALREADY USED.

(4). FLARE BARRIER TO EXTEND BEYOND CLEAR ZONE OR FLARE BARRIER TO EDGE LINE AND USE APPROVED END TREATMENT.

SHOULDER WORK
LANE CLOSURE
TEMPORARY
TRAFFIC CONTROL
SHEET 4 OF 8

STATE OF MISSOURI
SEAN M. DOMINGO
NUMBER
PE-2022001607
PROFESSIONAL ENGINEER
07/31/2023 3:14:12 PM
SEAN M. DOMINGO - CIVIL
MO-PE-2022001607

DATE PREPARED	7/31/2023
ROUTE	69
STATE	MO
DISTRICT	KC
SHEET NO.	42
COUNTY	CLAY
JOB NO.	J4P3465
CONTRACT ID.	
PROJECT NO.	
BRIDGE NO.	

DATE	DESCRIPTION

MISSOURI HIGHWAYS AND TRANSPORTATION COMMISSION
105 WEST CAPITOL
JEFFERSON CITY, MO 65102
1-888-ASK-MODOT (1-888-275-6636)

IF A SEAL IS PRESENT ON THIS SHEET IT HAS BEEN ELECTRONICALLY SEALED AND DATED.

REV.

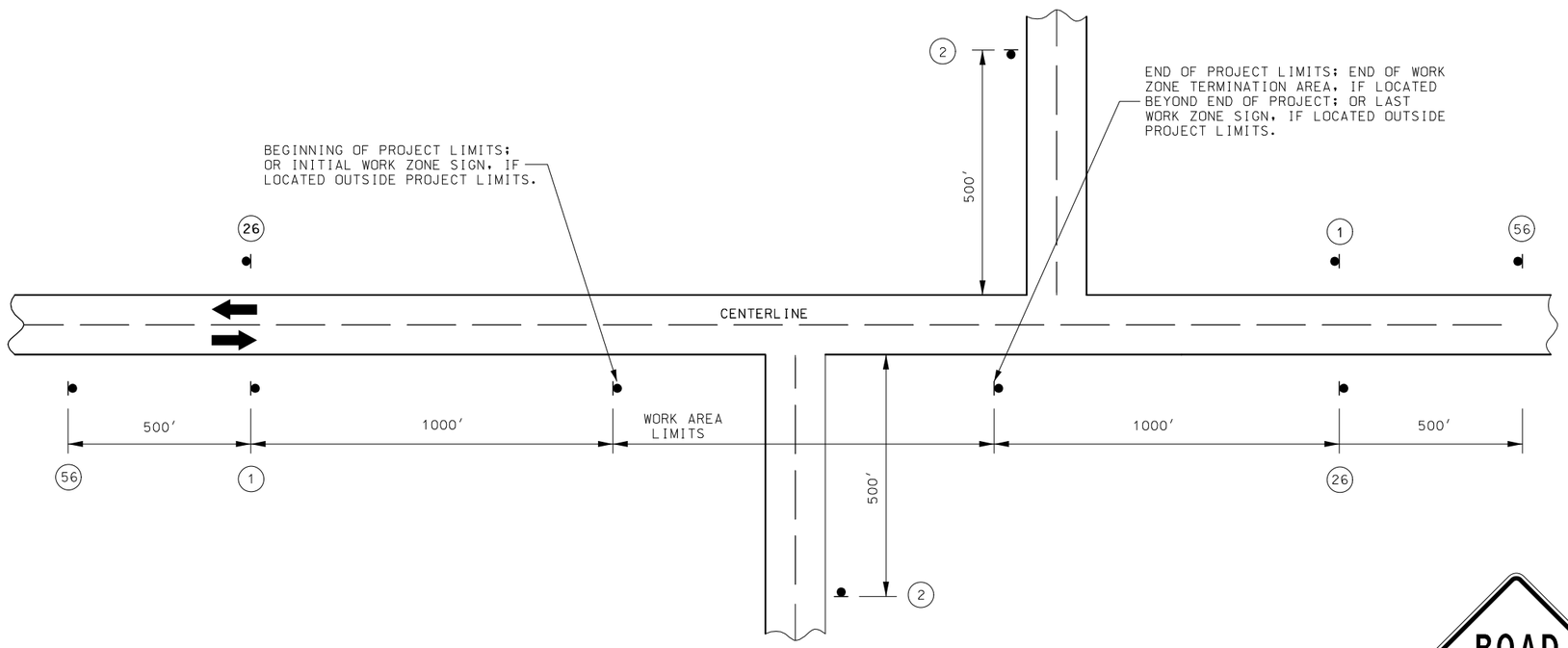

CONST-7-48

56

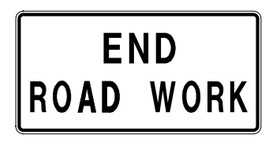

G020-2a

26

G020-1

1

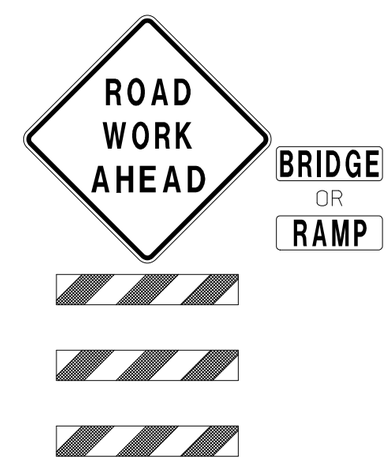

W020-1

2

NOTES:

SIGN (1) IS ONLY USED ON PROJECT LENGTHS 2 MILES OR GREATER.

SIGN (26) MAY BE USED ON PROJECTS LESS THAN 2 MILES.

PROVIDE SIGNS IN EACH DIRECTION ON TWO-WAY HIGHWAY.

DISTANCE MAY BE ADJUSTED ACCORDING TO FIELD CONDITIONS.

SIDE ROAD
TEMPORARY
TRAFFIC CONTROL
SHEET 5 OF 8

STATE OF MISSOURI
SEAN M. DOMINGO
NUMBER
PE-2022001607
PROFESSIONAL ENGINEER

07-31-2023 3:15:01 PM
SEAN M. DOMINGO - CIVIL
MO-PE-2022001607

DATE PREPARED	
7/31/2023	
ROUTE 69	STATE MO
DISTRICT KC	SHEET NO. 43
COUNTY CLAY	
JOB NO. J4P3465	
CONTRACT ID.	
PROJECT NO.	
BRIDGE NO.	

DESCRIPTION	DATE

MISSOURI HIGHWAYS AND TRANSPORTATION COMMISSION

105 WEST CAPITOL
JEFFERSON CITY, MO 65102
1-888-ASK-MODOT (1-888-275-6636)

IF A SEAL IS PRESENT ON THIS SHEET IT HAS BEEN ELECTRONICALLY SEALED AND DATED.

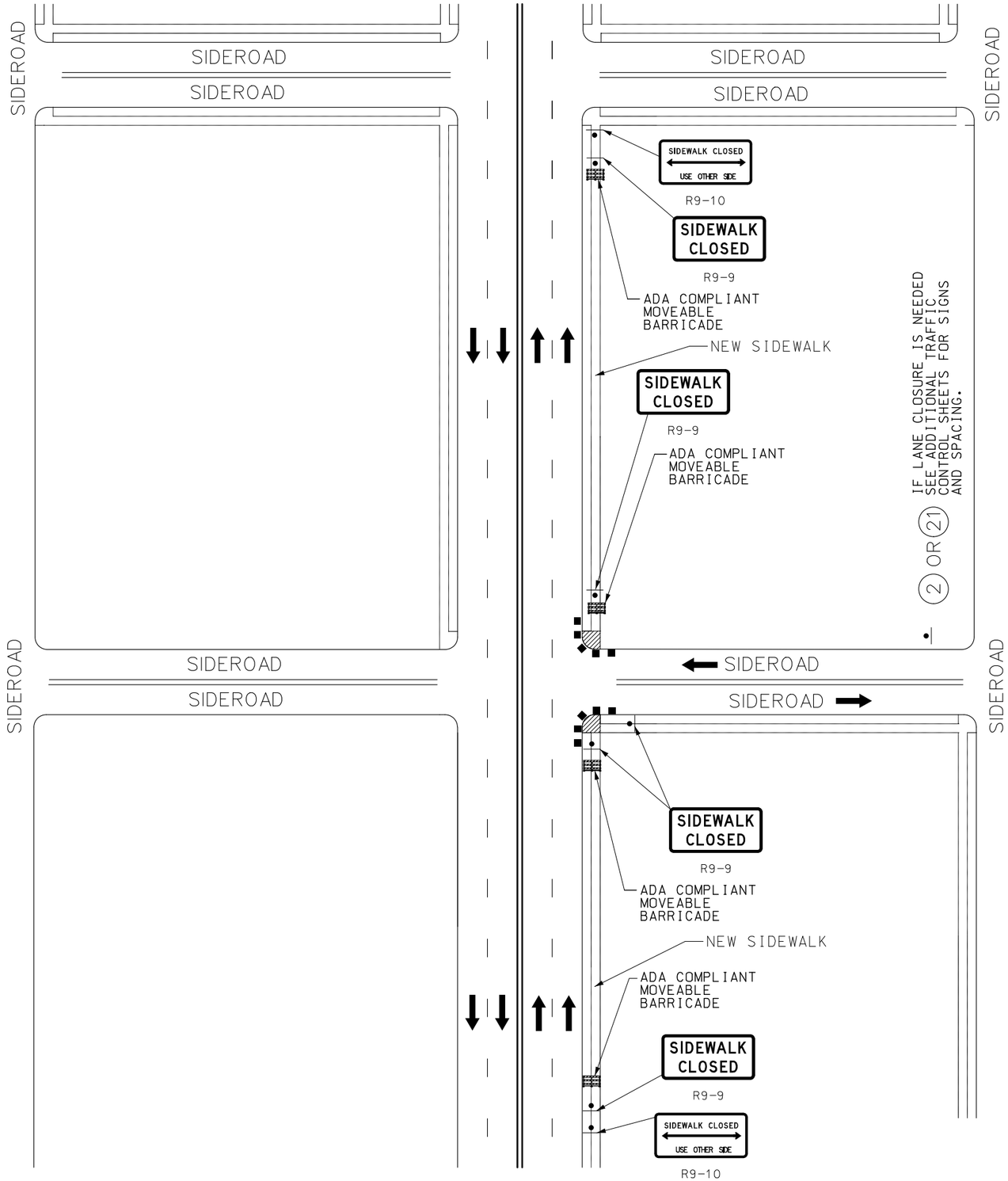

ADA COMPLIANT MOVEABLE BARRICADE

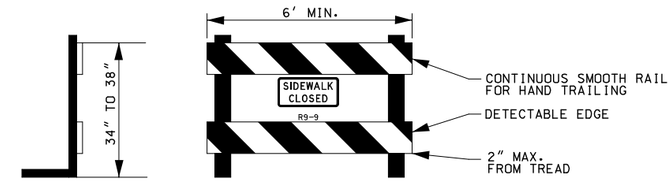

(1). WARNING LIGHTS SHALL NOT BE ATTACHED TO ADA COMPLIANT BARRICADES.

(2). CHEVRON RAILS ON THE ADA COMPLIANT BARRICADES MUST BE 8" WIDE MIN. AND MEET TYPE 3 RETRO-REFLECTIVE SHEETING AND COLOR CONTRAST BARRICADE RAILS AS SHOWN. THE TOP RAIL MUST PROVIDE A SMOOTH CONTINUOUS RAIL SURFACE SUITABLE FOR HAND TRAILING WITH NO SPLINTERS, BURRS OR SHARP EDGES. A MINIMUM OF TWO 8" WIDE RAILS REQUIRED.

(3). NO TRIPPING HAZARDS FROM THE BARRICADES ARE ALLOWED WITHIN THE PEDESTRIAN SPACE. THIS MEANS NO FEET OR BARS USED TO HOLD THE RAILS OR SUPPORT THE DEVICE ARE ALLOWED WITHIN THE WALKWAY, ALL FEET AND BALLASTS WILL NEED TO BE BEHIND THE DEVICE.

(4). THE BARRICADE MUST BE THE FULL WIDTH OF THE CLOSED SIDEWALK.

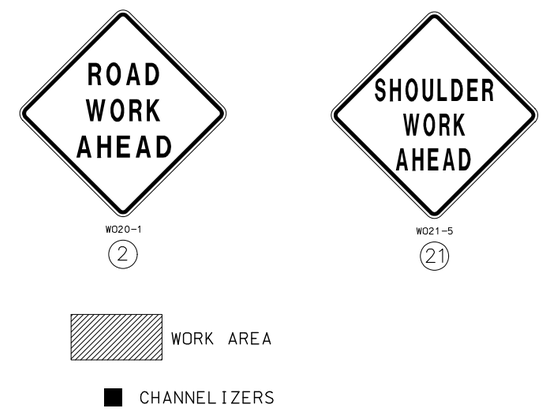

NOTES:

(1). ALL SIGNS AND BARRICADES SHALL BE MOVED TO THE OPPOSITE SIDE OF THE ROADWAY WHEN SIDEWALK UPGRADES ARE REQUIRED FOR BOTH SIDES OF THE ROAD.

(2). ONLY THE TEMPORARY TRAFFIC CONTROL DEVICES RELATED TO PEDESTRIANS ARE SHOWN OTHER DEVICES MAY BE NECESSARY TO CONTROL TRAFFIC, SEE OTHER TRAFFIC CONTROL SHEETS FOR LANE CLOSURES

(3). SEE TRAFFIC CONTROL SHEET 1 FOR WORK ZONE SPEED LIMIT GUIDELINES.

(4). SEE TRAFFIC CONTROL SHEET 1 FOR SIGN SPACING, DEVICE SPACING AND CHANNELIZING TAPER LENGTHS.

(5). FOR SIGNALIZED INTERSECTIONS, ADJUSTMENTS MAY NEED TO BE MADE TO SIGNAL PHASING, TIMING, INDICATIONS OR DETECTOR SETTINGS.

(6). REMOVE AND/OR MODIFY EXISTING PAVEMENT MARKING AS NEEDED.

(7). PAVEMENT MARKING OPTIONAL FOR SHORT TERM OPERATIONS.

(8). TEMPORARY PAVEMENT MARKING REQUIRED WITH LONG TERM LANE CLOSURES.

(9). SIGNS MAY ALSO BE PLACED IN THE MEDIAN OF THE ROADWAY IF THERE IS SUFFICENT ROOM BETWEEN LANES

SIDEWALK WORK
AT INTERSECTION
TEMPORARY
TRAFFIC CONTROL
SHEET 6 OF 8

STATE OF MISSOURI
SEAN M. DOMINGO
NUMBER
PE-2022001607
PROFESSIONAL ENGINEER
07/31/2023 3:15:40 PM
SEAN M. DOMINGO - CIVIL
MO-PE-2022001607

DATE PREPARED	
7/31/2023	
ROUTE 69	STATE MO
DISTRICT KC	SHEET NO. 44
COUNTY CLAY	
JOB NO. J4P3465	
CONTRACT ID.	
PROJECT NO.	
BRIDGE NO.	

DATE	DESCRIPTION

MISSOURI HIGHWAYS AND TRANSPORTATION COMMISSION
105 WEST CAPITOL
JEFFERSON CITY, MO 65102
1-888-ASK-MODOT (1-888-275-6636)

IF A SEAL IS PRESENT ON THIS SHEET IT HAS BEEN ELECTRONICALLY SEALED AND DATED.

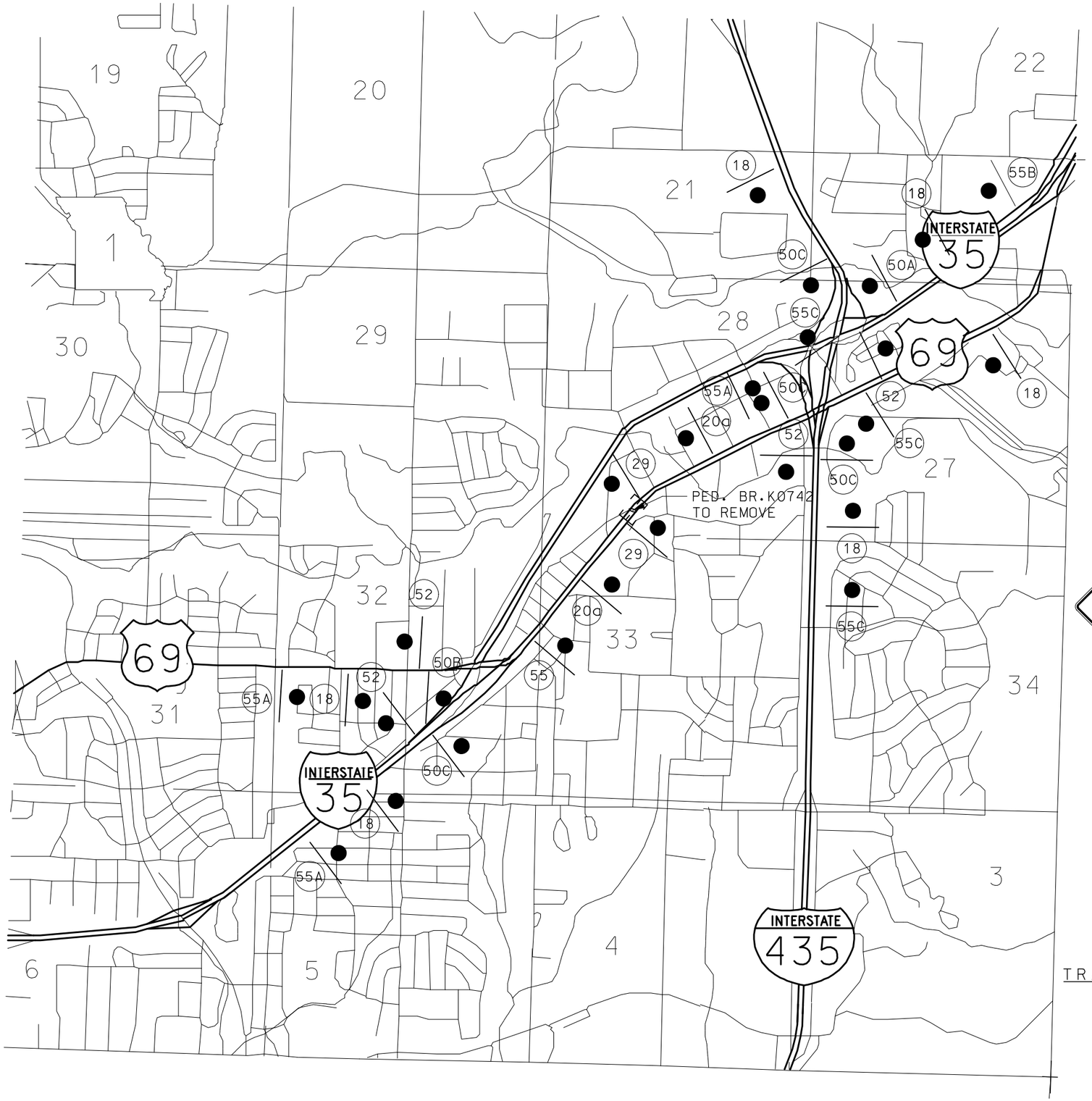

M04-12

50A

M04-12

50B

M04-12

50C

M04-8a

52

55A

55B

55C

W020-2

18

W020-3

20a

R11-4

55

R11-2

29

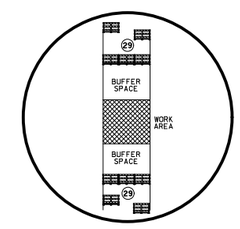

TRAFFIC CONTROL LEGEND

• SIGN (SINGLE SIDED)

E BARRICADE

ROAD CLOSURE
TEMPORARY
TRAFFIC CONTROL
SHEET 7 OF 8

STATE OF MISSOURI
SEAN M. DOMINGO
NUMBER
PE-2022001607
PROFESSIONAL ENGINEER

08/15/2023 1:24:32 PM
SEAN M. DOMINGO - CIVIL
MO-PE-2022001607

DATE PREPARED	
8/15/2023	
ROUTE 69	STATE MO
DISTRICT KC	SHEET NO. 45
COUNTY CLAY	
JOB NO. J4P3465	
CONTRACT ID.	
PROJECT NO.	
BRIDGE NO.	

DATE	DESCRIPTION

MISSOURI HIGHWAYS AND TRANSPORTATION COMMISSION

105 WEST CAPITOL
JEFFERSON CITY, MO 65102
1-888-ASK-MODOT (1-888-275-6636)

IF A SEAL IS PRESENT ON THIS SHEET IT HAS BEEN ELECTRONICALLY SEALED AND DATED.

REV.

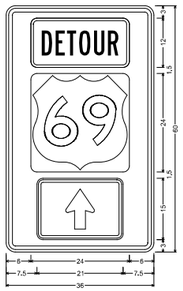

MO4-12 SHF-FLAT SHEET FLUORESCENT:
2.250" Radius, 0.875" Border, 0.625" Indent, Black on, Orange;
Table of letter and object lefts

■	6.000
■	6.000
■	7.500

50A

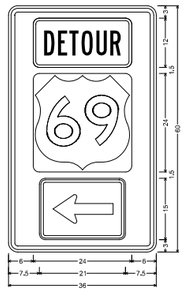

MO4-12 SHF-FLAT SHEET FLUORESCENT:
2.250" Radius, 0.875" Border, 0.625" Indent, Black on, Orange;
Table of letter and object lefts

■	6.000
■	6.000
■	7.500

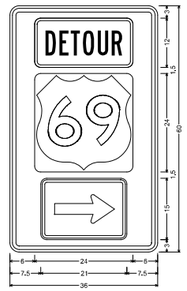

MO4-12 SHF-FLAT SHEET FLUORESCENT:
2.250" Radius, 0.875" Border, 0.625" Indent, Black on, Orange;
Table of letter and object lefts

■	6.000
■	6.000
■	7.500

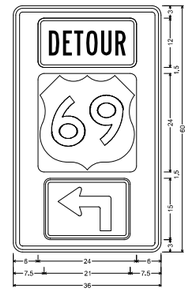

MO4-12 SHF-FLAT SHEET FLUORESCENT:
2.250" Radius, 0.875" Border, 0.625" Indent, Black on, Orange;
Table of letter and object lefts

■	6.000
■	6.000
■	7.500

50B

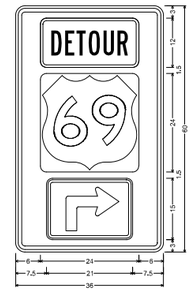

MO4-12 SHF-FLAT SHEET FLUORESCENT:
2.250" Radius, 0.875" Border, 0.625" Indent, Black on, Orange;
Table of letter and object lefts

■	6.000
■	6.000
■	7.500

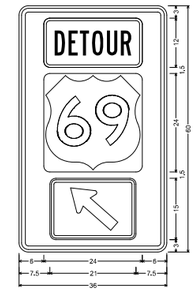

MO4-12 SHF-FLAT SHEET FLUORESCENT:
2.250" Radius, 0.875" Border, 0.625" Indent, Black on, Orange;
Table of letter and object lefts

■	6.000
■	6.000
■	7.500

50C

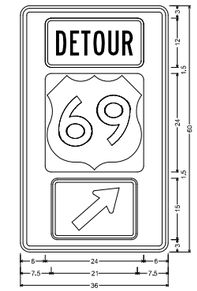

MO4-12 SHF-FLAT SHEET FLUORESCENT:
2.250" Radius, 0.875" Border, 0.625" Indent, Black on, Orange;
Table of letter and object lefts

■	6.000
■	6.000
■	7.500

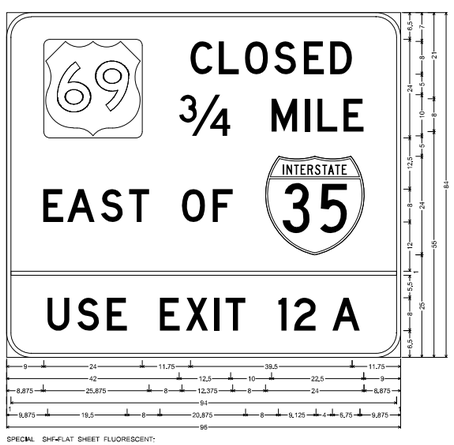

SPECIAL SHF-FLAT SHEET FLUORESCENT:
6.000" Radius, 1.000" Border, Black on, Orange;
"CLOSED", D; "¾ MILE", D; "EAST OF", D; Interstate 35 12.000" C; "USE EXIT 12 A", D;
Table of letter and object lefts

■ 9.000	C 44.750	L 51.625	O 58.000	S 65.125	E 72.500	D 78.875	
¾ 42.000	M 64.500	I 72.625	N 75.750	82.125			
E 8.875	A 14.750	S 23.000	T 29.875	O 42.750	F 50.250	🛡 63.125	
▬ 1.000							
U 6.875	S 17.125	E 24.500	E 37.375	X 43.750	I 50.625	T 53.375	I 66.250	2 70.000	A 78.375

55A

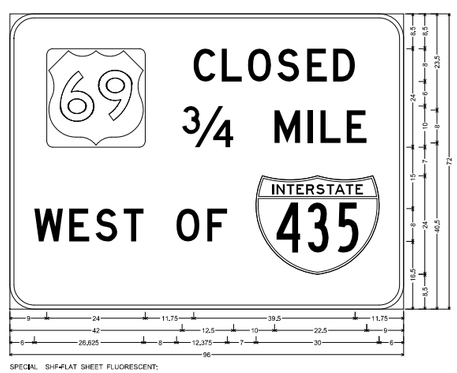

SPECIAL SHF-FLAT SHEET FLUORESCENT:
6.000" Radius, 1.000" Border, Black on, Orange;
"CLOSED", D; "¾ MILE", D; "WEST OF", D; Interstate 435 12.000" B;
Table of letter and object lefts

■ 9.000	C 44.750	L 51.625	O 58.000	S 65.125	E 72.500	D 78.875	
¾ 42.000	M 64.500	I 72.625	N 75.750	82.125			
W 6.000	E 14.500	S 20.875	T 27.750	O 40.625	F 48.125	🛡 60.000	

55B

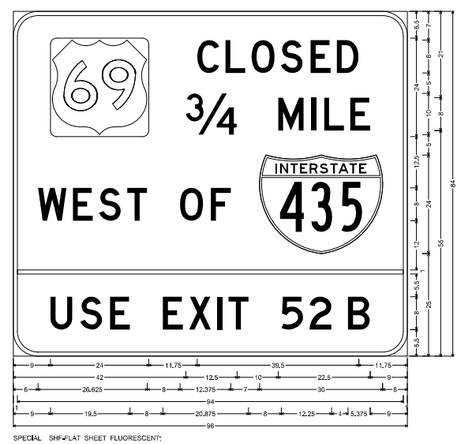

SPECIAL SHF-FLAT SHEET FLUORESCENT:
6.000" Radius, 1.000" Border, Black on, Orange;
"CLOSED", D; "¾ MILE", D; "WEST OF", D; Interstate 435 12.000" B; "USE EXIT 52 B", D;
Table of letter and object lefts

■ 9.000	C 44.750	L 51.625	O 58.000	S 65.125	E 72.500	D 78.875	
¾ 42.000	M 64.500	I 72.625	N 75.750	82.125			
W 6.000	E 14.500	S 20.875	T 27.750	O 40.625	F 48.125	🛡 60.000	
▬ 1.000							
U 9.000	S 16.375	E 23.625	E 36.500	X 42.875	I 49.750	T 52.500	S 65.375	2 72.250	B 81.625

55C

NOT TO SCALE

TEMPORARY TRAFFIC CONTROL
DETOUR SIGN LEGEND SHEET
SHEET 8 OF 8

STATE OF MISSOURI
SEAN M. DOMINGO
NUMBER
PE-2022001607
PROFESSIONAL ENGINEER

07:31:2023 3:17:00 PM
SEAN M. DOMINGO - CIVIL
MO-PE-2022001607

DATE PREPARED	
7/31/2023	
ROUTE 69	STATE MO
DISTRICT KC	SHEET NO. 46
COUNTY CLAY	
JOB NO. J4P3465	
CONTRACT ID.	
PROJECT NO.	
BRIDGE NO.	

DATE	DESCRIPTION

MISSOURI HIGHWAYS AND TRANSPORTATION COMMISSION

105 WEST CAPITOL
JEFFERSON CITY, MO 65102
1-888-ASK-MODOT (1-888-275-6636)

IF A SEAL IS PRESENT ON THIS SHEET IT HAS BEEN ELECTRONICALLY SEALED AND DATED.

DI-1
STA 229+34.87
OFF: 43.1′ LT
UIP EX. DI
BLD.1-18″ OPENING

DI-2
STA 229+58.10
OFF: 43.9′ LT
BLD. 2′x 2′ TYPE D D.I
1-18″ OPENING
CL-3 EXC.= 4.3 CY

P-1
DI-1 TO DI-2
STA 229+37.26 TO 229+56.31
BLD.18″ x 20.5′GROUP A PIPE
CL-3 EXC.=16.60 CY

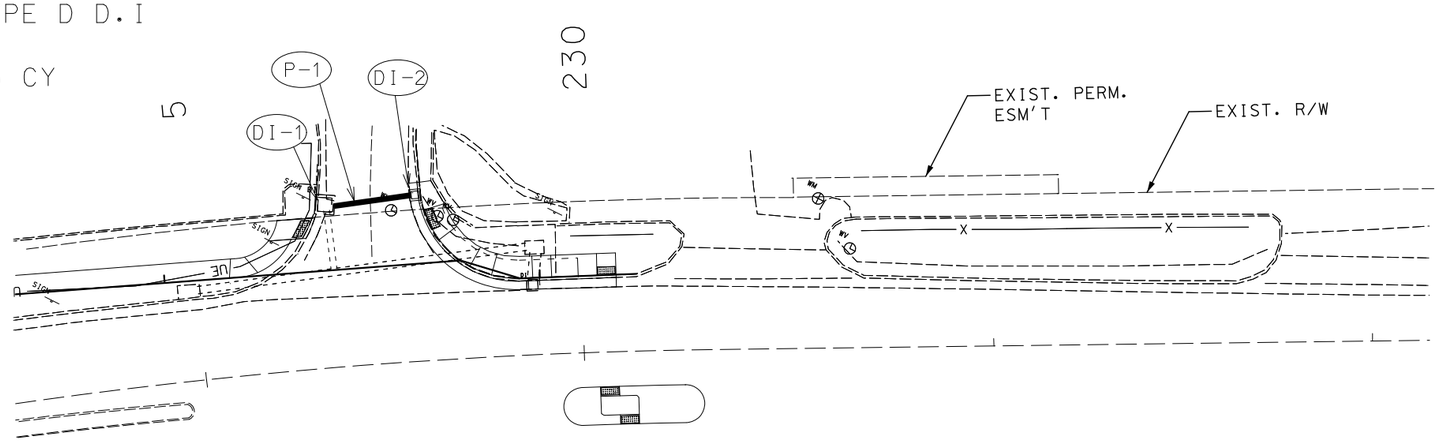

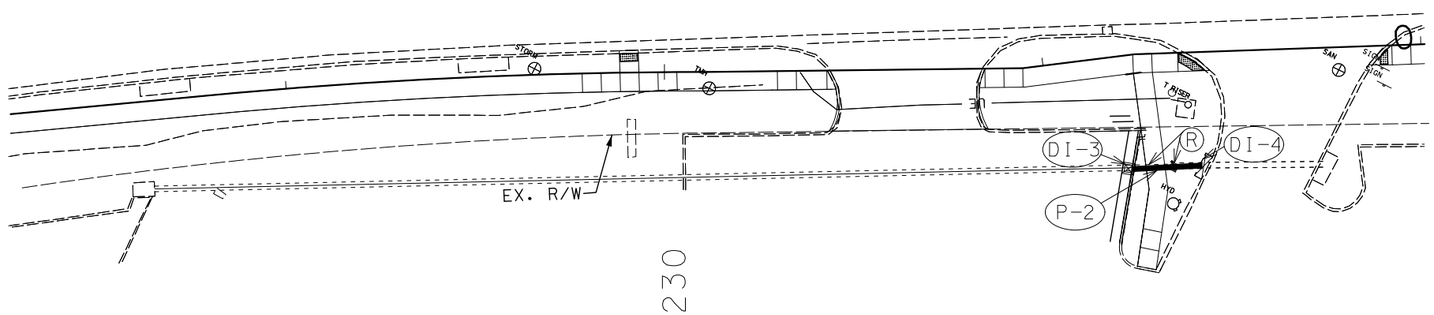

DI-3
STA 231+35.75
OFFSET 80.9′ RT
BLD. 2′x 2′ TYPE D D.I
2-18″ OPENING
CL-3 EXC.=3.50 CY

DI-4
STA 231+55.70
OFFSET 80.5′ RT
UIP EX. DI

STA.231+35.75 TO 231+55.70
REMOVE EXISTING 18″ PIPE AND DI

P-2
DI-3 TO DI-4
STA 231+37.28 TO 231+54.60
BLD.18″x 18′GROUP A PIPE
CL-3 EXC.=9.6 CY

SCALE
0 20 40 60

DRAINAGE SHEET
SHEET 1 OF 2

STATE OF MISSOURI
SEAN M. DOMINGO
NUMBER
PE-2022001607
PROFESSIONAL ENGINEER
07/31/2023 3:17:36 PM
SEAN M. DOMINGO - CIVIL
MO-PE-2022001607

DATE PREPARED	
7/31/2023	
ROUTE 69	STATE MO
DISTRICT KC	SHEET NO. 47
COUNTY CLAY	
JOB NO. J4P3465	
CONTRACT ID.	
PROJECT NO.	
BRIDGE NO.	

DATE	DESCRIPTION

MISSOURI HIGHWAYS AND TRANSPORTATION COMMISSION
105 WEST CAPITOL
JEFFERSON CITY, MO 65102
1-888-ASK-MODOT (1-888-275-6636)

IF A SEAL IS PRESENT ON THIS SHEET IT HAS BEEN ELECTRONICALLY SEALED AND DATED.

EX. DI-1
STA. 229+34.87
OFF: 43.1′ LT
ONE 18″ HOLE

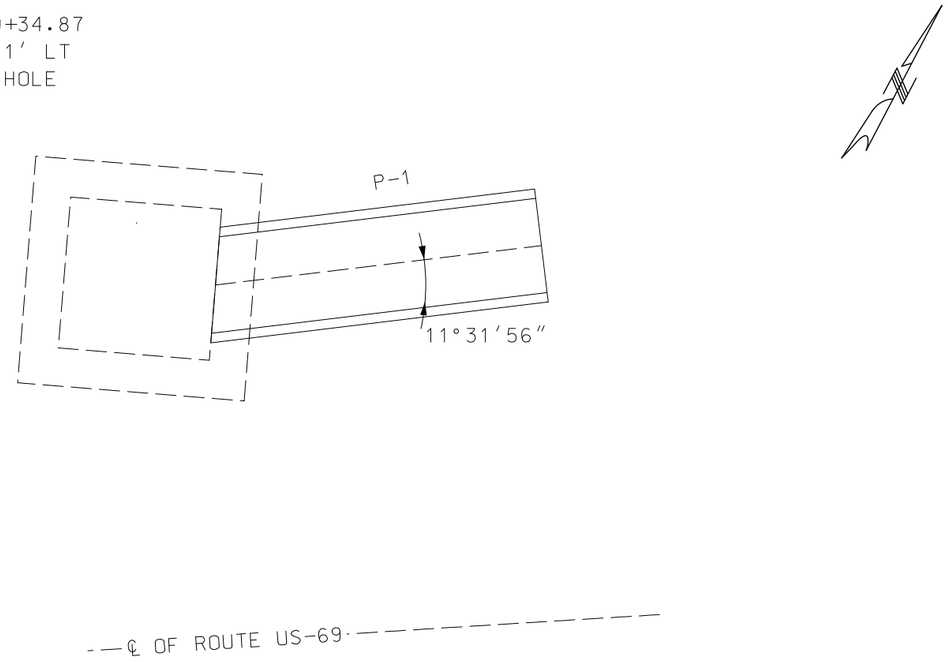

DI-2
STA. 229+58.10
OFF: 43.9′ LT
PC TYPE D 2′ × 2′
ONE 18″ HOLE

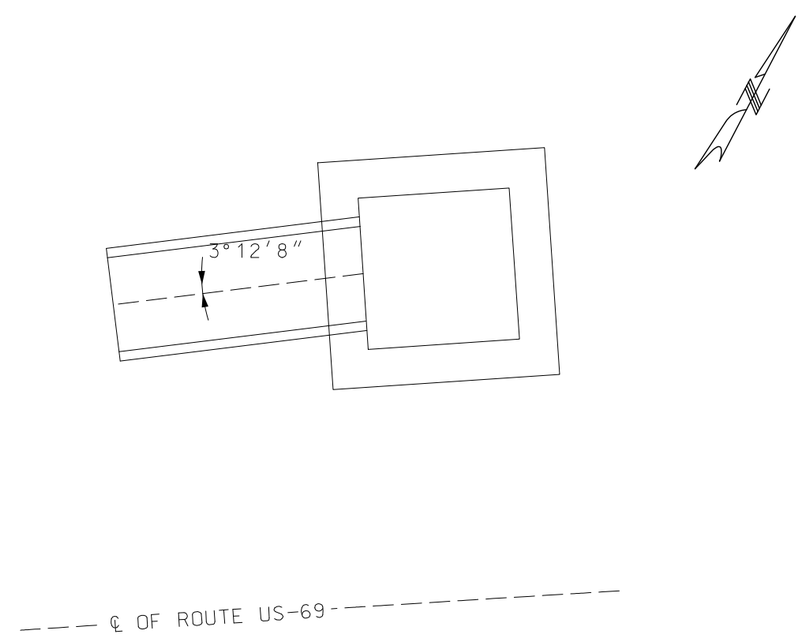

DI-3
STA. 231+35.75
OFF: 80.9′′ RT
PC TYPE D 2′ × 2′
TWO 18″ HOLES

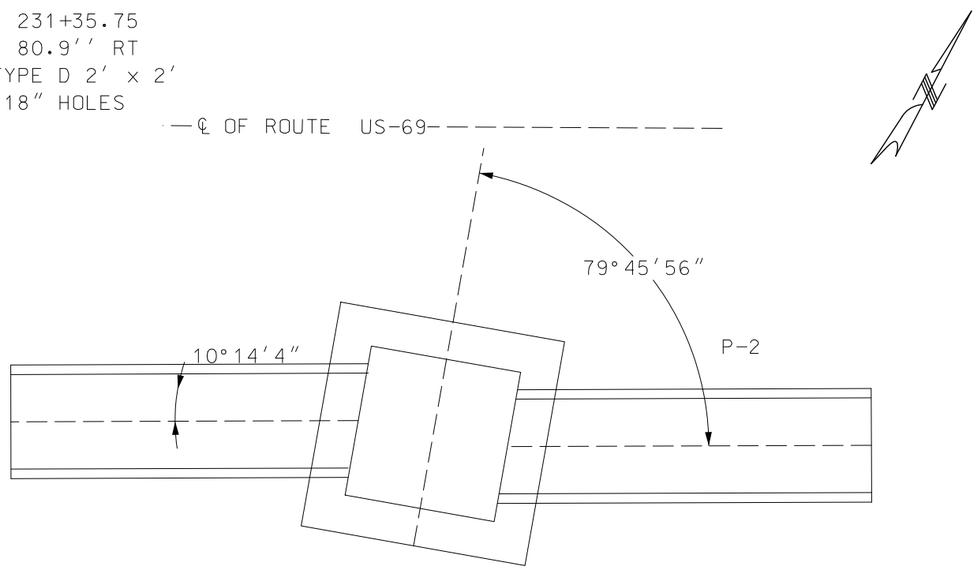

EX. DI-4
STA. 231+55.70
OFF: 80.5′ RT
USE EXISTING HOLE

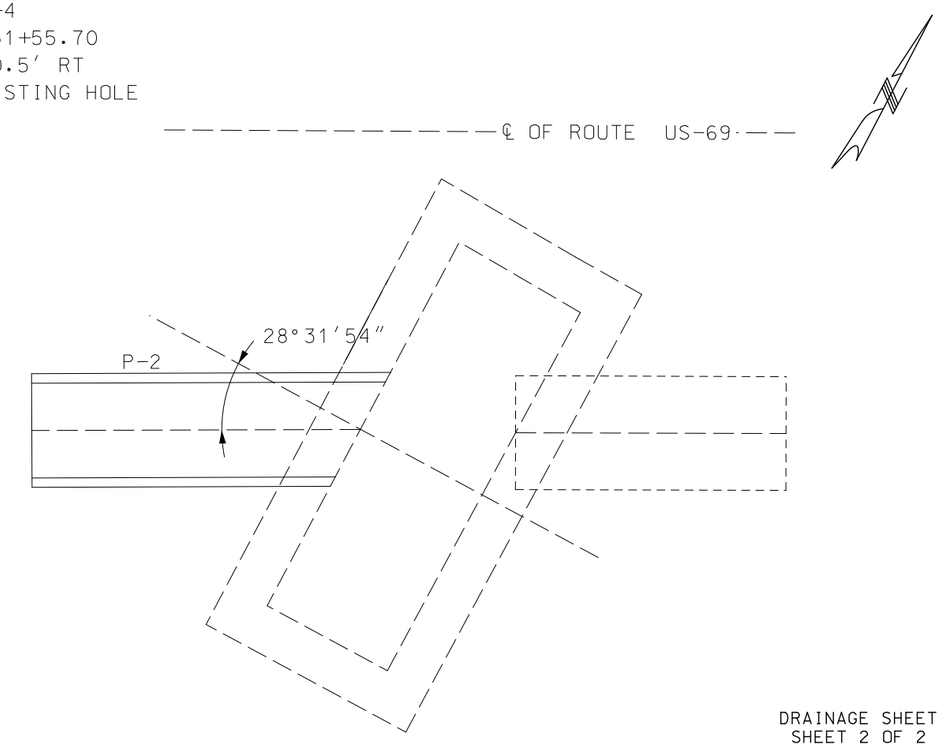

NOT TO SCALE

DRAINAGE SHEET
SHEET 2 OF 2

STATE OF MISSOURI
SEAN M. DOMINGO
NUMBER
PE-2022001607
PROFESSIONAL ENGINEER
07-31-2023 3:18:20 PM
SEAN M. DOMINGO - CIVIL
MO-PE-2022001607

DATE PREPARED	
7/31/2023	
ROUTE 69	STATE MO
DISTRICT KC	SHEET NO. 48
COUNTY CLAY	
JOB NO. J4P3465	
CONTRACT ID.	
PROJECT NO.	
BRIDGE NO.	

DATE	DESCRIPTION

IF A SEAL IS PRESENT ON THIS SHEET IT HAS BEEN ELECTRONICALLY SEALED AND DATED.

MISSOURI HIGHWAYS AND TRANSPORTATION COMMISSION
105 WEST CAPITOL
JEFFERSON CITY, MO 65102
1-888-ASK-MODOT (1-888-275-6636)

NOTE:
PLACE TURF TYPE TALL FESCUE SODDING
AT ALL DISTURBED AREA.

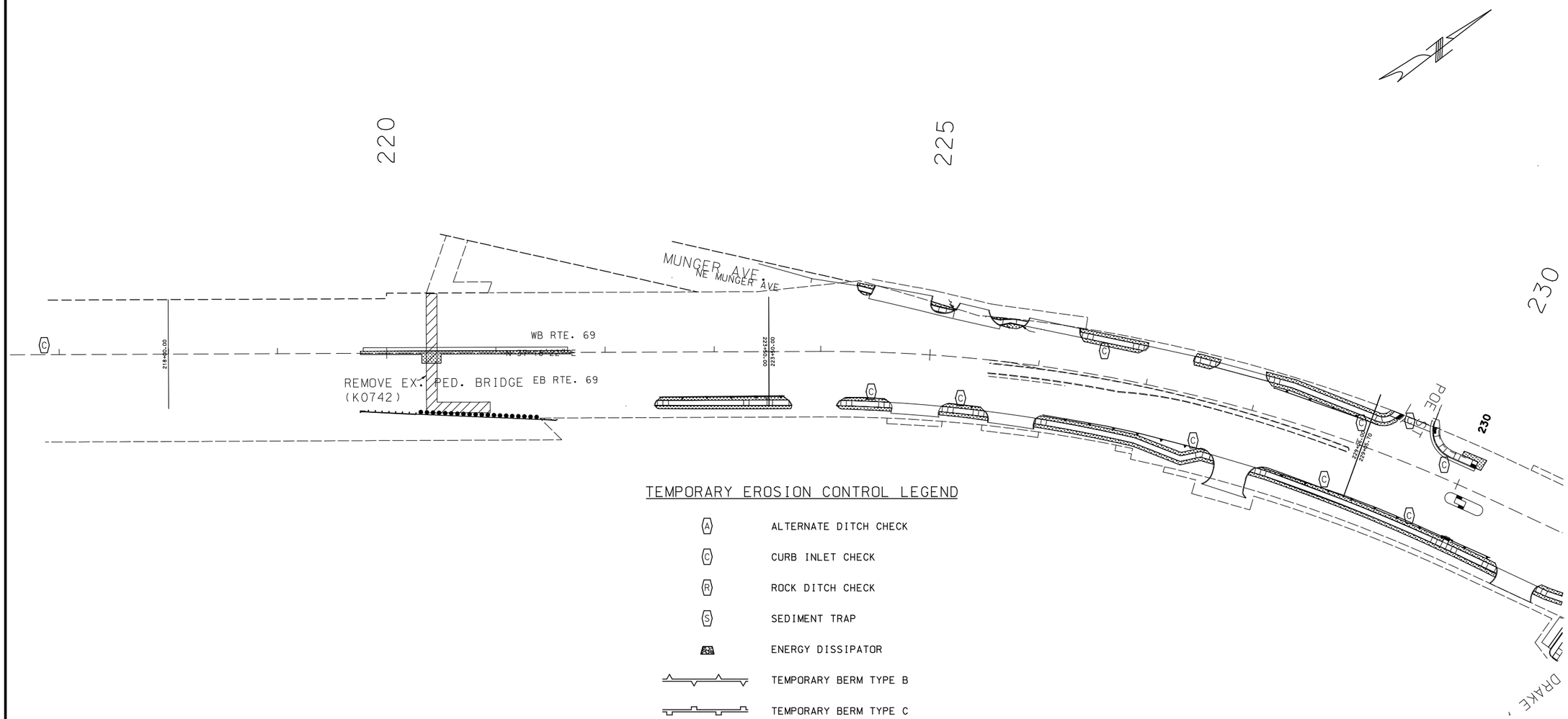

TEMPORARY EROSION CONTROL LEGEND

- ALTERNATE DITCH CHECK
- CURB INLET CHECK
- ROCK DITCH CHECK
- SEDIMENT TRAP
- ENERGY DISSIPATOR
- TEMPORARY BERM TYPE B
- TEMPORARY BERM TYPE C
- SILT FENCE
- TEMPORARY SEDIMENT BASIN
- PERMANENT SEDIMENT BASIN
- SODDING

SCALE
0 50 100 150

EROSION CONTROL SHEET
SHEET 1 OF 3

STATE OF MISSOURI
SEAN M. DOMINGO
NUMBER
PE-2022001607
PROFESSIONAL ENGINEER
07/31/2023 3:18:52 PM
SEAN M. DOMINGO - CIVIL
MO-PE-2022001607

DATE PREPARED	
7/31/2023	
ROUTE 69	STATE MO
DISTRICT KC	SHEET NO. 49
COUNTY CLAY	
JOB NO. J4P3465	
CONTRACT ID.	
PROJECT NO.	
BRIDGE NO.	

DATE	DESCRIPTION

MISSOURI HIGHWAYS AND TRANSPORTATION COMMISSION
105 WEST CAPITOL
JEFFERSON CITY, MO 65102
1-888-ASK-MODOT (1-888-275-6636)

IF A SEAL IS PRESENT ON THIS SHEET IT HAS BEEN ELECTRONICALLY SEALED AND DATED.

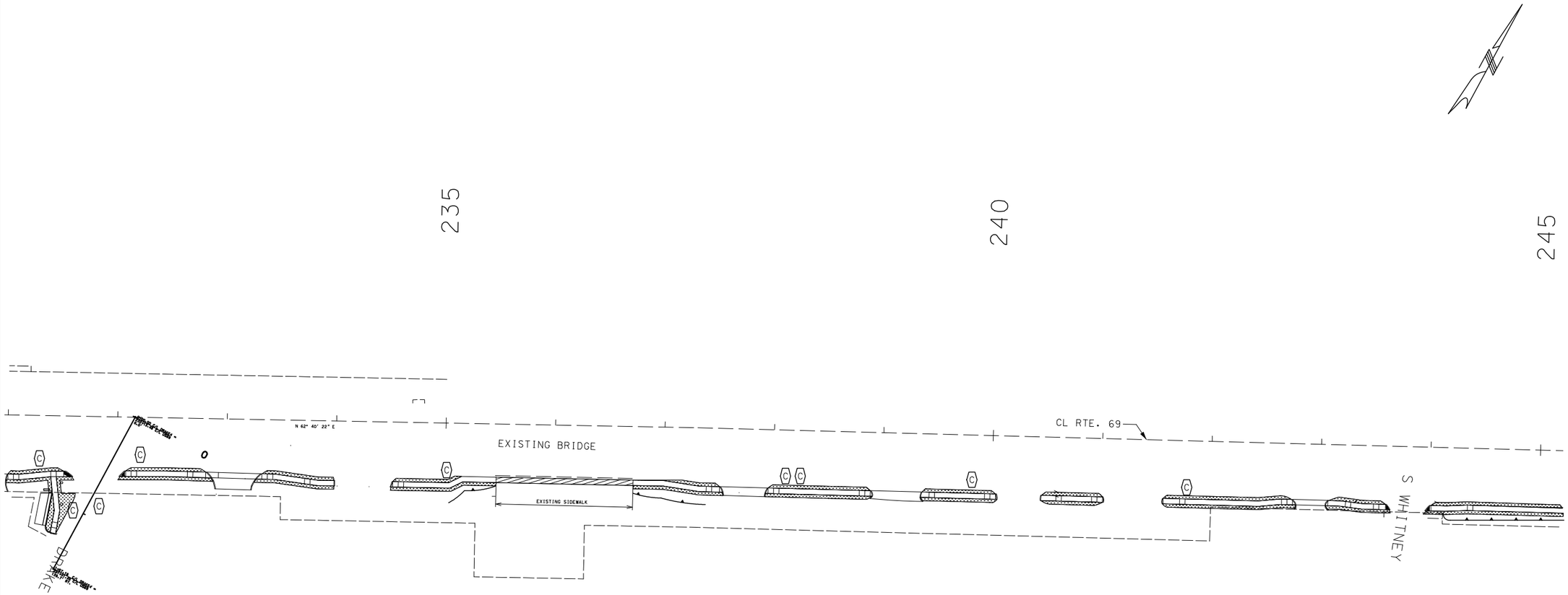

SCALE

0 50 100 150

EROSION CONTROL SHEET
SHEET 2 OF 3

STATE OF MISSOURI
SEAN M. DOMINGO
NUMBER
PE-2022001607
PROFESSIONAL ENGINEER

07/31/2023 3:19:39 PM
SEAN M. DOMINGO - CIVIL
MO-PE-2022001607

DATE PREPARED	7/31/2023
ROUTE	69
STATE	MO
DISTRICT	KC
SHEET NO.	50
COUNTY	CLAY
JOB NO.	J4P3465
CONTRACT ID.	
PROJECT NO.	
BRIDGE NO.	

DATE	DESCRIPTION

MISSOURI HIGHWAYS AND TRANSPORTATION COMMISSION

105 WEST CAPITOL
JEFFERSON CITY, MO 65102
1-888-ASK-MODOT (1-888-275-6636)

IF A SEAL IS PRESENT ON THIS SHEET IT HAS BEEN ELECTRONICALLY SEALED AND DATED.

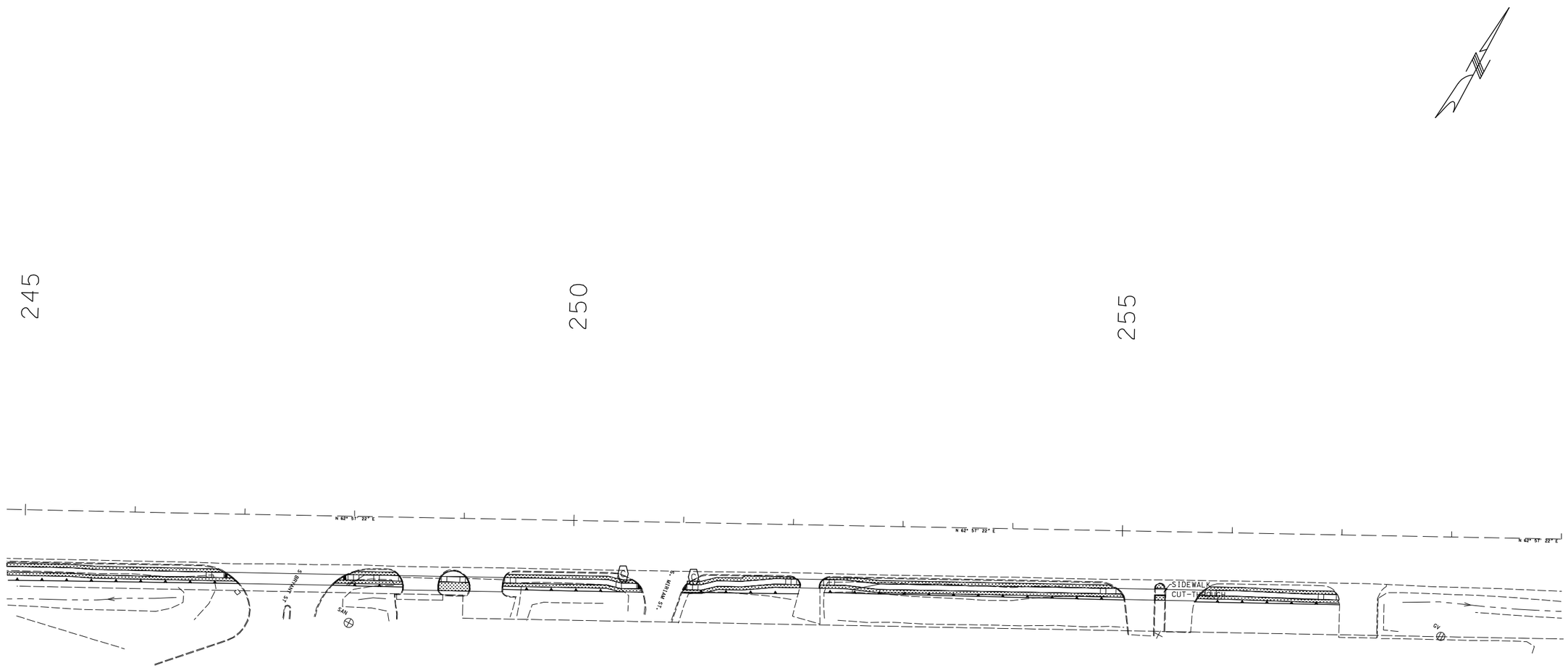

SCALE

0 50 100 150

EROSION CONTROL SHEET
SHEET 3 OF 3

STATE OF MISSOURI
SEAN M. DOMINGO
NUMBER
PE-2022001607
PROFESSIONAL ENGINEER

08/15/2023 1:52:00 PM
SEAN M. DOMINGO - CIVIL
MO-PE-2022001607

DATE PREPARED	
8/15/2023	
ROUTE 69	STATE MO
DISTRICT KC	SHEET NO. 51
COUNTY CLAY	
JOB NO. J4P3465	
CONTRACT ID.	
PROJECT NO.	
BRIDGE NO.	

DATE	DESCRIPTION

IF A SEAL IS PRESENT ON THIS SHEET IT HAS BEEN ELECTRONICALLY SEALED AND DATED.

MISSOURI HIGHWAYS AND TRANSPORTATION COMMISSION

105 WEST CAPITOL
JEFFERSON CITY, MO 65102
1-888-ASK-MODOT (1-888-275-6636)

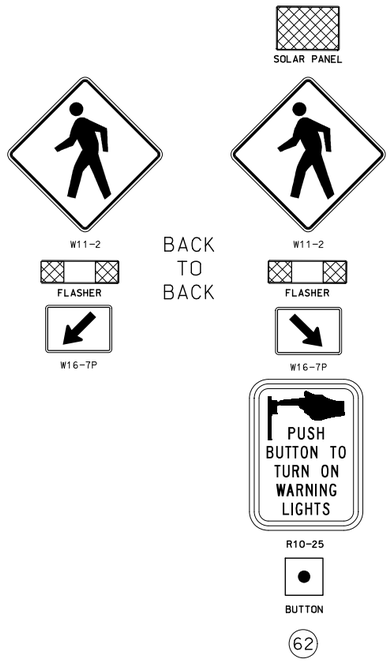

RRFB
(RECTANGULAR RAPID FLASHING BEACON)

230

61

60

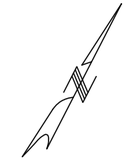

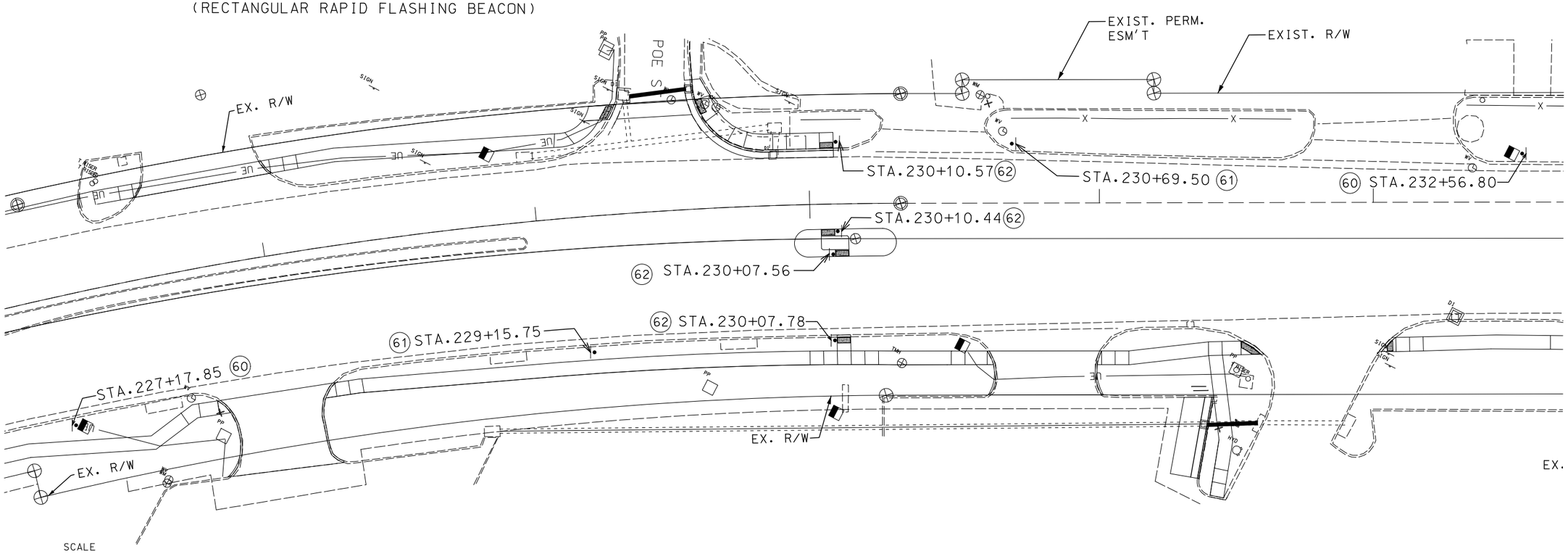

SIGNING SHEET
SHEET 1 OF 3

STATE OF MISSOURI
SEAN M. DOMINGO
NUMBER
PE-2022001607
PROFESSIONAL ENGINEER
07/31/2023 3:21:49 PM
SEAN M. DOMINGO - CIVIL
MO-PE-2022001607

DATE PREPARED	
7/31/2023	
ROUTE 69	STATE MO
DISTRICT KC	SHEET NO. 52
COUNTY CLAY	
JOB NO. J4P3465	
CONTRACT ID.	
PROJECT NO.	
BRIDGE NO.	

DESCRIPTION	DATE

MISSOURI HIGHWAYS AND TRANSPORTATION COMMISSION

105 WEST CAPITOL
JEFFERSON CITY, MO 65102
1-888-ASK-MODOT (1-888-275-6636)

IF A SEAL IS PRESENT ON THIS SHEET IT HAS BEEN ELECTRONICALLY SEALED AND DATED.

EFFECTIVE 07-01-2022

SIGNS						CONCRETE FOOTINGS EMBEDDED	STRUCTURAL STEEL POSTS ✳						PIPE POSTS ✳					BACKING BARS ✳✳				U-CHANNEL POST	PERFORATED SQUARE STEEL TUBE												BREAK-AWAY ASSEMBLY	REMARKS AND OTHER REQUIRED ITEMS
902 SIGNAL SIGNS TABULATED ON D-37A SHEET																		2" X 3/8" BARS @ 2.55 LBS PER FT					2 IN. POST						2.5 IN. POST							
																										ANCHORS						ANCHORS				
SIGN NO.	SIGN SIZE	STATION	HORZ CLEAR IF NOT STD	LOCATION	SIGN DTL. SHT. NO.	ITEM NO. 9031010	POST DES NO.	POST NO.1	POST NO.2	POST NO.3	LBS PER FT	TOTAL ITEM NO. 9031210	PIPE SIZE	POST NO.1	POST NO.2	LBS PER FT	TOTAL ITEM NO. 9031220	NO. EACH	LGTH IN.	TOTAL LF	TOTAL LBS	ITEM NO. 9031250A	POST NO.1	POST NO.2	TOTAL ITEM NO. 9031270A	DRIVEN 12-GA. ITEM NO. 9031271A	DRIVEN 7-GA. ITEM NO. 9031273A	CONCRETE 7-GA. ITEM NO. 9031274	POST NO.1	POST NO.2	TOTAL ITEM NO. 9031280	2.25" INSERT (6 FT) ITEM NO. 9031272A	DRIVEN 7-GA. ITEM NO. 9031281A	CONCRETE 7-GA. ITEM NO. 9031285	ITEM NO. 9031241	
						CY		LF	LF	LF		LBS	IN.	LF	LF		LBS	EACH	IN.	LF	LBS	LF	LF	LF	LF	EA	EA	EA	LF	LF	LF	EA	EA	EA	EA	
60	36 X 36	227+17.85		RTE. 69																									16		16		3			W11-2 & W16-9
61	18 X 18	229+15.75		RTE. 69																									16		16		3			R1-5
61	18 X 18	230+69.50		RTE. 69																									16		16		3			R1-5
60	36 X 36	232+56.80		RTE. 69																									16		16		3			W11-2 & W16-9
SUBTOTAL																															64		12			
TOTAL																						✳✳									64		12			

✳ BREAKAWAY ASSEMBLY IS INCIDENTAL FOR STRUCTURAL STEEL AND PIPE POSTS.
✳✳ BACKING BARS ARE TOTALED WITH STRUCTURAL STEEL OR PIPE POSTS.

ROUND PIPE POST AND FOOTING DATA TABLE

NOM. SIZE	WEIGHT		STUB LENGTH	FOOTING		CONCRETE
(IN.)	LBS/FT	LBS/IN		DIA.	DEPTH	C.Y.
2½	5.79	0.48	4'- 3½"	12"	4'-6"	0.13
3	7.58	0.63	4'- 3½"	12"	4'-6"	0.13
4	10.79	0.90	5'- 3½"	18"	5'-6"	0.36

STRUCTURAL STEEL POST AND FOOTING DATA TABLE

POST DES. NO.	NOM. SIZE	POST WEIGHT LBS/FT	POST WEIGHT LBS/IN	STUB LENGTH	FOOTING DIA.	LEVEL GROUND DEPTH	LEVEL GROUND C.Y.	6:1 GRADE DEPTH	6:1 GRADE C.Y.	4:1 GRADE DEPTH	4:1 GRADE C.Y.	3:1 OR 2:1 GRADE DEPTH	3:1 OR 2:1 GRADE C.Y.
1	W6	9.0	0.75	3'-0"	15"	3'-0"	0.14	3'-2"	0.15	3'-3"	0.16	3'-6"	0.17
2	W6	15.0	1.25	4'-0"	24"	4'-0"	0.47	4'-2"	0.50	4'-3"	0.51	4'-6"	0.54
3	W8	18.0	1.50	4'-6"	28"	4'-6"	0.71	4'-8"	0.73	4'-9"	0.74	5'-0"	0.78
4	W10	22.0	1.83	5'-0"	36"	5'-0"	1.31	5'-2"	1.36	5'-3"	1.39	5'-6"	1.45
5	W10	26.0	2.17	5'-0"	36"	5'-0"	1.31	5'-3"	1.37	5'-5"	1.43	5'-9"	1.52
6	W12	35.0	2.92	5'-6"	36"	5'-6"	1.44	5'-9"	1.52	5'-11"	1.56	6'-3"	1.65

SIGNING SHEET
SHEET 2 OF 3

D-29

STATE OF MISSOURI
SEAN M. DOMINGO
NUMBER
PE-2022001607
PROFESSIONAL ENGINEER
07-31/2023 3:22:47 PM
SEAN M. DOMINGO - CIVIL
MO-PE-2022001607

DATE PREPARED: 7/31/2023
ROUTE: 69 | STATE: MO
DISTRICT: KC | SHEET NO.: 53
COUNTY: CLAY
JOB NO.: J4P3465
CONTRACT ID.
PROJECT NO.
BRIDGE NO.

DESCRIPTION	DATE

MISSOURI HIGHWAYS AND TRANSPORTATION COMMISSION
105 WEST CAPITOL
JEFFERSON CITY, MO 65102
1-888-ASK-MODOT (1-888-275-6636)

IF A SEAL IS PRESENT ON THIS SHEET IT HAS BEEN ELECTRONICALLY SEALED AND DATED.

EFFECTIVE 10-01-2016

STANDARD SIGN ASSEMBLIES

SIGN NUMBER	STATION	LOCATION	TYPE: SHF	SHF	SHF	SH	SHF	SH										
			SIGN DESCRIPTION, SIZES & NUMBER OF EACH															
			36"X36" W11-2	24"X12" W16-7P	24"X12" W16-7P	9"X12" R10-25 (PUSH BUTTON FOR TURN ON WARNING LIGHTS)	30"X18" AHEAD W16-9P	18"X18" R1-5										
60	227+17.85	ROUTE 69 NB	1				1											
61	229+15.75	ROUTE 69 NB						1										
✱✱ 62	230+07.78	ROUTE 69 NB	2	1	1	1												
✱✱ 62	230+07.56	ROUTE 69 NB	2	1	1	1												
✱✱ 62	230+10.57	ROUTE 69 SB	2	1	1	1												
✱✱ 62	230+10.44	ROUTE 69 SB	2	1	1	1												
61	230+69.50	ROUTE 69 SB						1										
60	232+56.80	ROUTE 69 SB	1				1											
		TOTAL	10	4	4	4	4	2										

SIGN SUMMARY

STANDARD SIGN OR SPECIAL SIGN NUMBER	SIGN DETAIL SHEET NO.	NO. EACH	SIZE, TYPE & SQUARE FEET: SIZE	FLAT SHEET SH ITEM NO. 9035004A	FLAT SHEET FLUORESCENT SHF ✳ ITEM NO. 9035069A	STRUCTURAL ST ITEM NO. 9035011A	STRUCTURAL FLUORESCENT STF ✳ ITEM NO. 9035071A
PEDESTRIAN	STD	10	36" X 36"		✱✱ 90.0		
DIADONAL BLACK ARROW	STD	8	24" X 12"		✱✱ 16.0		
AHEAD	STD	2	30" X 18"		✱✱ 7.5		
PUSH BUTTON WARNING LIGHT	STD	4	9" X 12"	✱✱ 3.0			
YIELD HERE TO PEDESTRIAN	STD	2	18" X 18"	4.5			
			TOTAL	5.0	✱✱ 113.5		

✱✱ FOR INFORMATION ONLY.
THE SIGNS ARE INCLUDED IN THE LUMP SUM COST FOR RECTANGULAR RAPID FLASHING BEACON (RRFB)

✳ ORANGE, YELLOW & YELLOW/GREEN

SIGNING SHEET
SHEET 3 OF 3

D-30

STATE OF MISSOURI
SEAN M. DOMINGO
NUMBER
PE-2022001607
PROFESSIONAL ENGINEER

07/31/2023 3:23:39 PM
SEAN M. DOMINGO - CIVIL
MO-PE-2022001607

DATE PREPARED: 7/31/2023

ROUTE	STATE
69	MO
DISTRICT	SHEET NO.
KC	54

COUNTY: CLAY

JOB NO. J4P3465

CONTRACT ID.

PROJECT NO.

BRIDGE NO.

DATE	DESCRIPTION

MISSOURI HIGHWAYS AND TRANSPORTATION COMMISSION
105 WEST CAPITOL
JEFFERSON CITY, MO 65102
1-888-ASK-MODOT (1-888-275-6636)

IF A SEAL IS PRESENT ON THIS SHEET IT HAS BEEN ELECTRONICALLY SEALED AND DATED.

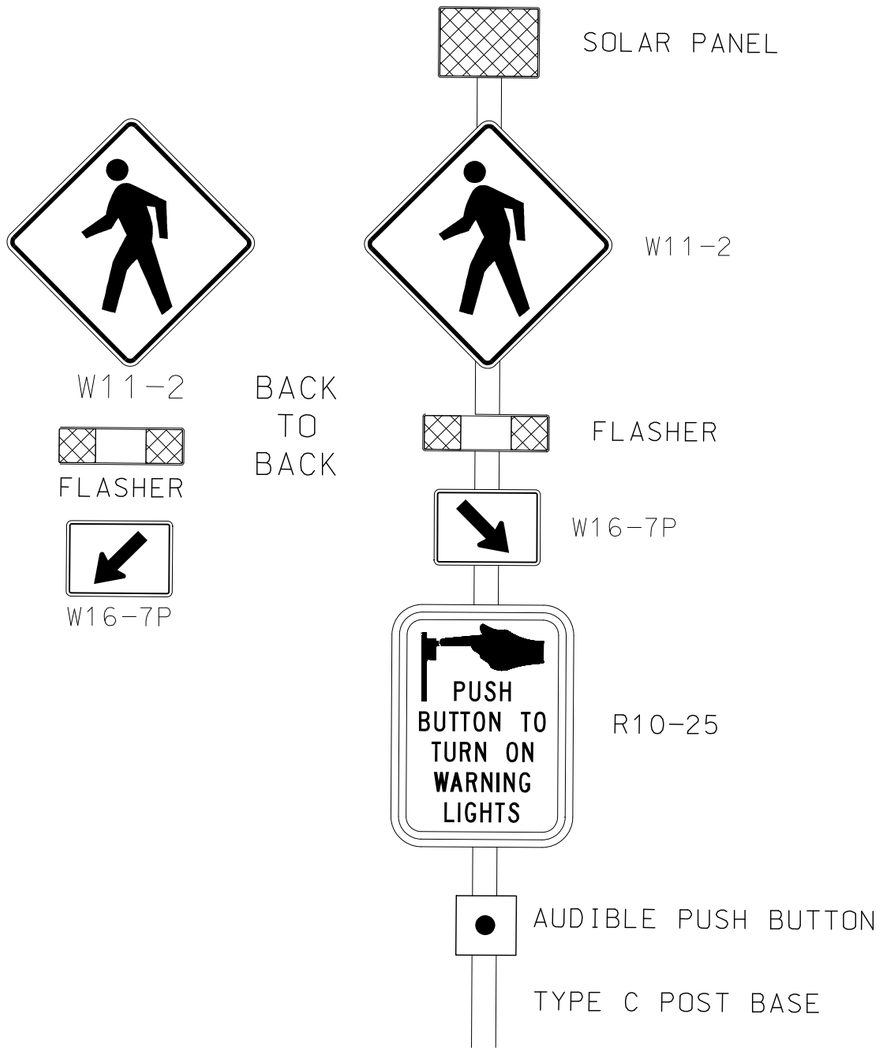

RRFB
(RECTANGULAR RAPID FLASHING BEACONS)

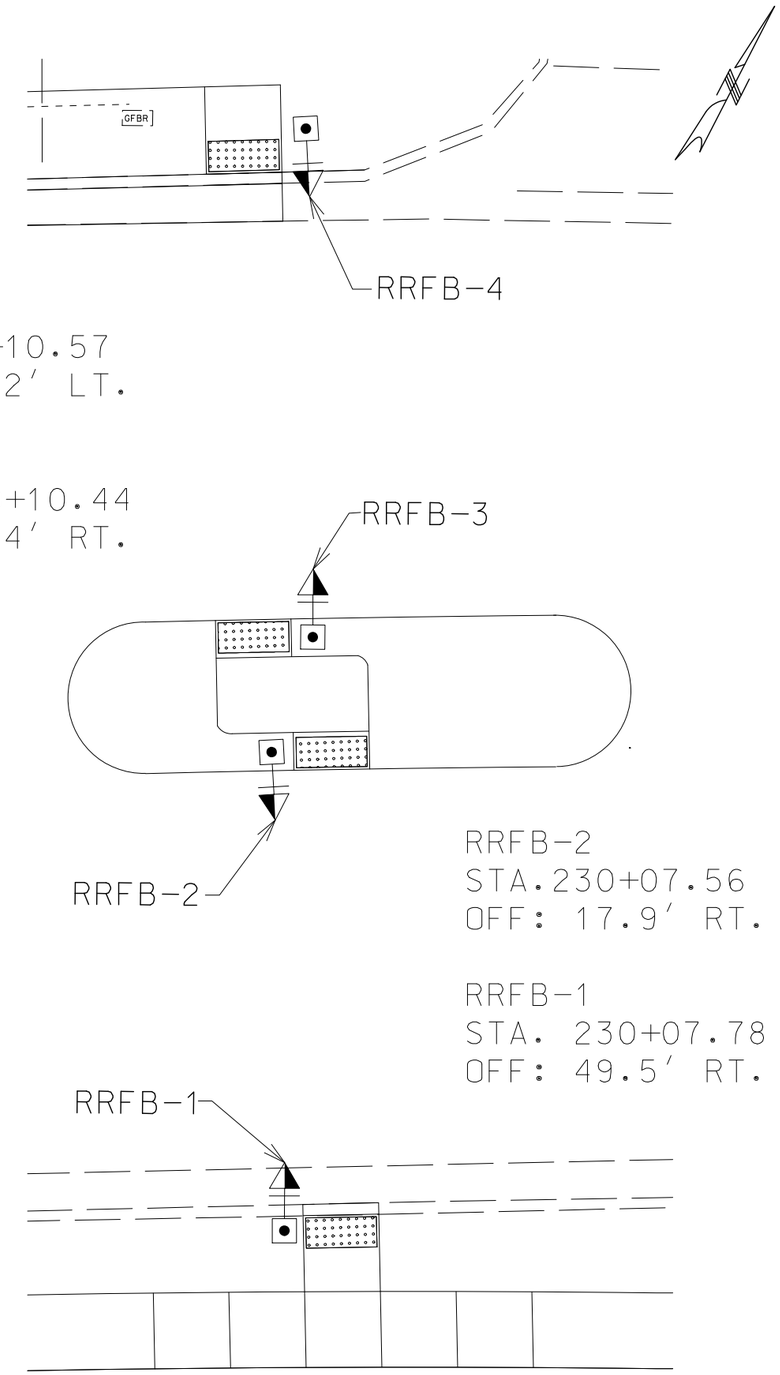

NOT TO SCALE

SIGNAL SHEET
RECTANGULAR RAPID FLASHING BEACONS (RRFB)
SHEET 1 OF 1

STATE OF MISSOURI
SEAN M. DOMINGO
NUMBER
PE-2022001607
PROFESSIONAL ENGINEER
07/31/2023 3:24:45 PM
SEAN M. DOMINGO - CIVIL
MO-PE-2022001607

DATE PREPARED	
7/31/2023	
ROUTE 69	STATE MO
DISTRICT KC	SHEET NO. 55
COUNTY CLAY	
JOB NO. J4P3465	
CONTRACT ID.	
PROJECT NO.	
BRIDGE NO.	

DATE	DESCRIPTION

IF A SEAL IS PRESENT ON THIS SHEET IT HAS BEEN ELECTRONICALLY SEALED AND DATED.

MISSOURI HIGHWAYS AND TRANSPORTATION COMMISSION
105 WEST CAPITOL
JEFFERSON CITY, MO 65102
1-888-ASK-MODOT (1-888-275-6636)

LIGHTING LEGEND

	CONTROLLER, LIGHTING		LED-A LUMINAIRE
	CONTROLLER, LIGHTING (EXISTING)		LED-B LUMINAIRE
	WOOD POST		LED-C LUMINAIRE
	POWER SUPPLY	P.S.	POWER SOURCE
JCT	JUNCTION BOX		PULL BOX (EXISTING)
	PULL BOX CONCRETE TYPE 1		PULL BOX CONCRETE TYPE 2
	PULL BOX PREFORMED TYPE 1		PULL BOX PREFORMED TYPE 2
	CONDUIT, RIGID (TRENCH)		CONDUIT, RIGID (PUSHED)
M	CONDUIT, RIGID (MEDIAN)	B	CONDUIT, RIGID (BRIDGE)
	CONDUIT, RIGID (EXISTING)		CABLE-CONDUIT (EXISTING)
			CABLE-CONDUIT

(A1) STA. 229+33.00
OFF.49.63' RT.
30' LP TYPE AT
15' BRACKET ARM WITH
LED A LUMINAIRE

(A2) STA. 230+73.58
OFF.21.74 LT.
30' LP TYPE AT
15' BRACKET ARM WITH
LED A LUMINAIRE

(PB1) STA. 230+43.90
OFF.49.97 RT.
PREFORMED PULL BOX
CLASS 1, TYPE 2

(PB2) STA. 230+67.13
OFF.25.52 LT.
PREFORMED PULL BOX
CLASS 1, TYPE 2

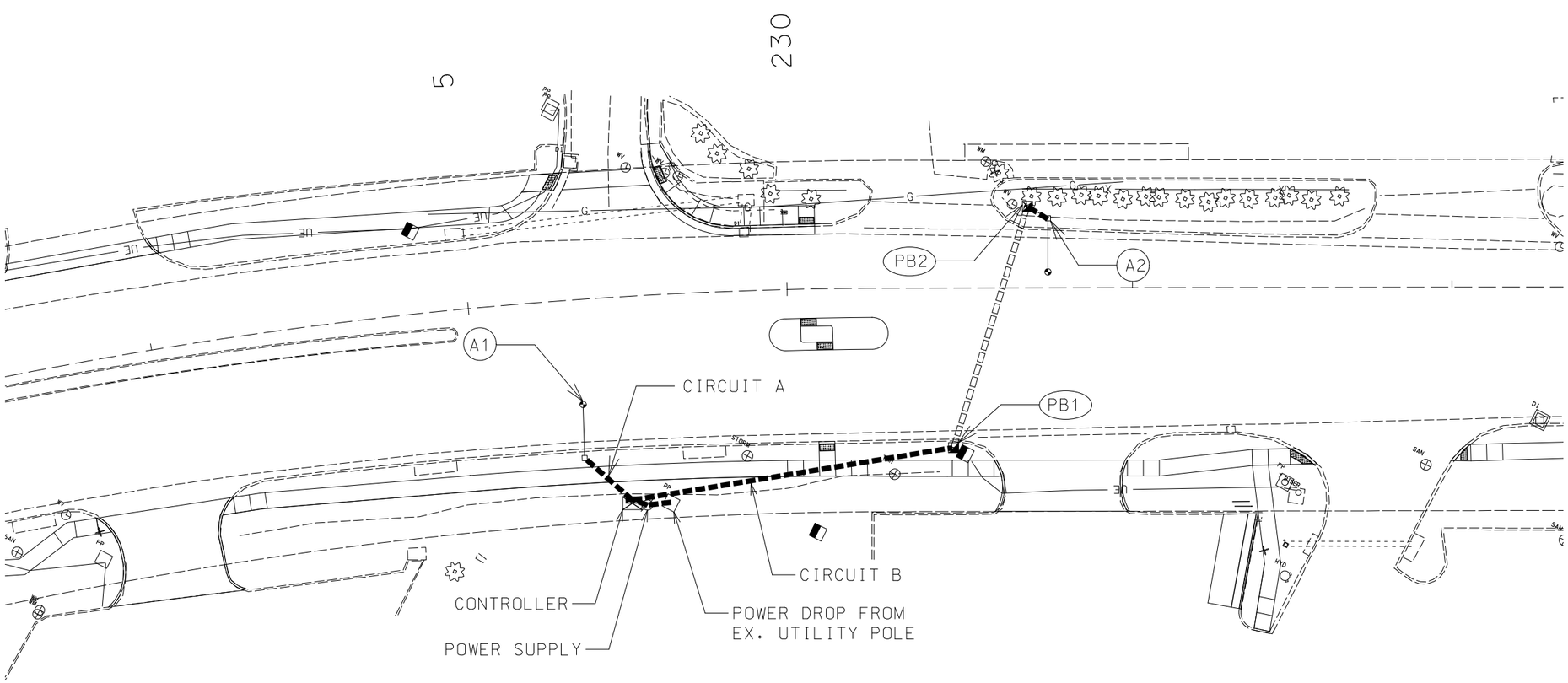

SCALE
0 20 40 60

LIGHTING SHEET
SHEET 1 OF 5

STATE OF MISSOURI
SEAN M. DOMINGO
NUMBER
PE-2022001607
PROFESSIONAL ENGINEER
07/31/2023 3:25:22 PM
SEAN M. DOMINGO - CIVIL
MO-PE-2022001607

DATE PREPARED	
7/31/2023	
ROUTE 69	STATE MO
DISTRICT KC	SHEET NO. 56
COUNTY CLAY	
JOB NO. J4P3465	
CONTRACT ID.	
PROJECT NO.	
BRIDGE NO.	

DATE	DESCRIPTION

MISSOURI HIGHWAYS AND TRANSPORTATION COMMISSION
105 WEST CAPITOL
JEFFERSON CITY, MO 65102
1-888-ASK-MODOT (1-888-275-6636)

IF A SEAL IS PRESENT ON THIS SHEET IT HAS BEEN ELECTRONICALLY SEALED AND DATED.

LOCATION / BASE / PULL BOX

POST NUMBER	PULL BOX NUMBER	APPROACH	STATION	OFFSET	BASE A 9	A 9.5	A 10	A 10.5	A 11	A 12	F 9	F 9.5	F 10	F 10.5	F 11	F 12	C	CONCRETE** (CU. YDS.)	LIGHT POLE FOUNDATION (EACH)	PULL BOX PREFORMED CLASS 1	CLASS 2	CLASS 3	CLASS 5	CONCRETE STANDARD	DOUBLE, TYPE A	DOUBLE, TYPE B	DRAIN TYPE* I	II A	II B	II C
		CONTROLLER	229+47.52	64.8' RT.														0.15												
A1		US69 NBL	229+33.00	49.63' RT.															1											
A2		US69 SBL	230+73.58	21.74' LT.															1											
	PB1	US69 NBL	362+02.19	38.05' RT																1										
	PB2	US69 SBL	360+86.86	58.27' RT																1										
																	TOTAL	0.15	2	2										

POST

POST NUMBER	PULL BOX NUMBER	TOP MOUNT POST 8 FT.	15 FT.	TYPE C & CL ARM LENGTH A	A	A	A	SIGNAL SPACING B	C	D	SIGN SPACING B	C	TYPE B & BL ARM LENGTH K	E	K	E	K	LEFT ARM E SIGNAL SPACING F	G	H	H'	LEFT ARM E SIGN SPACING F	G	H	H'	RIGHT ARM K SIGNAL SPACING L	M	N	N'	RIGHT ARM K SIGN SPACING L	M	N	N'	LUMINAIRE BRACKET ARM 15 FT.	6 FT.	30 FT. POLE
A1																																		1		1
A2																																		1		1
	PB1																																			
	PB2																																			
TOTAL																																		2		2

SIGNAL HEADS

SPAN NUMBER	POST NUMBER	FACE NUMBER	LUMINAIRE LED A-103W	INDICATIONS* 12" LENS CONVENTIONAL R	RL	YL	YR†	FYL	FYR	G	S	L	R†		12" LENS OPTICAL LIMITING R	Y	YL	YR†	YL	YR†	G	S	L	R†	VISORS* 12" LENS	PED.
	A1		1																							
	A2		1																							
TOTAL			2	NO.901-13.11																					TOTAL CONVENTIONAL	

POST NUMBER	LOUVERS* A	B	C	D	E	F	BACKPLATE* LENSES 1	2	3	4	5	BRACKET* TYPE I	II	III	ONE-FACE SECTION 1- T	1- S	1- C	1- B	3- T	3- S	3- C	3- B	4- T	4- S	4- C	4- B	5- T	5- S	5- C	5- B	TWO-FACE SECTIONS 11- T	11- S	11- B	33- T	33- S	33- C	33- B	34- S	34- B	35- S	35- B	44- S	44- B	45- S	45- B
A1																																													
A2																																													

LEGEND

- FDW — FLASHING DON'T WALK
- R/W — RIGHT OF WAY INTERVAL
- DW — DON'T WALK
- YR† — YELLOW RIGHT ARROW
- RT. — GREEN RIGHT ARROW
- W — WALK
- YL — YELLOW LEFT ARROW
- L — GREEN LEFT ARROW
- S — GREEN STRAIGHT AHEAD ARROW
- G — CIRCULAR GREEN
- Y — CIRCULAR YELLOW
- R — CIRCULAR RED
- Ø — TRAFFIC PHASE
- RL — RED LEFT ARROW
- FR — FLASHING RED
- FY — FLASHING CIRCULARE YELLOW
- FYA — FLASHING YELLOW ARROW
- FYL — FLASHING YELLOW LEFT ARROW
- FYR — FLASHING YELLOW RIGHT ARROW

T - TOP MOUNT
S - SIDE MOUNT
C - SPANWIRE MOUNT
B - MAST ARM MOUNT

SIGNS

SEE SIGNING SHEET

QUANTITY	MUTCD SIGN NUMBER	SIZE (INCHES)	AREA (SQ. FT.)	TOTAL SH-FLAT SHEET SIGNAL SIGN (SQ. FT.)	TOTAL SH-FLAT SHEET SIGNAL SIGN (EACH) 902-08.33	SIGNAL SIGN MOUNTING HARDWARE (EACH) 902-08.34
				TOTAL:		

REMARKS

ALL LENGTHS AND SPACINGS ARE IN FEET UNLESS OTHERWISE INDICATED.

* ITEMS FOR WHICH SEPARATE PAYMENT WILL NOT BE MADE.

** SEE STANDARD PLANS 902.10 AND 902.30 FOR CONCRETE REQUIREMENTS ON BASES.

*** USE D3-16 FOR ONE LINE. USE D3-18 FOR TWO LINE.

SIGNAL STRUCTURES WHICH WILL EXCEED THE DIMENSION LIMITS SHOWN ON STANDARD PLAN SHEETS IN SECTION 902 AND ANY OTHER INSTALLATION WHERE THE DETAILS OF CONSTRUCTION ARE NOT FURNISHED IN THE CONTRACT PLANS, SHALL BE DESIGNED BY A PROFESSIONAL ENGINEER IN ACCORDANCE WITH THE 2001 AASHTO STANDARD SPECIFICATIONS FOR STRUCTURAL SUPPORTS FOR HIGHWAY SIGNS, LUMINAIRES AND TRAFFIC SIGNALS, 4TH EDITION, AND LATEST INTERIMS. THE STRUCTURE SHALL BE DESIGNED AS IMPORTANCE CATEGORY I FOR FATIGUE WITH A 50-YEAR DESIGN LIFE. THE CONTRACTOR SHALL SUBMIT A SET OF SHOP DETAIL DRAWINGS INCLUDING WELD PROCEDURE SPECIFICATIONS AND DESIGN COMPUTATIONS FOR MODOT RECORDS AND REFERENCE. THE SUBMITTED DRAWINGS AND CALCULATIONS SHALL BE SIGNED AND SEALED IN ACCORDANCE WITH THE LAWS RELATING TO ARCHITECTS AND PROFESSIONAL ENGINEERS (CHAPTER 327, RSMO.), AND SHALL INCLUDE A TITLE BLOCK OR SUMMARY SHEET WHICH LISTS AND CERTIFIES THAT THE PRODUCT MEETS ALL OF THE SPECIFIED DESIGN CRITERIA.

LIGHTING SHEET
SHEET 2 OF 5
D-37A

STATE OF MISSOURI
SEAN M. DOMINGO
NUMBER PE-2022001607
PROFESSIONAL ENGINEER
08/15/2023 1:26:30 PM
SEAN M. DOMINGO - CIVIL
MO-PE-2022001607

DATE PREPARED 8/15/2023
ROUTE 69 | STATE MO
DISTRICT KC | SHEET NO. 57
COUNTY CLAY
JOB NO. J4P3465
CONTRACT ID.
PROJECT NO.
BRIDGE NO.

DESCRIPTION | DATE

MISSOURI HIGHWAYS AND TRANSPORTATION COMMISSION
105 WEST CAPITOL
JEFFERSON CITY, MO 65102
1-888-ASK-MODOT (1-888-275-6636)

IF A SEAL IS PRESENT ON THIS SHEET IT HAS BEEN ELECTRONICALLY SEALED AND DATED.

✳ CONDUIT AND CABLE BETWEEN KCPL SERVICE POLE AND POWER SUPPLY INCLUDED IN BID ITEM FOR POWER SUPPY ASSEMBLY

CONDUIT

FROM	TO	CENTER TO CENTER DISTANCE	LOOP DET.	TRENCH				PUSHED			MEDIAN			ON STRUCTURE			REMARKS
			1"	2"	3"	4"		2"	3"	4"	2"	3"	4"	2"	3"		
Power Source	∅	7			10												
∅	⊠	5			11												
⊠	A1	20			25												
⊠	PB1	105			110												
PB 1	PB 2	80							85								
PB 2	A2	5			10												
A1																	
A2																	
✳ Light Pole																	
PAY TOTAL					166				85								

CABLE

FROM	TO	CENTER TO CENTER DISTANCE	POWER		CONTROL				LED A		TRAFFIC DETECTOR		FIBER			
			1c#2	1c#8	2c #16	5c #16	7c #16	3c #16	CONTROL 2c #12	POLE & BRACKET 1c #10	VIDEO COAX CABLE	2c #14 LEAD-IN CABLE	DROP CABLE, 12 COUNT, SINGLE MODE (LENGTH)	DROP CABLE, 12 COUNT, SINGLE MODE (EACH)	SPLICING, TESTING AND DOC. (L.S.)	INSTALLATION OF COMMISSION FURNISHED TELECOMMUNICATION EQUIPMENT (L.S.)
Power Source	∅	7	20													
∅	⊠	11		20												
⊠	A1	20		30												
⊠	PB1	105		115												
PB1	PB2	80		90												
PB2	A2	5		15												
										100						
										100						
PAY TOTAL			20	270						200						

LIGHTING SHEET
SHEET 3 OF 5

D-37B

STATE OF MISSOURI
SEAN M. DOMINGO
NUMBER
PE-2022001607
PROFESSIONAL ENGINEER

07/31/2023 3:26:35 PM
SEAN M. DOMINGO - CIVIL
MO-PE-2022001607

DATE PREPARED	
7/31/2023	
ROUTE 69	STATE MO
DISTRICT KC	SHEET NO. 58
COUNTY CLAY	
JOB NO. J4P3465	
CONTRACT ID.	
PROJECT NO.	
BRIDGE NO.	

DATE	DESCRIPTION

MISSOURI HIGHWAYS AND TRANSPORTATION COMMISSION
105 WEST CAPITOL
JEFFERSON CITY, MO 65102
1-888-ASK-MODOT (1-888-275-6636)

IF A SEAL IS PRESENT ON THIS SHEET IT HAS BEEN ELECTRONICALLY SEALED AND DATED.

POWER SUPPLY

LOCATION			POWER SUPPLY ASSEMBLY		CIRCUIT BREAKER TRIP RATING✳				LIGHTING CONTROL ✳ (ON POWER SUPPLY)		SERVICE POLE	
					CONTROLLER		POWER SUPPLY DISCONNECT					
							MAIN BREAKER					
APPROACH	STATION	OFFSET	DRAWING 902.15	DRAWING	AUXILIARY BREAKER	CONT & SIGNAL LAMPS	SIGNALS	LIGHTING	240/120 VOLT CONTROL CABINET	MAIN BREAKER	CONTRACT FURNISH	UTILITY COMPANY
US69 NBL	229+52.45	65.6' RT.	TYPE 2		Amps	Amps	Amps	15 Amps	1	100 Amps	Ci. Ft.	KCPL
					Amps	Amps	Amps	Amps		Amps	Ci. Ft.	

CONTROLLER ASSEMBLY AND AUXILIARY EQUIPMENT

LOCATION			SYSTEM MASTER (CLOSED LOOP)		ACTUATED		ON-OFF✳ SWITCH TYPE		COORDINATION INTERFACE ✳						TIME ✳ CLOCK	NEMA CABINET TYPE ✳			170 CABINET TYPE ✳		170 SOFTWARE ✳	
									12C/7C HARDWIRE (1)			CLOSED LOOP										
APPROACH	STATION	OFFSET	NEMA	170	NEMA	170	I	II	MASTER	LOCAL	LINE BASE	NEMA	170	FIBER		E	EV	DOUBLE	332	336S	BITRAN	WAPITI

DETECTOR SCHEDULE

DETECTOR NUMBER	APPROACH	TYPE				
		PUSH BUTTON	INDUCTION LOOP (2)			VIDEO
			STANDARD	DELAY/ EXTEND ✳	CALL UNIT ✳	
	TOTAL					

✳ ITEMS FOR WHICH SEPARATE PAYMENT WILL NOT BE MADE.

(1) MoDOT "D" PLUG SHALL BE WIRED INTO ALL NEMA CONTROLLERS WITH 7C HARDWIRE INTERCONNECT.

(2) PAYMENT IS MADE FOR THE NUMBER OF 2-CHANNEL DETECTOR CARDS AS SHOWN BELOW THE ASSIGNMENT CHART.

(3) CONTROLLER SHALL BE NTCIP CENTRAL SYSTEM READY.

(4) FOR WHEELCHAIR ACCESSIBILITY INSTALL AS NEEDED EXTENSION TO MAKE PUSH BUTTON FLUSH WITH SIDEWALK AT NO DIRECT COST.

170 OUTPUT FILE ASSIGNMENTS

FR1							MONITOR
FR2							
FR3							
FR4							

NEMA DETECTOR ASSIGNMENT

CHANNEL	CARD POSITION 1	2	3	4	5	6	7	8
1	V	I	D	E	O			
2								

TOTAL NUMBER OF DETECTOR CARDS(2-CHANNEL) = (2)

170 INPUT FILE ASSIGNMENTS

	CHANNEL	1	2	3	4	5	6	7	8	9	10	11	12	13	14
"I"	U														
	L														
"J"	U														
	L														

170 AUXILIARY OUTPUT FILE

FR5							
FR6							

NEMA 16 LOAD SWITCH ASSIGNMENTS

1	2	3	4	5	6	7	8				

LIGHTING SHEET
SHEET 4 OF 5

D-37C

STATE OF MISSOURI
SEAN M. DOMINGO
NUMBER PE-2022001607
PROFESSIONAL ENGINEER

07/31/2023 3:27:28 PM
SEAN M. DOMINGO - CIVIL
MO-PE-2022001607

DATE PREPARED
7/31/2023

ROUTE	STATE
69	MO
DISTRICT	SHEET NO.
KC	59

COUNTY
CLAY

JOB NO.
J4P3465

CONTRACT ID.

PROJECT NO.

BRIDGE NO.

DATE	DESCRIPTION

IF A SEAL IS PRESENT ON THIS SHEET IT HAS BEEN ELECTRONICALLY SEALED AND DATED.

MISSOURI HIGHWAYS AND TRANSPORTATION COMMISSION
105 WEST CAPITOL
JEFFERSON CITY, MO 65102
1-888-ASK-MODOT (1-888-275-6636)

LIGHTING WIRING DIAGRAM

NOTE:
ORIENTATE BRACKET ARMS
AS REQUIRED FACING
ROADWAY

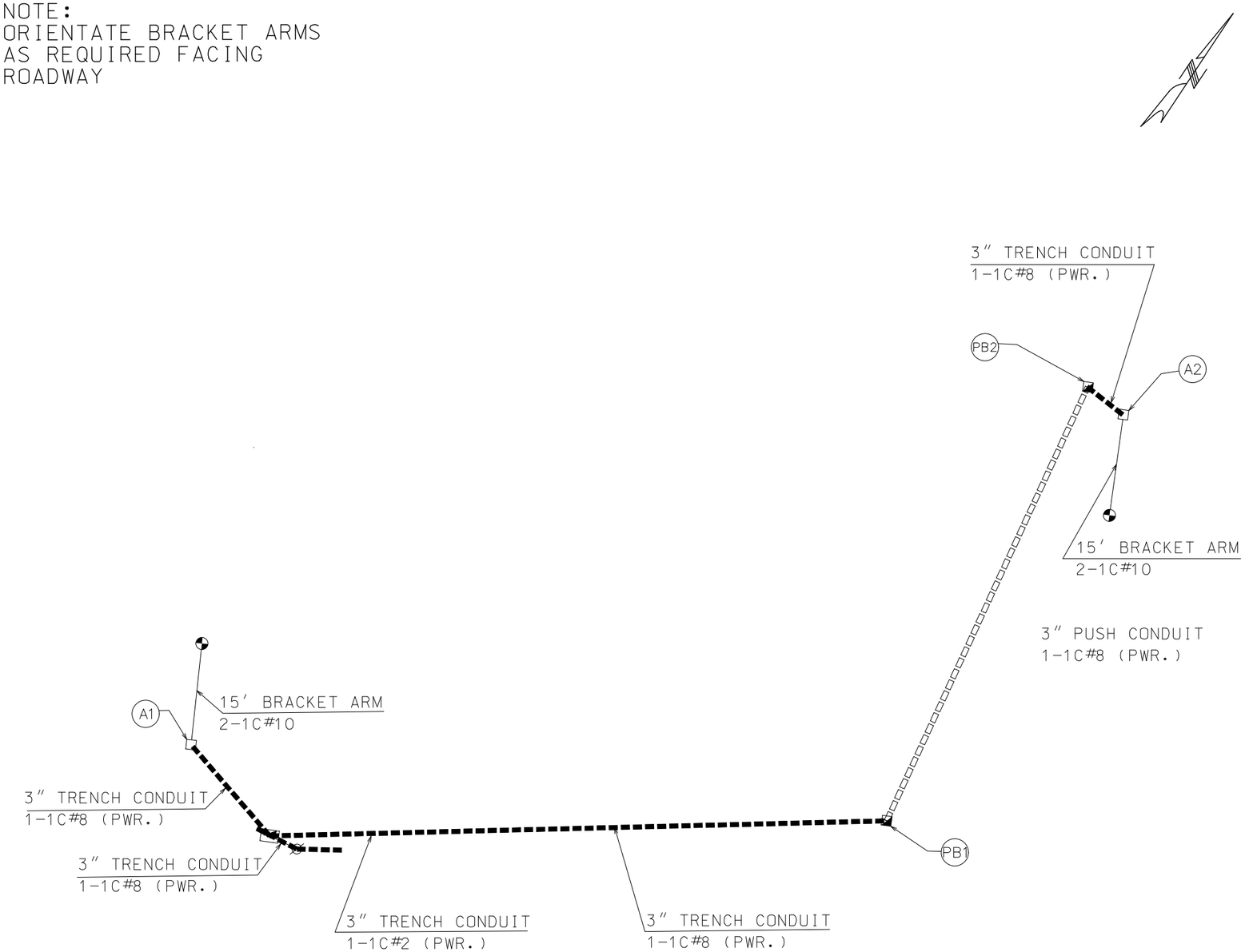

LEGEND

S.C.	SIGNAL CONTROLLER
P.S.	POWER SUPPLY (WITH 120V LIGHTING CONTROL)
PP	EXISTING UTILITY POWER POLE
	SIGNAL HEAD (PEDESTRIAN)
	SIGNAL HEAD (STANDARD)
XX	SIGNAL FACE NUMBER
XX	SIGNAL POST NUMBER
XC	TYPE C MAST ARM - TYPE A BASE (WITH LENGTH AND TYPE NOTED)
35'CL 15'	TYPE CL MAST ARM - TYPE A BASE WITH 150-WATT HPS LUMINAIRE (35'MAST ARM AND 15' LUM. BRACKET ARM)
15'	40-WATT LED A (30'MTG HT & 15' BRACKET ARM)
	8' TOP MOUNT POST - TYPE C BASE
	PREFORMED PULL BOX
X XX	PULL BOX NUMBER (WITH CLASS NUMBER)
	VIDEO DETECTOR (AS NEEDED)
	SIGNAL MAST ARM SIGN
	PUSH BUTTON DETECTOR
XX	PUSH BUTTON DETECTOR NUMBER
	CONDUIT TRENCHED
	CONDUIT PUSHED
	CONDUIT EXISTING
ITS	CIRCULAR PULL BOX CLASS 5 (FOR FIBER-OPTIC CABLE INTERCONNECT)

NOTE: ALL WIRING IS #16 UNLESS NOTED OTHERWISE

STATE OF MISSOURI
SEAN M. DOMINGO
NUMBER PE-2022001607
PROFESSIONAL ENGINEER
07/31/2023 3:28:17 PM
SEAN M. DOMINGO - CIVIL
MO-PE-2022001607

DATE PREPARED	
7/31/2023	
ROUTE 69	STATE MO
DISTRICT KC	SHEET NO. 60
COUNTY CLAY	
JOB NO. J4P3465	
CONTRACT ID.	
PROJECT NO.	
BRIDGE NO.	

DATE	DESCRIPTION

IF A SEAL IS PRESENT ON THIS SHEET IT HAS BEEN ELECTRONICALLY SEALED AND DATED.

MISSOURI HIGHWAYS AND TRANSPORTATION COMMISSION
105 WEST CAPITOL
JEFFERSON CITY, MO 65102
1-888-ASK-MODOT (1-888-275-6636)

LIGHTING WIRING SHEET
SHEET 5 OF 5

D-37D

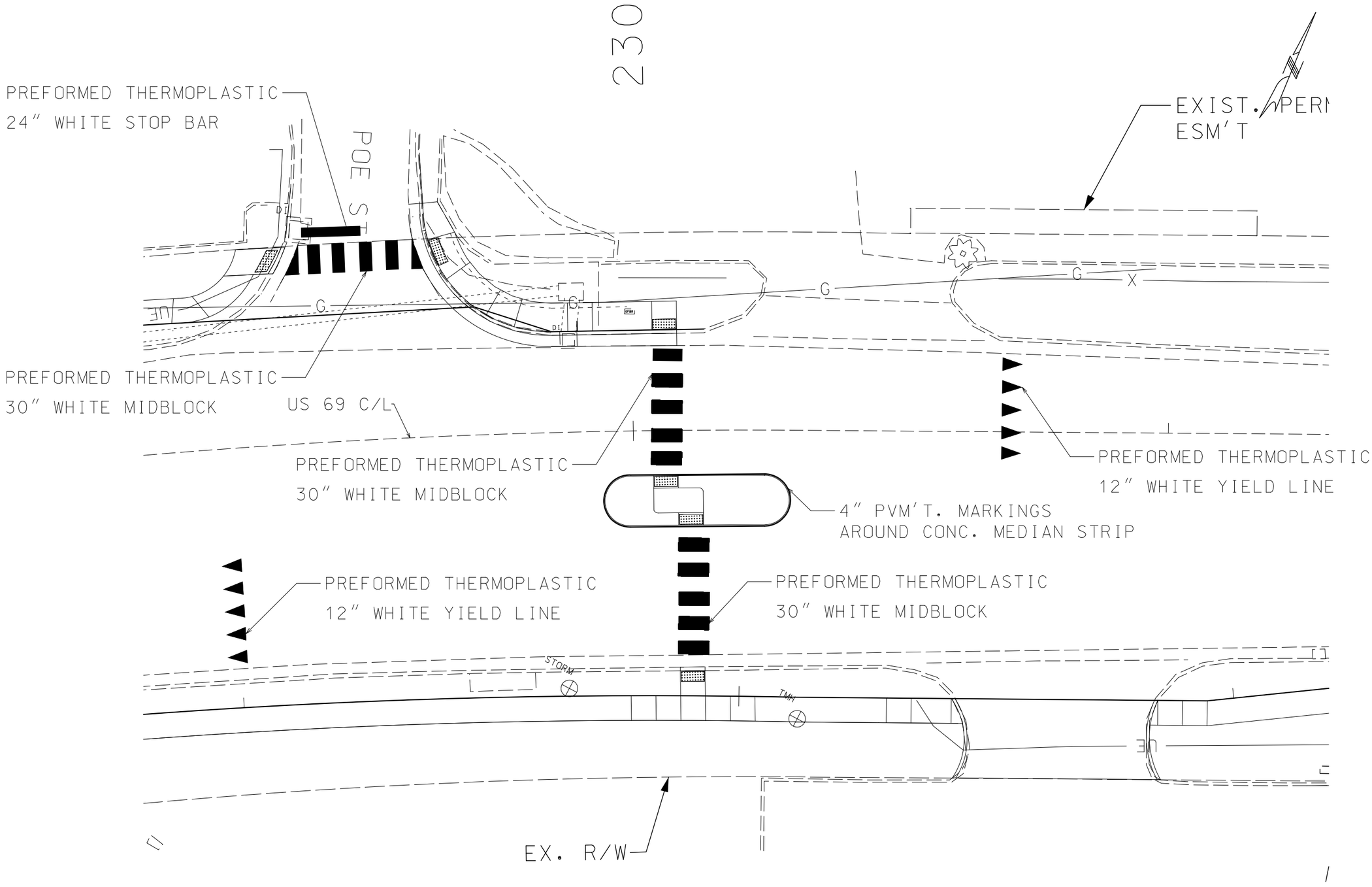

PAVEMENT MARKING SHEET
SHEET 1 OF 1

STATE OF MISSOURI
SEAN M. DOMINGO
NUMBER
PE-2022001607
PROFESSIONAL ENGINEER
07/31/2023 3:28:58 PM
SEAN M. DOMINGO - CIVIL
MO-PE-2022001607

DATE PREPARED	
7/31/2023	
ROUTE 69	STATE MO
DISTRICT KC	SHEET NO. 61
COUNTY CLAY	
JOB NO. J4P3465	
CONTRACT ID.	
PROJECT NO.	
BRIDGE NO.	

DATE	DESCRIPTION

MISSOURI HIGHWAYS AND TRANSPORTATION COMMISSION
105 WEST CAPITOL
JEFFERSON CITY, MO 65102
1-888-ASK-MODOT (1-888-275-6636)

IF A SEAL IS PRESENT ON THIS SHEET IT HAS BEEN ELECTRONICALLY SEALED AND DATED.

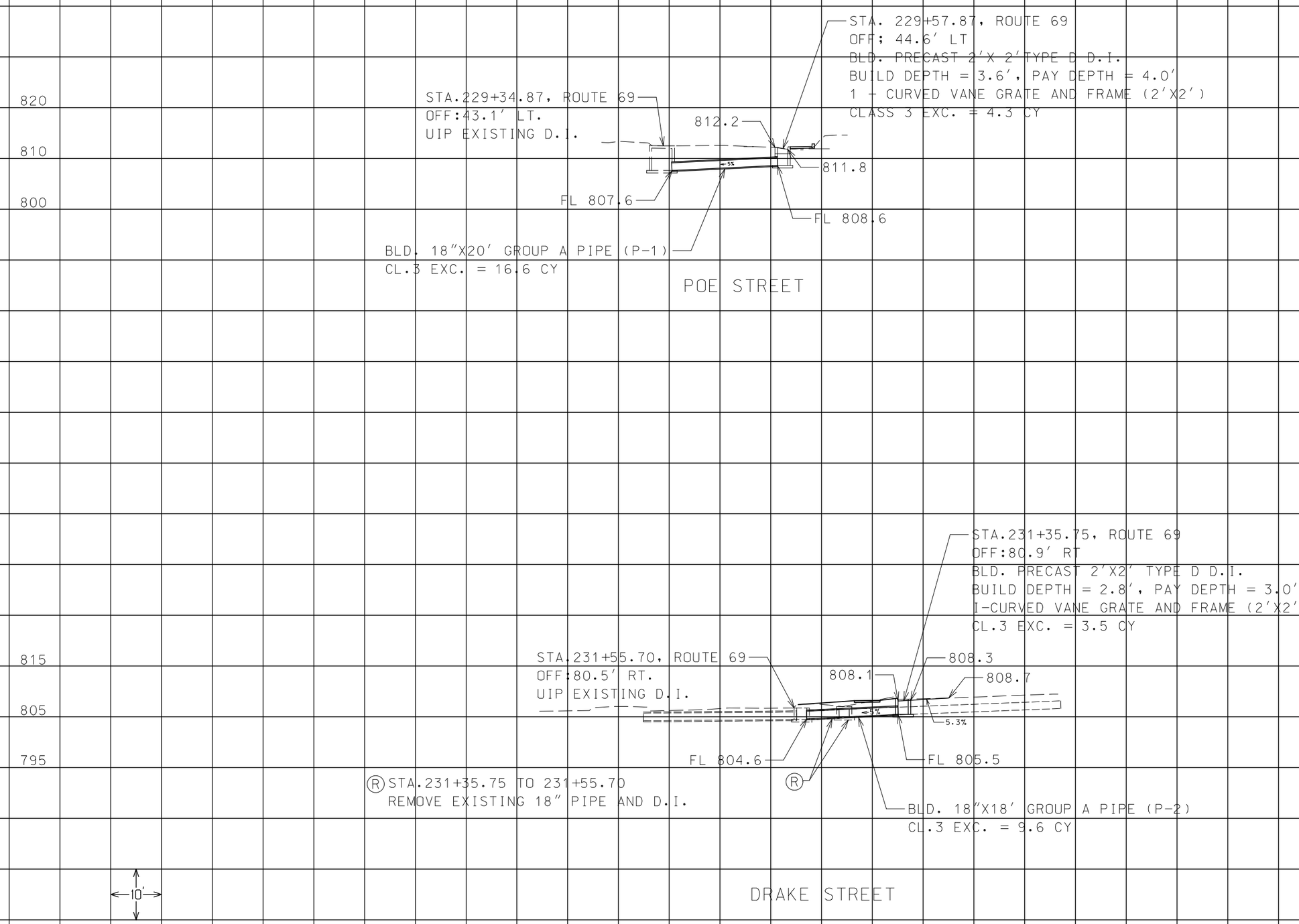

CROSS SECTION SHEET
DRAINAGE STRUCTURES
SHEET 1 OF 1

STATE OF MISSOURI
SEAN M. DOMINGO
NUMBER
PE-2022001607
PROFESSIONAL ENGINEER

07-31-2023 3:29:45 PM
SEAN M. DOMINGO - CIVIL
MO-PE-2022001607

DATE PREPARED	
7/31/2023	
ROUTE 69	STATE MO
DISTRICT KC	SHEET NO. 62
COUNTY CLAY	
JOB NO. J4P3465	
CONTRACT ID.	
PROJECT NO.	
BRIDGE NO.	

DATE	DESCRIPTION

MISSOURI HIGHWAYS AND TRANSPORTATION COMMISSION

105 WEST CAPITOL
JEFFERSON CITY, MO 65102
1-888-ASK-MODOT (1-888-275-6636)

IF A SEAL IS PRESENT ON THIS SHEET IT HAS BEEN ELECTRONICALLY SEALED AND DATED.

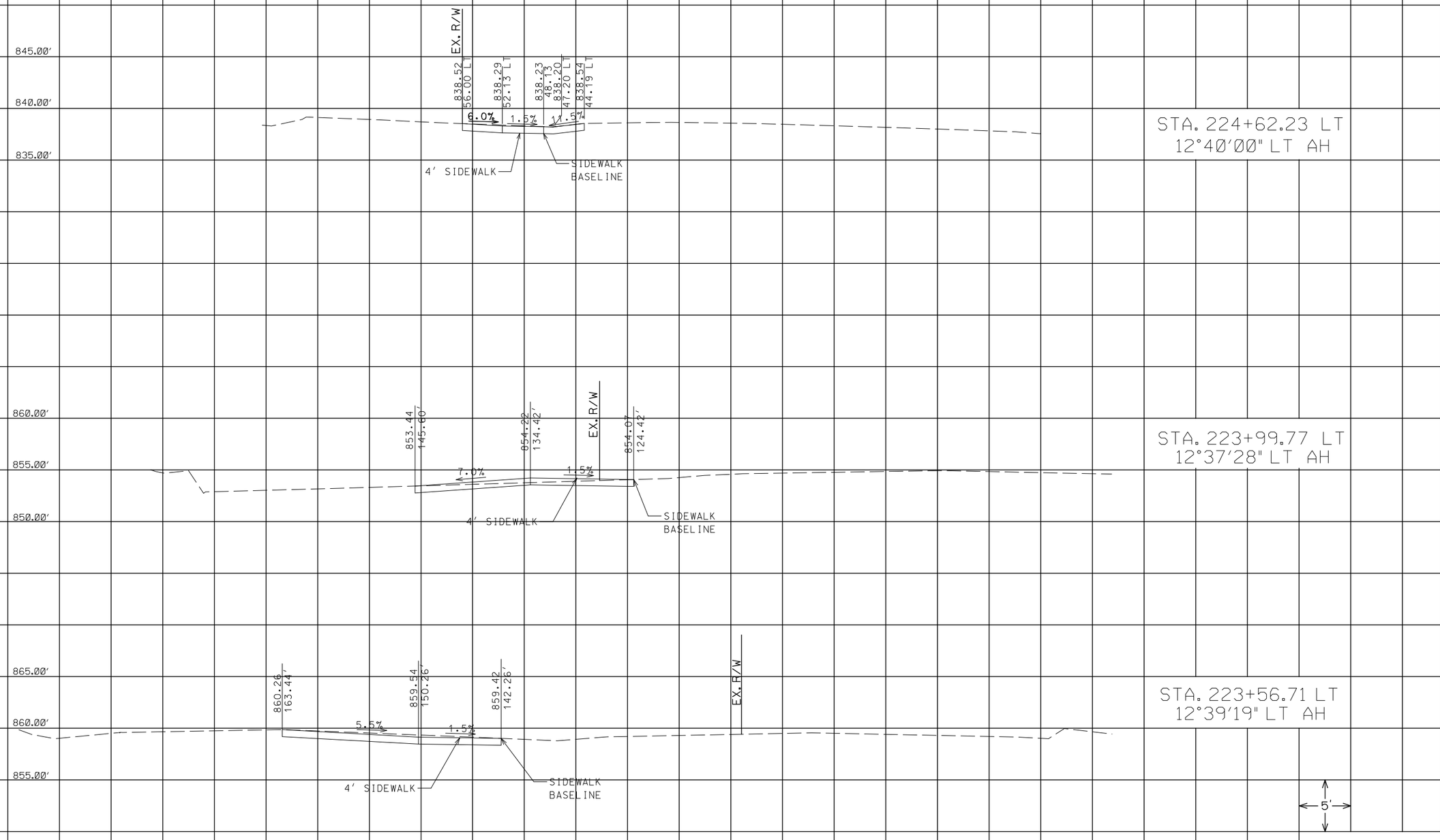

ENTRANCE PROFILES
SHEET 1 OF 6

STATE OF MISSOURI
SEAN M. DOMINGO
NUMBER
PE-2022001607
PROFESSIONAL ENGINEER

07/31/2023 3:30:30 PM
SEAN M. DOMINGO - CIVIL
MO-PE-2022001607

DATE PREPARED	
7/31/2023	
ROUTE 69	STATE MO
DISTRICT KC	SHEET NO. 63
COUNTY CLAY	
JOB NO. J4P3465	
CONTRACT ID.	
PROJECT NO.	
BRIDGE NO.	

DATE	DESCRIPTION

MISSOURI HIGHWAYS AND TRANSPORTATION COMMISSION

105 WEST CAPITOL
JEFFERSON CITY, MO 65102
1-888-ASK-MODOT (1-888-275-6636)

IF A SEAL IS PRESENT ON THIS SHEET IT HAS BEEN ELECTRONICALLY SEALED AND DATED.

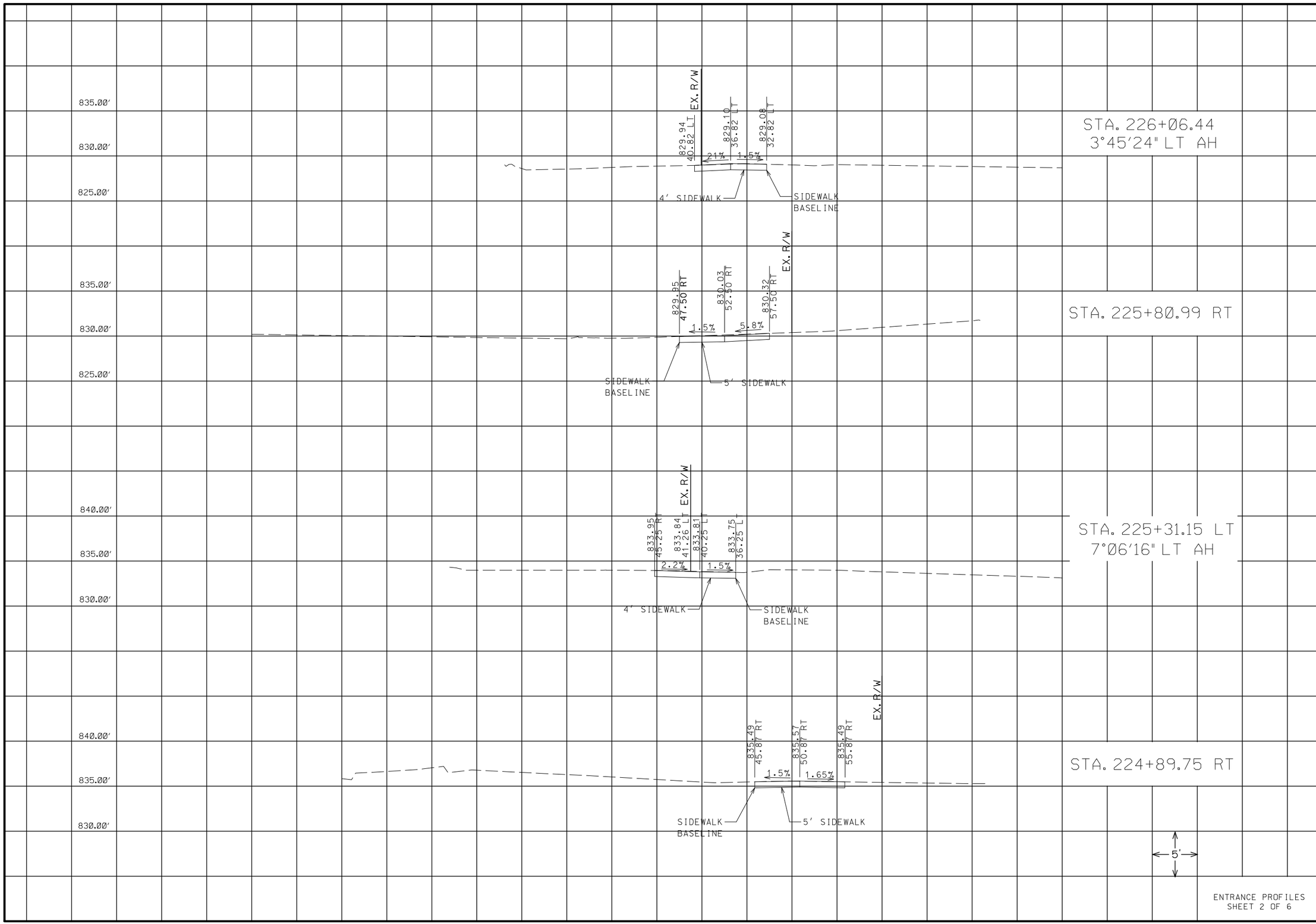

ENTRANCE PROFILES
SHEET 2 OF 6

STATE OF MISSOURI
SEAN M. DOMINGO
NUMBER
PE-2022001607
PROFESSIONAL ENGINEER

07/31/2023 3:31:06 PM
SEAN M. DOMINGO - CIVIL
MO-PE-2022001607

DATE PREPARED	
7/31/2023	
ROUTE 69	STATE MO
DISTRICT KC	SHEET NO. 64
COUNTY CLAY	
JOB NO. J4P3465	
CONTRACT ID.	
PROJECT NO.	
BRIDGE NO.	

DATE	DESCRIPTION

IF A SEAL IS PRESENT ON THIS SHEET IT HAS BEEN ELECTRONICALLY SEALED AND DATED.

MISSOURI HIGHWAYS AND TRANSPORTATION COMMISSION

105 WEST CAPITOL
JEFFERSON CITY, MO 65102
1-888-ASK-MODOT (1-888-275-6636)

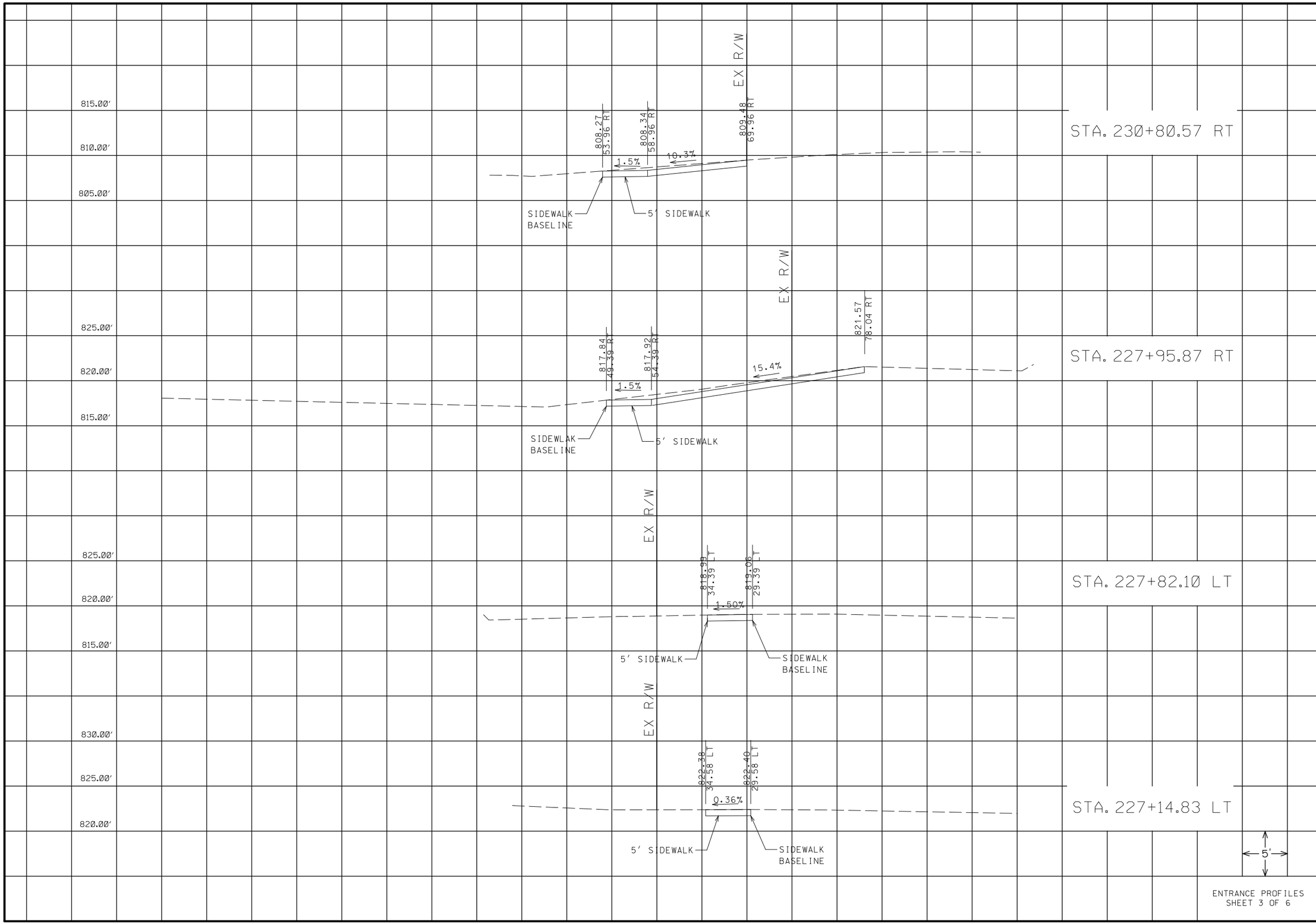

ENTRANCE PROFILES
SHEET 3 OF 6

STATE OF MISSOURI
SEAN M. DOMINGO
NUMBER
PE-2022001607
PROFESSIONAL ENGINEER

07/31/2023 3:32:01 PM
SEAN M. DOMINGO - CIVIL
MO-PE-2022001607

DATE PREPARED	7/31/2023
ROUTE	69
STATE	MO
DISTRICT	KC
SHEET NO.	65
COUNTY	CLAY
JOB NO.	J4P3465
CONTRACT ID.	
PROJECT NO.	
BRIDGE NO.	

DATE	DESCRIPTION

MISSOURI HIGHWAYS AND TRANSPORTATION COMMISSION

105 WEST CAPITOL
JEFFERSON CITY, MO 65102
1-888-ASK-MODOT (1-888-275-6636)

IF A SEAL IS PRESENT ON THIS SHEET IT HAS BEEN ELECTRONICALLY SEALED AND DATED.

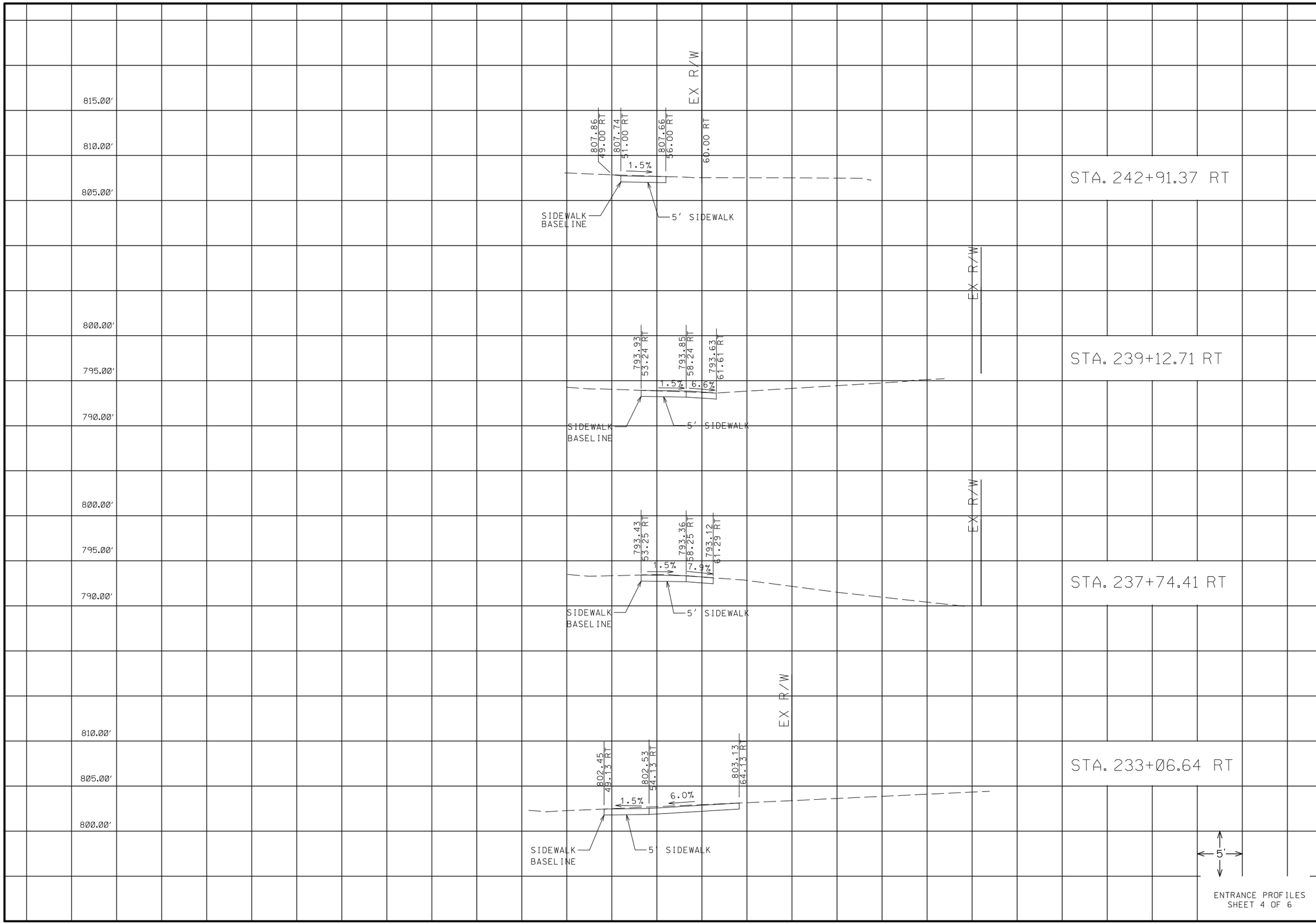

ENTRANCE PROFILES
SHEET 4 OF 6

STATE OF MISSOURI
SEAN M. DOMINGO
NUMBER
PE-2022001607
PROFESSIONAL ENGINEER

07-31-2023 3:32:49 PM
SEAN M. DOMINGO - CIVIL
MO-PE-2022001607

DATE PREPARED	
7/31/2023	
ROUTE 69	STATE MO
DISTRICT KC	SHEET NO. 66
COUNTY CLAY	
JOB NO. J4P3465	
CONTRACT ID.	
PROJECT NO.	
BRIDGE NO.	

DATE	DESCRIPTION

MISSOURI HIGHWAYS AND TRANSPORTATION COMMISSION

105 WEST CAPITOL
JEFFERSON CITY, MO 65102
1-888-ASK-MODOT (1-888-275-6636)

IF A SEAL IS PRESENT ON THIS SHEET IT HAS BEEN ELECTRONICALLY SEALED AND DATED.

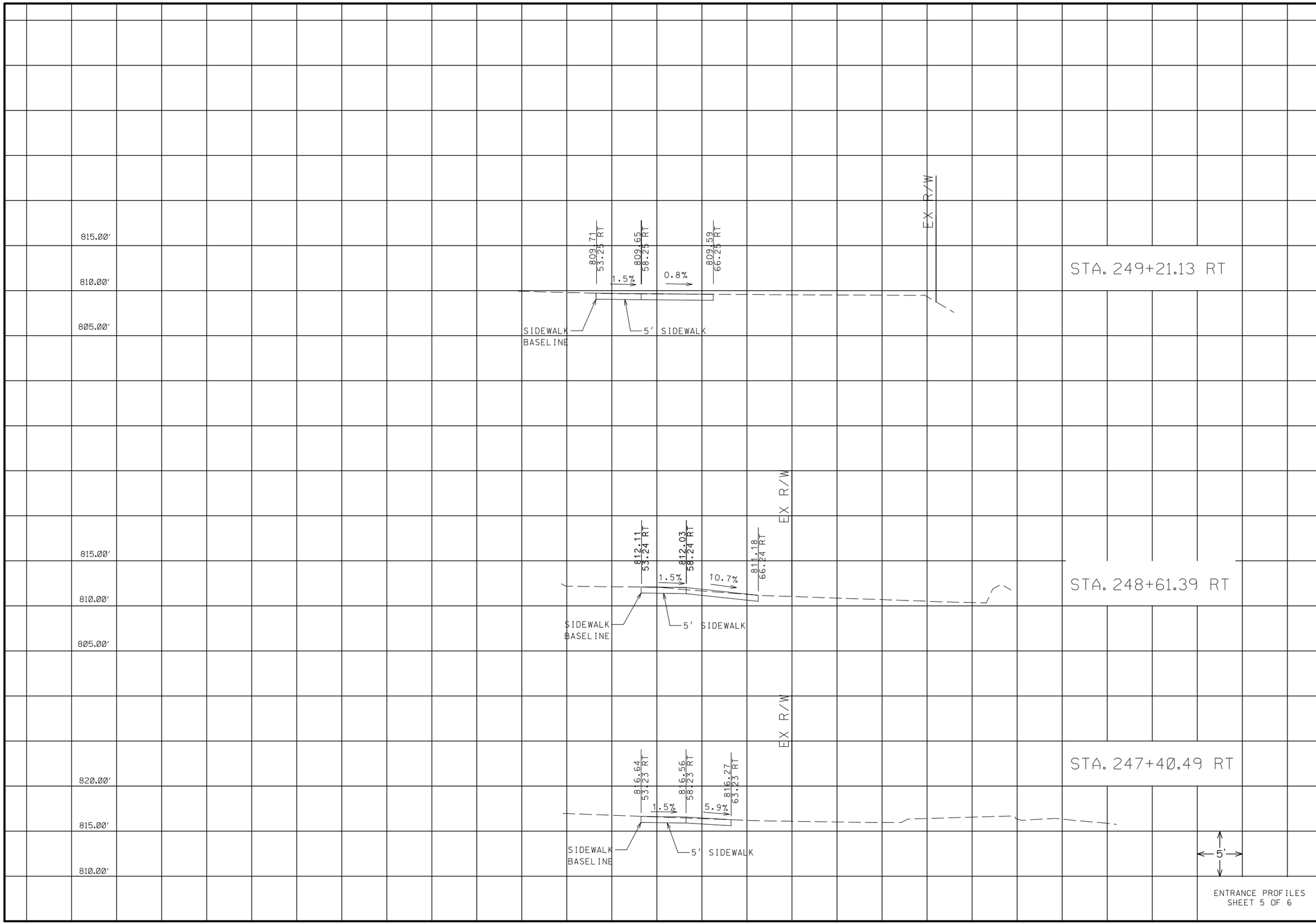

ENTRANCE PROFILES
SHEET 5 OF 6

STATE OF MISSOURI
SEAN M. DOMINGO
NUMBER
PE-2022001607
PROFESSIONAL ENGINEER

07-31/2023 3:33:36 PM
SEAN M. DOMINGO - CIVIL
MO-PE-2022001607

DATE PREPARED	7/31/2023
ROUTE	69
STATE	MO
DISTRICT	KC
SHEET NO.	67
COUNTY	CLAY
JOB NO.	J4P3465
CONTRACT ID.	
PROJECT NO.	
BRIDGE NO.	

DATE	DESCRIPTION

MISSOURI HIGHWAYS AND TRANSPORTATION COMMISSION

105 WEST CAPITOL
JEFFERSON CITY, MO 65102
1-888-ASK-MODOT (1-888-275-6636)

IF A SEAL IS PRESENT ON THIS SHEET IT HAS BEEN ELECTRONICALLY SEALED AND DATED.

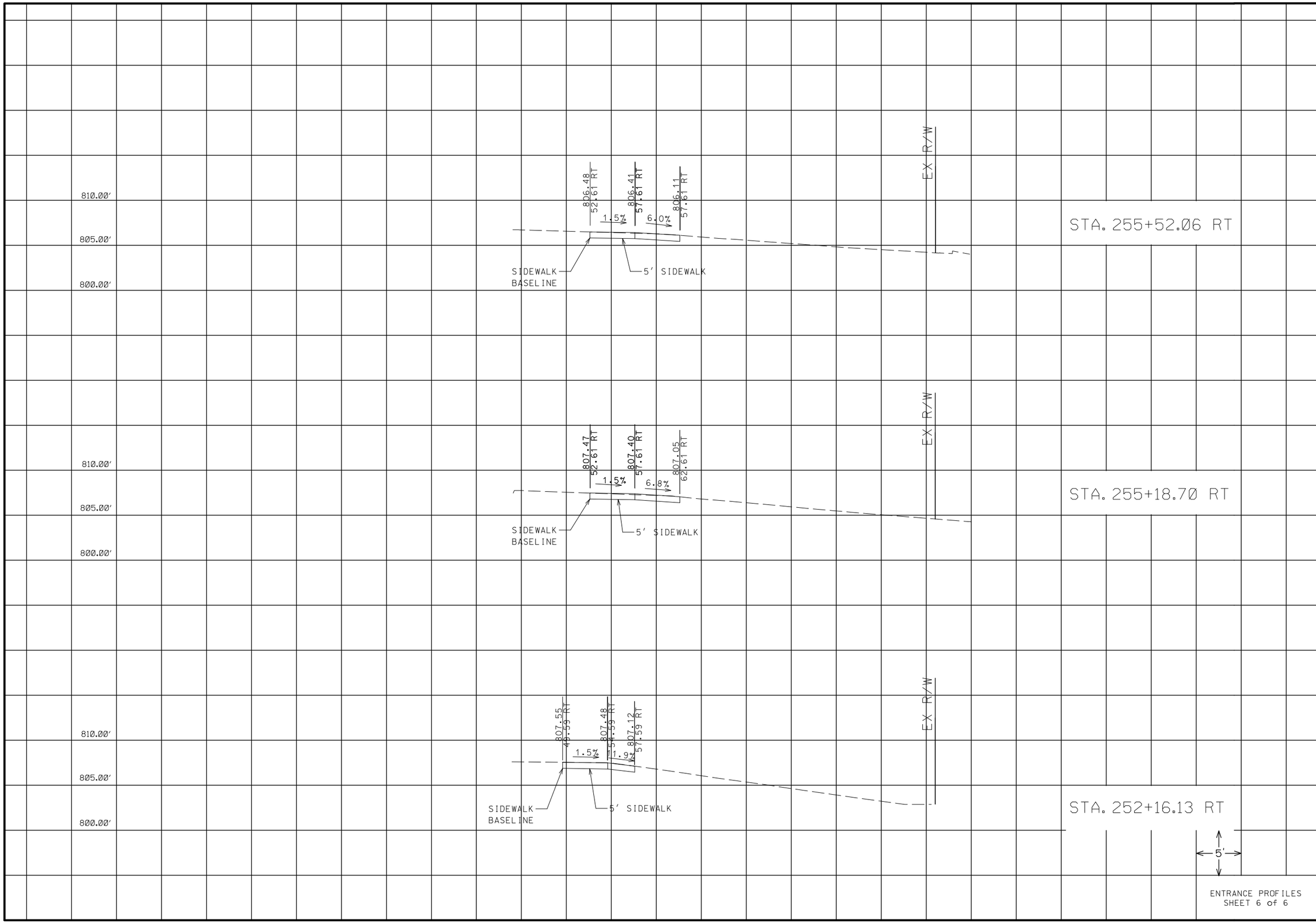

ENTRANCE PROFILES
SHEET 6 of 6

STATE OF MISSOURI
SEAN M. DOMINGO
NUMBER PE-2022001607
PROFESSIONAL ENGINEER

07/31/2023 3:34:13 PM
SEAN M. DOMINGO - CIVIL
MO-PE-2022001607

DATE PREPARED	
7/31/2023	
ROUTE 69	STATE MO
DISTRICT KC	SHEET NO. 68
COUNTY CLAY	
JOB NO. J4P3465	
CONTRACT ID.	
PROJECT NO.	
BRIDGE NO.	

DATE	DESCRIPTION

MISSOURI HIGHWAYS AND TRANSPORTATION COMMISSION

105 WEST CAPITOL
JEFFERSON CITY, MO 65102
1-888-ASK-MODOT (1-888-275-6636)

IF A SEAL IS PRESENT ON THIS SHEET IT HAS BEEN ELECTRONICALLY SEALED AND DATED.