# MISSOURI HIGHWAYS AND TRANSPORTATION COMMISSION
# PLANS FOR PROPOSED
# STATE HIGHWAY

## CAPE GIRARDEAU COUNTY

## DESIGN DESIGNATION

WEST OF RTE PP
AADT - 2023 = 14785
AADT - 2033 = 17657
DHV = 8%
T = 9%
D = 50%
V = 40/55 MPH

EAST OF RTE PP
AADT - 2023 = 19667
AADT - 2033 = 21237
DHV = 11%
T = 6%
D = 50%
V = 40 MPH

FUNCTIONAL CLASSIFICATION - PRINICIPAL ARTERIAL

## CONVENTIONAL SYMBOLS
(USED IN PLANS)

| | EXISTING | NEW |
|---|---|---|
| BUILDINGS AND STRUCTURES | | |
| GUARD RAIL | | |
| GUARD CABLE | | |
| CONCRETE RIGHT-OF-WAY MARKER | | |
| STEEL RIGHT-OF-WAY MARKER | | |
| LOCATION SURVEY MARKER | | |
| UTILITIES | | |
| FIBER OPTICS | -FO- | ~~FO~~ |
| OVERHEAD CABLE TV | -OTV- | ~~OTV~~ |
| UNDERGROUND CABLE TV | -UTV- | ~~UTV~~ |
| OVERHEAD TELEPHONE | -OT- | ~~OT~~ |
| UNDERGROUND TELEPHONE | -UT- | ~~UT~~ |
| OVERHEAD POWER | -OE- | ~~OE~~ |
| UNDERGROUND POWER | -UE- | ~~UE~~ |
| SANITARY SEWER | -S- | ~~S~~ |
| STORM SEWER | -SS- | ~~SS~~ |
| GAS | -G- | ~~G~~ |
| WATER | -W- | ~~W~~ |
| MANHOLE | SAN | |
| FIRE HYDRANT | HYD | |
| WATER VALVE | WV | |
| WATER METER | WM | |
| DROP INLET | D | |
| DITCH BLOCK | | |
| GROUND MOUNTED SIGN | SIGN | |
| LIGHT POLE | | |
| H-FRAME POWER POLE | | |
| TELEPHONE PEDESTAL | PED | |
| FENCE | | |
| CHAIN LINK | -V- | |
| WOVEN WIRE | -X- | |
| GATE POST | | |
| BENCHMARK | BM | |

NOTE: DASHED OR OPEN SYMBOLS INDICATE EXISTING FEATURES

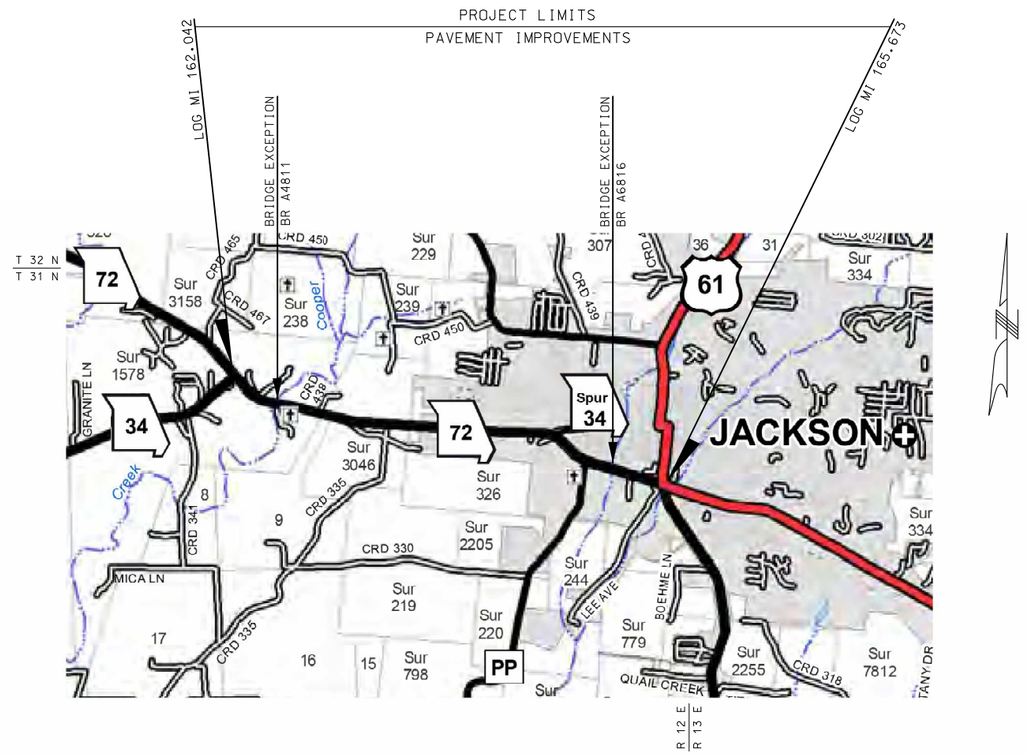


CITY OF JACKSON DETAIL

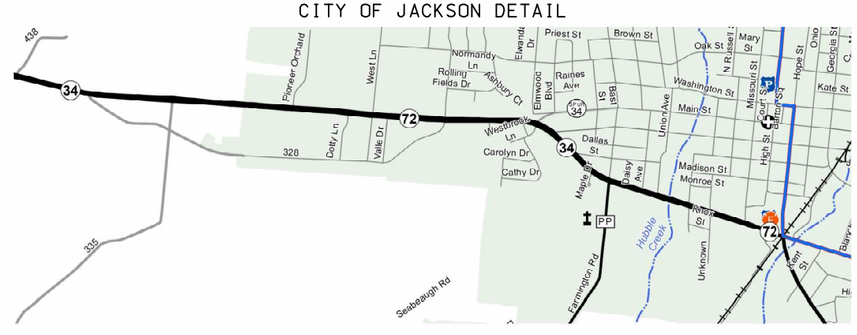


THE EXISTENCE AND APPROXIMATE LOCATION OF UTILITY FACILITIES KNOWN TO EXIST, AS SHOWN ON THE PLANS, ARE BASED ON THE BEST INFORMATION AVAILABLE TO THE COMMISSION AT THIS TIME. THIS INFORMATION IS PROVIDED BY THE COMMISSION "AS-IS" AND THE COMMISSION EXPRESSLY DISCLAIMS ANY REPRESENTATION OR WARRANTY AS TO THE COMPLETENESS, ACCURACY, OR SUITABILITY OF THE INFORMATION FOR ANY USE. RELIANCE UPON THIS INFORMATION IS DONE AT THE RISK AND PERIL OF THE USER, AND THE COMMISSION SHALL NOT BE LIABLE FOR ANY DAMAGES THAT MAY ARISE FROM ANY ERROR IN THE INFORMATION. IT IS, THEREFORE, THE RESPONSIBILITY OF THE CONTRACTOR TO VERIFY THE EXISTENCE, LOCATION AND STATUS OF ANY FACILITY. SUCH VERIFICATION INCLUDES DIRECT CONTACT WITH THE LISTED UTILITIES.

## INDEX OF SHEETS


| DESCRIPTION | SHEET NUMBER |
|---|---|
| TITLE SHEET | 1 |
| TYPICAL SECTIONS (TS) (9 SHEETS) | 2 |
| QUANTITIES (QU) (5 SHEETS) | 3 |
| SPECIAL SHEETS (SS) | 4-7 |
| TRAFFIC CONTROL SHEETS (TC) | 8-18 |
| EROSION CONTROL SHEETS (EC) | 19 |


## LENGTH OF PROJECT

| | |
|---|---|
| BEGINNING OF PROJECT | LM 162.042 |
| END OF PROJECT | LM 165.673 |
| APPARENT LENGTH | 3.631 MILES |
| APPARENT LENGTH | 19171.68 FEET |

EXCEPTIONS:

| | |
|---|---|
| BR A4811 EXCEPTION<br>LM 162.531 - LM 162.565 | 179.52 FEET |
| BR A6816 EXCEPTION<br>LM 165.238 - LM 165.284 | 242.88 FEET |
| TOTAL CORRECTIONS | 422.40 FEET |
| NET LENGTH OF PROJECT | 18749.28 FEET |
| STATE LENGTH | 3.551 MILES |
| FOR INFORMATION ONLY<br>ESTIMATED DISTURBED ACRES | 0.1 ACRES |

STATE OF MISSOURI
CURTIS DEWAYNE WOOLSEY
NUMBER
PE-2001018834
PROFESSIONAL ENGINEER
07/26/2023 9:32:59 AM
CURTIS DEWAYNE WOOLSEY - CIVIL
MO-PE-2001018834

| DATE PREPARED | |
|---|---|
| 7/6/2023 | |
| ROUTE: 72 | STATE: MO |
| DISTRICT: SE | SHEET NO.: 1 |
| COUNTY: CAPE GIRARDEAU | |
| JOB NO.: J9P3121B | |
| CONTRACT ID. | |
| PROJECT NO. | |
| BRIDGE NO. | |

| DATE | DESCRIPTION |
|---|---|
| | |

MISSOURI HIGHWAYS AND TRANSPORTATION COMMISSION
105 WEST CAPITOL
JEFFERSON CITY, MO 65102
1-888-ASK-MODOT (1-888-275-6636)

IF A SEAL IS PRESENT ON THIS SHEET IT HAS BEEN ELECTRONICALLY SEALED AND DATED.

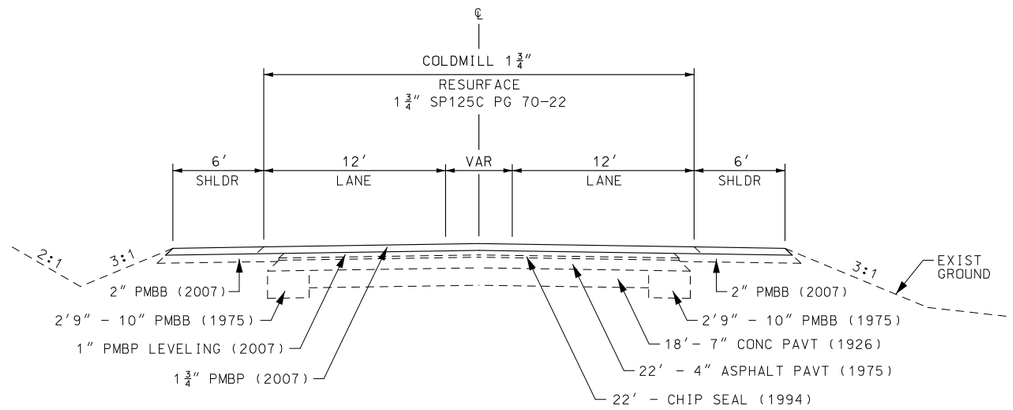


SECTION ON TANGENT
TYPICAL SECTION RTE 72
LOG MI 162.042 TO LOG MI 162.082

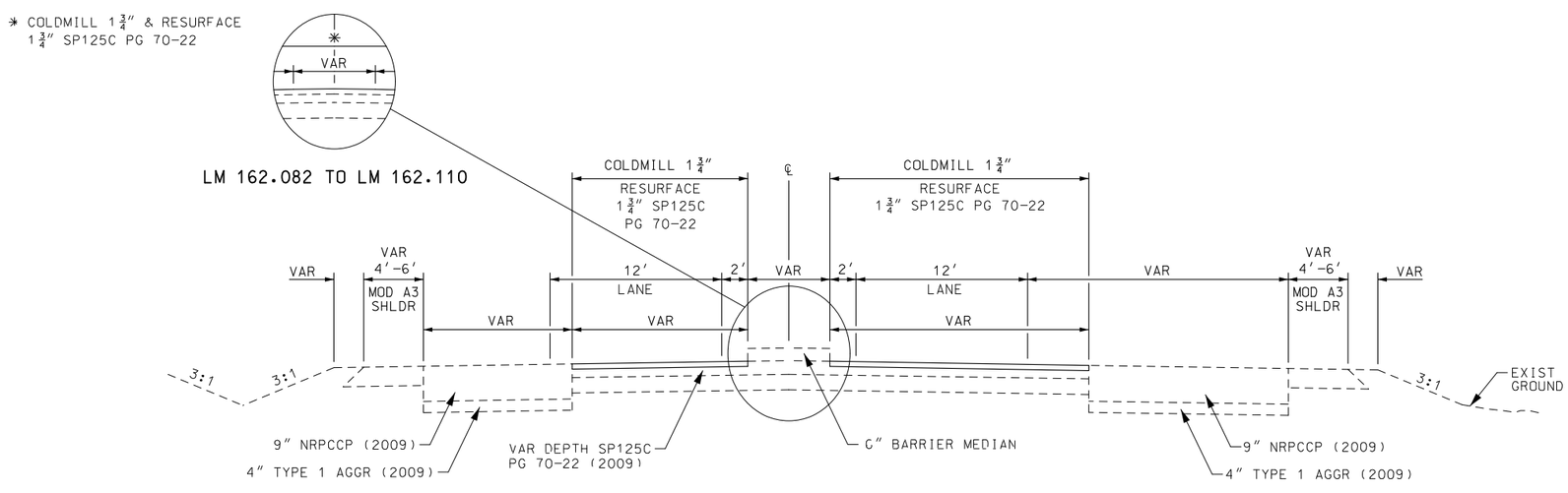


SECTION ON TANGENT
TYPICAL SECTION RTE 72
LOG MI 162.082 TO LOG MI 162.184

DRAWING NOT TO SCALE. FOLLOW DIMENSIONS.

STATE OF MISSOURI
CURTIS DEWAYNE WOOLSEY
NUMBER
PE-2001018834
PROFESSIONAL ENGINEER

07/06/2023 9:33:28 AM
CURTIS DEWAYNE WOOLSEY - CIVIL
MO-PE-2001018834

| | |
|---|---|
| DATE PREPARED | 7/6/2023 |
| ROUTE | 72 |
| STATE | MO |
| DISTRICT | SE |
| SHEET NO. | 2 |
| COUNTY | CAPE GIRARDEAU |
| JOB NO. | J9P3121B |
| CONTRACT ID. | |
| PROJECT NO. | |
| BRIDGE NO. | |

| DATE | DESCRIPTION |
|---|---|
| | |

MISSOURI HIGHWAYS AND TRANSPORTATION COMMISSION
105 WEST CAPITOL
JEFFERSON CITY, MO 65102
1-888-ASK-MODOT (1-888-275-6636)

TYPCIAL SECTIONS
SHEET 1 OF 9

IF A SEAL IS PRESENT ON THIS SHEET IT HAS BEEN ELECTRONICALLY SEALED AND DATED.

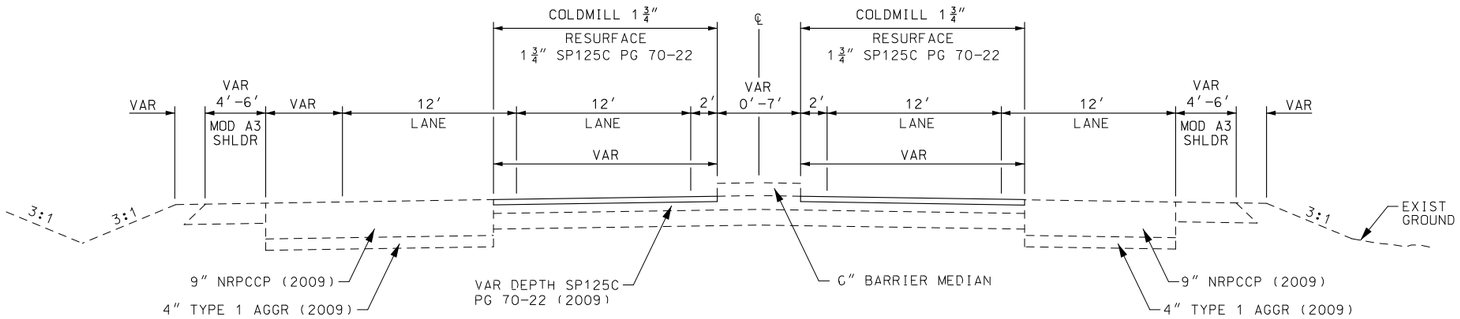


SECTION ON TANGENT
TYPICAL SECTION RTE 72
LOG MI 162.184 TO LOG MI 162.302

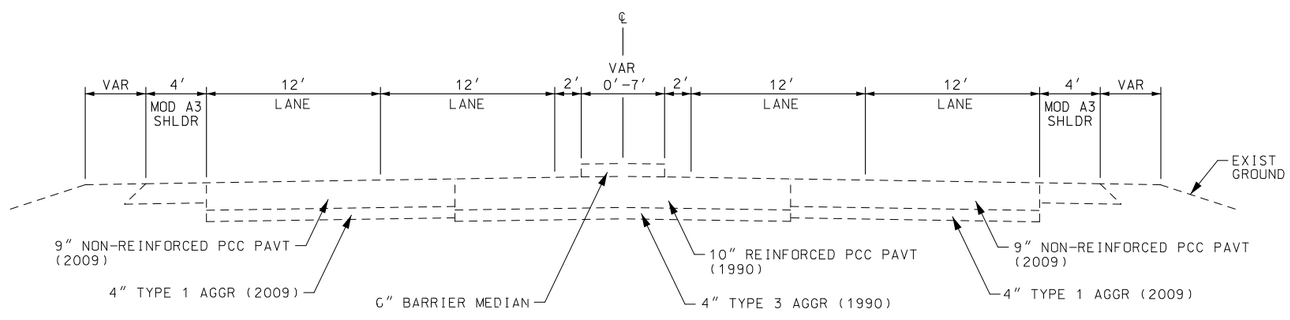


SECTION ON TANGENT
TYPICAL SECTION RTE 72
LOG MI 162.302 TO LOG MI 162.531
LOG MI 162.565 TO LOG MI 162.810

BRIDGE A4811 EXCEPTION
LOG MI 162.531 TO LOG MI 162.565

DRAWING NOT TO SCALE. FOLLOW DIMENSIONS.

STATE OF MISSOURI
CURTIS DEWAYNE WOOLSEY
NUMBER
PE-2001018834
PROFESSIONAL ENGINEER

07/26/2023 9:33:48 AM
CURTIS DEWAYNE WOOLSEY - CIVIL
MO-PE-2001018834

| DATE PREPARED | |
|---|---|
| 7/6/2023 | |
| ROUTE 72 | STATE MO |
| DISTRICT SE | SHEET NO. 2 |
| COUNTY CAPE GIRARDEAU | |
| JOB NO. J9P3121B | |
| CONTRACT ID. | |
| PROJECT NO. | |
| BRIDGE NO. | |

| DATE | DESCRIPTION |
|---|---|
| | |

MISSOURI HIGHWAYS AND TRANSPORTATION COMMISSION
105 WEST CAPITOL
JEFFERSON CITY, MO 65102
1-888-ASK-MODOT (1-888-275-6636)

TYPCIAL SECTIONS
SHEET 2 OF 9

IF A SEAL IS PRESENT ON THIS SHEET IT HAS BEEN ELECTRONICALLY SEALED AND DATED.

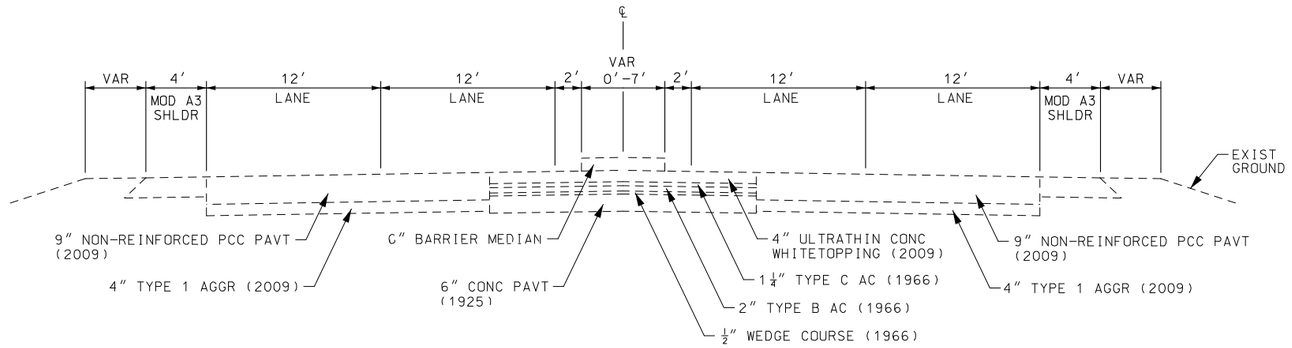


SECTION ON TANGENT
TYPICAL SECTION RTE 72
LOG MI 162.810 TO LOG MI 162.913

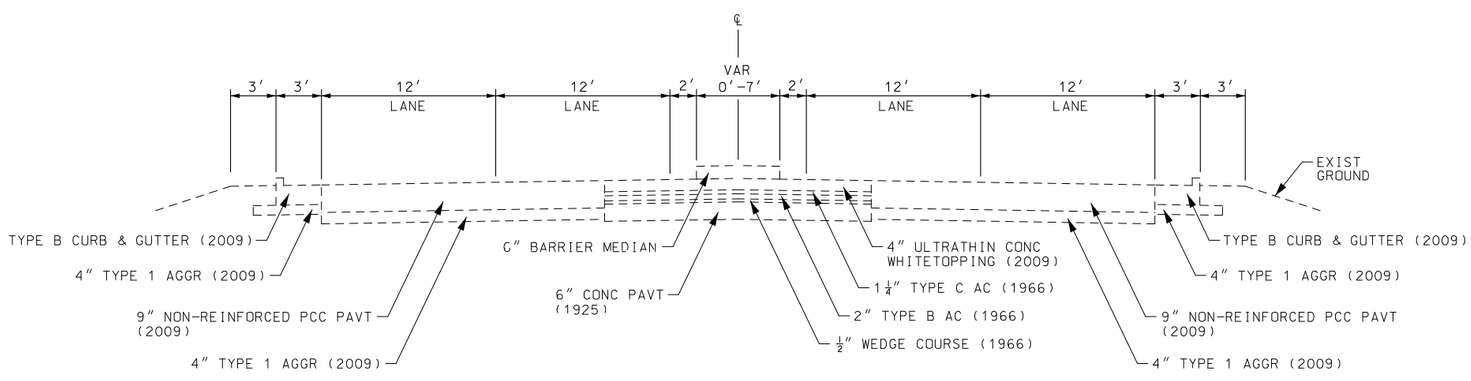


SECTION ON TANGENT
TYPICAL SECTION RTE 72
LOG MI 162.913 TO LOG MI 163.343

DRAWING NOT TO SCALE. FOLLOW DIMENSIONS.

STATE OF MISSOURI
CURTIS DEWAYNE WOOLSEY
NUMBER
PE-2001018834
PROFESSIONAL ENGINEER

07/26/2023 9:32:28 AM
CURTIS DEWAYNE WOOLSEY - CIVIL
MO-PE-2001018834

| | |
|---|---|
| DATE PREPARED | 7/6/2023 |
| ROUTE | 72 |
| STATE | MO |
| DISTRICT | SE |
| SHEET NO. | 2 |
| COUNTY | CAPE GIRARDEAU |
| JOB NO. | J9P3121B |
| CONTRACT ID. | |
| PROJECT NO. | |
| BRIDGE NO. | |

| DATE | DESCRIPTION |
|---|---|
| | |

MISSOURI HIGHWAYS AND TRANSPORTATION COMMISSION
105 WEST CAPITOL
JEFFERSON CITY, MO 65102
1-888-ASK-MODOT (1-888-275-6636)

TYPCIAL SECTIONS
SHEET 3 OF 9

IF A SEAL IS PRESENT ON THIS SHEET IT HAS BEEN ELECTRONICALLY SEALED AND DATED.

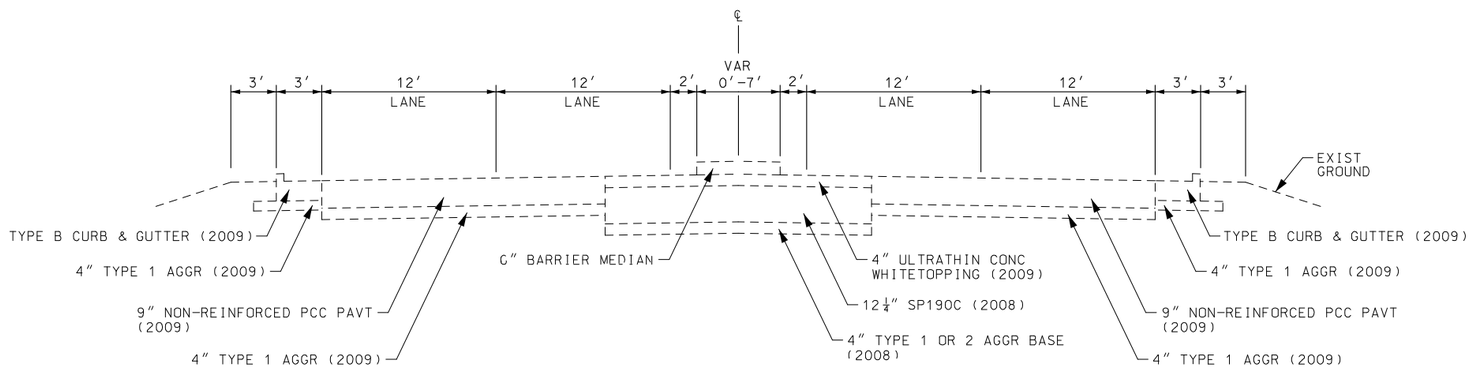


SECTION ON TANGENT
TYPICAL SECTION RTE 72
LOG MI 163.343 TO LOG MI 163.440

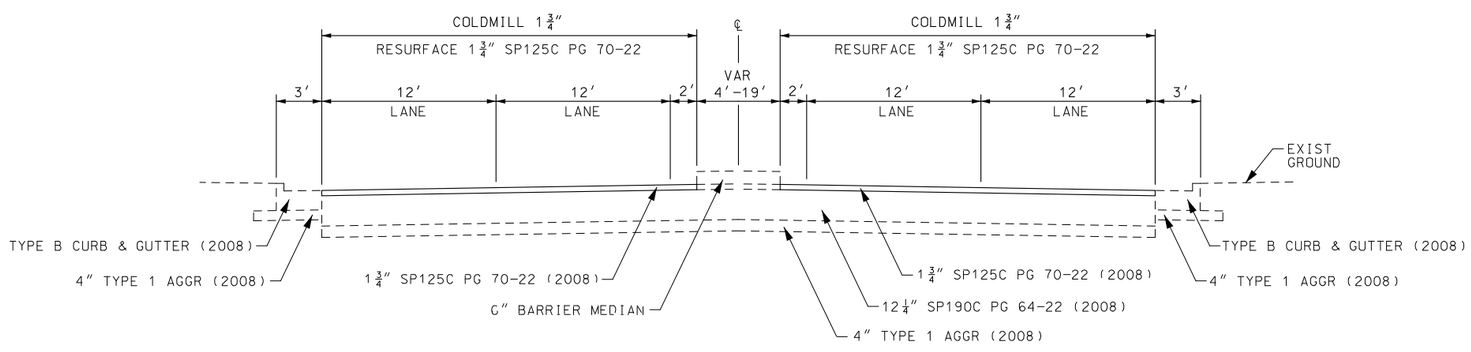


SECTION ON TANGENT
TYPICAL SECTION RTE 72
LOG MI 163.440 TO LOG MI 163.711

DRAWING NOT TO SCALE. FOLLOW DIMENSIONS.

STATE OF MISSOURI
CURTIS DEWAYNE WOOLSEY
NUMBER
PE-2001018834
PROFESSIONAL ENGINEER

07/26/2023 9:36:34 AM
CURTIS DEWAYNE WOOLSEY - CIVIL
MO-PE-2001018834
DATE PREPARED
7/6/2023

| ROUTE | STATE |
|---|---|
| 72 | MO |
| DISTRICT | SHEET NO. |
| SE | 2 |

COUNTY
CAPE GIRARDEAU

JOB NO.
J9P3121B

CONTRACT ID.

PROJECT NO.

BRIDGE NO.

| DATE | DESCRIPTION |
|---|---|
| | |

MISSOURI HIGHWAYS AND TRANSPORTATION COMMISSION
105 WEST CAPITOL
JEFFERSON CITY, MO 65102
1-888-ASK-MODOT (1-888-275-6636)

TYPCIAL SECTIONS
SHEET 4 OF 9

IF A SEAL IS PRESENT ON THIS SHEET IT HAS BEEN ELECTRONICALLY SEALED AND DATED.

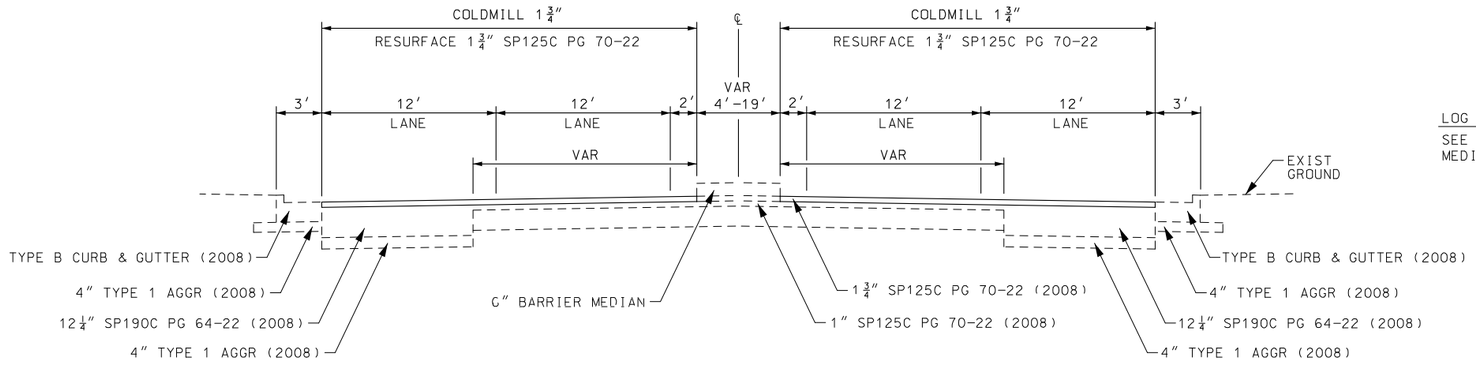


LOG MI 164.612 TO LOG MI 164.641

SEE SPECIAL SHEET 3 FOR CONCRETE MEDIAN REMOVAL DETAILS.

## SECTION ON TANGENT

TYPICAL SECTION RTE 72

LOG MI 163.711 TO LOG MI 164.694

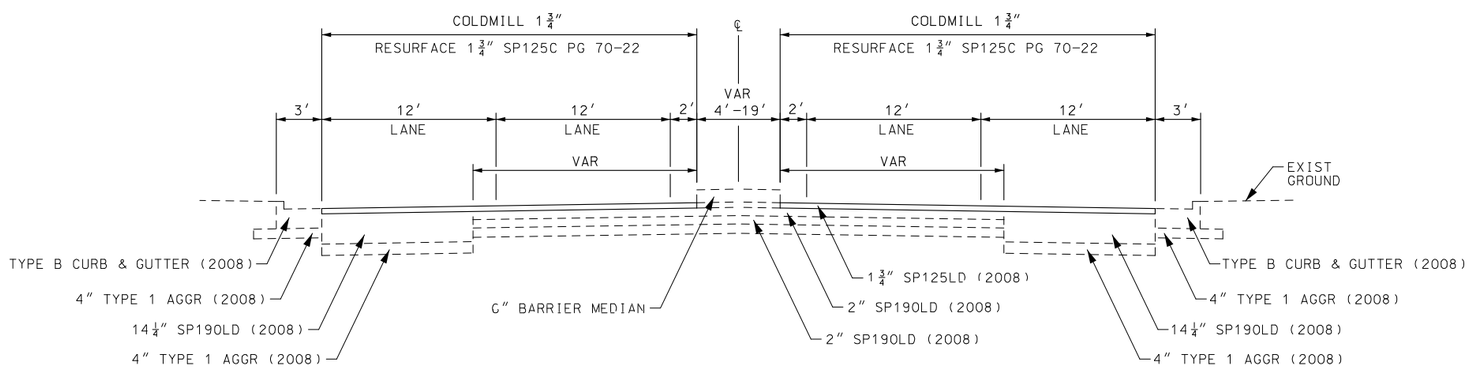


## SECTION ON TANGENT

TYPICAL SECTION RTE 72

LOG MI 164.694 TO LOG MI 165.238
LOG MI 165.284 TO LOG MI 165.520

BRIDGE A6816 EXCEPTION
LOG MI 165.238 LOG MI 165.284

DRAWING NOT TO SCALE. FOLLOW DIMENSIONS.

STATE OF MISSOURI
CURTIS DEWAYNE WOOLSEY
NUMBER PE-2001018834
PROFESSIONAL ENGINEER

07-26-2023 9:36:50 AM
CURTIS DEWAYNE WOOLSEY - CIVIL
MO-PE-2001018834

| DATE PREPARED | |
|---|---|
| 7/6/2023 | |
| ROUTE 72 | STATE MO |
| DISTRICT SE | SHEET NO. 2 |
| COUNTY CAPE GIRARDEAU | |
| JOB NO. J9P3121B | |
| CONTRACT ID. | |
| PROJECT NO. | |
| BRIDGE NO. | |

| DATE | DESCRIPTION |
|---|---|
| | |

MISSOURI HIGHWAYS AND TRANSPORTATION COMMISSION

105 WEST CAPITOL
JEFFERSON CITY, MO 65102
1-888-ASK-MODOT (1-888-275-6636)

TYPCIAL SECTIONS
SHEET 5 OF 9

IF A SEAL IS PRESENT ON THIS SHEET IT HAS BEEN ELECTRONICALLY SEALED AND DATED.

✳ 6" BARRIER MEDIAN

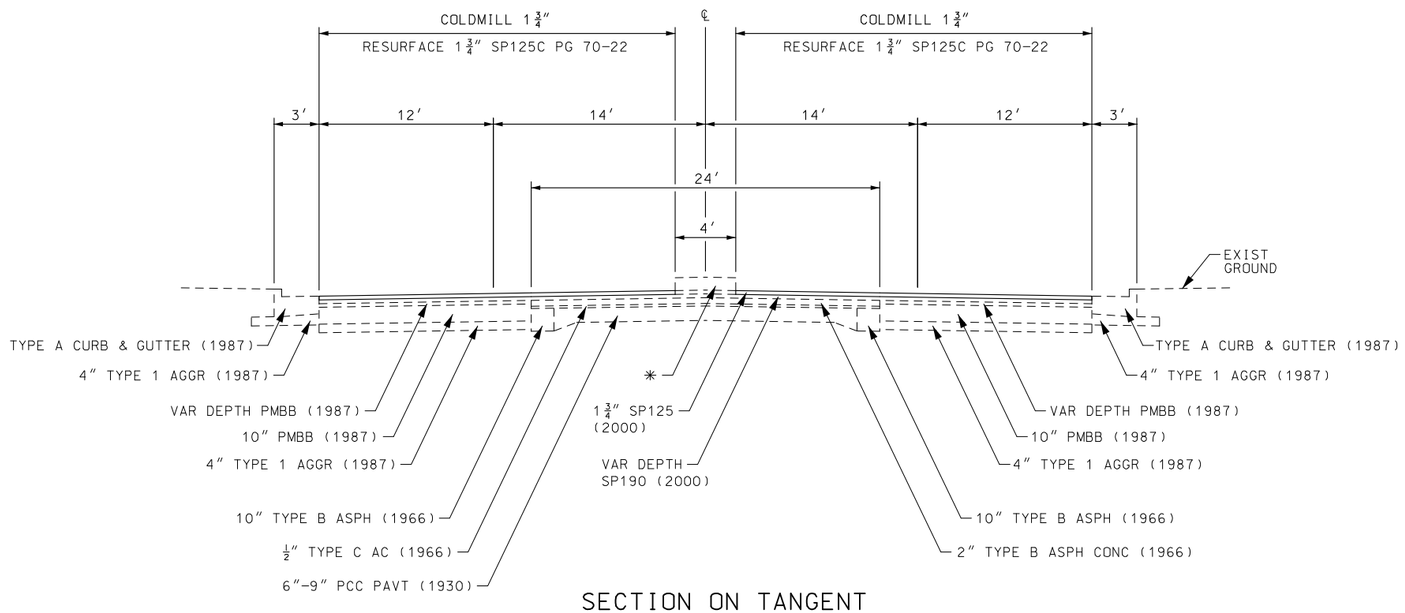


SECTION ON TANGENT
TYPICAL SECTION RTE 72

LOG MI 165.520 TO LOG MI 165.557

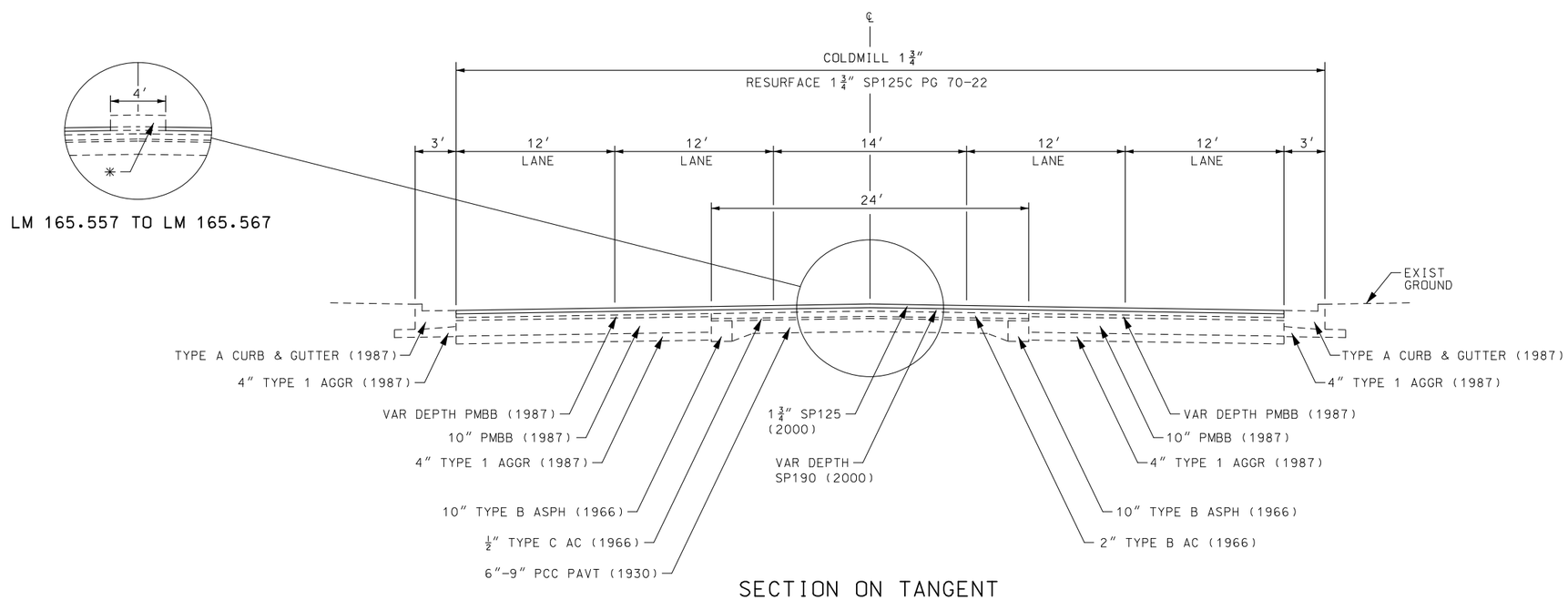


SECTION ON TANGENT
TYPICAL SECTION RTE 72

LOG MI 165.554 TO LOG MI 165.609

DRAWING NOT TO SCALE. FOLLOW DIMENSIONS.

STATE OF MISSOURI
CURTIS DEWAYNE WOOLSEY
NUMBER
PE-2001018834
PROFESSIONAL ENGINEER

07/26/2023 9:37:11 AM
CURTIS DEWAYNE WOOLSEY - CIVIL
MO-PE-2001018834

| | |
|---|---|
| DATE PREPARED | 7/6/2023 |
| ROUTE | 72 |
| STATE | MO |
| DISTRICT | SE |
| SHEET NO. | 2 |
| COUNTY | CAPE GIRARDEAU |
| JOB NO. | J9P3121B |
| CONTRACT ID. | |
| PROJECT NO. | |
| BRIDGE NO. | |

| DATE | DESCRIPTION |
|---|---|
| | |

MISSOURI HIGHWAYS AND TRANSPORTATION COMMISSION
105 WEST CAPITOL
JEFFERSON CITY, MO 65102
1-888-ASK-MODOT (1-888-275-6636)

TYPCIAL SECTIONS
SHEET 6 OF 9

IF A SEAL IS PRESENT ON THIS SHEET IT HAS BEEN ELECTRONICALLY SEALED AND DATED.

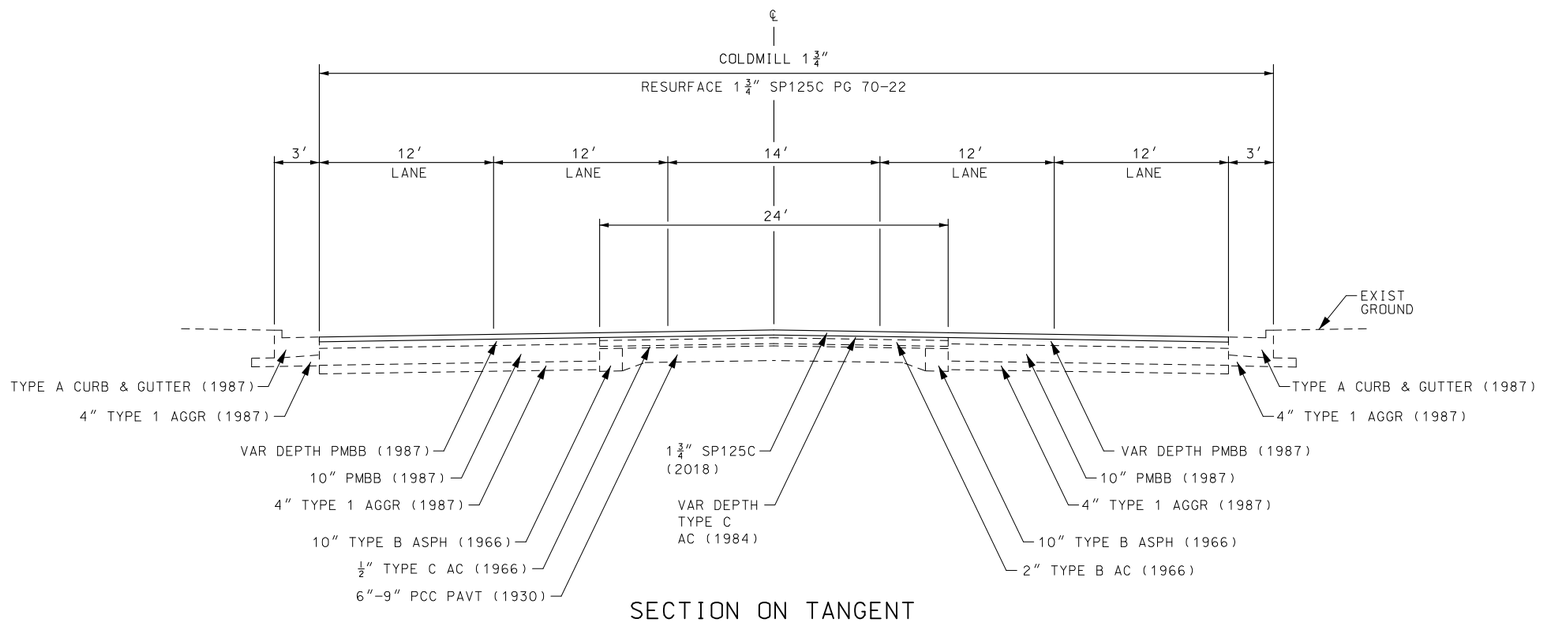


## SECTION ON TANGENT

TYPICAL SECTION RTE 72

LOG MI 165.609 TO LOG MI 165.675

DRAWING NOT TO SCALE. FOLLOW DIMENSIONS.

STATE OF MISSOURI
CURTIS DEWAYNE WOOLSEY
NUMBER
PE-2001018834
PROFESSIONAL ENGINEER

07/06/2023 9:37:29 AM
CURTIS DEWAYNE WOOLSEY - CIVIL
MO-PE-2001018834

| DATE PREPARED | |
|---|---|
| 7/6/2023 | |
| ROUTE 72 | STATE MO |
| DISTRICT SE | SHEET NO. 2 |
| COUNTY CAPE GIRARDEAU | |
| JOB NO. J9P3121B | |
| CONTRACT ID. | |
| PROJECT NO. | |
| BRIDGE NO. | |

| DATE | DESCRIPTION |
|---|---|
| | |

IF A SEAL IS PRESENT ON THIS SHEET IT HAS BEEN ELECTRONICALLY SEALED AND DATED.

MISSOURI HIGHWAYS AND TRANSPORTATION COMMISSION

105 WEST CAPITOL
JEFFERSON CITY, MO 65102
1-888-ASK-MODOT (1-888-275-6636)

TYPCIAL SECTIONS
SHEET 7 OF 9

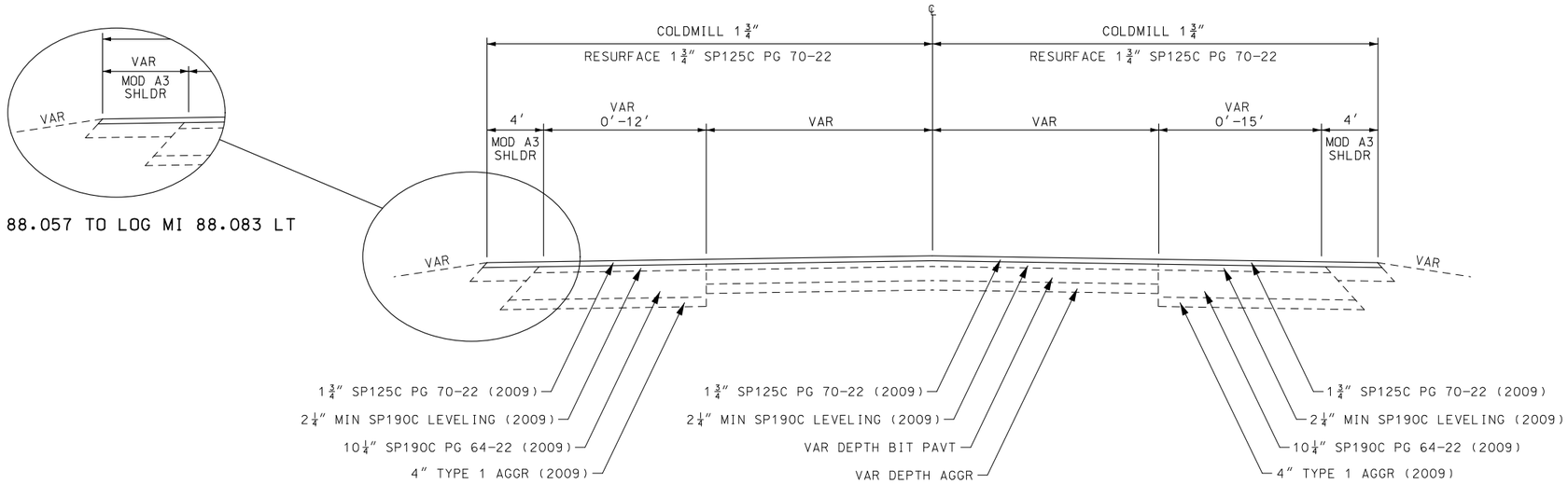


LOG MI 88.064 TO LOG MI 88.125

SEE SPECIAL SHEET 1 FOR OPTIONAL PAVEMENT DETAILS.

## SECTION ON TANGENT

TYPICAL SECTION RTE 34

LOG MI 88.057 TO LOG MI 88.125

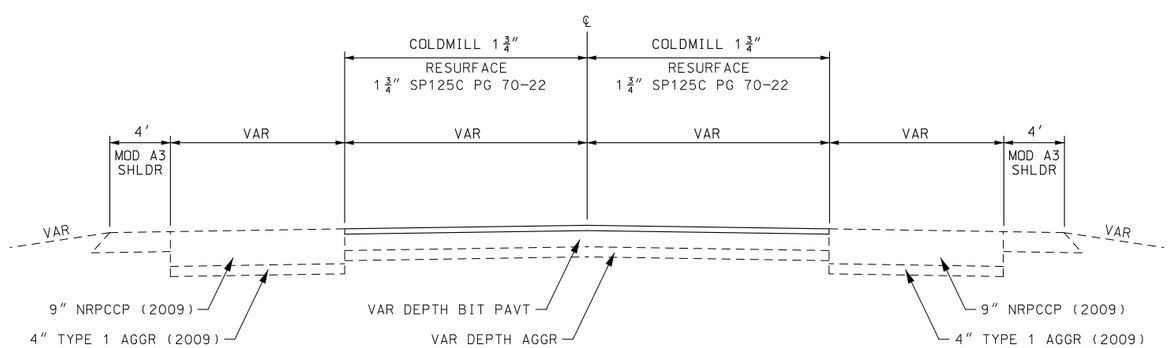


## SECTION ON TANGENT

TYPICAL SECTION RTE 34

LOG MI 88.125 TO LOG MI 88.146

DRAWING NOT TO SCALE. FOLLOW DIMENSIONS.

STATE OF MISSOURI
CURTIS DEWAYNE WOOLSEY
NUMBER
PE-2001018834
PROFESSIONAL ENGINEER

07/06/2023 9:37:43 AM
CURTIS DEWAYNE WOOLSEY - CIVIL
MO-PE-2001018834

| | |
|---|---|
| DATE PREPARED | 7/6/2023 |
| ROUTE | 72 |
| STATE | MO |
| DISTRICT | SE |
| SHEET NO. | 2 |
| COUNTY | CAPE GIRARDEAU |
| JOB NO. | J9P3121B |
| CONTRACT ID. | |
| PROJECT NO. | |
| BRIDGE NO. | |

| DATE | DESCRIPTION |
|---|---|
| | |

IF A SEAL IS PRESENT ON THIS SHEET IT HAS BEEN ELECTRONICALLY SEALED AND DATED.

MISSOURI HIGHWAYS AND TRANSPORTATION COMMISSION

105 WEST CAPITOL
JEFFERSON CITY, MO 65102
1-888-ASK-MODOT (1-888-275-6636)

TYPCIAL SECTIONS
SHEET 8 OF 9

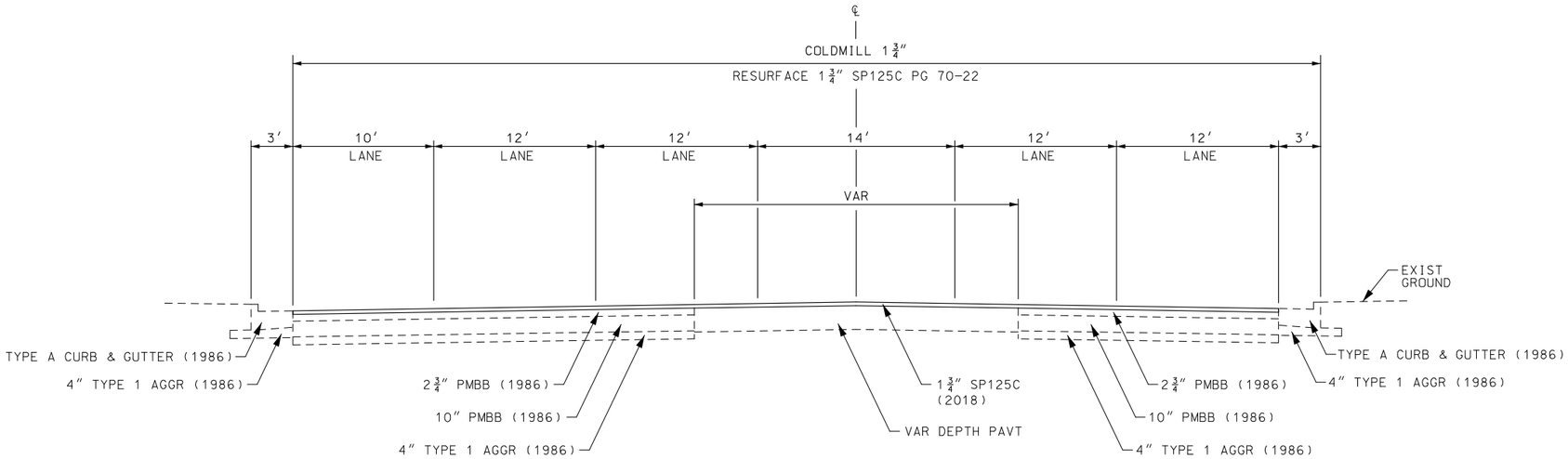


## SECTION ON TANGENT
TYPICAL SECTION RTE 61

LOG MI 280.811 TO LOG MI 280.845

BR A4555 & BRIDGE APPROACH SLABS – RTE 61
LOG MI 280.845 TO LOG MI 280.880

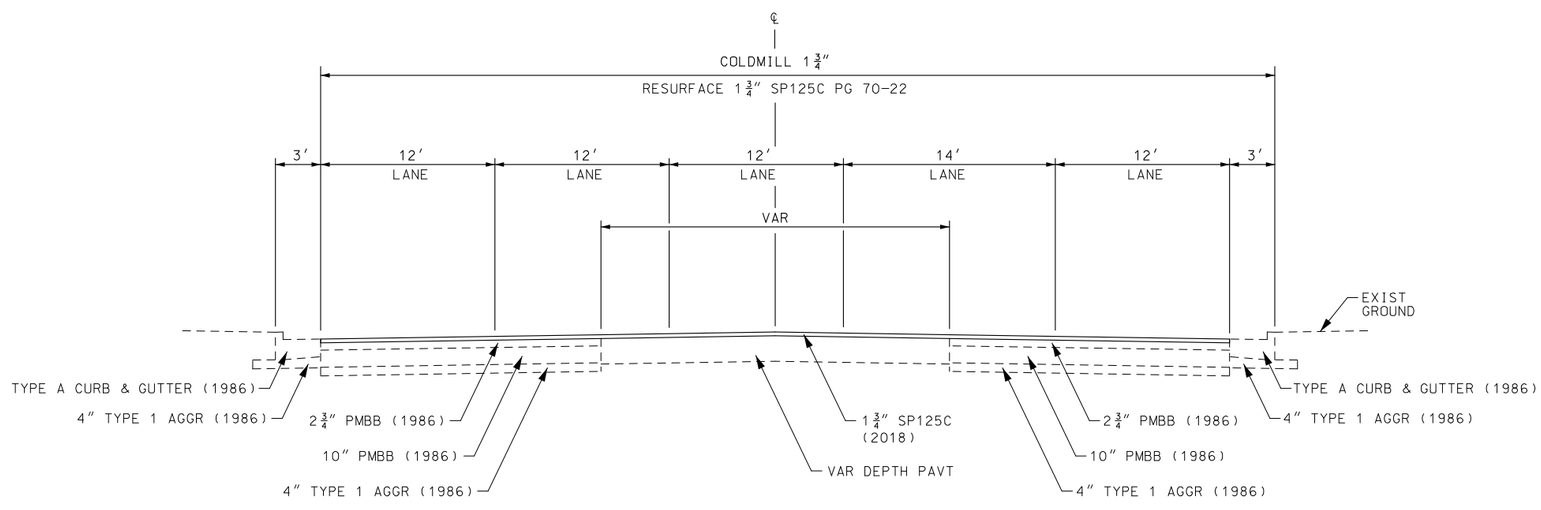


## SECTION ON TANGENT
TYPICAL SECTION RTE 25

LOG MI 0.006 TO LOG MI 0.030

BR A4556 & BRIDGE APPROACH SLABS – RTE 25
LOG MI 0.030 TO LOG MI 0.070

DRAWING NOT TO SCALE. FOLLOW DIMENSIONS.

STATE OF MISSOURI
CURTIS DEWAYNE WOOLSEY
NUMBER PE-2001018834
PROFESSIONAL ENGINEER

07/26/2023 9:38:00 AM
CURTIS DEWAYNE WOOLSEY - CIVIL
MO-PE-2001018834

| DATE PREPARED | |
|---|---|
| 7/6/2023 | |
| ROUTE 72 | STATE MO |
| DISTRICT SE | SHEET NO. 2 |
| COUNTY CAPE GIRARDEAU | |
| JOB NO. J9P3121B | |
| CONTRACT ID. | |
| PROJECT NO. | |
| BRIDGE NO. | |

| DATE | DESCRIPTION |
|---|---|
| | |

IF A SEAL IS PRESENT ON THIS SHEET IT HAS BEEN ELECTRONICALLY SEALED AND DATED.

MISSOURI HIGHWAYS AND TRANSPORTATION COMMISSION
105 WEST CAPITOL
JEFFERSON CITY, MO 65102
1-888-ASK-MODOT (1-888-275-6636)

TYPCIAL SECTIONS
SHEET 9 OF 9

## REMOVAL OF IMPROVEMENTS

| LOG MI | LOG MI | LOC | DESCRIPTION | REMARKS |
|---|---|---|---|---|
| RTE 72 | | | | |
| 162.531 | | RT | APPROX 125′ GUARDRAIL | BR A4811 |
| 162.565 | | LT | APPROX 130′ GUARDRAIL | BR A4811 |
| 164.612 | 164.641 | RT | APPROX 420 SF CONC MEDIAN | SEE SPECIAL SHEET 3 |
| 164.629 | | LT/RT | APPROX 160 SF PLANTER AREA | SEE SPECIAL SHEET 3 |
| 165.238 | | RT | APPROX 50′ GUARDRAIL | BR A6816 |
| 165.284 | | LT | APPROX 50′ GUARDRAIL | BR A6816 |
| VARIOUS LOCATIONS | | | APPROX 2 LF CONC GUTTER | REMOVE DAMAGED CONC GUTTER |
| VARIOUS LOCATIONS | | | APPROX 57 LF CURB & GUTTER | REMOVE DAMAGED CURB & GUTTER |
| VARIOUS LOCATIONS | | | APPROX 63 LF CONC CURB | REMOVE DAMAGED CONC CURB |
| VARIOUS LOCATIONS | | | EXIST MEDIAN PLANTER AREAS | REMOVE VEGETATION AND SOIL |
| RTE 25 | | | | |
| 0.040 | | LT | APPROX 130′ GUARDRAIL | BR A4556 |
| 0.063 | | LT | APPROX 130′ GUARDRAIL | BR A4556 |
| 0.068 | | RT | APPROX 115′ GUARDRAIL | BR A4556 |
| LUMP SUM ONE | | | | |

## LINEAR GRADING

| LOG MI | LOG MI | LOC | LENGTH (FT) | LINEAR GRADING CL 2 (STA) | APPROX EARTHWORK CUT (CY) | APPROX EARTHWORK FILL (CY) | REMARKS |
|---|---|---|---|---|---|---|---|
| RTE 34 | | | | | | | |
| 88.064 | 88.125 | LT | 322.08 | 3.22 | 252 | 37 | |
| | | | | | | | |
| | | | TOTAL | 3.3 | | | |

## GRAVEL A OR CRUSHED STONE B

| LOG MI | GRAVEL A CRUSHED STONE B (TON) | REMARKS |
|---|---|---|
| ✳ ADD QUANTITY | 5.0 | |
| | | |
| TOTAL | 5 | |

✳ LOCATIONS TO BE DETERMINED BY THE ENGINEER.

## BITUMINOUS PAVEMENT

| LOG MI | LOG MI | LOC | LENGTH (FT) | WIDTH (FT) | THICK (IN) | SP125C PG 70-22 2.025 TON/CY (CY) | SP125C PG 70-22 2.025 TON/CY (TON) | ✳ TACK 0.10 GAL/SY (GAL) | REMARKS |
|---|---|---|---|---|---|---|---|---|---|
| RTE 72 | | | | | | | | | |
| 162.042 | 162.082 | ℄ | 211.20 | VAR | 1.75 | 48.74 | 98.70 | 100.3 | |
| 162.082 | 162.269 | ℄ | 987.36 | VAR | 1.75 | 246.56 | 499.28 | 507.2 | |
| 162.269 | 162.302 | ℄ | 174.24 | VAR | 1.75 | 21.91 | 44.37 | 45.1 | |
| 163.440 | 163.879 | ℄ | 2317.92 | VAR | 1.75 | 744.58 | 1507.77 | 1531.7 | |
| 163.879 | 164.154 | ℄ | 1452.00 | VAR | 1.75 | 493.57 | 999.48 | 1015.3 | |
| 164.154 | 164.404 | ℄ | 1320.00 | VAR | 1.75 | 420.63 | 851.78 | 865.3 | |
| 164.404 | 164.723 | ℄ | 1684.32 | VAR | 1.75 | 520.82 | 1054.66 | 1071.4 | |
| 164.723 | 165.043 | ℄ | 1689.60 | VAR | 1.75 | 520.68 | 1054.38 | 1071.1 | |
| 165.043 | 165.238 | ℄ | 1029.60 | VAR | 1.75 | 313.33 | 634.49 | 644.6 | |
| 165.284 | 165.673 | ℄ | 2053.92 | VAR | 1.75 | 665.85 | 1348.35 | 1369.7 | |
| RTE 34 | | | | | | | | | |
| 88.057 | 88.125 | ℄ | 359.04 | VAR | 1.75 | 82.85 | 167.77 | 170.4 | |
| RTE 61 | | | | | | | | | |
| 280.813 | 280.845 | ℄ | 168.96 | VAR | 1.75 | 60.56 | 122.63 | 124.6 | |
| RTE 25 | | | | | | | | | |
| 0.006 | 0.030 | ℄ | 126.72 | VAR | 1.75 | 47.07 | 95.32 | 96.8 | |
| RTE 72 SIDE ROADS | | | | | | | | | |
| 164.404 | | RT | VAR | VAR | 1.75 | 49.78 | 100.8 | 102.4 | OLD TOLL RD |
| 164.724 | | LT | VAR | VAR | 1.75 | 77.38 | 156.69 | 159.2 | MAIN ST |
| 165.044 | | LT | VAR | VAR | 1.75 | 83.75 | 169.59 | 172.3 | RTE PP |
| 165.044 | | RT | VAR | VAR | 1.75 | 51.72 | 104.73 | 106.4 | FARMINGTON RD |
| 165.410 | | LT | VAR | VAR | 1.75 | 59.73 | 120.95 | 122.9 | OKLAHOMA ST |
| | | | | | | | | | |
| | | | | | TOTAL | | 9131.8 | 9277 | |

ASSUME TACK EST @ 0.10 GAL/SY FOR COLDMILLED SURFACES

## OPTIONAL PAVEMENT AND AGGREGATE BASE

| LOG MI | LOG MI | LOC | LENGTH (FT) | WIDTH (FT) | 6″ TYPE 5 AGGR BASE (SY) | OPTIONAL PAVT (SY) | REMARKS |
|---|---|---|---|---|---|---|---|
| RTE 34 | | | | | | | |
| 88.064 | 88.125 | LT | 322.08 | VAR | 223.3 | 223.33 | |
| 88.080 | 88.105 | RT | 132.00 | VAR | 288.8 | 288.78 | |
| | | | | | | | |
| | | | | TOTAL | 513 | 512.2 | |

## GUARDRAIL

| LOG MI | LOC | MGS GUARDRAIL (LF) | MGS BRIDGE APPROACH TRANS SECTION (REG/NO CURB) (EA) | MODIFIED MGS BRIDGE APPROACH TRANS SECTION (REG/NO CURB) (EA) | TYPE A CRASHWORTHY END TERMINAL MASH (EA) | END SECTION (EA) | MOD SHAPING SLOPES CL III (100 FT) | REMARKS |
|---|---|---|---|---|---|---|---|---|
| RTE 72 | | | | | | | | |
| 162.531 | RT | 100.0 | 1 | | | 1 | 0.5 | BR A4811 ✳ APPROX R=15′ |
| 162.565 | LT | 162.5 | 1 | | 1 | | 1.5 | BR A4811 |
| 165.238 | RT | | | | 1 | | 0.8 | ✳✳ BR A6816 |
| 165.284 | LT | | | | 1 | | 0.8 | ✳✳ BR A6816 |
| RTE 25 | | | | | | | | |
| 0.040 | RT | | | 1 | | 1 | 0.6 | ✳✳✳ BR A4556 ✳ APPROX R=15′ |
| 0.063 | LT | 50.0 | 1 | | 1 | | 0.8 | ✳✳✳ BR A4556 |
| 0.068 | RT | | 1 | | 1 | | 0.8 | ✳✳✳ BR A4556 |
| | | | | | | | | |
| | TOTAL | 313 | 4 | 1 | 5 | ✳✳✳✳ | 6 | |

✳ INCLUDES RADIUS IN GUARDRAIL. CONTRACTOR SHALL FIELD MEASURE THE RADIUS AND LENGTH OF RADIUS OF GUARDRAIL.

✳✳ UIP EXISTING BRIDGE SECTION AND GUARDRAIL. REPLACE CRASHWORTHY END TERMINAL ONLY.

✳✳✳ WILL REQUIRE NEW HOLES TO BE DRILLED FOR 5 HOLE PATTERN. ALL COSTS ASSOCIATED WITH INSTALLATION SHALL BE CONSIDERED COMPLETELY COVERED BY THE PAY ITEM - MGS BRIDGE APPROACH TRANSITION SECTION/MODIFIED MGS BRIDGE APPROACH TRANSITION SECTION.

✳✳✳✳ END SECTION (STD PLAN 606.00 AY SHEET 5) AT NO DIRECT PAY.

STATE OF MISSOURI
CURTIS DEWAYNE WOOLSEY
NUMBER PE-2001018834
PROFESSIONAL ENGINEER

07/26/2023 9:44:38 AM
CURTIS DEWAYNE WOOLSEY - CIVIL
MO-PE-2001018834

DATE PREPARED: 7/6/2023

| ROUTE | STATE |
|---|---|
| 72 | MO |
| DISTRICT | SHEET NO. |
| SE | 3 |

COUNTY: CAPE GIRARDEAU

JOB NO.: J9P3121B

CONTRACT ID.

PROJECT NO.

BRIDGE NO.

| DESCRIPTION | DATE |
|---|---|
| | |

IF A SEAL IS PRESENT ON THIS SHEET IT HAS BEEN ELECTRONICALLY SEALED AND DATED.

MISSOURI HIGHWAYS AND TRANSPORTATION COMMISSION

105 WEST CAPITOL
JEFFERSON CITY, MO 65102
1-888-ASK-MODOT (1-888-275-6636)

SUMAMRY OF QUANTITIES
SHEET 1 OF 5

# PAVEMENT REPAIR

| LOG MI | LOC | LENGTH OF REPAIR (FT) | WIDTH OF REPAIR (FT) | REMOVAL CLASS A PARTIAL DEPTH PAVT REPAIR (SY) | FURNISHING & PLACING MATERIAL FOR PAVT REPAIR CLASS A PARTIAL DEPTH (CY) | FURNISHING & PLACING MATERIAL FOR PAVT REPAIR FULL DEPTH (SY) | SUBGRADE COMPACTION 6" DEPTH PAVT REPAIR (SY) | TYPE 1 OR 5 AGGR BASE 4" THICK PAVT REPAIR (SY) | FULL DEPTH SAW CUT PAVT REPAIR (LF) | DOWEL BAR DRILLED (EA) | DOWEL BAR BASKETS (EA) | TIE BAR (EA) | REMARKS |
|---|---|---|---|---|---|---|---|---|---|---|---|---|---|
| EASTBOUND LANES | | | | | | | | | | | | | |
| 162.268 | PASSING LN | 4 | 4 | 1.78 | 0.20 | | | | | | | | |
| 162.421 | CENTER | 3 | 3 | 1.00 | 0.11 | | | | | | | | |
| 162.421 | DRIVING LN | 3 | 3 | 1.00 | 0.11 | | | | | | | | |
| 162.430 | | 3 | 3 | 1.00 | 0.11 | | | | | | | | |
| 162.430 | | 3 | 3 | 1.00 | 0.11 | | | | | | | | |
| 162.465 | CENTER | 3 | 3 | 1.00 | 0.11 | | | | | | | | |
| 162.521 | PASSING LN | 3 | 3 | 1.00 | 0.11 | | | | | | | | |
| 162.525 | PASSING LN | 3 | 3 | 1.00 | 0.11 | | | | | | | | |
| 162.615 | PASSING LN | 6 | 18 | | | 12 | 1.2 | 1.2 | 54 | 30 | | | |
| 162.575 | PASSING LN | 3 | 4 | 1.33 | 0.15 | | | | | | | | |
| 162.684 | PASSING LN | 10 | 15 | | | 16.67 | 1.7 | 1.7 | 65 | 20 | | | |
| 162.698 | DRIVING LN | 13 | 13 | | | 18.78 | 1.9 | 1.9 | 78 | 20 | | | |
| 162.709 | DRIVING LN | 3 | 3 | 1.00 | 0.11 | | | | | | | | |
| 162.814 | DRIVING LN | 6 | 6 | | | 4 | 0.4 | 0.4 | 24 | 10 | | | |
| 162.814 | PASSING LN | 6 | 6 | | | 4 | 0.4 | 0.4 | 24 | 10 | | | |
| 163.062 | DRIVING LN | 6 | 6 | | | 4 | 0.4 | 0.4 | 24 | 10 | | | |
| 163.216 | DRIVING LN | 15 | 15 | | | 25 | 2.5 | 2.5 | 90 | 20 | | | |
| 163.265 | PASSING LN | 6 | 6 | | | 4 | 0.4 | 0.4 | 24 | 10 | | | |
| 163.296 | DRIVING LN | 6 | 15 | | | 10 | 1 | 1 | 42 | 20 | | | |
| 163.306 | PASSING LN | 6 | 6 | | | 4 | 0.4 | 0.4 | 24 | 10 | | | |
| 163.306 | DRIVING LN | 6 | 6 | | | 4 | 0.4 | 0.4 | 24 | 10 | | | |
| 163.373 | PASSING LN | 6 | 6 | | | 4 | 0.4 | 0.4 | 24 | 10 | | | |
| 163.392 | DRIVING LN | 90 | 15 | | | 150 | 150 | 150 | 420 | 20 | 75 | 30 | * |
| 163.402 | | 4 | 4 | 1.78 | 0.20 | | | | | | | | |
| WESTBOUND LANES | | | | | | | | | | | | | |
| 162.290 | PASSING LN | 6 | 12 | | | 8 | 0.8 | 0.8 | 36 | 20 | | | |
| 162.320 | PASSING LN | 2 | 4 | 0.89 | 0.10 | | | | | | | | |
| 162.322 | PASSING LN/LT TURN | 6 | 23 | | | 15.33 | 1.5 | 1.5 | 64 | 40 | | | |
| 162.353 | PASSING LN | 2 | 2 | 0.44 | 0.05 | | | | | | | | |
| 162.424 | PASSING LN | 3 | 3 | 1.00 | 0.11 | | | | | | | | |
| 162.427 | PASSING LN | 6 | 6 | | | 4 | 0.4 | 0.4 | 24 | 10 | | | |
| 162.443 | LT TURN | 6 | 12 | | | 8 | 0.8 | 0.8 | 36 | 20 | | | |
| 162.575 | PASSING LN | 6 | 12 | | | 8 | 0.8 | 0.8 | 36 | 20 | | | |
| 162.678 | DRIVING LN | 3 | 3 | 1.00 | 0.11 | | | | | | | | |
| 162.680 | PASSING LN | 6 | 6 | | | 4 | 0.4 | 0.4 | 24 | 10 | | | |
| 162.685 | DRIVING LN | 6 | 6 | | | 4 | 0.4 | 0.4 | 24 | 10 | | | |
| 162.685 | PASSING LN | 6 | 12 | | | 8 | 0.8 | 0.8 | 36 | 20 | | | |
| 162.811 | | 6 | 10 | | | 6.67 | 0.7 | 0.7 | 32 | 20 | | | |
| 162.888 | | 6 | 6 | | | 4 | 0.4 | 0.4 | 24 | 10 | | | |
| 162.908 | | 6 | 6 | | | 4 | 0.4 | 0.4 | 24 | 10 | | | |
| 162.942 | DRIVING LN | 6 | 6 | | | 4 | 0.4 | 0.4 | 24 | 10 | | | |
| 162.942 | DRIVING LN | 6 | 6 | | | 4 | 0.4 | 0.4 | 24 | 10 | | | |
| 162.966 | | 6 | 6 | | | 4 | 0.4 | 0.4 | 24 | 10 | | | |
| 163.026 | DRIVING LN | 6 | 6 | | | 4 | 0.4 | 0.4 | 24 | 10 | | | |
| 163.044 | DRIVING LN | 6 | 6 | | | 4 | 0.4 | 0.4 | 24 | 10 | | | |
| 163.052 | DRIVING LN | 6 | 6 | | | 4 | 0.4 | 0.4 | 24 | 10 | | | |
| 163.436 | DRIVING LN | 12 | 15 | | | 20 | 2 | 2 | 69 | 20 | | | |
| RTE 61 SOUTHBOUND LANES | | | | | | | | | | | | | |
| 280.825 | DRIVING LN | 12 | 15 | | | 20 | 2 | 2 | 69 | 20 | | | |
| | | | | | | | | | | | | | |
| | | | TOTAL | 16.3 | 1.8 | 398.5 | 175 | 175 | 1559 | 490 | 75 | 30 | |

PAVT REPAIR LOCATIONS TO BE DETERMINED BY THE ENGINEER. PAVT REPAIR SIZES ARE APPROXIMATE AND MAY BE ADJUSTED AS DIRECTED BY THE ENGINEER.

SUBGRADE COMPACTION FOR PAVT REPAIR AND 4" TYPE 1 OR 5 AGGR BASE FOR PAVT REPAIR QUANTITIES ARE CALCULATED AT 10% OF THE TOTAL AREA OF FULL DEPTH PAVT REPAIR.

* SUBGRADE COMPACTION FOR PAVT REPAIR AND 4" TYPE 1 OR 5 AGGR BASE FOR PAVT REPAIR QUANTITIES ARE CALCULATED AT 100% OF THE TOTAL AREA OF FULL DEPTH PAVT REPAIR.

STATE OF MISSOURI
CURTIS DEWAYNE WOOLSEY
NUMBER
PE-2001018834
PROFESSIONAL ENGINEER

07/26/2023 9:45:18 AM
CURTIS DEWAYNE WOOLSEY - CIVIL
MO-PE-2001018834

DATE PREPARED
7/6/2023

| ROUTE | STATE |
|---|---|
| 72 | MO |
| DISTRICT | SHEET NO. |
| SE | 3 |

COUNTY
CAPE GIRARDEAU

JOB NO.
J9P3121B

CONTRACT ID.

PROJECT NO.

BRIDGE NO.

| DATE | DESCRIPTION |
|---|---|

MISSOURI HIGHWAYS AND TRANSPORTATION COMMISSION
105 WEST CAPITOL
JEFFERSON CITY, MO 65102
1-888-ASK-MODOT (1-888-275-6636)

SUMAMRY OF QUANTITIES
SHEET 2 OF 5

IF A SEAL IS PRESENT ON THIS SHEET IT HAS BEEN ELECTRONICALLY SEALED AND DATED.

## CONCRETE GUTTER/CURB AND GUTTER/CONCRETE CURB

| LOG MI | LOC | TYPE B GUTTER (LF) | TYPE B CURB AND GUTTER (LF) | TYPE S 6″ CONC CURB (LF) | TYPE A 6″ INTERGRAL CURB (LF) | REMARKS |
|---|---|---|---|---|---|---|
| 163.392 | EB DRIVING LN | | | | 90 | THRU LIMITS OF PAVT REPAIR |
| ✳ VARIOUS LOCATIONS | | 2 | 57 | 63 | | |
| | | | | | | |
| | TOTAL | 2 | 57 | 63 | 90 | |

✳ LOCATIONS TO BE DETERMINED BY THE ENGINEER.

## CONCRETE MEDIAN & AGGREGATE BASE

| LOG MI | LOC | LENGTH (FT) | WIDTH (FT) | THICK (IN) | CONCRETE MEDIAN TINTED & STAMPED (SY) | 4″ TYPE 5 AGGR BASE (SY) | REMARKS |
|---|---|---|---|---|---|---|---|
| 163.530 | LT/RT | 20 | 8 | 6 | 17.78 | 17.8 | |
| 163.652 | LT/RT | 20 | 8 | 6 | 17.78 | 17.8 | |
| 163.802 | LT/RT | 20 | 8 | 6 | 17.78 | 17.8 | |
| 164.055 | LT/RT | 20 | 8 | 6 | 17.78 | 17.8 | |
| 164.241 | LT/RT | 20 | 8 | 6 | 17.78 | 17.8 | |
| 164.285 | LT/RT | 20 | 8 | 6 | 17.78 | 17.8 | |
| 164.329 | LT/RT | 20 | 8 | 6 | 17.78 | 17.8 | |
| 164.479 | LT/RT | 20 | 8 | 6 | 17.78 | 17.8 | |
| 164.629 | LT/RT | 20 | 8.5 | 6 | 18.89 | 18.9 | |
| 164.794 | LT/RT | 20 | 8 | 6 | 17.78 | 17.8 | |
| 164.965 | LT/RT | 20 | 8 | 6 | 17.78 | 17.8 | |
| 165.118 | LT/RT | 20 | 8 | 6 | 17.78 | 17.8 | |
| 165.329 | LT/RT | 20 | 8 | 6 | 17.78 | 17.8 | |
| | | | | | | | |
| | | | | TOTAL | 232.3 | 233 | |

EXISTING MEDIAN PLANTER AREAS - SEE SPECIAL SHEET 3 FOR DETAILS.

## PAVEMENT EDGE TREATMENT

| LOG MI | LOG MI | LOC | LENGTH (FT) | PAVT EDGE TREATMENT (LF) | REMARKS |
|---|---|---|---|---|---|
| RTE 34 | | | | | |
| 88.064 | 88.125 | LT | 322.08 | 327.2 | |
| 88.080 | 88.105 | RT | 132.00 | 168.2 | |
| | | | | | |
| | | | TOTAL | 495.4 | |

## COLDMILLING

| LOG MI | LOG MI | LOC | LENGTH (FT) | WIDTH (FT) | THICK (IN) | COLDMILLING 3″ OR LESS (SY) | REMARKS |
|---|---|---|---|---|---|---|---|
| 162.042 | 162.082 | ℄ | 211.20 | VAR | 1.75 | 1002.6 | |
| 162.082 | 162.269 | ℄ | 987.36 | VAR | 1.75 | 5072.0 | |
| 162.269 | 162.302 | ℄ | 174.24 | VAR | 1.75 | 450.7 | |
| 163.440 | 163.879 | ℄ | 2317.92 | VAR | 1.75 | 15317.1 | |
| 163.879 | 164.154 | ℄ | 1452.00 | VAR | 1.75 | 10153.4 | |
| 164.154 | 164.404 | ℄ | 1320.00 | VAR | 1.75 | 8652.9 | |
| 164.404 | 164.723 | ℄ | 1684.32 | VAR | 1.75 | 10714.0 | |
| 164.723 | 165.043 | ℄ | 1689.60 | VAR | 1.75 | 10711.2 | |
| 165.043 | 165.238 | ℄ | 1029.60 | VAR | 1.75 | 6445.7 | |
| 165.284 | 165.673 | ℄ | 2053.92 | VAR | 1.75 | 13697.4 | |
| RTE 34 | | | | | | | |
| 88.057 | 88.125 | ℄ | 359.04 | VAR | 1.75 | 1704.3 | |
| RTE 61 | | | | | | | |
| 280.813 | 280.845 | ℄ | 168.96 | VAR | 1.75 | 1245.8 | |
| RTE 25 | | | | | | | |
| 0.006 | 0.030 | ℄ | 126.72 | VAR | 1.75 | 968.2 | |
| RTE 72 SIDE ROADS | | | | | | | |
| 164.404 | | RT | VAR | VAR | 1.75 | 1024.0 | OLD TOLL RD |
| 164.724 | | LT | VAR | VAR | 1.75 | 1591.8 | MAIN ST |
| 165.044 | | LT | VAR | VAR | 1.75 | 1722.9 | RTE PP |
| 165.044 | | RT | VAR | VAR | 1.75 | 1064.0 | FARMINGTON RD |
| 165.410 | | LT | VAR | VAR | 1.75 | 1228.7 | OKLAHOMA ST |
| | | | | | | | |
| | | | | | TOTAL | 92767 | |

## MOBILIZATION

LUMP SUM ONE

## CURVED VANE GRATE & FRAME

| LOG MI | LOC | EXIST BAR GRATE | CURVED VANE GRATE & FRAME 2′ X 2′ (EA) | REMARKS |
|---|---|---|---|---|
| 165.434 | RT | 28″ X 25″ | 1 | |
| 165.435 | LT | 28″ X 25″ | 1 | |
| 165.551 | RT | 31″ X 25″ | 1 | |
| 165.577 | LT | 31″ X 25″ | 1 | |
| 165.595 | RT | 31″ X 25″ | 1 | |
| 165.606 | LT | 31″ X 25″ | 1 | |
| 165.624 | LT | 31″ X 25″ | 1 | |
| | | | | |
| | | TOTAL | 7 | |

## PAVEMENT MARKING

| | STANDARD WATERBORNE TYPE P BEADS | | HIGH BUILD WATERBORNE TYPE L BEADS | | | | PREFORMED THERMOPLASTIC | | | | | | | | | | |
|---|---|---|---|---|---|---|---|---|---|---|---|---|---|---|---|---|---|
| | 4″ SOLID YELLOW (LF) | 4″ SOLID WHITE (LF) | 4″ SOLID YELLOW (LF) | 6″ SOLID YELLOW (LF) | 6″ INT WHITE (LF) | 6″ SOLID WHITE (LF) | LEFT ARROW (EA) | RIGHT ARROW (EA) | STRAIGHT ARROW (EA) | STRAIGHT LEFT ARROW (EA) | 6″ WHITE (DOTTED) (LF) | 6″ WHITE PED XING (LF) | 24″ WHITE STOP (LF) | 24″ WHITE HASH (LF) | 24″ YELLOW HASH (LF) | 30″ WHITE MIDBLOCK (EA) | RAILROAD CROSSING MARKER (EA) |
| SUBTOTAL | 1598 | 2476 | 4136 | 35522 | 8701 | 46545 | 48 | 7 | 3 | 4 | 202 | 544 | 674 | 101 | 109 | 20 | 2 |
| TOTAL | 1598 | 2476 | 4136 | 35522 | 55246 | | 55 | | 3 | 4 | 746 | | 775 | | 109 | 20 | 2 |

CONTRAST MARKING SHALL BE REQUIRED FOR ALL CONCRETE PAVEMENT REGARDLESS OF LENGTH AND AT NO DIRECT PAY.

STATE OF MISSOURI
CURTIS DEWAYNE WOOLSEY
NUMBER PE-2001018834
PROFESSIONAL ENGINEER
07/06/2023 9:44:51 AM
CURTIS DEWAYNE WOOLSEY - CIVIL
MO-PE-2001018834

| DATE PREPARED | |
|---|---|
| 7/6/2023 | |
| ROUTE 72 | STATE MO |
| DISTRICT SE | SHEET NO. 3 |
| COUNTY CAPE GIRARDEAU | |
| JOB NO. J9P3121B | |
| CONTRACT ID. | |
| PROJECT NO. | |
| BRIDGE NO. | |

DESCRIPTION

DATE

IF A SEAL IS PRESENT ON THIS SHEET IT HAS BEEN ELECTRONICALLY SEALED AND DATED.

MISSOURI HIGHWAYS AND TRANSPORTATION COMMISSION

105 WEST CAPITOL
JEFFERSON CITY, MO 65102
1-888-ASK-MODOT (1-888-275-6636)

SUMAMRY OF QUANTITIES
SHEET 3 OF 5

## HALF-SOLE REPAIR

| LOG MI | LOC | HALF-SOLE REPAIR (SF) | REMARKS |
|---|---|---|---|
| RTE 61 - BR A4555 APPROACH SLABS | | | |
| 280.845 | WB DRIVING LN | 50.0 | |
| 280.845 | WB PASSING LN | 130.0 | |
| 280.845 | TURN LN | 400.0 | |
| 280.845 | EB PASSING LN | 315.0 | |
| 280.845 | EB DRIVING LN | 252.0 | |
| 280.880 | WB DRIVING LN | 170.0 | |
| 280.880 | WB PASSING LN | 210.0 | |
| 280.880 | TURN LN | 160.0 | |
| 280.880 | EB PASSING LN | 60.0 | |
| 280.880 | EB DRIVING LN | 100.0 | |
| RTE 25 - BR A4556 APPROACH SLABS | | | |
| 0.030 | SB DRIVING LN | 33.0 | |
| 0.030 | NB DRIVING LN | 20.0 | |
| 0.030 | NB RT TURN LN | 99.0 | |
| 0.030 | NB INSIDE LT TURN LN | 30.0 | |
| 0.030 | NB OUTSIDE LT TURN LN | 244.0 | |
| 0.070 | SB DRIVING LN | 133.0 | |
| 0.070 | NB DRIVING LN | 80.0 | |
| 0.070 | NB RT TURN LN | 338.0 | |
| 0.070 | NB INSIDE LT TURN LN | 66.0 | |
| ✳ ADD QUANTITY | | 480.0 | |
| | | | |
| | TOTAL | 3370 | |

HALF-SOLE REPAIR LOCATIONS TO BE DETERMINED BY THE ENGINEER.
HALF-SOLE REPAIR QUANTITIES ARE APPROXIMATE AND MAY BE ADJUSTED AS DIRECTED BY THE ENGINEER.
✳ LOCATIONS TO BE DETERMINED BY THE ENGINEER.

## PRECAST DROP INLET

| LOG MI | LOC | TYPE | "D" (FT) | PRECAST DI 5'X3' (FT) | REMARKS |
|---|---|---|---|---|---|
| 163.518 | LT | T | 4.00 | 4.0 | 1-18" OPENING |
| | | | | | |
| | | | TOTAL | 4 | |

ALL COSTS ASSOCIATED WITH INSTALLATION SHALL BE CONSIDERED COMPLETELY COVERED BY THE PAY ITEM - PRECAST DROP INLET 5'x3'

## CURB DELINEATOR SYSTEM

| LOG MI | LOG MI | LOC | CURB DELINEATOR SYSTEM (FT) | REMARKS |
|---|---|---|---|---|
| 162.191 | 162.206 | RT | 80.0 | RADIUS |
| | | | | |
| | | TOTAL | 80 | |

OMIT SYSTEM THROUGH LIMITS OF CONCRETE PAVEMENT.

## FESCUE SODDING

| LOG MI | LOG MI | LOC | K-31TALL FESCUE SODDING (SY) | REMARKS |
|---|---|---|---|---|
| RTE 34 | | | | |
| 88.064 | 88.125 | LT | 453.3 | |
| 88.080 | 88.105 | RT | 200.0 | |
| | | | | |
| | | TOTAL | 654 | |

## TEMPORARY EROSION CONTROL

| | SILT FENCE (LF) | ALTERNATE DITCH CHECK (LF) |
|---|---|---|
| | | |
| TOTAL | 490 | 33 |

## CABLE - LOOP DETECTOR

| LOG MI | LOC | DETECTOR 1C-#14 IN DUCT (LF) | REMARKS |
|---|---|---|---|
| 162.173 | RT | 294 | 6 X 30 LOOP DETECTOR - LEFT |
| 162.177 | RT | 346 | 6 X 30 LOOP DETECTOR - STRAIGHT |
| 162.193 | LT | 296 | 6 X 30 LOOP DETECTOR - LEFT |
| 162.193 | LT | 322 | 6 X 30 LOOP DETECTOR - STRAIGHT |
| 164.145 | RT | 290 | 6 X 30 LOOP DETECTOR - LEFT |
| 164.145 | RT | 314 | 6 X 30 LOOP DETECTOR - STRAIGHT |
| 164.145 | RT | 338 | 6 X 30 LOOP DETECTOR - STRAIGHT |
| 164.162 | LT | 294 | 6 X 30 LOOP DETECTOR - LEFT |
| 164.162 | LT | 318 | 6 X 30 LOOP DETECTOR - STRAIGHT |
| 164.162 | LT | 340 | 6 X 30 LOOP DETECTOR - STRAIGHT |
| 164.396 | RT | 292 | 6 X 30 LOOP DETECTOR - LEFT |
| 164.396 | RT | 320 | 6 X 30 LOOP DETECTOR - STRAIGHT |
| 164.396 | RT | 348 | 6 X 30 LOOP DETECTOR - STRAIGHT |
| 164.413 | LT | 292 | 6 X 30 LOOP DETECTOR - LEFT |
| 164.413 | LT | 316 | 6 X 30 LOOP DETECTOR - STRAIGHT |
| 164.413 | LT | 340 | 6 X 30 LOOP DETECTOR - STRAIGHT |
| 164.713 | RT | 294 | 6 X 30 LOOP DETECTOR - LEFT |
| 164.713 | RT | 318 | 6 X 30 LOOP DETECTOR - STRAIGHT |
| 164.713 | RT | 342 | 6 X 30 LOOP DETECTOR - STRAIGHT |
| 164.731 | LT | 294 | 6 X 30 LOOP DETECTOR - LEFT |
| 164.731 | LT | 318 | 6 X 30 LOOP DETECTOR - STRAIGHT |
| 164.731 | LT | 342 | 6 X 30 LOOP DETECTOR - STRAIGHT |
| 165.033 | RT | 302 | 6 X 30 LOOP DETECTOR - LEFT |
| 165.033 | RT | 322 | 6 X 30 LOOP DETECTOR - STRAIGHT |
| 165.033 | RT | 344 | 6 X 30 LOOP DETECTOR - STRAIGHT |
| 165.053 | LT | 356 | 6 X 30 LOOP DETECTOR - LEFT |
| 165.053 | LT | 334 | 6 X 30 LOOP DETECTOR - STRAIGHT |
| 165.053 | LT | 316 | 6 X 30 LOOP DETECTOR - STRAIGHT |
| 165.396 | RT | 296 | 6 X 30 LOOP DETECTOR - LEFT |
| 165.396 | RT | 318 | 6 X 30 LOOP DETECTOR - STRAIGHT |
| 165.396 | RT | 340 | 6 X 30 LOOP DETECTOR - STRAIGHT |
| 165.416 | LT | 364 | 6 X 30 LOOP DETECTOR - LEFT |
| 165.416 | LT | 344 | 6 X 30 LOOP DETECTOR - STRAIGHT |
| 165.416 | LT | 330 | 6 X 30 LOOP DETECTOR - STRAIGHT |
| 165.657 | RT | 320 | 6 X 30 LOOP DETECTOR - LEFT |
| 165.665 | RT | 346 | 6 X 30 LOOP DETECTOR - STRAIGHT |
| 165.665 | RT | 374 | 6 X 30 LOOP DETECTOR - STRAIGHT |
| RTE 34 | | | |
| 88.139 | RT | 294 | 6 X 30 LOOP DETECTOR - STRAIGHT/LEFT |
| RTE 61 | | | |
| 280.819 | LT | 420 | 6 X 30 LOOP DETECTOR - STRAIGHT |
| 280.819 | LT | 390 | 6 X 30 LOOP DETECTOR - STRAIGHT |
| 280.823 | LT | 370 | 6 X 30 LOOP DETECTOR - LEFT |
| RTE 25 | | | |
| 0.011 | LT | 335 | 6 X 30 LOOP DETECTOR - STRAIGHT |
| 0.014 | LT | 318 | 6 X 30 LOOP DETECTOR - INSIDE LEFT |
| 0.015 | LT/RT | 306 | 6 X 30 LOOP DETECTOR - OUTSIDE LEFT |
| RTE 72 SIDE ROADS | | | |
| 163.163 | RT | 294 | 6 X 30 LOOP DETECTOR - STRAIGHT (OLD TOLL RD) |
| 163.163 | RT | 336 | 6 X 30 LOOP DETECTOR - LEFT (OLD TOLL RD) |
| 164.724 | LT | 290 | 6 X 30 LOOP DETECTOR - STRAIGHT (MAIN ST) |
| 164.724 | LT | 350 | 6 X 30 LOOP DETECTOR - LEFT (MAIN ST) |
| 165.044 | LT | 312 | 6 X 30 LOOP DETECTOR - STRAIGHT/LEFT (FARMINGTON RD) |
| 165.044 | LT | 340 | 6 X 30 LOOP DETECTOR - LEFT (FARMINGTON RD) |
| 165.044 | RT | 338 | 6 X 30 LOOP DETECTOR - STRAIGHT/LEFT (RTE PP) |
| 165.410 | LT | 352 | 6 X 30 LOOP DETECTOR - STRAIGHT/LEFT (OKLAHOMA ST) |
| 165.410 | LT | 368 | 6 X 30 LOOP DETECTOR - LEFT (OKLAHOMA ST) |
| | | | |
| | SUBTOTAL | 17387 | |
| | ADD 5% | 869 | |
| | TOTAL | 18260 | |

QUANTITIES ARE APPROXIMATE.
LOOP DETECTORS TO BE INSTALLED AT THE SAME LOCATION AS THE EXISTING LOOP DETECTORS, UNLESS OTHERWISE DIRECTED BY THE ENGINEER.

STATE OF MISSOURI
CURTIS DEWAYNE WOOLSEY
NUMBER
PE-2001018834
PROFESSIONAL ENGINEER

07/26/2023 9:45:05 AM
CURTIS DEWAYNE WOOLSEY - CIVIL
MO-PE-2001018834
DATE PREPARED
7/6/2023

| ROUTE | STATE |
|---|---|
| 72 | MO |
| DISTRICT | SHEET NO. |
| SE | 3 |

COUNTY
CAPE GIRARDEAU
JOB NO.
J9P3121B
CONTRACT ID.
PROJECT NO.
BRIDGE NO.

| DATE | DESCRIPTION |
|---|---|

IF A SEAL IS PRESENT ON THIS SHEET IT HAS BEEN ELECTRONICALLY SEALED AND DATED.

MISSOURI HIGHWAYS AND TRANSPORTATION COMMISSION
105 WEST CAPITOL
JEFFERSON CITY, MO 65102
1-888-ASK-MODOT (1-888-275-6636)

SUMAMRY OF QUANTITIES
SHEET 4 OF 5

EFFECTIVE: 04-01-2023

| SIGN | SIZE IN. | AREA SQ.FT. | QTY EACH | TOTAL AREA SQ.FT. | QTY RELOC EACH | TOTAL RELOC SQ.FT. | SIGN NUM. | DESCRIPTION |
|---|---|---|---|---|---|---|---|---|
| WARNING SIGNS | | | | | | | | |
| W01-1L | 48X48 | 16.00 | | | | | | TURN (SYMBOL LEFT ARROW) |
| W01-1R | 48X48 | 16.00 | | | | | | TURN (SYMBOL RIGHT ARROW) |
| W01-2L | 48X48 | 16.00 | | | | | | CURVE (SYMBOL LEFT ARROW) |
| W01-2R | 48X48 | 16.00 | | | | | | CURVE (SYMBOL RIGHT ARROW) |
| W01-3L | 48X48 | 16.00 | | | | | | REVERSE TURN (SYMBOL LEFT ARROW) |
| W01-3R | 48X48 | 16.00 | | | | | | REVERSE TURN (SYMBOL RIGHT ARROW) |
| W01-4L | 48X48 | 16.00 | 1 | 16.00 | | | | REVERSE CURVE (SYMBOL LEFT ARROW) |
| W01-4R | 48X48 | 16.00 | 1 | 16.00 | | | | REVERSE CURVE (SYMBOL RIGHT ARROW) |
| W01-4bL | 48X48 | 16.00 | | | | | | DOUBLE ARROW REVERSE CURVE (SYMBOL LT ARROWS) |
| W01-4bR | 48X48 | 16.00 | | | | | | DOUBLE ARROW REVERSE CURVE (SYMBOL RT ARROWS) |
| W01-4cL | 48X48 | 16.00 | | | | | | TRIPLE ARROW REVERSE CURVE (SYMBOL LT ARROWS) |
| W01-4cR | 48X48 | 16.00 | | | | | | TRIPLE ARROW REVERSE CURVE (SYMBOL RT ARROWS) |
| W01-6 | 60X30 | 12.50 | | | | | | HORIZONTAL ARROW (SYMBOL) |
| W01-6a | 72X36 | 18.00 | | | | | | HORIZ. ARROW (SYMBOL ON PERMANENT BARRICADE) |
| W01-7 | 60X30 | 12.50 | | | | | | DOUBLE HEAD HORIZONTAL ARROW (SYMBOL) |
| W01-7a | 72X36 | 18.00 | | | | | | DOUBLE HEAD HORIZ. ARROW (SYMBOL ON PERM. BARR.) |
| W01-8 | 18X24 | 3.00 | | | | | | CHEVRON (SYMBOL) |
| W01-8a | 30X36 | 7.50 | | | | | | CHEVRON (SYMBOL FOR DIVIDED HIGHWAYS) |
| W03-1 | 48X48 | 16.00 | | | | | | STOP AHEAD (SYMBOL) |
| W03-2 | 48X48 | 16.00 | | | | | | YIELD AHEAD (SYMBOL) |
| W03-3 | 48X48 | 16.00 | | | | | | SIGNAL AHEAD (SYMBOL) |
| W03-4 | 48X48 | 16.00 | | | | | | BE PREPARED TO STOP |
| W03-5 | 48X48 | 16.00 | | | | | | SPEED LIMIT AHEAD |
| W04-1L | 48X48 | 16.00 | | | | | | MERGE (SYMBOL FROM LEFT) |
| W04-1R | 48X48 | 16.00 | | | | | | MERGE (SYMBOL FROM RIGHT) |
| W04-1aL | 48X48 | 16.00 | | | | | | MERGE (ARROW SYMBOL) |
| W04-1aR | 48X48 | 16.00 | | | | | | MERGE (ARROW SYMBOL) |
| W05-1 | 48X48 | 16.00 | | | | | | ROAD/BRIDGE/RAMP NARROWS |
| W05-3 | 48X48 | 16.00 | | | | | | ONE LANE BRIDGE |
| W05-5 | 48X48 | 16.00 | | | | | | NARROW LANES |
| W06-1 | 48X48 | 16.00 | | | | | | DIVIDED HIGHWAY (SYMBOL) |
| W06-2 | 48X48 | 16.00 | | | | | | DIVIDED HIGHWAY END (SYMBOL) |
| W06-3 | 48X48 | 16.00 | | | | | | TWO WAY TRAFFIC (SYMBOL) |
| W07-3a | 30X24 | 5.00 | | | | | | NEXT XX MILES (PLAQUE) |
| W08-1 | 48X48 | 16.00 | | | | | | BUMP |
| W08-2 | 48X48 | 16.00 | | | | | | DIP |
| W08-3 | 48X48 | 16.00 | | | | | | PAVEMENT ENDS |
| W08-4 | 48X48 | 16.00 | | | | | | SOFT SHOULDER |
| W08-5 | 48X48 | 16.00 | | | | | | SLIPPERY WHEN WET (SYMBOL) |
| W08-6 | 48X48 | 16.00 | | | | | | TRUCK CROSSING (WITH FLAGS) |
| W08-6c | 48X48 | 16.00 | | | | | | TRUCK ENTRANCE |
| W08-7 | 36X36 | 9.00 | | | | | | LOOSE GRAVEL |
| W08-7a | 36X36 | 9.00 | | | | | | FRESH OIL/LOOSE GRAVEL |
| W08-9 | 48X48 | 16.00 | | | | | | LOW SHOULDER |
| W08-11 | 48X48 | 16.00 | 12 | 192.00 | | | | UNEVEN LANES |
| W08-12 | 48X48 | 16.00 | 6 | 96.00 | | | | NO CENTER LINE |
| W08-15 | 48X48 | 16.00 | | | | | | GROOVED PAVEMENT |
| W08-15P | 30X24 | 5.00 | | | | | | MOTORCYCLE (PLAQUE) |
| W08-17 | 48X48 | 16.00 | | | | | | SHOULDER DROP-OFF (SYMBOL) |
| W08-17P | 30X24 | 5.00 | | | | | | SHOULDER DROP-OFF (PLAQUE) |
| W10-1 | 42RND. | 9.62 | | | | | | RAILROAD CROSSING |
| W012-1 | 24X24 | 4.00 | | | | | | DOUBLE DOWN ARROW (SYMBOL) |
| W012-2 | 48X48 | 16.00 | | | | | | LOW CLEARANCE (SYMBOL) |
| W012-2X | 24X18 | 3.00 | | | | | | LOW CLEARANCE (PLAQUE) |
| W012-2a | 84X24 | 14.00 | | | | | | OVERHEAD LOW CLEARANCE (FEET AND INCHES) |
| W012-4 | 120X60 | 50.00 | | | | | | LOW CLEARANCE XX FT XX IN XX MILES AHEAD |
| W012-5 | 120X60 | 50.00 | | | | | | WIDTH RESTRICTION XX FT XX IN XX MILES AHEAD |
| W013-1 | 30X30 | 6.25 | | | | | | ADVISORY SPEED (PLAQUE) |
| W016-2 | 30X24 | 5.00 | | | | | | XXX FEET (PLAQUE) |
| W016-3 | 30X24 | 5.00 | | | | | | X MILE (PLAQUE) |
| W020-1 | 48X48 | 16.00 | 13 | 208.00 | | | | ROAD/BRIDGE/RAMP WORK AHEAD |
| W020-2 | 48X48 | 16.00 | | | | | | DETOUR AHEAD |
| W020-3 | 48X48 | 16.00 | | | | | | ROAD CLOSED AHEAD |
| W020-4 | 48X48 | 16.00 | 4 | 64.00 | | | | ONE LANE ROAD AHEAD |
| W020-5 | 48X48 | 16.00 | 5 | 80.00 | | | | RIGHT/CENTER/LEFT LANE CLOSED AHEAD |
| W020-5a | 48X48 | 16.00 | | | | | | 2 RIGHT/CENTER/LEFT LANES CLOSED AHEAD |
| W020-6a | 48X48 | 16.00 | 5 | 80.00 | | | | RIGHT/CENTER/LEFT LANE CLOSED |
| W020-7a | 48X48 | 16.00 | 4 | 64.00 | | | | FLAGGER (SYMBOL, WITH FLAGS) |
| W021-2 | 36X36 | 9.00 | | | | | | FRESH OIL |
| W021-5 | 48X48 | 16.00 | | | | | | SHOULDER WORK AHEAD |
| W022-1 | 48X48 | 16.00 | | | | | | BLASTING ZONE AHEAD |
| W022-2 | 42X36 | 10.50 | | | | | | TURN OFF 2-WAY RADIO AND PHONE |
| W022-3 | 42X36 | 10.50 | | | | | | END BLASTING ZONE |
| G022-1 | 21X15 | 2.19 | 4 | 8.76 | | | | WET PAINT (ARROW PIVOTS) |

| SIGN | SIZE IN. | AREA SQ.FT. | QTY EACH | TOTAL SQ.FT. | QTY RELOC EACH | TOTAL RELOC SQ.FT. | SIGN NUM. | DESCRIPTION |
|---|---|---|---|---|---|---|---|---|
| GUIDE SIGNS | | | | | | | | |
| E05-1 | 36X48 | 12.00 | | | | | | GORE EXIT |
| E05-2 | 48X36 | 12.00 | | | | | | EXIT OPEN |
| E05-2a | 48X36 | 12.00 | | | | | | EXIT CLOSED |
| G020-1 | 60X24 | 10.00 | 2 | 20.00 | | | | ROAD WORK NEXT XX MILES |
| G020-2 | 48X24 | 8.00 | 2 | 16.00 | | | | END ROAD WORK |
| G020-4 | 36X18 | 4.50 | | | | | | PILOT CAR FOLLOW ME |
| G020-4a | 42X30 | 8.75 | | | | | | PILOT CAR IN USE WAIT & FOLLOW |
| G020-4a | 18X12 | 1.50 | | | | | | PILOT CAR IN USE WAIT & FOLLOW |
| G020-5aP | 36X24 | 6.00 | | | | | | WORK ZONE (PLAQUE) |
| M04-8a | 24X18 | 3.00 | | | | | | END DETOUR |
| M04-9L | 48X36 | 12.00 | | | | | | DETOUR (LEFT ARROW) |
| M04-9R | 48X36 | 12.00 | | | | | | DETOUR (RIGHT ARROW) |
| M04-9P | 48X12 | 4.00 | | | | | | STREET NAME (PLAQUE) |
| M04-10L | 48X18 | 6.00 | | | | | | DETOUR (ARROW LEFT) |
| M04-10R | 48X18 | 6.00 | | | | | | DETOUR (ARROW RIGHT) |
| REGULATORY SIGNS | | | | | | | | |
| R1-1 | 48X48 | 13.25 | | | | | | STOP |
| R1-2 | 48TRI. | 6.93 | | | | | | YIELD |
| R1-2a | 36X36 | 9.00 | | | | | | TO ONCOMING TRAFFIC (PLAQUE) |
| R1-3P | 30X12 | 2.50 | | | | | | ALL WAY (PLAQUE) |
| R2-1 | 36X48 | 12.00 | 1 | 12.00 | | | | SPEED LIMIT XX |
| R3-1 | 48X48 | 16.00 | | | | | | NO RIGHT TURN (SYMBOL) |
| R3-2 | 48X48 | 16.00 | | | | | | NO LEFT TURN (SYMBOL) |
| R3-3 | 36X36 | 9.00 | | | | | | NO TURNS |
| R3-4 | 48X48 | 16.00 | | | | | | NO U-TURN (SYMBOL) |
| R3-7L | 30X30 | 6.25 | 1 | 6.25 | | | | LEFT LANE MUST TURN LEFT |
| R3-7R | 30X30 | 6.25 | 1 | 6.25 | | | | RIGHT LANE MUST TURN RIGHT |
| R4-1 | 36X48 | 12.00 | | | | | | DO NOT PASS |
| R4-2 | 36X48 | 12.00 | | | | | | PASS WITH CARE |
| R4-8a | 36X48 | 12.00 | | | | | | KEEP LEFT (HORIZONTAL ARROW) |
| R4-7a | 36X48 | 12.00 | | | | | | KEEP RIGHT (HORIZONTAL ARROW) |
| R5-1 | 30X30 | 6.25 | | | | | | DO NOT ENTER |
| R5-1a | 36X24 | 6.00 | | | | | | WRONG WAY |
| R6-1L | 54X18 | 6.75 | | | | | | ONE WAY ARROW (LEFT) |
| R6-1R | 54X18 | 6.75 | | | | | | ONE WAY ARROW (RIGHT) |
| R6-2L | 24X30 | 5.00 | | | | | | ONE WAY (LEFT) |
| R6-2R | 24X30 | 5.00 | | | | | | ONE WAY (RIGHT) |
| R9-9 | 24X12 | 2.00 | | | | | | SIDEWALK CLOSED |
| R9-11L | 24X18 | 3.00 | | | | | | SIDEWALK CLOSED AHEAD, (ARROW LEFT) CROSS HERE |
| R9-11R | 24X18 | 3.00 | | | | | | SIDEWALK CLOSED AHEAD, (ARROW RIGHT) CROSS HERE |
| R10-6 | 24X36 | 6.00 | | | | | | STOP HERE ON RED (45° ARROW) |
| R11-2 | 48X30 | 10.00 | | | | | | ROAD CLOSED |
| R11-3a | 60X30 | 12.50 | | | | | | ROAD CLOSED XX MILES AHEAD LOCAL TRAFFIC ONLY |
| R11-4 | 60X30 | 12.50 | | | | | | ROAD CLOSED TO THRU TRAFFIC |
| CONST-3A | 60X48 | 20.00 | | | | | | FINE SIGN |
| CONST-3X | 56X12 | 4.67 | | | | | | SPEEDING/PASSING (PLATE) |
| MISCELLANEOUS SIGNS | | | | | | | | |
| CONST-5 | 48X36 | 12.00 | | | | | | POINT OF PRESENCE |
| CONST-5 | 96X48 | 32.00 | | | | | | POINT OF PRESENCE |
| CONST-7 | 48X24 | 8.00 | | | | | | RATE OUR WORK ZONE |
| CONST-7 | 72X36 | 18.00 | 2 | 36.00 | | | | RATE OUR WORK ZONE |
| CONST-8 | 48X36 | 12.00 | 2 | 24.00 | | | | WORK ZONE NO PHONE ZONE |

| | TOTAL |
|---|---|
| 616-10.05 CONSTRUCTION SIGNS | 946 |
| 616-10.10 RELOCATED SIGNS | * |

| ITEM NUMBER | TOTAL QTY | DESCRIPTION |
|---|---|---|
| 6122008 | | IMPACT ATTENUATOR 40 MPH (SAND BARRELS) |
| 6122009 | | IMPACT ATTENUATOR 45 MPH (SAND BARRELS) |
| 6122010 | | IMPACT ATTENUATOR 50 MPH (SAND BARRELS) |
| 6122012 | | IMPACT ATTENUATOR 55 MPH (SAND BARRELS) |
| 6122014 | | IMPACT ATTENUATOR 60 MPH (SAND BARRELS) |
| 6122017 | | IMPACT ATTENUATOR 65 MPH (SAND BARRELS) |
| 6122019 | | IMPACT ATTENUATOR 70 MPH (SAND BARRELS) |
| 6122020 | | REPLACEMENT SAND BARREL |
| 6122030 | | IMPACT ATTENUATOR (RELOCATION) |
| 6123000A | 2 | TRUCK OR TRAILER MOUNTED ATTENUATOR (TMA) |
| 6161008 | | ADVANCED WARNING RAIL SYSTEM |
| 6161012 | | BUOYS (BOATS KEEP OUT) |
| 6161013 | | BUOYS (NO WAKE) |
| 6161014 | | SPECIAL SIGN ASSEMBLY (BOATS KEEP OUT) |
| 6161025 | 250 | CHANNELIZER (TRIM LINE) |
| 6161030 | 14 | TYPE III MOVEABLE BARRICADE |
| 6161033 | | DIRECTION INDICATOR BARRICADE |
| 6161040 | 5 | FLASHING ARROW PANEL |
| 6161047 | | TYPE III OBJECT MARKER |
| 6161055 | | SEQUENTIAL FLASHING WARNING LIGHT |
| 6161070 | | TUBULAR MARKER |
| 6161095 | | RADAR SPEED ADVISORY SYSTEM |
| 6161096 | | CHANGEABLE MESSAGE SIGN, COMMISSION FURNISHED/RETAINED |
| 6161098A | 4 | CHANGEABLE MESSAGE SIGN W/O COMM. INTERFACE, CONTRACTOR FURNISHED/RETAINED |
| 6161099 | | CHANGEABLE MESSAGE SIGN WITH COMM. INTERFACE, CONTRACTOR FURNISHED/RETAINED |
| 6162000A | | WORK ZONE TRAFFIC SIGNAL SYSTEM |
| 6162002 | | TEMPORARY LONG-TERM RUMBLE STRIPS |
| 6173600D | | TEMPORARY TRAFFIC BARRIER CONTRACTOR FURNISHED/RETAINED |
| 6173602B | | TEMPORARY TRAFFIC BARRIER CONTRACTOR FURNISHED/COMMISSION RETAINED |
| 6174000A | | TEMP. TRAFFIC BARRIER HEIGHT TRANSITION |
| 6175010A | | RELOCATING TEMPORARY TRAFFIC BARRIER |
| 6176000B | | TEMPORARY TRAFFIC BARRIER COMMISSION FURNISHED/RETAINED |
| 6177000B | | TEMP. TRAFFIC BARRIER HEIGHT TRANSITION COMMISSION FURNISHED/RETAINED |
| 6208064A | | TEMPORARY RAISED PAVEMENT MARKER |
| 9029400 | | TEMPORARY TRAFFIC SIGNALS |
| 9029401 | | TEMPORARY TRAFFIC SIGNALS AND LIGHTING |

* NO DIRECT PAY FOR RELOCATION OF TEMPORARY TRAFFIC CONTROL SIGNS OR DEVICES.

NOTES:

CONTRACTOR SHALL PROVIDE PROPER LIGHTING AT ALL FLAGGER LOCATIONS.

SIGNS W08-1 AND W08-15/W08-15P SHALL BE PLACED AS DIRECTED BY THE ENGINEER AT NO DIRECT PAY.

STATE OF MISSOURI
CURTIS DEWAYNE WOOLSEY
NUMBER PE-2001018834
PROFESSIONAL ENGINEER
07/26/2023 10:05:40 AM
CURTIS DEWAYNE WOOLSEY - CIVIL
MO-PE-2001018834

DATE PREPARED 7/26/2023

| ROUTE | STATE |
|---|---|
| 72 | MO |
| DISTRICT | SHEET NO. |
| SE | 3 |

COUNTY: CAPE GIRARDEAU

JOB NO. J9P3121B

CONTRACT ID.

PROJECT NO.

BRIDGE NO.

| DATE | DESCRIPTION |
|---|---|

MISSOURI HIGHWAYS AND TRANSPORTATION COMMISSION
105 WEST CAPITOL
JEFFERSON CITY, MO 65102
1-888-ASK-MODOT (1-888-275-6636)

IF A SEAL IS PRESENT ON THIS SHEET IT HAS BEEN ELECTRONICALLY SEALED AND DATED.

SUMMARY OF QUANTITIES
SHEET 5 OF 5

MILL/FILL

1.75″ SP125C ON OPTIONAL PAVT ON 6″ TYPE 5 AGGR BASE

**OPTIONAL PAVT**

1.) 1.75″ SP125C PG 70-22 ON 10.25 SP190C PG 64-22

2.) 9″ NON-REINFORCED PCC

BEGIN PROJECT
LOG MI 162.042

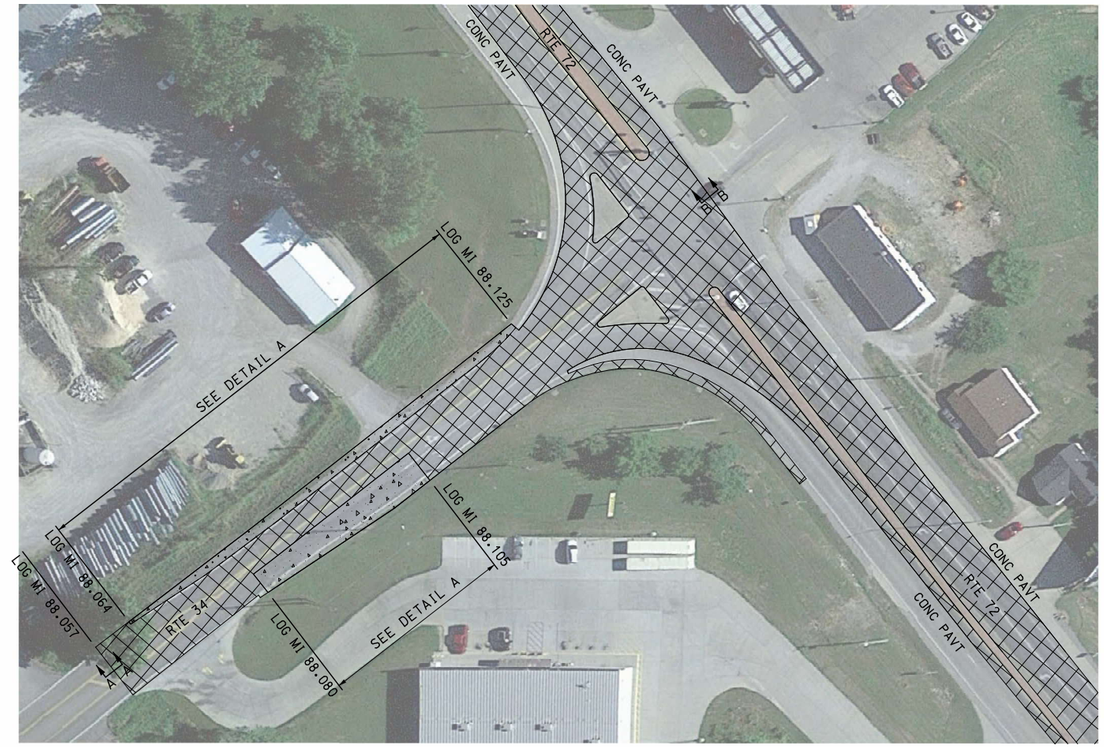


RTE 72 / RTE 34 INTERSECTION
LOG MI 162.185

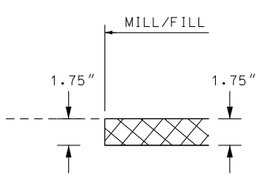


SECTION A-A

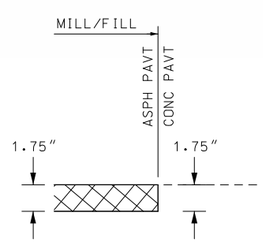


SECTION B-B

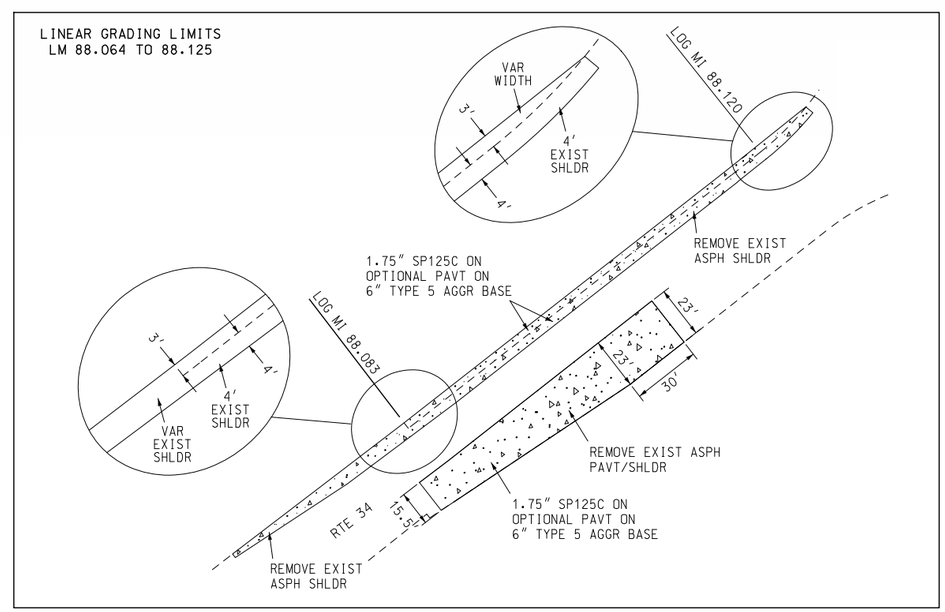


DETAIL A

NOTE:
LOG MILE LOCATIONS ARE APPROXIMATE.
ADJUST AS DIRECTED BY THE ENGINEER
TO FIT FIELD CONDITIONS.

DRAWING NOT TO SCALE. FOLLOW DIMENSIONS.

STATE OF MISSOURI
CURTIS DEWAYNE WOOLSEY
NUMBER PE-2001018834
PROFESSIONAL ENGINEER

07/26/2023 10:04:05 AM
CURTIS DEWAYNE WOOLSEY - CIVIL
MO-PE-2001018834

| DATE PREPARED | |
|---|---|
| 7/6/2023 | |
| ROUTE 72 | STATE MO |
| DISTRICT SE | SHEET NO. 4 |
| COUNTY CAPE GIRARDEAU | |
| JOB NO. J9P3121B | |
| CONTRACT ID. | |
| PROJECT NO. | |
| BRIDGE NO. | |

| DATE | DESCRIPTION |
|---|---|
| | |

MISSOURI HIGHWAYS AND TRANSPORTATION COMMISSION

105 WEST CAPITOL
JEFFERSON CITY, MO 65102
1-888-ASK-MODOT (1-888-275-6636)

PAVEMENT DETAILS
SPECIAL SHEET 1 OF 4

IF A SEAL IS PRESENT ON THIS SHEET IT HAS BEEN ELECTRONICALLY SEALED AND DATED.

MILL/FILL

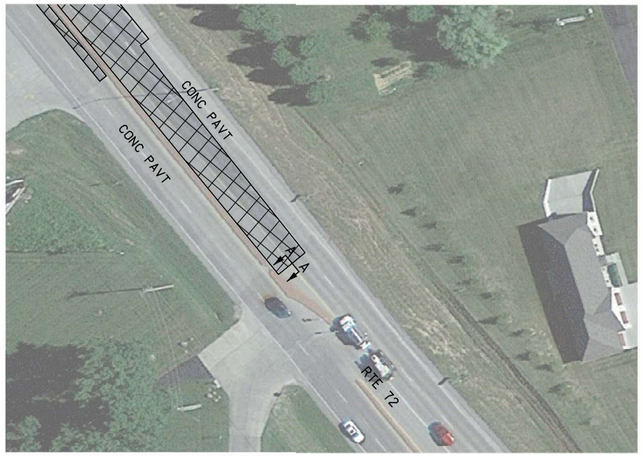


LOG MI 162.302

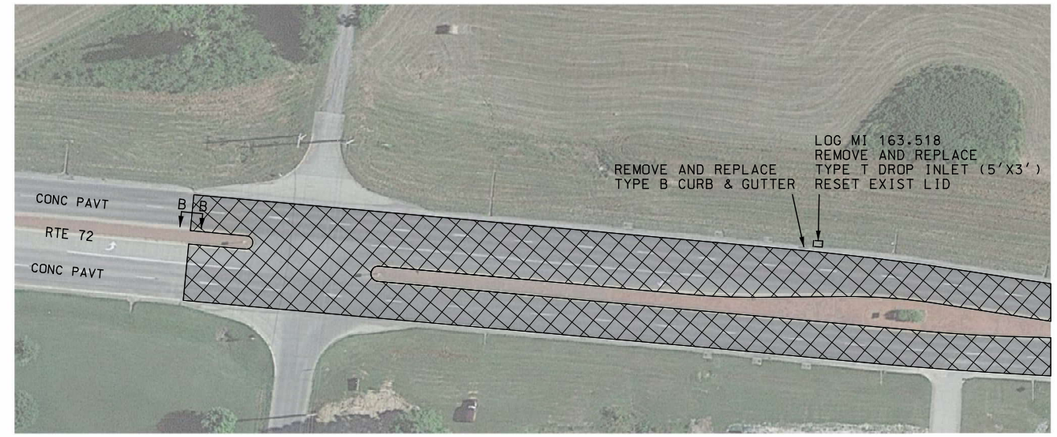


LOG MI 163.440

DROP INLET REPLACEMENT
LOG MI 163.512

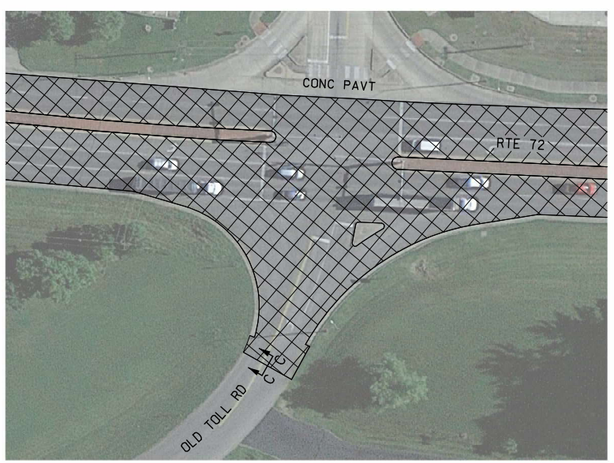


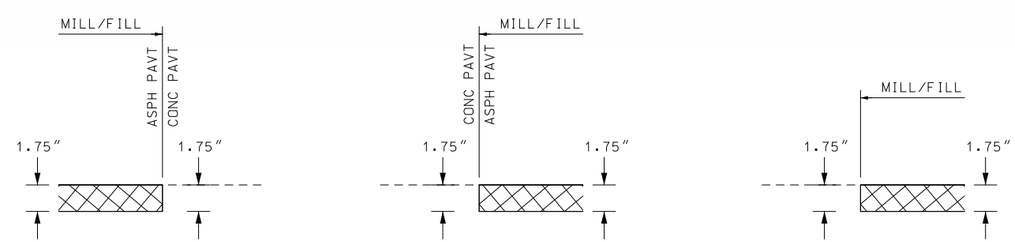


SECTION A-A

SECTION B-B

SECTION C-C

NOTE:
LOG MILE LOCATIONS ARE APPROXIMATE.
ADJUST AS DIRECTED BY THE ENGINEER
TO FIT FIELD CONDITIONS.

DRAWING NOT TO SCALE. FOLLOW DIMENSIONS.

STATE OF MISSOURI
CURTIS DEWAYNE WOOLSEY
NUMBER
PE-2001018834
PROFESSIONAL ENGINEER

07/26/2023 10:04:17 AM
CURTIS DEWAYNE WOOLSEY - CIVIL
MO-PE-2001018834

| DATE PREPARED | |
|---|---|
| 7/6/2023 | |
| ROUTE 72 | STATE MO |
| DISTRICT SE | SHEET NO. 5 |
| COUNTY CAPE GIRARDEAU | |
| JOB NO. J9P3121B | |
| CONTRACT ID. | |
| PROJECT NO. | |
| BRIDGE NO. | |

| DATE | DESCRIPTION |
|---|---|
| | |

MISSOURI HIGHWAYS AND TRANSPORTATION COMMISSION
105 WEST CAPITOL
JEFFERSON CITY, MO 65102
1-888-ASK-MODOT (1-888-275-6636)

PAVEMENT DETAILS
SPECIAL SHEET 2 OF 4

IF A SEAL IS PRESENT ON THIS SHEET IT HAS BEEN ELECTRONICALLY SEALED AND DATED.

MILL/FILL

CONCRETE MEDIAN – TINTED & STAMPED ON TYPE 5 AGGR BASE

NOTE:
LOG MILE LOCATIONS ARE APPROXIMATE. ADJUST AS DIRECTED BY THE ENGINEER TO FIT FIELD CONDITIONS.

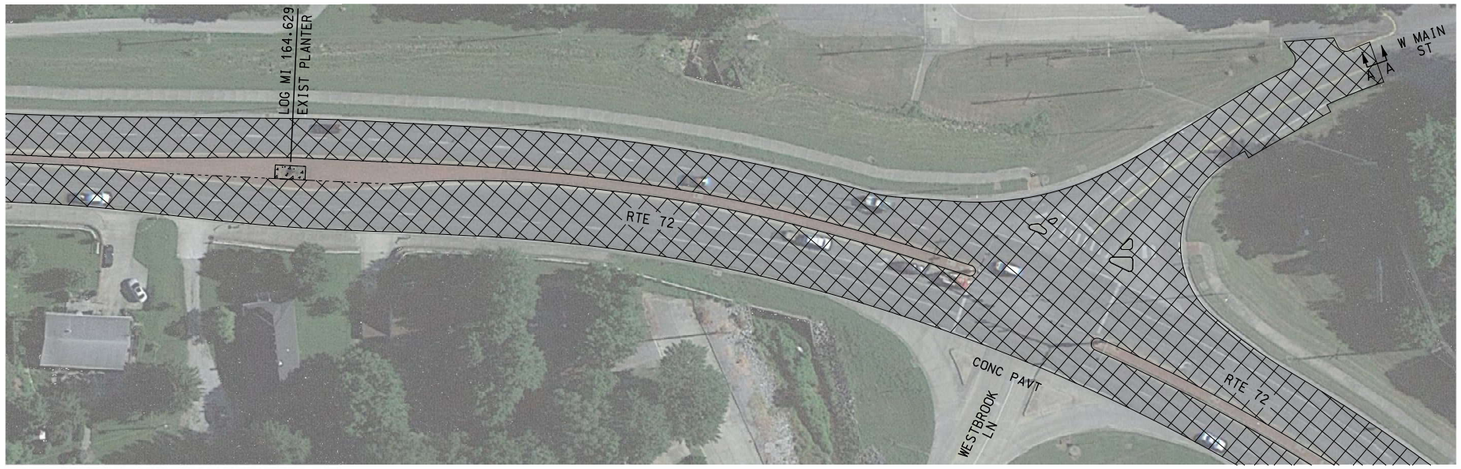


CONCRETE MEDIAN REMOVAL & REPLACEMENT
LOG MI 164.612 TO 164.641
SEE DETAIL A

MAIN ST & WESTBROOK LN
LOG MI 164.724

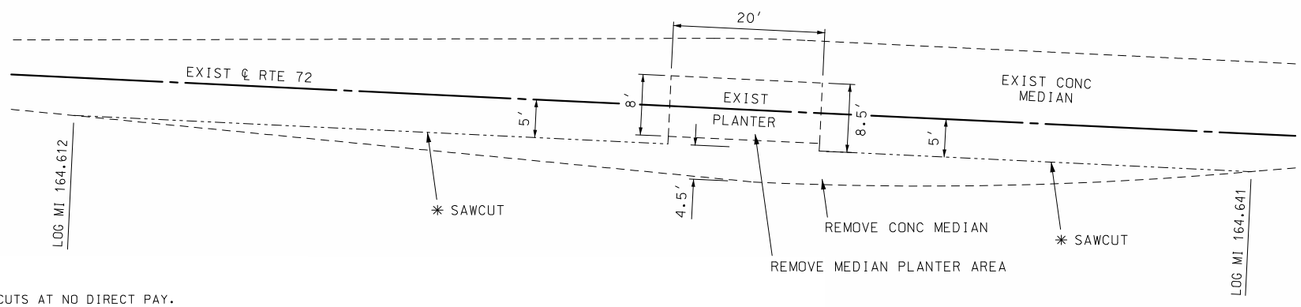


✳ SAWCUTS AT NO DIRECT PAY.

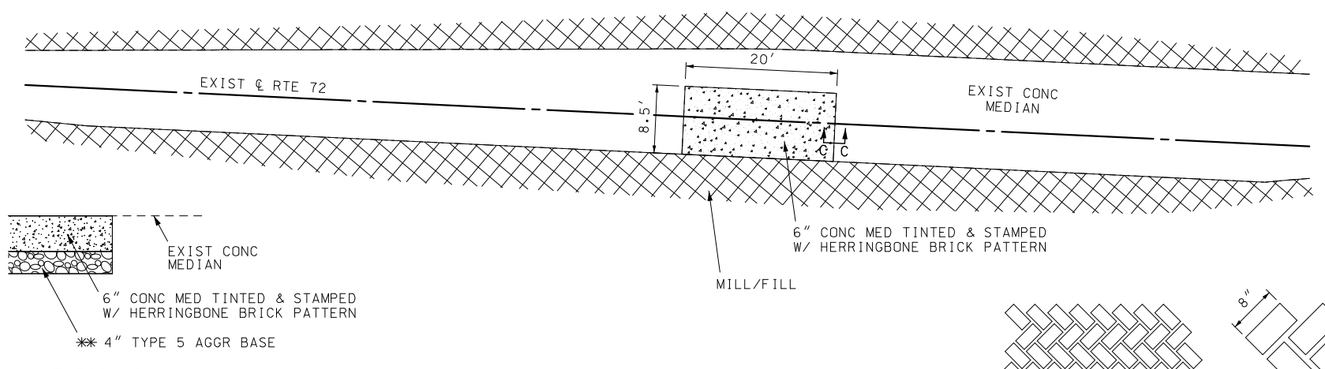


SECTION C-C

✳✳ REMOVE VEGETATION & SOIL LEVEL BEFORE PLACING AGGREGATE BASE

NOTE:
SEE SUMMARY OF QUANTITIES FOR ADDITIONAL LOCATIONS OF EXISTING MEDIAN PLANTER AREAS TO BE FILLED WITH CONCRETE MEDIAN TINTED & STAMPED WITH HERRINGBONE BRICK PATTERN.

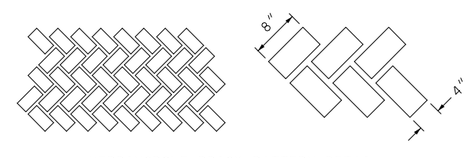


HERRINGBONE BRICK PATTERN DETAIL

DETAIL A

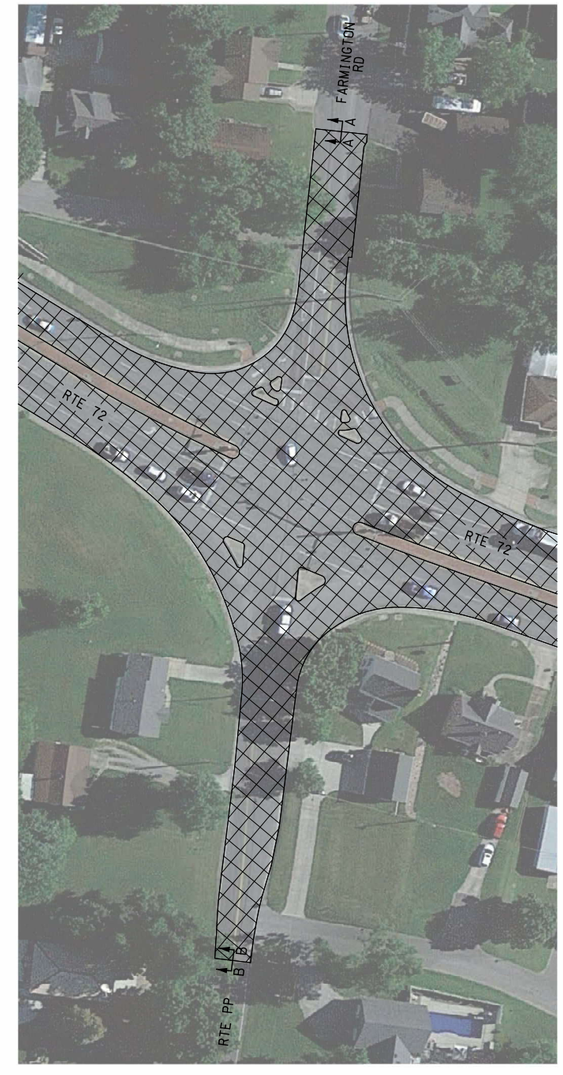


FARMINGTON RD & RTE PP
LOG MI 165.044

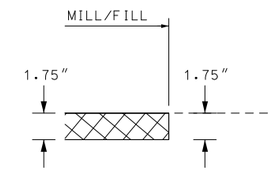


SECTION A-A

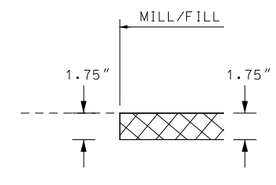


SECTION B-B

DRAWING NOT TO SCALE. FOLLOW DIMENSIONS.

STATE OF MISSOURI
CURTIS DEWAYNE WOOLSEY
NUMBER
PE-2001018834
PROFESSIONAL ENGINEER
07/26/2023 10:04:30 AM
CURTIS DEWAYNE WOOLSEY - CIVIL
MO-PE-2001018834

| | |
|---|---|
| DATE PREPARED | 7/6/2023 |
| ROUTE | 72 |
| STATE | MO |
| DISTRICT | SE |
| SHEET NO. | 6 |
| COUNTY | CAPE GIRARDEAU |
| JOB NO. | J9P3121B |
| CONTRACT ID. | |
| PROJECT NO. | |
| BRIDGE NO. | |

| DESCRIPTION | DATE |
|---|---|
| | |

IF A SEAL IS PRESENT ON THIS SHEET IT HAS BEEN ELECTRONICALLY SEALED AND DATED.

MISSOURI HIGHWAYS AND TRANSPORTATION COMMISSION
105 WEST CAPITOL
JEFFERSON CITY, MO 65102
1-888-ASK-MODOT (1-888-275-6636)

PAVEMENT DETAILS
SPECIAL SHEET 3 OF 4

MILL/FILL

NOTE:
LOG MILE LOCATIONS ARE APPROXIMATE. ADJUST AS DIRECTED BY THE ENGINEER TO FIT FIELD CONDITIONS.

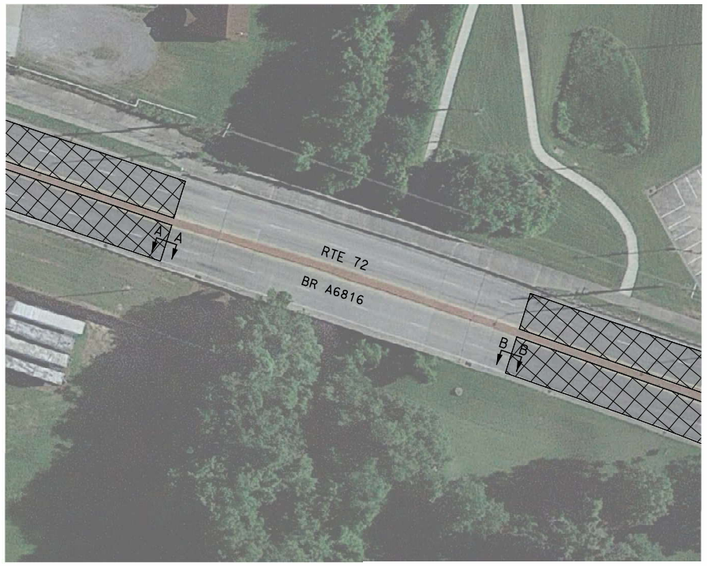


BR A6816
LOG MI 165.238 AND LOG MI 165.284

RTE 72 / RTE 61 / RTE 25 INTERSECTION - END OF PROJECT

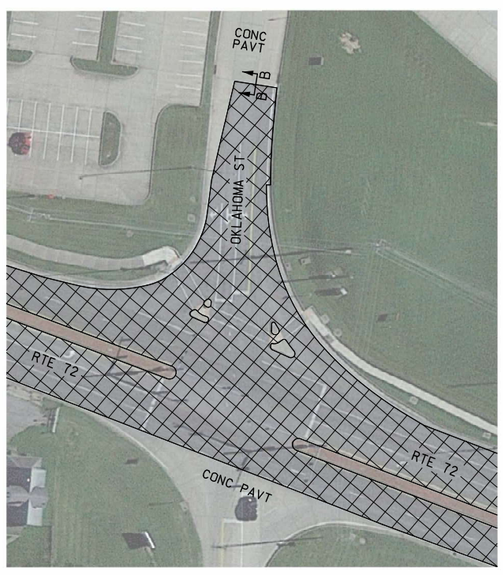


OKLAHOMA ST
LOG MI 165.410

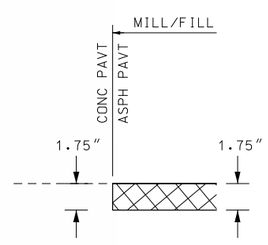


SECTION A-A

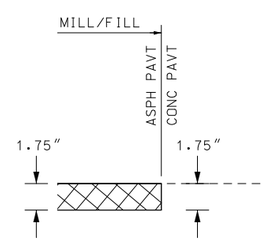


SECTION B-B

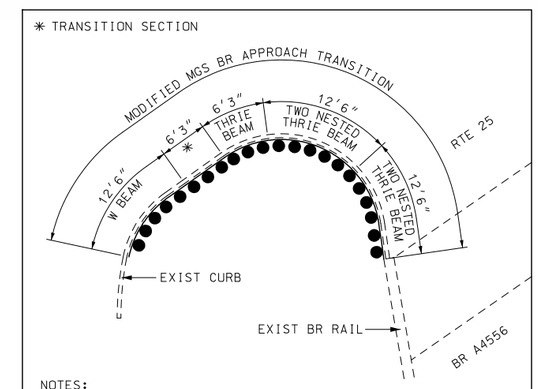


NOTES:

REFER TO STD PLAN 606.60B FOR STANDARD POST SPACING.

THE COST OF FURNISHING, FABRICATING AND INSTALLING MODIFIED BRIDGE APPROACH TRANSITION, COMPLETE IN PLACE, SHALL BE PAID FOR AT THE CONTRACT UNIT PRICE PER EACH, MODIFIED BRIDGE APPROACH TRANSITION.

DETAIL A

DRAWING NOT TO SCALE. FOLLOW DIMENSIONS.

STATE OF MISSOURI
CURTIS DEWAYNE WOOLSEY
NUMBER
PE-2001018834
PROFESSIONAL ENGINEER

07/26/2023 10:04:44 AM
CURTIS DEWAYNE WOOLSEY - CIVIL
MO-PE-2001018834
DATE PREPARED
7/6/2023

| ROUTE | STATE |
|---|---|
| 72 | MO |
| DISTRICT | SHEET NO. |
| SE | 7 |

COUNTY
CAPE GIRARDEAU

JOB NO.
J9P3121B

CONTRACT ID.

PROJECT NO.

BRIDGE NO.

| DATE | DESCRIPTION |
|---|---|
| | |

MISSOURI HIGHWAYS AND TRANSPORTATION COMMISSION

105 WEST CAPITOL
JEFFERSON CITY, MO 65102
1-888-ASK-MODOT (1-888-275-6636)

PAVEMENT DETAILS
SPECIAL SHEET 4 OF 4

IF A SEAL IS PRESENT ON THIS SHEET IT HAS BEEN ELECTRONICALLY SEALED AND DATED.

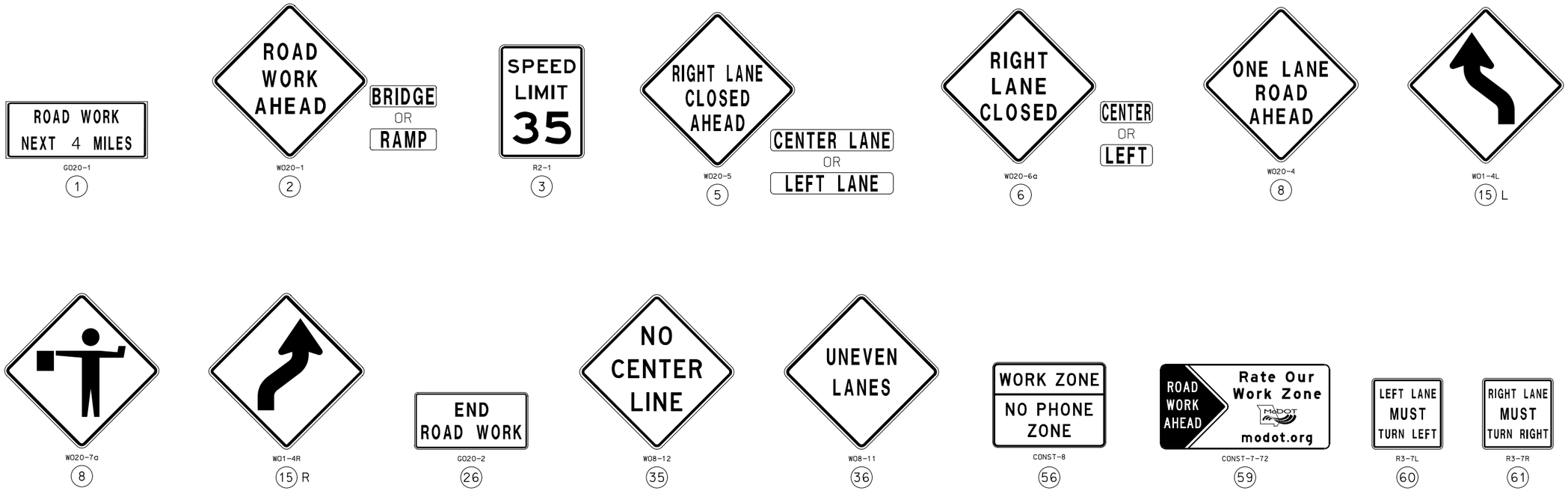


## TRAFFIC CONTROL LEGEND

- SIGN (SINGLE SIDED)
- CHANNELIZER
- BARRICADE
- FLASHING ARROW PANEL
- FLAGGER

TRAFFIC CONTROL PLAN NOTES:

DISTANCE MAY BE ADJUSTED ACCORDING TO FIELD CONDITIONS. WHERE TRAFFIC BACKUPS ARE EXPECTED BEYOND THE ADVANCE WARNING AREA, ADDITIONAL SIGNING MAY BE NEEDED.

ANY EXISTING SIGNING THAT CONFLICTS WITH THE TRAFFIC CONTROL SIGNING SHALL BE COMPETELY COVERED OR REMOVED.

DRAWING NOT TO SCALE. FOLLOW DIMENSIONS.

| SIGN SPACING FOR ADVANCE SIGN SERIES (2) | | |
|---|---|---|
| SPEED LIMIT (1) (MPH) | UNDIVIDED HIGHWAYS | DIVIDED HIGHWAYS |
| 0 - 35 | 200 FT (3) | 200 FT (3) |
| 40 - 45 | 350 FT | 500 FT |
| 50 - 55 | 500 FT | 1000 FT |
| 60 - 70 | S - 1000 FT | SA - 1000 FT<br>SB - 1500 FT<br>SC - 2640 FT |

(1) SPEED LIMIT IS BASED ON POSTED SPEED LIMIT.

(2) SIGN SPACING MAY BE ADJUSTED, NORMALLY BY INCREASING IT, TO ACCOMMODATE FIELD CONDITIONS AND VISIBILITY.

(3) FOR URBAN LOW SPEED, MINIMUM RECOMMENDED SPACING IN MUTCD IS 100'.

| TAPER LENGTH AND SPACING | | | | | |
|---|---|---|---|---|---|
| SPEED LIMIT (1) (MPH) | TAPER LENGTH L FOR LATERAL SHIFTS (2) | | OPTIONAL BUFFER LENGTH (B) | CHANNELIZER SPACING (3) | |
| | SHLDR T1 (4) | LANE T2 (5) | | TAPERS | BUFFER SPACE WORK AREA |
| 0 - 35 | 70 FT | 245 FT | 280 FT | 35 FT (6) | 40 FT (6) |
| 40 - 45 | 150 FT | 540 FT | 400 FT | 40 FT (6) | 80 FT (6) |
| 50 - 55 | 185 FT | 660 FT | 560 FT | 50 FT (7) | 80 FT (7) |
| 60 - 70 | 235 FT | 840 FT | 840 FT | 60 FT (7) | 120 FT (7) |

(1) SPEED LIMIT IS BASED ON POSTED SPEED LIMIT.

(2) TAPER LENGTHS MAY BE ADJUSTED TO ACCOMMODATE CROSSROADS, CURVES, INTERSECTIONS, RAMPS, OR OTHER GEOMETIC FEATURES.

(3) CHANNELIZER SPACING MAY BE REDUCED TO DISCOURAGE TRAFFIC ENCROACHMENT.

(4) BASED ON 10 FT SHOULDER WIDTH.

(5) BASED ON 12 FT LANE WIDTH.

(6) SPACING REDUCED TO $\frac{1}{2}$ AT INTERSECTIONS.

(7) SPACING MAY BE REDUCED TO $\frac{1}{2}$ AT INTERSECTIONS.

STATE OF MISSOURI
CURTIS DEWAYNE WOOLSEY
NUMBER PE-2001018834
PROFESSIONAL ENGINEER
07/26/2023 10:07:16 AM
CURTIS DEWAYNE WOOLSEY - CIVIL
MO-PE-2001018834

| DATE PREPARED | |
|---|---|
| 7/26/2023 | |
| ROUTE 72 | STATE MO |
| DISTRICT SE | SHEET NO. 8 |
| COUNTY CAPE GIRARDEAU | |
| JOB NO. J9P3121B | |
| CONTRACT ID. | |
| PROJECT NO. | |
| BRIDGE NO. | |

| DATE | DESCRIPTION |
|---|---|
| | |

MISSOURI HIGHWAYS AND TRANSPORTATION COMMISSION
105 WEST CAPITOL
JEFFERSON CITY, MO 65102
1-888-ASK-MODOT (1-888-275-6636)

TRAFFIC CONTROL
SHEET 1 OF 11

IF A SEAL IS PRESENT ON THIS SHEET IT HAS BEEN ELECTRONICALLY SEALED AND DATED.

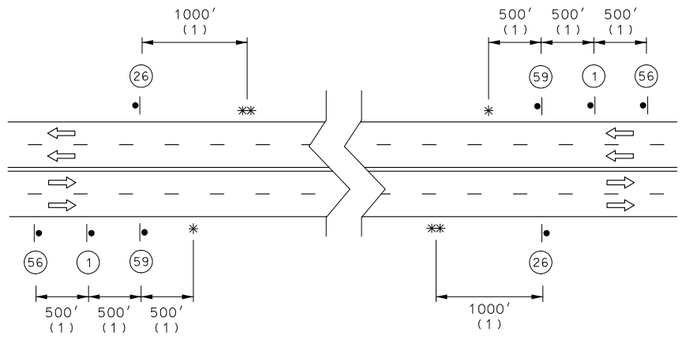


BEGINNING/END OF PROJECT SIGNING
MULTI-LANE

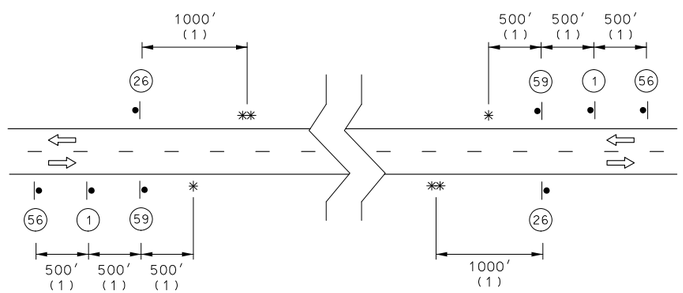


BEGINNING/END OF PROJECT SIGNING
TWO-LANE

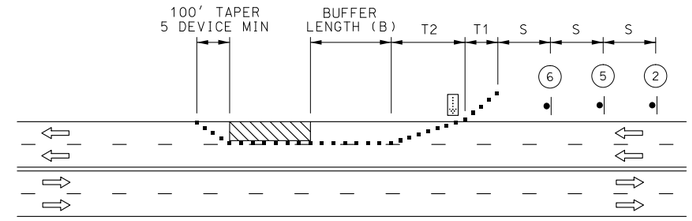


OPERATIONS IN RIGHT LANE
MULTI-LANE

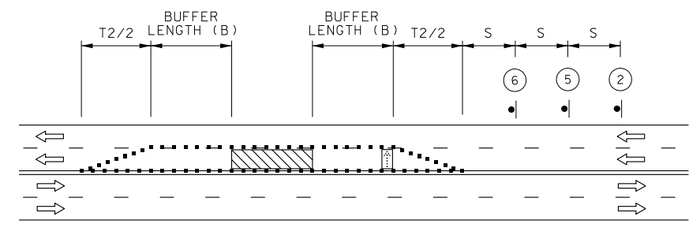


OPERATIONS IN LEFT LANE
MULTI-LANE

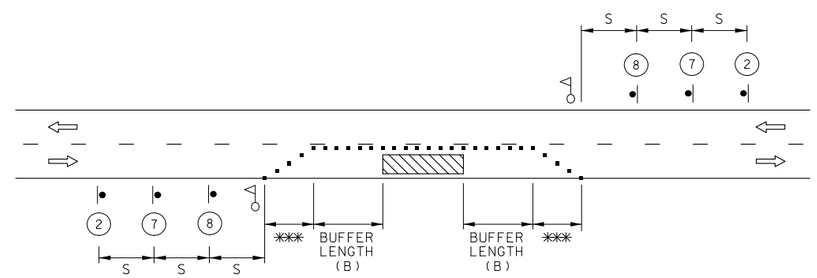


LANE CLOSURE
TWO-LANE

✱✱✱ 100′ TAPER
5 DEVICE MIN

✱ BEGINNING OF PROJECT LIMITS, OR INITIAL WORK ZONE SIGN IF LOCATED OUTSIDE PROJECT LIMITS.

✱✱ END OF PROJECT LIMITS, END OF WORK ZONE TERMINATION AREA IF LOCATED BEYOND END OF PROJECT, OR LAST WORK ZONE SIGN IF LOCATED OUTSIDE PROJECT LIMITS.

(1) DISTANCE MAY BE ADJUSTED ACCORDING TO FIELD CONDITIONS, WHERE TRAFFIC BACKUPS ARE EXPECTED BEYOND THE ADVANCE WARNING AREA, ADDITIONAL SIGNING MAY BE NEEDED.

DRAWING NOT TO SCALE. FOLLOW DIMENSIONS.

STATE OF MISSOURI
CURTIS DEWAYNE WOOLSEY
NUMBER
PE-2001018834
PROFESSIONAL ENGINEER

07/26/2023 10:07:43 AM
CURTIS DEWAYNE WOOLSEY - CIVIL
MO-PE-2001018834

| | |
|---|---|
| DATE PREPARED | 7/6/2023 |
| ROUTE | 72 |
| STATE | MO |
| DISTRICT | SE |
| SHEET NO. | 9 |
| COUNTY | CAPE GIRARDEAU |
| JOB NO. | J9P3121B |
| CONTRACT ID. | |
| PROJECT NO. | |
| BRIDGE NO. | |

| DATE | DESCRIPTION |
|---|---|
| | |

MISSOURI HIGHWAYS AND TRANSPORTATION COMMISSION
105 WEST CAPITOL
JEFFERSON CITY, MO 65102
1-888-ASK-MODOT (1-888-275-6636)

TRAFFIC CONTROL
SHEET 2 OF 11

IF A SEAL IS PRESENT ON THIS SHEET IT HAS BEEN ELECTRONICALLY SEALED AND DATED.

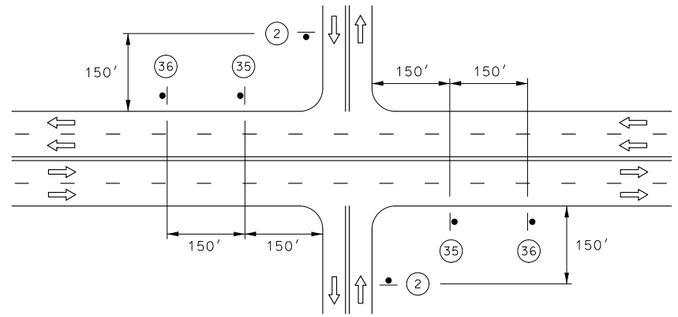


SIGN SPACING AT STATE ROUTE INTERSECTIONS
SHOWING TEMPORARY STIPING

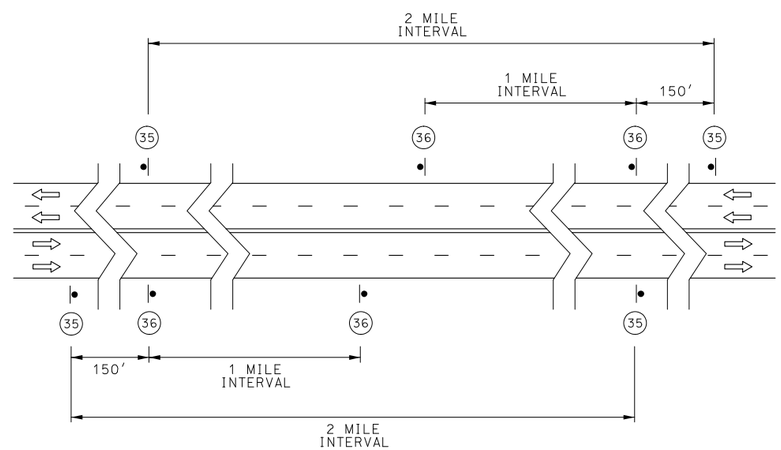


SIGN SPACING AND TEMPORARY STRIPING

NOTES:

SIGN W08-12 AND TEMPORARY RAISED PAVEMENT MARKING (STD PLAN 620.10) INSTALLED WHERE CENTERLINE STRIPING HAS BEEN COVERED OR REMOVED. SIGNS ARE TO REMAIN IN PLACE UNTIL THE PERMANENT CENTERLINE PAVEMENT MARKINGS ARE IN PLACE. SIGNS SHALL BE COVERED OR REMOVED WHEN PAVEMENT CENTERLINE MARKING HAS BEEN INSTALLED.

SIGN W08-12 IS PLACED AT APPROXIMATELY TWO MILE INTERVALS AND AT STATE ROUTE JUNCTIONS. WHEN THE INSTALLATION AT A JUNCTION IS WITHIN ONE-EIGHTH MILE OF THE NORMAL MAINLINE SIGN W08-12, THE LATTER MAY BE ELIMINATED.

DRAWING NOT TO SCALE. FOLLOW DIMENSIONS.

STATE OF MISSOURI
CURTIS DEWAYNE WOOLSEY
NUMBER
PE-2001018834
PROFESSIONAL ENGINEER

07/26/2023 10:07:27 AM
CURTIS DEWAYNE WOOLSEY - CIVIL
MO-PE-2001018834

| | |
|---|---|
| DATE PREPARED | 7/6/2023 |
| ROUTE 72 | STATE MO |
| DISTRICT SE | SHEET NO. 10 |
| COUNTY | CAPE GIRARDEAU |
| JOB NO. | J9P3121B |
| CONTRACT ID. | |
| PROJECT NO. | |
| BRIDGE NO. | |

| DATE | DESCRIPTION |
|---|---|
| | |

MISSOURI HIGHWAYS AND TRANSPORTATION COMMISSION

105 WEST CAPITOL
JEFFERSON CITY, MO 65102
1-888-ASK-MODOT (1-888-275-6636)

TRAFFIC CONTROL
SHEET 3 OF 11

IF A SEAL IS PRESENT ON THIS SHEET IT HAS BEEN ELECTRONICALLY SEALED AND DATED.

RIGHT LANE CLOSURE AT INTERSECTION
WORK ON NEAR OR FAR SIDE

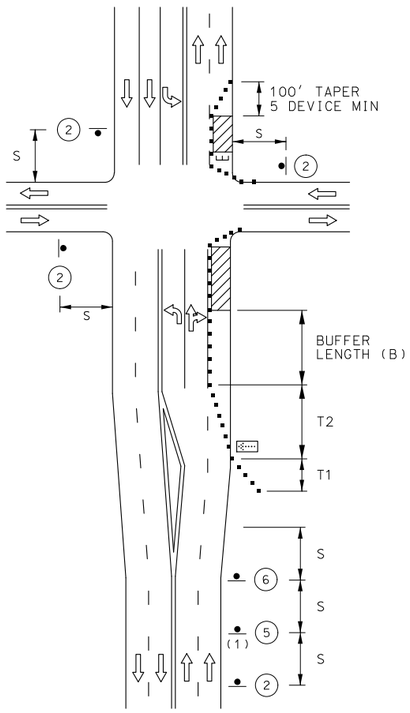


RIGHT LANE CLOSURE AT INTERSECTION
WORK ON FAR SIDE

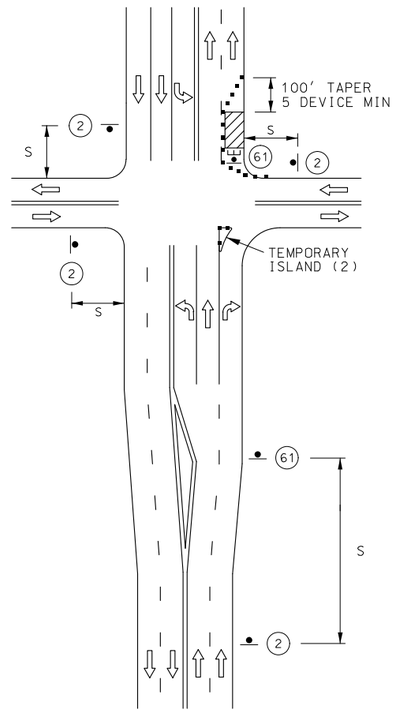


LANE CLOSURE OF LEFT LANE
ON FAR SIDE OF INTERSECTION
WORK ON NEAR OR FAR SIDE

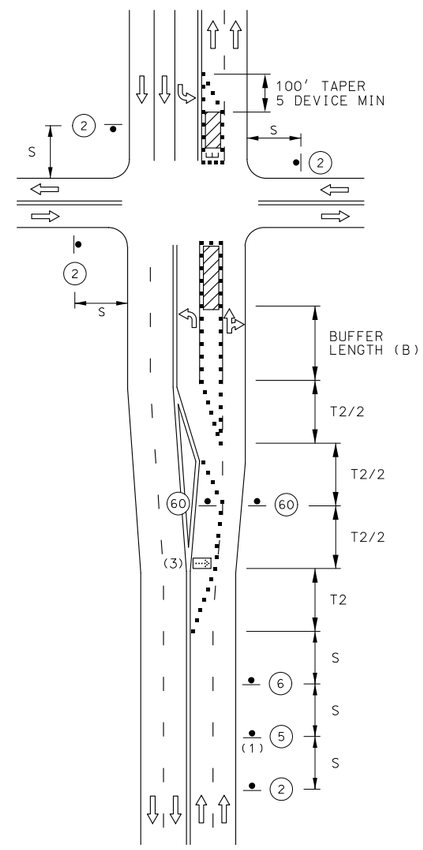


(1) W020-5 SIGN MAY BE OMITTED IN LOW SPEED URBAN AREAS WHERE THERE IS NOT SUFFICIENT SPACE FOR THE FULL SIGN SERIES.
(2) TEMPORARY ISLAND MAY BE USED TO EMPHASIZE THE MANDATORY RIGHT TURN MOVEMENT WHERE THERE IS A SUFFICIENT RIGHT TURN RADIUS.
(3) THE FLASHING ARROW BOARD SHOULD BE LOCATED AT THE BEGINNING OF THE MERGING TAPER WHEN MEDIAN WIDTH ALLOWS THIS PLACEMENT.

DRAWING NOT TO SCALE. FOLLOW DIMENSIONS.

NOTES:

FOR SIGNALIZED INTERSECTIONS, ADJUSTMENTS MAY NEED TO BE MADE TO SIGNAL PHASING, TIMING, INDICATIONS, OR DETECTOR SETTINGS.

BARRICADES ARE OPTIONAL FOR SHORT TERM OPERATIONS.

10 FEET DEVICE SPACING IS USED WHERE TRAFFIC IS GUIDED ACROSS DOUBLE YELLOW LINES OR OTHER CONFLICTING PAVEMENT MARKING. ALL OTHER SPACINGS ARE ONE-HALF OF THE SPACING.

STATE OF MISSOURI
CURTIS DEWAYNE WOOLSEY
NUMBER
PE-2001018834
PROFESSIONAL ENGINEER

07/26/2023 10:07:59 AM
CURTIS DEWAYNE WOOLSEY - CIVIL
MO-PE-2001018834

| DATE PREPARED | |
|---|---|
| 7/6/2023 | |
| ROUTE 72 | STATE MO |
| DISTRICT SE | SHEET NO. 11 |
| COUNTY CAPE GIRARDEAU | |
| JOB NO. J9P3121B | |
| CONTRACT ID. | |
| PROJECT NO. | |
| BRIDGE NO. | |

| DATE | DESCRIPTION |
|---|---|
| | |

MISSOURI HIGHWAYS AND TRANSPORTATION COMMISSION
105 WEST CAPITOL
JEFFERSON CITY, MO 65102
1-888-ASK-MODOT (1-888-275-6636)

TRAFFIC CONTROL
SHEET 4 OF 11

IF A SEAL IS PRESENT ON THIS SHEET IT HAS BEEN ELECTRONICALLY SEALED AND DATED.

## MOBILE OPERATION TWO-LANE

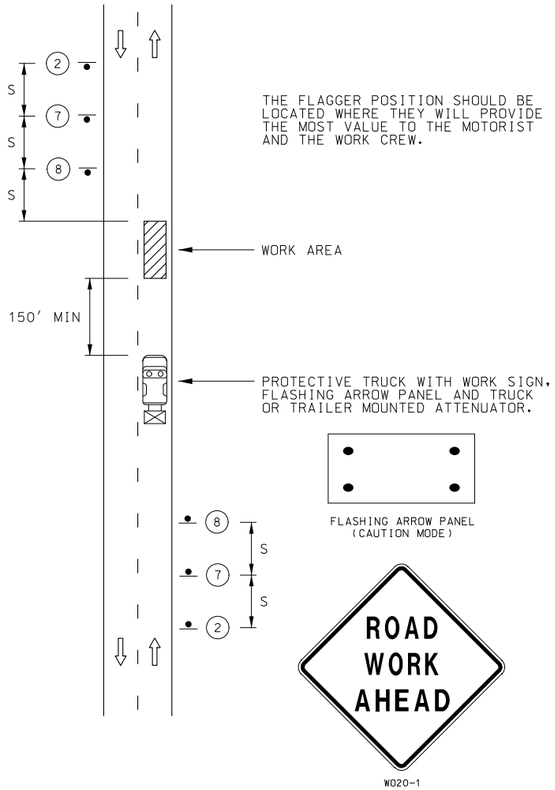


## MOBILE OPERATION MULTI-LANE

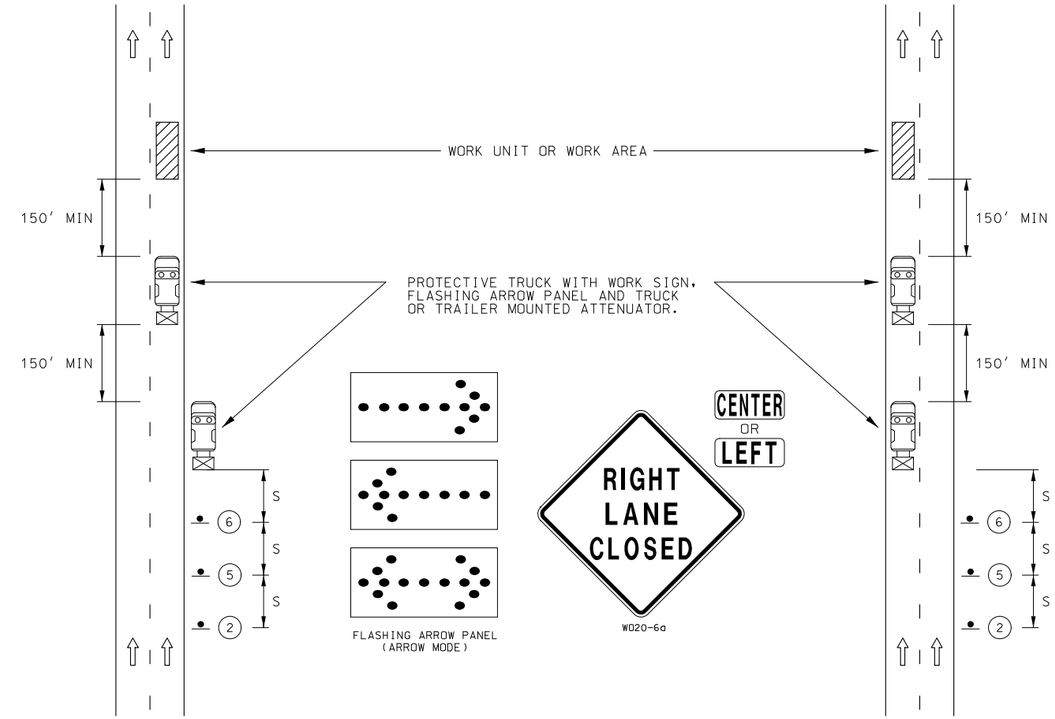


NOTES:

PROTECTIVE TRUCK AND WORK VEHICLES SHALL DISPLAY HIGH-INTENSITY ROTATING, FLASHING, OSCILLATING, OR STROBE LIGHTS.

VEHICLE HAZARD WARNING SIGNALS SHALL NOT BE USED INSTEAD OF THE VEHICLE'S HIGH-INSTENSITY ROTATING, FLASHING, OSCILLATING, OR STROBE LIGHTS.

FLASHING ARROW PANELS SHALL, AS A MINIMUM, BE TYPE B, WITH A SIZE OF 60 X 30 INCHES.

VEHICLE-MOUNTED SIGNS SHALL BE MOUNTED IN A MANNER SUCH THAT THEY ARE NOT OBSCURED BY EQUIPMENT OR SUPPLES, SIGN LEGENDS ON VEHICLE-MOUNTED SIGNS SHALL BE COVERED OR TURNED FROM VIEW WHEN WORK IS NOT IN PROGRESS.

DRAWING NOT TO SCALE. FOLLOW DIMENSIONS.

STATE OF MISSOURI
CURTIS DEWAYNE WOOLSEY
NUMBER
PE-2001018834
PROFESSIONAL ENGINEER

07/26/2023 10:08:15 AM
CURTIS DEWAYNE WOOLSEY - CIVIL
MO-PE-2001018834

| DATE PREPARED | |
|---|---|
| 7/6/2023 | |
| ROUTE 72 | STATE MO |
| DISTRICT SE | SHEET NO. 12 |
| COUNTY CAPE GIRARDEAU | |
| JOB NO. J9P3121B | |
| CONTRACT ID. | |
| PROJECT NO. | |
| BRIDGE NO. | |

| DATE | DESCRIPTION |
|---|---|
| | |

IF A SEAL IS PRESENT ON THIS SHEET IT HAS BEEN ELECTRONICALLY SEALED AND DATED.

MISSOURI HIGHWAYS AND TRANSPORTATION COMMISSION

105 WEST CAPITOL
JEFFERSON CITY, MO 65102
1-888-ASK-MODOT (1-888-275-6636)

TRAFFIC CONTROL
SHEET 5 OF 11

CENTER LINE/EDGE LINE STRIPING
TWO-LANE

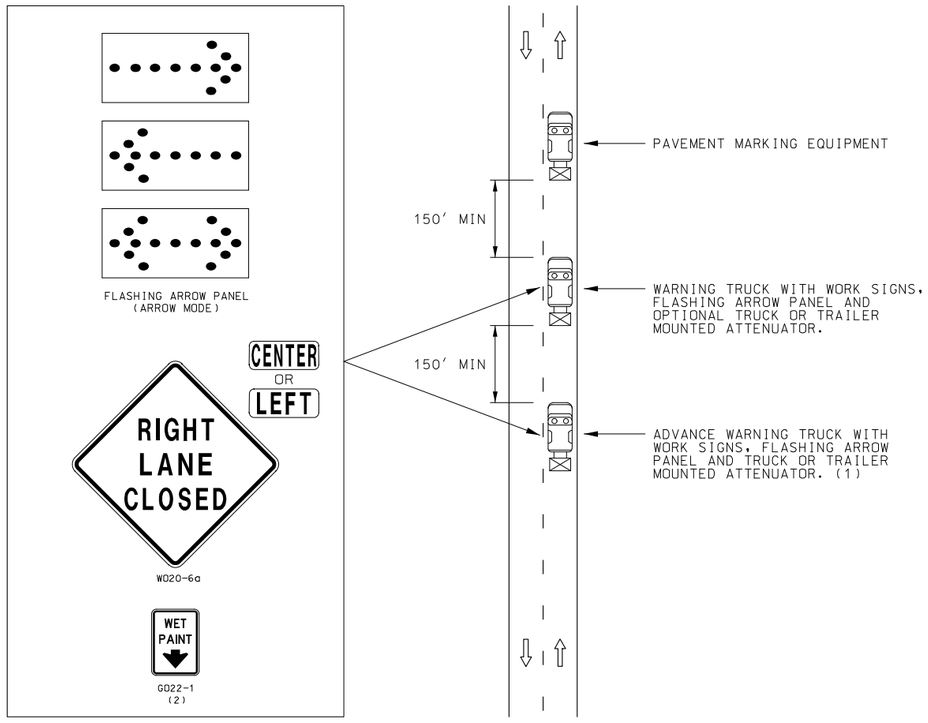


CENTER LINE AND/OR LANE LINE STRIPING
MULTI-LANE

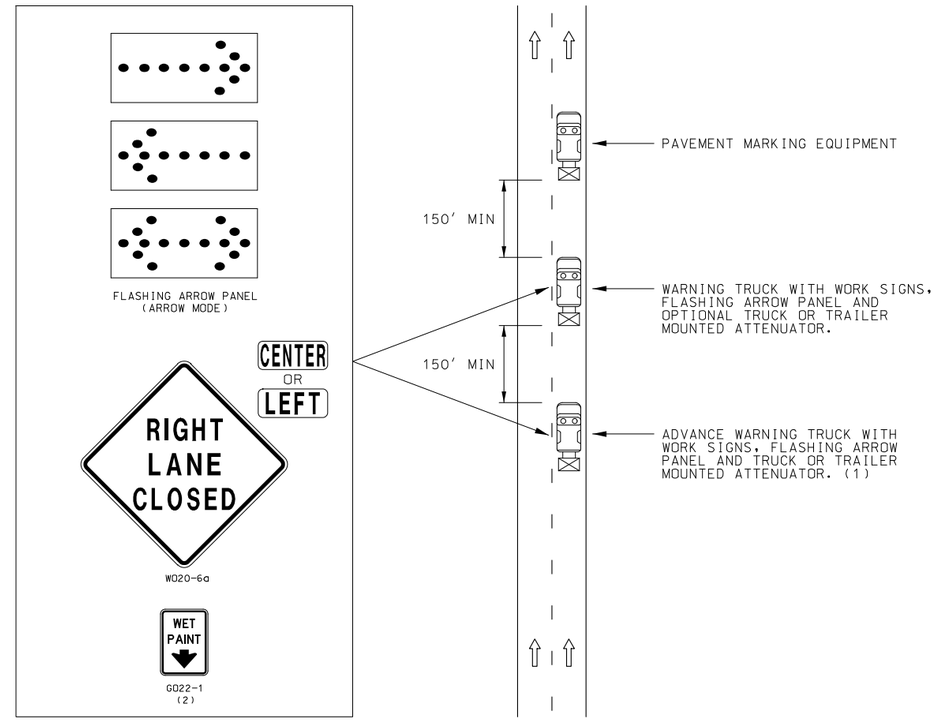


NOTES:

PROTECTIVE TRUCK AND WORK VEHICLES SHALL DISPLAY HIGH-INTENSITY ROTATING, FLASHING, OSCILLATING, OR STROBE LIGHTS.

VEHICLE HAZARD WARNING SIGNALS SHALL NOT BE USED INSTEAD OF THE VEHICLE'S HIGH-INSTENSITY ROTATING, FLASHING, OSCILLATING, OR STROBE LIGHTS.

FLASHING ARROW PANELS SHALL, AS A MINIMUM, BE TYPE B, WITH A SIZE OF 60 X 30 INCHES.

VEHICLE-MOUNTED SIGNS SHALL BE MOUNTED IN A MANNER SUCH THAT THEY ARE NOT OBSCURED BY EQUIPMENT OR SUPPLES, SIGN LEGENDS ON VEHICLE-MOUNTED SIGNS SHALL BE COVERED OR TURNED FROM VIEW WHEN WORK IS NOT IN PROGRESS.

DRAWING NOT TO SCALE. FOLLOW DIMENSIONS.

(1) ADVANCE WARNING TRUCK IS POSITIONED AT THE NO TRACK POINT OF THE PAVEMENT MARKING MATERIAL OR SPACING SHOWN, WHICH EVER IS GREATER.
(2) WET PAINT SIGNS ARE INSTALLED TO INDICATE THE SIDE IN WHICH THE PAVEMENT MATERIAL IS BEING APPLIED. AT THE CONTRACTOR'S OPTION, A FRONT FACING WET PAINT SIGN MAY BE INSTALLED ON THE LEFT SIDE OF THE PAVEMENT MARKING EQUIPMENT.

STATE OF MISSOURI
CURTIS DEWAYNE WOOLSEY
NUMBER
PE-2001018834
PROFESSIONAL ENGINEER
07/26/2023 10:09:45 AM
CURTIS DEWAYNE WOOLSEY - CIVIL
MO-PE-2001018834

| DATE PREPARED | |
|---|---|
| 7/6/2023 | |
| ROUTE 72 | STATE MO |
| DISTRICT SE | SHEET NO. 13 |
| COUNTY CAPE GIRARDEAU | |
| JOB NO. J9P3121B | |
| CONTRACT ID. | |
| PROJECT NO. | |
| BRIDGE NO. | |

| DATE | DESCRIPTION |
|---|---|
| | |

IF A SEAL IS PRESENT ON THIS SHEET IT HAS BEEN ELECTRONICALLY SEALED AND DATED.

MISSOURI HIGHWAYS AND TRANSPORTATION COMMISSION
105 WEST CAPITOL
JEFFERSON CITY, MO 65102
1-888-ASK-MODOT (1-888-275-6636)

TRAFFIC CONTROL
SHEET 6 OF 11

NOTES:
10' CHANNELIZER SPACING TO BE USED.
LANE WIDTHS SHALL BE 11' MINIMUM.

DRAWING NOT TO SCALE. FOLLOW DIMENSIONS.

STATE OF MISSOURI
CURTIS DEWAYNE WOOLSEY
NUMBER
PE-2001018834
PROFESSIONAL ENGINEER

07/20/2023 10:09:56 AM
CURTIS DEWAYNE WOOLSEY - CIVIL
MO-PE-2001018834

| | |
|---|---|
| DATE PREPARED | 7/6/2023 |
| ROUTE | 72 |
| STATE | MO |
| DISTRICT | SE |
| SHEET NO. | 14 |
| COUNTY | CAPE GIRARDEAU |
| JOB NO. | J9P3121B |
| CONTRACT ID. | |
| PROJECT NO. | |
| BRIDGE NO. | |

| DATE | DESCRIPTION |
|---|---|
| | |

MISSOURI HIGHWAYS AND TRANSPORTATION COMMISSION

105 WEST CAPITOL
JEFFERSON CITY, MO 65102
1-888-ASK-MODOT (1-888-275-6636)

TRAFFIC CONTROL
RTE 34 PAVEMENT REPLACEMENT
SHEET 7 OF 11

IF A SEAL IS PRESENT ON THIS SHEET IT HAS BEEN ELECTRONICALLY SEALED AND DATED.

NOTES:
15′ CHANNELIZER SPACING TO BE USED.
TMA'S SHALL BE USED WHEN A 150′ ROLL AHEAD SPACE IS AVAILABLE TO PROTECT WORKERS. A PROTECTIVE VEHICLE SHALL BE USED WHEN A 150′ ROLL AHEAD SPACE IS NOT AVAILABLE.

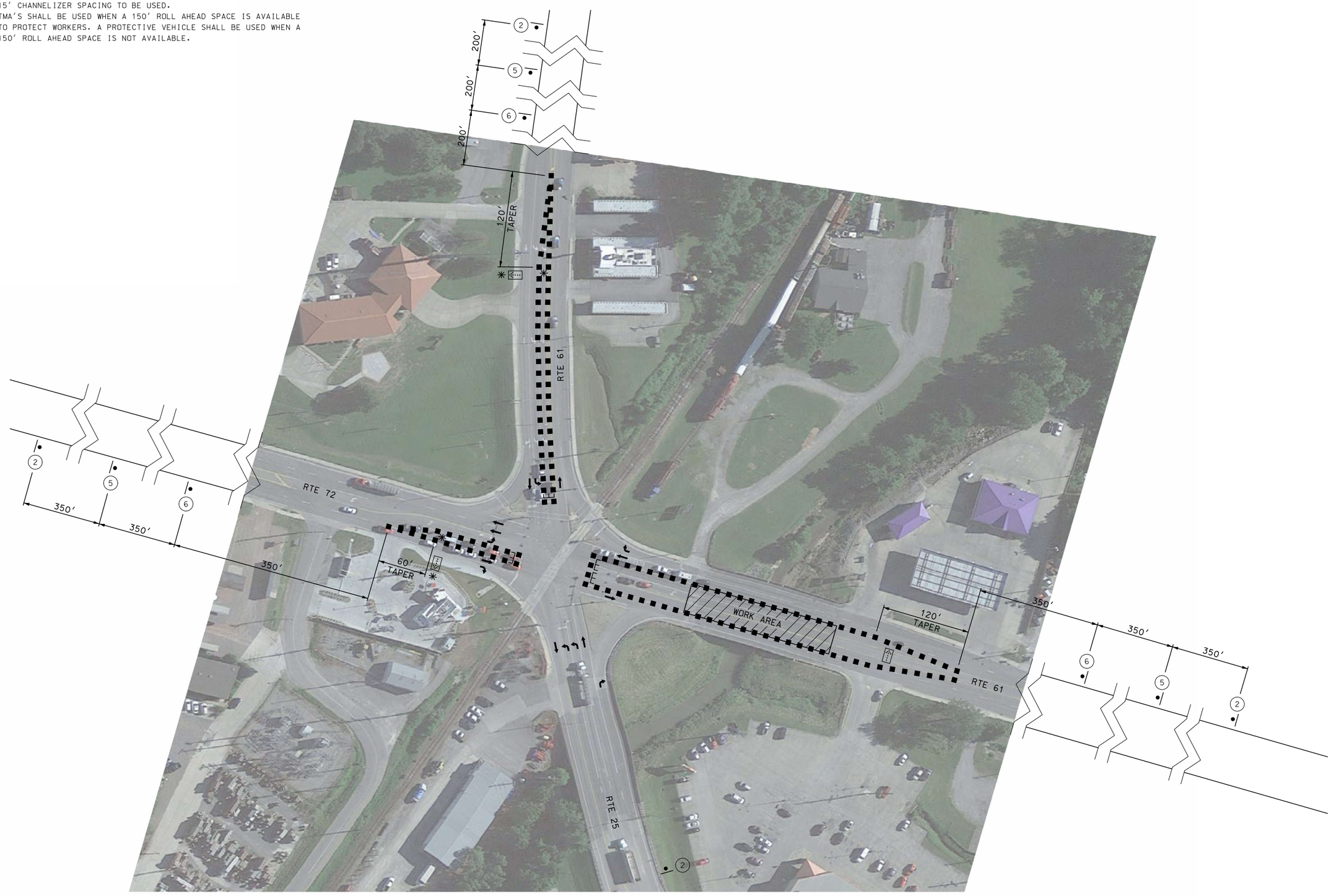


DRAWING NOT TO SCALE. FOLLOW DIMENSIONS.

STATE OF MISSOURI
CURTIS DEWAYNE WOOLSEY
NUMBER
PE-2001018834
PROFESSIONAL ENGINEER

07/06/2023 10:10:09 AM
CURTIS DEWAYNE WOOLSEY - CIVIL
MO-PE-2001018834

| DATE PREPARED | |
|---|---|
| 7/6/2023 | |
| ROUTE 72 | STATE MO |
| DISTRICT SE | SHEET NO. 15 |
| COUNTY CAPE GIRARDEAU | |
| JOB NO. J9P3121B | |
| CONTRACT ID. | |
| PROJECT NO. | |
| BRIDGE NO. | |

| DATE | DESCRIPTION |
|---|---|
| | |

IF A SEAL IS PRESENT ON THIS SHEET IT HAS BEEN ELECTRONICALLY SEALED AND DATED.

MISSOURI HIGHWAYS AND TRANSPORTATION COMMISSION
105 WEST CAPITOL
JEFFERSON CITY, MO 65102
1-888-ASK-MODOT (1-888-275-6636)

TRAFFIC CONTROL
RTE 61 HALF SOLE REPAIR
STAGE ONE
SHEET 8 OF 11

NOTES:
15′ CHANNELIZER SPACING TO BE USED.
TMA'S SHALL BE USED WHEN A 150′ ROLL AHEAD SPACE IS AVAILABLE TO PROTECT WORKERS. A PROTECTIVE VEHICLE SHALL BE USED WHEN A 150′ ROLL AHEAD SPACE IS NOT AVAILABLE.

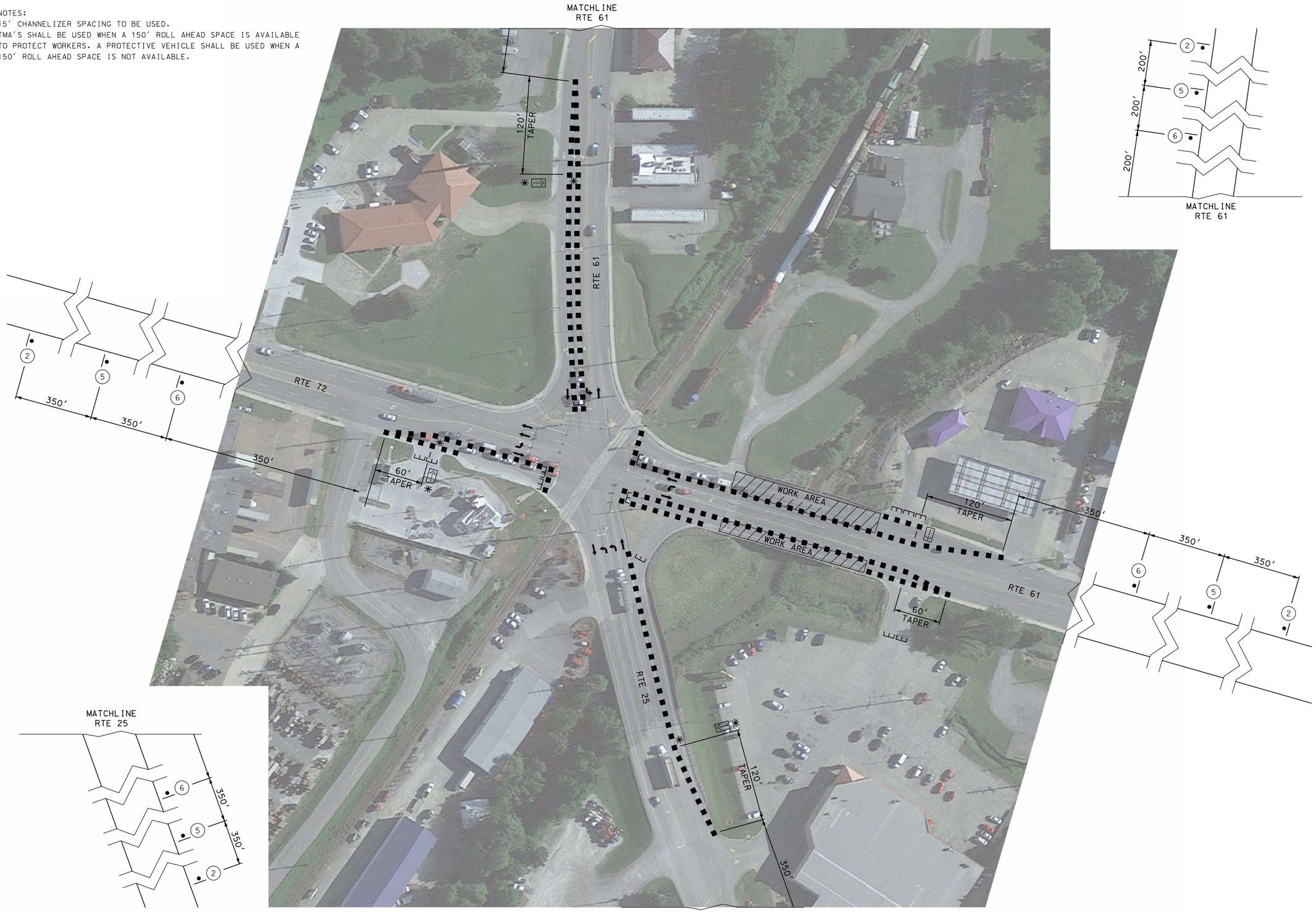


DRAWING NOT TO SCALE. FOLLOW DIMENSIONS.

STATE OF MISSOURI
CURTIS DEWAYNE WOOLSEY
NUMBER
PE-2001018834
PROFESSIONAL ENGINEER

07/26/2023 10:10:23 AM
CURTIS DEWAYNE WOOLSEY - CIVIL
MO-PE-2001018834

| DATE PREPARED | |
|---|---|
| 7/6/2023 | |
| ROUTE 72 | STATE MO |
| DISTRICT SE | SHEET NO. 16 |
| COUNTY CAPE GIRARDEAU | |
| JOB NO. J9P3121B | |
| CONTRACT ID. | |
| PROJECT NO. | |
| BRIDGE NO. | |

| DATE | DESCRIPTION |
|---|---|
| | |

IF A SEAL IS PRESENT ON THIS SHEET IT HAS BEEN ELECTRONICALLY SEALED AND DATED.

MISSOURI HIGHWAYS AND TRANSPORTATION COMMISSION
105 WEST CAPITOL
JEFFERSON CITY, MO 65102
1-888-ASK-MODOT (1-888-275-6636)

TRAFFIC CONTROL
RTE 61 HALF SOLE REPAIR
STAGE TWO
SHEET 9 OF 11

NOTES:
15' CHANNELIZER SPACING TO BE USED.
TMA'S SHALL BE USED WHEN A 150' ROLL AHEAD SPACE IS AVAILABLE TO PROTECT WORKERS. A PROTECTIVE VEHICLE SHALL BE USED WHEN A 150' ROLL AHEAD SPACE IS NOT AVAILABLE.

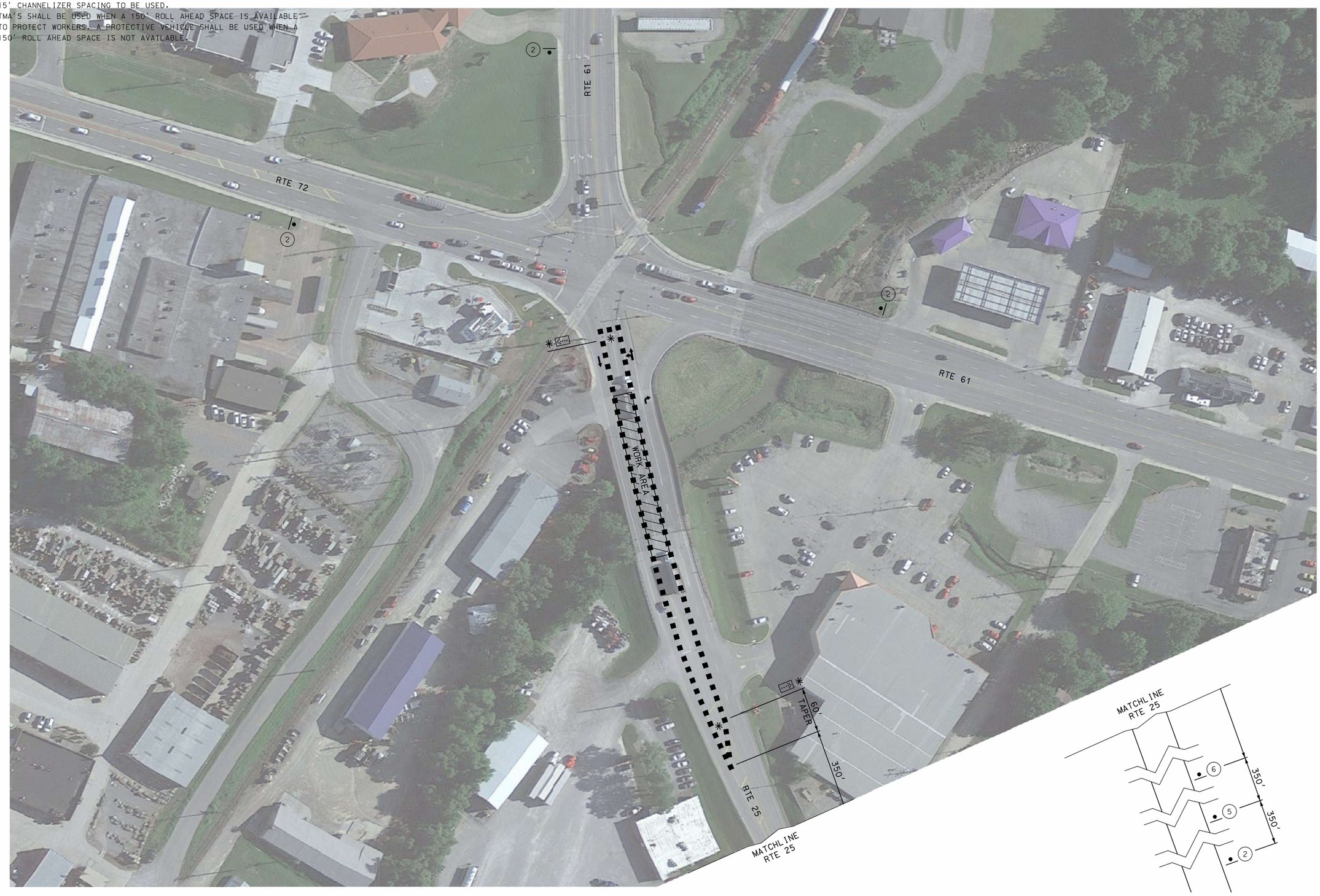


DRAWING NOT TO SCALE. FOLLOW DIMENSIONS.

STATE OF MISSOURI
CURTIS DEWAYNE WOOLSEY
NUMBER
PE-2001018834
PROFESSIONAL ENGINEER

07/26/2023 10:10:35 AM
CURTIS DEWAYNE WOOLSEY - CIVIL
MO-PE-2001018834

| DATE PREPARED | |
|---|---|
| 7/6/2023 | |
| ROUTE 72 | STATE MO |
| DISTRICT SE | SHEET NO. 17 |
| COUNTY CAPE GIRARDEAU | |
| JOB NO. J9P3121B | |
| CONTRACT ID. | |
| PROJECT NO. | |
| BRIDGE NO. | |

| DATE | DESCRIPTION |
|---|---|
| | |

MISSOURI HIGHWAYS AND TRANSPORTATION COMMISSION

105 WEST CAPITOL
JEFFERSON CITY, MO 65102
1-888-ASK-MODOT (1-888-275-6636)

TRAFFIC CONTROL
RTE 25 HALF SOLE REPAIR
STAGE ONE
SHEET 10 OF 11

IF A SEAL IS PRESENT ON THIS SHEET IT HAS BEEN ELECTRONICALLY SEALED AND DATED.

NOTES:
15' CHANNELIZER SPACING TO BE USED.
TMA'S SHALL BE USED WHEN A 150' ROLL AHEAD SPACE IS AVAILABLE TO PROTECT WORKERS. A PROTECTIVE VEHICLE SHALL BE USED WHEN A 150' ROLL AHEAD SPACE IS NOT AVAILABLE.

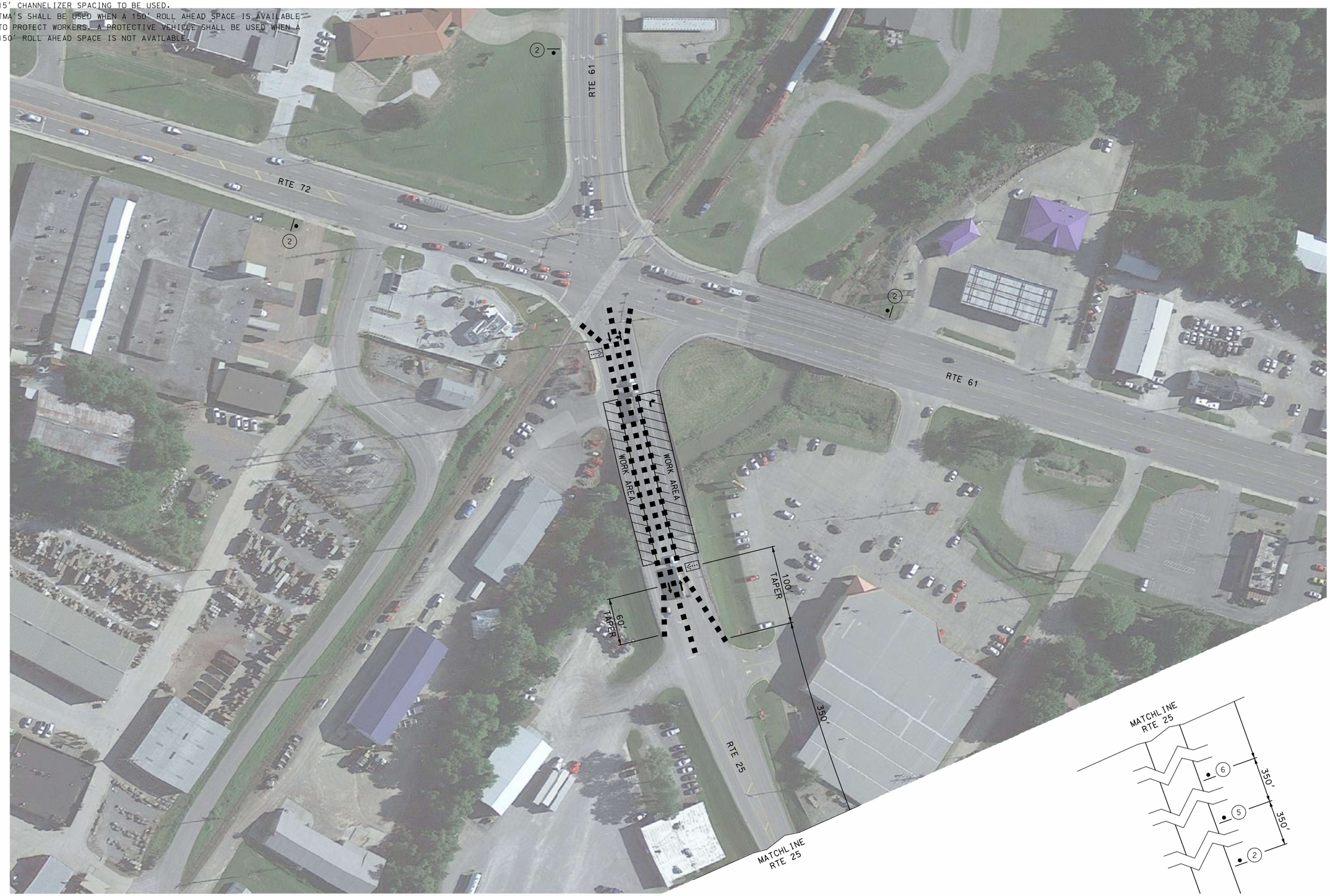


DRAWING NOT TO SCALE. FOLLOW DIMENSIONS.

STATE OF MISSOURI
CURTIS DEWAYNE WOOLSEY
NUMBER
PE-2001018834
PROFESSIONAL ENGINEER
07/06/2023 10:10:53 AM
CURTIS DEWAYNE WOOLSEY - CIVIL
MO-PE-2001018834

| | |
|---|---|
| DATE PREPARED | 7/6/2023 |
| ROUTE 72 | STATE MO |
| DISTRICT SE | SHEET NO. 18 |
| COUNTY | CAPE GIRARDEAU |
| JOB NO. | J9P3121B |
| CONTRACT ID. | |
| PROJECT NO. | |
| BRIDGE NO. | |

| DATE | DESCRIPTION |
|---|---|
| | |

MISSOURI HIGHWAYS AND TRANSPORTATION COMMISSION
105 WEST CAPITOL
JEFFERSON CITY, MO 65102
1-888-ASK-MODOT (1-888-275-6636)

IF A SEAL IS PRESENT ON THIS SHEET IT HAS BEEN ELECTRONICALLY SEALED AND DATED.

TRAFFIC CONTROL
RTE 25 HALF SOLE REPAIR
STAGE TWO
SHEET 11 OF 11

TEMPORARY EROSION CONTROL LEGEND

(A) ALTERNATE DITCH CHECK

SILT FENCE

DRAWING NOT TO SCALE.

STATE OF MISSOURI
CURTIS DEWAYNE WOOLSEY
NUMBER PE-2001018834
PROFESSIONAL ENGINEER

07/26/2023 10:11:05 AM
CURTIS DEWAYNE WOOLSEY - CIVIL
MO-PE-2001018834

| DATE PREPARED | |
|---|---|
| 7/6/2023 | |
| ROUTE 72 | STATE MO |
| DISTRICT SE | SHEET NO. 19 |
| COUNTY CAPE GIRARDEAU | |
| JOB NO. J9P3121B | |
| CONTRACT ID. | |
| PROJECT NO. | |
| BRIDGE NO. | |

| DESCRIPTION | DATE |
|---|---|
| | |

MISSOURI HIGHWAYS AND TRANSPORTATION COMMISSION

105 WEST CAPITOL
JEFFERSON CITY, MO 65102
1-888-ASK-MODOT (1-888-275-6636)

EROSION CONTROL
SHEET 1 OF 1

IF A SEAL IS PRESENT ON THIS SHEET IT HAS BEEN ELECTRONICALLY SEALED AND DATED.