MISSOURI HIGHWAYS AND TRANSPORTATION COMMISSION
PLANS
FOR PROPOSED
STATE HIGHWAY
LACLEDE COUNTY
SEC. 4 T34N R16W

DESIGN DESIGNATION

RTE 64	
A.A.D.T - 2024 =	6,211
A.A.D.T - 2044 =	6,409
D.H.V. =	9.53%
T =	5.26%
V =	55 M.P.H.
D =	50%/ 50%
FUNCTIONAL CLASS.	MAJOR COLLECTOR

NORMAL ACCESS HIGHWAY

THE DESIGN GUIDE FOR THE WIDTH OF RIGHT OF WAY FOR THUS PROJECT WILL BE 40' FROM THE EXISTING CENTERLINE. MORE RIGHT OF WAY AS WELL AS OTHER PROPERTY INTERESTS, MAY BE SECURED TO SATISFY THE REQIREMENTS OF THE DESIGN FEATURES OF THIS PROJECT.

NOTE: ACQUISTION OF NORMAL RIGHT OF WAY IS NECESSARY FOR CONSTRUCTION ON THIS PROJECT.

CONVENTIONAL SYMBOLS
(USED IN PLANS)

	EXISTING	NEW
BUILDINGS AND STRUCTURES		
GUARD RAIL		
GUARD CABLE		
CONCRETE RIGHT-OF-WAY MARKER		
STEEL RIGHT-OF-WAY MARKER		
LOCATION SURVEY MARKER		
UTILITIES		
FIBER OPTICS	—FO—	—FO—
OVERHEAD CABLE TV	—OTV—	—OTV—
UNDERGROUND CABLE TV	—UTV—	—UTV—
OVERHEAD TELEPHONE	—OT—	—OT—
UNDERGROUND TELEPHONE	—UT—	—UT—
OVERHEAD POWER	—OE—	—OE—
UNDERGROUND POWER	—UE—	—UE—
SANITARY SEWER	—S—	—S—
STORM SEWER	—SS—	—SS—
GAS	—G—	—G—
WATER	—W—	—W—
MANHOLE	SAN	
FIRE HYDRANT	HYD	
WATER VALVE	WV	
WATER METER	WM	
DROP INLET	D	
DITCH BLOCK		
GROUND MOUNTED SIGN	SIGN	
LIGHT POLE		
H-FRAME POWER POLE		
TELEPHONE PEDESTAL	PED	
FENCE		
CHAIN LINK	—V—	
WOVEN WIRE	—X—	
GATE POST		
BENCHMARK	BM	

NOTE: DASHED OR OPEN SYMBOLS INDICATE EXISTING FEATURES

NOT TO SCALE

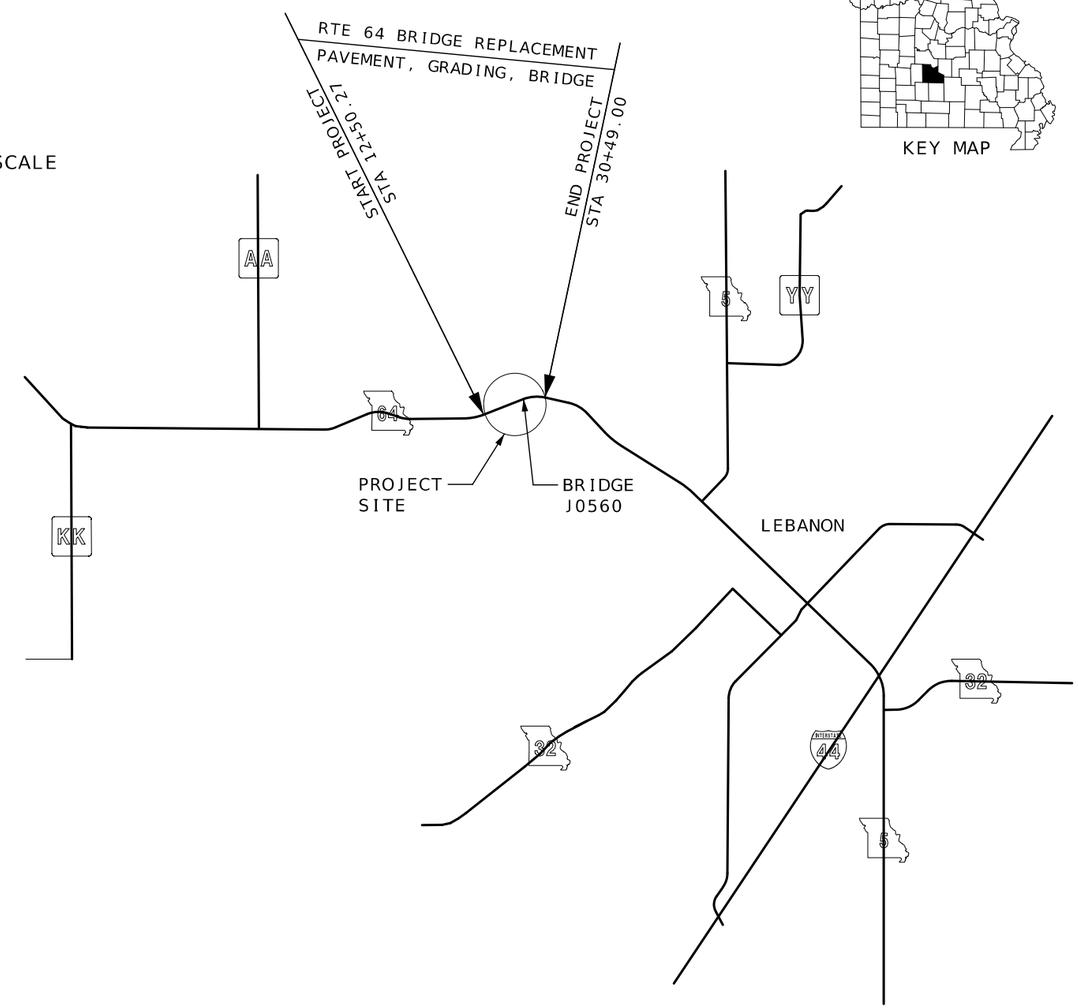

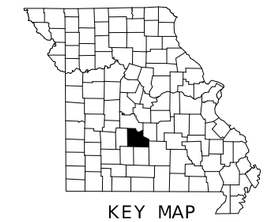

THE EXISTENCE AND APPROXIMATE LOCATION OF UTILITY FACILITIES KNOWN TO EXIST, AS SHOWN ON THE PLANS, ARE BASED ON THE BEST INFORMATION AVAILABLE TO THE COMMISSION AT THIS TIME. THIS INFORMATION IS PROVIDED BY THE COMMISSION "AS-IS" AND THE COMMISSION EXPRESSLY DISCLAIMS ANY REPRESENTATION OR WARRANTY AS TO THE COMPLETENESS, ACCURACY, OR SUITABILITY OF THE INFORMATION FOR ANY USE. RELIANCE UPON THIS INFORMATION IS DONE AT THE RISK AND PERIL OF THE USER, AND THE COMMISSION SHALL NOT BE LIABLE FOR ANY DAMAGES THAT MAY ARISE FROM ANY ERROR IN THE INFORMATION. IT IS, THEREFORE, THE RESPONSIBILITY OF THE CONTRACTOR TO VERIFY THE EXISTENCE, LOCATION AND STATUS OF ANY FACILITY. SUCH VERIFICATION INCLUDES DIRECT CONTACT WITH THE LISTED UTILITIES.

INDEX OF SHEETS

LENGTH OF PROJECT

RTE 64			
BEGINNING	STA	12+50.27	
END	STA	30+49.00	
APPARENT LENGTH		1,798.73	FEET
EQUATIONS AND EXCEPTIONS			
NONE			
TOTAL CORRECTIONS		0.0	FEET
NET LENGTH OF PROJECT		1,798.73	FEET
STATE LENGTH		0.341	MILES

FOR INFORMATION ONLY
ESTIMATED DISTURBED ACRES 1.0 ACRES

STATE OF MISSOURI
RYAN JOSEPH LIBBERT
NUMBER PE-2006019679
PROFESSIONAL ENGINEER

09/29/2023 7:59:10 AM
RYAN JOSEPH LIBBERT - CIVIL
MO-PE-2006019679

DATE PREPARED
9/28/2023

ROUTE	STATE
64	MO
DISTRICT	SHEET NO.
CD	1

COUNTY
LACLEDE

JOB NO.
J5P3244

CONTRACT ID.

PROJECT NO.

BRIDGE NO.

DESCRIPTION	DATE

MISSOURI HIGHWAYS AND TRANSPORTATION COMMISSION
105 WEST CAPITOL
JEFFERSON CITY, MO 65102
1-888-ASK-MODOT (1-888-275-6636)

TITLE SHEET

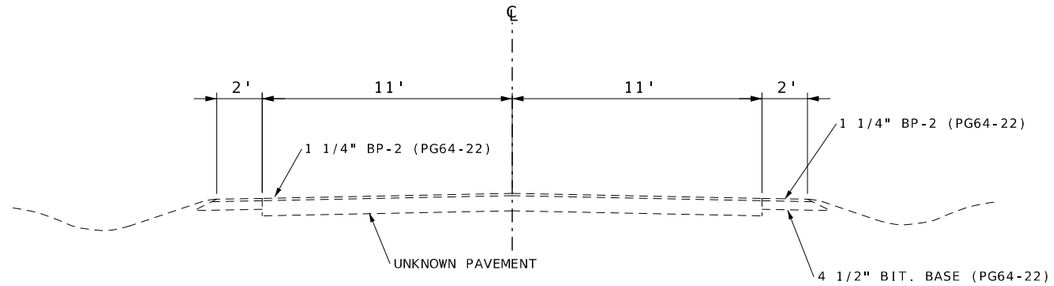

TYPICAL SECTION OF EXISTING RTE 64

STA 499+67.31 RTE 64 ℄ - STA 517+65.85 RTE 64 ℄

SE SLOPE Lt.	
STA	SLOPE
12+50.27	-2%
17+11.57	-2%
17+62.63	0%
18+13.68	2%
21+33.82	2%
22+76.77	7.6%
28+84.33	7.6%
30+27.28	2%
30+49.00	1.15%

SE SLOPE Rt.	
STA	SLOPE
12+50.27	-2%
17+11.57	-2%
17+62.63	-2%
18+13.68	-2%
21+33.82	-2%
22+76.77	-7.60%
28+84.33	-7.60%
29+49.00	-5.07%
30+49.00	-7.91%

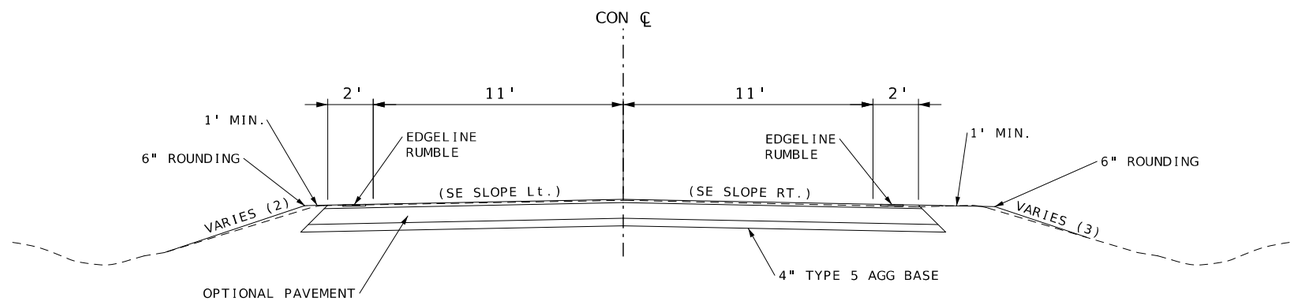

TYPICAL SECTION OF PROPOSED RTE 64

STA 499+67.31 RTE 64 ℄= STA 12+50.27 CON ℄ - STA 17+80.42 CON ℄

OPTIONAL PAVEMENT	
HMA DESIGN	JPCP DESIGN
1 3/4 IN. BP-1 (PG 64-22) OVER 8 1/4 IN. BIT BASE (PG 64-22)	8 1/2" JPCP 15' JOINTS 1 1/4" DOWELS 13' - 15' SLABS

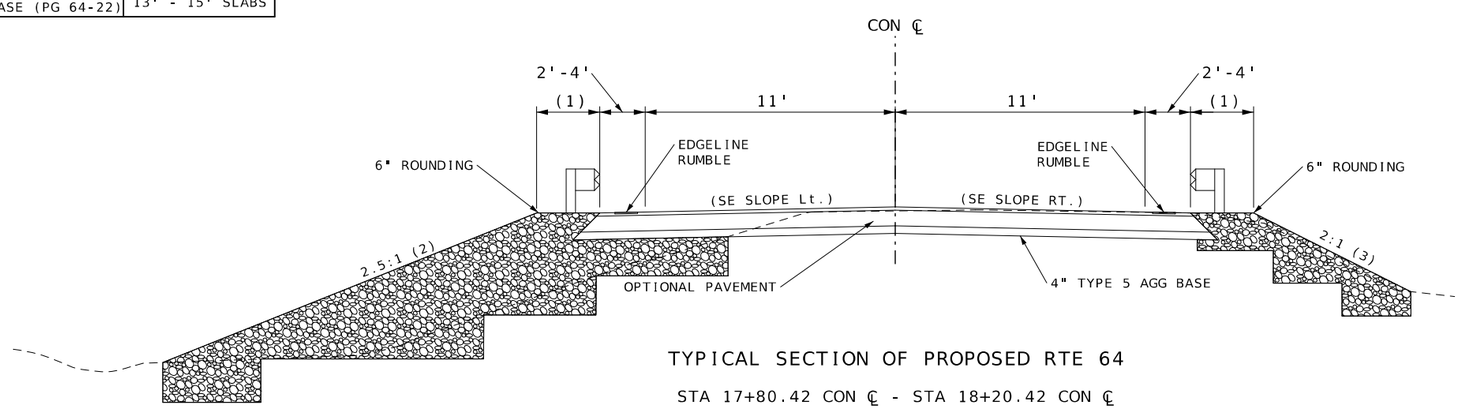

TYPICAL SECTION OF PROPOSED RTE 64

STA 17+80.42 CON ℄ - STA 18+20.42 CON ℄

(1) MAINTAIN MIN. 2' BEHIND GUARDRAIL POSTS

(2) STA 12+50.27 TO 16+58.28 - 3:1
STA 16+58.28 TO 16+72.46 - 3:1 TO 2.5:1
STA 16+72.46 TO 18+40.42 - 2.5:1 (ROCK FILL)
STA 20+49.14 TO 22+77.10 - 2.5:1 (ROCK FILL)
STA 22+77.10 TO 22+92.10 - 2.5:1 TO 3:1
STA 22+92.10 TO 30+49.00 - 3:1

(3) STA 12+50.27 TO 14+00.00 - 3:1
STA 14+00.00 TO 16+00.00 - EXISTING
STA 16+00.00 TO 16+12.46 - EXIST TO 2.5:1
STA 16+12.46 TO 17+33.13 - 2.5:1
STA 17+33.13 TO 17+50.00 - 2.5:1 TO 2:1
STA 17+50.00 TO 18+00.00 - 2:1
STA 18+00.00 TO 18+40.42 - 2:1 (ROCK FILL)
STA 20+49.14 TO 22+43.68 - 2:1 TO 10:1
STA 22+43.68 TO 23+00.00 - 10:1
STA 23+00.00 TO 23+50.00 - 10:1 TO 2.5:1
STA 23+50.00 TO 30+49.00 - 2.5:1

SEE PLANS AND CROSS SECTIONS FOR ADDITIONAL DETAIL AND ROCK BLANKET LIMITS.

NOT TO SCALE

STATE OF MISSOURI
RYAN JOSEPH LIBBERT
NUMBER PE-2006019679
PROFESSIONAL ENGINEER

10/02/2023 10:34:32 AM
RYAN JOSEPH LIBBERT - CIVIL
MO-PE-2006019679

DATE PREPARED
9/21/2023

ROUTE	STATE
64	MO
DISTRICT	SHEET NO.
CD	2

COUNTY
LACLEDE

JOB NO.
J5P3244

CONTRACT ID.

PROJECT NO.

BRIDGE NO.

DATE	DESCRIPTION

MISSOURI HIGHWAYS AND TRANSPORTATION COMMISSION

105 WEST CAPITOL
JEFFERSON CITY, MO 65102
1-888-ASK-MODOT (1-888-275-6636)

TYPICAL SECTIONS SHEET
SHEET 1 OF 3

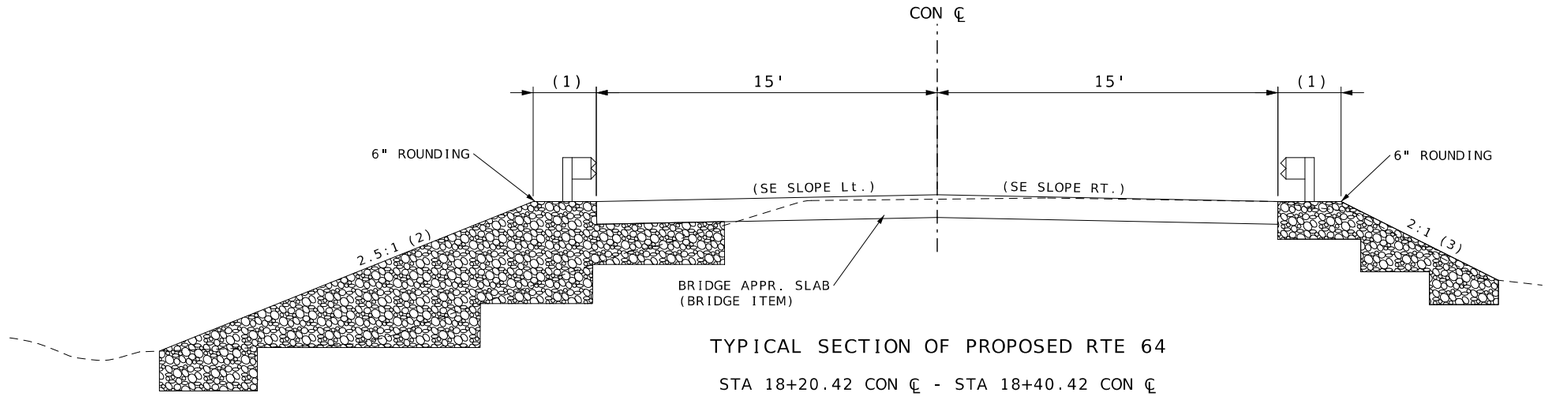

TYPICAL SECTION OF PROPOSED RTE 64

STA 18+20.42 CON ℄ - STA 18+40.42 CON ℄

SE SLOPE Lt.	
STA	SLOPE
12+50.27	-2%
17+11.57	-2%
17+62.63	0%
18+13.68	2%
21+33.82	2%
22+76.77	7.6%
28+84.33	7.6%
30+27.28	2%
30+49.00	1.15%

SE SLOPE Rt.	
STA	SLOPE
12+50.27	-2%
17+11.57	-2%
17+62.63	-2%
18+13.68	-2%
21+33.82	-2%
22+76.77	-7.60%
28+84.33	-7.60%
29+49.00	-5.07%
30+49.00	-7.91%

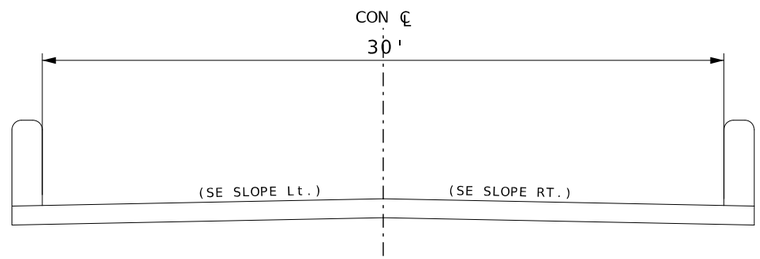

TYPICAL SECTION OF PROPOSED BRIDGE A9326

STA 18+40.42 CON ℄- STA 20+49.14 CON ℄

OPTIONAL PAVEMENT	
HMA DESIGN	JPCP DESIGN
1 3/4 IN. BP-1 (PG 64-22) OVER 8 1/4 IN. BIT BASE (PG 64-22)	8 1/2" JPCP 15' JOINTS 1 1/4" DOWELS 13' - 15' SLABS

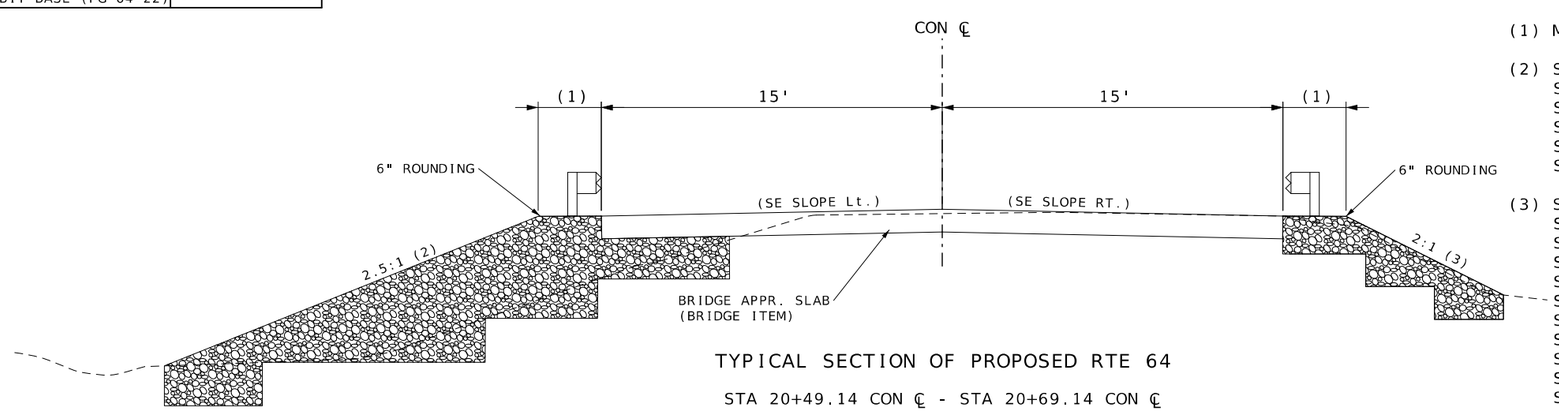

TYPICAL SECTION OF PROPOSED RTE 64

STA 20+49.14 CON ℄ - STA 20+69.14 CON ℄

(1) MAINTAIN MIN. 2' BEHIND GUARDRAIL POSTS

(2) STA 12+50.27 TO 16+58.28 - 3:1
STA 16+58.28 TO 16+72.46 - 3:1 TO 2.5:1
STA 16+72.46 TO 18+40.42 - 2.5:1 (ROCK FILL)
STA 20+49.14 TO 22+77.10 - 2.5:1 (ROCK FILL)
STA 22+77.10 TO 22+92.10 - 2.5:1 TO 3:1
STA 22+92.10 TO 30+49.00 - 3:1

(3) STA 12+50.27 TO 14+00.00 - 3:1
STA 14+00.00 TO 16+00.00 - EXISTING
STA 16+00.00 TO 16+12.46 - EXIST TO 2.5:1
STA 16+12.46 TO 17+33.13 - 2.5:1
STA 17+33.13 TO 17+50.00 - 2.5:1 TO 2:1
STA 17+50.00 TO 18+00.00 - 2:1
STA 18+00.00 TO 18+40.42 - 2:1 (ROCK FILL)
STA 20+49.14 TO 22+43.68 - 2:1 TO 10:1
STA 22+43.68 TO 23+00.00 - 10:1
STA 23+00.00 TO 23+50.00 - 10:1 TO 2.5:1
STA 23+50.00 TO 30+49.00 - 2.5:1

SEE PLANS AND CROSS SECTIONS FOR ADDITIONAL DETAIL AND ROCK BLANKET LIMITS.

NOT TO SCALE

STATE OF MISSOURI
RYAN JOSEPH LIBBERT
NUMBER PE-2006019679
PROFESSIONAL ENGINEER

10/02/2023 10:38:49 AM
RYAN.JOSEPH.LIBBERT - CIVIL
MO-PE-2006019679

DATE PREPARED	
9/21/2023	
ROUTE 64	STATE MO
DISTRICT CD	SHEET NO. 2
COUNTY LACLEDE	
JOB NO. J5P3244	
CONTRACT ID.	
PROJECT NO.	
BRIDGE NO.	

DESCRIPTION	DATE

MISSOURI HIGHWAYS AND TRANSPORTATION COMMISSION

105 WEST CAPITOL
JEFFERSON CITY, MO 65102
1-888-ASK-MODOT (1-888-275-6636)

TYPICAL SECTIONS SHEET
SHEET 2 OF 3

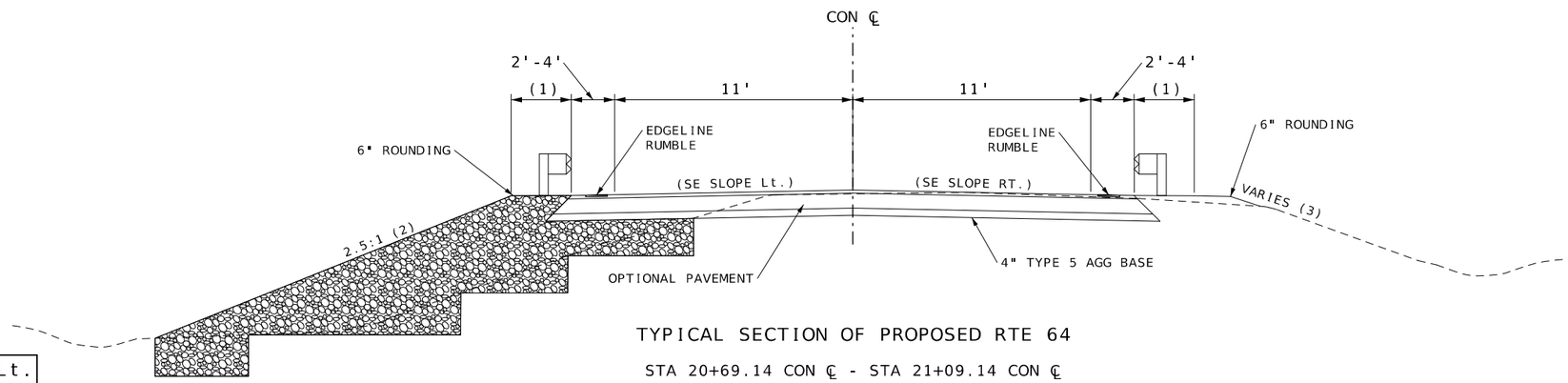

TYPICAL SECTION OF PROPOSED RTE 64

STA 20+69.14 CON ℄ - STA 21+09.14 CON ℄

SE SLOPE Lt.	
STA	SLOPE
12+50.27	-2%
17+11.57	-2%
17+62.63	0%
18+13.68	2%
21+33.82	2%
22+76.77	7.6%
28+84.33	7.6%
30+27.28	2%
30+49.00	1.15%

SE SLOPE Rt.	
STA	SLOPE
12+50.27	-2%
17+11.57	-2%
17+62.63	-2%
18+13.68	-2%
21+33.82	-2%
22+76.77	-7.60%
28+84.33	-7.60%
29+49.00	-5.07%
30+49.00	-7.91%

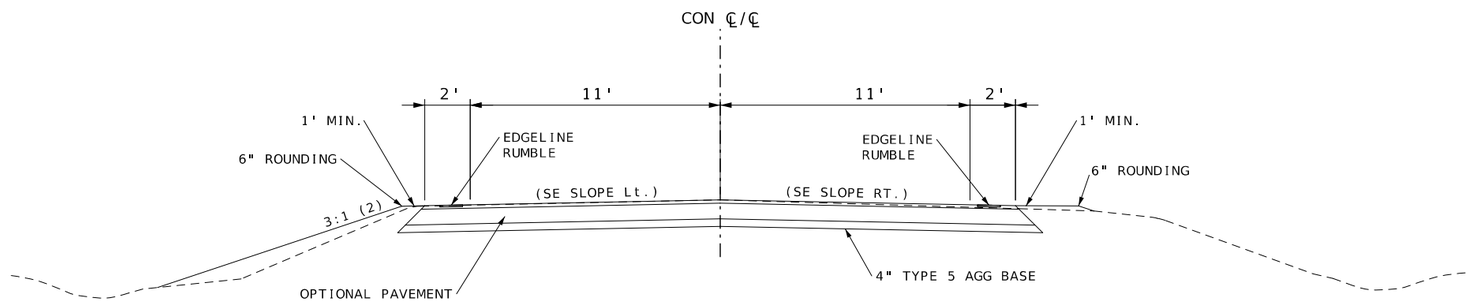

TYPICAL SECTION OF PROPOSED RTE 64

STA 21+09.14 CON ℄ - STA 30+49.00 CON ℄= STA 517+65.85 RTE 64 ℄

OPTIONAL PAVEMENT	
HMA DESIGN	JPCP DESIGN
1 3/4 IN. BP-1 (PG 64-22) OVER 8 1/4 IN. BIT BASE (PG 64-22)	8 1/2" JPCP 15' JOINTS 1 1/4" DOWELS 13' - 15' SLABS

(1) MAINTAIN MIN. 2' BEHIND GUARDRAIL POSTS

(2) STA 12+50.27 TO 16+58.28 - 3:1
STA 16+58.28 TO 16+72.46 - 3:1 TO 2.5:1
STA 16+72.46 TO 18+40.42 - 2.5:1 (ROCK FILL)
STA 20+49.14 TO 22+77.10 - 2.5:1 (ROCK FILL)
STA 22+77.10 TO 22+92.10 - 2.5:1 TO 3:1
STA 22+92.10 TO 30+49.00 - 3:1

(3) STA 12+50.27 TO 14+00.00 - 3:1
STA 14+00.00 TO 16+00.00 - EXISTING
STA 16+00.00 TO 16+12.46 - EXIST TO 2.5:1
STA 16+12.46 TO 17+33.13 - 2.5:1
STA 17+33.13 TO 17+50.00 - 2.5:1 TO 2:1
STA 17+50.00 TO 18+00.00 - 2:1
STA 18+00.00 TO 18+40.42 - 2:1 (ROCK FILL)
STA 20+49.14 TO 22+43.68 - 2:1 TO 10:1
STA 22+43.68 TO 23+00.00 - 10:1
STA 23+00.00 TO 23+50.00 - 10:1 TO 2.5:1
STA 23+50.00 TO 30+49.00 - 2.5:1

SEE PLANS AND CROSS SECTIONS FOR ADDITIONAL DETAIL AND ROCK BLANKET LIMITS.

NOT TO SCALE

STATE OF MISSOURI
RYAN JOSEPH LIBBERT
NUMBER
PE-2006019679
PROFESSIONAL ENGINEER

10/02/2023 10:39:32 AM
RYAN JOSEPH LIBBERT - CIVIL
MO-PE-2006019679

DATE PREPARED	
9/21/2023	
ROUTE	STATE
64	MO
DISTRICT	SHEET NO.
CD	2
COUNTY	
LACLEDE	
JOB NO.	
J5P3244	
CONTRACT ID.	
PROJECT NO.	
BRIDGE NO.	

DATE	DESCRIPTION

MISSOURI HIGHWAYS AND TRANSPORTATION COMMISSION
105 WEST CAPITOL
JEFFERSON CITY, MO 65102
1-888-ASK-MODOT (1-888-275-6636)

TYPICAL SECTIONS SHEET
SHEET 3 OF 3

CLEARING & GRUBBING

STATION FROM	STATION TO	LOCATION	LENGTH FT	CLEARING & GRUBBING ACRE	REMARKS
498+40.37	515+00.00	RTE 64 EX CL - Lt.	1,659.6	0.5	CLEAR AND REMOVE BRUSH/ TREES BETWEEN EX. R/W AND PROPOSED R/W
			TOTAL	0.5	
			USE	1	

TEMPORARY SURFACING

STATION TO	STATION FROM	LOCATION	TEMPORARY SURFACING TONS	REMARKS
12+50.27	30+49.00	RTE 64	250.0	PE ACCESS
		TOTAL	250.0	
		USE	250.0	

REMOVAL OF IMPROVEMENTS

LOG MILE	LOCATION	ITEM	QUANTITY	UNIT	REMARKS
SAWCUT					
12+50.27	RTE 64 CON CL	FULL DEPTH SAWCUT	26	FT	BEGIN PROJECT
30+49.00	RTE 64 CON CL	FULL DEPTH SAWCUT	26	FT	END PROJECT
PAVEMENT					
12+50.27	RTE 64 CON CL	EXISTING ASPHALT PAVEMENT	1,588.5	SY	
30+49.00	RTE 64 CON CL	EXISTING ASPHALT PAVEMENT	2,703.8	SY	
GUARDRAIL					
17+21.00	RTE 64 CON CL	EXISTING GUARDRAIL	124	FT	
16+46.00	RTE 64 CON CL	EXISTING GUARDRAIL	200	FT	
20+35.00	RTE 64 CON CL	EXISTING GUARDRAIL	170	FT	
20+35.00	RTE 64 CON CL	EXISTING GUARDRAIL	120	FT	
SIGNS					
18+00.00	RTE 64 CON CL	OBJECT MAKERS	6	EA	WEST OF BRIDGE
20+38.00	RTE 64 CON CL	OBJECT MAKERS	6	EA	EAST OF BRIDGE
23+00.00	RTE 64 CON CL	CHEVRONS	10	EA	AROUND EXISTING CURVE
		TOTAL	1 LUMP SUM		

GRADING

STATION TO	STATION FROM	LOCATION	CLASS A EXCAVATION CUYD	COMPACTING EMBANKMENT CUYD	REMARKS
12+50.27	18+45.88	RTE 64 CON CL	363	55	WEST OF BRIDGE
18+40.42		RTE 64 CON CL	148	0	SPILL FILL SLOPE
20+49.14		RTE 64 CON CL	428	0	SPILL FILL SLOPE
20+43.68	30+49.00	RTE 64 CON CL	390	787	EAST OF BRIDGE
		TOTAL	1329.0	842.0	
		USE	1329	842	

AGGREGATE FOR BASE

STATION TO	STATION FROM	LOCATION	LENGTH FT	AVG WIDTH FT	TYPE 5 AGG. FOR BASE (4 IN. THICK) SQYD	REMARKS
12+50.27	17+74.96	RTE 64 CON CL Rt.	524.7	13.0	757.9	
17+74.96	18+14.96	RTE 64 CON CL Rt.	40.0	14.0	62.2	PAVEMENT WIDTH TRANSITION
18+14.96	18+34.96	RTE 64 CON CL Rt.	20.0	15.0		BR. APPR. SLAB (BRIDGE ITEM)
12+50.27	17+85.88	RTE 64 CON CL Lt.	535.6	13.0	773.6	
17+85.88	18+25.88	RTE 64 CON CL Lt.	40.0	14.0	62.2	PAVEMENT WIDTH TRANSITION
18+25.88	18+45.88	RTE 64 CON CL Lt.	20.0	15.0		BR. APPR. SLAB (BRIDGE ITEM)
20+43.68	20+63.68	RTE 64 CON CL Rt.	20.0	15.0		BR. APPR. SLAB (BRIDGE ITEM)
20+63.68	21+03.68	RTE 64 CON CL Rt.	40.0	14.0	62.2	PAVEMENT WIDTH TRANSITION
21+03.68	30+49.00	RTE 64 CON CL Rt.	945.3	13.0	1,365.4	
20+54.60	20+74.60	RTE 64 CON CL Lt.	20.0	15.0		BR. APPR. SLAB (BRIDGE ITEM)
20+74.60	21+14.60	RTE 64 CON CL Lt.	40.0	14.0	62.2	PAVEMENT WIDTH TRANSITION
21+14.60	30+49.00	RTE 64 CON CL Lt.	934.4	13.0	1,349.7	
				TOTAL	4,495.4	
				USE	4,495	

GRAVEL (A), CRUSHED STONE (B)

STATION TO	STATION FROM	LOCATION	GRAVEL (A) OR CRUSHED STONE (B) TONS	REMARKS
12+94.00		RTE 64 CON CL - Lt.	0.9	PRIVATE ENTRANCE
14+05.00		RTE 64 CON CL - Rt.	1.0	PRIVATE ENTRANCE
24+86.00		RTE 64 CON CL - Rt.	1.1	PRIVATE ENTRANCE
26+14.00		RTE 64 CON CL - Rt.	1.9	PRIVATE ENTRANCE
29+21.00		RTE 64 CON CL - Rt.	2.0	PRIVATE ENTRANCE
		TOTAL	6.9	
		USE	7.0	

PAVEMENT

STATION TO	STATION FROM	LOCATION	LENGTH FT	AVG WIDTH FT	OPTIONAL PAVEMENT 8.5" PCCP VS 10" HMA SY	REMARKS
12+50.27	17+74.96	RTE 64 CON CL Rt.	524.7	13	757.9	
17+74.96	18+14.96	RTE 64 CON CL Rt.	40.0	14	62.2	PAVEMENT WIDTH TRANSITION
18+14.96	18+34.96	RTE 64 CON CL Rt.	20.0	15		BR. APPR. SLAB (BRIDGE ITEM)
12+50.27	17+85.88	RTE 64 CON CL Lt.	535.6	13	773.6	
17+85.88	18+25.88	RTE 64 CON CL Lt.	40.0	14	62.2	PAVEMENT WIDTH TRANSITION
18+25.88	18+45.88	RTE 64 CON CL Lt.	20.0	15		BR. APPR. SLAB (BRIDGE ITEM)
20+43.68	20+63.68	RTE 64 CON CL Rt.	20.0	15		BR. APPR. SLAB (BRIDGE ITEM)
20+63.68	21+03.68	RTE 64 CON CL Rt.	40.0	14	62.2	PAVEMENT WIDTH TRANSITION
21+03.68	30+49.00	RTE 64 CON CL Rt.	945.3	13	1,365.4	
20+54.60	20+74.60	RTE 64 CON CL Lt.	20.0	15		BR. APPR. SLAB (BRIDGE ITEM)
20+74.60	21+14.60	RTE 64 CON CL Lt.	40.0	14	62.2	PAVEMENT WIDTH TRANSITION
21+14.60	30+49.00	RTE 64 CON CL Lt.	934.4	13	1,349.7	
				TOTAL	4,495.4	
				USE	4,495	

GUARDRAIL

STATION TO	STATION FROM	LOCATION	LENGTH FT	MGS GUARDRAIL LF	MGS BRIDGE APPROACH TRANS. SECT. REG/ NO CURB EA	TYPE A CRASHWORTHY END TERMINAL (MASH) EA	REMARKS
16+21.33	18+34.69	RTE 64 CON CL - Rt.	212.5	125	1	1	WEST OF BRIDGE
16+82.25	18+45.88	RTE 64 CON CL - Lt.	162.5	75	1	1	WEST OF BRIDGE
20+43.68	22+19.91	RTE 64 CON CL - Rt.	175.0	87.5	1	1	EAST OF BRIDGE
20+54.60	22+67.58	RTE 64 CON CL - Lt.	212.5	125	1	1	EAST OF BRIDGE
			TOTAL	412.5	4	4	
			USE	413	4	4	

ROCK BLANKET

STATION TO	STATION FROM	LOCATION	LENGTH FT	FURNISHING TYPE 2 ROCK BLANKET CY	PLACING TYPE 2 ROCK BLANKET CY	REMARKS
18+14.96	18+34.96	RTE 64 CON CL Rt.	20.0	45.8	45.8	ADJACENT TO BR. APP. SLAB
18+25.88	18+45.88	RTE 64 CON CL Lt.	20.0	55.2	55.2	ADJACENT TO BR. APP. SLAB
18+40.42		RTE 64 CON CL		404.4	404.4	SPILL FILL SLOPE
20+49.14		RTE 64 CON CL		351.5	351.5	SPILL FILL SLOPE
20+43.68	20+63.68	RTE 64 CON CL Rt.	20.0	40.3	40.3	ADJACENT TO BR. APP. SLAB
20+54.60	20+74.60	RTE 64 CON CL Lt.	20.0	50.0	50.0	ADJACENT TO BR. APP. SLAB
			TOTAL	947.2	947.2	
			USE	947	947	

STATE OF MISSOURI
RYAN JOSEPH LIBBERT
NUMBER PE-2006019679
PROFESSIONAL ENGINEER

10/02/2023 10:40:33 AM
RYAN JOSEPH LIBBERT - CIVIL
MO-PE-2006019679

DATE PREPARED: 9/21/2023

ROUTE	STATE
64	MO
DISTRICT	SHEET NO.
CD	3

COUNTY: LACLEDE

JOB NO.: J5P3244

CONTRACT ID.

PROJECT NO.

BRIDGE NO.

DESCRIPTION

DATE

MISSOURI HIGHWAYS AND TRANSPORTATION COMMISSION

105 WEST CAPITOL
JEFFERSON CITY, MO 65102
1-888-ASK-MODOT (1-888-275-6636)

SUMMARY OF QUANTITIES SHEET
SHEET 1 OF 3

PERMANENT EROSION CONTROL GEOTEXTILE

STATION TO	STATION FROM	LOCATION	LENGTH FT	PERMANENT EROSION CONTROL GEOTEXTILE SY	REMARKS
18+14.96	18+34.96	RTE 64 CON CL Rt.	20.0	73.8	ADJACENT TO BR. APP. SLAB
18+25.88	18+45.88	RTE 64 CON CL Lt.	20.0	88.7	ADJACENT TO BR. APP. SLAB
18+40.42		RTE 64 CON CL		643.6	SPILL FILL SLOPE
20+49.14		RTE 64 CON CL		593.9	SPILL FILL SLOPE
20+43.68	20+63.68	RTE 64 CON CL Rt.	20.0	65.6	ADJACENT TO BR. APP. SLAB
20+54.60	20+74.60	RTE 64 CON CL Lt.	20.0	80.8	ADJACENT TO BR. APP. SLAB
			TOTAL	1,546.4	
			USE	1,546	

ROCK FILL

STATION TO	STATION FROM	LOCATION	LENGTH FT	FURNISHING ROCK FILL CY	PLACING ROCK FILL CY	REMARKS
12+50.27	18+45.88	RTE 64 CON CL Lt.	595.6	781.8	781.8	
12+50.27	18+34.96	RTE 64 CON CL Rt.	584.7	43.7	43.7	
18+40.42		RTE 64 CON CL		67.7	67.7	SPILL FILL SLOPE
20+49.14		RTE 64 CON CL		25.9	25.9	SPILL FILL SLOPE
20+54.60	30+49.00	RTE 64 CON CL Lt.	994.4	1,472.4	1,472.4	
20+43.68	30+49.00	RTE 64 CON CL Rt.	1005.3	0.0	0.0	
			TOTAL	2,391.5	2,391.5	
			USE	2,392	2,392	

MOBILIZATION
1 LUMP SUM

PAVEMENT MARKING

STATION FROM	STATION TO	LOCATION	LENGTH FT	HIGH BUILD WATERBORNE PAV. MARK. PAINT, TYPE P BEADS 4" SOLID YELLOW FT	4" SOLID WHITE FT	REMARKS
12+50.27	30+49.00	RTE 64 CON CL	1,798.7	3,597.4	3,597.4	NO PASS
			TOTAL	3,597.4	3,597.4	
			USE	3,597	3,597	

CONTRACTOR FURNISHED SURVEYING AND STAKING
1 LUMP SUM

SEEDING

STATION TO	STATION FROM	LOCATION	LENGTH FT	COOL SEASON MIXTURES ACRE	MULCHING ACRE	TEMP. SEEDING ACRE	REMARKS
12+50.27	30+49.00	RTE 64 CON CL	1798.73	1.0	1.3	0.25	FROM EOP TO LIMITS OF CONSTRUCTION EACH SIDE
			TOTAL	1.0	1.3	0.25	
			USE	1	1.3	0.30	

EROSION CONTROL

STATION TO	STATION FROM	LOCATION	LENGTH FT	SEDIMENT TRAP ROCK CUYD	ROCK DITCH CHECK LF	ALT DITCH CHECK LF	SEDIMENT REMOVAL CUYD	SILT FENCE LF	TYPE C BERM LF	REMARKS
12+83.00	13+20.00	RTE 64 CON CL - Rt.	37.00			20	2.0			PLACE 2 AT 37' SPACING
13+57.00		RTE 64 CON CL - Rt.			10		1.0			PLACE BEFORE CULVERT INLET
14+67.00	16+65.00	RTE 64 CON CL - Rt.	198.00			50	5.0			PLACE 5 AT 50' SPACING
17+21.00		RTE 64 CON CL - Rt.		6.0			1.2			
19+02.00		RTE 64 CON CL							406	
12+61.00		RTE 64 CON CL - Lt.			10		1.0			PLACE BEFORE CULVERT INLET
13+15.00	14+14.00	RTE 64 CON CL - Lt.	99		70		7.0			PLACE 10 AT 15' SPACING
14+60.00	16+93.00	RTE 64 CON CL - Lt.	233			90	9.0			PLACE 9 AT 30' SPACNG
17+29.00		RTE 64 CON CL - Lt.		6.0			1.2			
19+87.00		RTE 64 CON CL							451	
21+65.00		RTE 64 CON CL - Rt.		6.0			1.2			
21+65.00	24+48.00	RTE 64 CON CL - Rt.	283				2.7	271		
25+01.00	25+82.00	RTE 64 CON CL - Rt.	81				0.9	85		
26+44.00	28+93.00	RTE 64 CON CL - Rt.	249				2.4	241		
29+42.00	30+50.00	RTE 64 CON CL - Rt.	108				1.1	111		
21+82.00		RTE 64 CON CL - Lt.		6.0			1.2			
25+36.00	26+86.00	RTE 64 CON CL - Lt.	150			70	7.0			PLACE 7 AT 25' SPACING
27+13.00	30+50.00	RTE 64 CON CL - Lt.	337			230	23.0			PLACE 23 AT 15' SPACING
20+32.00	27+05.00	RTE 64 CON CL - Lt.	673				5.5	554		
			TOTAL	24.0	90.0	460.0	72.4	1,262.0	857.0	
			USE	24	90	460	72	1262	857	

ADDITIONAL MOBILIZATION OF SEEDING
4 EACH

RUMBLE STRIPS

STATION TO	STATION FROM	LOCATION	BITUMINOUS SHOULDER RUMBLE STRIP STA	REMARKS
12+50.27	18+40.42	RTE 64 CON CL	11.8	
20+49.14	30+49.00	RTE 64 CON CL	20.0	
		TOTAL	31.8	
		USE	32	

RIGHT OF WAY MARKERS

STATION	LOCATION	2" ALUM. CAP w/ MODOT R/W IMPRINT EA	6' WHITE CARSONITE POST w/ MODOT R/W STICKER EA	24" SURVEY PIN EA	REMARKS
14+13.15	RTE 64 CON CL	1	1	1	PLACED BY OTHERS
18+20.00	RTE 64 CON CL	1	1	1	PLACED BY OTHERS
22+12.10	RTE 64 CON CL	1	1	1	PLACED BY OTHERS
23+65.00	RTE 64 CON CL	1	1	1	PLACED BY OTHERS
25+00.00	RTE 64 CON CL	1	1	1	PLACED BY OTHERS
25+26.93	RTE 64 CON CL	1	1	1	PLACED BY OTHERS
	TOTAL	6	6	6	

STATE OF MISSOURI
RYAN JOSEPH LIBBERT
NUMBER PE-2006019679
PROFESSIONAL ENGINEER

10/18/2023 1:06:23 PM
RYAN JOSEPH LIBBERT - CIVIL
MO-PE-2006019679

DATE PREPARED
10/18/2023

ROUTE	STATE
64	MO
DISTRICT	SHEET NO.
CD	3

COUNTY
LACLEDE

JOB NO.
J5P3244

CONTRACT ID.

PROJECT NO.

BRIDGE NO.

DATE	DESCRIPTION

MISSOURI HIGHWAYS AND TRANSPORTATION COMMISSION
105 WEST CAPITOL
JEFFERSON CITY, MO 65102
1-888-ASK-MODOT (1-888-275-6636)

SUMMARY OF QUANTITIES SHEET
SHEET 2 OF 3

EFFECTIVE: 04-01-2023

SIGN	SIZE IN.	AREA SQ.FT.	QTY EACH	TOTAL AREA SQ.FT.	QTY RELOC EACH	TOTAL RELOC SQ.FT.	SIGN NUM.	DESCRIPTION
WARNING SIGNS								
WO1-1L	48X48	16.00						TURN (SYMBOL LEFT ARROW)
WO1-1R	48X48	16.00						TURN (SYMBOL RIGHT ARROW)
WO1-2L	48X48	16.00						CURVE (SYMBOL LEFT ARROW)
WO1-2R	48X48	16.00						CURVE (SYMBOL RIGHT ARROW)
WO1-3L	48X48	16.00						REVERSE TURN (SYMBOL LEFT ARROW)
WO1-3R	48X48	16.00						REVERSE TURN (SYMBOL RIGHT ARROW)
WO1-4L	48X48	16.00						REVERSE CURVE (SYMBOL LEFT ARROW)
WO1-4R	48X48	16.00						REVERSE CURVE (SYMBOL RIGHT ARROW)
WO1-4bL	48X48	16.00						DOUBLE ARROW REVERSE CURVE (SYMBOL LT ARROWS)
WO1-4bR	48X48	16.00						DOUBLE ARROW REVERSE CURVE (SYMBOL RT ARROWS)
WO1-4cL	48X48	16.00						TRIPLE ARROW REVERSE CURVE (SYMBOL LT ARROWS)
WO1-4cR	48X48	16.00						TRIPLE ARROW REVERSE CURVE (SYMBOL RT ARROWS)
WO1-6	60X30	12.50						HORIZONTAL ARROW (SYMBOL)
WO1-6a	72X36	18.00						HORIZ. ARROW (SYMBOL ON PERMANENT BARRICADE)
WO1-7	60X30	12.50						DOUBLE HEAD HORIZONTAL ARROW (SYMBOL)
WO1-7a	72X36	18.00						DOUBLE HEAD HORIZ. ARROW (SYMBOL ON PERM. BARR.)
WO1-8	18X24	3.00						CHEVRON (SYMBOL)
WO1-8a	30X36	7.50						CHEVRON (SYMBOL FOR DIVIDED HIGHWAYS)
WO3-1	48X48	16.00						STOP AHEAD (SYMBOL)
WO3-2	48X48	16.00						YIELD AHEAD (SYMBOL)
WO3-3	48X48	16.00						SIGNAL AHEAD (SYMBOL)
WO3-4	48X48	16.00						BE PREPARED TO STOP
WO3-5	48X48	16.00						SPEED LIMIT AHEAD
WO4-1L	48X48	16.00						MERGE (SYMBOL FROM LEFT)
WO4-1R	48X48	16.00						MERGE (SYMBOL FROM RIGHT)
WO4-1aL	48X48	16.00						MERGE (ARROW SYMBOL)
WO4-1aR	48X48	16.00						MERGE (ARROW SYMBOL)
WO5-1	48X48	16.00						ROAD/BRIDGE/RAMP NARROWS
WO5-3	48X48	16.00						ONE LANE BRIDGE
WO5-5	48X48	16.00						NARROW LANES
WO6-1	48X48	16.00						DIVIDED HIGHWAY (SYMBOL)
WO6-2	48X48	16.00						DIVIDED HIGHWAY END (SYMBOL)
WO6-3	48X48	16.00						TWO WAY TRAFFIC (SYMBOL)
WO7-3a	30X24	5.00						NEXT XX MILES (PLAQUE)
WO8-1	48X48	16.00						BUMP
WO8-2	48X48	16.00						DIP
WO8-3	48X48	16.00						PAVEMENT ENDS
WO8-4	48X48	16.00						SOFT SHOULDER
WO8-5	48X48	16.00						SLIPPERY WHEN WET (SYMBOL)
WO8-6	48X48	16.00						TRUCK CROSSING (WITH FLAGS)
WO8-6c	48X48	16.00						TRUCK ENTRANCE
WO8-7	36X36	9.00						LOOSE GRAVEL
WO8-7a	36X36	9.00						FRESH OIL/LOOSE GRAVEL
WO8-9	48X48	16.00						LOW SHOULDER
WO8-11	48X48	16.00						UNEVEN LANES
WO8-12	48X48	16.00						NO CENTER LINE
WO8-15	48X48	16.00						GROOVED PAVEMENT
WO8-15P	30X24	5.00						MOTORCYCLE (PLAQUE)
WO8-17	48X48	16.00						SHOULDER DROP-OFF (SYMBOL)
WO8-17P	30X24	5.00						SHOULDER DROP-OFF (PLAQUE)
W10-1	42RND.	9.62						RAILROAD CROSSING
WO12-1	24X24	4.00						DOUBLE DOWN ARROW (SYMBOL)
WO12-2	48X48	16.00						LOW CLEARANCE (SYMBOL)
WO12-2X	24X18	3.00						LOW CLEARANCE (PLAQUE)
WO12-2a	84X24	14.00						OVERHEAD LOW CLEARANCE (FEET AND INCHES)
WO12-4	120X60	50.00						LOW CLEARANCE XX FT XX IN XX MILES AHEAD
WO12-5	120X60	50.00						WIDTH RESTRICTION XX FT XX IN XX MILES AHEAD
WO13-1	30X30	6.25						ADVISORY SPEED (PLAQUE)
WO16-2	30X24	5.00	2	10			20B	XXX FEET (PLAQUE)
WO16-3	30X24	5.00						X MILE (PLAQUE)
WO20-1	48X48	16.00	2	32			2	ROAD/BRIDGE/RAMP WORK AHEAD
WO20-2	48X48	16.00	5	80			18	DETOUR AHEAD
WO20-3	48X48	16.00	4	64			20A,20B	ROAD CLOSED AHEAD
WO20-4	48X48	16.00	2	32			7	ONE LANE ROAD AHEAD
WO20-5	48X48	16.00						RIGHT/CENTER/LEFT LANE CLOSED AHEAD
WO20-5a	48X48	16.00						2 RIGHT/CENTER/LEFT LANES CLOSED AHEAD
WO20-6a	48X48	16.00						RIGHT/CENTER/LEFT LANE CLOSED
WO20-7a	48X48	16.00	2	32			8	FLAGGER (SYMBOL, WITH FLAGS)
WO21-2	36X36	9.00						FRESH OIL
WO21-5	48X48	16.00						SHOULDER WORK AHEAD
WO22-1	48X48	16.00						BLASTING ZONE AHEAD
WO22-2	42X36	10.50						TURN OFF 2-WAY RADIO AND PHONE
WO22-3	42X36	10.50						END BLASTING ZONE
GO22-1	21X15	2.19						WET PAINT (ARROW PIVOTS)

SIGN	SIZE IN.	AREA SQ.FT.	QTY EACH	TOTAL SQ.FT.	QTY RELOC EACH	TOTAL RELOC SQ.FT.	SIGN NUM.	DESCRIPTION
GUIDE SIGNS								
E05-1	36X48	12.00						GORE EXIT
E05-2	48X36	12.00						EXIT OPEN
E05-2a	48X36	12.00						EXIT CLOSED
GO20-1	60X24	10.00						ROAD WORK NEXT XX MILES
GO20-2	48X24	8.00						END ROAD WORK
GO20-4	36X18	4.50						PILOT CAR FOLLOW ME
GO20-4a	42X30	8.75						PILOT CAR IN USE WAIT & FOLLOW
GO20-4a	18X12	1.50						PILOT CAR IN USE WAIT & FOLLOW
GO20-5aP	36X24	6.00						WORK ZONE (PLAQUE)
MO4-8a	24X18	3.00	1	3			52	END DETOUR
MO4-9L	48X36	12.00						DETOUR (LEFT ARROW)
MO4-9R	48X36	12.00						DETOUR (RIGHT ARROW)
MO4-9P	48X12	4.00						STREET NAME (PLAQUE)
MO4-10L	48X18	6.00						DETOUR (ARROW LEFT)
MO4-10R	48X18	6.00						DETOUR (ARROW RIGHT)
REGULATORY SIGNS								
R1-1	48X48	13.25						STOP
R1-2	48TRI.	6.93						YIELD
R1-2a	36X36	9.00						TO ONCOMING TRAFFIC (PLAQUE)
R1-3P	30X12	2.50						ALL WAY (PLAQUE)
R2-1	36X48	12.00						SPEED LIMIT XX
R3-1	48X48	16.00						NO RIGHT TURN (SYMBOL)
R3-2	48X48	16.00						NO LEFT TURN (SYMBOL)
R3-3	36X36	9.00						NO TURNS
R3-4	48X48	16.00						NO U-TURN (SYMBOL)
R3-7L	30X30	6.25						LEFT LANE MUST TURN LEFT
R3-7R	30X30	6.25						RIGHT LANE MUST TURN RIGHT
R4-1	36X48	12.00						DO NOT PASS
R4-2	36X48	12.00						PASS WITH CARE
R4-8a	36X48	12.00						KEEP LEFT (HORIZONTAL ARROW)
R4-7a	36X48	12.00						KEEP RIGHT (HORIZONTAL ARROW)
R5-1	30X30	6.25						DO NOT ENTER
R5-1a	36X24	6.00						WRONG WAY
R6-1L	54X18	6.75						ONE WAY ARROW (LEFT)
R6-1R	54X18	6.75						ONE WAY ARROW (RIGHT)
R6-2L	24X30	5.00						ONE WAY (LEFT)
R6-2R	24X30	5.00						ONE WAY (RIGHT)
R9-9	24X12	2.00						SIDEWALK CLOSED
R9-11L	24X18	3.00						SIDEWALK CLOSED AHEAD, (ARROW LEFT) CROSS HERE
R9-11R	24X18	3.00						SIDEWALK CLOSED AHEAD, (ARROW RIGHT) CROSS HERE
R10-6	24X36	6.00						STOP HERE ON RED (45^ ARROW)
R11-2	48X30	10.00	2	20			29	ROAD CLOSED
								ROAD CLOSED XX MILES AHEAD
R11-3a	60X30	12.50	7	87.5			60	LOCAL TRAFFIC ONLY
R11-4	60X30	12.50						ROAD CLOSED TO THRU TRAFFIC
CONST-3A	60X48	20.00						FINE SIGN
CONST-3X	56X12	4.67						SPEEDING/PASSING (PLATE)
MISCELLANEOUS SIGNS								
CONST-5	48X36	12.00						POINT OF PRESENCE
CONST-5	96X48	32.00	2	64			80	POINT OF PRESENCE
CONST-7	48X24	8.00						RATE OUR WORK ZONE
CONST-7	72X36	18.00						RATE OUR WORK ZONE
CONST-8	48X36	12.00						WORK ZONE NO PHONE ZONE
SPECIAL	36X78	19.5	58	1131			VAR	NUMBERED ROUTE DETOUR ASSEMBLY
SPECIAL	96X48	32.00	2	64			55	EAST 64, CLOSED 9 MILES AHEAD

616-10.05 CONSTRUCTION SIGNS	TOTAL	1620
616-10.10 RELOCATED SIGNS	TOTAL	0

ITEM NUMBER	TOTAL QTY	DESCRIPTION
6122008		IMPACT ATTENUATOR 40 MPH (SAND BARRELS)
6122009		IMPACT ATTENUATOR 45 MPH (SAND BARRELS)
6122010		IMPACT ATTENUATOR 50 MPH (SAND BARRELS)
6122012		IMPACT ATTENUATOR 55 MPH (SAND BARRELS)
6122014		IMPACT ATTENUATOR 60 MPH (SAND BARRELS)
6122017		IMPACT ATTENUATOR 65 MPH (SAND BARRELS)
6122019		IMPACT ATTENUATOR 70 MPH (SAND BARRELS)
6122020		REPLACEMENT SAND BARREL
6122030		IMPACT ATTENUATOR (RELOCATION)
6123000A		TRUCK OR TRAILER MOUNTED ATTENUATOR (TMA)
6161008	2	ADVANCED WARNING RAIL SYSTEM
6161012		BUOYS (BOATS KEEP OUT)
6161013		BUOYS (NO WAKE)
6161014		SPECIAL SIGN ASSEMBLY (BOATS KEEP OUT)
6161025	20	CHANNELIZER (TRIM LINE)
6161030	10	TYPE III MOVEABLE BARRICADE
6161033		DIRECTION INDICATOR BARRICADE
6161040		FLASHING ARROW PANEL
6161047		TYPE III OBJECT MARKER
6161055		SEQUENTIAL FLASHING WARNING LIGHT
6161070		TUBULAR MARKER
6161095		RADAR SPEED ADVISORY SYSTEM
		CHANGEABLE MESSAGE SIGN,
6161096		COMMISSION FURNISHED/RETAINED
		CHANGEABLE MESSAGE SIGN W/O COMM.
6161098A	5	INTERFACE - CONTRACTOR FURNISHED/RETAINED
		CHANGEABLE MESSAGE SIGN WITH COMM.
6161099		INTERFACE - CONTRACTOR FURNISHED/RETAINED
6162000A		WORK ZONE TRAFFIC SIGNAL SYSTEM
6162002		TEMPORARY LONG-TERM RUMBLE STRIPS
		TEMPORARY TRAFFIC BARRIER
6173600D		CONTRACTOR FURNISHED/RETAINED
		TEMPORARY TRAFFIC BARRIER
6173602B		CONTRACTOR FURNISHED/COMMISSION RETAINED
6174000A		TEMP. TRAFFIC BARRIER HEIGHT TRANSITION
6175010A		RELOCATING TEMPORARY TRAFFIC BARRIER
		TEMPORARY TRAFFIC BARRIER
6176000B		COMMISSION FURNISHED/RETAINED
		TEMP. TRAFFIC BARRIER HEIGHT TRANSITION
6177000B		COMMISSION FURNISHED/RETAINED
6208064A		TEMPORARY RAISED PAVEMENT MARKER
9029400		TEMPORARY TRAFFIC SIGNALS
9029401		TEMPORARY TRAFFIC SIGNALS AND LIGHTING

50A - 3
50B - 6
50C - 3
50D - 7
50E - 3
50F - 2
50G - 3
50H - 3
50I - 10
50J - 18

STATE OF MISSOURI
RYAN JOSEPH LIBBERT
NUMBER PE-2006019679
PROFESSIONAL ENGINEER

10/02/2023 10:44:15 AM
RYAN JOSEPH LIBBERT - CIVIL
MO-PE-2006019679

DATE PREPARED: 9/21/2023
ROUTE: 64
STATE: MO
DISTRICT: CD
SHEET NO.: 3
COUNTY: LACLEDE
JOB NO.: J5P3244
CONTRACT ID.
PROJECT NO.
BRIDGE NO.

DESCRIPTION
DATE

MISSOURI HIGHWAYS AND TRANSPORTATION COMMISSION
105 WEST CAPITOL
JEFFERSON CITY, MO 65102
1-888-ASK-MODOT (1-888-275-6636)

SUMMARY OF QUANTITIES SHEET
SHEET 3 OF 3

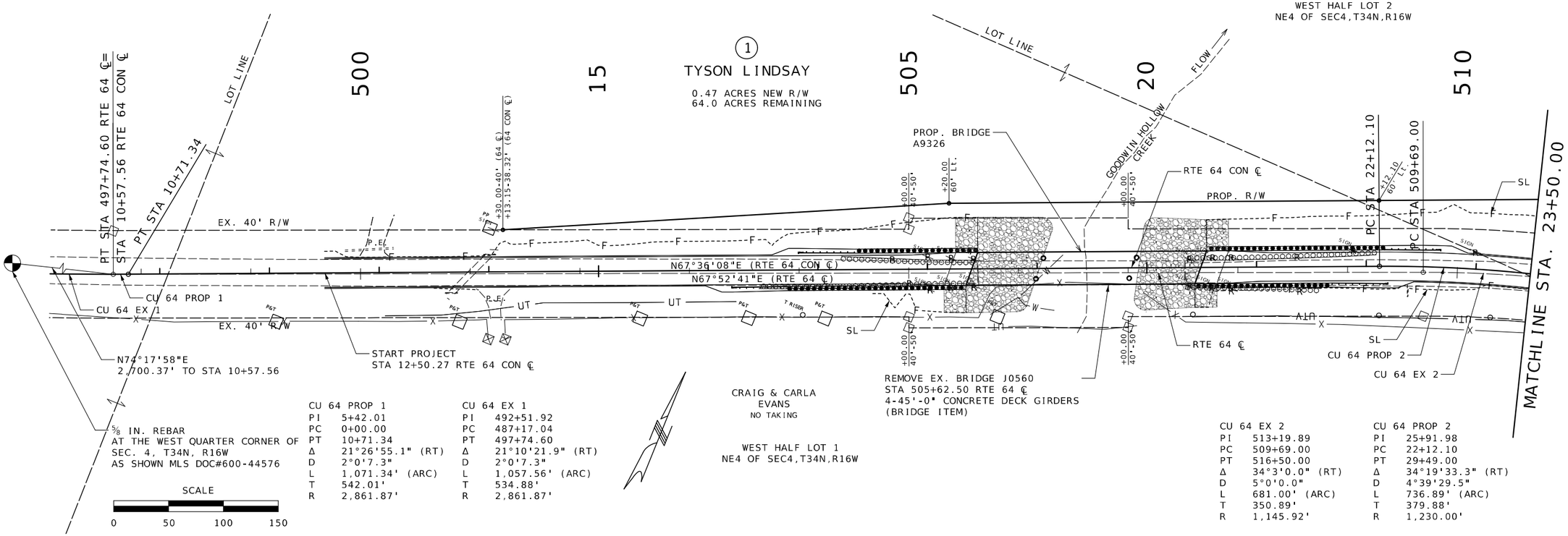

CU 64 PROP 1	
PI	5+42.01
PC	0+00.00
PT	10+71.34
Δ	21°26'55.1" (RT)
D	2°0'7.3"
L	1,071.34' (ARC)
T	542.01'
R	2,861.87'

CU 64 EX 1	
PI	492+51.92
PC	487+17.04
PT	497+74.60
Δ	21°10'21.9" (RT)
D	2°0'7.3"
L	1,057.56' (ARC)
T	534.88'
R	2,861.87'

CU 64 EX 2	
PI	513+19.89
PC	509+69.00
PT	516+50.00
Δ	34°3'0.0" (RT)
D	5°0'0.0"
L	681.00' (ARC)
T	350.89'
R	1,145.92'

CU 64 PROP 2	
PI	25+91.98
PC	22+12.10
PT	29+49.00
Δ	34°19'33.3" (RT)
D	4°39'29.5"
L	736.89' (ARC)
T	379.88'
R	1,230.00'

ANY WORK INDICATED ON THE PLANS THAT EXTENDS BEYOND THE PROJECT LIMITS IS CONSIDERED INCIDENTAL TO AND A PART OF THE CONSTRUCTION OF THIS PROJECT.

RIGHT OF WAY LIMITS FOR THIS PROJECT EXTEND FROM STA 14+13.15 (64 CON ℄) TO STA 25+26.93 (64 CON ℄). A DISTANCE OF 0.211 MILES.

ALL BEARINGS ARE BASED ON STATE PLANE COORDINATES, CENTRAL ZONE.

NOTE: NEW R/W STATIONING AND OFFSET TO BE BASED OFF CONSTRUCTION CENTERLINE.

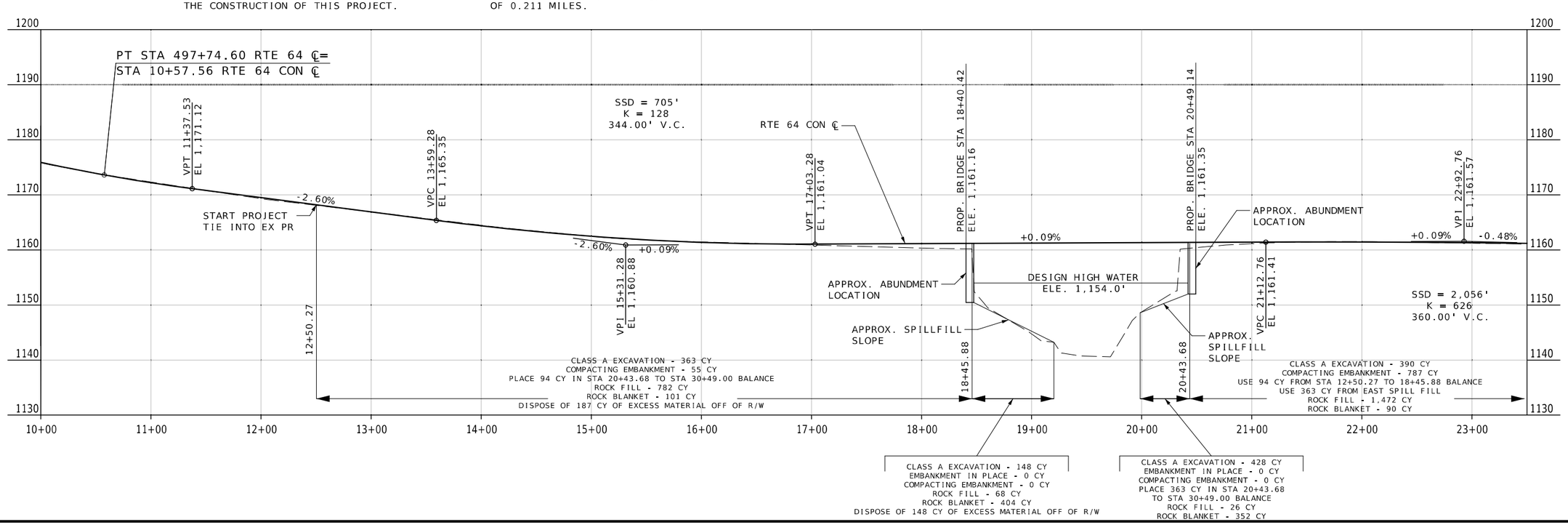

STATE OF MISSOURI
RYAN JOSEPH LIBBERT
NUMBER PE-2006019679
PROFESSIONAL ENGINEER

10/02/2023 10:47:57 AM
RYAN JOSEPH LIBBERT - CIVIL
MO-PE-2006019679

DATE PREPARED	
9/27/2023	
ROUTE 64	STATE MO
DISTRICT CD	SHEET NO. 4
COUNTY LACLEDE	
JOB NO. J5P3244	
CONTRACT ID.	
PROJECT NO.	
BRIDGE NO.	

DATE	DESCRIPTION

MISSOURI HIGHWAYS AND TRANSPORTATION COMMISSION
105 WEST CAPITOL
JEFFERSON CITY, MO 65102
1-888-ASK-MODOT (1-888-275-6636)

PLAN & PROFILE SHEET
SHEET 1 OF 2

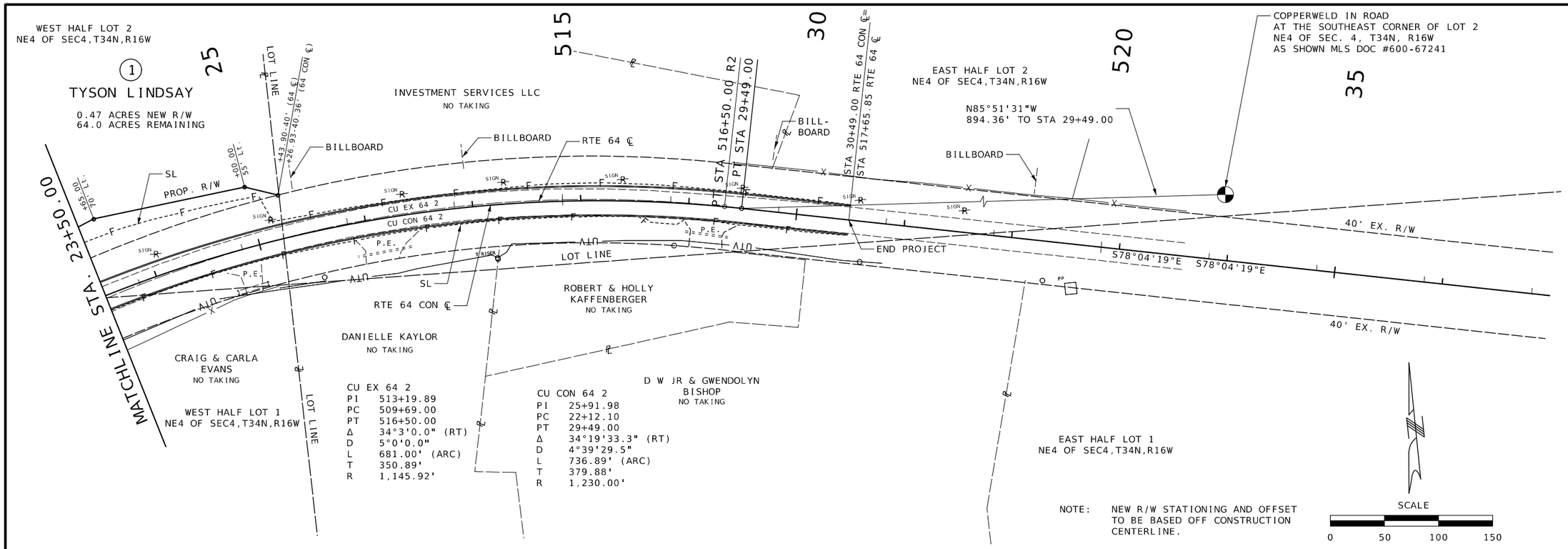

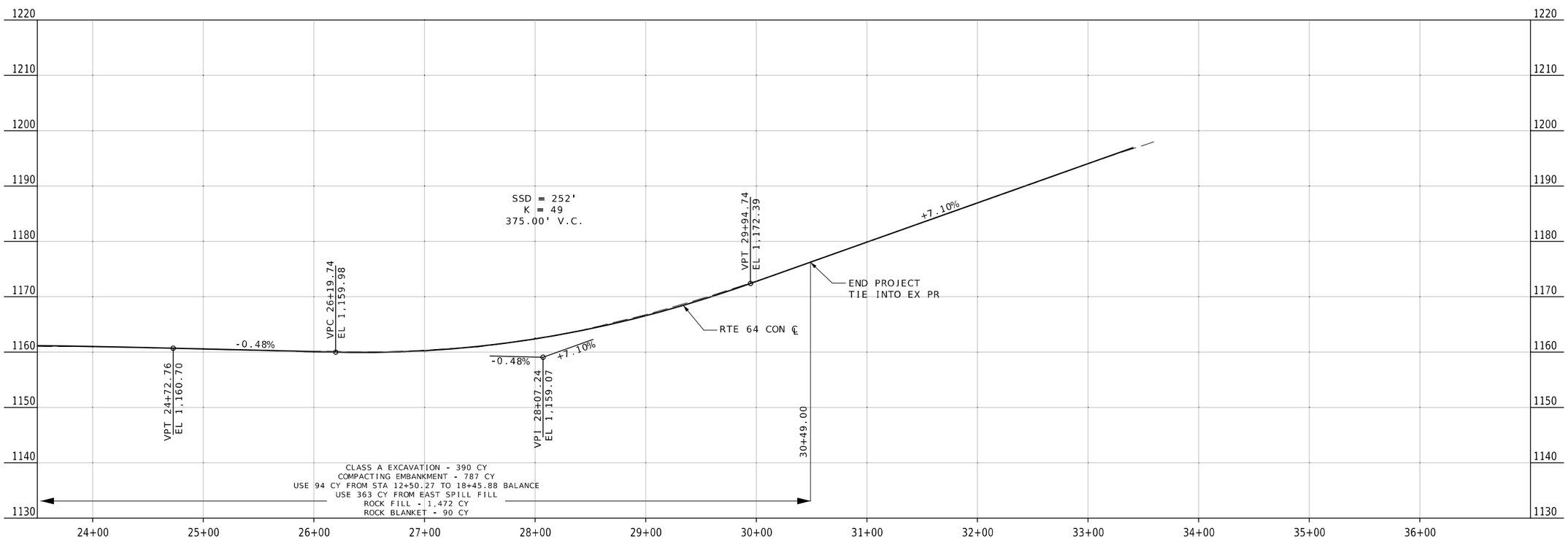

STATE OF MISSOURI
RYAN JOSEPH LIBBERT
NUMBER PE-2006019679
PROFESSIONAL ENGINEER

10/02/2023 10:49:06 AM
RYAN JOSEPH LIBBERT - CIVIL
MO-PE-2006019679

DATE PREPARED	9/27/2023
ROUTE 64	STATE MO
DISTRICT CD	SHEET NO. 5
COUNTY	LACLEDE
JOB NO.	J5P3244
CONTRACT ID.	
PROJECT NO.	
BRIDGE NO.	

DATE	DESCRIPTION

MISSOURI HIGHWAYS AND TRANSPORTATION COMMISSION

105 WEST CAPITOL
JEFFERSON CITY, MO 65102
1-888-ASK-MODOT (1-888-275-6636)

PLAN & PROFILE SHEET
SHEET 2 OF 2

ALL PROJECT COORDINATES HAVE BEEN PROJECTED FROM THE MISSOURI STATE PLANE COORDINATE (SPC) SYSTEM OF 1983 USING AN AVERAGE PROJECT PROJECTION (GRID TO GROUND) FACTOR. TO GET BACK TO STATE PLANE COORDINATES MULTIPY THE PROJECT COORDINATES BY THE AVERAGE GRID FACTOR AS SHOWN IN THE "REFERENCE CONTROL INFORMATION" PORTION OF THIS TABLE.

PROJECT COORDINATE INFORMATION

COORDINATE SYSTEM	MODIFIED STATE PLANE
HORIZONTAL DATUM	NAD83
VERTICAL DATUM	NAVD88
GEOID MODEL	
ELEVATIONS DETERMINED BY	DIFFERENTIAL LEVELING
PROJECT PROJECTION FACTOR	1.00012110

REFERENCE CONTROL INFORMATION

COORDINATE SYSTEM	MODIFIED STATE PLANE
CONTROL STATION	
DESIGNATION	MODOT NEBO CORS ARP
CORS_ID	MONF
PID	DN7496
LATITUDE	37 34 19.54018
LONGITUDE	92 20 33.30401
NORTHING (M)	192952.7690
EASTING (M)	513905.2240
ZONE	2402 (MO-CENTRAL)
PROJECT AVERAGE GRID FACTOR	0.99987890

EXAMPLE OF PROJECT COORDINATE TO S.P.C.

PROJECT NORTHING X AVERAGE GRID FACTOR
= STATE PLANE NORTHING
PROJECT EASTING X AVERAGE GRID FACTOR
= STATE PLANE EASTING

EXAMPLE: CONTROL POINT # 801
N 677,514.9517 X 0.9998789 = N 677,432.9046
E 1,583,950.7879 X 0.9998789= E 1,583,758.971

LINEAR UNIT CONVERSION

1 METER = 3.280833333 US SURVEY FEET (USFT)

W.P. 801

REBAR & CAP BURIED 0.15',
29' S OF RTE 64 ℄, 898'
W OF WEST END OF BRIDGE OVER
GOODWIN HOLLOW CREEK

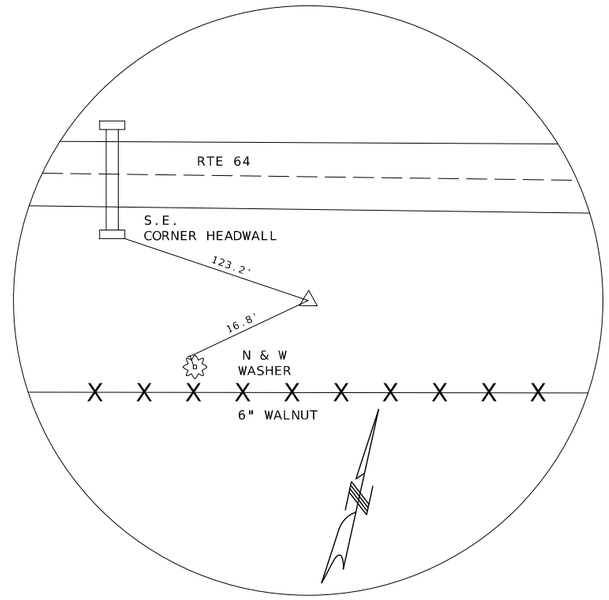

X - 1,583,950.7879
Y - 677,514.9517
Z - 1,177.09

W.P. 802

REBAR & CAP BURIED 0.15',
17' S OF RTE 64 ℄, 206'
W OF WEST END OF BRIDGE OVER
GOODWIN HOLLOW CREEK

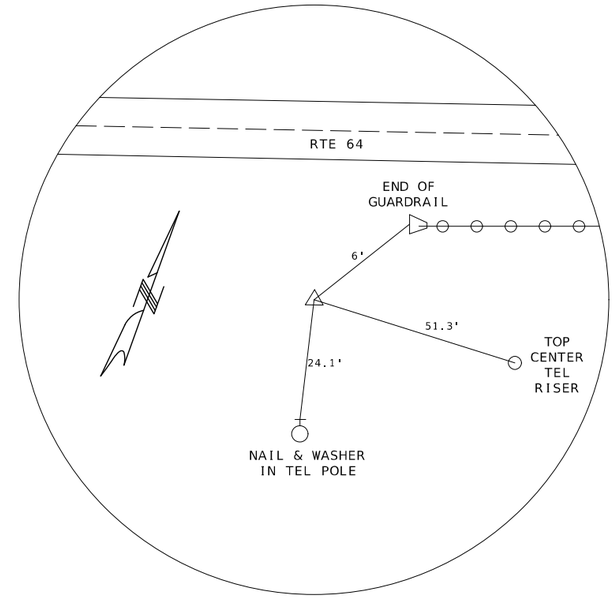

X - 1,584,589.4201
Y - 677,783.2637
Z - 1,160.73'

COORDINATE POINT LISTING

SHEET NO	STATION	LOCATION	OFFSET (USFT)	MODIFIED STATE PLANE (GROUND) NORTHING (US SURVEY FT)	EASTING (US SURVEY FT)	ELEVATION (US SURVEY FT)	DESCRIPTION
PROJECT CONTROL POINTS							
6				677,514.95	1,583,950.79	1,177.09	RB W/ CAP 29' S OF RTE 64 CL, 898' W OF WEST OF BRIDGE
6				677,783.26	1,584,589.42	1,160.73	RB W/ CAP 17' S OF RTE 64 CL, 206' W OF WEST OF BRIDGE
ALIGNMENTS							
	0+00.00	RTE 64 CON CL		677,367.84	1,583,012.86		START/ PC
	5+42.01	RTE 64 CON CL		677,376.81	1,583,554.80		PI
4	10+71.34	RTE 64 CON CL		677,583.34	1,584,055.92		PT
4	22+12.10	RTE 64 CON CL		678,018.01	1,585,110.63		PC
5	25+91.98	RTE 64 CON CL		678,162.76	1,585,461.85		PI
5	29+49.00	RTE 64 CON CL		678,084.24	1,585,833.52		PT
	37+95.14	RTE 64 CON CL		677,909.36	1,586,661.40		END
	470+70.00	RTE 64 CL		677,340.58	1,581,367.80		START
	487+17.04	RTE 64 CL		677,367.84	1,583,012.86		PC
	492+51.92	RTE 64 CL		677,376.70	1,583,547.66		PI
4	497+74.60	RTE 64 CL		677,578.12	1,584,043.17		PT
4	509+69.00	RTE 64 CL		678,027.90	1,585,149.64		PC
5	513+19.89	RTE 64 CL		678,160.04	1,585,474.70		PI
5	516+50.00	RTE 64 CL		678,087.52	1,585,818.01		PT
	525+12.00	RTE 64 CL		677,909.36	1,586,661.40		END

STATE OF MISSOURI
RYAN JOSEPH LIBBERT
NUMBER PE-2006019679
PROFESSIONAL ENGINEER
10/02/2023 10:49:25 AM
RYAN JOSEPH LIBBERT - CIVIL
MO-PE-2006019679

DATE PREPARED
9/21/2023

ROUTE	STATE
64	MO
DISTRICT	SHEET NO.
CD	6

COUNTY
LACLEDE

JOB NO.
J5P3244

CONTRACT ID.

PROJECT NO.

BRIDGE NO.

DATE	DESCRIPTION

MISSOURI HIGHWAYS AND TRANSPORTATION COMMISSION
105 WEST CAPITOL
JEFFERSON CITY, MO 65102
1-888-ASK-MODOT (1-888-275-6636)

REFERENCE POINT &
COORDINATE POINT SHEET
SHEET 1 OF 1

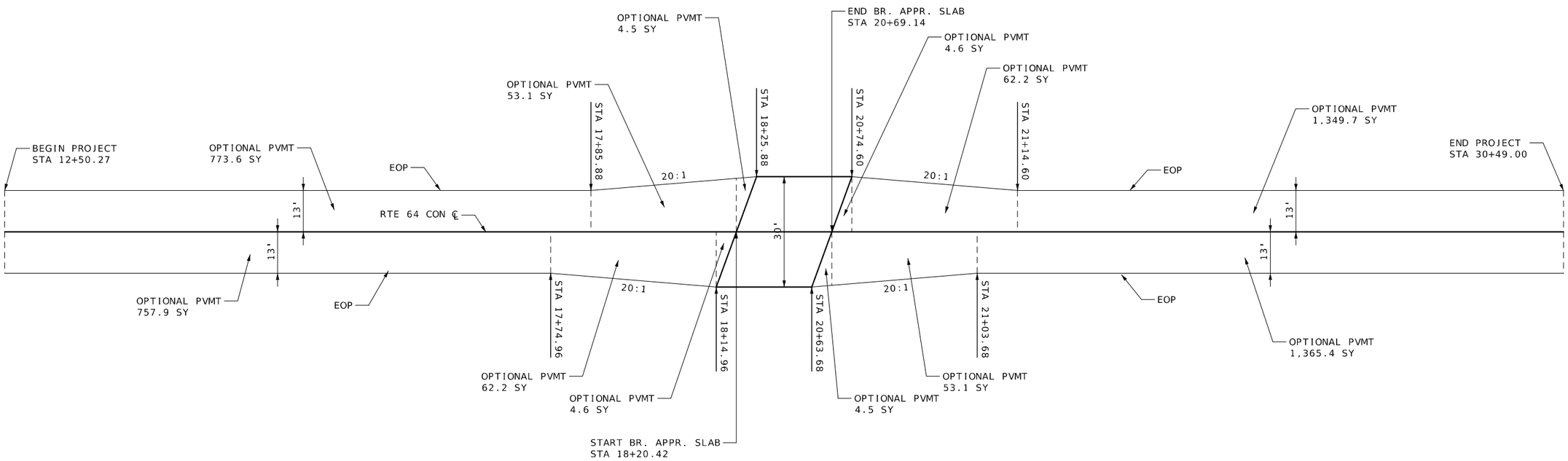

NOT TO SCALE

PAVEMENT DETAIL

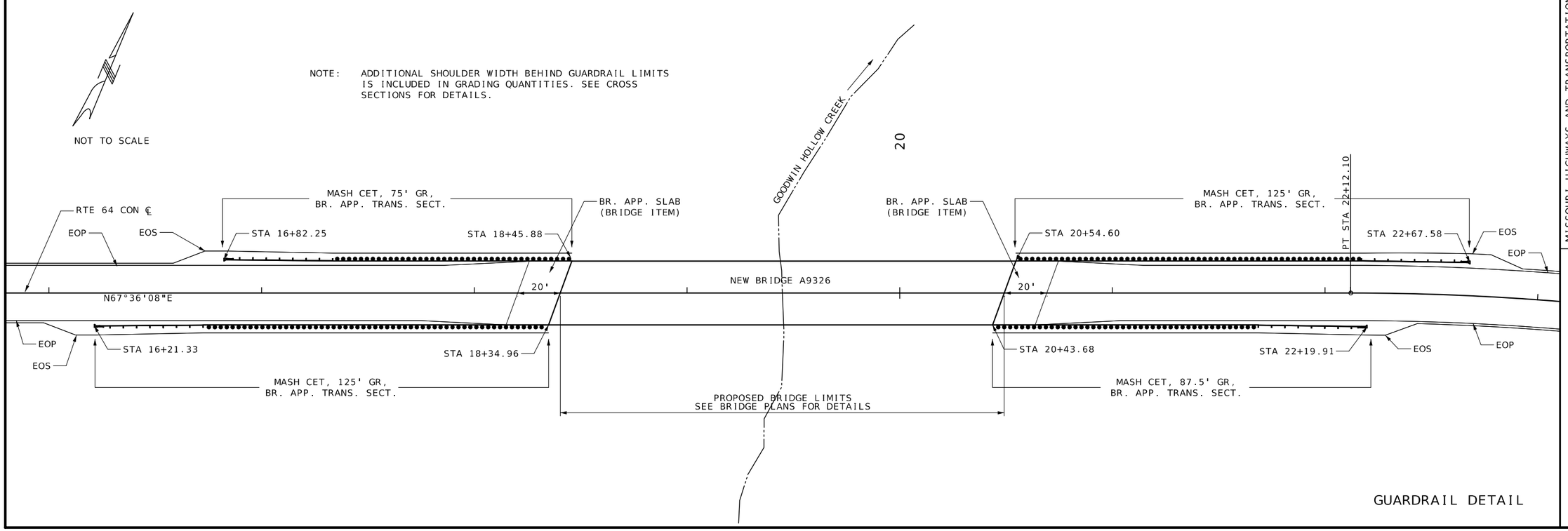

GUARDRAIL DETAIL

STATE OF MISSOURI
RYAN JOSEPH LIBBERT
NUMBER PE-2006019679
PROFESSIONAL ENGINEER

10/02/2023 10:54:12 AM
RYAN JOSEPH LIBBERT - CIVIL
MO-PE-2006019679

DATE PREPARED	
9/21/2023	
ROUTE 64	STATE MO
DISTRICT CD	SHEET NO. 7
COUNTY LACLEDE	
JOB NO. J5P3244	
CONTRACT ID.	
PROJECT NO.	
BRIDGE NO.	

DESCRIPTION	DATE

MISSOURI HIGHWAYS AND TRANSPORTATION COMMISSION

105 WEST CAPITOL
JEFFERSON CITY, MO 65102
1-888-ASK-MODOT (1-888-275-6636)

SPECIAL SHEET
GUARDRAIL DETAIL
SHEET 1 OF 2

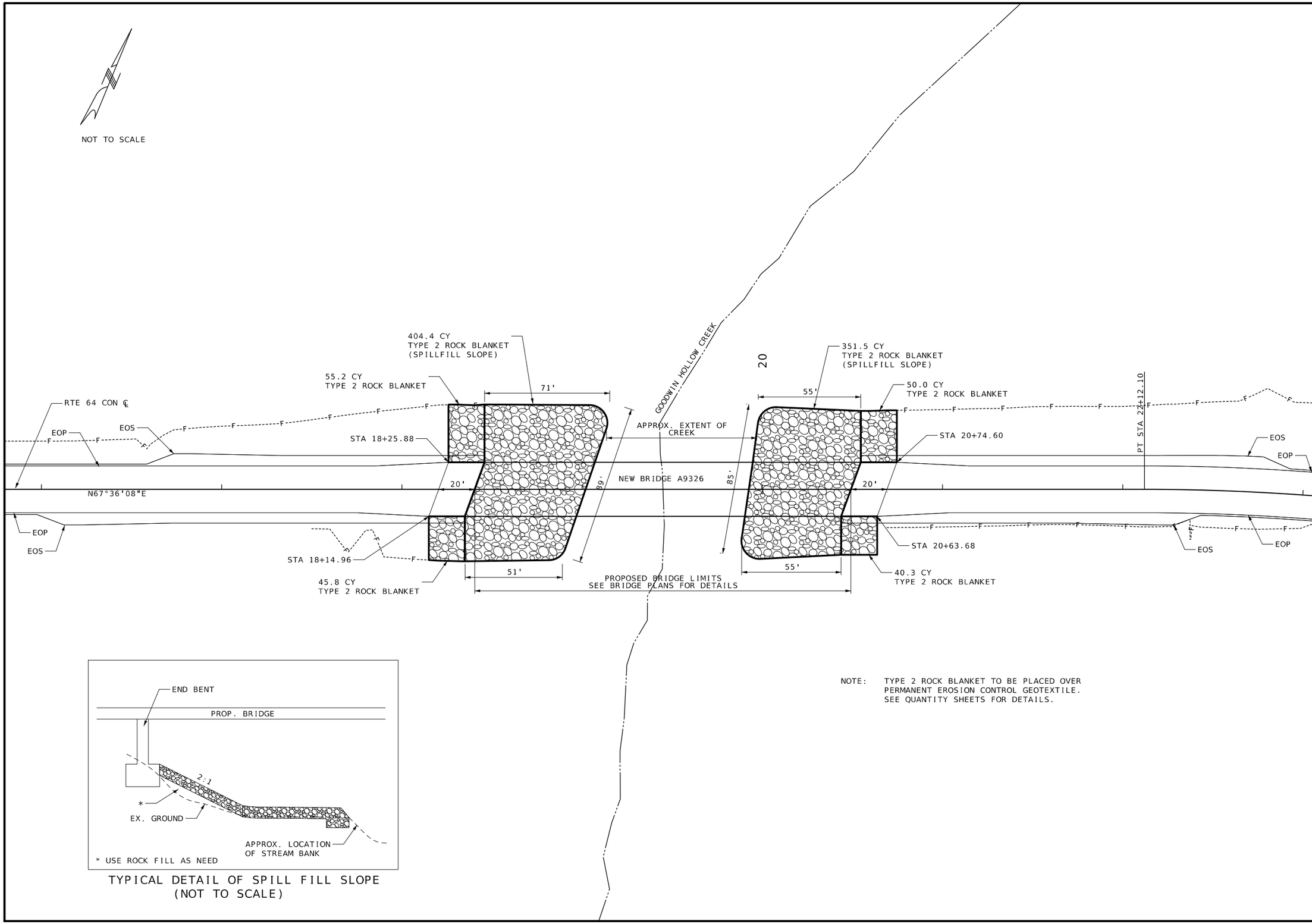

TYPICAL DETAIL OF SPILL FILL SLOPE
(NOT TO SCALE)

NOTE: TYPE 2 ROCK BLANKET TO BE PLACED OVER PERMANENT EROSION CONTROL GEOTEXTILE. SEE QUANTITY SHEETS FOR DETAILS.

STATE OF MISSOURI
RYAN JOSEPH LIBBERT
NUMBER
PE-2006019679
PROFESSIONAL ENGINEER

10/02/2023 10:55:06 AM
RYAN JOSEPH LIBBERT - CIVIL
MO-PE-2006019679

DATE PREPARED	
9/21/2023	
ROUTE	STATE
64	MO
DISTRICT	SHEET NO.
CD	8
COUNTY	
LACLEDE	
JOB NO.	
J5P3244	
CONTRACT ID.	
PROJECT NO.	
BRIDGE NO.	

DATE	DESCRIPTION

MISSOURI HIGHWAYS AND TRANSPORTATION COMMISSION

105 WEST CAPITOL
JEFFERSON CITY, MO 65102
1-888-ASK-MODOT (1-888-275-6636)

SPECIAL SHEET
ROCK BLANKET DETAIL
SHEET 2 OF 2

RTE 64 DETOUR SIGN LAYOUT

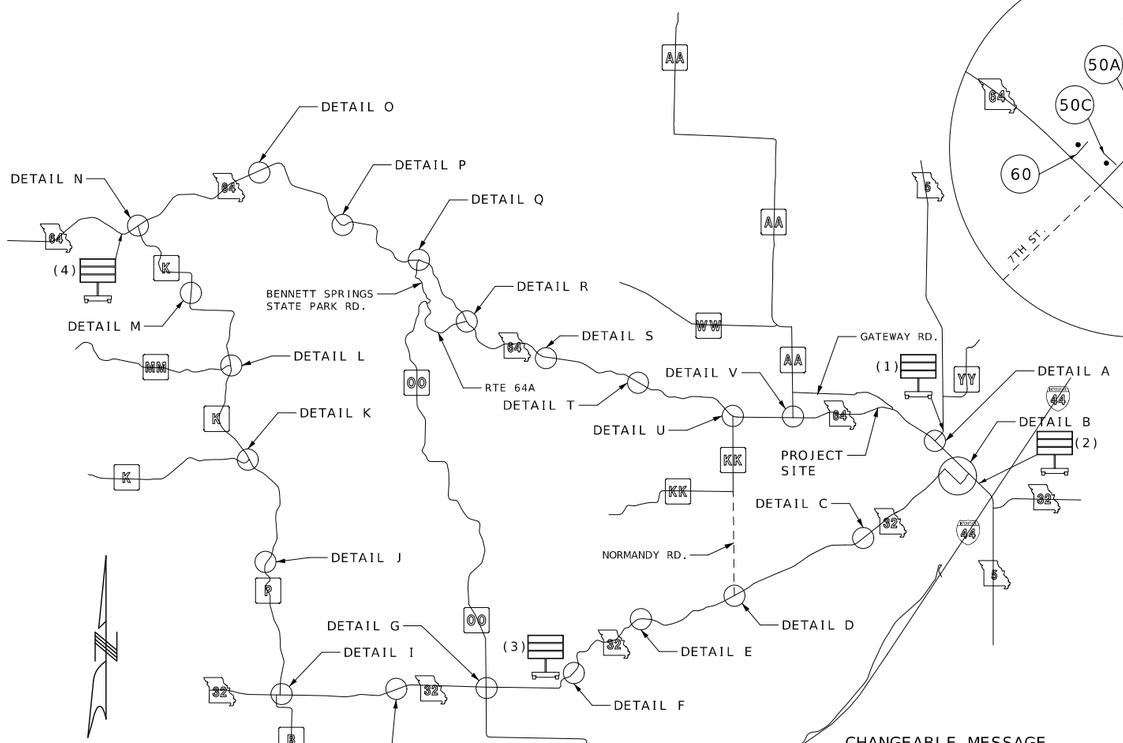

CHANGEABLE MESSAGE BOARD

R11-3a (60)

"XX" FOR DETAIL A = 1
"XX" FOR DETAIL N = 18
"XX" FOR DETAIL R = 9
"XX" FOR DETAIL U = 3
"XX" FOR DETAIL V = 1

(18) (52)

CHANGEABLE MESSAGE BOARD MESSAGES

(1) -	RTE 64 CLOSED	USE DETOUR
(2) -	RTE 64 CLOSED AHEAD	USE RTE 32
(3) -	STATE PARK VISITORS	USE RTE OO
(4) -	RTE 64 18 MI AHEAD	USE DETOUR
(5) -	RT 64 TO BENNETT SPRINGS	CLOSED USE ALT ROUTE

MESSAGES MAY BE ALTERED WITH APPROVAL OF THE ENGINEER

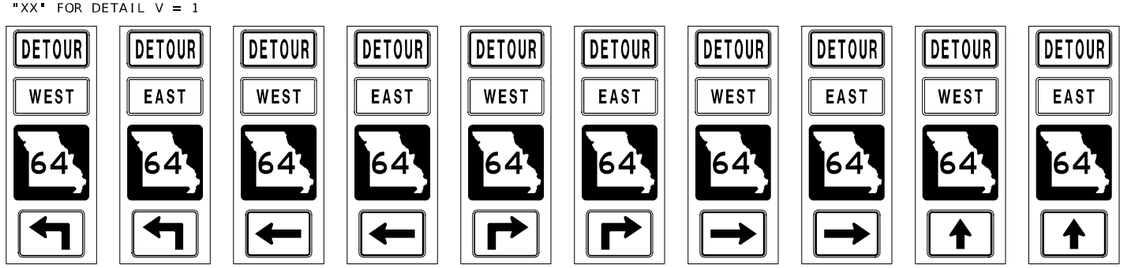

(50A) (50B) (50C) (50D) (50E) (50F) (50G) (50H) (50I) (50J)

DETAIL A

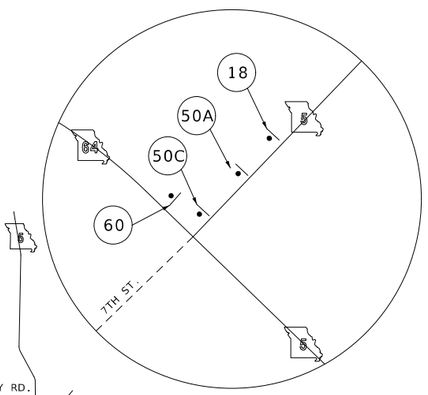

DETAIL B

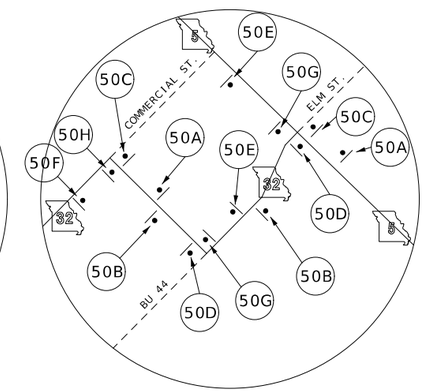

DETAIL C

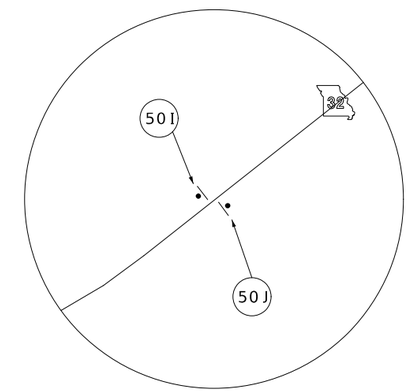

DETAIL D

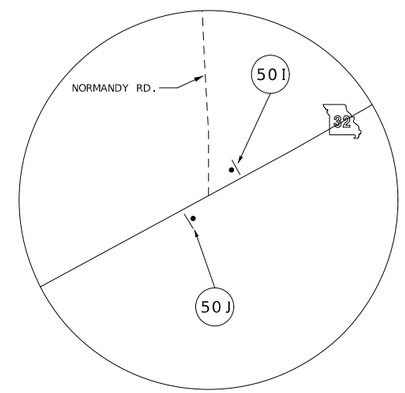

DETAIL E

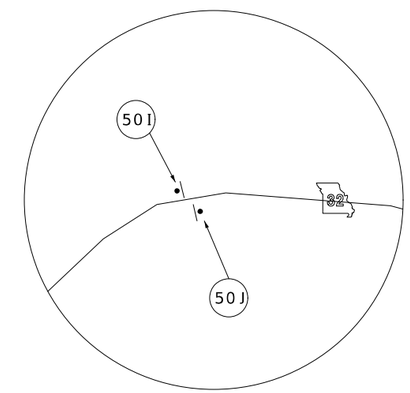

DETAIL F

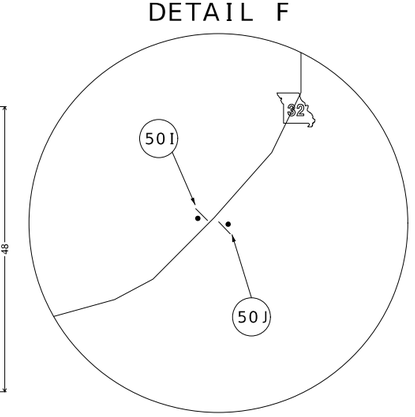

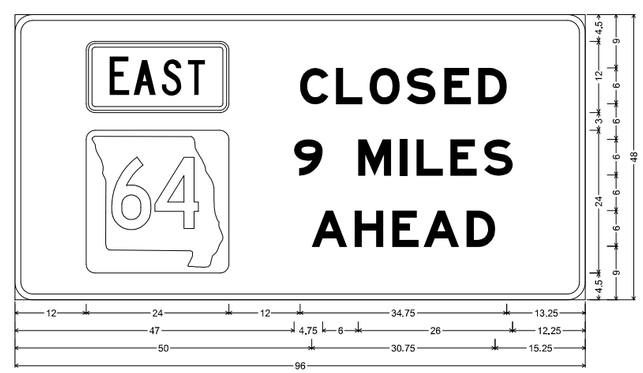

MO4-13 SHF-FLAT SHEET FLUORESCENT;
3.000" Radius, 1.000" Border, Black on, Orange;
"CLOSED", E Mod; "9 MILES", E Mod; "AHEAD", E Mod;
Table of letter and object lefts

12.000	C 48.000	L 54.000	O 59.750	S 66.000	E 72.250	D 78.000
9 12.000	9 47.000	M 57.750	I 64.875	L 67.625	E 73.250	S 79.000
A 50.000	H 57.125	E 63.500	A 68.750	D 76.000		

(55)

STATE OF MISSOURI
RYAN JOSEPH LIBBERT
NUMBER PE-2006019679
PROFESSIONAL ENGINEER

10/03/2023 7:58:58 AM
RYAN JOSEPH LIBBERT - CIVIL
MO-PE-2006019679

DATE PREPARED	10/3/2023
ROUTE 64	STATE MO
DISTRICT CD	SHEET NO. 9
COUNTY	LACLEDE
JOB NO.	J5P3244
CONTRACT ID.	
PROJECT NO.	
BRIDGE NO.	

DATE	DESCRIPTION

MISSOURI HIGHWAYS AND TRANSPORTATION COMMISSION
105 WEST CAPITOL
JEFFERSON CITY, MO 65102
1-888-ASK-MODOT (1-888-275-6636)

TRAFFIC CONTROL SHEET
SHEET 1 OF 4

DETAIL G

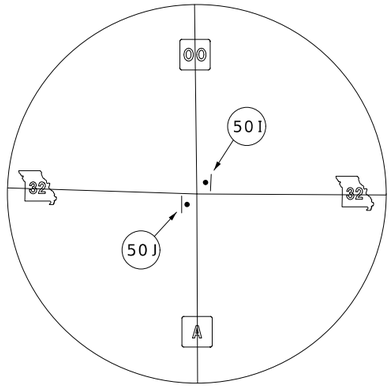

DETAIL H

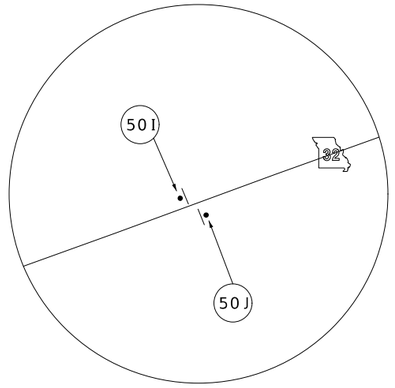

DETAIL I

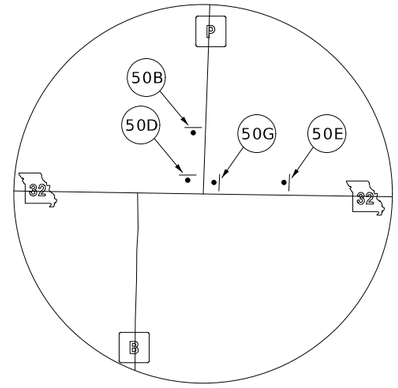

DETAIL J

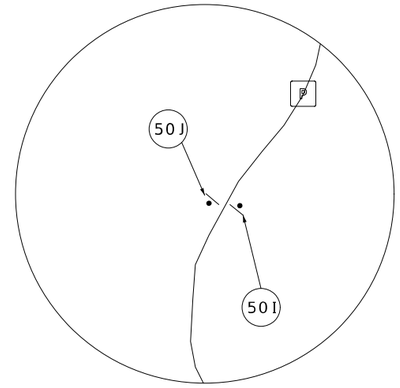

DETAIL K

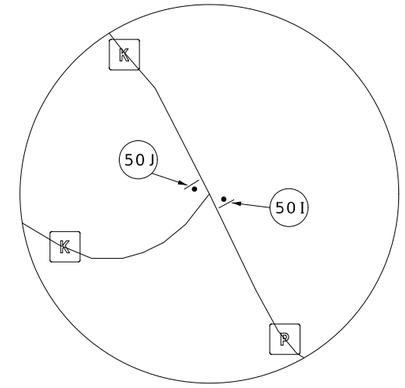

DETAIL L

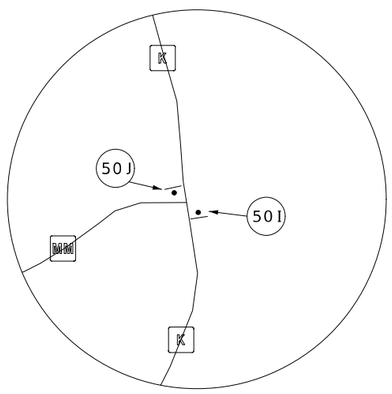

DETAIL M

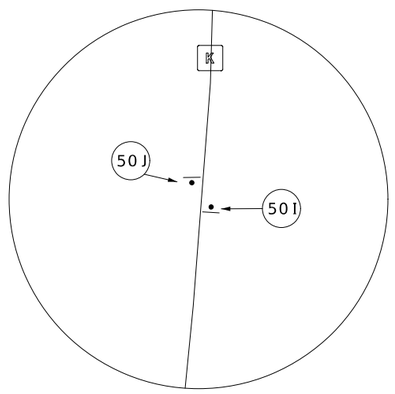

DETAIL N

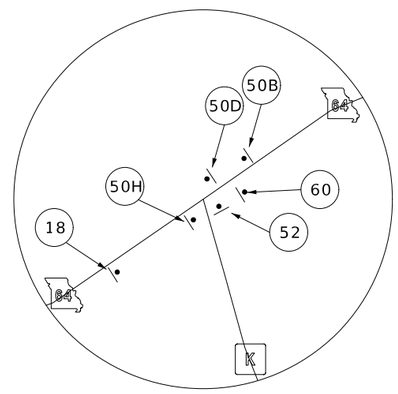

DETAIL O

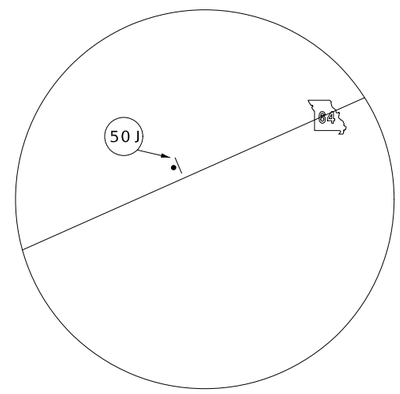

DETAIL P

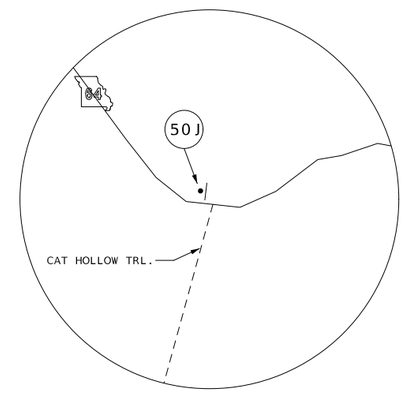

DETAIL Q

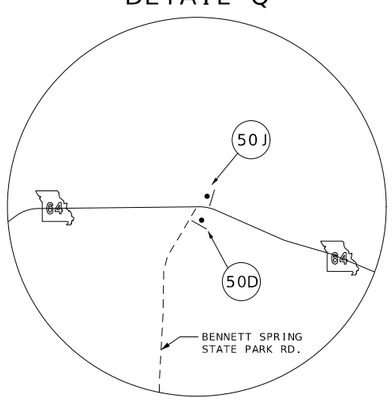

DETAIL R

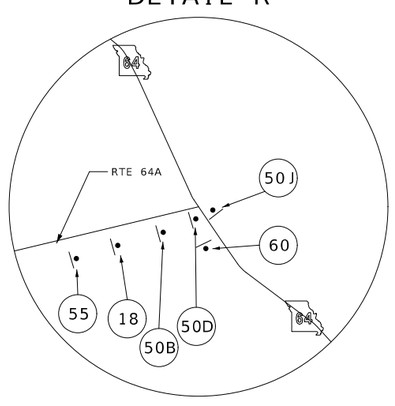

DETAIL S & T

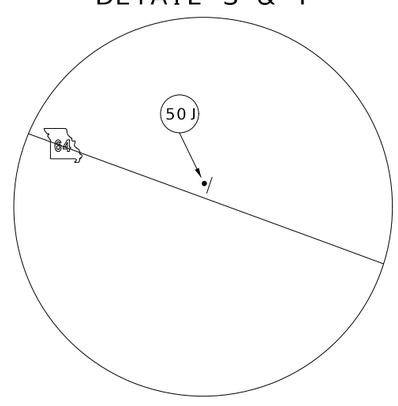

DETAIL U

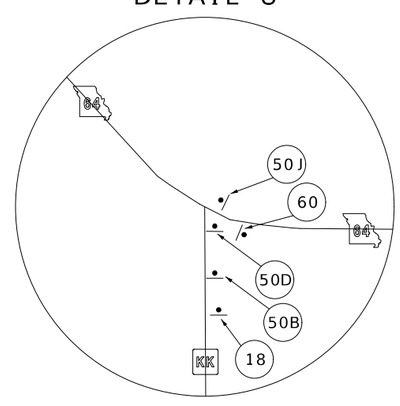

DETAIL V

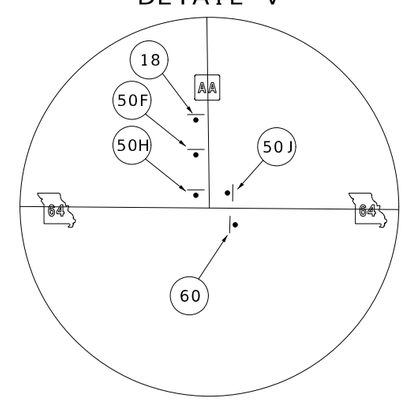

STATE OF MISSOURI
RYAN JOSEPH LIBBERT
NUMBER PE-2006019679
PROFESSIONAL ENGINEER

10/02/2023 11:02:42 AM
RYAN JOSEPH LIBBERT - CIVIL
MO-PE-2006019679

DATE PREPARED	
9/21/2023	
ROUTE 64	STATE MO
DISTRICT CD	SHEET NO. 10

COUNTY: LACLEDE

JOB NO. J5P3244

CONTRACT ID.

PROJECT NO.

BRIDGE NO.

DATE	DESCRIPTION

MISSOURI HIGHWAYS AND TRANSPORTATION COMMISSION

105 WEST CAPITOL
JEFFERSON CITY, MO 65102
1-888-ASK-MODOT (1-888-275-6636)

TRAFFIC CONTROL SHEET
SHEET 2 OF 4

TEMPORARY CLOSURE OF BRIDGE

NOTE: PAVEMENT RECONSTRUCTION WORK SHALL BE STAGED TO ALLOW CONTINUOUS ACCESS TO PRIVATE ENTRANCES LOCATED WITHIN THE RECONSTRUCTION LIMITS. HARD CLOSURES LOCATIONS MAY BE ADJUSTED AS NECESSARY. TEMPORARY SURFACING SHALL BE USED AS NEEDED TO PROVIDE ACCESS.

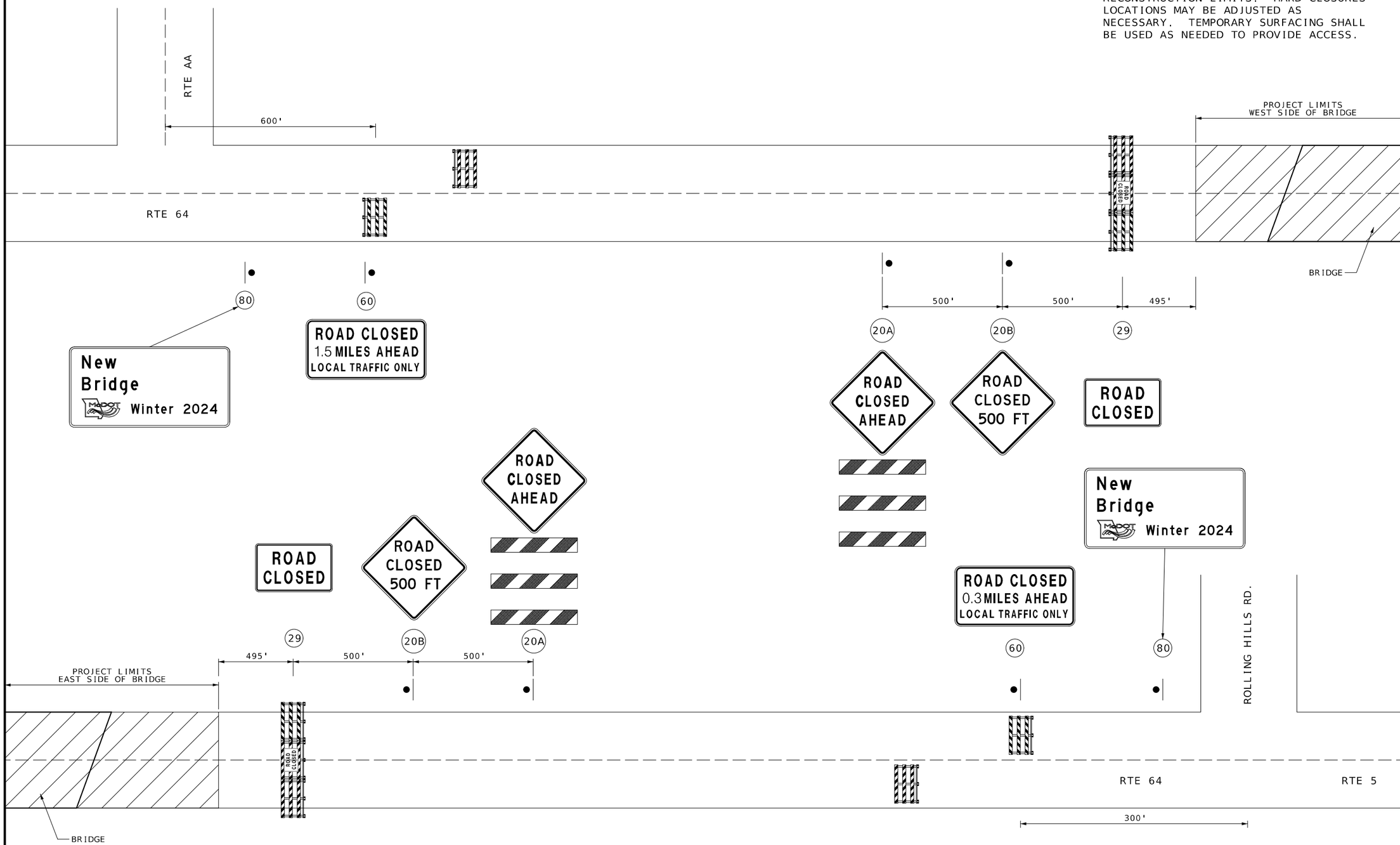

NOT TO SCALE

STATE OF MISSOURI
RYAN JOSEPH LIBBERT
NUMBER
PE-2006019679
PROFESSIONAL ENGINEER

10/02/2023 11:02:55 AM
RYAN JOSEPH LIBBERT - CIVIL
MO-PE-2006019679

DATE PREPARED	9/21/2023
ROUTE	64
STATE	MO
DISTRICT	CD
SHEET NO.	11
COUNTY	LACLEDE
JOB NO.	J5P3244
CONTRACT ID.	
PROJECT NO.	
BRIDGE NO.	

DATE	DESCRIPTION

MISSOURI HIGHWAYS AND TRANSPORTATION COMMISSION

105 WEST CAPITOL
JEFFERSON CITY, MO 65102
1-888-ASK-MODOT (1-888-275-6636)

TRAFFIC CONTROL SHEET
SHEET 3 OF 4

LANE CLOSURE ON TWO-LANE ROAD USING FLAGGERS

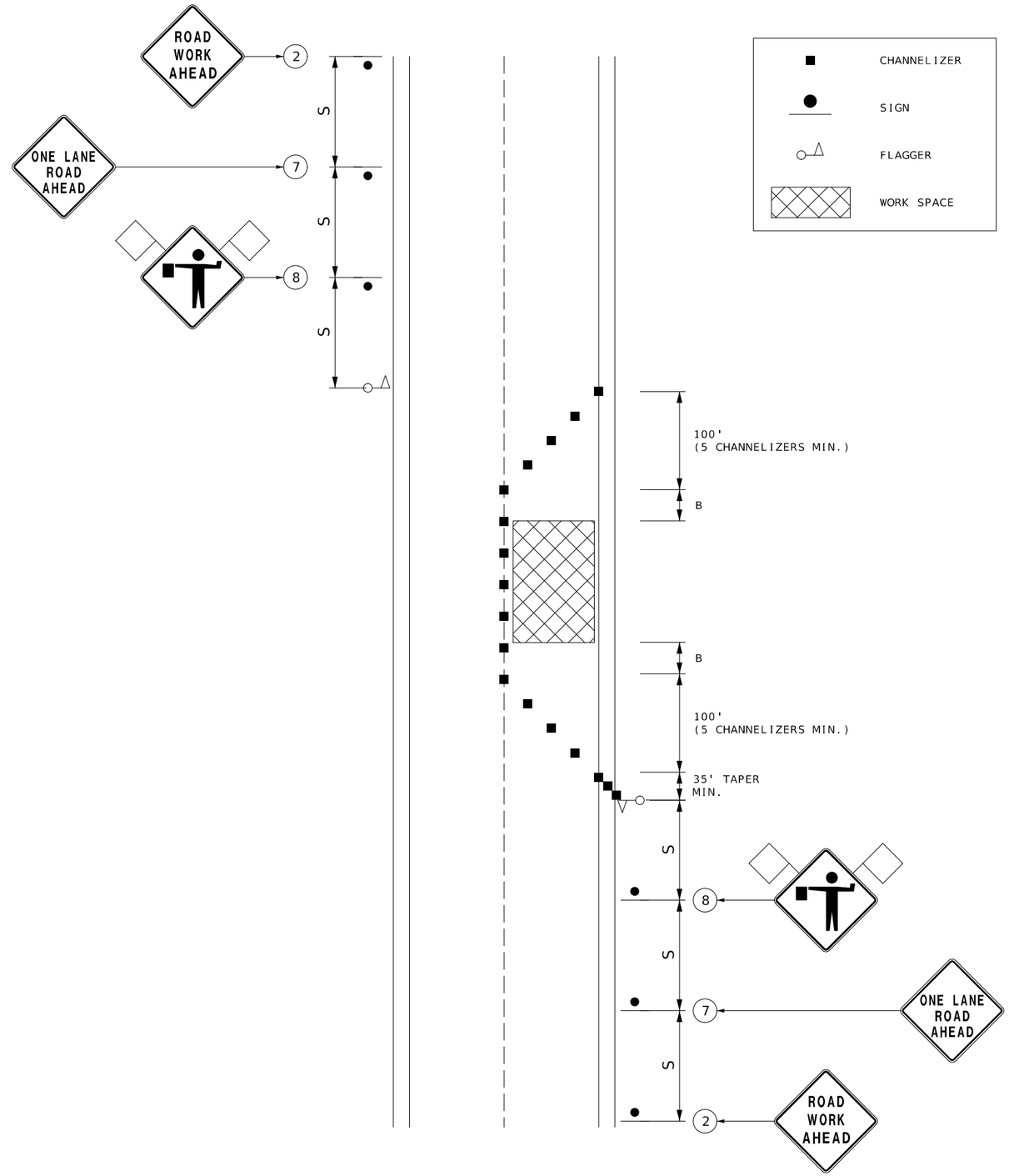

SPEED	SIGN SPACING (FT.)	OPTIONAL	CHANNELIZER SPACING(FT.)
NORMAL POSTED (MPH)	UNDIVIDED (S)	BUFFER LENGTH (FT.) (B)	BUFFER/ WORK AREAS
0-35	200	280	40
40-45	350	400	80
50-55	500	560	80
60-70	1000	840	120

STATE OF MISSOURI
RYAN JOSEPH LIBBERT
NUMBER
PE-2006019679
PROFESSIONAL ENGINEER

10/06/2023 6:13:06 AM
RYAN JOSEPH LIBBERT - CIVIL
MO-PE-2006019679

DATE PREPARED	
10/6/2023	
ROUTE 64	STATE MO
DISTRICT CD	SHEET NO. 12
COUNTY LACLEDE	
JOB NO. J5P3244	
CONTRACT ID.	
PROJECT NO.	
BRIDGE NO.	

DESCRIPTION	DATE

MISSOURI HIGHWAYS AND TRANSPORTATION COMMISSION

105 WEST CAPITOL
JEFFERSON CITY, MO 65102
1-888-ASK-MODOT (1-888-275-6636)

TRAFFIC CONTROL SHEET
SHEET 4 OF 4

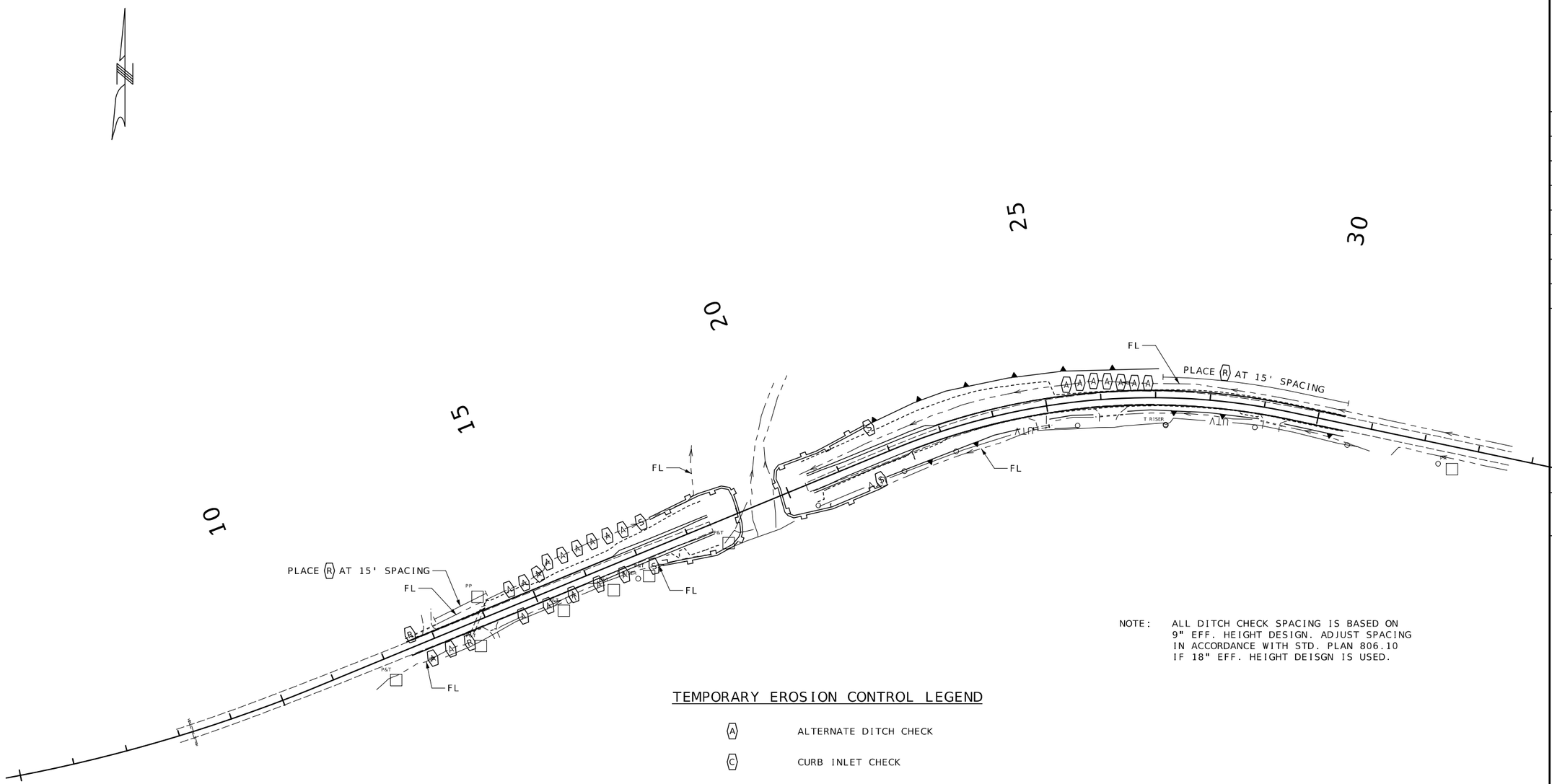

NOTE: ALL DITCH CHECK SPACING IS BASED ON 9" EFF. HEIGHT DESIGN. ADJUST SPACING IN ACCORDANCE WITH STD. PLAN 806.10 IF 18" EFF. HEIGHT DEISGN IS USED.

TEMPORARY EROSION CONTROL LEGEND

- A — ALTERNATE DITCH CHECK
- C — CURB INLET CHECK
- R — ROCK DITCH CHECK
- S — SEDIMENT TRAP
- ENERGY DISSIPATOR
- TEMPORARY BERM TYPE B
- TEMPORARY BERM TYPE C
- SILT FENCE
- TEMPORARY SEDIMENT BASIN
- PERMANENT SEDIMENT BASIN

SCALE

0 100 200 300 400 500

STATE OF MISSOURI
RYAN JOSEPH LIBBERT
NUMBER
PE-2006019679
PROFESSIONAL ENGINEER

10/02/2023 11:26:28 AM
RYAN JOSEPH LIBBERT - CIVIL
MO-PE-2006019679

DATE PREPARED	
9/21/2023	
ROUTE	STATE
64	MO
DISTRICT	SHEET NO.
CD	13
COUNTY	
LACLEDE	
JOB NO.	
J5P3244	
CONTRACT ID.	
PROJECT NO.	
BRIDGE NO.	

DATE	DESCRIPTION

MISSOURI HIGHWAYS AND TRANSPORTATION COMMISSION

105 WEST CAPITOL
JEFFERSON CITY, MO 65102
1-888-ASK-MODOT (1-888-275-6636)

EROSION CONTROL SHEET
SHEET 1 OF 1

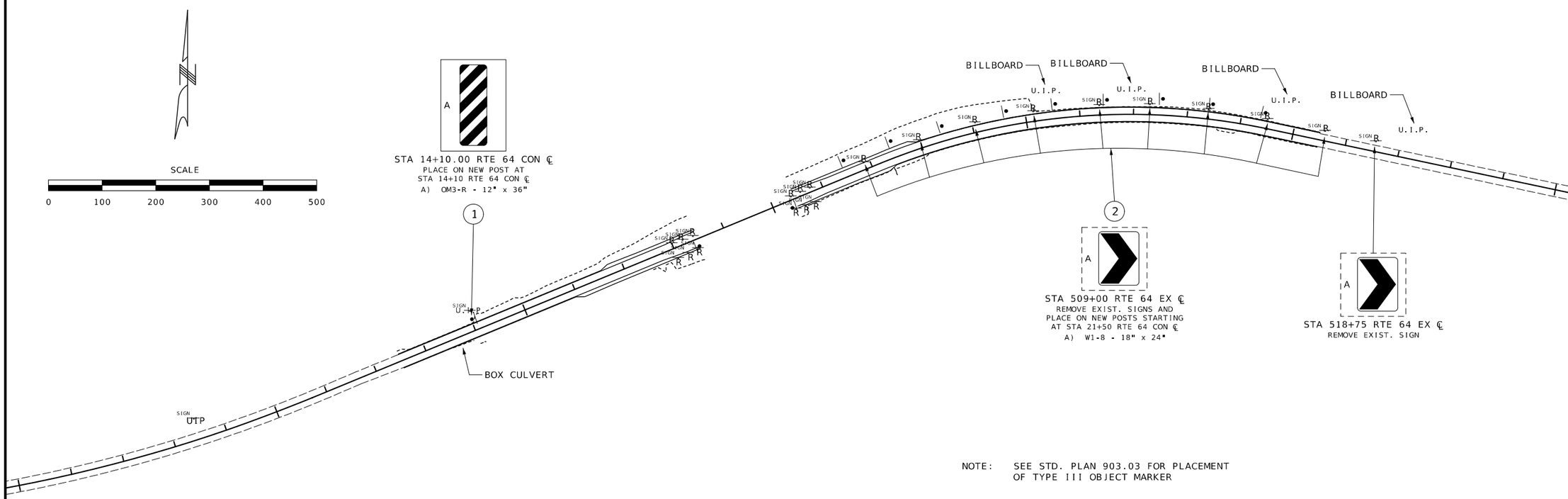

NOTE: SEE STD. PLAN 903.03 FOR PLACEMENT OF TYPE III OBJECT MARKER

SIGNS 902 SIGNAL SIGNS TABULATED ON D-37A SHEET						U CHAN-NEL POST	REMARKS & OTHER REQUIRED ITEMS
SIGN NO.	SIGN SIZE	STATION/ LOG MILE	HORZ CLEAR IF NOT STD	LOCATION	SIGN DTL. SHT. NO.	ITEM NO. 9031250 LF	
1	1'x3'	14+10.00		RTE 64 CON CL - Lt.		12	OBJECT MARKER AT CULVERT
2	1.5'x2'	21+50		RTE 64 CON CL - Lt.		126	REPLACE APPROX. 9 SIGNS
					TOTAL	138	

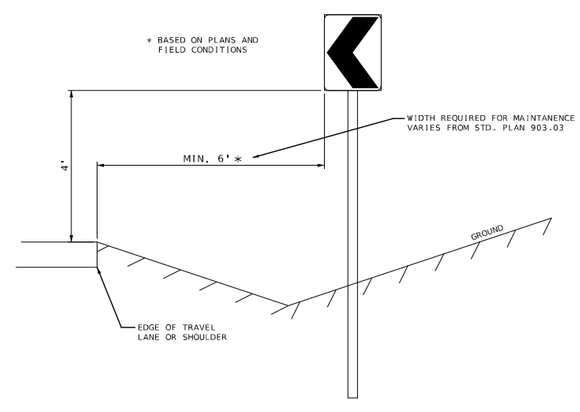

MOUNTING HEIGHT DETAIL
CHEVRON SIGN

STATE OF MISSOURI
RYAN JOSEPH LIBBERT
NUMBER PE-2006019679
PROFESSIONAL ENGINEER

10/02/2023 11:27:01 AM
RYAN JOSEPH LIBBERT - CIVIL
MO-PE-2006019679

DATE PREPARED	
9/21/2023	
ROUTE 64	STATE MO
DISTRICT CD	SHEET NO. 14
COUNTY LACLEDE	
JOB NO. J5P3244	
CONTRACT ID.	
PROJECT NO.	
BRIDGE NO.	

DATE	DESCRIPTION

MISSOURI HIGHWAYS AND TRANSPORTATION COMMISSION

105 WEST CAPITOL
JEFFERSON CITY, MO 65102
1-888-ASK-MODOT (1-888-275-6636)

SIGNING SHEET
SIGNING LAYOUT/ D29
SHEET 1 OF 1

SEC/SUR 4 TWP 34 N RGE 16 W

(60'-85'-60') PRESTRESSED CONCRETE NU-GIRDER SPANS (SKEW: 20° L.A.)

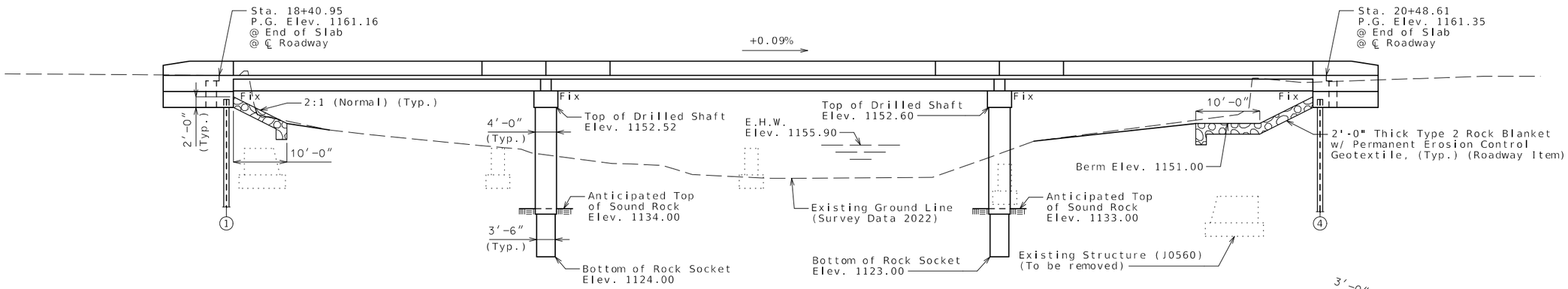

GENERAL ELEVATION

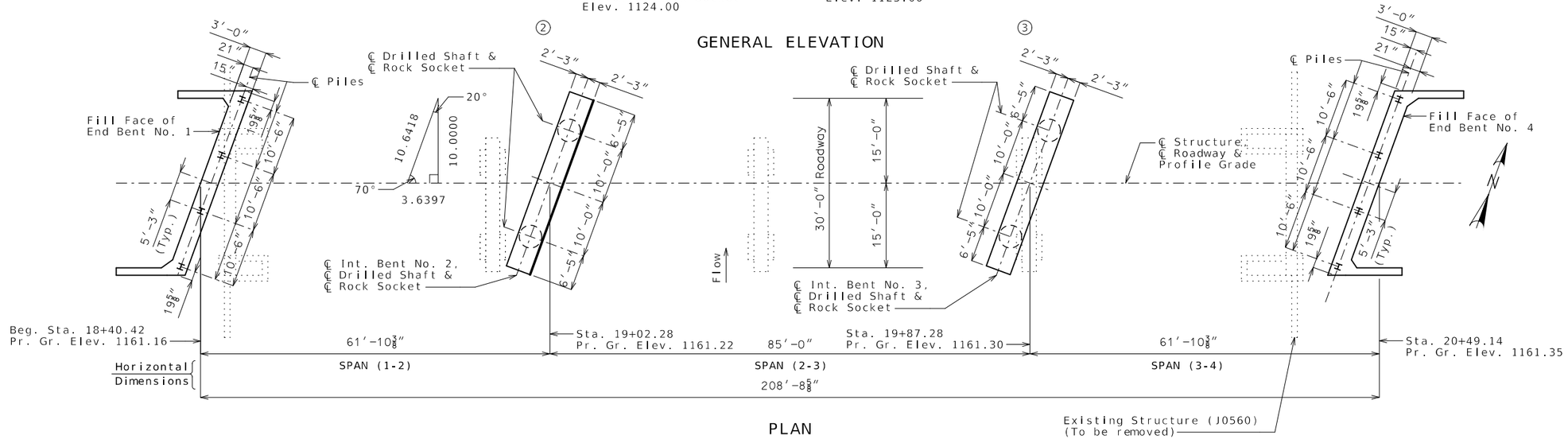

PLAN

Indicates location of borings.

Notice and Disclaimer Regarding Boring Log Data

The locations of all subsurface borings for this structure are shown on the plan sheet(s) for this structure. The boring data for all locations indicated, as well as any other boring logs or other factual records of subsurface data and investigations performed by the department for the design of the project, are shown on Sheet(s) No. 27 and may be included in the Electronic Bridge Deliverables. They will also be available from the Project Contact upon written request. No greater significance or weight should be given to the boring data depicted on the plan sheets than is given to the subsurface data available from the district or elsewhere.

The Commission does not represent or warrant that any such boring data accurately depicts the conditions to be encountered in constructing this project. A contractor assumes all risks it may encounter in basing its bid prices, time or schedule of performance on the boring data depicted here or those available from the district, or on any other documentation not expressly warranted, which the contractor may obtain from the Commission.

Notes:

For General Notes, Estimated Quantities, Estimated Quantities for Slab on Concrete NU-Girder, Foundation Data and Hydrologic Data, see Sheet No. 2.

Existing roadway fill under ends of bridge shall be removed as shown. Removal of existing roadway fill will be considered completely covered by the contract unit price for roadway excavation.

B.M. ELEV. 351.52 NAIL & NUT IN SIDE OF 14" WALNUT 100' RT OF STA. 506+85.00

BRIDGE: ROUTE 64
OVER GOODWIN HOLLOW CREEK

ROUTE 64 FROM ROUTE AA TO ROUTE 5
ABOUT 1.7 MILES EAST OF ROUTE AA
BEGINNING STATION 18+40.42

Designed Aug. 2023
Detailed Aug. 2023
Checked Sep. 2023

Note: This drawing is not to scale. Follow dimensions.

STATE OF MISSOURI
TRENTON B. CRAWFORD
NUMBER PE-2012018053
PROFESSIONAL ENGINEER
THIS SHEET HAS BEEN SIGNED, SEALED AND DATED ELECTRONICALLY.

DATE PREPARED	10/25/2023
ROUTE	64
STATE	MO
DISTRICT	BR
SHEET NO.	1
COUNTY	LACLEDE
JOB NO.	J5P3244
CONTRACT ID.	
PROJECT NO.	
BRIDGE NO.	A9326

DESCRIPTION

DATE

MISSOURI HIGHWAYS AND TRANSPORTATION COMMISSION
105 WEST CAPITOL
JEFFERSON CITY, MO 65102
1-888-ASK-MODOT (1-888-275-6636)

General Notes:

Design Specifications:
2020 AASHTO LRFD Bridge Design Specifications (9th Ed.)
2011 AASHTO Guide Specifications for LRFD Seismic Bridge Design (2nd Ed.) and 2014 Interim Revisions (Seismic Details)
Seismic Design Category = A
Design earthquake response spectral acceleration coefficient at 1.0 second period, SD1 = 0.144g
Acceleration Coefficient (effective peak ground acceleration coefficient), As = 0.100g

Design Loading:
Vehicular = HL-93
Future Wearing Surface = 35 lb/sf
Earth = 120 lb/sf
Equivalent Fluid Pressure = 45 lb/cf (Min.)
Superstructure: Simply-Supported, Non-Composite for dead load.
Continuous Composite for live load.

Design Unit Stresses:

Class B Concrete (Substructure)	f'c = 3,000 psi
Class B-1 Concrete (Barrier)	f'c = 4,000 psi
Class B-2 Concrete (Superstructure, except Prestressed Girders and Barrier)	f'c = 4,000 psi
Reinforcing Steel (Grade 60)	fy = 60,000 psi
Structural Steel HP Pile (ASTM A709 Grade 50S)	fy = 50,000 psi

For precast prestressed panel stresses, see Sheet No. 17.

For prestressed girder stresses, see Sheets No. 12 thru 15.

Neoprene Pads:
Neoprene bearing pads shall be 60 durometer and shall be in accordance with Sec 716.

Joint Filler:
All Joint Filler shall be in accordance with Sec 1057 for preformed sponge rubber expansion and partition joint filler, except as noted.

Reinforcing Steel:
Minimum clearance to reinforcing steel shall be 1 1/2", unless otherwise shown.

Traffic Handling:
Structure to be closed during construction. Traffic to be maintained on other routes during construction. See roadway plans for traffic control.

Miscellaneous:
MoDOT Construction personnel will indicate the type of joint filler option used under the precast panels for this structure:

☐ Constant Joint Filler
☐ Variable Joint Filler

Hydrologic Data

Drainage Area = 33 mi^2
Design Flood Frequency = 50 years
Design Flood Discharge = 11700 cfs
Design Flood (D.F.) Elevation = 1154.0
Base Flood (100-year)
Base Flood Elevation = 1154.5
Base Flood Discharge = 13700 cfs
Estimated Backwater = 0.3 ft
Average Velocity thru Opening = 13.7 ft/s
Freeboard (50-year)
Freeboard = 3.1 ft
Roadway Overtopping
Overtopping Flood Discharge = N/A
Overtopping Flood Frequency > 500 years
500-year Flood Elevation = 1155.7

Foundation Data

Type	Design Data		Bent Number 1	2	3	4
Load Bearing Pile	Pile Type and Size		HP 12x53	*	*	HP 12x53
	Number	ea	4	*	*	4
	Approximate Length Per Each	ft	20	*	*	29
	Pile Point Reinforcement	ea	ALL	*	*	ALL
	Min. Galvanized Penetration (Elev.)	ft	Full Length	*	*	Full Length
	Est. Max. Scour Depth 100 (Elev.)	ft	-	*	*	-
	Minimum Tip Penetration (Elev.)	ft	1135.52	*	*	1126.75
	Criteria for Min. Tip Penetration		Min. Embed.	*	*	Min. Embed.
	Pile Driving Verification Method		D.F.	*	*	D.F.
	Resistance Factor		0.40	*	*	0.40
	Minimum Nominal Axial Compressive Resistance	kip	521	*	*	521
Rock Socket	Number	ea	*	2	2	*
	Layer 1: Foundation Material		*	Strong Rock	Strong Rock	*
	Layer 1: Elevation Range	ft	*	1134	1133	*
	Layer 1: Design Side Friction	ksf	*	29.26	25.47	*
	Design End Bearing	ksf	*	*	*	*

Load Bearing Pile:
Minimum Nominal Axial Compressive Resistance = $\frac{\text{Maximum Factored Loads}}{\text{Resistance Factor}}$

Rock Socket (Drilled Shafts):
Minimum Nominal Axial Compressive Resistance = $\frac{\text{Maximum Factored Loads}}{\text{Resistance Factors}}$
(Side Resistance + Tip Resistance)

All piles shall be galvanized down to the minimum galvanized penetration (elevation).

Pile point reinforcement need not be galvanized. Shop drawings will not be required for pile point reinforcement.

The contractor shall make every effort to achieve the minimum galvanized penetration (elevation) shown on the plans for all piles. Deviation in penetration less than 5 feet of the minimum will be considered acceptable provided the contractor makes the necessary corrections to ensure the minimum penetration is achieved on subsequent piles.

DF = FHWA-modified Gate Dynamic Formula

Estimated Quantities for Slab on Concrete NU-Girder

Item		Total
Class B-2 Concrete	cu. yard	250
Reinforcing Steel (Epoxy Coated)	pound	55,100

The table of Estimated Quantities for Slab on Concrete NU-Girder represents the quantities used by the State in preparing the cost estimate for concrete slabs. The area of the concrete slab will be measured to the nearest square yard longitudinally from end of slab to end of slab and transversely from out to out of bridge slab (or with the horizontal dimensions as shown on the plan of slab). Payment for prestressed panels, conventional forms, all concrete and epoxy coated reinforcing steel will be considered completely covered by the contract unit price for the slab. Variations may be encountered in the estimated quantities but the variations cannot be used for an adjustment in the contract unit price.

Method of forming the slab shall be as shown on the plans and in accordance with Sec 703. All hardware for forming the slab to be left in place as a permanent part of the structure shall be coated in accordance with ASTM A123 or ASTM B633 with a thickness class SC 4 and a finish type I, II or III.

Class B-2 Concrete quantity is based on minimum top flange thickness and minimum joint material thickness.

The Estimated Quantities for Slab on Concrete NU-Girder are based on skewed precast prestressed end panels.

The prestressed panel quantities are not included in the table of Estimated Quantities for Slab on Concrete NU-Girder.

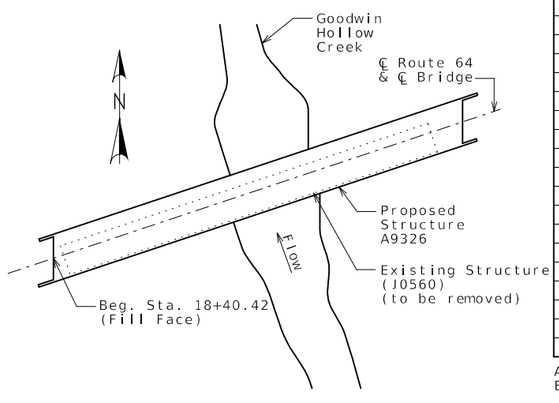

LOCATION SKETCH

Estimated Quantities

Item		Substr.	Superstr.	Total
Removal of Miscellaneous ACM (Non-Friable)	sq. foot.	137		137
Class 1 Excavation	cu. yard	80		80
Removal of Bridges (J0560)	lump sum			1
Bridge Approach Slab (Minor)	sq. yard		135	135
Drilled Shafts (4 ft. 0 in. Dia.)	linear foot	76.2		76.2
Rock Sockets (3 ft. 6 in. Dia.)	linear foot	40.0		40.0
Video Camera Inspection	each	4		4
Foundation Inspection Holes	linear foot	80.0		80.0
Sonic Logging Testing	each	4		4
Galvanized Structural Steel Piles (12 in.)	linear foot	196		196
Pile Point Reinforcement	each	8		8
Class B Concrete (Substructure)	cu. yard	83.0		83.0
Type D Barrier	linear foot		450	450
Slab on Concrete NU-Girder	sq. yard		754	754
NU 35, Prestressed Concrete NU-Girder	linear foot		818	818
Reinforcing Steel (Bridges)	pound		23,200	23,200
Slab Drain	each		10	10
Vertical Drain at End Bents	each		2	2
Plain Neoprene Bearing Pad	each		8	8
Laminated Neoprene Bearing Pad	each		16	16

All concrete above the construction joint in the end bents is included in the Estimated Quantities for Slab on Concrete NU-Girder.

All reinforcement in the end bents is included in the Estimated Quantities for Slab on Concrete NU-Girder.

All reinforcement in the intermediate bent concrete diaphragms except reinforcement embedded in the beam cap is included in the Estimated Quantities for Slab on Concrete NU-Girder.

All concrete above the intermediate beam cap is included in the Estimated Quantities for Slab on Concrete NU-Girder.

STATE OF MISSOURI
TRENTON B. CRAWFORD
NUMBER PE-2012018053
PROFESSIONAL ENGINEER
THIS SHEET HAS BEEN SIGNED, SEALED AND DATED ELECTRONICALLY.

DATE PREPARED 10/25/2023
ROUTE 64 | STATE MO
DISTRICT BR | SHEET NO. 2
COUNTY LACLEDE
JOB NO. J5P3244
CONTRACT ID.
PROJECT NO.
BRIDGE NO. A9326

DESCRIPTION | DATE

MISSOURI HIGHWAYS AND TRANSPORTATION COMMISSION
105 WEST CAPITOL
JEFFERSON CITY, MO 65102
1-888-ASK-MODOT (1-888-275-6636)

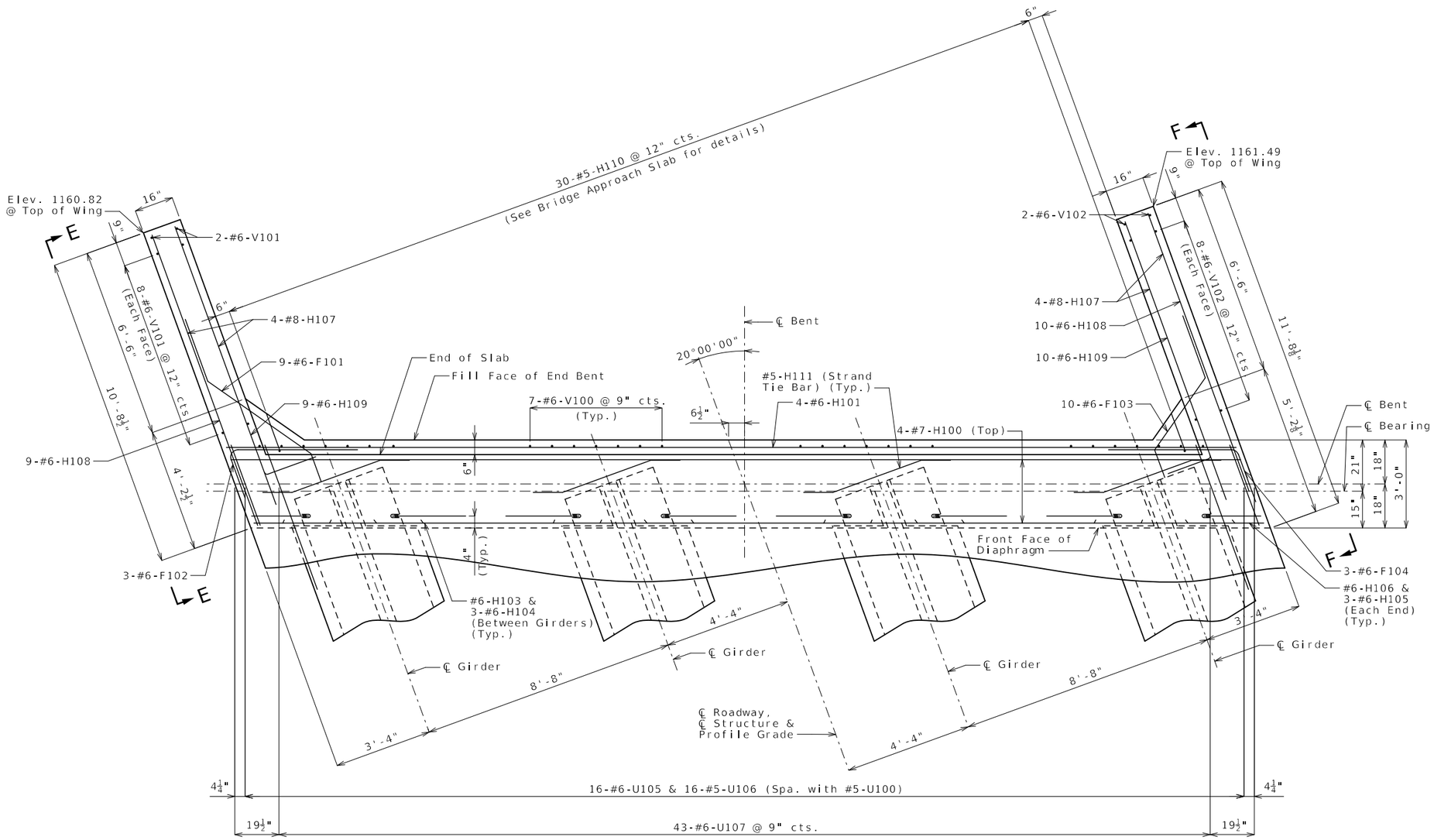

PART PLAN

Notes:

All concrete in the end bent above top of beam and below top of slab shall be Class B-2.

Strands at end of girders shall be field bent or, if necessary, cut in field to maintain 1 1/2-inch minimum clearance to fill face of end bent.

The #6-F101 & #6-F103 bars shall be bent in the field to clear girders.

The U bars shall be placed parallel to centerline of roadway.

For location of coil tie rods and #5-H101 (Strand Tie Bar), see Sheets No. 12 & 13.

For Elevation E-E and Elevation F-F, see Sheet No. 5.

For details of Vertical Drain at End Bents, see Sheet No. 6.

For details of Bridge Approach Slab, see Sheet No. 23.

Work this sheet with Sheets No. 4 & 5.

Substructure Quantity Table for Bent No. 1		
Item		Quantity
Class 1 Excavation	cu. yard	40
Galvanized Structural Steel Piles (12 in.)	linear foot	80
Pile Point Reinforcement	each	4
Class B Concrete (Substructure)	cu. yard	15.4

These quantities are included in the Estimated Quantities table on Sheet No. 2.

END BENT NO. 1

Detailed Aug. 2023
Checked Sep. 2023

Note: This drawing is not to scale. Follow dimensions.

STATE OF MISSOURI
TRENTON B. CRAWFORD
NUMBER PE-2012018053
PROFESSIONAL ENGINEER
THIS SHEET HAS BEEN SIGNED, SEALED AND DATED ELECTRONICALLY.

DATE PREPARED 10/25/2023

ROUTE	STATE
64	MO
DISTRICT	SHEET NO.
BR	3

COUNTY LACLEDE
JOB NO. J5P3244
CONTRACT ID.
PROJECT NO.
BRIDGE NO. A9326

DESCRIPTION
DATE

MISSOURI HIGHWAYS AND TRANSPORTATION COMMISSION
105 WEST CAPITOL
JEFFERSON CITY, MO 65102
1-888-ASK-MODOT (1-888-275-6636)

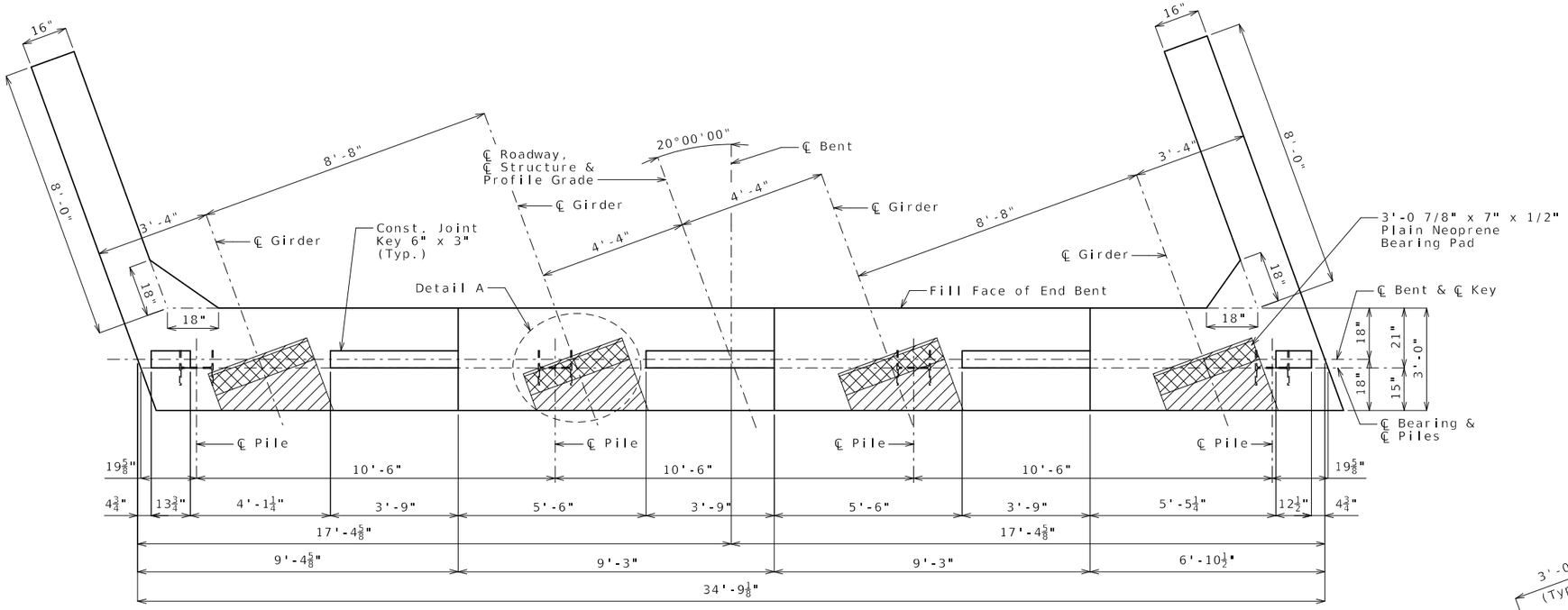

PLAN OF BEAM

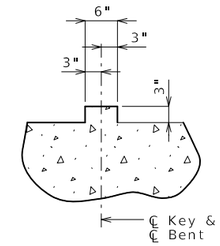

SECTION THRU KEY

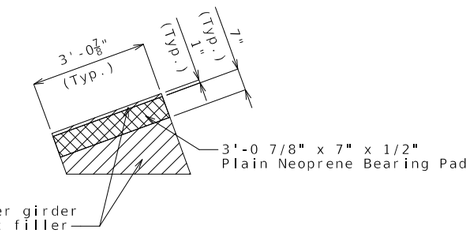

DETAIL A

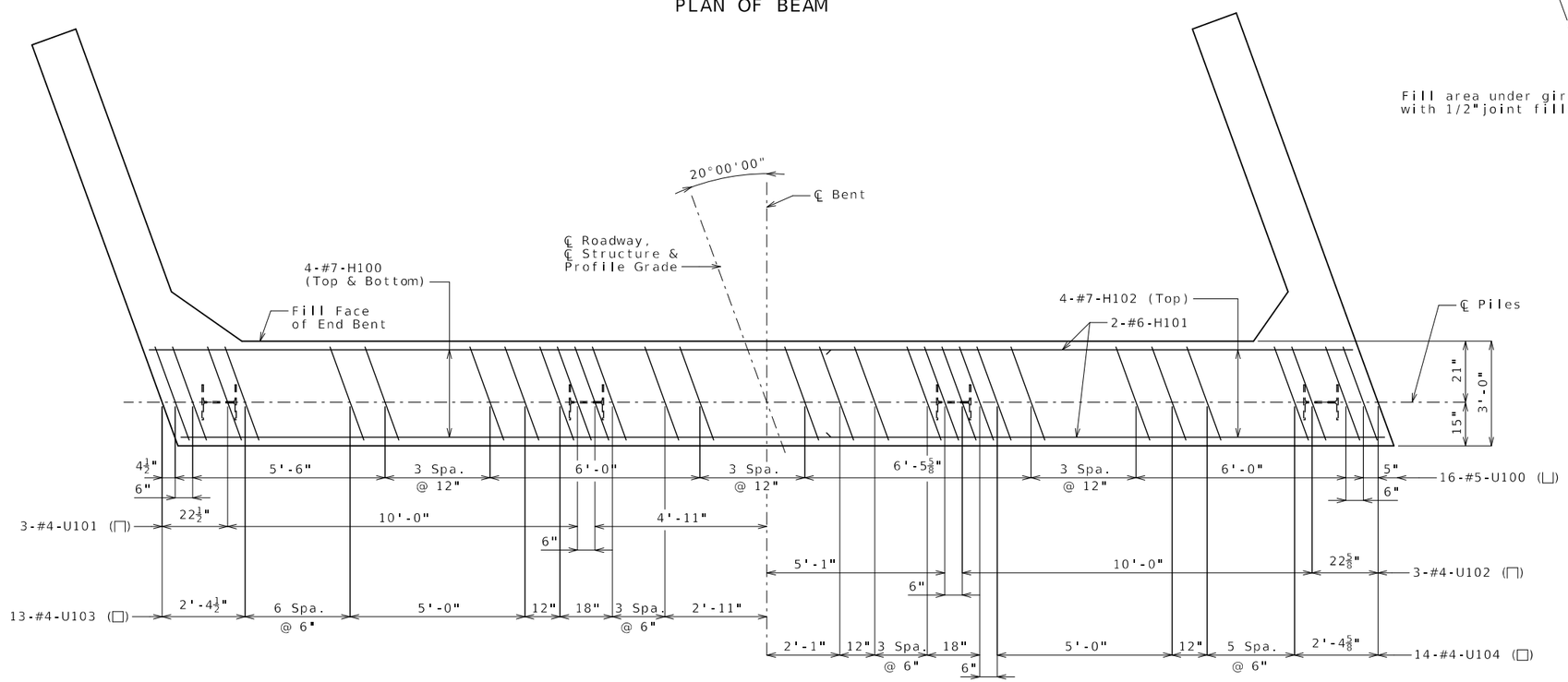

PLAN OF BEAM SHOWING REINFORCEMENT

END BENT NO. 1

Notes:

Reinforcing steel shall be shifted to clear piles. U bars shall clear piles by at least 1 1/2 inches.

For details of End Bent No. 1 not shown, see Sheets No. 3 & 5.

The U bars shall be placed parallel to centerline of roadway.

Detailed Aug. 2023
Checked Sep. 2023

Note: This drawing is not to scale. Follow dimensions.

STATE OF MISSOURI
TRENTON B. CRAWFORD
NUMBER
PE-2012018053
PROFESSIONAL ENGINEER

THIS SHEET HAS BEEN SIGNED, SEALED AND DATED ELECTRONICALLY.

DATE PREPARED	
10/25/2023	
ROUTE 64	STATE MO
DISTRICT BR	SHEET NO. 4
COUNTY LACLEDE	
JOB NO. J5P3244	
CONTRACT ID.	
PROJECT NO.	
BRIDGE NO. A9326	

DESCRIPTION

DATE

MISSOURI HIGHWAYS AND TRANSPORTATION COMMISSION

105 WEST CAPITOL
JEFFERSON CITY, MO 65102
1-888-ASK-MODOT (1-888-275-6636)

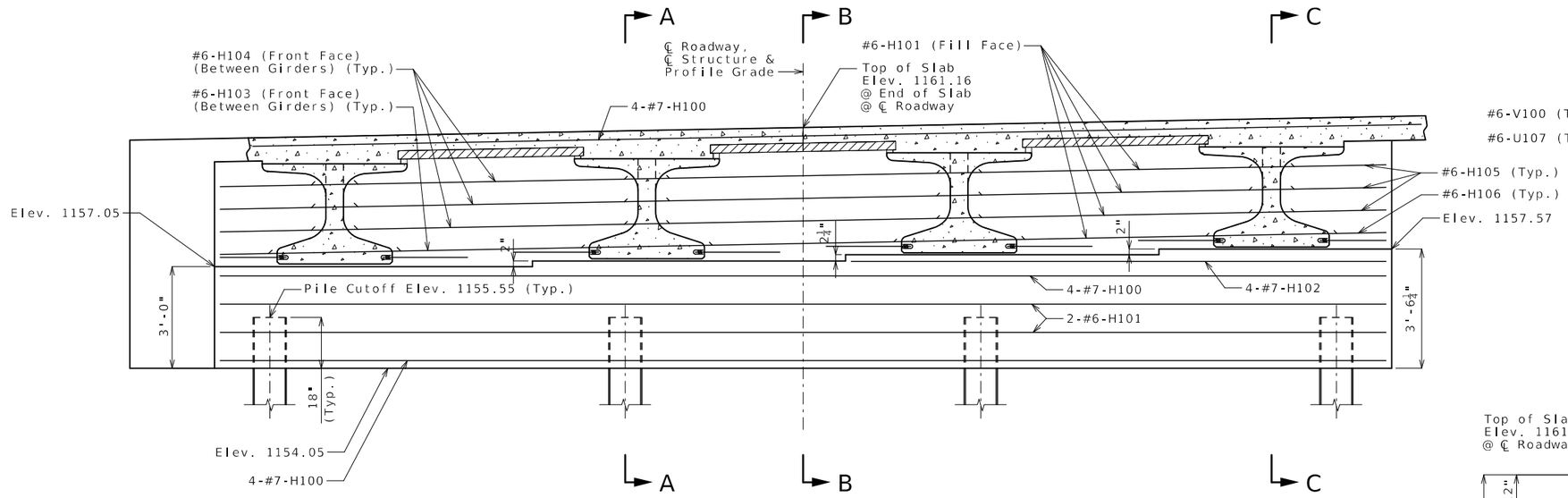

SECTION NEAR END BENT

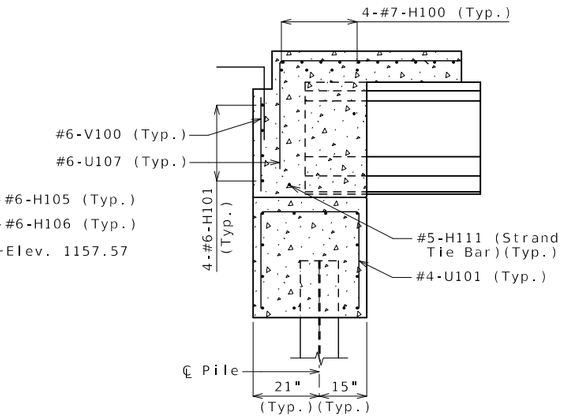

SECTION A-A

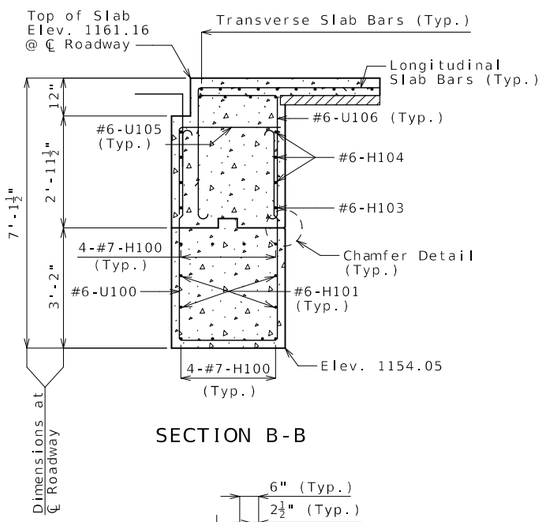

SECTION B-B

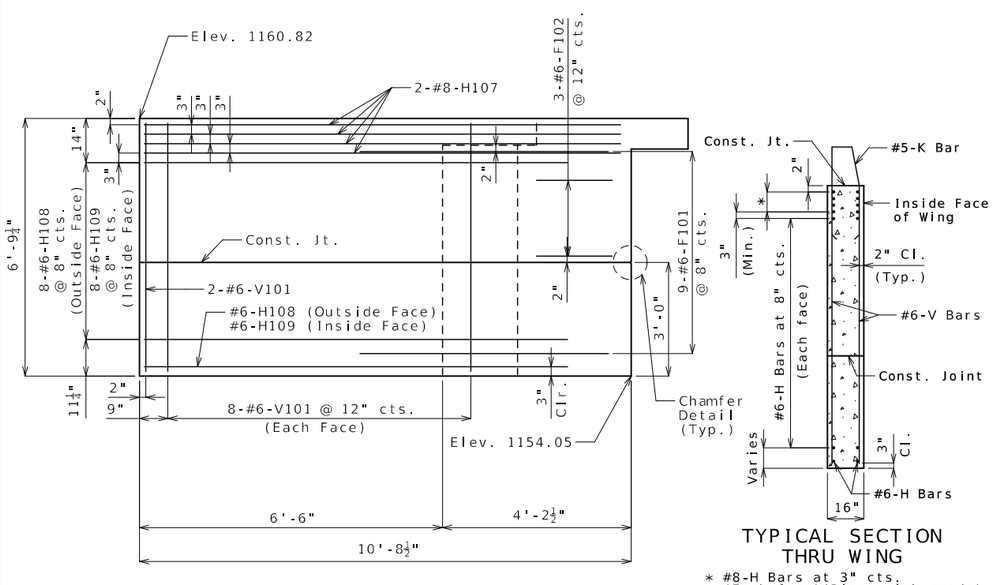

ELEVATION E-E

TYPICAL SECTION THRU WING

* #8-H Bars at 3" cts. (Each face)(Place with grade)

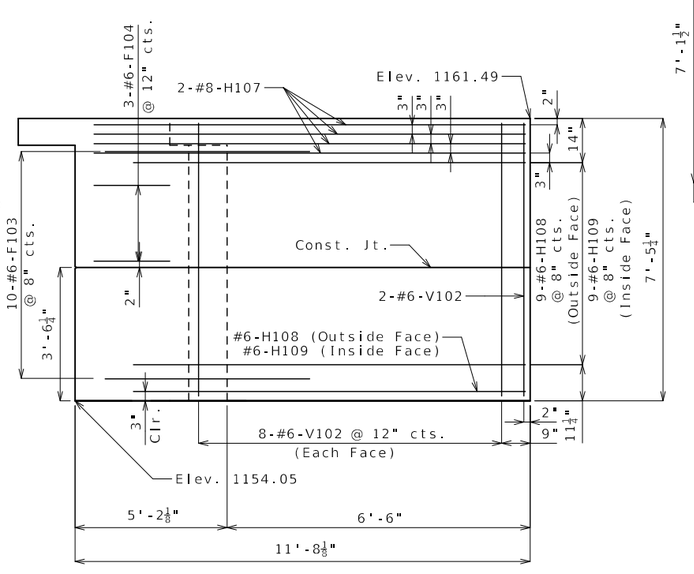

ELEVATION F-F

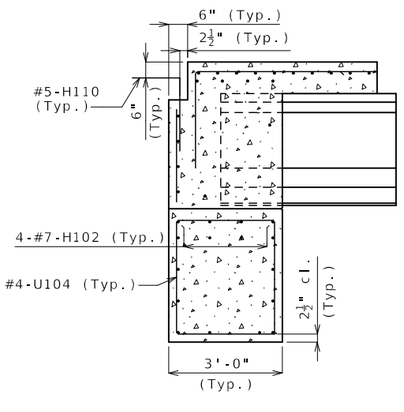

SECTION C-C

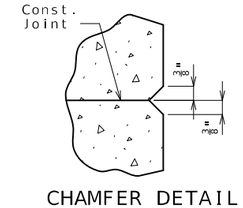

CHAMFER DETAIL

Note:

For location of Elevation E-E and Elevation F-F, see Sheet No. 3.

For details of End Bent No. 1 not shown, see Sheets No. 3 & 4.

For reinforcement of the barrier, see Sheets No. 21 & 22.

END BENT NO. 1

Detailed Aug. 2023
Checked Sep. 2023

Note: This drawing is not to scale. Follow dimensions.

STATE OF MISSOURI
TRENTON B. CRAWFORD
NUMBER PE-2012018053
PROFESSIONAL ENGINEER
THIS SHEET HAS BEEN SIGNED, SEALED AND DATED ELECTRONICALLY.

DATE PREPARED	
10/25/2023	
ROUTE 64	STATE MO
DISTRICT BR	SHEET NO. 5
COUNTY LACLEDE	
JOB NO. J5P3244	
CONTRACT ID.	
PROJECT NO.	
BRIDGE NO. A9326	

DATE	DESCRIPTION

MISSOURI HIGHWAYS AND TRANSPORTATION COMMISSION
105 WEST CAPITOL
JEFFERSON CITY, MO 65102
1-888-ASK-MODOT (1-888-275-6636)

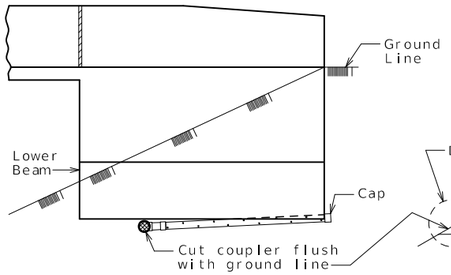

ELEVATION OF WING

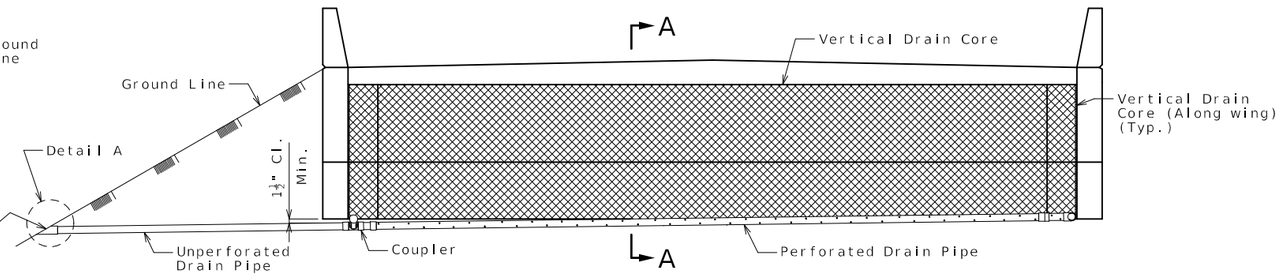

ELEVATION OF END BENT

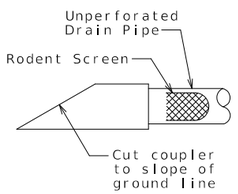

DETAIL A

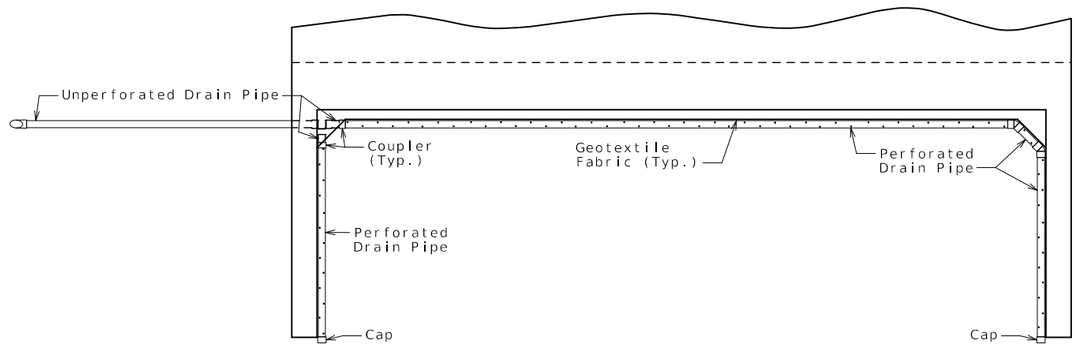

PLAN OF END BENT

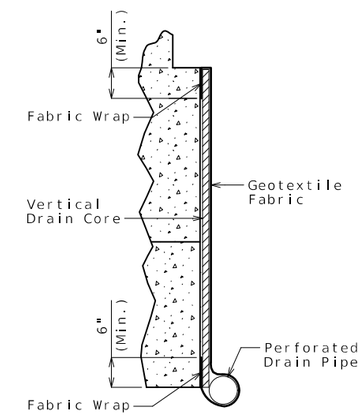

PART SECTION A-A
(Section thru wing similar)

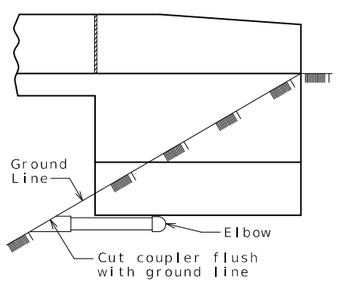

ELEVATION OF WING

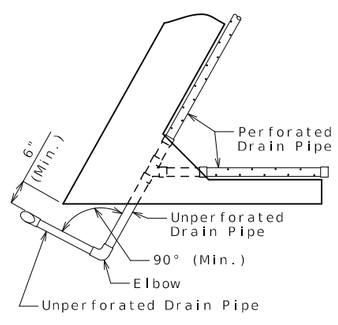

PART PLAN

OPTIONAL TURNED DRAIN
(Use only when straight drain is not practical.)

General Notes:

All drain pipe shall be sloped 1 to 2 percent.

Drain pipe may be either 6-inch diameter corrugated metallic-coated steel pipe underdrain, 4-inch diameter corrugated polyvinyl chloride (PVC) drain pipe, or 4-inch diameter corrugated polyethylene (PE) drain pipe.

Drain pipe shall be placed at fill face of end bent and inside face of wings. The pipe shall slope to lowest grade of ground line, also missing the lower beam of end bent by a minimum of 1 1/2 inches.

Perforated pipe shall be placed at fill face side and inside face of wings at the bottom of end bent and plain pipe shall be used where the vertical drain ends to the exit at ground line.

VERTICAL DRAIN AT END BENTS

(Squared end bent shown, skewed end bent similar)

Detailed Aug. 2023
Checked Sep. 2023

Note: This drawing is not to scale. Follow dimensions.

STATE OF MISSOURI
TRENTON B. CRAWFORD
NUMBER PE-2012018053
PROFESSIONAL ENGINEER
THIS SHEET HAS BEEN SIGNED, SEALED AND DATED ELECTRONICALLY.

DATE PREPARED	10/25/2023
ROUTE	64
STATE	MO
DISTRICT	BR
SHEET NO.	6
COUNTY	LACLEDE
JOB NO.	J5P3244
CONTRACT ID.	
PROJECT NO.	
BRIDGE NO.	A9326

DATE	DESCRIPTION

MISSOURI HIGHWAYS AND TRANSPORTATION COMMISSION
105 WEST CAPITOL
JEFFERSON CITY, MO 65102
1-888-ASK-MODOT (1-888-275-6636)

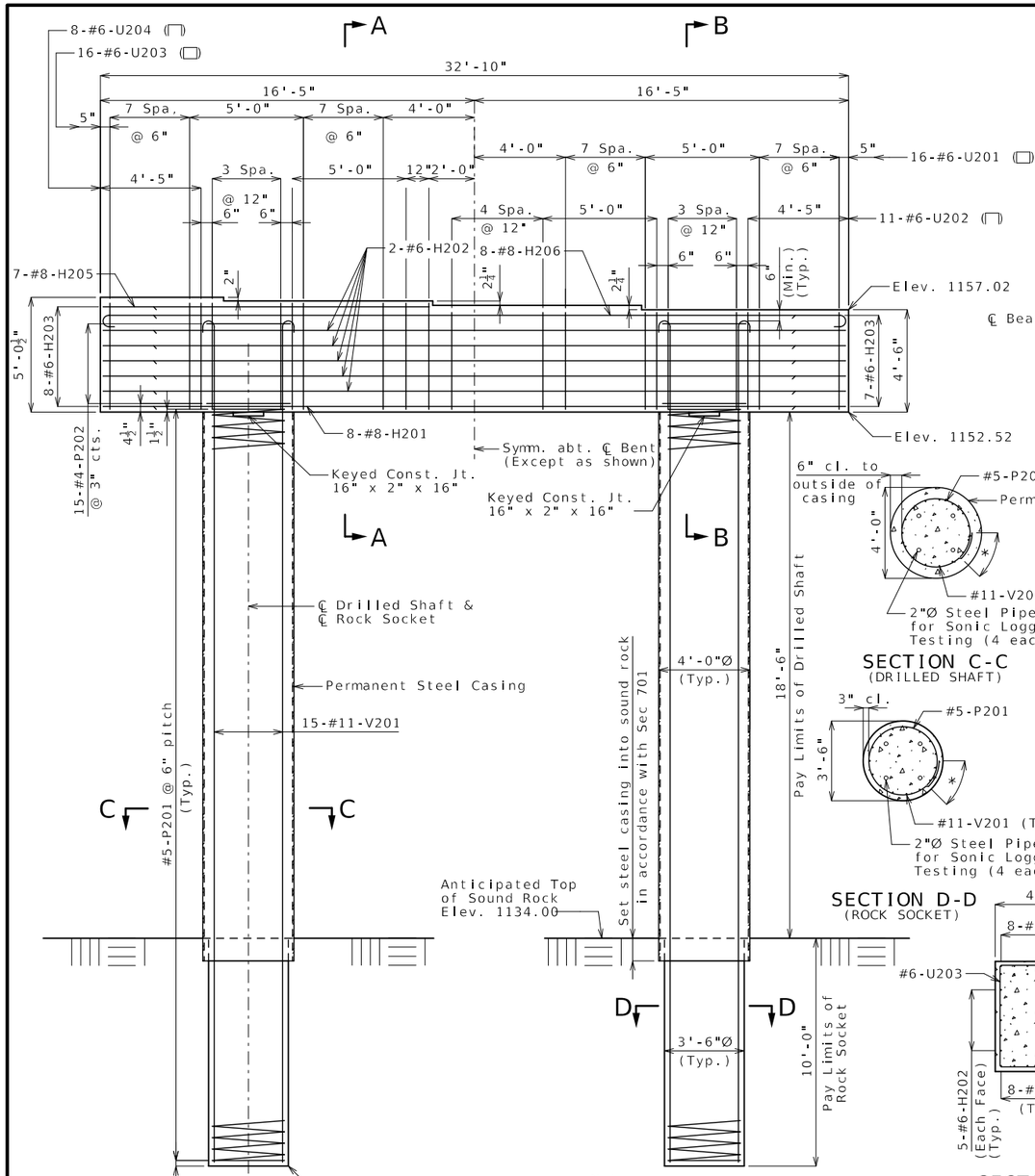

ELEVATION

(Keys on beam not shown for clarity.)

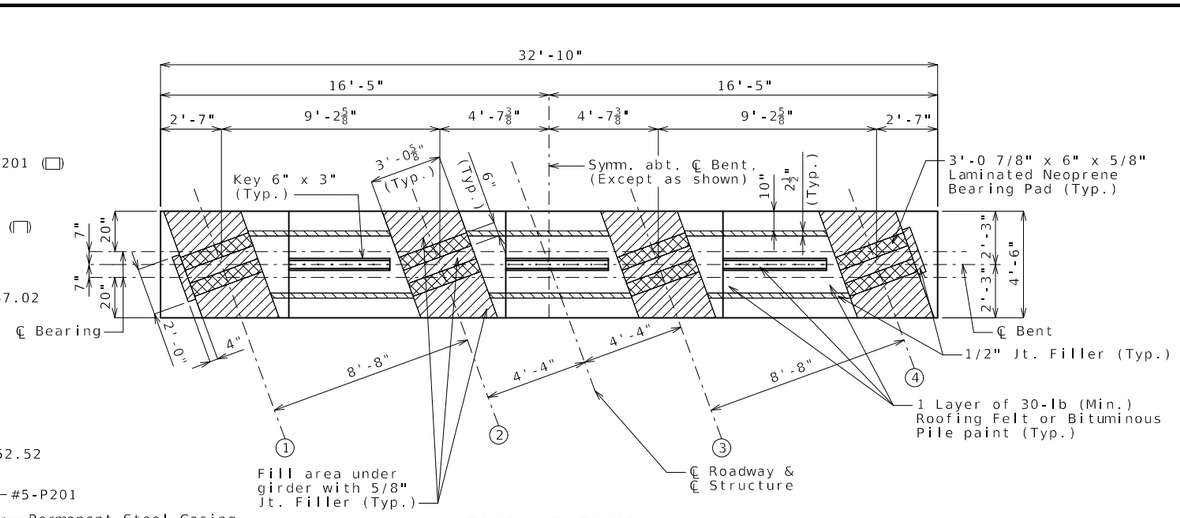

PLAN OF BEAM

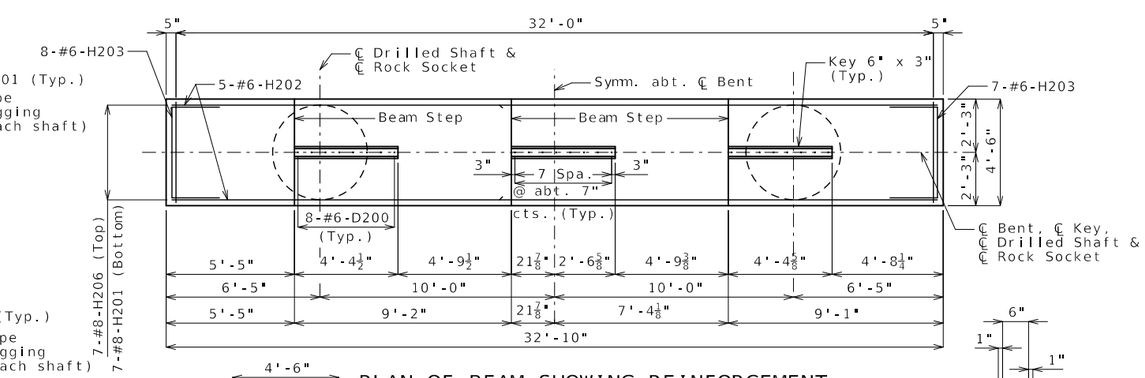

PLAN OF BEAM SHOWING REINFORCEMENT

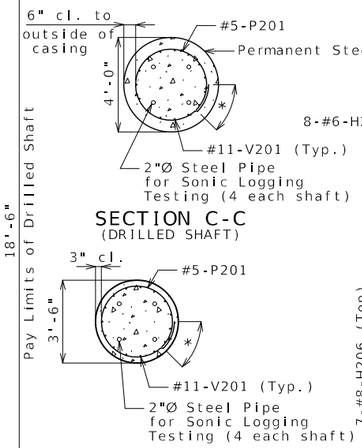

SECTION C-C
(DRILLED SHAFT)

SECTION D-D
(ROCK SOCKET)

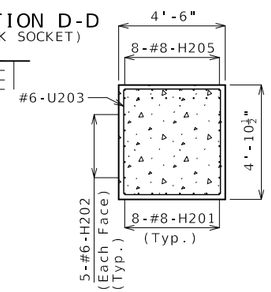

SECTION A-A

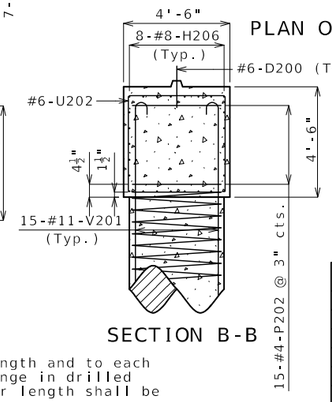

SECTION B-B

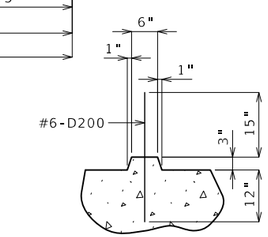

SECTION THRU KEY

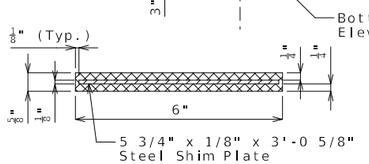

TYPICAL SECTION THRU
6" X 5/8" X 3'-0 7/8"
LAMINATED NEOPRENE
BEARING PAD

Notes:

An additional 4 feet has been added to each #11-V201 bar length and to each #5-P201 height in quantities, if required, for possible change in drilled shaft or rock socket length. The additional V-bar and P-bar length shall be cut off if not required.

Sonic logging testing shall be performed on all drilled shafts and rock sockets.

Thickness of permanent steel casing shall be in accordance with Sec 701.

At the contractor's option, the hooks of the vertical bars embedded in the beam cap may be oriented inward or outward.

All reinforcement in drilled shafts and rock sockets is included in the substructure quantities.

For steps 2 inches or more, use 2¼x½inch joint filler up vertical face.

Substructure Quantity Table for Bent No. 2		
Item		Quantity
Drilled Shaft (4 ft. 0 in. Dia.)	linear foot	37.0
Rock Sockets (3 ft. 6 in. Dia.)	linear foot	20.0
Video Camera Inspection	each	2
Foundation Inspection Holes	linear foot	40
Sonic Logging Testing	each	2
Class B Concrete (Substructure)	cu. yard	26.0
Reinforcing Steel (Bridges)	pound	11,420

These quantities are included in the Estimated Quantities table on Sheet No. 2.

INTERMEDIATE BENT NO. 2

Detailed Aug. 2023
Checked Sep. 2023

Note: This drawing is not to scale. Follow dimensions.

STATE OF MISSOURI
TRENTON B. CRAWFORD
NUMBER PE-2012018053
PROFESSIONAL ENGINEER
THIS SHEET HAS BEEN SIGNED, SEALED AND DATED ELECTRONICALLY.

DATE PREPARED	
10/25/2023	
ROUTE 64	STATE MO
DISTRICT BR	SHEET NO. 7
COUNTY LACLEDE	
JOB NO. J5P3244	
CONTRACT ID.	
PROJECT NO.	
BRIDGE NO. A9326	

DATE	DESCRIPTION

MISSOURI HIGHWAYS AND TRANSPORTATION COMMISSION
105 WEST CAPITOL
JEFFERSON CITY, MO 65102
1-888-ASK-MODOT (1-888-275-6636)

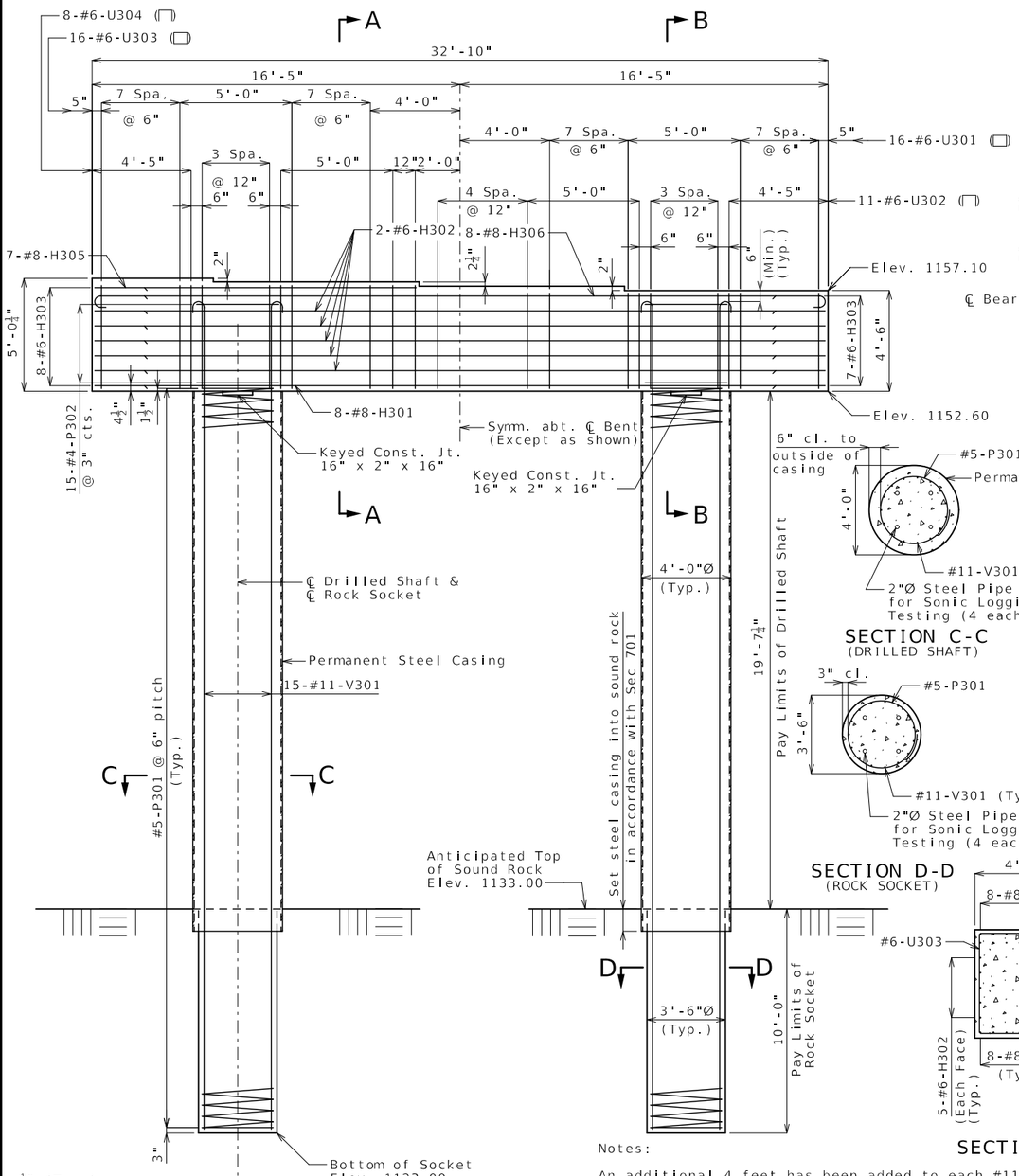

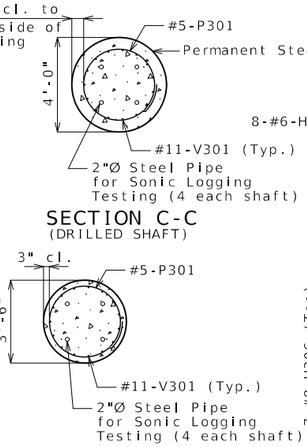

SECTION C-C
(DRILLED SHAFT)

SECTION D-D
(ROCK SOCKET)

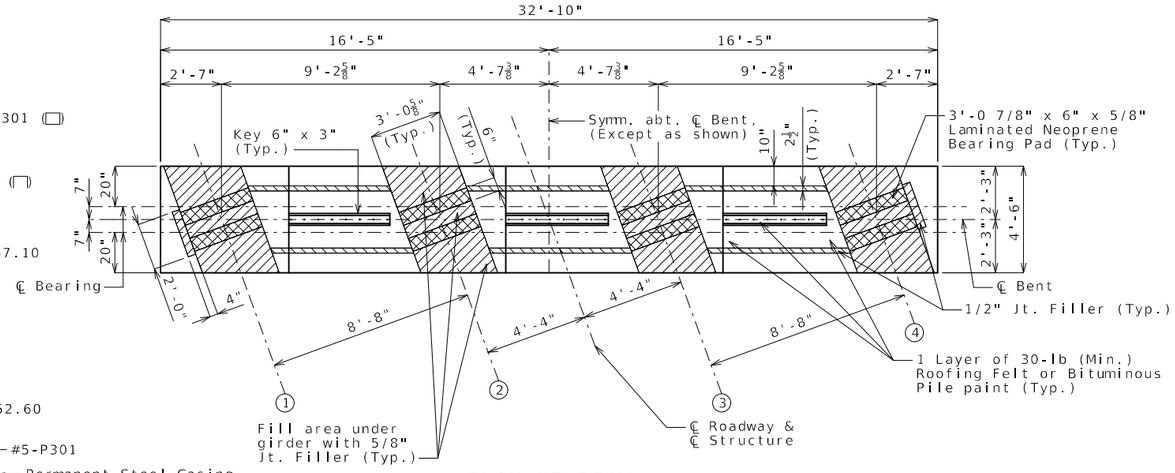

PLAN OF BEAM

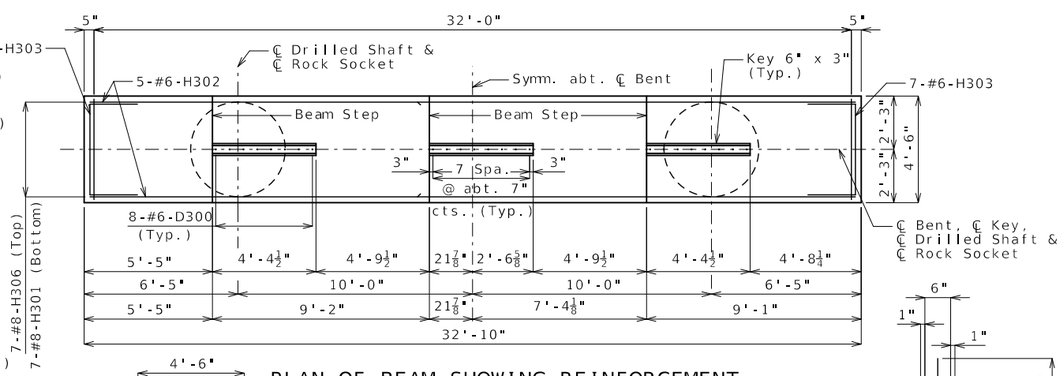

PLAN OF BEAM SHOWING REINFORCEMENT

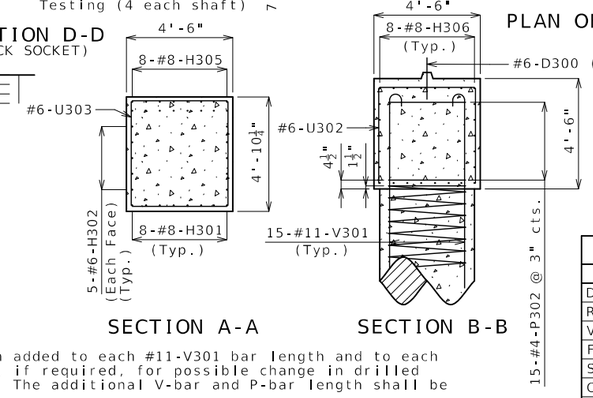

SECTION A-A

SECTION B-B

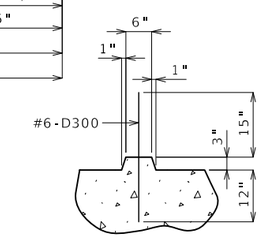

SECTION THRU KEY

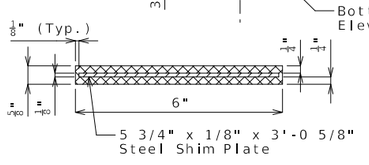

TYPICAL SECTION THRU
6" X 5/8" X 3'-0 7/8"
LAMINATED NEOPRENE
BEARING PAD

ELEVATION

(Keys on beam not shown for clarity.)

Notes:

An additional 4 feet has been added to each #11-V301 bar length and to each #5-P301 height in quantities, if required, for possible change in drilled shaft or rock socket length. The additional V-bar and P-bar length shall be cut off if not required.

Sonic logging testing shall be performed on all drilled shafts and rock sockets.

Thickness of permanent steel casing shall be in accordance with Sec 701.

At the contractor's option, the hooks of the vertical bars embedded in the beam cap may be oriented inward or outward.

All reinforcement in drilled shafts and rock sockets is included in the substructure quantities.

For steps 2 inches or more, use 2¼x½inch joint filler up vertical face.

Substructure Quantity Table for Bent No. 3

Item		Quantity
Drilled Shaft (4 ft. 0 in. Dia.)	linear foot	39.2
Rock Socket (3 ft. 6 in. Dia.)	linear foot	20.0
Video Camera Inspection	each	2
Foundation Inspection Holes	linear foot	40
Sonic Logging Testing	each	2
Class B Concrete (Substructure)	cu. yard	26.0
Reinforcing Steel (Bridges)	pound	11,780

These quantities are included in the Estimated Quantities table on Sheet No. 3.

INTERMEDIATE BENT NO. 3

Detailed Aug. 2023
Checked Sep. 2023

Note: This drawing is not to scale. Follow dimensions.

STATE OF MISSOURI
TRENTON B. CRAWFORD
NUMBER PE-2012018053
PROFESSIONAL ENGINEER
THIS SHEET HAS BEEN SIGNED, SEALED AND DATED ELECTRONICALLY.

DATE PREPARED	
10/25/2023	
ROUTE 64	STATE MO
DISTRICT BR	SHEET NO. 8
COUNTY LACLEDE	
JOB NO. J5P3244	
CONTRACT ID.	
PROJECT NO.	
BRIDGE NO. A9326	

DATE	DESCRIPTION

MISSOURI HIGHWAYS AND TRANSPORTATION COMMISSION
105 WEST CAPITOL
JEFFERSON CITY, MO 65102
1-888-ASK-MODOT (1-888-275-6636)

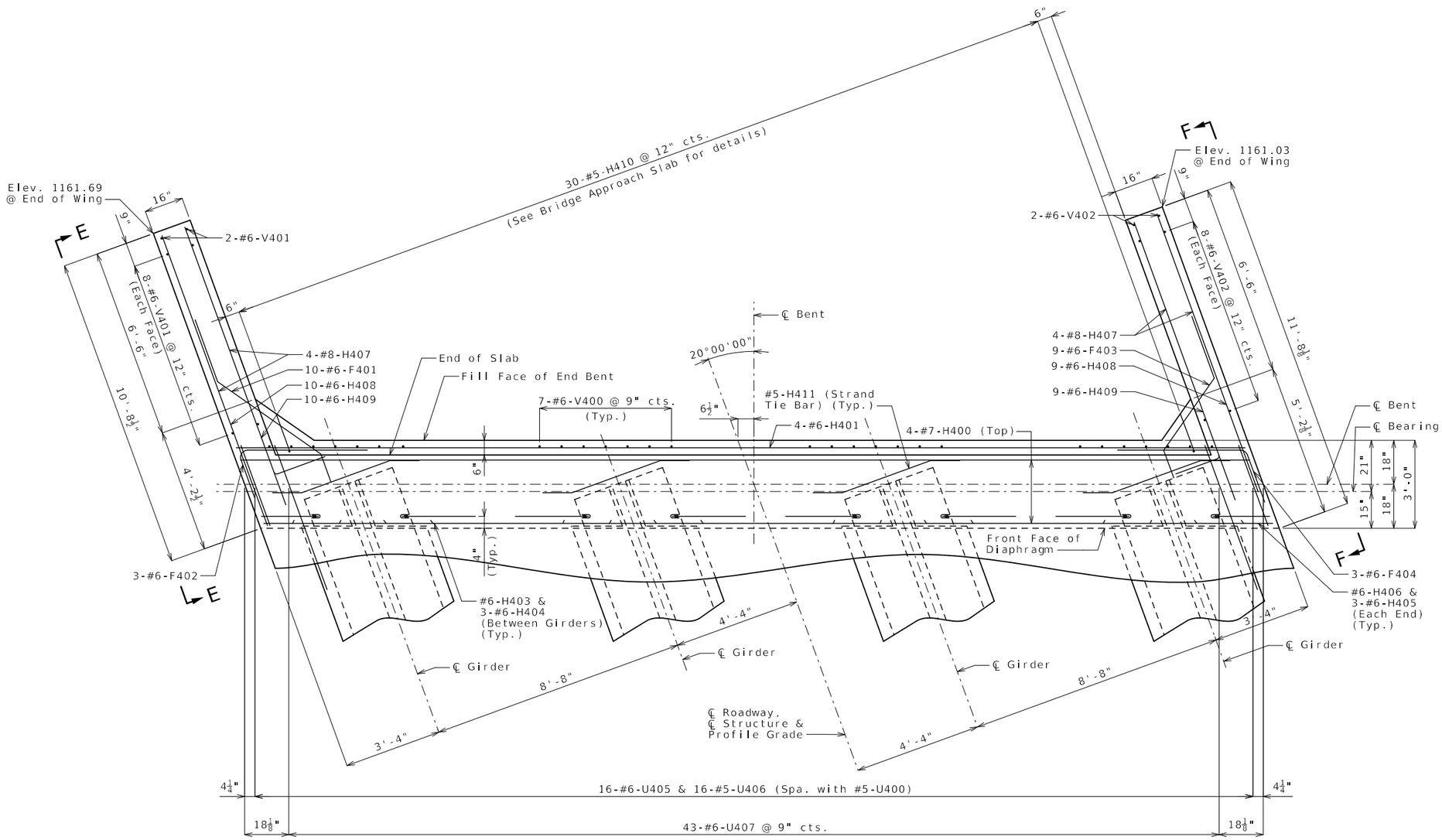

PART PLAN

Notes:

All concrete in the end bent above top of beam and below top of slab shall be Class B-2.

Strands at end of girders shall be field bent or, if necessary, cut in field to maintain 1 1/2 inch minimum clearance to fill face of end bent.

The #6-F401 & #6-F403 bars shall be bent in the field to clear girders.

The U bars shall be placed parallel to centerline of roadway.

For location of coil tie rods and #5-H401 (Strand Tie Bar), see Sheets No. 12 & 13.

For Elevation A-A and Elevation B-B, see Sheet No. 11.

For details of Vertical Drain at End Bents, see Sheet No. 6.

For details of Bridge Approach Slab, see Sheet No. 23.

Work this sheet with Sheets No. 10 & 11.

Substructure Quantity Table for Bent No. 4		
Item		Quantity
Class 1 Excavation	cu. yard	40
Galvanized Structural Steel Piles (12 in.)	linear foot	116
Pile Point Reinforcement	each	4
Class B Concrete (Substructure)	cu. yard	15.6

These quantities are included in the Estimated Quantities table on Sheet No. 2.

END BENT NO. 4

Detailed Aug. 2023
Checked Sep. 2023

Note: This drawing is not to scale. Follow dimensions.

STATE OF MISSOURI
TRENTON B. CRAWFORD
NUMBER
PE-2012018053
PROFESSIONAL ENGINEER

THIS SHEET HAS BEEN SIGNED, SEALED AND DATED ELECTRONICALLY.

DATE PREPARED	10/25/2023
ROUTE	64
STATE	MO
DISTRICT	BR
SHEET NO.	9
COUNTY	LACLEDE
JOB NO.	J5P3244
CONTRACT ID.	
PROJECT NO.	
BRIDGE NO.	A9326

DESCRIPTION

DATE

MISSOURI HIGHWAYS AND TRANSPORTATION COMMISSION
105 WEST CAPITOL
JEFFERSON CITY, MO 65102
1-888-ASK-MODOT (1-888-275-6636)

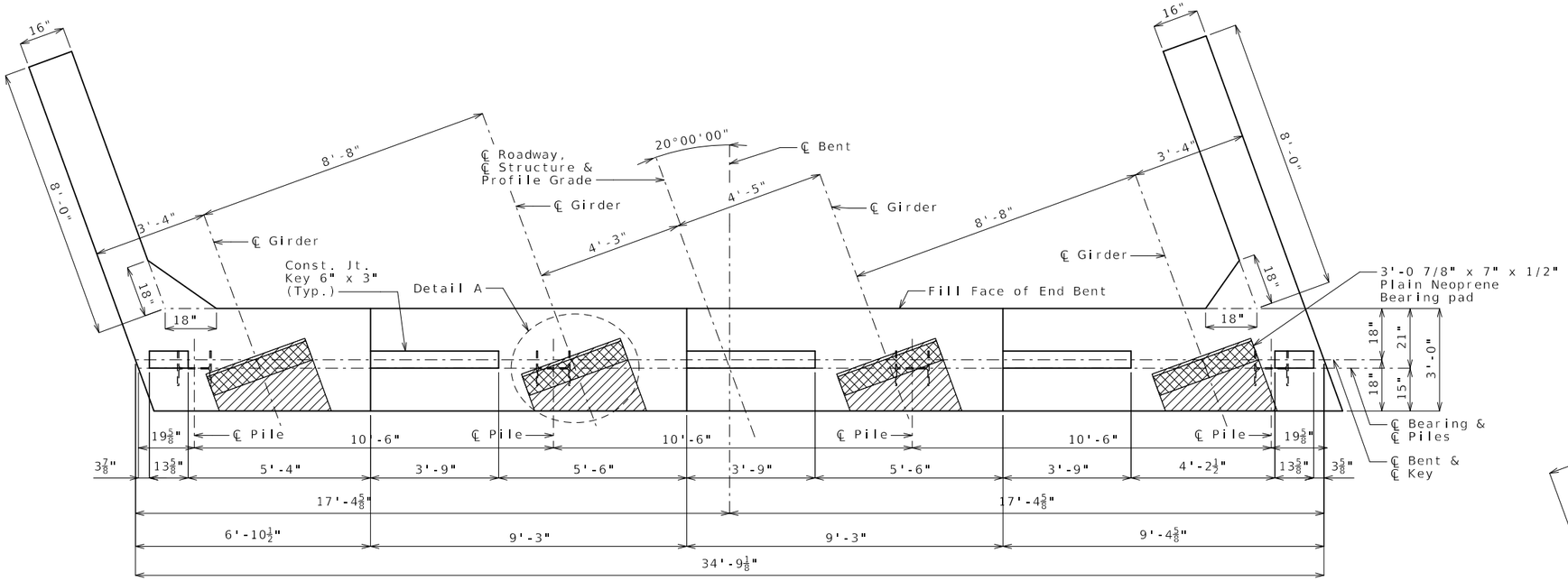

PLAN OF BEAM

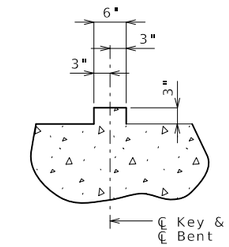

SECTION THRU KEY

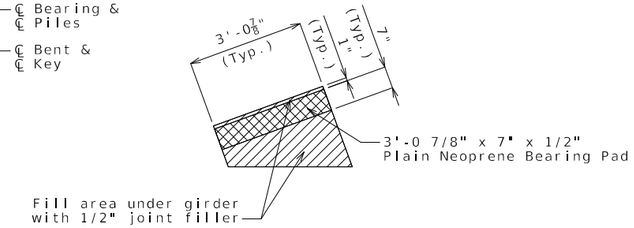

DETAIL A

Notes:

Reinforcing steel shall be shifted to clear piles. U bars shall clear piles by at least 1 1/2 inches.

For details of End Bent No. 4 not shown, see Sheets No. 9 & 11.

The U bars shall be placed parallel to centerline of roadway.

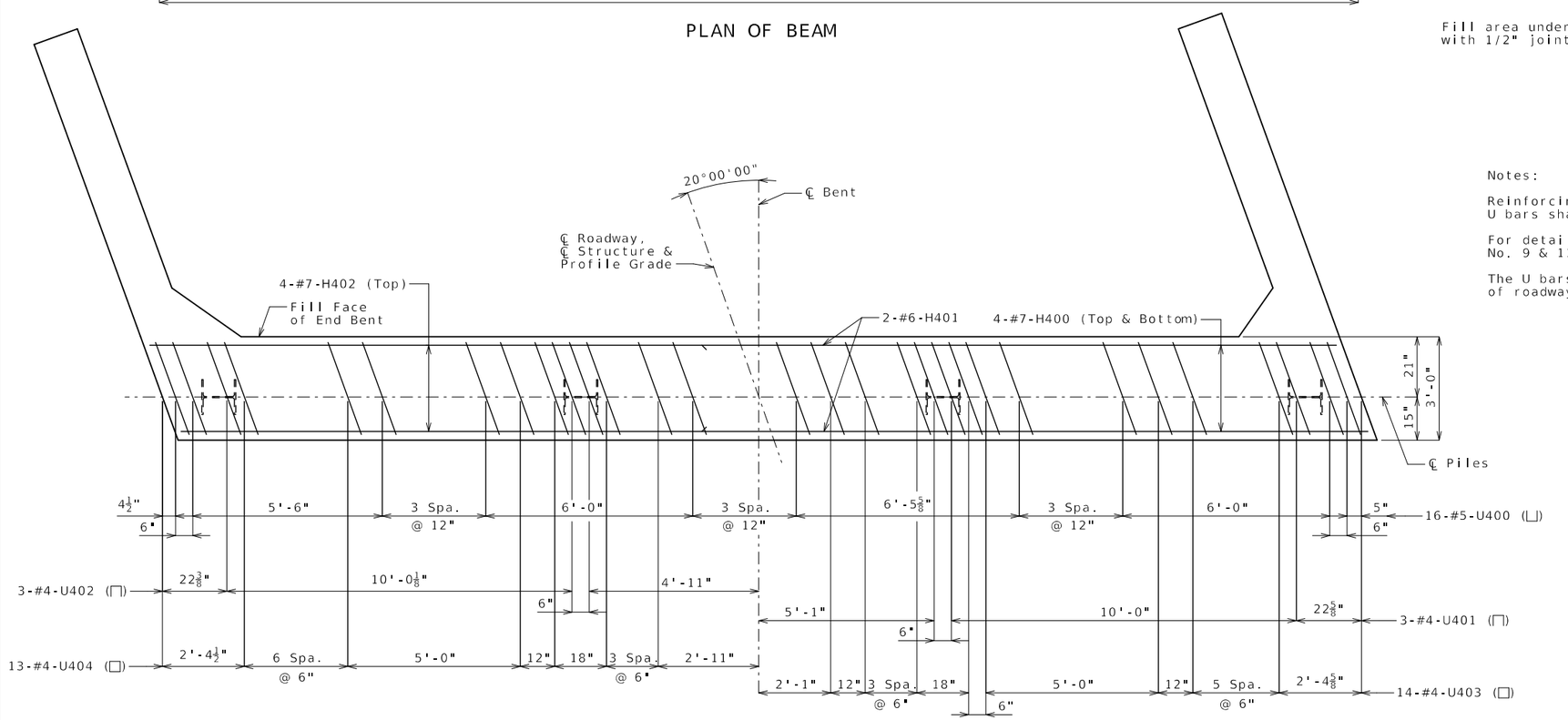

PLAN OF BEAM SHOWING REINFORCEMENT

END BENT NO. 4

Detailed Aug. 2023
Checked Sep. 2023

Note: This drawing is not to scale. Follow dimensions.

STATE OF MISSOURI
TRENTON B. CRAWFORD
NUMBER
PE-2012018053
PROFESSIONAL ENGINEER

THIS SHEET HAS BEEN SIGNED, SEALED AND DATED ELECTRONICALLY.

DATE PREPARED	10/31/2023
ROUTE	64
STATE	MO
DISTRICT	BR
SHEET NO.	10
COUNTY	LACLEDE
JOB NO.	J5P3244
CONTRACT ID.	
PROJECT NO.	
BRIDGE NO.	A9326

DESCRIPTION

DATE

MISSOURI HIGHWAYS AND TRANSPORTATION COMMISSION

105 WEST CAPITOL
JEFFERSON CITY, MO 65102
1-888-ASK-MODOT (1-888-275-6636)

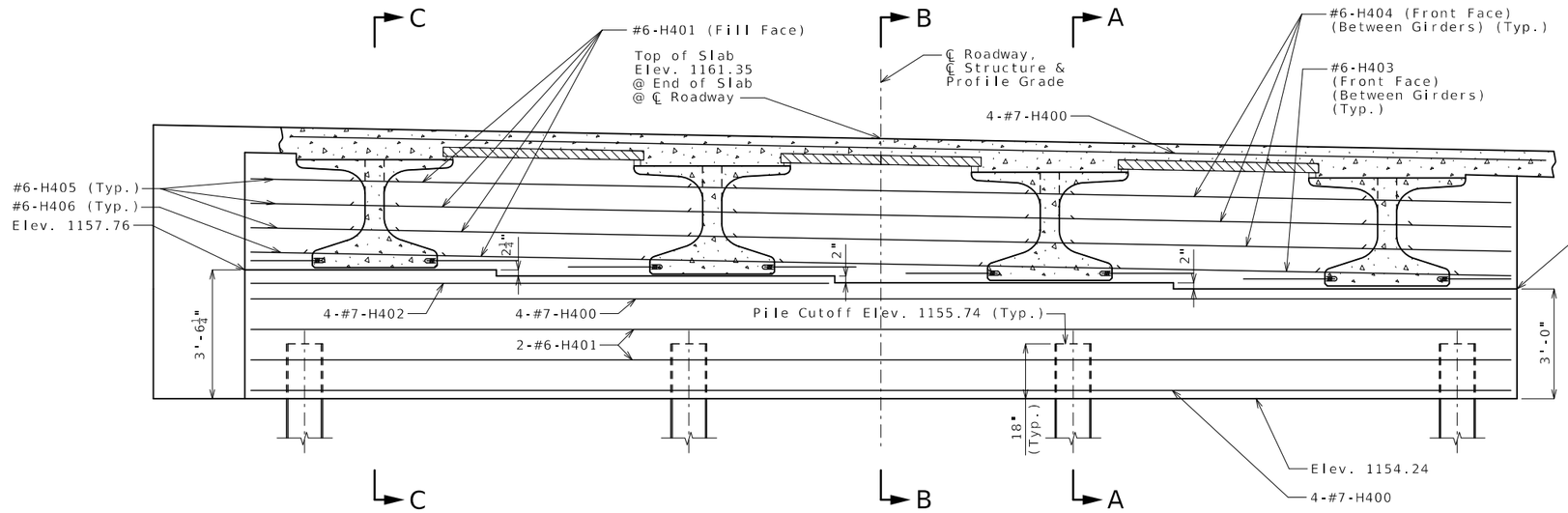

SECTION NEAR END BENT

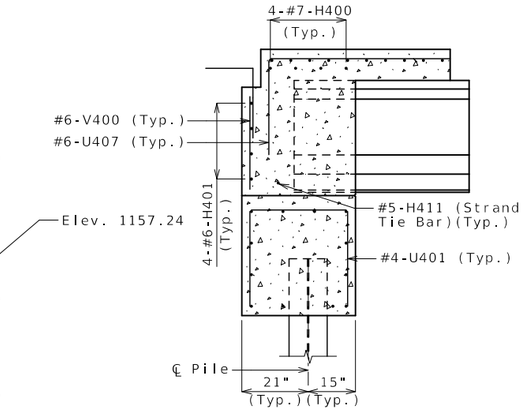

SECTION A-A

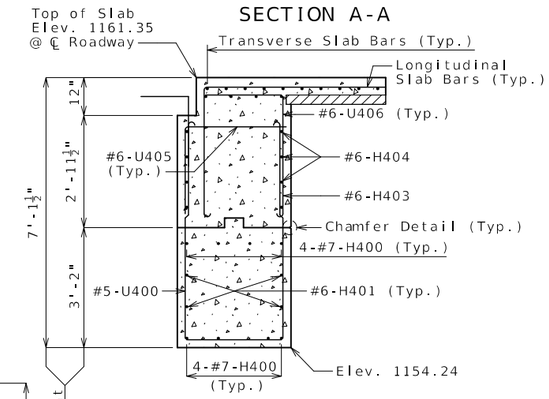

SECTION B-B

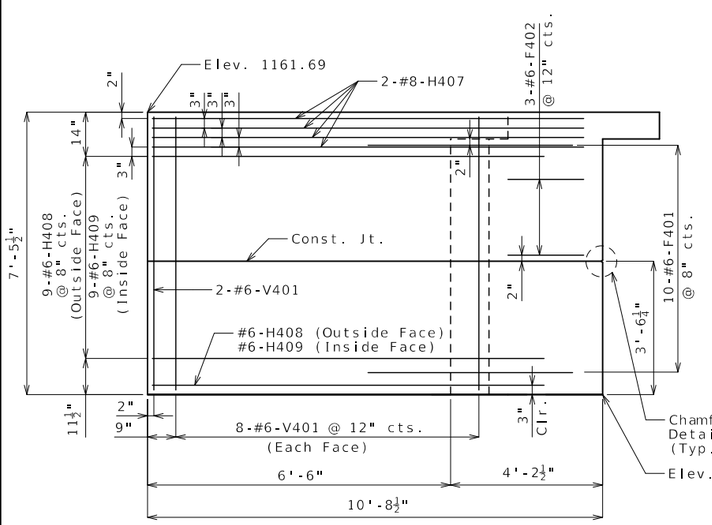

ELEVATION E-E

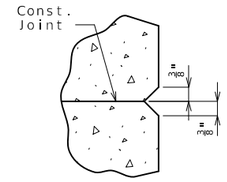

CHAMFER DETAIL

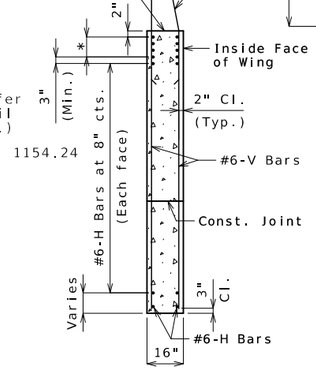

TYPICAL SECTION
THRU WING

* #8-H Bars at 3" cts.
(Each face)(Place with grade)

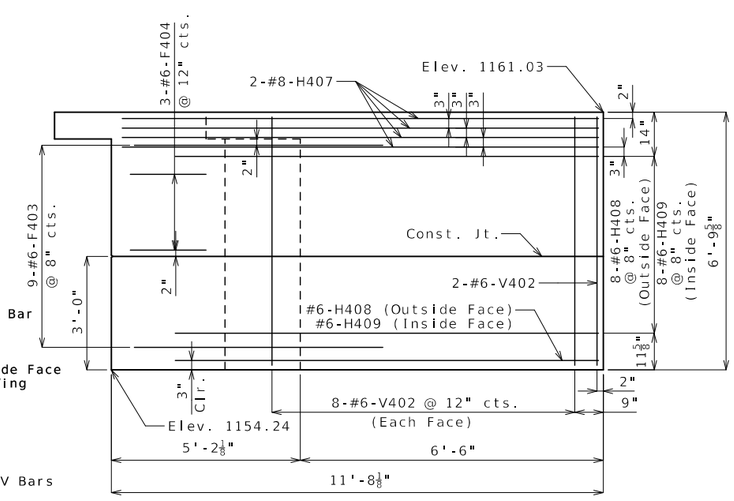

ELEVATION F-F

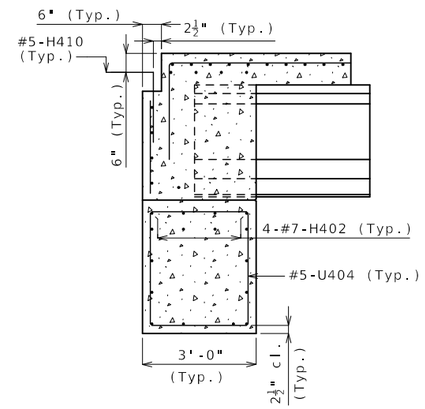

SECTION C-C

Note:

For location of Elevation E-E and Elevation F-F, see Sheet No. 9.

For details of End Bent No. 4 not shown, see Sheets No. 9 & 10.

For reinforcement of the barrier, see Sheets No. 21 & 22.

END BENT NO. 4

Detailed Aug. 2023
Checked Sep. 2023

Note: This drawing is not to scale. Follow dimensions.

STATE OF MISSOURI
TRENTON B. CRAWFORD
NUMBER
PE-2012018053
PROFESSIONAL ENGINEER

THIS SHEET HAS BEEN SIGNED, SEALED AND DATED ELECTRONICALLY.

DATE PREPARED	10/25/2023
ROUTE 64	STATE MO
DISTRICT BR	SHEET NO. 11
COUNTY	LACLEDE
JOB NO.	J5P3244
CONTRACT ID.	
PROJECT NO.	
BRIDGE NO.	A9326

DESCRIPTION

DATE

MISSOURI HIGHWAYS AND TRANSPORTATION COMMISSION

105 WEST CAPITOL
JEFFERSON CITY, MO 65102
1-888-ASK-MODOT (1-888-275-6636)

(1) Fabricator shall apply a bond breaker to this region excluding where joint filler will be applied.

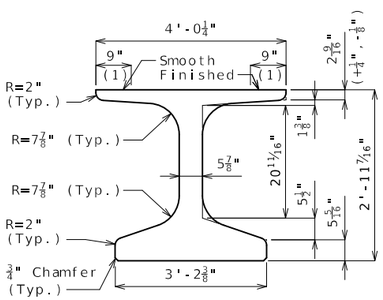

DIMENSIONS

(2) Outer strands tensioned to 2.02 kips/strand and inner strands to 8 kips/strand. Placed symmetrical about ℄ Girder. May be moved laterally in pairs.

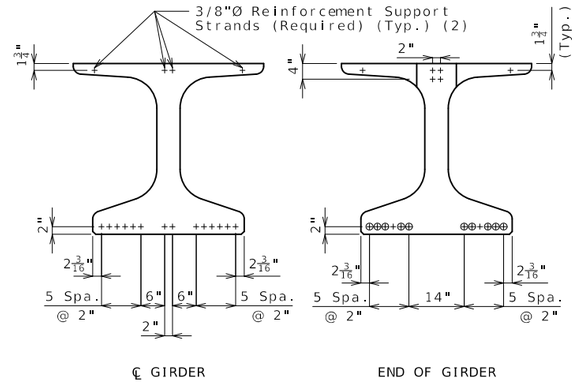

STRAND ARRANGEMENT

+ Indicates prestressing strand.

o Indicates cut & shop bend with 3'-0" projection.

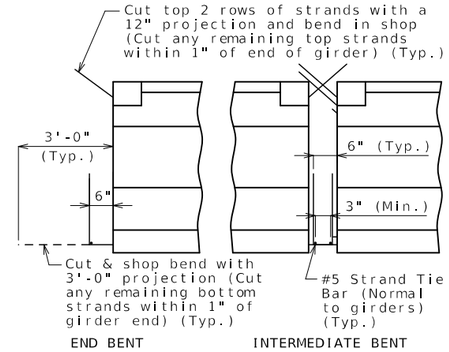

STRANDS AT GIRDER ENDS

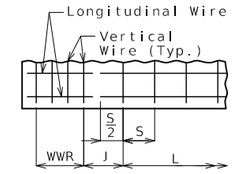

WELDED WIRE PLACEMENT

S = Vertical wire spacing

L = Length of WWR mats

J = Distance between WWR mats

Bill of Reinforcing Steel

Bars Each Girder

No.	Size/Mark		Length	Shape
82	3	G1	2'-10"	8
2	4	G3	4'-1"	20
2	4	G4	2'-3"	20
2	4	G5	2'-10"	20
4	4	G6	Varies	20

Welded Wire Each Girder

Mark	Size	S	W	L	J
WWR1	D31	4"	W12	2'-8"	4"
WWR2	D31	8"	W12	4'-8"	8"
WWR3	D31	16"	W12	40'-0"	--
WWR6	D31	2"	W12	16"	2¾"

Bending Diagrams

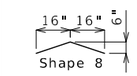

Shape 20

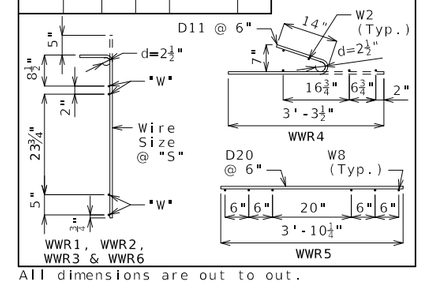

All dimensions are out to out.

Hooks and bends shall be in accordance with the CRSI Manual of Standard Practice for Detailing Reinforced Concrete Structures, Stirrup and Tie Dimensions.

Actual bar lengths are measured along centerline of bar to the nearest inch.

Minimum clearance to reinforcing shall be 1", unless otherwise shown.

All bar reinforcement shall be Grade 60.

WWR shall not be epoxy coated.

G4 and G5 not required for interior girders. G3 and G6 not required for exterior girders of intermediate spans. Half no. of G3, G4, G5 and G6 not required for ext. girders of end spans.

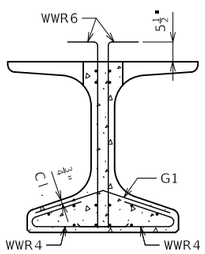

SECTION A-A

Strands not shown for clarity.

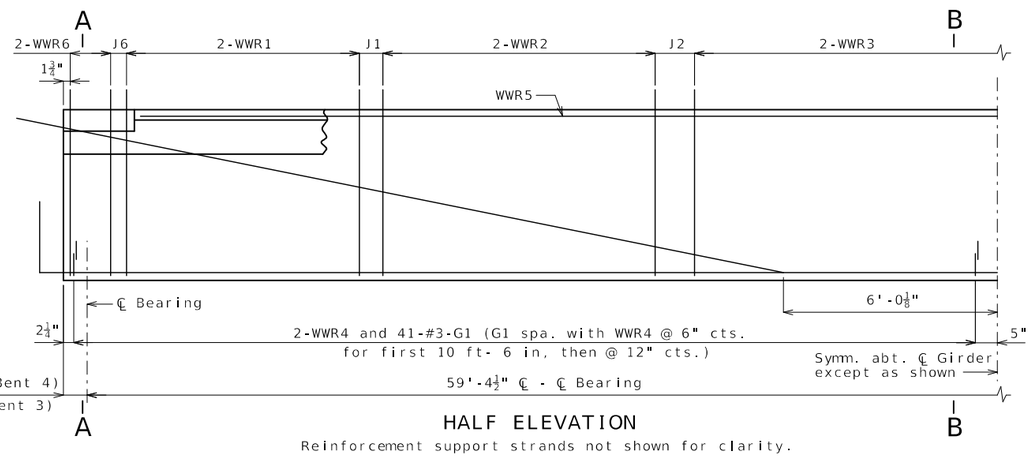

HALF ELEVATION

Reinforcement support strands not shown for clarity.

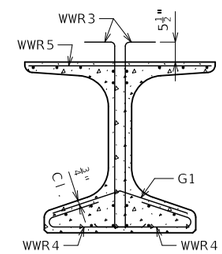

SECTION B-B

Strands not shown for clarity.

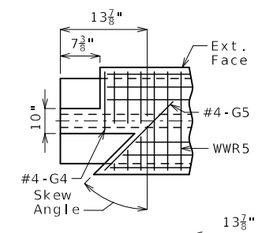

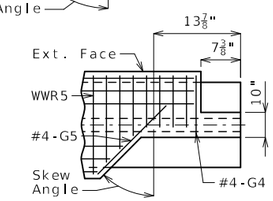

LEFT EXTERIOR GIRDER AT INTERMEDIATE BENT

Rotate 180° for right ext.

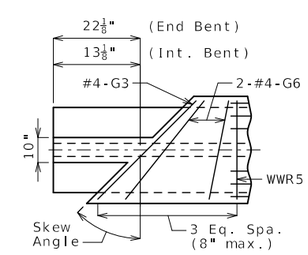

INTERIOR GIRDER AT ALL BENTS & EXTERIOR GIRDER AT END BENT

TOP FLANGE BLOCKOUT

Mirror for right advanced.

General Notes:

Concrete for prestressed beams shall be Class A-1 with f'c = 8000 psi and f'ci = 6500 psi.

Use 14 strands, 0.6"Ø Grade 270, with an initial prestress force of 615 kips.

Pretensioned members shall be in accordance with Sec 1029.

Fabricator shall be responsible for location and design of lifting devices.

Exterior and interior girders are the same except: coil ties, top flange blockout, application of bond breaker, coil inserts for slab drains, holes for steel intermediate diaphragms.

The contractor shall provide bracing necessary for lateral and torsional stability of the girders during construction of the concrete slab and remove the bracing after the slab has attained 75% design strength. Contractor shall not drill holes in the girders.

For Girder Camber Diagram, see Sheet No. 19.

For location of coil inserts at slab drains, see Sheet No. 18.

For location of coil ties at concrete diaphragms and integral bents, see Sheets No. 3, 6, 9, 11 and 16.

Alternate bar reinforcing steel details are provided and may be used. The same type of reinforcing steel shall be used for all girders in all spans.

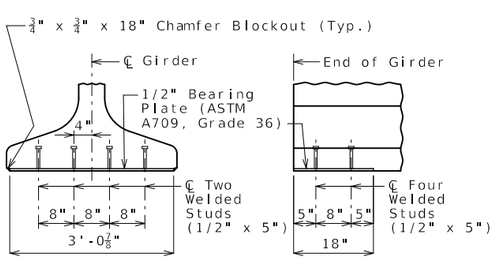

BEARING PLATE

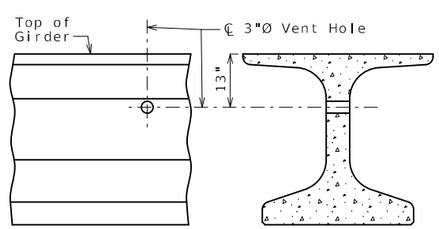

VENT HOLE

Place vent holes at or near upgrade 1/3 point of girders and clear reinforcing steel or strands by 1 1/2" minimum and steel intermediate diaphragm bolt connections by 6" minimum.

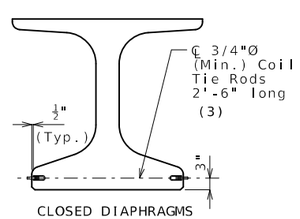

COIL TIES

Exclude coil tie at exterior face of exterior girders except at integral end bents.

NU-GIRDERS - SPANS (1-2) AND (3-4)

Detailed Aug. 2023
Checked Sep. 2023

Note: This drawing is not to scale. Follow dimensions.

STATE OF MISSOURI
TRENTON B. CRAWFORD
NUMBER PE-2012018053
PROFESSIONAL ENGINEER
THIS SHEET HAS BEEN SIGNED, SEALED AND DATED ELECTRONICALLY.

DATE PREPARED	
10/25/2023	
ROUTE 64	STATE MO
DISTRICT BR	SHEET NO. 12
COUNTY LACLEDE	
JOB NO. J5P3244	
CONTRACT ID.	
PROJECT NO.	
BRIDGE NO. A9326	

DESCRIPTION

DATE

MISSOURI HIGHWAYS AND TRANSPORTATION COMMISSION
105 WEST CAPITOL
JEFFERSON CITY, MO 65102
1-888-ASK-MODOT (1-888-275-6636)

(1) Fabricator shall apply a bond breaker to this region excluding where joint filler will be applied.

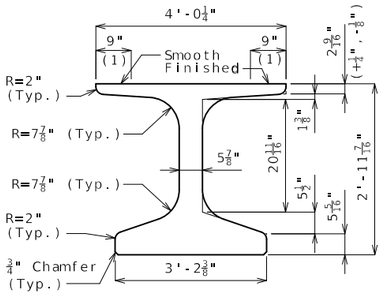

DIMENSIONS

(2) Outer strands tensioned to 2.02 kips/strand and inner strands to 8 kips/strand. Placed symmetrical about ℄ Girder. May be moved laterally in pairs.

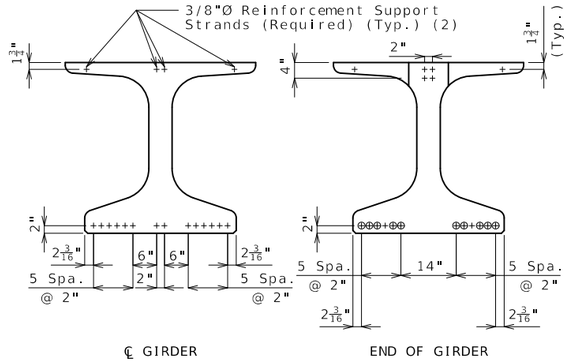

℄ GIRDER END OF GIRDER

STRAND ARRANGEMENT

+ Indicates prestressing strand.

o Indicates cut & shop bend with 3'-0" projection.

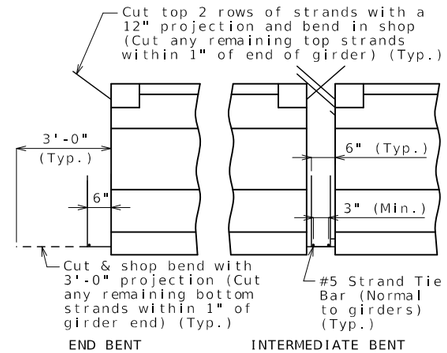

STRANDS AT GIRDER ENDS

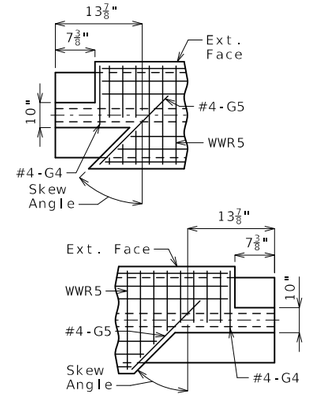

LEFT EXTERIOR GIRDER AT INTERMEDIATE BENT

Rotate 180° for right ext.

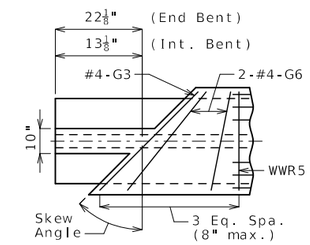

INTERIOR GIRDER AT ALL BENTS & EXTERIOR GIRDER AT END BENT

TOP FLANGE BLOCKOUT

Mirror for right advanced.

Bill of Reinforcing Steel - Each Girder			
No.	Size/ Mark	Length	Shape
118	5 B1	4'-4"	11
138	4 D1	4'-0"	9
2	4 G3	4'-1"	20
2	4 G4	2'-3"	20
2	4 G5	2'-10"	20
4	4 G6	Varies	20

Bending Diagrams

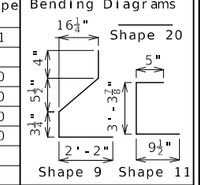

Welded Wire Reinforcement - Each Girder

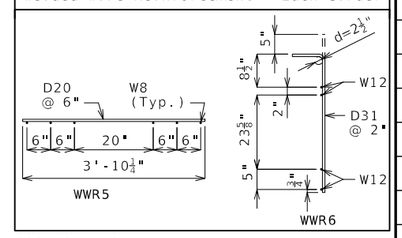

All dimensions are out to out.

Hooks and bends shall be in accordance with the CRSI Manual of Standard Practice for Detailing Reinforced Concrete Structures, Stirrup and Tie Dimensions.

Actual bar lengths are measured along centerline of bar to the nearest inch.

Minimum clearance to reinforcing shall be 1".

All bar reinforcement shall be Grade 60.

The two D1 bars may be furnished as one bar at the fabricator's option.

All B1 bars shall be epoxy coated.

G4 and G5 not required for interior girders. G3 and G6 not required for exterior girders of intermediate spans. Half no. of G3, G4, G5 and G6 not required for ext. girders of end spans.

General Notes:

Concrete for prestressed girders shall be Class A-1 with f'c = 8000 psi and f'ci = 6500 psi.

Use 14 strands, 0.6"Ø Grade 270, with an initial prestress force of 615 kips.

Pretensioned members shall be in accordance with Sec 1029.

Fabricator shall be responsible for location and design of lifting devices.

Exterior and interior girders are the same except: coil ties, top flange blockout, application of bond breaker, coil inserts for slab drains, holes for steel intermediate diaphragms.

The contractor shall provide bracing necessary for lateral and torsional stability of the girders during construction of the concrete slab and remove the bracing after the slab has attained 75% design strength. Contractor shall not drill holes in the girders.

For Girder Camber Diagram, see Sheet No. 19.

For location of coil inserts at slab drains, see Sheet No. 18.

For location of coil ties at concrete diaphragms and integral bents, see Sheets No. 3, 6, 9, 11 and 16.

Alternate bar reinforcing steel details are provided and may be used. The same type of reinforcing steel shall be used for all girders in all spans.

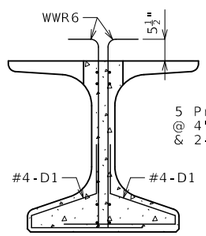

SECTION A-A

Strands not shown for clarity.

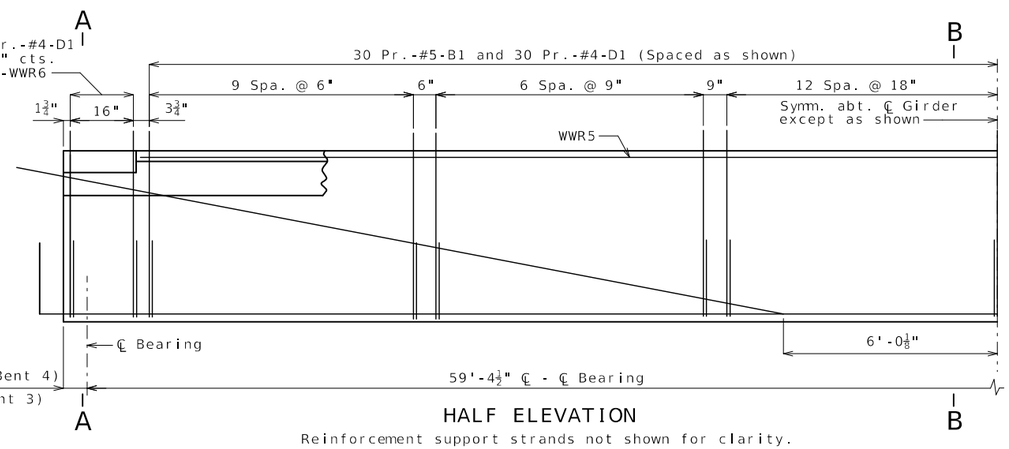

HALF ELEVATION

Reinforcement support strands not shown for clarity.

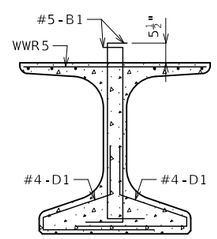

SECTION B-B

Strands not shown for clarity.

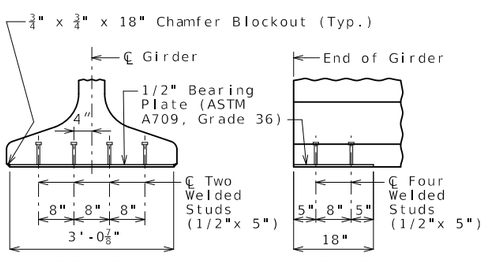

END VIEW SIDE VIEW

BEARING PLATE

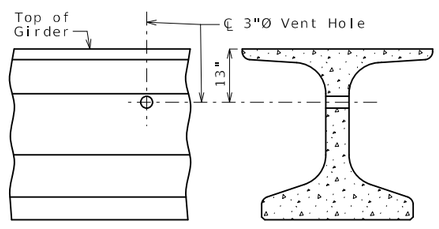

PART ELEVATION PART SECTION

VENT HOLE

Place vent holes at or near upgrade 1/3 point of girders and clear reinforcing steel or strands by 1 1/2" minimum and steel intermediate diaphragm bolt connections by 6" minimum.

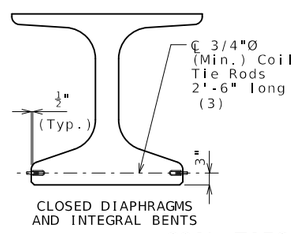

CLOSED DIAPHRAGMS AND INTEGRAL BENTS

COIL TIES

Exclude coil tie at exterior face of exterior girders except at integral end bents.

NU-GIRDERS - SPANS (1-2) AND (3-4)

Detailed Aug. 2023
Checked Sep. 2023

Note: This drawing is not to scale. Follow dimensions.

STATE OF MISSOURI
TRENTON B. CRAWFORD
NUMBER PE-2012018053
PROFESSIONAL ENGINEER
THIS SHEET HAS BEEN SIGNED, SEALED AND DATED ELECTRONICALLY.

DATE PREPARED	
10/25/2023	
ROUTE 64	STATE MO
DISTRICT BR	SHEET NO. 13
COUNTY LACLEDE	
JOB NO. J5P3244	
CONTRACT ID.	
PROJECT NO.	
BRIDGE NO. A9326	

DATE	DESCRIPTION

MISSOURI HIGHWAYS AND TRANSPORTATION COMMISSION
105 WEST CAPITOL
JEFFERSON CITY, MO 65102
1-888-ASK-MODOT (1-888-275-6636)

(1) Fabricator shall apply a bond breaker to this region excluding where joint filler will be applied.

(2) Outer strands tensioned to 2.02 kips/strand and inner strands to 8 kips/strand. Placed symmetrical about ℄ Girder. May be moved laterally in pairs.

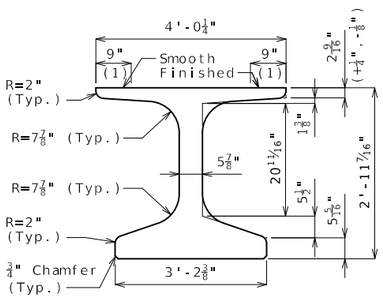

DIMENSIONS

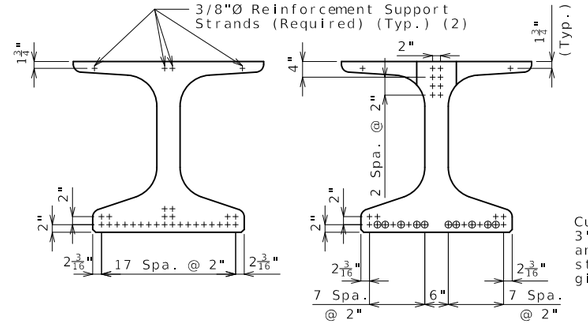

STRAND ARRANGEMENT

+ Indicates prestressing strand.

o Indicates cut & shop bend with 3'-0" projection.

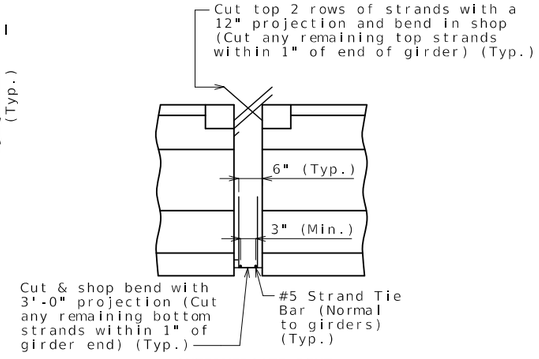

STRANDS AT GIRDER ENDS

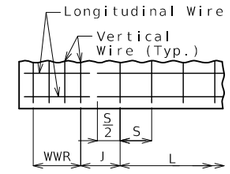

WELDED WIRE PLACEMENT

S = Vertical wire spacing

L = Length of WWR mats

J = Distance between WWR mats

Bill of Reinforcing Steel

Bars Each Girder				
No.	Size/Mark		Length	Shape
108	3	G1	2'-10"	8
2	4	G3	4'-1"	20
2	4	G4	2'-3"	20
2	4	G5	2'-10"	20
4	4	G6	Varies	20

Welded Wire Each Girder					
Mark	Size	S	W	L	J
WWR1	D31	4"	W12	4'-0"	4¾"
WWR2	D31	8"	W12	14'-0"	8"
WWR3	D31	16"	W12	42'-8"	--
WWR6	D31	2"	W12	16"	4"

Bending Diagrams

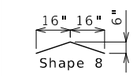

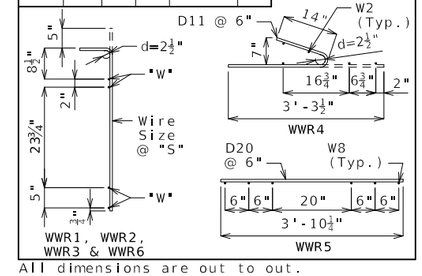

All dimensions are out to out.

Hooks and bends shall be in accordance with the CRSI Manual of Standard Practice for Detailing Reinforced Concrete Structures, Stirrup and Tie Dimensions.

Actual bar lengths are measured along centerline of bar to the nearest inch.

Minimum clearance to reinforcing shall be 1", unless otherwise shown.

All bar reinforcement shall be Grade 60.

WWR shall not be epoxy coated.

G4 and G5 not required for interior girders. G3 and G6 not required for exterior girders of intermediate spans. Half no. of G3, G4, G5 and G6 not required for ext. girders of end spans.

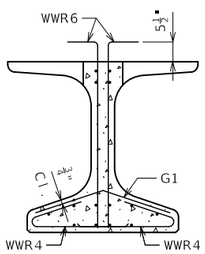

SECTION A-A

Strands not shown for clarity.

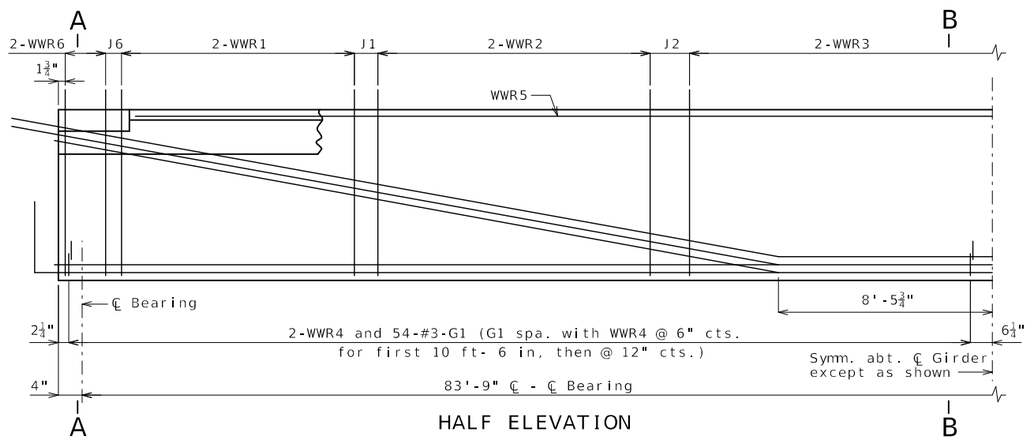

HALF ELEVATION

Reinforcement support strands not shown for clarity.

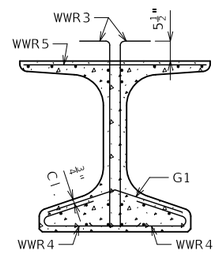

SECTION B-B

Strands not shown for clarity.

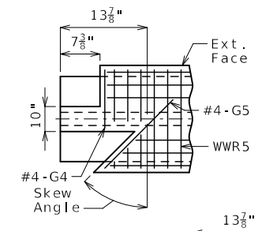

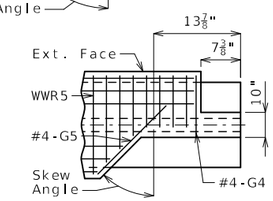

LEFT EXTERIOR GIRDER AT INTERMEDIATE BENT

Rotate 180° for right ext.

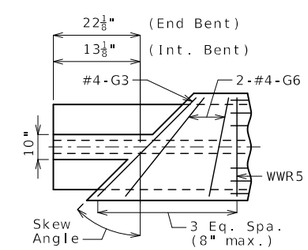

INTERIOR GIRDER AT ALL BENTS

TOP FLANGE BLOCKOUT

Mirror for right advanced.

General Notes:

Concrete for prestressed beams shall be Class A-1 with f'c = 8000 psi and f'ci = 6500 psi.

Use 26 strands, 0.6"Ø Grade 270, with an initial prestress force of 1143 kips.

Pretensioned members shall be in accordance with Sec 1029.

Fabricator shall be responsible for location and design of lifting devices.

Exterior and interior girders are the same except: coil ties, top flange blockout, application of bond breaker, coil inserts for slab drains, holes for steel intermediate diaphragms.

The contractor shall provide bracing necessary for lateral and torsional stability of the girders during construction of the concrete slab and remove the bracing after the slab has attained 75% design strength. Contractor shall not drill holes in the girders.

For Girder Camber Diagram, see Sheet No. 19.

For location of coil inserts at slab drains, see Sheet No. 18.

For location of coil ties at concrete diaphragms and integral bents, see Sheets No. 3, 6, 9, 11 and 16.

Alternate bar reinforcing steel details are provided and may be used. The same type of reinforcing steel shall be used for all girders in all spans.

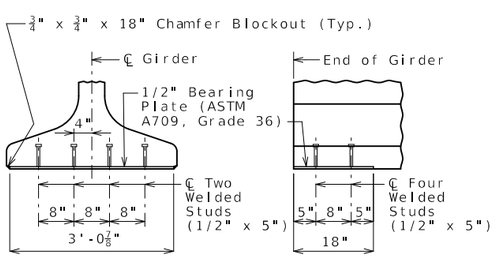

BEARING PLATE

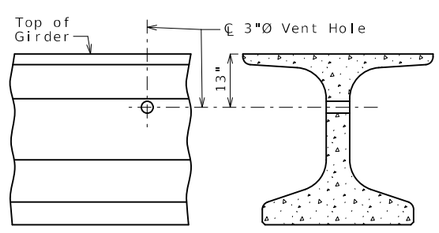

VENT HOLE

Place vent holes at or near upgrade 1/3 point of girders and clear reinforcing steel or strands by 1 1/2" minimum and steel intermediate diaphragm bolt connections by 6" minimum.

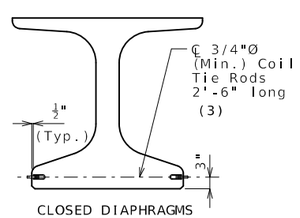

COIL TIES

Exclude coil tie at exterior face of exterior girders except at integral end bents.

NU-GIRDERS - SPANS (2-3)

Detailed Aug. 2023
Checked Sep. 2023

Note: This drawing is not to scale. Follow dimensions.

STATE OF MISSOURI
TRENTON B. CRAWFORD
NUMBER PE-2012018053
PROFESSIONAL ENGINEER
THIS SHEET HAS BEEN SIGNED, SEALED AND DATED ELECTRONICALLY.

DATE PREPARED 10/25/2023

ROUTE	STATE
64	MO
DISTRICT	SHEET NO.
BR	14

COUNTY: LACLEDE
JOB NO.: J5P3244
CONTRACT ID.
PROJECT NO.
BRIDGE NO.: A9326

DESCRIPTION
DATE

MISSOURI HIGHWAYS AND TRANSPORTATION COMMISSION
105 WEST CAPITOL
JEFFERSON CITY, MO 65102
1-888-ASK-MODOT (1-888-275-6636)

(1) Fabricator shall apply a bond breaker to this region excluding where joint filler will be applied.

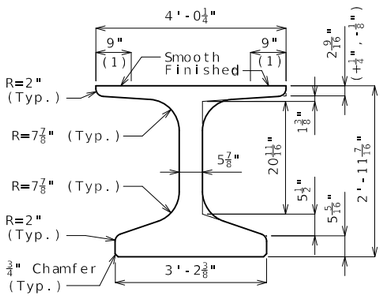

DIMENSIONS

(2) Outer strands tensioned to 2.02 kips/strand and inner strands to 8 kips/strand. Placed symmetrical about ℄ Girder. May be moved laterally in pairs.

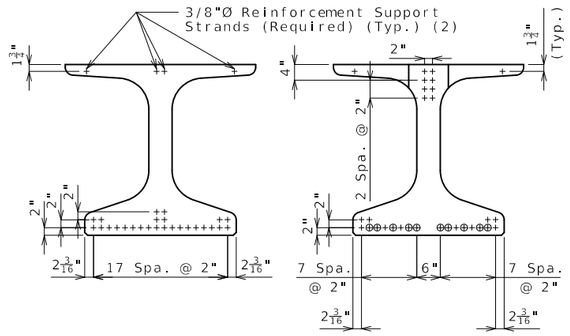

℄ GIRDER END OF GIRDER

STRAND ARRANGEMENT

+ Indicates prestressing strand.

o Indicates cut & shop bend with 3'-0" projection.

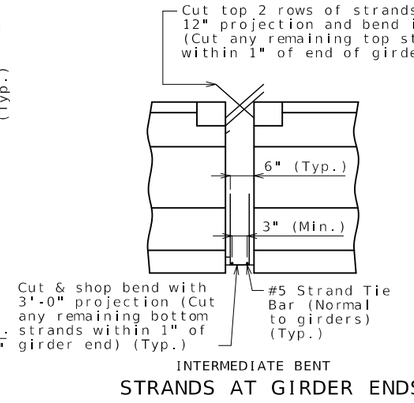

INTERMEDIATE BENT

STRANDS AT GIRDER ENDS

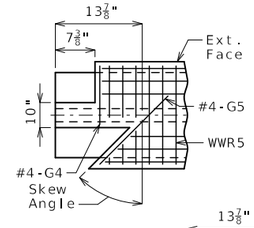

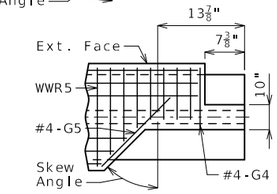

LEFT EXTERIOR GIRDER AT INTERMEDIATE BENT

Rotate 180° for right ext.

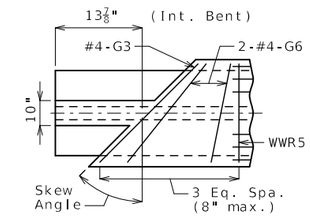

INTERIOR GIRDER AT ALL BENTS

TOP FLANGE BLOCKOUT

Mirror for right advanced.

Bill of Reinforcing Steel - Each Girder			
No.	Size/ Mark	Length	Shape
176	5 B1	4'-4"	11
198	4 D1	4'-0"	9
2	4 G3	4'-1"	20
2	4 G4	2'-3"	20
2	4 G5	2'-10"	20
4	4 G6	Varies	20

Bending Diagrams

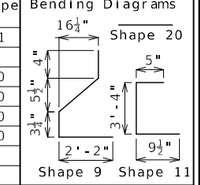

Welded Wire Reinforcement - Each Girder

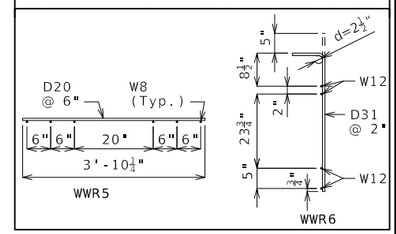

All dimensions are out to out.

Hooks and bends shall be in accordance with the CRSI Manual of Standard Practice for Detailing Reinforced Concrete Structures, Stirrup and Tie Dimensions.

Actual bar lengths are measured along centerline of bar to the nearest inch.

Minimum clearance to reinforcing shall be 1".

All bar reinforcement shall be Grade 60.

The two D1 bars may be furnished as one bar at the fabricator's option.

All B1 bars shall be epoxy coated.

G4 and G5 not required for interior girders. G3 and G6 not required for exterior girders of intermediate spans. Half no. of G3, G4, G5 and G6 not required for ext. girders of end spans.

General Notes:

Concrete for prestressed girders shall be Class A-1 with f'c = 8000 psi and f'ci = 6500 psi.

Use 26 strands, 0.6"Ø Grade 270, with an initial prestress force of 1143 kips.

Pretensioned members shall be in accordance with Sec 1029.

Fabricator shall be responsible for location and design of lifting devices.

Exterior and interior girders are the same except: coil ties, top flange blockout, application of bond breaker, coil inserts for slab drains, holes for steel intermediate diaphragms.

The contractor shall provide bracing necessary for lateral and torsional stability of the girders during construction of the concrete slab and remove the bracing after the slab has attained 75% design strength. Contractor shall not drill holes in the girders.

For Girder Camber Diagram, see Sheet No. 19.

For location of coil inserts at slab drains, see Sheet No. 18.

For location of coil ties at concrete diaphragms and integral bents, see Sheets No. 3, 6, 9, 11 and 16.

Alternate bar reinforcing steel details are provided and may be used. The same type of reinforcing steel shall be used for all girders in all spans.

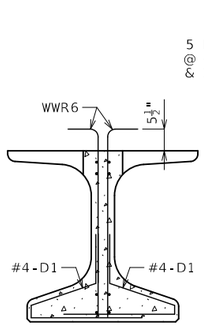

SECTION A-A

Strands not shown for clarity.

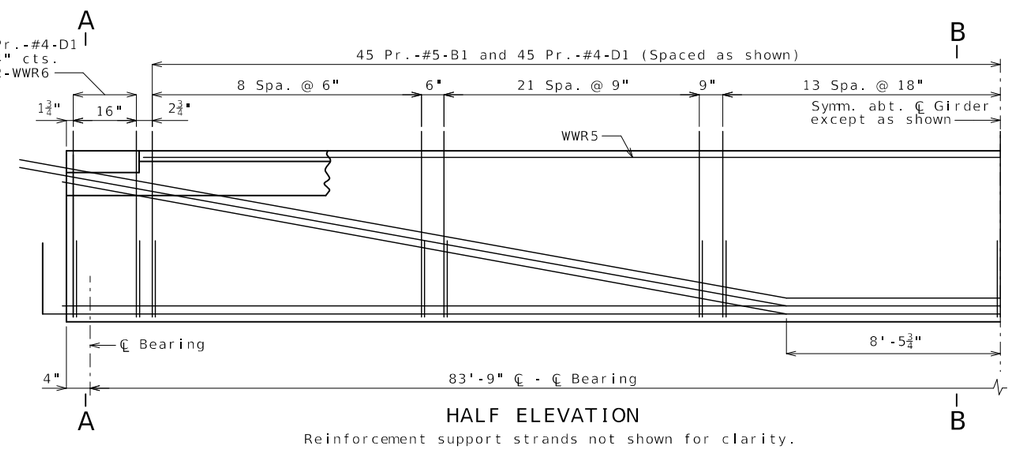

HALF ELEVATION

Reinforcement support strands not shown for clarity.

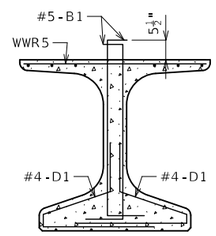

SECTION B-B

Strands not shown for clarity.

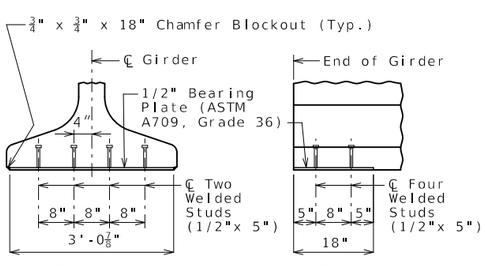

END VIEW SIDE VIEW

BEARING PLATE

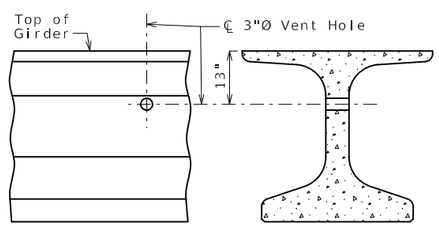

PART ELEVATION PART SECTION

VENT HOLE

Place vent holes at or near upgrade 1/3 point of girders and clear reinforcing steel or strands by 1 1/2" minimum and steel intermediate diaphragm bolt connections by 6" minimum.

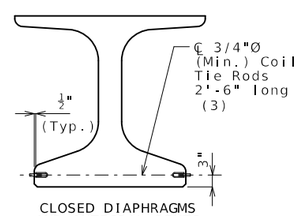

CLOSED DIAPHRAGMS AND INTEGRAL BENTS

COIL TIES

Exclude coil tie at exterior face of exterior girders except at integral end bents.

NU-GIRDERS - SPAN (2-3)

Detailed Aug. 2023
Checked Sep. 2023

Note: This drawing is not to scale. Follow dimensions.

STATE OF MISSOURI
TRENTON B. CRAWFORD
NUMBER PE-2012018053
PROFESSIONAL ENGINEER
THIS SHEET HAS BEEN SIGNED, SEALED AND DATED ELECTRONICALLY.

DATE PREPARED 10/25/2023

ROUTE	STATE
64	MO
DISTRICT	SHEET NO.
BR	15

COUNTY: LACLEDE
JOB NO.: J5P3244
CONTRACT ID.:
PROJECT NO.:
BRIDGE NO.: A9326

DATE	DESCRIPTION

MISSOURI HIGHWAYS AND TRANSPORTATION COMMISSION
105 WEST CAPITOL
JEFFERSON CITY, MO 65102
1-888-ASK-MODOT (1-888-275-6636)

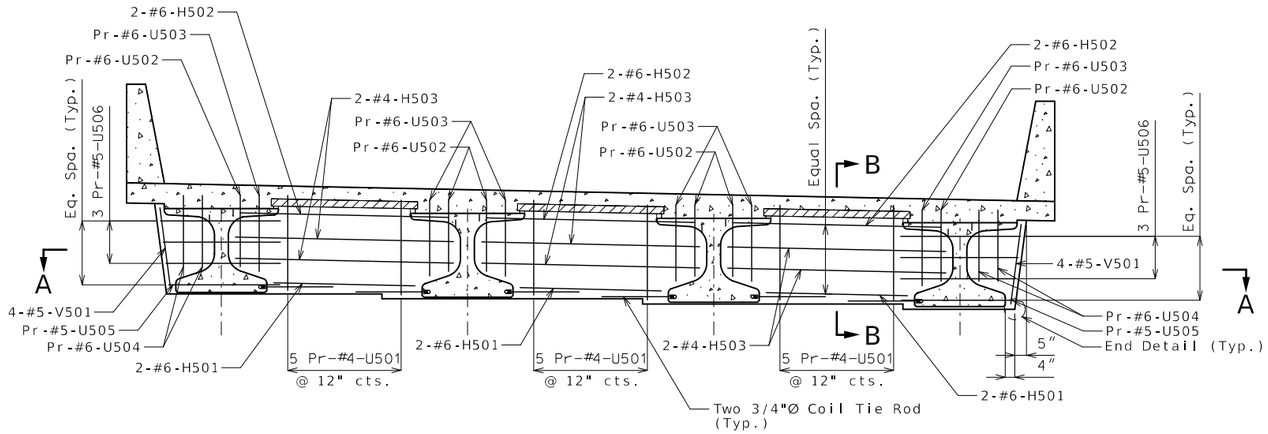

SECTION NEAR INTERMEDIATE BENT
(Normal to centerline of girders)

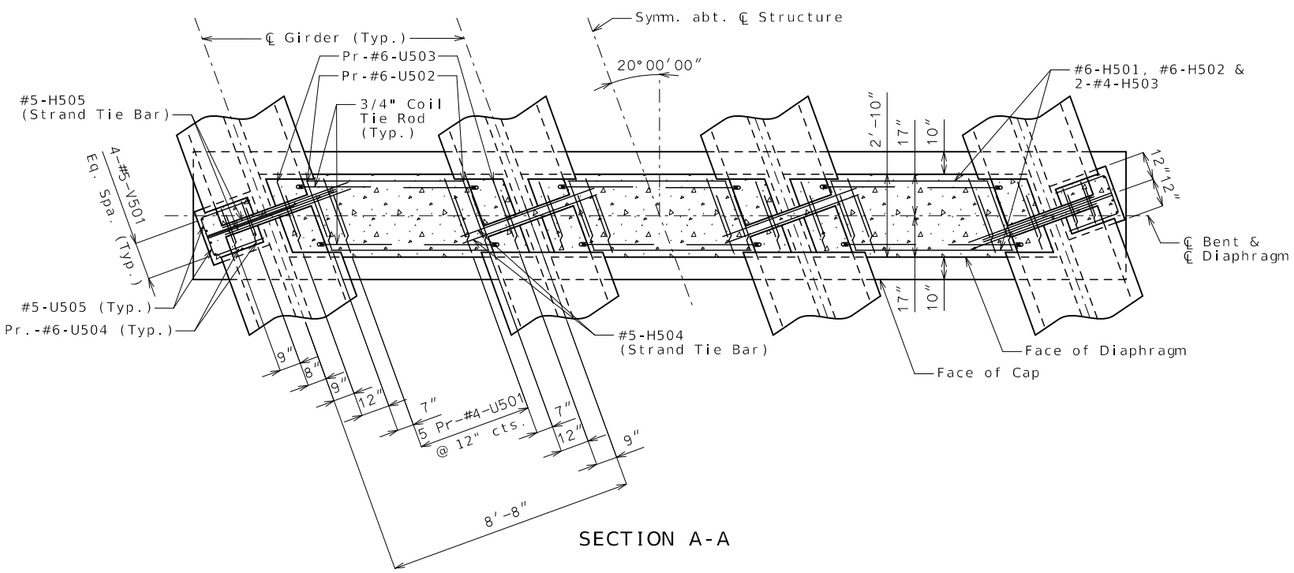

SECTION A-A

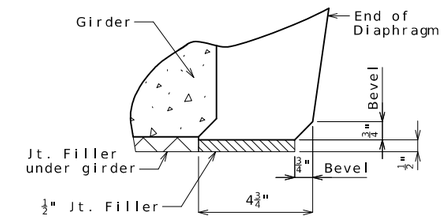

END DETAIL

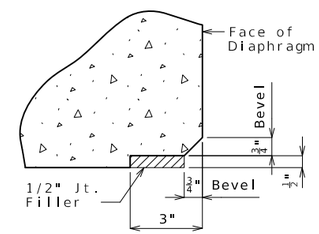

EDGE DETAIL

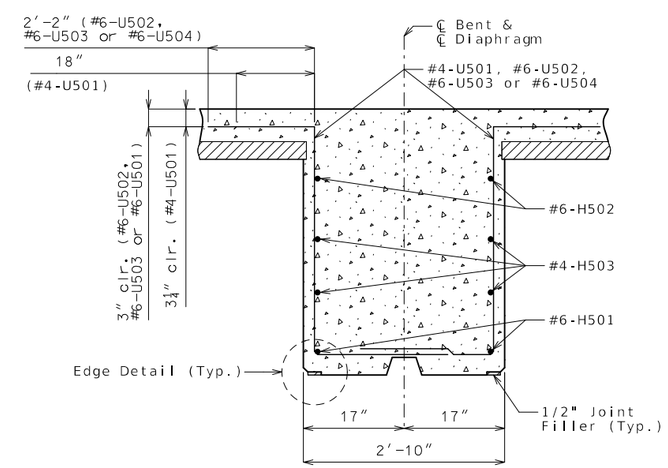

SECTION B-B

Notes:

For location of strand tie bars, see Sheets No. 12 thru 15.

For location and details of Coil Tie Rods, see Sheets No. 12 thru 15.

Diaphragm at intermediate bents shall be built vertical.

The U bars in diaphragm are to be placed parallel to centerline of roadway.

DETAILS OF DIAPHRAGMS AT INTERMEDIATE BENTS NO. 2 & 3

Detailed Aug. 2023
Checked Sep. 2023

Note: This drawing is not to scale. Follow dimensions.

STATE OF MISSOURI
TRENTON B. CRAWFORD
NUMBER
PE-2012018053
PROFESSIONAL ENGINEER

THIS SHEET HAS BEEN SIGNED, SEALED AND DATED ELECTRONICALLY.

DATE PREPARED	10/25/2023
ROUTE	64
STATE	MO
DISTRICT	BR
SHEET NO.	16
COUNTY	LACLEDE
JOB NO.	J5P3244
CONTRACT ID.	
PROJECT NO.	
BRIDGE NO.	A9326

DESCRIPTION

DATE

MISSOURI HIGHWAYS AND TRANSPORTATION COMMISSION
105 WEST CAPITOL
JEFFERSON CITY, MO 65102
1-888-ASK-MODOT (1-888-275-6636)

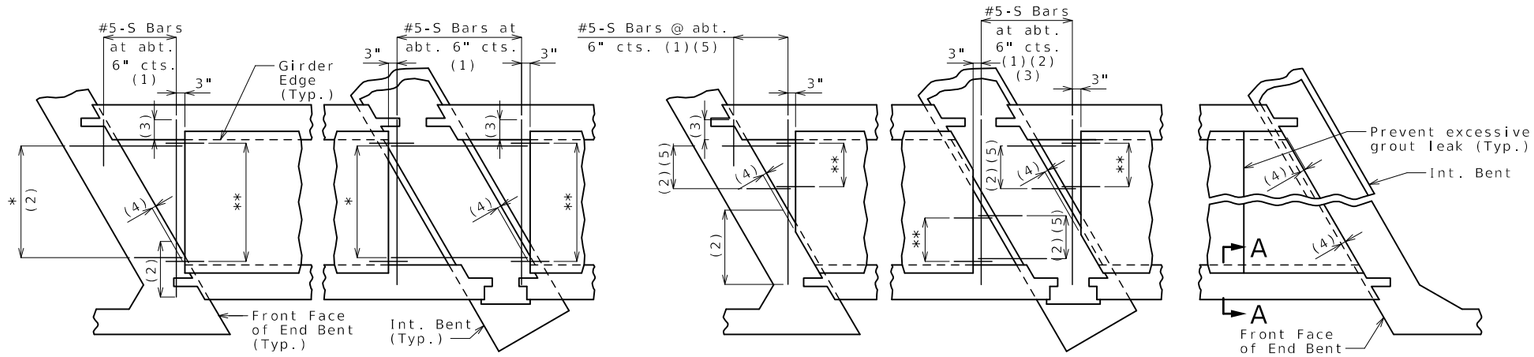

SQUARED END PANELS OR TRUNCATED END PANELS

PLAN SHOWING PANEL PLACEMENT

* #5-S Bars at abt. 9" cts. (1)
** #3-P1 at 12" cts. (End panels only)

SKEWED END PANELS

Joint Filler Dimensions		
Width	Height	
	Min.	Max.
3"	1"	4"

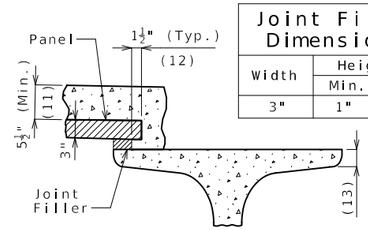

SECTION A-A

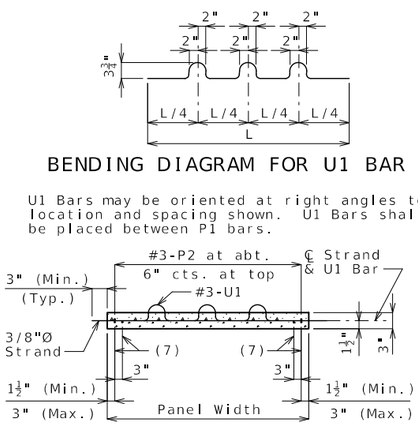

BENDING DIAGRAM FOR U1 BAR

U1 Bars may be oriented at right angles to location and spacing shown. U1 Bars shall be placed between P1 bars.

SECTION B-B

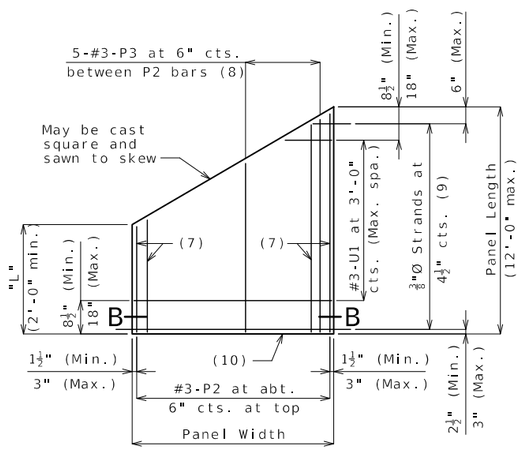

PLAN OF OPTIONAL SKEWED END PANEL

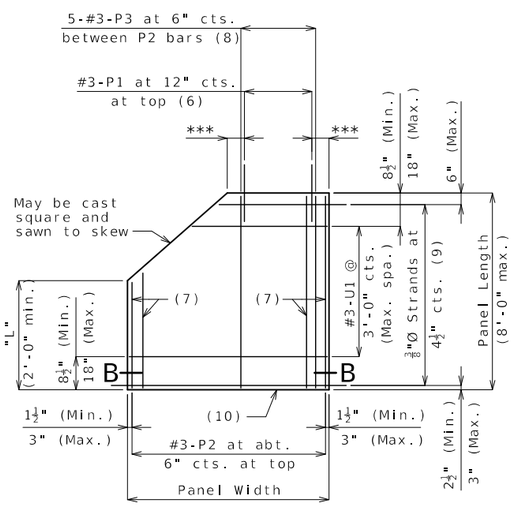

PLAN OF OPTIONAL TRUNCATED END PANEL

*** 3" (Min.), 6" (Max.)

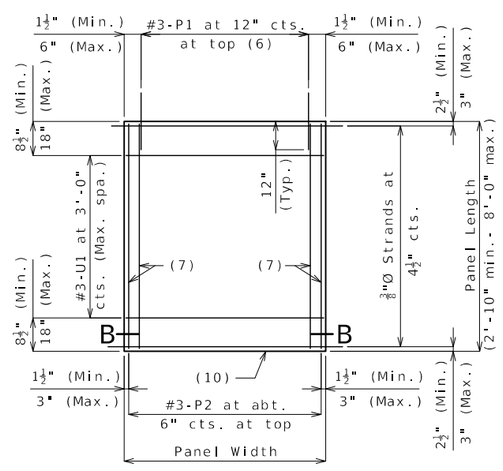

PLAN OF SQUARED PANEL

Reference Notes:

Plan of Panel Placement:

(1) S-bars shown are bottom steel in slab between panels and used with squared and truncated end panels only.

(2) Extend S-bars 18 inches beyond the front face of end bents and int. bents for squared and truncated end panels only.

(3) Extend S-bars 9 inches beyond edge of girder (Typ.).

(4) End panels shall be dimensioned 1/2" min. to 1 1/2" max. from the inside face of diaphragm.

(5) For truncated end panels, use a min. of #5-S bars at 6" crossings in openings, or min. 4x4-W7xW7.

Plans of Panels:

(6) For end panels only, P1 bars shall be 2'-0" in length and embedded 12". P1 bars will not be required for panels at squared integral end bents.

(7) #3-P2 bars near edge of panel at bottom (under strands).

(8) Use #3-P3 bars if panel is skewed 45° or greater.

(9) Any strand 2'-0" or shorter shall have a #4 reinforcing bar on each side of it, centered between strands. Strands 2'-0" or shorter may then be debonded at the fabricator's option.

(10) Optional 1/2" x 45° Chamfer one or both sides at bottom.

Section A-A:

(11) Slab thickness over prestressed panels varies due to girder camber. In order to maintain minimum slab thickness, it may be necessary to raise the grade uniformly throughout the structure. No payment will be made for additional labor or materials required for necessary grade adjustment.

(12) Contractor shall ensure proper consolidation under and between panels.

(13) At the contractor's option, the variation in slab thickness over prestressed panels may be eliminated or reduced by increasing and varying the girder top flange thickness. Dimensions shall be shown on the shop drawings.

General Notes:

Prestressed Panels:

Concrete for prestressed panels shall be Class A-1 with f'c = 6,000 psi, f'ci = 4,000 psi.

The top surface of all panels shall receive a scored finish with a depth of scoring of 1/8" perpendicular to the prestressing strands in the panels.

Prestressing tendons shall be high-tensile strength, uncoated, seven-wire, low-relaxation strands for prestressed concrete in accordance with AASHTO M 203 Grade 270, with nominal diameter of strand = 3/8" and nominal area = 0.085 sq.in. and minimum ultimate strength = 22.95 kips (270 ksi). Larger strands may be used with the same spacing and initial tension.

Initial prestressing force = 17.2 kips/strand.

The method and sequence of releasing the strands shall be shown on the shop drawings.

Suitable anchorage devices for lifting panels may be cast in panels, provided the devices are shown on the shop drawings and approved by the engineer. Panel lengths shall be determined by the contractor and shown on the shop drawings.

When squared end panels are used at skewed bents, the skewed portion shall be cast full depth. No separate payment will be made for additional concrete and reinforcing required.

Support from diaphragm forms is required under the optional skewed end until cast-in-place concrete has reached 3,000 psi compressive strength.

Prestressed panels shall be brought to saturated surface-dry (SSD) condition just prior to the deck pour. There shall be no free standing water on the panels or in the area to be cast.

The prestressed panel quantities are not included in the table of estimated quantities for the slab.

Reinforcing Steel:

All dimensions are out to out.

Hooks and bends shall be in accordance with the CRSI Manual of Standard Practice for Detailing Reinforced Concrete Structures, Stirrup and Tie Dimensions.

Minimum clearance to reinforcing steel shall be 1 1/2", unless otherwise shown.

If U1 bars interfere with placement of slab steel, U1 loops may be bent over, as necessary, to clear slab steel.

Deformed welded wire reinforcement (WWR) providing a minimum area of reinforcing perpendicular to strands of 0.22 sq in./ft, with spacing parallel to strands sufficient to ensure proper handling, may be used in lieu of the #3-P2 bars shown. Wire diameter shall not be larger than 0.375 inch. The above alternative reinforcement criteria may be used in lieu of the #3-P3 bars, when required, and placed over a width not less than 2 feet.

The following reinforcing steel shall be tied securely to the strands with the following maximum spacing in each direction:
#3-P2 bars at 16 inches.
WWR at 24 inches.

The #3-U1 bars shall be tied securely to #3-P2 bars, to WWR or to strands (when placed between P1 bars) at about 3-foot centers.

Minimum reinforcement steel length shall be 2'-0".

All reinforcement other than prestressing strands shall be epoxy coated.

Precast panels may be in contact with stirrup reinforcing in diaphragms.

S-bars are not listed in the bill of reinforcing.

Cost of S-bars will be considered completely covered by the contract unit price for the slab.

Joint Filler:

Joint filler shall be preformed fiber expansion joint material in accordance with Sec 1057 or expanded or extruded polystyrene bedding material in accordance with Sec 1073.

Use Slab Haunching Diagram on Sheet No. 19 for determining thickness of joint filler within the limits noted in the table of Joint Filler Dimensions.

Thicker material may be used on one or both sides of the girder to reduce cast-in-place concrete thickness to within tolerances.

The same thickness of preformed fiber expansion joint material shall be used under any one edge of any panel except at locations where top flange thickness may be stepped. The maximum change in thickness between adjacent panels shall be 1/2 inch. The polystyrene bedding material may be cut with a transition to match haunch height above top of flange.

Joint filler shall be glued to the girder. When thickness exceeds 1 1/2 inches, the joint filler shall be glued top and bottom. The glue used shall be the type recommended by the joint filler manufacturer.

Edges of panels shall be uniformly seated on the joint filler before slab reinforcement is placed.

STATE OF MISSOURI
TRENTON B. CRAWFORD
NUMBER PE-2012018053
PROFESSIONAL ENGINEER
THIS SHEET HAS BEEN SIGNED, SEALED AND DATED ELECTRONICALLY.

DATE PREPARED	
10/25/2023	
ROUTE 64	STATE MO
DISTRICT BR	SHEET NO. 17
COUNTY LACLEDE	
JOB NO. J5P3244	
CONTRACT ID.	
PROJECT NO.	
BRIDGE NO. A9326	

DESCRIPTION

DATE

MISSOURI HIGHWAYS AND TRANSPORTATION COMMISSION
105 WEST CAPITOL
JEFFERSON CITY, MO 65102
1-888-ASK-MODOT (1-888-275-6636)

Detailed Aug. 2023
Checked Sep. 2023

Note: This drawing is not to scale. Follow dimensions.

PRESTRESSED PANELS

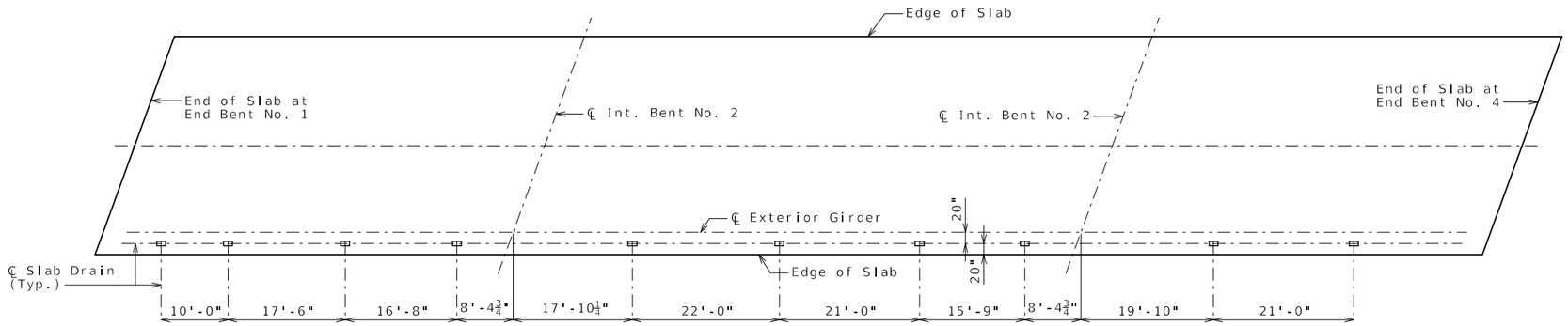

PLAN OF SLAB SHOWING SLAB DRAIN LOCATIONS

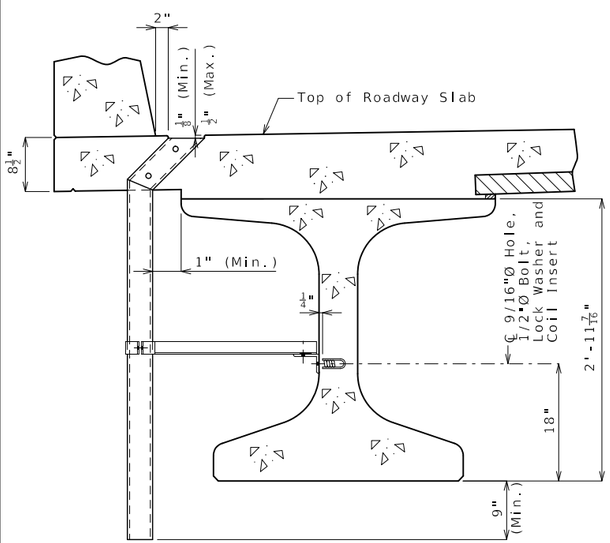

PART SECTION NEAR DRAIN

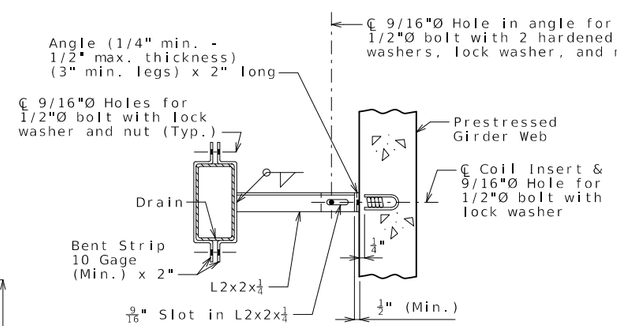

PART SECTION SHOWING BRACKET ASSEMBLY

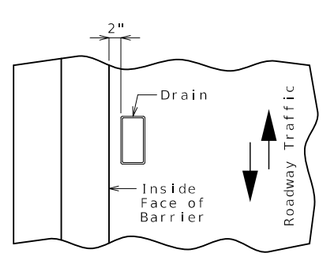

PART PLAN OF SLAB AT DRAIN

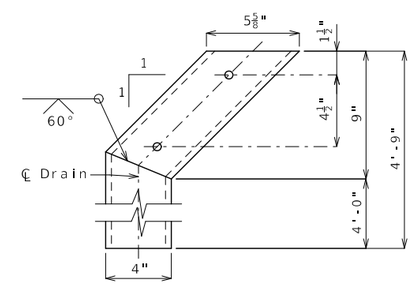

ELEVATION OF DRAIN

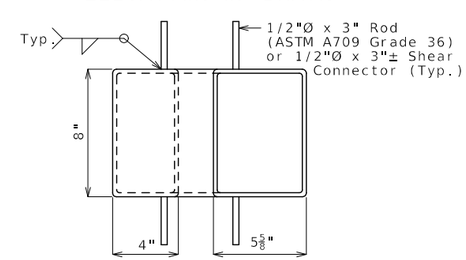

PLAN OF STEEL DRAIN OPTION

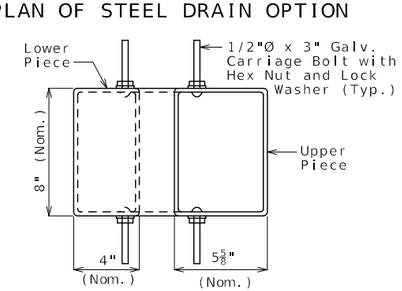

PLAN OF FRP DRAIN OPTION

General Notes:

Contractor shall have the option to construct either steel or FRP slab drains. All drains shall be of same type.

Slab drain bracket assembly shall be ASTM A709 Grade 36 steel.

Locate drains in slab by dimensions shown in Part Section Near Drain.

Reinforcing steel shall be shifted to clear drains.

The coil inserts and bracket assembly shall be galvanized in accordance with ASTM A123.

All bolts, hardened washers, lock washers and nuts shall be galvanized in accordance with AASHTO M 232 (ASTM A153), Class C.

All 1/2"Ø bolts shall be ASTM A307.

Shop drawings will not be required for the slab drains and the bracket assembly.

The coil insert required for the bracket assembly attachment shall be located on the prestressed girder shop drawings.

Coil inserts shall have a concrete pull-out strength (ultimate load) of at least 2,500 pounds in 5,000 psi concrete.

The bolt required to attach the slab drain bracket assembly to the prestressed girder web shall be supplied by the prestressed girder fabricator.

Notes for Steel Drain:

Slab drains may be fabricated of either 1/4" welded sheets of ASTM A709 Grade 36 steel or from 1/4" structural steel tubing ASTM A500 or A501.

Outside dimensions of drains are 8" x 4".

The drains shall be galvanized in accordance with ASTM A123.

Notes for FRP Drain:

Drains shall be machine filament-wound thermosetting resin tubing meeting the requirements of ASTM D2996 with the following exceptions:

Shape of drains shall be rectangular with outside nominal dimensions of 8" x 4".

Minimum reinforced wall thickness shall be 1/4 inch.

The resin used shall be ultraviolet (UV) resistant and/or have UV inhibitors mixed throughout. Drains may have an exterior coating for additional UV resistance.

The color of the slab drain shall be gray (Federal Standard 26373). The color shall be uniform throughout the resin and any coating used.

The combination of materials used in the manufacture of the drains shall be tested for UV resistance in accordance with ASTM D4329 Cycle A. The representative material shall withstand at least 500 hours of testing with only minor discoloration and without any physical deterioration. The contractor shall furnish the results of the required ultraviolet testing prior to acceptance of the slab drains.

At the contractor's option, drains may be field cut. The method of cutting FRP slab drain shall be as recommended by the manufacturer to ensure a smooth, chip free cut.

Both upper and lower drain pieces shall be rigidly connected to each other. Drain flow shall not be obstructed. Approval of the engineer is required.

STATE OF MISSOURI
TRENTON B. CRAWFORD
NUMBER PE-2012018053
PROFESSIONAL ENGINEER
THIS SHEET HAS BEEN SIGNED, SEALED AND DATED ELECTRONICALLY.

DATE PREPARED	
10/25/2023	
ROUTE 64	STATE MO
DISTRICT BR	SHEET NO. 18
COUNTY LACLEDE	
JOB NO. J5P3244	
CONTRACT ID.	
PROJECT NO.	
BRIDGE NO. A9326	

DATE	DESCRIPTION

MISSOURI HIGHWAYS AND TRANSPORTATION COMMISSION
105 WEST CAPITOL
JEFFERSON CITY, MO 65102
1-888-ASK-MODOT (1-888-275-6636)

SLAB DRAINS

Detailed Aug. 2023
Checked Sep. 2023

Note: This drawing is not to scale. Follow dimensions.

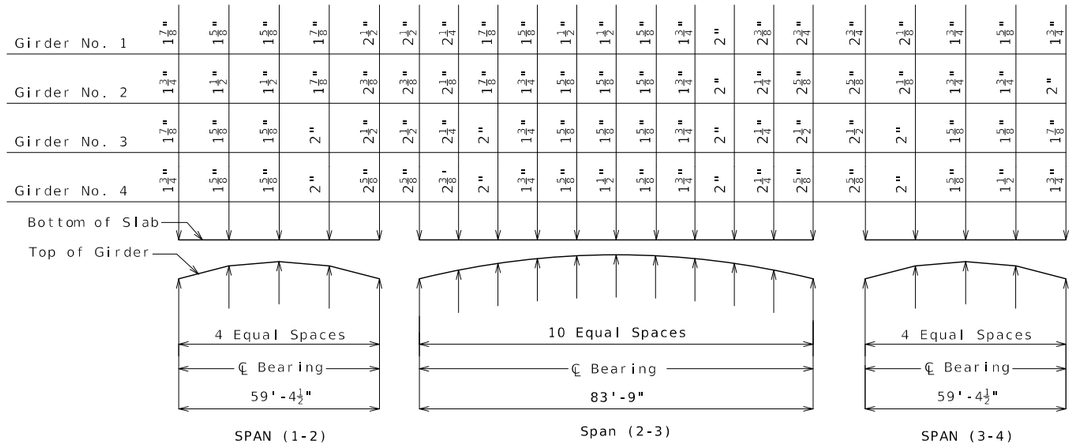

THEORETICAL SLAB HAUNCHING DIAGRAM (ESTIMATED AT 90 DAYS)

If girder camber is different from that shown in the camber diagram, in order to maintain minimum slab thickness, an adjustment of the slab haunches, an increase in slab thickness or a raise in grade uniformly throughout the structure shall be necessary. No payment will be made for additional labor or materials required for variation in haunching, slab thickness or grade adjustment.

Concrete in the slab haunches is included in the Estimated Quantities for Slab on Concrete NU-Girder.

Theoretical Bottom of Slab Elevations at Centerline of Girder (Prior to forming for slab) (Estimated at 90 days)

Girder Number	Span (1-2) (59-4½" ℄ Brg. - ℄ Brg.)				
	℄ Brg.	.25	.50	.75	℄ Brg.
1	1160.72	1160.76	1160.78	1160.79	1160.77
2	1160.54	1160.59	1160.61	1160.61	1160.60
3	1160.37	1160.41	1160.43	1160.44	1160.42
4	1160.19	1160.23	1160.25	1160.26	1160.25

Girder Number	Span (2-3) (83-9" ℄ Brg. - ℄ Brg.)										
	℄ Brg.	.10	.20	.30	.40	.50	.60	.70	.80	.90	℄ Brg.
1	1160.78	1160.83	1160.87	1160.91	1160.94	1160.95	1160.95	1160.94	1160.92	1160.89	1160.85
2	1160.60	1160.65	1160.70	1160.75	1160.77	1160.79	1160.79	1160.78	1160.75	1160.71	1160.67
3	1160.42	1160.48	1160.53	1160.57	1160.60	1160.61	1160.61	1160.60	1160.57	1160.54	1160.50
4	1160.25	1160.30	1160.34	1160.38	1160.41	1160.42	1160.42	1160.41	1160.39	1160.36	1160.32

Girder Number	Span (3-4) (59-4½" ℄ Brg. - ℄ Brg.)				
	℄ Brg.	.25	.50	.75	℄ Brg.
1	1160.85	1160.89	1160.91	1160.92	1160.90
2	1160.68	1160.72	1160.74	1160.74	1160.73
3	1160.50	1160.54	1160.57	1160.57	1160.55
4	1160.32	1160.36	1160.38	1160.39	1160.38

Elevations are based on a constant slab thickness of 8 1/2" and include allowance for theoretical dead load deflections due to weight of slab (including precast panel) and barrier.

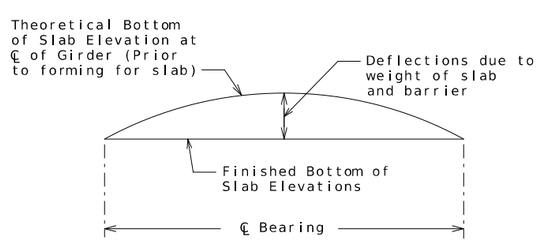

TYPICAL SLAB ELEVATIONS DIAGRAM

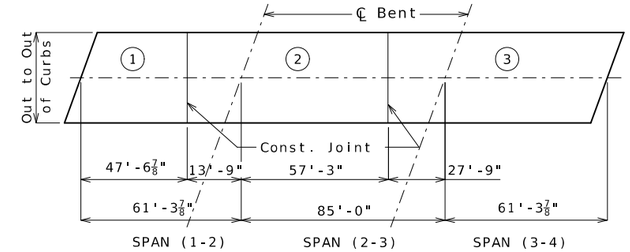

	Sequence of Pours			Min. Rate of Pour Cu. Yds./Hr.
	Direction			With Retarder
Basic Sequence	1	2	3	25
	End to 2	1 to 3	2 to End	
Alternate pours to the basic sequence are subject to the approval of the engineer in accordance with Sec 703.				
Alternate A Pours	1 + 2		3	25
	End to 3		2 to End	
Alternate B Pours	1 + 2 + 3			25
	End to End			

The contractor shall furnish an approved retarder to retard the set of the concrete to 2.5 hours, and shall pour and satisfactorily finish the slab pours at the rate given.

The concrete diaphragm at the intermediate bents and integral end bents shall be poured a minimum of 30 minutes and a maximum of 2 hours before the slab is poured.

SLAB POURING SEQUENCE

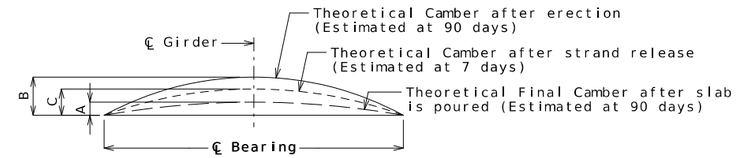

Girder	Span (1-2)			Span (2-3)			Span (3-4)		
	A	B	C	A	B	C	A	B	C
Exterior	5/8"	1"	5/8"	1"	2¾"	1⅞"	5/8"	1"	5/8"
Interior	½"			⅞"			½"		

GIRDER CAMBER DIAGRAM

Conversion Factors for Girder Camber (Estimated at 90 days):

0.1 pt. = 0.314 x 0.5 pt.
0.2 pt. = 0.593 x 0.5 pt.
0.3 pt. = 0.813 x 0.5 pt.
0.4 pt. = 0.952 x 0.5 pt.

0.25 pt. = 0.7125 x 0.5 pt.

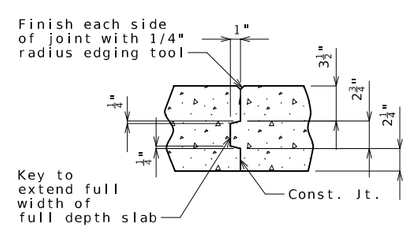

FULL DEPTH SLAB

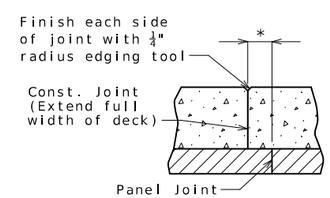

* Adjust the construction joint to a clearance of 6 inches minimum from the panel joint.

SLAB ON PANELS

SLAB CONSTRUCTION JOINT

STATE OF MISSOURI
TRENTON B. CRAWFORD
NUMBER PE-2012018053
PROFESSIONAL ENGINEER
THIS SHEET HAS BEEN SIGNED, SEALED AND DATED ELECTRONICALLY.

DATE PREPARED 10/25/2023
ROUTE 64 | STATE MO
DISTRICT BR | SHEET NO. 19
COUNTY LACLEDE
JOB NO. J5P3244
CONTRACT ID.
PROJECT NO.
BRIDGE NO. A9326

DESCRIPTION | DATE

MISSOURI HIGHWAYS AND TRANSPORTATION COMMISSION
105 WEST CAPITOL
JEFFERSON CITY, MO 65102
1-888-ASK-MODOT (1-888-275-6636)

Detailed Aug. 2023
Checked Sep. 2023

Note: This drawing is not to scale. Follow dimensions.

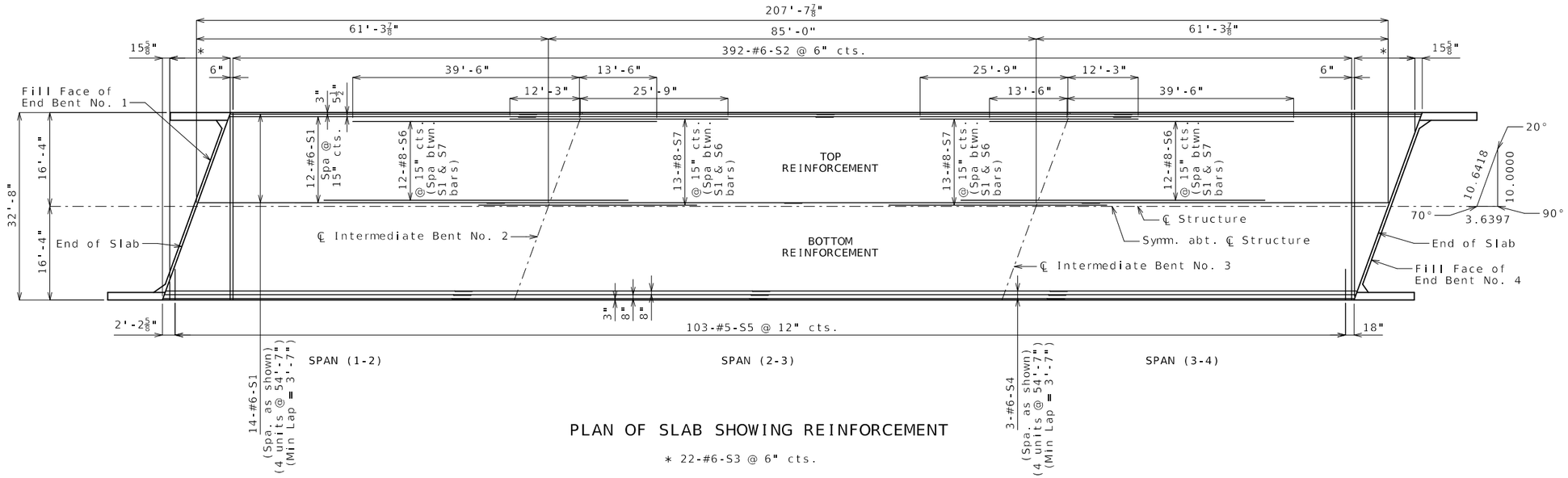

PLAN OF SLAB SHOWING REINFORCEMENT

* 22-#6-S3 @ 6" cts.

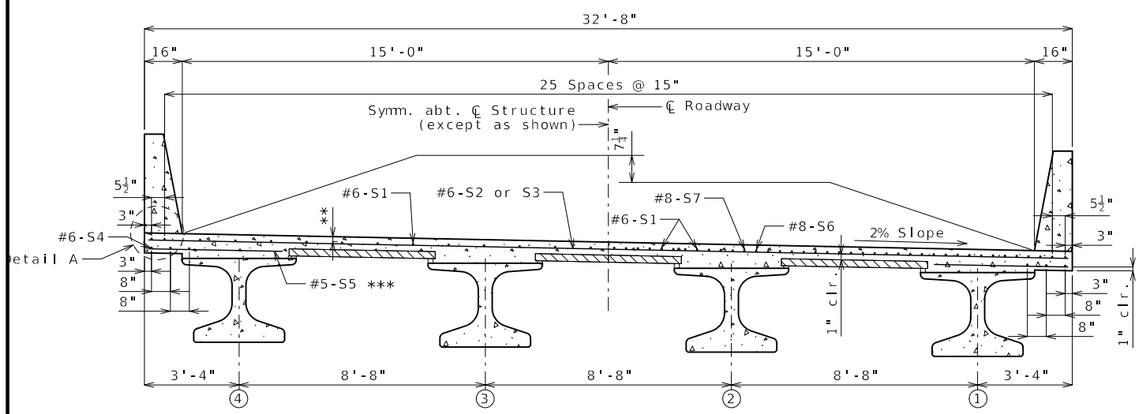

TYPICAL HALF SECTION NEAR MID SPAN

TYPICAL HALF SECTION NEAR INTERMEDIATE BENT

*** Alternate bar shape available, see barrier sheet

** 3" (#6) clr.
2¾" (#8) clr.

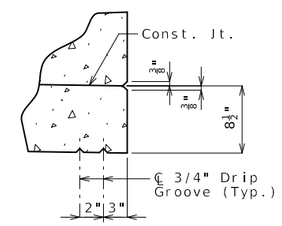

DETAIL A

Notes:

For details of barrier, see Sheets No. 21 & 22.

For details of precast panels, see Sheet No. 17.

For details and locations of slab drains, see Sheet No. 18.

For Theoretical Bottom of Slab Elevations, Girder Camber Diagram, Theoretical Slab Haunching Diagram and Slab Pouring Sequence, see Sheet No. 19.

Longitudinal slab dimensions are measured horizontally.

STATE OF MISSOURI
TRENTON B. CRAWFORD
NUMBER PE-2012018053
PROFESSIONAL ENGINEER
THIS SHEET HAS BEEN SIGNED, SEALED AND DATED ELECTRONICALLY.

DATE PREPARED	10/25/2023
ROUTE	64
STATE	MO
DISTRICT	BR
SHEET NO.	20
COUNTY	LACLEDE
JOB NO.	J5P3244
CONTRACT ID.	
PROJECT NO.	
BRIDGE NO.	A9326

DESCRIPTION

DATE

MISSOURI HIGHWAYS AND TRANSPORTATION COMMISSION
105 WEST CAPITOL
JEFFERSON CITY, MO 65102
1-888-ASK-MODOT (1-888-275-6636)

Detailed Aug. 2023
Checked Sep. 2023

Note: This drawing is not to scale. Follow dimensions.

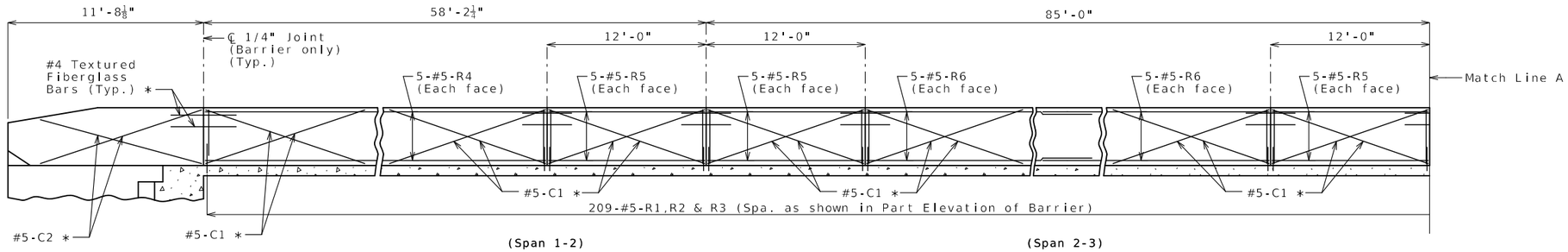

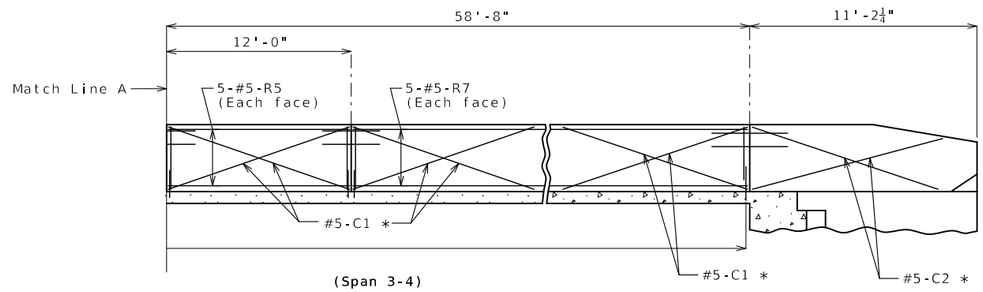

ELEVATION OF LEFT BARRIER

(Left barrier shown, right barrier similar)
Longitudinal dimensions are horizontal.

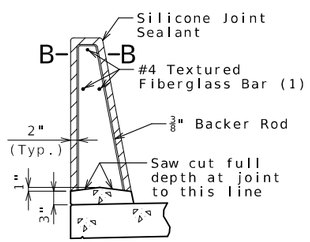

SECTION THRU SAW CUT JOINT

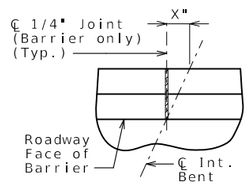

PART PLAN SHOWING JOINT LOCATION

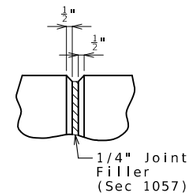

PART ELEVATION AT FORMED JOINT

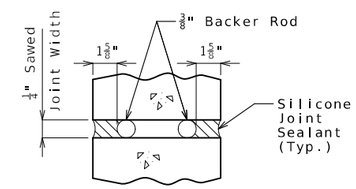

SECTION B-B

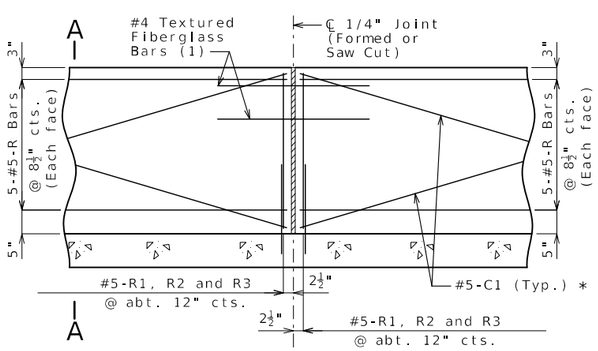

PART ELEVATION OF BARRIER

(1) Four feet long, centered on joint, slip-formed option only

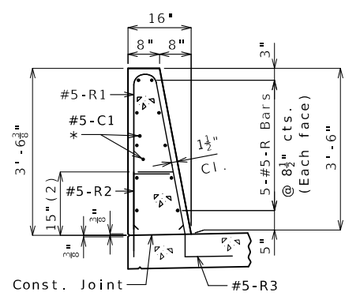

SECTION A-A

Use a minimum lap of 3'-1" for #5 horizontal barrier bars.

The cross-sectional area above the slab is 3.52 square feet.

(2) To top of bar

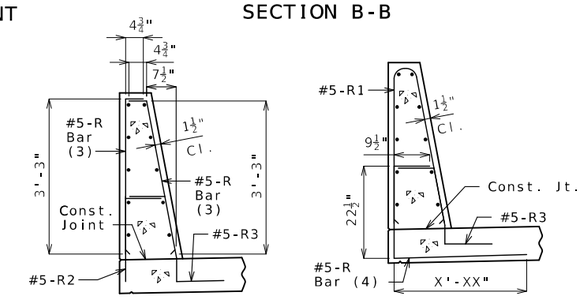

R-BAR PERMISSIBLE ALTERNATE SHAPE

(3) The R1 bar may be separated into two bars as shown, at the contractor's option, only when slip forming is not used. (All dimensions are out to out.)

(4) The R2 bar and #5 bottom transverse slab bar in cantilever (prestressed panels only) combination may be furnished as one bar as shown, at the contractor's option.

General Notes:

* Slip-formed option only.

Conventional forming or slip forming may be used. Saw cut joints may be used with conventional forming.

Top of barrier shall be built parallel to grade and barrier joints (except at end bents) normal to grade.

All exposed edges of barrier shall have either a 1/2-inch radius or a 3/8-inch bevel, unless otherwise noted.

Payment for all concrete and reinforcement, complete in place, will be considered completely covered by the contract unit price for Type D Barrier per linear foot.

Concrete in barrier shall be Class B-1.

Measurement of barrier is to the nearest linear foot for each structure, measured along the outside top of slab from end of wing to end of wing.

Concrete traffic barrier delineators shall be placed on top of the barrier as shown on Missouri Standard Plan 617.10 and in accordance with Sec 617. Delineators on bridges with two-lane, two-way traffic shall have retroreflective sheeting on both sides. Concrete traffic barrier delineators will be considered completely covered by the contract unit price for Type D Barrier.

Joint sealant and backer rods shall be in accordance with Sec 717 for silicone joint sealant for saw cut and formed joints.

For slip-formed option, both sides of barrier shall have a vertically broomed finish and the top shall have a transversely broomed finish.

Plastic waterstop shall not be used with saw cut joints.

TYPE D BARRIER

Detailed Aug. 2023
Checked Sep. 2023

Note: This drawing is not to scale. Follow dimensions.

STATE OF MISSOURI
TRENTON B. CRAWFORD
NUMBER PE-2012018053
PROFESSIONAL ENGINEER
THIS SHEET HAS BEEN SIGNED, SEALED AND DATED ELECTRONICALLY.

DATE PREPARED	
10/25/2023	
ROUTE 64	STATE MO
DISTRICT BR	SHEET NO. 21
COUNTY LACLEDE	
JOB NO. J5P3244	
CONTRACT ID.	
PROJECT NO.	
BRIDGE NO. A9326	

DATE	DESCRIPTION

MISSOURI HIGHWAYS AND TRANSPORTATION COMMISSION
105 WEST CAPITOL
JEFFERSON CITY, MO 65102
1-888-ASK-MODOT (1-888-275-6636)

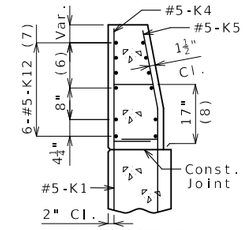

SECTION A-A

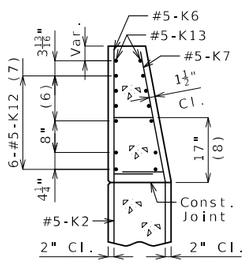

SECTION B-B

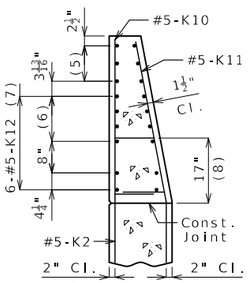

SECTION C-C

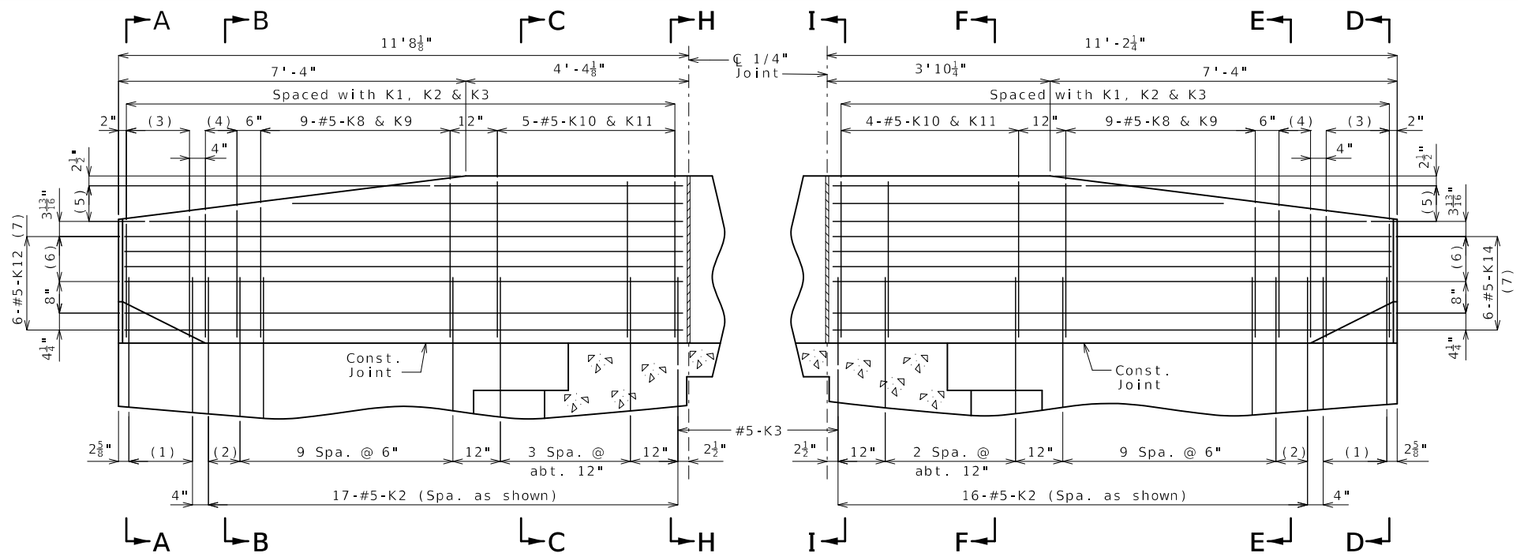

PART ELEVATION

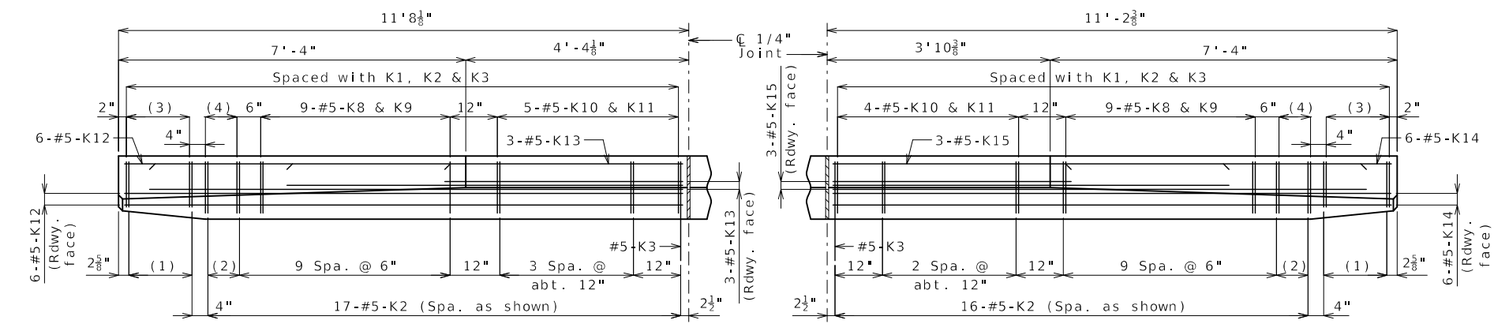

PART PLAN

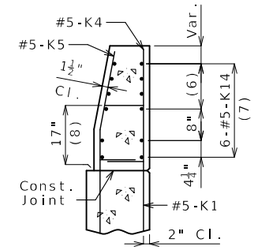

SECTION D-D

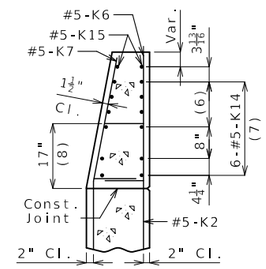

SECTION E-E

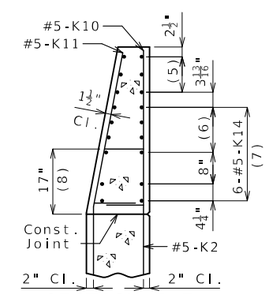

SECTION F-F

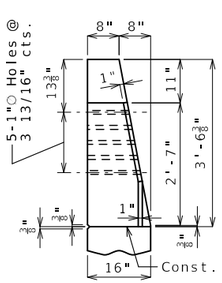

ELEVATION G-G

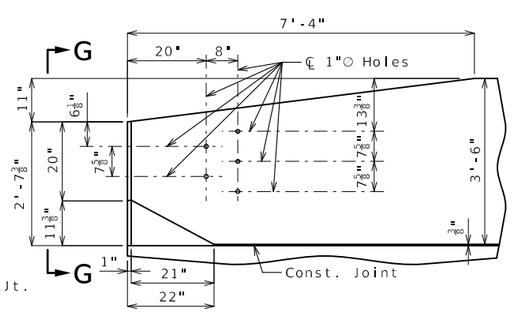

ELEVATION

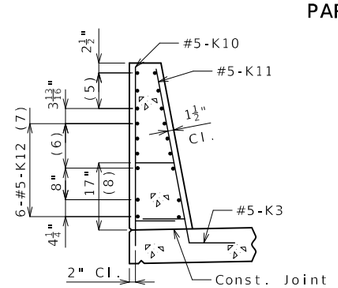

SECTION H-H

(1) 5-#5-K1 @ 4" cts.

(2) 2 spaces @ 4"

(3) 5-#5-K4 & K5

(4) 3-#5-K6 & K7

(5) 3-#5-K13 or K15 @ 4½" cts., each face

(6) 3 spaces @ 3 13/16"

(7) Spaced as shown, each face

(8) To top of bar

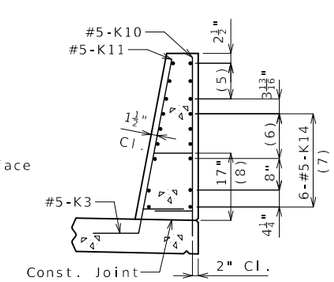

SECTION I-I

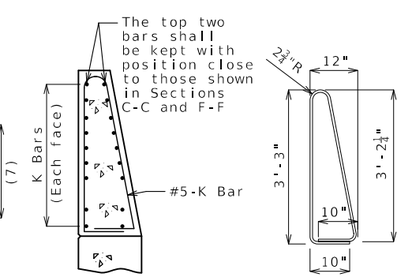

K10-K11 BAR PERMISSIBLE ALTERNATE SHAPE

(Other K bars not shown for clarity)

The K10-K11 bar combination may be furnished as one bar as shown, at the contractor's option.

All dimensions are out to out.

* Transition to zero at Type A curb for gutter lines to match.

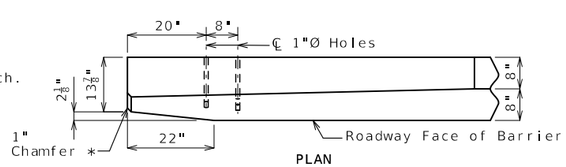

PLAN

DETAILS OF GUARD RAIL ATTACHMENT

General Notes:

Concrete traffic barrier delineators shall be placed on top of the barrier as shown on Missouri Standard Plan 617.10 and in accordance with Sec 617. Delineators on bridges with two-lane, two-way traffic shall have retroreflective sheeting on both sides. Concrete traffic barrier delineators will be considered completely covered by the contract unit price for Type D Barrier.

Reinforcing Steel:
Minimum clearance to reinforcing steel shall be 1 1/2" except as shown for bars embedded into end bent.

TYPE D BARRIER AT END BENTS

(Left barrier shown, right barrier similar)

Detailed Aug. 2023
Checked Sep. 2023

Note: This drawing is not to scale. Follow dimensions.

STATE OF MISSOURI
TRENTON B. CRAWFORD
NUMBER PE-2012018053
PROFESSIONAL ENGINEER
THIS SHEET HAS BEEN SIGNED, SEALED AND DATED ELECTRONICALLY.

DATE PREPARED	
10/25/2023	
ROUTE	STATE
64	MO
DISTRICT	SHEET NO.
BR	22
COUNTY	
LACLEDE	
JOB NO.	
J5P3244	
CONTRACT ID.	
PROJECT NO.	
BRIDGE NO.	
A9326	

DATE	DESCRIPTION

MISSOURI HIGHWAYS AND TRANSPORTATION COMMISSION
105 WEST CAPITOL
JEFFERSON CITY, MO 65102
1-888-ASK-MODOT (1-888-275-6636)

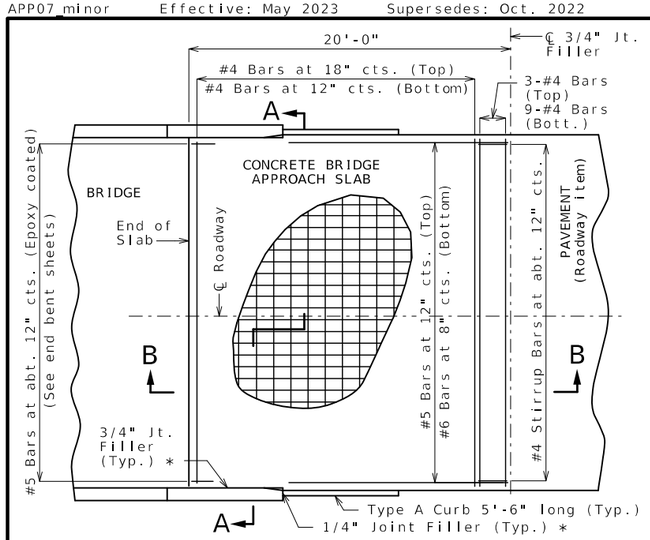

PART PLAN OF SQUARED STRUCTURE
(Skewed structure similar)

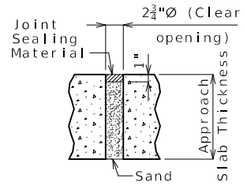

UNDERSEAL ACCESS HOLE DETAIL
(If required)

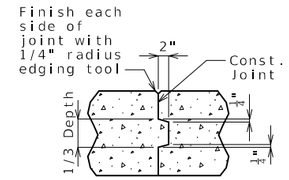

CONSTRUCTION JOINT DETAIL

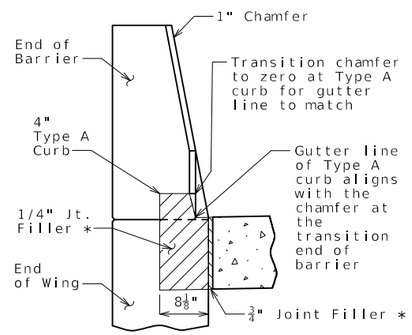

SECTION BETWEEN CURB AND BARRIER

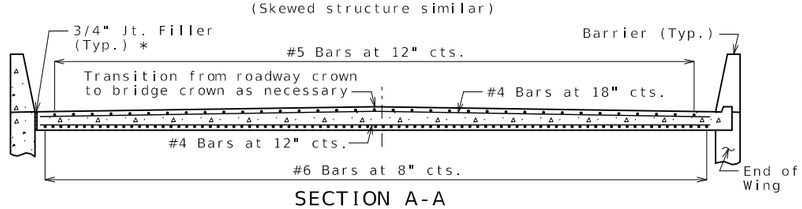

SECTION A-A

With the approval of the engineer, the contractor may crown the bottom of the approach slab to match the crown of the roadway surface.

Notes For Concrete Slab Only:

All concrete for the bridge approach slab shall be in accordance with Sec 503 (f'c = 4,000 psi).

The reinforcing steel in the bridge approach slab shall be epoxy coated Grade 60 with fy = 60,000 psi.

Longitudinal construction joints in bridge approach slab shall be aligned with longitudinal construction joints in bridge slab.

Minimum clearance to reinforcing steel shall be 1 1/2", unless otherwise shown.

The reinforcing steel in the bridge approach slab shall be continuous. The transverse reinforcing steel may be made continuous by providing a minimum lap splice of 23 inches for #4 bars, or by mechanical bar splice.

Mechanical bar splices shall be in accordance with Sec 710.

All joint filler shall be in accordance with Sec 1057 for preformed fiber expansion joint filler except as noted.

Payment for furnishing all materials, labor and excavation necessary to construct the concrete bridge approach slab, including the timber header, underdrain, Type 5 aggregate base, joint filler, and all other appurtenances and incidental work as shown on this sheet, complete in place, will be considered completely covered by the contract unit price for Bridge Approach Slab (Minor) per square yard.

See Missouri Standard Plan 609.00 for details of Type A curb.

Drain pipe may be either 6" diameter corrugated metallic-coated pipe underdrain, 4" diameter corrugated polyvinyl chloride (PVC) drain pipe, or 4" diameter corrugated polyethylene (PE) drain pipe.

* Seal joint between vertical face of approach slab and wing with sealant in accordance with Sec 717 for silicone joint sealant for saw cut and formed joints.

General Notes:

Contractor shall have the option to construct either slab except as noted.

The contractor shall pour and satisfactorily finish the bridge slab before placing the bridge approach slab.

MoDOT Construction personnel will indicate the bridge approach slab used for this structure:

- ☐ Concrete Bridge Approach Slab
- ☐ Asphalt Bridge Approach Slab

Notes For Asphalt Slab Only:

Payment for furnishing all materials, labor and excavation necessary to construct the asphalt bridge approach slab, including tack, curb, and Type 5 aggregate base within the pay limits shown, complete in place, will be considered completely covered by the contract unit price for Bridge Approach Slab (Minor) per square yard.

Application of tack is required between lifts per Sec 403.

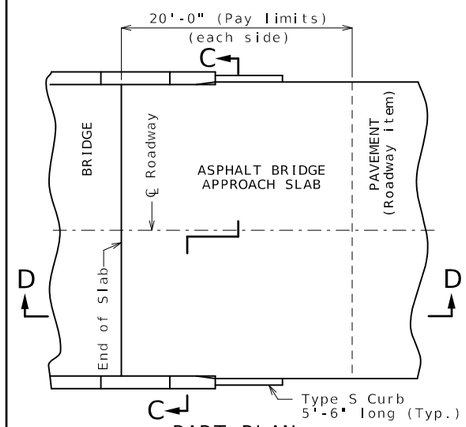

PART PLAN
(Squared structure shown, skewed structure similar)

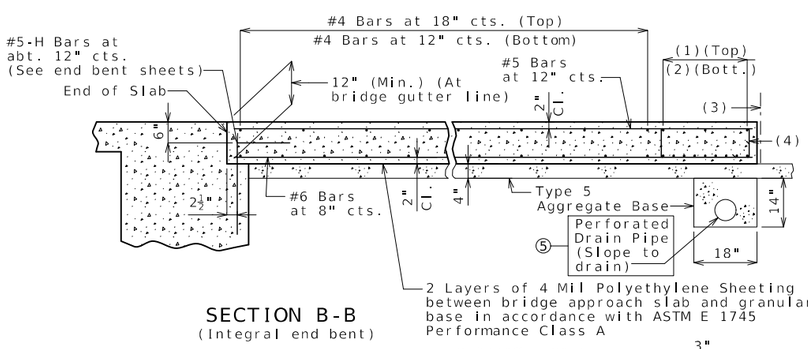

(1) 3-#4 Bars
(2) 9-#4 Bars
(3) ℄ 3/4" Jt. Filler
(4) #4 Stirrup Bars at abt. 12" cts.; 2'-0"x 8" (Min.) out to out; Actual length = 5'-10" (Min.); 90° stirrup hook at bottom; Stirrup height (8") and actual length vary due to crown.

SECTION B-B
(Integral end bent)

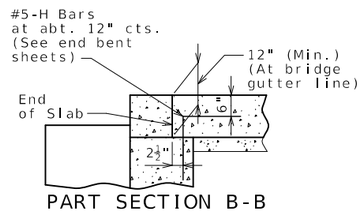

PART SECTION B-B
(Non-integral end bent)

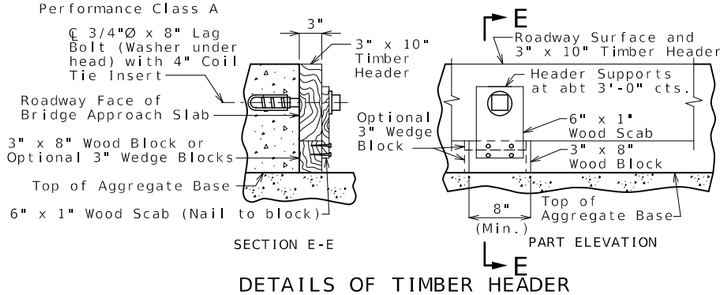

SECTION E-E

PART ELEVATION

DETAILS OF TIMBER HEADER
Remove timber header when concrete pavement is placed.

OPTIONAL CONCRETE SLAB

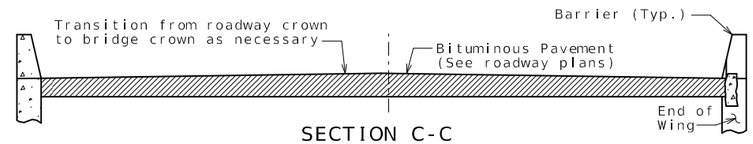

SECTION C-C

With the approval of the engineer, the contractor may crown the bottom of the approach slab to match the crown of the roadway surface.

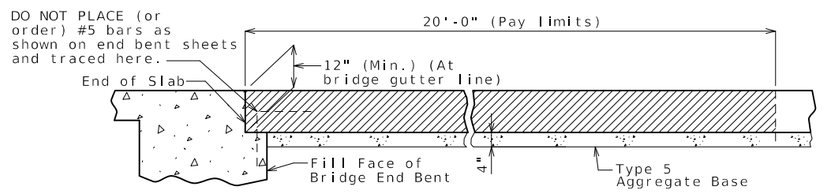

SECTION D-D

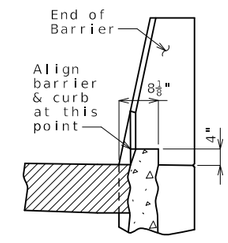

4" TYPE S CURB
See Missouri Standard Plan 609.00 for details of Type S curb.

OPTIONAL ASPHALT SLAB (NOT ALLOWED WITH CONCRETE PAVEMENT)

STATE OF MISSOURI
TRENTON B. CRAWFORD
NUMBER PE-2012018053
PROFESSIONAL ENGINEER
THIS SHEET HAS BEEN SIGNED, SEALED AND DATED ELECTRONICALLY.

DATE PREPARED	10/31/2023
ROUTE 64	STATE MO
DISTRICT BR	SHEET NO. 23
COUNTY	LACLEDE
JOB NO.	J5P3244
CONTRACT ID.	
PROJECT NO.	
BRIDGE NO.	A9326

DESCRIPTION

DATE

MISSOURI HIGHWAYS AND TRANSPORTATION COMMISSION
105 WEST CAPITOL
JEFFERSON CITY, MO 65102
1-888-ASK-MODOT (1-888-275-6636)

BRIDGE APPROACH SLAB (MINOR)

Integral end bents shown, non-integral end bent similar.

Detailed Aug. 2023
Checked Sep. 2023

Note: This drawing is not to scale. Follow dimensions.

BILL OF REINFORCING STEEL

NO. REQ'D.	MARK NO. SIZE	MARK NO. MARK	LOCATION	EPOXY (E)	SHAPE NO.	STIRRUP (S)	SUBSTR. (X)	VARIES (V)	NO. EACH	B FT. IN.	C FT. IN.	D FT. IN.	E FT. IN.	F FT. IN.	H FT. IN.	K FT. IN.	NOMINAL LENGTH FT. IN.	ACTUAL LENGTH FT. IN.	WEIGHT LBS.
			SUBSTRUCTURE																
			INT. BENT NO																
			. 2																
24	6	D200	BEAM		20		X			2 6.000							2 6	2 6	90
8	8	H201	BEAM		20		X			32 7.000							32 7	32 7	696
10	6	H202	BEAM		20		X			32 7.000							32 7	32 7	489
15	6	H203	BEAM		10	S	X				22.000	4 1.500					7 10	7 6	169
8	8	H205	BEAM		20		X			14 4.000							14 4	14 4	306
8	8	H206	BEAM		18		X			32 7.000							34 5	34 5	735
16	6	U201	BEAM		13	S	X			4 3.000	4 3.000	4 3.000	4 3.000				18 4	17 10	429
11	6	U202	BEAM		10	S	X				4 3.000	4 3.000					12 9	12 5	205
16	6	U203	BEAM		13	S	X			4 3.000	4 7.500	4 3.000	4 7.500				19 1	18 7	447
8	6	U204	BEAM		10	S	X				4 7.500	4 3.000					13 6	13 2	158
2	5	P201	COLUMN		35		X			3 3.000	6.000	32 4.500					681	6681 6	1422
30	4	P202	BEAM		16		X			3 3.000							10 1	10 1	202
30	11	V201	COLUMN		17		X			36 6.000							38 1	38 1	6070
			INT. BENT NO																
			. 3																
24	6	D300	BEAM		20		X			2 6.000							2 6	2 6	90
8	8	H301	BEAM		20		X			32 7.000							32 7	32 7	696
10	6	H302	BEAM		20		X			32 7.000							32 7	32 7	489
15	6	H303	BEAM		10	S	X				22.000	4 1.500					7 10	7 6	169
8	8	H305	BEAM		20		X			14 4.000							14 4	14 4	306
8	8	H306	BEAM		18		X			32 7.000							34 5	34 5	735
16	6	U301	BEAM		13	S	X			4 3.000	4 3.000	4 3.000	4 3.000				18 4	17 10	429
11	6	U302	BEAM		10	S	X				4 3.000	4 3.000					12 9	12 5	205
16	6	U303	BEAM		13	S	X			4 3.000	4 7.500	4 3.000	4 7.500				19 1	18 7	447
8	6	U304	BEAM		10	S	X				4 7.500	4 3.000					13 6	13 2	158
2	5	P301	COLUMN		35		X			3 3.000	6.000	34 3.750					720	5720 5	1503
30	4	P302	BEAM		16		X			3 3.000							10 1	10 1	202
30	11	V301	COLUMN		17		X			38 3.000							39 10	39 10	6349
			SUPERSTRUCTU																
			RE																
			END BENT NO.																
			1																
9	6	F101	WING	E	23					2 3.000	6 2.875	14.000	8.000	11.500	15.500	22.125	9 8	9 7	130
3	6	F102	DIAPHRAGM	E	21					5 5.750	2 11.125				5 1.750	22.500	8 5	8 1	36
10	6	F103	WING	E	23					14.000	4 5.375	2 3.000	22.125	15.500	11.500	8.000	7 10	7 9	116
3	6	F104	DIAPHRAGM	E	15					2 11.125	4 8.750				2 9.000	12.000	7 8	7 7	34
12	7	H100	BEAM	E	20					34 6.000							34 6	34 6	846
8	6	H101	BEAM	E	20					34 6.000							34 6	34 6	415
4	7	H102	BEAM	E	20					15 10.000							15 10	15 10	129
3	6	H103	DIAPHRAGM	E	20					5 6.000							5 6	5 6	25
9	6	H104	DIAPHRAGM	E	20					8 5.000							8 5	8 5	114

BILL OF REINFORCING STEEL

NO. REQ'D.	MARK NO. SIZE	MARK NO. MARK	LOCATION	EPOXY (E)	SHAPE NO.	STIRRUP (S)	SUBSTR. (X)	VARIES (V)	NO. EACH	B FT. IN.	C FT. IN.	D FT. IN.	E FT. IN.	F FT. IN.	H FT. IN.	K FT. IN.	NOMINAL LENGTH FT. IN.	ACTUAL LENGTH FT. IN.	WEIGHT LBS.
6	6	H105	DIAPHRAGM	E	20					3 0.000							3 0	3 0	27
2	6	H106	DIAPHRAGM	E	20					19.000							0 19	0 19	5
16	8	H107	WING	E	20					10 6.000							10 6	10 6	449
19	6	H108	WING	E	20					9 8.000							9 8	9 8	276
19	6	H109	WING	E	19					9 8.000	12.000						10 8	10 6	300
30	5	H110	APP. NOTCH	E	19	S				18.000	15.000						2 9	2 8	83
4	5	H111	STRAND TIE	E	23					15.000	3 2.375	15.000	5.125	14.125	5.125	14.125	5 8	5 8	24
16	5	U100	BEAM	E	31	S				5 5.250	2 11.250	5 5.250					14 9	14 6	242
3	4	U101	BEAM	E	10	S					2 8.000	2 11.250					8 3	8 1	16
3	4	U102	BEAM	E	10	S					3 0.250	2 11.250					9 0	8 10	18
13	4	U103	BEAM	E	13	S				2 11.250	2 8.000	2 11.250	2 8.000				12 0	11 9	102
14	4	U104	BEAM	E	13	S				2 11.250	3 0.250	2 11.250	3 0.250				12 8	12 5	116
16	6	U105	DIAPHRAGM	E	19	S				2 6.250	2 11.250						5 6	5 4	128
16	5	U106	DIAPHRAGM	E	31	S				3 5.250	2 4.875	3 5.250					10 2	10 0	167
43	6	U107	DIAPHRAGM	E	19	S				2 11.000	4 9.000						7 8	7 6	484
28	6	V100	DIAPHRAGM	E	20					2 6.000							2 6	2 6	105
18	6	V101	WING	E	20					6 6.000							6 6	6 6	176
18	6	V102	WING	E	20					7 2.000							7 2	7 2	194
			INT. BENT NO																
			. 2 & 3																
12	6	H501	DIAPHRAGM	E	20					5 5.000							5 5	5 5	98
12	6	H502	DIAPHRAGM	E	20					8 4.000							8 4	8 4	150
24	4	H503	DIAPHRAGM	E	20					8 4.000							8 4	8 4	134
8	5	H504	STRAND TIE	E	20					6 0.000							6 0	6 0	50
8	5	H505	STRAND TIE	E	20					6 0.000							6 0	6 0	50
60	4	U501	DIAPHRAGM	E	28	S					2 4.000	3 2.500	18.000				7 1	6 11	277
24	6	U502	DIAPHRAGM	E	28	S					2 7.000	3 2.500	2 2.000				8 0	7 8	276
24	6	U503	DIAPHRAGM	E	28	S					2 7.000	2 4.500	2 2.000				7 2	6 10	246
8	6	U504	DIAPHRAGM	E	28	S					22.000	2 4.500	2 2.000				6 5	6 1	73
8	5	U505	DIAPHRAGM	E	19	S				4 5.875	13.000						5 7	5 6	46
24	5	U506	DIAPHRAGM	E	6	S				4 5.875	13.000	17.250					7 0	6 10	171
16	5	V101	DIAPHRAGM	E	20					3 6.000							3 6	3 6	58
			END BENT NO.																
			4																
10	6	F401	WING	E	23					2 3.000	6 2.875	14.000	8.000	11.500	15.500	22.125	9 8	9 7	144
3	6	F402	DIAPHRAGM	E	21					5 5.750	2 11.125				5 1.750	22.500	8 5	8 1	36
9	6	F403	WING	E	23					14.000	4 5.375	2 3.000	22.125	15.500	11.500	8.000	7 10	7 9	105
3	6	F404	DIAPHRAGM	E	15					2 11.125	4 8.750				2 9.000	12.000	7 8	7 7	34
12	7	H400	BEAM	E	20					34 6.000							34 6	34 6	846
8	6	H401	BEAM	E	20					34 6.000							34 6	34 6	415
4	7	H402	BEAM	E	20					15 10.000							15 10	15 10	129
3	6	H403	DIAPHRAGM	E	20					5 6.000							5 6	5 6	25
9	6	H404	DIAPHRAGM	E	20					8 5.000							8 5	8 5	114
6	6	H405	DIAPHRAGM	E	20					3 0.000							3 0	3 0	27
2	6	H406	DIAPHRAGM	E	20					19.000							0 19	0 19	5
16	8	H407	WING	E	20					10 6.000							10 6	10 6	449
19	6	H408	WING	E	20					9 8.000							9 8	9 8	276
19	6	H409	WING	E	19					9 8.000	12.000						10 8	10 6	300
30	5	H410	APP. NOTCH	E	19	S				18.000	15.000						2 9	2 8	83
4	5	H411	STRAND TIE	E	23					15.000	3 2.375	15.000	5.125	14.125	5.125	14.125	5 8	5 8	24

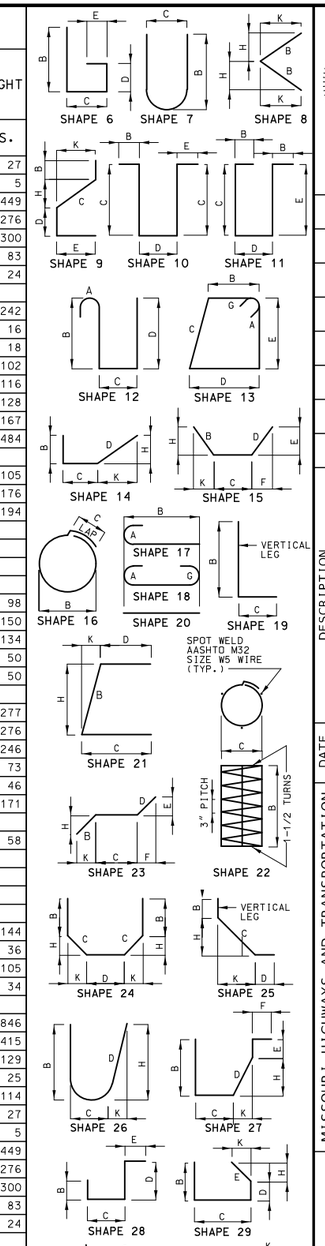

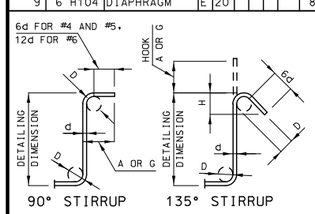

STIRRUP HOOK DIMENSIONS				
GRADES 40 - 50 - 60 KSI				
BAR SIZE	D (IN.)	90° HOOK	135° HOOK	
		HOOK A OR G	HOOK A OR G	APPROX. H
#4	2"	4 1/2"	4 1/2"	3"
#5	2 1/2"	6"	5 1/2"	3 3/4"
#6	4 1/2"	12"	8"	4 1/2"

NOTE: UNLESS OTHERWISE NOTED, DIAMETER "D" IS THE SAME FOR ALL BENDS AND HOOKS ON A BAR.

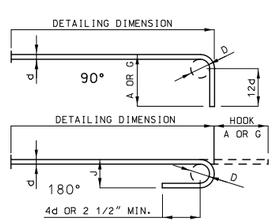

END HOOK DIMENSIONS				
BAR SIZE	D (IN.)	ALL GRADES		
		180° HOOKS		90° HOOKS
		A OR G	J	A OR G
#3	2 1/4"	5"	3"	6"
#4	3"	6"	4"	8"
#5	3 3/4"	7"	5"	10"
#6	4 1/2"	8"	6"	12"
#7	5 1/4"	10"	7"	14"
#8	6"	11"	8"	16"
#9	9 1/2"	15"	11 3/4"	19"
#10	10 3/4"	17"	13 1/4"	22"
#11	12"	19"	14 3/4"	2'-0"
#14	18 1/4"	2'-3"	21 3/4"	2'-7"

NOTE:

ALL STANDARD HOOKS AND BENDS OTHER THAN 180 DEGREE ARE TO BE BENT WITH SAME PROCEDURE AS FOR 90 DEGREE STANDARD HOOKS.

HOOKS AND BENDS SHALL BE IN ACCORDANCE WITH THE PROCEDURES AS SHOWN ON THIS SHEET.

E = EPOXY COATED REINFORCEMENT.
S = STIRRUP.
X = BAR IS INCLUDED IN SUBSTRUCTURE QUANTITIES.
V = BAR DIMENSIONS VARY IN EQUAL INCREMENTS BETWEEN DIMENSIONS SHOWN ON THIS LINE AND THE FOLLOWING LINE.
NO. EA. = NUMBER OF BARS OF EACH LENGTH.

NOMINAL LENGTHS ARE BASED ON OUT TO OUT DIMENSIONS SHOWN IN BENDING DIAGRAMS AND ARE LISTED FOR FABRICATORS USE. (NEAREST INCH)

ACTUAL LENGTHS ARE MEASURED ALONG CENTERLINE BAR TO THE NEAREST INCH.

PAYWEIGHTS ARE BASED ON ACTUAL LENGTHS.

FOUR ANGLE OR CHANNEL SPACERS ARE REQUIRED FOR EACH COLUMN SPIRAL. SPACERS ARE TO BE PLACED ON INSIDE OF SPIRALS. LENGTH AND WEIGHT OF COLUMN SPIRALS DO NOT INCLUDE SPLICES OR SPACERS.

REINFORCING STEEL (GRADE 60) FY = 60,000 PSI.

STATE OF MISSOURI
TRENTON B. CRAWFORD
NUMBER PE-2012018053
PROFESSIONAL ENGINEER
THIS SHEET HAS BEEN SIGNED, SEALED AND DATED ELECTRONICALLY.

DATE PREPARED 10/27/2023
ROUTE 64 | STATE MO
DISTRICT BR | SHEET NO. 24
COUNTY LACLEDE
JOB NO. J5P3244
CONTRACT ID.
PROJECT NO.
BRIDGE NO. A9326

DESCRIPTION
DATE

MISSOURI HIGHWAYS AND TRANSPORTATION COMMISSION
105 WEST CAPITOL
JEFFERSON CITY, MO 65102
1-888-ASK-MODOT (1-888-275-6636)

Detailed Aug. 2023
Checked Sep. 2023

Note: This drawing is not to scale. Follow dimensions.

BILL OF REINFORCING STEEL

NO. REQ'D.	MARK NO. (SIZE MARK)	LOCATION	EPOXY (E)	SHAPE NO.	STIRRUP (S)	SUBSTR. (X)	VARIES (V)	NO. EACH	B FT. IN.	C FT. IN.	D FT. IN.	E FT. IN.	F FT. IN.	H FT. IN.	K FT. IN.	NOMINAL LENGTH FT. IN.	ACTUAL LENGTH FT. IN.	WEIGHT LBS.
16	5 U400	BEAM	E	31	S				5 5.250	2 11.250	5 5.250					14 9	14 6	242
3	4 U401	BEAM	E	10	S					2 8.000	2 11.250					8 3	8 1	16
3	4 U402	BEAM	E	10	S					3 0.250	2 11.250					9 0	8 10	18
14	4 U403	BEAM	E	13	S				2 11.250	2 8.000	2 11.250	2 8.000				12 0	11 9	110
13	4 U404	BEAM	E	13	S				2 11.250	3 0.250	2 11.250	3 0.250				12 8	12 5	108
16	6 U405	DIAPHRAGM	E	19	S				2 6.250	2 11.250						5 6	5 4	128
16	5 U406	DIAPHRAGM	E	31	S				3 5.250	2 4.875	3 5.250					10 2	10 0	167
43	6 U407	DIAPHRAGM	E	19	S				2 11.000	4 9.000						7 8	7 6	484
28	6 V400	DIAPHRAGM	E	20					2 6.000							2 6	2 6	105
18	6 V401	WING	E	20					7 2.000							7 2	7 2	194
18	6 V402	WING	E	20					6 6.000							6 6	6 6	176
		SLAB																
112	6 S1	SLAB	E	20					54 7.000							54 7	54 7	9182
391	6 S2	SLAB	E	20					32 5.000							32 5	32 5	19038
44	6 S3	SLAB	E	20			V	2	2 3.000							2 3	2 3	
		INCREMENT =							31 2.000							31 2	31 2	1104
		16.500 INCH																
24	6 S4	SLAB	E	20					54 7.000							54 7	54 7	1968
103	5 S5	SLAB	E	20					4 9.000							4 9	4 9	510
50	8 S6	SLAB	E	20					53 0.000							53 0	53 0	7076
50	8 S7	SLAB	E	20					38 0.000							38 0	38 0	5073
		TYPE D																
		BARRIER																
20	5 K1	BARRIER	E	27	S				3 8.000	9.250	5.375	3 2.750	12.000	5.250	1.000	9 1	8 10	184
66	5 K2	BARRIER	E	27	S				3 8.000	9.250	14.500	2 5.750	12.000	14.250	2.750	9 2	8 10	608
4	5 K3	BARRIER	E	27	S				22.500	9.250	14.750	7.750	12.000	14.500	2.750	5 6	5 3	22
20	5 K4	BARRIER	E	19	S		V	4	2 4.250	10.000						3 2	3 1	
		INCREMENT =							2 6.250	10.000						3 4	3 3	66
		0.500 INCH																
20	5 K5	BARRIER	E	14	S		V	4	8.250	9.500	18.500			4.000	18.000	3 0	2 11	
		INCREMENT =							8.250	9.500	20.500			4.500	20.000	3 2	3 1	63
		0.500 INCH																
12	5 K6	BARRIER	E	19	S		V	4	2 6.750	10.000						3 5	3 4	
		INCREMENT =							2 7.750	10.000						3 6	3 5	42
		0.500 INCH																
12	5 K7	BARRIER	E	21	S		V	4	2 6.625	10.000				2 6.000	6.250	3 5	3 3	
		INCREMENT =							2 7.625	10.000				2 7.000	6.500	3 6	3 4	41
		0.500 INCH																
36	5 K8	BARRIER	E	19	S		V	4	2 8.500	10.000						3 7	3 5	
		INCREMENT =							3 2.500	10.000						4 1	3 11	138
		0.750 INCH																
36	5 K9	BARRIER	E	21	S		V	4	2 8.500	10.000				2 7.750	6.750	3 7	3 5	
		INCREMENT =							3 2.500	10.000				3 1.750	7.750	4 1	3 11	138
		0.750 INCH																
20	5 K10	BARRIER	E	19	S				3 3.000	10.000						4 1	4 0	83
20	5 K11	BARRIER	E	21	S				3 3.000	10.000				3 2.250	7.750	4 1	3 11	82
24	5 K12	BARRIER	E	20					11 5.000							11 5	11 5	286
12	5 K13	BARRIER	E	20			V	4	4 8.000							4 8	4 8	
		INCREMENT =							10 8.000							10 8	10 8	96
		36.000 INCH																
24	5 K14	BARRIER	E	20					10 11.000							10 11	10 11	273
12	5 K15	BARRIER	E	20			V	4	4 2.000							4 2	4 2	
		INCREMENT =							10 2.000							10 2	10 2	90
		36.000 INCH																

BILL OF REINFORCING STEEL

NO. REQ'D.	MARK NO. (SIZE MARK)	LOCATION	EPOXY (E)	SHAPE NO.	STIRRUP (S)	SUBSTR. (X)	VARIES (V)	NO. EACH	B FT. IN.	C FT. IN.	D FT. IN.	E FT. IN.	F FT. IN.	H FT. IN.	K FT. IN.	NOMINAL LENGTH FT. IN.	ACTUAL LENGTH FT. IN.	WEIGHT LBS.
418	5 R1	BARRIER	E	26					3 3.000	5.500	3 3.625			3 3.000	6.750	6 9	6 9	2943
418	5 R2	BARRIER	E	19	S				20.500	9.500						2 6	2 5	1054
418	5 R3	BARRIER	E	27	S					9.500	15.250	13.750	12.000	15.000	3.000	4 3	4 0	1744
20	5 R4	BARRIER	E	20					45 10.000							45 10	45 10	956
80	5 R5	BARRIER	E	20					11 9.000							11 9	11 9	980
40	5 R6	BARRIER	E	20					32 2.000							32 2	32 2	1342
20	5 R7	BARRIER	E	20					46 5.000							46 5	46 5	968
		SLIP FORM																
		OPTION																
40	5 C1	BARRIER	E	20					12 0.000							12 0	12 0	501
8	5 C2	BARRIER	E	20					8 9.000							8 9	8 9	73
		TOTALS																
	4																	404
	4		E															915
	5																	2925
	5		E															14690
	6																	3974
	6		E															37268
	7		E															1950
	8																	3474
	8		E															13047
	11																	12419
		TOTAL																23196
		TOTAL	E															67870
		Slab on Girder																
	4		E															915
	5		E															1917
	6		E															37268
	7		E															1950
	8		E															13047
		TOTAL																55097
		Reinforcing Steel (Bridges)																
	4																	404
	5																	2925
	6																	3974
	8																	3474
	11																	12419
		TOTAL																23196
		Type D Barrier																
	5		E															12773
		TOTAL																12773

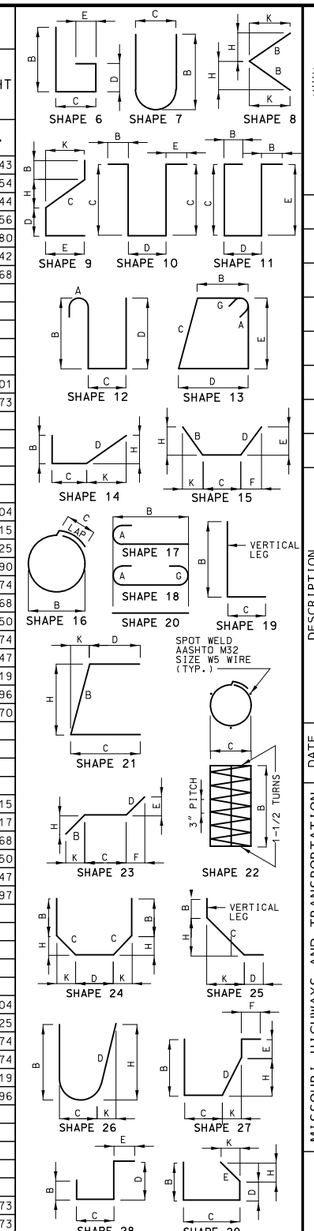

STATE OF MISSOURI
TRENTON B. CRAWFORD
NUMBER PE-2012018053
PROFESSIONAL ENGINEER

THIS SHEET HAS BEEN SIGNED, SEALED AND DATED ELECTRONICALLY.

DATE PREPARED	10/27/2023
ROUTE 64	STATE MO
DISTRICT BR	SHEET NO. 25
COUNTY	LACLEDE
JOB NO.	J5P3244
CONTRACT ID.	
PROJECT NO.	
BRIDGE NO.	A9326

DESCRIPTION

DATE

MISSOURI HIGHWAYS AND TRANSPORTATION COMMISSION

105 WEST CAPITOL
JEFFERSON CITY, MO 65102
1-888-ASK-MODOT (1-888-275-6636)

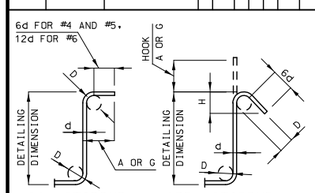

STIRRUP HOOK DIMENSIONS				
GRADES 40 - 50 - 60 KSI				
BAR SIZE	D (IN.)	90° HOOK: HOOK A OR G	135° HOOK: HOOK A OR G	135° HOOK: APPROX. H
#4	2"	4 1/2"	4 1/2"	3"
#5	2 1/2"	6"	5 1/2"	3 3/4"
#6	4 1/2"	12"	8"	4 1/2"

NOTE: UNLESS OTHERWISE NOTED, DIAMETER "D" IS THE SAME FOR ALL BENDS AND HOOKS ON A BAR.

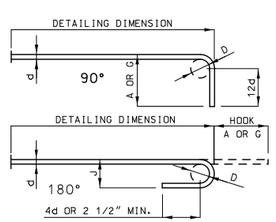

END HOOK DIMENSIONS				
BAR SIZE	D (IN.)	ALL GRADES: 180° HOOKS A OR G	ALL GRADES: 180° HOOKS J	ALL GRADES: 90° HOOKS A OR G
#3	2 1/4"	5"	3"	6"
#4	3"	6"	4"	8"
#5	3 3/4"	7"	5"	10"
#6	4 1/2"	8"	6"	12"
#7	5 1/4"	10"	7"	14"
#8	6"	11"	8"	16"
#9	9 1/2"	15"	11 3/4"	19"
#10	10 3/4"	17"	13 1/4"	22"
#11	12"	19"	14 3/4"	2'-0"
#14	18 1/4"	2'-3"	21 3/4"	2'-7"

NOTE:

ALL STANDARD HOOKS AND BENDS OTHER THAN 180 DEGREE ARE TO BE BENT WITH SAME PROCEDURE AS FOR 90 DEGREE STANDARD HOOKS.

HOOKS AND BENDS SHALL BE IN ACCORDANCE WITH THE PROCEDURES AS SHOWN ON THIS SHEET.

E = EPOXY COATED REINFORCEMENT.
S = STIRRUP.
X = BAR IS INCLUDED IN SUBSTRUCTURE QUANTITIES.
V = BAR DIMENSIONS VARY IN EQUAL INCREMENTS BETWEEN DIMENSIONS SHOWN ON THIS LINE AND THE FOLLOWING LINE.
NO. EA. = NUMBER OF BARS OF EACH LENGTH.

NOMINAL LENGTHS ARE BASED ON OUT TO OUT DIMENSIONS SHOWN IN BENDING DIAGRAMS AND ARE LISTED FOR FABRICATORS USE. (NEAREST INCH)

ACTUAL LENGTHS ARE MEASURED ALONG CENTERLINE BAR TO THE NEAREST INCH.

PAYWEIGHTS ARE BASED ON ACTUAL LENGTHS.

FOUR ANGLE OR CHANNEL SPACERS ARE REQUIRED FOR EACH COLUMN SPIRAL. SPACERS ARE TO BE PLACED ON INSIDE OF SPIRALS. LENGTH AND WEIGHT OF COLUMN SPIRALS DO NOT INCLUDE SPLICES OR SPACERS.

REINFORCING STEEL (GRADE 60) FY = 60,000 PSI.

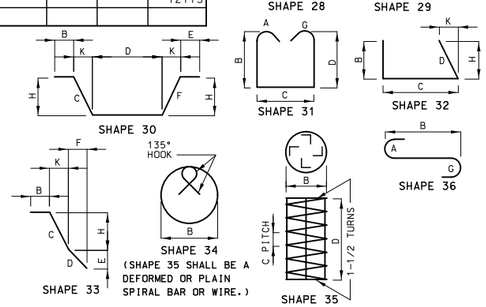

BENDING DIAGRAMS

Detailed Aug. 2023
Checked Sep. 2023

Note: This drawing is not to scale. Follow dimensions.

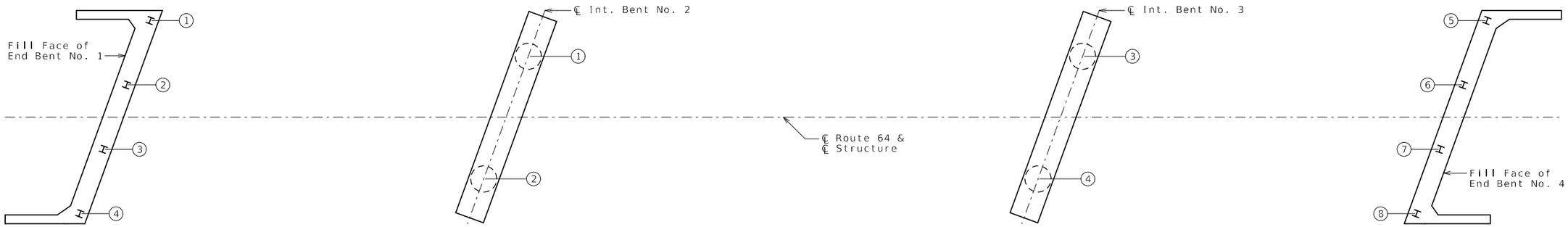

PART PLAN SHOWING PILE NUMBERING FOR RECORDING AS-BUILT PILE DATA

As-Built Pile Data

Pile No.	Length in Place (ft)	Computed Nominal Axial Compressive Resistance (kips)	Remarks
			End Bent No. 1
1			
2			
3			
4			
			End Bent No. 4
5			
6			
7			
8			

As-Built Drilled Shaft Data

Shaft No.	Top of Sound Rock (Elev.)	Tip of Casing (Elev.)	Bottom Of Rock Socket (Elev.)	Remarks
				Intermediate Bent No. 2
1				
2				
				Intermediate Bent No. 3
3				
4				

Note:
Indicate in remarks column:
A. Pile type and grade
B. Batter
C. Driven to practical refusal

This sheet to be completed by MoDOT construction personnel.

STATE OF MISSOURI
TRENTON B. CRAWFORD
NUMBER PE-2012018053
PROFESSIONAL ENGINEER
THIS SHEET HAS BEEN SIGNED, SEALED AND DATED ELECTRONICALLY.

DATE PREPARED 10/25/2023
ROUTE 64 | STATE MO
DISTRICT BR | SHEET NO. 26
COUNTY LACLEDE
JOB NO. J5P3244
CONTRACT ID.
PROJECT NO.
BRIDGE NO. A9326

DESCRIPTION | DATE

MISSOURI HIGHWAYS AND TRANSPORTATION COMMISSION
105 WEST CAPITOL
JEFFERSON CITY, MO 65102
1-888-ASK-MODOT (1-888-275-6636)

Detailed Aug. 2023
Checked Sep. 2023

Note: This drawing is not to scale. Follow dimensions.

Missouri Department of Transportation

SUBSURFACE DIAGRAM

PROJECT NAME Bridge Replacement & Realignment
PROJECT LOCATION Over Goodwin Creek
CLIENT
PROJECT NUMBER J5P3244

USCS Low Plasticity Clay
Highly Weathered Dolomite
USCS High Plasticity Gravelly Clay
Sandstone
USCS Poorly-graded Gravel with Clay
Dolomite
USCS Low Plasticity Sandy Clay
USCS Low Plasticity Gravelly Clay
USCS High Plasticity Clay
USCS Poorly-graded Sand
USCS Well-graded Sandy Gravel
USCS Clayey Gravel

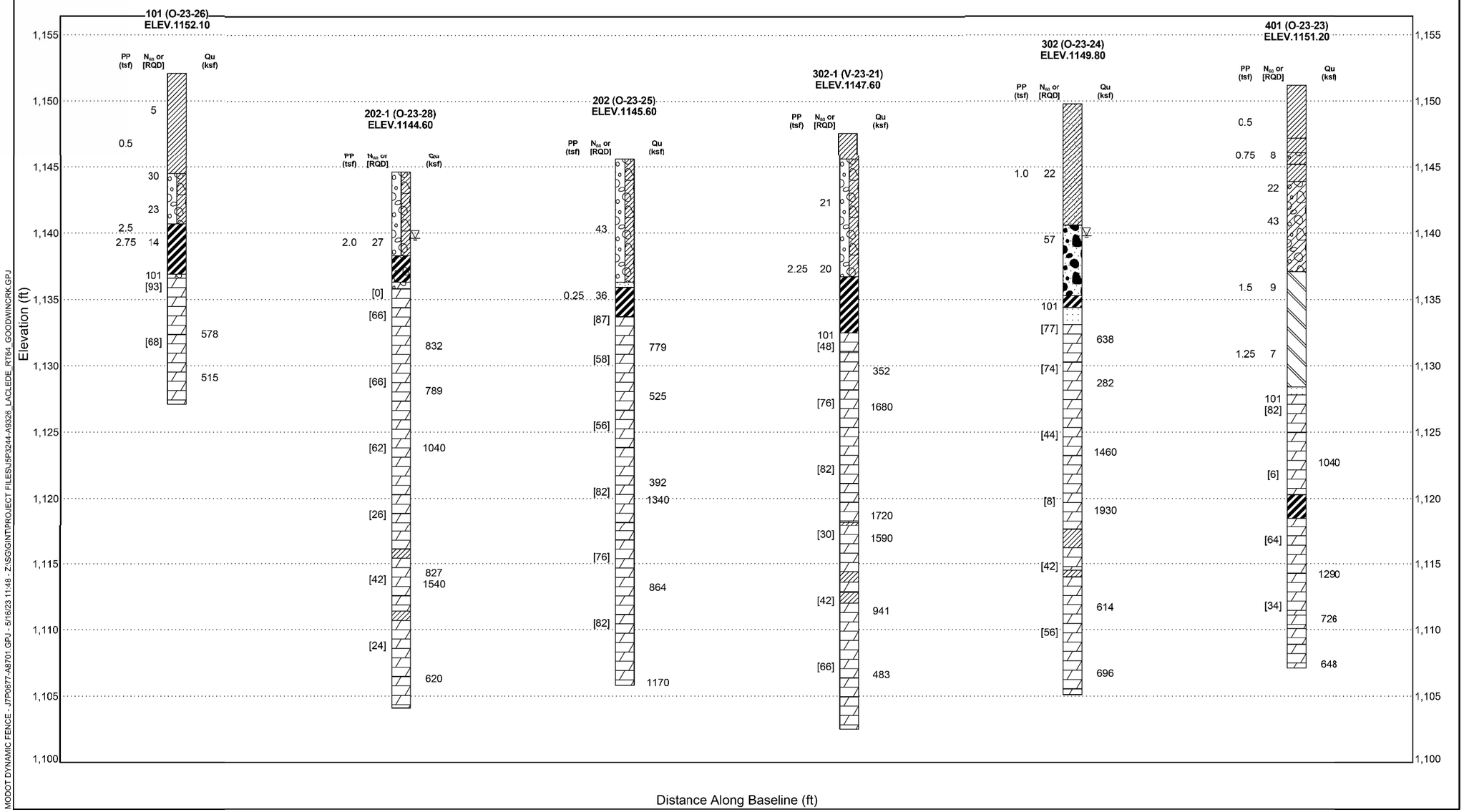

BORING DATA

Note: For locations of borings, see Sheet No. 1.

Note: This drawing is not to scale. Follow dimensions.

Detailed Aug. 2023
Checked Sep. 2023

STATE OF MISSOURI
TRENTON B. CRAWFORD
NUMBER PE-2012018053
PROFESSIONAL ENGINEER
THIS SHEET HAS BEEN SIGNED, SEALED AND DATED ELECTRONICALLY.

DATE PREPARED	10/25/2023
ROUTE	64
STATE	MO
DISTRICT	BR
SHEET NO.	27
COUNTY	LACLEDE
JOB NO.	J5P3244
CONTRACT ID.	
PROJECT NO.	
BRIDGE NO.	A9326

DESCRIPTION
DATE

MISSOURI HIGHWAYS AND TRANSPORTATION COMMISSION
105 WEST CAPITOL
JEFFERSON CITY, MO 65102
1-888-ASK-MODOT (1-888-275-6636)