MISSOURI HIGHWAYS AND TRANSPORTATION COMMISSION

PLANS FOR PROPOSED STATE HIGHWAY

GREENE COUNTY

DESIGN DESIGNATION

A.A.D.T. - 2024 = 813
A.A.D.T. - 2044 = 898
D.H.V. = 10.16%
T = 11.03%
V = 55 M.P.H.
D (N/S) = 50.1%/49.9%
FUNCTIONAL CLASSIFICATION-MAJOR COLLECTOR

NORMAL RIGHT OF WAY

KEY MAP
LOCATION OF GREENE COUNTY

BEGIN PROJECT
STA. 232+92.96

PROJECT LIMITS
- J7S3486 -
ROUTE V
BRIDGE REPLACEMENT #T0493
OVER CLEAR CREEK
PROJECT LENGTH - 0.239 MILES

END PROJECT
STA. 245+54.35

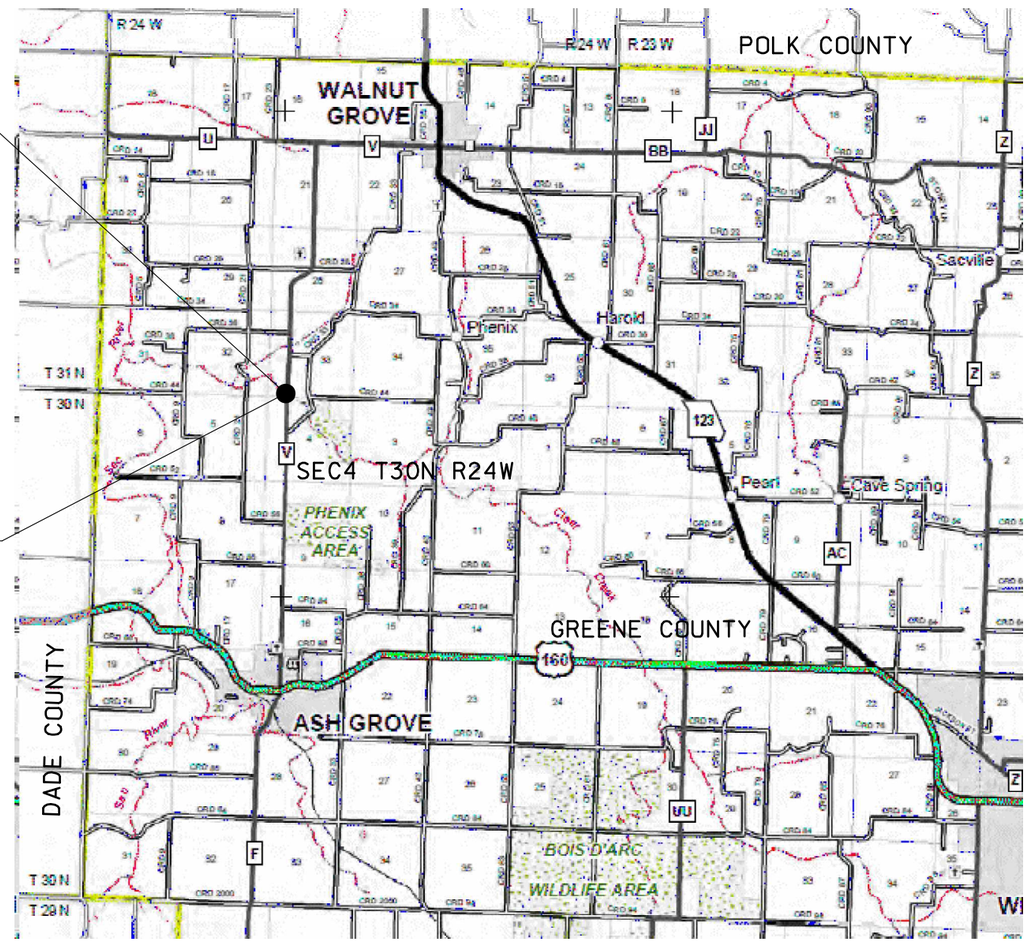

CONVENTIONAL SYMBOLS
(USED IN PLANS)

	EXISTING	NEW
BUILDINGS AND STRUCTURES		
GUARD RAIL		
GUARD CABLE		
CONCRETE RIGHT-OF-WAY MARKER		
STEEL RIGHT-OF-WAY MARKER		
LOCATION SURVEY MARKER		
UTILITIES		
FIBER OPTICS	-FO-	-FO-
OVERHEAD CABLE TV	-OTV-	-OTV-
UNDERGROUND CABLE TV	-UTV-	-UTV-
OVERHEAD TELEPHONE	-OT-	-OT-
UNDERGROUND TELEPHONE	-UT-	-UT-
OVERHEAD POWER	-OE-	-OE-
UNDERGROUND POWER	-UE-	-UE-
SANITARY SEWER	-S-	-S-
STORM SEWER	-SS-	-SS-
GAS	-G-	-G-
WATER	-W-	-W-
MANHOLE	SAN	
FIRE HYDRANT	HYD	
WATER VALVE	WV	
WATER METER	WM	
DROP INLET		
DITCH BLOCK		
GROUND MOUNTED SIGN	SIGN	
LIGHT POLE		
H-FRAME POWER POLE		
TELEPHONE PEDESTAL	PED	
FENCE		
CHAIN LINK	-V-	
WOVEN WIRE	-X-	
GATE POST		
BENCHMARK	BM	

NOTE: DASHED OR OPEN SYMBOLS INDICATE EXISTING FEATURES

INDEX OF SHEETS

LENGTH OF PROJECT

BEGINNING OF PROJECT	STA.	232+92.96
END OF PROJECT	STA.	245+54.35
APPARENT LENGTH		1261.39 FEET

EQUATIONS AND EXCEPTIONS:

TOTAL CORRECTIONS	0.000	FEET
NET LENGTH OF PROJECT	1261.39	FEET
STATE LENGTH	0.239	MILES

STATE OF MISSOURI
WARNER D. SHERMAN II
NUMBER PE-26645
PROFESSIONAL ENGINEER
10/02/2023 2:36:21 PM
WARNER D. SHERMAN II - CIVIL
MO-PE-26645

DATE PREPARED	10/2/2023
ROUTE	V
STATE	MO
DISTRICT	SW
SHEET NO.	1
COUNTY	GREENE
JOB NO.	J7S3486
CONTRACT ID.	
PROJECT NO.	
BRIDGE NO.	A9119

DESCRIPTION | DATE

MISSOURI HIGHWAYS AND TRANSPORTATION COMMISSION
105 WEST CAPITOL
JEFFERSON CITY, MO 65102
1-888-ASK-MODOT (1-888-275-6636)

OPTIONAL PAVEMENT DESIGN FOR MINOR ROUTE		
ROADWAY	7" HMA/ 7" JPCP	4" TYPE 1 AGGREGATE BASE
BRIDGE APPROACH	10" HMA/8" JPCP	4" TYPE 1 AGGREGATE BASE

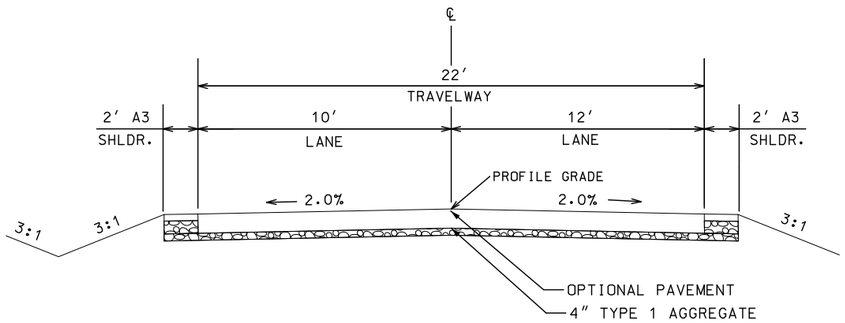

TYPICAL SECTION - ROUTE V

STA. 232+92.96 TO STA. 234+52.70

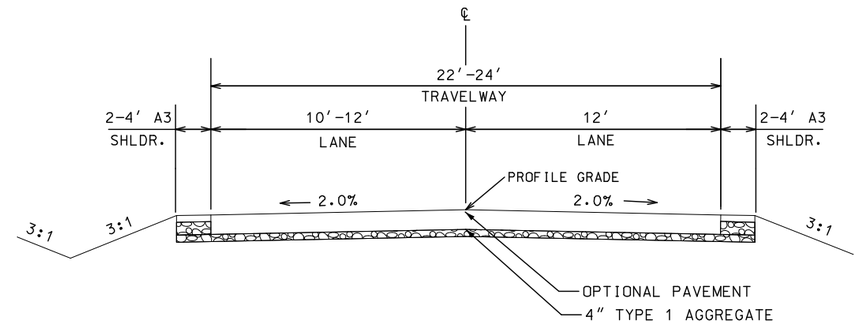

TYPICAL SECTION - ROUTE V

STA. 234+52.70 TO STA. 236+52.70

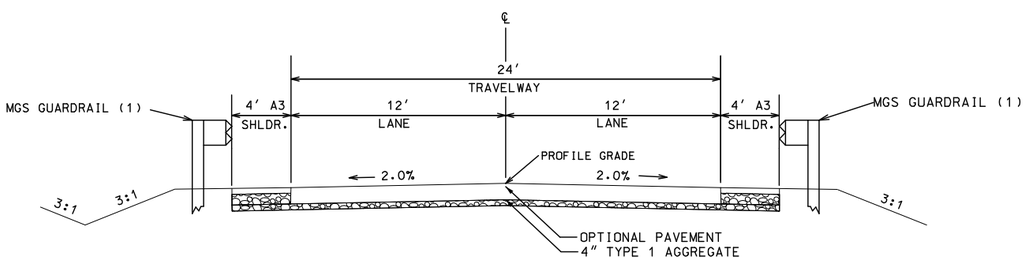

TYPICAL SECTION - ROUTE V

STA. 236+52.70 TO STA. 238+03.94
STA. 241+57.98 TO STA. 243+09.22

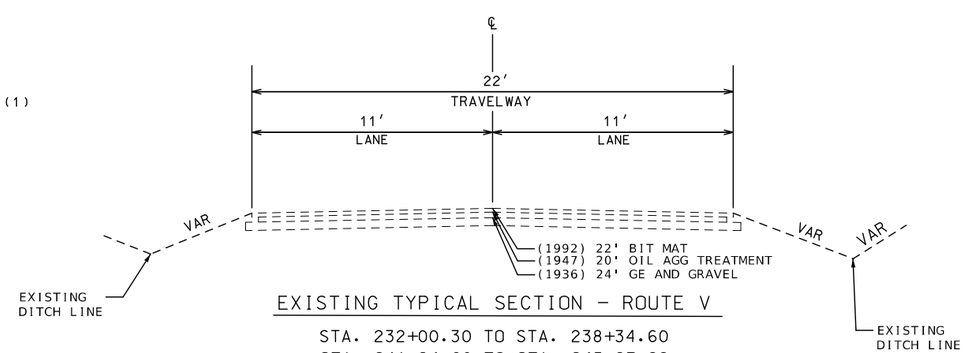

EXISTING TYPICAL SECTION - ROUTE V

STA. 232+00.30 TO STA. 238+34.60
STA. 241+24.60 TO STA. 245+87.89

NOTE:
(1) SEE SPECIAL SHEET 1 OF 2 FOR EXACT LIMITS OF MGS GUARDRAIL.

NOT TO SCALE

TYPICAL SECTION SHEET
SHEET 1 OF 2

STATE OF MISSOURI
WARNER D. SHERMAN
NUMBER PE-26645
PROFESSIONAL ENGINEER

Warner Sherman
10/02/2023 2:36:53 PM
WARNER D. SHERMAN II - CIVIL
MO-PE-26645

DATE PREPARED	
10/2/2023	
ROUTE: V	STATE: MO
DISTRICT: SW	SHEET NO.: 2
COUNTY: GREENE	
JOB NO.: J7S3486	
CONTRACT ID.	
PROJECT NO.	
BRIDGE NO.: A9119	

DATE	DESCRIPTION

MISSOURI HIGHWAYS AND TRANSPORTATION COMMISSION
105 WEST CAPITOL
JEFFERSON CITY, MO 65102
1-888-ASK-MODOT (1-888-275-6636)

OPTIONAL PAVEMENT DESIGN FOR MINOR ROUTE		
ROADWAY	7" HMA/ 7" JPCP	4" TYPE 1 AGGREGATE BASE
BRIDGE APPROACH	10" HMA/8" JPCP	4" TYPE 1 AGGREGATE BASE

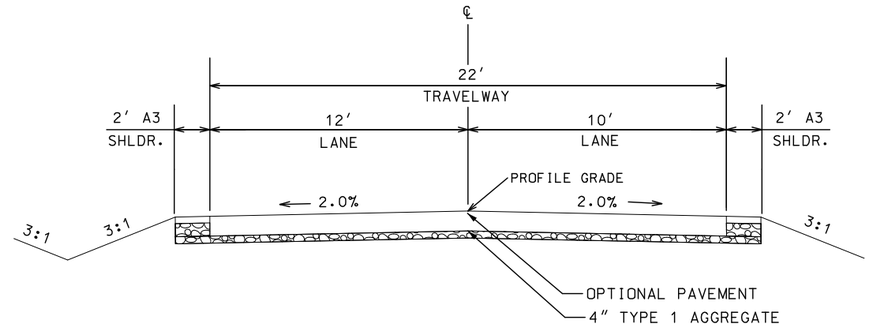

TYPICAL SECTION – ROUTE V

STA. 245+09.22 TO STA. 245+54.35

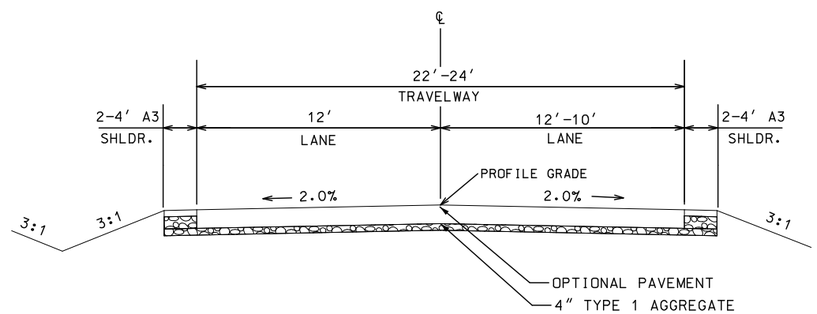

TYPICAL SECTION – ROUTE V

STA. 243+09.22 TO STA. 245+09.22

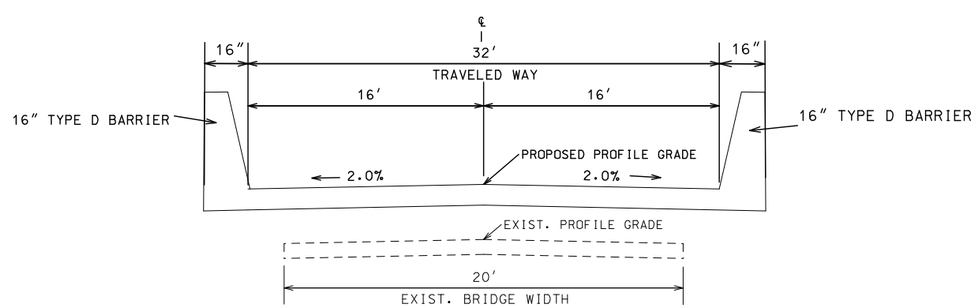

BRIDGE A9119

TYPICAL SECTION – ROUTE V

PROPOSED BRIDGE

STA. 238+23.94 TO STA. 241+37.98

NOT TO SCALE

TYPICAL SECTION SHEET

SHEET 2 OF 2

STATE OF MISSOURI
WARNER D. SHERMAN
NUMBER PE-26645
PROFESSIONAL ENGINEER

Warner Sherman
10/02/2023 2:37:31 PM
WARNER D. SHERMAN II - CIVIL
MO-PE-26645

DATE PREPARED	
10/2/2023	
ROUTE: V	STATE: MO
DISTRICT: SW	SHEET NO.: 2
COUNTY: GREENE	
JOB NO.: J7S3486	
CONTRACT ID.	
PROJECT NO.	
BRIDGE NO.: A9119	

DATE	DESCRIPTION

MISSOURI HIGHWAYS AND TRANSPORTATION COMMISSION

105 WEST CAPITOL
JEFFERSON CITY, MO 65102
1-888-ASK-MODOT (1-888-275-6636)

OPTIONAL PAVEMENT, TYPE A3 SHOULDER & AGGREGATE BASE

STA.	STA.	LOCATION	LENGTH (FT)	LT SHOULDER WIDTH (FT)	RT SHOULDER WIDTH (FT)	MAINLINE WIDTH (FT)	OPTIONAL PAVEMENT (SY)	TYPE A3 SHOULDER (SY)	4 INCH TYPE 1 AGGREGATE BASE (SY)	REMARKS
232+92.96	234+52.70	LT / RT OF RTE V CL	159.74	2	2	22	390.48	71.00	461.5	10' NB LANE AND 12' SB LANE
234+52.70	236+52.70	LT / RT OF RTE V CL	200	2-4	2-4	22-24	511.11	133.33	644.4	WIDTH TRANSITION NORTH OF BRIDGE
236+52.70	238+03.94	LT / RT OF RTE V CL	151.24	4	4	24	403.31	134.44	537.7	12' LANES NORTH OF BRIDGE
241+57.98	243+09.22	LT / RT OF RTE V CL	151.24	4	4	24	403.31	134.44	537.7	12' LANES SOUTH OF BRIDGE
243+09.22	245+09.22	LT / RT OF RTE V CL	200	4-2	4-2	24-22	511.11	133.33	644.4	WIDTH TRANSITION SOUTH OF BRIDGE
245+09.22	245+54.35	LT / RT OF RTE V CL	45.13	2	2	22	110.32	20.06	130.4	12' NB LANE AND 10' SB LANE
						TOTAL	2329.64	626.60	2956.1	
						USE	2329.6	626.6	2956	

PERMANENT PAVEMENT MARKING

STA	STA	LOCATION	LENGTH (FT)	4" SOLID WHITE WATERBORNE PAINT TYPE P BEADS (LF)	4" INTERMITTENT YELLOW WATERBORNE PAINT TYPE P BEADS (LF)	4" SOLID YELLOW WATERBORNE PAINT TYPE P BEADS (LF)	REMARKS
232+92.96	237+75.00	RT / LT / CL OF RTE V	482.04	964.1	120.5	482.0	CENTERLINE, SBL NO PASSING LINE, EDGELINES
237+75.00	242+25.00	RT / LT / CL OF RTE V	450	900.0	112.5		CENTERLINE & EDGELINES
242+25.00	243+25.00	RT / LT / CL OF RTE V	100	200.0	25.0	100.0	CENTERLINE, SBL NO PASSING LINE, EDGELINES
243+25.00	245+54.35	RT / LT / CL OF RTE V	229.35	458.7		458.7	DOUBLE NO PASSING LINE, EDGELINES
			TOTAL	2522.8	258.0	1040.7	
			USE	2523	258	1041	

GUARDRAIL

STA	STA	LENGTH (LF)	LOCATION	GUARDRAIL (MGS) (LF)	TYPE A CRASHWORTHY END TERMINAL (MASH) (EA)	BRIDGE APPROACH TRANSITION SECTION (MGS) (EA)	REMARKS
236+52.70	238+02.70	150	RT OF RTE V EOS	62.5	1	1	NW CORNER OF BR A9119
236+96.18	238+21.18	125	LT OF RTE V EOS	37.5	1	1	NE CORNER OF BR A9119
241+40.74	242+65.74	125	RT OF RTE V EOS	37.5	1	1	SW CORNER OF BR A9119
241+59.22	243+09.22	150	LT OF RTE V EOS	62.5	1	1	SE CORNER OF BR A9119
			TOTAL	200.0	4	4	
			USE	200	4	4	

EARTHWORK

STA	STA	LOCATION	APPROX EARTHWORK CUT (CY)	APPROX EARTHWORK FILL (CY)	APPROX EARTHWORK UNSUITABLE (CY)	UNCLASSIFIED EXCAVATION (CY)	COMPACTING EMBANKMENT (CY)	EMBANKMENT IN PLACE (CY)	COMPACTING IN CUT (STA)	REMARKS
232+92.96	238+33.18	LT / RT OF RTE V CL	291.97	2246.02	232.46	292.0	546.4	1699.6	5.40	RTE V - NORTH OF BR A9119
238+14.70	238+96.10	LT / RT OF RTE V CL	637.58	26.62	3.77	637.6	26.6		0.81	SPILL FILL SLOPE - NORTH END OF BR A9119
240+79.73	241+47.22	LT / RT OF RTE V CL	502.92	15.30	4.94	502.9	15.3		0.67	SPILL FILL SLOPE - SOUTH END OF BR A9119
241+28.74	245+54.35	LT / RT OF RTE V CL	214.10	2710.90	181.05	214.1	423.6	2287.3	4.26	RTE V - SOUTH OF BR A9119
					TOTAL	1646.6	1011.9	3986.9	11.14	
					USE	1647	1012	3987	11.1	

UNSUITABLE MATERIAL CONSISTS OF REMOVED EXISTING PAVEMENT. THIS MATERIAL SHALL BE HAULED AWAY BY THE CONTRACTOR AT NO DIRECT PAY.

ROCK BLANKET

STA	STA	LOCATION	ROCK DEPTH (FT)	LENGTH (FT)	WIDTH (FT)	TYPE 2 ROCK BLANKET FURNISH (CY)	TYPE 2 ROCK BLANKET PLACE (CY)	GEOTEXTILE FABRIC (SY)	REMARKS
237+94.70	238+96.10	LT / RT OF RTE V CL	2	101.4	VAR	458.1	458.1	793.2	NORTH END OF BRIDGE
240+79.73	241+67.22	LT / RT OF RTE V CL	2	87.5	VAR	389.8	389.8	678.3	SOUTH END OF BRIDGE
					TOTAL	847.9	847.9	1471.5	
					USE	848	848	1472	

SUMMARY OF QUANTITIES

SHEET 1 OF 3

STATE OF MISSOURI
WARNER D. SHERMAN
NUMBER PE-26645
PROFESSIONAL ENGINEER

Warner Sherman
10/02/2023 2:38:05 PM
WARNER D. SHERMAN II - CIVIL
MO-PE-26645

DATE PREPARED: 10/2/2023

ROUTE	STATE
V	MO
DISTRICT	SHEET NO.
SW	3

COUNTY: GREENE

JOB NO.: J7S3486

CONTRACT ID.

PROJECT NO.

BRIDGE NO.: A9119

DESCRIPTION	DATE

MISSOURI HIGHWAYS AND TRANSPORTATION COMMISSION

105 WEST CAPITOL
JEFFERSON CITY, MO 65102
1-888-ASK-MODOT (1-888-275-6636)

TEMPORARY EROSION CONTROL

STA	STA	LOCATION	SILT FENCE (LF)	ROCK DITCH CHECK (LF)	TYPE C BERM (LF)	SEDIMENT REMOVAL (CY)	TEMPORARY SEEDING (ACRES)	MULCHING (ACRES)	REMARKS
232+92.90	238+96.10	LT / RT OF RTE V					0.62	0.62	RTE V - NORTH OF BRIDGE
232+92.90	237+94.70	RT OF RTE V	504.2			5.0			RTE V - NORTH OF BRIDGE
232+92.90	238+13.18	LT OF RTE V	521.6			5.2			RTE V - NORTH OF BRIDGE
233+09.29		LT OF RTE V		12		1.2			RTE V - NORTH OF BRIDGE
233+41.18		LT OF RTE V		12		1.2			RTE V - NORTH OF BRIDGE
233+70.14		LT OF RTE V		13.9		1.4			RTE V - NORTH OF BRIDGE
234+10.71		LT OF RTE V		13.3		1.3			RTE V - NORTH OF BRIDGE
234+56.19		LT OF RTE V		14.2		1.4			RTE V - NORTH OF BRIDGE
235+45.00		LT OF RTE V		13.7		1.4			RTE V - NORTH OF BRIDGE
237+94.70	239+02.98	LT / RT OF RTE V			244.4	2.4			RTE V - NORTH BRIDGE END
240+72.79	241+67.22	LT / RT OF RTE V			221.5	2.2			RTE V - SOUTH BRIDGE END
240+79.73	245+54.35	LT / RT OF RTE V					0.60	0.60	RTE V - SOUTH OF BRIDGE
241+48.74	245+54.35	RT OF RTE V	407.9			4.1			RTE V - SOUTH OF BRIDGE
241+67.22	245+54.35	LT OF RTE V	389.6			3.9			RTE V - SOUTH OF BRIDGE
		TOTAL	1823.3	79.1	465.9	30.7	1.22	1.22	
		USE	1823	79	466	31	1.2	1.2	

SEEDING

STA	STA	LOCATION	LENGTH (FT)	WIDTH (FT)	SEEDING COOL SEASON MIX (ACRES)	MULCHING (ACRES)	REMARKS
232+92.90	238+96.10	LT / RT OF RTE V	603.2	VAR	0.62	0.62	RTE V - NORTH OF BRIDGE
240+79.73	245+54.35	LT / RT OF RTE V	474.62	VAR	0.60	0.60	RTE V - SOUTH OF BRIDGE
				TOTAL	1.22	1.22	
				USE	1.2	1.2	

PLAN QUANTITY WILL BE PAID UNLESS OVERUN IS AUTHORIZED.

REMOVAL OF IMPROVEMENTS

STA / LOG MILE	STA / LOG MILE	LOCATION	QTY	DESCRIPTION
4.158		RTE V RT	1	ONE LANE BRIDGE SIGN
232+55.19		RTE V RT	1	WEIGHT LIMIT SIGN
236+49.02		RTE V RT	1	YEILD TO ONCOMING TRAFFIC SIGN
237+42.00	242+17.00	RTE V RT	6	OBJECT MARKER
237+42.00	242+17.00	RTE V LT	6	OBJECT MARKER
243+10.40		RTE V LT	1	YEILD TO ONCOMING TRAFFIC SIGN
247+09.80		RTE V LT	1	WEIGHT LIMIT SIGN
4.738		RTE V LT	1	ONE LANE BRIDGE SIGN
1 LUMP SUM				

MOBILIZATION

1 LUMP SUM

CONTRACTOR FURNISHED SURVEYING AND STAKING

1 LUMP SUM

CLEARING AND GRUBBING

TOTAL 0.75 ACRES

USE 1.00 ACRES

SUMMARY OF QUANTITIES

SHEET 2 OF 3

STATE OF MISSOURI
WARNER D. SHERMAN II
NUMBER PE-26645
PROFESSIONAL ENGINEER

Warner Sherman
10/02/2023 2:39:16 PM
WARNER D. SHERMAN II - CIVIL
MO-PE-26645

DATE PREPARED	10/2/2023
ROUTE	V
STATE	MO
DISTRICT	SW
SHEET NO.	3
COUNTY	GREENE
JOB NO.	J7S3486
CONTRACT ID.	
PROJECT NO.	
BRIDGE NO.	A9119

DESCRIPTION

DATE

MISSOURI HIGHWAYS AND TRANSPORTATION COMMISSION

105 WEST CAPITOL
JEFFERSON CITY, MO 65102
1-888-ASK-MODOT (1-888-275-6636)

EFFECTIVE: 04 01 2023

SIGN	SIZE IN.	AREA SQ.FT.	QTY EACH	TOTAL AREA SQ.FT.	QTY RELOC EACH	TOTAL RELOC SQ.FT.	SIGN NUM.	DESCRIPTION
WARNING SIGNS								
WO1-1L	48X48	16.00						TURN (SYMBOL LEFT ARROW)
WO1-1R	48X48	16.00						TURN (SYMBOL RIGHT ARROW)
WO1-2L	48X48	16.00						CURVE (SYMBOL LEFT ARROW)
WO1-2R	48X48	16.00						CURVE (SYMBOL RIGHT ARROW)
WO1-3L	48X48	16.00						REVERSE TURN (SYMBOL LEFT ARROW)
WO1-3R	48X48	16.00						REVERSE TURN (SYMBOL RIGHT ARROW)
WO1-4L	48X48	16.00						REVERSE CURVE (SYMBOL LEFT ARROW)
WO1-4R	48X48	16.00						REVERSE CURVE (SYMBOL RIGHT ARROW)
WO1-4bL	48X48	16.00						DOUBLE ARROW REVERSE CURVE (SYMBOL LT ARROWS)
WO1-4bR	48X48	16.00						DOUBLE ARROW REVERSE CURVE (SYMBOL RT ARROWS)
WO1-4cL	48X48	16.00						TRIPLE ARROW REVERSE CURVE (SYMBOL LT ARROWS)
WO1-4cR	48X48	16.00						TRIPLE ARROW REVERSE CURVE (SYMBOL RT ARROWS)
WO1-6	60X30	12.50						HORIZONTAL ARROW (SYMBOL)
WO1-6a	72X36	18.00						HORIZ. ARROW (SYMBOL ON PERMANENT BARRICADE)
WO1-7	60X30	12.50						DOUBLE HEAD HORIZONTAL ARROW (SYMBOL)
WO1-7a	72X36	18.00						DOUBLE HEAD HORIZ. ARROW (SYMBOL ON PERM. BARR.)
WO1-8	18X24	3.00						CHEVRON (SYMBOL)
WO1-8a	30X36	7.50						CHEVRON (SYMBOL FOR DIVIDED HIGHWAYS)
WO3-1	48X48	16.00						STOP AHEAD (SYMBOL)
WO3-2	48X48	16.00						YIELD AHEAD (SYMBOL)
WO3-3	48X48	16.00						SIGNAL AHEAD (SYMBOL)
WO3-4	48X48	16.00						BE PREPARED TO STOP
WO3-5	48X48	16.00						SPEED LIMIT AHEAD
WO4-1L	48X48	16.00						MERGE (SYMBOL FROM LEFT)
WO4-1R	48X48	16.00						MERGE (SYMBOL FROM RIGHT)
WO4-1aL	48X48	16.00						MERGE (ARROW SYMBOL)
WO4-1aR	48X48	16.00						MERGE (ARROW SYMBOL)
WO5-1	48X48	16.00						ROAD/BRIDGE/RAMP NARROWS
WO5-3	48X48	16.00						ONE LANE BRIDGE
WO5-5	48X48	16.00						NARROW LANES
WO6-1	48X48	16.00						DIVIDED HIGHWAY (SYMBOL)
WO6-2	48X48	16.00						DIVIDED HIGHWAY END (SYMBOL)
WO6-3	48X48	16.00						TWO WAY TRAFFIC (SYMBOL)
WO7-3a	30X24	5.00						NEXT XX MILES (PLAQUE)
WO8-1	48X48	16.00						BUMP
WO8-2	48X48	16.00						DIP
WO8-3	48X48	16.00						PAVEMENT ENDS
WO8-4	48X48	16.00						SOFT SHOULDER
WO8-5	48X48	16.00						SLIPPERY WHEN WET (SYMBOL)
WO8-6	48X48	16.00						TRUCK CROSSING (WITH FLAGS)
WO8-6c	48X48	16.00						TRUCK ENTRANCE
WO8-7	36X36	9.00						LOOSE GRAVEL
WO8-7a	36X36	9.00						FRESH OIL/LOOSE GRAVEL
WO8-9	48X48	16.00						LOW SHOULDER
WO8-11	48X48	16.00						UNEVEN LANES
WO8-12	48X48	16.00						NO CENTER LINE
WO8-15	48X48	16.00						GROOVED PAVEMENT
WO8-15P	30X24	5.00						MOTORCYCLE (PLAQUE)
WO8-17	48X48	16.00						SHOULDER DROP-OFF (SYMBOL)
WO8-17P	30X24	5.00						SHOULDER DROP-OFF (PLAQUE)
W10-1	42RND.	9.62						RAILROAD CROSSING
WO12-1	24X24	4.00						DOUBLE DOWN ARROW (SYMBOL)
WO12-2	48X48	16.00						LOW CLEARANCE (SYMBOL)
WO12-2X	24X18	3.00						LOW CLEARANCE (PLAQUE)
WO12-2a	84X24	14.00						OVERHEAD LOW CLEARANCE (FEET AND INCHES)
WO12-4	120X60	50.00						LOW CLEARANCE XX FT XX IN XX MILES AHEAD
WO12-5	120X60	50.00						WIDTH RESTRICTION XX FT XX IN XX MILES AHEAD
WO13-1	30X30	6.25						ADVISORY SPEED (PLAQUE)
WO16-2	30X24	5.00						XXX FEET (PLAQUE)
WO16-3	30X24	5.00						X MILE (PLAQUE)
WO20-1	48X48	16.00						ROAD/BRIDGE/RAMP WORK AHEAD
WO20-2	48X48	16.00						DETOUR AHEAD
WO20-3	48X48	16.00	2	32				ROAD CLOSED AHEAD
WO20-4	48X48	16.00						ONE LANE ROAD AHEAD
WO20-5	48X48	16.00						RIGHT/CENTER/LEFT LANE CLOSED AHEAD
WO20-5a	48X48	16.00						2 RIGHT/CENTER/LEFT LANES CLOSED AHEAD
WO20-6a	48X48	16.00						RIGHT/CENTER/LEFT LANE CLOSED
WO20-7a	48X48	16.00						FLAGGER (SYMBOL, WITH FLAGS)
WO21-2	36X36	9.00						FRESH OIL
WO21-5	48X48	16.00						SHOULDER WORK AHEAD
WO22-1	48X48	16.00						BLASTING ZONE AHEAD
WO22-2	42X36	10.50						TURN OFF 2-WAY RADIO AND PHONE
WO22-3	42X36	10.50						END BLASTING ZONE
GO22-1	21X15	2.19						WET PAINT (ARROW PIVOTS)

SIGN	SIZE IN.	AREA SQ.FT.	QTY EACH	TOTAL SQ.FT.	QTY RELOC EACH	TOTAL RELOC SQ.FT.	SIGN NUM.	DESCRIPTION
GUIDE SIGNS								
E05-1	36X48	12.00						GORE EXIT
E05-2	48X36	12.00						EXIT OPEN
E05-2a	48X36	12.00						EXIT CLOSED
GO20-1	60X24	10.00						ROAD WORK NEXT XX MILES
GO20-2	48X24	8.00						END ROAD WORK
GO20-4	36X18	4.50						PILOT CAR FOLLOW ME
GO20-4a	42X30	8.75						PILOT CAR IN USE WAIT & FOLLOW
GO20-4a	18X12	1.50						PILOT CAR IN USE WAIT & FOLLOW
GO20-5aP	36X24	6.00						WORK ZONE (PLAQUE)
MO4-8a	24X18	3.00						END DETOUR
MO4-9L	48X36	12.00						DETOUR (LEFT ARROW)
MO4-9R	48X36	12.00						DETOUR (RIGHT ARROW)
MO4-9P	48X12	4.00						STREET NAME (PLAQUE)
MO4-10L	48X18	6.00						DETOUR (ARROW LEFT)
MO4-10R	48X18	6.00						DETOUR (ARROW RIGHT)
REGULATORY SIGNS								
R1-1	48X48	13.25						STOP
R1-2	48TRI.	6.93						YIELD
R1-2a	36X36	9.00						TO ONCOMING TRAFFIC (PLAQUE)
R1-3P	30X12	2.50						ALL WAY (PLAQUE)
R2-1	36X48	12.00						SPEED LIMIT XX
R3-1	48X48	16.00						NO RIGHT TURN (SYMBOL)
R3-2	48X48	16.00						NO LEFT TURN (SYMBOL)
R3-3	36X36	9.00						NO TURNS
R3-4	48X48	16.00						NO U-TURN (SYMBOL)
R3-7L	30X30	6.25						LEFT LANE MUST TURN LEFT
R3-7R	30X30	6.25						RIGHT LANE MUST TURN RIGHT
R4-1	36X48	12.00						DO NOT PASS
R4-2	36X48	12.00						PASS WITH CARE
R4-8a	36X48	12.00						KEEP LEFT (HORIZONTAL ARROW)
R4-7a	36X48	12.00						KEEP RIGHT (HORIZONTAL ARROW)
R5-1	30X30	6.25						DO NOT ENTER
R5-1a	36X24	6.00						WRONG WAY
R6-1L	54X18	6.75						ONE WAY ARROW (LEFT)
R6-1R	54X18	6.75						ONE WAY ARROW (RIGHT)
R6-2L	24X30	5.00						ONE WAY (LEFT)
R6-2R	24X30	5.00						ONE WAY (RIGHT)
R9-9	24X12	2.00						SIDEWALK CLOSED
R9-11L	24X18	3.00						SIDEWALK CLOSED AHEAD, (ARROW LEFT) CROSS HERE
R9-11R	24X18	3.00						SIDEWALK CLOSED AHEAD, (ARROW RIGHT) CROSS HERE
R10-6	24X36	6.00						STOP HERE ON RED (45^ ARROW)
R11-2	48X30	10.00	2	20				ROAD CLOSED
R11-3a	60X30	12.50	4	50				ROAD CLOSED XX MILES AHEAD LOCAL TRAFFIC ONLY
R11-4	60X30	12.50	2	25				ROAD CLOSED TO THRU TRAFFIC
CONST-3A	60X48	20.00						FINE SIGN
CONST-3X	56X12	4.67						SPEEDING/PASSING (PLATE)
MISCELLANEOUS SIGNS								
CONST-5	48X36	12.00						POINT OF PRESENCE
CONST-5	96X48	32.00						POINT OF PRESENCE
CONST-7	48X24	8.00						RATE OUR WORK ZONE
CONST-7	72X36	18.00						RATE OUR WORK ZONE
CONST-8	48X36	12.00						WORK ZONE NO PHONE ZONE
SPECIAL	48X48	16.00	2	32				ROAD CLOSED XXX FT

	TOTAL
616-10.05 CONSTRUCTION SIGNS	159

	TOTAL
616-10.10 RELOCATED SIGNS	0

ITEM NUMBER	TOTAL QTY	DESCRIPTION
6122008		IMPACT ATTENUATOR 40 MPH (SAND BARRELS)
6122009		IMPACT ATTENUATOR 45 MPH (SAND BARRELS)
6122010		IMPACT ATTENUATOR 50 MPH (SAND BARRELS)
6122012		IMPACT ATTENUATOR 55 MPH (SAND BARRELS)
6122014		IMPACT ATTENUATOR 60 MPH (SAND BARRELS)
6122017		IMPACT ATTENUATOR 65 MPH (SAND BARRELS)
6122019		IMPACT ATTENUATOR 70 MPH (SAND BARRELS)
6122020		REPLACEMENT SAND BARREL
6122030		IMPACT ATTENUATOR (RELOCATION)
6123000A		TRUCK OR TRAILER MOUNTED ATTENUATOR (TMA)
6161008	4	ADVANCED WARNING RAIL SYSTEM
6161012		BUOYS (BOATS KEEP OUT)
6161013		BUOYS (NO WAKE)
6161014		SPECIAL SIGN ASSEMBLY (BOATS KEEP OUT)
6161025		CHANNELIZER (TRIM LINE)
6161030	10	TYPE III MOVEABLE BARRICADE
6161033		DIRECTION INDICATOR BARRICADE
6161040		FLASHING ARROW PANEL
6161047		TYPE III OBJECT MARKER
6161055		SEQUENTIAL FLASHING WARNING LIGHT
6161070		TUBULAR MARKER
6161095		RADAR SPEED ADVISORY SYSTEM
6161096		CHANGEABLE MESSAGE SIGN, COMMISSION FURNISHED/RETAINED
6161098A		CHANGEABLE MESSAGE SIGN W/O COMM. INTERFACE - CONTRACTOR FURNISHED/RETAINED
6161099	2	CHANGEABLE MESSAGE SIGN WITH COMM. INTERFACE - CONTRACTOR FURNISHED/RETAINED
6162000A		WORK ZONE TRAFFIC SIGNAL SYSTEM
6162002		TEMPORARY LONG-TERM RUMBLE STRIPS
6173600D		TEMPORARY TRAFFIC BARRIER CONTRACTOR FURNISHED/RETAINED
6173602B		TEMPORARY TRAFFIC BARRIER CONTRACTOR FURNISHED/COMMISSION RETAINED
6174000A		TEMP. TRAFFIC BARRIER HEIGHT TRANSITION
6175010A		RELOCATING TEMPORARY TRAFFIC BARRIER
6176000B		TEMPORARY TRAFFIC BARRIER COMMISSION FURNISHED/RETAINED
6177000B		TEMP. TRAFFIC BARRIER HEIGHT TRANSITION COMMISSION FURNISHED/RETAINED
6208064A		TEMPORARY RAISED PAVEMENT MARKER
9029400		TEMPORARY TRAFFIC SIGNALS
9029401		TEMPORARY TRAFFIC SIGNALS AND LIGHTING

QUANTITY SHEET
SHEET 3 OF 3

STATE OF MISSOURI
WARNER D. SHERMAN
NUMBER PE-26645
PROFESSIONAL ENGINEER

Warner Sherman
10/02/2023 2:40:14 PM
WARNER D. SHERMAN II - CIVIL
MO-PE-26645

DATE PREPARED	
10/2/2023	
ROUTE V	STATE MO
DISTRICT SW	SHEET NO. 3
COUNTY GREENE	
JOB NO. J7S3486	
CONTRACT ID.	
PROJECT NO.	
BRIDGE NO. A9119	

DESCRIPTION	DATE

MISSOURI HIGHWAYS AND TRANSPORTATION COMMISSION
105 WEST CAPITOL
JEFFERSON CITY, MO 65102
1-888-ASK-MODOT (1-888-275-6636)

NOTES

BRIDGE WILL BE CLOSED DURING CONSTRUCTION WITH DETOURS

EXIST. BRIDGE SKEW 30°LA

PROPOSED BRIDGE:
32' WIDE ROADWAY (20' EXIST.)
314.04' LONG (275' EXIST.)
LENGTHENED EQUALLY TO BOTH SIDES
NEW 20' BR APPRCH SLABS FOR MINOR ROUTE

✳ THE APPROXIMATE LOCATION OF PROPETY LINES AS SHOWN ON THE PLANS ARE BASED ON THE BEST INFORMATION AVAILABLE TO THE COMMISSION AT THIS TIME. THIS INFORMATION IS PROVIDED BY THE COMMISSION "AS-IS" AND THE COMMISSION EXPRESSLY DISCLAIMS ANY REPRESENTATION OR WARANTY AS TO THE COMPLETENESS, ACURACY, OR SUITABILITY OF THE INFORMATION FOR ANY USE.

ANY WORK INDICATED ON THE PLANS THAT EXTENDS BEYOND THE PROJECT LIMITS IS CONSIDERED INCIDENTAL TO AND A PART OF THE CONSTRUCTION OF THIS PROJECT.

SEE SPECIAL SHEET 1 OF 2 FOR EXACT LIMITS OF MGS GUARDRAIL

PLAN

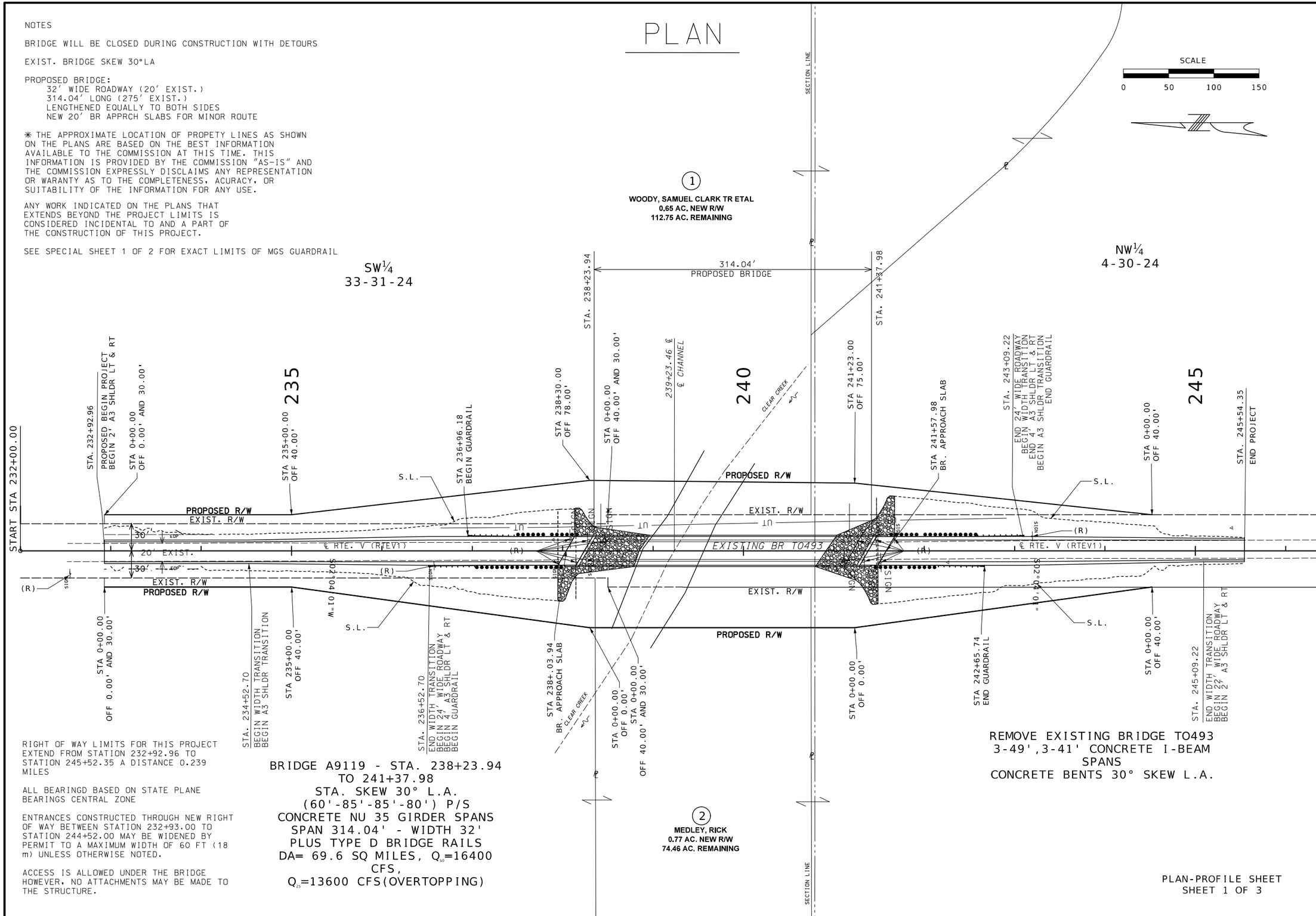

RIGHT OF WAY LIMITS FOR THIS PROJECT EXTEND FROM STATION 232+92.96 TO STATION 245+52.35 A DISTANCE 0.239 MILES

ALL BEARINGD BASED ON STATE PLANE BEARINGS CENTRAL ZONE

ENTRANCES CONSTRUCTED THROUGH NEW RIGHT OF WAY BETWEEN STATION 232+93.00 TO STATION 244+52.00 MAY BE WIDENED BY PERMIT TO A MAXIMUM WIDTH OF 60 FT (18 m) UNLESS OTHERWISE NOTED.

ACCESS IS ALLOWED UNDER THE BRIDGE HOWEVER, NO ATTACHMENTS MAY BE MADE TO THE STRUCTURE.

BRIDGE A9119 - STA. 238+23.94
TO 241+37.98
STA. SKEW 30° L.A.
(60'-85'-85'-80') P/S
CONCRETE NU 35 GIRDER SPANS
SPAN 314.04' - WIDTH 32'
PLUS TYPE D BRIDGE RAILS
DA= 69.6 SQ MILES, Q_{50}=16400 CFS,
Q_{25}=13600 CFS(OVERTOPPING)

REMOVE EXISTING BRIDGE T0493
3-49',3-41' CONCRETE I-BEAM
SPANS
CONCRETE BENTS 30° SKEW L.A.

PLAN-PROFILE SHEET
SHEET 1 OF 3

STATE OF MISSOURI
WARNER D. SHERMAN
NUMBER PE-26645
PROFESSIONAL ENGINEER
Warner Sherman
10/02/2023 2:40:57 PM
WARNER D. SHERMAN II - CIVIL
MO:PE-26645

DATE PREPARED	10/2/2023
ROUTE	V
STATE	MO
DISTRICT	SW
SHEET NO.	4
COUNTY	GREENE
JOB NO.	J7S3486
CONTRACT ID.	
PROJECT NO.	
BRIDGE NO.	A9119

DATE	DESCRIPTION

MISSOURI HIGHWAYS AND TRANSPORTATION COMMISSION
105 WEST CAPITOL
JEFFERSON CITY, MO 65102
1-888-ASK-MODOT (1-888-275-6636)

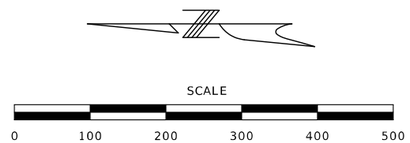

EXISTING IRON PIN
S¼ CORNER
33-31-24
SURVEY RECORD BOOK 5490 PAGE 2329
DATED 11/30/2012
WOLFE, PLS 2000161241

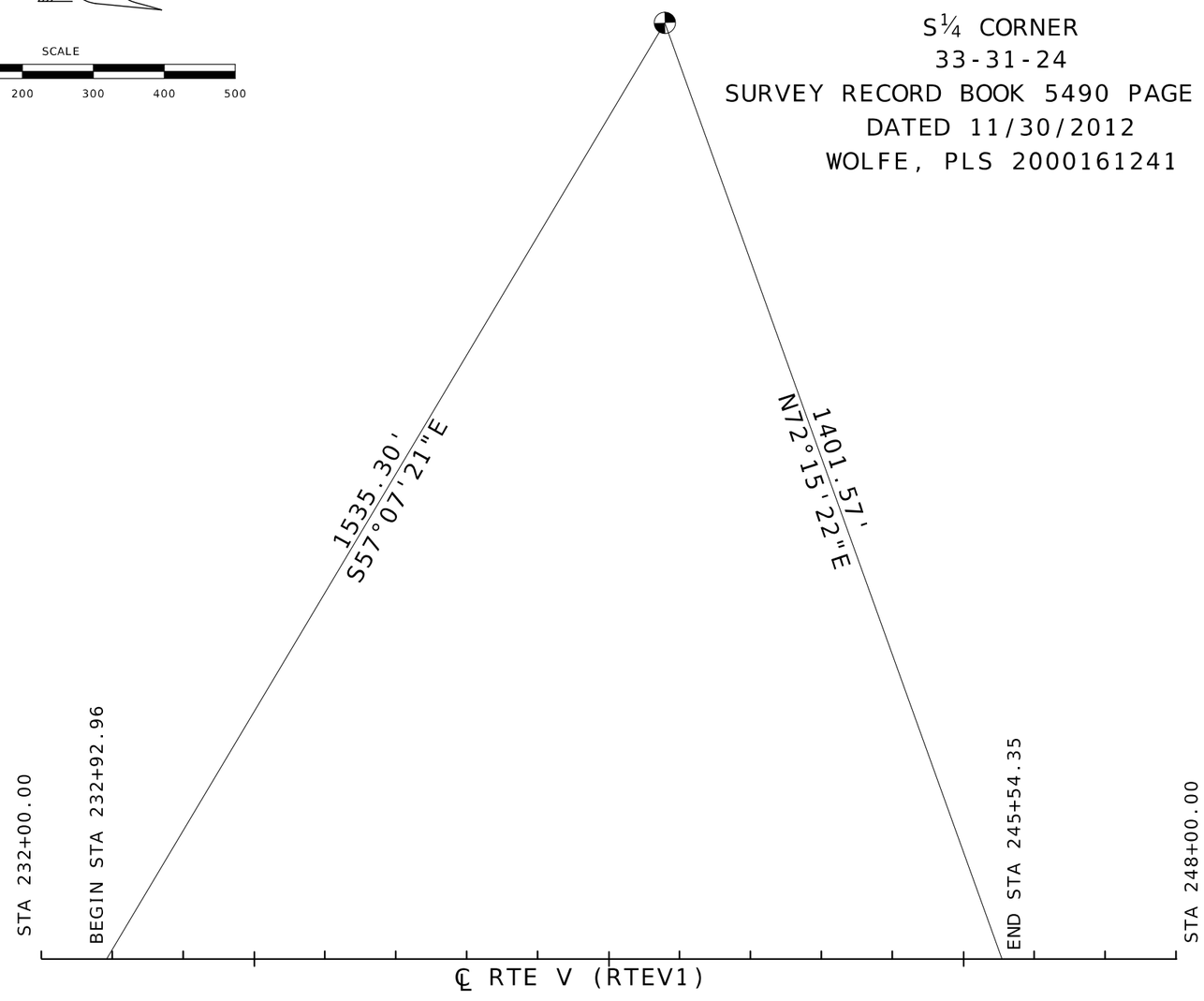

PLAN-PROFILE SHEET
SHEET 2 OF 3

STATE OF MISSOURI
WARNER D. SHERMAN
NUMBER PE-26645
PROFESSIONAL ENGINEER

Warner Sherman
10/02/2023 2:41:27 PM
WARNER D. SHERMAN II - CIVIL
MO-PE-26645

DATE PREPARED	10/2/2023
ROUTE	V
STATE	MO
DISTRICT	SW
SHEET NO.	5
COUNTY	GREENE
JOB NO.	J7S3486
CONTRACT ID.	
PROJECT NO.	
BRIDGE NO.	A9119

DATE	DESCRIPTION

MISSOURI HIGHWAYS AND TRANSPORTATION COMMISSION
105 WEST CAPITOL
JEFFERSON CITY, MO 65102
1-888-ASK-MODOT (1-888-275-6636)

RTE V ℄ PROFILE

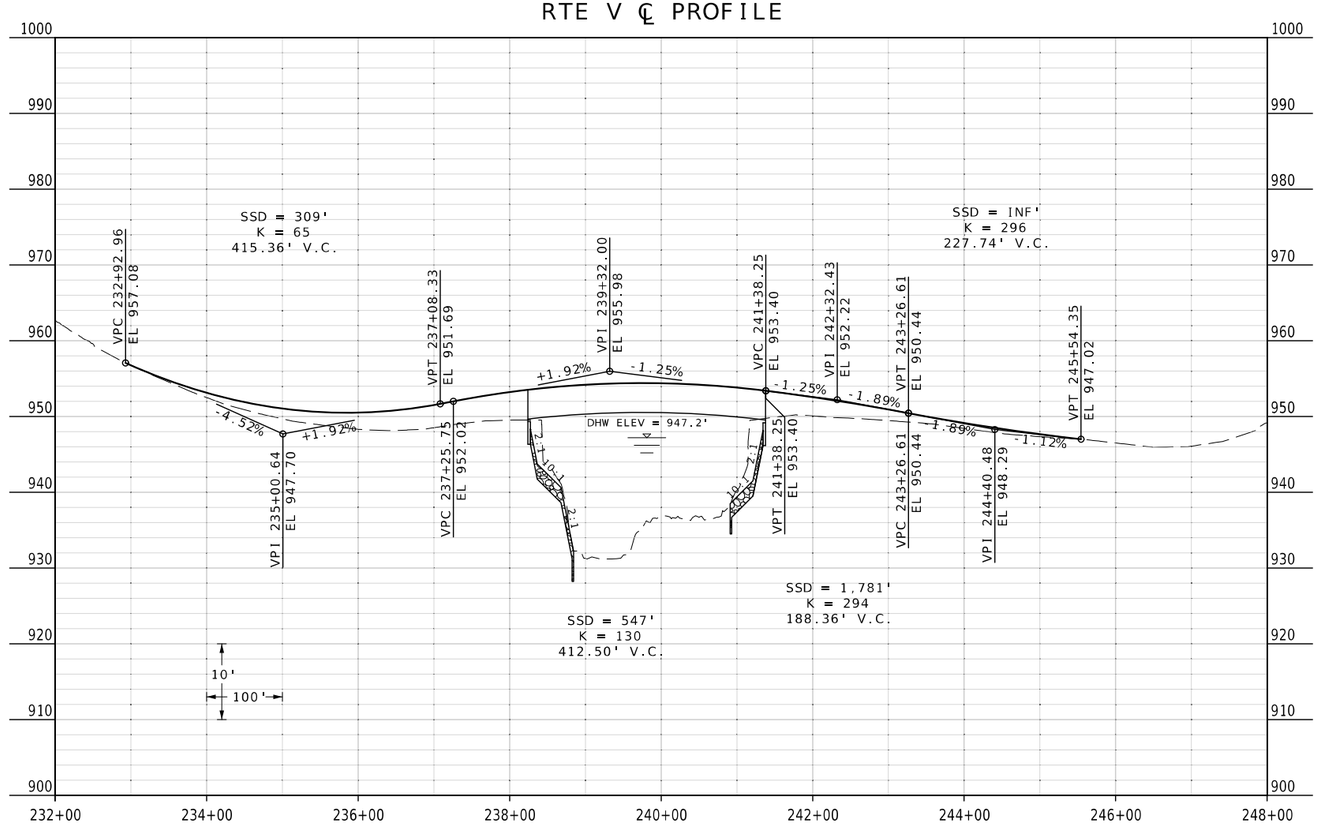

NOTE:
NORTH K VALUE DOES NOT MEET MODOT STANDARDS. THE EXISTING K VALUE IS 65 AND THE PROPOSED K VALUE IS 65. A DESIGN EXCEPTION HAS BEEN CREATED FOR THIS VALUE.

PLAN & PROFILE
SHEET 3 OF 3

STATE OF MISSOURI
WARNER D. SHERMAN II
NUMBER PE-26645
PROFESSIONAL ENGINEER

Warner Sherman
10/02/2023 2:41:52 PM
WARNER D. SHERMAN II - CIVIL
MO-PE-26645

DATE PREPARED	
10/2/2023	
ROUTE	STATE
V	MO
DISTRICT	SHEET NO.
SW	6
COUNTY	
GREENE	
JOB NO.	
J7S3486	
CONTRACT ID.	
PROJECT NO.	
BRIDGE NO.	
A9119	

DATE	DESCRIPTION

MISSOURI HIGHWAYS AND TRANSPORTATION COMMISSION
105 WEST CAPITOL
JEFFERSON CITY, MO 65102
1-888-ASK-MODOT (1-888-275-6636)

ALL PROJECT COORDINATES HAVE BEEN PROJECTED FROM THE MISSOURI STATE PLANE COORDINATE (SPC) SYSTEM OF 1983 USING AN AVERAGE PROJECT PROJECTION (GRID TO GROUND) FACTOR. TO GET BACK TO STATE PLANE COORDINATES MULTIPY THE PROJECT COORDINATES BY THE AVERAGE GRID FACTOR AS SHOWN IN THE "REFERENCE CONTROL INFORMATION" PORTION OF THIS TABLE.

PROJECT COORDINATE INFORMATION

COORDINATE SYSTEM	Modified State Plane
HORIZONTAL DATUM	NAD83
VERTICAL DATUM	NAVD88
GEOID MODEL	Geoid 18
ELEVATIONS DETERMINED BY	GPS
PROJECT PROJECTION FACTOR	0.99999430

REFERENCE CONTROL INFORMATION

COORDINATE SYSTEM	Missouri State Plane
CONTROL STATION	MoDOT GNSS
DESIGNATION	MoDOT Springfield Cors ARP
CORS_ID	MOSF
PID	DL5388
LATITUDE	37 14 30.33454
LONGITUDE	093 13 47.54333
NORTHING (M)	156530.873
EASTING (M)	435242.882
ZONE	Central
PROJECT AVERAGE GRID FACTOR	1.00000570

EXAMPLE OF PROJECT COORDINATE TO S.P.C.

PROJECT NORTHING X AVERAGE GRID FACTOR
= STATE PLANE NORTHING

PROJECT EASTING X AVERAGE GRID FACTOR
= STATE PLANE EASTING

EXAMPLE: CONTROL POINT # 1
N 560135.3905 X 1.0000057 = N 560138.5878
E 1325990.8618 X 1.0000057 = E 1325998.4198

LINEAR UNIT CONVERSION

1 METER = 3.280833333 US SURVEY FEET (USFT)

COORDINATE POINT LISTING

SHEET NO	STATION	LOCATION	OFFSET (USFT)	MODIFIED STATE PLANE (GROUND) NORTHING (US SURVEY FT)	EASTING (US SURVEY FT)	ELEVATION (US SURVEY FT)	DESCRIPTION	GPK POINT ID
PROJECT CONTROL POINTS								
4	245+40.35	RTE V LT	25.43	1325990.8618	560135.3905	944.0867	REBAR	CP1
4	242+26.42	RTE V RT	12.69	1325964.0899	560450.4910	948.8300	REBAR	CP2
4	237+89.66	RTE V LT	12.29	1326004.8149	560886.0620	948.8500	REBAR	CP3
4	238+49.03	RTE V LT	11.80	1326002.1842	560826.7524	949.9900		BM1
4	241+10.12	RTE V RT	11.84	1325969.1369	560566.6817	950.0000		BM2
ALIGNMENTS: RTE V (RTEV1)								
4	232+00.00	RTE V	0.00	1326013.7812	561475.7870		POT - BEGIN RTEV1 CHAIN	N/A
N/A	248+00.00	RTE V	0.00	1325956.0712	559876.8283		POT - END RTEV1 CHAIN	N/A

COORDINATE POINT
SHEET 1 OF 1

STATE OF MISSOURI
WARNER D. SHERMAN
NUMBER PE-26645
PROFESSIONAL ENGINEER

Warner Sherman
10/02/2023 2:42:16 PM
WARNER D. SHERMAN II - CIVIL
MO-PE-26645

DATE PREPARED	10/2/2023
ROUTE	V
STATE	MO
DISTRICT	SW
SHEET NO.	7
COUNTY	GREENE
JOB NO.	J7S3486
CONTRACT ID.	
PROJECT NO.	
BRIDGE NO.	A9119

DATE	DESCRIPTION

MISSOURI HIGHWAYS AND TRANSPORTATION COMMISSION
105 WEST CAPITOL
JEFFERSON CITY, MO 65102
1-888-ASK-MODOT (1-888-275-6636)

SCALE

0 20 40 60

PROPOSED GUARDRAIL AT BRIDGE ENDS RTE V

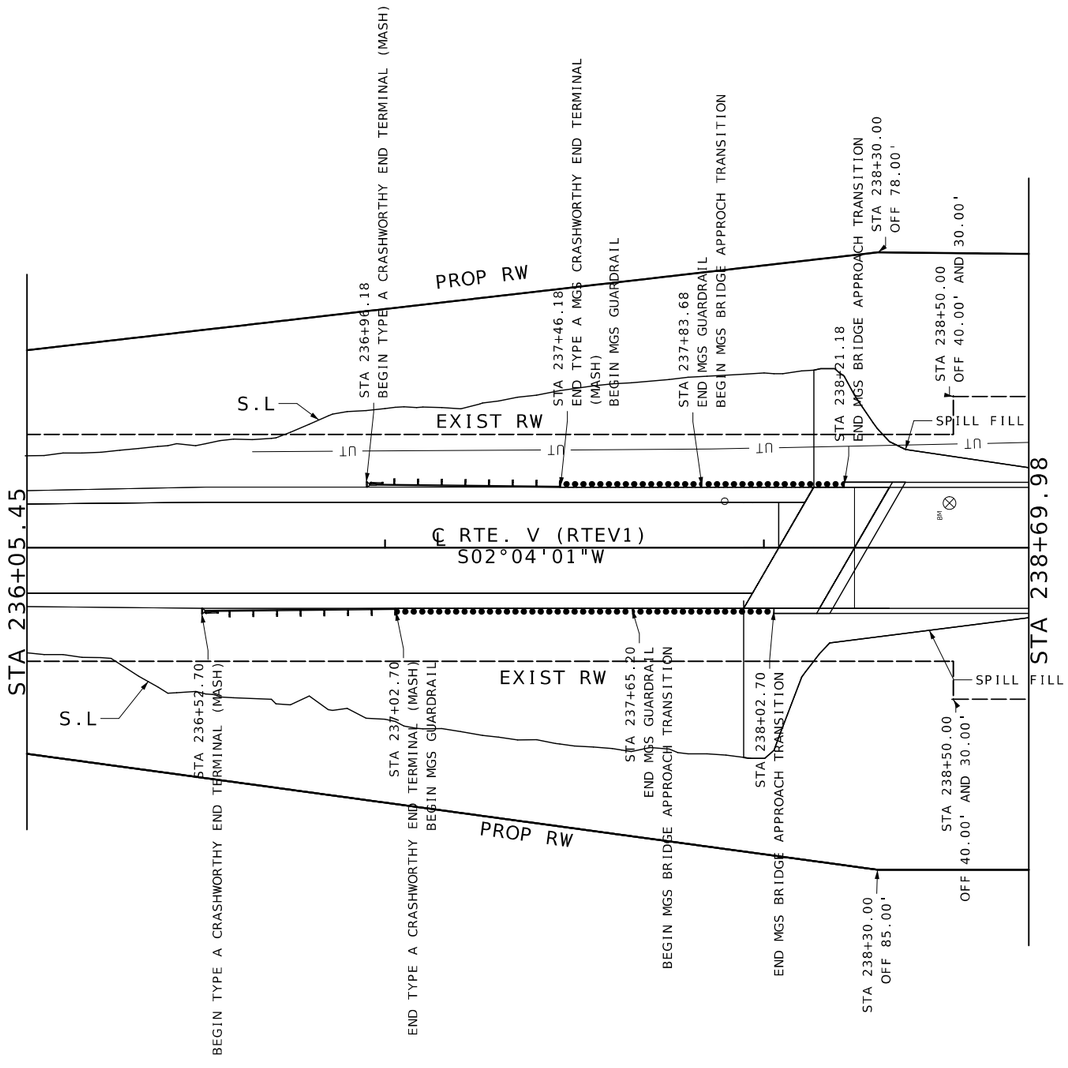

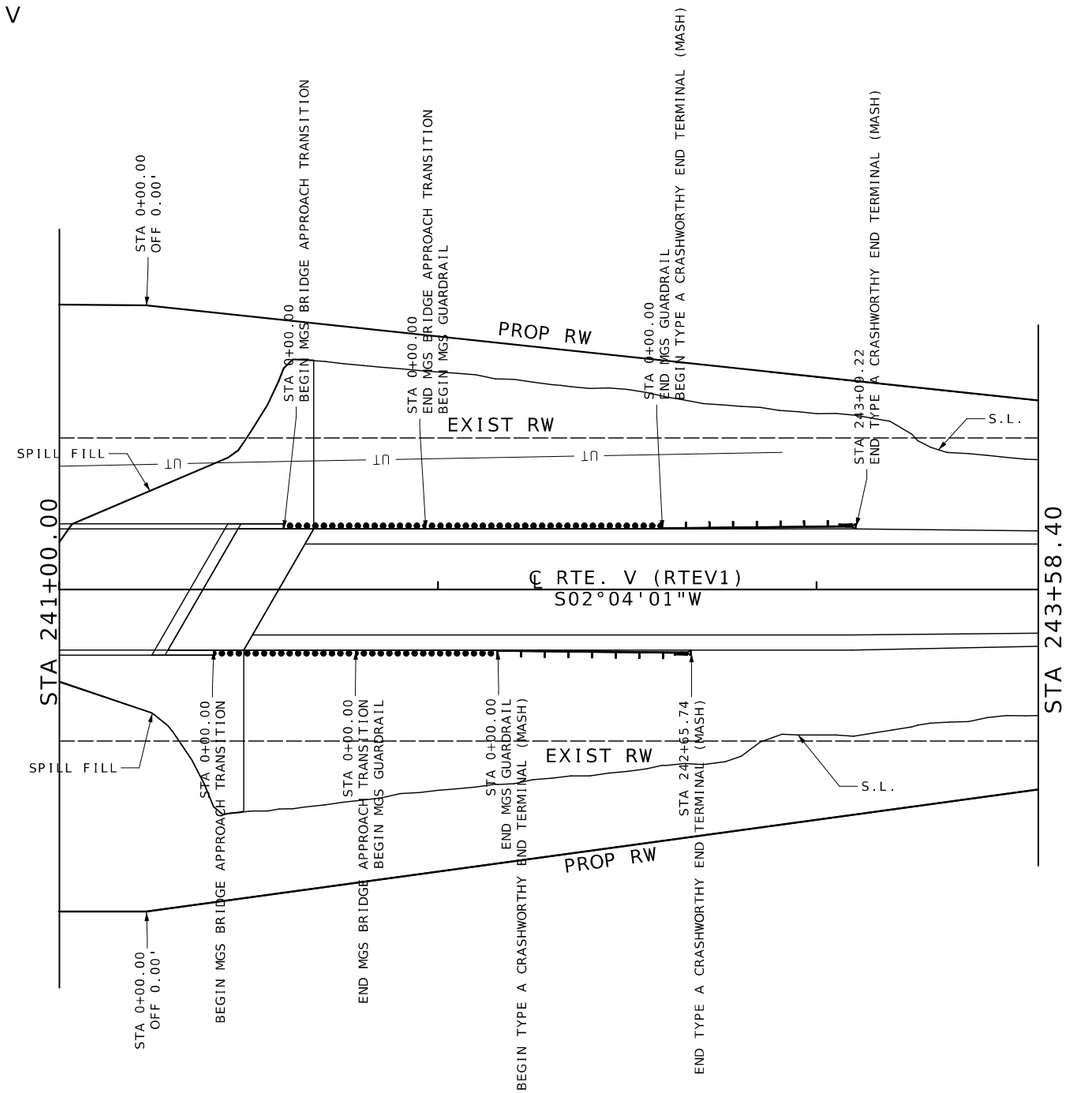

NOTE:
GUARDRAIL INSTALLATION AND GRADING SHALL BE IN ACCORDANCE WITH STANDARD PLAN 606.50 AND 606.81.
GUARDRAIL GRADING QUANTITY INCLUDED IN EARTHWORK PAY ITEMS.

SPECIAL SHEET
SHEET 1 OF 3

STATE OF MISSOURI
WARNER D. SHERMAN II
NUMBER PE-26645
PROFESSIONAL ENGINEER

Warner Sherman
10/02/2023 2:42:44 PM
WARNER D. SHERMAN II - CIVIL
MO-PE-26645

DATE PREPARED	10/2/2023
ROUTE	V
STATE	MO
DISTRICT	SW
SHEET NO.	8
COUNTY	GREENE
JOB NO.	J7S3486
CONTRACT ID.	
PROJECT NO.	
BRIDGE NO.	A9119

DATE	DESCRIPTION

MISSOURI HIGHWAYS AND TRANSPORTATION COMMISSION

105 WEST CAPITOL
JEFFERSON CITY, MO 65102
1-888-ASK-MODOT (1-888-275-6636)

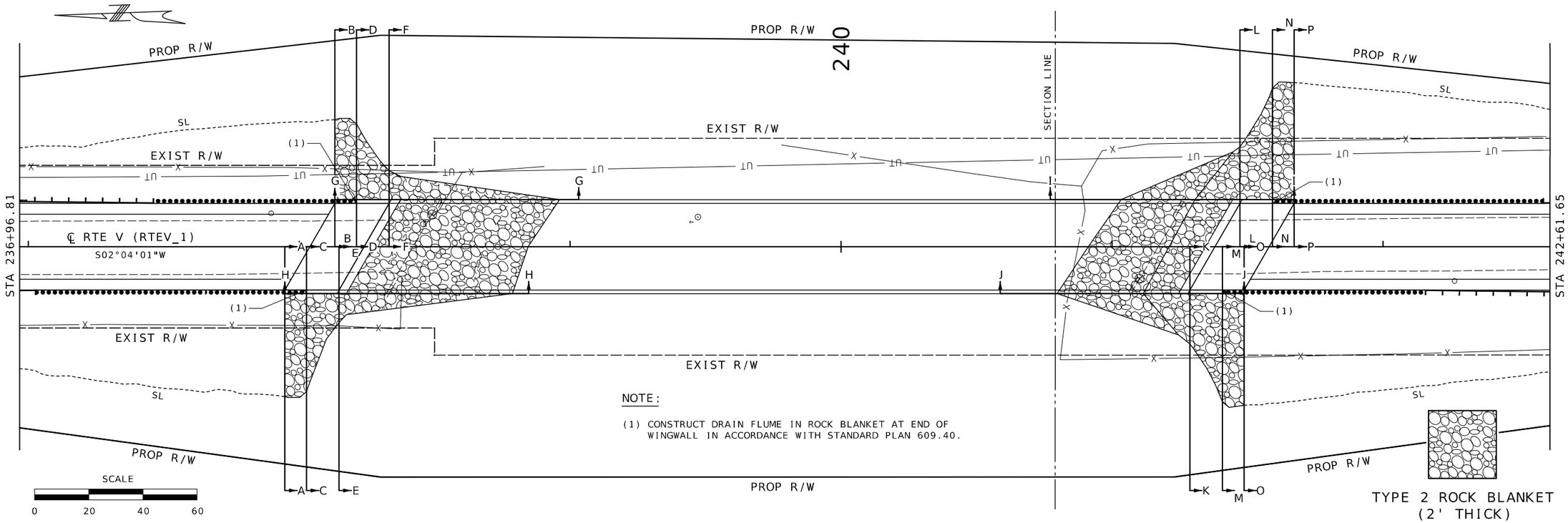

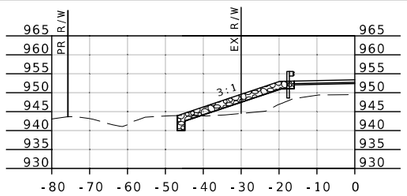

STA 238+13.18
SECTION B-B

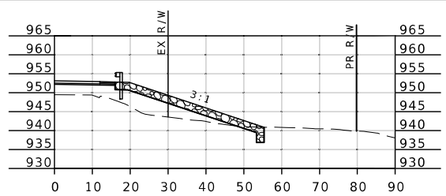

STA 237+94.70
SECTION A-A

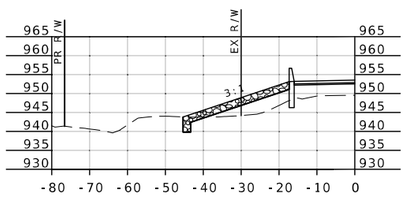

STA 238+21.18
SECTION D-D

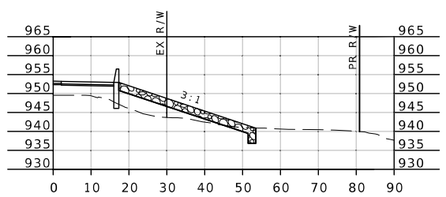

STA 238+02.70
SECTION C-C

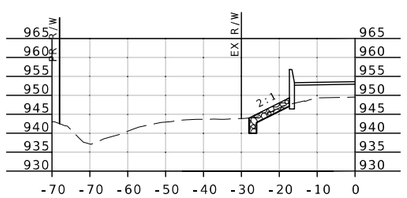

STA 238+33.18
SECTION F-F

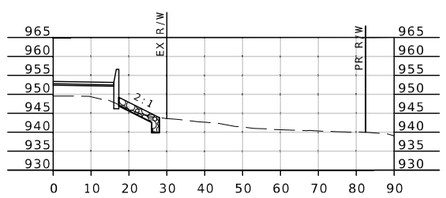

STA 238+14.70
SECTION E-E

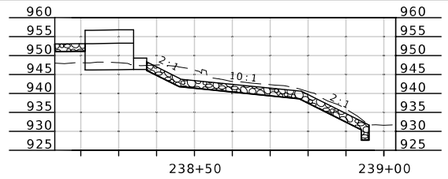

SECTION G-G

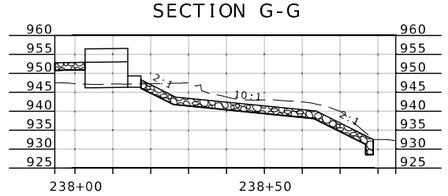

SECTION H-H

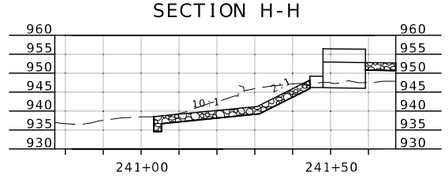

SECTION I-I

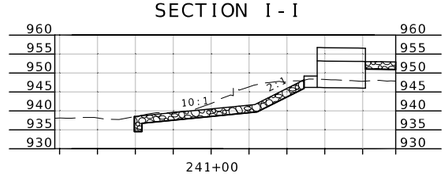

SECTION J-J

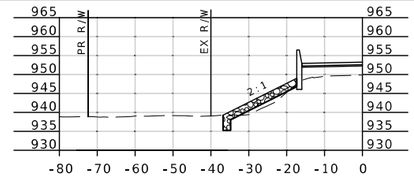

STA 241+47.22
SECTION L-L

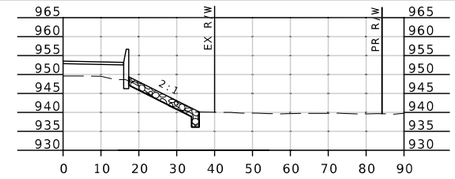

STA 241+28.74
SECTION K-K

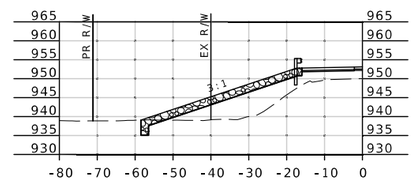

STA 241+59.22
SECTION N-N

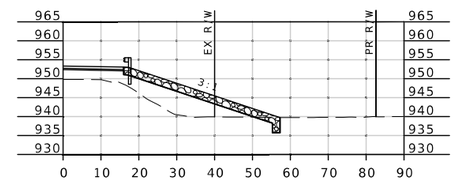

STA 241+40.74
SECTION M-M

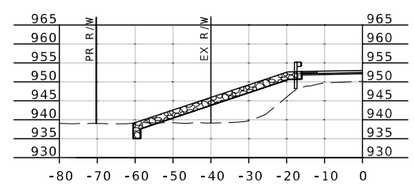

STA 241+67.22
SECTION P-P

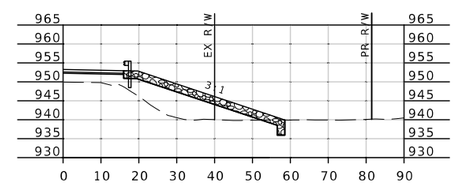

STA 241+48.74
SECTION O-O

SPECIAL SHEET
SHEET 2 OF 3

STATE OF MISSOURI
WARNER D. SHERMAN II
NUMBER PE-26645
PROFESSIONAL ENGINEER
Warner Sherman
10/02/2023 2:43:08 PM
WARNER D. SHERMAN II · CIVIL
MO PE-26645

DATE PREPARED	10/2/2023
ROUTE	V
STATE	MO
DISTRICT	SW
SHEET NO.	9
COUNTY	GREENE
JOB NO.	J7S3486
CONTRACT ID.	
PROJECT NO.	
BRIDGE NO.	A9119

DATE	DESCRIPTION

MISSOURI HIGHWAYS AND TRANSPORTATION COMMISSION
105 WEST CAPITOL
JEFFERSON CITY, MO 65102
1-888-ASK-MODOT (1-888-275-6636)

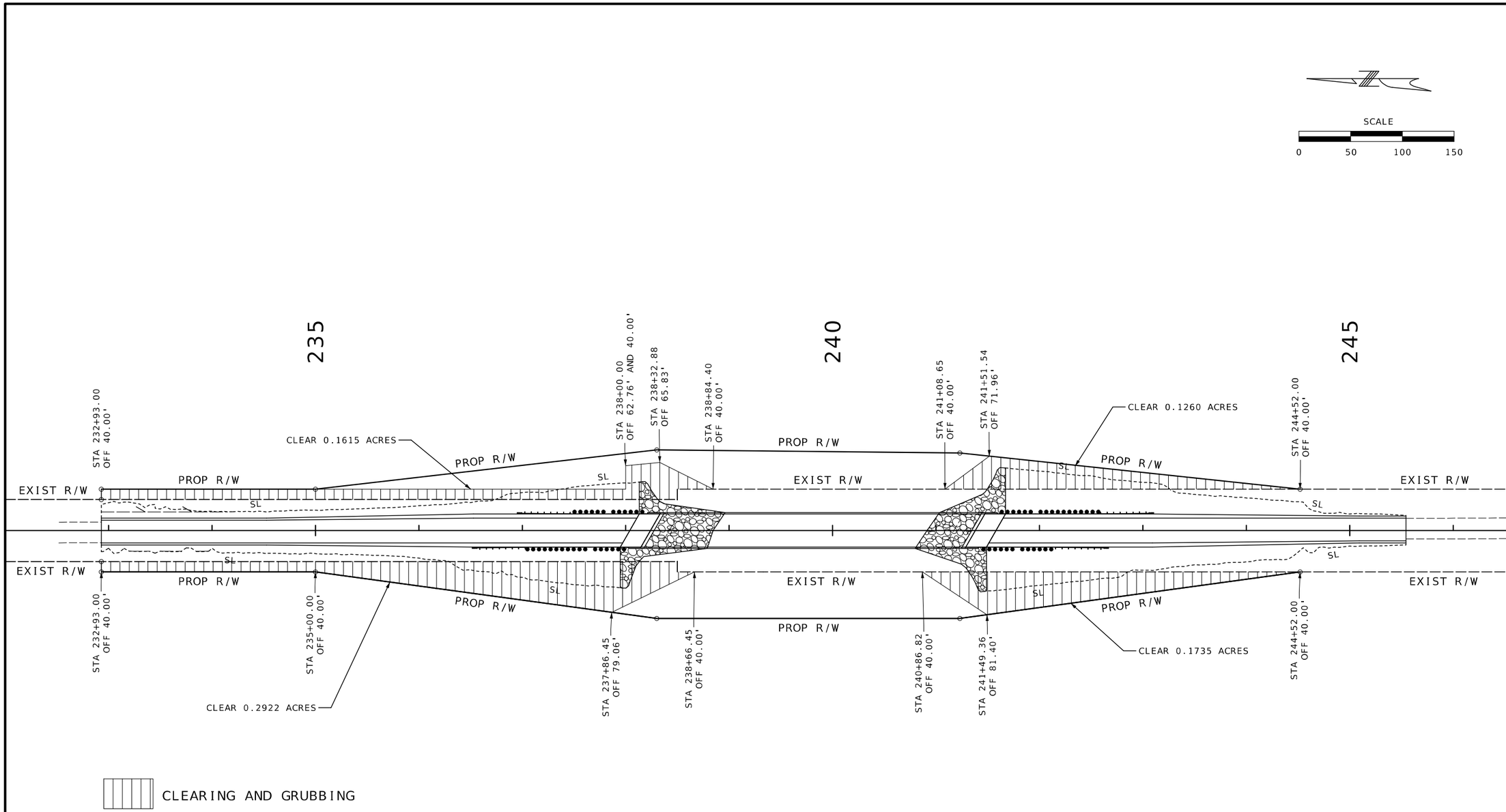

CLEARING AND GRUBBING

SPECIAL SHEET
SHEET 3 OF 3

STATE OF MISSOURI
WARNER D. SHERMAN II
NUMBER PE-26645
PROFESSIONAL ENGINEER

Warner Sherman
10/02/2023 2:43:49 PM
WARNER D. SHERMAN II - CIVIL
MO-PE-26645

DATE PREPARED	10/2/2023
ROUTE	V
STATE	MO
DISTRICT	SW
SHEET NO.	10
COUNTY	GREENE
JOB NO.	J7S3486
CONTRACT ID.	
PROJECT NO.	
BRIDGE NO.	A9119

DESCRIPTION

DATE

MISSOURI HIGHWAYS AND TRANSPORTATION COMMISSION

105 WEST CAPITOL
JEFFERSON CITY, MO 65102
1-888-ASK-MODOT (1-888-275-6636)

WO20-3 WITH AWRS

(20)

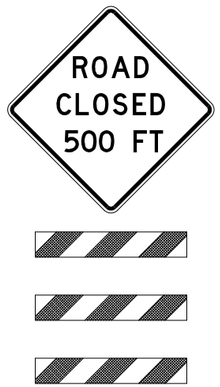

WO20-3 WITH AWRS

(20A)

R11-2

(29)

R11-4

(55)

NOTE:

(1) ROAD CLOSED SIGN MAY BE PLACED 7-10 FEET BEHIND THE BARRICADES AND AT A SIGN HEIGHT APPROPRIATE TO THE TYPE OF ROADWAY. ONE BARRICADE SHOULD BE REQUIRED TO COMPLETELY CLOSE EACH 8 FEET OF PAVEMENT. PAVED SHOULDERS SHALL BE INLCUDED IN THE AREA TO BE CLOSED.

(2) IF USED, THE "ROAD CLOSED XX MILES AHEAD LOCAL TRAFFIC ONLY" OR "ROAD CLOSED TO THRU TRAFFIC" SIGN SHOULD BE LOCATED AT THE FIRST STATE ROUTE OR, AT THE DISCRETION OF THE ENGINEER, ANY OTHER INTERSECTION IN ADVANCE OF THE CLOSURE. ADDITIONAL BARRICADES MAY BE USED AND OFFSET TO FACILITATE ACCESS FOR WORK VEHICLES, LOCAL TRAFFIC, ETC.

(3) LOCATION TO BE DETERMINED BY THE ENGINEER.

USE IN PLACE ALL SIGNS WHICH DO NOT CONFLICT WITH THIS PLAN. COVER AND/OR REMOVE CONFLICTING SIGNS AT NO DIRECT PAY.

ALL R11-2 AND R11-3a SIGNS SHALL BE MOUNTED ON TYPE III BARRICADE.

TRAFFIC CONTROL SHOULD BE REMOVED AS SOON AS PRACTICAL AFTER CONDITION FOR CLOSURE NO LONGER EXISTS.

REFER TO STANDARD DRAWING 616.10, 619.10 AND 620.10 FOR ADDITIONAL DETAILS AND 903.03 FOR SIGN AND SIGN MOUNTING REQUIREMENTS.

SPACING AND DISTANCES OF TRAFFIC CONTROL DEVICES ARE APPROXIMATE. THE EXACT LOCATIONS SHALL BE DETERMINED IN THE FIELD AND APPROVED BY THE ENGINEER.

TRAFFIC CONTROL SHALL CONFORM TO THE LATEST EDITION OF THE MANUAL ON UNIFORM TRAFFIC CONTROL DEVICES (MUTCD).

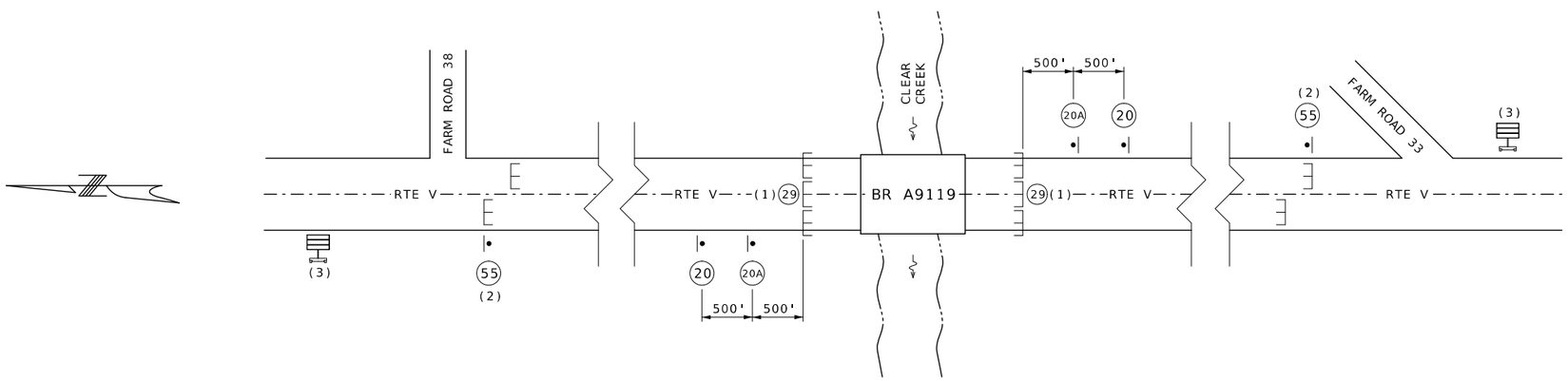

TRAFFIC CONTROL LEGEND

- SIGN (SINGLE SIDED)
- BARRICADE
- CHANGEABLE MESSAGE BOARD (1)

DRAWING NOT TO SCALE

TRAFFIC CONTROL PLANS
SHEET 1 OF 1

STATE OF MISSOURI
WARNER D. SHERMAN II
NUMBER PE-26645
PROFESSIONAL ENGINEER

10/02/2023 2:45:24 PM
WARNER D. SHERMAN II - CIVIL
MO-PE-26645

DATE PREPARED	
10/2/2023	
ROUTE	STATE
V	MO
DISTRICT	SHEET NO.
SW	11
COUNTY	
GREENE	
JOB NO.	
J7S3486	
CONTRACT ID.	
PROJECT NO.	
BRIDGE NO.	
A9119	

DESCRIPTION	DATE

MISSOURI HIGHWAYS AND TRANSPORTATION COMMISSION

105 WEST CAPITOL
JEFFERSON CITY, MO 65102
1-888-ASK-MODOT (1-888-275-6636)

TEMPORARY EROSION CONTROL LEGEND

- ROCK DITCH CHECK
- TEMPORARY BERM TYPE C
- SILT FENCE

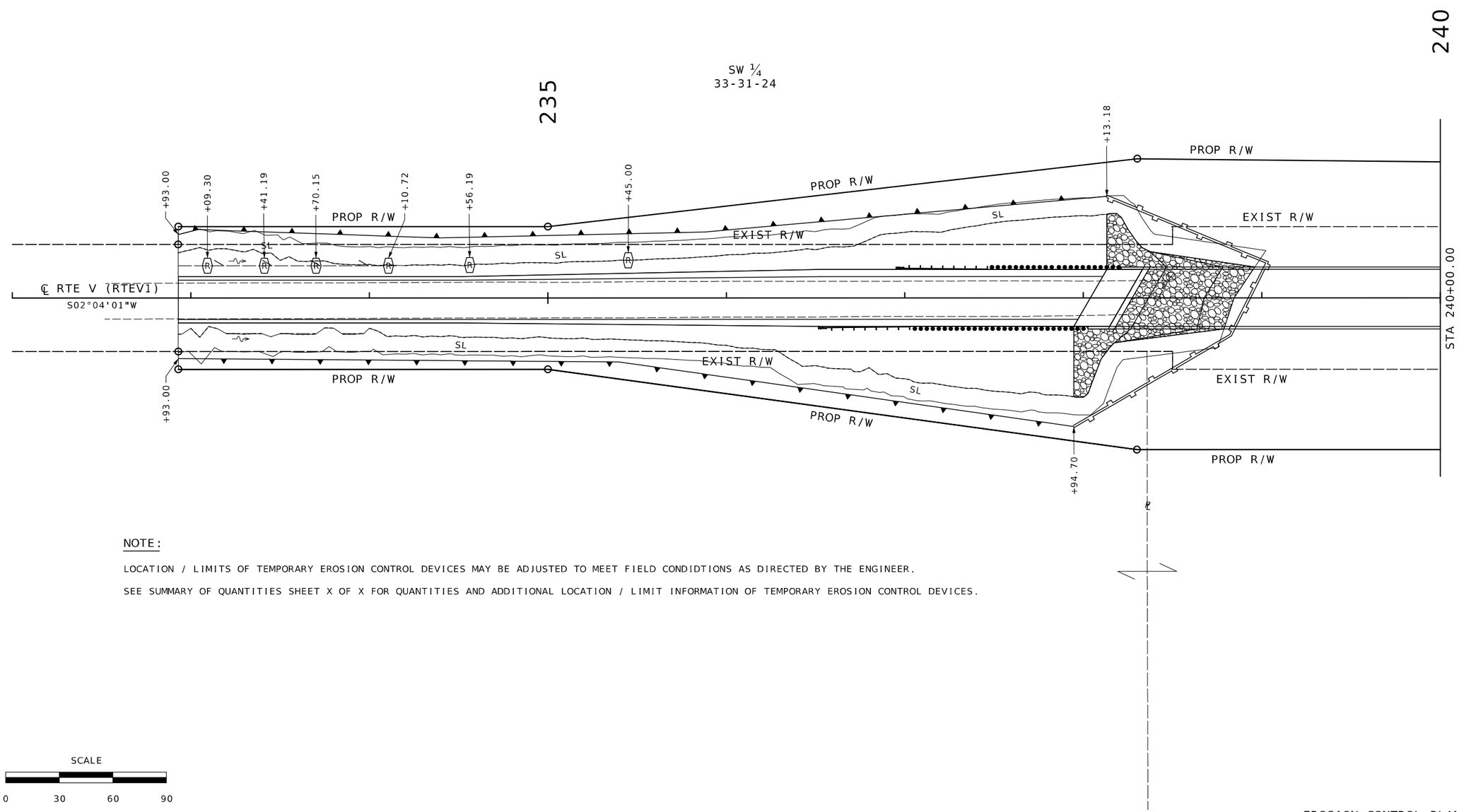

NOTE:

LOCATION / LIMITS OF TEMPORARY EROSION CONTROL DEVICES MAY BE ADJUSTED TO MEET FIELD CONDIDTIONS AS DIRECTED BY THE ENGINEER.

SEE SUMMARY OF QUANTITIES SHEET X OF X FOR QUANTITIES AND ADDITIONAL LOCATION / LIMIT INFORMATION OF TEMPORARY EROSION CONTROL DEVICES.

SCALE

0 30 60 90

EROSION CONTROL PLANS
SHEET 1 OF 2

STATE OF MISSOURI
WARNER D. SHERMAN II
NUMBER PE-26645
PROFESSIONAL ENGINEER

10/02/2023 2:47:11 PM
WARNER D. SHERMAN II - CIVIL
MO-PE-26645

DATE PREPARED	10/2/2023
ROUTE	V
STATE	MO
DISTRICT	SW
SHEET NO.	12
COUNTY	GREENE
JOB NO.	J7S3486
CONTRACT ID.	
PROJECT NO.	
BRIDGE NO.	A9119

DATE	DESCRIPTION

MISSOURI HIGHWAYS AND TRANSPORTATION COMMISSION
105 WEST CAPITOL
JEFFERSON CITY, MO 65102
1-888-ASK-MODOT (1-888-275-6636)

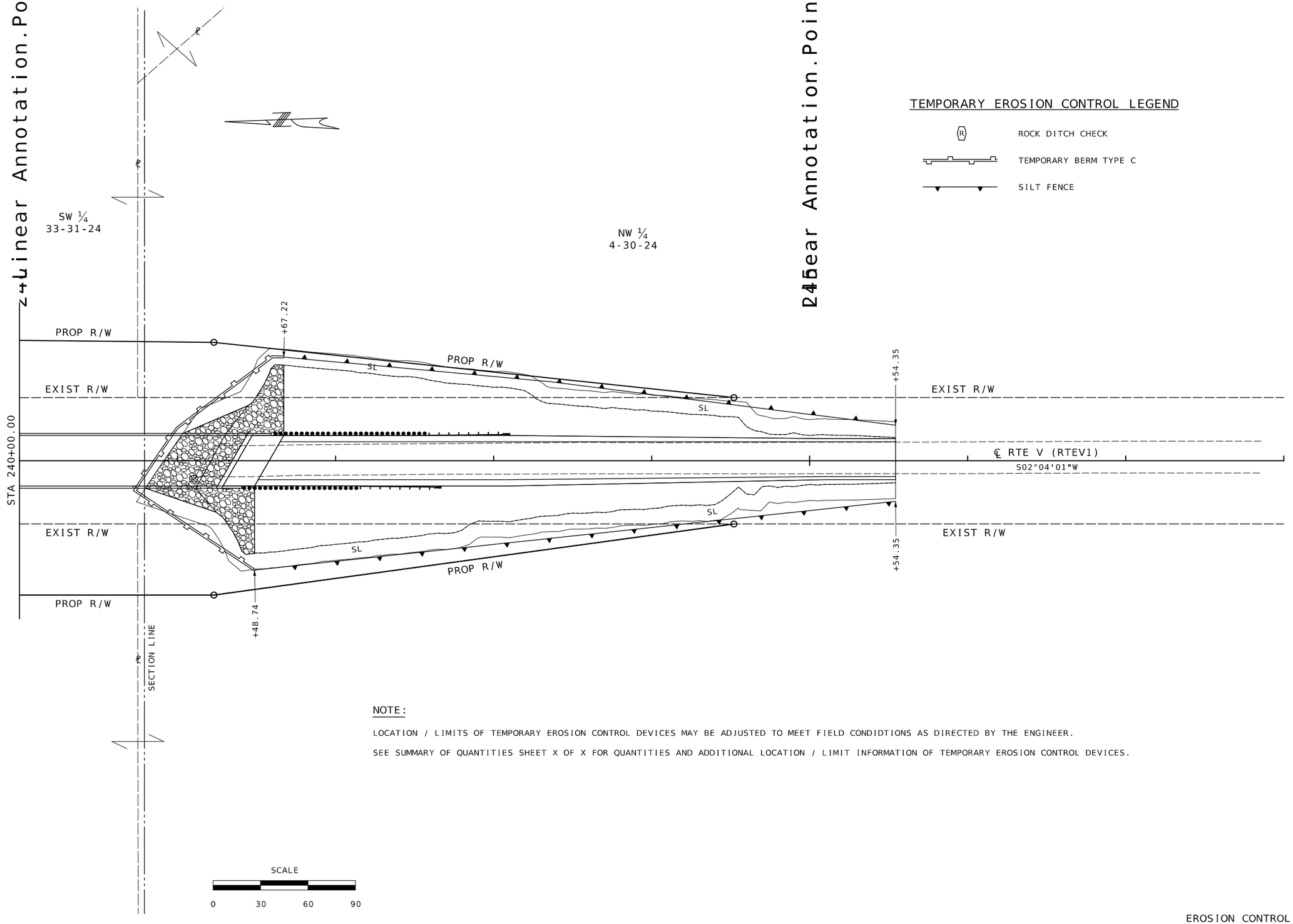

TEMPORARY EROSION CONTROL LEGEND

- ROCK DITCH CHECK
- TEMPORARY BERM TYPE C
- SILT FENCE

NOTE:

LOCATION / LIMITS OF TEMPORARY EROSION CONTROL DEVICES MAY BE ADJUSTED TO MEET FIELD CONDIDTIONS AS DIRECTED BY THE ENGINEER.

SEE SUMMARY OF QUANTITIES SHEET X OF X FOR QUANTITIES AND ADDITIONAL LOCATION / LIMIT INFORMATION OF TEMPORARY EROSION CONTROL DEVICES.

EROSION CONTROL PLANS
SHEET 2 OF 2

STATE OF MISSOURI
WARNER D. SHERMAN II
NUMBER PE-26645
PROFESSIONAL ENGINEER

Warner Sherman
10/02/2023 2:47:42 PM
WARNER D. SHERMAN II - CIVIL
MO-PE-26645

DATE PREPARED	10/2/2023
ROUTE	V
STATE	MO
DISTRICT	SW
SHEET NO.	13
COUNTY	GREENE
JOB NO.	J7S3486
CONTRACT ID.	
PROJECT NO.	
BRIDGE NO.	A9119

DESCRIPTION

DATE

MISSOURI HIGHWAYS AND TRANSPORTATION COMMISSION

105 WEST CAPITOL
JEFFERSON CITY, MO 65102
1-888-ASK-MODOT (1-888-275-6636)

PAVEMENT MARKING LEGEND

SW - SOLID WHITE
SY - SOLID YELLOW
IY - INTERMITTENT YELLOW

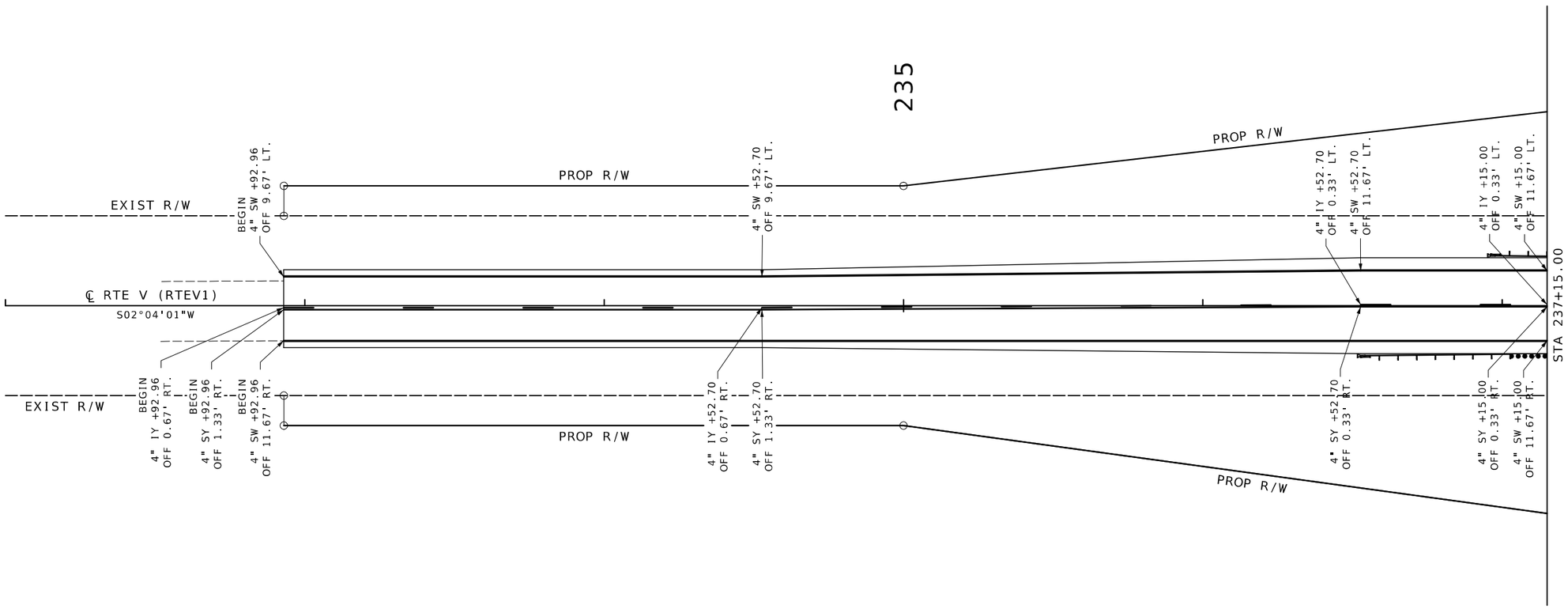

NOTE:

THE PAVEMENT MARKING LAYOUT AND EXACT LOCATIONS OF STRIPING MAY BE ADJUSTED TO MEET FEILD CONDITIONS AS APPROVED BY THE ENGINEER.

PAVEMENT MARKING SHALL BE IN ACCORDANCE WITH STANDARD PLAN 620.00.

SCALE

0 20 40 60

PAVEMENT MARKING PLANS
SHEET 1 OF 3

STATE OF MISSOURI
WARNER D. SHERMAN II
NUMBER PE-26645
PROFESSIONAL ENGINEER

Warner Sherman
10/02/2023 2:48:27 PM
WARNER D. SHERMAN II - CIVIL
MO-PE-26645

DATE PREPARED	10/2/2023
ROUTE	V
STATE	MO
DISTRICT	SW
SHEET NO.	14
COUNTY	GREENE
JOB NO.	J7S3486
CONTRACT ID.	
PROJECT NO.	
BRIDGE NO.	A9119

DATE	DESCRIPTION

MISSOURI HIGHWAYS AND TRANSPORTATION COMMISSION

105 WEST CAPITOL
JEFFERSON CITY, MO 65102
1-888-ASK-MODOT (1-888-275-6636)

PAVEMENT MARKING LEGEND

SW - SOLID WHITE
SY - SOLID YELLOW
IY - INTERMITTENT YELLOW

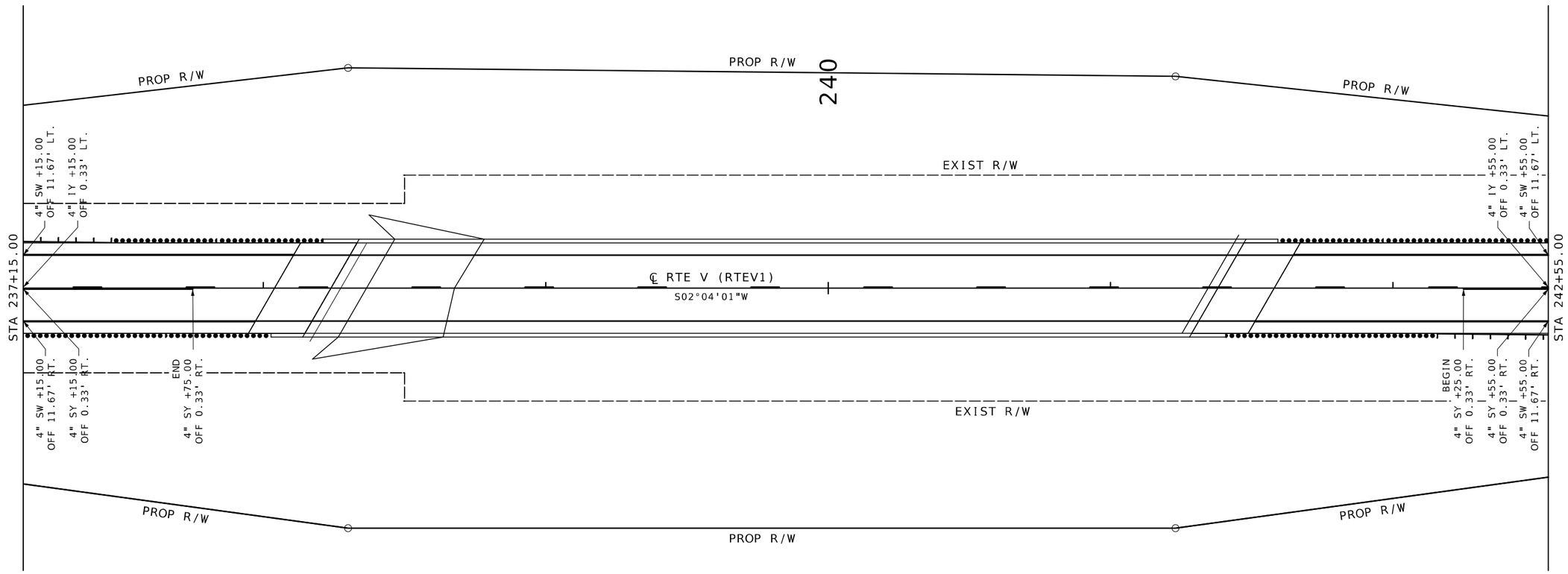

NOTE:

THE PAVEMENT MARKING LAYOUT AND EXACT LOCATIONS OF STRIPING MAY BE ADJUSTED TO MEET FEILD CONDITIONS AS APPROVED BY THE ENGINEER.

PAVEMENT MARKING SHALL BE IN ACCORDANCE WITH STANDARD PLAN 620.00.

SCALE

0 20 40 60

PAVEMENT MARKING PLANS
SHEET 2 OF 3

STATE OF MISSOURI
WARNER D. SHERMAN II
NUMBER PE-26645
PROFESSIONAL ENGINEER

Warner Sherman
10/02/2023 2:49:05 PM
WARNER D. SHERMAN II - CIVIL
MO-PE-26645

DATE PREPARED	10/2/2023
ROUTE	V
STATE	MO
DISTRICT	SW
SHEET NO.	15
COUNTY	GREENE
JOB NO.	J7S3486
CONTRACT ID.	
PROJECT NO.	
BRIDGE NO.	A9119

DATE	DESCRIPTION

MISSOURI HIGHWAYS AND TRANSPORTATION COMMISSION

105 WEST CAPITOL
JEFFERSON CITY, MO 65102
1-888-ASK-MODOT (1-888-275-6636)

PAVEMENT MARKING LEGEND

SW - SOLID WHITE
SY - SOLID YELLOW
IY - INTERMITTENT YELLOW

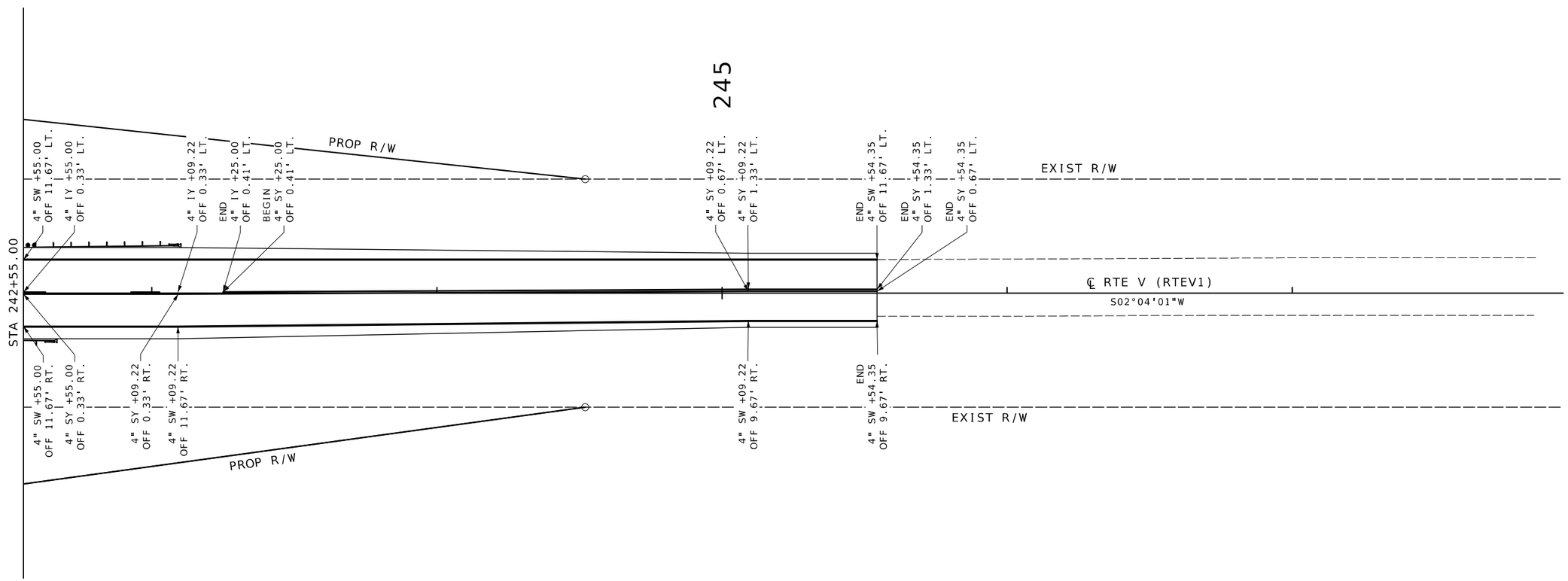

NOTE:

THE PAVEMENT MARKING LAYOUT AND EXACT LOCATIONS OF STRIPING MAY BE ADJUSTED TO MEET FEILD CONDITIONS AS APPROVED BY THE ENGINEER.

PAVEMENT MARKING SHALL BE IN ACCORDANCE WITH STANDARD PLAN 620.00.

SCALE

0 20 40 60

PAVEMENT MARKING PLANS
SHEET 3 OF 3

STATE OF MISSOURI
WARNER D. SHERMAN
NUMBER PE-26645
PROFESSIONAL ENGINEER

Warner Sherman
10/02/2023 2:49:45 PM
WARNER D. SHERMAN II - CIVIL
MO-PE-26645

DATE PREPARED	10/2/2023
ROUTE	V
STATE	MO
DISTRICT	SW
SHEET NO.	16
COUNTY	GREENE
JOB NO.	J7S3486
CONTRACT ID.	
PROJECT NO.	
BRIDGE NO.	A9119

DATE	DESCRIPTION

MISSOURI HIGHWAYS AND TRANSPORTATION COMMISSION
105 WEST CAPITOL
JEFFERSON CITY, MO 65102
1-888-ASK-MODOT (1-888-275-6636)

SEC/SUR 33 TWP 31N RGE 24W

(60'-85'-85'-80') PRESTRESSED CONCRETE NU-GIRDER SPANS

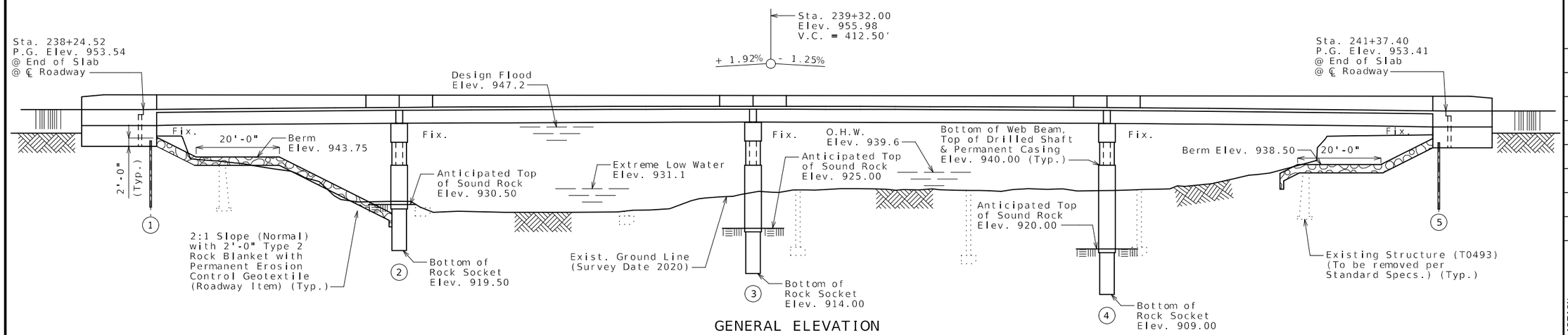

GENERAL ELEVATION

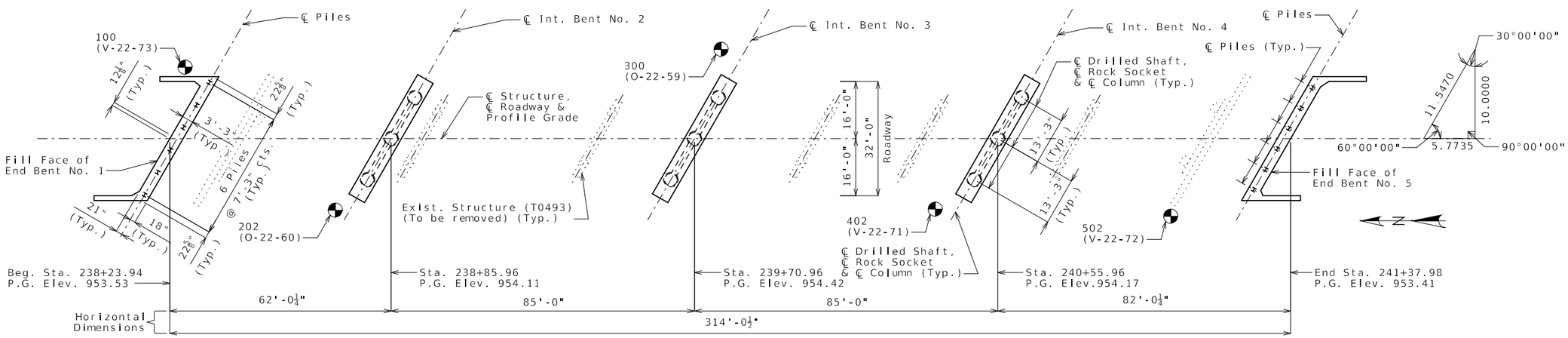

PLAN

Indicates location of borings.

Notice and Disclaimer Regarding Boring Log Data

The locations of all subsurface borings for this structure are shown on the plan sheet(s) for this structure. The boring data for all locations indicated, as well as any other boring logs or other factual records of subsurface data and investigations performed by the department for the design of the project, are shown on Sheet(s) No. 35 and may be included in the Electronic Bridge Deliverables. They will also be available from the Project Contact upon written request. No greater significance or weight should be given to the boring data depicted on the plan sheets than is given to the subsurface data available from the district or elsewhere.

The Commission does not represent or warrant that any such boring data accurately depicts the conditions to be encountered in constructing this project. A contractor assumes all risks it may encounter in basing its bid prices, time or schedule of performance on the boring data depicted here or those available from the district, or on any other documentation not expressly warranted, which the contractor may obtain from the Commission.

Notes:

For General Notes, Hydrologic Data, Foundation Data, Estimated Quantities, Estimated Quantities for Slab on Concrete NU-Girder and Location Sketch, see Sheet No. 2.

Roadway fill shall be completed to the final roadway section and up to the elevation of the bottom of the concrete beam within the limits of the substructure and for not less than 25 feet in back of the fill face of the end bents before any piles are driven for any bents falling within embankment section.

Existing roadway fill under the ends of the bridge shall be removed as shown. Removal of existing roadway fill will be considered completely covered by the contract unit price for roadway excavation.

B.M.1: ELEV. 949.99 NORTHING 1326002.1842, EASTING 560826.7524.

B.M.2: ELEV. 950.00 NORTHING 1325969.1369, EASTING 560566.6817.

BRIDGE: ROUTE V OVER CLEAR CREEK

ROUTE V FROM ROUTE U TO ROUTE 160
ABOUT 3.1 MILES SOUTH OF ROUTE U
BEGINNING STATION 238+23.94

Designed Sep. 2023
Detailed Sep. 2023
Checked Sep. 2023

Note: This drawing is not to scale. Follow dimensions.

STATE OF MISSOURI
TED S. KOESTER
NUMBER PE-2013000591
PROFESSIONAL ENGINEER
THIS SHEET HAS BEEN SIGNED, SEALED AND DATED ELECTRONICALLY.

DATE PREPARED	10/30/2023
ROUTE	V
STATE	MO
DISTRICT	BR
SHEET NO.	1
COUNTY	GREENE
JOB NO.	J7S3486
CONTRACT ID.	
PROJECT NO.	
BRIDGE NO.	A9119

DESCRIPTION | DATE

MISSOURI HIGHWAYS AND TRANSPORTATION COMMISSION
105 WEST CAPITOL
JEFFERSON CITY, MO 65102
1-888-ASK-MODOT (1-888-275-6636)

General Notes:

Design Specifications:

2020 AASHTO LRFD Bridge Design Specifications (9th Ed.)
2011 AASHTO Guide Specifications for LRFD Seismic Bridge Design (2nd Ed.) and 2014 Interim Revisions (Seismic Details)

Seismic Design Category = A

Design earthquake response special accelerated coefficient at 1.0 second period. SD1 = 0.123 g

Acceleration Coefficient (effective peak ground acceleration coefficient). As = 0.077 g

Design Loading:

Vehicular = HL-93
Future Wearing Surface = 35 lb/sf
Earth = 120 lb/cf
Equivalent Fluid Pressure = 45 lb/cf (Min.)
Superstructure: Simply-Suported, Non-Composite for dead load.
Continuous Composite for live load.

Design Unit Stresses:

Class B Concrete (Substructure)	f'c = 3,000 psi
Class B-1 Concrete (Barrier)	f'c = 4,000 psi
Class B-2 Concrete (Superstructure except Prestressed Girders and Barrier)	f'c = 4,000 psi
Reinforcing Steel (Grade 60)	fy = 60,000 psi
Structural Steel HP Pile (ASTM A709 Grade 50S)	fy = 50,000 psi

For prestressed girder stresses, see Sheets No. 16 thru 21.
For precast prestressed panel stresses, see sheet No. 23.

Neoprene Pads:

Neoprene bearing pads shall be 60 durometer and shall be in accordance with Sec 716.

Joint Filler:

All joint filler shall be in accordance with Sec 1057 for preformed sponge rubber expansion and partition joint filler, except as noted.

Reinforcing Steel:

Minimum clearance to reinforcing steel shall be 1 1/2", unless otherwise shown.

Traffic Handling:

Structure to be closed during construction. Traffic to be maintained on other routes during construction. See Roadway plans for traffic control.

MoDOT Construction personnel will indicate the type of joint filler used under the precast panels for this structure:

☐ Constant Joint Filler
☐ Variable Joint Filler

Estimated Quantities for Slab on Concrete NU-Girder

Item		Total
Class B-2 Concrete	cu. yard	354
Reinforcing Steel (Epoxy Coated)	pound	93,170

The table of Estimated Quantities for Slab on Concrete NU-Girder represents the quantities used by the State in preparing the cost estimate for concrete slabs. The area of the concrete slab will be measured to the nearest square yard longitudinally from end of slab to end of slab and transversely from out to out of bridge slab (or with the horizontal dimensions as shown on the plan of slab). Payment for prestressed panels, conventional forms, all concrete and epoxy coated reinforcing steel will be considered completely covered by the contract unit price for the slab. Variations may be encountered in the estimated quantities but the variations cannot be used for an adjustment in the contract unit price.

Method of forming the slab shall be as shown on the plans and in accordance with Sec 703. All hardware for forming the slab to be left in place as a permanent part of the structure shall be coated in accordance with ASTM A123 or ASTM B633 with a thickness class SC 4 and a finish type I, II or III.

The Estimated Quantities for Slab on Concrete NU-Girder are based on skewed precast prestressed end panels.

Class B-2 Concrete quantity is based on minimum top flange thickness and minimum joint material thickness.

The prestressed panel quantities are not included in the table of Estimated Quantities for Slab on Concrete NU-Girder.

Estimated Quantities

Item		Substr.	Superstr.	Total
Class 1 Excavation	cu. yard	100		100
Removal of Bridges (T0493)	lump sum			1
Bridge Approach Slab (Minor)	sq. yard		144	144
Drilled Shafts (4 ft. 0 in. Dia.)	linear foot	133.5		133.5
Rock Sockets (3 ft. 6 in. Dia.)	linear foot	99.0		99.0
Video Camera Inspection	each	9		9
Foundation Inspection Holes	linear foot	189.0		189.0
Sonic Logging Testing	each	9		9
Galvanized Structural Steel Piles (12 in.)	linear foot	288		288
Pre-Bore For Piling	linear foot	252		252
Pile Point Reinforcement	each	12		12
Class B Concrete (Substructure)	cu. yard	157.1		157.1
Type D Barrier	linear foot		676	676
Slab on Concrete NU-Girder	sq. yard		1205	1205
NU 35, Prestressed Concrete NU-Girder	linear foot		1236	1236
Reinforcing Steel (Bridges)	pound	45,790		45,790
Vertical Drain at End Bents	each			2
Plain Neoprene Bearing Pad	each		8	8
Laminated Neoprene Bearing Pad	each		24	24

All concrete above the construction joint in the end bents is included in the Estimated Quantities for Slab on Concrete NU-Girder.

All reinforcement in the end bents is included in the Estimated Quantities for Slab on Concrete NU-Girder.

All reinforcement in the intermediate bent concrete diaphragms except reinforcement embedded in the beam cap is included in the Estimated Quantities for Slab on Concrete NU-Girder.

All concrete above the intermediate beam cap is included in the Estimated Quantities for Slab on Concrete NU-Girder.

Cost of L4x4 ASTM A709 Grade 36 HP pile anchors and 3/4-inch diameter ASTM F3125 Grade A325 Type 1 bolts, complete in place, will be considered completely covered by the contract unit price for Galvanized Structural Steel Piles (12 in.).

Hydrologic Data

Drainage Area = 69.6 mi²
Design Flood Frequency = 50 years
Design Flood Discharge = 16,400 cfs
Design Flood (D.F.) Elevation = 947.2
Base Flood (100-year)
Base Flood Elevation = 948.0
Base Flood Discharge = 19,200 cfs
Estimated Backwater = 1.00 ft
Average Velocity thru Opening = 5.8 ft/s
Freeboard (50-year)
Freeboard = 2.0 ft
Roadway Overtopping
Overtopping Flood Discharge = 13,600 cfs
Overtopping Flood Frequency = 25 years
Overtopping Flood Elevation = 945.0

Roadway overtopping occurs near Sta. 246+50 (±).

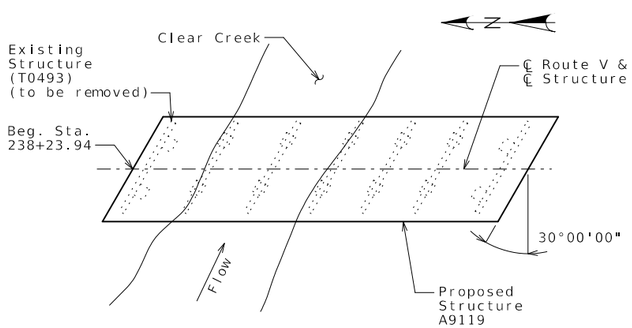

LOCATION SKETCH

Foundation Data

Type	Design Data		Bent Number 1	2	3	4	5
Load Bearing Pile	Pile Type and Size		HP 12x53	--	--	--	HP 12x53
	Number	ea	6	--	--	--	6
	Approximate Length Per Each	ft	24	--	--	--	24
	Pile Point Reinforcement	ea	All	--	--	--	All
	Min. Galvanized Penetration (Elev.)	ft	Full Length	--	--	--	Full Length
	Pile Driving Verification Method		DF	--	--	--	DF
	Resistance Factor		0.4	--	--	--	0.4
	Minimum Nominal Axial Compressive Resistance	kip	387	--	--	--	444
Rock Socket	Layer 1: Number	ea	--	3	3	3	--
	Layer 1: Foundation Material		--	Rock	Rock	Rock	--
	Layer 1: Elevation Range	ft	--	927.5-899.1	922.0-894.9	917.0-894.2	--
	Layer 1: Minimum Nominal Axial Compressive Resistance (Side Resistance)	ksf	--	16.1	17.7	18.7	--
	Minimum Nominal Axial Compressive Resistance (Tip Resistance)	ksf	--	0.0	0.0	0.0	--

Load Bearing Pile:

DF = FHWA-modified Gates Dynamic Pile Formula

$$\text{Minimum Nominal Axial Compressive Resistance} = \frac{\text{Maximum Factored Loads}}{\text{Resistance Factor}}$$

All piles shall be galvanized down to the minimum galvanized penetration (elevation).

Pile point reinforcement need not be galvanized. Shop drawings will not be required for pile point reinforcement.

The contractor shall make every effort to achieve the minimum galvanized penetration (elevation) shown on the plans for all piles. Deviations in penetration less than 5 feet of the minimum will be considered acceptable provided the contractor makes the necessary corrections to ensure the minimum penetration is achieved on subsequent piles.

Prebore for piles at Bents No. 1 & 5 to elevation 925.00.

$$\text{Rock Socket (Drilled Shaft): Minimum Nominal Axial Compressive Resistance} = \frac{\text{Maximum Factored Loads}}{\text{Resistance Factors}}$$
(Side Resistance + Tip Resistance)

Detailed Sep. 2023
Checked Sep. 2023

Note: This drawing is not to scale. Follow dimensions.

STATE OF MISSOURI
TED S. KOESTER
NUMBER PE-2013000591
PROFESSIONAL ENGINEER
THIS SHEET HAS BEEN SIGNED, SEALED AND DATED ELECTRONICALLY.

DATE PREPARED 10/30/2023

ROUTE	STATE
V	MO
DISTRICT	SHEET NO.
BR	2

COUNTY: GREENE
JOB NO.: J7S3486
CONTRACT ID.
PROJECT NO.
BRIDGE NO.: A9119

DATE	DESCRIPTION

MISSOURI HIGHWAYS AND TRANSPORTATION COMMISSION
105 WEST CAPITOL
JEFFERSON CITY, MO 65102
1-888-ASK-MODOT (1-888-275-6636)

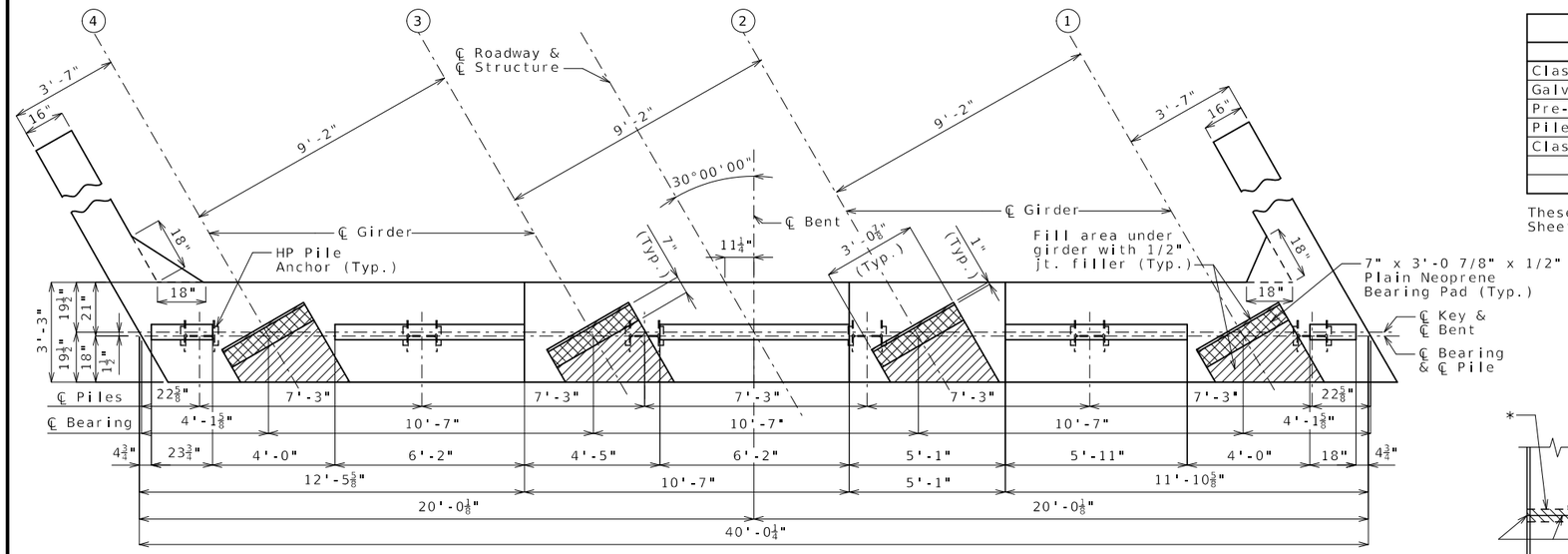

PLAN OF BEAM SHOWING DIMENSIONS

Substructure Quantity Table for Bent No. 1		
Item		Quantity
Class 1 Excavation	cu. yard	50
Galvanized Structural Steel Piles (12" in.)	linear foot	144
Pre-Bore for Piling	linear foot	126
Pile Point Reinforcement	each	6
Class B Concrete (Substructure)	cu. yard	19.2

These quantities are included in the Estimated Quantities table on Sheet No. 2.

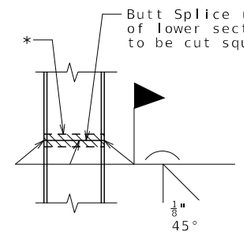

STEEL PILE SPLICE

(If required)

* Galvanizing material shall be omitted or removed one inch clear of weld locations in accordance with Sec 702.

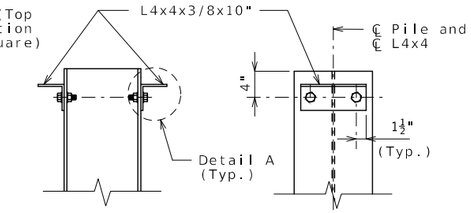

DETAILS OF HP PILE ANCHORS

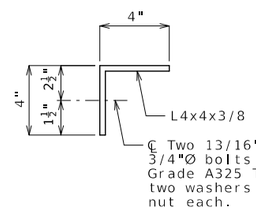

DETAIL A

Angles shall be coated with a minimum of two coats of non-aluminum epoxy mastic primer to provide a dry film thickness of 4 mils minimum, 8 mils maximum, or galvanized in accordance with Sec 1081. Bolts, washers and nuts shall be galvanized in accordance with AASHTO M 232 (ASTM A153), Class C.

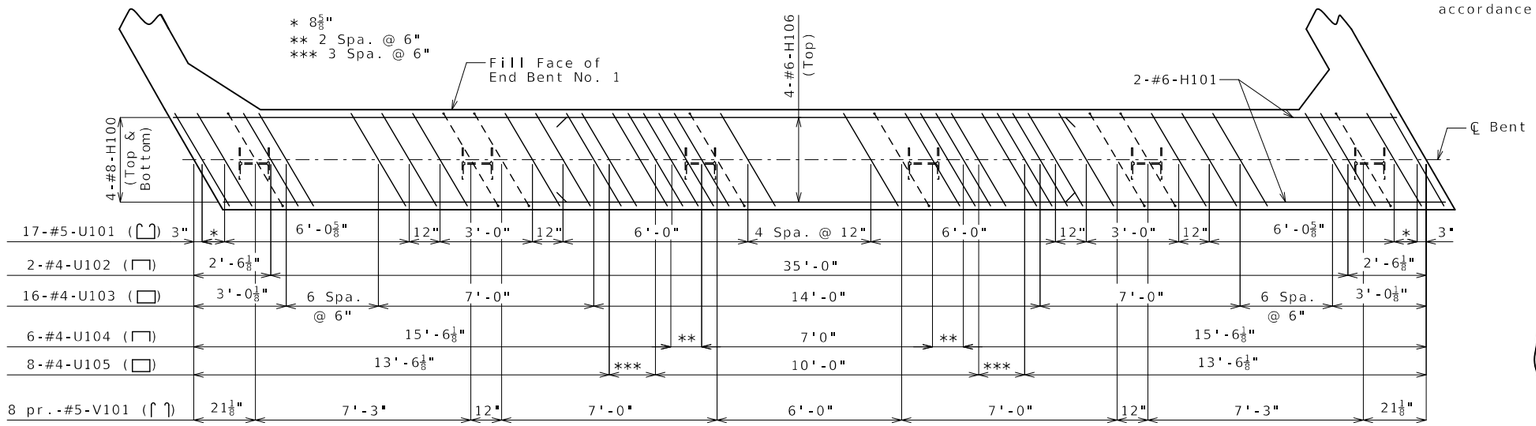

PLAN OF BEAM SHOWING REINFORCEMENT

Keys, Steps, and H-Pile Anchors no shown for clarity.

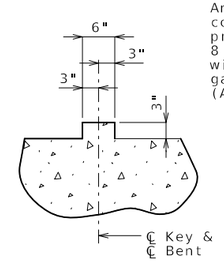

SECTION THRU KEY

Notes:

For details of End Bent No. 1 not shown, see Sheets No. 4 & 5.

Reinforcing steel shall be shifted to clear piles. U bars shall clear piles by at least 1 1/2 inches.

The U bars and pairs of V bars shall be placed parallel to centerline of Roadway.

For details of Vertical Drain at End Bents, see Sheet No. 6.

DETAILS OF END BENT NO. 1

Detailed Sep. 2023
Checked Sep. 2023

Note: This drawing is not to scale. Follow dimensions.

STATE OF MISSOURI
TED S. KOESTER
NUMBER PE-2013000591
PROFESSIONAL ENGINEER
THIS SHEET HAS BEEN SIGNED, SEALED AND DATED ELECTRONICALLY.

DATE PREPARED 10/30/2023

ROUTE	STATE
V	MO
DISTRICT	SHEET NO.
BR	3

COUNTY GREENE

JOB NO. J7S3486

CONTRACT ID.

PROJECT NO.

BRIDGE NO. A9119

DESCRIPTION

DATE

MISSOURI HIGHWAYS AND TRANSPORTATION COMMISSION
105 WEST CAPITOL
JEFFERSON CITY, MO 65102
1-888-ASK-MODOT (1-888-275-6636)

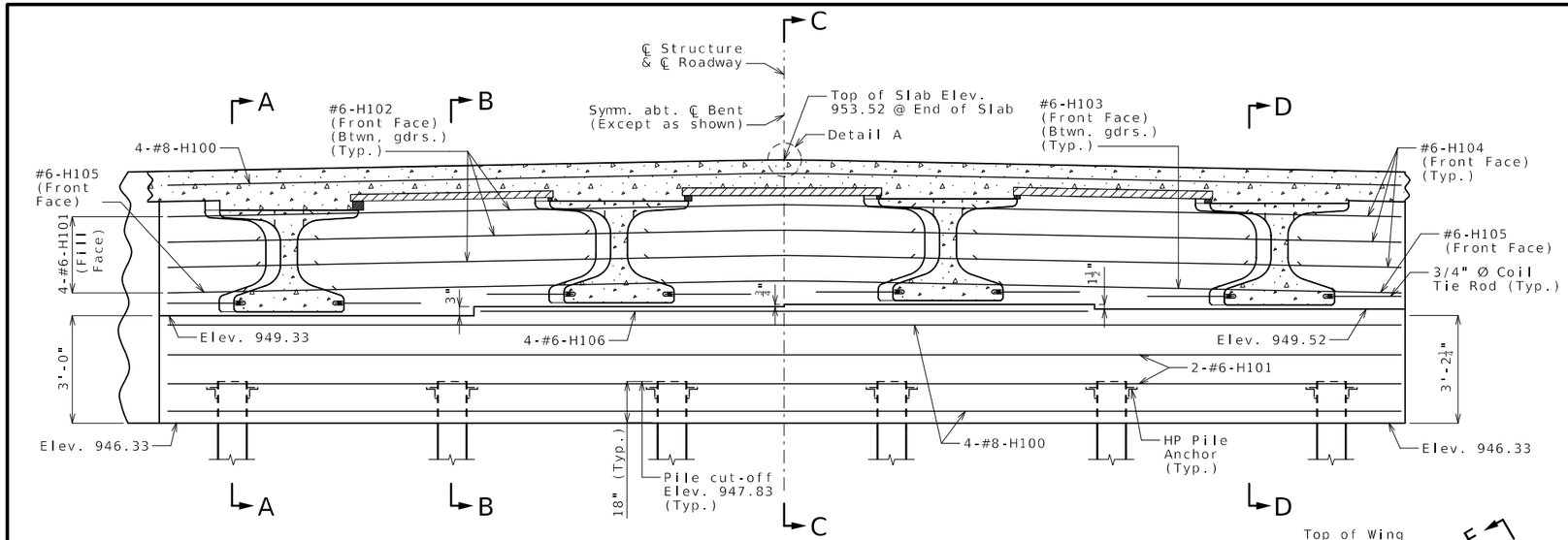

SECTION NEAR END BENT

Notes:

For Sections A-A, B-B, C-C & D-D and Elevations E-E & F-F, see Sheet No. 5.

For details of End Bent No. 1 not shown, see Sheets No. 3 & 5.

All concrete in the end bent above top of beam and below top of slab shall be Class B-2.

Strands at end of girders shall be field bent or, if necessary, cut in field to maintain 1 1/2" minimum clearance to fill face of end bent.

For location of Coil Ties & #5-H109 Strand Tie Bars, see Sheets No. 16 & 17.

The Pairs of V bars and U bars shall be placed parallel to centerline of Roadway.

The #6-F101 & #6-F103 bars shall be bent in field to clear girders.

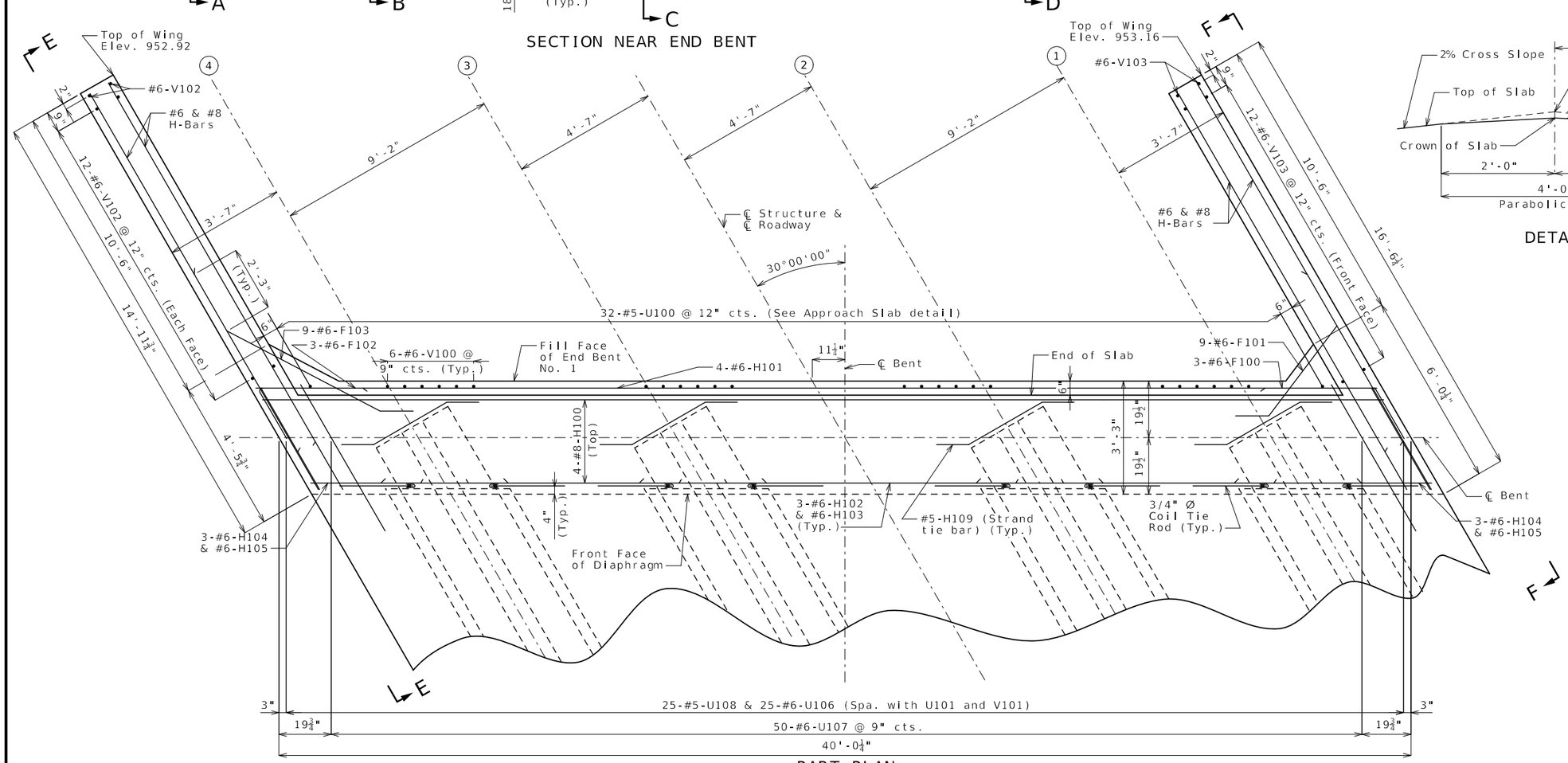

PART PLAN

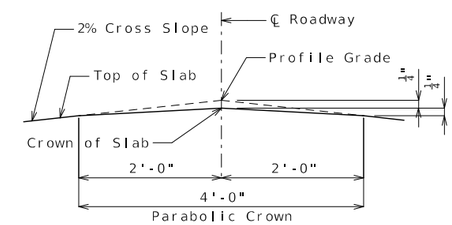

DETAIL A

DETAILS OF END BENT NO. 1

Detailed Sep. 2023
Checked Sep. 2023

Note: This drawing is not to scale. Follow dimensions.

STATE OF MISSOURI
TED S. KOESTER
NUMBER
PE-2013000591
PROFESSIONAL ENGINEER

THIS SHEET HAS BEEN SIGNED, SEALED AND DATED ELECTRONICALLY.

DATE PREPARED	10/30/2023
ROUTE V	STATE MO
DISTRICT BR	SHEET NO. 4
COUNTY	GREENE
JOB NO.	J7S3486
CONTRACT ID.	
PROJECT NO.	
BRIDGE NO.	A9119

DESCRIPTION

DATE

MISSOURI HIGHWAYS AND TRANSPORTATION COMMISSION

105 WEST CAPITOL
JEFFERSON CITY, MO 65102
1-888-ASK-MODOT (1-888-275-6636)

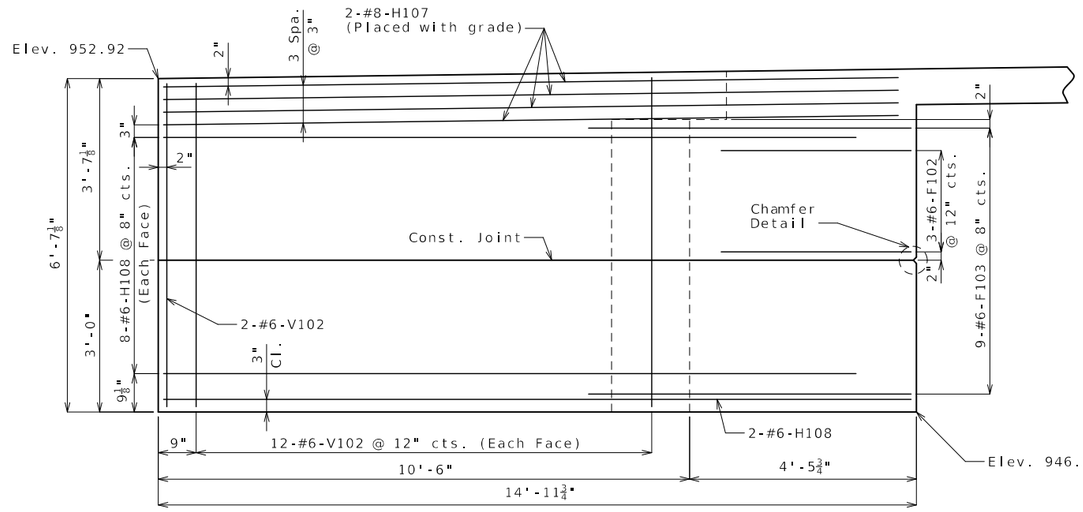

ELEVATION E-E

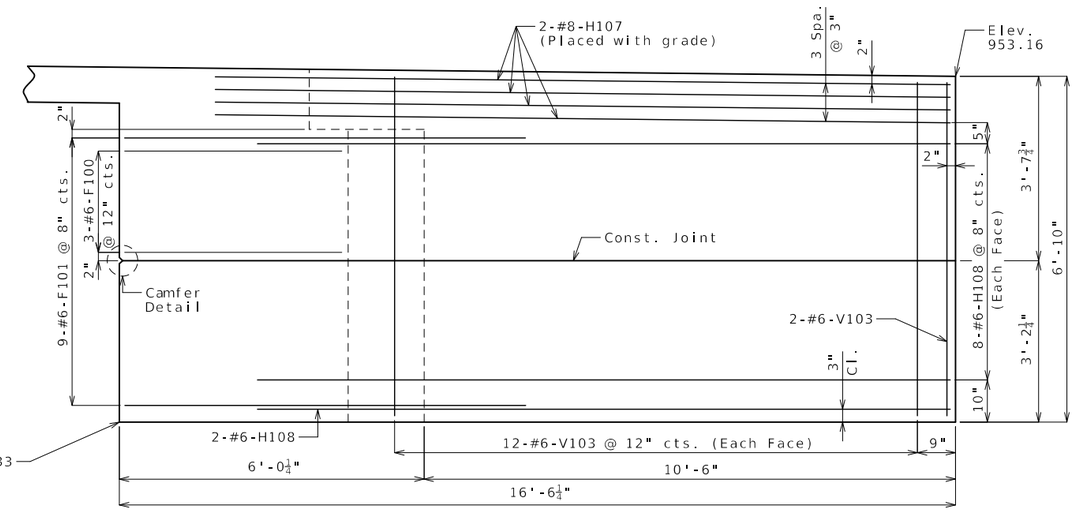

ELEVATION F-F

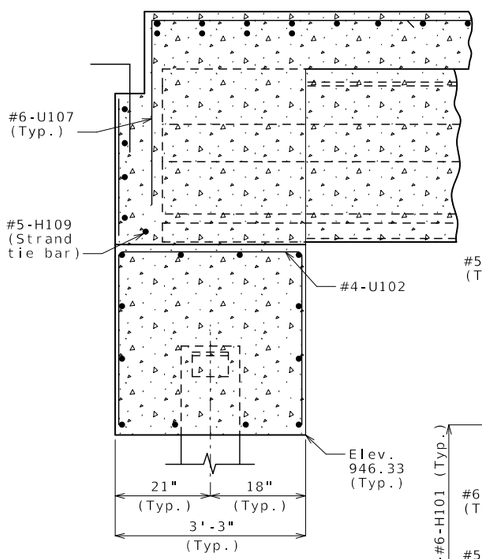

SECTION A-A

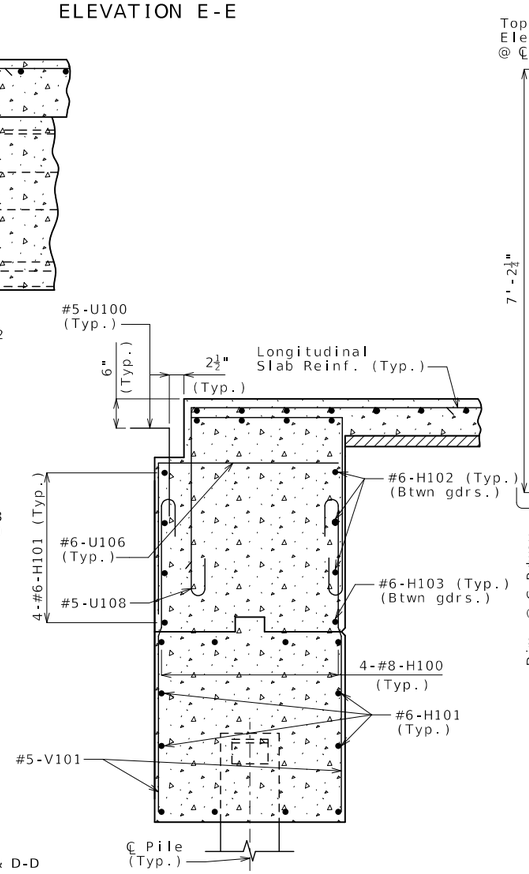

SECTION B-B

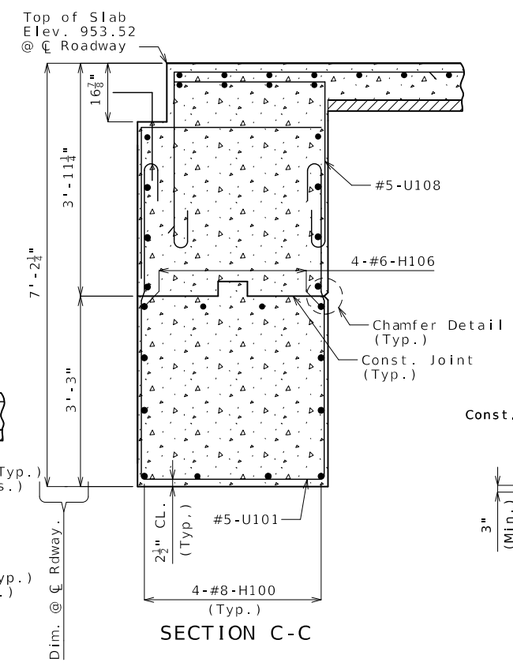

SECTION C-C

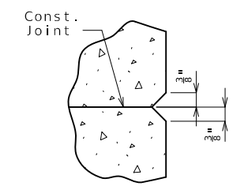

CHAMFER DETAIL

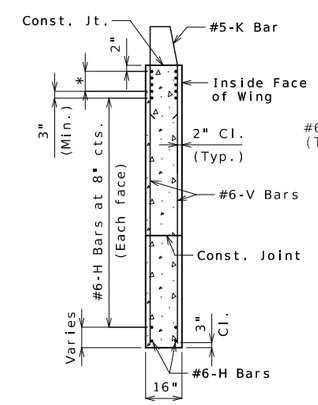

TYPICAL SECTION
THRU WING

* #8-H Bars at 3" cts.
(Each face)(Place with grade)

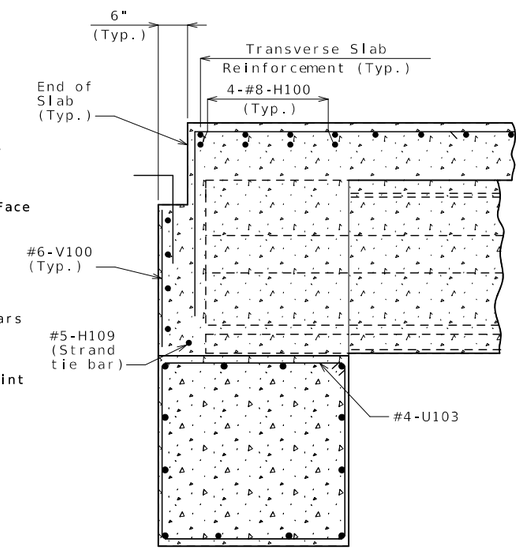

SECTION D-D

Notes:

Work this sheet with Sheets No. 3 & 4.

For Locations of Sections A-A, B-B, C-C, & D-D and Elevations E-E & F-F see Sheet No. 4.

DETAILS OF END BENT NO. 1

Detailed Sep. 2023
Checked Sep. 2023

Note: This drawing is not to scale. Follow dimensions.

STATE OF MISSOURI
TED S. KOESTER
NUMBER
PE-2013000591
PROFESSIONAL ENGINEER

THIS SHEET HAS BEEN SIGNED, SEALED AND DATED ELECTRONICALLY.

DATE PREPARED	10/30/2023
ROUTE	V
STATE	MO
DISTRICT	BR
SHEET NO.	5
COUNTY	GREENE
JOB NO.	J7S3486
CONTRACT ID.	
PROJECT NO.	
BRIDGE NO.	A9119

DESCRIPTION

DATE

MISSOURI HIGHWAYS AND TRANSPORTATION COMMISSION

105 WEST CAPITOL
JEFFERSON CITY, MO 65102
1-888-ASK-MODOT (1-888-275-6636)

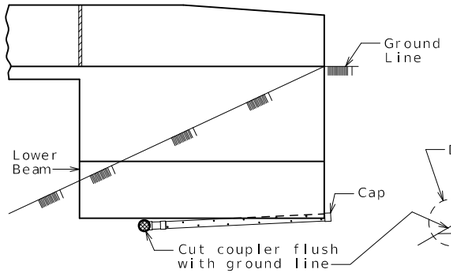

ELEVATION OF WING

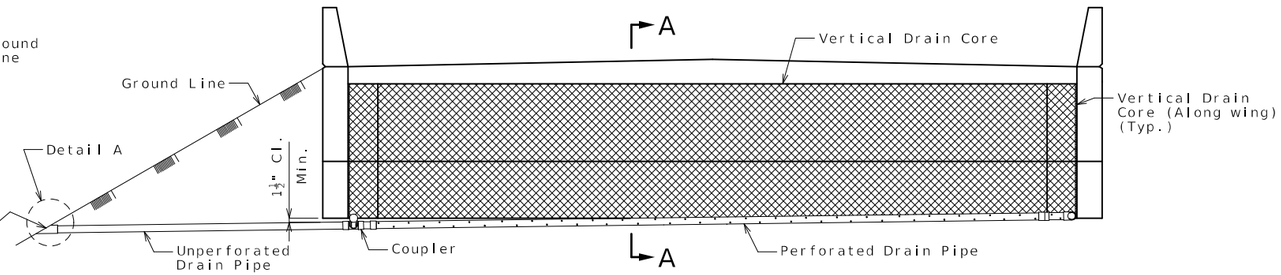

ELEVATION OF END BENT

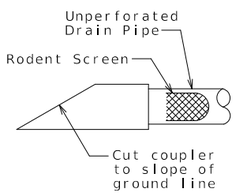

DETAIL A

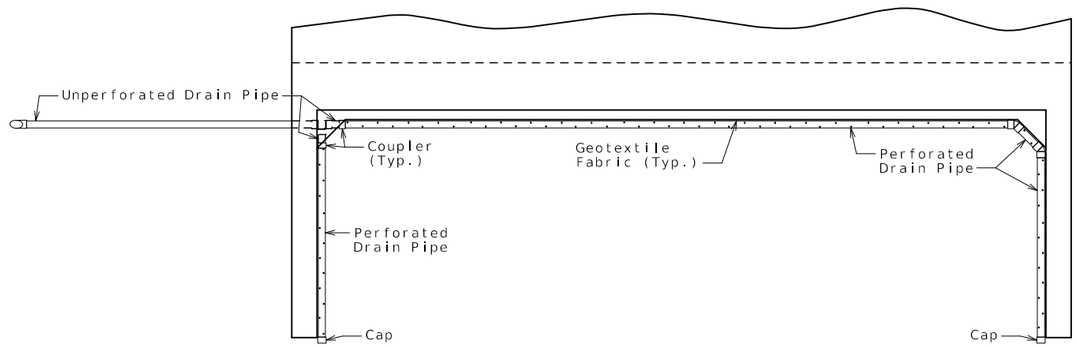

PLAN OF END BENT

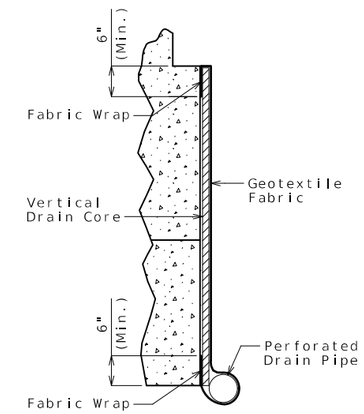

PART SECTION A-A
(Section thru wing similar)

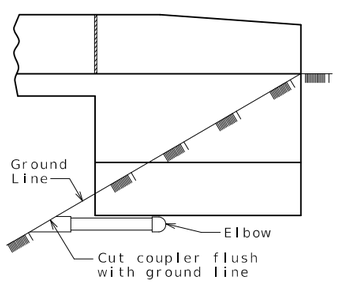

ELEVATION OF WING

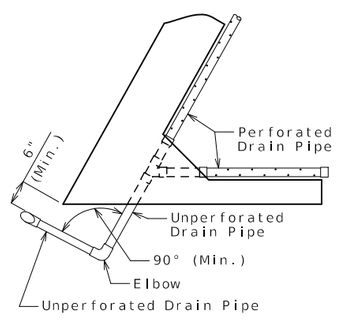

PART PLAN

OPTIONAL TURNED DRAIN
(Use only when straight drain is not practical.)

General Notes:

All drain pipe shall be sloped 1 to 2 percent.

Drain pipe may be either 6-inch diameter corrugated metallic-coated steel pipe underdrain, 4-inch diameter corrugated polyvinyl chloride (PVC) drain pipe, or 4-inch diameter corrugated polyethylene (PE) drain pipe.

Drain pipe shall be placed at fill face of end bent and inside face of wings. The pipe shall slope to lowest grade of ground line, also missing the lower beam of end bent by a minimum of 1 1/2 inches.

Perforated pipe shall be placed at fill face side and inside face of wings at the bottom of end bent and plain pipe shall be used where the vertical drain ends to the exit at ground line.

VERTICAL DRAIN AT END BENTS

(Squared end bent shown, skewed end bent similar)

Detailed Sep. 2023
Checked Sep. 2023

Note: This drawing is not to scale. Follow dimensions.

STATE OF MISSOURI
TED S. KOESTER
NUMBER PE-2013000591
PROFESSIONAL ENGINEER
THIS SHEET HAS BEEN SIGNED, SEALED AND DATED ELECTRONICALLY.

DATE PREPARED	10/30/2023
ROUTE	V
STATE	MO
DISTRICT	BR
SHEET NO.	6
COUNTY	GREENE
JOB NO.	J7S3486
CONTRACT ID.	
PROJECT NO.	
BRIDGE NO.	A9119

DESCRIPTION

DATE

MISSOURI HIGHWAYS AND TRANSPORTATION COMMISSION
105 WEST CAPITOL
JEFFERSON CITY, MO 65102
1-888-ASK-MODOT (1-888-275-6636)

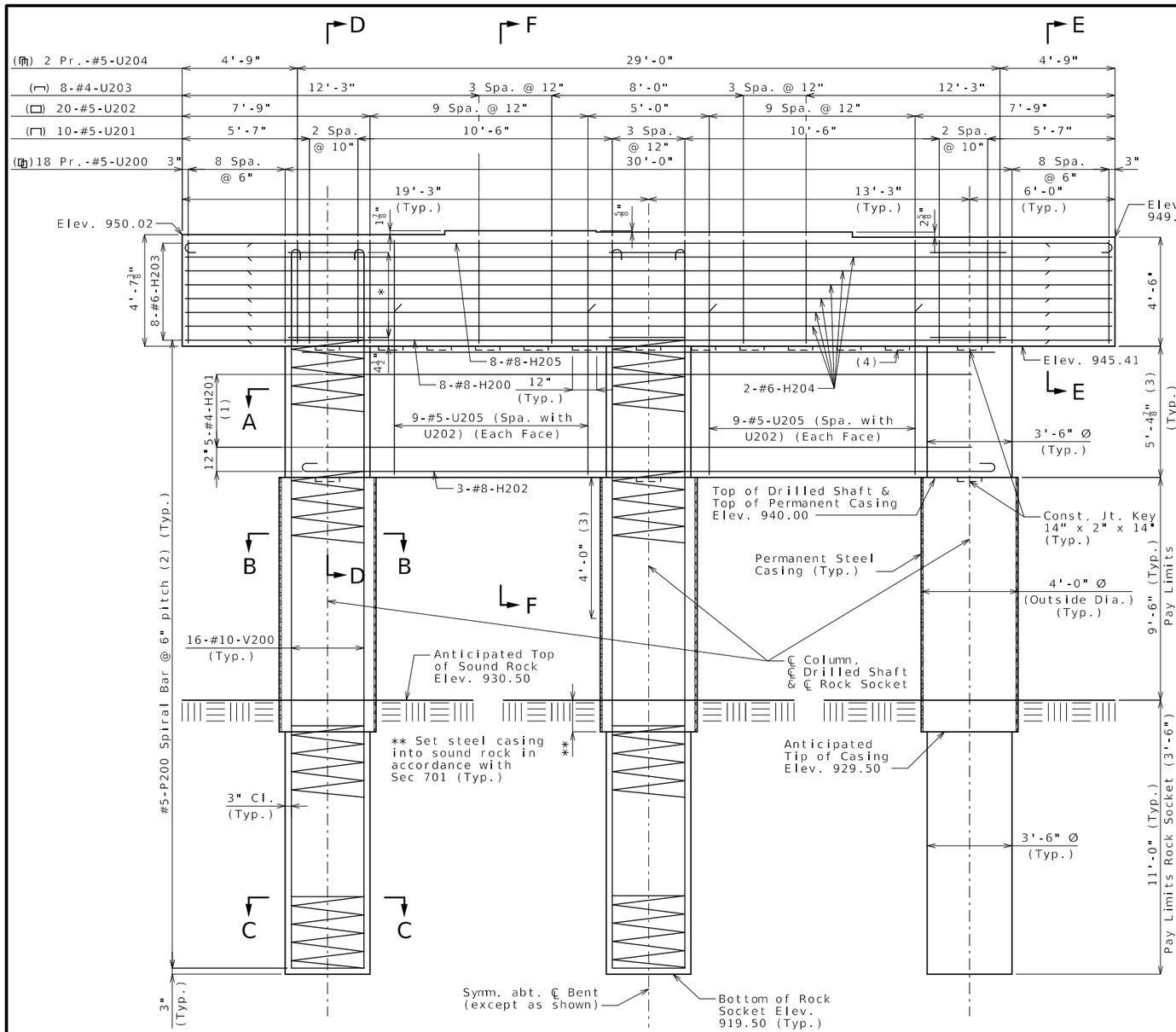

ELEVATION

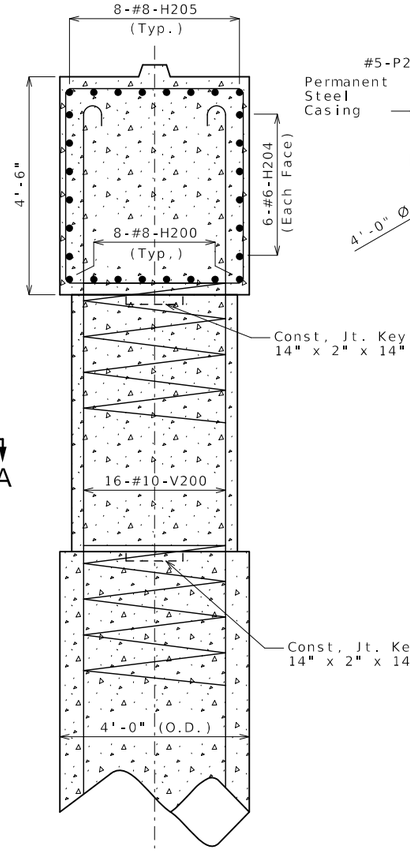

SECTION D-D

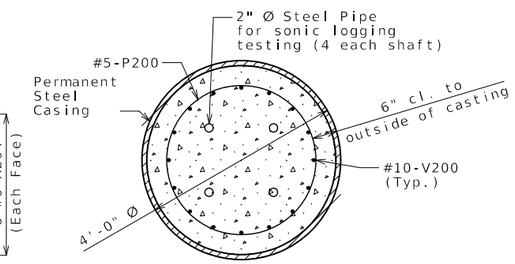

SECTION B-B

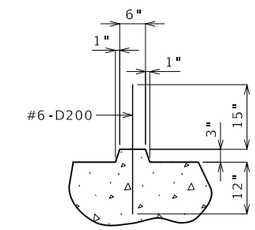

SECTION THRU KEY

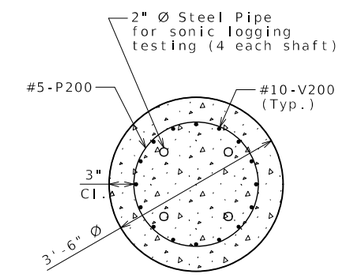

SECTION C-C

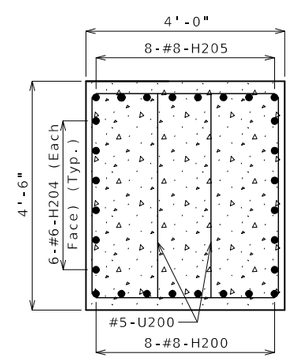

SECTION E-E

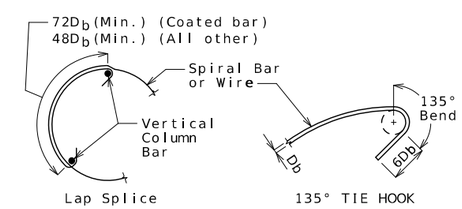

INTERMEDIATE SPLICE OF SPIRALS

Standard 135-degree tie hooks that engage vertical column reinforcing bars shall be provided at each end of splice.

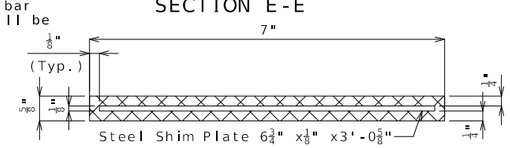

TYPICAL SECTION THRU LAMINATED NEOPRENE BEARING PAD 7" X 5/8" x 3'-0 7/8"

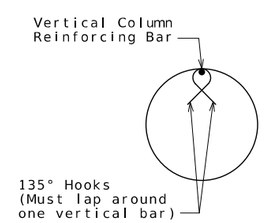

SEISMIC STIRRUP BAR
(P201)

Notes:

Sonic logging shall be performed on all drilled shafts & rock sockets.

All reinforcement in drilled shafts & rock sockets is included in the Substructure Quantities.

At the contractor's option, the hooks of vertical bars embedded in the beam cap may be oriented inward or outward.

For steps 2 inches or more, use 2 1/4 x 1/2 inch joint filler up vertical face.

Work this sheet with Sheet No. 8.

∗ 15-#4-P201 @ 3" cts. (Typ.)

(1) Spa. @ abt. 12" (Each Face)

(2) Extend top of spiral bar 1½" into beam.

(3) Lapping of spirals will not be permitted in these regions. If lapping is unavoidable, a mechanical bar splice will be required. No additional payment will be made for any mechanical connections used.

(4) Const. Jt. Key 12" x2" x7" @ abt. 2'-0" cts. (Between Columns) (Typ.)

DETAILS OF INTERMEDIATE BENT NO. 2

Detailed Sep. 2023
Checked Sep. 2023

Note: This drawing is not to scale. Follow dimensions.

STATE OF MISSOURI
TED S. KOESTER
NUMBER PE-2013000591
PROFESSIONAL ENGINEER
THIS SHEET HAS BEEN SIGNED, SEALED AND DATED ELECTRONICALLY.

DATE PREPARED	10/30/2023
ROUTE V	STATE MO
DISTRICT BR	SHEET NO. 7
COUNTY	GREENE
JOB NO.	J7S3486
CONTRACT ID.	
PROJECT NO.	
BRIDGE NO.	A9119

DESCRIPTION

DATE

MISSOURI HIGHWAYS AND TRANSPORTATION COMMISSION
105 WEST CAPITOL
JEFFERSON CITY, MO 65102
1-888-ASK-MODOT (1-888-275-6636)

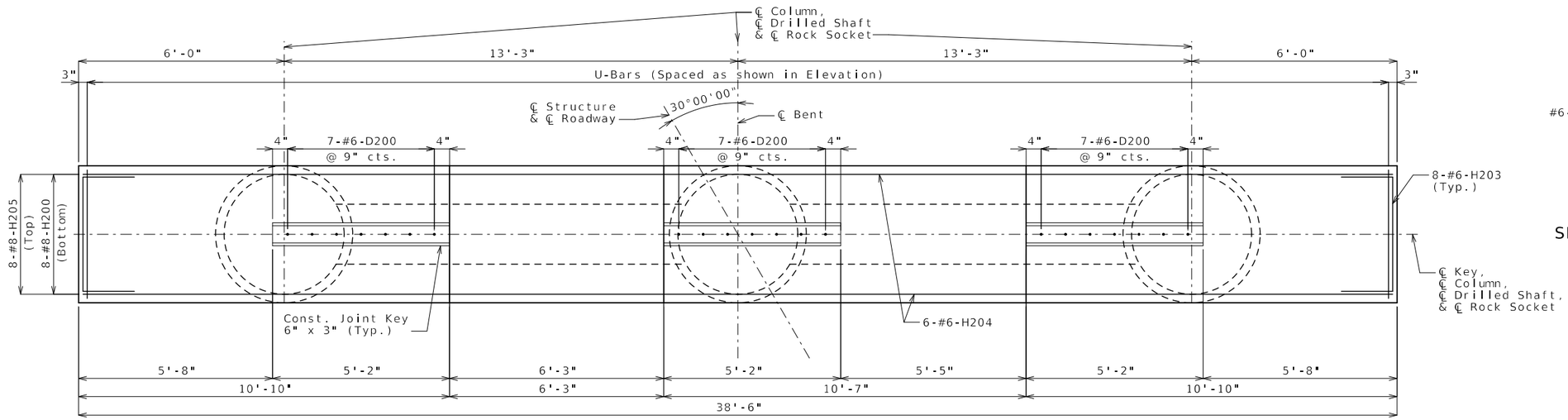

PLAN SHOWING REINFORCEMENT

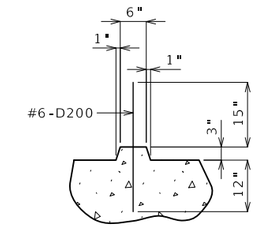

SECTION THRU KEY

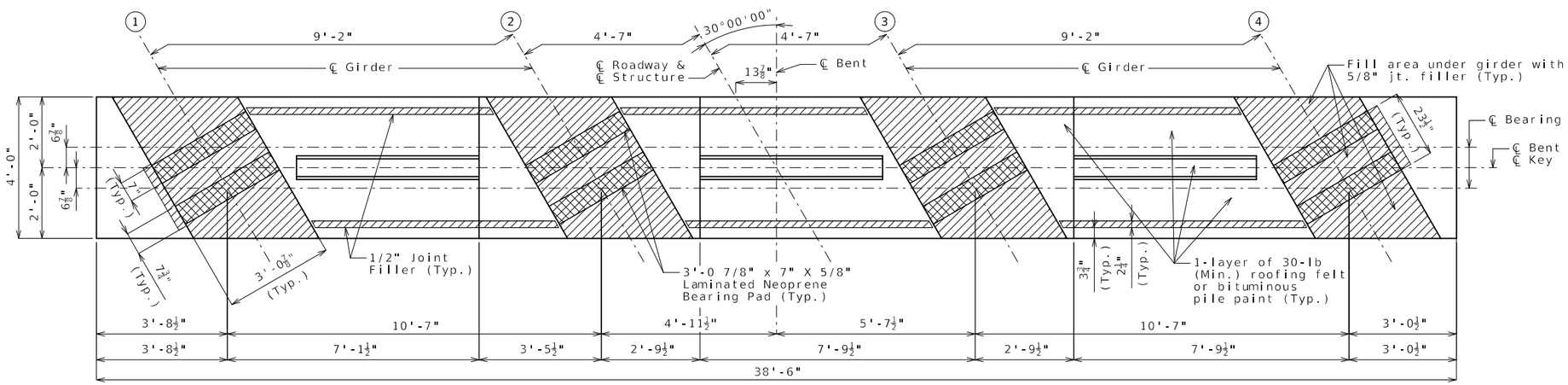

PLAN OF BEAM

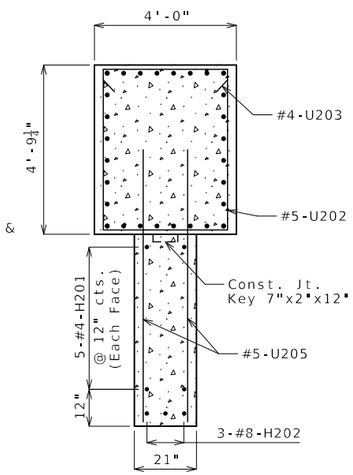

SECTION F-F

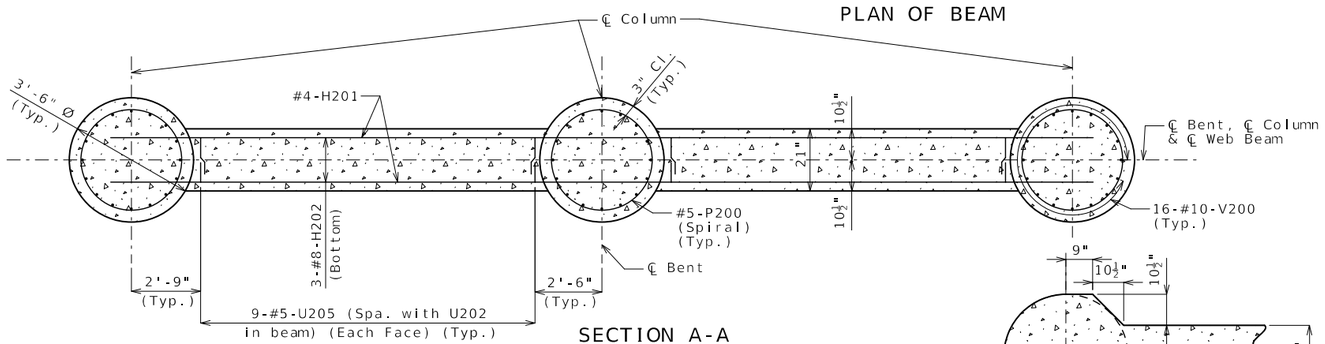

SECTION A-A

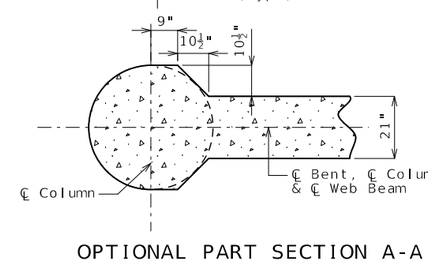

OPTIONAL PART SECTION A-A

Substructure Quantity Table for Bent No. 2		
Item		Quantity
Drilled Shafts (4 ft. 0 in. Dia.)	linear foot	28.5
Rock Sockets (3 ft. 6 in. Dia.)	linear foot	33.0
Video Camera Inspection	each	3
Foundation Inspection Holes	linear foot	63.0
Sonic Logging Testing	each	3
Class B Concrete (Substructure)	cu. yard	39.3
Reinforcing Steel (Bridges)	pound	15,380

These quantities are included in the Estimated Quantities table on Sheet No. 2.

Notes:

Thickness of permanent steel casing shall be in accordance with Sec 701.

An additional 4 feet has been added to each #10-V200 bar length and height of each #5-P200 bar in the quantities, if required, for possible change in drilled shaft or rock socket length. If not required, the additional V-bar and P-bar length shall be cut off.

The tip of casing shall not extend into the rock socket elevation range reported in the Foundation Data table without approval by the engineer.

DETAILS OF INTERMEDIATE BENT NO. 2

Detailed Sep. 2023
Checked Sep. 2023

Note: This drawing is not to scale. Follow dimensions.

STATE OF MISSOURI
TED S. KOESTER
NUMBER PE-2013000591
PROFESSIONAL ENGINEER
THIS SHEET HAS BEEN SIGNED, SEALED AND DATED ELECTRONICALLY.

DATE PREPARED	
10/30/2023	
ROUTE: V	STATE: MO
DISTRICT: BR	SHEET NO.: 8
COUNTY: GREENE	
JOB NO.: J7S3486	
CONTRACT ID.	
PROJECT NO.	
BRIDGE NO.: A9119	

DATE	DESCRIPTION

MISSOURI HIGHWAYS AND TRANSPORTATION COMMISSION
105 WEST CAPITOL
JEFFERSON CITY, MO 65102
1-888-ASK-MODOT (1-888-275-6636)

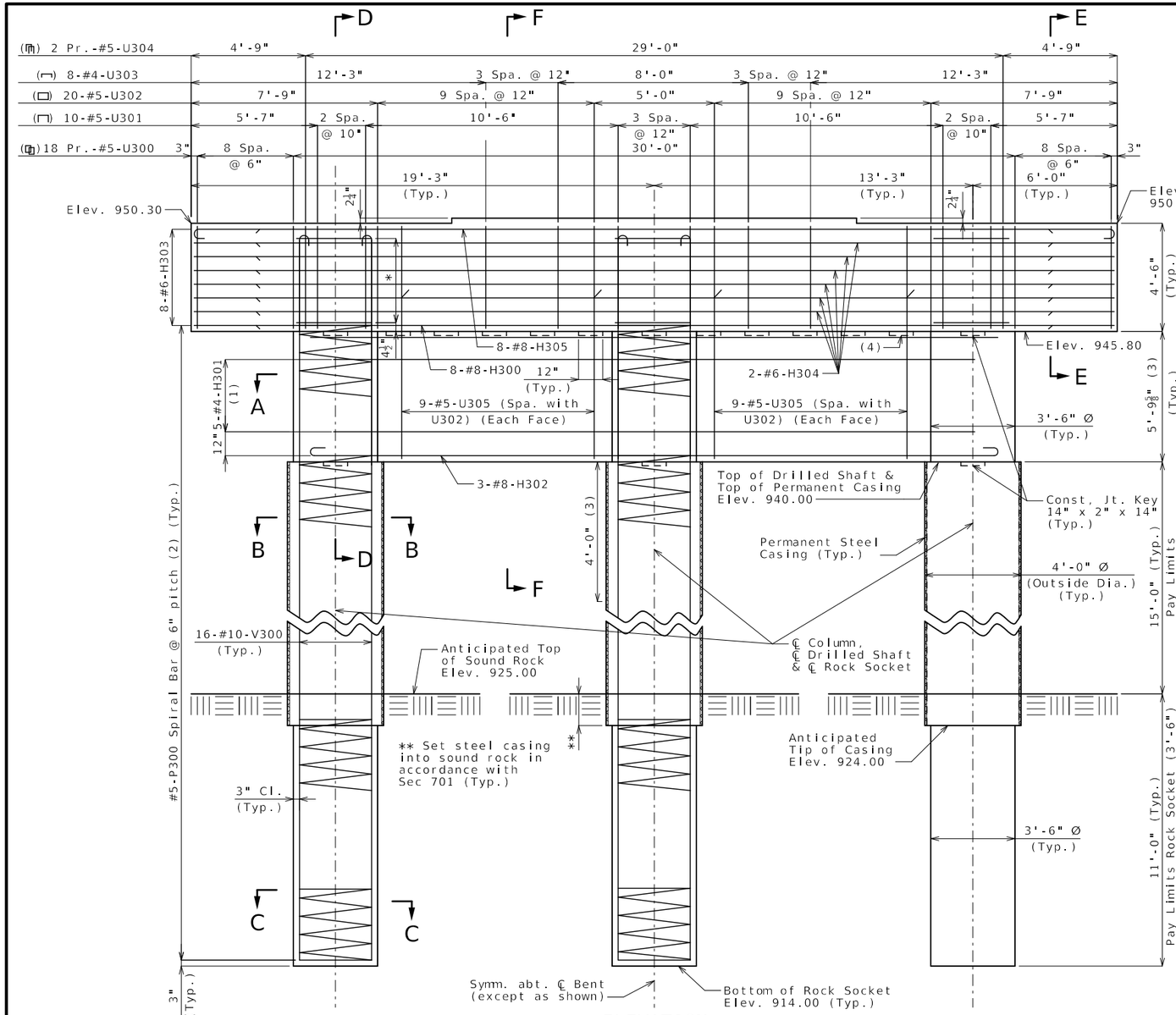

ELEVATION

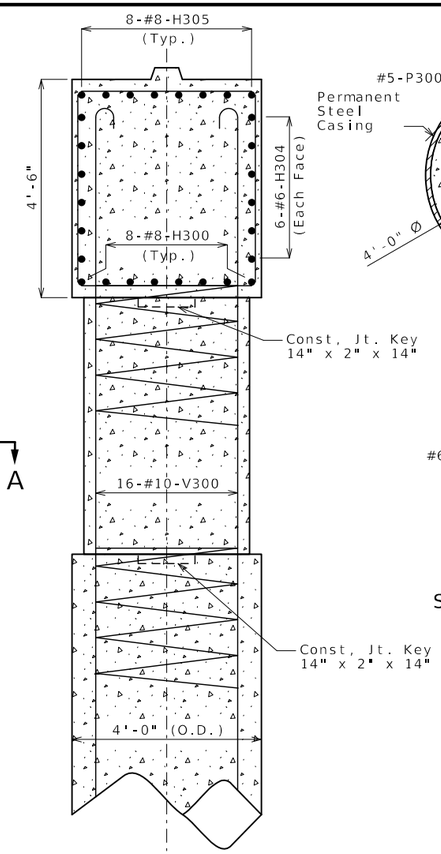

SECTION D-D

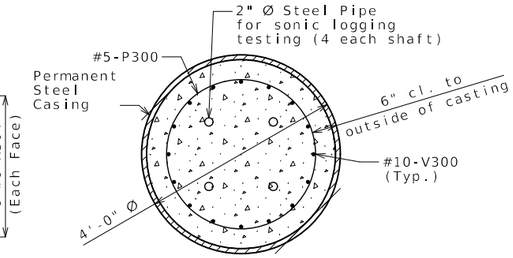

SECTION B-B

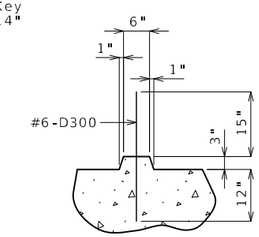

SECTION THRU KEY

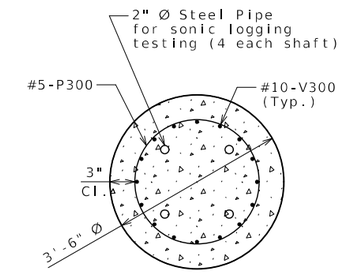

SECTION C-C

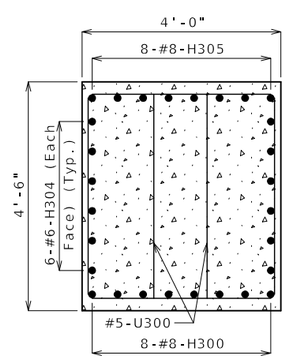

SECTION E-E

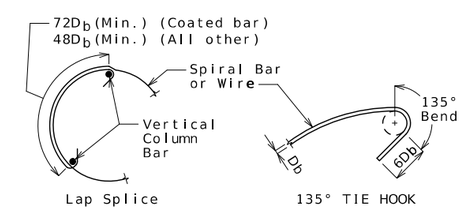

INTERMEDIATE SPLICE OF SPIRALS

Standard 135-degree tie hooks that engage vertical column reinforcing bars shall be provided at each end of splice.

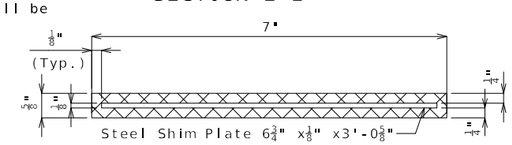

TYPICAL SECTION THRU LAMINATED NEOPRENE BEARING PAD 7" X 5/8" x3'-0 7/8"

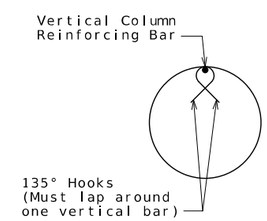

SEISMIC STIRRUP BAR
(P301)

Notes:

Sonic logging shall be performed on all drilled shafts & rock sockets.

All reinforcement in drilled shafts & rock sockets is included in the Substructure Quantities.

At the contractor's option, the hooks of vertical bars embedded in the beam cap may be oriented inward or outward.

For steps 2 inches or more, use 2 1/4 x 1/2 inch joint filler up vertical face.

Work this sheet with Sheet No. 10.

* 15-#4-P301 @ 3" cts. (Typ.)

(1) Spa. @ abt. 12" (Each Face)

(2) Extend top of spiral bar 1½" into beam.

(3) Lapping of spirals will not be permitted in these regions. If lapping is unavoidable, a mechanical bar splice will be required. No additional payment will be made for any mechanical connections used.

(4) Const. Jt. Key 12" x2" x7" @ abt. 2'-0" cts. (Between Columns) (Typ.)

DETAILS OF INTERMEDIATE BENT NO. 3

Note: This drawing is not to scale. Follow dimensions.

Detailed Sep. 2023
Checked Sep. 2023

STATE OF MISSOURI
TED S. KOESTER
NUMBER PE-2013000591
PROFESSIONAL ENGINEER
THIS SHEET HAS BEEN SIGNED, SEALED AND DATED ELECTRONICALLY.

DATE PREPARED	10/30/2023
ROUTE	V
STATE	MO
DISTRICT	BR
SHEET NO.	9
COUNTY	GREENE
JOB NO.	J7S3486
CONTRACT ID.	
PROJECT NO.	
BRIDGE NO.	A9119

DESCRIPTION | DATE

MISSOURI HIGHWAYS AND TRANSPORTATION COMMISSION
105 WEST CAPITOL
JEFFERSON CITY, MO 65102
1-888-ASK-MODOT (1-888-275-6636)

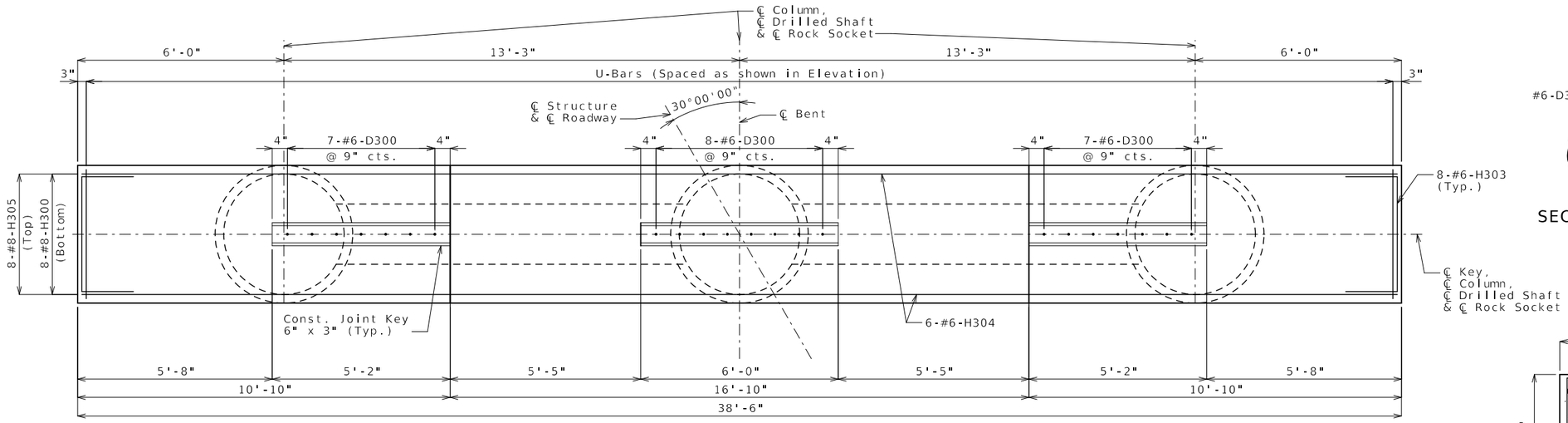

PLAN SHOWING REINFORCEMENT

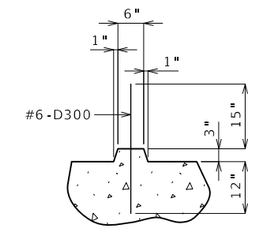

SECTION THRU KEY

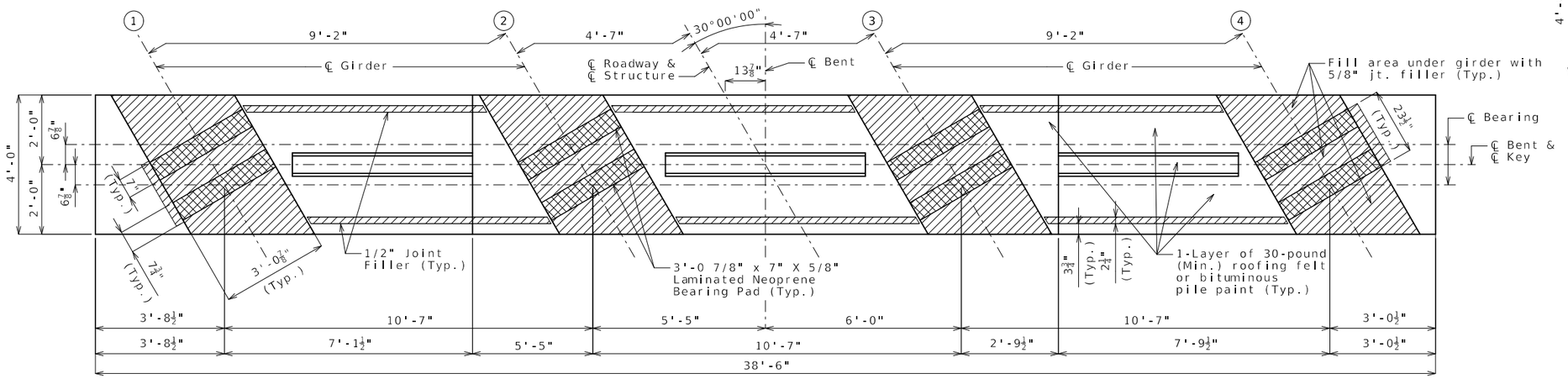

PLAN OF BEAM

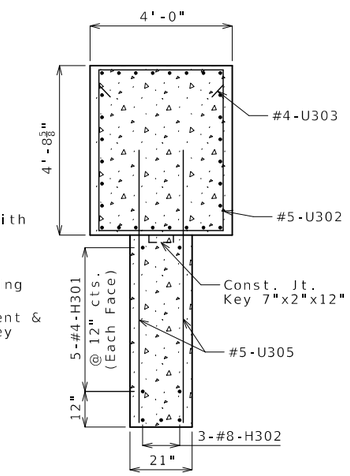

SECTION F-F

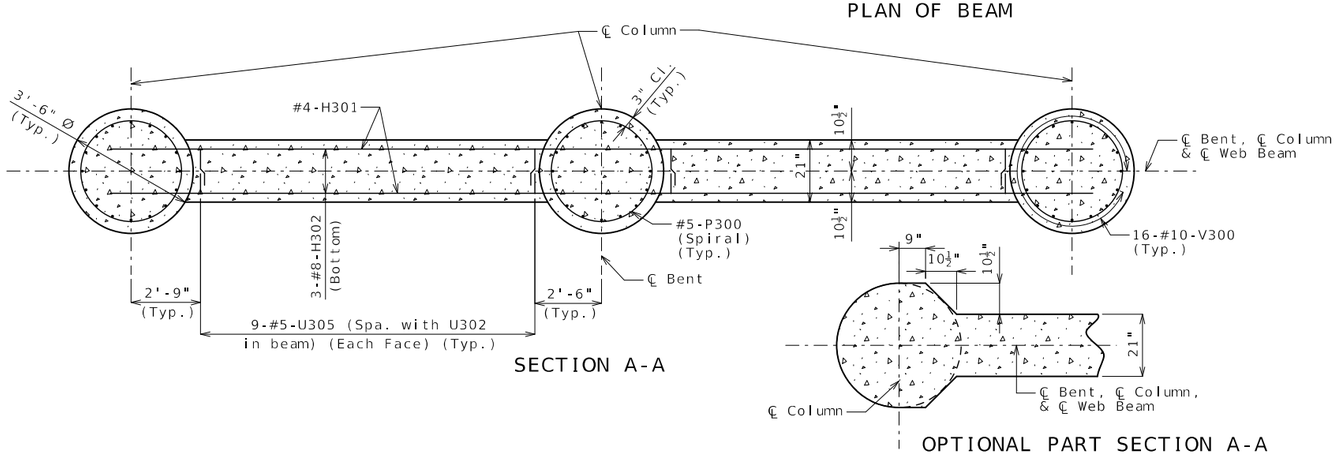

SECTION A-A

OPTIONAL PART SECTION A-A

Substructure Quantity Table for Bent No. 3		
Item		Quantity
Drilled Shafts (4 ft. 0 in. Dia.)	linear foot	45.0
Rock Sockets (3 ft. 6 in. Dia.)	linear foot	33.0
Video Camera Inspection	each	3
Foundation Inspection Holes	linear foot	63.0
Sonic Logging Testing	each	3
Class B Concrete (Substructure)	cu. yard	39.9
Reinforcing Steel (Bridges)	pound	13,800

These quantities are included in the Estimated Quantities table on Sheet No. 2.

Notes:

Thickness of permanent steel casing shall be in accordance with Sec 701.

An additional 4 feet has been added to each #10-V300 bar length and height of each #5-P300 bar in the quantities, if not required, for possible change in drilled shaft or rock socket length. If not required, the additional V-bar and P-bar length shall be cut off.

The tip of casing shall not extend into the rock socket elevation range reported in the Foundation Data table without approval by the engineer.

DETAILS OF INTERMEDIATE BENT NO. 3

Detailed Sep. 2023
Checked Sep. 2023

Note: This drawing is not to scale. Follow dimensions.

STATE OF MISSOURI
TED S. KOESTER
NUMBER PE-2013000591
PROFESSIONAL ENGINEER
THIS SHEET HAS BEEN SIGNED, SEALED AND DATED ELECTRONICALLY.

DATE PREPARED	10/30/2023
ROUTE V	STATE MO
DISTRICT BR	SHEET NO. 10
COUNTY	GREENE
JOB NO.	J7S3486
CONTRACT ID.	
PROJECT NO.	
BRIDGE NO.	A9119

DESCRIPTION

DATE

MISSOURI HIGHWAYS AND TRANSPORTATION COMMISSION
105 WEST CAPITOL
JEFFERSON CITY, MO 65102
1-888-ASK-MODOT (1-888-275-6636)

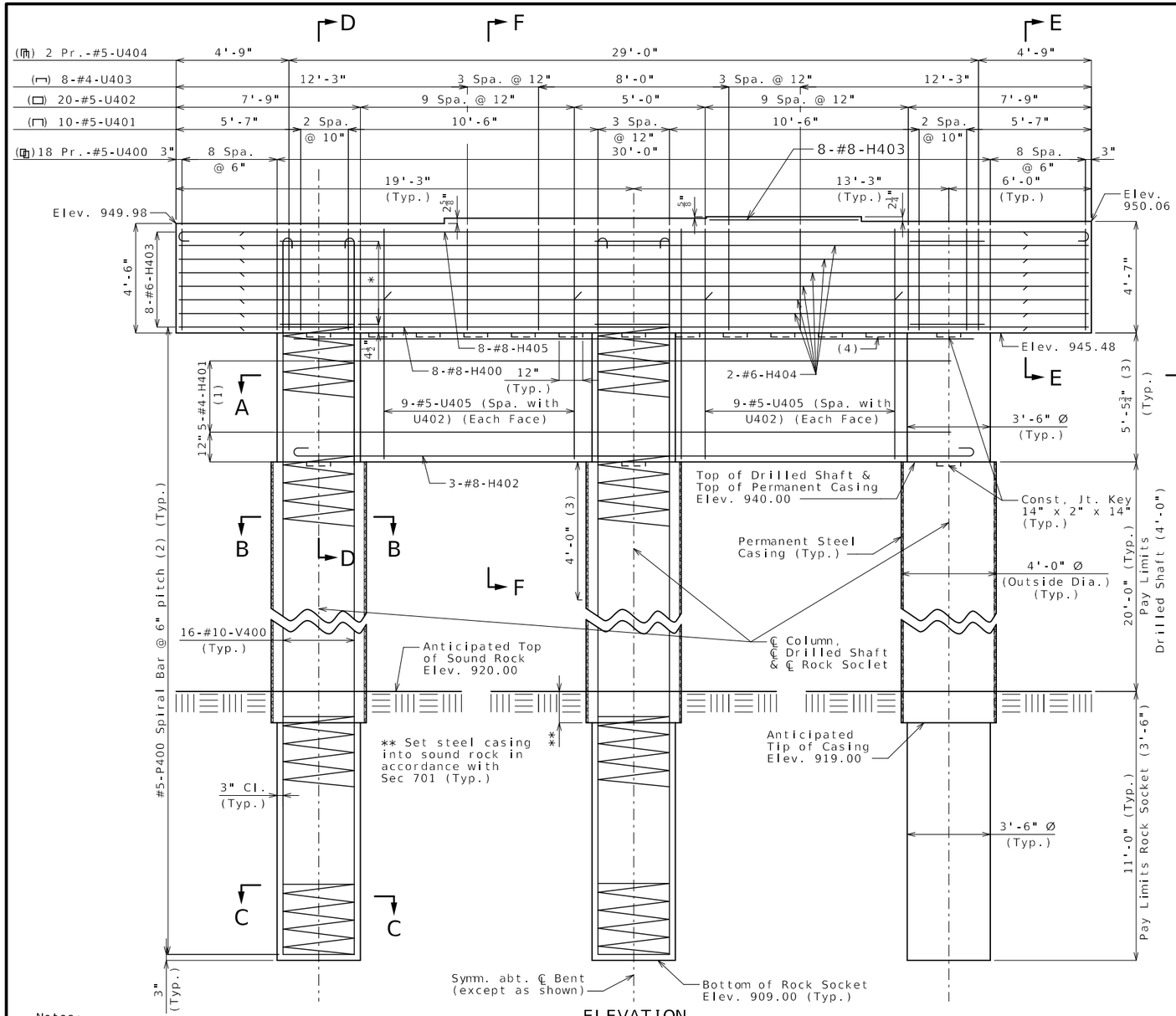

ELEVATION

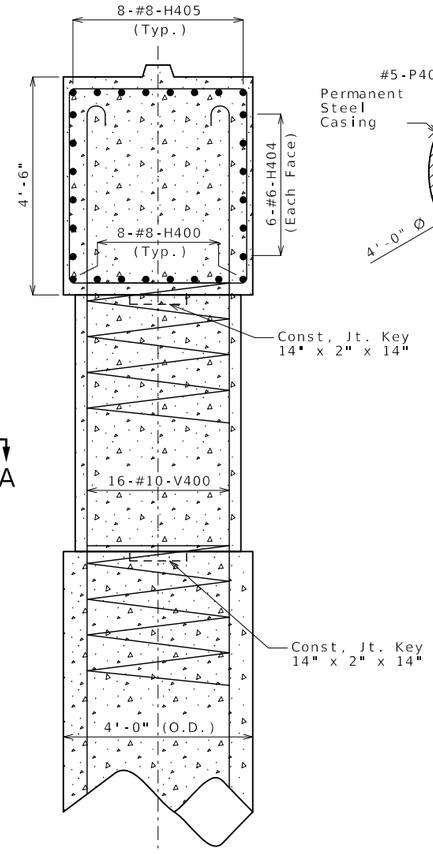

SECTION D-D

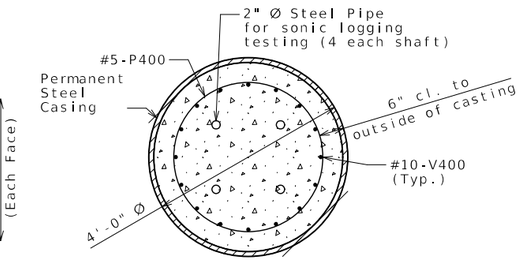

SECTION B-B

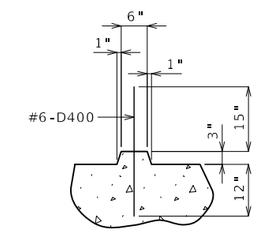

SECTION THRU KEY

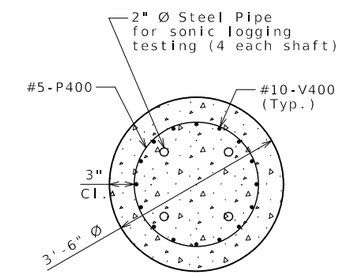

SECTION C-C

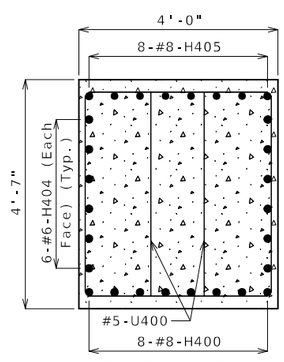

SECTION E-E

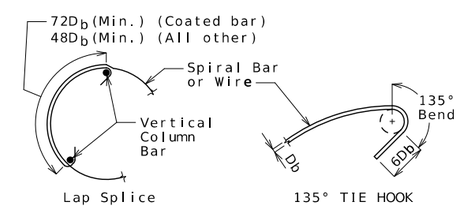

INTERMEDIATE SPLICE OF SPIRALS

Standard 135-degree tie hooks that engage vertical column reinforcing bars shall be provided at each end of splice.

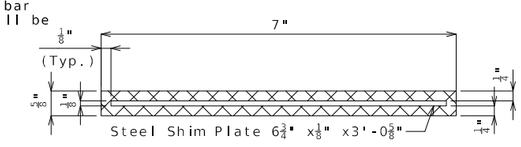

TYPICAL SECTION THRU LAMINATED NEOPRENE BEARING PAD 7" X 5/8" x 3'-0 7/8"

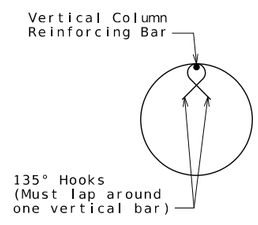

SEISMIC STIRRUP BAR (P401)

Notes:

Sonic logging shall be performed on all drilled shafts & rock sockets.

All reinforcement in drilled shafts & rock sockets is included in the Substructure Quantities.

At the contractor's option, the hooks of vertical bars embedded in the beam cap may be oriented inward or outward.

For steps 2" or more, use 2 1/4 x 1/2 inch joint filler up vertical face.

Work this sheet with Sheet No. 12.

∗ 15-#4-P401 @ 3" cts. (Typ.)

(1) Spa. @ abt. 12" (Each Face)

(2) Extend top of spiral bar 1½" into beam.

(3) Lapping of spirals will not be permitted in these regions. If lapping is unavoidable, a mechanical bar splice will be required. No additional payment will be made for any mechanical connections used.

(4) Const. Jt. Key 12" x2" x7" @ abt. 2'-0" cts. (Between Columns) (Typ.)

DETAILS OF INTERMEDIATE BENT NO. 4

Note: This drawing is not to scale. Follow dimensions.

Detailed Sep. 2023
Checked Sep. 2023

STATE OF MISSOURI
TED S. KOESTER
NUMBER PE-2013000591
PROFESSIONAL ENGINEER
THIS SHEET HAS BEEN SIGNED, SEALED AND DATED ELECTRONICALLY.

DATE PREPARED	10/30/2023
ROUTE V	STATE MO
DISTRICT BR	SHEET NO. 11
COUNTY	GREENE
JOB NO.	J7S3486
CONTRACT ID.	
PROJECT NO.	
BRIDGE NO.	A9119

DESCRIPTION

DATE

MISSOURI HIGHWAYS AND TRANSPORTATION COMMISSION
105 WEST CAPITOL
JEFFERSON CITY, MO 65102
1-888-ASK-MODOT (1-888-275-6636)

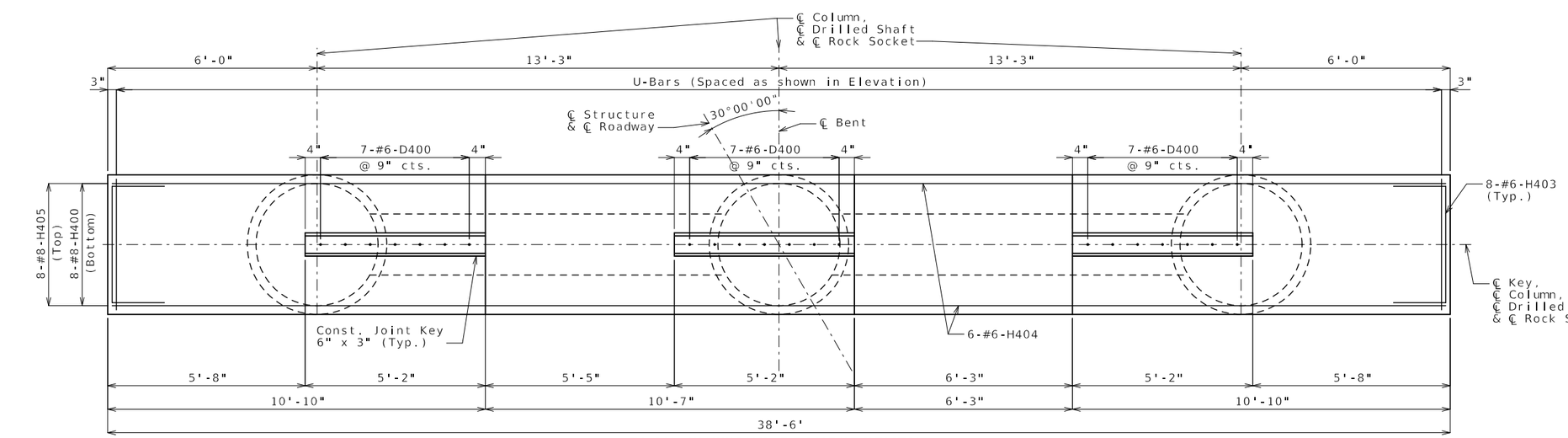

PLAN SHOWING REINFORCEMENT

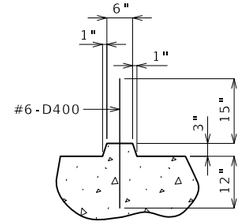

SECTION THRU KEY

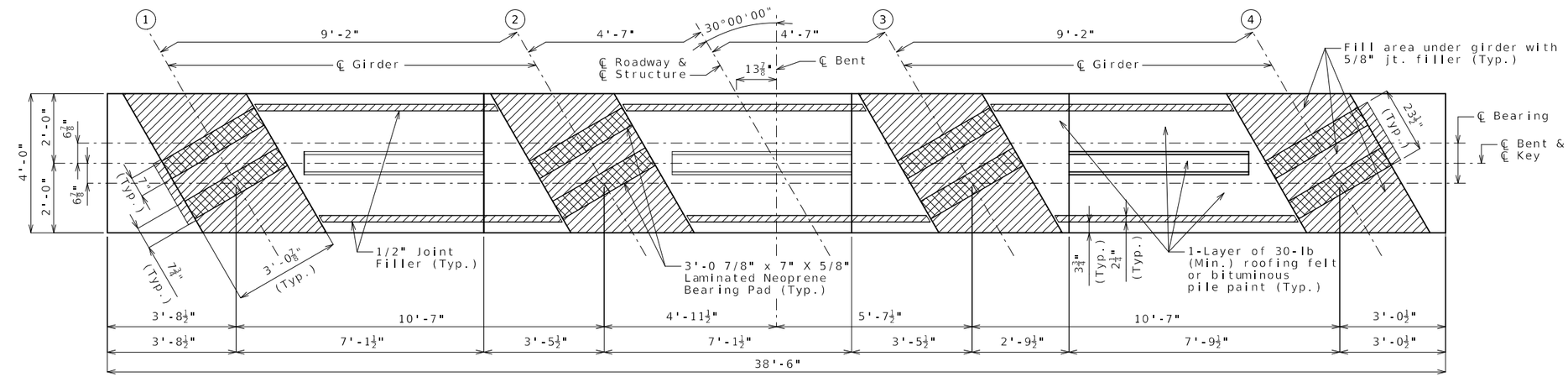

PLAN OF BEAM

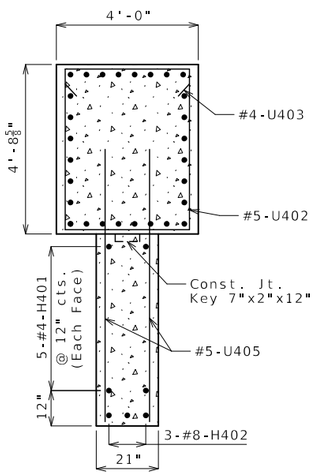

SECTION F-F

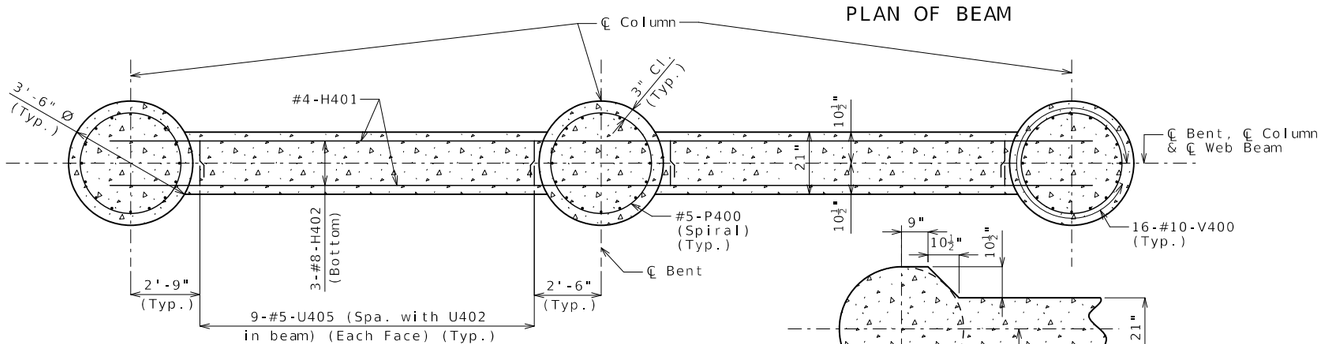

SECTION A-A

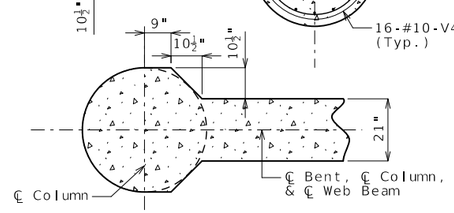

OPTIONAL PART SECTION A-A

DETAILS OF INTERMEDIATE BENT NO. 4

Substructure Quantity Table for Bent No. 4		
Item		Quantity
Drilled Shafts (4 ft. 0 in. Dia.)	linear foot	60.0
Rock Sockets (3 ft. 6 in. Dia.)	linear foot	33.0
Video Camera Inspection	each	3
Foundation Inspection Holes	linear foot	63.0
Sonic Logging Testing	each	3
Class B Concrete (Substructure)	cu. yard	39.4
Reinforcing Steel (Bridges)	pound	16,610

These quantities are included in the Estimated Quantities table on Sheet No. 2.

Notes:

Thickness of permanent steel casing shall be in accordance with Sec 701.

An additional 4 feet has been added to each #10-V400 bar length and height of each #5-P400 bar in the quantities, if required, for possible change in drilled shaft or rock socket length. If not required, the additional V-bar and P-bar length shall be cut off.

The tip of casing shall not extend into the rock socket elevation range reported in the Foundation Data table without approval by the engineer.

Detailed Sep. 2023
Checked Sep. 2023

Note: This drawing is not to scale. Follow dimensions.

STATE OF MISSOURI
TED S. KOESTER
NUMBER
PE-2013000591
PROFESSIONAL ENGINEER
THIS SHEET HAS BEEN SIGNED, SEALED AND DATED ELECTRONICALLY.

DATE PREPARED	
10/30/2023	
ROUTE: V	STATE: MO
DISTRICT: BR	SHEET NO.: 12
COUNTY: GREENE	
JOB NO.: J7S3486	
CONTRACT ID.	
PROJECT NO.	
BRIDGE NO.: A9119	

DATE	DESCRIPTION

MISSOURI HIGHWAYS AND TRANSPORTATION COMMISSION
105 WEST CAPITOL
JEFFERSON CITY, MO 65102
1-888-ASK-MODOT (1-888-275-6636)

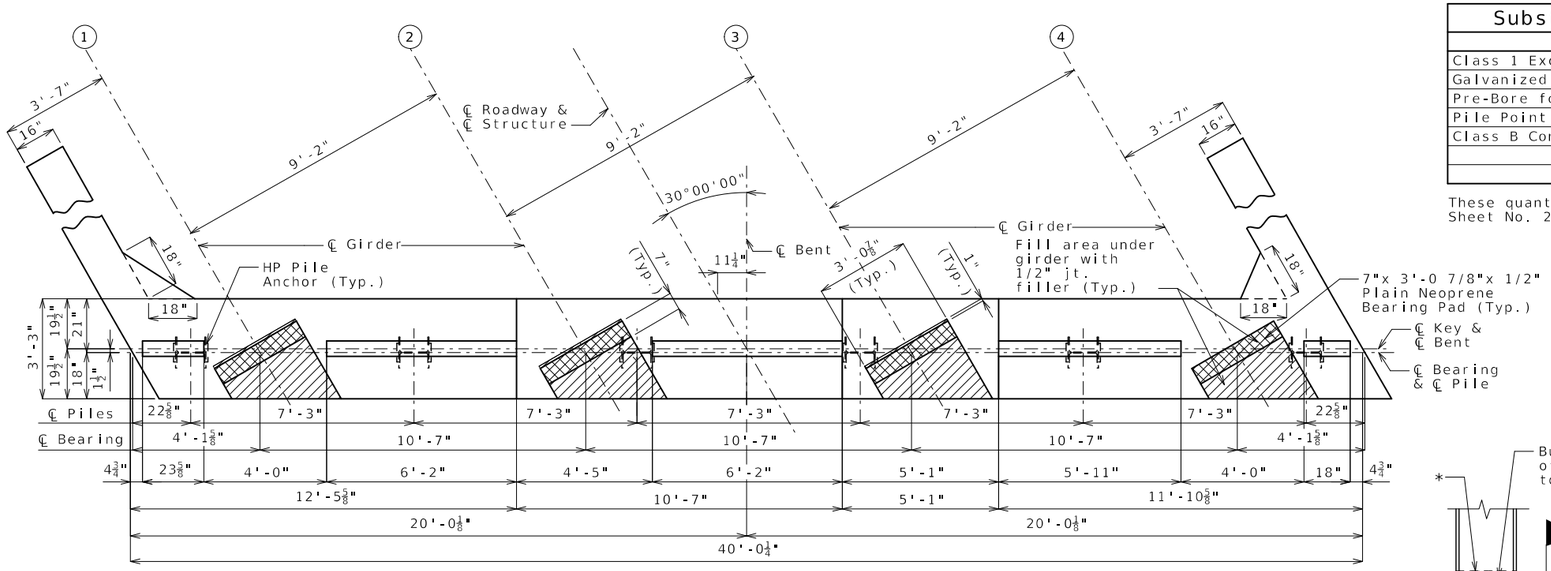

PLAN OF BEAM SHOWING DIMENSIONS

Substructure Quantity Table for Bent No. 5		
Item		Quantity
Class 1 Excavation	cu. yard	50
Galvanized Structural Steel Piles (12" in.)	linear foot	144
Pre-Bore for Piling	linear foot	126
Pile Point Reinforcement	each	6
Class B Concrete (Substructure)	cu. yard	19.3

These quantities are included in the Estimated Quantities table on Sheet No. 2.

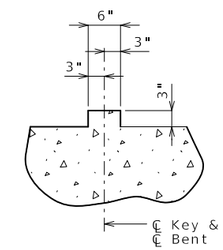

SECTION THRU KEY

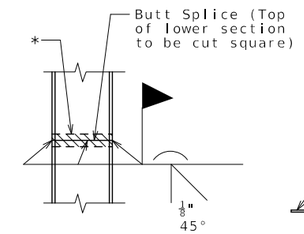

STEEL PILE SPLICE

(If required)

* Galvanizing material shall be omitted or removed one inch clear of weld locations in accordance with Sec 702.

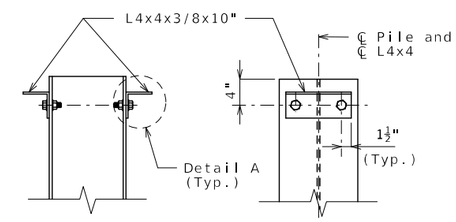

DETAILS OF HP PILE ANCHORS

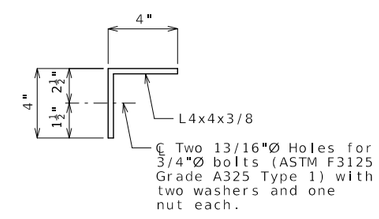

DETAIL A

Angles shall be coated with a minimum of two coats of non-aluminum epoxy mastic primer to provide a dry film thickness of 4 mils minimum, 8 mils maximum, or galvanized in accordance with Sec 1081. Bolts, washers and nuts shall be galvanized in accordance with AASHTO M 232 (ASTM A153), Class C.

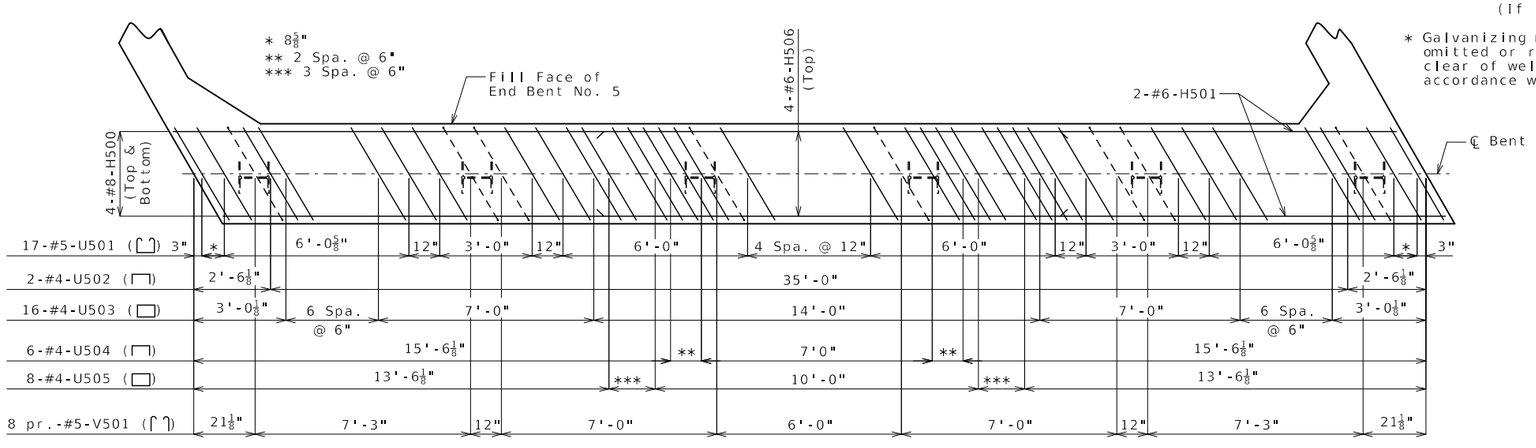

PLAN OF BEAM SHOWING REINFORCEMENT

Keys, Steps, and H-Pile Anchors no shown for clarity.

Notes:

For details of End Bent No. 5 not shown, see Sheets No. 14 & 15.

Reinforcing steel shall be shifted to clear piles. U bars shall clear piles by at least 1 1/2 inches.

The U bars and pairs of V bars shall be placed parallel to centerline of Roadway.

For details of Vertical Drain at End Bents, see Sheet No. 6.

DETAILS OF END BENT NO. 5

Detailed Sep. 2023
Checked Sep. 2023

Note: This drawing is not to scale. Follow dimensions.

STATE OF MISSOURI
TED S. KOESTER
NUMBER PE-2013000591
PROFESSIONAL ENGINEER

THIS SHEET HAS BEEN SIGNED, SEALED AND DATED ELECTRONICALLY.

DATE PREPARED	10/30/2023
ROUTE V	STATE MO
DISTRICT BR	SHEET NO. 13
COUNTY	GREENE
JOB NO.	J7S3486
CONTRACT ID.	
PROJECT NO.	
BRIDGE NO.	A9119

DESCRIPTION

DATE

MISSOURI HIGHWAYS AND TRANSPORTATION COMMISSION

105 WEST CAPITOL
JEFFERSON CITY, MO 65102
1-888-ASK-MODOT (1-888-275-6636)

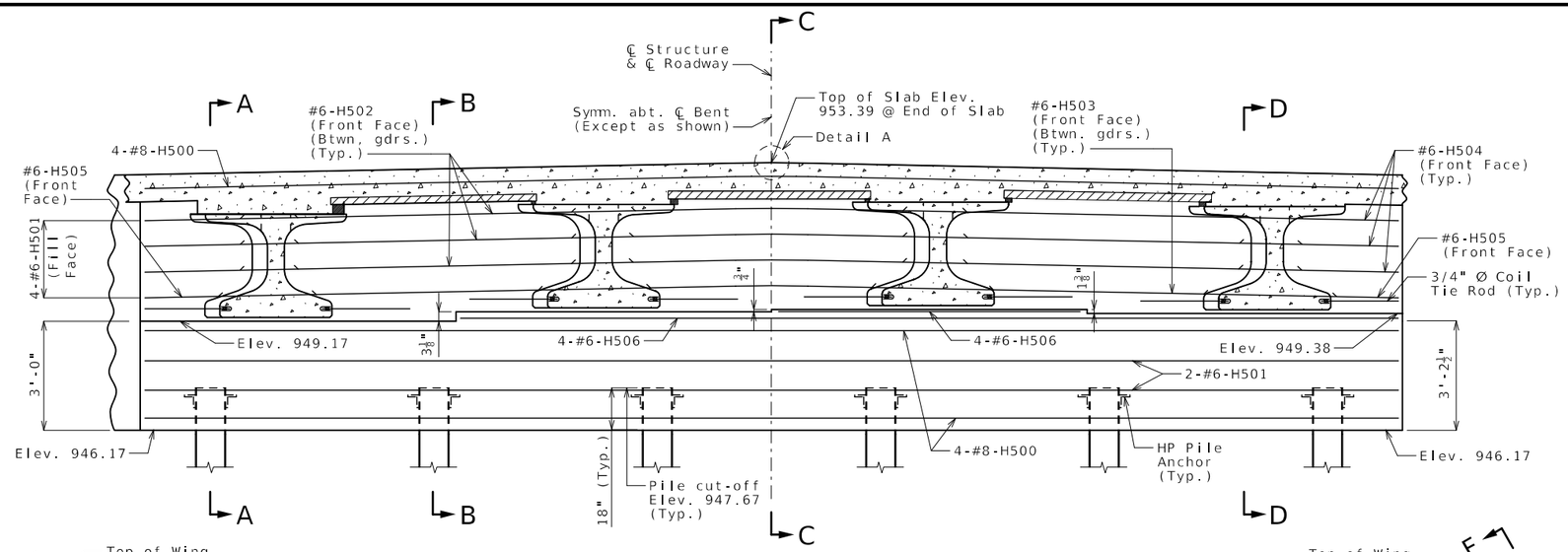

SECTION NEAR END BENT

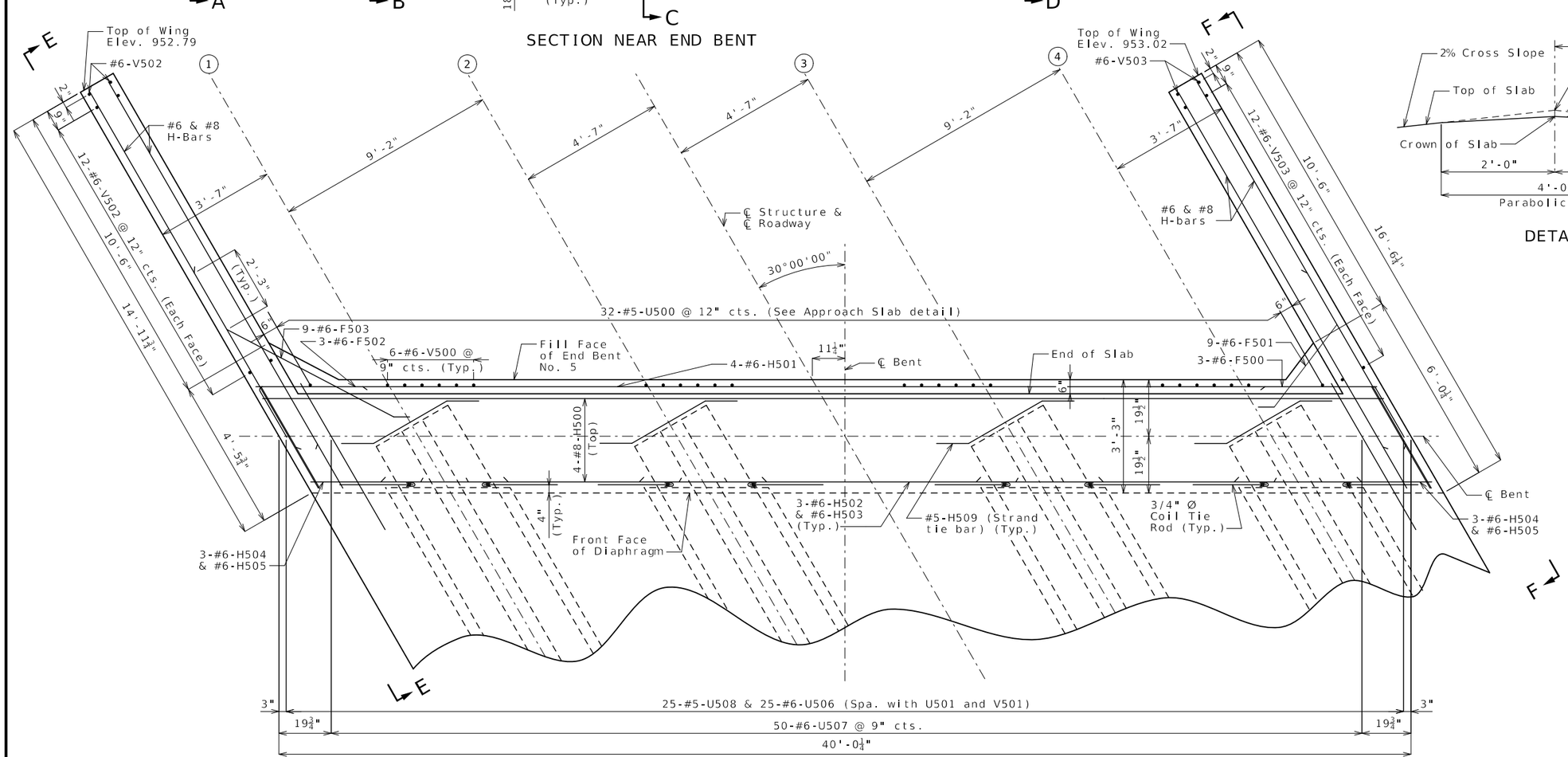

PART PLAN

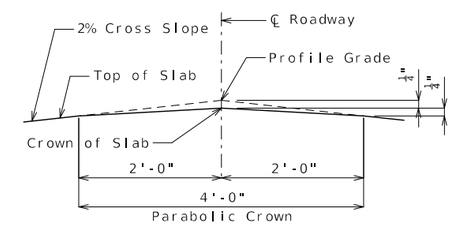

DETAIL A

Notes:

For Sections A-A, B-B, C-C & D-D and Elevation E-E & F-F, see Sheet No. 15.

For details of End Bent No. 5 not shown, see Sheets No. 13 & 15.

All concrete in the end bent above top of beam and below top of slab shall be Class B-2.

Strands at end of girders shall be field bent or, if necessary, cut in field to maintain 1 1/2" minimum clearance to fill face of end bent.

For location of Coil Ties & #5-H509 Strand Tie Bars, see Sheets No. 20 & 21.

The Pairs of V bars and U bars shall be placed parallel to centerline of Roadway.

The #6-F501 & F503 bars shall be bent in field to clear girders.

DETAILS OF END BENT NO. 5

Detailed Sep. 2023
Checked Sep. 2023

Note: This drawing is not to scale. Follow dimensions.

STATE OF MISSOURI
TED S. KOESTER
NUMBER PE-2013000591
PROFESSIONAL ENGINEER
THIS SHEET HAS BEEN SIGNED, SEALED AND DATED ELECTRONICALLY.

DATE PREPARED	
10/30/2023	
ROUTE	STATE
V	MO
DISTRICT	SHEET NO.
BR	14
COUNTY	
GREENE	
JOB NO.	
J7S3486	
CONTRACT ID.	
PROJECT NO.	
BRIDGE NO.	
A9119	

DESCRIPTION

DATE

MISSOURI HIGHWAYS AND TRANSPORTATION COMMISSION
105 WEST CAPITOL
JEFFERSON CITY, MO 65102
1-888-ASK-MODOT (1-888-275-6636)

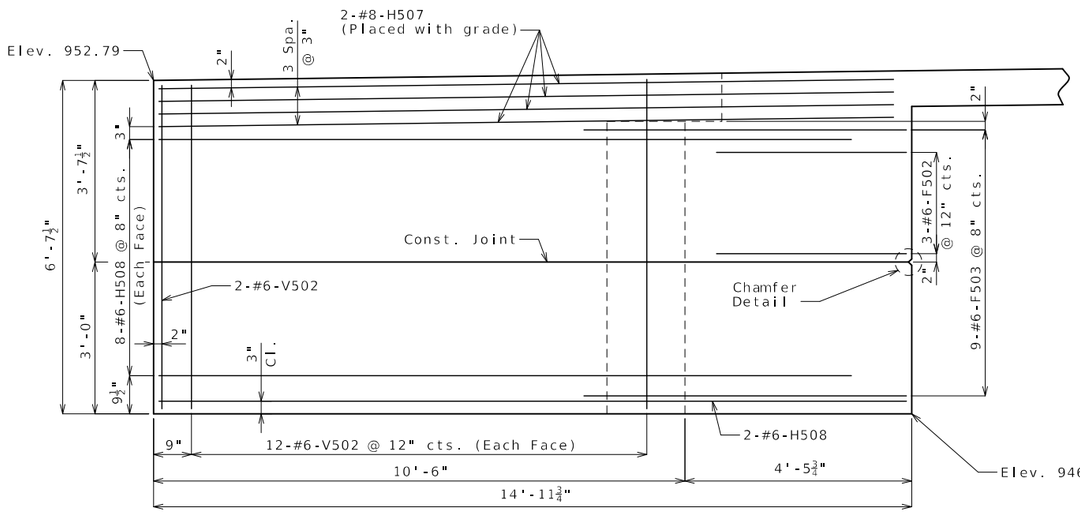

ELEVATION E-E

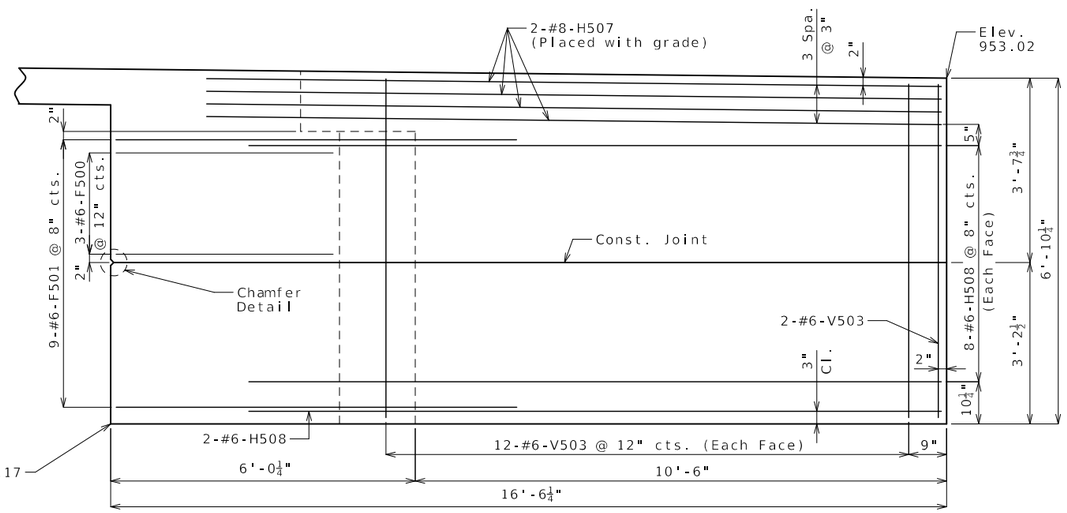

ELEVATION F-F

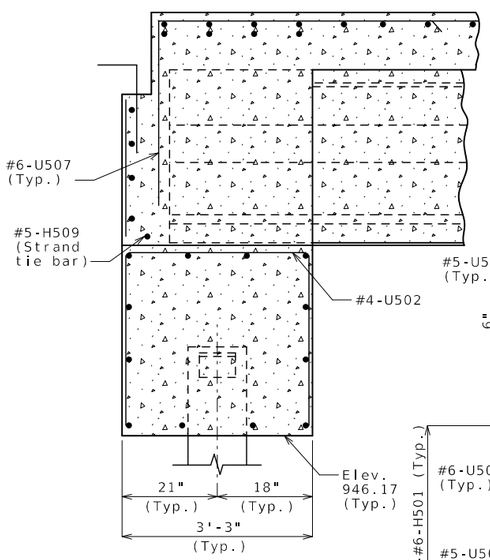

SECTION A-A

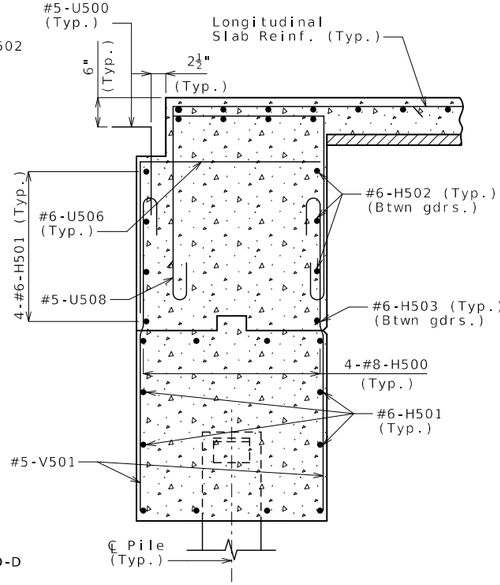

SECTION B-B

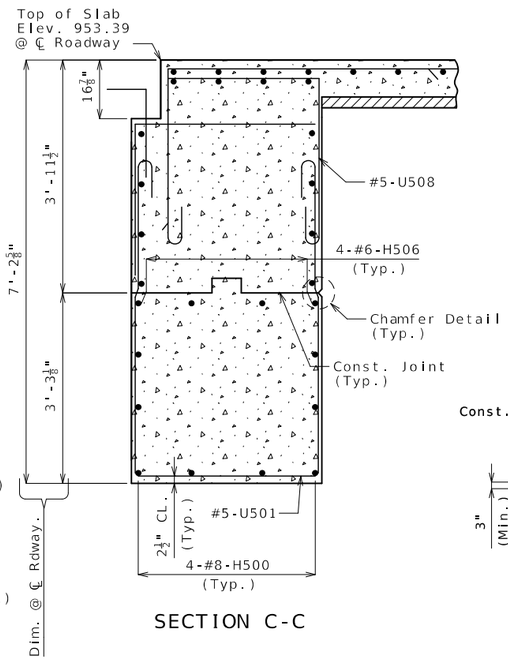

SECTION C-C

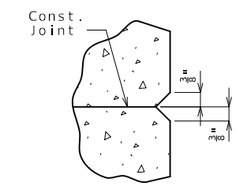

CHAMFER DETAIL

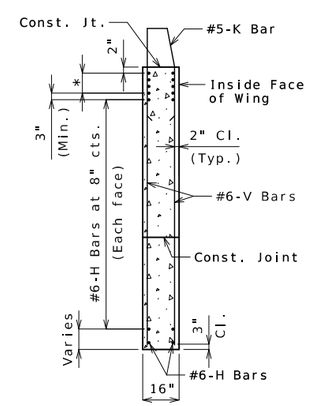

TYPICAL SECTION
THRU WING

* #8-H Bars at 3" cts.
(Each face)(Place with grade)

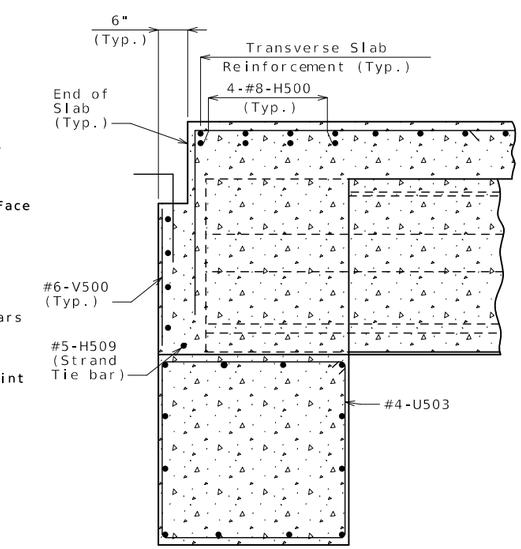

SECTION D-D

Notes:

Work this sheet with Sheets No. 13 & 14.

For Locations of Sections A-A, B-B, C-C, & D-D and Elevations E-E & F-F see Sheet No. 14.

DETAILS OF END BENT NO. 5

Detailed Sep. 2023
Checked Sep. 2023

Note: This drawing is not to scale. Follow dimensions.

STATE OF MISSOURI
TED S. KOESTER
NUMBER
PE-2013000591
PROFESSIONAL ENGINEER

THIS SHEET HAS BEEN SIGNED, SEALED AND DATED ELECTRONICALLY.

DATE PREPARED	10/30/2023
ROUTE	V
STATE	MO
DISTRICT	BR
SHEET NO.	15
COUNTY	GREENE
JOB NO.	J7S3486
CONTRACT ID.	
PROJECT NO.	
BRIDGE NO.	A9119

DESCRIPTION

DATE

MISSOURI HIGHWAYS AND TRANSPORTATION COMMISSION

105 WEST CAPITOL
JEFFERSON CITY, MO 65102
1-888-ASK-MODOT (1-888-275-6636)

(1) Fabricator shall apply a bond breaker to this region excluding where joint filler will be applied.

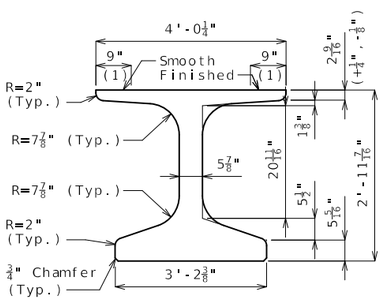

DIMENSIONS

(2) Outer strands tensioned to 2.02 kips/strand and inner strands to 8 kips/strand. Placed symmetrical about ℄ Girder. May be moved laterally in pairs.

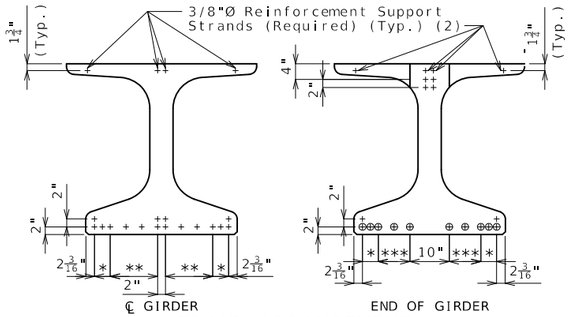

STRAND ARRANGEMENT

+ Indicates prestressing strand.

o Indicates cut & shop bend with 3'-0" projection.

* 2 Spa. @ 2"
** 3 Spa. @ 4"
*** 2 Spa. @ 4"

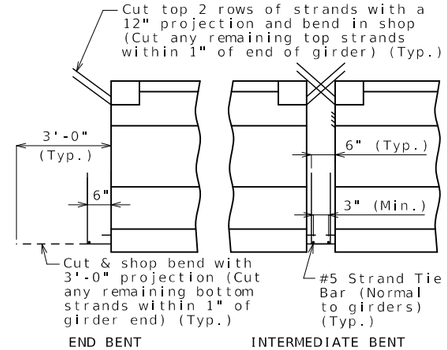

STRANDS AT GIRDER ENDS

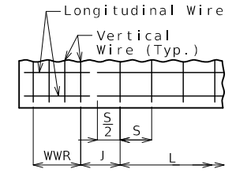

WELDED WIRE PLACEMENT

S = Vertical wire spacing

L = Length of WWR mats

J = Distance between WWR mats

Bill of Reinforcing Steel

Bars Each Girder				
No.	Size/Mark		Length	Shape
81	3	G1	2'-10"	8
2	4	G3	4'-5"	20
2	4	G4	2'-3"	20
2	4	G5	3'-1"	20
8	4	G6	Varies	20

Welded Wire Each Girder					
Mark	Size	S	W	L	J
WWR1	D20	4"	W8	7'-0"	6¾"
WWR2	D20	8"	W8	7'-4"	10"
WWR3	D20	12"	W8	12'-0"	6"
WWR6	D31	2"	W12	16"	4"

Bending Diagrams

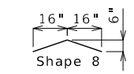

Shape 20

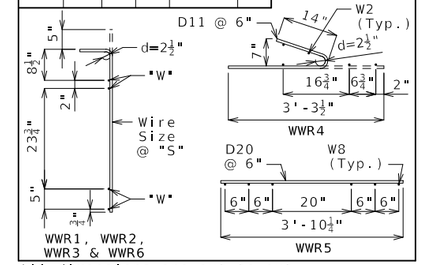

All dimensions are out to out.

Hooks and bends shall be in accordance with the CRSI Manual of Standard Practice for Detailing Reinforced Concrete Structures, Stirrup and Tie Dimensions.

Actual bar lengths are measured along centerline of bar to the nearest inch.

Minimum clearance to reinforcing shall be 1", unless otherwise shown.

All bar reinforcement shall be Grade 60.

WWR shall not be epoxy coated.

G4 and G5 not required for interior girders. Half no. of G3, G4, G5 and G6 not required for ext. girders of end spans.

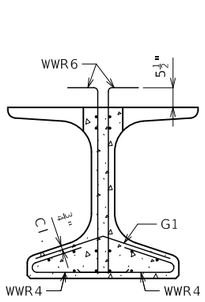

SECTION A-A

Strands not shown for clarity.

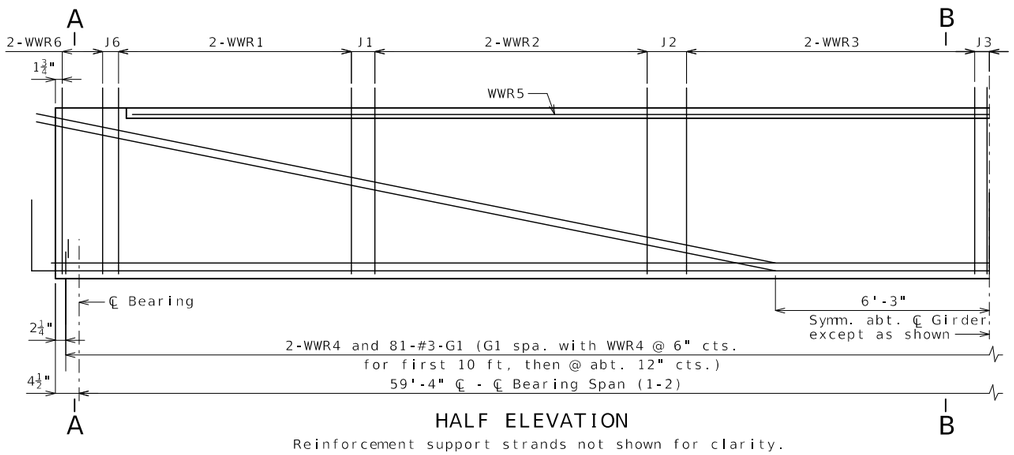

HALF ELEVATION

Reinforcement support strands not shown for clarity.

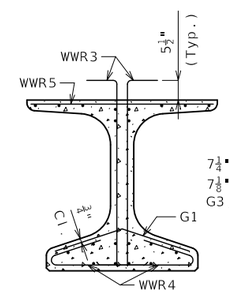

SECTION B-B

Strands not shown for clarity.

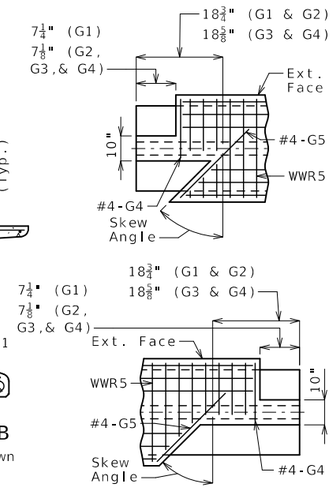

LEFT EXTERIOR GIRDER AT INTERMEDIATE BENT

Rotate 180° for right ext.

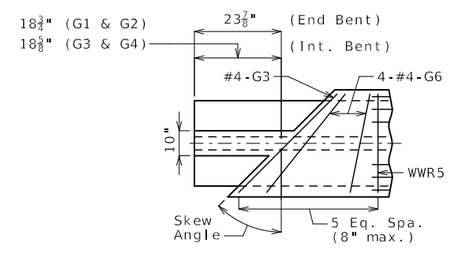

INTERIOR GIRDER AT ALL BENTS & EXTERIOR GIRDER AT END BENT

TOP FLANGE BLOCKOUT

General Notes:

Concrete for prestressed beams shall be Class A-1 with f'c = 8000 psi and f'ci = 6500 psi.

Use 16 strands, 0.6"Ø Grade 270, with an initial prestress force of 703 kips.

Pretensioned members shall be in accordance with Sec 1029.

Fabricator shall be responsible for location and design of lifting devices.

Exterior and interior girders are the same except: coil ties, top flange blockout, application of bond breaker.

The contractor shall provide bracing necessary for lateral and torsional stability of the girders during construction of the concrete slab and remove the bracing after the slab has attained 75% design strength. Contractor shall not drill holes in the girders.

For Girder Camber Diagram, see Sheet No. 24.

For location of coil ties at concrete diaphragms and integral bents, see Sheets No. 22 and 4.

Alternate bar reinforcing steel details are provided and may be used. The same type of reinforcing steel shall be used for all girders in all spans.

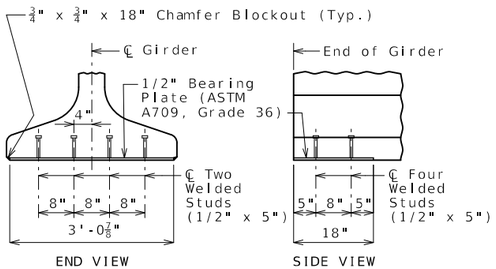

END VIEW SIDE VIEW

BEARING PLATE

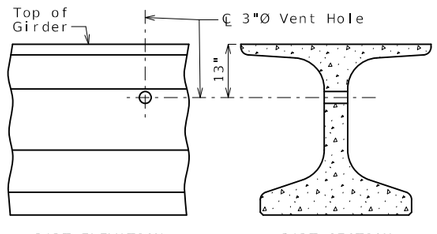

PART ELEVATION PART SECTION

VENT HOLE

Place vent holes at or near upgrade 1/3 point of girders and clear reinforcing steel or strands by 1 1/2" minimum.

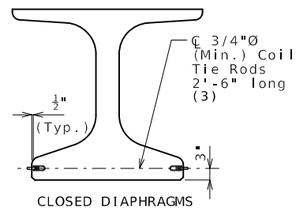

CLOSED DIAPHRAGMS AND INTEGRAL BENTS

COIL TIES

Exclude coil tie at exterior face of exterior girders except at integral end bents.

(3) 2'-1" at exterior face of exterior girders at end bents

NU-GIRDERS - SPAN (1-2)

Detailed Sep. 2023
Checked Sep. 2023

Note: This drawing is not to scale. Follow dimensions.

STATE OF MISSOURI
TED S. KOESTER
NUMBER PE-2013000591
PROFESSIONAL ENGINEER
THIS SHEET HAS BEEN SIGNED, SEALED AND DATED ELECTRONICALLY.

DATE PREPARED	10/30/2023
ROUTE V	STATE MO
DISTRICT BR	SHEET NO. 16
COUNTY	GREENE
JOB NO.	J7S3486
CONTRACT ID.	
PROJECT NO.	
BRIDGE NO.	A9119

DESCRIPTION

DATE

MISSOURI HIGHWAYS AND TRANSPORTATION COMMISSION

105 WEST CAPITOL
JEFFERSON CITY, MO 65102
1-888-ASK-MODOT (1-888-275-6636)

(1) Fabricator shall apply a bond breaker to this region excluding where joint filler will be applied.

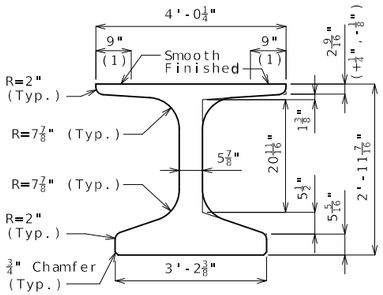

DIMENSIONS

(2) Outer strands tensioned to 2.02 kips/strand and inner strands to 8 kips/strand. Placed symmetrical about ℄ Girder. May be moved laterally in pairs.

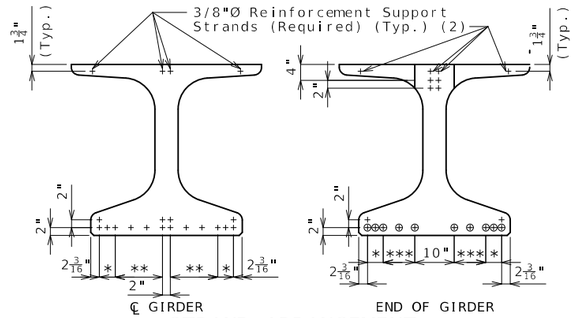

STRAND ARRANGEMENT

+ Indicates prestressing strand.

o Indicates cut & shop bend with 3'-0" projection.

* 2 Spa. @ 2"
** 3 Spa. @ 4"
*** 2 Spa. @ 4"

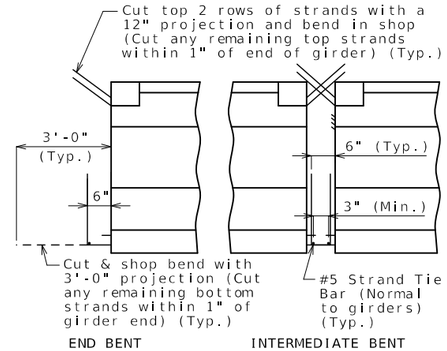

STRANDS AT GIRDER ENDS

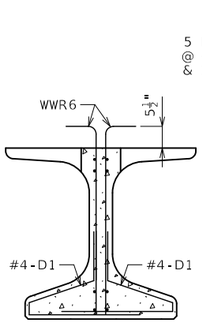

SECTION A-A

Strands not shown for clarity.

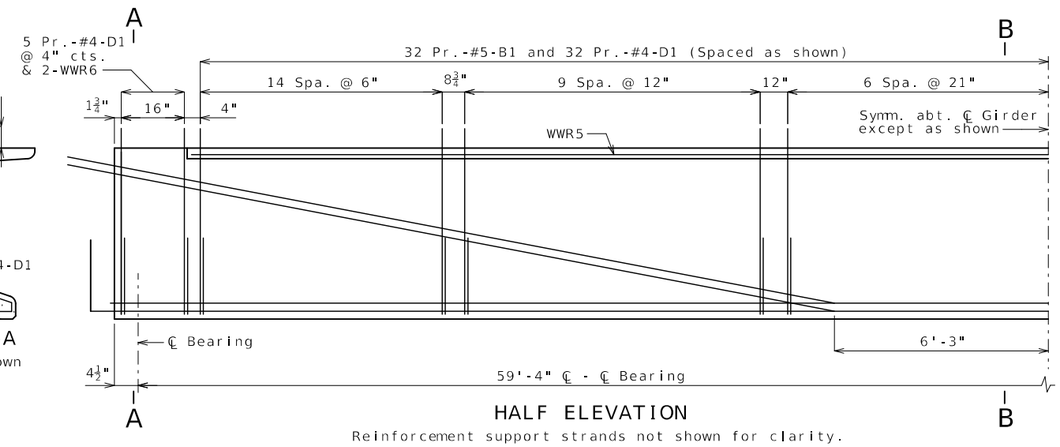

HALF ELEVATION

Reinforcement support strands not shown for clarity.

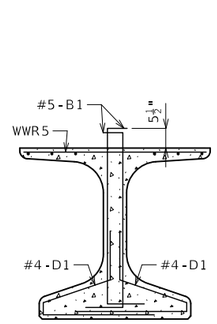

SECTION B-B

Strands not shown for clarity.

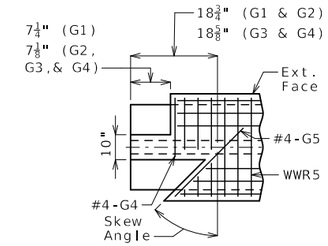

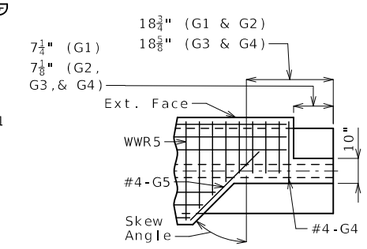

LEFT EXTERIOR GIRDER AT INTERMEDIATE BENT

Rotate 180° for right ext.

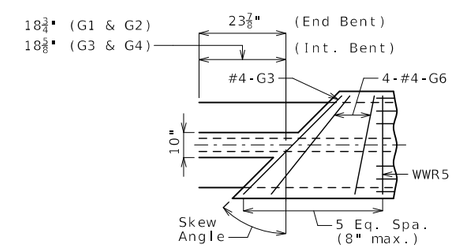

INTERIOR GIRDER AT ALL BENTS & EXTERIOR GIRDER AT END BENT

TOP FLANGE BLOCKOUT

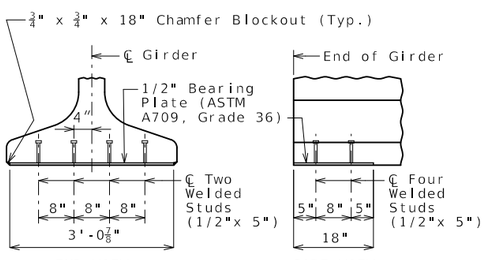

END VIEW

SIDE VIEW

BEARING PLATE

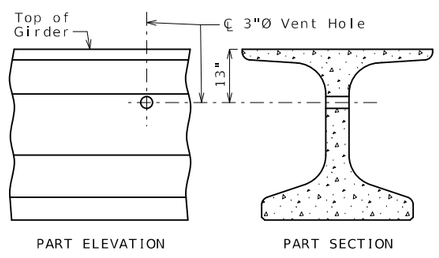

PART ELEVATION

PART SECTION

VENT HOLE

Place vent holes at or near upgrade 1/3 point of girders and clear reinforcing steel or strands by 1 1/2" minimum.

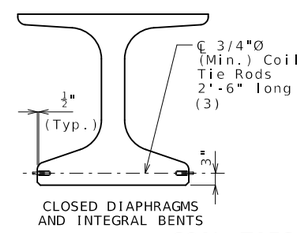

CLOSED DIAPHRAGMS AND INTEGRAL BENTS

COIL TIES

Exclude coil tie at exterior face of exterior girders except at integral end bents.

(3) 2'-1" at exterior face of exterior girders at end bents

Bill of Reinforcing Steel - Each Girder			
No.	Size/ Mark	Length	Shape
126	5 B1	4'-4"	11
126	4 D1	4'-0"	9
2	4 G3	4'-5"	20
2	4 G4	2'-3"	20
2	4 G5	3'-1"	20
8	4 G6	Varies	20

Bending Diagrams

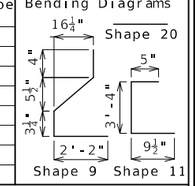

Welded Wire Reinforcement - Each Girder

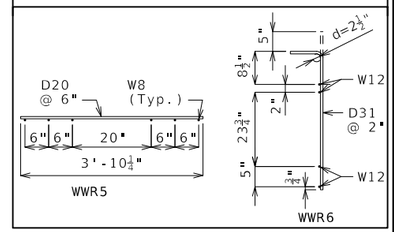

All dimensions are out to out.

Hooks and bends shall be in accordance with the CRSI Manual of Standard Practice for Detailing Reinforced Concrete Structures, Stirrup and Tie Dimensions.

Actual bar lengths are measured along centerline of bar to the nearest inch.

Minimum clearance to reinforcing shall be 1".

All bar reinforcement shall be Grade 60.

The two D1 bars may be furnished as one bar at the fabricator's option.

All B1 bars shall be epoxy coated.

G4 and G5 not required for interior girders. Half no. of G3, G4, G5 and G6 not required for ext. girders of end spans.

General Notes:

Concrete for prestressed girders shall be Class A-1 with f'c = 8000 psi and f'ci = 6500 psi.

Use 16 strands, 0.6"Ø Grade 270, with an initial prestress force of 703 kips.

Pretensioned members shall be in accordance with Sec 1029.

Fabricator shall be responsible for location and design of lifting devices.

Exterior and interior girders are the same except: coil ties, top flange blockout, application of bond breaker.

The contractor shall provide bracing necessary for lateral and torsional stability of the girders during construction of the concrete slab and remove the bracing after the slab has attained 75% design strength. Contractor shall not drill holes in the girders.

For Girder Camber Diagram, see Sheet No. 24.

For location of coil ties at concrete diaphragms and integral bents, see Sheets No. 22 and 4.

Alternate bar reinforcing steel details are provided and may be used. The same type of reinforcing steel shall be used for all girders in all spans.

STATE OF MISSOURI
TED S. KOESTER
NUMBER PE-2013000591
PROFESSIONAL ENGINEER
THIS SHEET HAS BEEN SIGNED, SEALED AND DATED ELECTRONICALLY.

DATE PREPARED 10/30/2023

ROUTE	STATE
V	MO
DISTRICT	SHEET NO.
BR	17

COUNTY: GREENE
JOB NO.: J7S3486
CONTRACT ID.:
PROJECT NO.:
BRIDGE NO.: A9119

DATE	DESCRIPTION

MISSOURI HIGHWAYS AND TRANSPORTATION COMMISSION
105 WEST CAPITOL
JEFFERSON CITY, MO 65102
1-888-ASK-MODOT (1-888-275-6636)

NU-GIRDERS (ALTERNATE REINFORCEMENT) - SPAN (1-2)

Detailed Sep. 2023
Checked Sep. 2023

Note: This drawing is not to scale. Follow dimensions.

(1) Fabricator shall apply a bond breaker to this region excluding where joint filler will be applied.

(2) Outer strands tensioned to 2.02 kips/strand and inner strands to 8 kips/strand. Placed symmetrical about ℄ Girder. May be moved laterally in pairs.

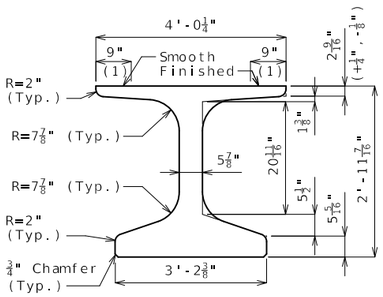

DIMENSIONS

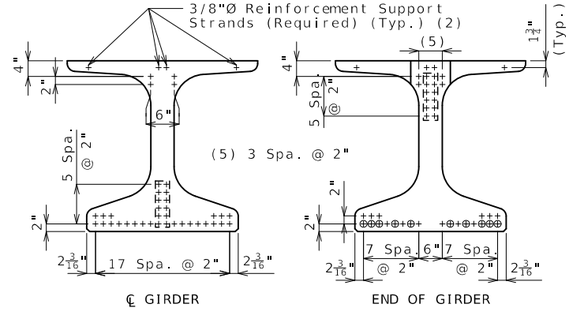

STRAND ARRANGEMENT

+ Indicates prestressing strand.

o Indicates cut & shop bend with 3'-0" projection.

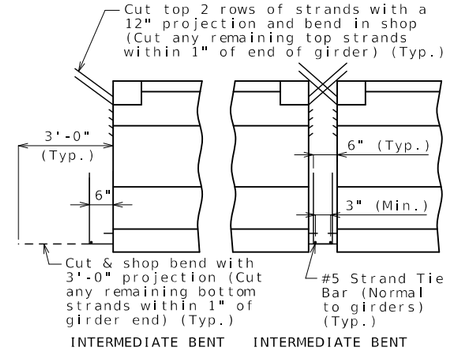

STRANDS AT GIRDER ENDS

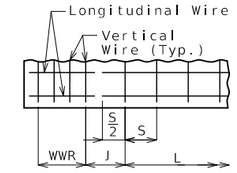

WELDED WIRE PLACEMENT

S = Vertical wire spacing

L = Length of WWR mats

J = Distance between WWR mats

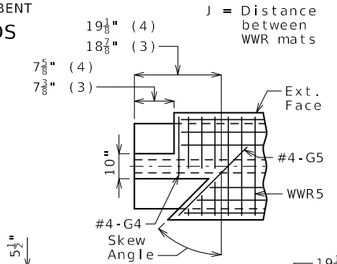

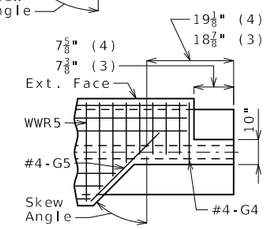

LEFT EXTERIOR GIRDER AT INTERMEDIATE BENT

Rotate 180° for right ext.

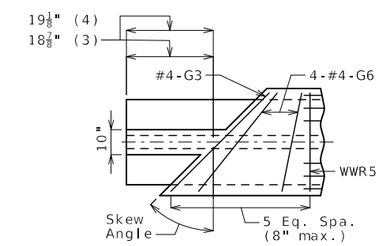

INTERIOR GIRDER AT ALL BENTS

TOP FLANGE BLOCKOUT

Bill of Reinforcing Steel

Bars Each Girder

No.	Size	Mark	Length	Shape
105	3	G1	2'-10"	8
2	4	G3	4'-5"	20
2	4	G4	2'-3"	20
2	4	G5	3'-1"	20
8	4	G6	Varies	20

Welded Wire Each Girder

Mark	Size	S	W	L	J
WWR1	D20	4"	W8	8'-4"	6¾"
WWR2	D20	8"	W8	10'-0"	12"
WWR3	D20	12"	W8	20'-0"	6"
WWR6	D31	2"	W12	16"	4"

Bending Diagrams

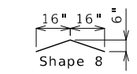

Shape 20

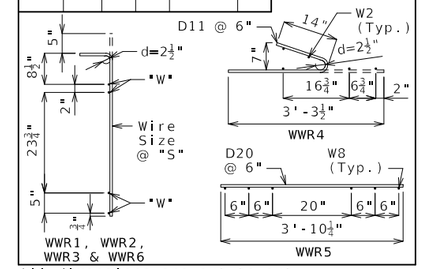

All dimensions are out to out.

Hooks and bends shall be in accordance with the CRSI Manual of Standard Practice for Detailing Reinforced Concrete Structures, Stirrup and Tie Dimensions.

Actual bar lengths are measured along centerline of bar to the nearest inch.

Minimum clearance to reinforcing shall be 1", unless otherwise shown.

All bar reinforcement shall be Grade 60.

WWR shall not be epoxy coated.

G4 and G5 not required for interior girders. G3 and G6 not required for exterior girders of intermediate spans.

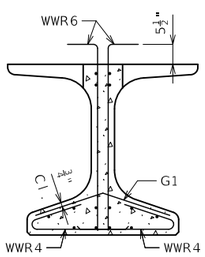

SECTION A-A

Strands not shown for clarity.

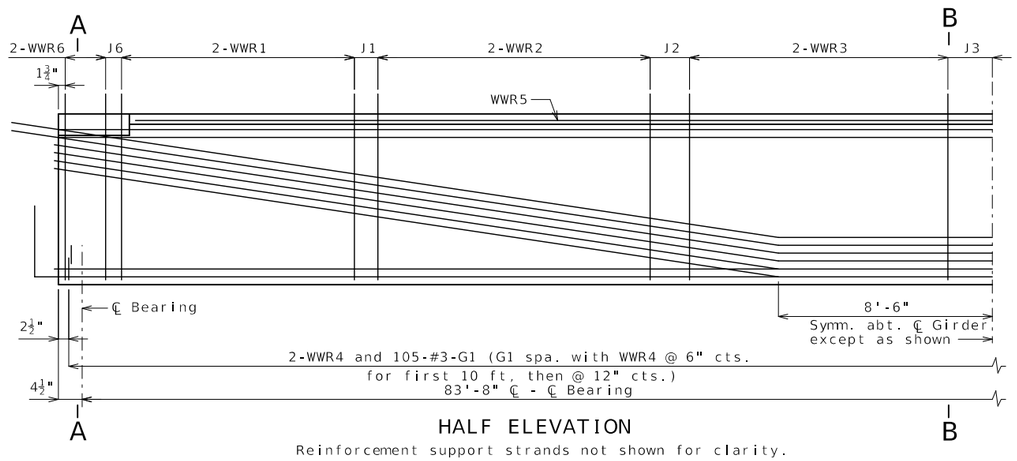

HALF ELEVATION

Reinforcement support strands not shown for clarity.

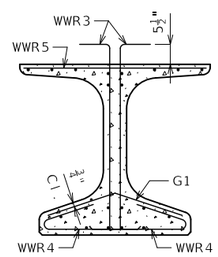

SECTION B-B

Strands not shown for clarity.

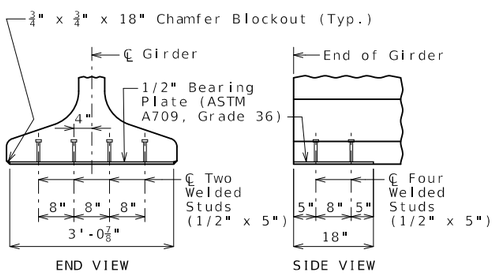

BEARING PLATE

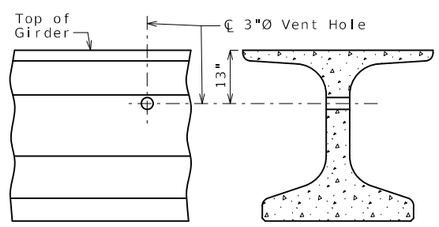

VENT HOLE

Place vent holes at or near upgrade 1/3 point of girders and clear reinforcing steel or strands by 1 1/2" minimum.

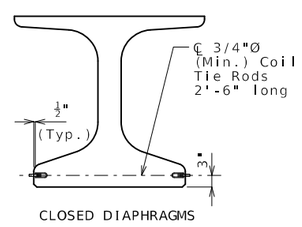

COIL TIES

Exclude coil tie at exterior face of exterior girders.

General Notes:

Concrete for prestressed beams shall be Class A-1 with f'c = 8000 psi and f'ci = 6500 psi.

Use 38 strands, 0.6"Ø Grade 270, with an initial prestress force of 1670 kips.

Pretensioned members shall be in accordance with Sec 1029.

Fabricator shall be responsible for location and design of lifting devices.

Exterior and interior girders are the same except: coil ties, top flange blockout, application of bond breaker.

The contractor shall provide bracing necessary for lateral and torsional stability of the girders during construction of the concrete slab and remove the bracing after the slab has attained 75% design strength. Contractor shall not drill holes in the girders.

For Girder Camber Diagram, see Sheet No. 24.

For location of coil ties at concrete diaphragms see Sheet No. 22.

Alternate bar reinforcing steel details are provided and may be used. The same type of reinforcing steel shall be used for all girders in all spans.

(3) Bent No. 3
(4) Bent No. 2 & 4

NU-GIRDERS - SPANS (2-3) AND (3-4)

Detailed Sep. 2023
Checked Sep. 2023

Note: This drawing is not to scale. Follow dimensions.

STATE OF MISSOURI
TED S. KOESTER
NUMBER PE-2013000591
PROFESSIONAL ENGINEER
THIS SHEET HAS BEEN SIGNED, SEALED AND DATED ELECTRONICALLY.

DATE PREPARED 10/30/2023

ROUTE	STATE
V	MO
DISTRICT	SHEET NO.
BR	18

COUNTY GREENE

JOB NO. J7S3486

CONTRACT ID.

PROJECT NO.

BRIDGE NO. A9119

DESCRIPTION

DATE

MISSOURI HIGHWAYS AND TRANSPORTATION COMMISSION
105 WEST CAPITOL
JEFFERSON CITY, MO 65102
1-888-ASK-MODOT (1-888-275-6636)

(1) Fabricator shall apply a bond breaker to this region excluding where joint filler will be applied.

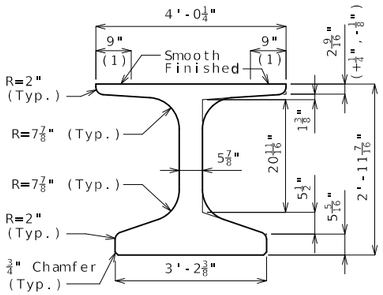

DIMENSIONS

(2) Outer strands tensioned to 2.02 kips/strand and inner strands to 8 kips/strand. Placed symmetrical about ℄ Girder. May be moved laterally in pairs.

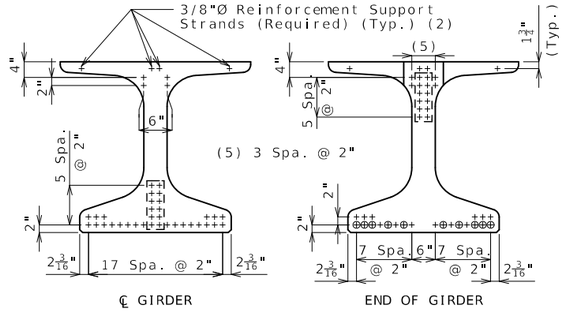

STRAND ARRANGEMENT

+ Indicates prestressing strand.

o Indicates cut & shop bend with 3'-0" projection.

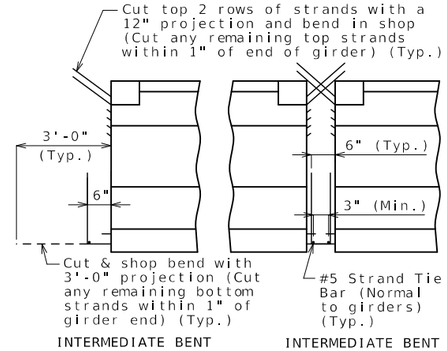

STRANDS AT GIRDER ENDS

Bill of Reinforcing Steel - Each Girder			
No.	Size/ Mark	Length	Shape
174	5 B1	4'-4"	11
194	4 D1	4'-0"	9
2	4 G3	4'-5"	20
2	4 G4	2'-3"	20
2	4 G5	3'-1"	20
8	4 G6	Varies	20

Bending Diagrams

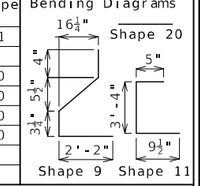

Welded Wire Reinforcement - Each Girder

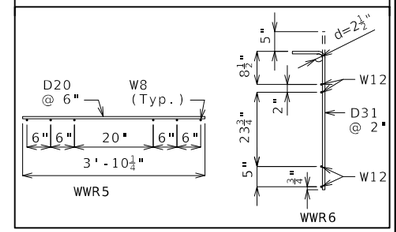

All dimensions are out to out.

Hooks and bends shall be in accordance with the CRSI Manual of Standard Practice for Detailing Reinforced Concrete Structures, Stirrup and Tie Dimensions.

Actual bar lengths are measured along centerline of bar to the nearest inch.

Minimum clearance to reinforcing shall be 1".

All bar reinforcement shall be Grade 60.

The two D1 bars may be furnished as one bar at the fabricator's option.

All B1 bars shall be epoxy coated.

G4 and G5 not required for interior girders. G3 and G6 not required for exterior girders of intermediate spans.

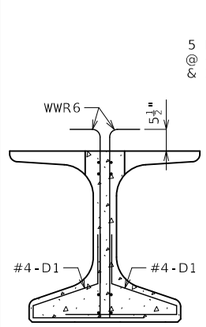

SECTION A-A

Strands not shown for clarity.

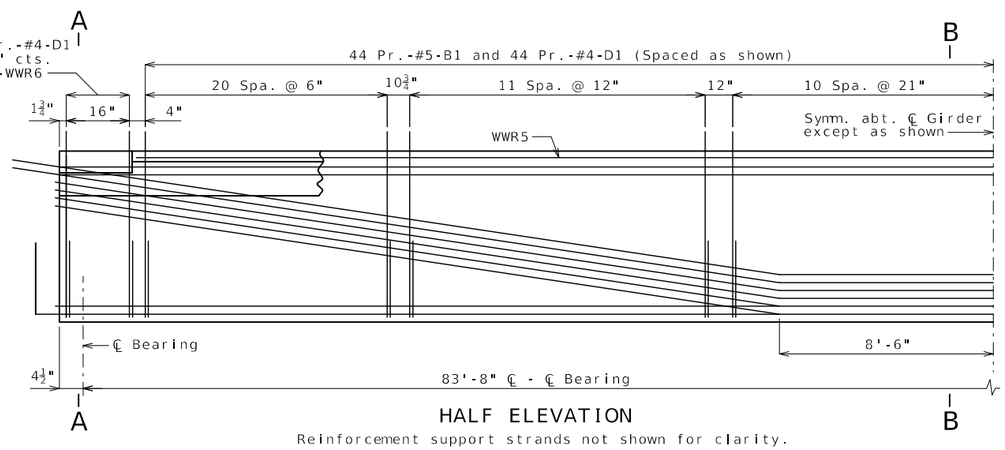

HALF ELEVATION

Reinforcement support strands not shown for clarity.

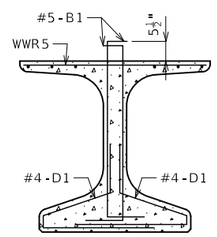

SECTION B-B

Strands not shown for clarity.

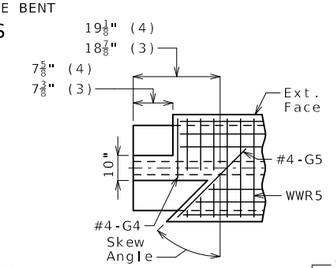

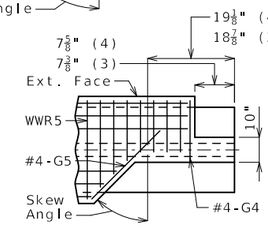

LEFT EXTERIOR GIRDER AT INTERMEDIATE BENT

Rotate 180° for right ext.

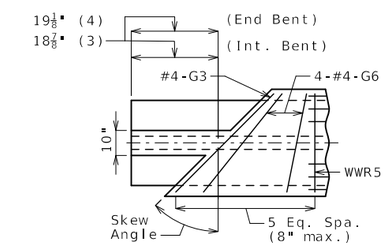

INTERIOR GIRDER AT ALL BENTS

TOP FLANGE BLOCKOUT

General Notes:

Concrete for prestressed girders shall be Class A-1 with f'c = 8000 psi and f'ci = 6500 psi.

Use 38 strands, 0.6"Ø Grade 270, with an initial prestress force of 1670 kips.

Pretensioned members shall be in accordance with Sec 1029.

Fabricator shall be responsible for location and design of lifting devices.

Exterior and interior girders are the same except: coil ties, top flange blockout, application of bond breaker.

The contractor shall provide bracing necessary for lateral and torsional stability of the girders during construction of the concrete slab and remove the bracing after the slab has attained 75% design strength. Contractor shall not drill holes in the girders.

For Girder Camber Diagram, see Sheet No. 24.

For location of coil ties at concrete diaphragms see Sheet No. 22.

Alternate bar reinforcing steel details are provided and may be used. The same type of reinforcing steel shall be used for all girders in all spans.

(3) Bent No. 3
(4) Bent No. 4

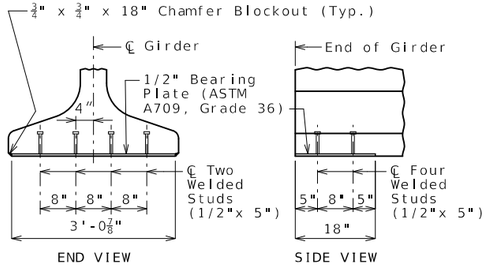

END VIEW

SIDE VIEW

BEARING PLATE

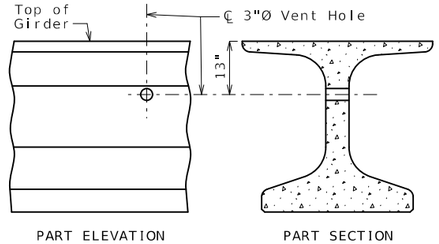

PART ELEVATION

PART SECTION

VENT HOLE

Place vent holes at or near upgrade 1/3 point of girders and clear reinforcing steel or strands by 1 1/2" minimum.

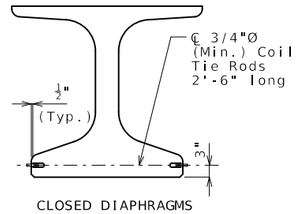

CLOSED DIAPHRAGMS

COIL TIES

Exclude coil tie at exterior face of exterior girders.

NU-GIRDERS (ALTERNATE REINFORCEMENT) - SPANS (2-3) AND (3-4)

Detailed Sep. 2023
Checked Sep. 2023

Note: This drawing is not to scale. Follow dimensions.

STATE OF MISSOURI
TED S. KOESTER
NUMBER PE-2013000591
PROFESSIONAL ENGINEER
THIS SHEET HAS BEEN SIGNED, SEALED AND DATED ELECTRONICALLY.

DATE PREPARED	10/30/2023
ROUTE V	STATE MO
DISTRICT BR	SHEET NO. 19
COUNTY	GREENE
JOB NO.	J7S3486
CONTRACT ID.	
PROJECT NO.	
BRIDGE NO.	A9119

DATE	DESCRIPTION

MISSOURI HIGHWAYS AND TRANSPORTATION COMMISSION
105 WEST CAPITOL
JEFFERSON CITY, MO 65102
1-888-ASK-MODOT (1-888-275-6636)

(1) Fabricator shall apply a bond breaker to this region excluding where joint filler will be applied.

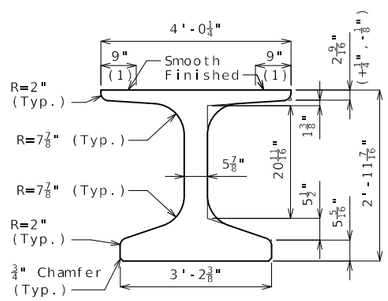

DIMENSIONS

(2) Outer strands tensioned to 2.02 kips/strand and inner strands to 8 kips/strand. Placed symmetrical about ℄ Girder. May be moved laterally in pairs.

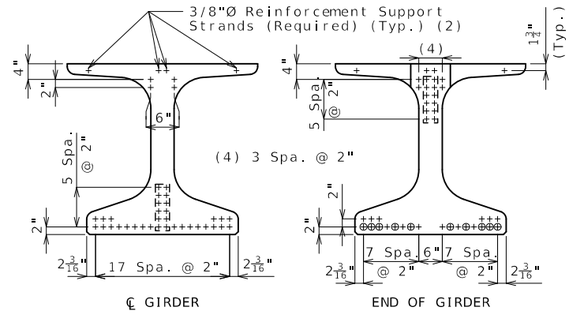

STRAND ARRANGEMENT

+ Indicates prestressing strand.

o Indicates cut & shop bend with 3'-0" projection.

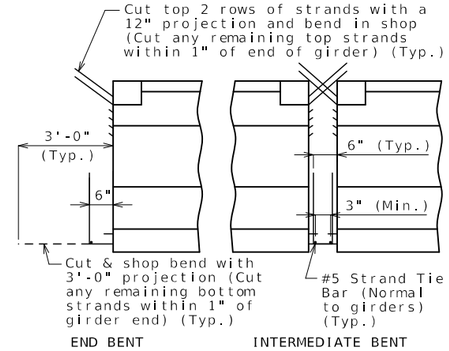

STRANDS AT GIRDER ENDS

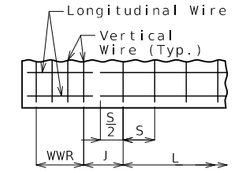

WELDED WIRE PLACEMENT

S = Vertical wire spacing

L = Length of WWR mats

J = Distance between WWR mats

Bill of Reinforcing Steel

Bars Each Girder

No.	Size	Mark	Length	Shape
101	3	G1	2'-10"	8
2	4	G3	4'-5"	20
2	4	G4	2'-3"	20
2	4	G5	3'-1"	20
8	4	G6	Varies	20

Welded Wire Each Girder

Mark	Size	S	W	L	J
WWR1	D20	4"	W8	10'-4"	4¾"
WWR2	D20	8"	W8	10'-0"	12"
WWR3	D20	12"	W8	16'-0"	6"
WWR6	D31	2"	W12	16"	4"

Bending Diagrams

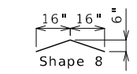

Shape 20

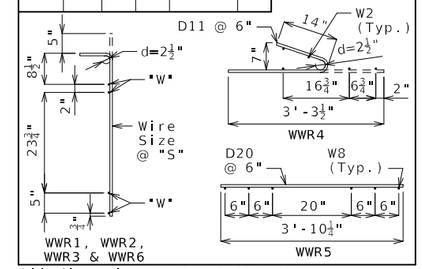

All dimensions are out to out.

Hooks and bends shall be in accordance with the CRSI Manual of Standard Practice for Detailing Reinforced Concrete Structures, Stirrup and Tie Dimensions.

Actual bar lengths are measured along centerline of bar to the nearest inch.

Minimum clearance to reinforcing shall be 1", unless otherwise shown.

All bar reinforcement shall be Grade 60.

WWR shall not be epoxy coated.

G4 and G5 not required for interior girders. Half no. of G3, G4, G5 and G6 not required for ext. girders of end spans.

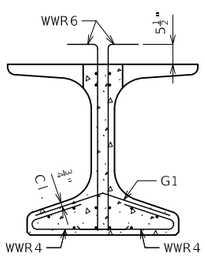

SECTION A-A

Strands not shown for clarity.

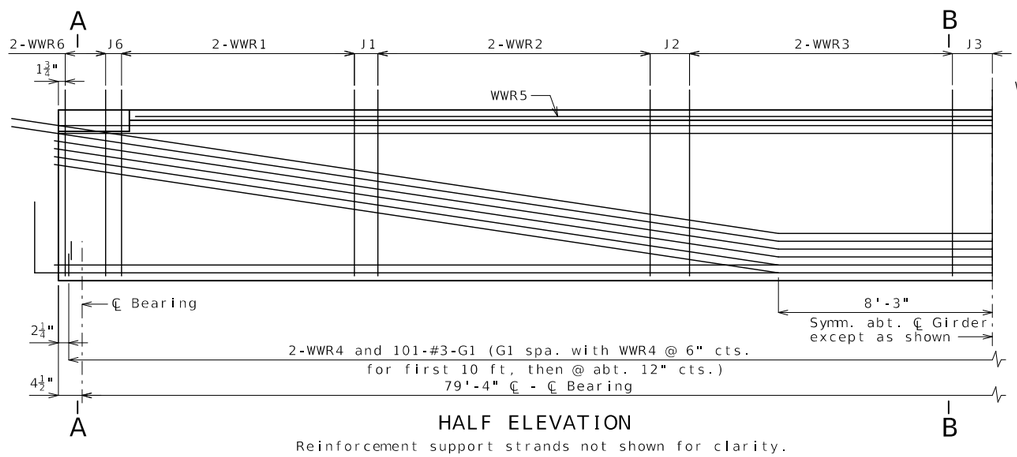

HALF ELEVATION

Reinforcement support strands not shown for clarity.

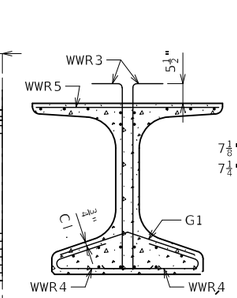

SECTION B-B

Strands not shown for clarity.

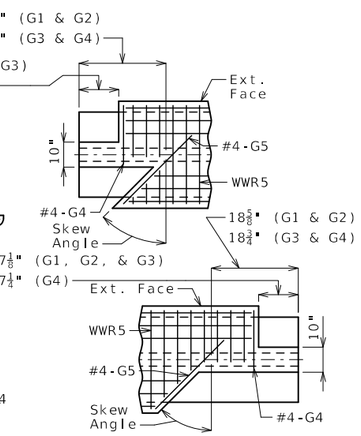

LEFT EXTERIOR GIRDER AT INTERMEDIATE BENT

Rotate 180° for right ext.

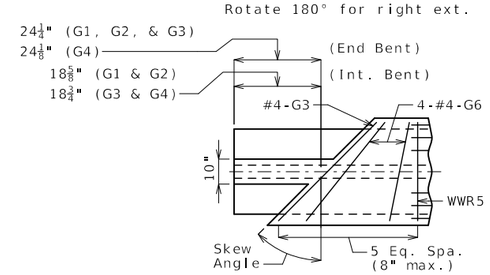

INTERIOR GIRDER AT ALL BENTS & EXTERIOR GIRDER AT END BENT

TOP FLANGE BLOCKOUT

General Notes:

Concrete for prestressed beams shall be Class A-1 with f'c = 8000 psi and f'ci = 6500 psi.

Use 38 strands, 0.6"Ø Grade 270, with an initial prestress force of 1670 kips.

Pretensioned members shall be in accordance with Sec 1029.

Fabricator shall be responsible for location and design of lifting devices.

Exterior and interior girders are the same except: coil ties, top flange blockout, application of bond breaker.

The contractor shall provide bracing necessary for lateral and torsional stability of the girders during construction of the concrete slab and remove the bracing after the slab has attained 75% design strength. Contractor shall not drill holes in the girders.

For Girder Camber Diagram, see Sheet No. 24.

For location of coil ties at concrete diaphragms and integral bents, see Sheets No. 22 and 14.

Alternate bar reinforcing steel details are provided and may be used. The same type of reinforcing steel shall be used for all girders in all spans.

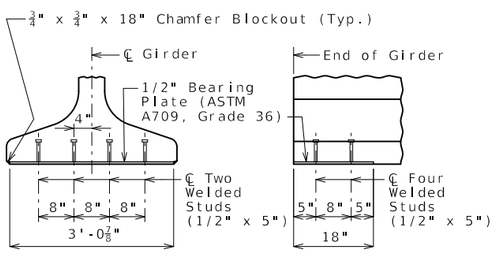

BEARING PLATE

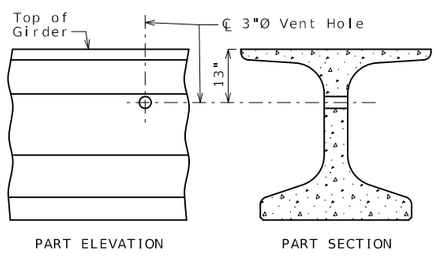

VENT HOLE

Place vent holes at or near upgrade 1/3 point of girders and clear reinforcing steel or strands by 1 1/2" minimum.

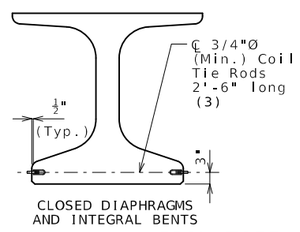

COIL TIES

Exclude coil tie at exterior face of exterior girders except at integral end bents.

(3) 2'-1" at exterior face of exterior girders at end bents

NU-GIRDERS - SPAN (4-5)

Detailed Sep. 2023
Checked Sep. 2023

Note: This drawing is not to scale. Follow dimensions.

STATE OF MISSOURI
TED S. KOESTER
NUMBER PE-2013000591
PROFESSIONAL ENGINEER
THIS SHEET HAS BEEN SIGNED, SEALED AND DATED ELECTRONICALLY.

DATE PREPARED 10/30/2023

ROUTE	STATE
V	MO
DISTRICT	SHEET NO.
BR	20

COUNTY GREENE

JOB NO. J7S3486

CONTRACT ID.

PROJECT NO.

BRIDGE NO. A9119

DESCRIPTION

DATE

MISSOURI HIGHWAYS AND TRANSPORTATION COMMISSION
105 WEST CAPITOL
JEFFERSON CITY, MO 65102
1-888-ASK-MODOT (1-888-275-6636)

(1) Fabricator shall apply a bond breaker to this region excluding where joint filler will be applied.

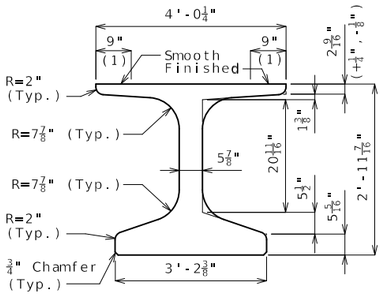

DIMENSIONS

(2) Outer strands tensioned to 2.02 kips/strand and inner strands to 8 kips/strand. Placed symmetrical about ℄ Girder. May be moved laterally in pairs.

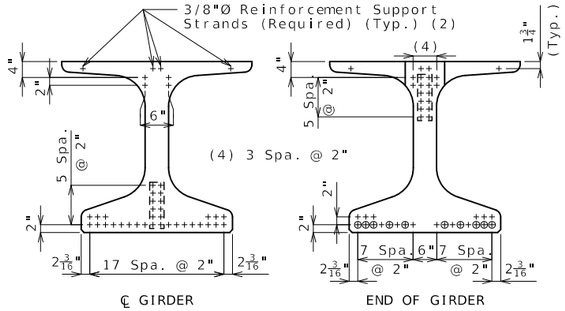

STRAND ARRANGEMENT

+ Indicates prestressing strand.

o Indicates cut & shop bend with 3'-0" projection.

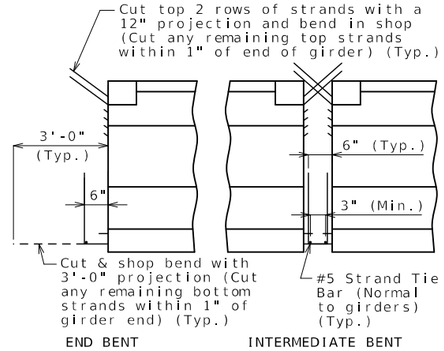

STRANDS AT GIRDER ENDS

Bill of Reinforcing Steel - Each Girder			
No.	Size/ Mark	Length	Shape
170	5 B1	4'-4"	11
190	4 D1	4'-0"	9
2	4 G3	4'-5"	20
2	4 G4	2'-3"	20
2	4 G5	3'-1"	20
8	4 G6	Varies	20

Bending Diagrams

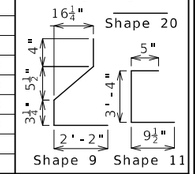

Welded Wire Reinforcement - Each Girder

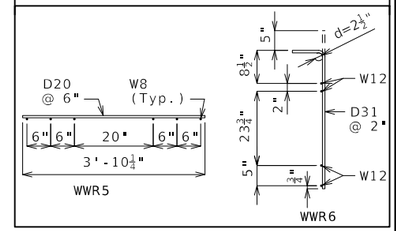

All dimensions are out to out.

Hooks and bends shall be in accordance with the CRSI Manual of Standard Practice for Detailing Reinforced Concrete Structures, Stirrup and Tie Dimensions.

Actual bar lengths are measured along centerline of bar to the nearest inch.

Minimum clearance to reinforcing shall be 1".

All bar reinforcement shall be Grade 60.

The two D1 bars may be furnished as one bar at the fabricator's option.

All B1 bars shall be epoxy coated.

G4 and G5 not required for interior girders. Half no. of G3, G4, G5 and G6 not required for ext. girders of end spans.

General Notes:

Concrete for prestressed girders shall be Class A-1 with f'c = 8000 psi and f'ci = 6500 psi.

Use 38 strands, 0.6"Ø Grade 270, with an initial prestress force of 1670 kips.

Pretensioned members shall be in accordance with Sec 1029.

Fabricator shall be responsible for location and design of lifting devices.

Exterior and interior girders are the same except: coil ties, top flange blockout, application of bond breaker.

The contractor shall provide bracing necessary for lateral and torsional stability of the girders during construction of the concrete slab and remove the bracing after the slab has attained 75% design strength. Contractor shall not drill holes in the girders.

For Girder Camber Diagram, see Sheet No. 24.

For location of coil ties at concrete diaphragms and integral bents, see Sheets No. 22 and 14.

Alternate bar reinforcing steel details are provided and may be used. The same type of reinforcing steel shall be used for all girders in all spans.

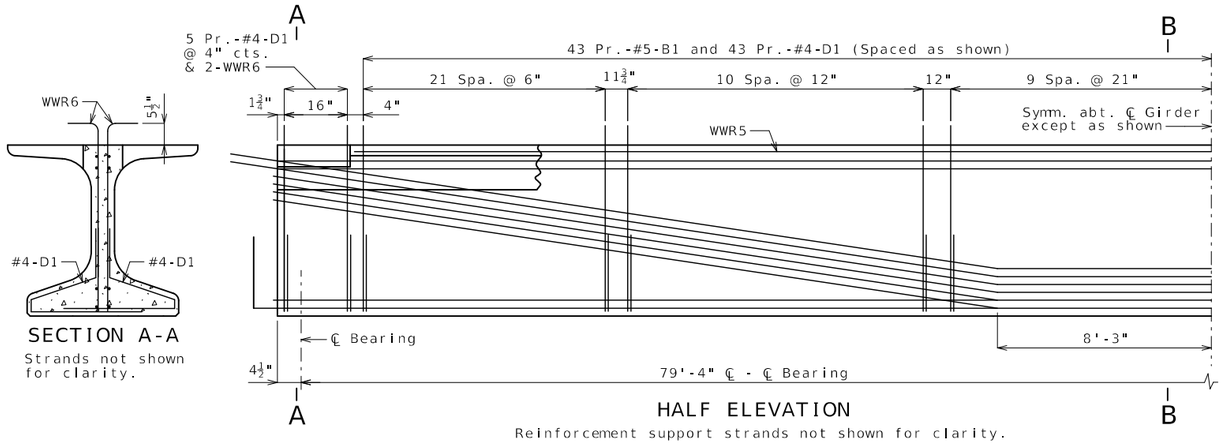

SECTION A-A

Strands not shown for clarity.

HALF ELEVATION

Reinforcement support strands not shown for clarity.

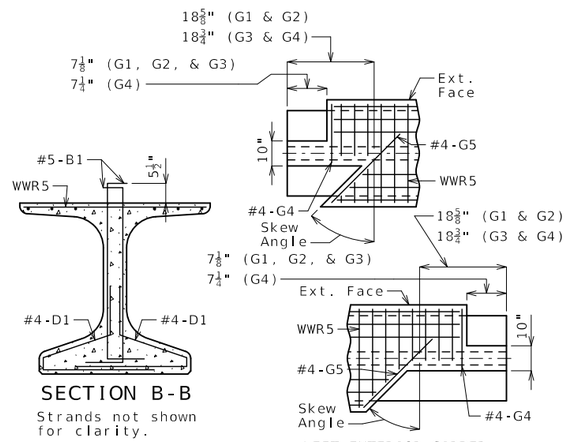

SECTION B-B

Strands not shown for clarity.

LEFT EXTERIOR GIRDER AT INTERMEDIATE BENT

Rotate 180° for right ext.

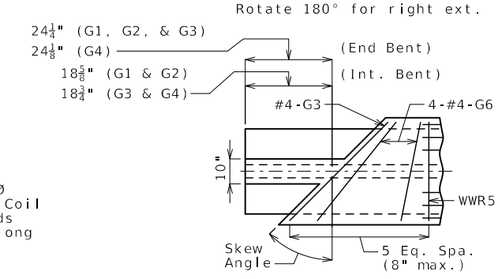

INTERIOR GIRDER AT ALL BENTS & EXTERIOR GIRDER AT END BENT

TOP FLANGE BLOCKOUT

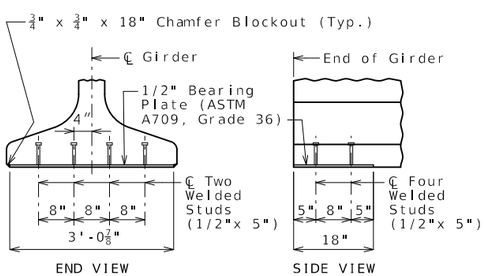

END VIEW

SIDE VIEW

BEARING PLATE

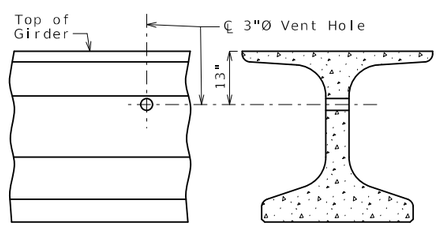

PART ELEVATION

PART SECTION

VENT HOLE

Place vent holes at or near upgrade 1/3 point of girders and clear reinforcing steel or strands by 1 1/2" minimum.

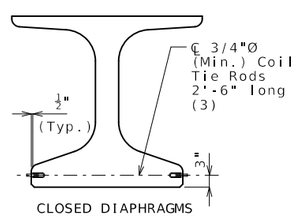

CLOSED DIAPHRAGMS AND INTEGRAL BENTS

COIL TIES

Exclude coil tie at exterior face of exterior girders except at integral end bents.

(3) 2'-1" at exterior face of exterior girders at end bents

NU-GIRDERS (ALTERNATE REINFORCEMENT) - SPAN (4-5)

Detailed Sep. 2023
Checked Sep. 2023

Note: This drawing is not to scale. Follow dimensions.

STATE OF MISSOURI
TED S. KOESTER
NUMBER PE-2013000591
PROFESSIONAL ENGINEER
THIS SHEET HAS BEEN SIGNED, SEALED AND DATED ELECTRONICALLY.

DATE PREPARED 10/30/2023

ROUTE	STATE
V	MO
DISTRICT	SHEET NO.
BR	21

COUNTY GREENE
JOB NO. J7S3486
CONTRACT ID.
PROJECT NO.
BRIDGE NO. A9119

DATE	DESCRIPTION

MISSOURI HIGHWAYS AND TRANSPORTATION COMMISSION
105 WEST CAPITOL
JEFFERSON CITY, MO 65102
1-888-ASK-MODOT (1-888-275-6636)

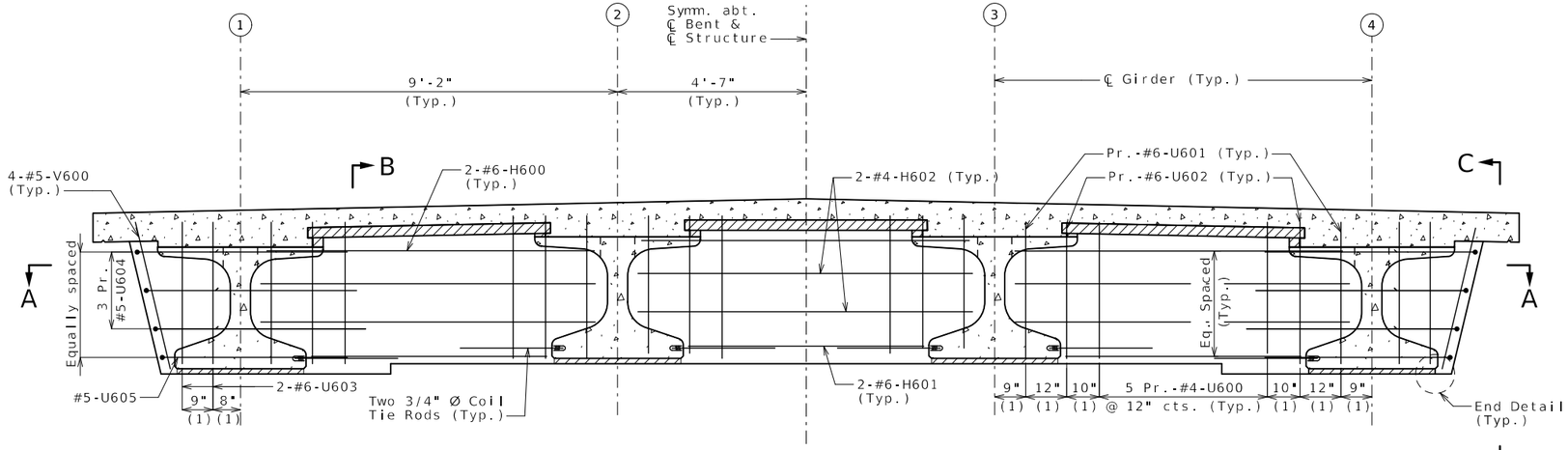

SECTION NEAR INTERMEDIATE BENT

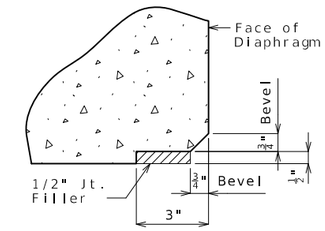

EDGE DETAIL

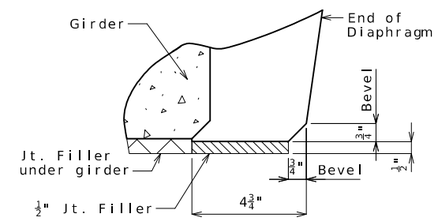

END DETAIL

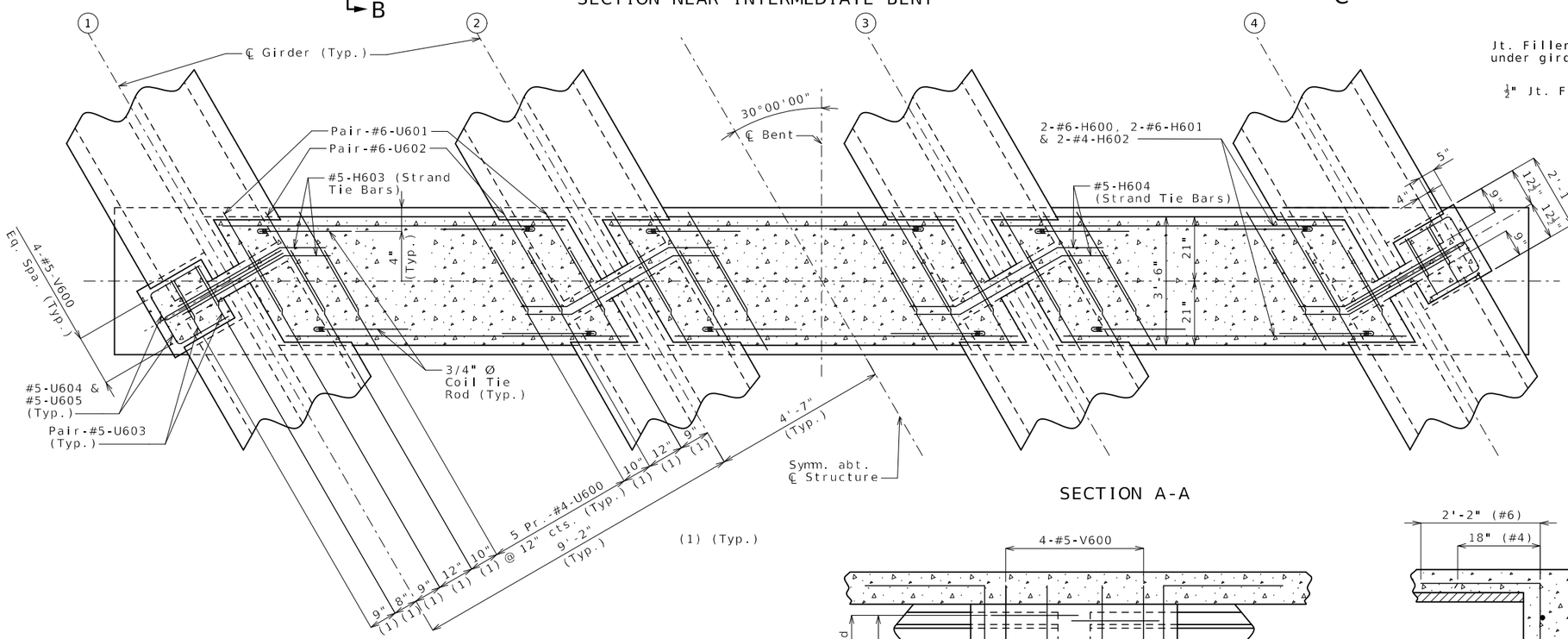

SECTION A-A

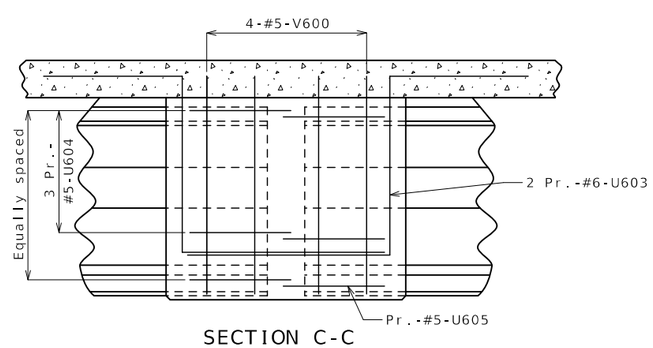

SECTION C-C

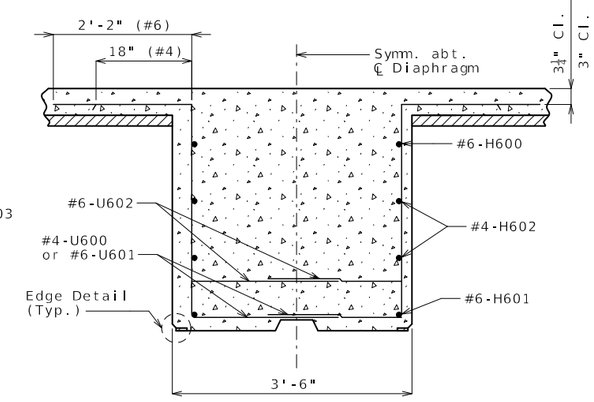

SECTION B-B

Notes:

Slab reinforcing bars not shown for clarity.

For location of strand tie bars, see Sheets No. 18, 19, 20, & 21.

For location and details of Coil Tie Rods, see Sheets No. 18, 19, 20, & 21.

Diaphragms of intermediate bents shall be built vertical.

All U bars shall be placed parallel to centerline of roadway.

DETAILS OF CONCRETE DIAPHRAGMS AT INTERMEDIATE BENTS NO. 2, 3 & 4

Detailed Sep. 2023
Checked Sep. 2023

Note: This drawing is not to scale. Follow dimensions.

STATE OF MISSOURI
TED S. KOESTER
NUMBER PE-2013000591
PROFESSIONAL ENGINEER
THIS SHEET HAS BEEN SIGNED, SEALED AND DATED ELECTRONICALLY.

DATE PREPARED	10/30/2023
ROUTE V	STATE MO
DISTRICT BR	SHEET NO. 22
COUNTY	GREENE
JOB NO.	J7S3486
CONTRACT ID.	
PROJECT NO.	
BRIDGE NO.	A9119

DESCRIPTION | DATE

MISSOURI HIGHWAYS AND TRANSPORTATION COMMISSION
105 WEST CAPITOL
JEFFERSON CITY, MO 65102
1-888-ASK-MODOT (1-888-275-6636)

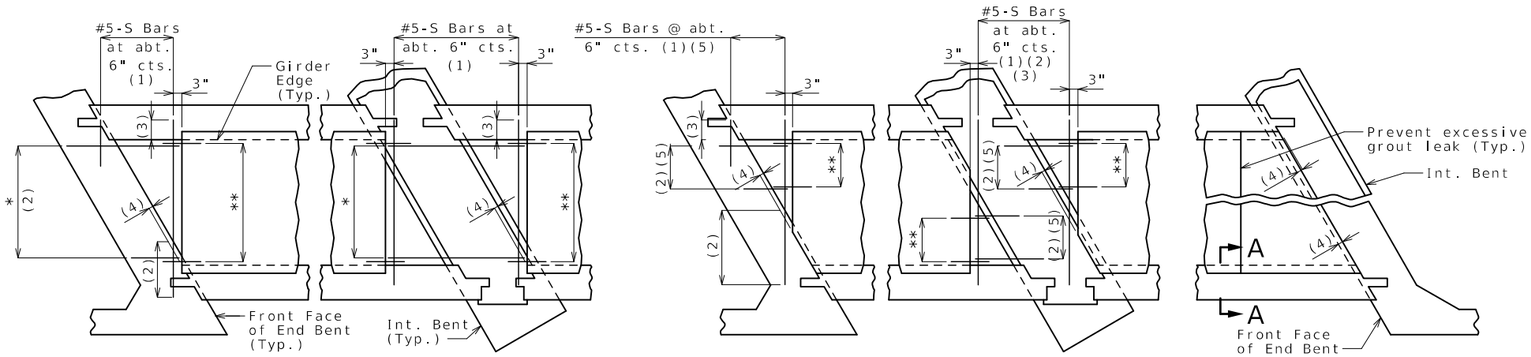

SQUARED END PANELS OR TRUNCATED END PANELS

PLAN SHOWING PANEL PLACEMENT

* #5-S Bars at abt. 9" cts. (1)
** #3-P1 at 12" cts. (End panels only)

SKEWED END PANELS

Joint Filler Dimensions		
Width	Height	
	Min.	Max.
3"	1"	4"

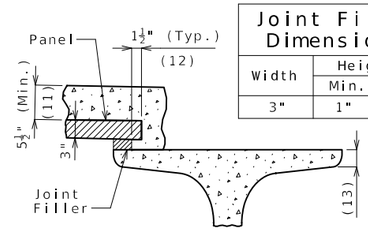

SECTION A-A

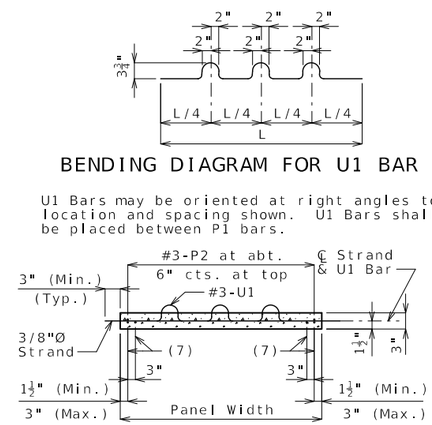

BENDING DIAGRAM FOR U1 BAR

U1 Bars may be oriented at right angles to location and spacing shown. U1 Bars shall be placed between P1 bars.

SECTION B-B

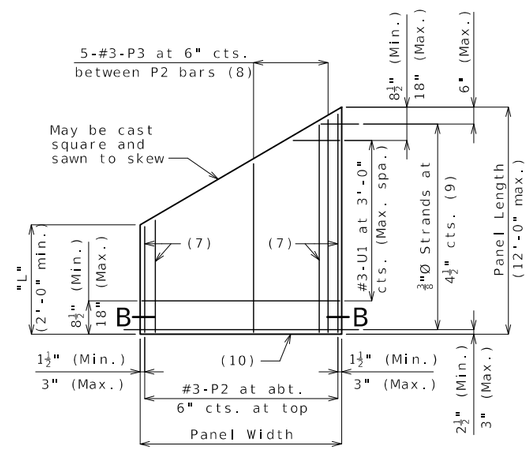

PLAN OF OPTIONAL SKEWED END PANEL

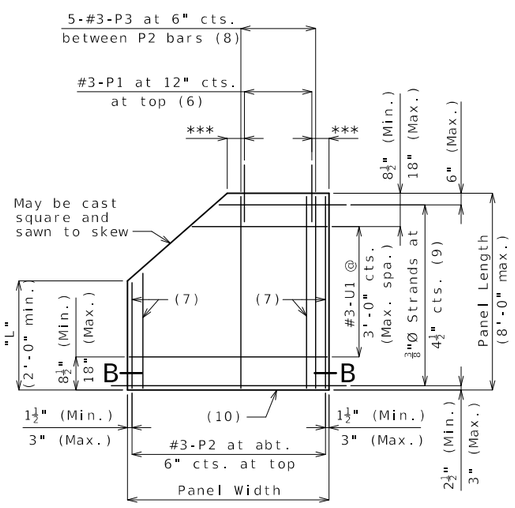

PLAN OF OPTIONAL TRUNCATED END PANEL

*** 3" (Min.), 6" (Max.)

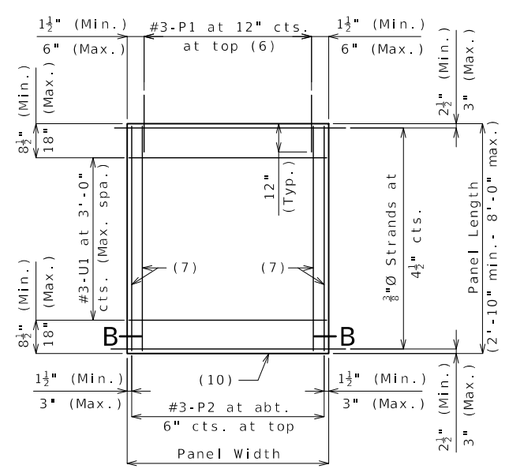

PLAN OF SQUARED PANEL

General Notes:

Prestressed Panels:

Concrete for prestressed panels shall be Class A-1 with f'c = 6,000 psi, f'ci = 4,000 psi.

The top surface of all panels shall receive a scored finish with a depth of scoring of 1/8" perpendicular to the prestressing strands in the panels.

Prestressing tendons shall be high-tensile strength, uncoated, seven-wire, low-relaxation strands for prestressed concrete in accordance with AASHTO M 203 Grade 270, with nominal diameter of strand = 3/8" and nominal area = 0.085 sq.in. and minimum ultimate strength = 22.95 kips (270 ksi). Larger strands may be used with the same spacing and initial tension.

Initial prestressing force = 17.2 kips/strand.

The method and sequence of releasing the strands shall be shown on the shop drawings.

Suitable anchorage devices for lifting panels may be cast in panels, provided the devices are shown on the shop drawings and approved by the engineer. Panel lengths shall be determined by the contractor and shown on the shop drawings.

When squared end panels are used at skewed bents, the skewed portion shall be cast full depth. No separate payment will be made for additional concrete and reinforcing required.

Support from diaphragm forms is required under the optional skewed end until cast-in-place concrete has reached 3,000 psi compressive strength.

Prestressed panels shall be brought to saturated surface-dry (SSD) condition just prior to the deck pour. There shall be no free standing water on the panels or in the area to be cast.

The prestressed panel quantities are not included in the table of estimated quantities for the slab.

Reinforcing Steel:

All dimensions are out to out.

Hooks and bends shall be in accordance with the CRSI Manual of Standard Practice for Detailing Reinforced Concrete Structures, Stirrup and Tie Dimensions.

Minimum clearance to reinforcing steel shall be 1 1/2", unless otherwise shown.

If U1 bars interfere with placement of slab steel, U1 loops may be bent over, as necessary, to clear slab steel.

Deformed welded wire reinforcement (WWR) providing a minimum area of reinforcing perpendicular to strands of 0.22 sq in./ft, with spacing parallel to strands sufficient to ensure proper handling, may be used in lieu of the #3-P2 bars shown. Wire diameter shall not be larger than 0.375 inch. The above alternative reinforcement criteria may be used in lieu of the #3-P3 bars, when required, and placed over a width not less than 2 feet.

The following reinforcing steel shall be tied securely to the strands with the following maximum spacing in each direction:
#3-P2 bars at 16 inches.
WWR at 24 inches.

The #3-U1 bars shall be tied securely to #3-P2 bars, to WWR or to strands (when placed between P1 bars) at about 3-foot centers.

Minimum reinforcement steel length shall be 2'-0".

All reinforcement other than prestressing strands shall be epoxy coated.

Precast panels may be in contact with stirrup reinforcing in diaphragms.

S-bars are not listed in the bill of reinforcing.

Cost of S-bars will be considered completely covered by the contract unit price for the slab.

Joint Filler:

Joint filler shall be preformed fiber expansion joint material in accordance with Sec 1057 or expanded or extruded polystyrene bedding material in accordance with Sec 1073.

Use Slab Haunching Diagram on Sheet No. 24 for determining thickness of joint filler within the limits noted in the table of Joint Filler Dimensions.

Thicker material may be used on one or both sides of the girder to reduce cast-in-place concrete thickness to within tolerances.

The same thickness of preformed fiber expansion joint material shall be used under any one edge of any panel except at locations where top flange thickness may be stepped. The maximum change in thickness between adjacent panels shall be 1/2 inch. The polystyrene bedding material may be cut with a transition to match haunch height above top of flange.

Joint filler shall be glued to the girder. When thickness exceeds 1 1/2 inches, the joint filler shall be glued top and bottom. The glue used shall be the type recommended by the joint filler manufacturer.

Edges of panels shall be uniformly seated on the joint filler before slab reinforcement is placed.

Reference Notes:

Plan of Panel Placement:

(1) S-bars shown are bottom steel in slab between panels and used with squared and truncated end panels only.

(2) Extend S-bars 18 inches beyond the front face of end bents and int. bents for squared and truncated end panels only.

(3) Extend S-bars 9 inches beyond edge of girder (Typ.).

(4) End panels shall be dimensioned 1/2" min. to 1 1/2" max. from the inside face of diaphragm.

(5) For truncated end panels, use a min. of #5-S bars at 6" crossings in openings, or min. 4x4-W7xW7.

Plans of Panels:

(6) For end panels only, P1 bars shall be 2'-0" in length and embedded 12". P1 bars will not be required for panels at squared integral end bents.

(7) #3-P2 bars near edge of panel at bottom (under strands).

(8) Use #3-P3 bars if panel is skewed 45° or greater.

(9) Any strand 2'-0" or shorter shall have a #4 reinforcing bar on each side of it, centered between strands. Strands 2'-0" or shorter may then be debonded at the fabricator's option.

(10) Optional 1/2" x 45° Chamfer one or both sides at bottom.

Section A-A:

(11) Slab thickness over prestressed panels varies due to girder camber. In order to maintain minimum slab thickness, it may be necessary to raise the grade uniformly throughout the structure. No payment will be made for additional labor or materials required for necessary grade adjustment.

(12) Contractor shall ensure proper consolidation under and between panels.

(13) At the contractor's option, the variation in slab thickness over prestressed panels may be eliminated or reduced by increasing and varying the girder top flange thickness. Dimensions shall be shown on the shop drawings.

PRESTRESSED PANELS

Detailed Sep. 2023
Checked Sep. 2023

Note: This drawing is not to scale. Follow dimensions.

STATE OF MISSOURI
TED S. KOESTER
NUMBER PE-2013000591
PROFESSIONAL ENGINEER
THIS SHEET HAS BEEN SIGNED, SEALED AND DATED ELECTRONICALLY.

DATE PREPARED	
10/30/2023	
ROUTE V	STATE MO
DISTRICT BR	SHEET NO. 23
COUNTY GREENE	
JOB NO. J7S3486	
CONTRACT ID.	
PROJECT NO.	
BRIDGE NO. A9119	

DATE	DESCRIPTION

MISSOURI HIGHWAYS AND TRANSPORTATION COMMISSION
105 WEST CAPITOL
JEFFERSON CITY, MO 65102
1-888-ASK-MODOT (1-888-275-6636)

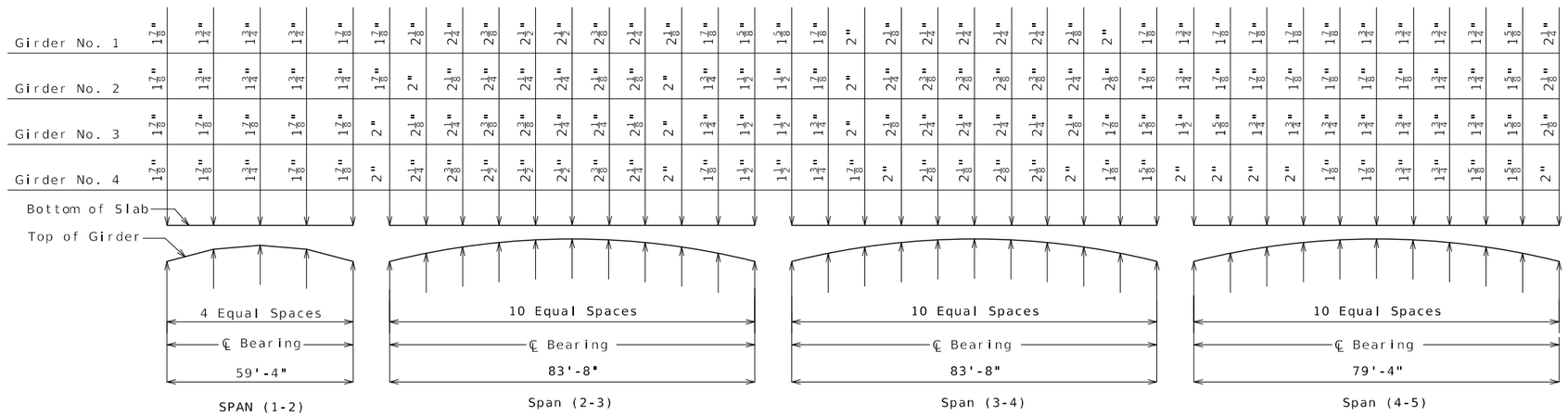

THEORETICAL SLAB HAUNCHING DIAGRAM (ESTIMATED AT 90 DAYS)

If girder beam camber is different from that shown in the camber diagram, in order to maintain minimum slab thickness, an adjustment of the slab haunches, an increase in slab thickness or a raise in grade uniformly throughout the structure shall be necessary. The haunch shall be limited to ensure the projecting girder reinforcement is embedded into slab at least 2 inches. No payment will be made for additional labor or materials required for variation in haunching, slab thickness or grade adjustment.

Concrete in the slab haunches is included in the Estimated Quantities for Slab on Concrete NU-Girder.

Longitudinal dimensions are horizontal.

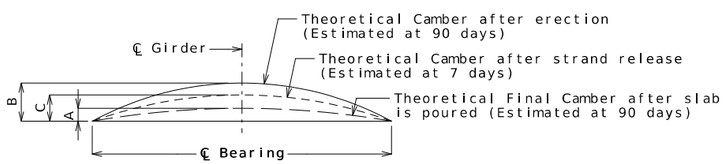

Girder	Span (1-2)			Span (2-3)			Span (3-4)			Span (4-5)		
	A	B	C	A	B	C	A	B	C	A	B	C
Exterior	1/2"	1"	5/8"	1/4"	2"	1 1/2"	1/4"	2"	1 1/2"	5/8"	2 1/8"	1 1/2"
Interior	1/2"			1/8"			1/8"			1/2"		

GIRDER CAMBER DIAGRAM

Conversion Factors for Girder Camber (Estimated at 90 days):

0.1 pt. = 0.314 x 0.5 pt.
0.2 pt. = 0.593 x 0.5 pt.
0.3 pt. = 0.813 x 0.5 pt.
0.4 pt. = 0.952 x 0.5 pt.

0.25 pt. = 0.7125 x 0.5 pt.

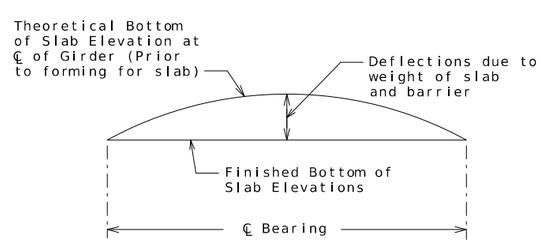

TYPICAL SLAB ELEVATIONS DIAGRAM

Theoretical Bottom of Slab Elevations at Centerline of Girder (Prior to forming for slab) (Estimated at 90 days)

Girder Number	Span (1-2) (59'-4" ℄ Brg. - ℄ Brg.)				
	℄ Brg.	.25	.50	.75	℄ Brg.
1	952.66	952.84	952.99	953.10	953.17
2	952.79	952.98	953.13	953.24	953.32
3	952.73	952.92	953.08	953.20	953.29
4	952.48	952.68	952.84	952.97	953.06

Girder Number	Span (2-3) (83'-8" ℄ Brg. - ℄ Brg.)										
	℄ Brg.	.10	.20	.30	.40	.50	.60	.70	.80	.90	℄ Brg.
1	953.18	953.28	953.37	953.45	953.50	953.54	953.55	953.55	953.52	953.48	953.43
2	953.33	953.43	953.52	953.59	953.65	953.69	953.71	953.71	953.69	953.66	953.62
3	953.30	953.40	953.49	953.57	953.63	953.67	953.69	953.69	953.68	953.65	953.62
4	953.07	953.18	953.28	953.37	953.43	953.48	953.50	953.51	953.50	953.47	953.43

Girder Number	Span (3-4) (83-8" ℄ Brg. - ℄ Brg.)										
	℄ Brg.	.10	.20	.30	.40	.50	.60	.70	.80	.90	℄ Brg.
1	953.43	953.48	953.51	953.52	953.52	953.50	953.46	953.40	953.33	953.24	953.14
2	953.62	953.67	953.70	953.73	953.73	953.72	953.68	953.62	953.55	953.46	953.36
3	953.62	953.67	953.71	953.74	953.74	953.73	953.70	953.65	953.57	953.49	953.39
4	953.43	953.48	953.52	953.55	953.56	953.55	953.52	953.47	953.41	953.33	953.24

Girder Number	Span (4-5) (79'-4" ℄ Brg. - ℄ Brg.)										
	℄ Brg.	.10	.20	.30	.40	.50	.60	.70	.80	.90	℄ Brg.
1	953.13	953.11	953.08	953.03	952.97	952.90	952.80	952.69	952.57	952.44	952.35
2	953.35	953.33	953.31	953.27	953.22	953.14	953.05	952.95	952.82	952.69	952.60
3	953.38	953.37	953.35	953.31	953.26	953.19	953.11	953.00	952.88	952.75	952.66
4	953.23	953.22	953.19	953.16	953.11	953.05	952.96	952.86	952.75	952.63	952.54

Elevations are based on a constant slab thickness of 8 1/2" and include allowance for theoretical dead load deflections due to weight of slab (including precast panel) and barrier.

Detailed Sep. 2023
Checked Sep. 2023

Note: This drawing is not to scale. Follow dimensions.

STATE OF MISSOURI
TED S. KOESTER
NUMBER PE-2013000591
PROFESSIONAL ENGINEER
THIS SHEET HAS BEEN SIGNED, SEALED AND DATED ELECTRONICALLY.

DATE PREPARED	
10/30/2023	
ROUTE V	STATE MO
DISTRICT BR	SHEET NO. 24
COUNTY GREENE	
JOB NO. J7S3486	
CONTRACT ID.	
PROJECT NO.	
BRIDGE NO. A9119	

DESCRIPTION	DATE

MISSOURI HIGHWAYS AND TRANSPORTATION COMMISSION
105 WEST CAPITOL
JEFFERSON CITY, MO 65102
1-888-ASK-MODOT (1-888-275-6636)

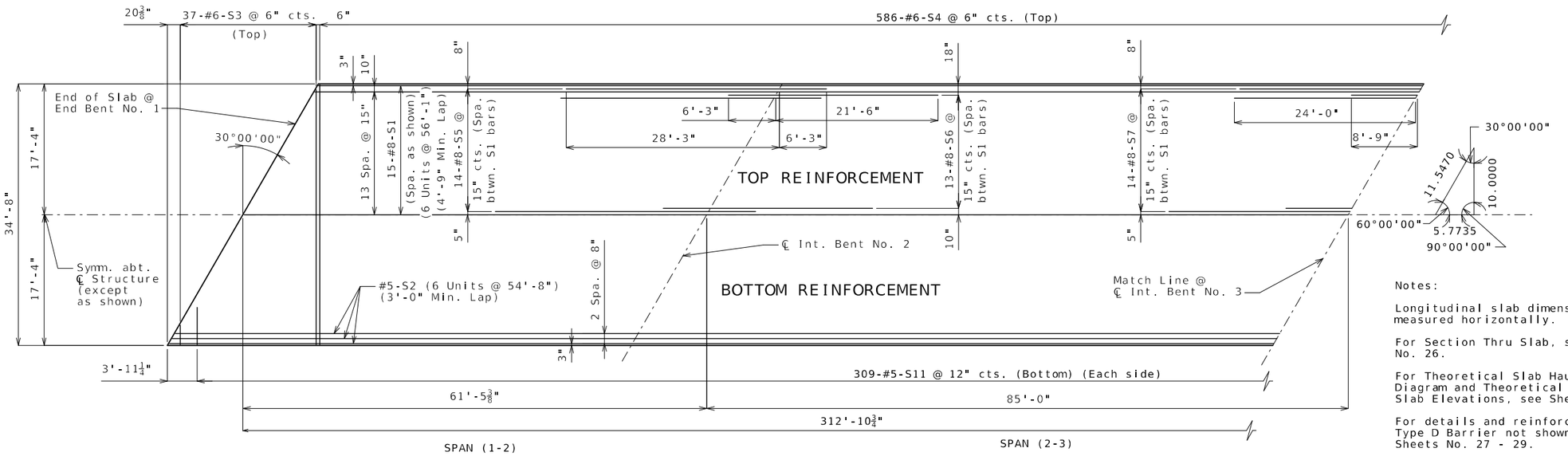

Notes:

Longitudinal slab dimensions are measured horizontally.

For Section Thru Slab, see Sheet No. 26.

For Theoretical Slab Haunching Diagram and Theoretical Bottom of Slab Elevations, see Sheet No. 24.

For details and reinforcement of Type D Barrier not shown, see Sheets No. 27 - 29.

For details of Prestressed Panels, see Sheet No. 23.

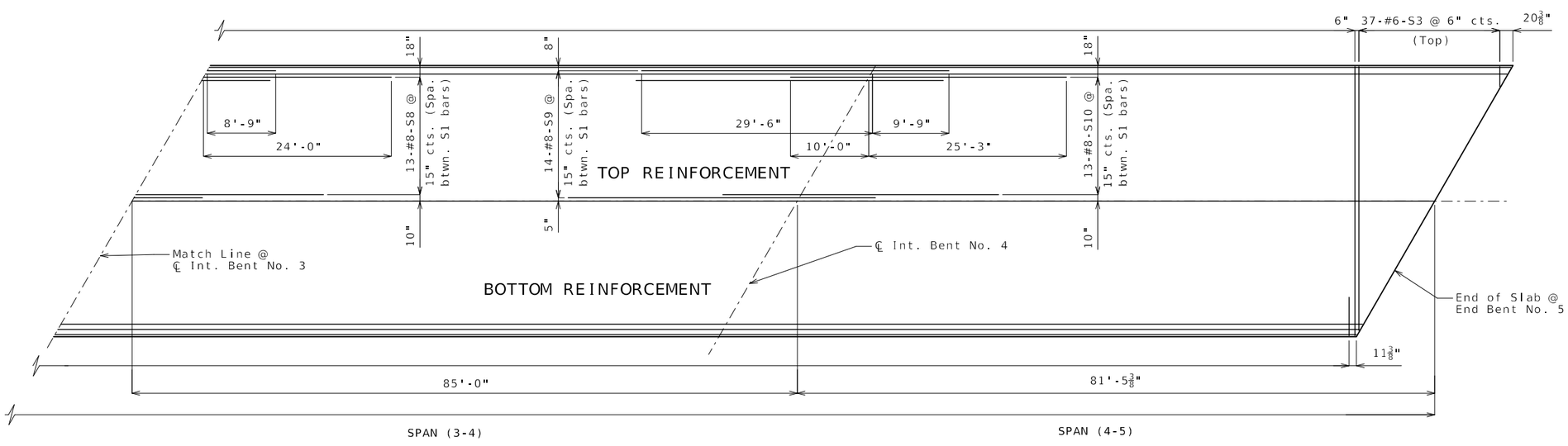

PLAN OF SLAB SHOWING REINFORCEMENT

Detailed Sept. 2023
Checked Sept. 2023

Note: This drawing is not to scale. Follow dimensions.

STATE OF MISSOURI
TED S. KOESTER
NUMBER PE-2013000591
PROFESSIONAL ENGINEER

THIS SHEET HAS BEEN SIGNED, SEALED AND DATED ELECTRONICALLY.

DATE PREPARED	10/30/2023
ROUTE V	STATE MO
DISTRICT BR	SHEET NO. 25
COUNTY	GREENE
JOB NO.	J7S3486
CONTRACT ID.	
PROJECT NO.	
BRIDGE NO.	A9119

DESCRIPTION

DATE

MISSOURI HIGHWAYS AND TRANSPORTATION COMMISSION

105 WEST CAPITOL
JEFFERSON CITY, MO 65102
1-888-ASK-MODOT (1-888-275-6636)

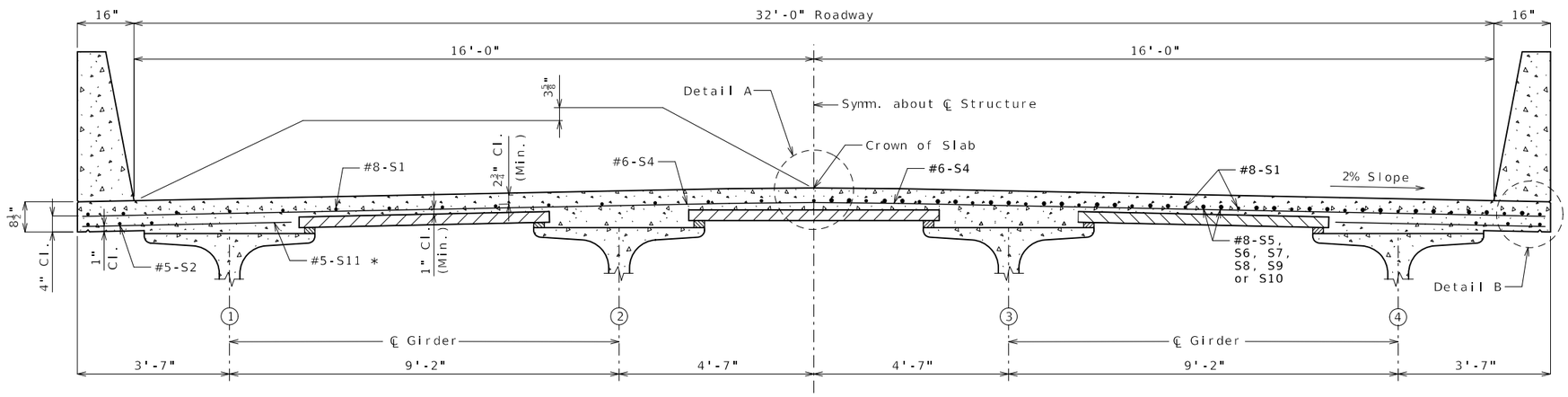

HALF SECTION NEAR MIDSPAN

HALF SECTION NEAR INTERMEDIATE BENT

SECTION THRU SLAB

* Alternate bar shape available, see barrier sheet.

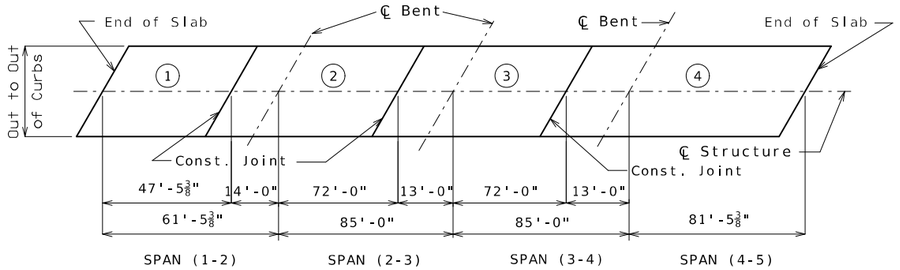

	Sequence of Pours				Min. Rate of Pour Cu. Yds./Hr.
	Direction				With Retarder
Basic Sequence	1	2	3	4	25
	End to 2	1 to 3	2 to 4	3 to End	
Alternate pours to the basic sequence are subject to the approval of the engineer in accordance with Sec 703.					
Alternate A Pours	1 + 2		3	4	25
	End to 3		2 to 4	3 to End	
Alternate B Pours	1 + 2		3 + 4		25
	End to 3		2 to End		
Alternate C Pours	1 + 2 + 3 + 4				25
	End to End				

The contractor shall furnish an approved retarder to retard the set of the concrete to 2.5 hours, and shall pour and satisfactorily finish the slab pours at the rate given.

The concrete diaphragm at the intermediate bents and integral end bents shall be poured a minimum of 30 minutes and a maximum of 2 hours before the slab is poured.

SLAB POURING SEQUENCE

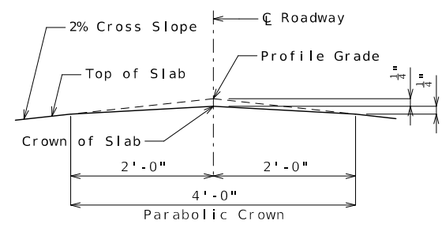

DETAIL A

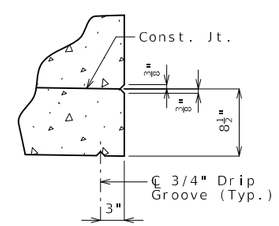

DETAIL B

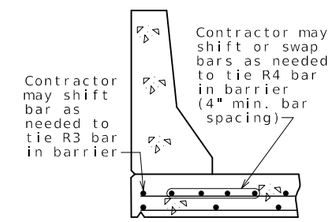

OPTIONAL SHIFTING TOP BARS AT BARRIER

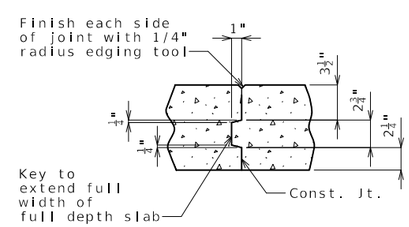

FULL DEPTH SLAB

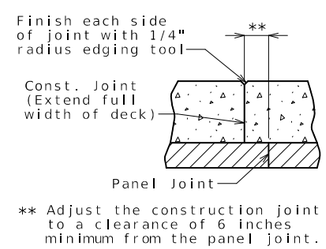

SLAB ON PANELS

SLAB CONSTRUCTION JOINT

Notes:

For details of Prestressed Panels, see Sheet No. 23.

For details and reinforcement of barrier not shown, see Sheets No. 27 thru 29.

For Theoretical Bottom of Slab Elevations, Girder Camber Diagram and Theoretical Slab Haunching Diagram, see Sheet No. 24.

For Plan of Slab Showing Reinforcement, see Sheet No. 25.

SLAB DETAILS

Detailed Sep. 2023
Checked Sep. 2023

Note: This drawing is not to scale. Follow dimensions.

STATE OF MISSOURI
TED S. KOESTER
NUMBER PE-2013000591
PROFESSIONAL ENGINEER

THIS SHEET HAS BEEN SIGNED, SEALED AND DATED ELECTRONICALLY.

DATE PREPARED	10/30/2023
ROUTE V	STATE MO
DISTRICT BR	SHEET NO. 26
COUNTY	GREENE
JOB NO.	J7S3486
CONTRACT ID.	
PROJECT NO.	
BRIDGE NO.	A9119

DESCRIPTION

DATE

MISSOURI HIGHWAYS AND TRANSPORTATION COMMISSION
105 WEST CAPITOL
JEFFERSON CITY, MO 65102
1-888-ASK-MODOT (1-888-275-6636)

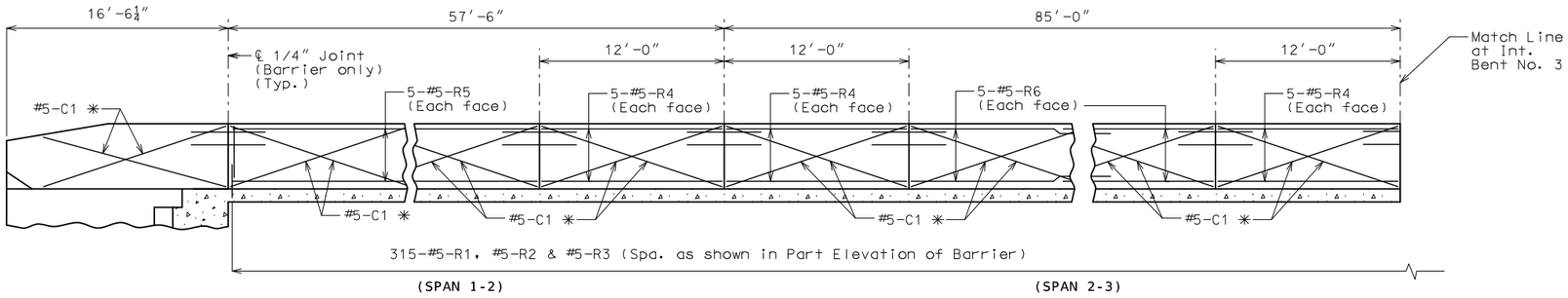

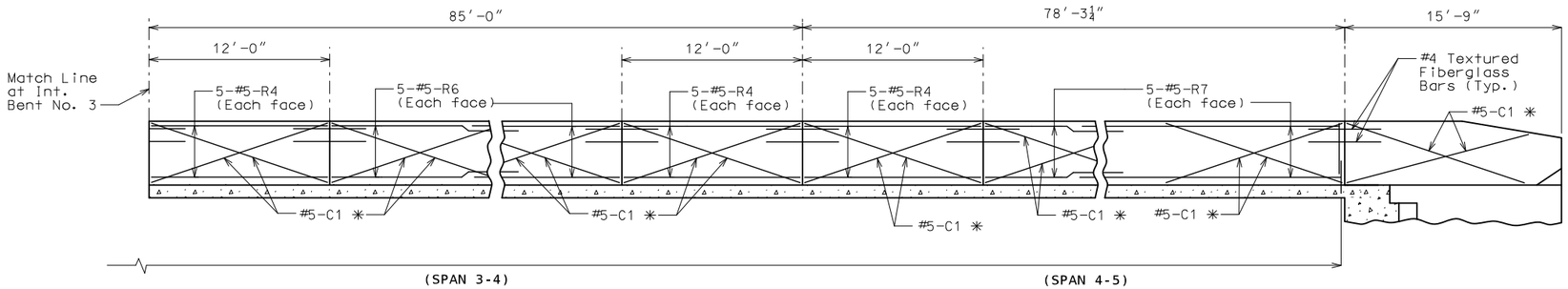

ELEVATION OF LEFT BARRIER

Longitudinal dimensions are horizontal.

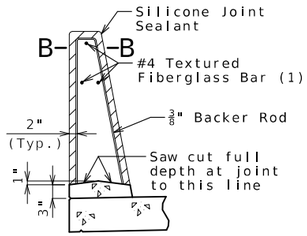

SECTION THRU SAW CUT JOINT

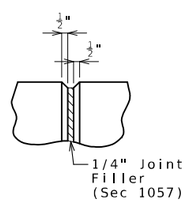

PART ELEVATION AT FORMED JOINT

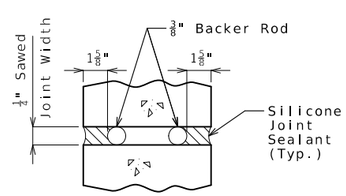

SECTION B-B

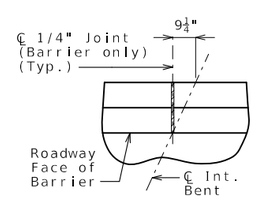

PART PLAN SHOWING JOINT LOCATION

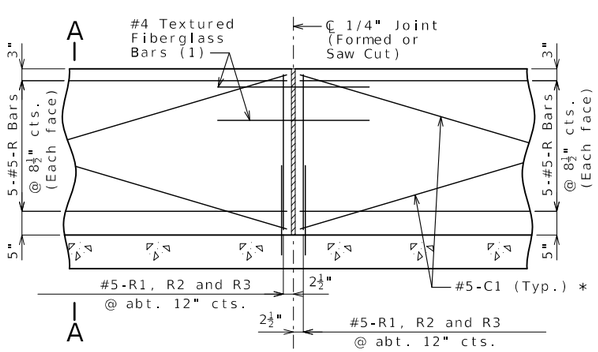

PART ELEVATION OF BARRIER

(1) Four feet long, centered on joint, slip-formed option only

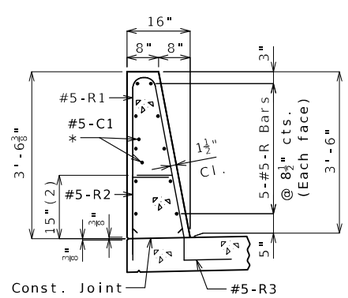

SECTION A-A

Use a minimum lap of 3'-1" for #5 horizontal barrier bars.

The cross-sectional area above the slab is 3.52 square feet.

(2) To top of bar

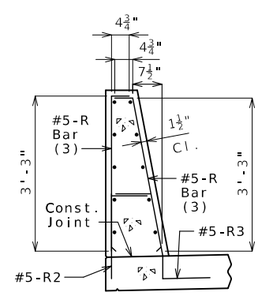

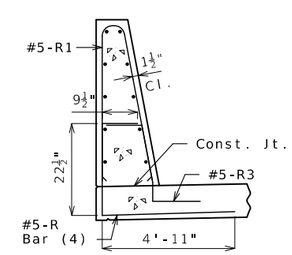

R-BAR PERMISSIBLE ALTERNATE SHAPE

(3) The R1 bar may be separated into two bars as shown, at the contractor's option, only when slip forming is not used. (All dimensions are out to out.)

(4) The R2 bar and #5 bottom transverse slab bar in cantilever (prestressed panels only) combination may be furnished as one bar as shown, at the contractor's option.

General Notes:

✳ Slip-formed option only.

Conventional forming or slip forming may be used. Saw cut joints may be used with conventional forming.

Top of barrier shall be built parallel to grade and barrier joints (except at end bents) normal to grade.

All exposed edges of barrier shall have either a 1/2-inch radius or a 3/8-inch bevel, unless otherwise noted.

Payment for all concrete and reinforcement, complete in place, will be considered completely covered by the contract unit price for Type D Barrier per linear foot.

Concrete in barrier shall be Class B-1.

Measurement of barrier is to the nearest linear foot for each structure, measured along the outside top of slab from end of wing to end of wing.

Concrete traffic barrier delineators shall be placed on top of the barrier as shown on Missouri Standard Plan 617.10 and in accordance with Sec 617. Delineators on bridges with two-lane, two-way traffic shall have retroreflective sheeting on both sides. Concrete traffic barrier delineators will be considered completely covered by the contract unit price for Type D Barrier.

Joint sealant and backer rods shall be in accordance with Sec 717 for silicone joint sealant for saw cut and formed joints.

For slip-formed option, both sides of barrier shall have a vertically broomed finish and the top shall have a transversely broomed finish.

TYPE D BARRIER (LEFT SIDE)

Detailed Sep. 2023
Checked Sep. 2023

Note: This drawing is not to scale. Follow dimensions.

STATE OF MISSOURI
TED S. KOESTER
NUMBER PE-2013000591
PROFESSIONAL ENGINEER
THIS SHEET HAS BEEN SIGNED, SEALED AND DATED ELECTRONICALLY.

DATE PREPARED	
10/30/2023	
ROUTE V	STATE MO
DISTRICT BR	SHEET NO. 27
COUNTY GREENE	
JOB NO. J7S3486	
CONTRACT ID.	
PROJECT NO.	
BRIDGE NO. A9119	

DESCRIPTION	DATE

MISSOURI HIGHWAYS AND TRANSPORTATION COMMISSION
105 WEST CAPITOL
JEFFERSON CITY, MO 65102
1-888-ASK-MODOT (1-888-275-6636)

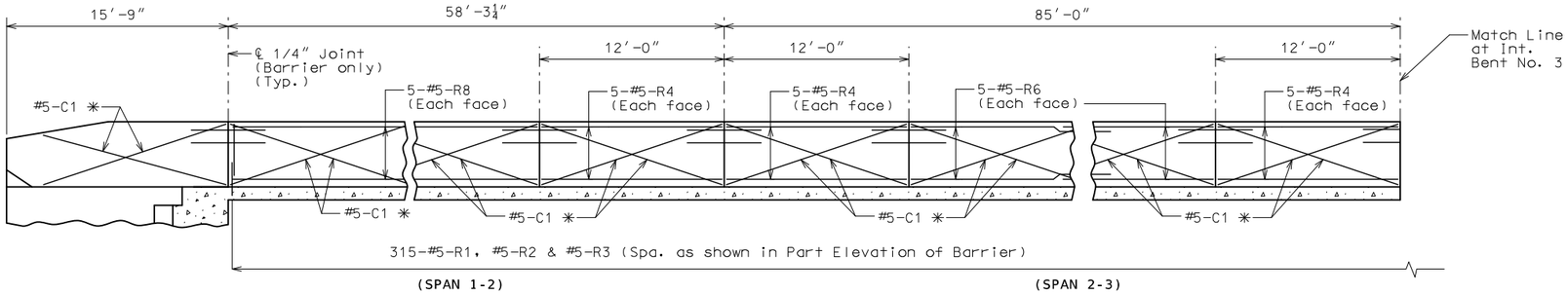

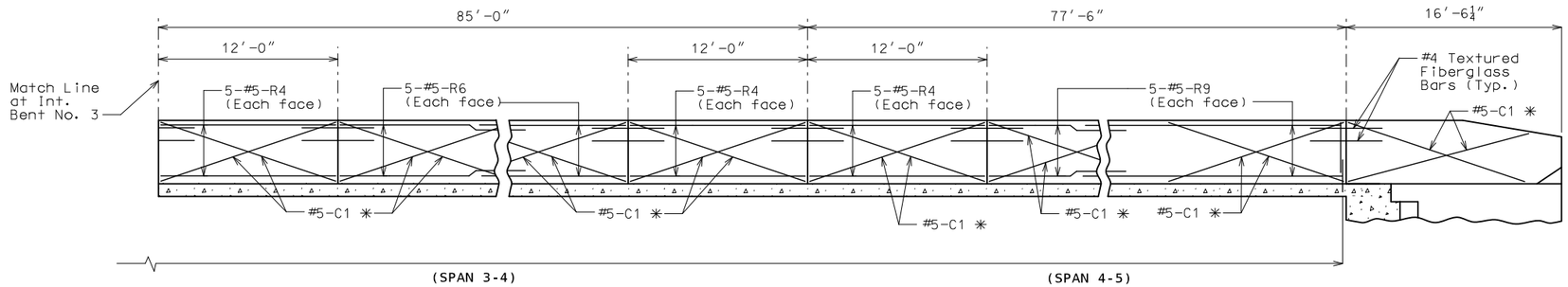

ELEVATION OF RIGHT BARRIER

Longitudinal dimensions are horizontal.

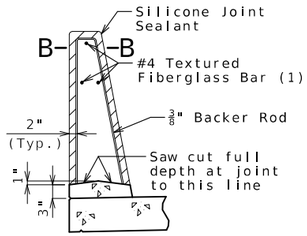

SECTION THRU SAW CUT JOINT

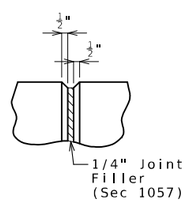

PART ELEVATION AT FORMED JOINT

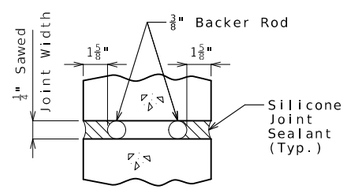

SECTION B-B

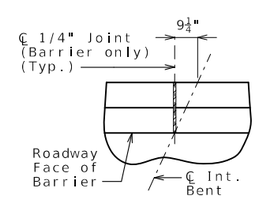

PART PLAN SHOWING JOINT LOCATION

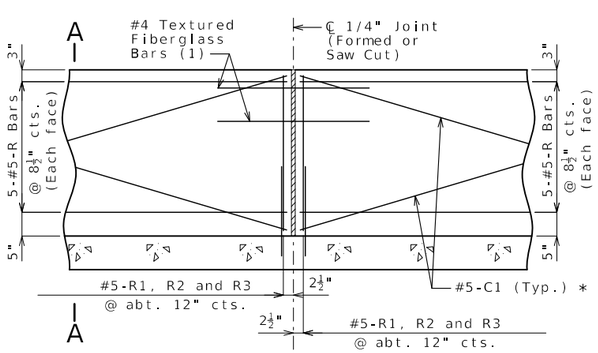

PART ELEVATION OF BARRIER

(1) Four feet long, centered on joint, slip-formed option only

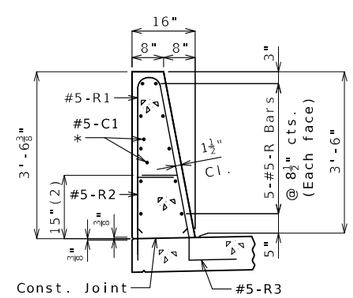

SECTION A-A

Use a minimum lap of 3'-1" for #5 horizontal barrier bars.

The cross-sectional area above the slab is 3.52 square feet.

(2) To top of bar

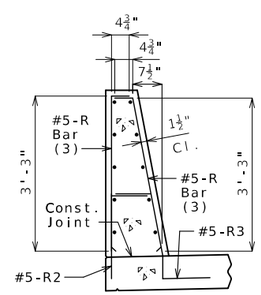

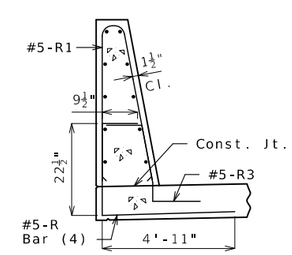

R-BAR PERMISSIBLE ALTERNATE SHAPE

(3) The R1 bar may be separated into two bars as shown, at the contractor's option, only when slip forming is not used. (All dimensions are out to out.)

(4) The R2 bar and #5 bottom transverse slab bar in cantilever (prestressed panels only) combination may be furnished as one bar as shown, at the contractor's option.

General Notes:

✳ Slip-formed option only.

Conventional forming or slip forming may be used. Saw cut joints may be used with conventional forming.

Top of barrier shall be built parallel to grade and barrier joints (except at end bents) normal to grade.

All exposed edges of barrier shall have either a 1/2-inch radius or a 3/8-inch bevel, unless otherwise noted.

Payment for all concrete and reinforcement, complete in place, will be considered completely covered by the contract unit price for Type D Barrier per linear foot.

Concrete in barrier shall be Class B-1.

Measurement of barrier is to the nearest linear foot for each structure, measured along the outside top of slab from end of wing to end of wing.

Concrete traffic barrier delineators shall be placed on top of the barrier as shown on Missouri Standard Plan 617.10 and in accordance with Sec 617. Delineators on bridges with two-lane, two-way traffic shall have retroreflective sheeting on both sides. Concrete traffic barrier delineators will be considered completely covered by the contract unit price for Type D Barrier.

Joint sealant and backer rods shall be in accordance with Sec 717 for silicone joint sealant for saw cut and formed joints.

For slip-formed option, both sides of barrier shall have a vertically broomed finish and the top shall have a transversely broomed finish.

TYPE D BARRIER (RIGHT SIDE)

Detailed Sep. 2023
Checked Sep. 2023

Note: This drawing is not to scale. Follow dimensions.

STATE OF MISSOURI
TED S. KOESTER
NUMBER PE-2013000591
PROFESSIONAL ENGINEER
THIS SHEET HAS BEEN SIGNED, SEALED AND DATED ELECTRONICALLY.

DATE PREPARED	10/30/2023
ROUTE V	STATE MO
DISTRICT BR	SHEET NO. 28
COUNTY	GREENE
JOB NO.	J7S3486
CONTRACT ID.	
PROJECT NO.	
BRIDGE NO.	A9119

DESCRIPTION

DATE

MISSOURI HIGHWAYS AND TRANSPORTATION COMMISSION
105 WEST CAPITOL
JEFFERSON CITY, MO 65102
1-888-ASK-MODOT (1-888-275-6636)

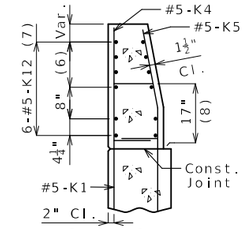

SECTION A-A

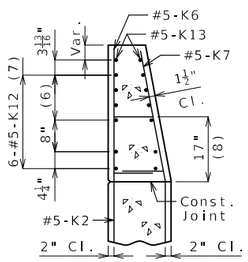

SECTION B-B

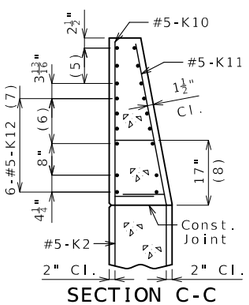

SECTION C-C

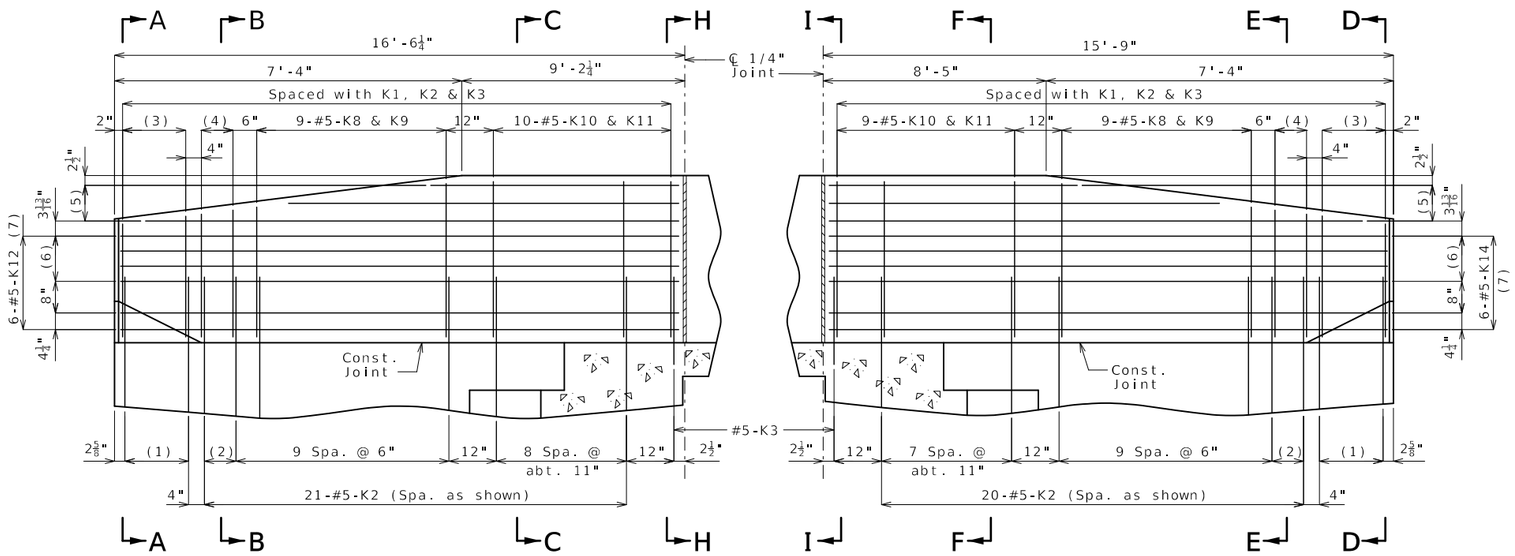

PART ELEVATION

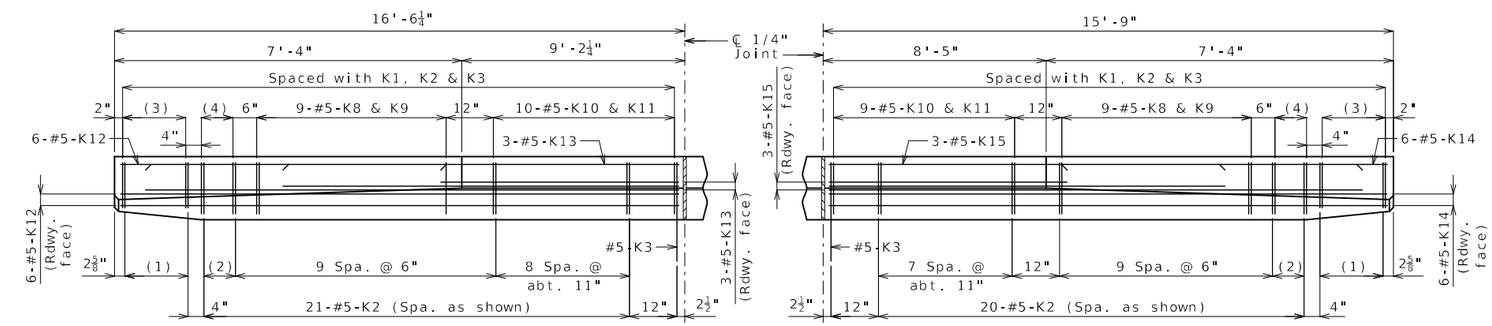

PART PLAN

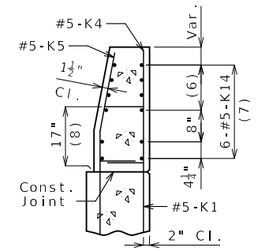

SECTION D-D

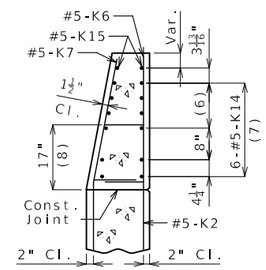

SECTION E-E

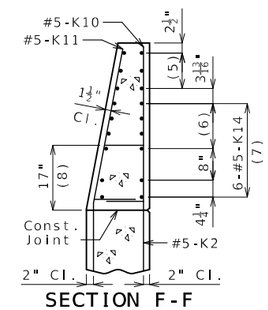

SECTION F-F

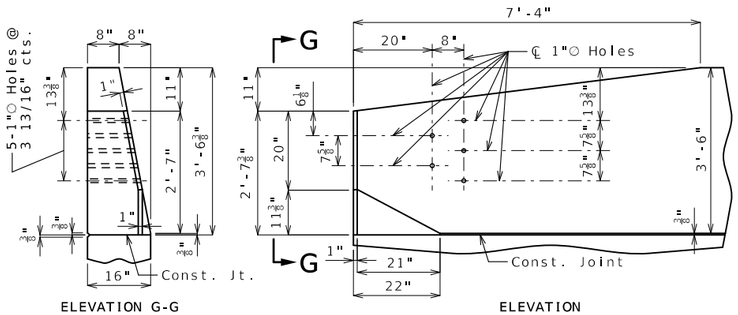

ELEVATION G-G

ELEVATION

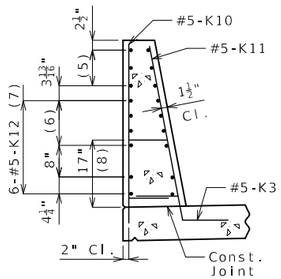

SECTION H-H

(1) 5-#5-K1 @ 4" cts.

(2) 2 spaces @ 4"

(3) 5-#5-K4 & K5

(4) 3-#5-K6 & K7

(5) 3-#5-K13 or K15 @ 4½" cts., each face

(6) 3 spaces @ 3 13/16"

(7) Spaced as shown, each face

(8) To top of bar

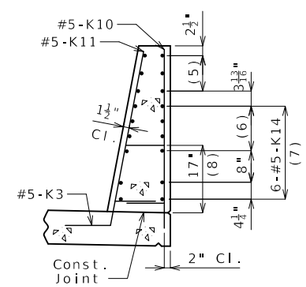

SECTION I-I

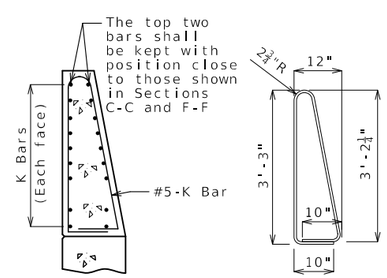

K10-K11 BAR PERMISSIBLE ALTERNATE SHAPE

(Other K bars not shown for clarity)

The K10-K11 bar combination may be furnished as one bar as shown, at the contractor's option.

All dimensions are out to out.

* Transition to zero at Type A curb for gutter lines to match.

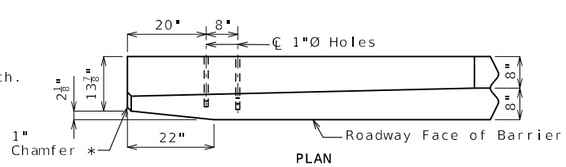

DETAILS OF GUARD RAIL ATTACHMENT

General Notes:

Concrete traffic barrier delineators shall be placed on top of the barrier as shown on Missouri Standard Plan 617.10 and in accordance with Sec 617. Delineators on bridges with two-lane, two-way traffic shall have retroreflective sheeting on both sides. Concrete traffic barrier delineators will be considered completely covered by the contract unit price for Type D Barrier.

Reinforcing Steel:
Minimum clearance to reinforcing steel shall be 1 1/2" except as shown for bars embedded into end bent.

TYPE D BARRIER AT END BENTS

(Left barrier shown, right barrier similar)

Detailed Sep. 2023
Checked Sep. 2023

Note: This drawing is not to scale. Follow dimensions.

STATE OF MISSOURI
TED S. KOESTER
NUMBER PE-2013000591
PROFESSIONAL ENGINEER
THIS SHEET HAS BEEN SIGNED, SEALED AND DATED ELECTRONICALLY.

DATE PREPARED	
10/30/2023	
ROUTE	STATE
V	MO
DISTRICT	SHEET NO.
BR	29
COUNTY	
GREENE	
JOB NO.	
J7S3486	
CONTRACT ID.	
PROJECT NO.	
BRIDGE NO.	
A9119	

DATE	DESCRIPTION

MISSOURI HIGHWAYS AND TRANSPORTATION COMMISSION
105 WEST CAPITOL
JEFFERSON CITY, MO 65102
1-888-ASK-MODOT (1-888-275-6636)

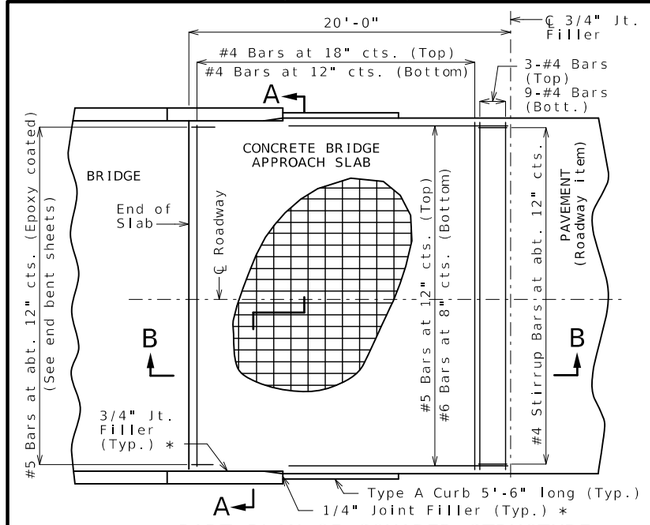

PART PLAN OF SQUARED STRUCTURE

(Skewed structure similar)

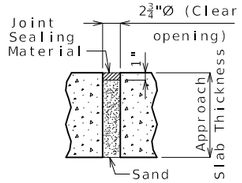

UNDERSEAL ACCESS HOLE DETAIL

(If required)

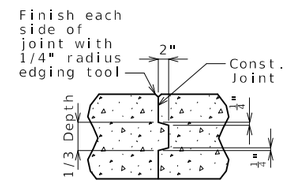

CONSTRUCTION JOINT DETAIL

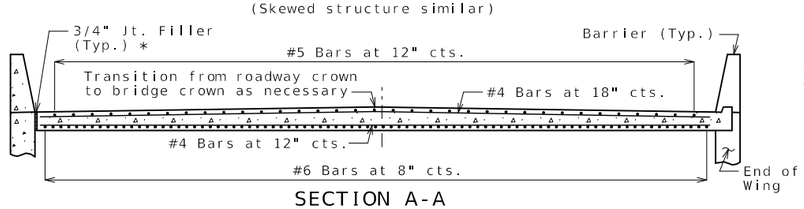

SECTION A-A

With the approval of the engineer, the contractor may crown the bottom of the approach slab to match the crown of the roadway surface.

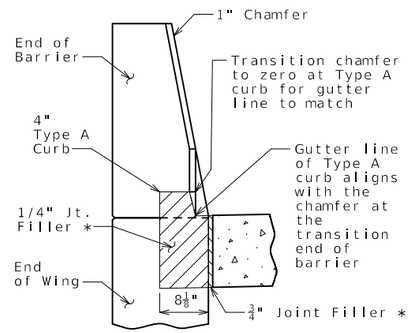

SECTION BETWEEN CURB AND BARRIER

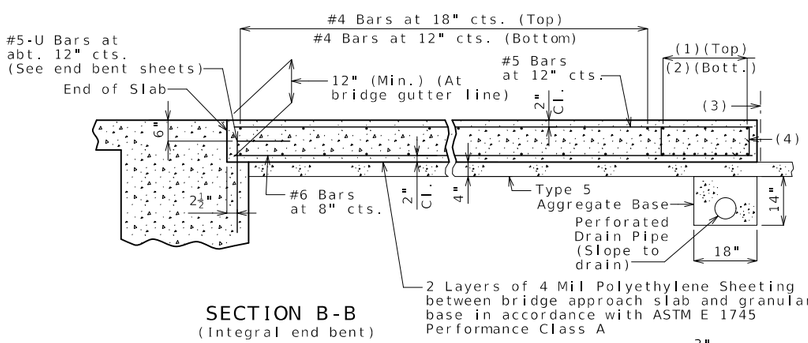

(1) 3-#4 Bars

(2) 9-#4 Bars

(3) ℄ 3/4" Jt. Filler

(4) #4 Stirrup Bars at abt. 12" cts.; 2'-0"x 8" (Min.) out to out; Actual length = 5'-10" (Min.); 90° stirrup hook at bottom; Stirrup height (8") and actual length vary due to crown.

SECTION B-B

(Integral end bent)

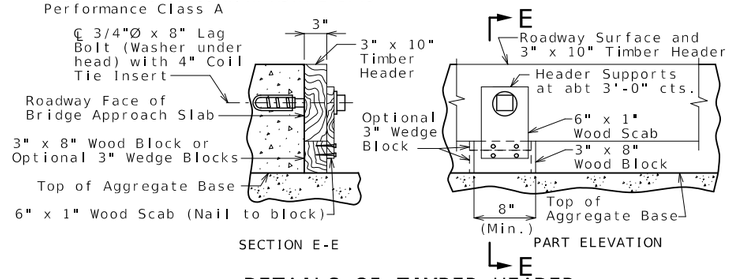

SECTION E-E

PART ELEVATION

DETAILS OF TIMBER HEADER

Remove timber header when concrete pavement is placed.

OPTIONAL CONCRETE SLAB

Notes For Concrete Slab Only:

All concrete for the bridge approach slab shall be in accordance with Sec 503 (f'c = 4,000 psi).

The reinforcing steel in the bridge approach slab shall be epoxy coated Grade 60 with fy = 60,000 psi.

Longitudinal construction joints in bridge approach slab shall be aligned with longitudinal construction joints in bridge slab.

Minimum clearance to reinforcing steel shall be 1 1/2", unless otherwise shown.

The reinforcing steel in the bridge approach slab shall be continuous. The transverse reinforcing steel may be made continuous by providing a minimum lap splice of 23 inches for #4 bars, or by mechanical bar splice.

Mechanical bar splices shall be in accordance with Sec 710.

All joint filler shall be in accordance with Sec 1057 for preformed fiber expansion joint filler except as noted.

Payment for furnishing all materials, labor and excavation necessary to construct the concrete bridge approach slab, including the timber header, underdrain, Type 5 aggregate base, joint filler, and all other appurtenances and incidental work as shown on this sheet, complete in place, will be considered completely covered by the contract unit price for Bridge Approach Slab (Minor) per square yard.

See Missouri Standard Plan 609.00 for details of Type A curb.

Drain pipe may be either 6" diameter corrugated metallic-coated pipe underdrain, 4" diameter corrugated polyvinyl chloride (PVC) drain pipe, or 4" diameter corrugated polyethylene (PE) drain pipe.

* Seal joint between vertical face of approach slab and wing with sealant in accordance with Sec 717 for silicone joint sealant for saw cut and formed joints.

General Notes:

Contractor shall have the option to construct either slab except as noted.

The contractor shall pour and satisfactorily finish the bridge slab before placing the bridge approach slab.

MoDOT Construction personnel will indicate the bridge approach slab used for this structure:

☐ Concrete Bridge Approach Slab

☐ Asphalt Bridge Approach Slab

Notes For Asphalt Slab Only:

Payment for furnishing all materials, labor and excavation necessary to construct the asphalt bridge approach slab, including tack, curb, and Type 5 aggregate base within the pay limits shown, complete in place, will be considered completely covered by the contract unit price for Bridge Approach Slab (Minor) per square yard.

Application of tack is required between lifts per Sec 403.

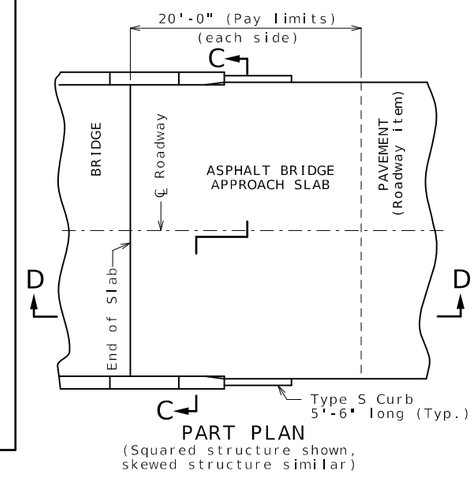

PART PLAN

(Squared structure shown, skewed structure similar)

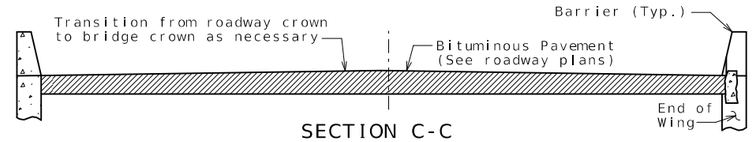

SECTION C-C

With the approval of the engineer, the contractor may crown the bottom of the approach slab to match the crown of the roadway surface.

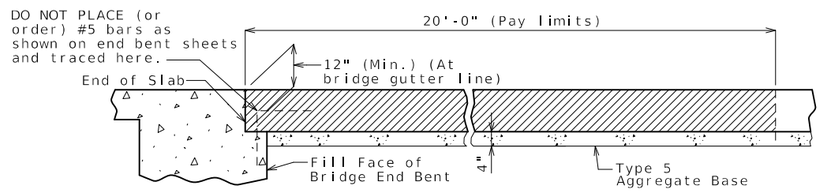

SECTION D-D

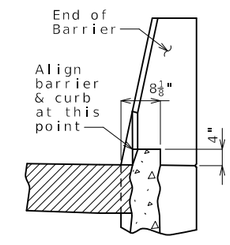

4" TYPE S CURB

See Missouri Standard Plan 609.00 for details of Type S curb.

OPTIONAL ASPHALT SLAB (NOT ALLOWED WITH CONCRETE PAVEMENT)

BRIDGE APPROACH SLAB (MINOR)

Integral end bents shown, non-integral end bent similar.

Detailed Sep. 2023
Checked Sep. 2023

Note: This drawing is not to scale. Follow dimensions.

STATE OF MISSOURI — TED S. KOESTER — NUMBER PE-2013000591 — PROFESSIONAL ENGINEER

THIS SHEET HAS BEEN SIGNED, SEALED AND DATED ELECTRONICALLY.

DATE PREPARED	10/30/2023
ROUTE	V
STATE	MO
DISTRICT	BR
SHEET NO.	30
COUNTY	GREENE
JOB NO.	J7S3486
CONTRACT ID.	
PROJECT NO.	
BRIDGE NO.	A9119

DESCRIPTION

DATE

MISSOURI HIGHWAYS AND TRANSPORTATION COMMISSION

105 WEST CAPITOL
JEFFERSON CITY, MO 65102
1-888-ASK-MODOT (1-888-275-6636)

BILL OF REINFORCING STEEL

NO. REQ'D.	MARK NO. (SIZE MARK)	LOCATION	EPOXY (E)	SHAPE NO.	STIRRUP (S)	SUBSTR. (X)	VARIES (V)	NO. EACH	B FT. IN.	C FT. IN.	D FT. IN.	E FT. IN.	F FT. IN.	H FT. IN.	K FT. IN.	NOMINAL LENGTH FT. IN.	ACTUAL LENGTH FT. IN.	WEIGHT LBS.
		SUBSTRUCTURE																
		INT. BENT 2																
21	6 D200	BEAM		20		X			2 6.000							2 6	2 6	79
8	8 H200	BEAM		20		X			38 3.000							38 3	38 3	817
10	4 H201	WEB		20		X			27 2.000							27 2	27 2	181
3	8 H202	WEB		17		X			28 0.000							28 11	28 11	232
16	6 H203	BEAM		10	S	X				22.000	3 7.750					7 4	7 0	168
12	6 H204	BEAM		20		X			38 3.000							38 3	38 3	689
8	8 H205	BEAM		17		X			38 3.000							39 2	39 2	837
3	5 P200	SOCKET		35		X			3 0.000	6.000	29 10.000					581	2581 2	1818
45	4 P201	BEAM		34	S	X			3 0.000							10 4	10 4	311
36	5 U200	BEAM		13	S	X			2 6.000	4 3.000	2 6.000	4 3.000				14 5	14 1	529
10	5 U201	BEAM		10	S	X				4 3.000	3 9.000					12 3	12 1	126
20	5 U202	BEAM		13	S	X			3 9.000	4 3.000	3 9.000	4 3.000				16 11	16 7	346
8	4 U203	BEAM		10	S	X				6.000	3 9.000					4 9	4 7	24
4	5 U204	BEAM		10	S	X				4 3.000	2 6.000					11 0	10 10	45
36	5 U205	WEB		19	S	X			7 1.000	18.000						8 7	8 6	319
48	10 V200	SOCKET		17		X			33 10.000							35 3	35 3	7281
		INT. BENT 3																
21	6 D300	BEAM		20		X			2 6.000							2 6	2 6	79
8	8 H300	BEAM		20		X			38 3.000							38 3	38 3	817
10	4 H301	WEB		20		X			27 2.000							27 2	27 2	181
3	8 H302	WEB		17		X			28 0.000							28 11	28 11	232
16	6 H303	BEAM		10	S	X				22.000	3 7.750					7 4	7 0	168
12	6 H304	BEAM		20		X			38 3.000							38 3	38 3	689
8	8 H305	BEAM		17		X			38 3.000							39 2	39 2	837
3	5 P300	SOCKET		35		X			3 0.000	6.000	35 9.000					690 1	690 1	2162
45	4 P301	BEAM		34	S	X			3 0.000							10 4	10 4	311
36	5 U300	BEAM		13	S	X			2 6.000	4 3.000	2 6.000	4 3.000				14 5	14 1	529
10	5 U301	BEAM		10	S	X				4 3.000	3 9.000					12 3	12 1	126
20	5 U302	BEAM		13	S	X			3 9.000	4 3.000	3 9.000	4 3.000				16 11	16 7	346
8	4 U303	BEAM		10	S	X				6.000	3 9.000					4 9	4 7	24
4	5 U304	BEAM		10	S	X				4 3.000	2 6.000					11 0	10 10	45
36	5 U305	WEB		19	S	X			7 6.000	18.000						9 0	8 11	335
48	10 V300	SOCKET		17		X			39 9.000							41 2	41 2	8503
		INT. BENT 4																
21	6 D400	BEAM		20		X			2 6.000							2 6	2 6	79
8	8 H400	BEAM		20		X			38 3.000							38 3	38 3	817
10	4 H401	WEB		20		X			27 2.000							27 2	27 2	181
3	8 H402	WEB		17		X			28 0.000							28 11	28 11	232

BILL OF REINFORCING STEEL

NO. REQ'D.	MARK NO. (SIZE MARK)	LOCATION	EPOXY (E)	SHAPE NO.	STIRRUP (S)	SUBSTR. (X)	VARIES (V)	NO. EACH	B FT. IN.	C FT. IN.	D FT. IN.	E FT. IN.	F FT. IN.	H FT. IN.	K FT. IN.	NOMINAL LENGTH FT. IN.	ACTUAL LENGTH FT. IN.	WEIGHT LBS.
16	6 H403	BEAM		10	S	X				22.000	3 7.750					7 4	7 0	168
12	6 H404	BEAM		20		X			38 3.000							38 3	38 3	689
8	8 H405	BEAM		17		X			38 3.000							39 2	39 2	837
3	5 P400	SOCKET		35		X			3 0.000	6.000	40 5.000					777	6777 6	2433
45	4 P401	BEAM		34	S	X			3 0.000							10 4	10 4	311
36	5 U400	BEAM		13	S	X			2 6.000	4 3.000	2 6.000	4 3.000				14 5	14 1	529
10	5 U401	BEAM		10	S	X				4 3.000	3 9.000					12 3	12 1	126
20	5 U402	BEAM		13	S	X			3 9.000	4 3.000	3 9.000	4 3.000				16 11	16 7	346
8	4 U403	BEAM		10	S	X				6.000	3 9.000					4 9	4 7	24
4	5 U404	BEAM		10	S	X				4 3.000	2 6.000					11 0	10 10	45
36	5 U405	WEB		19	S	X			7 2.000	18.000						8 8	8 7	322
48	10 V400	SOCKET		17		X			44 5.000							45 10	45 10	9467
		SUPERSTRUCT.																
		END BENT 1																
3	6 F100	DIAPHRAGM	E	23	S				3 4.625	5 0.000				2 11.250	20.250	8 5	8 4	38
9	6 F101	WING BRACE	E	15	S				13.875	3 7.000	2 3.125	23.500	13.500	12.000	7.000	7 0	6 11	93
3	6 F102	DIAPHRAGM	E	21	S				3 4.625	6 6.000				2 11.250	20.250	9 11	9 6	43
9	6 F103	WING BRACE	E	15	S				2 3.125	6 0.000	13.875	7.000	12.000	13.500	23.500	9 5	9 5	127
12	8 H100	BEAM&DIAPH.	E	20					39 9.000							39 9	39 9	1274
8	6 H101	BEAM&DIAPH.	E	20					39 9.000							39 9	39 9	478
9	6 H102	DIAPHRAGM	E	20					9 4.000							9 4	9 4	126
3	6 H103	DIAPHRAGM	E	20					6 7.000							6 7	6 7	30
6	6 H104	DIAPHRAGM	E	20					3 4.000							3 4	3 4	30
2	6 H105	DIAPHRAGM	E	20					2 0.000							2 0	2 0	6
4	6 H106	BEAM	E	20					15 5.000							15 5	15 5	93
16	8 H107	WING	E	20					14 6.000							14 6	14 6	619
36	6 H108	WING	E	20					13 8.000							13 8	13 8	739
4	5 H109	STRD. TIE	E	23					15.000	3 3.000	15.000	7.500	13.000	7.500	13.000	5 9	5 9	24
32	5 U100	APP. TIE	E	19	S				2 0.000	15.000						3 3	3 2	106
17	5 U101	BEAM	E	31	S				4 9.000	3 5.500	4 9.000					13 11	13 8	242
2	4 U102	BEAM	E	10	S					2 8.000	3 5.500					8 10	8 8	12
16	4 U103	BEAM	E	13	S				3 5.500	2 8.000	3 5.500	2 8.000				13 0	12 9	136
6	4 U104	BEAM	E	10	S					2 11.000	3 5.500					9 4	9 2	37
8	4 U105	BEAM	E	13	S				3 5.500	2 11.000	3 5.500	2 11.000				13 6	13 3	71
25	6 U106	DIAPHRAGM	E	19	S				2 3.000	3 5.500						5 9	5 7	210
50	6 U107	DIAPHRAGM	E	19	S				3 4.000	5 3.000						8 7	8 5	632
25	5 U108	DIAPHRAGM	E	31	S				3 4.000	2 10.500	3 4.000					10 6	10 3	267
24	6 V100	DIAPHRAGM	E	20					2 3.000							2 3	2 3	81
16	5 V101	BEAM	E	17					4 9.000							5 4	5 4	89
26	6 V102	WING	E	20					6 4.000							6 4	6 4	247
26	6 V103	WING	E	20					6 7.000							6 7	6 7	257
		END BENT 5																
3	6 F500	DIAPHRAGM	E	23	S				3 4.625	5 0.000				2 11.250	20.250	8 5	8 4	38
9	6 F501	WING BRACE	E	15	S				13.875	3 7.000	2 3.125	23.500	13.500	12.000	7.000	7 0	6 11	93
3	6 F502	DIAPHRAGM	E	21	S				3 4.625	6 6.000				2 11.250	20.250	9 11	9 6	43
9	6 F503	WING BRACE	E	15	S				2 3.125	6 0.000	13.875	7.000	12.000	13.500	23.500	9 5	9 5	127

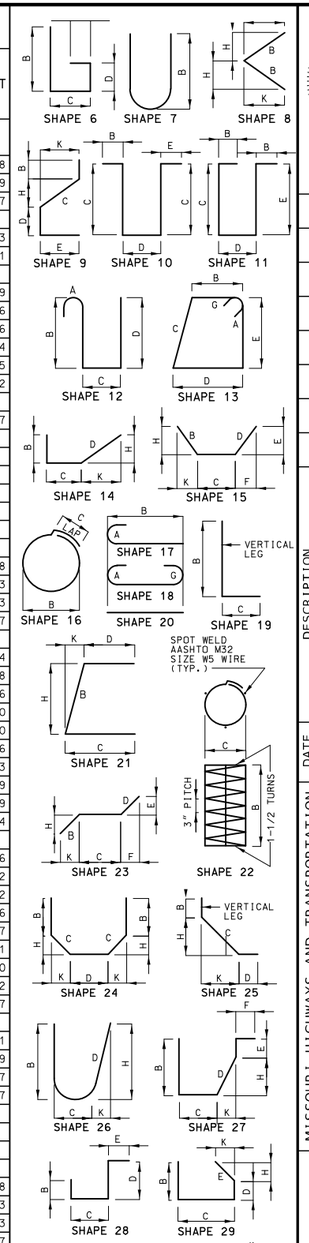

BENDING DIAGRAMS

STATE OF MISSOURI
TED S. KOESTER
NUMBER PE-2013000591
PROFESSIONAL ENGINEER

THIS SHEET HAS BEEN SIGNED, SEALED AND DATED ELECTRONICALLY.

DATE PREPARED	
10/30/2023	
ROUTE	STATE
V	MO
DISTRICT	SHEET NO.
BR	31
COUNTY	
GREENE	
JOB NO.	
J7S3486	
CONTRACT ID.	
PROJECT NO.	
BRIDGE NO.	
A9119	

DESCRIPTION

DATE

MISSOURI HIGHWAYS AND TRANSPORTATION COMMISSION
105 WEST CAPITOL
JEFFERSON CITY, MO 65102
1-888-ASK-MODOT (1-888-275-6636)

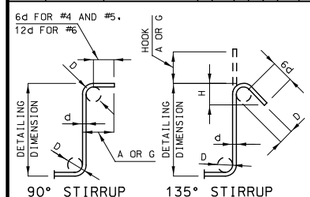

STIRRUP HOOK DIMENSIONS				
GRADES 40 - 50 - 60 KSI				
BAR SIZE	D (IN.)	90° HOOK	135° HOOK	
		HOOK A OR G	HOOK A OR G	APPROX. H
#4	2"	4 1/2"	4 1/2"	3"
#5	2 1/2"	6"	5 1/2"	3 3/4"
#6	4 1/2"	12"	8"	4 1/2"

NOTE: UNLESS OTHERWISE NOTED, DIAMETER "D" IS THE SAME FOR ALL BENDS AND HOOKS ON A BAR.

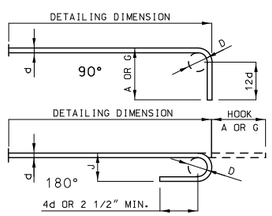

END HOOK DIMENSIONS				
BAR SIZE	D (IN.)	ALL GRADES		
		180° HOOKS		90° HOOKS
		A OR G	J	A OR G
#3	2 1/4"	5"	3"	6"
#4	3"	6"	4"	8"
#5	3 3/4"	7"	5"	10"
#6	4 1/2"	8"	6"	12"
#7	5 1/4"	10"	7"	14"
#8	6"	11"	8"	16"
#9	9 1/2"	15"	11 3/4"	19"
#10	10 3/4"	17"	13 1/4"	22"
#11	12"	19"	14 3/4"	2'-0"
#14	18 1/4"	2'-3"	21 3/4"	2'-7"

NOTE:
ALL STANDARD HOOKS AND BENDS OTHER THAN 180 DEGREE ARE TO BE BENT WITH SAME PROCEDURE AS FOR 90 DEGREE STANDARD HOOKS.

HOOKS AND BENDS SHALL BE IN ACCORDANCE WITH THE PROCEDURES AS SHOWN ON THIS SHEET.

E = EPOXY COATED REINFORCEMENT.
S = STIRRUP.
X = BAR IS INCLUDED IN SUBSTRUCTURE QUANTITIES.
V = BAR DIMENSIONS VARY IN EQUAL INCREMENTS BETWEEN DIMENSIONS SHOWN ON THIS LINE AND THE FOLLOWING LINE.
NO. EA. = NUMBER OF BARS OF EACH LENGTH.

NOMINAL LENGTHS ARE BASED ON OUT TO OUT DIMENSIONS SHOWN IN BENDING DIAGRAMS AND ARE LISTED FOR FABRICATORS USE. (NEAREST INCH)

ACTUAL LENGTHS ARE MEASURED ALONG CENTERLINE BAR TO THE NEAREST INCH.

PAYWEIGHTS ARE BASED ON ACTUAL LENGTHS.

FOUR ANGLE OR CHANNEL SPACERS ARE REQUIRED FOR EACH COLUMN SPIRAL. SPACERS ARE TO BE PLACED ON INSIDE OF SPIRALS. LENGTH AND WEIGHT OF COLUMN SPIRALS DO NOT INCLUDE SPLICES OR SPACERS.

REINFORCING STEEL (GRADE 60) FY = 60,000 PSI.

Detailed Sep. 2023
Checked Sep. 2023

Note: This drawing is not to scale. Follow dimensions.

BILL OF REINFORCING STEEL

NO. REQ'D.	MARK NO. SIZE	MARK NO. MARK	LOCATION	EPOXY (E)	SHAPE NO.	STIRRUP (S)	SUBSTR. (X)	VARIES (V)	NO. EACH	B FT.	B IN.	C FT.	C IN.	D FT.	D IN.	E FT.	E IN.	F FT.	F IN.	H FT.	H IN.	K FT.	K IN.	NOMINAL LENGTH FT.	NOMINAL LENGTH IN.	ACTUAL LENGTH FT.	ACTUAL LENGTH IN.	WEIGHT LBS.
12	8	H500	BEAM&DIAPH.	E	20					39	9.000													39	9	39	9	1274
8	6	H501	BEAM&DIAPH.	E	20					39	9.000													39	9	39	9	478
9	6	H502	DIAPHRAGM	E	20					9	4.000													9	4	9	4	126
3	6	H503	DIAPHRAGM	E	20					6	7.000													6	7	6	7	30
6	6	H504	DIAPHRAGM	E	20					3	4.000													3	4	3	4	30
2	6	H505	DIAPHRAGM	E	20					2	0.000													2	0	2	0	6
4	6	H506	BEAM	E	20					15	5.000													15	5	15	5	93
16	8	H507	WING	E	20					14	6.000													14	6	14	6	619
36	6	H508	WING	E	20					13	8.000													13	8	13	8	739
4	5	H509	STRD. TIE	E	23						15.000	3	3.000		15.000		7.500		13.000		7.500		13.000	5	9	5	9	24
32	5	U500	APP. TIE	E	19	S				2	0.000		15.000											3	3	3	2	106
17	5	U501	BEAM	E	31	S				4	9.000	3	5.500	4	9.000									13	11	13	8	242
2	4	U502	BEAM	E	10	S						2	8.000	3	5.500									8	10	8	8	12
16	4	U503	BEAM	E	13	S				3	5.500	2	8.000	3	5.500	2	8.000							13	0	12	9	136
6	4	U504	BEAM	E	10	S						2	11.000	3	5.500									9	4	9	2	37
8	4	U505	BEAM	E	13	S				3	5.500	2	11.000	3	5.500	2	11.000							13	6	13	3	71
25	6	U506	DIAPHRAGM	E	19	S				2	3.000	3	5.500											5	9	5	7	210
50	6	U507	DIAPHRAGM	E	19	S				3	4.000	5	3.000											8	7	8	5	632
25	5	U508	DIAPHRAGM	E	31	S				3	4.000	2	10.500	3	4.000									10	6	10	3	267
24	6	V500	DIAPHRAGM	E	20					2	3.000													2	3	2	3	81
16	5	V501	BEAM	E	17					4	9.000													5	4	5	4	89
26	6	V502	WING	E	20					6	4.000													6	4	6	4	247
26	6	V503	WING	E	20					6	7.000													6	7	6	7	257
			DIAPHRAGMS																									
			AT INT BENT																									
			NO 2,3,4																									
18	6	H600	DIAPHRAGM	E	20					9	4.000													9	4	9	4	252
18	6	H601	DIAPHRAGM	E	20					6	7.000													6	7	6	7	178
36	4	H602	DIAPHRAGM	E	20					9	8.000													9	8	9	8	232
4	5	H603	STRD. TIE	E	23						15.000	3	3.000								7.500		13.000	4	6	4	6	19
4	5	H604	STRD. TIE	E	23						15.000	3	3.000		15.000		7.500		13.000		7.500		13.000	5	9	5	9	24
90	4	U600	DIAPHRAGM	E	28	S						2	11.000	3	2.000		18.000							7	7	7	5	446
36	6	U601	DIAPHRAGM	E	28	S						3	9.000	3	2.000	2	2.000							9	1	8	9	473
36	6	U602	DIAPHRAGM	E	28	S						3	9.000	3	2.000	2	2.000							9	1	8	9	473
24	6	U603	DIAPHRAGM	E	28	S							22.000	3	2.000	2	2.000							7	2	6	10	246
36	5	U604	DIAPHRAGM	E	11	S		V	12			4	7.000		12.000		19.000							7	2	7	0	
			INCREMENT =									4	10.000		12.000		19.000							7	5	7	3	268
			1.500 INCH																									
12	5	U605	DIAPHRAGM	E	19	S				4	6.000		12.000											5	6	5	5	68
24	5	V600	DIAPHRAGM	E	20					3	5.000													3	5	3	5	86
			SLAB																									
174	8	S1	SLAB	E	20					56	1.000													56	1	56	1	26055
36	5	S2	SLAB	E	20					54	8.000													54	8	54	8	2053
74	6	S3	SLAB	E	20			V	2	2	6.000													2	6	2	6	
			INCREMENT =							33	8.000													33	8	33	8	2010
			10.375 INCH																									
586	6	S4	SLAB	E	20					34	5.000													34	5	34	5	30293
28	8	S5	SLAB	E	20					34	6.000													34	6	34	6	2579
26	8	S6	SLAB	E	20					27	9.000													27	9	27	9	1926
54	8	S7	SLAB	E	20					32	9.000													32	9	32	9	4722
618	5	S8	SLAB	E	20					4	11.000													4	11	4	11	3169

BILL OF REINFORCING STEEL

NO. REQ'D.	MARK NO. SIZE	MARK NO. MARK	LOCATION	EPOXY (E)	SHAPE NO.	STIRRUP (S)	SUBSTR. (X)	VARIES (V)	NO. EACH	B FT.	B IN.	C FT.	C IN.	D FT.	D IN.	E FT.	E IN.	F FT.	F IN.	H FT.	H IN.	K FT.	K IN.	NOMINAL LENGTH FT.	NOMINAL LENGTH IN.	ACTUAL LENGTH FT.	ACTUAL LENGTH IN.	WEIGHT LBS.
28	8	S9	SLAB	E	20					39	3.000													39	3	39	3	2934
26	8	S10	SLAB	E	20					35	3.000													35	3	35	3	2447
			TYPE D																									
			BARRIER																									
20	5	K1	BARRIER	E	27	S				3	8.000		9.250		5.375	3	2.750				5.250		1.000	8	1	7	11	165
82	5	K2	BARRIER	E	27	S				3	8.000		9.250		14.500	2	5.750				14.250		2.750	8	2	7	11	677
4	5	K3	BARRIER	E	27	S					22.500		9.250		14.750		7.750		12.000		14.500		2.750	5	6	5	3	22
20	5	K4	BARRIER	E	19	S		V	4	2	4.250		10.000											3	2	3	1	
			INCREMENT =							2	6.250		10.000											3	4	3	3	66
			0.500 INCH																									
20	5	K5	BARRIER	E	14	S		V	4		8.250		9.500		18.500						4.000		18.000	3	0	2	11	
			INCREMENT =								8.250		9.500		20.500						4.500		20.000	3	2	3	1	63
			0.500 INCH																									
12	5	K6	BARRIER	E	19	S		V	4	2	6.750		10.000											3	5	3	4	
			INCREMENT =							2	7.750		10.000											3	6	3	5	42
			0.500 INCH																									
12	5	K7	BARRIER	E	21	S		V	4	2	6.625		10.000							2	6.000		6.250	3	5	3	3	
			INCREMENT =							2	7.625		10.000							2	7.000		6.500	3	6	3	4	41
			0.500 INCH																									
36	5	K8	BARRIER	E	19	S		V	4	2	8.500		10.000											3	7	3	5	
			INCREMENT =							3	2.500		10.000											4	1	3	11	138
			0.750 INCH																									
36	5	K9	BARRIER	E	21	S		V	4	2	8.500		10.000							2	7.750		6.750	3	7	3	5	
			INCREMENT =							3	2.500		10.000							3	1.750		7.750	4	1	3	11	138
			0.750 INCH																									
38	5	K10	BARRIER	E	19	S				3	3.000		10.000											4	1	4	0	159
38	5	K11	BARRIER	E	21	S				3	3.000		10.000							3	2.250		7.750	4	1	3	11	155
24	5	K12	BARRIER	E	20					16	3.000													16	3	16	3	407
12	5	K13	BARRIER	E	20			V	4	9	6.000													9	6	9	6	
			INCREMENT =							15	6.000													15	6	15	6	156
			36.000 INCH																									
24	5	K14	BARRIER	E	20					15	6.000													15	6	15	6	388
12	5	K15	BARRIER	E	20			V	4	8	9.000													8	9	8	9	
			INCREMENT =							14	9.000													14	9	14	9	147
			36.000 INCH																									
630	5	R1	BARRIER	E	26					3	3.000		5.500	3	3.625					3	3.000		6.750	6	9	6	9	4435
630	5	R2	BARRIER	E	19	S					20.500		9.500											2	6	2	5	1588
630	5	R3	BARRIER	E	27	S							9.500		15.250		5.000		12.000		15.000		3.000	3	6	3	4	2190
120	5	R4	BARRIER	E	20					11	9.000													11	9	11	9	1471
10	5	R5	BARRIER	E	20					45	3.000													45	3	45	3	472
80	5	R6	BARRIER	E	20					31	11.000													31	11	31	11	2663
20	5	R7	BARRIER	E	20					34	7.000													34	7	34	7	721
10	5	R8	BARRIER	E	20					46	0.000													46	0	46	0	480
20	5	R9	BARRIER	E	20					34	2.000													34	2	34	2	713
			SLIP FORM																									
			OPTION																									
64	5	C1	SLIP FORM	E	20					12	0.000													12	0	12	0	801
			TOTALS																									

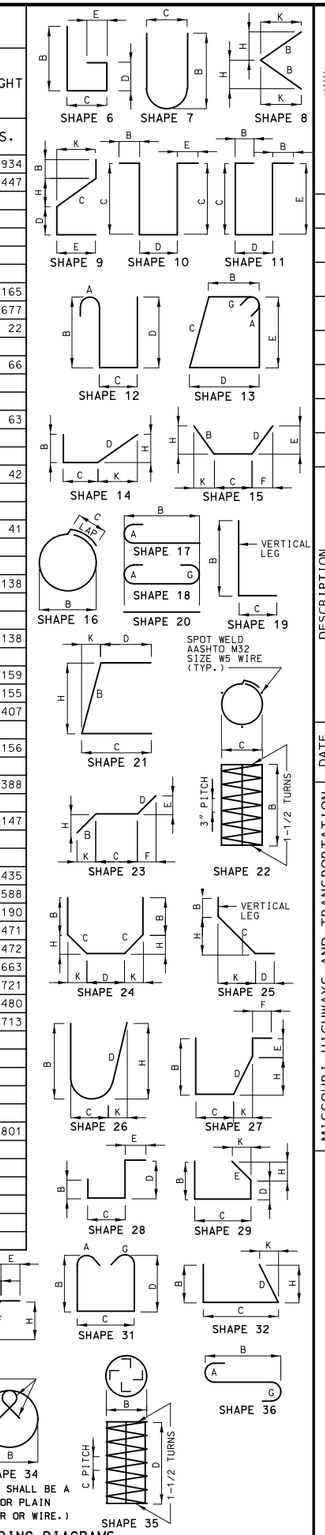

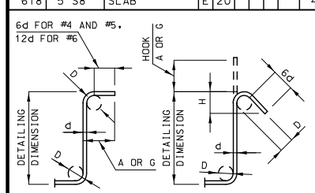

STIRRUP HOOK DIMENSIONS				
GRADES 40 - 50 - 60 KSI				
BAR SIZE	D (IN.)	90° HOOK	135° HOOK	
		HOOK A OR G	HOOK A OR G	APPROX. H
#4	2"	4 1/2"	4 1/2"	3"
#5	2 1/2"	6"	5 1/2"	3 3/4"
#6	4 1/2"	12"	8"	4 1/2"

NOTE: UNLESS OTHERWISE NOTED, DIAMETER "D" IS THE SAME FOR ALL BENDS AND HOOKS ON A BAR.

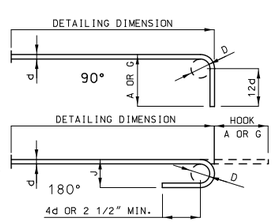

END HOOK DIMENSIONS				
BAR SIZE	D (IN.)	ALL GRADES		
		180° HOOKS		90° HOOKS
		A OR G	J	A OR G
#3	2 1/4"	5"	3"	6"
#4	3"	6"	4"	8"
#5	3 3/4"	7"	5"	10"
#6	4 1/2"	8"	6"	12"
#7	5 1/4"	10"	7"	14"
#8	6"	11"	8"	16"
#9	9 1/2"	15"	11 3/4"	19"
#10	10 3/4"	17"	13 1/4"	22"
#11	12"	19"	14 3/4"	2'-0"
#14	18 1/4"	2'-3"	21 3/4"	2'-7"

NOTE:

ALL STANDARD HOOKS AND BENDS OTHER THAN 180 DEGREE ARE TO BE BENT WITH SAME PROCEDURE AS FOR 90 DEGREE STANDARD HOOKS.

HOOKS AND BENDS SHALL BE IN ACCORDANCE WITH THE PROCEDURES AS SHOWN ON THIS SHEET.

E = EPOXY COATED REINFORCEMENT.
S = STIRRUP.
X = BAR IS INCLUDED IN SUBSTRUCTURE QUANTITIES.
V = BAR DIMENSIONS VARY IN EQUAL INCREMENTS BETWEEN DIMENSIONS SHOWN ON THIS LINE AND THE FOLLOWING LINE.
NO. EA. = NUMBER OF BARS OF EACH LENGTH.

NOMINAL LENGTHS ARE BASED ON OUT TO OUT DIMENSIONS SHOWN IN BENDING DIAGRAMS AND ARE LISTED FOR FABRICATORS USE. (NEAREST INCH)

ACTUAL LENGTHS ARE MEASURED ALONG CENTERLINE BAR TO THE NEAREST INCH.

PAYWEIGHTS ARE BASED ON ACTUAL LENGTHS.

FOUR ANGLE OR CHANNEL SPACERS ARE REQUIRED FOR EACH COLUMN SPIRAL. SPACERS ARE TO BE PLACED ON INSIDE OF SPIRALS. LENGTH AND WEIGHT OF COLUMN SPIRALS DO NOT INCLUDE SPLICES OR SPACERS.

REINFORCING STEEL (GRADE 60) FY = 60,000 PSI.

STATE OF MISSOURI
TED S. KOESTER
NUMBER PE-2013000591
PROFESSIONAL ENGINEER
THIS SHEET HAS BEEN SIGNED, SEALED AND DATED ELECTRONICALLY.

DATE PREPARED 10/30/2023

ROUTE	STATE
V	MO
DISTRICT	SHEET NO.
BR	32

COUNTY: GREENE
JOB NO.: J7S3486
CONTRACT ID.
PROJECT NO.
BRIDGE NO.: A9119

DESCRIPTION
DATE

MISSOURI HIGHWAYS AND TRANSPORTATION COMMISSION
105 WEST CAPITOL
JEFFERSON CITY, MO 65102
1-888-ASK-MODOT (1-888-275-6636)

Detailed Sep. 2023
Checked Sep. 2023

Note: This drawing is not to scale. Follow dimensions.

BILL OF REINFORCING STEEL

NO. REQ'D.	MARK NO. SIZE	MARK NO. MARK	LOCATION	EPOXY (E)	SHAPE NO.	STIRRUP (S)	SUBSTR. (X)	VARIES (V)	NO. EACH	B FT. IN.	C FT. IN.	D FT. IN.	E FT. IN.	F FT. IN.	H FT. IN.	K FT. IN.	NOMINAL LENGTH FT. IN.	ACTUAL LENGTH FT. IN.	WEIGHT LBS.
	4																		1548
	4			E															1190
	5																		10527
	5			E															25441
	6																		2808
	6			E															40385
	8																		5658
	8			E															44449
	10																		25251
			TOTAL																45792
			TOTAL	E															111465
			Slab on Girder																
	4			E															1190
	5			E															7143
	6			E															40385
	8			E															44449
			TOTAL																93167
			Reinforcing Steel (Bridges)																
	4																		1548
	5																		10527
	6																		2808
	8																		5658
	10																		25251
			TOTAL																45792
			Type D Barrier																
	5			E															17497
			TOTAL																17497
			Slip Form Option																
	5			E															801
			TOTAL																801

BILL OF REINFORCING STEEL

NO. REQ'D.	MARK NO. SIZE	MARK NO. MARK	LOCATION	EPOXY (E)	SHAPE NO.	STIRRUP (S)	SUBSTR. (X)	VARIES (V)	NO. EACH	B FT. IN.	C FT. IN.	D FT. IN.	E FT. IN.	F FT. IN.	H FT. IN.	K FT. IN.	NOMINAL LENGTH FT. IN.	ACTUAL LENGTH FT. IN.	WEIGHT LBS.

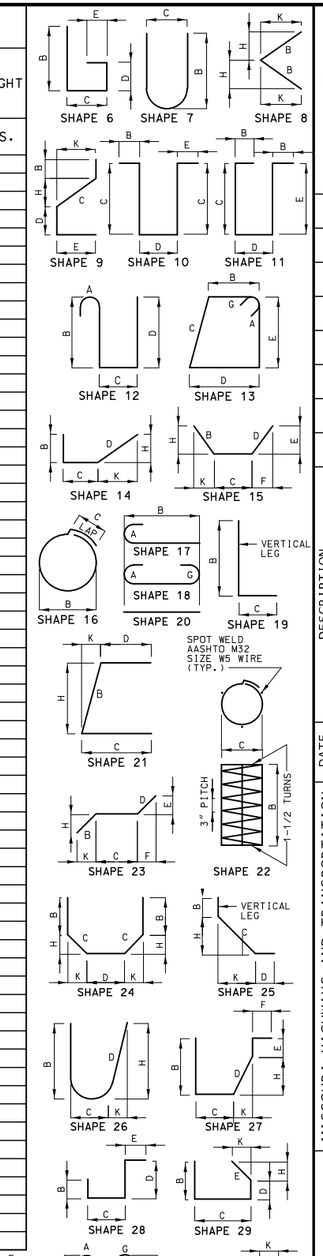

BENDING DIAGRAMS

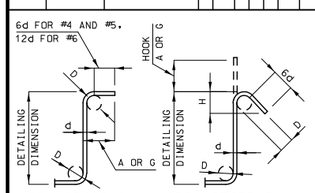

STIRRUP HOOK DIMENSIONS				
GRADES 40 - 50 - 60 KSI				
BAR SIZE	D (IN.)	90° HOOK	135° HOOK	
		HOOK A OR G	HOOK A OR G	APPROX. H
#4	2"	4 1/2"	4 1/2"	3"
#5	2 1/2"	6"	5 1/2"	3 3/4"
#6	4 1/2"	12"	8"	4 1/2"

NOTE: UNLESS OTHERWISE NOTED, DIAMETER "D" IS THE SAME FOR ALL BENDS AND HOOKS ON A BAR.

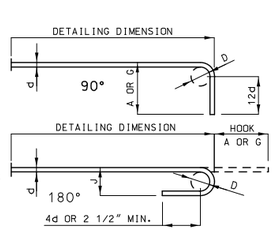

END HOOK DIMENSIONS				
BAR SIZE	D (IN.)	ALL GRADES		
		180° HOOKS		90° HOOKS
		A OR G	J	A OR G
#3	2 1/4"	5"	3"	6"
#4	3"	6"	4"	8"
#5	3 3/4"	7"	5"	10"
#6	4 1/2"	8"	6"	12"
#7	5 1/4"	10"	7"	14"
#8	6"	11"	8"	16"
#9	9 1/2"	15"	11 3/4"	19"
#10	10 3/4"	17"	13 1/4"	22"
#11	12"	19"	14 3/4"	2'-0"
#14	18 1/4"	2'-3"	21 3/4"	2'-7"

NOTE:

ALL STANDARD HOOKS AND BENDS OTHER THAN 180 DEGREE ARE TO BE BENT WITH SAME PROCEDURE AS FOR 90 DEGREE STANDARD HOOKS.

HOOKS AND BENDS SHALL BE IN ACCORDANCE WITH THE PROCEDURES AS SHOWN ON THIS SHEET.

E = EPOXY COATED REINFORCEMENT.
S = STIRRUP.
X = BAR IS INCLUDED IN SUBSTRUCTURE QUANTITIES.
V = BAR DIMENSIONS VARY IN EQUAL INCREMENTS BETWEEN DIMENSIONS SHOWN ON THIS LINE AND THE FOLLOWING LINE.
NO. EA. = NUMBER OF BARS OF EACH LENGTH.

NOMINAL LENGTHS ARE BASED ON OUT TO OUT DIMENSIONS SHOWN IN BENDING DIAGRAMS AND ARE LISTED FOR FABRICATORS USE. (NEAREST INCH)

ACTUAL LENGTHS ARE MEASURED ALONG CENTERLINE BAR TO THE NEAREST INCH.

PAYWEIGHTS ARE BASED ON ACTUAL LENGTHS.

FOUR ANGLE OR CHANNEL SPACERS ARE REQUIRED FOR EACH COLUMN SPIRAL. SPACERS ARE TO BE PLACED ON INSIDE OF SPIRALS. LENGTH AND WEIGHT OF COLUMN SPIRALS DO NOT INCLUDE SPLICES OR SPACERS.

REINFORCING STEEL (GRADE 60) FY = 60,000 PSI.

STATE OF MISSOURI
TED S. KOESTER
NUMBER PE-2013000591
PROFESSIONAL ENGINEER

THIS SHEET HAS BEEN SIGNED, SEALED AND DATED ELECTRONICALLY.

DATE PREPARED	10/30/2023
ROUTE	V
STATE	MO
DISTRICT	BR
SHEET NO.	33
COUNTY	GREENE
JOB NO.	J7S3486
CONTRACT ID.	
PROJECT NO.	
BRIDGE NO.	A9119

DESCRIPTION

DATE

MISSOURI HIGHWAYS AND TRANSPORTATION COMMISSION

105 WEST CAPITOL
JEFFERSON CITY, MO 65102
1-888-ASK-MODOT (1-888-275-6636)

Detailed Sep. 2023
Checked Sep. 2023

Note: This drawing is not to scale. Follow dimensions.

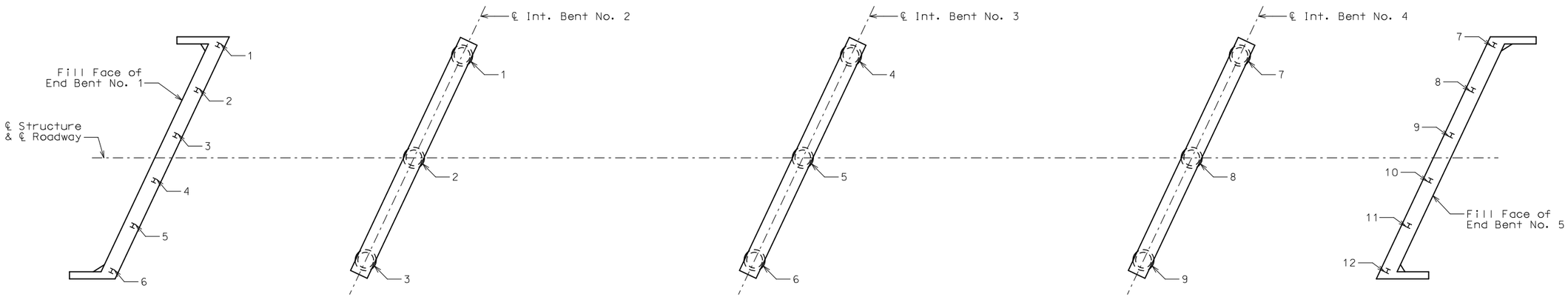

PART PLAN SHOWING PILE & DRILLED SHAFT NUMBERING FOR RECORDING AS-BUILT PILE DATA
& AS-BUILT DRILLED SHAFT DATA

As-Built Pile Data

Pile No.	Length in Place (ft)	Computed Nominal Axial Compressive Resistance (kips)	Remarks
			End Bent No. 1
1			
2			
3			
4			
5			
6			
			End Bent No. 5
7			
8			
9			
10			
11			
12			

As-Built Drilled Shaft Data

Shaft No.	Top of Sound Rock (Elev.)	Tip of Casing (Elev.)	Bottom of Rock Socket (Elev.)	Remarks
				Int. Bent No. 2
1				
2				
3				
				Int. Bent No. 3
4				
5				
6				
				Int. Bent No. 4
7				
8				
9				

Note:
Indicate in remarks column:
A. Pile type and grade
B. Batter
C. Driven to practical refusal

This sheet to be completed by MoDOT construction personnel.

AS-BUILT PILE DATA & AS-BUILT DRILLED SHAFT DATA

STATE OF MISSOURI
TED S. KOESTER
NUMBER
PE-2013000591
PROFESSIONAL ENGINEER

THIS SHEET HAS BEEN SIGNED, SEALED AND DATED ELECTRONICALLY.

DATE PREPARED 10/30/2023

ROUTE	STATE
V	MO
DISTRICT	SHEET NO.
BR	34

COUNTY GREENE
JOB NO. J7S3486
CONTRACT ID.
PROJECT NO.
BRIDGE NO. A9119

DESCRIPTION
DATE

MISSOURI HIGHWAYS AND TRANSPORTATION COMMISSION
105 WEST CAPITOL
JEFFERSON CITY, MO 65102
1-888-ASK-MODOT (1-888-275-6636)

MoDOT-Geotechnical Section
1617 Missouri Blvd
Jefferson City, MO 65109

SUBSURFACE DIAGRAM

PROJECT NAME Bridge Replacement
PROJECT LOCATION Over Clear Creek
CLIENT
PROJECT NUMBER J7S3486

USCS Low Plasticity Silty Clay
Limestone
Breccia
USCS Poorly-graded Gravelly Sand
USCS Low Plasticity Clay
USCS Low Plasticity Gravelly Clay
USCS Silt
No Core
Shale
Highly Weathered Limestone
USCS Gravelly Silt
Boulders and cobbles

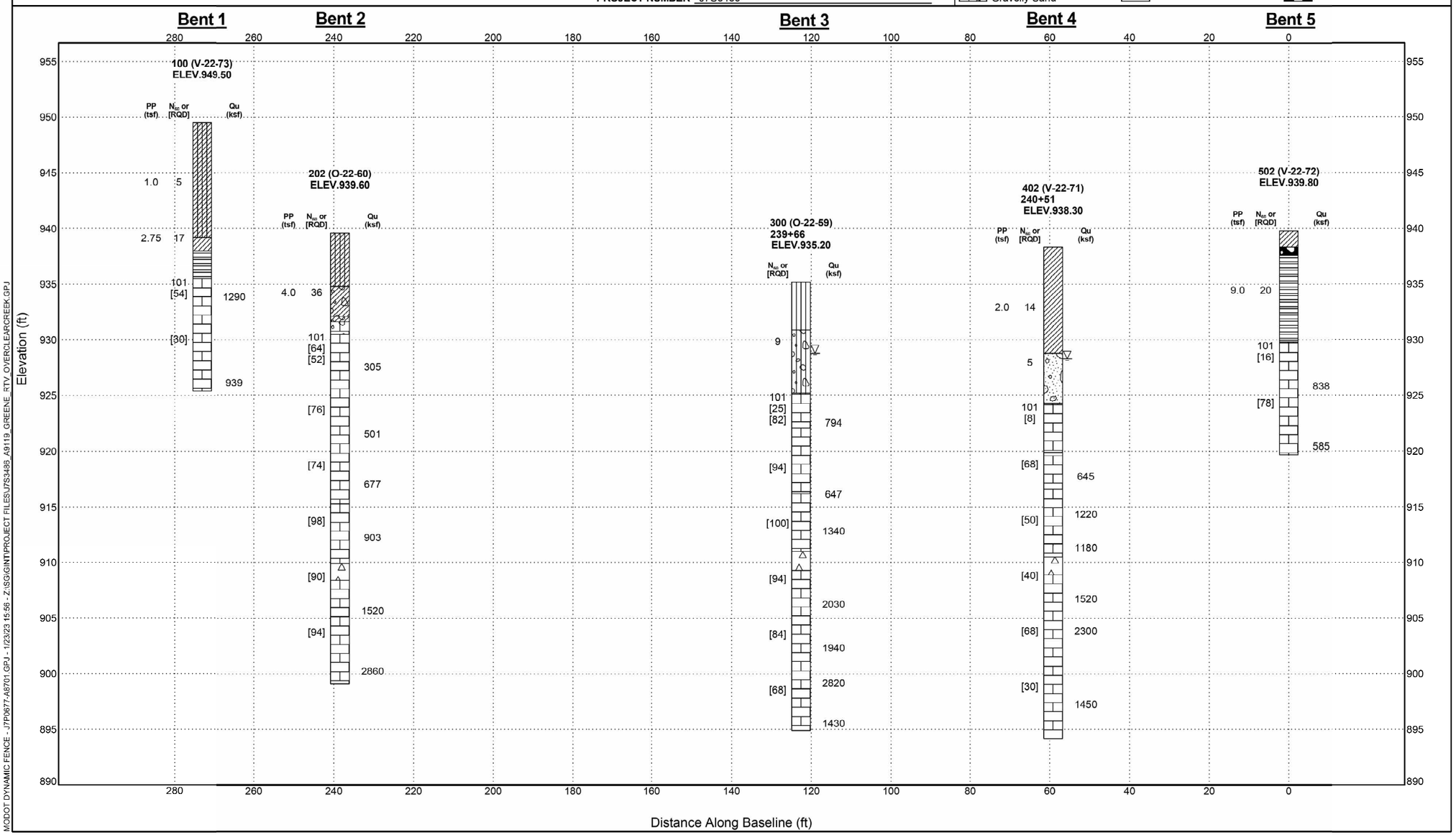

BORING DATA

Note: For locations of borings, see Sheet No. 1.

Note: This drawing is not to scale. Follow dimensions.

Detailed Sep. 2023
Checked Sep. 2023

STATE OF MISSOURI
TED S. KOESTER
NUMBER PE-2013000591
PROFESSIONAL ENGINEER
THIS SHEET HAS BEEN SIGNED, SEALED AND DATED ELECTRONICALLY.

DATE PREPARED	10/30/2023
ROUTE	V
STATE	MO
DISTRICT	BR
SHEET NO.	1
COUNTY	GREENE
JOB NO.	J7S3486
CONTRACT ID.	
PROJECT NO.	
BRIDGE NO.	A9119

DESCRIPTION

DATE

MISSOURI HIGHWAYS AND TRANSPORTATION COMMISSION
105 WEST CAPITOL
JEFFERSON CITY, MO 65102
1-888-ASK-MODOT (1-888-275-6636)