MISSOURI HIGHWAYS AND TRANSPORTATION COMMISSION
PLANS FOR PROPOSED
STATE HIGHWAY

ST FRANCOIS/IRON COUNTIES

DESIGN DESIGNATION

A.A.D.T. - 2024 = 13,244
A.A.D.T. - 2034 = 13,921
D.H.V. = 10%
T = 7%
V = 55 M.P.H.

FUNCTIONAL CLASSIFICATION-MINOR ARTERIAL

NORMAL R/W

CONVENTIONAL SYMBOLS
(USED IN PLANS)

	EXISTING	NEW
BUILDINGS AND STRUCTURES		
GUARD RAIL		
GUARD CABLE		
CONCRETE RIGHT-OF-WAY MARKER		
STEEL RIGHT-OF-WAY MARKER		
LOCATION SURVEY MARKER		
UTILITIES		
FIBER OPTICS	-FO-	~~FO~~
OVERHEAD CABLE TV	-OTV-	~~OTV~~
UNDERGROUND CABLE TV	-UTV-	~~UTV~~
OVERHEAD TELEPHONE	-OT-	~~OT~~
UNDERGROUND TELEPHONE	-UT-	~~UT~~
OVERHEAD POWER	-OE-	~~OE~~
UNDERGROUND POWER	-UE-	~~UE~~
SANITARY SEWER	-S-	~~S~~
STORM SEWER	-SS-	~~SS~~
GAS	-G-	~~G~~
WATER	-W-	~~W~~
MANHOLE	SAN	
FIRE HYDRANT	HYD	
WATER VALVE	WV	
WATER METER	WM	
DROP INLET	DI	
DITCH BLOCK		
GROUND MOUNTED SIGN	SIGN	
LIGHT POLE		
H-FRAME POWER POLE		
TELEPHONE PEDESTAL	PED	
FENCE		
CHAIN LINK	-V-	
WOVEN WIRE	-X-	
GATE POST		
BENCHMARK	BM	

NOTE: DASHED OR OPEN SYMBOLS INDICATE EXISTING FEATURES

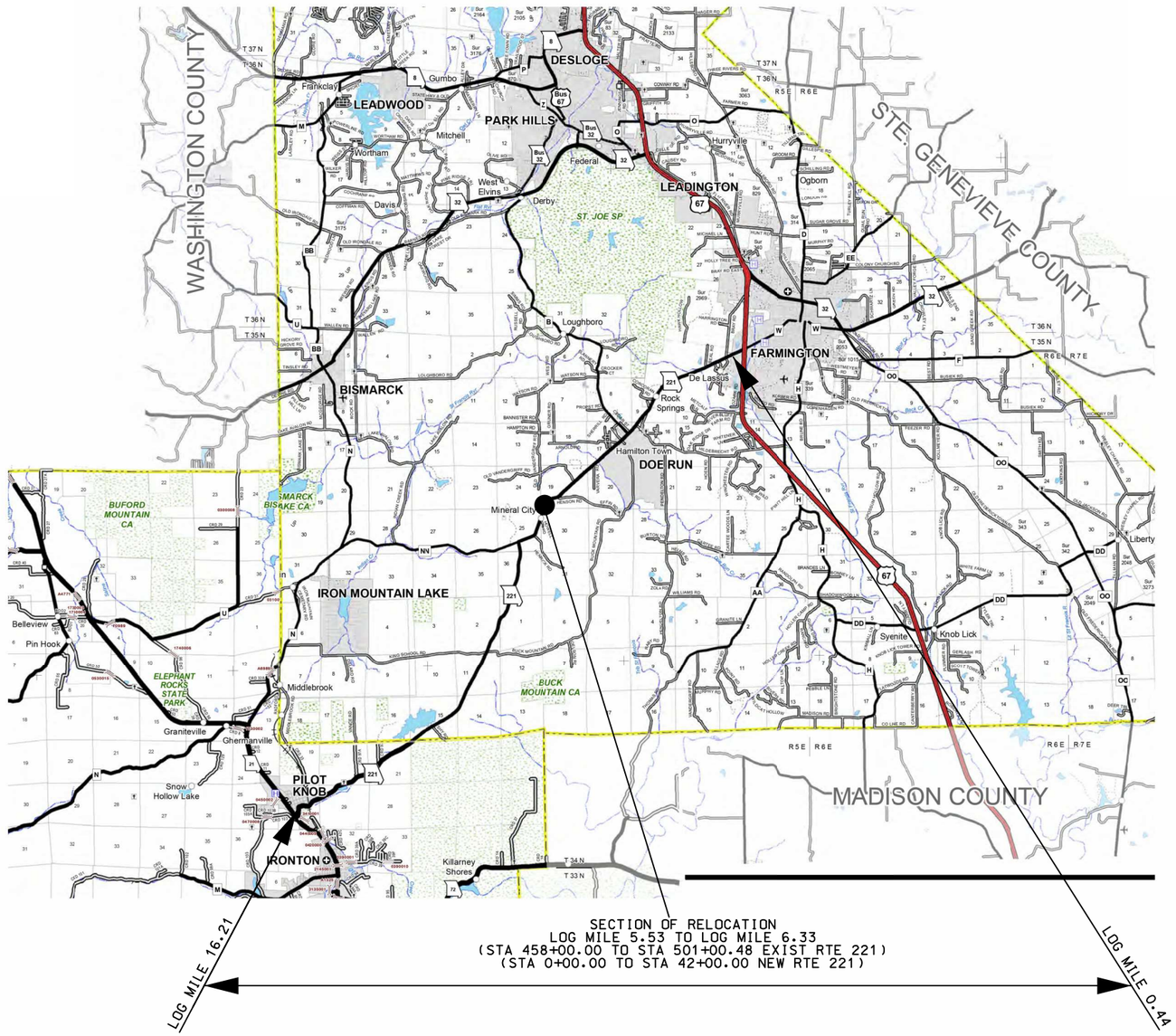

THE EXISTENCE AND APPROXIMATE LOCATION OF UTILITY FACILITIES KNOWN TO EXIST, AS SHOWN ON THE PLANS, ARE BASED ON THE BEST INFORMATION AVAILABLE TO THE COMMISSION AT THIS TIME. THIS INFORMATION IS PROVIDED BY THE COMMISSION "AS-IS" AND THE COMMISSION EXPRESSLY DISCLAIMS ANY REPRESENTATION OR WARRANTY AS TO THE COMPLETENESS, ACCURACY, OR SUITABILITY OF THE INFORMATION FOR ANY USE. RELIANCE UPON THIS INFORMATION IS DONE AT THE RISK AND PERIL OF THE USER, AND THE COMMISSION SHALL NOT BE LIABLE FOR ANY DAMAGES THAT MAY ARISE FROM ANY ERROR IN THE INFORMATION. IT IS, THEREFORE, THE RESPONSIBILITY OF THE CONTRACTOR TO VERIFY THE EXISTENCE, LOCATION AND STATUS OF ANY FACILITY. SUCH VERIFICATION INCLUDES DIRECT CONTACT WITH THE LISTED UTILITIES.

INDEX OF SHEETS

DESCRIPTION	SHEET NUMBER
TITLE SHEET	1
TYPICAL SECTIONS (TS) (02 SHEETS)	2
QUANTITIES (QU) (05 SHEETS)	3
PLAN-PROFILE (PP)	4-5
REFERENCE/COORDINATE POINTS (RP/CP)	6
SPECIAL SHEETS (SS)	7-13
TRAFFIC CONTROL SHEETS (TC)	14-17
EROSION CONTROL SHEETS (EC)	18-19
SIGNING (SN)	20
PAVEMENT MARKING (PM)	21-22
CULVERT SECTIONS (CS)	23-24
BRIDGE DRAWINGS (B)	
L02832	1-7
CROSS SECTIONS (XS)	1-26

LENGTH OF PROJECT

BEGINNING OF PROJECT	LOG MI 0.441	
END OF PROJECT	LOG MI 16.211	
APPARENT LENGTH	83265.60	FEET
EQUATIONS AND EXCEPTIONS:		
TOTAL CORRECTIONS	0.00	FEET
NET LENGTH OF PROJECT	83265.60	FEET
STATE LENGTH	15.770	MILES
FOR INFORMATION ONLY ESTIMATED DISTURBED ACRES	11	ACRES

STATE OF MISSOURI
JESSIE BENJAMIN PHILPOT
NUMBER PE-2016017665
PROFESSIONAL ENGINEER
03/01/2024 9:08:53 AM
JESSIE BENJAMIN PHILPOT - CIVIL
MO-PE-2016017665

DATE PREPARED	
2/22/2024	
ROUTE 221	STATE MO
DISTRICT SE	SHEET NO. 1
COUNTY ST FRANCOIS/IRON	
JOB NO. J9S3610	
CONTRACT ID.	
PROJECT NO.	
BRIDGE NO.	

DATE	DESCRIPTION

IF A SEAL IS PRESENT ON THIS SHEET IT HAS BEEN ELECTRONICALLY SEALED AND DATED.

MISSOURI HIGHWAYS AND TRANSPORTATION COMMISSION
105 WEST CAPITOL
JEFFERSON CITY, MO 65102
1-888-ASK-MODOT (1-888-275-6636)

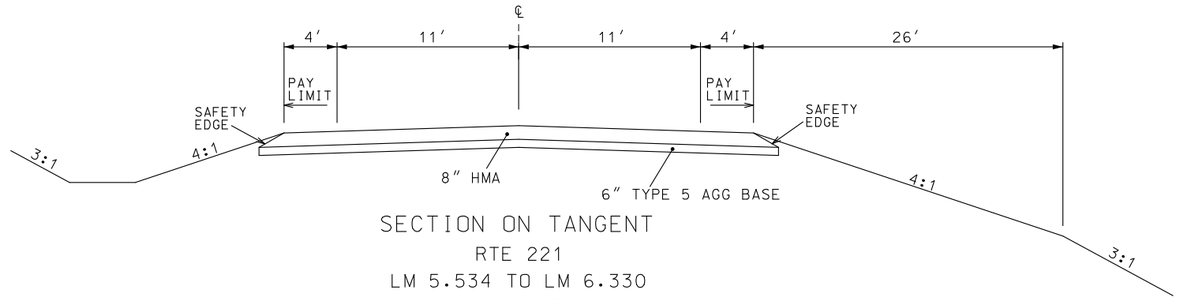

SECTION ON TANGENT
RTE 221
LM 5.534 TO LM 6.330
(STA 0+00.00 TO STA 42+00.00)

NOTE: 8.0″ HMA CONSIST OF 1 1/2″ SP-095C (PG 64-22) OVER 6 1/2″ PMBB (PG 64-22)

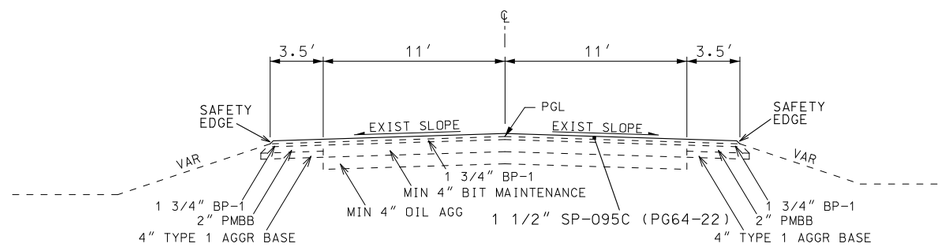

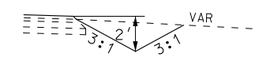

NOTE: BUILD V-BOTTOM DITCH WITH 3:1 FORE SLOPES AND BACK SLOPES 2′ DEEP FROM LM 5.47 TO LM 5.53 ON RT SIDE OF ROADWAY

SECTION ON TANGENT
RTE 221
LM 1.140 TO LM 2.754
LM 3.620 TO LM 5.534
LM 6.330 TO LM 16.211

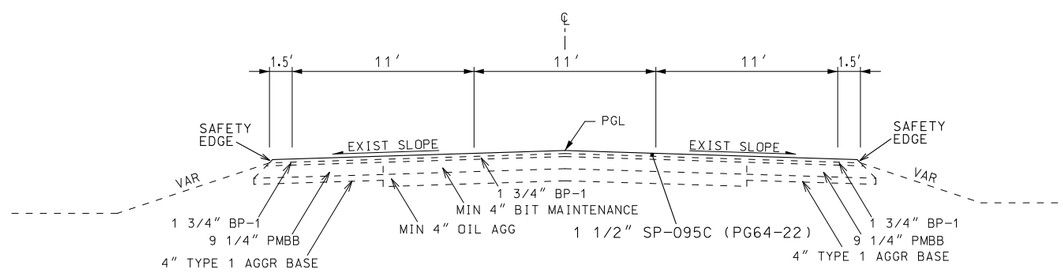

SECTION ON TANGENT
RTE 221
LM 0.441 TO LM 1.140
LM 2.754 TO LM 3.620

ALTERNATE A
TYPICAL SECTION
SHEET 1 OF 2
DRAWING NOT TO SCALE

STATE OF MISSOURI
JESSIE BENJAMIN PHILPOT
NUMBER PE-2016017665
PROFESSIONAL ENGINEER
03/27/2024 4:09:31 PM
JESSIE BENJAMIN PHILPOT - CIVIL
MO-PE-2016017665

DATE PREPARED	
3/14/2024	
ROUTE 221	STATE MO
DISTRICT SE	SHEET NO. 2
COUNTY ST FRANCOIS/IRON	
JOB NO. J9S3610	
CONTRACT ID.	
PROJECT NO.	
BRIDGE NO.	

DATE	DESCRIPTION

MISSOURI HIGHWAYS AND TRANSPORTATION COMMISSION
105 WEST CAPITOL
JEFFERSON CITY, MO 65102
1-888-ASK-MODOT (1-888-275-6636)

IF A SEAL IS PRESENT ON THIS SHEET IT HAS BEEN ELECTRONICALLY SEALED AND DATED.

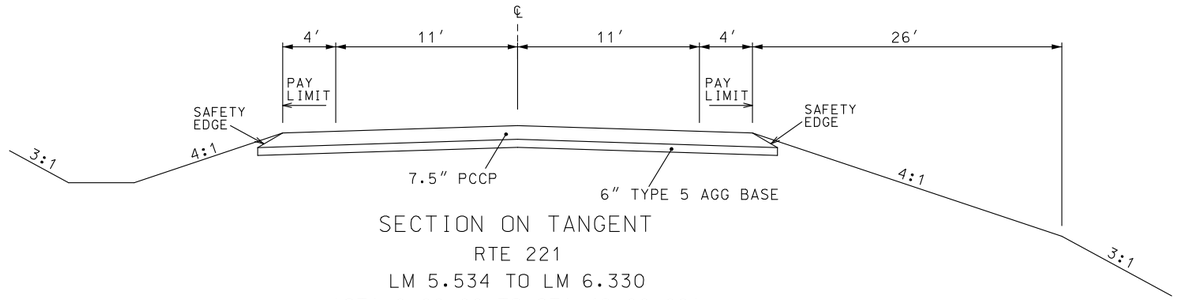

SECTION ON TANGENT
RTE 221
LM 5.534 TO LM 6.330
(STA 0+00.00 TO STA 42+00.00)

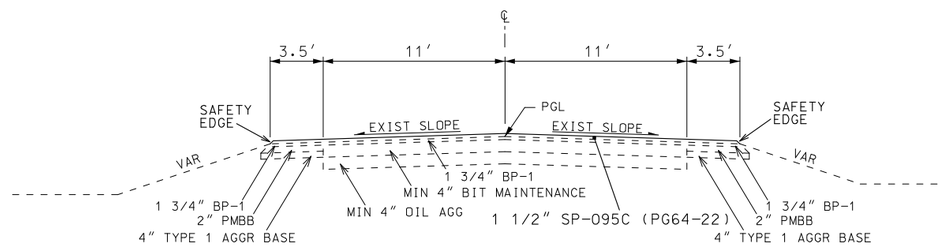

SECTION ON TANGENT
RTE 221
LM 1.140 TO LM 2.754
LM 3.620 TO LM 5.534
LM 6.330 TO LM 16.211

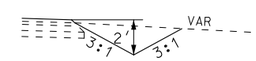

NOTE: BUILD V-BOTTOM DITCH WITH 3:1
FORE SLOPES AND BACK SLOPES 2′ DEEP
FROM LM 5.47 TO LM 5.53 ON RT SIDE OF ROADWAY

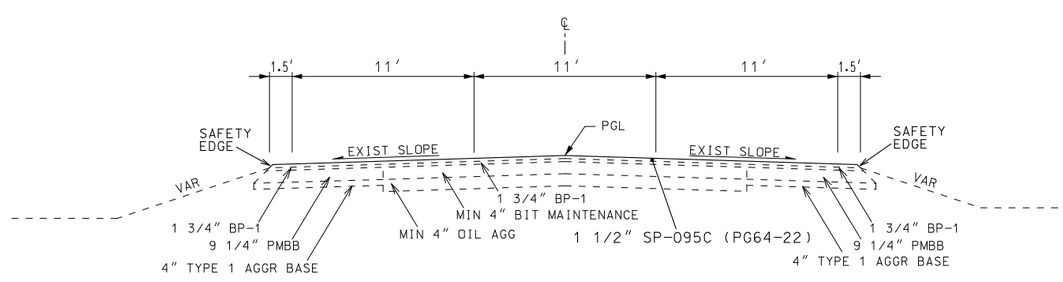

SECTION ON TANGENT
RTE 221
LM 0.441 TO LM 1.140
LM 2.754 TO LM 3.620

ALTERNATE B
TYPICAL SECTION
SHEET 2 OF 2
DRAWING NOT TO SCALE

STATE OF MISSOURI
JESSIE BENJAMIN PHILPOT
NUMBER
PE-2016017665
PROFESSIONAL ENGINEER
03/27/2024 4:10:40 PM
JESSIE BENJAMIN PHILPOT - CIVIL
MO-PE-2016017665

DATE PREPARED	3/14/2024
ROUTE	221
STATE	MO
DISTRICT	SE
SHEET NO.	2
COUNTY	ST FRANCOIS/IRON
JOB NO.	J9S3610
CONTRACT ID.	
PROJECT NO.	
BRIDGE NO.	

DATE	DESCRIPTION

IF A SEAL IS PRESENT ON THIS SHEET IT HAS BEEN ELECTRONICALLY SEALED AND DATED.

MISSOURI HIGHWAYS AND TRANSPORTATION COMMISSION
105 WEST CAPITOL
JEFFERSON CITY, MO 65102
1-888-ASK-MODOT (1-888-275-6636)

ALTERNATE A PAVEMENT

SHEET	STA	STA	LENGTH FT	WIDTH FT	AVE WIDTH FT	PAVEMENT SY	REMARKS
4	0+00.00	7+56.00	756	30.0		2520.00	
4	7+56.00	9+69.36	213		31.9	754.97	
4	9+69.36	16+76.00	707	33.8		2655.18	
4	16+76.00	18+89.00	213		31.9	754.97	
4-5	18+89.00	27+62.82	874	30.0		2913.33	
5	27+62.82	29+27.82	165		31.3	573.83	
5	29+27.82	34+05.96	478	32.6		1731.42	
5	34+05.96	35+70.96	165		31.3	573.83	
5	35+70.96	42+00.00	629	30.0		2096.67	
					TOTAL	14574.20	
					USE	14574.2	

6" AGGREGATE BASE

SHEET	STA	STA	LENGTH FT	WIDTH FT	AVE WIDTH FT	SY	REMARKS
4	0+00.00	7+56.00	756	30.0		2520.0	
4	7+56.00	9+69.36	213		31.9	755.0	
4	9+69.36	16+76.00	707	33.8		2655.2	
4	16+76.00	18+89.00	213		31.9	755.0	
4-5	18+89.00	27+62.82	874	30.0		2913.3	
5	27+62.82	29+27.82	165		31.3	573.8	
5	29+27.82	34+05.96	478	32.6		1731.4	
5	34+05.96	35+70.96	165		31.3	573.8	
5	35+70.96	42+00.00	629	30.0		2096.7	
12-16	427+42.62	428+85.61	143		5.2	82.6	CURVE WIDENING
12-16	428+85.61	431+70.14	285		8.2	259.7	CURVE WIDENING
12-16	431+70.14	433+13.14	143		5.5	87.4	CURVE WIDENING
					TOTAL	15003.9	
					USE	15004	

CONTRACTOR FURNISHED SURVEYING
LUMP SUM 1

ADDITIONAL MOB FOR SEEDING
2 EA

MOBILIZATION
LUMP SUM 1

EARTHWORK

SHEET	STA	STA	CLASS A EXC CY	CLASS C EXC CY	COMP EMB CY	EMB IN PLACE CY	NEEDED FILL CY	COMP IN CUT STA	LINEAR GRADING CL 2 STA	EST CUT CY	EST FILL CY	REMARKS
4	0+00.00	19+00.00	10368	2783	10072	6169	16241	14.0				
4-5	19+00.00	27+09.59	5860	28072	37492	-36338	1154	3.0				USE ECESS CUT MATERIAL ELSEWHERE IN PROJECT
5	27+09.59	42+00.00	676	0	439	33581	34020	14.0				
4	1+97.00								0.5		74	ENTRANCE
4	4+73.00								0.5	4	74	ENTRANCE
4	4+92.00								1.0	2	91	ENTRANCE
4	7+00.00								0.5	50	45	ENTRANCE
4	12+80.00								0.5	13	271	ENTRANCE
4	19+67.00								0.5	7	168	ENTRANCE
5	26+00.00								0.5	15	130	ENTRANCE
5	30+89.00								2.5		2638	ENTRANCE, LINEAR GRADING ALONG HENSON ROAD
5	30+89.00								1.0		231	ENTRANCE OFF OF HENSON ROAD
5	37+26.00								1.0		62	ENTRANCE
5	37+45.00								0.5		57	ENTRANCE
5	38+20.00								0.5		30	ENTRANCE
5	38+93.00								0.5		74	ENTRANCE
5	40+23.00								0.5		35	ENTRANCE
8									3.2	71	7	BUILD DITCH ON RT, LM 5.47 TO LM 5.53 (INCLUDES ENTRANCE GRADING)
12-16									5.7	63	3	BUILD WIDENING ON RT, LM 6.813 TO LM 6.921
8									1.0		10	WIDEN KING SCHOOL ROAD, LM 10.007
		TOTAL	16904	30855	48003	3412		31.0	20.4	225.0	4000.0	
		USE	16904	30855	48003	3412		31	20.4			

ENTRANCES (PIPE/SURFACE)

SHEET	STA	LOC	GROUP B PIPE 18" FT	GROUP B PIPE 24" FT	GROUP B PIPE 36" FT	BEVEL END 18" EA	BEVEL END 24" EA	BEVEL END 36" EA	4" SP-095C TONS	4" AGG BASE SY	REMARKS
4	1+97.00	RT	57			2			30.1	131.1	
4	4+73.00	RT	57			2			27.3	118.9	
4	4+92.00	LT	96			2			46.2	201.7	
4	7+00.00	LT	51			2			74.2	323.3	
4	12+80.00	RT			69			2	81.2	353.9	
4	19+67.00	RT	84			2			31.1	135.6	
5	26+00.00	LT	75			2			42.6	185.6	
5	30+89.00	RT							159.5	695.6	HENSON ROAD
5	30+89.00	RT							48.4	211.1	ENT OFF OF HENSON ROAD
5	37+26.00	RT	77			2			35.9	156.7	
5	37+45.00	LT	51			2			28.3	123.3	
5	38+20.00	RT	50			2			14.5	63.3	
5	38+93.00	LT	76			2			41.3	180.0	
5	40+23.00	RT	50			2			11.7	51.1	
		RT	50			2			10.2	44.4	LM 5.50
		RT		124			2				LM 10.01, KING SCHOOL ROAD
		TOTAL	774	124	69	24	2	2	682.5	2975.6	
		USE	774	124	69	24	2	2	683	2976	

USE BEVEL DRIVEWAY PIPE TREATMENT, SEE STD PLAN 732.05D

TYPE 2 ROCK DITCH LINER

SHEET	STA	STA	LOC	LENGTH FT	WIDTH FT	PLACE 1' DEPTH TON	EROSION CONTROL GEOTEXTILE FABRIC SY	REMARKS
4	13+40	18+00	RT	460	12	347.6	715.6	
4	26+80	28+40	RT	160	12	120.9	248.9	
					TOTAL	468.5	964.5	
					USE	469	965	

ROCK DITCH LINER ESTIMATED AT 1.7 TONS PER CY

SEED AND MULCH

SHEET	STA	STA	WARM SEED AC	COOL SEED AC	MULCH AC	REMARKS
4	0+00	24+00	2.3	2.4	4.7	
5	24+00	45+00	1.5	2.6	4.1	
5	29+00	31+00	0.2		0.2	PARCEL 9 REMOVALS
				0.2	0.2	DITCH ON RT, LM 5.47 TO LM 5.53
		TOTAL	4.0	5.2	9.2	
		USE	4.0	5.2	9.2	

SEE STANDARD PLAN 805.00 FOR SEED,LIME, AND FERTILIZER REQUIREMENTS

ALTERNATE A
SUMMARY OF QUANTITIES
SHEET 1 OF 5

STATE OF MISSOURI
JESSIE BENJAMIN PHILPOT
NUMBER PE-2016017665
PROFESSIONAL ENGINEER
03/04/2024 7:56:10 PM
JESSIE BENJAMIN PHILPOT - CIVIL
MO-PE-2016017665

DATE PREPARED 3/4/2024

ROUTE	STATE
221	MO
DISTRICT	SHEET NO.
SE	3

COUNTY: ST FRANCOIS/IRON
JOB NO. J9S3610
CONTRACT ID.
PROJECT NO.
BRIDGE NO.

DATE	DESCRIPTION

MISSOURI HIGHWAYS AND TRANSPORTATION COMMISSION
105 WEST CAPITOL
JEFFERSON CITY, MO 65102
1-888-ASK-MODOT (1-888-275-6636)

IF A SEAL IS PRESENT ON THIS SHEET IT HAS BEEN ELECTRONICALLY SEALED AND DATED.

ALTERNATE B PAVEMENT

SHEET	STA	STA	LENGTH FT	WIDTH FT	AVE WIDTH FT	PAVEMENT SY	REMARKS
4	0+00.00	7+56.00	756	30.0		2520.00	
4	7+56.00	9+69.36	213		31.9	754.97	
4	9+69.36	16+76.00	707	33.8		2655.18	
4	16+76.00	18+89.00	213		31.9	754.97	
4-5	18+89.00	27+62.82	874	30.0		2913.33	
5	27+62.82	29+27.82	165		31.3	573.83	
5	29+27.82	34+05.96	478	32.6		1731.42	
5	34+05.96	35+70.96	165		31.3	573.83	
5	35+70.96	42+00.00	629	30.0		2096.67	
					TOTAL	14574.20	
					USE	14574.2	

6" AGGREGATE BASE

SHEET	STA	STA	LENGTH FT	WIDTH FT	AVE WIDTH FT	SY	REMARKS
4	0+00.00	7+56.00	756	30.0		2520.0	
4	7+56.00	9+69.36	213		31.9	755.0	
4	9+69.36	16+76.00	707	33.8		2655.2	
4	16+76.00	18+89.00	213		31.9	755.0	
4-5	18+89.00	27+62.82	874	30.0		2913.3	
5	27+62.82	29+27.82	165		31.3	573.8	
5	29+27.82	34+05.96	478	32.6		1731.4	
5	34+05.96	35+70.96	165		31.3	573.8	
5	35+70.96	42+00.00	629	30.0		2096.7	
12-16	427+42.62	428+85.61	143		5.2	82.6	CURVE WIDENING
12-16	428+85.61	431+70.14	285		8.2	259.7	CURVE WIDENING
12-16	431+70.14	433+13.14	143		5.5	87.4	CURVE WIDENING
					TOTAL	15003.9	
					USE	15004	

CONTRACTOR FURNISHED SURVEYING
LUMP SUM 1

ADDITIONAL MOB FOR SEEDING
2 EA

MOBILIZATION
LUMP SUM 1

EARTHWORK

SHEET	STA	STA	CLASS A EXC CY	CLASS C EXC CY	COMP EMB CY	EMB IN PLACE CY	NEEDED FILL CY	COMP IN CUT STA	LINEAR GRADING CL 2 STA	EST CUT CY	EST FILL CY	REMARKS
4	0+00.00	19+00.00	10368	2783	10072	6169	16241	14.0				
4-5	19+00.00	27+09.59	5860	28072	37492	-36338	1154	3.0				USE ECESS CUT MATERIAL ELSEWHERE IN PROJECT
5	27+09.59	42+00.00	676	0	439	33581	34020	14.0				
4	1+97.00								0.5		74	ENTRANCE
4	4+73.00								0.5	4	74	ENTRANCE
4	4+92.00								1.0	2	91	ENTRANCE
4	7+00.00								0.5	50	45	ENTRANCE
4	12+80.00								0.5	13	271	ENTRANCE
4	19+67.00								0.5	7	168	ENTRANCE
5	26+00.00								0.5	15	130	ENTRANCE
5	30+89.00								2.5		2638	ENTRANCE, LINEAR GRADING ALONG HENSON ROAD
5	30+89.00								1.0		231	ENTRANCE OFF OF HENSON ROAD
5	37+26.00								1.0		62	ENTRANCE
5	37+45.00								0.5		57	ENTRANCE
5	38+20.00								0.5		30	ENTRANCE
5	38+93.00								0.5		74	ENTRANCE
5	40+23.00								0.5		35	ENTRANCE
8									3.2	71	7	BUILD DITCH ON RT, LM 5.47 TO LM 5.53 (INCLUDES ENTRANCE GRADING)
12-16									5.7	63	3	BUILD WIDENING ON RT, LM 6.813 TO LM 6.921
8									1.0		10	WIDEN KING SCHOOL ROAD, LM 10.007
		TOTAL	16904	30855	48003	3412		31.0	20.4	225.0	4000.0	
		USE	16904	30855	48003	3412		31	20.4			

ENTRANCES (PIPE/SURFACE)

SHEET	STA	LOC	GROUP B PIPE 18" FT	24" FT	36" FT	BEVEL END 18" EA	24" EA	36" EA	4" SP-095C TONS	4" AGG BASE SY	REMARKS
4	1+97.00	RT	57			2			30.1	131.1	
4	4+73.00	RT	57			2			27.3	118.9	
4	4+92.00	LT	96			2			46.2	201.7	
4	7+00.00	LT	51			2			74.2	323.3	
4	12+80.00	RT			69			2	81.2	353.9	
4	19+67.00	RT	84			2			31.1	135.6	
5	26+00.00	LT	75			2			42.6	185.6	
5	30+89.00	RT							159.5	695.6	HENSON ROAD
5	30+89.00	RT							48.4	211.1	ENT OFF OF HENSON ROAD
5	37+26.00	RT	77			2			35.9	156.7	
5	37+45.00	LT	51			2			28.3	123.3	
5	38+20.00	RT	50			2			14.5	63.3	
5	38+93.00	LT	76			2			41.3	180.0	
5	40+23.00	RT	50			2			11.7	51.1	
		RT	50			2			10.2	44.4	LM 5.50
		RT		124			2				LM 10.01, KING SCHOOL ROAD
		TOTAL	774	124	69	24	2	2	682.5	2975.6	
		USE	774	124	69	24	2	2	683	2976	

USE BEVEL DRIVEWAY PIPE TREATMENT, SEE STD PLAN 732.05D

TYPE 2 ROCK DITCH LINER

SHEET	STA	STA	LOC	LENGTH FT	WIDTH FT	PLACE 1' DEPTH TON	EROSION CONTROL GEOTEXTILE FABRIC SY	REMARKS
4	13+40	18+00	RT	460	12	347.6	715.6	
4	26+80	28+40	RT	160	12	120.9	248.9	
					TOTAL	468.5	964.5	
					USE	469	965	

ROCK DITCH LINER ESTIMATED AT 1.7 TONS PER CY

SEED AND MULCH

SHEET	STA	STA	WARM SEED AC	COOL SEED AC	MULCH AC	REMARKS
4	0+00	24+00	2.3	2.4	4.7	
5	24+00	45+00	1.5	2.6	4.1	
5	29+00	31+00	0.2		0.2	PARCEL 9 REMOVALS
				0.2	0.2	DITCH ON RT, LM 5.47 TO LM 5.53
		TOTAL	4.0	5.2	9.2	
		USE	4.0	5.2	9.2	

SEE STANDARD PLAN 805.00 FOR SEED,LIME, AND FERTILIZER REQUIREMENTS

ALTERNATE B
SUMMARY OF QUANTITIES
SHEET 2 OF 5

STATE OF MISSOURI
JESSIE BENJAMIN PHILPOT
NUMBER
PE-2016017665
PROFESSIONAL ENGINEER
03/04/2024 7:56:48 PM
JESSIE BENJAMIN PHILPOT - CIVIL
MO-PE-2016017665

DATE PREPARED
3/4/2024

ROUTE	STATE
221	MO
DISTRICT	SHEET NO.
SE	3

COUNTY
ST FRANCOIS/IRON

JOB NO.
J9S3610

CONTRACT ID.

PROJECT NO.

BRIDGE NO.

DATE	DESCRIPTION

MISSOURI HIGHWAYS AND TRANSPORTATION COMMISSION
105 WEST CAPITOL
JEFFERSON CITY, MO 65102
1-888-ASK-MODOT (1-888-275-6636)

IF A SEAL IS PRESENT ON THIS SHEET IT HAS BEEN ELECTRONICALLY SEALED AND DATED.

COLDMILLING

LOG MI	LOG MI	LOC	LENGTH FT	WIDTH FT	AVE WIDTH FT	MODIFIED COLDMILLING SY	COLDMILLING LESS THAN 3" SY	TRANSVERSE RUMBLE STRIP LF	REMARKS
0.441	0.455	CL/LT/RT	75.00	36.00		300.0			PROJECT BEGIN
1.186	1.200	CL/LT/RT	75.00		31.00	258.3			TRAN TO BR L0283
1.240	1.254	CL/LT/RT	75.00		27.50	229.2			TRAN FROM BR L0283
7.330	7.335	LT	24.00	11.00			29.3	213.0	REMOVE AND REPLACE TRANSVERSE RUMBLE STRIP
7.369	7.374	LT	24.00	11.00			29.3	213.0	REMOVE AND REPLACE TRANSVERSE RUMBLE STRIP
15.738	15.752	CL/LT/RT	75.00	29.00		241.7			TRAN TO UNDER RR BR
15.752	15.760	CL/LT/RT	40.00	29.00			128.9		RR BR OVER ROUTE 221
15.760	15.774	CL/LT/RT	75.00	29.00		241.7			TRAN FROM UNDER RR BR
16.207	16.221	CL/LT/RT	75.00	29.00		241.7			PROJECT END
	3.568	RT	22.00	25.00		61.1			ROUTE B
	7.270	RT	75.00	36.00		300.0			ROUTE NN
0.441	5.670	RT/LT	10.00		45.00	1550.0			FIRST OVERLAY SECTION, PAVED CITY STREETS/COUNTY ROADS
6.270	6.790	RT/LT	10.00	40.00		44.4			SECOND OVERLAY SECTION, PAVED CITY STREETS/COUNTY ROADS
6.950	16.211	RT/LT	10.00		50.47	841.2			THIRD OVERLAY SECTION, PAVED CITY STREETS/COUNTY ROADS
0.441	5.670	RT/LT	2.00		42.47	1283.5			FIRST OVERLAY SECTION, PAVED ENTRANCES
6.270	6.790	RT/LT	2.00		32.88	58.5			SECOND OVERLAY SECTION, PAVED ENTRANCES
6.950	16.211	RT/LT	2.00		41.38	1204.6			THIRD OVERLAY SECTION, PAVED ENTRANCES
					TOTAL	6855.9	187.5	426.0	
					USE	6856	188	426	

REMOVAL OF IMPROVEMENTS

LOG MI	LOCATION	DESCRIPTION	REMARKS
1.22	LT/RT	270' GUARDRAIL	BRIDGE L0283
5.514	RT	1 CURVE WARNING SIGN	
5.694	RT	1 SCHOOL BUS SIGN	
5.900	RT	6 CHEVRONS	
5.990	RT	1 CURVE WARNING SIGN	
6.010	LT	1 CURVE WARNING SIGN	
6.050	LT/RT	2 LOW TRACKION SIGNS	
6.130	RT	6 CHEVRONS	
6.327	LT	1 CURVE WARNING SIGN	
15.756	LT	130' GUARDRAIL	UNDER RR BRIDGE
NEW SECTION		15" x 172' CMP	D.W. PIPES
NEW SECTION		18" X 126' CMP	D.W. PIPES
NEW SECTION		6' X 106' CONCRETE BOX	CROSS ROAD CULVERTS
NEW SECTION		24" X 50' RCP	CROSS ROAD CULVERT
NEW SECTION		18" X 56' RCP	CROSS ROAD CULVERT
		LUMP SUM 1	

PARCEL 9 REMOVALS

UNIT	DESCRIPTION	FIELD MEASURED QUANITITY	ESTIMATED QUANITITY
SF	REMOVAL OF SURFACING ACM	120	
SF	REMOVAL OF FLOOR SHEETING ACM ON WOOD	6	
GAL	TANK PIT WATER DISPOSAL		750
EA	DISPOSAL AND PLUGGING OF WELLS		1
EA	PLUGGING AND DISPOSAL OF SEPTIC TANKS*		1
LS	DEMOLITION AND REMOVAL OF BUILDINGS**		1

NOTE: SEE SPECIFICATION 202.3.2.1 FOR REMOVAL OF BASEMENT OR FOUNDATION

*NOTE: REMOVAL OF ALL THE SEPTIC SYSTEM IS INCLUDED IN THIS PAY ITEM, INCLUDING BUT NOT LIMITED TO THE DRAIN FIELD

**NOTE: REMOVAL OF THE BASEMENT OR FOUNDATION IS INCLUDED WITH THIS PAY ITEM

AGGREGATE EDGE DROP OFF TREATMENT

LOG MI	LOG MI	LOCATION	LENGTH FT	PERM AGG EDGE TREATMENT TONS	REMARKS
0.441	5.534	RT/LT OF ℄	26,891.04	145.4	
6.330	16.211	RT/LT OF ℄	52,171.68	282.1	
			TOTAL	427.5	
			USE	428	

DRAINAGE STRUCTURES

SHEET	STA	GROUP A PIPE 18" FT	GROUP A PIPE 36" FT	GROUP A PIPE 60" FT	GROUP A PIPE 72" FT	GROUP A FES 18" EA	GROUP A FES 36" EA	GROUP A FES 60" EA	GROUP A FES 72" EA	CLASS 3 EXC CY	REMARKS
4,26	3+10.39				81				2	156	
4,26	18+00.00				86				2	223	
5,26	28+35.08			132				2		100	
5,27	30+41.60		127				2			20	
5,27	32+19.12	109				2				2	
	TOTAL	109	127	132	167	2	2	2	4	501	
	USE	109	127	132	167	2	2	2	4	501	

PERMANENT PAVEMENT MARKING

LOG MI	LOG MI	LOC	LENGTH	WATERBORNE WITH TYPE P BEADS 4" SOLID WHITE FT	WATERBORNE WITH TYPE P BEADS 4" INT YELLOW FT	WATERBORNE WITH TYPE P BEADS 4" SOLID YELLOW FT	PREFORMED THERMOPLASTIC LEFT TURN ARROW EA	CENTERLINE RUMBLE STRIP STA	EDGELINE RUMBLE STRIP STA	REMARKS
0.441	16.211	RT/CL/LT	83265.6	166542.0	12534.0	124798.0	22	833	1665	
0.441	16.211	RT/CL/LT						-172	-242	EXCEPTIONS
			TOTAL	166542.0	12534.0	124798.0	22.0	661	1423	
			USE	166542	137332		22	661	1423	

LOG MILES ARE APPROXIMATE. EXACT LOCATIONS TO BE DETERMINED BY ENGINEER.

EROSION CONTROL

SHEET	STA	STA	ROCK DITCH CHECK FT	SILT FENCE FT	SEDIMENT REMOVAL CY	TEMP SEEDING AC	REMARKS
4,21	0+00	24+00	680	900	54	3	
5,22	24+00	45+00	640	2400	67	3	
		TOTAL	1320	3300	121	6	
		USE	1320	3300	121	6	

SUMMARY OF QUANTITIES
SHEET 3 OF 5

STATE OF MISSOURI
JESSIE BENJAMIN PHILPOT
NUMBER
PE-2016017665
PROFESSIONAL ENGINEER
03/04/2024 7:57:21 PM
JESSIE BENJAMIN PHILPOT - CIVIL
MO-PE-2016017665

DATE PREPARED
3/4/2024

ROUTE	STATE
221	MO
DISTRICT	SHEET NO.
SE	3

COUNTY
ST FRANCOIS/IRON

JOB NO.
J9S3610

CONTRACT ID.

PROJECT NO.

BRIDGE NO.

DATE	DESCRIPTION

IF A SEAL IS PRESENT ON THIS SHEET IT HAS BEEN ELECTRONICALLY SEALED AND DATED.

MISSOURI HIGHWAYS AND TRANSPORTATION COMMISSION
105 WEST CAPITOL
JEFFERSON CITY, MO 65102
1-888-ASK-MODOT (1-888-275-6636)

PAVEMENT/ENTRANCES (OVERLAY)

LOG MI	LOG MI	LOC	LENGTH FT	WIDTH FT	AVE WIDTH FT	SURFACE THICK IN	BASE THICK IN	BIT PVMT MIXTURE PG64-22 (SP-095C) 2.064 TON/CY TONS	BIT PVMT MIXTURE PG64-22 PMBB 2.067 TON/CY TONS	TACK .08 GAL/SY GAL	GRAVEL (A) OR CRUSHED STONE (B) SY	REMARKS
0.441	1.140	RT/CL/LT	3690.7	36.0		1.50		1269.6		1181		START JOB
1.140	1.200	RT/CL/LT	316.8		31.00	1.50		93.84		87.3		BEFORE BR L0283
1.200	1.240	RT/CL/LT	213.0	26.0		1.50		52.92		49.2		BR L0283
1.240	1.300	RT/CL/LT	316.8		27.50	1.50		83.25		77.4		AFTER BR L0283
1.300	2.714	RT/CL/LT	7465.9	29.0		1.50		2068.88		1924.5		
2.714	2.754	RT/CL/LT	211.2		31.00	1.50		62.56		58.2		
2.754	3.620	RT/CL/LT	4572.5	36.0		1.50		1572.94		1463.2		
3.620	3.677	RT/CL/LT	301.0		31.00	1.50		89.16		82.9		
3.677	5.534	RT/CL/LT	9805.0	29.0		1.50		2717.07		2527.5		
												NEW PAVEMENT
6.330	6.813	RT/CL/LT	2550.2	29.0		1.50		706.69		657.4		
6.813	6.840	RT/CL/LT	143.0		31.00	1.50	6.50	42.36	29.06	39.4		TRANSISTION TO CURVE WIDENING
6.840	6.894	RT/CL/LT	285.1	33.0		1.50	6.50	89.9	93.63	83.6		CURVE WIDENING
6.894	6.921	RT/CL/LT	143.0		31.00	1.50	6.50	42.36	31.25	39.4		TRANSISTION FROM CURVE WIDENING
6.921	7.148	RT/CL/LT	1198.6	29.0		1.50		332.15		309		
7.148	7.208	RT/CL/LT	316.8		31.00	1.50		93.84		87.3		
7.208	7.288	RT/CL/LT	422.4	36.0		1.50		145.31		135.2		
7.288	11.691	RT/CL/LT	23247.8	29.0		1.50		6442.22		5992.8		
11.691	11.701	RT/CL/LT	52.8		25.00	1.50		12.61		11.7		BEFORE BOX CULVERT Y0935
11.701	11.707	RT/CL/LT	33.7	21.0		1.50		6.76		6.3		BOX CULVERT Y0935
11.707	11.717	RT/CL/LT	52.8		25.00	1.50		12.61		11.7		BEFORE BOX CULVERT Y0935
11.717	16.211	RT/CL/LT	23728.3	29.0		1.50		6575.38		6116.6		
3.568		RT	45.0		26.70	1.50		11.48		10.7		ROUTE B INTERSECTION
7.270		RT	87.5	36.0		1.50		30.1		28		ROUTE NN INTERSECTION
7.330	7.335	LT	24.0	11.0		1.00		1.68		2.3		MILL/FILL AT TRANSVERSE RUMBLE STRIP LOCATION
7.369	7.374	LT	24.0	11.0		1.00		1.68		2.3		MILL/FILL AT TRANSVERSE RUMBLE STRIP LOCATION
0.441	5.670	RT/LT	10.00		45.00	1.50		133.3		124		FIRST OVERLAY SECTION, PAVED CITY STREETS/COUNTY ROADS
6.330	6.950	RT/LT	10.00	40.0		1.50		3.82		3.6		SECOND OVERLAY SECTION, PAVED CITY STREETS/COUNTY ROADS
6.950	16.211	RT/LT	10.00		50.47	1.50		72.34		67.3		SECOND OVERLAY SECTION, PAVED CITY STREETS/COUNTY ROADS
0.441	5.670	RT/LT	2.00		42.47	1.50		110.38		102.7	111.1	FIRST OVERLAY SECTION, ENTRANCES
6.330	6.950	RT/LT	2.00		32.88	1.50		5.03		4.7		SECOND OVERLAY SECTION, ENTRANCES
6.950	16.211	RT/LT	2.00		41.38	1.50		103.6		96.4	216.7	SECOND OVERLAY SECTION, ENTRANCES
5.490		RT	4.00	24.0		4.00		2.45				REPAIR ENTRANCE FROM PIPE PLACEMENT
10.007		RT	25.00		17.50	6.00		16.72				WIDEN KING SCHOOL ROAD
0.441	5.670	CL						392.18				FIRST OVERLAY SECTION, IRREGULARITIES (75 TONS/MILE)
6.330	16.211	CL						741.08				SECOND OVERLAY SECTION, IRREGULARITIES (75 TONS/MILE)
0.441	16.211	RT/LT						464.69				SAFETY EDGE (2% OF ASPHALT)
							TOTAL	24602.94	153.94	21383.60	327.8	
							USE	24603.0	154.0	21384	328	

LOG MILES ARE APPROXIMATE. EXACT LOCATIONS TO BE DETERMINED BY ENGINEER.

GUARDRAIL

LOG MI	LOC	TYPE A CRASHWORTHY END TERMINAL (MASH) EACH	MGS BARRIER TRANSITION SECTION EACH	MGS BRIDGE APPROACH TRANSITION SECTION (REGULAR/NO CURB) EACH	TYPE C CRASHWORTHY END TERMINAL EACH	MGS GUARDRAIL 8' POST FT	MODIFIED SHAPING SLOPES CLASS III (SEE JSP) FT	AGGREGATE APPROXIMATE QUANTITY TONS	TYPE D PERMANENT CONCRETE TRAFFIC BARRIER FT	REMARKS
1.220	RT				1 *		80.0			L0283 SB APPROACH
1.220	LT	1		1			80.0	148.1		L0283 NB DEPART
1.220	RT	1		1			80.0			L0283 SB DEPART
1.220	LT	1		1		87.5	80.0	148.1		L0283 NB APPROACH
15.756	LT	2	2				160.0	23.7	30	UNDER RR BRIDGE (GR IN CURVE, CURVE R=207')
	TOTAL	5	2	3	1	87.5	480.0	NO DIRECT PAY	30.0	
	USE	5	2	3	1	88	480		30	

* PAD FOR CRASH CUSHION IS AT NO DIRECT PAY
* CRASH CUSHION LENGTH IS TO BE NO MORE THAN 25 FEET

SUMMARY OF QUANTITIES
SHEET 4 OF 5

STATE OF MISSOURI
JESSIE BENJAMIN PHILPOT
NUMBER PE-2016017665
PROFESSIONAL ENGINEER
03/04/2024 7:57:56 PM
JESSIE BENJAMIN PHILPOT - CIVIL
MO-PE-2016017665

DATE PREPARED 3/4/2024
ROUTE 221 | STATE MO
DISTRICT SE | SHEET NO. 3
COUNTY ST FRANCOIS/IRON
JOB NO. J9S3610
CONTRACT ID.
PROJECT NO.
BRIDGE NO.

DESCRIPTION | DATE

MISSOURI HIGHWAYS AND TRANSPORTATION COMMISSION
105 WEST CAPITOL
JEFFERSON CITY, MO 65102
1-888-ASK-MODOT (1-888-275-6636)

IF A SEAL IS PRESENT ON THIS SHEET IT HAS BEEN ELECTRONICALLY SEALED AND DATED.

EFFECTIVE: 04-01-2024

SIGN	SIZE IN.	AREA SQ.FT.	QTY EACH	TOTAL AREA SQ.FT.	QTY RELOC EACH	TOTAL RELOC SQ.FT.	SIGN NUM.	DESCRIPTION
WARNING SIGNS								
W01-1L	48X48	16.00						TURN (SYMBOL LEFT ARROW)
W01-1R	48X48	16.00						TURN (SYMBOL RIGHT ARROW)
W01-2L	48X48	16.00						CURVE (SYMBOL LEFT ARROW)
W01-2R	48X48	16.00						CURVE (SYMBOL RIGHT ARROW)
W01-3L	48X48	16.00						REVERSE TURN (SYMBOL LEFT ARROW)
W01-3R	48X48	16.00						REVERSE TURN (SYMBOL RIGHT ARROW)
W01-4L	48X48	16.00						REVERSE CURVE (SYMBOL LEFT ARROW)
W01-4R	48X48	16.00						REVERSE CURVE (SYMBOL RIGHT ARROW)
W01-4bL	48X48	16.00						DOUBLE ARROW REVERSE CURVE (SYMBOL LT ARROWS)
W01-4bR	48X48	16.00						DOUBLE ARROW REVERSE CURVE (SYMBOL RT ARROWS)
W01-4cL	48X48	16.00						TRIPLE ARROW REVERSE CURVE (SYMBOL LT ARROWS)
W01-4cR	48X48	16.00						TRIPLE ARROW REVERSE CURVE (SYMBOL RT ARROWS)
W01-6	60X30	12.50						HORIZONTAL ARROW (SYMBOL)
W01-6a	72X36	18.00						HORIZ. ARROW (SYMBOL ON PERMANENT BARRICADE)
W01-7	60X30	12.50						DOUBLE HEAD HORIZONTAL ARROW (SYMBOL)
W01-7a	72X36	18.00						DOUBLE HEAD HORIZ. ARROW (SYMBOL ON PERM. BARR.)
W01-8	18X24	3.00						CHEVRON (SYMBOL)
W01-8a	30X36	7.50						CHEVRON (SYMBOL FOR DIVIDED HIGHWAYS)
W03-1	48X48	16.00						STOP AHEAD (SYMBOL)
W03-2	48X48	16.00						YIELD AHEAD (SYMBOL)
W03-3	48X48	16.00						SIGNAL AHEAD (SYMBOL)
W03-4	48X48	16.00	8	128.00				BE PREPARED TO STOP
W03-5	48X48	16.00						SPEED LIMIT AHEAD
W04-1L	48X48	16.00						MERGE (SYMBOL FROM LEFT)
W04-1R	48X48	16.00						MERGE (SYMBOL FROM RIGHT)
W04-1aL	48X48	16.00						MERGE (ARROW SYMBOL)
W04-1aR	48X48	16.00						MERGE (ARROW SYMBOL)
W05-1	48X48	16.00						ROAD/BRIDGE/RAMP NARROWS
W05-3	48X48	16.00						ONE LANE BRIDGE
W05-5	48X48	16.00						NARROW LANES
W06-1	48X48	16.00						DIVIDED HIGHWAY (SYMBOL)
W06-2	48X48	16.00						DIVIDED HIGHWAY END (SYMBOL)
W06-3	48X48	16.00						TWO WAY TRAFFIC (SYMBOL)
W07-3a	30X24	5.00						NEXT XX MILES (PLAQUE)
W08-1	48X48	16.00						BUMP
W08-2	48X48	16.00						DIP
W08-3	48X48	16.00						PAVEMENT ENDS
W08-4	48X48	16.00						SOFT SHOULDER
W08-5	48X48	16.00						SLIPPERY WHEN WET (SYMBOL)
W08-6	48X48	16.00						TRUCK CROSSING (WITH FLAGS)
W08-6c	48X48	16.00						TRUCK ENTRANCE
W08-7	36X36	9.00						LOOSE GRAVEL
W08-7a	36X36	9.00						FRESH OIL/LOOSE GRAVEL
W08-9	48X48	16.00						LOW SHOULDER
W08-11	48X48	16.00	32	512.00				UNEVEN LANES
W08-12	48X48	16.00	16	256.00				NO CENTER LINE
W08-15	48X48	16.00						GROOVED PAVEMENT
W08-15P	30X24	5.00						MOTORCYCLE (PLAQUE)
W08-17	48X48	16.00						SHOULDER DROP-OFF (SYMBOL)
W08-17P	30X24	5.00						SHOULDER DROP-OFF (PLAQUE)
W10-1	42RND.	9.62						RAILROAD CROSSING
W012-1	24X24	4.00						DOUBLE DOWN ARROW (SYMBOL)
W012-2	48X48	16.00						LOW CLEARANCE (SYMBOL)
W012-2X	24X18	3.00						LOW CLEARANCE (PLAQUE)
W012-2a	84X24	14.00						OVERHEAD LOW CLEARANCE (FEET AND INCHES)
W012-4	120X60	50.00						LOW CLEARANCE XX FT XX IN XX MILES AHEAD
W012-5	120X60	50.00						WIDTH RESTRICTION XX FT XX IN XX MILES AHEAD
W013-1	30X30	6.25						ADVISORY SPEED (PLAQUE)
W016-2	30X24	5.00	4	20.00				500 FEET (PLAQUE)
W016-3	30X24	5.00						X MILE (PLAQUE)
W020-1	48X48	16.00	12	192.00				ROAD/BRIDGE/RAMP WORK AHEAD
W020-2	48X48	16.00	4	64.00				DETOUR AHEAD
W020-3	48X48	16.00	6	96.00				ROAD CLOSED AHEAD
W020-4	48X48	16.00	8	128.00				ONE LANE ROAD AHEAD
W020-5	48X48	16.00						RIGHT/CENTER/LEFT LANE CLOSED AHEAD
W020-5a	48X48	16.00						2 RIGHT/CENTER/LEFT LANES CLOSED AHEAD
W020-6a	48X48	16.00						RIGHT/CENTER/LEFT LANE CLOSED
W020-7a	48X48	16.00						FLAGGER (SYMBOL)
W021-2	36X36	9.00						FRESH OIL
W021-5	48X48	16.00						SHOULDER WORK AHEAD
W022-1	48X48	16.00						BLASTING ZONE AHEAD
W022-2	42X36	10.50						TURN OFF 2-WAY RADIO AND PHONE
W022-3	42X36	10.50						END BLASTING ZONE
G022-1	21X15	2.19						WET PAINT (ARROW PIVOTS)

SIGN	SIZE IN.	AREA SQ.FT.	QTY EACH	TOTAL SQ.FT.	QTY RELOC EACH	TOTAL RELOC SQ.FT.	SIGN NUM.	DESCRIPTION
GUIDE SIGNS								
E05-1	36X48	12.00						GORE EXIT
E05-2	48X36	12.00						EXIT OPEN
E05-2a	48X36	12.00						EXIT CLOSED
G020-1	60X24	10.00	2	20.00				ROAD WORK NEXT 16 MILES
G020-2	48X24	8.00	2	16.00				END ROAD WORK
G020-4	36X18	4.50						PILOT CAR FOLLOW ME
G020-4a	42X30	8.75	6	52.50				PILOT CAR IN USE WAIT & FOLLOW
G020-4a	18X12	1.50						PILOT CAR IN USE WAIT & FOLLOW
G020-5aP	36X24	6.00						WORK ZONE (PLAQUE)
M04-8a	24X18	3.00	2	6.00				END DETOUR
M04-9L	48X36	12.00						DETOUR (LEFT ARROW)
M04-9R	48X36	12.00						DETOUR (RIGHT ARROW)
M04-9P	48X12	4.00						STREET NAME (PLAQUE)
M04-10L	48X18	6.00						DETOUR (ARROW LEFT)
M04-10R	48X18	6.00						DETOUR (ARROW RIGHT)
REGULATORY SIGNS								
R1-1	48X48	13.25						STOP
R1-2	48TRI.	6.93						YIELD
R1-2a	36X36	9.00						TO ONCOMING TRAFFIC (PLAQUE)
R1-3P	30X12	2.50						ALL WAY (PLAQUE)
R2-1	36X48	12.00						SPEED LIMIT X @ XXmph
R3-1	48X48	16.00						NO RIGHT TURN (SYMBOL)
R3-2	48X48	16.00						NO LEFT TURN (SYMBOL)
R3-3	36X36	9.00						NO TURNS
R3-4	48X48	16.00						NO U-TURN (SYMBOL)
R3-7L	30X30	6.25						LEFT LANE MUST TURN LEFT
R3-7R	30X30	6.25						RIGHT LANE MUST TURN RIGHT
R4-1	36X48	12.00						DO NOT PASS
R4-2	36X48	12.00						PASS WITH CARE
R4-8a	36X48	12.00						KEEP LEFT (HORIZONTAL ARROW)
R4-7a	36X48	12.00						KEEP RIGHT (HORIZONTAL ARROW)
R5-1	30X30	6.25						DO NOT ENTER
R5-1a	36X24	6.00						WRONG WAY
R6-1L	54X18	6.75						ONE WAY ARROW (LEFT)
R6-1R	54X18	6.75						ONE WAY ARROW (RIGHT)
R6-2L	24X30	5.00						ONE WAY (LEFT)
R6-2R	24X30	5.00						ONE WAY (RIGHT)
R9-9	24X12	2.00						SIDEWALK CLOSED
R9-11L	24X18	3.00						SIDEWALK CLOSED AHEAD, (ARROW LEFT) CROSS HERE
R9-11R	24X18	3.00						SIDEWALK CLOSED AHEAD, (ARROW RIGHT) CROSS HERE
R10-6	24X36	6.00	2	12.00				STOP HERE ON RED (45° ARROW)
R11-2	48X30	10.00	4	40.00				ROAD CLOSED
R11-3a	60X30	12.50	4	50.00				ROAD CLOSED XX MILES AHEAD LOCAL TRAFFIC ONLY 2@1M, 2@2M
R11-4	60X30	12.50						ROAD CLOSED TO THRU TRAFFIC
CONST-3A	60X48	20.00						FINE SIGN
CONST-3X	56X12	4.67						SPEEDING/PASSING (PLATE)
MISCELLANEOUS SIGNS								
CONST-5	48X36	12.00						POINT OF PRESENCE
CONST-5	96X48	32.00						POINT OF PRESENCE
CONST-7	48X24	8.00	2	16.00				RATE OUR WORK ZONE
CONST-7	72X36	18.00						RATE OUR WORK ZONE
CONST-8	48X36	12.00	2	24.00				WORK ZONE NO PHONE ZONE
	60X36	15.00	30	450.00				DETOUR BLANK

	TOTAL
616-10.05 CONSTRUCTION SIGNS	2083
616-10.10 RELOCATED SIGNS	0

ITEM NUMBER	TOTAL QTY	DESCRIPTION
6122008		IMPACT ATTENUATOR 40 MPH (SAND BARRELS)
6122009		IMPACT ATTENUATOR 45 MPH (SAND BARRELS)
6122010		IMPACT ATTENUATOR 50 MPH (SAND BARRELS)
6122012		IMPACT ATTENUATOR 55 MPH (SAND BARRELS)
6122014		IMPACT ATTENUATOR 60 MPH (SAND BARRELS)
6122017		IMPACT ATTENUATOR 65 MPH (SAND BARRELS)
6122019		IMPACT ATTENUATOR 70 MPH (SAND BARRELS)
6122020		REPLACEMENT SAND BARREL
6122030		IMPACT ATTENUATOR (RELOCATION)
6123001	1	TRUCK OR TRAILER MOUNTED ATTENUATOR (TMA)
6161008	10	ADVANCED WARNING RAIL SYSTEM
6161012		BUOYS (BOATS KEEP OUT)
6161013		BUOYS (NO WAKE)
6161014		SPECIAL SIGN ASSEMBLY (BOATS KEEP OUT)
6161025		CHANNELIZER (TRIM LINE)
6161030	10	TYPE III MOVEABLE BARRICADE
6161033		DIRECTION INDICATOR BARRICADE
6161040		FLASHING ARROW PANEL
6161047		TYPE III OBJECT MARKER
6161055		SEQUENTIAL FLASHING WARNING LIGHT
6161070		TUBULAR MARKER
6161095		RADAR SPEED ADVISORY SYSTEM
6161096		CHANGEABLE MESSAGE SIGN, COMMISSION FURNISHED/RETAINED
6161098A	6	CHANGEABLE MESSAGE SIGN W/O COMM. INTERFACE, CONTRACTOR FURNISHED/RETAINED
6161099		CHANGEABLE MESSAGE SIGN WITH COMM. INTERFACE, CONTRACTOR FURNISHED/RETAINED
6162000A		WORK ZONE TRAFFIC SIGNAL SYSTEM
6162002		TEMPORARY LONG-TERM RUMBLE STRIPS
6173600D		TEMPORARY TRAFFIC BARRIER CONTRACTOR FURNISHED/RETAINED
6173602B		TEMPORARY TRAFFIC BARRIER CONTRACTOR FURNISHED/COMMISSION RETAINED
6174000A		TEMP. TRAFFIC BARRIER HEIGHT TRANSITION
6175010A		RELOCATING TEMPORARY TRAFFIC BARRIER
6176000B		TEMPORARY TRAFFIC BARRIER COMMISSION FURNISHED/RETAINED
6177000B		TEMP. TRAFFIC BARRIER HEIGHT TRANSITION COMMISSION FURNISHED/RETAINED
6208064A		TEMPORARY RAISED PAVEMENT MARKER
9029400		TEMPORARY TRAFFIC SIGNALS
9029401		TEMPORARY TRAFFIC SIGNALS AND LIGHTING

STATE OF MISSOURI
JESSIE BENJAMIN PHILPOT
NUMBER PE-2016017665
PROFESSIONAL ENGINEER
03/04/2024 7:58:33 PM
JESSIE BENJAMIN PHILPOT - CIVIL
MO-PE-2016017665

DATE PREPARED 3/4/2024

ROUTE	STATE
221	MO
DISTRICT	SHEET NO.
SE	3

COUNTY: ST FRANCOIS/IRON

JOB NO. J9S3610

CONTRACT ID.

PROJECT NO.

BRIDGE NO.

DATE	DESCRIPTION

MISSOURI HIGHWAYS AND TRANSPORTATION COMMISSION
105 WEST CAPITOL
JEFFERSON CITY, MO 65102
1-888-ASK-MODOT (1-888-275-6636)

IF A SEAL IS PRESENT ON THIS SHEET IT HAS BEEN ELECTRONICALLY SEALED AND DATED.

SUMMARY OF QUANTITIES
SHEET 5 OF 5

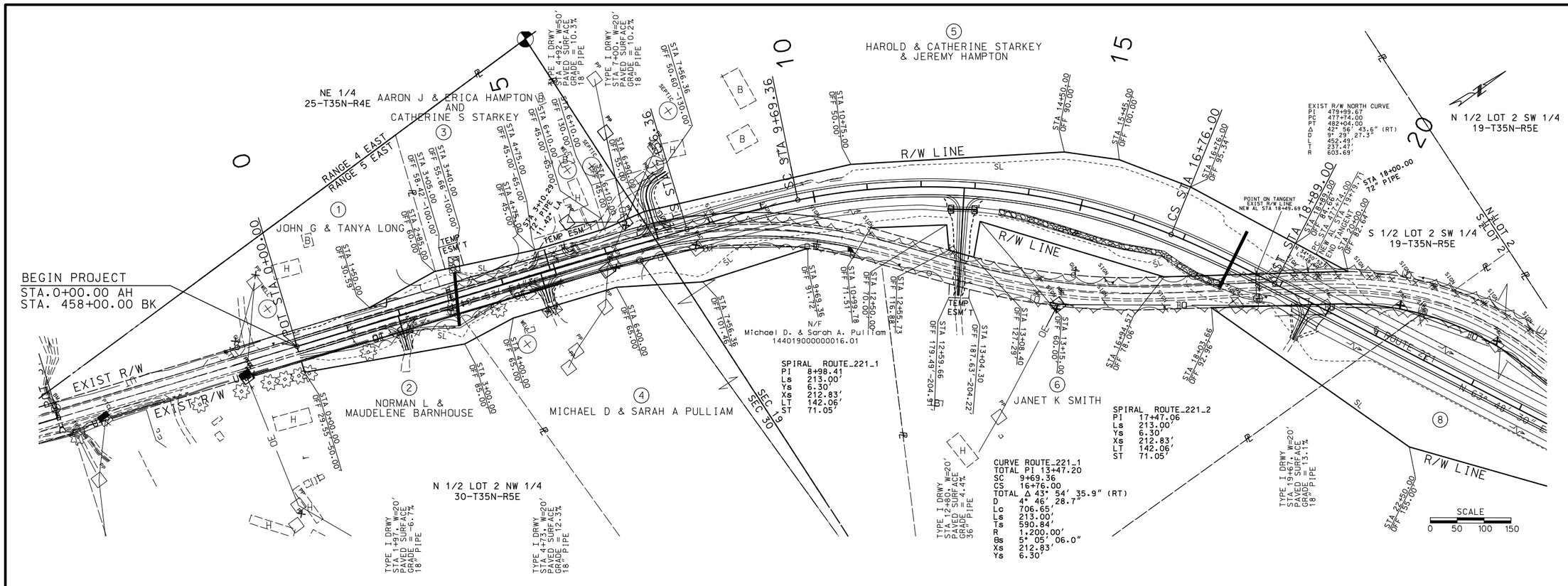

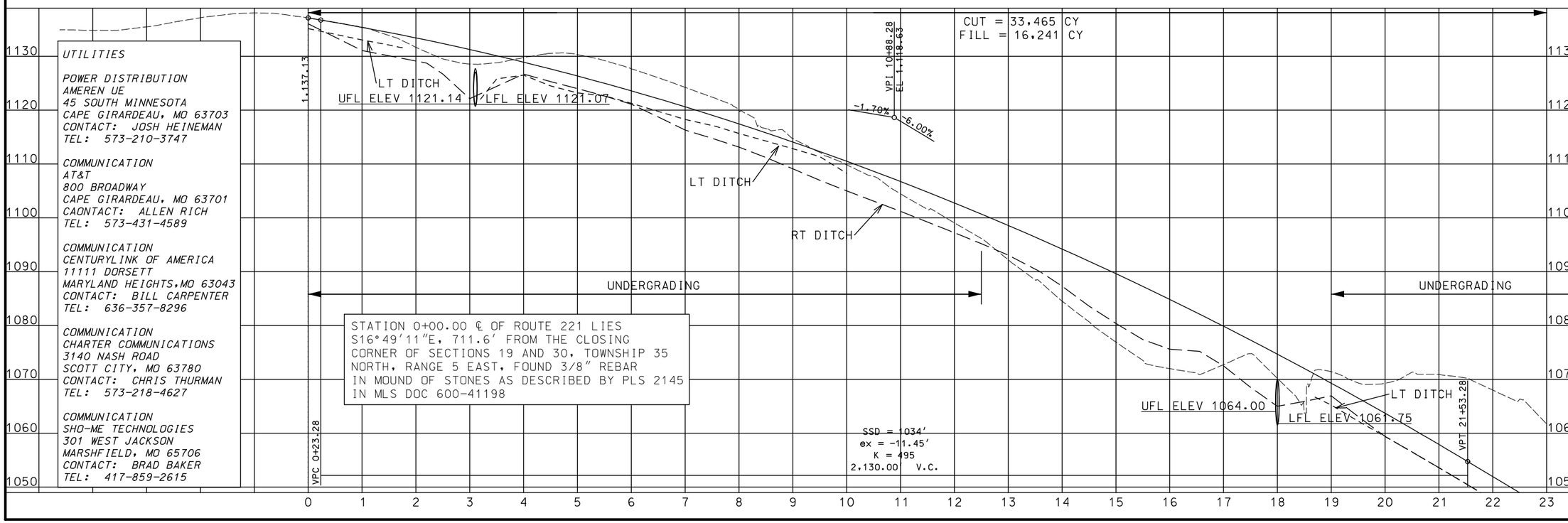

STATION 0+00.00 ℄ OF ROUTE 221 LIES S16°49'11"E, 711.6' FROM THE CLOSING CORNER OF SECTIONS 19 AND 30, TOWNSHIP 35 NORTH, RANGE 5 EAST, FOUND 3/8" REBAR IN MOUND OF STONES AS DESCRIBED BY PLS 2145 IN MLS DOC 600-41198

UTILITIES

POWER DISTRIBUTION
AMEREN UE
45 SOUTH MINNESOTA
CAPE GIRARDEAU, MO 63703
CONTACT: JOSH HEINEMAN
TEL: 573-210-3747

COMMUNICATION
AT&T
800 BROADWAY
CAPE GIRARDEAU, MO 63701
CAONTACT: ALLEN RICH
TEL: 573-431-4589

COMMUNICATION
CENTURYLINK OF AMERICA
11111 DORSETT
MARYLAND HEIGHTS,MO 63043
CONTACT: BILL CARPENTER
TEL: 636-357-8296

COMMUNICATION
CHARTER COMMUNICATIONS
3140 NASH ROAD
SCOTT CITY, MO 63780
CONTACT: CHRIS THURMAN
TEL: 573-218-4627

COMMUNICATION
SHO-ME TECHNOLOGIES
301 WEST JACKSON
MARSHFIELD, MO 65706
CONTACT: BRAD BAKER
TEL: 417-859-2615

STATE OF MISSOURI
JESSIE BENJAMIN PHILPOT
NUMBER
PE-2016017665
PROFESSIONAL ENGINEER
03/01/2024 9:12:13 AM
JESSIE BENJAMIN PHILPOT - CIVIL
MO-PE-2016017665

DATE PREPARED	
2/22/2024	
ROUTE 221	STATE MO
DISTRICT SE	SHEET NO. 4
COUNTY ST FRANCOIS/IRON	
JOB NO. J9S3610	
CONTRACT ID.	
PROJECT NO.	
BRIDGE NO.	

DATE	DESCRIPTION

MISSOURI HIGHWAYS AND TRANSPORTATION COMMISSION
105 WEST CAPITOL
JEFFERSON CITY, MO 65102
1-888-ASK-MODOT (1-888-275-6636)

IF A SEAL IS PRESENT ON THIS SHEET IT HAS BEEN ELECTRONICALLY SEALED AND DATED.

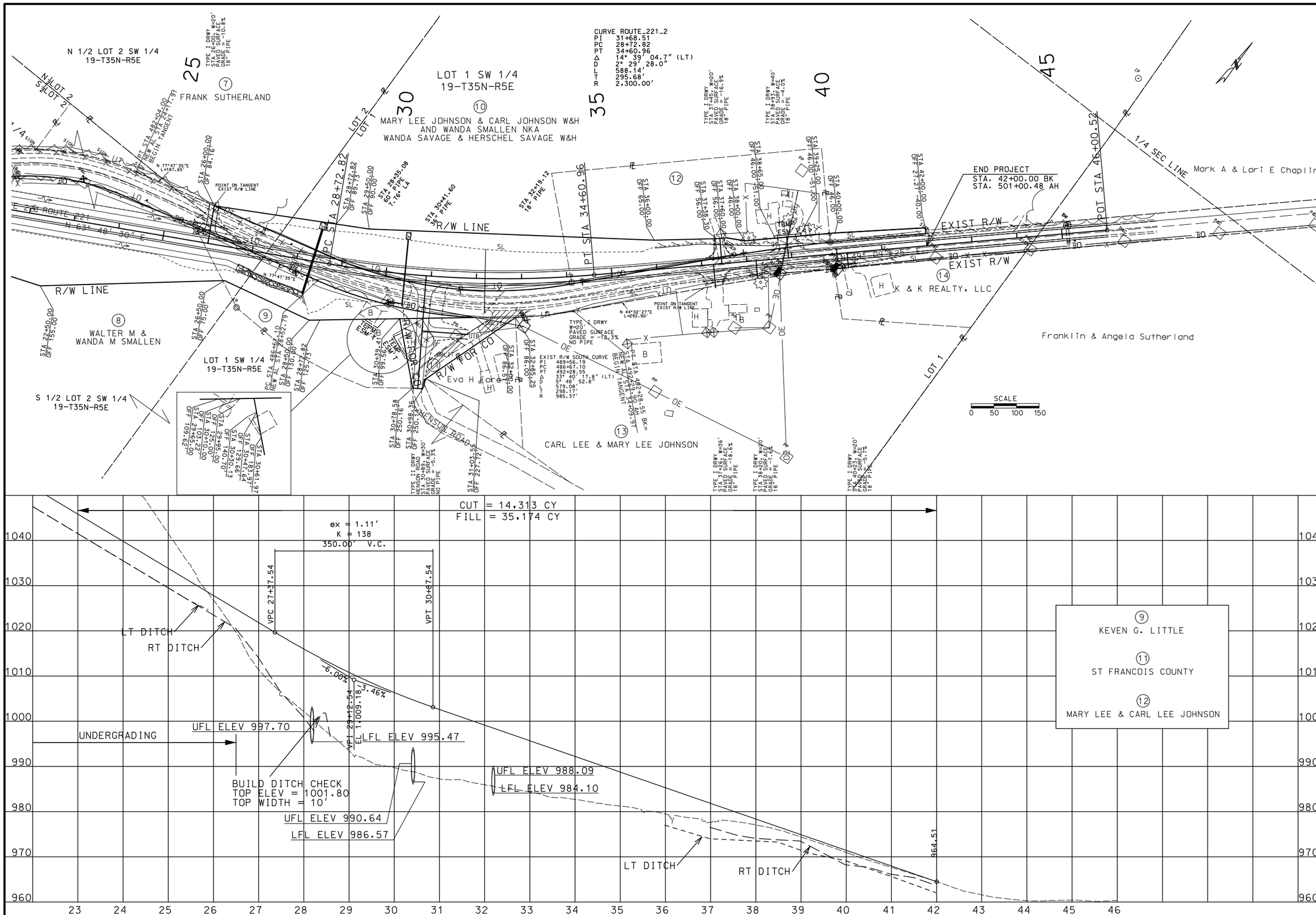

STATE OF MISSOURI
JESSIE BENJAMIN PHILPOT
NUMBER PE-2016017665
PROFESSIONAL ENGINEER
03/01/2024 9:10:39 AM
JESSIE BENJAMIN PHILPOT - CIVIL
MO-PE-2016017665

DATE PREPARED	
2/22/2024	
ROUTE 221	STATE MO
DISTRICT SE	SHEET NO. 5
COUNTY ST FRANCOIS/IRON	
JOB NO. J9S3610	
CONTRACT ID.	
PROJECT NO.	
BRIDGE NO.	

DATE	DESCRIPTION

MISSOURI HIGHWAYS AND TRANSPORTATION COMMISSION
105 WEST CAPITOL
JEFFERSON CITY, MO 65102
1-888-ASK-MODOT (1-888-275-6636)

IF A SEAL IS PRESENT ON THIS SHEET IT HAS BEEN ELECTRONICALLY SEALED AND DATED.

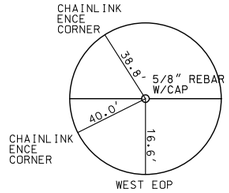

CONTROL PT#100
EXBL221
STA 408+12.72
OFFSET 41.22' RT

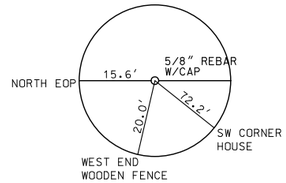

CONTROL PT#101
ROUTE_221
STA 5+26.07
OFFSET 33.15' LT

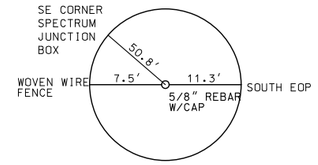

CONTROL PT#102
ROUTE_221
STA 33+52.59
OFFSET 76.73' RT

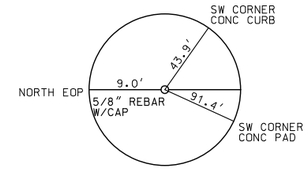

CONTROL PT#103
APPROX STA 517+70
OFFSET 26' LT

BENCH MARKS - NAVD 88					
BM#1	BM#2	BM#3	BM#4	BM#5	
ELEV 1183.31	ELEV 1134.50	ELEV 1127.53	ELEV 1072.28	ELEV 959.43	
◻ CEN. N. H.W. OF BOX CULVERT	◻ CEN. N. H.W. OF BOX CULVERT	◻ CEN. S. H.W. OF BOX CULVERT	◻ CEN. S. H.W. OF BOX CULVERT	◻ CEN. N. H.W. OF BOX CULVERT	
EXBL221	EXBL221	ROUTE_221	ROUTE_221	ROUTE_221	
STA 422+72.2	STA 453+38.3	STA 2+95.1	STA 18+73.9	STA 45+13.4	
15.9' LT	18.3' LT	18.2' RT	38.5' RT	18.3' LT	

PROJECT COORDINATE INFORMATION

COORDINATE SYSTEM	MO COORD SYSTEM OF 1983 (FEET)
HORIZONTAL DATUM	NAD83 2011
VERTICAL DATUM	NAVD 88
GEOID MODEL	2018
ELEVATIONS DETERMINED BY	
PROJECT PROJECTION FACTOR	1.00000000

REFERENCE CONTROL INFORMATION

COORDINATE SYSTEM	MO COORD SYSTEM OF 1983 (FEET)
CONTROL STATION	MOBW
DESIGNATION	MODOT BELLEVIEW CORS ARP
CORS_ID	MOBW
PID	DL6310
LATITUDE	904438.6164
LONGITUDE	374217.7419
NORTHING (M)	207711.3490
EASTING (M)	228479.4130
ZONE	East
PROJECT AVERAGE GRID FACTOR	1.00000000

COORDINATE POINT LISTING

SHEET NO	STATION	LOCATION	OFFSET (USFT)	STATE PLANE (FEET) NORTHING (US SURVEY FT)	EASTING (US SURVEY FT)	ELEVATION (US SURVEY FT)	DESCRIPTION	GPK POINT ID
PROJECT CONTROL POINTS								
	408+12.72	EXBL221	41.22 RT	682,703.82	807,525.23	1,175.84	5/8" Rebar w/ Orange Plastic Cap	CP100
4	5+26.07	ROUTE 221	33.15 LT	686,629.72	810,721.15	1,127.80	5/8" Rebar w/ Orange Plastic Cap	CP101
5	33+52.59	ROUTE 221	76.73 RT	688,280.17	812,897.54	984.18	5/8" Rebar w/ Orange Plastic Cap	CP102
				690,006.35	814,745.58	964.70	5/8" Rebar w/ Orange Plastic Cap	CP103
ALIGNMENTS								
4	0+00.00	ROUTE_221		686,123.77	810,573.27		POT/BEGIN PROJECT	
4	7+56.36	ROUTE 221		686,834.97	810,830.70		TS SPIRAL CURVE	
4	8+98.41	ROUTE 221		686,968.55	810,879.05		PI SPIRAL CURVE	
4	9+69.36	ROUTE 221		687,032.95	810,909.06		SC SPIRAL CURVE/PC CURVE	
4	13+33.26	ROUTE 221		687,362.80	811,062.75		PI CURVE	
4	16+76.00	ROUTE 221		687,551.73	811,373.77		PT CURVE/CS SPIRAL CURVE	
4	17+47.06	ROUTE 221		687,588.62	811,434.50		PI SPIRAL CURVE	
4	18+89.00	ROUTE 221		687,651.32	811,561.97		ST SPIRAL CURVE	
5	28+72.82	ROUTE 221		688,085.55	812,444.77		PC CURVE	
5	31+68.51	ROUTE 221		688,216.06	812,710.09		PI CURVE	
5	34+60.96	ROUTE 221		688,409.44	812,933.78		PT CURVE	
5	46+00.52	ROUTE_221		689,154.69	813,795.85		POT/END PROJECT	

COORDINATE/REFERENCE
POINT SHEET
SHEET 1 OF 1

STATE OF MISSOURI
JESSIE BENJAMIN PHILPOT
NUMBER
PE-2016017665
PROFESSIONAL ENGINEER
03/01/2024 9:13:14 AM
JESSIE BENJAMIN PHILPOT - CIVIL
MO-PE-2016017665

DATE PREPARED	
2/22/2024	
ROUTE 221	STATE MO
DISTRICT SE	SHEET NO. 6
COUNTY ST FRANCOIS/IRON	
JOB NO. J9S3610	
CONTRACT ID.	
PROJECT NO.	
BRIDGE NO.	

DATE	DESCRIPTION

IF A SEAL IS PRESENT ON THIS SHEET IT HAS BEEN ELECTRONICALLY SEALED AND DATED.

MISSOURI HIGHWAYS AND TRANSPORTATION COMMISSION
105 WEST CAPITOL
JEFFERSON CITY, MO 65102
1-888-ASK-MODOT (1-888-275-6636)

BEGIN PROJECT

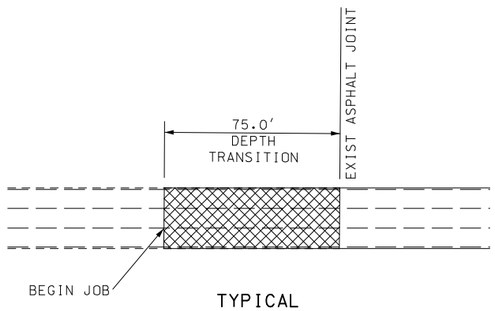

TYPICAL
RTE 221
(LM 0.441) BEGIN JOB

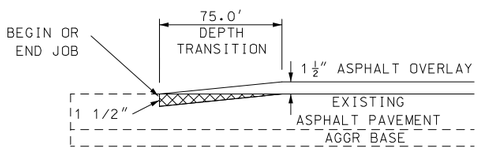

TYPICAL
RTE 221

END PROJECT

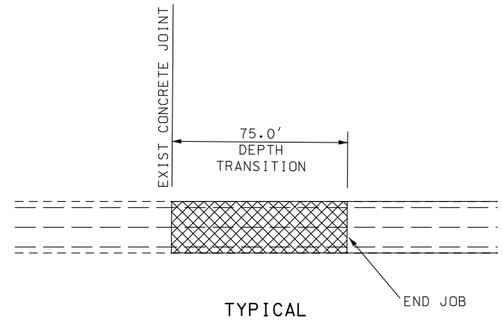

TYPICAL
RTE 221
(LM 16.211) END JOB

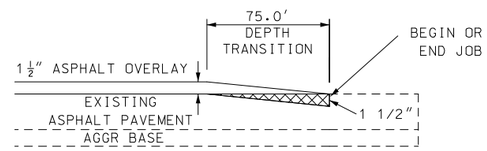

TYPICAL
RTE 221

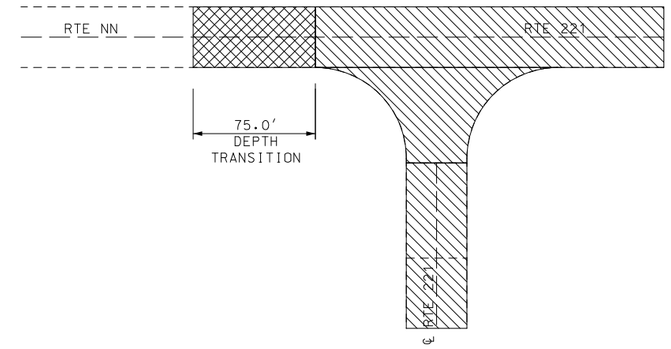

PLAN VIEW AT RTE NN AND RTE 221 (LM 7.270)

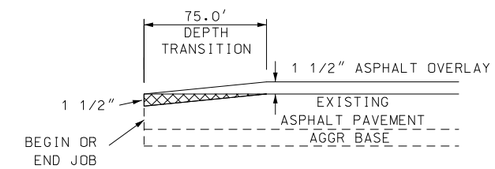

TYPICAL
RTE 221 AND RTE NN

OVERLAY

MODIFIED
COLDMILLING

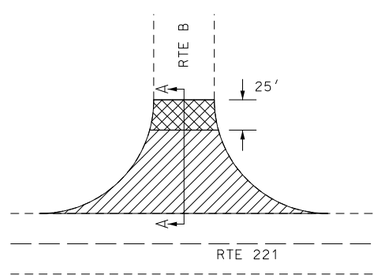

PLAN VIEW AT RTE B AND RTE 221 (LM 3.570)

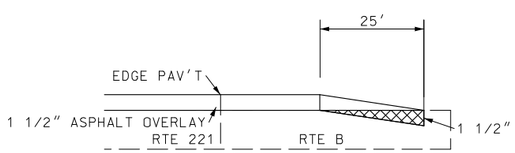

TYPICAL
SECTION A-A

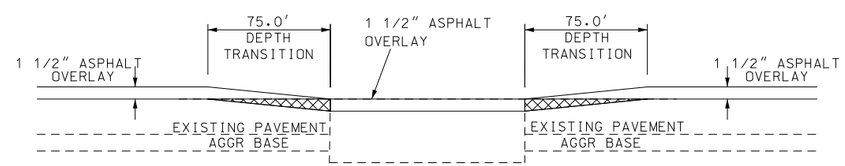

TYPICAL AT BRIDGE L0283
(LM 1.220)

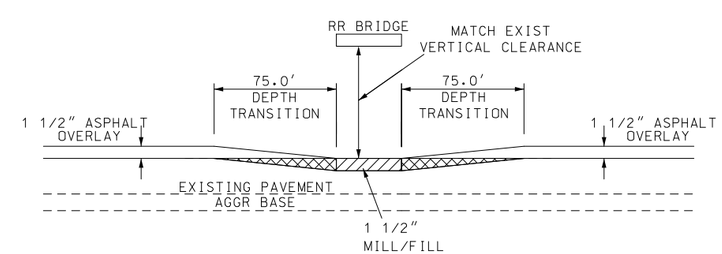

TYPICAL AT RR BRIDGE OVER ROUTE 221
(LM 15.752)

OVERLAY

MODIFIED
COLDMILLING

LOG MILE LOCATIONS APPROXIMATE
ADJUST AS DIRECTED BY ENGINEER
TO FIT FIELD CONDITIONS.

SPECIAL SHEET
SHEET 1 OF 7
DRAWING NOT TO SCALE

STATE OF MISSOURI
JESSIE BENJAMIN PHILPOT
NUMBER
PE-2016017665
PROFESSIONAL ENGINEER
03/01/2024 9:15:42 AM
JESSIE BENJAMIN PHILPOT - CIVIL
MO-PE-2016017665

DATE PREPARED	2/8/2024
ROUTE	221
STATE	MO
DISTRICT	SE
SHEET NO.	7
COUNTY	ST FRANCOIS/IRON
JOB NO.	J9S3610
CONTRACT ID.	
PROJECT NO.	
BRIDGE NO.	

DESCRIPTION

DATE

MISSOURI HIGHWAYS AND TRANSPORTATION COMMISSION
105 WEST CAPITOL
JEFFERSON CITY, MO 65102
1-888-ASK-MODOT (1-888-275-6636)

IF A SEAL IS PRESENT ON THIS SHEET IT HAS BEEN ELECTRONICALLY SEALED AND DATED.

REV.

NOTE:

IF ENTRANCE HAS A 2′ OR GREATER APRON THEN IT IS CONSIDERED PAVED. FOR 2′ APRONS TIE INTO THE BACK OF THE APRON.

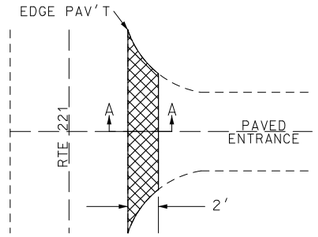

PLAN VIEW FOR PAVED PRIVATE AND COMMERCIAL ENTRANCES

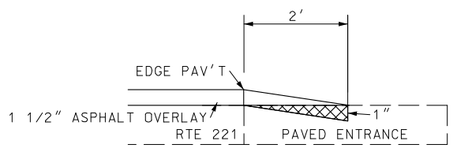

TYPICAL SECTION A–A

NOTE:

IF STREET OR COUNTY ROAD HAS A 10′ OR GREATER APRON THEN IT IS CONSIDERED PAVED. FOR 10′ APRONS TIE INTO THE BACK OF THE APRON.

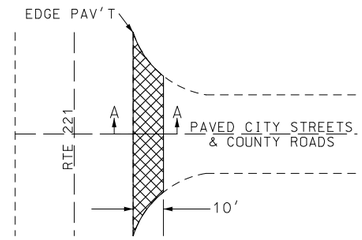

PLAN VIEW FOR PAVED CITY STREETS AND COUNTY ROADS

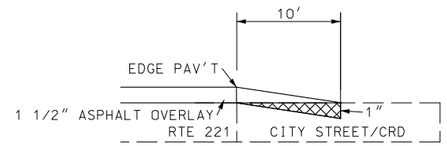

TYPICAL SECTION A–A

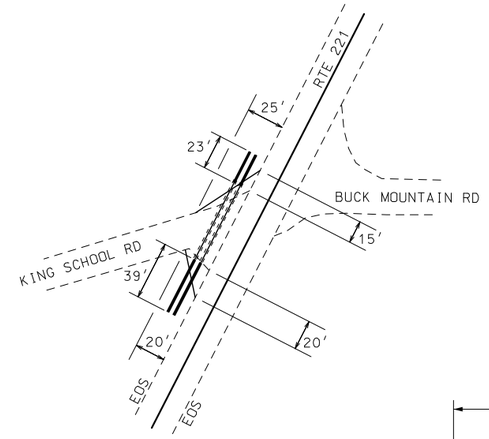

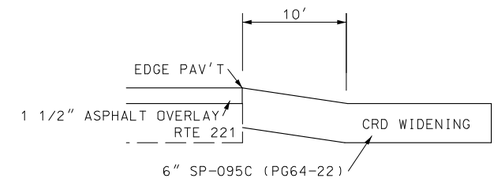

TYPICAL SECTION A–A

NOTE:

REGRADE DITCHES TO ALLOW PLACEMENT OF PIPES. EXTEND PIPES ON A GRADE THAT MAINTAINS EXISTING DRAINAGE PATTERNS.

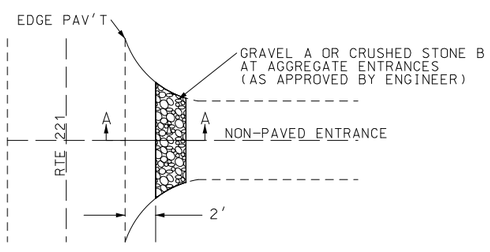

PLAN VIEW FOR NON-PAVED PRIVATE AND COMMERCIAL ENTRANCES WITH EXISTING APRON

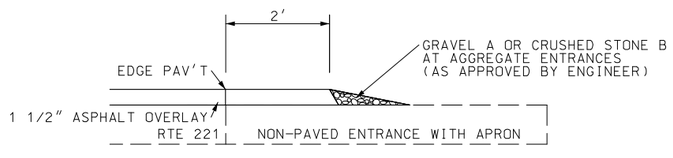

TYPICAL SECTION A–A

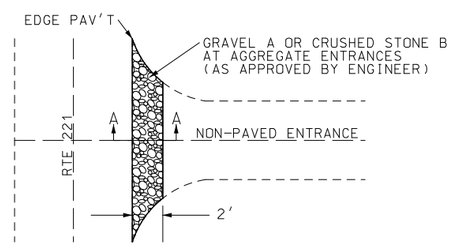

PLAN VIEW FOR NON-PAVED PRIVATE AND COMMERCIAL ENTRANCES WITHOUT EXISTING APRON

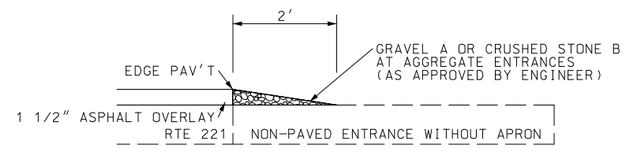

TYPICAL SECTION A–A

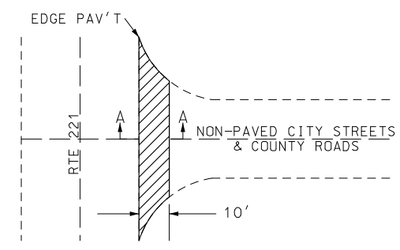

PLAN VIEW FOR NON-PAVED CITY STREETS AND COUNTY ROADS

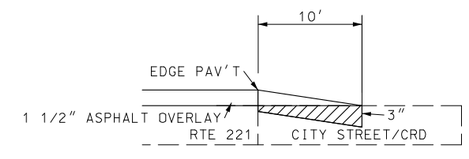

TYPICAL SECTION A–A

COLDMILLING

GRADING

GRAVEL A OR CRUSHED STONE B

NOTES

ALL GRADING NECESSARY FOR THE PROPER CONSTRUCTION OF HOT MIX AND AGGREGATE APRONS SHALL BE CONSIDERED INCIDENTAL WORK AND AT NO DIRECT PAY.

THE WIDTH OF ALL HOT MIX AND AGGREGATE APRONS MAY BE ADJUSTED BY THE ENGINEER AS NECESSARY TO OBTAIN SUITABLE TRANSITIONS.

NOTE

FOR ENTRANCE AT LM 5.49 ON RT REGRADE ENTRANCE ON A 0% GRADE TO CENTER OF NEW DITCH AND THEN GRADE TO TIE IN 1′ FROM THE EXISTING R/W INE.

SPECIAL SHEET
SHEET 2 OF 7
DRAWING NOT TO SCALE

STATE OF MISSOURI
JESSIE BENJAMIN PHILPOT
NUMBER PE-2016017665
PROFESSIONAL ENGINEER
03/01/2024 9:16:15 AM
JESSIE BENJAMIN PHILPOT - CIVIL
MO-PE-2016017665

DATE PREPARED	2/8/2024
ROUTE 221	STATE MO
DISTRICT SE	SHEET NO. 8
COUNTY	ST FRANCOIS/IRON
JOB NO.	J9S3610
CONTRACT ID.	
PROJECT NO.	
BRIDGE NO.	

DATE	DESCRIPTION

MISSOURI HIGHWAYS AND TRANSPORTATION COMMISSION

105 WEST CAPITOL
JEFFERSON CITY, MO 65102
1-888-ASK-MODOT (1-888-275-6636)

IF A SEAL IS PRESENT ON THIS SHEET IT HAS BEEN ELECTRONICALLY SEALED AND DATED.

REV.

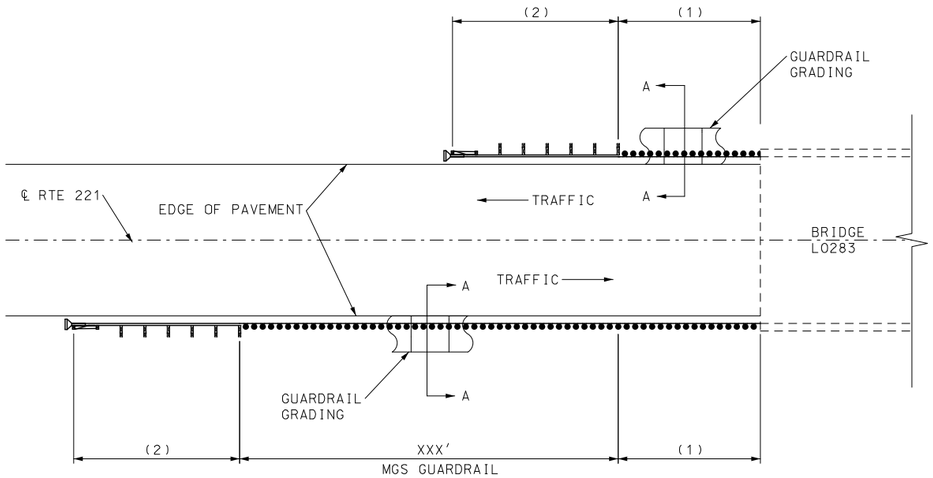

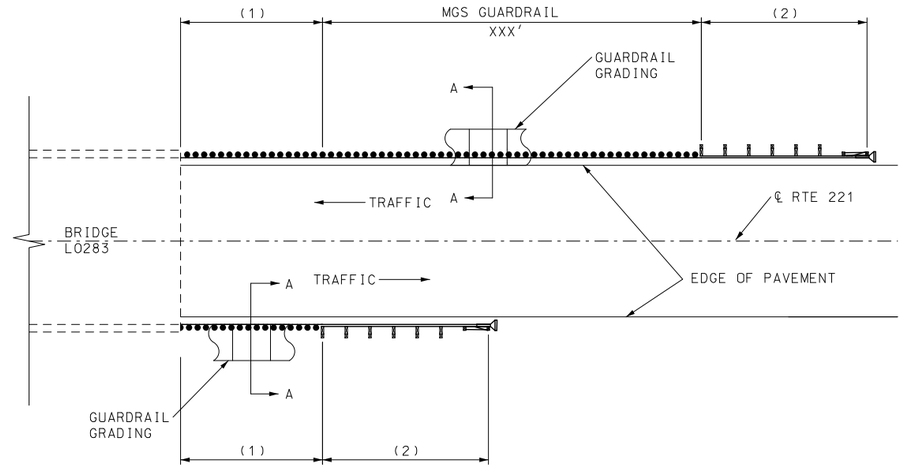

TYPICAL GUARDRAIL AND GRADING LIMITS AT BRIDGE (LM 1.220)

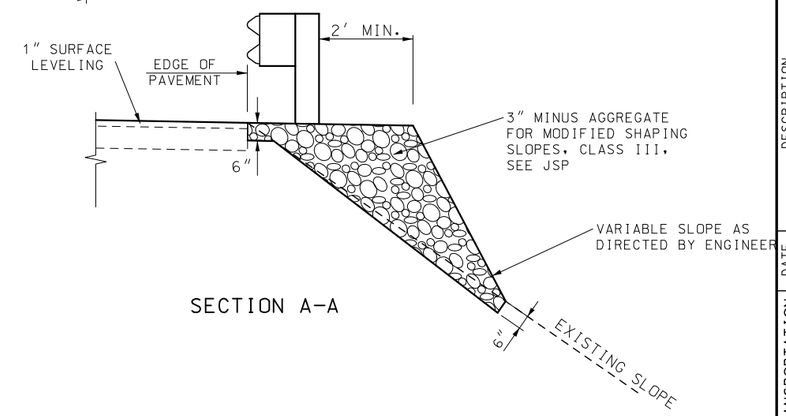

SECTION A-A

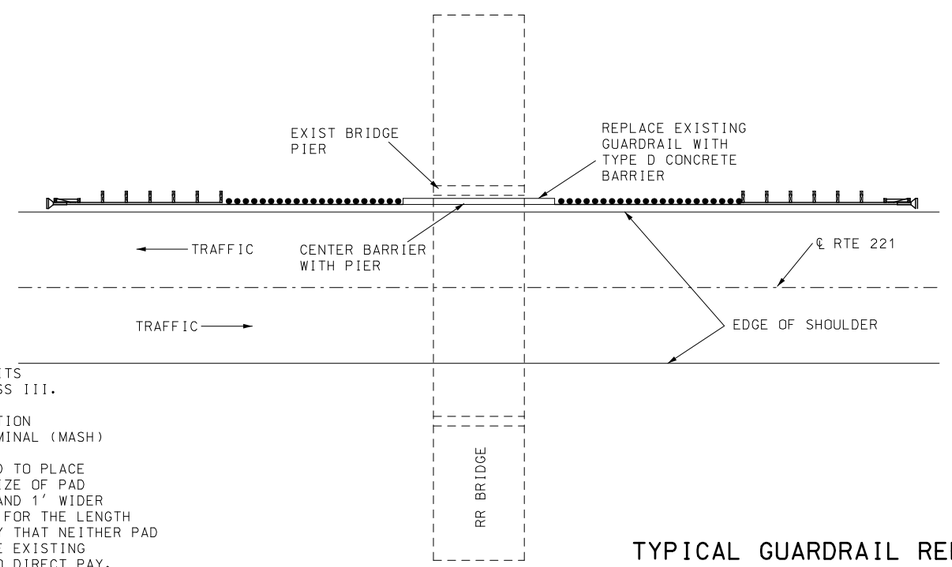

NOTES:

SEE STD 606.81 FOR GRADING LIMITS OF MODIFIED SHAPING SLOPES CLASS III.

(1) MGS BRIDGE APPROACH TRANSITION
(2) TYPE A CRASHWORTHY END TERMINAL (MASH)

BUILD A CONCRETE OR ASPHALT PAD TO PLACE TYPE D CONCRETE BARRIER ON. SIZE OF PAD SHALL BE AT LEAST 4" IN DEPTH AND 1' WIDER THAN THE BOTTOM OF THE BARRIER FOR THE LENGTH OF THE BARRIER. BUILD IN A WAY THAT NEITHER PAD NOR BARRIER ARE ATTACHED TO THE EXISTING COLUMN OR FOOTING. BUILD AT NO DIRECT PAY.

MODIFY END OF TYPE D BARRIER TO ACCOMMODATE GUARDRAIL PLACEMENT. BUILD AT NO DIRECT PAY.

TYPICAL GUARDRAIL REPLACEMENT AT RR BRIDGE (LM 15.756)

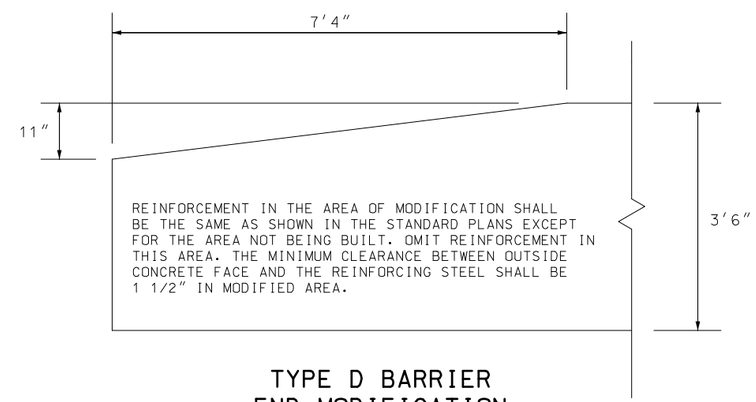

REINFORCEMENT IN THE AREA OF MODIFICATION SHALL BE THE SAME AS SHOWN IN THE STANDARD PLANS EXCEPT FOR THE AREA NOT BEING BUILT. OMIT REINFORCEMENT IN THIS AREA. THE MINIMUM CLEARANCE BETWEEN OUTSIDE CONCRETE FACE AND THE REINFORCING STEEL SHALL BE 1 1/2" IN MODIFIED AREA.

TYPE D BARRIER END MODIFICATION

SPECIAL SHEET
SHEET 3 OF 7
DRAWING NOT TO SCALE

STATE OF MISSOURI
JESSIE BENJAMIN PHILPOT
NUMBER PE-2016017665
PROFESSIONAL ENGINEER
03/04/2024 7:55:39 PM
JESSIE BENJAMIN PHILPOT - CIVIL
MO-PE-2016017665

DATE PREPARED	
2/8/2024	
ROUTE 221	STATE MO
DISTRICT SE	SHEET NO. 9
COUNTY ST FRANCOIS/IRON	
JOB NO. J9S3610	
CONTRACT ID.	
PROJECT NO.	
BRIDGE NO.	

DATE	DESCRIPTION

MISSOURI HIGHWAYS AND TRANSPORTATION COMMISSION
105 WEST CAPITOL
JEFFERSON CITY, MO 65102
1-888-ASK-MODOT (1-888-275-6636)

IF A SEAL IS PRESENT ON THIS SHEET IT HAS BEEN ELECTRONICALLY SEALED AND DATED.

REV.

ENT 1+97 RT

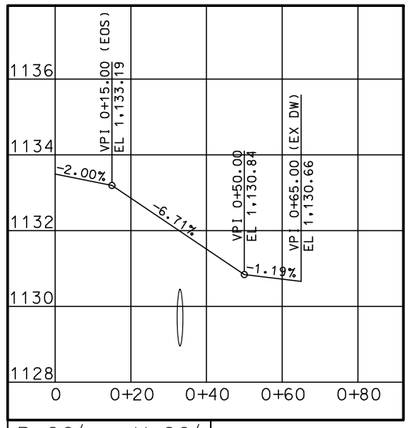

R=26′ W=20′

ENT 4+73 RT

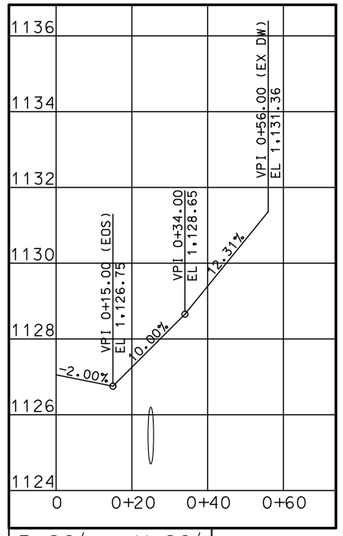

R=26′ W=20′

ENT 4+92 LT

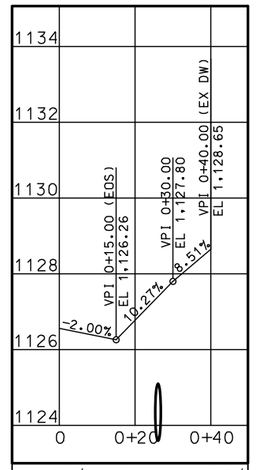

R=26′ LT W=50′
R=16′ RT

ENT 7+00 LT

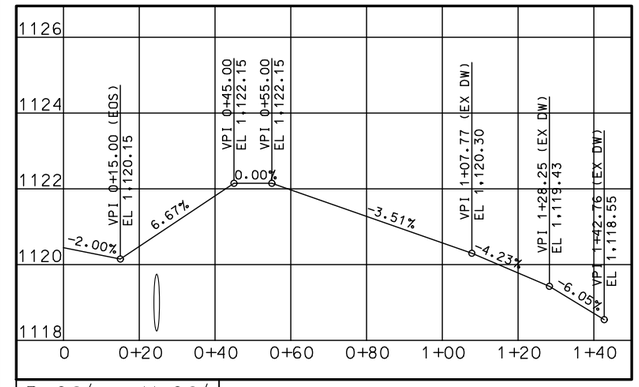

R=26′ W=20′

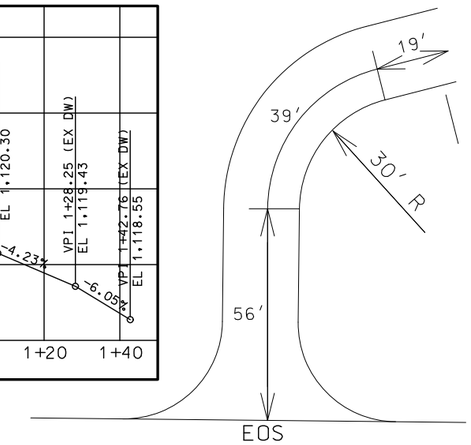

ENT 19+67 RT

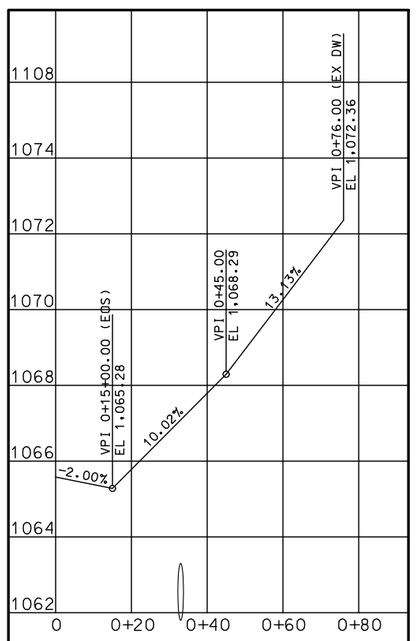

R=26′ W=20′

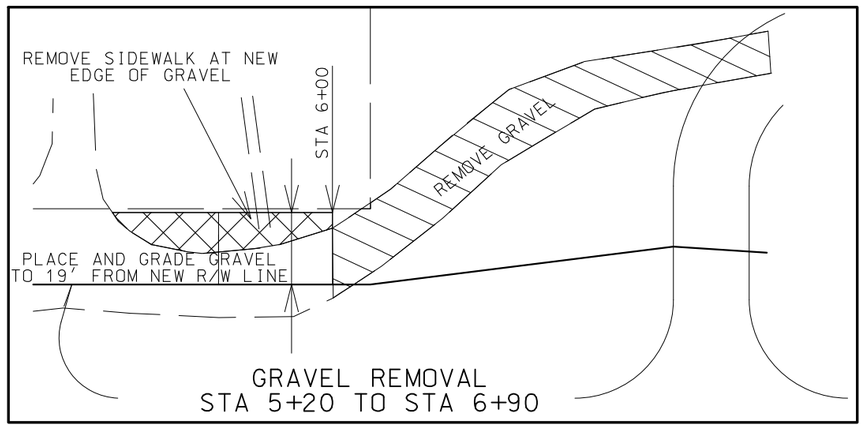

GRAVEL REMOVAL
STA 5+20 TO STA 6+90

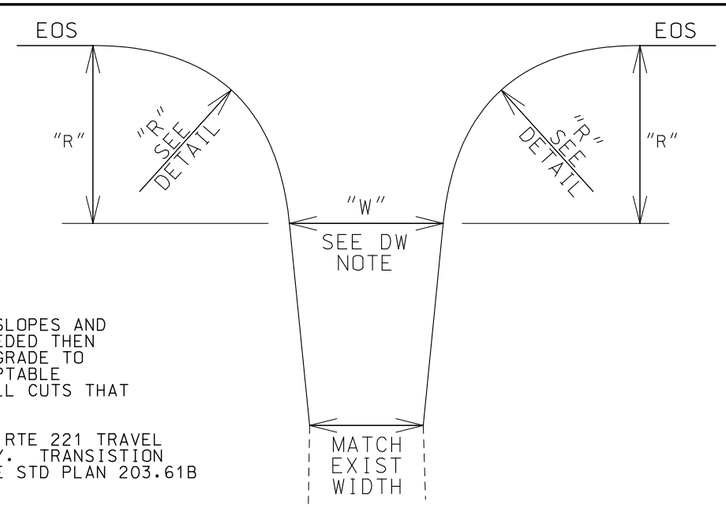

ENT 12+80 RT

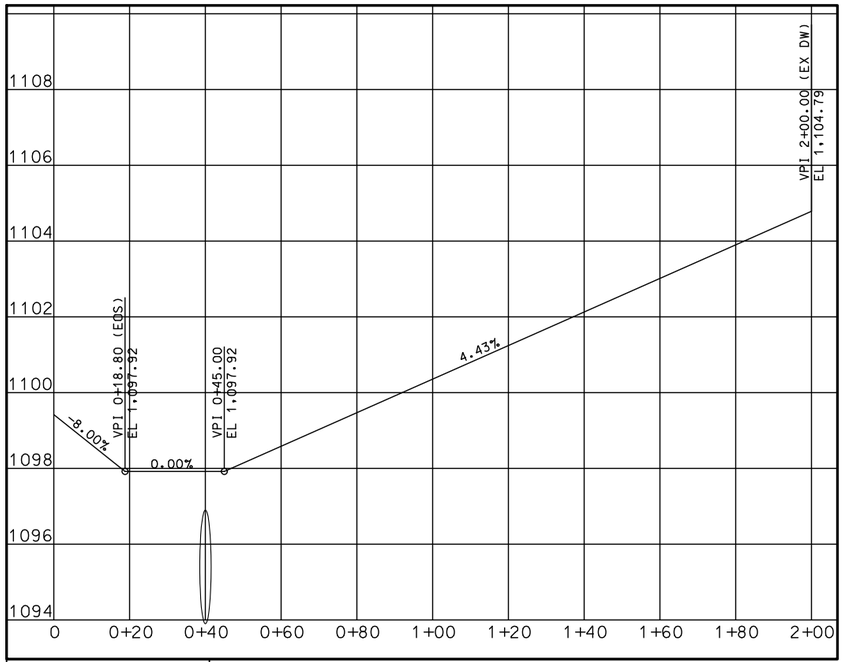

R=26′ W=20′

NOTES: BUILD ALL ENTRANCES WITH 6:1 OR 3:1 FORE SLOPES AND IF NEEDED 3:1 BACK SLOPES. IF DITCH IS NEEDED THEN BUILD A MINIMUM OF A 1′ DEEP V-DITCH AND GRADE TO DRAIN. BUILD NEW DITCH TO A STANDARD ACCEPTABLE TO THE ENGINEER. A DITCH IS REQUIRED IN ALL CUTS THAT DRAIN TOWARDS THE ROADWAY.

6:1 FORE SLOPES ARE REQUIRED FROM EDGE OF RTE 221 TRAVEL WAY TO 30′ FROM EDGE OF RTE 221 TRAVEL WAY. TRANSISTION FROM 6:1 TO 3:1 IN A MINIMUM OF 10′. SEE STD PLAN 203.61B

SPECIAL SHEET
SHEET 4 OF 7

STATE OF MISSOURI
JESSIE BENJAMIN PHILPOT
NUMBER
PE-2016017665
PROFESSIONAL ENGINEER
03/01/2024 9:14:07 AM
JESSIE BENJAMIN PHILPOT- CIVIL
MO-PE-2016017665

DATE PREPARED	
2/8/2024	
ROUTE 221	STATE MO
DISTRICT SE	SHEET NO. 10
COUNTY ST FRANCOIS/IRON	
JOB NO. J9S3610	
CONTRACT ID.	
PROJECT NO.	
BRIDGE NO.	

DATE	DESCRIPTION

MISSOURI HIGHWAYS AND TRANSPORTATION COMMISSION
105 WEST CAPITOL
JEFFERSON CITY, MO 65102
1-888-ASK-MODOT (1-888-275-6636)

IF A SEAL IS PRESENT ON THIS SHEET IT HAS BEEN ELECTRONICALLY SEALED AND DATED.

MAILBOX PLACEMENT

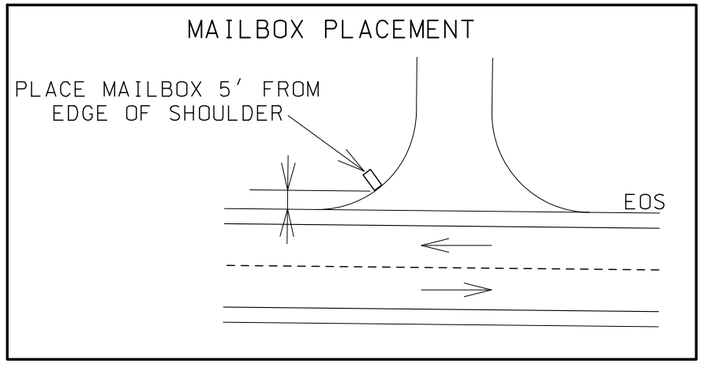

ENT 26+00 LT

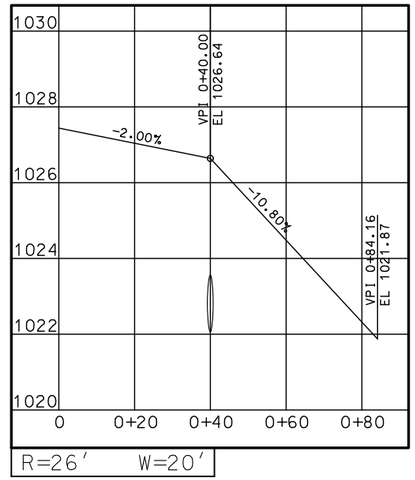

ENT 30+89 RT (HENSON ROAD)

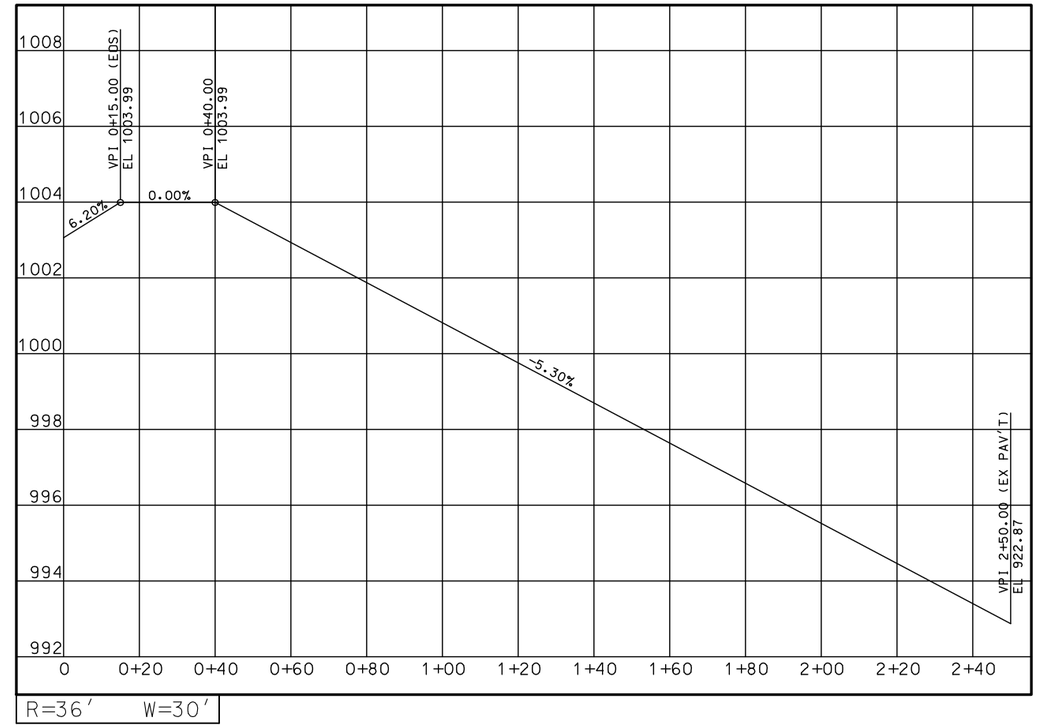

ENT @ 122.55' FROM RTE 221 ℄ (CONNECTS TO HENSON ROAD)

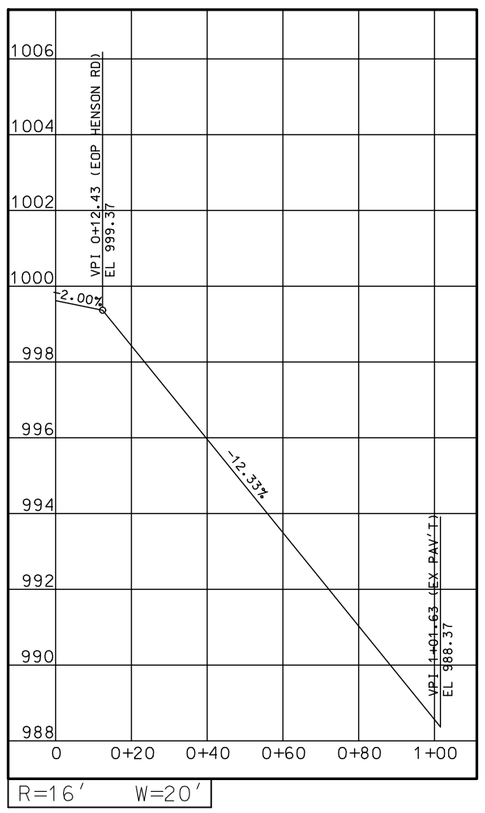

ENT 37+26 RT

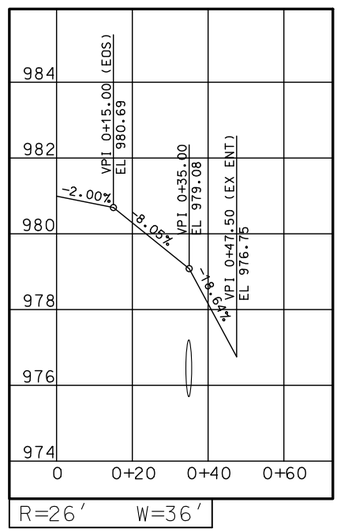

ENT 37+45 LT

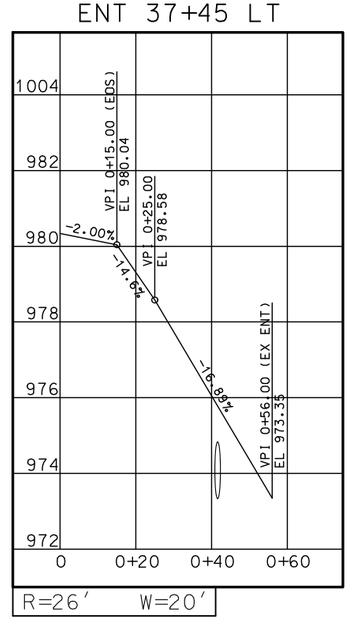

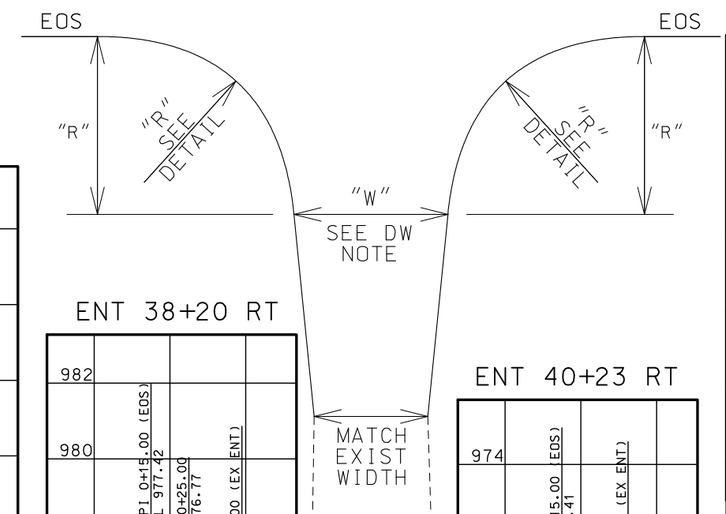

ENT 38+20 RT

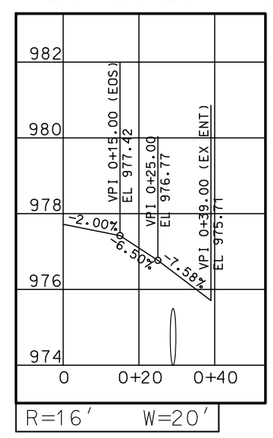

ENT 38+93 LT

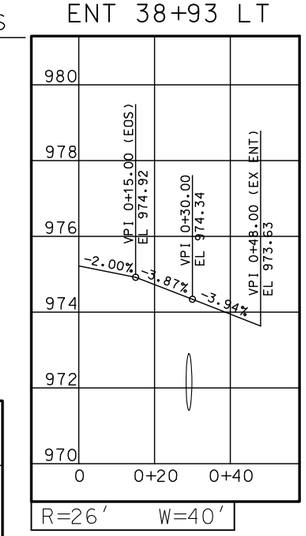

ENT 40+23 RT

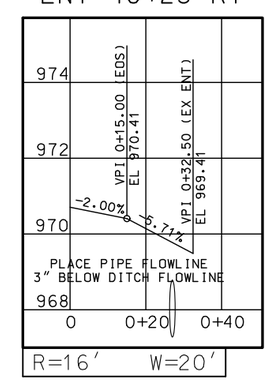

NOTES: BUILD ALL ENTRANCES WITH 6:1 OR 3:1 FORE SLOPES AND IF NEEDED 3:1 BACK SLOPES. IF DITCH IS NEEDED THEN BUILD A MINIMUM OF A 1' DEEP V-DITCH AND GRADE TO DRAIN. BUILD NEW DITCH TO A STANDARD ACCEPTABLE TO THE ENGINEER. A DITCH IS REQUIRED IN ALL CUTS THAT DRAIN TOWARDS THE ROADWAY.

6:1 FORE SLOPES ARE REQUIRED FROM EDGE OF RTE 221 TRAVEL WAY TO 30' FROM EDGE OF RTE 221 TRAVEL WAY. TRANSISTION FROM 6:1 TO 3:1 IN A MINIMUM OF 10'. SEE STD PLAN 203.61B

SPECIAL SHEET
SHEET 5 OF 7

STATE OF MISSOURI
JESSIE BENJAMIN PHILPOT
NUMBER PE-2016017665
PROFESSIONAL ENGINEER
03/01/2024 9:23:38 AM
JESSIE BENJAMIN PHILPOT - CIVIL
MO-PE-2016017665

DATE PREPARED	2/8/2024
ROUTE	221
STATE	MO
DISTRICT	SE
SHEET NO.	11
COUNTY	ST FRANCOIS/IRON
JOB NO.	J9S3610
CONTRACT ID.	
PROJECT NO.	
BRIDGE NO.	

DATE	DESCRIPTION

IF A SEAL IS PRESENT ON THIS SHEET IT HAS BEEN ELECTRONICALLY SEALED AND DATED.

MISSOURI HIGHWAYS AND TRANSPORTATION COMMISSION
105 WEST CAPITOL
JEFFERSON CITY, MO 65102
1-888-ASK-MODOT (1-888-275-6636)

CURVE WIDENING
LOG MILE 6.813 TO LOG MILE 6.921

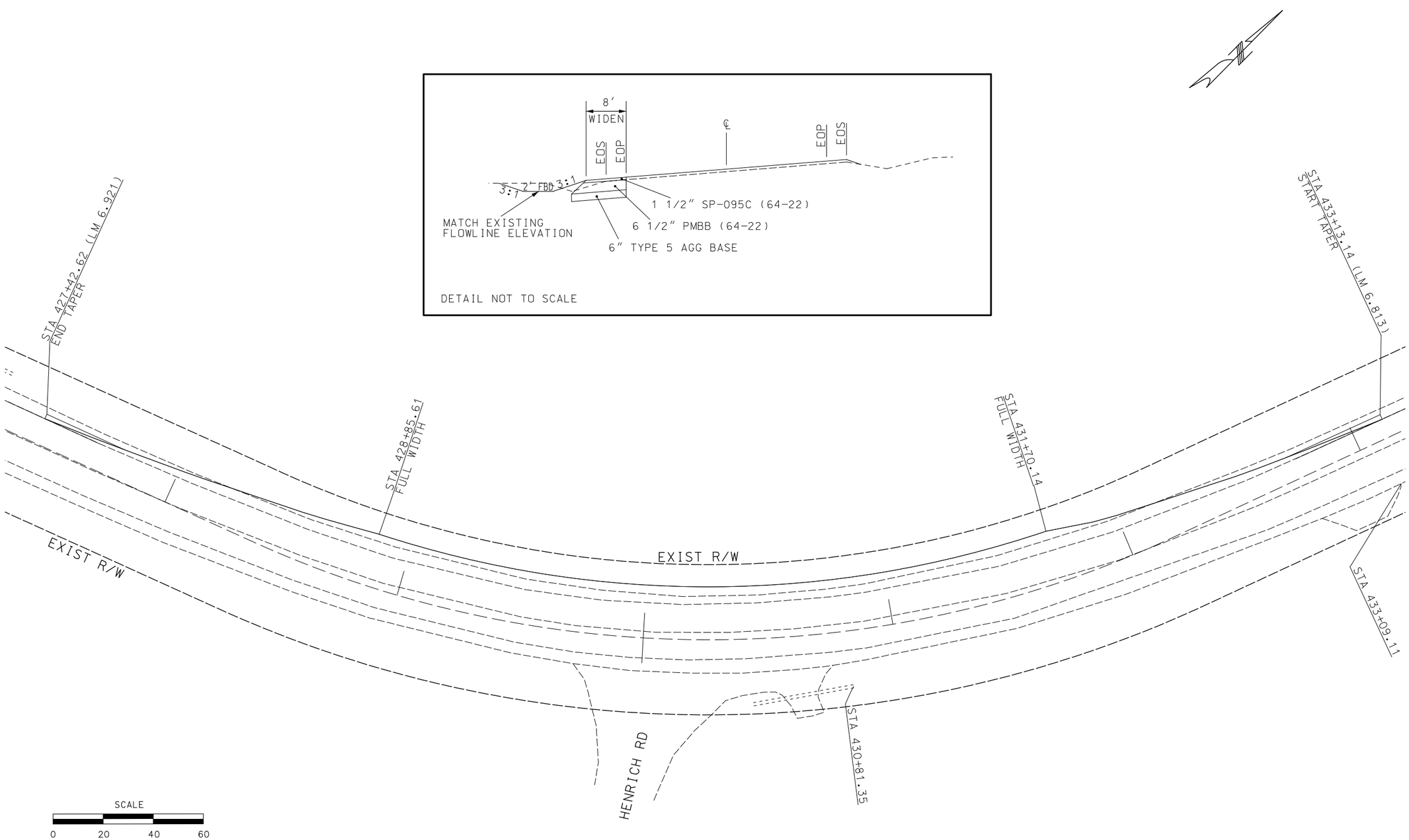

SPECIAL SHEET
SHEET 6 OF 7

STATE OF MISSOURI
JESSIE BENJAMIN PHILPOT
NUMBER
PE-2016017665
PROFESSIONAL ENGINEER

03/01/2024 9:24:34 AM
JESSIE BENJAMIN PHILPOT - CIVIL
MO-PE-2016017665

DATE PREPARED	
2/22/2024	
ROUTE 221	STATE MO
DISTRICT SE	SHEET NO. 12
COUNTY ST FRANCOIS/IRON	
JOB NO. J9S3610	
CONTRACT ID.	
PROJECT NO.	
BRIDGE NO.	

DATE	DESCRIPTION

MISSOURI HIGHWAYS AND TRANSPORTATION COMMISSION
105 WEST CAPITOL
JEFFERSON CITY, MO 65102
1-888-ASK-MODOT (1-888-275-6636)

IF A SEAL IS PRESENT ON THIS SHEET IT HAS BEEN ELECTRONICALLY SEALED AND DATED.

ROUTE NN/221
INTERSECTION
LOG MILE 7.270

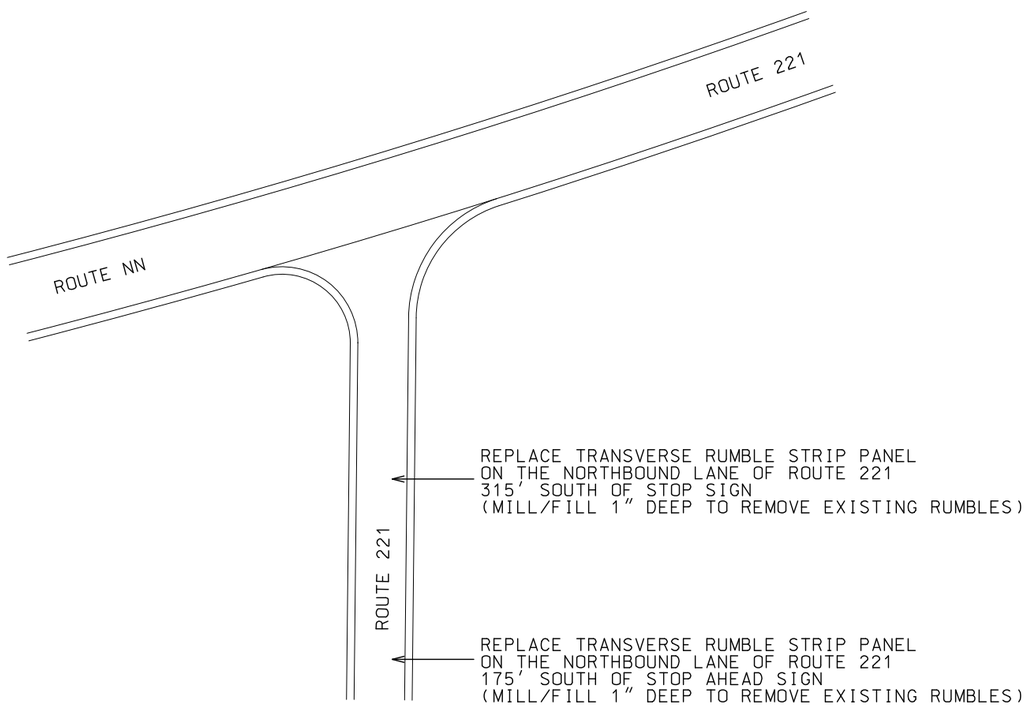

TRANSVERSE MILLED-IN RUMBLE STRIPS
NORTHBOUND ROUTE 221

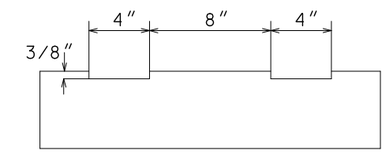

SECTION A-A
RUMBLE STRIP CUT IN VIEW

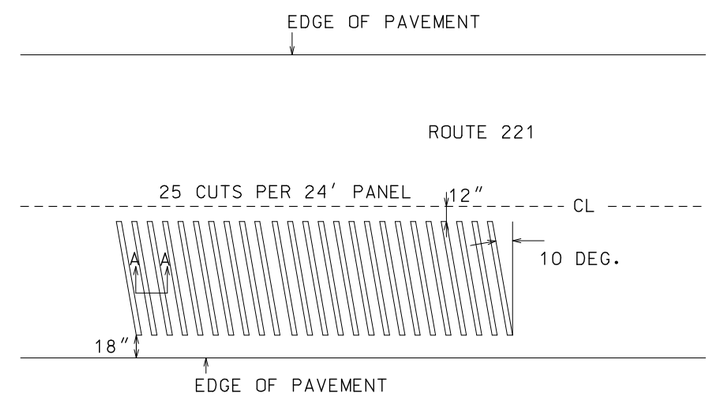

PAYMENT FOR TRANSVERSE RUMBLE STRIPS
PER LINEAR FOOT OF MILLED STRIP
PAY ITEM 6269903 = 213 L.F. PER 24' PANEL

SCALE
0 30 60 90

SPECIAL SHEET
SHEET 7 OF 7

STATE OF MISSOURI
JESSIE BENJAMIN PHILPOT
NUMBER
PE-2016017665
PROFESSIONAL ENGINEER
03/01/2024 9:25:12 AM
JESSIE BENJAMIN PHILPOT - CIVIL
MO-PE-2016017665

DATE PREPARED	2/8/2024
ROUTE	221
STATE	MO
DISTRICT	SE
SHEET NO.	13
COUNTY	ST FRANCOIS/IRON
JOB NO.	J9S3610
CONTRACT ID.	
PROJECT NO.	
BRIDGE NO.	

DATE	DESCRIPTION

IF A SEAL IS PRESENT ON THIS SHEET IT HAS BEEN ELECTRONICALLY SEALED AND DATED.

MISSOURI HIGHWAYS AND TRANSPORTATION COMMISSION
105 WEST CAPITOL
JEFFERSON CITY, MO 65102
1-888-ASK-MODOT (1-888-275-6636)

W020-1

2

W020-4

7

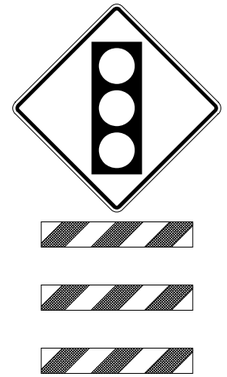

W03-3

12

R10-6L

47

SPEED	SIGN SPACING (FT)	
PERMANENT POSTED (MPH)	UNDIVIDED (S)	DIVIDED (S)
0-35	200	-
40-45	350	-
50-55	500	-
60-70	1000	-

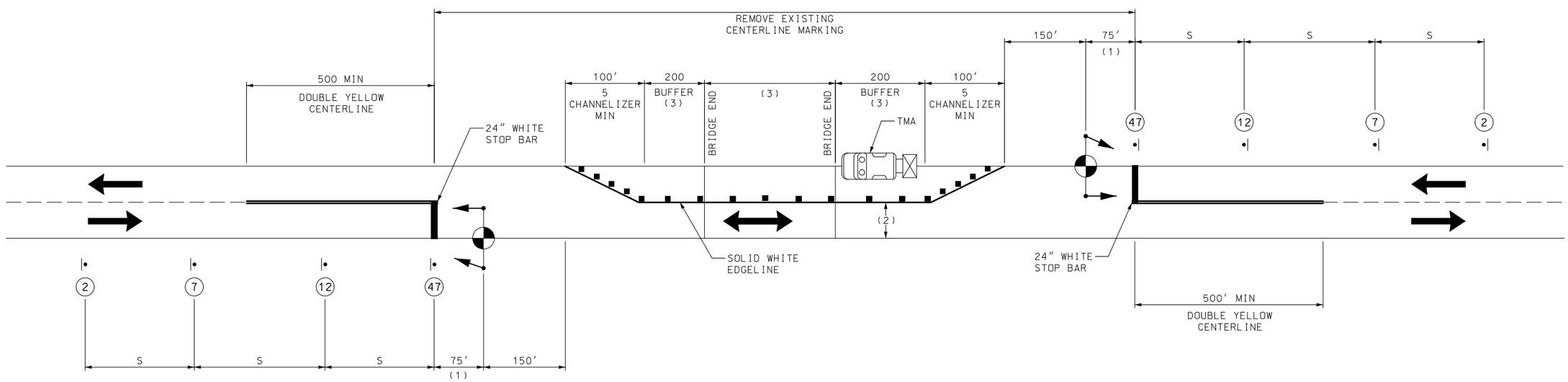

TRAFFIC CONTROL LEGEND

- SIGN (SINGLE SIDED)
- CHANNELIZER
- CHANGEABLE MESSAGE BOARD
- PORTABLE TRAFFIC SIGNAL AND LUMINARE
- TRUCK MOUNTED ATTENUATOR (TMA)

NOTE:

(1) 75' RECOMMENDED SPACING. SPACING MAY BE BETWEEN 40' AND 180'.
(2) DRIVING LANE SHALL BE AT LEAST 10' IN WIDTH.
(3) USE 20' CHANNELIZER SPACING.

EXISTING CONFLICTING PAVEMENT MARKINGS AND RAISED PAVEMENT MARKER REFLECTORS BETWEEN THE ACTIVITY AREA AND THE STOP LINE SHALL BE REMOVED. AFTER THE TEMPORARY TRAFFIC CONTROL SIGNAL IS REMOVED, THE STOP LINES AND OTHER TEMPORARY PAVEMENT MARKINGS SHALL BE REMOVED AND THE PERMANENT PAVEMENT MARKINGS RESTORED.
QUANTITIES PROVIDED ARE FOR ONE SET-UP AT A TIME.

RELOCATE PORTABLE TRAFFIC SIGNALS AS REQUIRED AT NO DIRECT PAY.

OVERHEAD LIGHTING FOR WORK ZONE TRAFFIC SIGNAL SYSTEM SHALL PROVIDE AN AVERAGE INTENSITY OF 5.0 FOOTCANDLES.

DRAWING NOT TO SCALE. FOLLOW DIMENSIONS.

TEMPORARY SIGNALS FOR BRIDGE RAIL INSTALLATION

BRIDGE L0283

TRAFFIC CONTROL
SHEET 1 OF 4

STATE OF MISSOURI
JESSIE BENJAMIN PHILPOT
NUMBER PE-2016017665
PROFESSIONAL ENGINEER
03/04/2024 7:59:23 PM
JESSIE BENJAMIN PHILPOT - CIVIL
MO-PE-2016017665

DATE PREPARED	
3/4/2024	
ROUTE 221	STATE MO
DISTRICT SE	SHEET NO. 14
COUNTY ST FRANCOIS/IRON	
JOB NO. J9S3610	
CONTRACT ID.	
PROJECT NO.	
BRIDGE NO.	

DATE	DESCRIPTION

MISSOURI HIGHWAYS AND TRANSPORTATION COMMISSION
105 WEST CAPITOL
JEFFERSON CITY, MO 65102
1-888-ASK-MODOT (1-888-275-6636)

IF A SEAL IS PRESENT ON THIS SHEET IT HAS BEEN ELECTRONICALLY SEALED AND DATED.

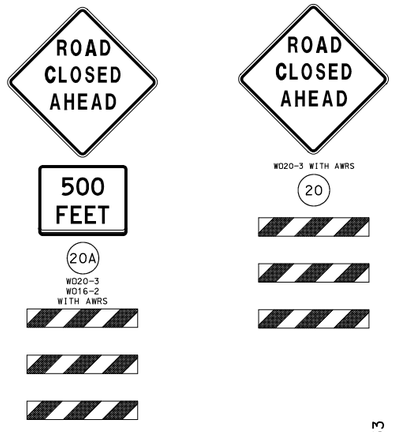

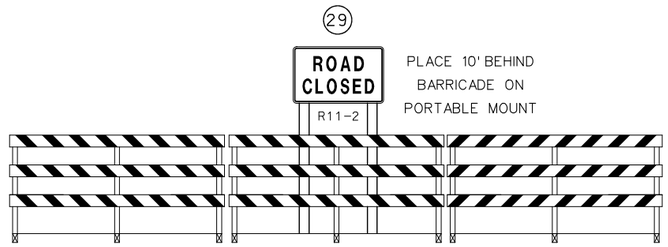

See Standard Plan 616.10 for Details.

TYPE III MOVEABLE BARRICADE

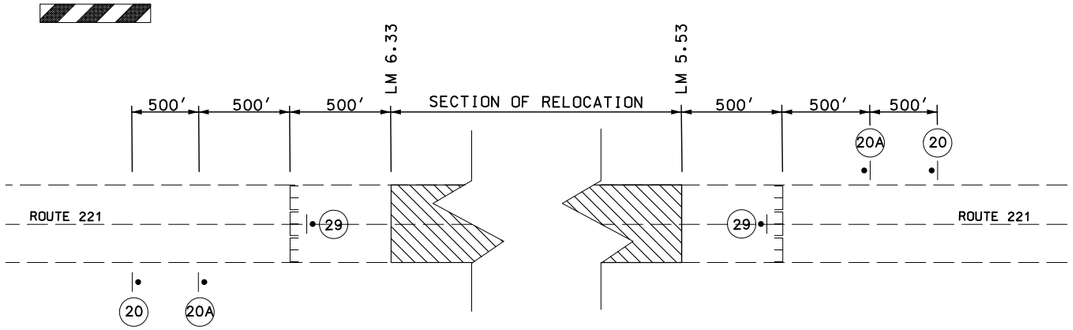

ROAD CLOSURE
ROUTE 221

DIMENSIONS FOR ROUTE ASSEMBLY IS 36" X 60"

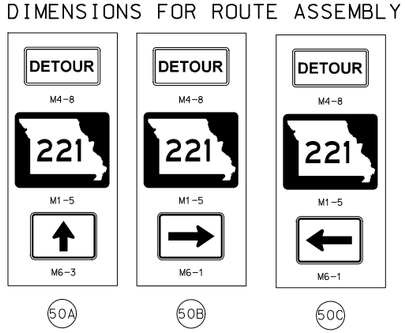

NOTE:

SIGNS MAY BE PRODUCED BY EITHER PROCESSES: APPROPRIATE CARDINAL DIRECTIONS, ROUTE SHIELDS, AND DIRECTIONAL ARROWS MAY BE SHEETED ON THE SIGN BLANKS AS ONE HOMOGENOUS PRODUCT OR APPROPRIATE CARDINAL DIRECTIONS, ROUTE SHIELDS, AND DIRECTIONAL ARROWS PLATES MAY BE CONSTRUCTED AND MAY BE BOLTED ON THE DETOUR BLANK SIGNS.

SIGN SPACING IS 500'. DISTANCE MAY BE ADJUSTED TO FIELD CONDITIONS.

USE IN PLACE ALL SIGNS WHICH DO NOT CONFLICT WITH THIS PLAN. COVER AND/OR REMOVE CONFLICTING SIGNS.

QUANTITY FOR #50 SIGNS ARE FOR A HOMOGENOUS PRODUCT PER SIGN. SUBSTITUTION OF SIGN BLANKS WITH BOLTED PLATES WILL BE ALLOWED FOR NO ADDITIONAL COMPENSATION.

TRAFFIC CONTROL LEGEND

- SIGN (SINGLE SIDED)
- BARRICADE
- CHANGEABLE MESSAGE BOARD

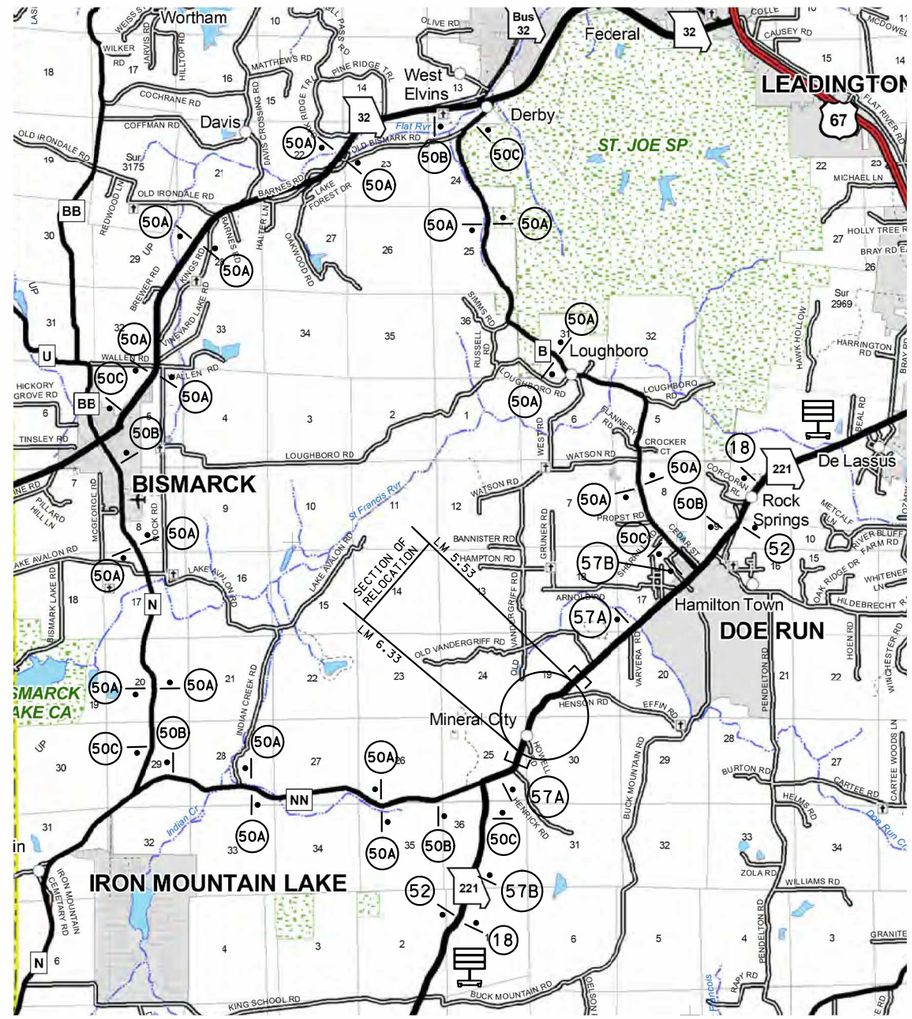

TRAFFIC CONTROL
SHEET 2 OF 4
DRAWING NOT TO SCALE

STATE OF MISSOURI
JESSIE BENJAMIN PHILPOT
NUMBER PE-2016017665
PROFESSIONAL ENGINEER
03/01/2024 10:21:40 AM
JESSIE BENJAMIN PHILPOT - CIVIL
MO-PE-2016017665

DATE PREPARED	
2/22/2024	
ROUTE 221	STATE MO
DISTRICT SE	SHEET NO. 15
COUNTY ST. FRANCOIS/IRON	
JOB NO. J9S3610	
CONTRACT ID.	
PROJECT NO.	
BRIDGE NO.	

DATE	DESCRIPTION

MISSOURI HIGHWAYS AND TRANSPORTATION COMMISSION
105 WEST CAPITOL
JEFFERSON CITY, MO 65102
1-888-ASK-MODOT (1-888-275-6636)

IF A SEAL IS PRESENT ON THIS SHEET IT HAS BEEN ELECTRONICALLY SEALED AND DATED.

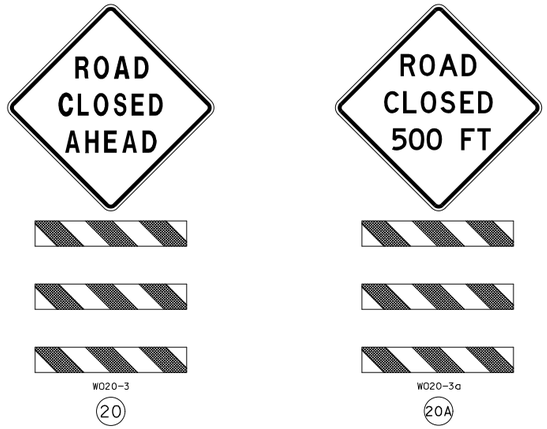

TRAFFIC CONTROL LEGEND

- SIGN (SINGLE SIDED)
- BARRICADE
- CHANGEABLE MESSAGE BOARD

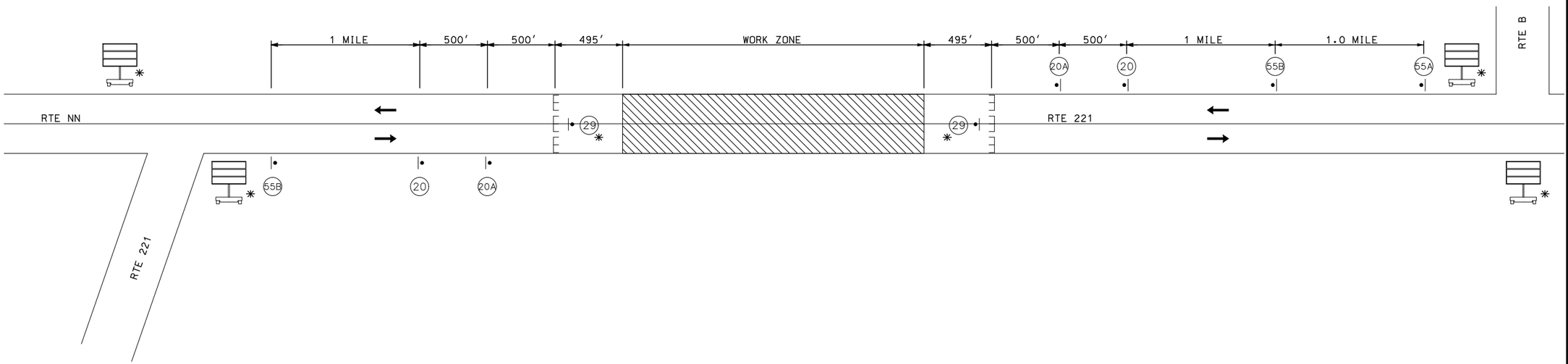

✳ NOTES:

MESSAGE AND LOCATION TO BE DETERMINED BY ENGINEER

PLACED ROAD CLOSED SIGN 7 TO 10 FEET BEHIND BARRICADES

ROAD CLOSED
RTE 221

TRAFFIC CONTROL
SHEET 3 OF 4
DRAWING NOT TO SCALE

STATE OF MISSOURI
JESSIE BENJAMIN PHILPOT
NUMBER
PE-2016017665
PROFESSIONAL ENGINEER
03/01/2024 10:23:29 AM
JESSIE BENJAMIN PHILPOT - CIVIL
MO-PE-2016017665

DATE PREPARED	
2/22/2024	
ROUTE 221	STATE MO
DISTRICT SE	SHEET NO. 16
COUNTY ST. FRANCOIS/IRON	
JOB NO. J9S3610	
CONTRACT ID.	
PROJECT NO.	
BRIDGE NO.	

DATE	DESCRIPTION

MISSOURI HIGHWAYS AND TRANSPORTATION COMMISSION
105 WEST CAPITOL
JEFFERSON CITY, MO 65102
1-888-ASK-MODOT (1-888-275-6636)

IF A SEAL IS PRESENT ON THIS SHEET IT HAS BEEN ELECTRONICALLY SEALED AND DATED.

REV.

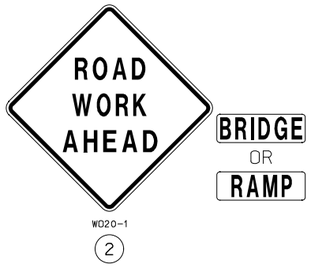

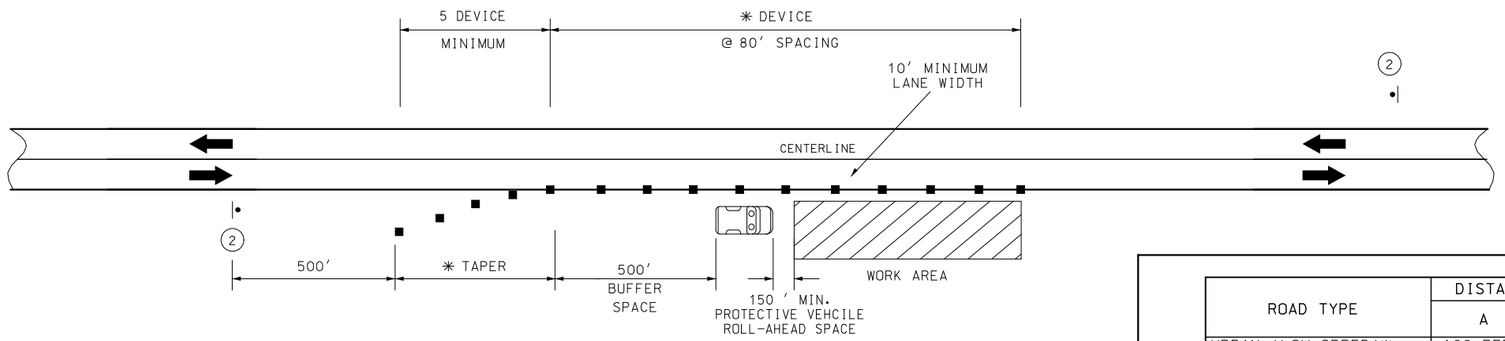

WORK ZONE FOR
SHOULDER WORK WITH MINOR
ENCROACHMENT ON DIVIDED
AND UNDIVIDED HIGHWAYS

TRAFFIC CONTROL LEGEND

■ CHANNELIZER

● SIGN

✳ NOTE : TAPER LENGTH = MINIMUM ⅓ L, WHERE L IS THE SHOULDER WIDTH MULTIPLIED BY POSTED SPEED, CHANNELIZER SPACING SHOULD NOT EXCEED 1X POSTED SPEED FOR THE TAPER.

TANGENT CHANNELIZATION SHOULD NOT EXCEED 2X POSTED SPEED.

ROAD TYPE	DISTANCE BETWEEN SIGNS ✳✳		
	A	B	C
URBAN (LOW SPEED)✳	100 FEET	100 FEET	100 FEET
URBAN (HIGH SPEED)✳	350 FEET	350 FEET	350 FEET
RURAL	500 FEET	500 FEET	500 FEET
EXPRESS/FREEWAY	1000 FEET	1500 FEET	2640 FEET

✳ SPEED CATEGORY TO BE DETERMINED BY THE HIGHWAY AGENCY OR OWNER OF THE SITE ROADWAYS OPEN TO PUBLIC TRAVEL.

✳✳ THE COLUMN HEADINGS A, B, AND C ARE THE DIMENSIONS SHOWN IN FIGURES 6P-1 THROUGH 6P-54. THE A DIMENSION IS THE DISTANCE FROM THE TRANSITION OR POINT OF RESTRICTION TO THE FIRST SIGN. THE B DIMENSION IS THE DISTANCE BETWEEN THE FIRST AND SECOND SIGNS. THE C DIMENSION IS THE DISTANCE BETWEEN THE SECOND AND THIRD SIGNS. (THE "FIRST SIGN" IS THE SIGN IN A THREE-SIGN SERIES THAT IS CLOSEST TO THE TTC ZONE. THE "THIRD SIGN" IS THE SIGN THAT IS FURTHEST UPSTREAM FROM THE TTC ZONE.)

ALL FIGURES REFERENCED ARE FROM MUTCD (11TH EDITION).

NOTES: SPACINGS MAY BE ADJUSTED AS NECESSARY TO MEET FIELD CONDITIONS.

NOTES:

ANY EXISTING SIGNING THAT CONFLICTS WITH THE TRAFFIC CONTROL SIGNING SHALL BE COMPETELY COVERED OR REMOVED.

NO PAYMENT WILL BE MADE FOR RELOCATION OF CONSTRUCTION SIGNS.

A TRUCK MOUNTED ATTENUATOR AND A FLASHING ARROW PANEL MAY BE USED IN CONJUNCTION WITH THE PROTECTIVE VEHICLE AT NO DIRECT PAY.

DRAWING NOT TO SCALE. FOLLOW DIMENSIONS.

STATE OF MISSOURI
JESSIE BENJAMIN PHILPOT
NUMBER
PE-2016017665
PROFESSIONAL ENGINEER
03/04/2024 8:00:28 PM
JESSIE BENJAMIN PHILPOT - CIVIL
MO-PE-2016017665

DATE PREPARED	
3/4/2024	
ROUTE 221	STATE MO
DISTRICT SE	SHEET NO. 17
COUNTY ST FRANCOIS/IRON	
JOB NO. J9S3610	
CONTRACT ID.	
PROJECT NO.	
BRIDGE NO.	

DATE	DESCRIPTION

MISSOURI HIGHWAYS AND TRANSPORTATION COMMISSION
105 WEST CAPITOL
JEFFERSON CITY, MO 65102
1-888-ASK-MODOT (1-888-275-6636)

IF A SEAL IS PRESENT ON THIS SHEET IT HAS BEEN ELECTRONICALLY SEALED AND DATED.

REV.

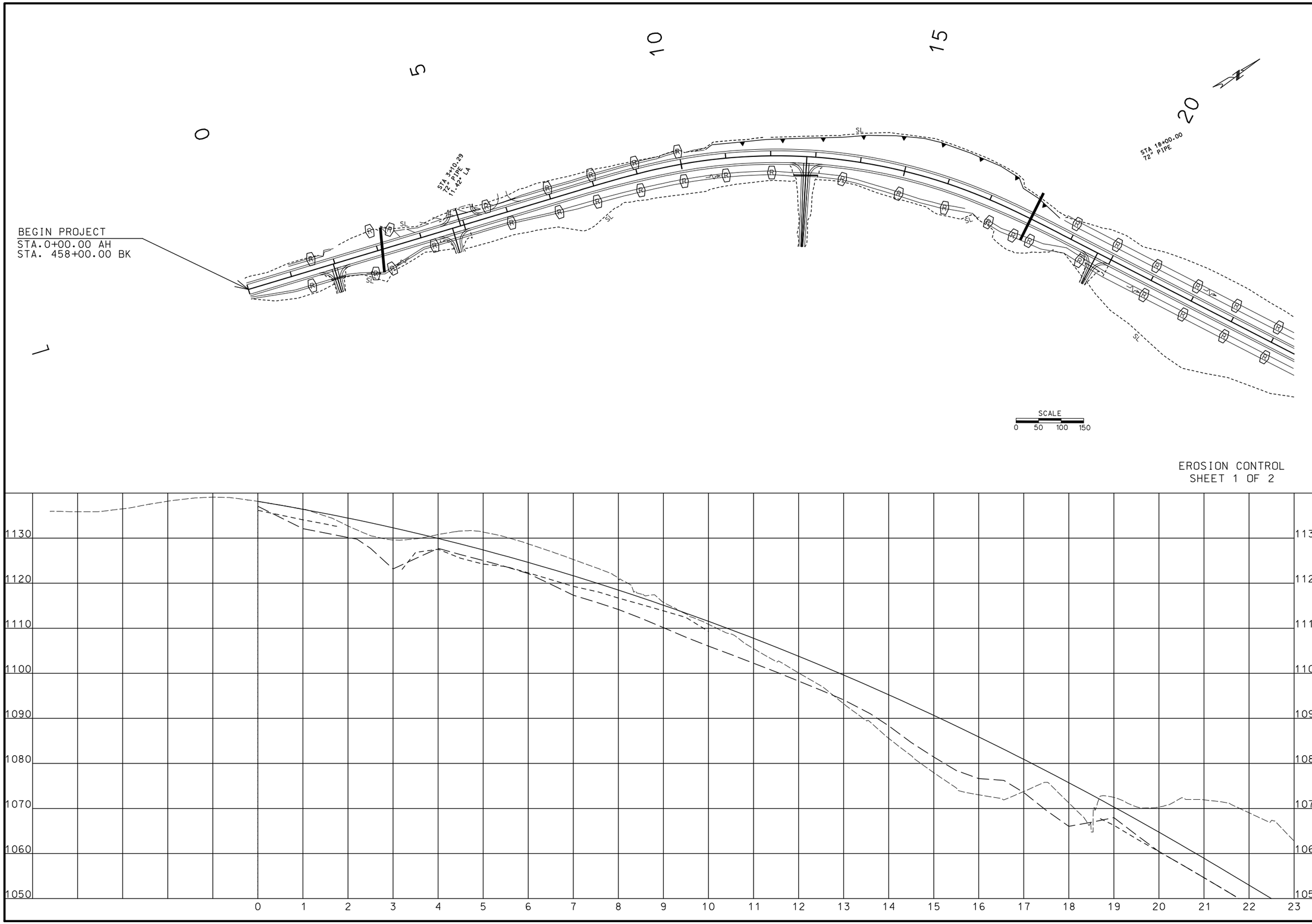

STATE OF MISSOURI
JESSIE BENJAMIN PHILPOT
NUMBER
PE-2016017665
PROFESSIONAL ENGINEER

03/01/2024 9:25:54 AM
JESSIE BENJAMIN PHILPOT - CIVIL
MO-PE-2016017665

DATE PREPARED	2/8/2024
ROUTE	221
STATE	MO
DISTRICT	SE
SHEET NO.	18
COUNTY	ST. FRANCOIS/IRON
JOB NO.	J9S3610
CONTRACT ID.	
PROJECT NO.	
BRIDGE NO.	

DATE	DESCRIPTION

MISSOURI HIGHWAYS AND TRANSPORTATION COMMISSION

105 WEST CAPITOL
JEFFERSON CITY, MO 65102
1-888-ASK-MODOT (1-888-275-6636)

IF A SEAL IS PRESENT ON THIS SHEET IT HAS BEEN ELECTRONICALLY SEALED AND DATED.

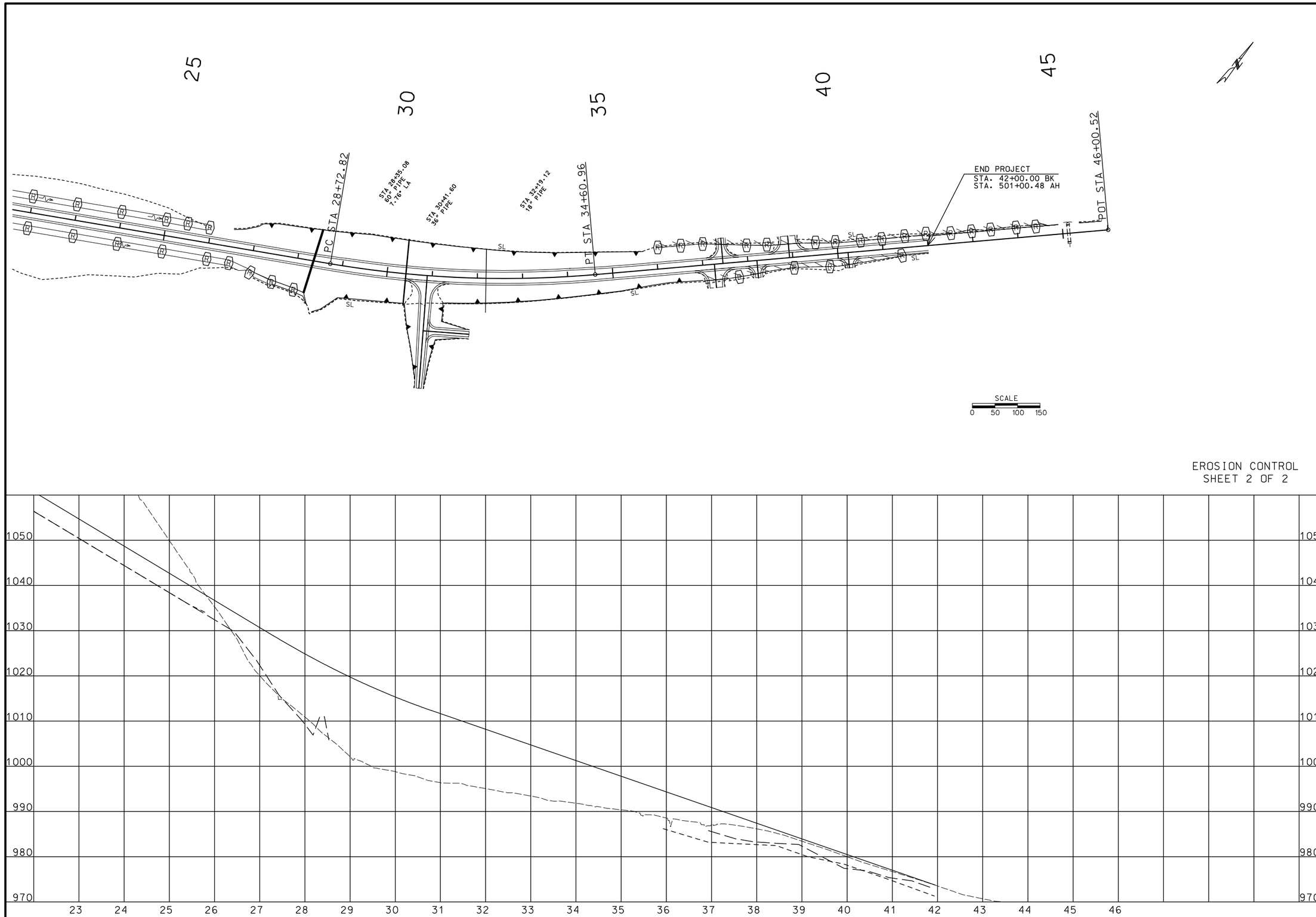

EROSION CONTROL
SHEET 2 OF 2

STATE OF MISSOURI
JESSIE BENJAMIN PHILPOT
NUMBER
PE-2016017665
PROFESSIONAL ENGINEER

03/01/2024 9:26:21 AM
JESSIE BENJAMIN PHILPOT - CIVIL
MO-PE-2016017665

DATE PREPARED	
2/8/2024	
ROUTE	STATE
221	MO
DISTRICT	SHEET NO.
SE	19
COUNTY	
ST. FRANCOIS/IRON	
JOB NO.	
J9S3610	
CONTRACT ID.	
PROJECT NO.	
BRIDGE NO.	

DATE	DESCRIPTION

MISSOURI HIGHWAYS AND TRANSPORTATION COMMISSION

105 WEST CAPITOL
JEFFERSON CITY, MO 65102
1-888-ASK-MODOT (1-888-275-6636)

IF A SEAL IS PRESENT ON THIS SHEET IT HAS BEEN ELECTRONICALLY SEALED AND DATED.

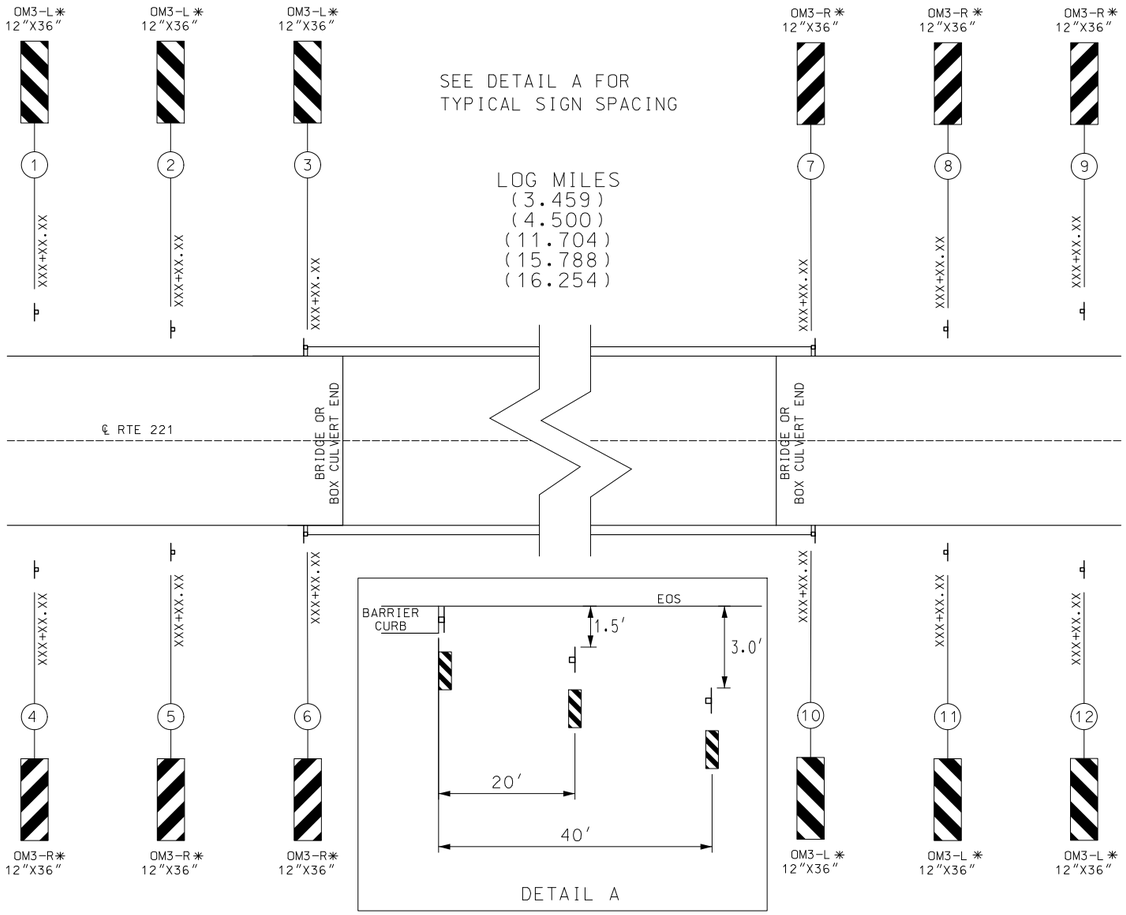

✳ ALTERNATING BLACK AND REFLECTIVE YELLOW STRIPES

NOTE:

(3) (6) (7) (10) INSTALL OBJECT MARKER SAME HEIGHT AS BRIDGE BARRIER CURB

(2) (5) (8) (11) INSTALL OBJECT MARKER AT ½ STANDARD HEIGHT

(1) (4) (9) (12) INSTALL OBJECT MARKER AT STANDARD HEIGHT

NOTE: REPLACE AND ADD OBJECT MARKERS AS SHOWN IN THE DETAIL FOR BOX CULVERTS AT LISTED LOG MILES.

NOTE: AT LOG MILES 0.55, 2.05, 2.34, 3.26, 7.01, 8.39, 10.47, 14.46, 14.68, AND 14.94 PLACE/REPLACE OBJECT MARKERS AS DIRECTED BY THE ENGINEER.

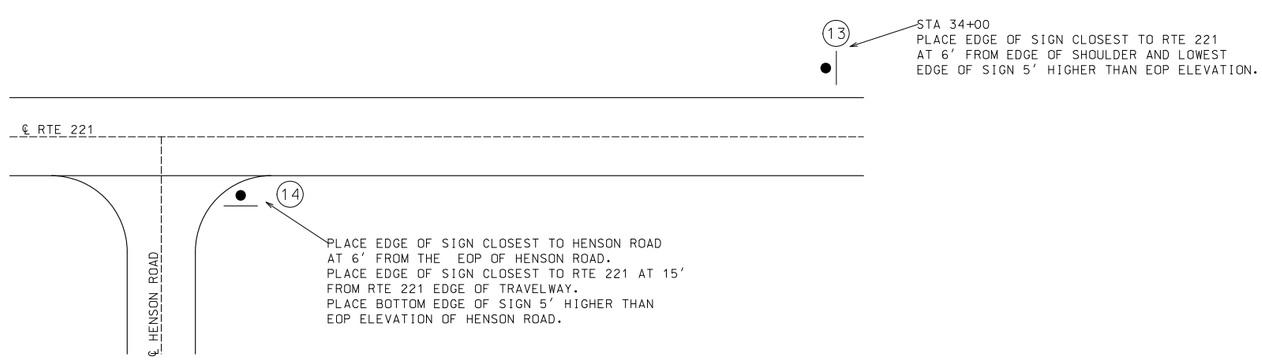

DRAWING NOT TO SCALE. FOLLOW DIMENSIONS.

SIGNS				PERFORATED SQUARE STEEL TUBE POST 2 IN			
SIGN NO	SIGN SIZE	LOCATION	SIGN DETAIL SHEET NO	POST NO 1	TOTAL ITEM NO 9031270A	ANCHOR 12 GA ITEM NO 9031271A	
				LF	LF	EA	
1	12X36	LT ℄ RTE 221	STD	9.00	54.00	6	6 LOCATIONS
2	12X36	LT ℄ RTE 221	STD	6.50	39.00	6	6 LOCATIONS
3	12X36	LT ℄ RTE 221	STD	3.50	21.00	6	6 LOCATIONS
4	12X36	RT ℄ RTE 221	STD	9.00	54.00	6	6 LOCATIONS
5	12X36	RT ℄ RTE 221	STD	6.50	39.00	6	6 LOCATIONS
6	12X36	RT ℄ RTE 221	STD	3.50	21.00	6	6 LOCATIONS
7	12X36	LT ℄ RTE 221	STD	3.50	21.00	6	6 LOCATIONS
8	12X36	LT ℄ RTE 221	STD	6.50	39.00	6	6 LOCATIONS
9	12X36	LT ℄ RTE 221	STD	9.00	54.00	6	6 LOCATIONS
10	12X36	RT ℄ RTE 221	STD	3.50	21.00	6	6 LOCATIONS
11	12X36	RT ℄ RTE 221	STD	6.50	39.00	6	6 LOCATIONS
12	12X36	RT ℄ RTE 221	STD	9.00	54.00	6	6 LOCATIONS
	36X36	STA 34+00	STD	13.00	13.00	1	
	30X30	HENSON RD	STD	13.00	13.00	1	
	12X36	LT/RT ℄ RTE 221	STD	9.00	189.00	21	
			SUBTOTAL		671.00	95	
			TOTAL		671	95	
			USE		671	95	

	STANDARD SIGN ASSEMBLIES					
SIGN NUMBER	LOCATION	SIGN DESCRIPTION, SIZES & NUMBER OF EACH				
		FLAT SHEET FLUORESCENT			FLAT SHEET	
		OM3-L (12"X36")	OM3-R (12"X36")	S3-1 (36"X36")	R1-1 (30"X30")	
1	LT ℄ RTE 221	6				6 LOCATIONS
2	LT ℄ RTE 221	6				6 LOCATIONS
3	LT ℄ RTE 221	6				6 LOCATIONS
4	RT ℄ RTE 221		6			6 LOCATIONS
5	RT ℄ RTE 221		6			6 LOCATIONS
6	RT ℄ RTE 221		6			6 LOCATIONS
7	LT ℄ RTE 221		6			6 LOCATIONS
8	LT ℄ RTE 221		6			6 LOCATIONS
9	LT ℄ RTE 221		6			6 LOCATIONS
10	RT ℄ RTE 221	6				6 LOCATIONS
11	RT ℄ RTE 221	6				6 LOCATIONS
12	RT ℄ RTE 221	6				6 LOCATIONS
	STA 34+00			1		
	HENSON RD				1	
	LT/RT ℄ RTE 221	4	17			
	TOTAL	40	53	1	1	

SIGN SUMMARY					
STANDARD SIGN	SIGN DETAIL SHEET NO	NO EACH	SIZE, TYPE & SQ FT		
			SIZE	FLAT SHEET ITEM NO 9035004A	FLAT SHEET FLUORESCENT ITEM NO 9035069A
OM3-L	STD	40	12"X36"		120
OM3-R	STD	53	12"X36"		159
S3-1	STD	1	36"X36"		9
R1-1	STD	1	30"X30"	6.25	
		TOTAL		6	288
		USE		6	288

HIGHWAYSIGNING
SHEET 1 OF 1

STATE OF MISSOURI
JESSIE BENJAMIN PHILPOT
NUMBER PE-2016017665
PROFESSIONAL ENGINEER
03/01/2024 9:27:07 AM
JESSIE BENJAMIN PHILPOT - CIVIL
MO-PE-2016017665

DATE PREPARED
2/22/2024

ROUTE	STATE
221	MO
DISTRICT	SHEET NO.
SE	20

COUNTY
ST FRANCOIS/IRON

JOB NO.
J9S3610

CONTRACT ID.

PROJECT NO.

BRIDGE NO.

DESCRIPTION	DATE

MISSOURI HIGHWAYS AND TRANSPORTATION COMMISSION
105 WEST CAPITOL
JEFFERSON CITY, MO 65102
1-888-ASK-MODOT (1-888-275-6636)

IF A SEAL IS PRESENT ON THIS SHEET IT HAS BEEN ELECTRONICALLY SEALED AND DATED.

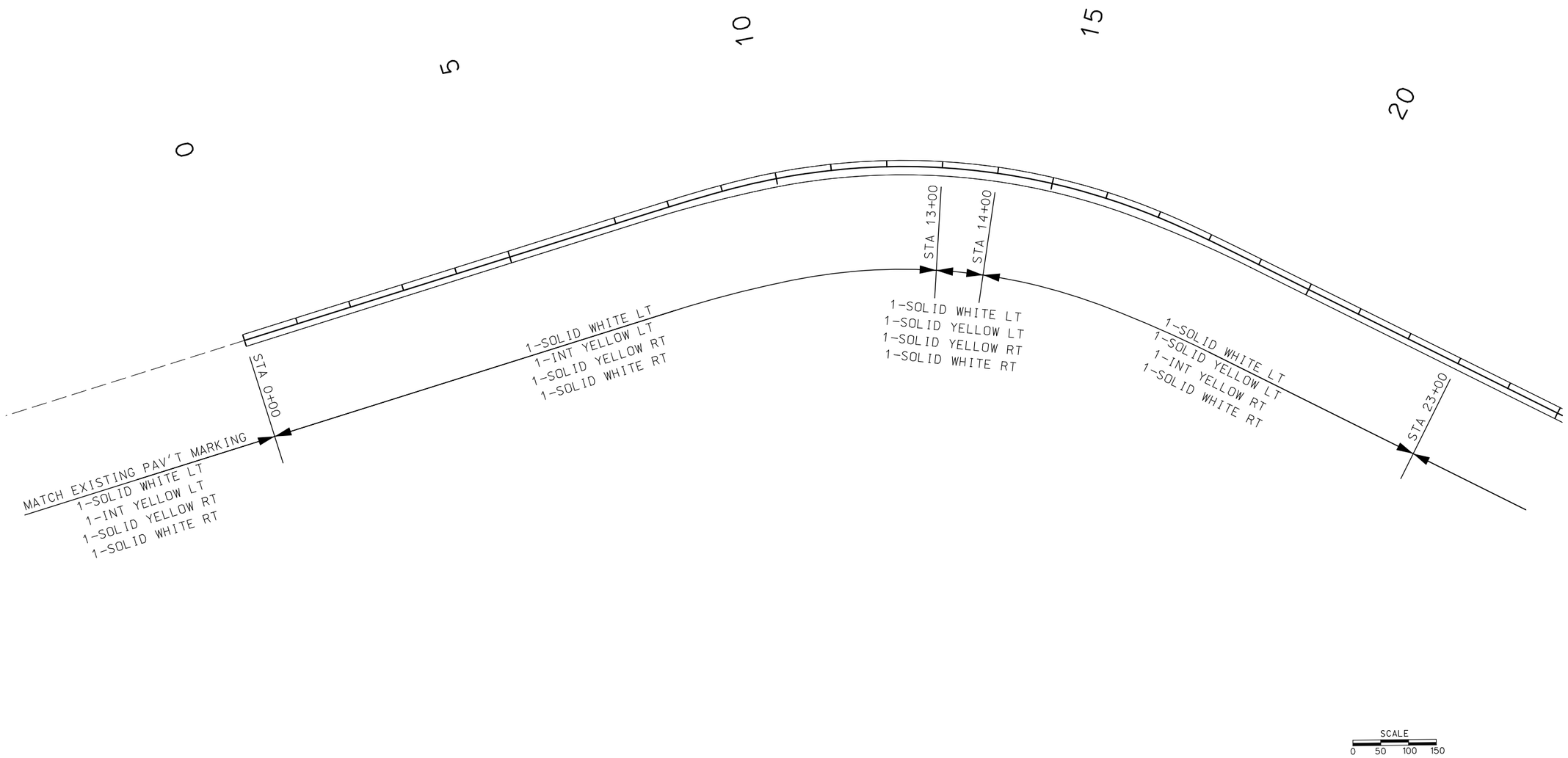

PAVEMENT MARKING
SHEET 1 OF 2

STATE OF MISSOURI
JESSIE BENJAMIN PHILPOT
NUMBER
PE-2016017665
PROFESSIONAL ENGINEER

03/01/2024 9:27:53 AM
JESSIE BENJAMIN PHILPOT - CIVIL
MO-PE-2016017665

DATE PREPARED	2/8/2024
ROUTE	221
STATE	MO
DISTRICT	SE
SHEET NO.	21
COUNTY	ST FRANCOIS/IRON
JOB NO.	J9S3610
CONTRACT ID.	
PROJECT NO.	
BRIDGE NO.	

DATE	DESCRIPTION

MISSOURI HIGHWAYS AND TRANSPORTATION COMMISSION

105 WEST CAPITOL
JEFFERSON CITY, MO 65102
1-888-ASK-MODOT (1-888-275-6636)

IF A SEAL IS PRESENT ON THIS SHEET IT HAS BEEN ELECTRONICALLY SEALED AND DATED.

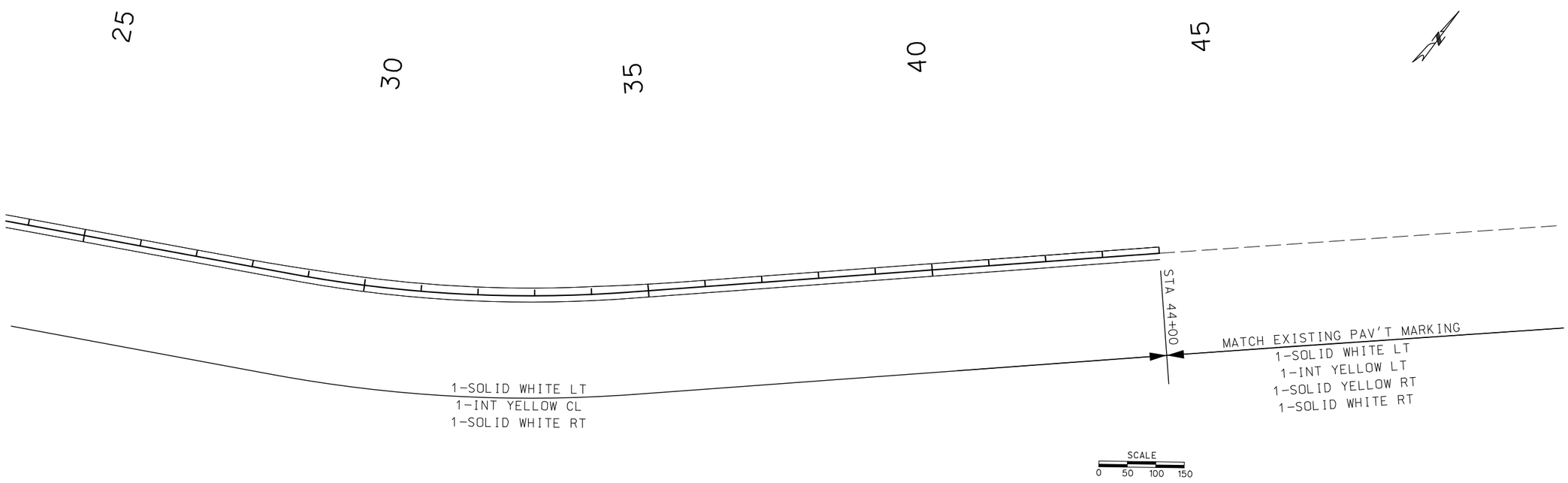

PAVEMENT MARKING
SHEET 2 OF 2

STATE OF MISSOURI
JESSIE BENJAMIN PHILPOT
NUMBER
PE-2016017665
PROFESSIONAL ENGINEER

03/01/2024 9:28:34 AM
JESSIE BENJAMIN PHILPOT - CIVIL
MO-PE-2016017665

DATE PREPARED	2/8/2024
ROUTE	221
STATE	MO
DISTRICT	SE
SHEET NO.	22
COUNTY	ST FRANCOIS/IRON
JOB NO.	J9S3610
CONTRACT ID.	
PROJECT NO.	
BRIDGE NO.	

DATE	DESCRIPTION

MISSOURI HIGHWAYS AND TRANSPORTATION COMMISSION

105 WEST CAPITOL
JEFFERSON CITY, MO 65102
1-888-ASK-MODOT (1-888-275-6636)

IF A SEAL IS PRESENT ON THIS SHEET IT HAS BEEN ELECTRONICALLY SEALED AND DATED.

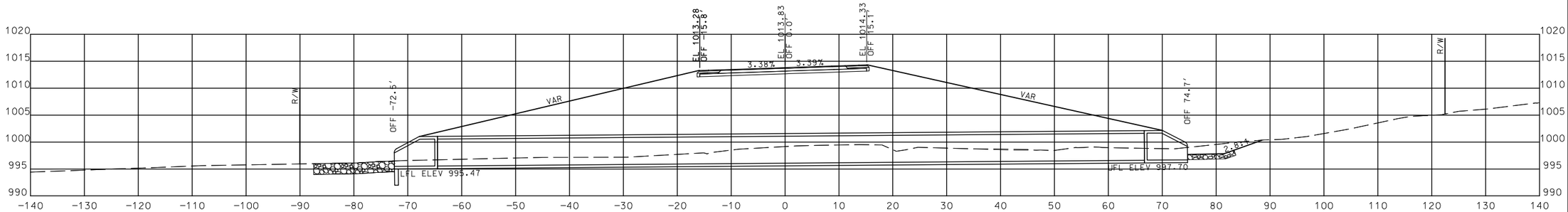

STA 28+35.08
7.76° LA SKEW
2 - FES
1 - 60" X 132' GROUP A PIPE
TYPE 2 INSTALLATION
CATEGORY 3 BEDDING
CL 3 = 100 CY
CAMBER = 0.12'
ROCK LINING LT = 2' X 15' X 15' = 17 CY
ROCK LINING RT = SEE 2B SHEET
EMBED FL OF PIPE 1' BELOW FL OF DITCHES

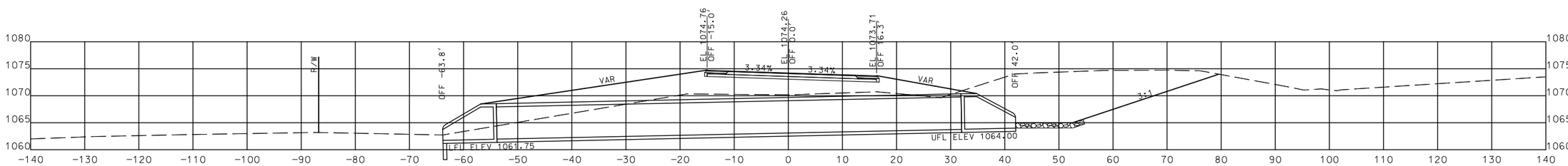

STA 18+00.00
2 - FES
1 - 72" X 86' GROUP A PIPE
TYPE 4 INSTALLATION
CATEGORY 1 BEDDING
CL 3 = 223 CY
EMBED FL OF PIPE 1' BELOW FL OF DITCHES

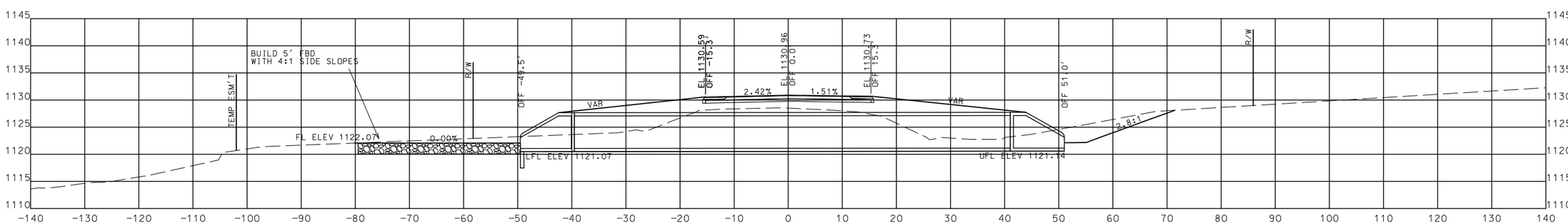

STA 3+10.39
11.42° LA SKEW
2 - FES
1 - 72" X 81' GROUP A PIPE
TYPE 4 INSTALLATION
CATEGORY 1 BEDDING
CL 3 = 156 CY
ROCK LINING LT = 2' X 15' X 15' = 17 CY
EMBED FL OF PIPE 1' BELOW FL OF DITCHES

NOTE: DEVIATE FROM STANDARD ROADWAY TEMPLATE AT CROSS ROAD CULVERTS TO CROSS SECTION TEMPLATE SHOWN IN CULVERT SECTIONS. FIFTY FEET PRIOR TO CULVERT START TRANSISTION OF FORE SLOPES TO CULVERT TEMPLATE, THEN TRANSISTION FROM THE CULVERT TEMPLATE BACK TO STANDARD TEMPLATE FIFTY FEET AFTER CULVERT.

CULVERT SECTION
SHEET 1 OF 2

STATE OF MISSOURI
JESSIE BENJAMIN PHILPOT
NUMBER PE-2016017665
PROFESSIONAL ENGINEER
03/01/2024 9:29:56 AM
JESSIE BENJAMIN PHILPOT - CIVIL
MO-PE-2016017665

DATE PREPARED	2/22/2024
ROUTE	221
STATE	MO
DISTRICT	SE
SHEET NO.	23
COUNTY	ST FRANCOIS/IRON
JOB NO.	J9S3610
CONTRACT ID.	
PROJECT NO.	
BRIDGE NO.	

DATE	DESCRIPTION

IF A SEAL IS PRESENT ON THIS SHEET IT HAS BEEN ELECTRONICALLY SEALED AND DATED.

MISSOURI HIGHWAYS AND TRANSPORTATION COMMISSION
105 WEST CAPITOL
JEFFERSON CITY, MO 65102
1-888-ASK-MODOT (1-888-275-6636)

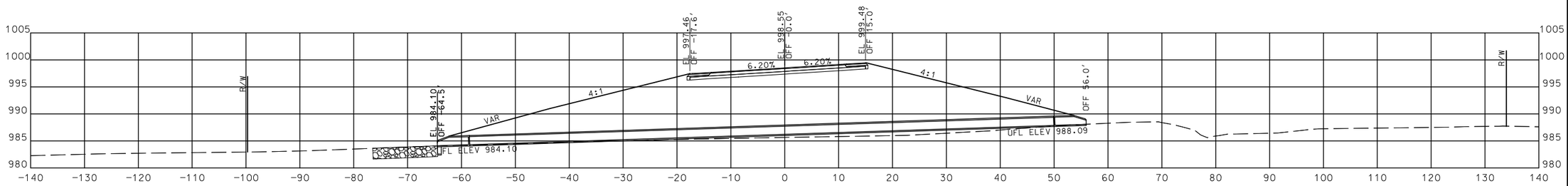

STA 32+19.12
2 - FES
1 - 18" X 109' GROUP A PIPE
TYPE 3 INSTALLATION
CATEGORY 3 BEDDING
CL 3 = 2 CY
CAMBER = 0.11'
ROCK LINING LT = 2' X 6' X 12' = 6 CY

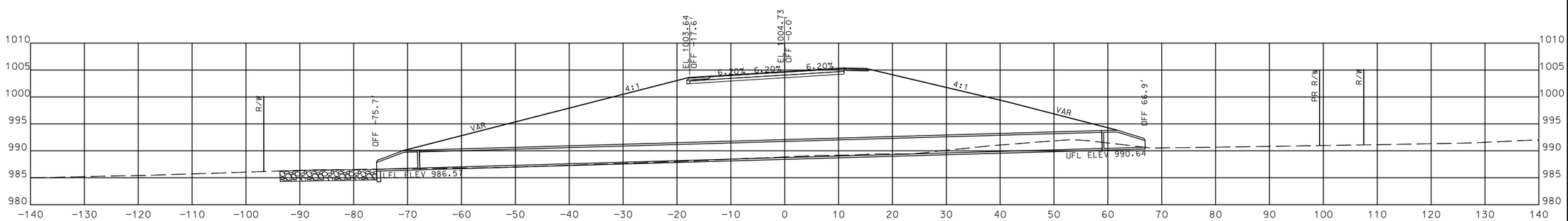

STA 30+41.60
2 - FES
1 - 36" X 127' GROUP A PIPE
TYPE 2 INSTALLATION
CATEGORY 3 BEDDING
CL 3 = 20 CY
CAMBER = 0.13'
ROCK LINING LT = 2' X 10' X 18' = 14 CY

NOTE: DEVIATE FROM STANDARD ROADWAY TEMPLATE AT CROSS ROAD CULVERTS TO CROSS SECTION TEMPLATE SHOWN IN CULVERT SECTIONS. FIFTY FEET PRIOR TO CULVERT START TRANSISTION OF FORE SLOPES TO CULVERT TEMPLATE, THEN TRANSISTION FROM THE CULVERT TEMPLATE BACK TO STANDARD TEMPLATE FIFTY FEET AFTER CULVERT.

CULVERT SECTION
SHEET 2 OF 2

STATE OF MISSOURI
JESSIE BENJAMIN PHILPOT
NUMBER
PE-2016017665
PROFESSIONAL ENGINEER

03/01/2024 9:30:51 AM
JESSIE BENJAMIN PHILPOT - CIVIL
MO-PE-2016017665

DATE PREPARED	
2/22/2024	
ROUTE 221	STATE MO
DISTRICT SE	SHEET NO. 24
COUNTY ST FRANCOIS/IRON	
JOB NO. J9S3610	
CONTRACT ID.	
PROJECT NO.	
BRIDGE NO.	

DATE	DESCRIPTION

IF A SEAL IS PRESENT ON THIS SHEET IT HAS BEEN ELECTRONICALLY SEALED AND DATED.

MISSOURI HIGHWAYS AND TRANSPORTATION COMMISSION
105 WEST CAPITOL
JEFFERSON CITY, MO 65102
1-888-ASK-MODOT (1-888-275-6636)

SEC/SUR	2989	TWP	35N	RGE	5E

U.I.P. AND REHABILITATE EXISTING (30', 50', 50', 30', 30') CONCRETE DECK GIRDER SPANS (SKEW: 20° R.A.)

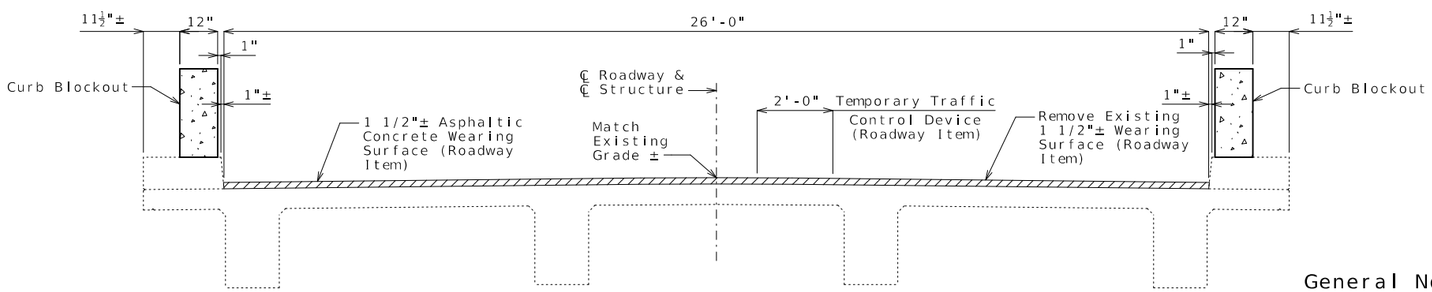

TYPICAL SECTION THRU EXISTING DECK

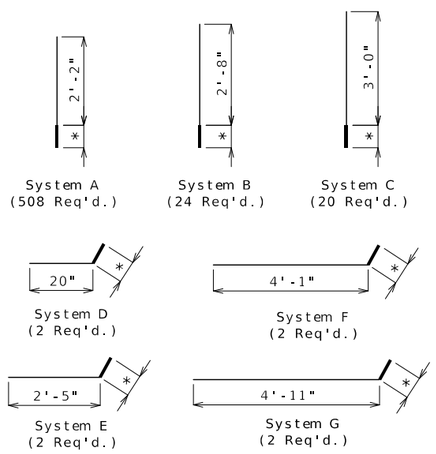

DETAILS OF RESIN
ANCHOR SYSTEMS

* Manufacturer's recommended embedment length (5" min.)

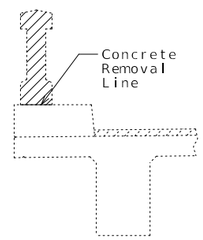

TYPICAL SECTION THRU
CURB SHOWING
BALLUSTER REMOVAL

General Notes:

Design Specifications:

2002 AASHTO LFD (17th Ed.) Standard Specifications
Bridge Deck Rating = 6

Design Loading:

H-15 (1944)

Design Unit Stresses:

Class B-1 Concrete (Curb Blockout) f'c = 4,000 psi
Reinforcing Steel (Grade 60) fy = 60,000 psi

Joint Filler:

All joint filler shall be in accordance with Sec 1057 for preformed sponge rubber expansion and partition joint filler, except as noted.

Reinforcing Steel:

Minimum clearance to reinforcing steel shall be 1 1/2", unless otherwise shown.

Resin Anchors:

The contractor shall use one of the qualified resin anchor systems in accordance with Sec 1039.

Cost of furnishing and installing the resin anchor systems, complete in place, will be considered completely covered by the contract unit price for Curb Blockout.

The minimum embedment depth in concrete with f'c = 4,000 psi for the resin anchor systems shall be that required to meet the minimum ultimate pullout strength in accordance with Sec 1039 but shall not be less than 5".

An epoxy coated #6 Grade 60 reinforcing bar shall be substituted for the 3/4"Ø threaded rod.

Miscellaneous:

Roadway surfacing adjacent to bridge ends shall match new bridge wearing surface (roadway item).

All concrete repairs shall be in accordance with Sec 704, unless otherwise noted.

Outline of existing work is indicated by light dashed lines. Heavy lines indicate new work.

Contractor shall verify all dimensions in field before ordering new material.

In order to maintain grade and a minimum thickness of wearing surface as shown on plans it may be necessary to use additional quantities of wearing surface at various locations throughout the structure. The cost of furnishing and installing the wearing surface will be considered completely covered in the contract unit price, including all additional labor, materials or equipment for variations in thickness of wearing surface.

Bars bonded in existing concrete not removed shall be cleanly stripped and embedded into new concrete where possible. If length is availabe, existing bars shall extend into new concrete at least 40 diameters for plain bars and 30 diameters for deformed bars, unless otherwise noted.

Cost of removing existing balluster rail concrete will be considered completely covered by the contract unit price for Removal of Existing Rail.

The area exposed by the removal of concrete and not covered with new concrete shall be coated with an approved qualified special mortar in accordance with Sec 704.

Traffic Handling:

Traffic to be maintained on structure during construction. See roadway plans for traffic control.

Estimated Quantities

Item		Total
Removal of Existing Rail	linear foot	424
Curb Blockout	linear foot	430

REPAIRS TO BRIDGE: ROUTE 221
OVER ST. FRANCIS RIVER

ROUTE 221 FROM ROUTE B TO ROUTE 67
ABOUT 1.1 MILES SOUTHWEST OF ROUTE 67
BEGINNING STATION 728+24.00± (Match Existing)

Detailed Nov. 2022
Checked Dec. 2022

Note: This drawing is not to scale. Follow dimensions.

STATE OF MISSOURI
WILLIAM J. DUNN
NUMBER
PE-2006019647
PROFESSIONAL ENGINEER

William J. Dunn
01/09/2023 1:59:23 PM
WILLIAM J. DUNN - CIVIL
MO-PE-2006019647

DATE PREPARED	
1/9/2023	
ROUTE 221	STATE MO
DISTRICT BR	SHEET NO. 1
COUNTY ST. FRANCOIS	
JOB NO. J9S3610	
CONTRACT ID.	
PROJECT NO.	
BRIDGE NO. L02832	

DATE	DESCRIPTION

MISSOURI HIGHWAYS AND TRANSPORTATION COMMISSION
105 WEST CAPITOL
JEFFERSON CITY, MO 65102
1-888-ASK-MODOT (1-888-275-6636)

IF A SEAL IS PRESENT ON THIS SHEET IT HAS BEEN ELECTRONICALLY SEALED AND DATED.

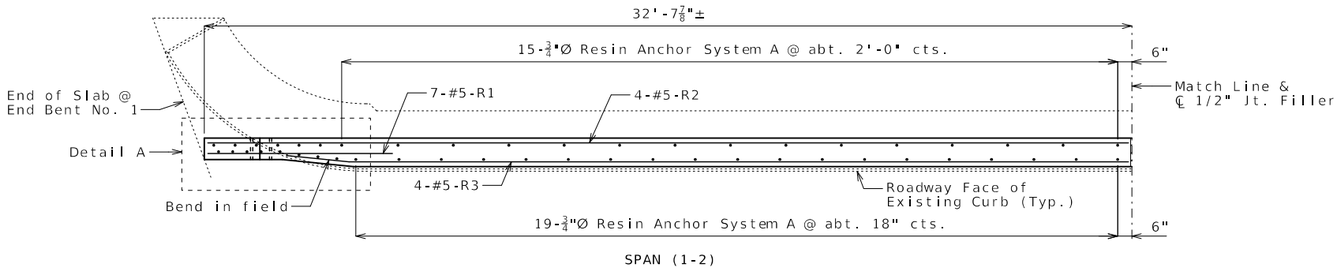

SPAN (1-2)

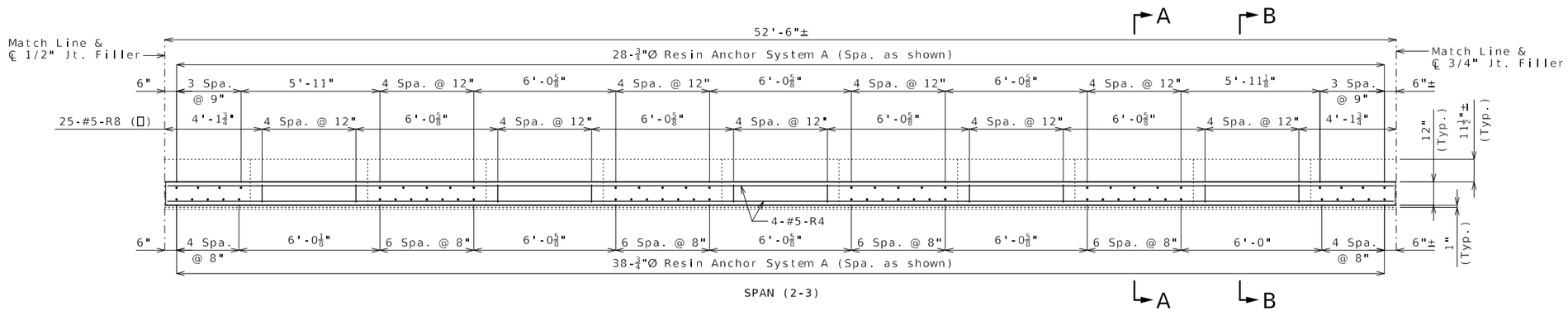

SPAN (2-3)

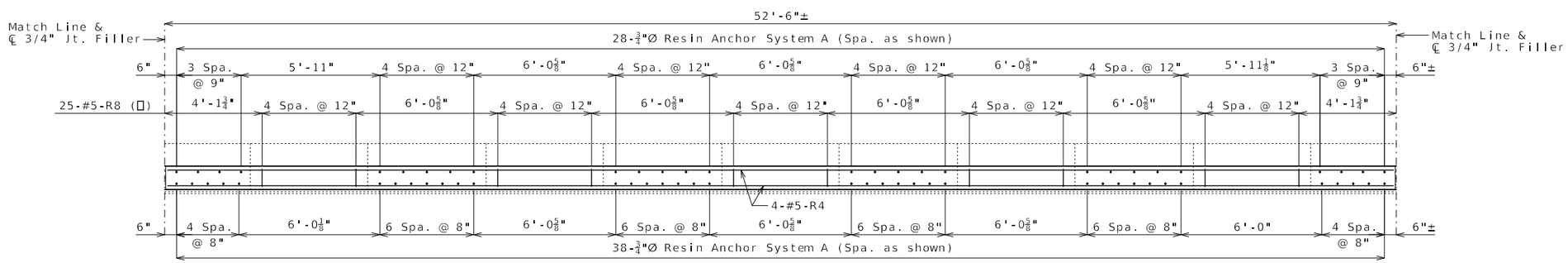

SPAN (3-4)

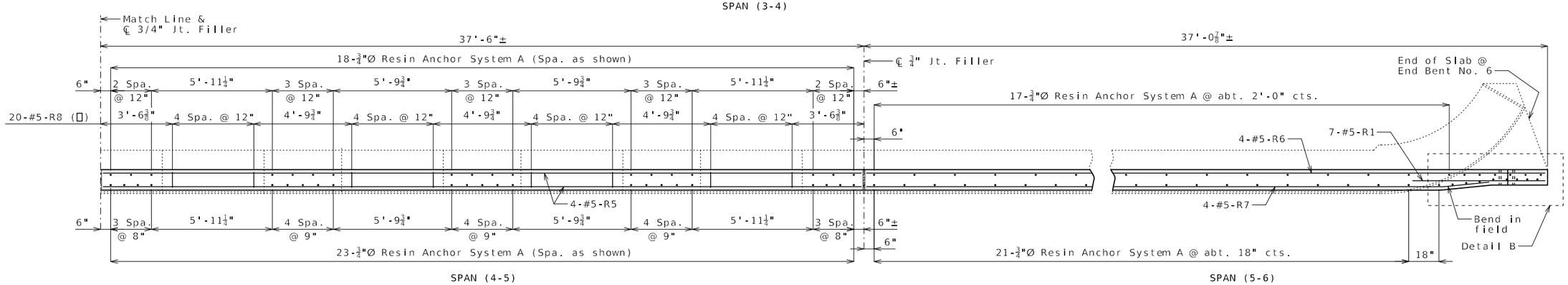

SPAN (4-5) SPAN (5-6)

PLAN OF LEFT CURB BLOCKOUT

CURB BLOCKOUT

Note: Work this sheet with Sheets No. 3 & 4.

Detailed Nov. 2022
Checked Dec. 2022

Note: This drawing is not to scale. Follow dimensions.

STATE OF MISSOURI
WILLIAM J. DUNN
NUMBER PE-2006019647
PROFESSIONAL ENGINEER
01/09/2023 12:38:57 PM
WILLIAM J. DUNN - CIVIL
MO-PE-2006019647

DATE PREPARED	1/9/2023
ROUTE	221
STATE	MO
DISTRICT	BR
SHEET NO.	2
COUNTY	ST. FRANCOIS
JOB NO.	J9S3610
CONTRACT ID.	
PROJECT NO.	
BRIDGE NO.	L02832

DESCRIPTION

DATE

MISSOURI HIGHWAYS AND TRANSPORTATION COMMISSION

105 WEST CAPITOL
JEFFERSON CITY, MO 65102
1-888-ASK-MODOT (1-888-275-6636)

IF A SEAL IS PRESENT ON THIS SHEET IT HAS BEEN ELECTRONICALLY SEALED AND DATED.

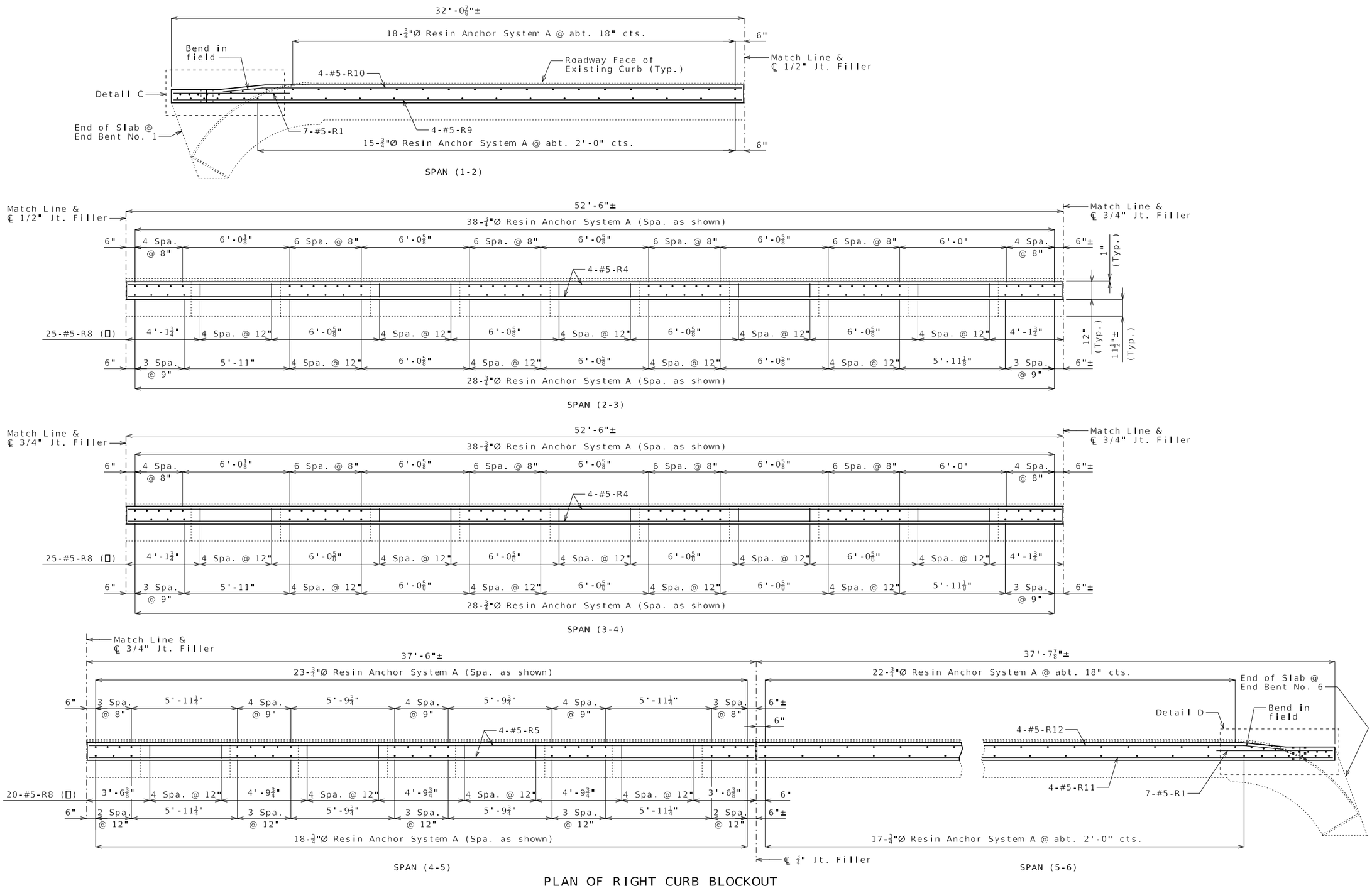

PLAN OF RIGHT CURB BLOCKOUT

CURB BLOCKOUT

Note: Work this sheet with Sheets No. 2 & 4.

Detailed Nov. 2022
Checked Dec. 2022

Note: This drawing is not to scale. Follow dimensions.

STATE OF MISSOURI
WILLIAM J. DUNN
NUMBER PE-2006019647
PROFESSIONAL ENGINEER
01/09/2023 12:39:29 PM
WILLIAM J. DUNN - CIVIL
MO-PE-2006019647

DATE PREPARED	1/9/2023
ROUTE 221	STATE MO
DISTRICT BR	SHEET NO. 3
COUNTY	ST. FRANCOIS
JOB NO.	J9S3610
CONTRACT ID.	
PROJECT NO.	
BRIDGE NO.	L02832

DATE	DESCRIPTION

MISSOURI HIGHWAYS AND TRANSPORTATION COMMISSION
105 WEST CAPITOL
JEFFERSON CITY, MO 65102
1-888-ASK-MODOT (1-888-275-6636)

IF A SEAL IS PRESENT ON THIS SHEET IT HAS BEEN ELECTRONICALLY SEALED AND DATED.

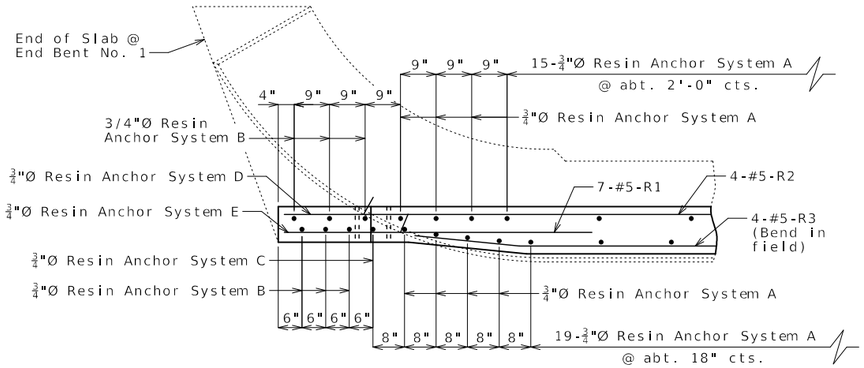

DETAIL A

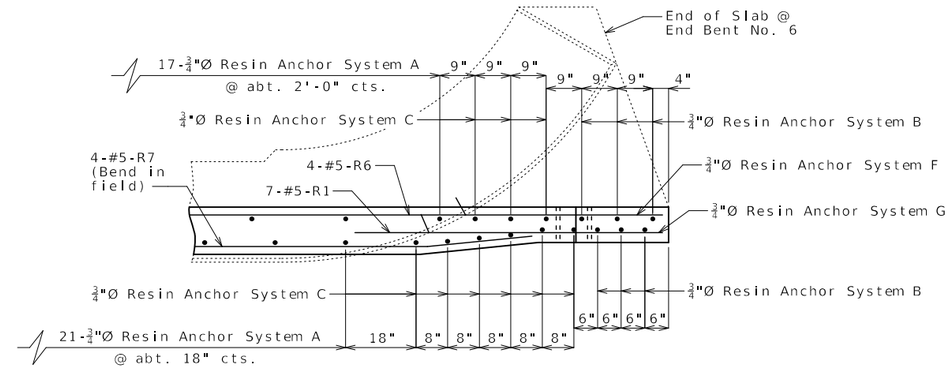

DETAIL B

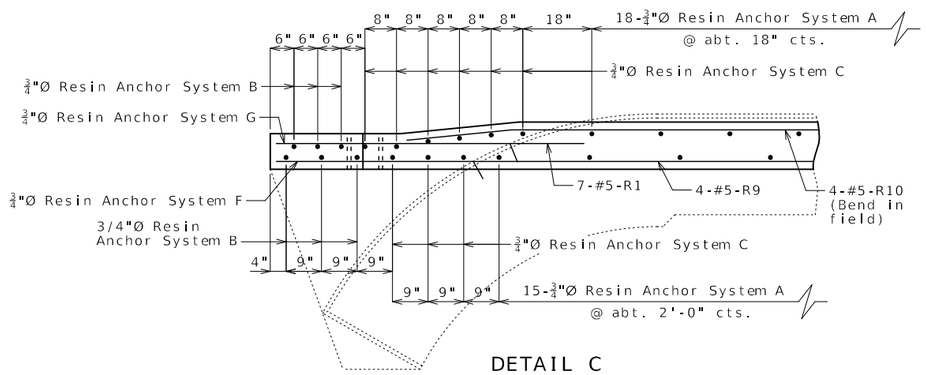

DETAIL C

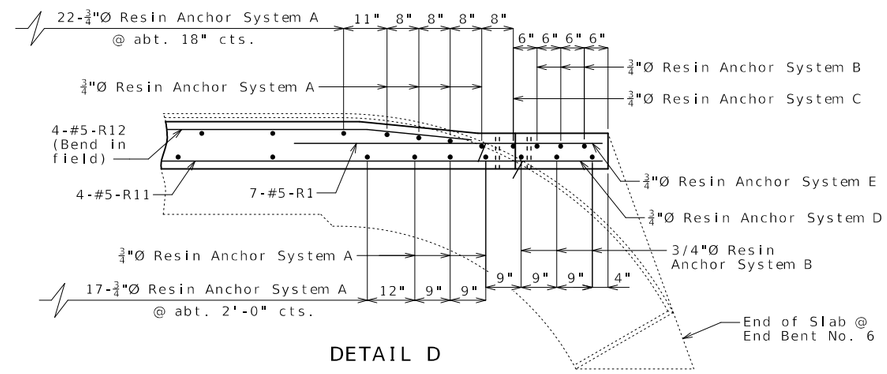

DETAIL D

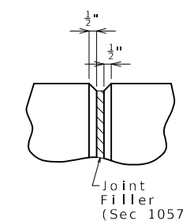

PART ELEVATION
AT FORMED JOINT

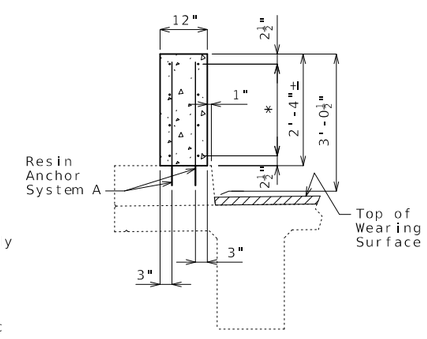

SECTION A-A
(Left curb shown, right curb similar)

∗ 4-#5-R bars (Each face) (Equally spaced)

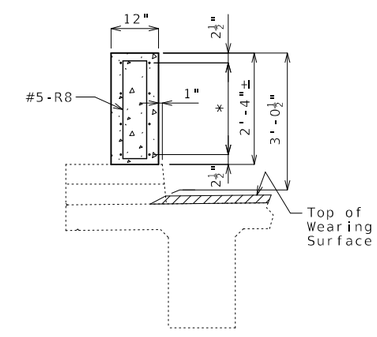

SECTION B-B
(Left curb shown, right curb similar)

∗ 4-#5-R bars (Each face) (Equally spaced)

Notes:

Longitudinal dimensions are along grade and are taken at top outside edge of curb.

Top of curb blockout shall be built parallel to grade with curb blockout joints normal to grade.

Concrete in the curb blockout shall be Class B-1.

All exposed edges of curb blockout shall have either a 1/2-inch radius or a 3/8-inch bevel, unless otherwise noted.

Payment for concrete, reinforcement, resin anchor systems and any other work incidental to the curb blockout, complete in place, will be considered completely covered by the contract unit price for Curb Blockout per linear foot.

Measurement of curb blockout is to the nearest linear foot for each structure, measured along the inside edge of curb from end of slab to end of slab.

Concrete traffic barrier delineators shall be placed on top of the curb blockout similarly as shown on Missouri Standard Plans 617.10 and in accordance with Sec 617. Delineators on bridges with two-lane, two-way traffic shall have retroreflective sheeting on both sides. Concrete traffic barrier delineators will be considered completely covered by the contract unit price for Curb Blockout.

Cost of any concrete curb repair will be considered completely covered by the contract unit price for Curb Blockout.

The joints may be either formed joints with joint filler or saw-cut joints.

Joint sealant and backer rods shall be in accordance with Sec 717 for Silicone Joint Sealant for Saw Cut and Formed Joints.

For details of optional saw-cut joint, see Sheet No. 6.

For additional details of end of blockout, see Sheet No. 5.

For Resin Anchor Notes and Details of Resin Anchor, see Sheet No. 1.

Work this sheet with Sheets No. 2 & 3.

CURB BLOCKOUT

Detailed Nov. 2022
Checked Dec. 2022

Note: This drawing is not to scale. Follow dimensions.

STATE OF MISSOURI
WILLIAM J. DUNN
NUMBER
PE-2006019647
PROFESSIONAL ENGINEER
01/09/2023 12:40:49 PM
WILLIAM J. DUNN - CIVIL
MO-PE-2006019647

DATE PREPARED	1/9/2023
ROUTE 221	STATE MO
DISTRICT BR	SHEET NO. 4
COUNTY	ST. FRANCOIS
JOB NO.	J9S3610
CONTRACT ID.	
PROJECT NO.	
BRIDGE NO.	L02832

DESCRIPTION

DATE

MISSOURI HIGHWAYS AND TRANSPORTATION COMMISSION

105 WEST CAPITOL
JEFFERSON CITY, MO 65102
1-888-ASK-MODOT (1-888-275-6636)

IF A SEAL IS PRESENT ON THIS SHEET IT HAS BEEN ELECTRONICALLY SEALED AND DATED.

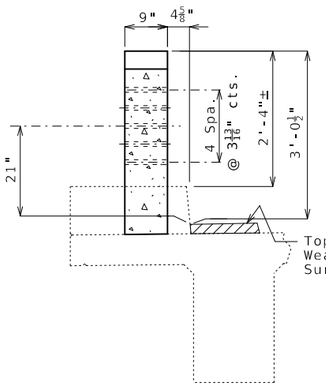

PART SECTION THRU
END OF BLOCKOUT

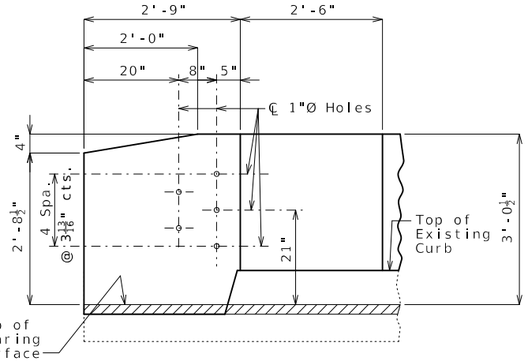

PART ELEVATION SHOWING
END OF BLOCKOUT

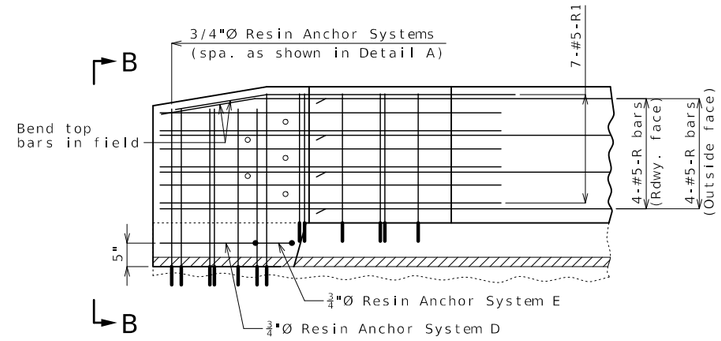

PART ELEVATION OF END OF BLOCKOUT
AT END BENT NO. 1 SHOWING REINFORCEMENT

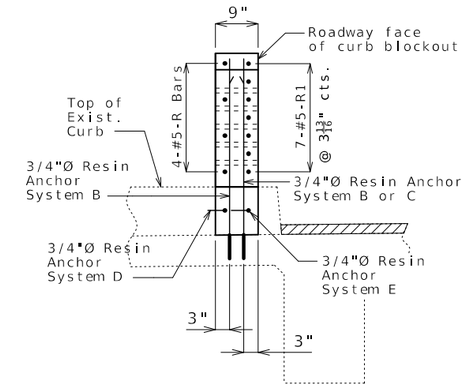

ELEVATION B-B

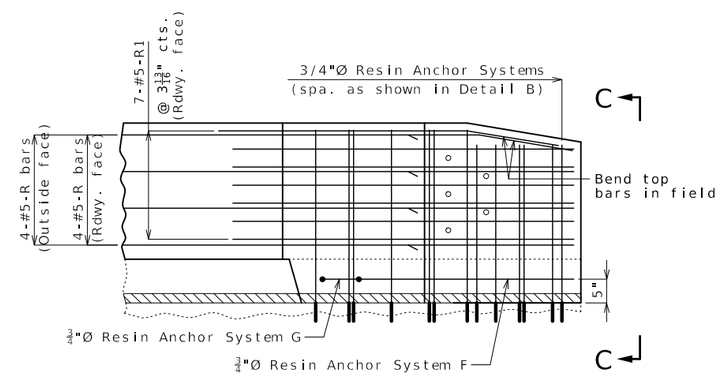

PART ELEVATION OF END OF BLOCKOUT
AT END BENT NO. 6 SHOWING REINFORCEMENT

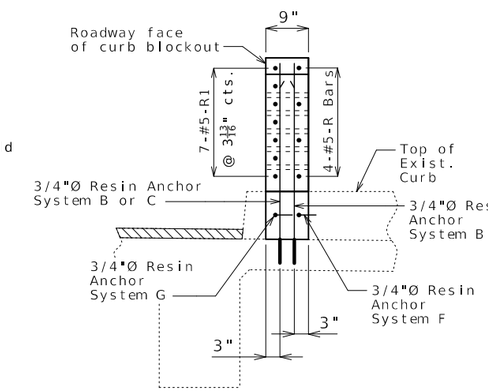

ELEVATION C-C

Notes:

All curb blockout reinforcement shall be epoxy coated.

For Resin Anchor Notes & Details of Resin Anchor, see Sheet No. 1.

For details of curb blockout not shown, see Sheets No. 2, 3 & 4.

CURB BLOCKOUT

(Left Curb Blockout shown, Right Curb Blockout similar by 180° rotation)

Detailed Nov. 2022
Checked Dec. 2022

Note: This drawing is not to scale. Follow dimensions.

STATE OF MISSOURI
WILLIAM J. DUNN
NUMBER
PE-2006019647
PROFESSIONAL ENGINEER

01/09/2023 12:41:42 PM
WILLIAM J. DUNN - CIVIL
MO-PE-2006019647

DATE PREPARED	
1/9/2023	
ROUTE 221	STATE MO
DISTRICT BR	SHEET NO. 5
COUNTY ST. FRANCOIS	
JOB NO. J9S3610	
CONTRACT ID.	
PROJECT NO.	
BRIDGE NO. L02832	

DATE	DESCRIPTION

IF A SEAL IS PRESENT ON THIS SHEET IT HAS BEEN ELECTRONICALLY SEALED AND DATED.

MISSOURI HIGHWAYS AND TRANSPORTATION COMMISSION
105 WEST CAPITOL
JEFFERSON CITY, MO 65102
1-888-ASK-MODOT (1-888-275-6636)

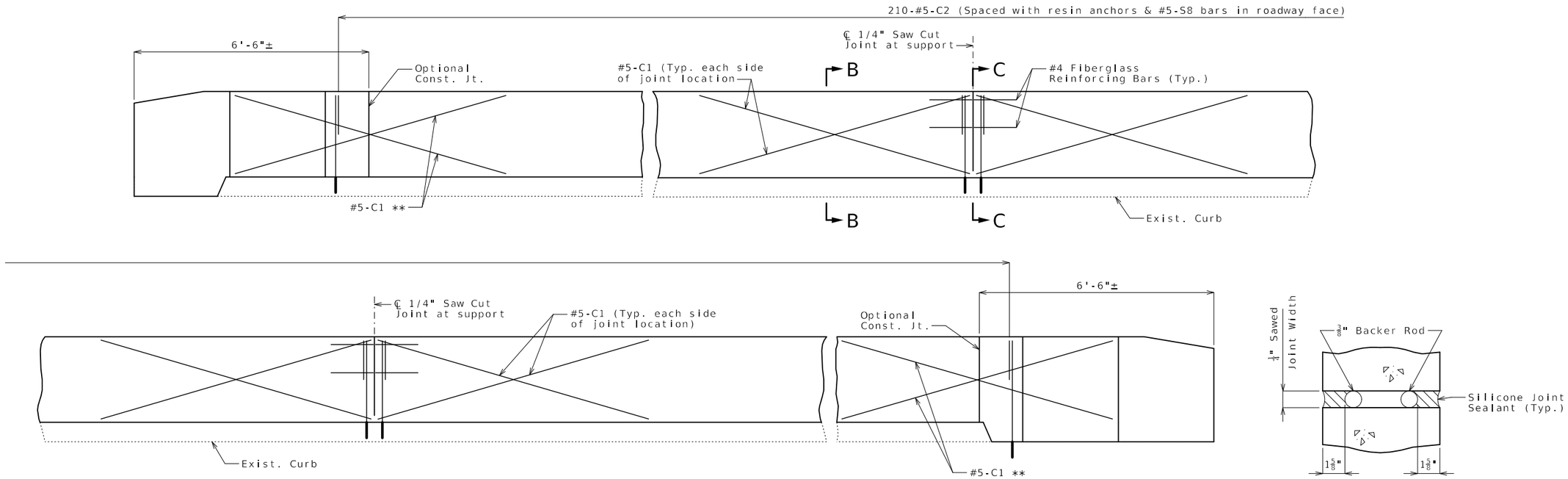

TYPICAL ELEVATION OF CURB BLOCKOUT AT SUPPORT LOCATIONS

Horizontal R bars and rail attachment holes not shown for clarity. C bars and textured fiberglass bars shall be used in addition to reinforcement shown for conventional forming.

SECTION A-A

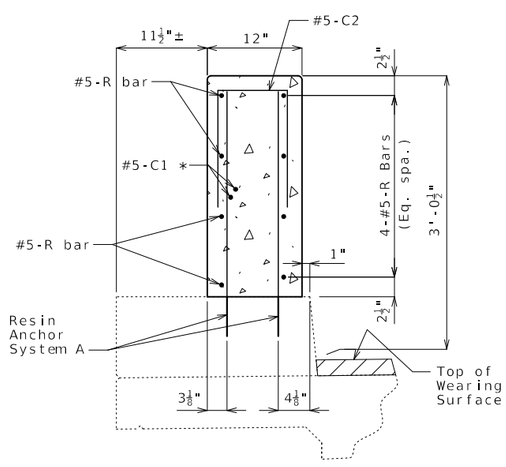

SECTION B-B

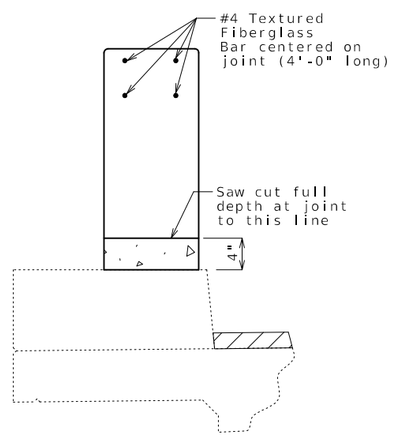

SECTION C-C

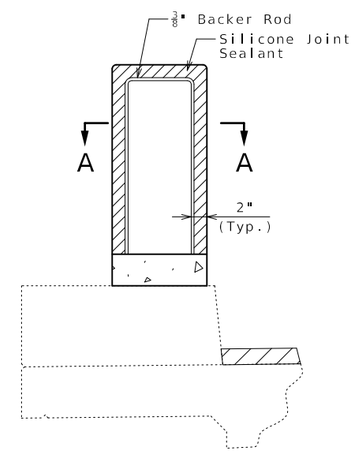

SECTION THRU SAW CUT JOINT

Notes:

** When optional construction joint is used, #5-C1 bars may be shifted or omitted.

Work this sheet with Sheets No. 2 thru 5.

Joint sealant and backer rods shall be in accordance with Sec 717 for silicone joint sealant for saw cut and formed joints.

For slip-formed option, both sides of the curb blockout shall have a vertically broomed finish and the top shall have a transversely broomed finish.

Cost of silicone joint sealant and backer rod, complete in place, will be considered completely covered by the contract unit price for Curb Blockout.

General notes shown for conventionally formed curb blockouts also apply to slip-formed curb blockouts.

Channel, posts and concrete end posts shall be removed if necessary for slip forming. Removal cost will be considered completely covered by the contract unit price for Curb Blockout.

* Each side of joint location.

Note: C2 bars spaced with resin anchor systems in roadway face of 12" wide curb blockout.

OPTIONAL SLIP-FORMED CURB BLOCKOUT

Detailed Nov. 2022
Checked Dec. 2022

Note: This drawing is not to scale. Follow dimensions.

STATE OF MISSOURI
WILLIAM J. DUNN
NUMBER PE-2006019647
PROFESSIONAL ENGINEER
01/09/2023 12:42:24 PM
WILLIAM J. DUNN - CIVIL
MO-PE-2006019647

DATE PREPARED	1/9/2023
ROUTE	221
STATE	MO
DISTRICT	BR
SHEET NO.	6
COUNTY	ST. FRANCOIS
JOB NO.	J9S3610
CONTRACT ID.	
PROJECT NO.	
BRIDGE NO.	L02832

DESCRIPTION

DATE

MISSOURI HIGHWAYS AND TRANSPORTATION COMMISSION
105 WEST CAPITOL
JEFFERSON CITY, MO 65102
1-888-ASK-MODOT (1-888-275-6636)

IF A SEAL IS PRESENT ON THIS SHEET IT HAS BEEN ELECTRONICALLY SEALED AND DATED.

BILL OF REINFORCING STEEL

NO. REQ'D.	MARK NO. SIZE	MARK NO. MARK	LOCATION	EPOXY (E)	SHAPE NO.	STIRRUP (S)	SUBSTR. (X)	VARIES (V)	NO. EACH	B FT. IN.	C FT. IN.	D FT. IN.	E FT. IN.	F FT. IN.	H FT. IN.	K FT. IN.	NOMINAL LENGTH FT. IN.	ACTUAL LENGTH FT. IN.	WEIGHT LBS.
			BLOCKOUT																
28	5	R1	BLOCKOUT	E	20					6 6.000							6 6	6 6	190
4	5	R2	BLOCKOUT	E	20					32 4.000							32 4	32 4	135
4	5	R3	BLOCKOUT	E	20					29 8.000							29 8	29 8	124
32	5	R4	BLOCKOUT	E	20					52 3.000							52 3	52 3	1744
16	5	R5	BLOCKOUT	E	20					37 3.000							37 3	37 3	622
4	5	R6	BLOCKOUT	E	20					36 9.000							36 9	36 9	153
4	5	R7	BLOCKOUT	E	20					34 1.000							34 1	34 1	142
140	5	R8	BLOCKOUT	E	13	S				6.750	2 1.000	6.750	2 1.000				6 3	5 11	864
4	5	R9	BLOCKOUT	E	20					31 9.000							31 9	31 9	132
4	5	R10	BLOCKOUT	E	20					29 1.000							29 1	29 1	121
4	5	R11	BLOCKOUT	E	20					37 4.000							37 4	37 4	156
4	5	R12	BLOCKOUT	E	20					34 8.000							34 8	34 8	145
			SLIP FORM																
40	5	C1	SLIP FORM	E	20					7 5.000							7 5	7 5	309
420	5	C2	SLIP FORM	E	10	S					13.000	9.000					2 11	2 9	1205
			TOTALS																
	5			E															6042
			TOTAL																0
			TOTAL	E															6042
			Blockout																
	5			E															4528
			TOTAL																4528
			Slip Form Option																
	5			E															1514
			TOTAL																1514

BILL OF REINFORCING STEEL

NO. REQ'D.	MARK NO. SIZE	MARK NO. MARK	LOCATION	EPOXY (E)	SHAPE NO.	STIRRUP (S)	SUBSTR. (X)	VARIES (V)	NO. EACH	B FT. IN.	C FT. IN.	D FT. IN.	E FT. IN.	F FT. IN.	H FT. IN.	K FT. IN.	NOMINAL LENGTH FT. IN.	ACTUAL LENGTH FT. IN.	WEIGHT LBS.

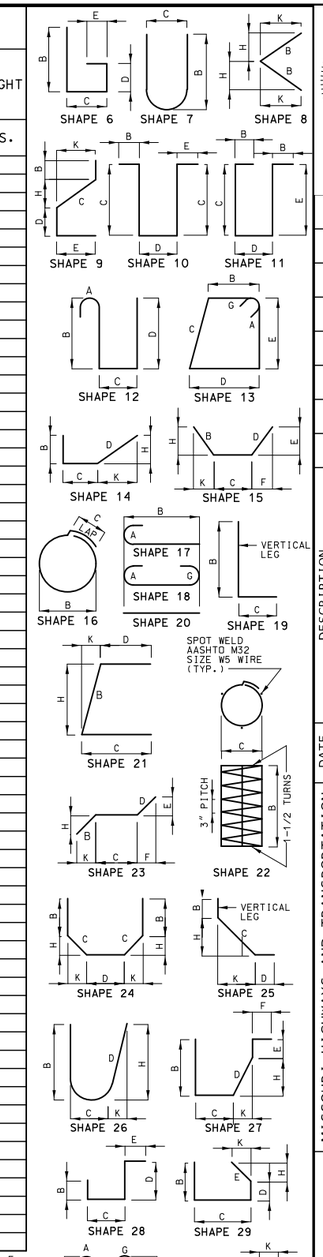

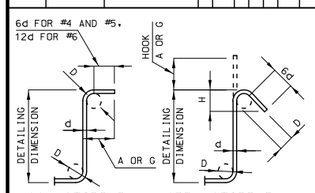

STIRRUP HOOK DIMENSIONS				
GRADES 40 - 50 - 60 KSI				
BAR SIZE	D (IN.)	90° HOOK	135° HOOK	
		HOOK A OR G	HOOK A OR G	APPROX. H
#4	2"	4 1/2"	4 1/2"	3"
#5	2 1/2"	6"	5 1/2"	3 3/4"
#6	4 1/2"	12"	8"	4 1/2"

NOTE: UNLESS OTHERWISE NOTED, DIAMETER "D" IS THE SAME FOR ALL BENDS AND HOOKS ON A BAR.

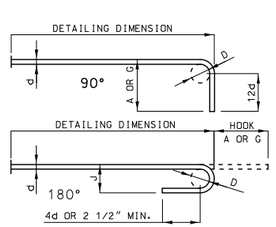

END HOOK DIMENSIONS				
BAR SIZE	D (IN.)	ALL GRADES		
		180° HOOKS		90° HOOKS
		A OR G	J	A OR G
#3	2 1/4"	5"	3"	6"
#4	3"	6"	4"	8"
#5	3 3/4"	7"	5"	10"
#6	4 1/2"	8"	6"	12"
#7	5 1/4"	10"	7"	14"
#8	6"	11"	8"	16"
#9	9 1/2"	15"	11 3/4"	19"
#10	10 3/4"	17"	13 1/4"	22"
#11	12"	19"	14 3/4"	2'-0"
#14	18 1/4"	2'-3"	21 3/4"	2'-7"

NOTE:

ALL STANDARD HOOKS AND BENDS OTHER THAN 180 DEGREE ARE TO BE BENT WITH SAME PROCEDURE AS FOR 90 DEGREE STANDARD HOOKS.

HOOKS AND BENDS SHALL BE IN ACCORDANCE WITH THE PROCEDURES AS SHOWN ON THIS SHEET.

E = EPOXY COATED REINFORCEMENT.
S = STIRRUP.
X = BAR IS INCLUDED IN SUBSTRUCTURE QUANTITIES.
V = BAR DIMENSIONS VARY IN EQUAL INCREMENTS BETWEEN DIMENSIONS SHOWN ON THIS LINE AND THE FOLLOWING LINE.
NO. EA. = NUMBER OF BARS OF EACH LENGTH.

NOMINAL LENGTHS ARE BASED ON OUT TO OUT DIMENSIONS SHOWN IN BENDING DIAGRAMS AND ARE LISTED FOR FABRICATORS USE. (NEAREST INCH)

ACTUAL LENGTHS ARE MEASURED ALONG CENTERLINE BAR TO THE NEAREST INCH.

PAYWEIGHTS ARE BASED ON ACTUAL LENGTHS.

FOUR ANGLE OR CHANNEL SPACERS ARE REQUIRED FOR EACH COLUMN SPIRAL. SPACERS ARE TO BE PLACED ON INSIDE OF SPIRALS. LENGTH AND WEIGHT OF COLUMN SPIRALS DO NOT INCLUDE SPLICES OR SPACERS.

REINFORCING STEEL (GRADE 60) FY = 60,000 PSI.

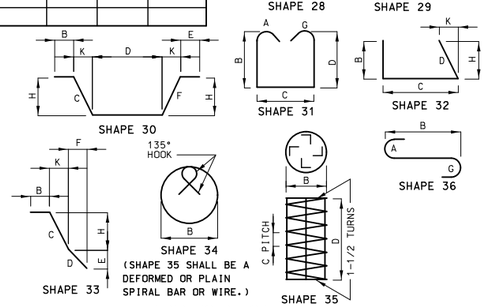

BENDING DIAGRAMS

STATE OF MISSOURI
WILLIAM J. DUNN
NUMBER
PE-2006019647
PROFESSIONAL ENGINEER

01/09/2023 12:42:54 PM
WILLIAM J. DUNN - CIVIL
MO-PE-2006019647

DATE PREPARED
1/9/2023

ROUTE	STATE
221	MO
DISTRICT	SHEET NO.
BR	7

COUNTY
ST. FRANCOIS

JOB NO.
J9S3610

CONTRACT ID.

PROJECT NO.

BRIDGE NO.
L02832

DATE	DESCRIPTION

MISSOURI HIGHWAYS AND TRANSPORTATION COMMISSION

105 WEST CAPITOL
JEFFERSON CITY, MO 65102
1-888-ASK-MODOT (1-888-275-6636)

IF A SEAL IS PRESENT ON THIS SHEET IT HAS BEEN ELECTRONICALLY SEALED AND DATED.

Detailed Dec. 2022
Checked Dec. 2022

Note: This drawing is not to scale. Follow dimensions.