MISSOURI HIGHWAYS AND TRANSPORTATION COMMISSION

PLANS FOR PROPOSED
STATE HIGHWAY
PLATTE COUNTY

DESIGN DESIGNATION

A.A.D.T. - 2024 = 842
A.A.D.T. - 2034 = 977
V = 55 M.P.H.
FUNCTIONAL CLASSIFICATION - MAJOR COLLECTOR

THIS IS AN EXISTING NORMAL ACCESS RIGHT OF WAY.

NO ADDITIONAL RIGHT OF WAY WILL BE ACQUIRED FOR THIS PROJECT

CONVENTIONAL SYMBOLS
(USED IN PLANS)

	EXISTING	NEW
BUILDINGS AND STRUCTURES		
GUARD RAIL		
GUARD CABLE		
CONCRETE RIGHT-OF-WAY MARKER		
STEEL RIGHT-OF-WAY MARKER		
LOCATION SURVEY MARKER		
UTILITIES		
FIBER OPTICS	—FO—	~~FO~~
OVERHEAD CABLE TV	-OTV-	~~OTV~~
UNDERGROUND CABLE TV	-UTV-	~~UTV~~
OVERHEAD TELEPHONE	—OT—	~~OT~~
UNDERGROUND TELEPHONE	—UT—	~~UT~~
OVERHEAD POWER	—OE—	~~OE~~
UNDERGROUND POWER	—UE—	~~UE~~
SANITARY SEWER	—S—	~~S~~
STORM SEWER	—SS—	~~SS~~
GAS	—G—	~~G~~
WATER	—W—	~~W~~
MANHOLE	SAN	
FIRE HYDRANT	HYD	
WATER VALVE	WV	
WATER METER	WM	
DROP INLET	D	
DITCH BLOCK		
GROUND MOUNTED SIGN	SIGN	
LIGHT POLE		
H-FRAME POWER POLE		
TELEPHONE PEDESTAL	PED	
FENCE		
CHAIN LINK	—V—	
WOVEN WIRE	—X—	
GATE POST		
BENCHMARK	BM	

NOTE: DASHED OR OPEN SYMBOLS INDICATE EXISTING FEATURES

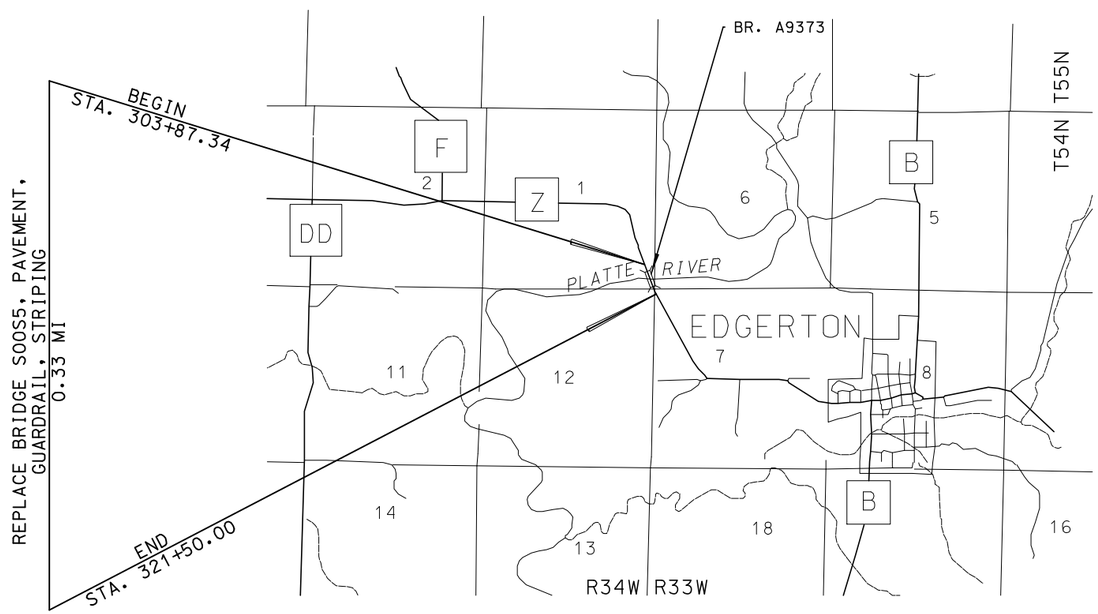

NOT TO SCALE

THE EXISTENCE AND APPROXIMATE LOCATION OF UTILITY FACILITIES KNOWN TO EXIST, AS SHOWN ON THE PLANS, ARE BASED ON THE BEST INFORMATION AVAILABLE TO THE COMMISSION AT THIS TIME. THIS INFORMATION IS PROVIDED BY THE COMMISSION "AS-IS" AND THE COMMISSION EXPRESSLY DISCLAIMS ANY REPRESENTATION OR WARRANTY AS TO THE COMPLETENESS, ACCURACY, OR SUITABILITY OF THE INFORMATION FOR ANY USE. RELIANCE UPON THIS INFORMATION IS DONE AT THE RISK AND PERIL OF THE USER, AND THE COMMISSION SHALL NOT BE LIABLE FOR ANY DAMAGES THAT MAY ARISE FROM ANY ERROR IN THE INFORMATION. IT IS, THEREFORE, THE RESPONSIBILITY OF THE CONTRACTOR TO VERIFY THE EXISTENCE, LOCATION AND STATUS OF ANY FACILITY. SUCH VERIFICATION INCLUDES DIRECT CONTACT WITH THE LISTED UTILITIES.

INDEX OF SHEETS

LENGTH OF PROJECT

BEGINNING OF PROJECT	STA. 303 + 87.34	
END OF PROJECT	STA. 321 + 50.00	
APPARENT LENGTH	1762.66	FEET
EQUATIONS AND EXCEPTIONS:	NONE	
TOTAL CORRECTIONS	0.00	FEET
NET LENGTH OF PROJECT	1762.66	FEET
STATE LENGTH	0.33	MILES
FOR INFORMATION ONLY ESTIMATED DISTURBED ACRES	3.1	ACRES

STATE OF MISSOURI
MICHAEL WAYNE DUSENBERG
NUMBER E-26546
PROFESSIONAL ENGINEER
THIS SHEET HAS BEEN SIGNED, SEALED AND DATED ELECTRONICALLY.

DATE PREPARED: 3/26/2024

ROUTE	STATE
Z	MO
DISTRICT	SHEET NO.
KC	1

COUNTY: PLATTE
JOB NO.: J4S3454
CONTRACT ID.:
PROJECT NO.:
BRIDGE NO.: A9373

DESCRIPTION	DATE

IF A SEAL IS PRESENT ON THIS SHEET IT HAS BEEN ELECTRONICALLY SEALED AND DATED.

MISSOURI HIGHWAYS AND TRANSPORTATION COMMISSION
105 WEST CAPITOL
JEFFERSON CITY, MO 65102
1-888-ASK-MODOT (1-888-275-6636)

Bartlett & West
601 MONROE ST. SUITE 201 - JEFFERSON CITY, MO 65101
PHONE 573-634-3181
CERTIFICATE OF AUTHORITY NO. 000167 - ENGINEERING
WWW.BARTLETTWEST.COM

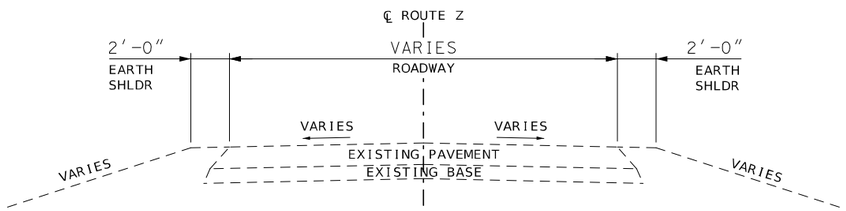

TYPICAL SECTION
EXISTING ROADWAY

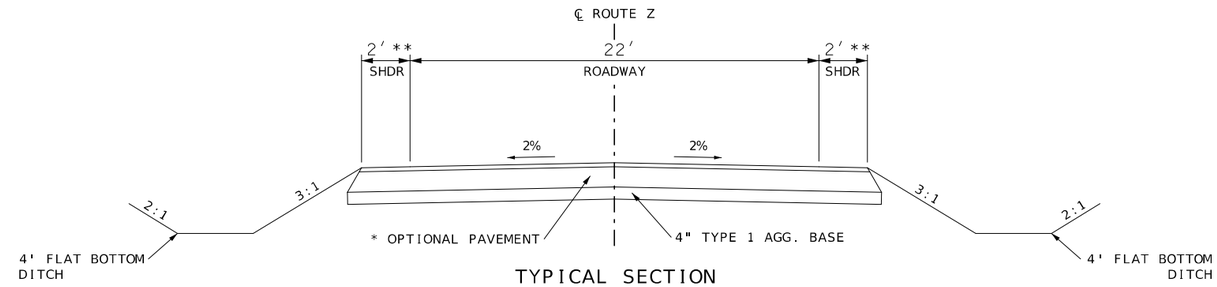

TYPICAL SECTION
PROPOSED ROADWAY
NO GUARDRAIL

ROUTE Z PAVEMENT REPLACEMENT
* STA. 303+87.34 TO 305+65.44
** SHOULDER TAPERS TO ZERO FROM STA.303+87.34 TO STA. 304+87.34

	OPTIONAL PAVEMENT DESIGN	
BASE TYPE	BRIDGE APPROACH SLAB	OPTIONAL PAVEMENT
4" TYPE 1 AGGREGATE	12" NRPCCP	8" JPCP
4" TYPE 1 AGGREGATE	2" BP-1 PG64-22 ON 10" BIT. BASE	2" BP-1 PG64-22 ON 8" BIT. BASE
TACK COAT APPLIED AT 0.5 GAL/YD2 TACK COAT INCIDENTAL TO OPTIONAL PAVEMENT		

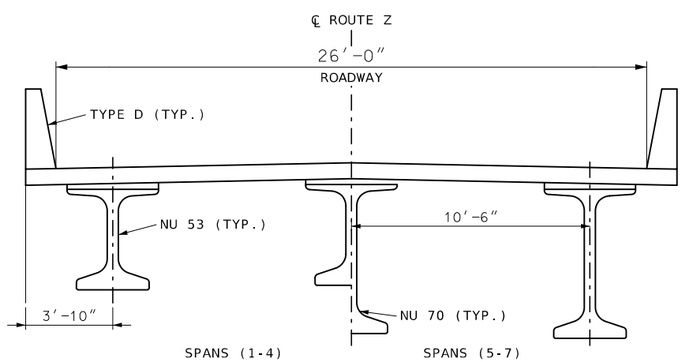

TYPICAL BRIDGE SECTION
PROPOSED BRIDGE

SPANS (1-4)
STA. 307+59.58 TO 312+18.87
SPANS (5-7)
STA. 312+18.87 TO 316+06.16

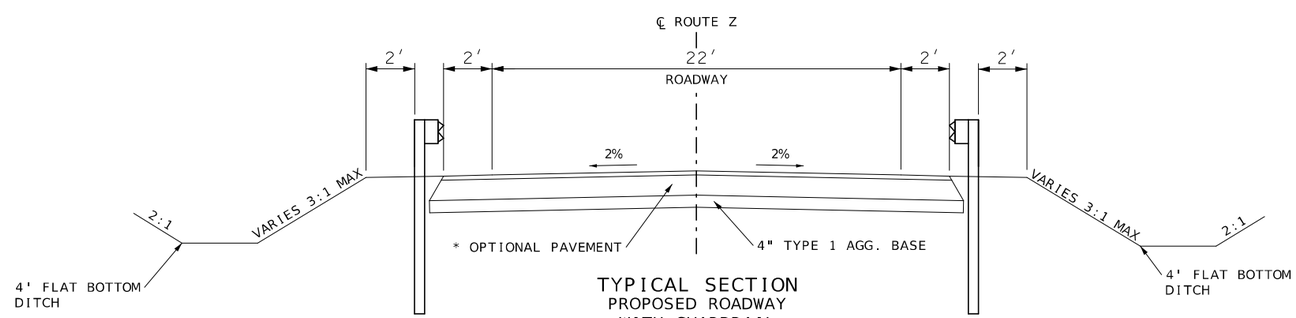

TYPICAL SECTION
PROPOSED ROADWAY
WITH GUARDRAIL

ROUTE Z PAVEMENT REPLACEMENT
STA. 305+65.44 TO 307+39.58
BRIDGE APPROACH SLAB
* STA. 307+39.58 TO 307+59.58 *

NOT TO SCALE

TYPICAL SECTIONS
SHEET 1 OF 2

STATE OF MISSOURI
MICHAEL WAYNE DUSENBERG
NUMBER E-26546
PROFESSIONAL ENGINEER
THIS SHEET HAS BEEN SIGNED, SEALED AND DATED ELECTRONICALLY.

DATE PREPARED
3/8/2024

ROUTE	STATE
Z	MO
DISTRICT	SHEET NO.
KC	2

COUNTY
PLATTE

JOB NO.
J4S3454

CONTRACT ID.

PROJECT NO.

BRIDGE NO.
A9373

DATE	DESCRIPTION

IF A SEAL IS PRESENT ON THIS SHEET IT HAS BEEN ELECTRONICALLY SEALED AND DATED.

MISSOURI HIGHWAYS AND TRANSPORTATION COMMISSION
105 WEST CAPITOL
JEFFERSON CITY, MO 65102
1-888-ASK-MODOT (1-888-275-6636)

Bartlett & West
601 MONROE ST. SUITE 201 - JEFFERSON CITY, MO 65101
PHONE 573-634-3181
CERTIFICATE OF AUTHORITY NO. 000167 - ENGINEERING
WWW.BARTLETTWEST.COM

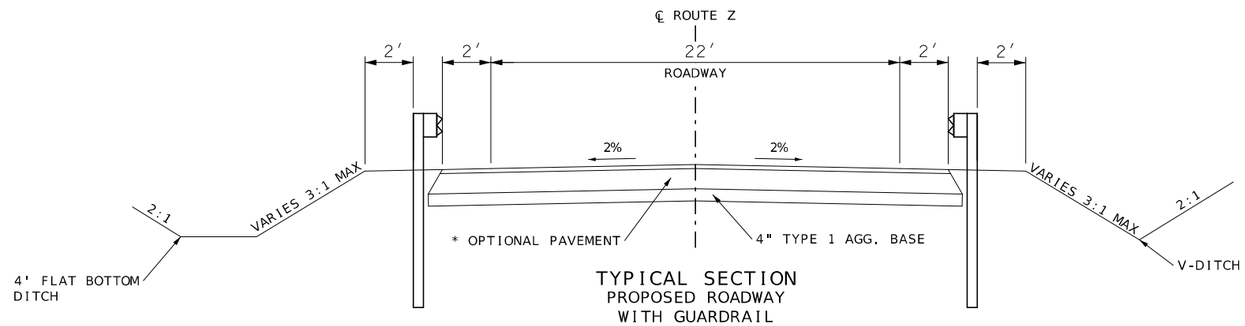

TYPICAL SECTION
PROPOSED ROADWAY
WITH GUARDRAIL

ROUTE Z PAVEMENT REPLACEMENT
STA. 316+26.16 TO 317+92.78
BRIDGE APPROACH SLAB
* STA. 316+06.16 TO 316+26.16 *

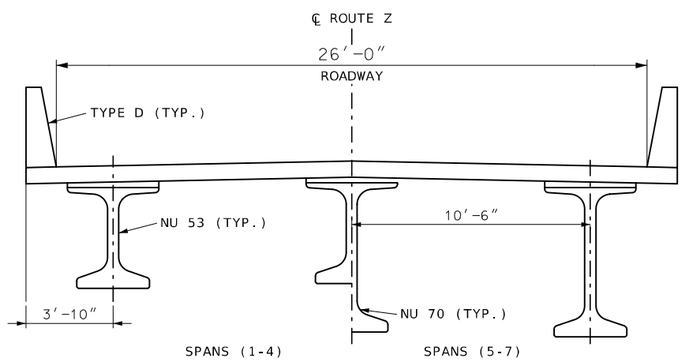

TYPICAL BRIDGE SECTION
PROPOSED BRIDGE
SPANS (1-4)
STA. 307+59.58 TO 312+18.87
SPANS (5-7)
STA. 312+18.87 TO 316+06.16

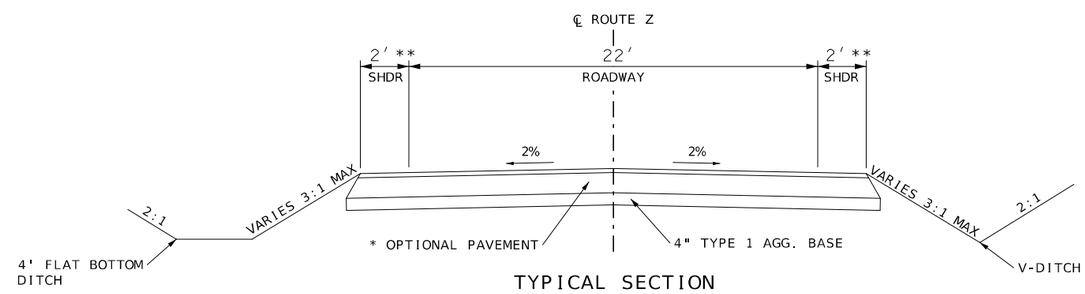

TYPICAL SECTION
PROPOSED ROADWAY
NO GUARDRAIL

ROUTE Z PAVEMENT REPLACEMENT
* STA. 317+92.78 TO 321+50.00
** SHOULDER TAPER TO ZERO FROM STA. 320+50.00 TO 321+50.00

OPTIONAL PAVEMENT DESIGN		
BASE TYPE	BRIDGE APPROACH SLAB	OPTIONAL PAVEMENT
4" TYPE 1 AGGREGATE	* 12" MIN. HMA OR REINF. PCC *	10" HMA OR 8" JPCP
TACK COAT APPLIED AT 0.5 GAL/YD2 TACK COAT INCIDENTAL TO OPTIONAL PAVEMENT		

NOT TO SCALE

TYPICAL SECTIONS
SHEET 2 OF 2

STATE OF MISSOURI
MICHAEL WAYNE DUSENBERG
NUMBER E-26546
PROFESSIONAL ENGINEER
THIS SHEET HAS BEEN SIGNED, SEALED AND DATED ELECTRONICALLY.

DATE PREPARED 3/4/2024

ROUTE	STATE
Z	MO
DISTRICT	SHEET NO.
KC	2

COUNTY PLATTE
JOB NO. J4S3454
CONTRACT ID.
PROJECT NO.
BRIDGE NO. A9373

DESCRIPTION	DATE

IF A SEAL IS PRESENT ON THIS SHEET IT HAS BEEN ELECTRONICALLY SEALED AND DATED.

MISSOURI HIGHWAYS AND TRANSPORTATION COMMISSION
MoDOT
105 WEST CAPITOL
JEFFERSON CITY, MO 65102
1-888-ASK-MODOT (1-888-275-6636)

Bartlett & West
601 MONROE ST. SUITE 201 - JEFFERSON CITY, MO 65101
PHONE 573-634-3181
CERTIFICATE OF AUTHORITY NO. 000167 - ENGINEERING
WWW.BARTLETTWEST.COM

REMOVAL OF IMPROVEMENTS

SHEET	ROUTE	STA.	STA.	LOCATION	DESCRIPTION	AMOUNT	UNIT	REMARKS
4	Z	303+87.34	-	BOTH	SAW CUT	26	LF	
4	Z	303+87.34	307+59.06	CENTERLINE	PAVEMENT REMOVAL	1150.11	SY	
4	Z	307+59.69	-	RT	WEIGHT LIMIT 45 TONS SIGN	1	EA	
4	Z	307+59.67	-	RT	TYPE III OBJECT MARKER	1	EA	
4	Z	307+63.22	-	LT	TYPE III OBJECT MARKER	1	EA	
4	Z	316+06.68	321+50.00	CENTERLINE	PAVEMENT REMOVAL	1503.14	SY	
5	Z	315+98.27	-	RT	TYPE III OBJECT MARKER	1	EA	
5	Z	316+07.55	-	LT	WEIGHT LIMIT 45 TONS SIGN	1	EA	
5	Z	316+07.55	-	LT	PLATTE RIVER SIGN	1	EA	
5	Z	316+05.20	-	LT	TYPE III OBJECT MARKER	1	EA	
5	Z	316+96.94	317+23.54	RT	15 " CMP	27	LF	
5	Z	317+19.81	317+50.08	LT	12" CMP	30.3	LF	
5	Z	321+19.21	-	BOTH	30" CMP	90	LF	
5	Z	321+50.00	-	BOTH	SAW CUT	26	LF	
					TOTALS	1	LUMP SUM	

MGS GUARDRAIL

SHEET	ROUTE	STA	STA	LOCATION	MGS GUARDRAIL 6' POST	MGS BRIDGE APPROACH TRANSITION SECTION	TYPE A CRASHWORTHY END TERMINAL	REMARKS
					L.F.	EA.	EA.	
9	Z	305+65.44	306+16.57	RT			1	
9	Z	306+34.93	306+86.08	LT			1	
9	Z	306+16.57	307+04.07	RT	87.5			
9	Z	306+86.08	307+11.08	LT	25.0			
9	Z	307+04.07	307+41.57	RT		1		
9	Z	307+11.08	307+48.58	LT		1		
9	Z	316+21.13	316+58.63	RT		1		
9	Z	316+28.16	316+65.66	LT		1		
9	Z	316+65.66	317+40.66	LT	75.00			
9	Z	316+58.63	317+08.63	RT			1	
9	Z	317+40.66	317+92.78	LT			1	
				TOTALS	187.5	4.0	4.0	
				USE	187.5	4.0	4.0	

TEMPORARY EROSION AND SEDIMENT CONTROL DEVICES

SHEET	ROUTE	STA.	STA.	LOCATION	ROCK DITCH CHECK	SILT FENCE	SEDIMENT TRAP EXCAVATION	SEDIMENT TRAP ROCK	TYPE C BERM	SEDIMENT REMOVAL	REMARKS
					LF	LF	CY	CY	LF	CY	
13	Z	303+87.25	313+09.53	RT		950.0				9.5	
13	Z	303+87.25	313+60.19	LT		1008.0				10.1	
13	Z	306+63.44	307+63.44	RT	20.0					2.0	2 AT 100' SPACING
13	Z	307+02.76	308+02.78	LT	20.0					2.0	2 AT 100' SPACING
14	Z	313+11.02	-	RT			3.5	3.5		1.0	OUTLET 1
14	Z	313+37.35	-	CL					166.0	0.0	
14	Z	313+61.99	-	LT			3.5	3.5		1.0	OUTLET 2
14	Z	314+51.04	-	RT			3.5	3.5		1.0	OUTLET 3
14	Z	314+57.53	-	CL					129.0	0.0	
14	Z	314+90.83	-	LT			3.5	3.5		1.0	OUTLET 4
14	Z	314+50.56	321+50.00	RT		733.0				7.3	
14	Z	314+92.79	321+50.00	LT		679.0				6.8	
14	Z	315+95.66	316+39.52	RT	40.0					4.0	4 AT 15' SPACING
14	Z	316+25.20	316+49.88	LT	20.0					2.0	2 AT 25' SPACING
14	Z	316+76.76	317+31.26	LT	30.0					3.0	3 AT 27' SPACING
14	Z	318+07.16	-	LT	10.0					1.0	1 AT 75' SPACING
14	Z	316+88.12	318+35.08	RT	20.0					2.0	2 AT 150' SPACING
14	Z	319+59.52	320+07.52	LT	20.0					2.0	2 AT 50' SPACING
14	Z	320+25.00	320+74.09	RT	20.0					2.0	2 AT 50' SPACING
14	Z	320+37.12	321+03.30	LT	50.0					5.0	5 AT 17' SPACING
14	Z	321+03.37	321+18.01	RT	20.0					2.0	2 AT 15' SPACING
14	Z	321+28.12	-	RT	10.0					1.0	1 AT PIPE INLET
				TOTAL	280.0	3370.0	14.0	14.0	295.0	65.7	
				USE	280	3370	14	14	295	66	

NOTE: SEDIMENT REMOVAL IS BASED ON 1 CY PER DITCH CHECK,
1 CY PER INLET CHECK, AND 1 CY PER 100 LINEAR FEET OF SILT FENCE.

ROCK BLANKET

SHEET	ROUTE	LOCATION	TYPE 2 ROCK BLANKET (24" THICK) FURNISHING ROCK BLANKET	PLACING ROCK BLANKET	EROSION CONTROL GEOTEXTILE	REMARKS
			CY	CY	SY	
4	Z	NORTH BRIDGE END	205.0	205.0	308.0	
5	Z	SOUTH BRIDGE END	308.0	308.0	462.0	
		TOTAL	513.0	513.0	770.0	
		USE	513.0	513.0	770.0	

ENTRANCES

SHEET	ROUTE	STA.	LOCATION	GRAVEL (A) CRUSHED STONE (B) CHAT (C)	LINEAR GRADING CLASS 2	REMARKS
				SY	STA.	
5	Z	317+26.61	RT	58.8	0.3	
5	Z	319+18.95	LT	178.3	0.7	
			TOTAL	237.1	1.0	
			USE	237	1.0	

ADDITIONAL MOBILIZATION FOR SEEDING
TOTAL QTY = 2

CONTRACTOR FURNISHED SURVEYING AND STAKING
TOTAL = 1 LUMP SUM

MOBILIZATION
TOTAL = 1 LUMP SUM

CLEARING AND GRUBBING

ROUTE	STA.	STA.	LOCATION	ACRE	REMARKS
Z	303+87.34	307+39.57	RT	0.52	
Z	303+87.34	307+39.57	LT	0.57	
Z	316+01.94	316+36.94	RT	0.04	
			TOTAL	1.1	
			USE	1.0	

TREE TRIMMING

ROUTE	STA.	STA.	LOCATION	ACRE	REMARKS
Z	307+63.44	316+01.94	RT	0.38	
			TOTAL	0.4	
			USE	1 LS	

NOTE: REMOVE ANY BRANCHES 25' BEYOND NEW BRIDGE

SUMMARY OF QUANTITIES
SHEET 1 OF 3

STATE OF MISSOURI
MICHAEL WAYNE DUSENBERG
NUMBER E-26546
PROFESSIONAL ENGINEER
THIS SHEET HAS BEEN SIGNED, SEALED AND DATED ELECTRONICALLY.

DATE PREPARED 4/1/2024
ROUTE Z | STATE MO
DISTRICT KC | SHEET NO. 3
COUNTY PLATTE
JOB NO. J4S3454
CONTRACT ID.
PROJECT NO.
BRIDGE NO. A9373

DESCRIPTION	DATE

IF A SEAL IS PRESENT ON THIS SHEET IT HAS BEEN ELECTRONICALLY SEALED AND DATED.

MISSOURI HIGHWAYS AND TRANSPORTATION COMMISSION
105 WEST CAPITOL
JEFFERSON CITY, MO 65102
1-888-ASK-MODOT (1-888-275-6636)

Bartlett & West
601 MONROE ST. SUITE 201 - JEFFERSON CITY, MO 65101
PHONE 573-634-3181
CERTIFICATE OF AUTHORITY NO. 000167 - ENGINEERING
WWW.BARTLETTWEST.COM

PAVEMENT MARKING (PERMANENT)

SHEET	ROUTE	STATION	STATION	LOCATION	4 IN. WHITE STANDARD WATERBORNE PAVEMENT MARKING PAINT TYPE P BEADS	4 IN. YELLOW STANDARD WATERBORNE PAVEMENT MARKING PAINT TYPE P BEADS	4 IN. YELLOW INTERMITTENT WATERBORNE PAVEMENT MARKING PAINT TYPE P BEADS	REMARKS
15	Z	303+87.25	312+30.00	LT	842.75			LEFT EOP
15	Z	303+87.25	307+59.00	CL		371.75		SOLID YELLOW CENTERLINE
15	Z	303+87.25	307+59.00	CL			92.94	INTERMITTENT DASH 10' STRIP WITH 30' GAP
15	Z	307+59	312+30.00	CL		942		DOUBLE SOLID YELLOW CENTERLINE
15	Z	303+87.25	312+30.00	RT	842.75			RIGHT EOP
16	Z	312+30	321+50.00	LT	920			LEFT EOP
16	Z	312+30	321+50.00	CL		1840		DOUBLE SOLID YELLOW CENTERLINE
16	Z	312+30	321+50.00	RT	920			RIGHT EOP
				TOTALS	3525.50	3153.75	93	
				USE	3526	3154	100	
						3254		

PERMANENT EROSION CONTROL

SHEET	ROUTE	STA.	STA.	LOCATION	COOL SEASON MIX SEEDING	COOL SEASON MIX MULCHING	TYPE 2 TURF REINFORCEMENT MAT	REMARKS
					ACRE	ACRE	SY	
13	Z	297+00.00	313+95.00	LT	1.687	1.687		
13	Z	303+87.35	307+54.33	RT	0.393	0.436		
13	Z	303+87.35	307+78.23	LT	0.455	0.466		
13	Z	304+50.00	307+47.20	RT			381.0	
13	Z	304+50.00	307+69.79	LT			449.7	
14	Z	315+32.00	315+16.00	LT	0.022	0.022		
14	Z	315+93.16	321+23.21	RT			558.7	
14	Z	315+98.48	321+04.77	LT			734.8	
14	Z	316+18.95	321+50.00	RT	0.299	0.242		
14	Z	316+23.48	321+50.00	LT	0.247	0.216		
				TOTALS	3.10	3.07	2124.2	
				USE	3.1	3.1	2124	

TEMPORARY SEEDING

SHEET	ROUTE	STA.	STA.	LOCATION	SEEDING	REMARKS
					ACRES	
13	Z	303+87.34	307+66.87	LT	0.23	
13	Z	303+87.35	307+54.28	RT	0.20	
14	Z	316+20.32	321+50.00	RT	0.15	
14	Z	316+23.48	321+50.00	LT	0.12	
				TOTAL	0.7	
				USE	0.7	

OPTIONAL PAVEMENT

SHEET	ROUTE	STA.	STA.	OPTIONAL PAVEMENT	AGGR. BASE TYPE 1 4" THICKNESS	6" SUBGRADE COMPACTION	REMARKS
				SY	SY	100 LF	
4	Z	303+87.34	307+39.57	995.4	1045.2	4	
5	Z	316+26.16	321+50.00	1491.0	1565.6	5	
			TOTALS	2486.4	2610.8	9	
			USE	2486.4	2611	9	

ROCK FLUME

SHEET	ROUTE	STA.	LOCATION	FURNISHING TYPE 1 ROCK DITCH LINER	PLACING TYPE 1 ROCK DITCH LINER	EROSION CONTROL GEOTEXTILE	REMARKS
				CY	CY	SY	
4	Z	307+40.04	RT	10.1	10.1	13.5	
4	Z	307+47.08	LT	10.7	10.7	14.3	
5	Z	316+18.82	RT	9.3	9.3	12.3	
5	Z	316+30.54	LT	7.6	7.6	10.1	
			TOTAL	37.7	37.7	50.2	
			USE	38.0	38.0	50.0	

DRAINAGE STRUCTURES, PIPES, AND END SECTIONS

SHEET	ROUTE	STA.	OFFSET	STA.	OFFSET	15 IN. PIPE GROUP C	24 IN. PIPE GROUP C	30 IN. PIPE GROUP A	15 IN. FES GROUP C	24 IN. FES GROUP C	30 IN. FES GROUP A	CLASS 3 EXC.	ROCK LINING	REMARKS
			(FT)		(FT)	(LF)	(LF)	(LF)	(EA)	(EA)	(EA)	(CY)	(CY)	
4	Z	307+71.28	55.81 LT	307+91.27	55.95 LT		20.0			2.0		19.0		
5	Z	316+69.78	34.82 RT	317+34.27	25.78 RT	27.0			2.0			21.0		
5	Z	321+08.24	43.39 LT	321+27.06	29.18 RT			75.0			2.0	170.0	4.0	
					TOTALS	27.0	20.0	75.0	2.0	2.0	2.0	210.0	4.0	
					USE	27	20	75	2	2	2	210	4	

PRECAST LIDS ARE INCLUDED IN PER FT QUANTITY FOR INLETS

EARTHWORK

ROUTE	LOCATION	STA.	STA.	CLASS A EXCAVATION	COMPACTING EMBANKMENT	EMBANKMENT IN PLACE	REMARKS
				CY	CY	CY	
Z	NORTH	303+87.34	307+39.57	500.6	425.5	2982.9	
Z	SOUTH	316+26.16	321+50.00	1170.7	418.2		USE 576.9 CY EXCESS FILL ON NORTH SIDE
			TOTAL	1671.3	843.7	2982.9	
			USE	1671	844	2983	

SUMMARY OF QUANTITIES
SHEET 2 OF 3

STATE OF MISSOURI
MICHAEL WAYNE DUSENBERG
NUMBER E-26546
PROFESSIONAL ENGINEER
THIS SHEET HAS BEEN SIGNED, SEALED AND DATED ELECTRONICALLY.

DATE PREPARED 4/2/2024
ROUTE Z | STATE MO
DISTRICT KC | SHEET NO. 3
COUNTY PLATTE
JOB NO. J4S3454
CONTRACT ID.
PROJECT NO.
BRIDGE NO. A9373

DESCRIPTION | DATE

IF A SEAL IS PRESENT ON THIS SHEET IT HAS BEEN ELECTRONICALLY SEALED AND DATED.

MISSOURI HIGHWAYS AND TRANSPORTATION COMMISSION
105 WEST CAPITOL
JEFFERSON CITY, MO 65102
1-888-ASK-MODOT (1-888-275-6636)

Bartlett & West
601 MONROE ST. SUITE 201 - JEFFERSON CITY, MO 65101
PHONE 573-634-3181
CERTIFICATE OF AUTHORITY NO. 000167 - ENGINEERING
WWW.BARTLETTWEST.COM

EFFECTIVE: 04-01-2023

SIGN	SIZE IN.	AREA SQ.FT.	QTY EACH	TOTAL AREA SQ.FT.	QTY RELOC EACH	TOTAL RELOC SQ.FT.	SIGN NUM.	DESCRIPTION
WARNING SIGNS								
WO1-1L	48X48	16.00						TURN (SYMBOL LEFT ARROW)
WO1-1R	48X48	16.00						TURN (SYMBOL RIGHT ARROW)
WO1-2L	48X48	16.00						CURVE (SYMBOL LEFT ARROW)
WO1-2R	48X48	16.00						CURVE (SYMBOL RIGHT ARROW)
WO1-3L	48X48	16.00						REVERSE TURN (SYMBOL LEFT ARROW)
WO1-3R	48X48	16.00						REVERSE TURN (SYMBOL RIGHT ARROW)
WO1-4L	48X48	16.00						REVERSE CURVE (SYMBOL LEFT ARROW)
WO1-4R	48X48	16.00						REVERSE CURVE (SYMBOL RIGHT ARROW)
WO1-4bL	48X48	16.00						DOUBLE ARROW REVERSE CURVE (SYMBOL LT ARROWS)
WO1-4bR	48X48	16.00						DOUBLE ARROW REVERSE CURVE (SYMBOL RT ARROWS)
WO1-4cL	48X48	16.00						TRIPLE ARROW REVERSE CURVE (SYMBOL LT ARROWS)
WO1-4cR	48X48	16.00						TRIPLE ARROW REVERSE CURVE (SYMBOL RT ARROWS)
WO1-6	60X30	12.50						HORIZONTAL ARROW (SYMBOL)
WO1-6a	72X36	18.00						HORIZ. ARROW (SYMBOL ON PERMANENT BARRICADE)
WO1-7	60X30	12.50						DOUBLE HEAD HORIZONTAL ARROW (SYMBOL)
WO1-7a	72X36	18.00						DOUBLE HEAD HORIZ. ARROW (SYMBOL ON PERM. BARR.)
WO1-8	18X24	3.00						CHEVRON (SYMBOL)
WO1-8a	30X36	7.50						CHEVRON (SYMBOL FOR DIVIDED HIGHWAYS)
WO3-1	48X48	16.00						STOP AHEAD (SYMBOL)
WO3-2	48X48	16.00						YIELD AHEAD (SYMBOL)
WO3-3	48X48	16.00						SIGNAL AHEAD (SYMBOL)
WO3-4	48X48	16.00						BE PREPARED TO STOP
WO3-5	48X48	16.00						SPEED LIMIT AHEAD
WO4-1L	48X48	16.00						MERGE (SYMBOL FROM LEFT)
WO4-1R	48X48	16.00						MERGE (SYMBOL FROM RIGHT)
WO4-1aL	48X48	16.00						MERGE (ARROW SYMBOL)
WO4-1aR	48X48	16.00						MERGE (ARROW SYMBOL)
WO5-1	48X48	16.00						ROAD/BRIDGE/RAMP NARROWS
WO5-3	48X48	16.00						ONE LANE BRIDGE
WO5-5	48X48	16.00						NARROW LANES
WO6-1	48X48	16.00						DIVIDED HIGHWAY (SYMBOL)
WO6-2	48X48	16.00						DIVIDED HIGHWAY END (SYMBOL)
WO6-3	48X48	16.00						TWO WAY TRAFFIC (SYMBOL)
WO7-3a	30X24	5.00						NEXT XX MILES (PLAQUE)
WO8-1	48X48	16.00						BUMP
WO8-2	48X48	16.00						DIP
WO8-3	48X48	16.00						PAVEMENT ENDS
WO8-4	48X48	16.00						SOFT SHOULDER
WO8-5	48X48	16.00						SLIPPERY WHEN WET (SYMBOL)
WO8-6	48X48	16.00						TRUCK CROSSING (WITH FLAGS)
WO8-6c	48X48	16.00						TRUCK ENTRANCE
WO8-7	36X36	9.00						LOOSE GRAVEL
WO8-7a	36X36	9.00						FRESH OIL/LOOSE GRAVEL
WO8-9	48X48	16.00						LOW SHOULDER
WO8-11	48X48	16.00						UNEVEN LANES
WO8-12	48X48	16.00						NO CENTER LINE
WO8-15	48X48	16.00						GROOVED PAVEMENT
WO8-15P	30X24	5.00						MOTORCYCLE (PLAQUE)
WO8-17	48X48	16.00						SHOULDER DROP-OFF (SYMBOL)
WO8-17P	30X24	5.00						SHOULDER DROP-OFF (PLAQUE)
W10-1	42RND.	9.62						RAILROAD CROSSING
WO12-1	24X24	4.00						DOUBLE DOWN ARROW (SYMBOL)
WO12-2	48X48	16.00						LOW CLEARANCE (SYMBOL)
WO12-2X	24X18	3.00						LOW CLEARANCE (PLAQUE)
WO12-2a	84X24	14.00						OVERHEAD LOW CLEARANCE (FEET AND INCHES)
WO12-4	120X60	50.00						LOW CLEARANCE XX FT XX IN XX MILES AHEAD
WO12-5	120X60	50.00						WIDTH RESTRICTION XX FT XX IN XX MILES AHEAD
WO13-1	30X30	6.25						ADVISORY SPEED (PLAQUE)
WO16-2	30X24	5.00	2	10			20B	XXX FEET (PLAQUE)
WO16-3	30X24	5.00						X MILE (PLAQUE)
WO20-1	48X48	16.00	2	32			2	ROAD/BRIDGE/RAMP WORK AHEAD 27-2;2-2A
WO20-2	48X48	16.00	3	48			18	DETOUR AHEAD
WO20-3	48X48	16.00	2	32			20B	ROAD CLOSED 500 FT
WO20-3	48X48	16.00	2	32			20A	ROAD CLOSED AHEAD
WO20-4	48X48	16.00	2	32			7	ONE LANE ROAD AHEAD
WO20-5	48X48	16.00						RIGHT/CENTER/LEFT LANE CLOSED AHEAD
WO20-5a	48X48	16.00						2 RIGHT/CENTER/LEFT LANES CLOSED AHEAD
WO20-6a	48X48	16.00						RIGHT/CENTER/LEFT LANE CLOSED
WO20-7a	48X48	16.00	2	32			8	FLAGGER (SYMBOL, WITH FLAGS)
WO21-2	36X36	9.00						FRESH OIL
WO21-5	48X48	16.00	2	32			21	SHOULDER WORK AHEAD
WO22-1	48X48	16.00						BLASTING ZONE AHEAD
WO22-2	42X36	10.50						TURN OFF 2-WAY RADIO AND PHONE
WO22-3	42X36	10.50						END BLASTING ZONE
GO22-1	21X15	2.19						WET PAINT (ARROW PIVOTS)

SIGN	SIZE IN.	AREA SQ.FT.	QTY EACH	TOTAL SQ.FT.	QTY RELOC EACH	TOTAL RELOC SQ.FT.	SIGN NUM.	DESCRIPTION
GUIDE SIGNS								
E05-1	36X48	12.00						GORE EXIT
E05-2	48X36	12.00						EXIT OPEN
E05-2a	48X36	12.00						EXIT CLOSED
GO20-1	60X24	10.00						ROAD WORK NEXT XX MILES
GO20-2	48X24	8.00						END ROAD WORK
GO20-4	36X18	4.50						PILOT CAR FOLLOW ME
GO20-4a	42X30	8.75						PILOT CAR IN USE WAIT & FOLLOW
GO20-4a	18X12	1.50						PILOT CAR IN USE WAIT & FOLLOW
GO20-5aP	36X24	6.00						WORK ZONE (PLAQUE)
MO4-8a	24X18	3.00	2	6			52	END DETOUR
MO4-9L	48X36	12.00						DETOUR (LEFT ARROW)
MO4-9R	48X36	12.00						DETOUR (RIGHT ARROW)
MO4-9P	48X12	4.00						STREET NAME (PLAQUE)
MO4-10L	48X18	6.00						DETOUR (ARROW LEFT)
MO4-10R	48X18	6.00						DETOUR (ARROW RIGHT)
REGULATORY SIGNS								
R1-1	48X48	13.25						STOP
R1-2	48TRI.	6.93						YIELD
R1-2a	36X36	9.00						TO ONCOMING TRAFFIC (PLAQUE)
R1-3P	30X12	2.50						ALL WAY (PLAQUE)
R2-1	36X48	12.00						SPEED LIMIT 2-40MPH; 2-30MPH
R3-1	48X48	16.00						NO RIGHT TURN (SYMBOL)
R3-2	48X48	16.00						NO LEFT TURN (SYMBOL)
R3-3	36X36	9.00						NO TURNS
R3-4	48X48	16.00						NO U-TURN (SYMBOL)
R3-7L	30X30	6.25						LEFT LANE MUST TURN LEFT
R3-7R	30X30	6.25						RIGHT LANE MUST TURN RIGHT
R4-1	36X48	12.00						DO NOT PASS
R4-2	36X48	12.00						PASS WITH CARE
R4-8a	36X48	12.00						KEEP LEFT (HORIZONTAL ARROW)
R4-7a	36X48	12.00						KEEP RIGHT (HORIZONTAL ARROW)
R5-1	30X30	6.25						DO NOT ENTER
R5-1a	36X24	6.00						WRONG WAY
R6-1L	54X18	6.75						ONE WAY ARROW (LEFT)
R6-1R	54X18	6.75						ONE WAY ARROW (RIGHT)
R6-2L	24X30	5.00						ONE WAY (LEFT)
R6-2R	24X30	5.00						ONE WAY (RIGHT)
R9-9	24X12	2.00						SIDEWALK CLOSED
R9-11L	24X18	3.00						SIDEWALK CLOSED AHEAD, (ARROW LEFT) CROSS HERE
R9-11R	24X18	3.00						SIDEWALK CLOSED AHEAD, (ARROW RIGHT) CROSS HERE
R10-6	24X36	6.00						STOP HERE ON RED (45^ ARROW)
R11-2	48X30	10.00	2	20			29	ROAD CLOSED
R11-3a	60X30	12.50	2	25			55B	ROAD CLOSED 4 MILES AHEAD LOCAL TRAFFIC ONLY
R11-4	60X30	12.50	4	50			55C	ROAD CLOSED TO THRU TRAFFIC
CONST-3A	60X48	20.00						FINE SIGN
CONST-3X	56X12	4.67						SPEEDING/PASSING (PLATE)
MISCELLANEOUS SIGNS								
CONST-5	48X36	12.00						POINT OF PRESENCE
CONST-5	96X48	32.00						POINT OF PRESENCE
CONST-7	48X24	8.00						RATE OUR WORK ZONE
CONST-7	72X36	18.00						RATE OUR WORK ZONE
CONST-8	96X48	32.00	2	64			56B	CLOSED 4 MILES AHEAD
SPECIAL	36X78	19.50	7	136.5			51A	DETOUR WEST RTE Z STRAIGHT ARROW
SPECIAL	36X78	19.50	2	39			51B	DETOUR WEST RTE Z LT TURN ARROW
SPECIAL	36X78	19.50	3	58.5			51C	DETOUR WEST RTE Z RT TURN ARROW
SPECIAL	36X78	19.50	3	58.5			51D	DETOUR WEST RTE Z LT TURN ARROW
SPECIAL	36X78	19.50	3	58.5			51E	DETOUR WEST RTE Z RT TURN ARROW
SPECIAL	36X78	19.50					51F	DETOUR WEST RTE Z RT TURN ARROW
SPECIAL	36X78	19.50	6	117			53A	DETOUR EAST RTE Z STRAIGHT ARROW
SPECIAL	36X78	19.50	2	39			53B	DETOUR EAST RTE Z LT TURN ARROW
SPECIAL	36X78	19.50	2	39			53C	DETOUR EAST RTE Z RT TURN ARROW
SPECIAL	36X78	19.50	2	39			53D	DETOUR EAST RTE Z LT TURN ARROW
SPECIAL	36X78	19.50	2	39			53E	DETOUR EAST RTE Z RT TURN ARROW
SPECIAL	36X78	19.50					53F	DETOUR EAST RTE Z RT TURN ARROW

616-10.05 CONSTRUCTION SIGNS	TOTAL	1039
616-10.10 RELOCATED SIGNS	TOTAL	0

ITEM NUMBER	TOTAL QTY	DESCRIPTION
6122008		IMPACT ATTENUATOR 40 MPH (SAND BARRELS)
6122009		IMPACT ATTENUATOR 45 MPH (SAND BARRELS)
6122010		IMPACT ATTENUATOR 50 MPH (SAND BARRELS)
6122012		IMPACT ATTENUATOR 55 MPH (SAND BARRELS)
6122014		IMPACT ATTENUATOR 60 MPH (SAND BARRELS)
6122017		IMPACT ATTENUATOR 65 MPH (SAND BARRELS)
6122019		IMPACT ATTENUATOR 70 MPH (SAND BARRELS)
6122020		REPLACEMENT SAND BARREL
6122030		IMPACT ATTENUATOR (RELOCATION)
6123000A		TRUCK OR TRAILER MOUNTED ATTENUATOR (TMA)
6161008	4	ADVANCED WARNING RAIL SYSTEM
6161012	8	BUOYS (BOATS KEEP OUT)
6161013	6	BUOYS (NO WAKE)
6161014	4	SPECIAL SIGN ASSEMBLY (BOATS KEEP OUT)
6161025	26	CHANNELIZER (TRIM LINE)
6161030	12	TYPE III MOVEABLE BARRICADE
6161033		DIRECTION INDICATOR BARRICADE
6161040		FLASHING ARROW PANEL
6161047		TYPE III OBJECT MARKER
6161055		SEQUENTIAL FLASHING WARNING LIGHT
6161070		TUBULAR MARKER
6161095		RADAR SPEED ADVISORY SYSTEM
6161096	4	CHANGEABLE MESSAGE SIGN, COMMISSION FURNISHED/RETAINED
6161098A		CHANGEABLE MESSAGE SIGN W/O COMM. INTERFACE - CONTRACTOR FURNISHED/RETAINED
6161099		CHANGEABLE MESSAGE SIGN WITH COMM. INTERFACE - CONTRACTOR FURNISHED/RETAINED
6162000A		WORK ZONE TRAFFIC SIGNAL SYSTEM
6162002		TEMPORARY LONG-TERM RUMBLE STRIPS
6173600D		TEMPORARY TRAFFIC BARRIER CONTRACTOR FURNISHED/RETAINED
6173602B		TEMPORARY TRAFFIC BARRIER CONTRACTOR FURNISHED/COMMISSION RETAINED
6174000A		TEMP. TRAFFIC BARRIER HEIGHT TRANSITION
6175010A		RELOCATING TEMPORARY TRAFFIC BARRIER
6176000B		TEMPORARY TRAFFIC BARRIER COMMISSION FURNISHED/RETAINED
6177000B		TEMP. TRAFFIC BARRIER HEIGHT TRANSITION COMMISSION FURNISHED/RETAINED
6208064A		TEMPORARY RAISED PAVEMENT MARKER
9029400		TEMPORARY TRAFFIC SIGNALS
9029401		TEMPORARY TRAFFIC SIGNALS AND LIGHTING

SUMMARY OF QUANTITIES
SHEET 3 OF 3

STATE OF MISSOURI
MICHAEL WAYNE DUSENBERG
NUMBER E-26546
PROFESSIONAL ENGINEER
THIS SHEET HAS BEEN SIGNED, SEALED AND DATED ELECTRONICALLY.

DATE PREPARED 3/8/2024
ROUTE Z | STATE MO
DISTRICT KC | SHEET NO. 3
COUNTY PLATTE
JOB NO. J4S3454
CONTRACT ID.
PROJECT NO.
BRIDGE NO. A9373

DESCRIPTION	DATE

MISSOURI HIGHWAYS AND TRANSPORTATION COMMISSION
MoDOT
105 WEST CAPITOL
JEFFERSON CITY, MO 65102
1-888-ASK-MODOT (1-888-275-6636)

Bartlett & West
601 MONROE ST. SUITE 201 - JEFFERSON CITY, MO 65101
PHONE 573-634-3181
CERTIFICATE OF AUTHORITY NO. 000167 - ENGINEERING
WWW.BARTLETTWEST.COM

IF A SEAL IS PRESENT ON THIS SHEET IT HAS BEEN ELECTRONICALLY SEALED AND DATED.

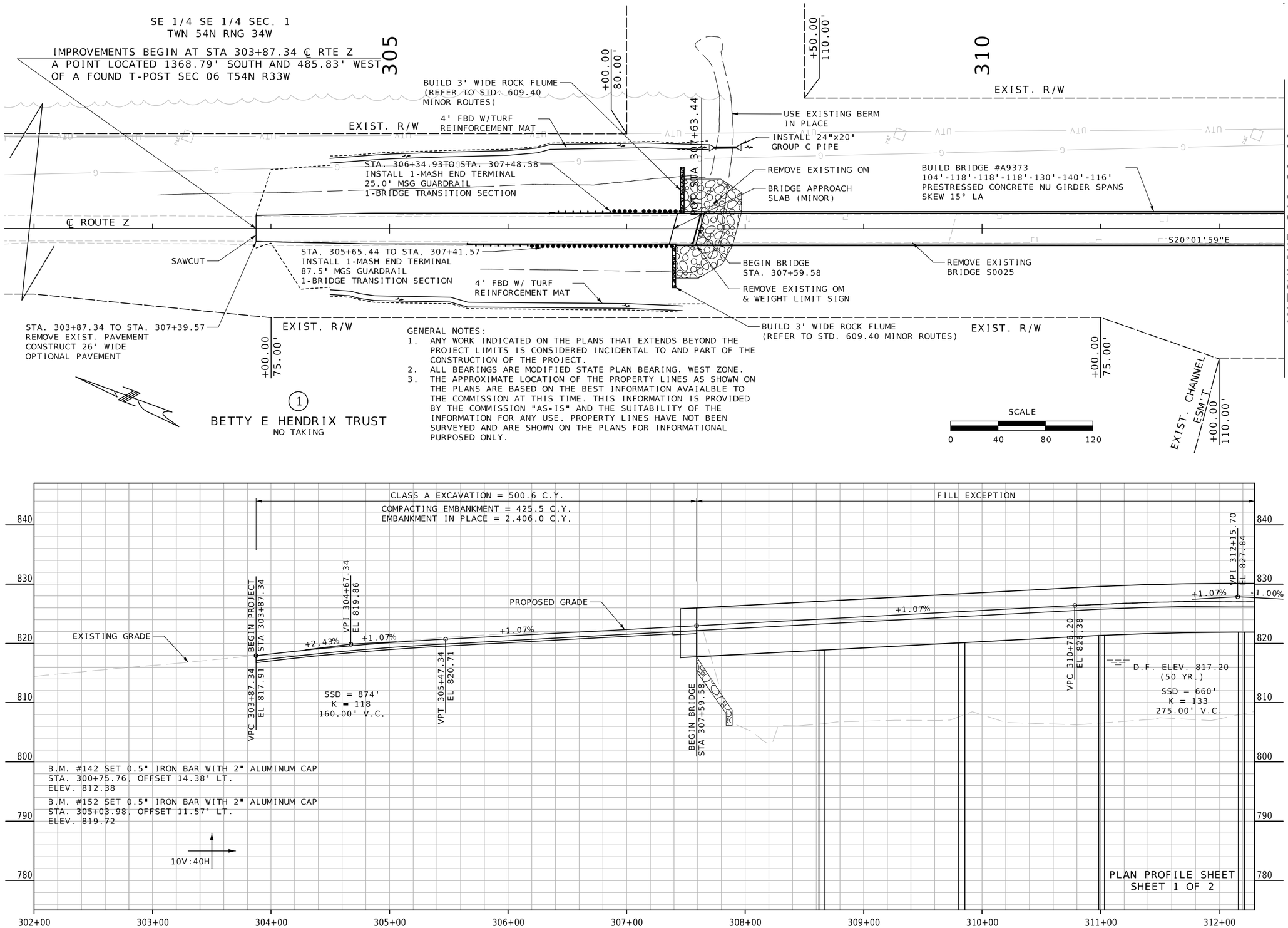

GENERAL NOTES:

1. ANY WORK INDICATED ON THE PLANS THAT EXTENDS BEYOND THE PROJECT LIMITS IS CONSIDERED INCIDENTAL TO AND PART OF THE CONSTRUCTION OF THE PROJECT.
2. ALL BEARINGS ARE MODIFIED STATE PLAN BEARING. WEST ZONE.
3. THE APPROXIMATE LOCATION OF THE PROPERTY LINES AS SHOWN ON THE PLANS ARE BASED ON THE BEST INFORMATION AVAIALBLE TO THE COMMISSION AT THIS TIME. THIS INFORMATION IS PROVIDED BY THE COMMISSION "AS-IS" AND THE SUITABILITY OF THE INFORMATION FOR ANY USE. PROPERTY LINES HAVE NOT BEEN SURVEYED AND ARE SHOWN ON THE PLANS FOR INFORMATIONAL PURPOSED ONLY.

STATE OF MISSOURI
MICHAEL WAYNE DUSENBERG
NUMBER E-26546
PROFESSIONAL ENGINEER
THIS SHEET HAS BEEN SIGNED, SEALED AND DATED ELECTRONICALLY.

DATE PREPARED	3/15/2024
ROUTE	Z
STATE	MO
DISTRICT	KC
SHEET NO.	4
COUNTY	PLATTE
JOB NO.	J4S3454
CONTRACT ID.	
PROJECT NO.	
BRIDGE NO.	A9373

DATE	DESCRIPTION

IF A SEAL IS PRESENT ON THIS SHEET IT HAS BEEN ELECTRONICALLY SEALED AND DATED.

MISSOURI HIGHWAYS AND TRANSPORTATION COMMISSION
105 WEST CAPITOL
JEFFERSON CITY, MO 65102
1-888-ASK-MODOT (1-888-275-6636)

Bartlett & West
601 MONROE ST, SUITE 201 - JEFFERSON CITY, MO 65101
PHONE 573-634-3181
CERTIFICATE OF AUTHORITY NO. 000167 - ENGINEERING
WWW.BARTLETTWEST.COM

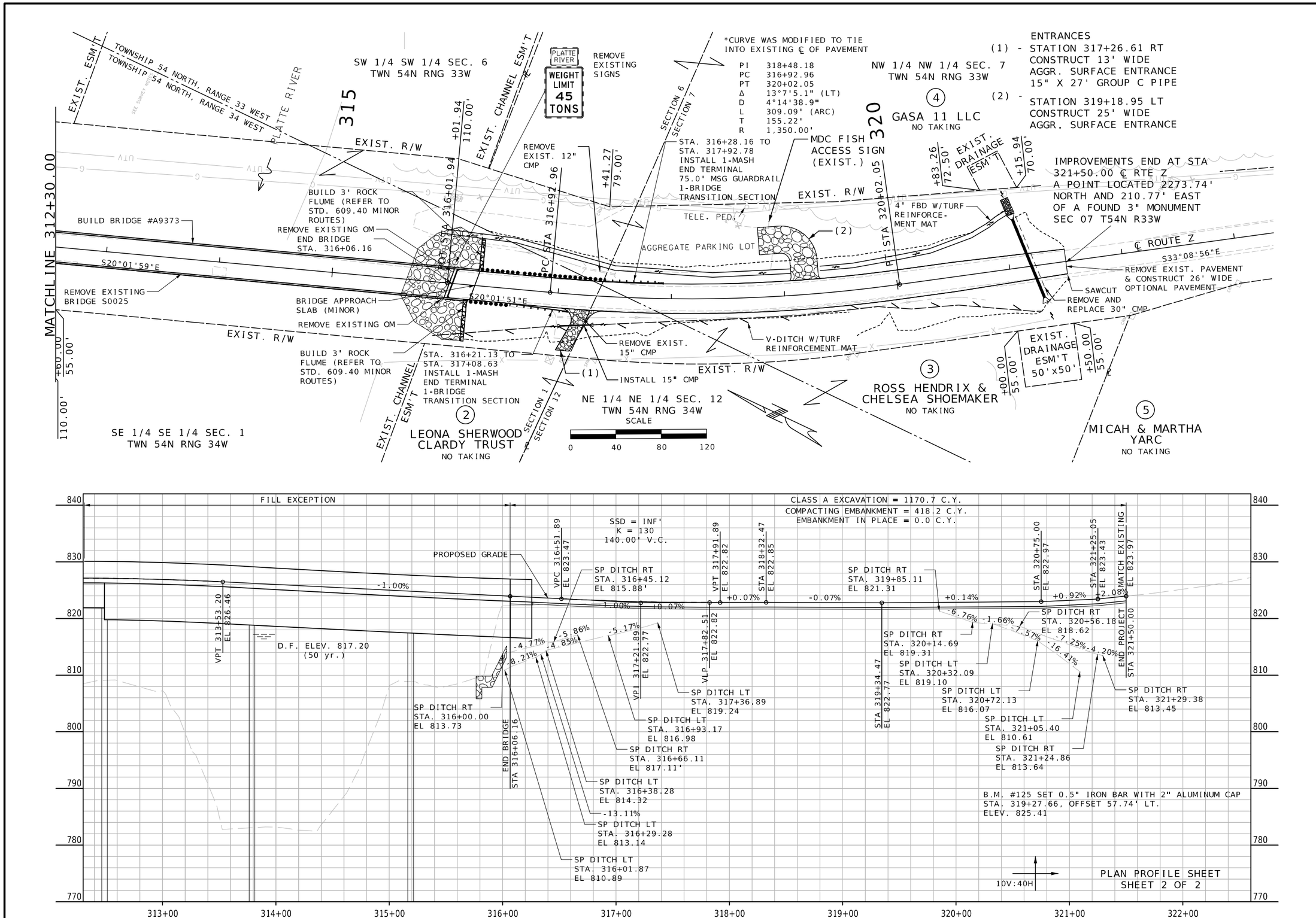

STATE OF MISSOURI
MICHAEL WAYNE DUSENBERG
NUMBER E-26546
PROFESSIONAL ENGINEER
THIS SHEET HAS BEEN SIGNED, SEALED AND DATED ELECTRONICALLY.

DATE PREPARED	
3/15/2024	
ROUTE	STATE
Z	MO
DISTRICT	SHEET NO.
KC	5
COUNTY	
PLATTE	
JOB NO.	
J4S3454	
CONTRACT ID.	
PROJECT NO.	
BRIDGE NO.	
A9373	

DATE	DESCRIPTION

IF A SEAL IS PRESENT ON THIS SHEET IT HAS BEEN ELECTRONICALLY SEALED AND DATED.

MISSOURI HIGHWAYS AND TRANSPORTATION COMMISSION
105 WEST CAPITOL
JEFFERSON CITY, MO 65102
1-888-ASK-MODOT (1-888-275-6636)

Bartlett & West
601 MONROE ST, SUITE 201 - JEFFERSON CITY, MO 65101
PHONE 573-634-3181
CERTIFICATE OF AUTHORITY NO. 000167 - ENGINEERING
WWW.BARTLETTWEST.COM

REFERENCE POINT 142
SET 0.5" IRON BAR
WITH 2" ALUMINIMUM CAP
STA. 300+75.76
OFF. 14.38' LT.

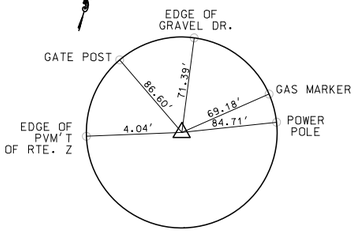

MODIFIED STATE PLAN
N: 1220465.622
E: 2744106.651
ELEV: 812.38

REFERENCE POINT 152
SET 0.5" IRON BAR
WITH 2" ALUMINIMUM CAP
STA. 305+03.98
OFF. 11.57' LT.

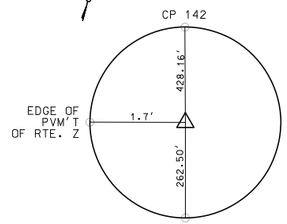

NW CORNER OF
BRIDGE HUBGUARD
MODIFIED STATE PLAN
N: 1220062.256
E: 2744250.464
ELEV: 819.72

REFERENCE POINT 125
SET 0.5" IRON BAR
WITH 2" ALUMINIMUM CAP
STA. 319+27.66
OFF. 57.74' LT.

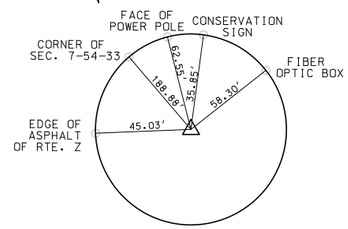

MODIFIED STATE PLAN
N: 1218758.347
E: 2744793.573
ELEV: 825.41

SET 0.5" IRON BAR
WITH 2" ALUMINUM CAP
WEST 45.03' TO EAST EDGE
OF ASPHALT OF RTE. Z

MODIFIED STATE PLANE COORDINATES
NAD-83 HORIZONTAL DATUM
NAVD-88 VERTICAL DATUM
WEST ZONE
PROJECTION FACTOR: 1.0000878
GRID FACTOR: 0.999909

REFERENCE POINTS
SHEET 1 OF 1

STATE OF MISSOURI
MICHAEL WAYNE DUSENBERG
NUMBER E-26546
PROFESSIONAL ENGINEER
THIS SHEET HAS BEEN SIGNED, SEALED AND DATED ELECTRONICALLY.

DATE PREPARED
3/1/2024

ROUTE	STATE
Z	MO
DISTRICT	SHEET NO.
KC	6

COUNTY
PLATTE

JOB NO.
J4S3454

CONTRACT ID.

PROJECT NO.

BRIDGE NO.
A9373

DESCRIPTION	DATE

MISSOURI HIGHWAYS AND TRANSPORTATION COMMISSION
MoDOT
105 WEST CAPITOL
JEFFERSON CITY, MO 65102
1-888-ASK-MODOT (1-888-275-6636)

Bartlett & West
601 MONROE ST. SUITE 201 - JEFFERSON CITY, MO 65101
PHONE 573-634-3181
CERTIFICATE OF AUTHORITY NO. 000167 - ENGINEERING
WWW.BARTLETTWEST.COM

IF A SEAL IS PRESENT ON THIS SHEET IT HAS BEEN ELECTRONICALLY SEALED AND DATED.

ALL PROJECT COORDINATES HAVE BEEN PROJECTED FROM THE MISSOURI STATE PLANE COORDINATE (SPC) SYSTEM OF 1983 USING AN AVERAGE PROJECT PROJECTION (GRID TO GROUND) FACTOR. TO GET BACK TO STATE PLANE COORDINATES, MULTIPY THE PROJECT COORDINATES BY THE AVERAGE GRID FACTOR AS SHOWN IN THE "REFERENCE CONTROL INFORMATION" PORTION OF THIS TABLE.

PROJECT COORDINATE INFORMATION

COORDINATE SYSTEM	MISSOURI STATE PLAN
HORIZONTAL DATUM	NAD83
VERTICAL DATUM	NAVD88
GEOID MODEL	GEOID 12B
ELEVATIONS DETERMINED BY	180 EPOCH DOUBLE OCCUPANCY RTK SURVEY OBSERVATIONS, UTILIZING THE MODOT GLOBAL POSITIONING SYSTEM REFERENCE STATION NETWORK.
PROJECT PROJECTION FACTOR	1.0000878

REFERENCE CONTROL INFORMATION

COORDINATE SYSTEM	MISSOURI STATE PLAN 1983
CONTROL STATION	PL-61
DESIGNATION	XX
CORS_ID	XX
PID	165061
LATITUDE	39.311
LONGITUDE	94.394
NORTHING (M)	372244
EASTING (M)	836213
ZONE	West
PROJECT AVERAGE GRID FACTOR	0.999909

EXAMPLE OF PROJECT COORDINATE TO S.P.C.

PROJECT NORTHING X AVERAGE GRID FACTOR
= STATE PLANE NORTHING
PROJECT EASTING X AVERAGE GRID FACTOR
= STATE PLANE EASTING

EXAMPLE: CONTROL POINT #___
N _____.____ X _._____ = N _____.___
E _____.____ X _._____ = E _____.___

LINEAR UNIT CONVERSION

1 METER = 3.280833333 US SURVEY FEET (USFT)

COORDINATE POINT LISTING

SHEET NO	STATION	LOCATION	OFFSET (USFT)	MODIFIED STATE PLANE (GROUND) NORTHING (US SURVEY FT)	EASTING (US SURVEY FT)	ELEVATION (US SURVEY FT)	DESCRIPTION	GPK POINT ID
PROJECT CONTROL POINTS								
N/A	300+75.76	LT	14.38	1220465.622	2744106.651	812.38	SET 0.5" IRON BAR WITH 2" ALUMINIMUM CAP	142
N/A	305+03.98	LT	11.57	1220062.256	2744250.464	819.72	SET 0.5" IRON BAR WITH 2" ALUMINIMUM CAP	152
N/A	319+27.66	LT	57.74	1218758.347	2744793.573	825.41	SET 0.5" IRON BAR WITH 2" ALUMINIMUM CAP	125
ALIGNMENTS								
N/A	293+43.50			1221148.800	2743842.700		POINT OF INTERSECTION	P.I.
1	303+87.34			1220167.904	2744199.703		BEGINNING OF PROJECT	B.P.
1	307+63.44			1219814.490	2744328.330		POINT OF TANGENCY	P.T.
2	316+01.94			1219026.720	2744615.570		POINT OF TANGENCY	P.T.
2	316+92.96			1218941.207	2744646.746		POINT OF CURVATURE	P.C.
2	320+02.05			1218665.414	2744784.792		POINT OF TANGENCY	P.T.
2	321+50.00			1218541.539	2744865.696		END OF PROJECT	E.P.
N/A	325+17.50			1218233.850	2745066.650		POINT OF CURVATURE	P.C.
N/A	328+00.83			1217992.900	2745215.650		POINT OF INTERSECTION	P.I.

COORDINATE POINT SHEET
SHEET 1 OF 1

STATE OF MISSOURI
MICHAEL WAYNE DUSENBERG
NUMBER E-26546
PROFESSIONAL ENGINEER
THIS SHEET HAS BEEN SIGNED, SEALED AND DATED ELECTRONICALLY.

DATE PREPARED 3/1/2024
ROUTE Z | STATE MO
DISTRICT KC | SHEET NO. 7
COUNTY PLATTE
JOB NO. J4S3454
CONTRACT ID.
PROJECT NO.
BRIDGE NO. A9373

DESCRIPTION	DATE

IF A SEAL IS PRESENT ON THIS SHEET IT HAS BEEN ELECTRONICALLY SEALED AND DATED.

MISSOURI HIGHWAYS AND TRANSPORTATION COMMISSION
MoDOT
105 WEST CAPITOL
JEFFERSON CITY, MO 65102
1-888-ASK-MODOT (1-888-275-6636)

Bartlett & West
601 MONROE ST. SUITE 201 - JEFFERSON CITY, MO 65101
PHONE 573-634-3181
CERTIFICATE OF AUTHORITY NO. 000167 - ENGINEERING
WWW.BARTLETTWEST.COM

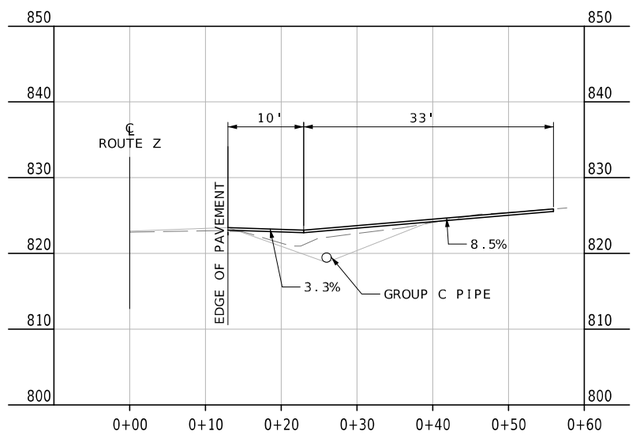

STA. 317+26.61 RT
AGGREGATE SURFACE
13' WIDE TOP
15" X 27' GROUP C PIPE

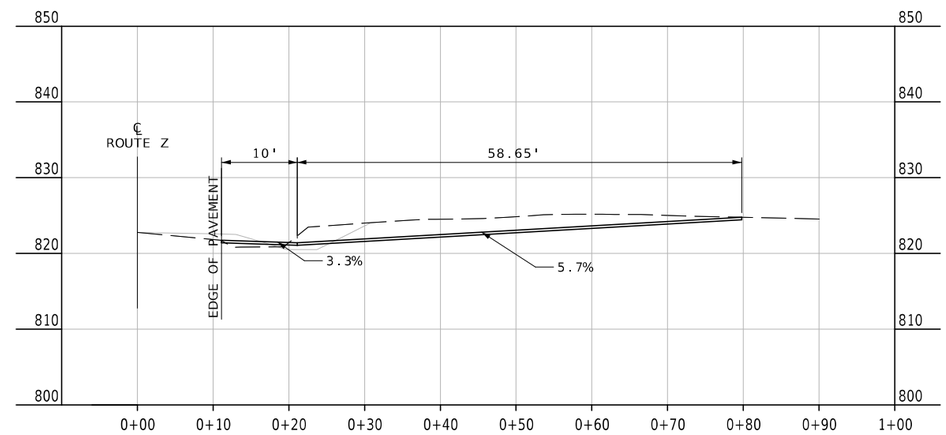

STA. 319+18.95 LT
AGGREGATE SURFACE
25' WIDE TOP

SPECIAL SHEET
DRIVE PROFILES
SHEET 1 OF 2

STATE OF MISSOURI
MICHAEL WAYNE DUSENBERG
NUMBER E-26546
PROFESSIONAL ENGINEER
THIS SHEET HAS BEEN SIGNED, SEALED AND DATED ELECTRONICALLY.

DATE PREPARED	3/1/2024
ROUTE	Z
STATE	MO
DISTRICT	KC
SHEET NO.	8
COUNTY	PLATTE
JOB NO.	J4S3454
CONTRACT ID.	
PROJECT NO.	
BRIDGE NO.	A9373

DATE	DESCRIPTION

IF A SEAL IS PRESENT ON THIS SHEET IT HAS BEEN ELECTRONICALLY SEALED AND DATED.

MISSOURI HIGHWAYS AND TRANSPORTATION COMMISSION
MoDOT
105 WEST CAPITOL
JEFFERSON CITY, MO 65102
1-888-ASK-MODOT (1-888-275-6636)

Bartlett & West
601 MONROE ST. SUITE 201 - JEFFERSON CITY, MO 65101
PHONE 573-634-3181
CERTIFICATE OF AUTHORITY NO. 000167 - ENGINEERING
WWW.BARTLETTWEST.COM

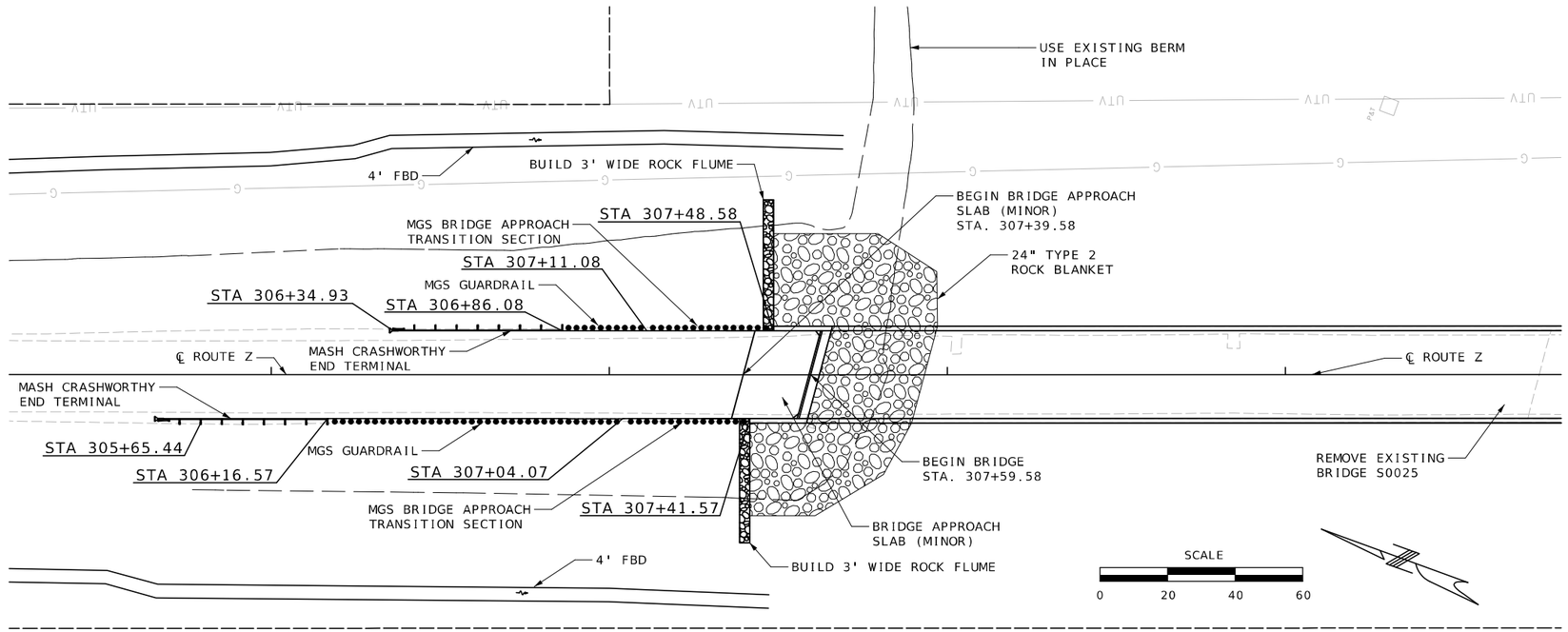

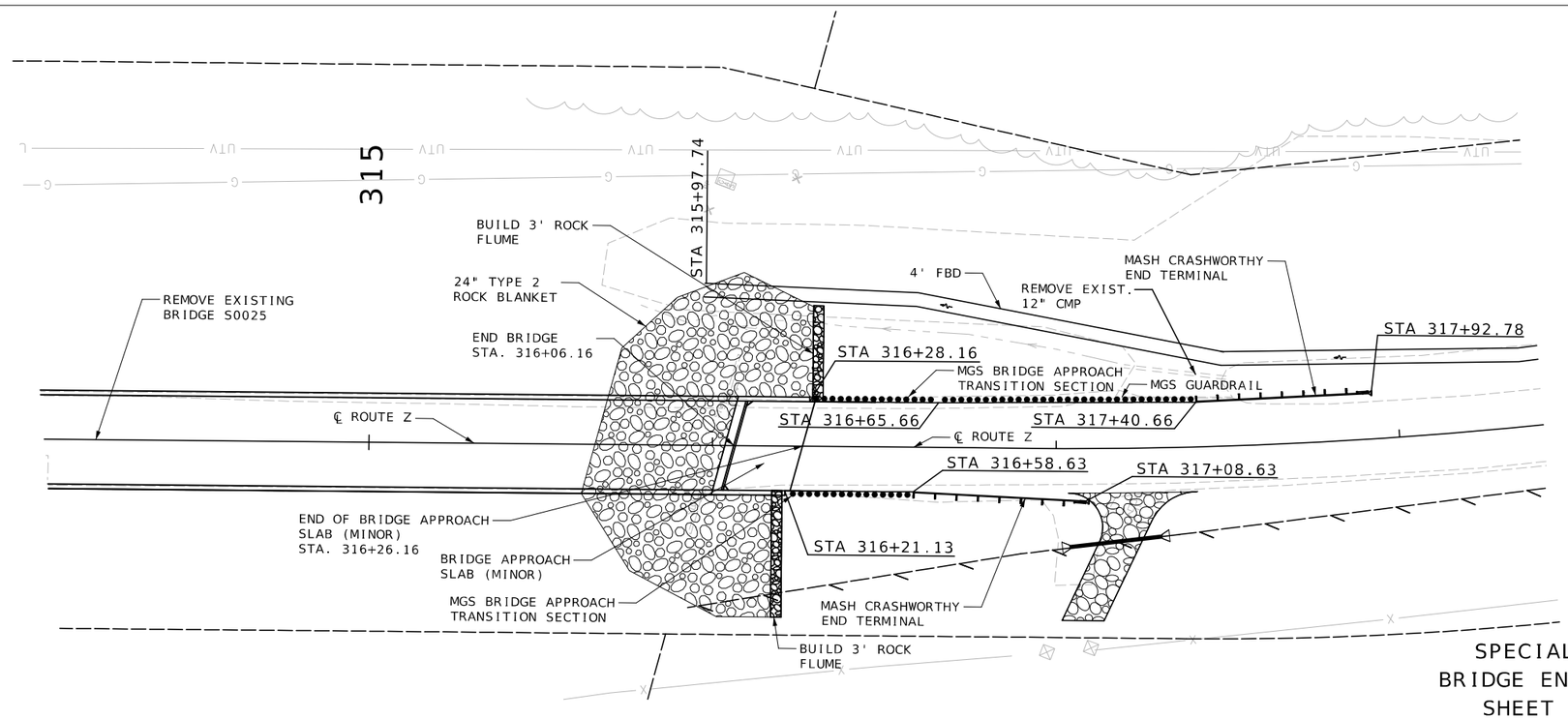

SPECIAL SHEET
BRIDGE END DETAILS
SHEET 2 OF 2

STATE OF MISSOURI
MICHAEL WAYNE DUSENBERG
NUMBER E-26546
PROFESSIONAL ENGINEER
THIS SHEET HAS BEEN SIGNED, SEALED AND DATED ELECTRONICALLY.

DATE PREPARED	3/15/2024
ROUTE	Z
STATE	MO
DISTRICT	KC
SHEET NO.	9
COUNTY	PLATTE
JOB NO.	J4S3454
CONTRACT ID.	
PROJECT NO.	
BRIDGE NO.	A9373

DATE	DESCRIPTION

IF A SEAL IS PRESENT ON THIS SHEET IT HAS BEEN ELECTRONICALLY SEALED AND DATED.

MISSOURI HIGHWAYS AND TRANSPORTATION COMMISSION
MoDOT
105 WEST CAPITOL
JEFFERSON CITY, MO 65102
1-888-ASK-MODOT (1-888-275-6636)

Bartlett & West
601 MONROE ST. SUITE 201 - JEFFERSON CITY, MO 65101
PHONE 573-634-3181
CERTIFICATE OF AUTHORITY NO. 000167 - ENGINEERING
WWW.BARTLETTWEST.COM

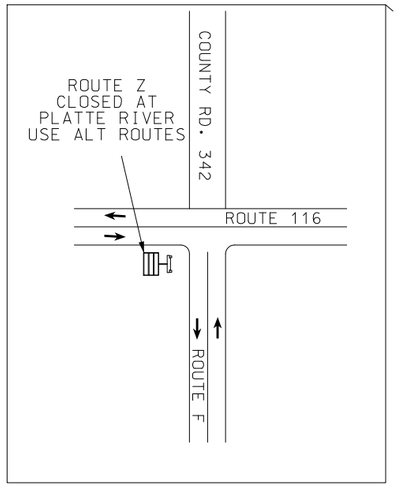

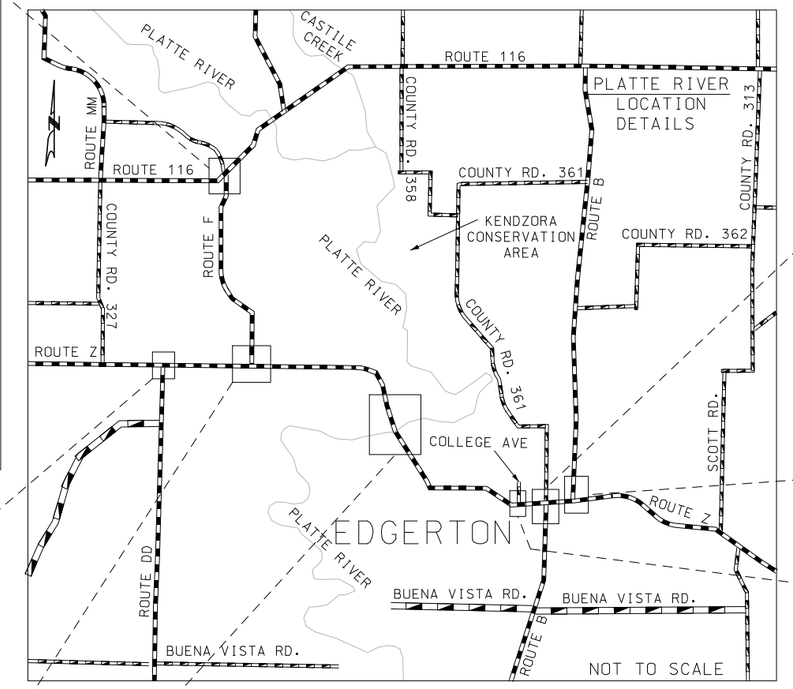

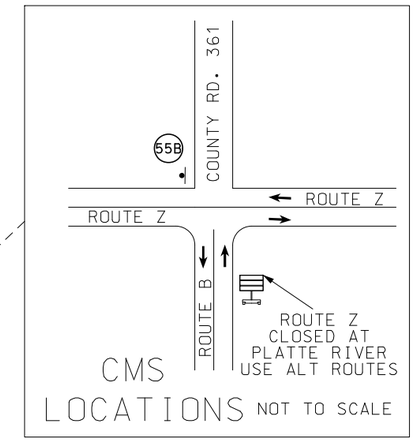

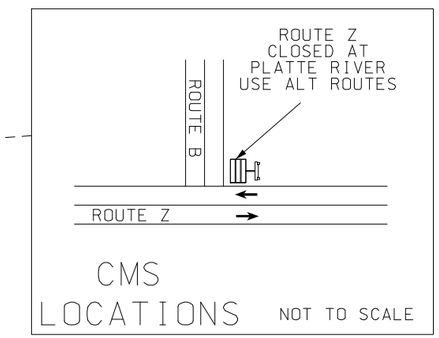

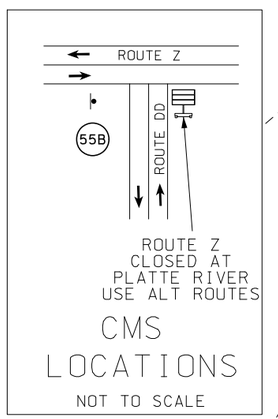

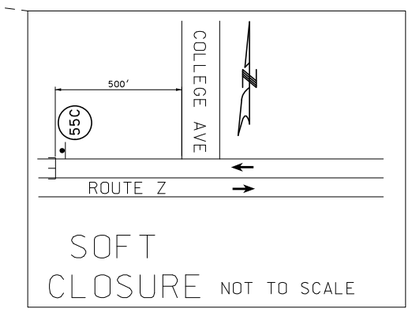

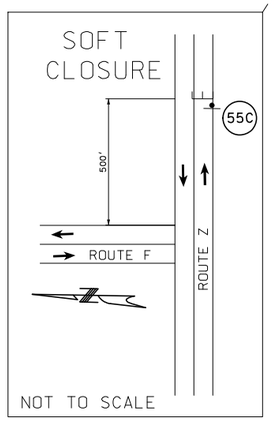

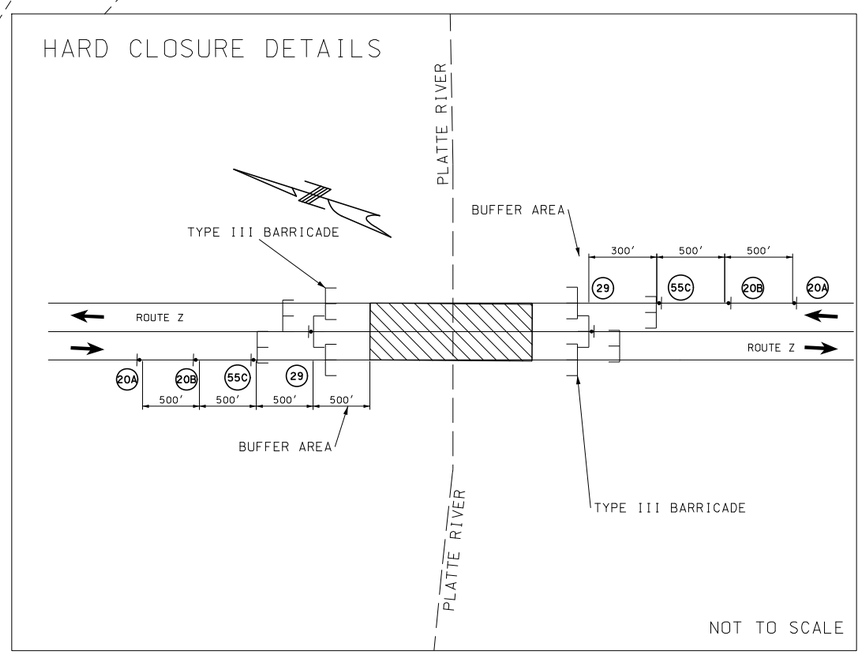

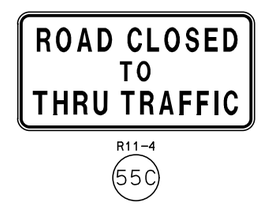

TRAFFIC CONTROL LEGEND

- SIGN (SINGLE SIDED)
- TYPE III MOVEABLE BARRICADE
- WORK AREA
- CHANGEABLE MESSAGE SIGN

GENERAL NOTES:

1) SIGN LOCATIONS TO BE APPROVED BY ENGINEER.
2) DISTANCE MAY BE ADJUSTED ACCORDING TO FIELD CONDITIONS WITH PERMISSION OF THE ENGINEER.
3) NO DIRECT PAYMENT WILL BE MADE FOR RELOCATION OF TTC SIGNS AND DEVICES.
4) ANY EXISTING SIGNS THAT CONFLICT WITH TEMPORARY TRAFFIC CONTROL SHALL BE COVERED OR REMOVED.
5) ALL TRAFFIC CONTROL ITEMS WHICH ARE NOT INCLUDED IN THE PAY ITEMS ARE TO BE CONSIDERED INCIDENTAL.
6) MAINTAIN ACCESS TO ALL ENTRANCES AT ALL TIMES.

TRAFFIC CONTROL PLAN
SHEET 1 OF 5

NOT TO SCALE

STATE OF MISSOURI
MICHAEL WAYNE DUSENBERG
NUMBER E-26546
PROFESSIONAL ENGINEER
THIS SHEET HAS BEEN SIGNED, SEALED AND DATED ELECTRONICALLY.

IF A SEAL IS PRESENT ON THIS SHEET IT HAS BEEN ELECTRONICALLY SEALED AND DATED.

DATE	DESCRIPTION

DATE PREPARED: 3/1/2024
ROUTE: Z
STATE: MO
DISTRICT: KC
SHEET NO.: 10
COUNTY: PLATTE
JOB NO.: J4S3454
CONTRACT ID.:
PROJECT NO.:
BRIDGE NO.: A9373

MISSOURI HIGHWAYS AND TRANSPORTATION COMMISSION
105 WEST CAPITOL
JEFFERSON CITY, MO 65102
1-888-ASK-MODOT (1-888-275-6636)

Bartlett & West
601 MONROE ST. SUITE 201 - JEFFERSON CITY, MO 65101
PHONE 573-634-3181
CERTIFICATE OF AUTHORITY NO. 000167 - ENGINEERING
WWW.BARTLETTWEST.COM

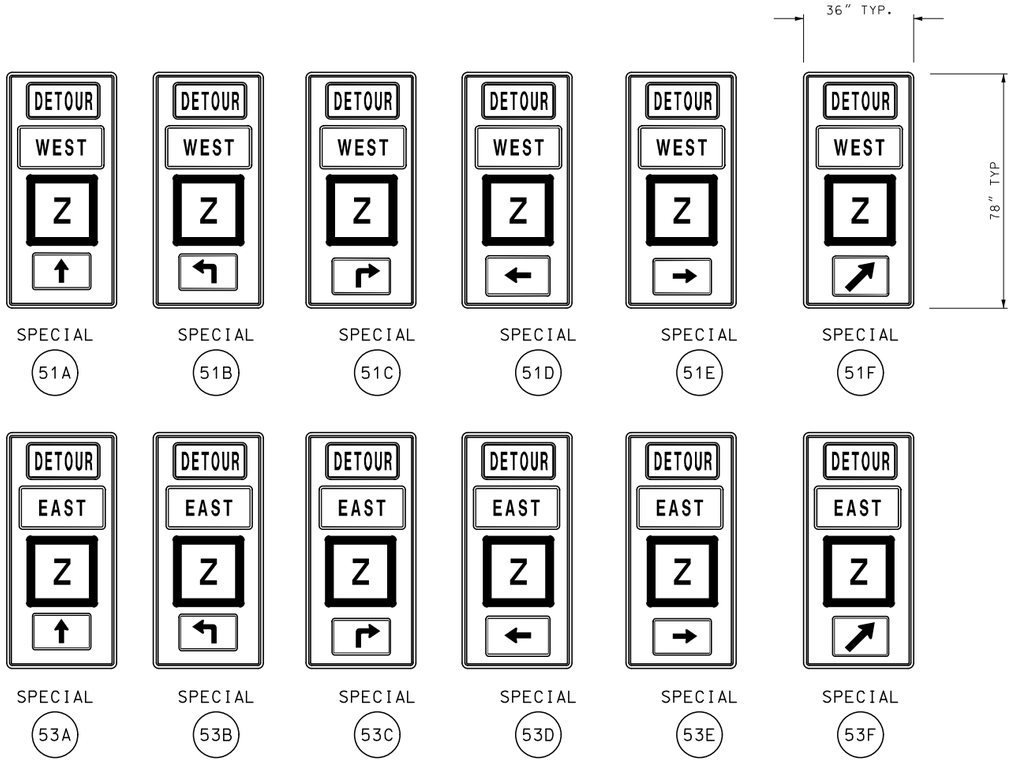

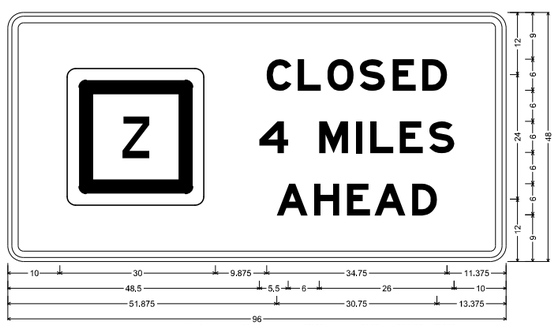

MO4-13-96 SHF-FLAT SHEET FLUORESCENT: 3.000" Radius, 1.250" Border, 0.750" Indent, Black on Orange;
[CLOSED] E Mod; [4 MILES] E Mod; [AHEAD] E Mod;
Table of letter and object lefts.

10.000	C 49.875	L 55.875	O 61.625	S 67.875	E 74.125	D 79.875
4 48.500	M 60.000	I 67.125	L 69.875	E 75.500	S 81.250	
A 51.875	H 59.000	E 65.375	A 70.625	D 77.875		

56B

TRAFFIC CONTROL LEGEND

SIGN (SINGLE SIDED)

WORK AREA

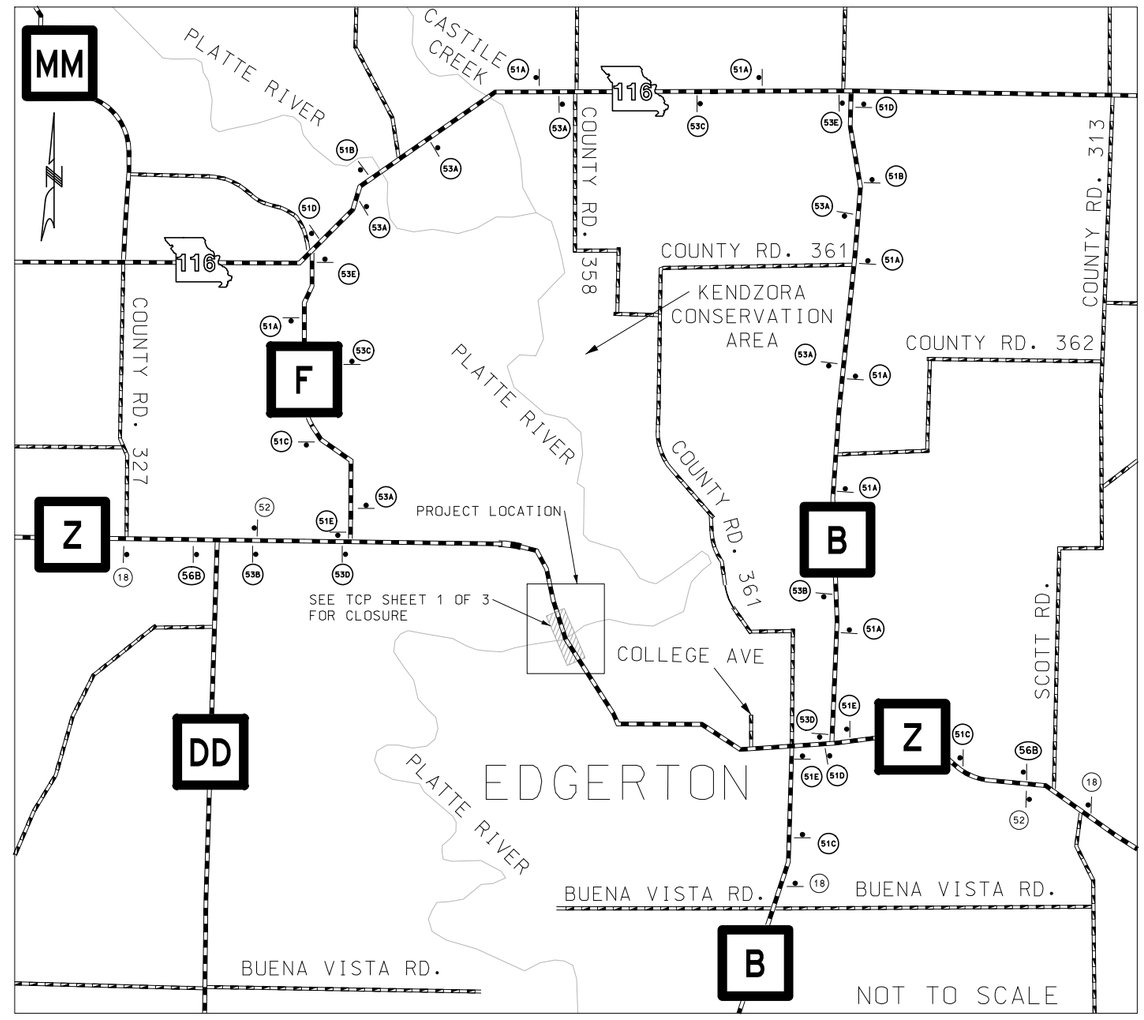

TYPICAL
TYPE III MOVEABLE BARRICADE

NOTES:
1.USE IN PLACE ALL SIGNS WHICH DO NOT CONFLICT WITH THIS PLAN. COVER AND/OR REMOVE CONFLICTING SIGNS. QUANTITY FOR #56 SIGNS ARE FOR A HOMOGENOUS PRODUCT PER SIGN. SUBSTITUTION OF SIGN BLANKS WITH BOLTED PLATES WILL BE ALLOWED FOR NO ADDITIONAL COMPENSATION.
2. 51E, 53E, 51D AND 53D DETOUR SIGNS ARE TO BE PLACED 500' BACK FROM THE INTERSECTION.
51C, 53C, 51B AND 53B ARE TO BE PLACED 1000' BACK FROM 51E, 53E, 51D AND 53D DETOUR SIGNS.
DETOUR SIGN 51A, AND 53A IS TO BE SPACED APPROXIMATELY 2 MILES APART.
ALL SPACING AND DISTANCES OF TRAFFIC CONTROL DEVICES ARE APPROXIMATE AND MAY BE REVISED AS APPROVED BY THE ENGINEER TO FIT FIELD CONDITIONS.
NO DIRECT PAY WILL BE MADE FOR RELOCATING, COVERING, UNCOVERING OR REMOVING SIGNS.

DRAWING NOT TO SCALE.

NOTES:
SIGN #29 SHALL BE INSTALLED ON THE BARRICADES OR SEPERATE SUPPORTS ADJACENT TO THE BARRICADES IN ACCORDANCE WITH STD PLAN 616.10.

TRAFFIC CONTROL PLAN
DETOUR SIGNING
SHEET 2 OF 5

STATE OF MISSOURI
MICHAEL WAYNE DUSENBERG
NUMBER E-26546
PROFESSIONAL ENGINEER
THIS SHEET HAS BEEN SIGNED, SEALED AND DATED ELECTRONICALLY.

DATE PREPARED 3/1/2024	
ROUTE Z	STATE MO
DISTRICT KC	SHEET NO. 11
COUNTY PLATTE	
JOB NO. J4S3454	
CONTRACT ID.	
PROJECT NO.	
BRIDGE NO. A9373	

DATE	DESCRIPTION

IF A SEAL IS PRESENT ON THIS SHEET IT HAS BEEN ELECTRONICALLY SEALED AND DATED.

MISSOURI HIGHWAYS AND TRANSPORTATION COMMISSION
105 WEST CAPITOL
JEFFERSON CITY, MO 65102
1-888-ASK-MODOT (1-888-275-6636)

Bartlett & West
601 MONROE ST. SUITE 201 - JEFFERSON CITY, MO 65101
PHONE 573-634-3181
CERTIFICATE OF AUTHORITY NO. 000167 - ENGINEERING
WWW.BARTLETTWEST.COM

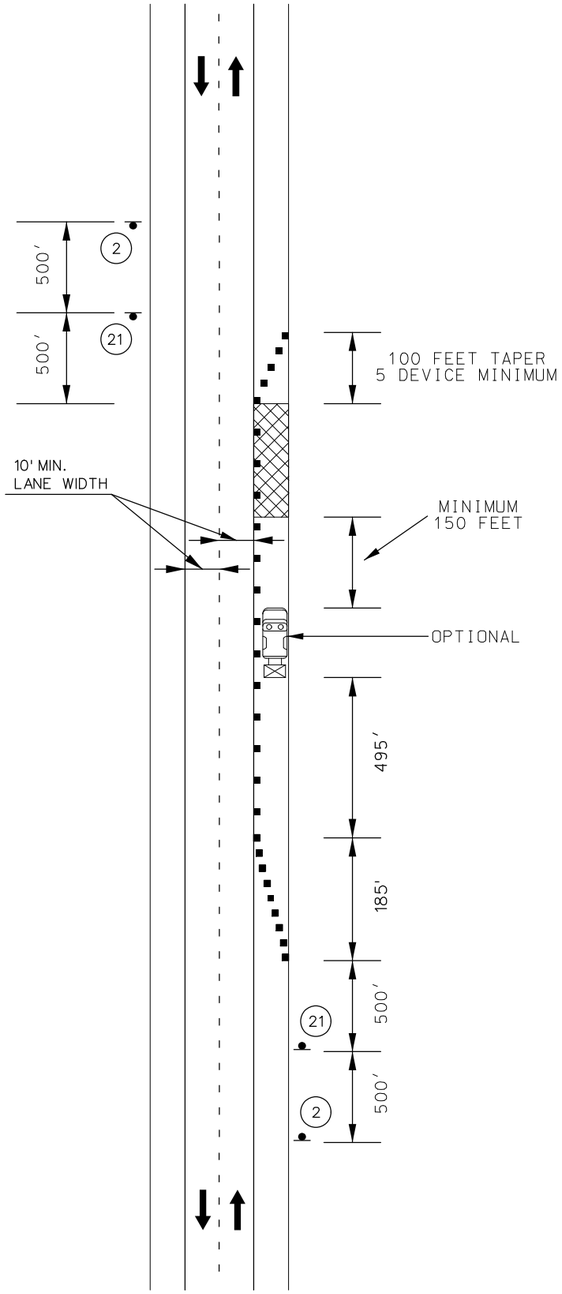

SHOULDER WORK ON TWO-LANE HIGHWAY
REDUCED LANE WIDTHS

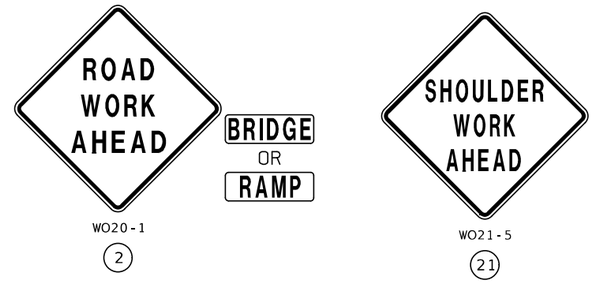

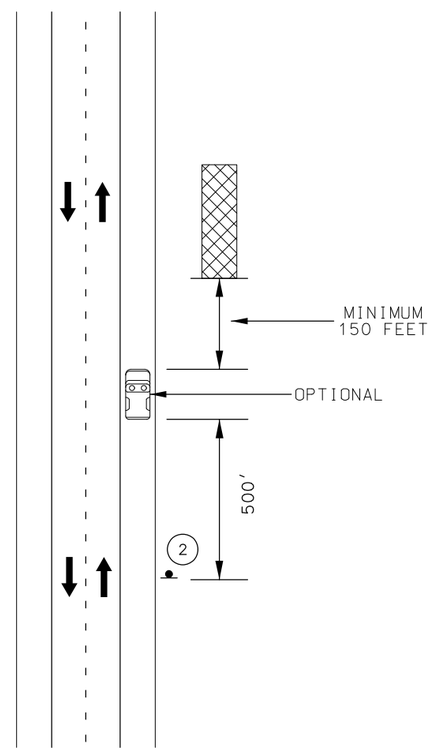

WORK BEYOND THE SHOULDER ON TWO-LANE HIGHWAY

TRAFFIC CONTROL LEGEND

- SIGN (SINGLE SIDED)
- CHANNELIZER
- PROTECTIVE VEHICLE
- TRUCK MOUNTED ATTENUATOR (TMA)
- WORK SPACE

NOTES:

FOR TWO-WAY UNDIVIDED HIGHWAYS WHERE NO SPEED REDUCTION IS REQUIRED ALL SIGNS OPPOSITE SHOULDER WORK SHALL BE OMITTED.

NO DIRECT PAYMENT WILL BE MADE FOR DRUM-LIKE, OR TRIM-LIKE CHANNELIZERS, OR FOR THE RELOCATION OF CHANNELIZERS AS SHOWN ON THE PLANS.

CHANNELIZING DEVICES LOCATED DOWNSTREAM OF THE ONE-LANE, TWO-WAY TAPER ARE OPTIONAL. THESE DEVICES SHOULD BE ELIMINATED WHEN THEIR USE WILL REDUCE THE USABLE LANE WIDTH. INCLUDING ANY ACCEPTABLE SHOULDERS, TO LESS THAN 10' OR WILL SIGNIFICANTLY AFFECT THE RESURFACING OPERATION.

WORK BEYOND SHOULDER IS ONLY APPLICABLE WHEN WORK IS WITHIN THE CLEAR ZONE

TRAFFIC CONTROL PLAN
SHOULDER WORK
SHEET 3 OF 5

STATE OF MISSOURI
MICHAEL WAYNE DUSENBERG
NUMBER E-26546
PROFESSIONAL ENGINEER
THIS SHEET HAS BEEN SIGNED, SEALED AND DATED ELECTRONICALLY.

DATE PREPARED	3/8/2024
ROUTE	Z
STATE	MO
DISTRICT	KC
SHEET NO.	12
COUNTY	PLATTE
JOB NO.	J4S3454
CONTRACT ID.	
PROJECT NO.	
BRIDGE NO.	A9373

DATE	DESCRIPTION

IF A SEAL IS PRESENT ON THIS SHEET IT HAS BEEN ELECTRONICALLY SEALED AND DATED.

MISSOURI HIGHWAYS AND TRANSPORTATION COMMISSION
MoDOT
105 WEST CAPITOL
JEFFERSON CITY, MO 65102
1-888-ASK-MODOT (1-888-275-6636)

Bartlett & West
601 MONROE ST. SUITE 201 - JEFFERSON CITY, MO 65101
PHONE 573-634-3181
CERTIFICATE OF AUTHORITY NO. 000167 - ENGINEERING
WWW.BARTLETTWEST.COM

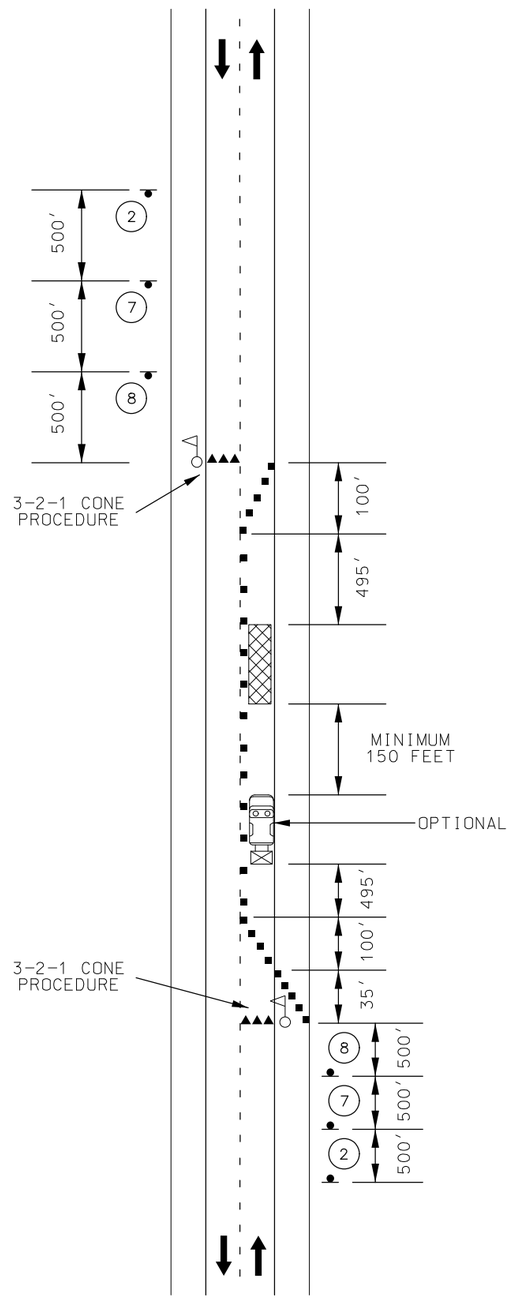

LANE CLOSURE ON A TWO-LANE ROAD USING FLAGGERS

TRAFFIC CONTROL LEGEND

- SIGN (SINGLE SIDED)
- FLAGGER
- CONE
- CHANNELIZER
- PROTECTIVE VEHICLE
- TRUCK MOUNTED ATTENUATOR (TMA)
- WORK SPACE

WO20-1

2

WO20-4

7

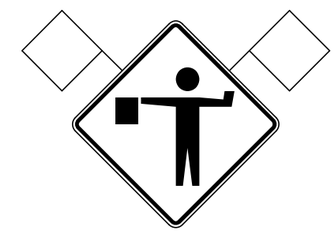

WO20-7a

8

NOTES:

THE FLAGGER SHALL FOLLOW THE PROCEDURES PROVIDED IN EPG 616.5.07 AND 616.05.08

DAYLIGHT FLAGGING OPERATIONS ONLY.

NO DIRECT PAYMENT WILL BE MADE FOR DRUM-LIKE, OR TRIM-LINE CHANNELIZERS. OR FOR THE RELOCATION OF CHANNELIZERS AS SHOWN ON THE PLANS.

TRAFFIC CONTROL PLAN
LANE CLOSURE
SHEET 4 OF 5

STATE OF MISSOURI
MICHAEL WAYNE DUSENBERG
NUMBER E-26546
PROFESSIONAL ENGINEER
THIS SHEET HAS BEEN SIGNED, SEALED AND DATED ELECTRONICALLY.

DATE PREPARED	3/8/2024
ROUTE Z	STATE MO
DISTRICT KC	SHEET NO. 13
COUNTY PLATTE	
JOB NO. J4S3454	
CONTRACT ID.	
PROJECT NO.	
BRIDGE NO. A9373	

DATE	DESCRIPTION

IF A SEAL IS PRESENT ON THIS SHEET IT HAS BEEN ELECTRONICALLY SEALED AND DATED.

MISSOURI HIGHWAYS AND TRANSPORTATION COMMISSION
MoDOT
105 WEST CAPITOL
JEFFERSON CITY, MO 65102
1-888-ASK-MODOT (1-888-275-6636)

Bartlett & West
601 MONROE ST. SUITE 201 - JEFFERSON CITY, MO 65101
PHONE 573-634-3181
CERTIFICATE OF AUTHORITY NO. 000167 - ENGINEERING
WWW.BARTLETTWEST.COM

NOTES:

BUOY LOCATIONS ARE BASED ON WATER LEVEL LIMITS ON THE DATE THE AERIAL PHOTOGRAPHY WAS TAKEN. THE WATER LEVELS WILL VARY THROUGH THE CONSTRUCTION TIME FRAME. THE DETAILS SHOWN ARE FOR BIDDING PURPOSES.

THE CONTRACTOR IS RESPONSIBLE FOR BUOY MAINTENANCE THROUGHOUT CONSTRUCTION.

THE CONTRACTOR IS RESPONSIBLE FOR DETERMINING ANTICIPATED WATER LEVELS DURING CONSTRUCTION.

NOTES:

EACH SIGN & BUOY SHALL BE ANCHORED TO THE BOTTOM OF STREAMBED.

BOATS KEEP OUT SIGN SHALL BE DOUBLE FACED.

EACH SPECIAL SIGN SHALL BE EQUIPPED WITH 2 FLASHING LIGHT UNITS WITH AMBER LENS. FLASHING LIGHT UNITS SHALL BE FURNISHED AND MAINTAINED BY THE CONTRACTOR.

ALL LETTERING TO BE BLACK IN COLOR IN BLOCK FORM.

FOR OTHER INFORMATION AND LOCATION OF SIGNS AND BUOYS SEE SPECIAL PROVISIONS.

✳ TO BE FURNISHED BY CONTRACTOR.

THE CONTRACTOR IS RESPONSIBLE FOR OBTANNING THE PERMIT FROM THE MISSOURI STATE WATER PATROL.

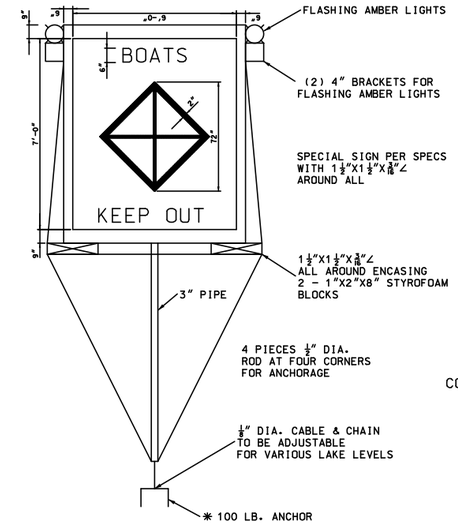

BOATS KEEP OUT SIGN

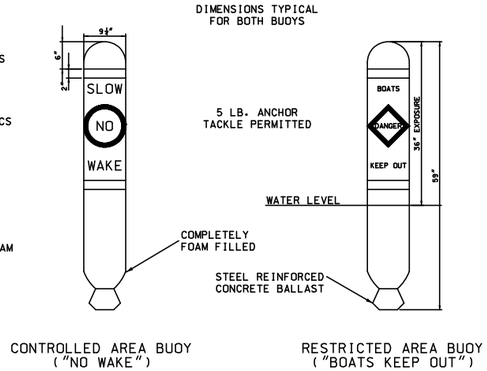

CONTROLLED AREA BUOY ("NO WAKE")

RESTRICTED AREA BUOY ("BOATS KEEP OUT")

COLOR: BACKGROUND - WHITE
LEGEND - BLACK
2" REFLECTIVE BAND AND SYMBOL - INTERNATIONAL ORANGE

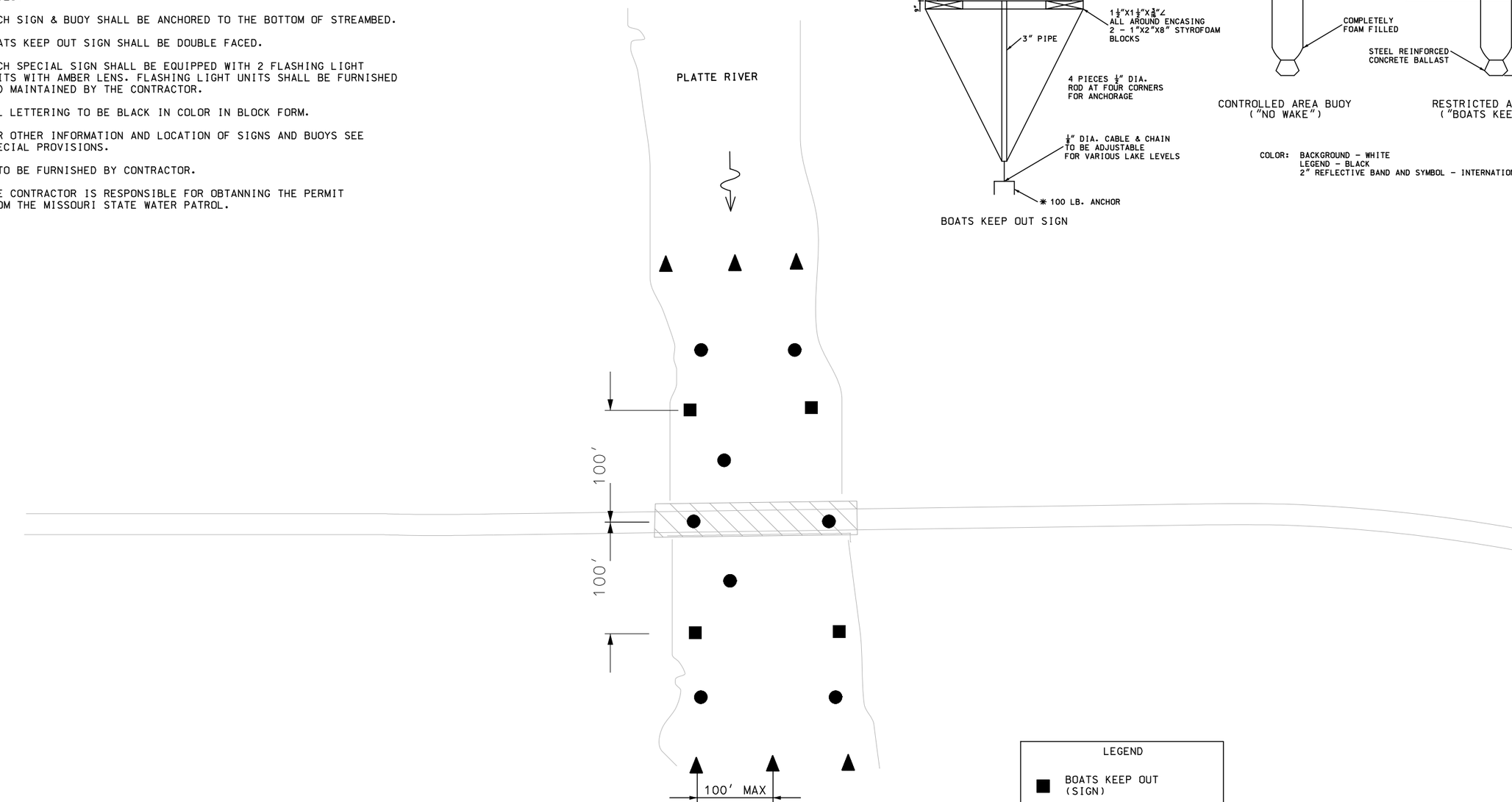

LEGEND

- ■ BOATS KEEP OUT (SIGN)
- ● BOATS KEEP OUT (RESTRICTED AREA BUOY)
- ▼ NO WAKE (CONTROLLED AREA BUOY)
- WORK AREA

SCALE

0 50 100 150

TRAFFIC CONTROL PLAN
NAVIGATIONAL TRAFFIC CONTROL
SHEET 5 OF 5

STATE OF MISSOURI
MICHAEL WAYNE DUSENBERG
NUMBER E-26546
PROFESSIONAL ENGINEER
THIS SHEET HAS BEEN SIGNED, SEALED AND DATED ELECTRONICALLY.

DATE PREPARED	
3/1/2024	
ROUTE	STATE
Z	MO
DISTRICT	SHEET NO.
KC	14
COUNTY	
PLATTE	
JOB NO.	
J4S3454	
CONTRACT ID.	
PROJECT NO.	
BRIDGE NO.	
A9373	

DATE	DESCRIPTION

IF A SEAL IS PRESENT ON THIS SHEET IT HAS BEEN ELECTRONICALLY SEALED AND DATED.

MISSOURI HIGHWAYS AND TRANSPORTATION COMMISSION
105 WEST CAPITOL
JEFFERSON CITY, MO 65102
1-888-ASK-MODOT (1-888-275-6636)

Bartlett & West
601 MONROE ST. SUITE 201 - JEFFERSON CITY, MO 65101
PHONE 573-634-3181
CERTIFICATE OF AUTHORITY NO. 000167 - ENGINEERING
WWW.BARTLETTWEST.COM

TEMPORARY EROSION CONTROL LEGEND

- (R) ROCK DITCH CHECK
- (S) SEDIMENT TRAP
- TEMPORARY BERM TYPE C
- SILT FENCE

SCALE

0 40 80 120

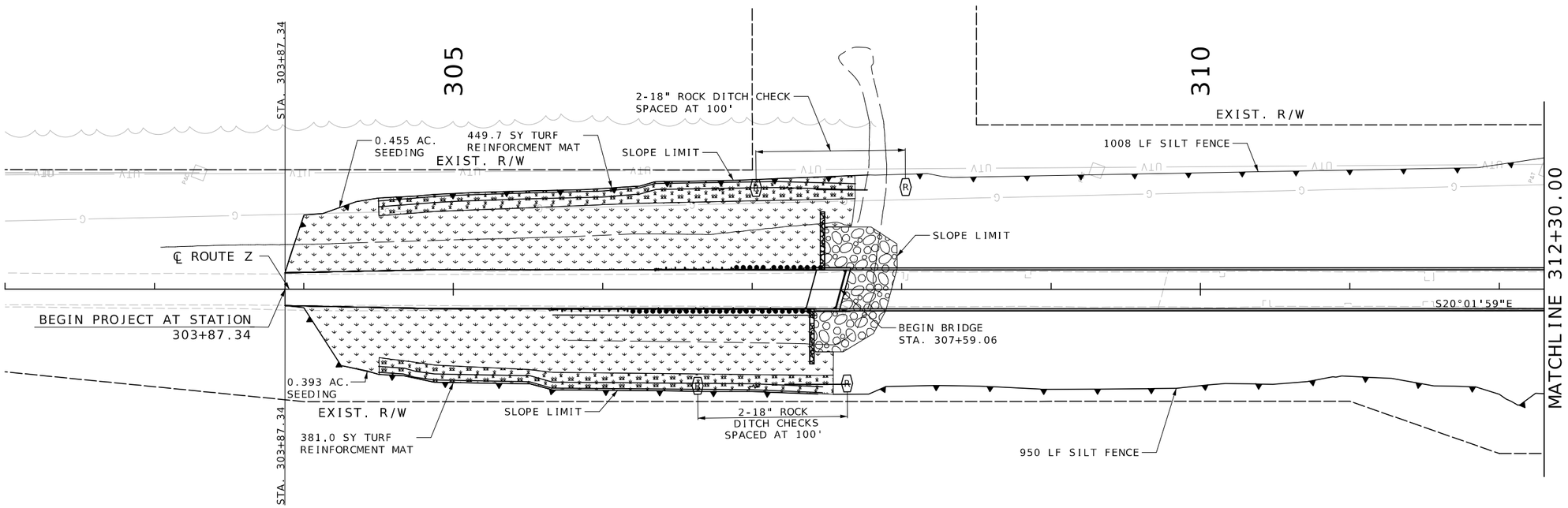

GENERAL NOTES:

1) SEE STD. PLAN 806.10 FOR TEMPORARY EROSION CONTROL DETAILS

2) FOR STORMWATER DISCHARGES AND TEMPORARY EROSION CONTROL, THE PROJECT OUTLETS INTO PLATTE RIVER (RECEIVING WATER)

EROSION CONTROL PLAN
SHEET 1 OF 2

STATE OF MISSOURI
MICHAEL WAYNE DUSENBERG
NUMBER E-26546
PROFESSIONAL ENGINEER
THIS SHEET HAS BEEN SIGNED, SEALED AND DATED ELECTRONICALLY.

DATE PREPARED	3/1/2024
ROUTE Z	STATE MO
DISTRICT KC	SHEET NO. 15
COUNTY PLATTE	
JOB NO. J4S3454	
CONTRACT ID.	
PROJECT NO.	
BRIDGE NO. A9373	

DATE	DESCRIPTION

IF A SEAL IS PRESENT ON THIS SHEET IT HAS BEEN ELECTRONICALLY SEALED AND DATED.

MISSOURI HIGHWAYS AND TRANSPORTATION COMMISSION
105 WEST CAPITOL
JEFFERSON CITY, MO 65102
1-888-ASK-MODOT (1-888-275-6636)

Bartlett & West
601 MONROE ST. SUITE 201 - JEFFERSON CITY, MO 65101
PHONE 573-634-3181
CERTIFICATE OF AUTHORITY NO. 000167 - ENGINEERING
WWW.BARTLETTWEST.COM

TEMPORARY EROSION CONTROL LEGEND

- (R) ROCK DITCH CHECK
- (S) SEDIMENT TRAP
- TEMPORARY BERM TYPE C
- SILT FENCE

SCALE

0 40 80 120

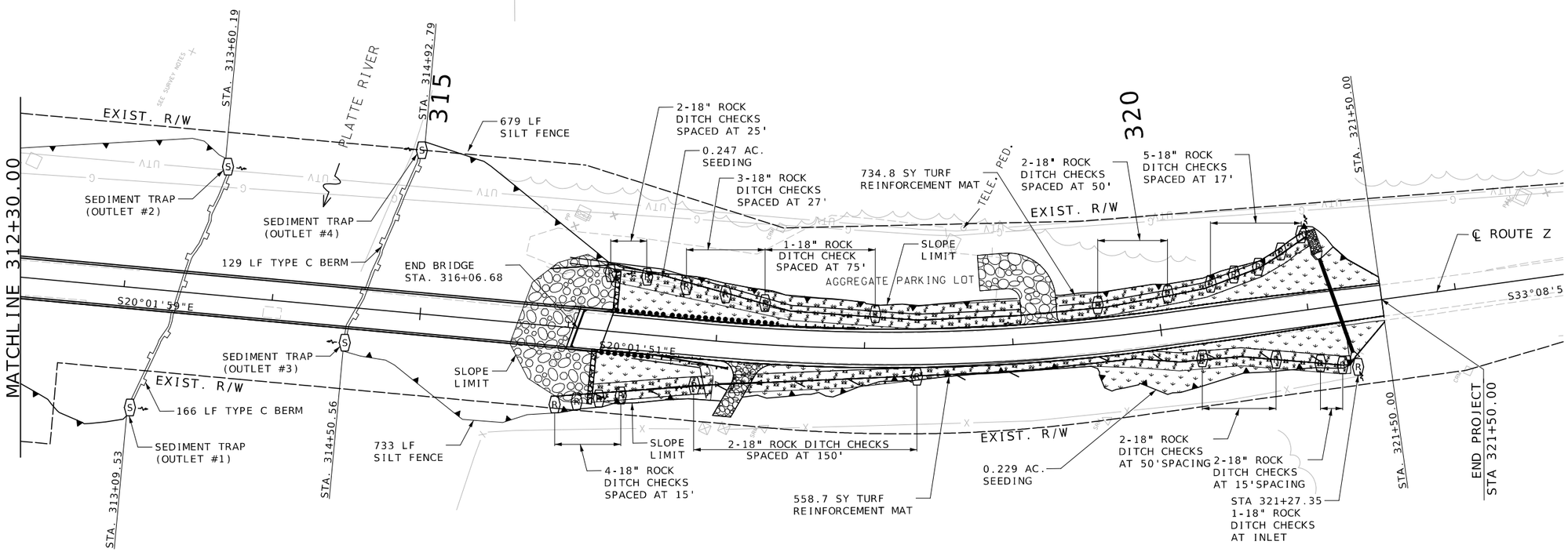

GENERAL NOTES:

1) SEE STD. PLAN 806.10 FOR TEMPORARY EROSION CONTROL DETAILS

2) FOR STORMWATER DISCHARGES AND TEMPORARY EROSION CONTROL, THE PROJECT OUTLETS INTO PLATTE RIVER (RECEIVING WATER)

EROSION CONTROL PLAN
SHEET 2 OF 2

STATE OF MISSOURI
MICHAEL WAYNE DUSENBERG
NUMBER E-26546
PROFESSIONAL ENGINEER
THIS SHEET HAS BEEN SIGNED, SEALED AND DATED ELECTRONICALLY.

IF A SEAL IS PRESENT ON THIS SHEET IT HAS BEEN ELECTRONICALLY SEALED AND DATED.

DATE PREPARED	
3/1/2024	
ROUTE	STATE
Z	MO
DISTRICT	SHEET NO.
KC	16
COUNTY	
PLATTE	
JOB NO.	
J4S3454	
CONTRACT ID.	
PROJECT NO.	
BRIDGE NO.	
A9373	

DATE	DESCRIPTION

MISSOURI HIGHWAYS AND TRANSPORTATION COMMISSION
MoDOT
105 WEST CAPITOL
JEFFERSON CITY, MO 65102
1-888-ASK-MODOT (1-888-275-6636)

Bartlett & West
601 MONROE ST, SUITE 201 - JEFFERSON CITY, MO 65101
PHONE 573-634-3181
CERTIFICATE OF AUTHORITY NO. 000167 - ENGINEERING
WWW.BARTLETTWEST.COM

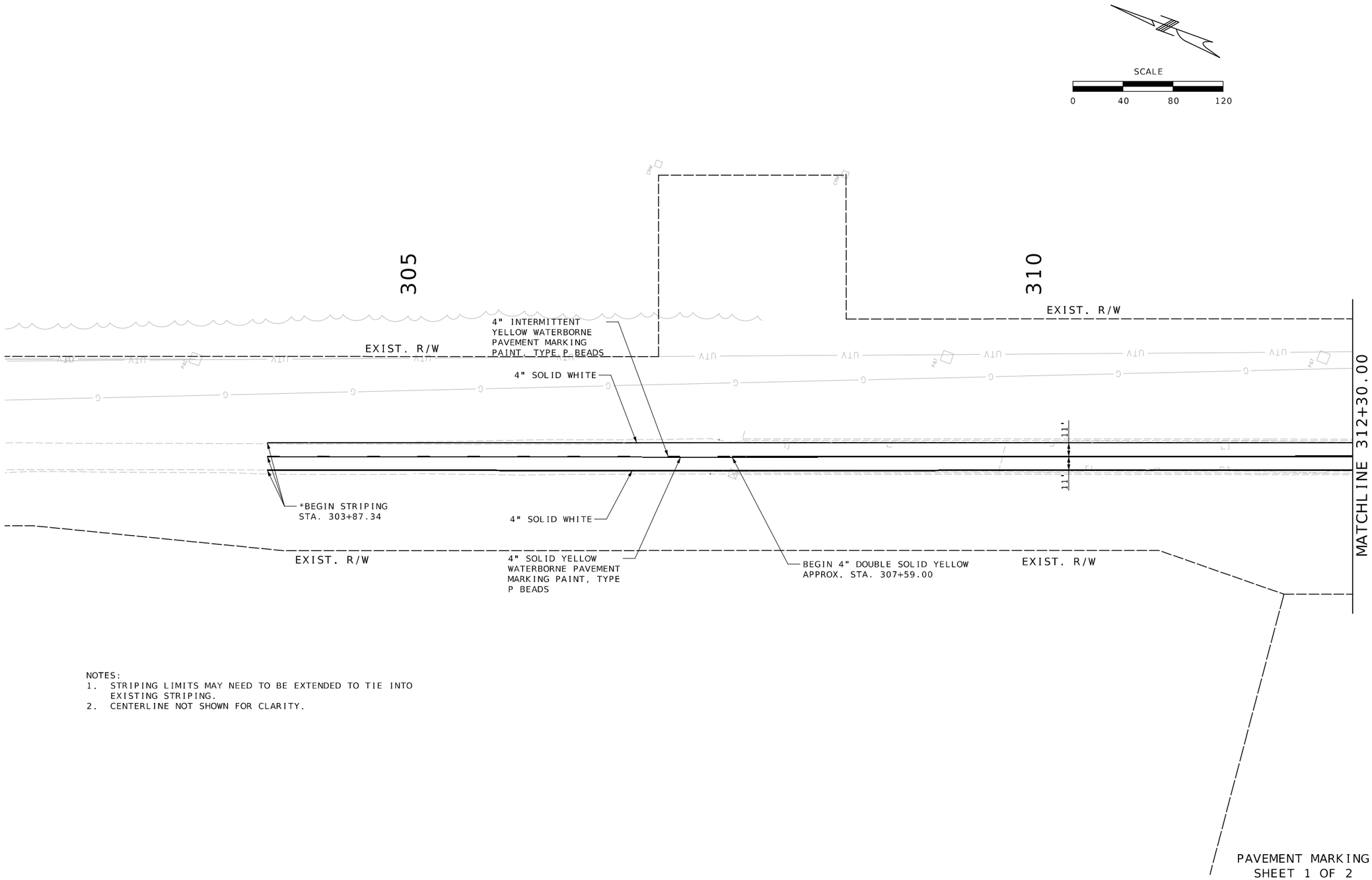

NOTES:
1. STRIPING LIMITS MAY NEED TO BE EXTENDED TO TIE INTO EXISTING STRIPING.
2. CENTERLINE NOT SHOWN FOR CLARITY.

PAVEMENT MARKING
SHEET 1 OF 2

STATE OF MISSOURI
MICHAEL WAYNE DUSENBERG
NUMBER E-26546
PROFESSIONAL ENGINEER
THIS SHEET HAS BEEN SIGNED, SEALED AND DATED ELECTRONICALLY.

DATE PREPARED	3/4/2024
ROUTE Z	STATE MO
DISTRICT KC	SHEET NO. 17
COUNTY	PLATTE
JOB NO.	J4S3454
CONTRACT ID.	
PROJECT NO.	
BRIDGE NO.	A9373

DATE	DESCRIPTION

IF A SEAL IS PRESENT ON THIS SHEET IT HAS BEEN ELECTRONICALLY SEALED AND DATED.

MISSOURI HIGHWAYS AND TRANSPORTATION COMMISSION
MoDOT
105 WEST CAPITOL
JEFFERSON CITY, MO 65102
1-888-ASK-MODOT (1-888-275-6636)

Bartlett & West
601 MONROE ST. SUITE 201 - JEFFERSON CITY, MO 65101
PHONE 573-634-3181
CERTIFICATE OF AUTHORITY NO. 000167 - ENGINEERING
WWW.BARTLETTWEST.COM

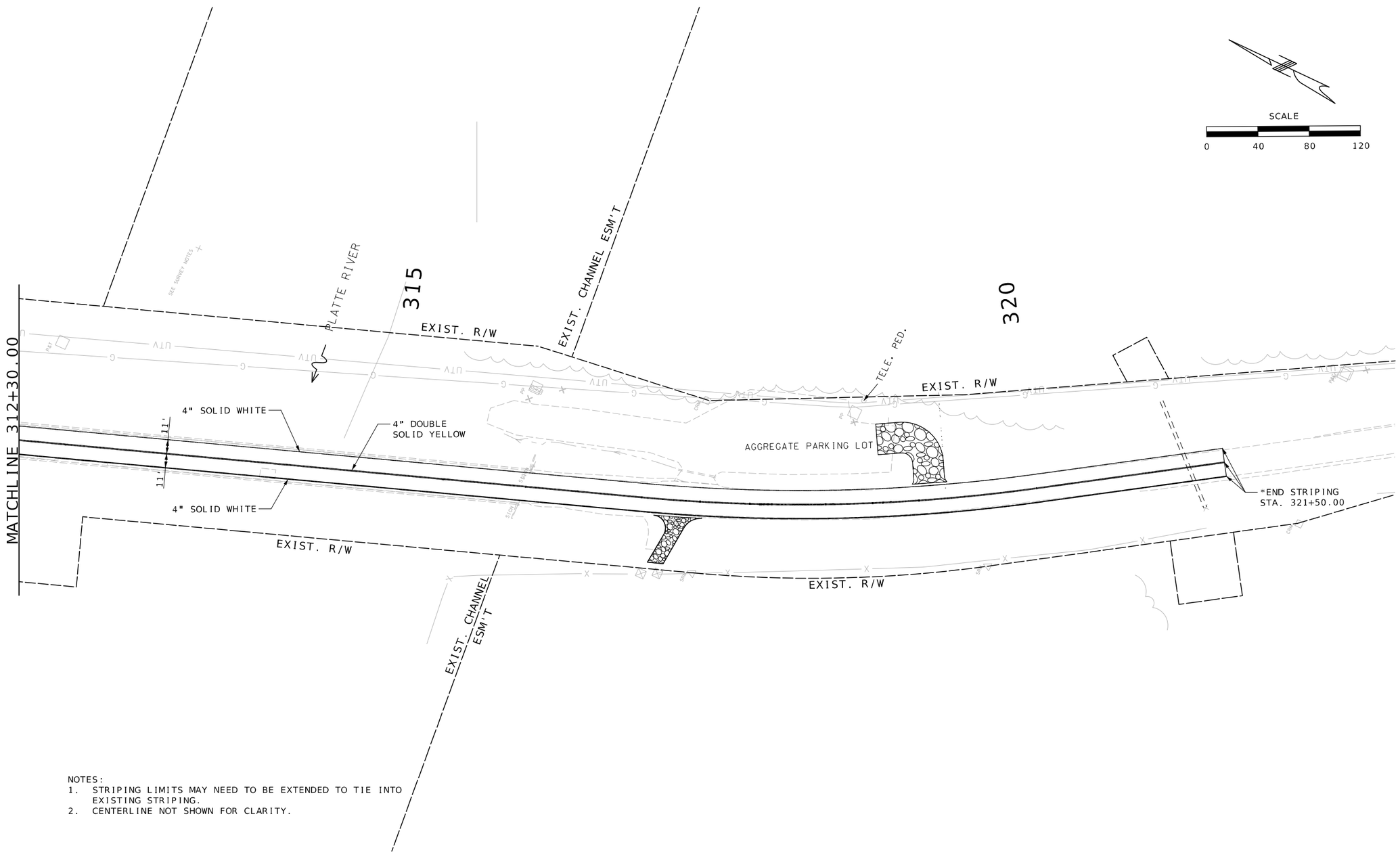

NOTES:
1. STRIPING LIMITS MAY NEED TO BE EXTENDED TO TIE INTO EXISTING STRIPING.
2. CENTERLINE NOT SHOWN FOR CLARITY.

PAVEMENT MARKING
SHEET 2 OF 2

STATE OF MISSOURI
MICHAEL WAYNE DUSENBERG
NUMBER E-26546
PROFESSIONAL ENGINEER
THIS SHEET HAS BEEN SIGNED, SEALED AND DATED ELECTRONICALLY.

DATE PREPARED	3/4/2024
ROUTE	Z
STATE	MO
DISTRICT	KC
SHEET NO.	18
COUNTY	PLATTE
JOB NO.	J4S3454
CONTRACT ID.	
PROJECT NO.	
BRIDGE NO.	A9373

DATE	DESCRIPTION

IF A SEAL IS PRESENT ON THIS SHEET IT HAS BEEN ELECTRONICALLY SEALED AND DATED.

MISSOURI HIGHWAYS AND TRANSPORTATION COMMISSION
105 WEST CAPITOL
JEFFERSON CITY, MO 65102
1-888-ASK-MODOT (1-888-275-6636)

Bartlett & West
601 MONROE ST. SUITE 201 - JEFFERSON CITY, MO 65101
PHONE 573-634-3181
CERTIFICATE OF AUTHORITY NO. 000167 - ENGINEERING
WWW.BARTLETTWEST.COM

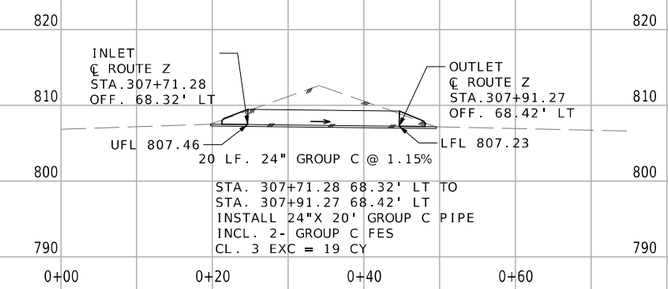

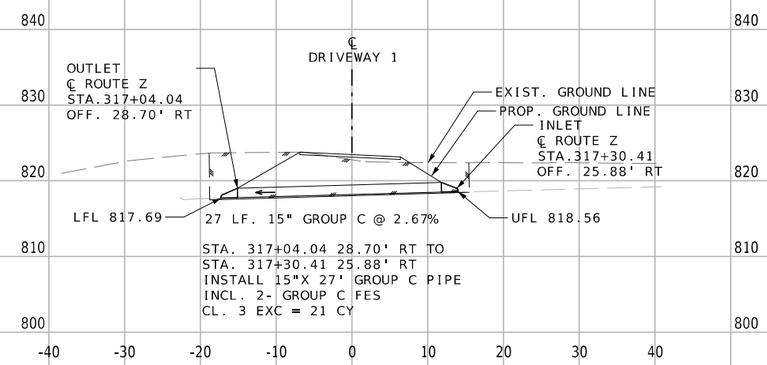

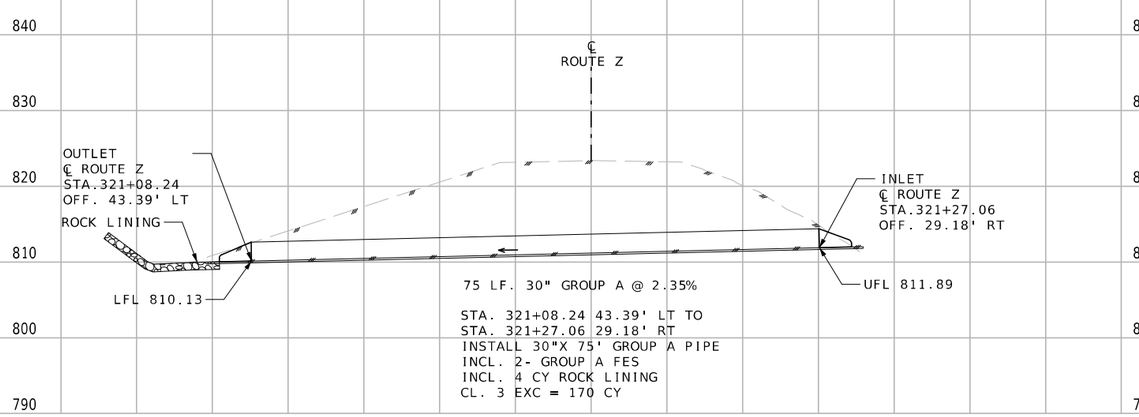

10'

CULVERT SECTION SHEET
SHEET 1 OF 1

STATE OF MISSOURI
MICHAEL WAYNE DUSENBERG
NUMBER E-26546
PROFESSIONAL ENGINEER

THIS SHEET HAS BEEN SIGNED, SEALED AND DATED ELECTRONICALLY.

DATE PREPARED	4/2/2024
ROUTE	Z
STATE	MO
DISTRICT	KC
SHEET NO.	19
COUNTY	PLATTE
JOB NO.	J4S3454
CONTRACT ID.	.
PROJECT NO.	.
BRIDGE NO.	A9373

DATE	DESCRIPTION
.	.
.	.
.	.
.	.
.	.
.	.

MISSOURI HIGHWAYS AND TRANSPORTATION COMMISSION

105 WEST CAPITOL
JEFFERSON CITY, MO 65102
1-888-ASK-MODOT (1-888-275-6636)

Bartlett & West

601 MONROE ST, SUITE 201 - JEFFERSON CITY, MO 65101
PHONE 573-634-3181
CERTIFICATE OF AUTHORITY NO. 000167 - ENGINEERING
WWW.BARTLETTWEST.COM

IF A SEAL IS PRESENT ON THIS SHEET IT HAS BEEN ELECTRONICALLY SEALED AND DATED.

SEC/SUR 1 TWP 54N RGE 34W

(104'-118'-118'-118')(130'-140'-116') PRESTRESSED CONCRETE NU GIRDER SPANS
SKEW: 15°00'00" L.A.

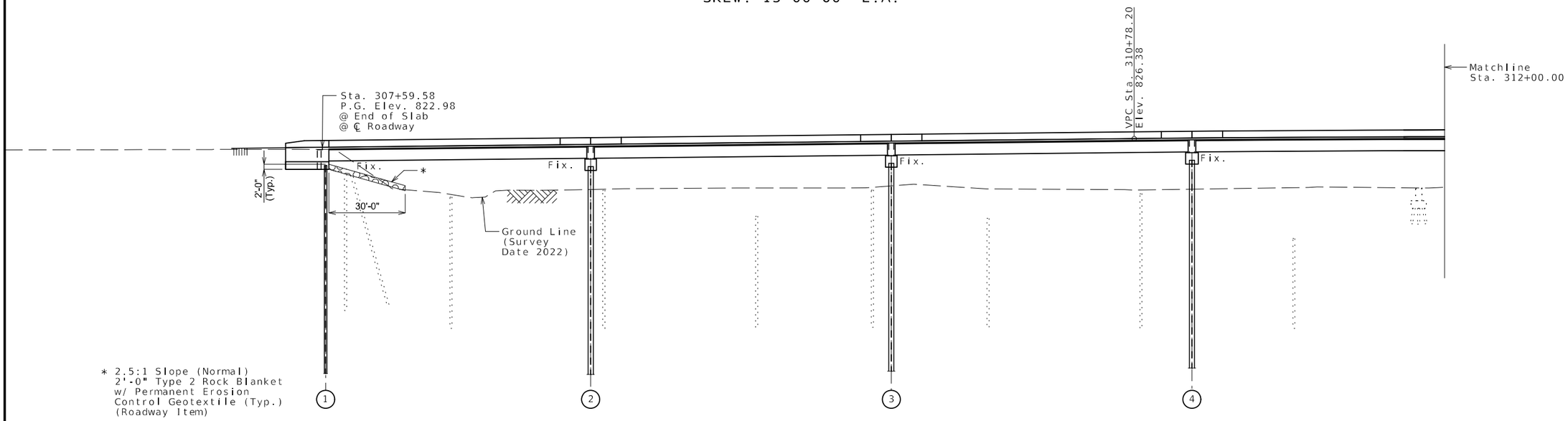

* 2.5:1 Slope (Normal)
2'-0" Type 2 Rock Blanket
w/ Permanent Erosion
Control Geotextile (Typ.)
(Roadway Item)

GENERAL ELEVATION

Notes: For General Notes, Estimated Quantities, Foundation Data, Estimated Quantities for Slab on Concrete NU-Girder and Location Sketch, see Sheet No. 3.

Roadway fill shall be completed to the final roadway section and up to the elevation of the bottom of the concrete beam within the limits of the structure and for not less than 25 feet in back of the fill face of the end bents before any piles are driven for any bents falling within the embankment section.

Work this sheet with Sheet No. 2.

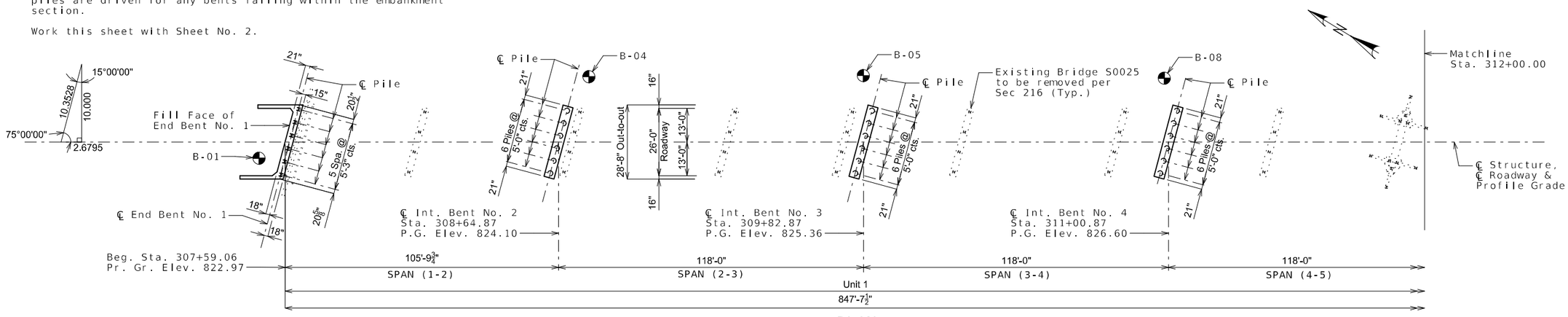

PLAN

◔ Indicates location of borings.

Notice and Disclaimer Regarding Boring Log Data

The locations of all subsurface borings for this structure are shown on the plan sheet(s) for this structure. The boring data for all locations indicated, as well as any other boring logs or other factual records of subsurface data and investigations performed by the department for the design of the project, are shown on Sheets No. 42-43 and may be included in the Electronic Bridge Deliverables. They will also be available from the Project Contact upon written request. No greater significance or weight should be given to the boring data depicted on the plan sheets than is given to the subsurface data available from the district or elsewhere.

The Commission does not represent or warrant that any such boring data accurately depicts the conditions to be encountered in constructing this project. A contractor assumes all risks it may encounter in basing its bid prices, time or schedule of performance on the boring data depicted here or those available from the district, or on any other documentation not expressly warranted, which the contractor may obtain from the Commission.

B.M. #142, Set 0.5" Iron Bar with 2" Aluminum Cap
Sta. 300+75.76, Offset 14.38' Lt.
Elev. 812.38

B.M. #152, Set 0.5" Iron Bar with 2" Aluminum Cap
Sta. 305+03.98, Offset 11.57' Lt.
Elev. 819.72

B.M. #125 Set 0.5" Iron Bar with 2" Aluminum Cap
Sta. 319+27.66, Offset 57.74' Lt.
Elev. 825.41

BRIDGE: ROUTE Z OVER PLATTE RIVER

ROUTE Z FROM ROUTE F TO ROUTE B
ABOUT 1.5 MILES EAST OF ROUTE F
BEG. STATION 307+59.06

Detailed Jan. 2024
Checked Jan. 2024

Note: This drawing is not to scale. Follow dimensions.

STATE OF MISSOURI
DAVID ANDREW STRAATMANN
NUMBER PE-2004000848
PROFESSIONAL ENGINEER
THIS SHEET HAS BEEN SIGNED, SEALED AND DATED ELECTRONICALLY.

DATE PREPARED 3/20/2024
ROUTE Z | STATE MO
DISTRICT BR | SHEET NO. 1
COUNTY PLATTE
JOB NO. J4S3454
CONTRACT ID.
PROJECT NO.
BRIDGE NO. A9373

DESCRIPTION	DATE

IF A SEAL IS PRESENT ON THIS SHEET IT HAS BEEN ELECTRONICALLY SEALED AND DATED.

MISSOURI HIGHWAYS AND TRANSPORTATION COMMISSION
105 WEST CAPITOL
JEFFERSON CITY, MO 65102
1-888-ASK-MODOT (1-888-275-6636)

Bartlett & West
601 MONROE STREET, SUITE 201 - JEFFERSON CITY, MO 65101
PHONE 573-634-3181 - FAX 573-634-7904
CERTIFICATE OF AUTHORITY NO. 000167 - ENGINEERING
WWW.BARTWEST.COM

SEC/SUR 1 TWP 54N RGE 34W

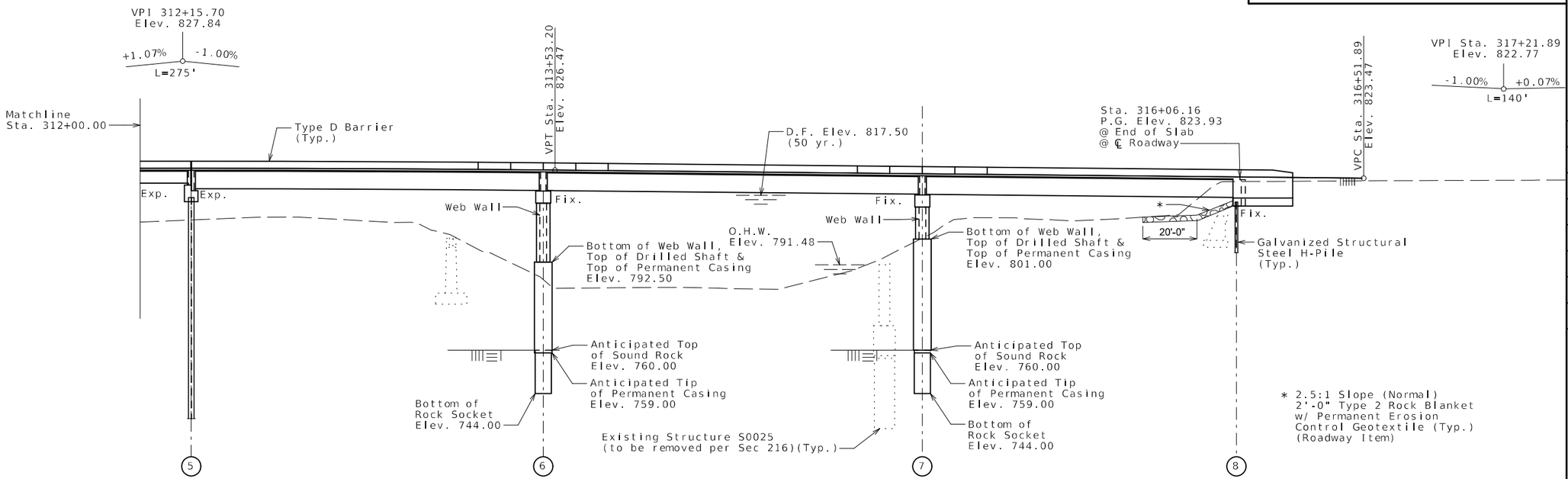

GENERAL ELEVATION

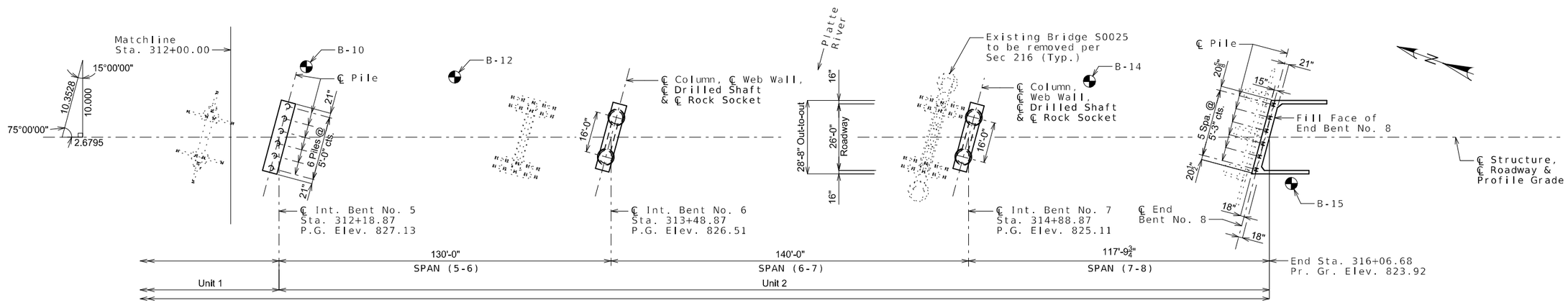

PLAN

Hydrologic Data
Drainage Area = 1990 mi²
Design Flood Frequency = 50 years
Design Flood Discharge = 54,500 cfs
Design Flood (D.F.) Elevation = 817.5 ft
Base Flood (100-year)
Base Flood Elevation = 818.5 ft.
Base Flood Discharge = 61,900 cfs
Estimated Backwater = 0.2 ft
Average Velocity thru Opening = 5.4 ft/s
Freeboard (50-year)
Freeboard = 0.8 ft
Roadway Overtopping
Overtopping Flood Discharge = 30,000 cfs
Overtopping Flood Frequency = 5 years
5-year Flood Elevation = 813.8 ft

STATE OF MISSOURI
DAVID ANDREW STRAATMANN
NUMBER PE-2004000848
PROFESSIONAL ENGINEER
THIS SHEET HAS BEEN SIGNED, SEALED AND DATED ELECTRONICALLY.

DATE PREPARED
3/20/2024

ROUTE	STATE
Z	MO
DISTRICT	SHEET NO.
BR	2

COUNTY
PLATTE

JOB NO.
J4S3454

CONTRACT ID.

PROJECT NO.

BRIDGE NO.
A9373

DATE	DESCRIPTION

IF A SEAL IS PRESENT ON THIS SHEET IT HAS BEEN ELECTRONICALLY SEALED AND DATED.

MISSOURI HIGHWAYS AND TRANSPORTATION COMMISSION
105 WEST CAPITOL
JEFFERSON CITY, MO 65102
1-888-ASK-MODOT (1-888-275-6636)

Bartlett & West
601 MONROE STREET, SUITE 201 - JEFFERSON CITY, MO 65101
PHONE 573-634-3181 - FAX 573-634-7904
CERTIFICATE OF AUTHORITY NO. 000167 - ENGINEERING
WWW.BARTWEST.COM

Detailed Jan. 2024
Checked Jan. 2024

Note: This drawing is not to scale. Follow dimensions.

pw://bartwest-pw.bentley.com:bartwest-pw-04/Documents/19000/19421.G30 - Platt County Route Z/OpenRoads Designer/A9373/B_A9373_002_J4S3454_front sheet.dgn 11:50:49 AM 3/20/2024

Estimated Quantities

Item		Substr.	Superstr.	Total
Removal of Miscellaneous ACM (Non-Friable)	sq. foot		74	74
Class 1 Excavation	cu. yard	115		115
Removal of Bridges (S0025)	lump sum			1
Bridge Approach Slab (Minor)	sq. yard		117	117
Drilled Shafts (6 ft. 6 in. Dia.)	linear foot	147		147
Rock Sockets (6 ft. 0 in. Dia.)	linear foot	64		64
Video Camera Inspection	each	4		4
Foundation Inspection Holes	linear foot	116		116
Sonic Logging Testing	each	4		4
Galvanized Structural Steel Piles (14 in.)	linear foot	468		468
Galvanized Cast-in-Place Concrete Piles (24 in.)	linear foot	1452		1452
Dynamic Pile Testing	each	4		4
Pile Point Reinforcement (H-Pile)	each	12		12
Pile Point Reinforcement (CIP-Pile)	each	24		24
Class B Concrete (Substructure)	cu. yard	255.4		255.4
Type D Barrier	linear foot		1759	1759
Slab on Concrete NU-Girder	sq. yard		2697	2697
NU 53, Prestressed Concrete NU-Girder	linear foot		1369	1369
NU 70, Prestressed Concrete NU-Girder	linear foot		1155	1155
Reinforcing Steel (Bridges)	pound	79,700		79,700
Reinforcing Steel (Galvanized)	pound	3750		3750
Protective Coating-Concrete Bents and Piers (Epoxy)	lump sum	1		1
Expansion Device (Finger Plate)	linear foot		27	27
Steel Intermediate Diaphragm for P/S Concrete Girders	each		28	28
Slab Drain	each		78	78
Vertical Drain at End Bents	each			2
Laminated Neoprene Bearing Pad	each		6	6
Laminated Neoprene Bearing Pad (Tapered)	each		30	30
Type N PTFE Bearing	each		6	6

Notes:

All concrete above the construction joint in the end bents is included in the Estimated Quantities for Slab on Concrete NU-Girder.

All reinforcement in the end bents is included in the Estimated Quantities for Slab on Concrete NU-Girder.

All reinforcement in the intermediate bent concrete diaphragms except reinforcement embedded in the beam cap is included in the Estimated Quanitites for Slab on Concrete NU-Girder.

All concrete above the intermediate beam cap is included in the Estimated Quantities for Slab on Concrete NU-Girder.

Estimated Quantities for Slab on Concrete NU-Girder

Item		Total
UNIT 1		
Class B-2 Concrete	cu. yard	442
Reinforcing Steel (Galvanized)	pound	145,300
UNIT 2		
Class B-2 Concrete	cu. yard	386
Reinforcing Steel (Galvanized)	pound	114,770

The table of Estimated Quantities for Slab on Concrete NU-Girder represents the quantities used by the State in preparing the cost estimate for concrete slabs. The area of the concrete slab will be measured to the nearest square yard longitudinally from end of slab to end of slab and transversely from out to out of bridge slab (or with the horizontal dimensions as shown on the plan of slab). Payment for stay-in-place corrugated steel forms, conventional forms, all concrete and galvanized reinforcing steel will be considered completely covered by the contract unit price for the slab. Variations may be encountered in the estimated quantities but the variations cannot be used for an adjustment in the contract unit price.

Method of forming the slab shall be as shown on the plans and in accordance with Sec 703. All hardware for forming the slab to be left in place as a permanent part of the structure shall be coated in accordance with ASTM A123 or ASTM B633 with a thickness class SC 4 and a finish type I, II or III.

Slab shall be cast-in-place with conventional forms or stay-in-place corrugated steel forms. Precast prestressed panels will not be permitted.

Corrugated steel forms, supports, closure elements and accessories shall be in accordance with grade requirement and coating designation G165 of ASTM A653. Complete shop drawings of the permanent steel deck forms shall be required in accordance with Sec 1080.

Corrugations of stay-in-place forms shall be filled with an expanded polystyrene material. The polystyrene material shall be placed in the forms with an adhesive in accordance with the manufacturer's recommendations.

Form sheets shall not rest directly on the top of girder flanges. Sheets shall be securely fastened to form supports with a minimum bearing length of one inch on each end. Form supports shall be placed in direct contact with the flange. Welding on or drilling holes in the girder flanges will not be permitted. All steel fabrication and construction shall be in accordance with Sec 1080 and 712. Certified field welders will not be required for welding of the form supports.

Class B-2 Concrete quantity is based on minimum top flange thickness and minimum haunch thickness.

Foundation Data

Type	Design Data		Bent Number 1	2	3	4	5	6	7	8
Load Bearing Pile	Pile Type and Size		HP 14x73	CECIP 24"	CECIP 24"	CECIP 24"	CECIP 24"			HP 14x73
	Number	ea	6	6	6	6	6			6
	Approximate Length Per Each	ft	60	60	62	63	57			18
	Pile Point Reinforcement	ea	All	All	All	All	All			All
	Min. Galvanized Penetration	ft	Full Length	Full Length	Full Length	Full Length	Full Length			Full Length
	Pile Driving Verification Method		DF	DT	DT	DT	DT			DF
	Resistance Factor		0.40	0.65	0.65	0.65	0.65			0.40
	Minimum Nominal Axial Compressive Resistance	kip	485	588	592	603	620			535
Rock Socket	Number	ea						2	2	
	Foundation Material							Shaley Limestone	Shaley Limestone	
	Elevation Range	ft						959-930	959-930	
	Minimum Nominal Axial Compressive Resistance (Side Resistance) Resistance Factor = 0.55	ksf						11.8	11.8	
	Minimum Nominal Axial Compressive Resistance (Tip Resistance) Resistance Factor = 0.5	ksf						26.6	17.2	

DF = FHWA-modified Gates Dynamic Pile Formula

DT = Dynamic Testing

CECIP = Closed Ended Cast-in-Place concrete pile

Load Bearing Pile:
Minimum Nominal Axial Compressive Resistance = Maximum Factored Loads/Resistance Factor

Driven Piles:
All piles shall be galvanized down to the minimum galvanized penetration (elevation).

Pile point reinforcement need not be galvanized. Shop drawings will not be required for pile point reinforcement.

The contractor shall make every effort to achieve the minimum galvanized penetration (elevation) shown on the plans for all piles. Deviations in penetration less than 5 feet of the minimum will be considered acceptable provided the contractor makes the necessary corrections to ensure the minimum penetration is achieved on subsequent piles.

All pile are anticipated to be driven to refusal on rock. Review all borings for depth of rock and restrict driving as appropriate to comply with hard rock driving criteria in accordance with Sec 702.

Rock Sockets (Drilled Shafts):
Minimum Nominal Axial Compressive Resistance (Side Resistance + Tip Resistance) = Maximum Factored Loads/Resistance Factors

General Notes:

Design Specifications:
2020 AASHTO LRFD Bridge Design Specifications (9th Ed.)
2011 AASHTO Guide Specifications for LRFD Seismic Bridge Design (2nd Ed.) and 2014 Interim Revisions (Seismic Details)
Seismic Design Category = A

Design earthquake response spectral acceleration coefficient at 1.0 second period. SD1 = 0.080

Acceleration Coefficient (effective peak ground acceleration coefficient), As = 0.051

Design Loading:
Vehicular = HL-93
Future Wearing Surface = 35 lb/sf
Earth = 120 lb/cf
Equivalent Fluid Pressure = 45 lb/cf (Min.)
Superstructure: Simply-supported, non-composite for dead load, continuous composite for live load.

Design Unit Stresses:

Class B Concrete (Substructure)	f'c = 3,000 psi
Class B-1 Concrete (Barrier)	f'c = 4,000 psi
Class B-2 Concrete (Drilled Shafts & Rock Sockets, Superstructure, except Prestressed Girders and Barrier)	f'c = 4,000 psi
Reinforcing Steel (Grade 60)	fy = 60,000 psi
Structural Carbon Steel (ASTM A709 Grade 36)	fy = 36,000 psi
Structural Steel HP Pile (ASTM A709 Grade 50S)	fy = 50,000 psi

For steel pipe pile stresses, see Sheet No. 10.

For prestressed girder stresses, see Sheets No. 17 thru 23.

Neoprene Pads:
Neoprene bearing pads shall be 60 durometer and shall be in accordance with Sec 716, except otherwise noted.

Joint Filler:
All joint filler shall be in accordance with Sec 1057 for preformed sponge rubber expansion and partition joint filler, except as noted.

Reinforcing Steel:
Minimum clearance to reinforcing steel shall be 1 1/2", unless otherwise shown.

Minimum clearance between galvanized piles and uncoated (plain) reinforcing steel including bar supports shall be 1 1/2". Nylon, PVC or polyethylene spacers shall be used to maintain clearance. Nylon cable ties shall be used to bind the spacers to the reinforcement.

Traffic Handling:
Structure to be closed during construction. Traffic to be maintained on other routes during construction. See roadway plans for traffic control.

Concrete Protective Coating:
Protective coating for concrete bents and piers (Epoxy) shall be applied as shown on the bridge plans and in accordance with Sec 711.

Galvanized Reinforcing Bars:
Specification, materials, zinc coating process and construction practice shall be in accordance with ASTM A1094/A1094M-18.

Galvanized reinforcing steel shall not come in contact with uncoated reinforcing steel. Nylon, PVC or Polyethylene spacers shall be used where necessary. Nylon cable ties shall be used to bind the spacers to the reinforcement.

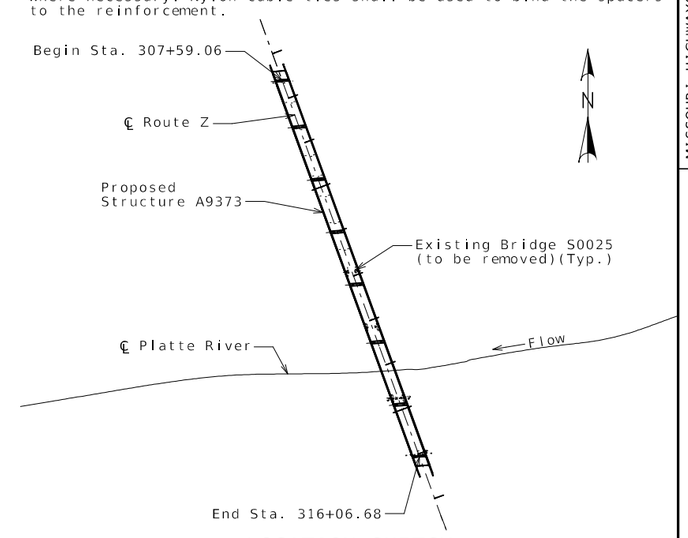

LOCATION SKETCH

STATE OF MISSOURI
DAVID ANDREW STRAATMANN
NUMBER PE-2004000848
PROFESSIONAL ENGINEER
THIS SHEET HAS BEEN SIGNED, SEALED AND DATED ELECTRONICALLY.

DATE PREPARED	
3/21/2024	
ROUTE: Z	STATE: MO
DISTRICT: BR	SHEET NO.: 3
COUNTY: PLATTE	
JOB NO.: J4S3454	
CONTRACT ID.	
PROJECT NO.	
BRIDGE NO.: A9373	

DATE	DESCRIPTION

IF A SEAL IS PRESENT ON THIS SHEET IT HAS BEEN ELECTRONICALLY SEALED AND DATED.

MISSOURI HIGHWAYS AND TRANSPORTATION COMMISSION
105 WEST CAPITOL
JEFFERSON CITY, MO 65102
1-888-ASK-MODOT (1-888-275-6636)

Bartlett & West
601 MONROE STREET, SUITE 201 - JEFFERSON CITY, MO 65101
PHONE 573-634-3181 - FAX 573-634-7904
CERTIFICATE OF AUTHORITY NO. 000167 - ENGINEERING
WWW.BARTWEST.COM

Detailed Jan. 2024
Checked Jan. 2024

Note: This drawing is not to scale. Follow dimensions.

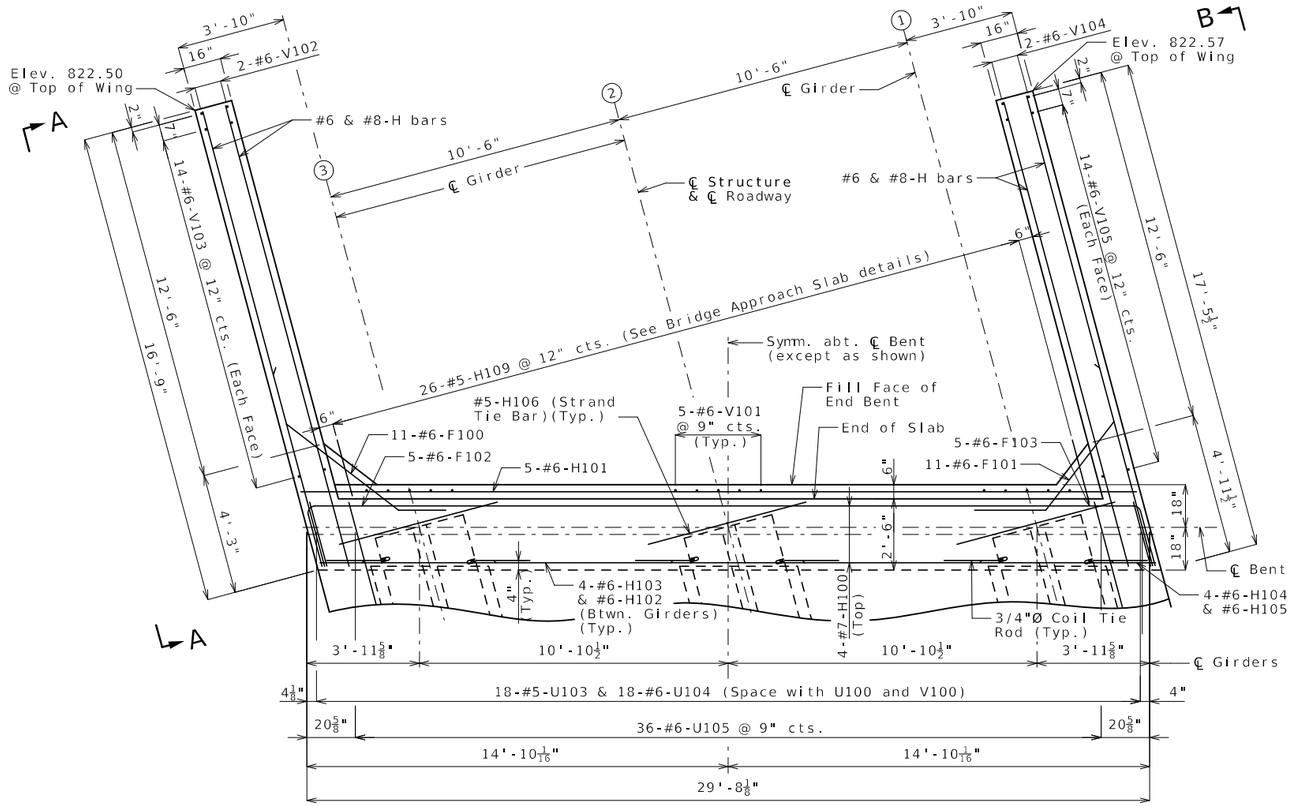

PART PLAN

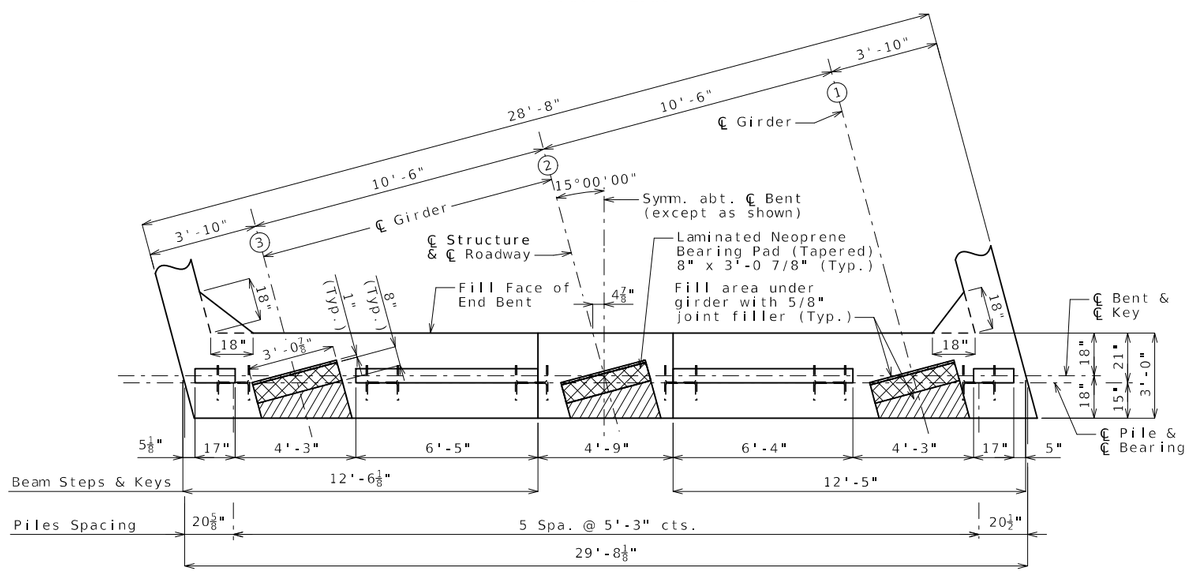

PLAN OF BEAM

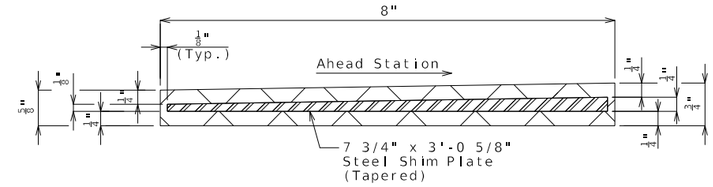

DETAILS OF 8" x 3'-0 7/8" LAMINATED NEOPRENE BEARING PADS (TAPERED)

Note: The required shim plate shall be placed between layers of elastomer and molded together to form an integral unit.

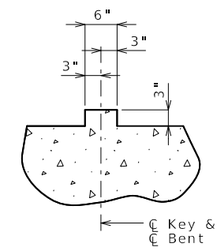

SECTION THRU KEY

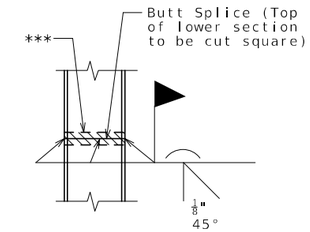

STEEL PILE SPLICE
(If required)

*** Galvanizing material shall be omitted or removed one inch clear of weld locations in accordance with Sec 702.

General Notes:

For details at End Bent not shown, see Sheets No. 5 and 6.

#5-H109 bars shall be used for the concrete bridge approach slab, see Sheet No. 36.

Strands at end of the girders shall be field bent or, if necessary, cut in field to maintain 1 1/2" minimum clearance to fill face of end bent.

For location of #5-H106 (Strand Tie Bar), see Sheets No. 17 or 18.

For Elevations A-A and B-B, see Sheet No. 6.

For Section Near End Bent, see Sheet No. 5.

All concrete in the end bent above top of beam and below top of slab shall be Class B-2.

The U bars and #5-H109 bars shall be placed parallel to centerline of roadway.

Bend #6-F100 & #6-F101 in field to clear girders.

Substructure Quantity Table for Bent No. 1

Item		End Bent No. 1
Class 1 Excavation	cu. yard	50
Galvanized Structural Steel Piles (14 in.)	linear foot	360
Pile Point Reinforcement (H-Pile)	each	6
Class B Concrete (Substructure)	cu. yard	14.6

Note: These quantities are included in the Estimated Quantities table on Sheet No. 3.

DETAILS OF END BENT NO. 1

Note: This drawing is not to scale. Follow dimensions.

Detailed Jan. 2024
Checked Jan. 2024

STATE OF MISSOURI
DAVID ANDREW STRAATMANN
NUMBER PE-2004000848
PROFESSIONAL ENGINEER
THIS SHEET HAS BEEN SIGNED, SEALED AND DATED ELECTRONICALLY.

DATE PREPARED	
3/20/2024	
ROUTE: Z	STATE: MO
DISTRICT: BR	SHEET NO.: 4
COUNTY: PLATTE	
JOB NO.: J4S3454	
CONTRACT ID.	
PROJECT NO.	
BRIDGE NO.: A9373	

DATE	DESCRIPTION

IF A SEAL IS PRESENT ON THIS SHEET IT HAS BEEN ELECTRONICALLY SEALED AND DATED.

MISSOURI HIGHWAYS AND TRANSPORTATION COMMISSION
105 WEST CAPITOL
JEFFERSON CITY, MO 65102
1-888-ASK-MODOT (1-888-275-6636)

Bartlett & West
601 MONROE STREET, SUITE 201 - JEFFERSON CITY, MO 65101
PHONE 573-634-3181 - FAX 573-634-7904
CERTIFICATE OF AUTHORITY NO. 000167 - ENGINEERING
WWW.BARTWEST.COM

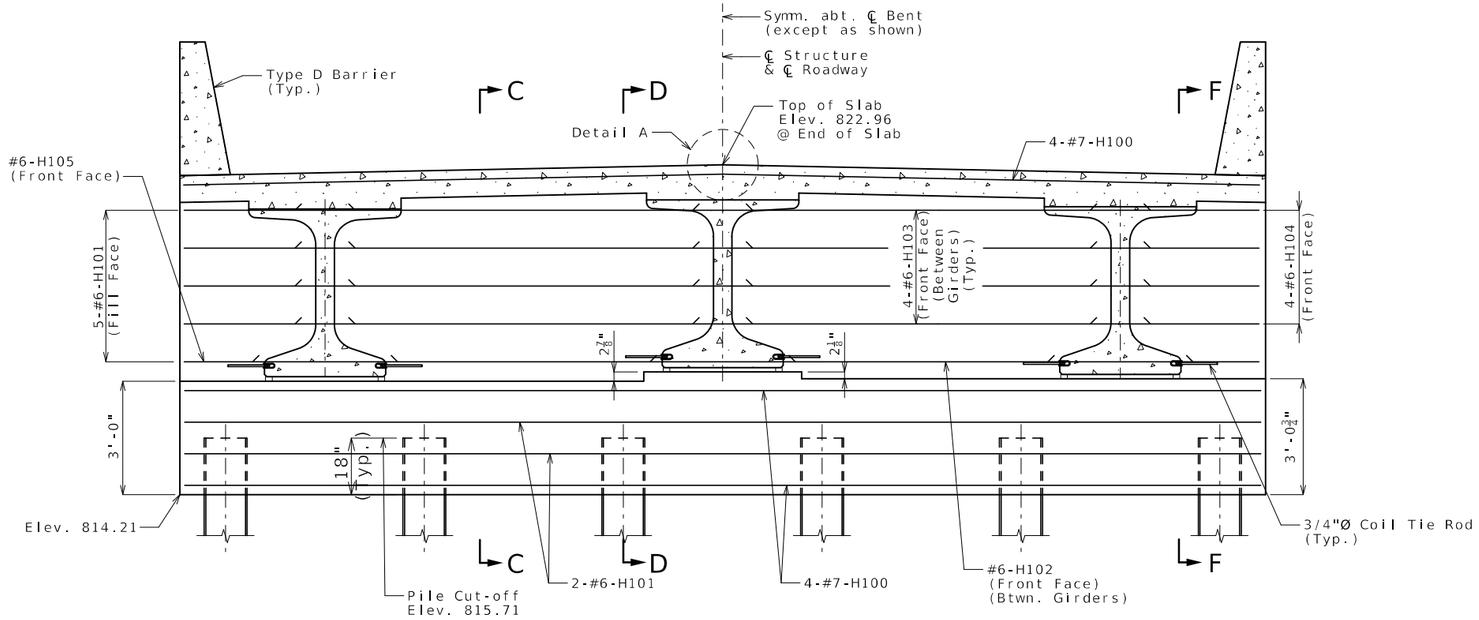

SECTION NEAR END BENT

Note: Keys not shown for clarity.

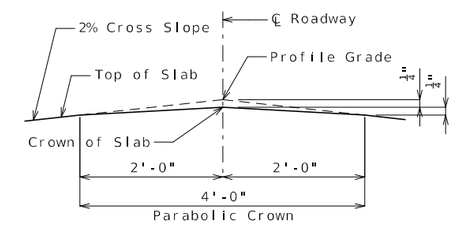

DETAIL A

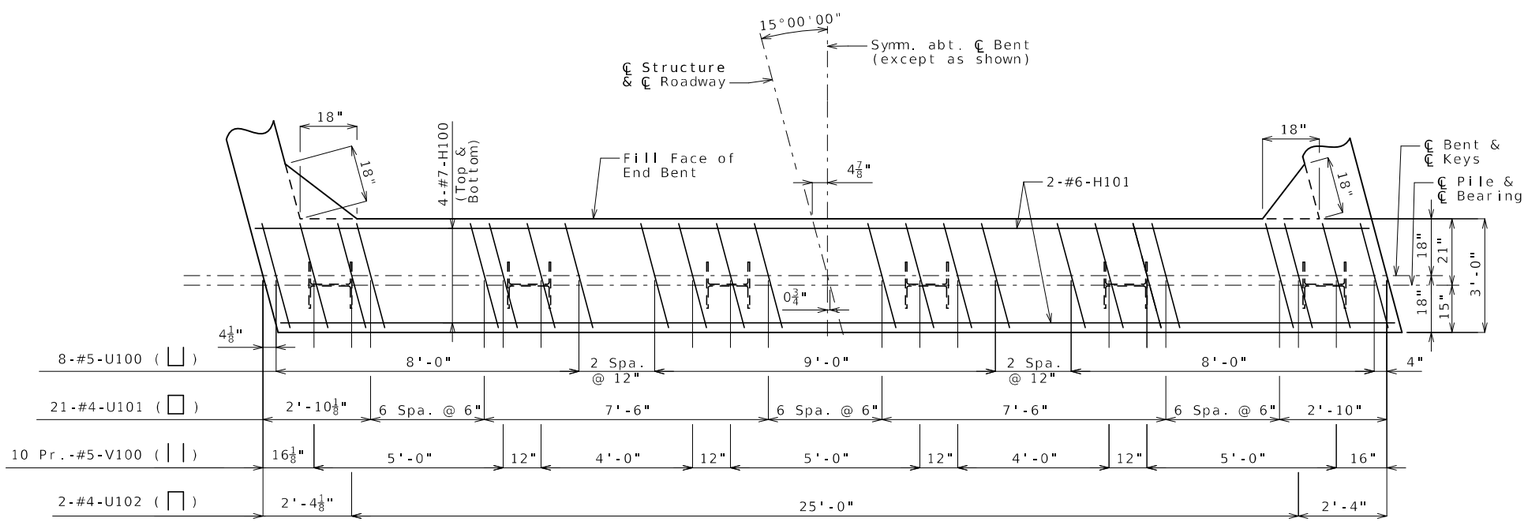

PLAN OF BEAM

Notes:

For details of End Bents not shown, see Sheets No. 4 and 6.

For location of Coil Tie Rods and #5-H106 (Strand Tie Bar), see Sheets No. 17 and 18.

All concrete in the End Bent above top of beam and below top of slab shall be Class B-2.

For Sections C-C thru F-F, see Sheet No. 6.

For details of Bridge Approach Slab, see Sheet No. 36.

Reinforcing steel shall be shifted to clear piles. U bars shall clear piles by at least 1 1/2 inches.

The U bars and pairs of V100 bars shall be placed parallel to centerline of roadway.

DETAILS OF END BENT NO. 1

Detailed Jan. 2024
Checked Jan. 2024

Note: This drawing is not to scale. Follow dimensions.

STATE OF MISSOURI
DAVID ANDREW STRAATMANN
NUMBER PE-2004000848
PROFESSIONAL ENGINEER
THIS SHEET HAS BEEN SIGNED, SEALED AND DATED ELECTRONICALLY.

DATE PREPARED	
3/20/2024	
ROUTE	STATE
Z	MO
DISTRICT	SHEET NO.
BR	5
COUNTY	
PLATTE	
JOB NO.	
J4S3454	
CONTRACT ID.	
PROJECT NO.	
BRIDGE NO.	
A9373	

DATE	DESCRIPTION

IF A SEAL IS PRESENT ON THIS SHEET IT HAS BEEN ELECTRONICALLY SEALED AND DATED.

MISSOURI HIGHWAYS AND TRANSPORTATION COMMISSION
105 WEST CAPITOL
JEFFERSON CITY, MO 65102
1-888-ASK-MODOT (1-888-275-6636)

Bartlett & West
601 MONROE STREET, SUITE 201 - JEFFERSON CITY, MO 65101
PHONE 573-634-3181 - FAX 573-634-7904
CERTIFICATE OF AUTHORITY NO. 000167 - ENGINEERING
WWW.BARTWEST.COM

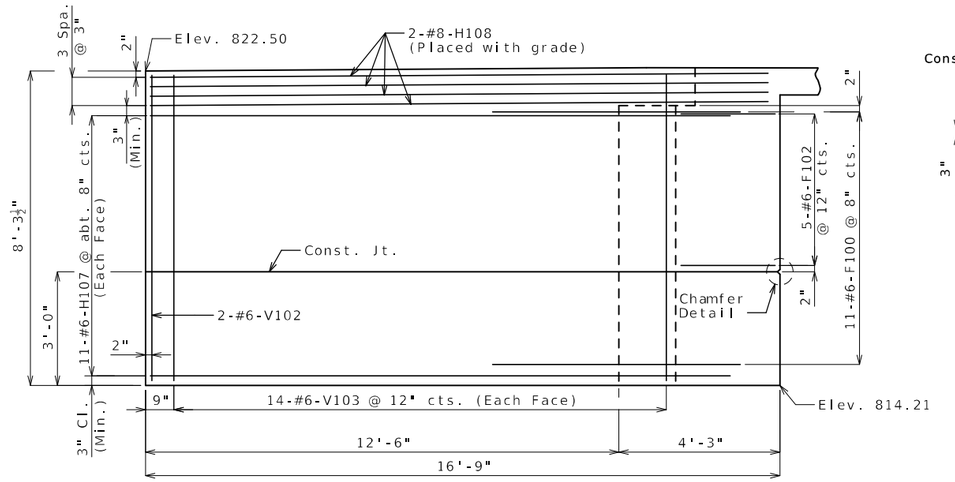

ELEVATION A-A

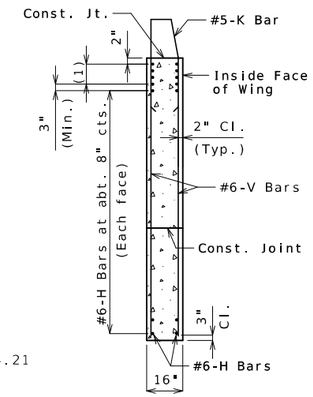

TYPICAL SECTION THRU WING

(1) #8-H Bars at 3" cts. (Each face)(Place with grade)

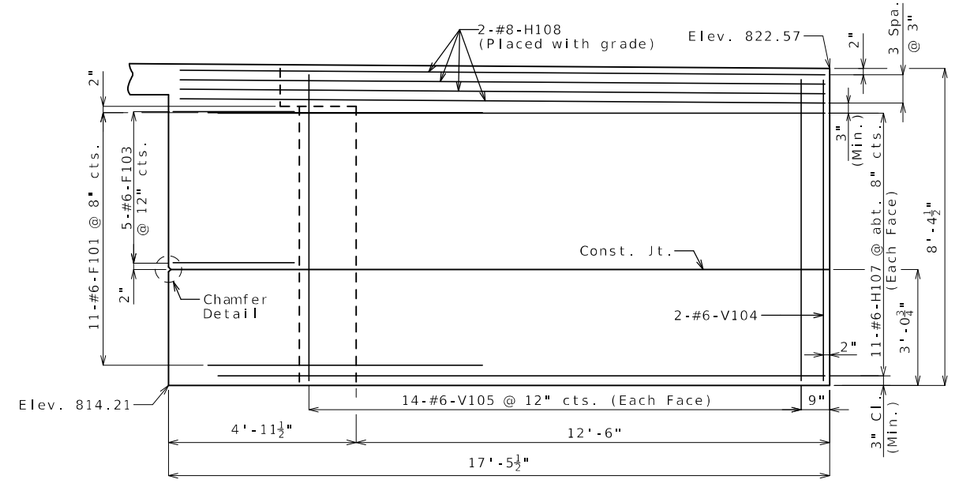

ELEVATION B-B

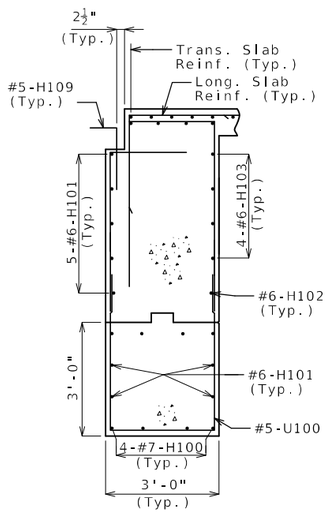

SECTION C-C

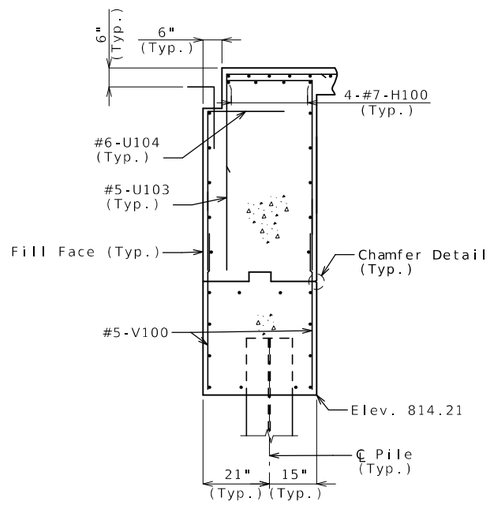

SECTION D-D

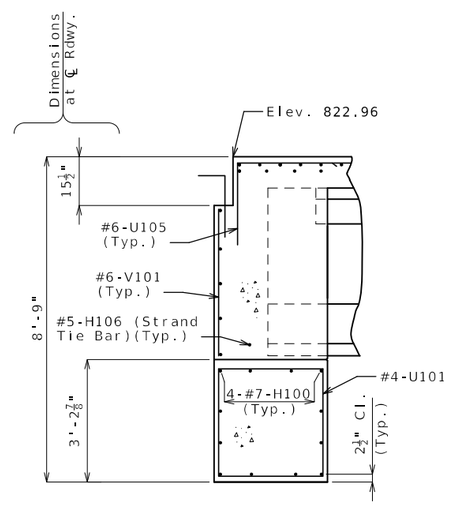

SECTION E-E

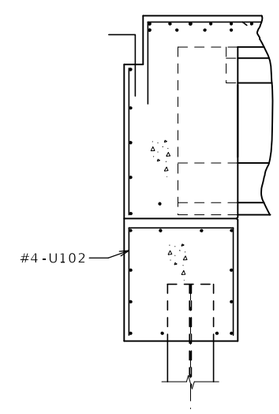

SECTION F-F

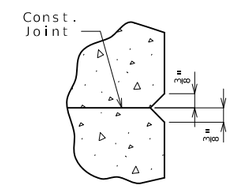

CHAMFER DETAIL

Notes:

For reinforcement of the Type D Barrier not shown, see Sheet No. 35.

For details of Vertical Drain at End Bents, see Sheet No. 7.

For details of End Bents not shown, see Sheets No. 4 and 5.

For details of Bridge Approach Slab, see Sheet No. 36.

DETAILS OF END BENT NO. 1

Detailed Jan. 2024
Checked Jan. 2024

Note: This drawing is not to scale. Follow dimensions.

STATE OF MISSOURI
DAVID ANDREW STRAATMANN
NUMBER PE-2004000848
PROFESSIONAL ENGINEER
THIS SHEET HAS BEEN SIGNED, SEALED AND DATED ELECTRONICALLY.

DATE PREPARED	
3/20/2024	
ROUTE	STATE
Z	MO
DISTRICT	SHEET NO.
BR	6
COUNTY	
PLATTE	
JOB NO.	
J4S3454	
CONTRACT ID.	
PROJECT NO.	
BRIDGE NO.	
A9373	

DATE	DESCRIPTION

IF A SEAL IS PRESENT ON THIS SHEET IT HAS BEEN ELECTRONICALLY SEALED AND DATED.

MISSOURI HIGHWAYS AND TRANSPORTATION COMMISSION
105 WEST CAPITOL
JEFFERSON CITY, MO 65102
1-888-ASK-MODOT (1-888-275-6636)

Bartlett & West
601 MONROE STREET, SUITE 201 - JEFFERSON CITY, MO 65101
PHONE 573-634-3181 - FAX 573-634-7904
CERTIFICATE OF AUTHORITY NO. 000167 - ENGINEERING
WWW.BARTWEST.COM

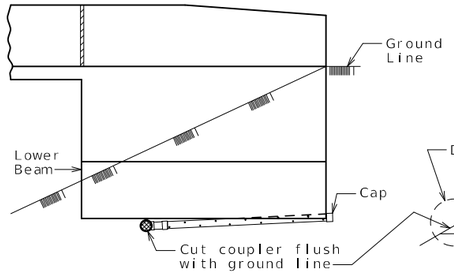

ELEVATION OF WING

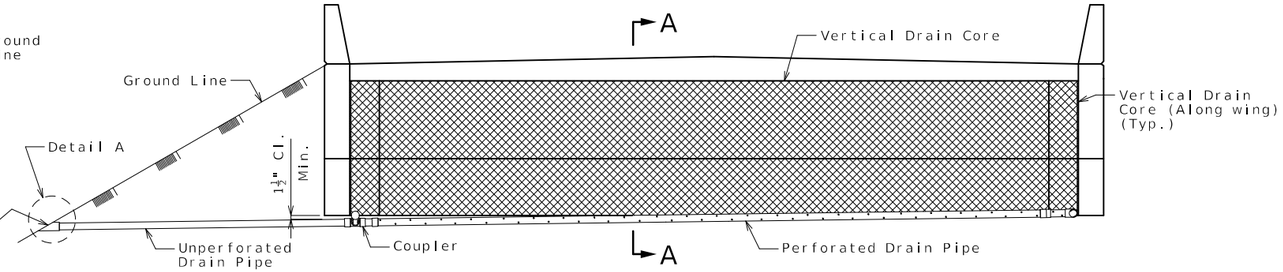

ELEVATION OF END BENT

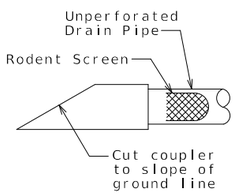

DETAIL A

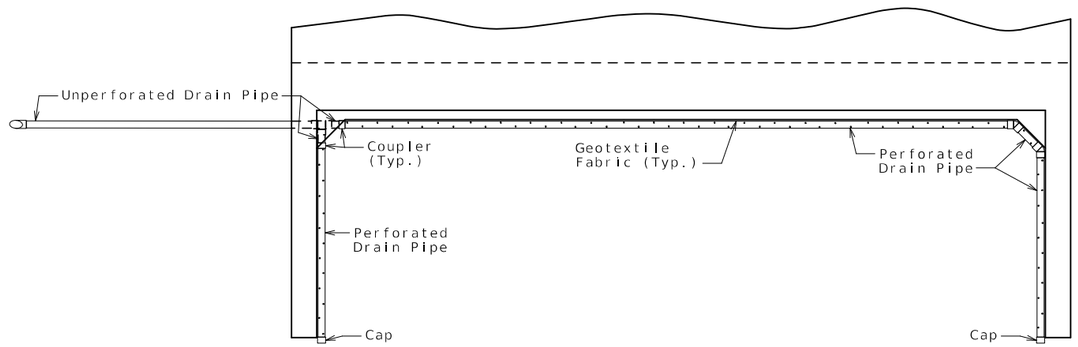

PLAN OF END BENT

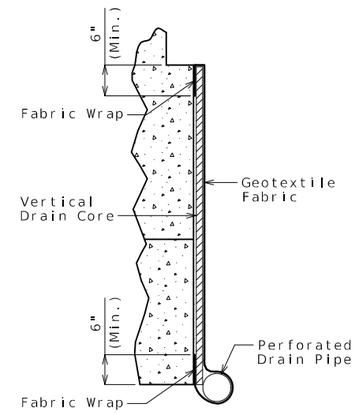

PART SECTION A-A
(Section thru wing similar)

General Notes:

All drain pipe shall be sloped 1 to 2 percent.

Drain pipe may be either 6-inch diameter corrugated metallic-coated steel pipe underdrain, 4-inch diameter corrugated polyvinyl chloride (PVC) drain pipe, or 4-inch diameter corrugated polyethylene (PE) drain pipe.

Drain pipe shall be placed at fill face of end bent and inside face of wings. The pipe shall slope to lowest grade of ground line, also missing the lower beam of end bent by a minimum of 1 1/2 inches.

Perforated pipe shall be placed at fill face side and inside face of wings at the bottom of end bent and plain pipe shall be used where the vertical drain ends to the exit at ground line.

VERTICAL DRAIN AT END BENTS

(Squared end bent shown, skewed end bent similar)

Detailed Jan. 2024
Checked Jan. 2024

Note: This drawing is not to scale. Follow dimensions.

STATE OF MISSOURI
DAVID ANDREW STRAATMANN
NUMBER PE-2004000848
PROFESSIONAL ENGINEER
THIS SHEET HAS BEEN SIGNED, SEALED AND DATED ELECTRONICALLY.

DATE PREPARED	3/20/2024
ROUTE	Z
STATE	MO
DISTRICT	BR
SHEET NO.	7
COUNTY	PLATTE
JOB NO.	J4S3454
CONTRACT ID.	
PROJECT NO.	
BRIDGE NO.	A9373

DATE	DESCRIPTION

IF A SEAL IS PRESENT ON THIS SHEET IT HAS BEEN ELECTRONICALLY SEALED AND DATED.

MISSOURI HIGHWAYS AND TRANSPORTATION COMMISSION
105 WEST CAPITOL
JEFFERSON CITY, MO 65102
1-888-ASK-MODOT (1-888-275-6636)

Bartlett & West
601 MONROE STREET, SUITE 201 - JEFFERSON CITY, MO 65101
PHONE 573-634-3181 - FAX 573-634-7904
CERTIFICATE OF AUTHORITY NO. 000167 - ENGINEERING
WWW.BARTWEST.COM

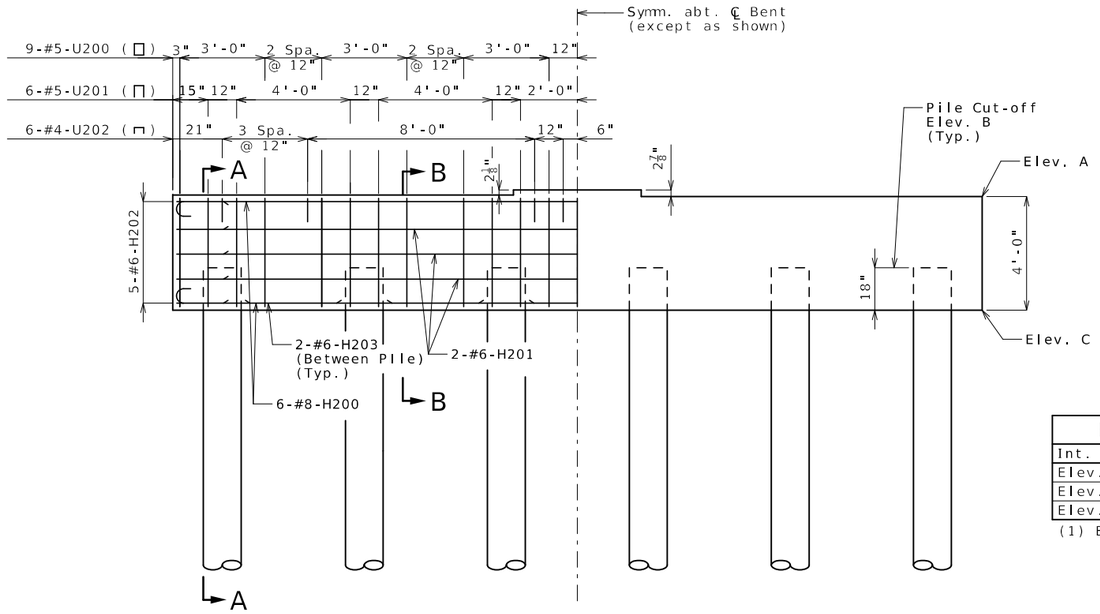

ELEVATION

Note: Key not shown for clarity.

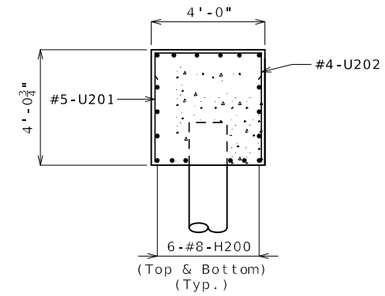

SECTION A-A

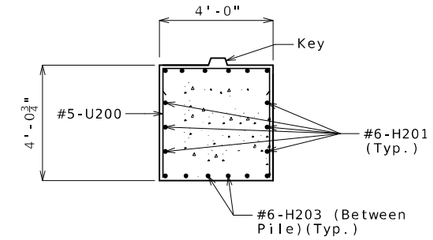

SECTION B-B

Elevation Data Table			
Int. Bent	No. 2	No. 3	No. 4
Elev. A (1)	818.33	819.61	820.93
Elev. B	815.83	817.11	818.43
Elev. C	814.33	815.61	816.93

(1) Elevation A taken near Girder No. 3.

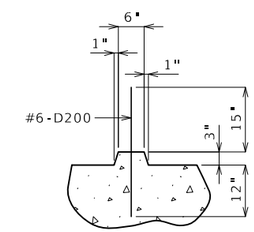

SECTION THRU KEY

Substructure Quantity Table for Bents No. 2, 3 and 4			
Item	Bent No. 2 Quantity	Bent No. 3 Quantity	Bent No. 4 Quantity
Galvanized Cast-in-Place Concrete Piles (24 in.) linear foot	360	372	378
Dynamic Pile Testing each	1	1	1
Pile Point Reinforcement (CIP-Pile) each	6	6	6
Class B Concrete (Substructure) cu. yard	16.2	16.2	16.2
Reinforcing Steel (Bridges) pound	2960	2960	2960

Notes:

These quantities are included in the Estimated Quantities table on Sheet No. 3.

Reinforcing steel shall be shifted to clear piles. U bars shall clear piles by at least 1 1/2 inches.

All reinforcement in cast-in-place pile is included in the substructure quantities.

Work this sheet with Sheet No. 10.

For steps 2 inches or more, use 2 1/4 x 1/2 inch joint filler up vertical face.

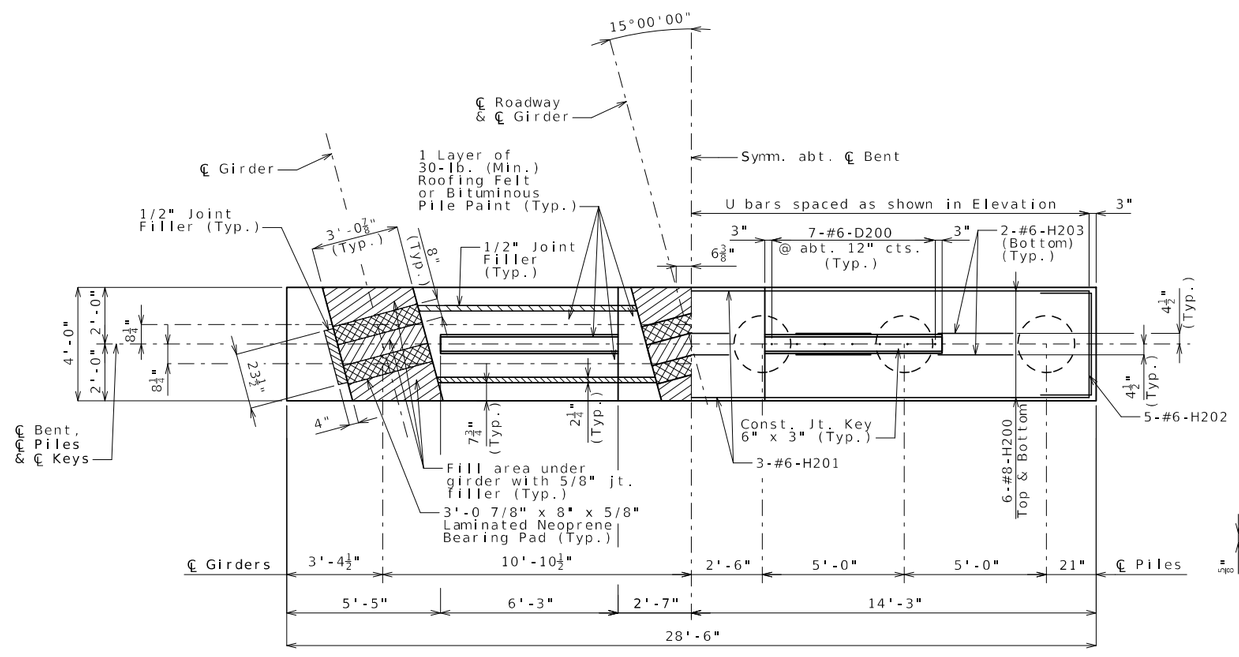

PART PLAN OF BEAM

PART PLAN OF BEAM SHOWING REINFORCEMENT

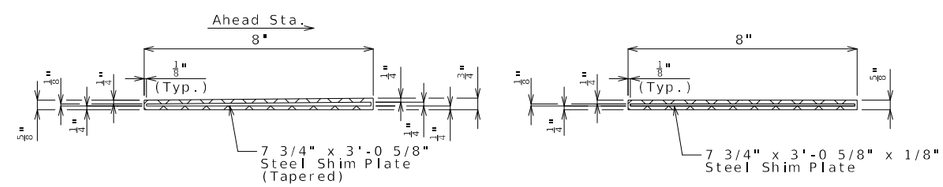

Int. Bts. No. 2, 3 & 4 (Lt.)

Int. Bt. No. 4 (Rt.)

DETAILS OF 8" x 3'-0 7/8" LAMINATED NEOPRENE BEARING PADS

Note: The required shim plate shall be placed between layers of elastomer and molded together to form an integral unit.

DETAILS OF INTERMEDIATE BENTS NO. 2, 3 AND 4

Detailed Jan. 2024
Checked Jan. 2024

Note: This drawing is not to scale. Follow dimensions.

STATE OF MISSOURI
DAVID ANDREW STRAATMANN
NUMBER PE-2004000848
PROFESSIONAL ENGINEER
THIS SHEET HAS BEEN SIGNED, SEALED AND DATED ELECTRONICALLY.

DATE PREPARED 3/20/2024

ROUTE	STATE
Z	MO
DISTRICT	SHEET NO.
BR	8

COUNTY PLATTE
JOB NO. J4S3454
CONTRACT ID.
PROJECT NO.
BRIDGE NO. A9373

DATE	DESCRIPTION

IF A SEAL IS PRESENT ON THIS SHEET IT HAS BEEN ELECTRONICALLY SEALED AND DATED.

MISSOURI HIGHWAYS AND TRANSPORTATION COMMISSION
105 WEST CAPITOL
JEFFERSON CITY, MO 65102
1-888-ASK-MODOT (1-888-275-6636)

Bartlett & West
601 MONROE STREET, SUITE 201 - JEFFERSON CITY, MO 65101
PHONE 573-634-3181 - FAX 573-634-7904
CERTIFICATE OF AUTHORITY NO. 000167 - ENGINEERING
WWW.BARTWEST.COM

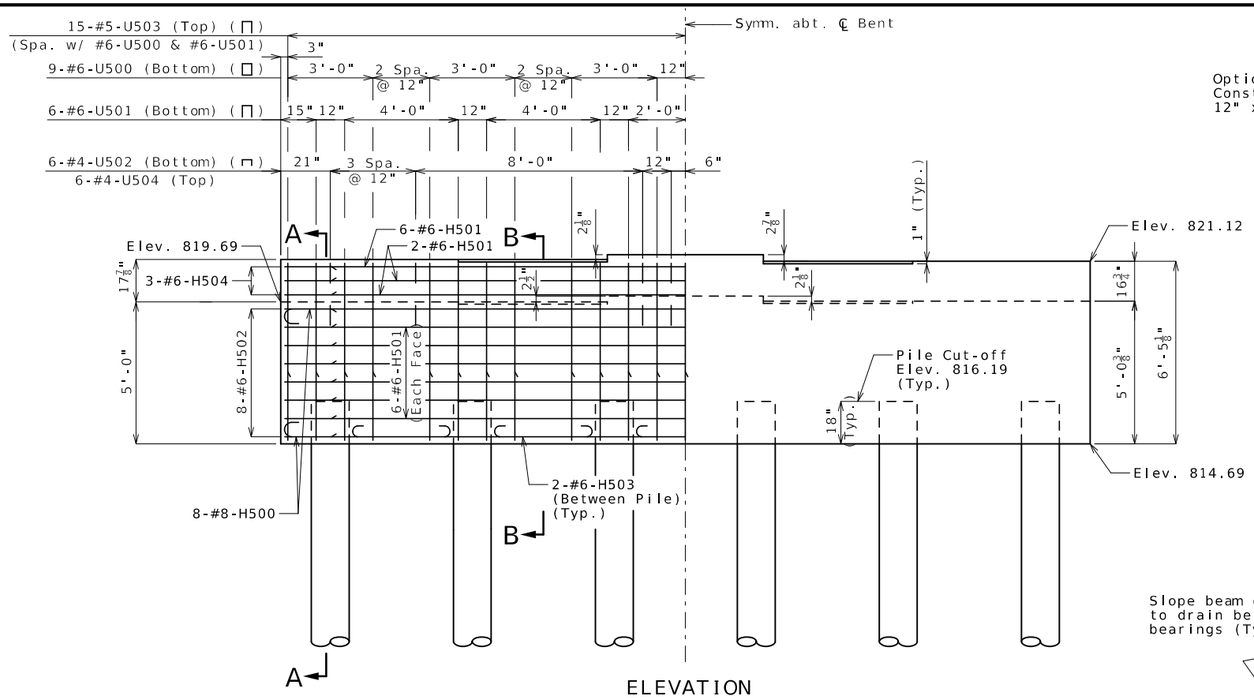

ELEVATION

Note: Key and anchor bolt wells not shown for clarity.

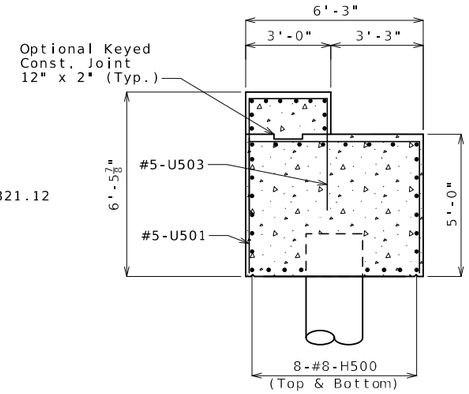

SECTION A-A

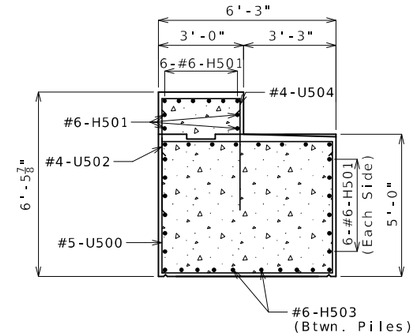

SECTION B-B

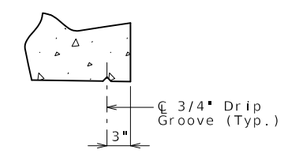

DETAIL A

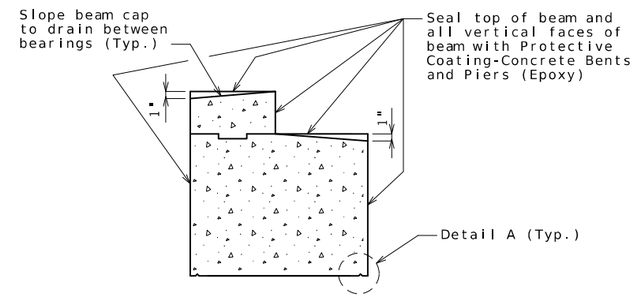

SUBSTRUCTURE PROTECTION

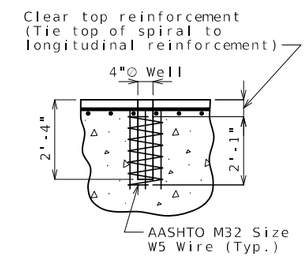

ANCHOR BOLT WELLS

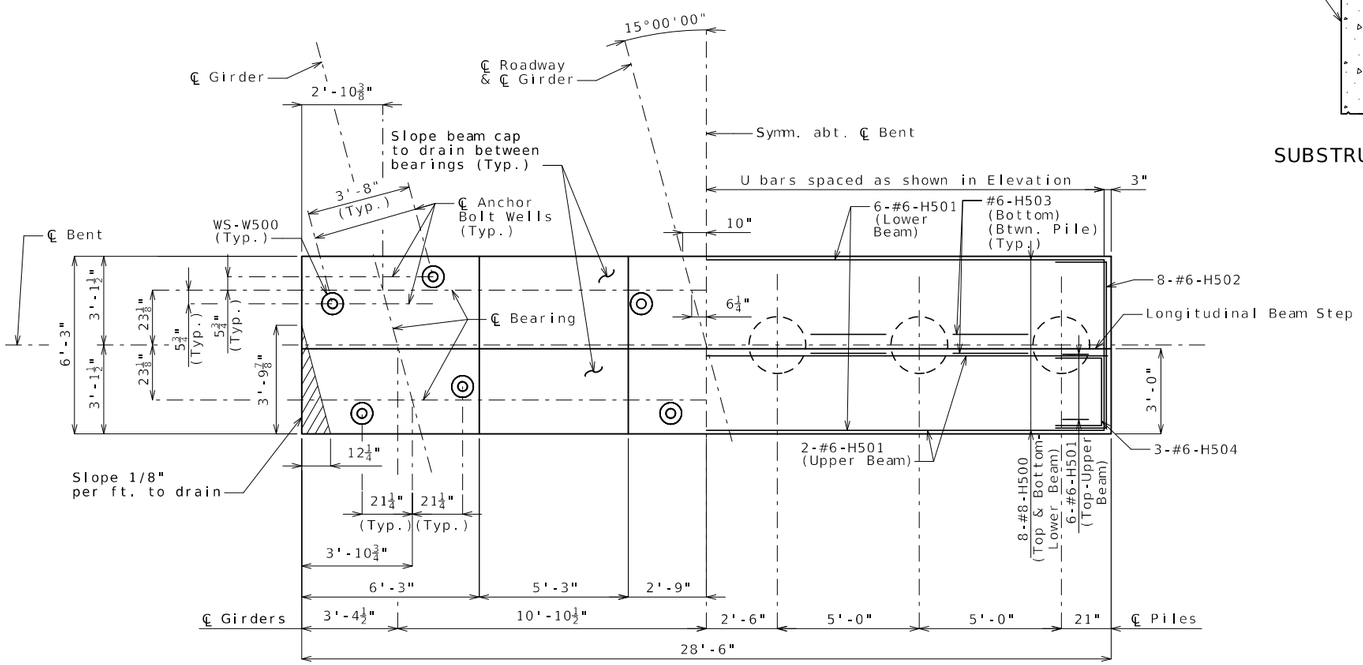

PART PLAN OF BEAM

PART PLAN OF BEAM SHOWING REINFORCEMENT

Substructure Quantity Table for Bent No. 5		
Item		Quantity
Galvanized Cast-in-Place Concrete Piles (24 in.)	linear foot	342
Dynamic Pile Testing	each	1
Pile Point Reinforcement (CIP-Pile)	each	6
Class B Concrete (Substructure)	cu. yard	36.8
Reinforcing Steel (Bridges)	pound	1170
Reinforcing Steel (Galvanized)	pound	3750
Protective Coating - Concrete Bents and Piers (Epoxy)	lump sum	1

Notes:

These quantities are included in the Estimated Quantities table on Sheet No. 3.

Reinforcing steel shall be shifted to clear piles. U bars shall clear piles by at least 1 1/2 inches.

All reinforcing bars in the tops of substructure beams or caps shall be spaced to clear anchor bolt wells for bearings by at least 1/2".

All reinforcement in cast-in-place pile is included in the substructure quantities.

Work this sheet with Sheet No. 10.

For details of PTFE bearing assemblies, see Sheet No. 16.

DETAILS OF INTERMEDIATE BENT NO. 5

Detailed Jan. 2024
Checked Jan. 2024

Note: This drawing is not to scale. Follow dimensions.

STATE OF MISSOURI
DAVID ANDREW STRAATMANN
NUMBER PE-2004000848
PROFESSIONAL ENGINEER
THIS SHEET HAS BEEN SIGNED, SEALED AND DATED ELECTRONICALLY.

DATE PREPARED	
3/20/2024	
ROUTE Z	STATE MO
DISTRICT BR	SHEET NO. 9
COUNTY PLATTE	
JOB NO. J4S3454	
CONTRACT ID.	
PROJECT NO.	
BRIDGE NO. A9373	

DESCRIPTION

DATE

IF A SEAL IS PRESENT ON THIS SHEET IT HAS BEEN ELECTRONICALLY SEALED AND DATED.

MISSOURI HIGHWAYS AND TRANSPORTATION COMMISSION
105 WEST CAPITOL
JEFFERSON CITY, MO 65102
1-888-ASK-MODOT (1-888-275-6636)

Bartlett & West
601 MONROE STREET, SUITE 201 - JEFFERSON CITY, MO 65101
PHONE 573-634-3181 - FAX 573-634-7904
CERTIFICATE OF AUTHORITY NO. 000167 - ENGINEERING
WWW.BARTWEST.COM

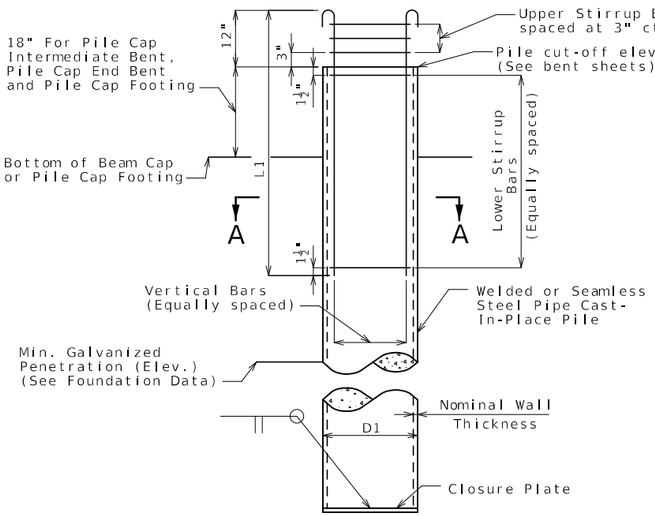

GALVANIZED CLOSED ENDED CAST-IN-PLACE (CECIP) CONCRETE PILE WITHOUT PILE POINT REINFORCEMENT

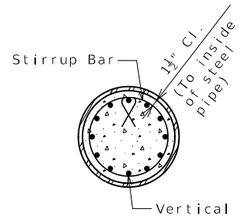

SECTION A-A

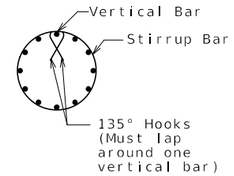

DETAIL OF SEISMIC STIRRUP BAR

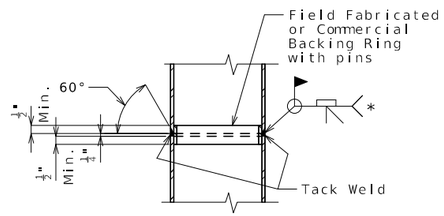

STEEL PIPE PILE SPLICE

* Galvanizing material shall be omitted or removed one inch clear of weld locations in accordance with Sec 702.

Cruciform Pile Point Reinforcement Data	
D1, CECIP Pile (O.D.)	24"
B1	24"
B2	10 5/8"
B3	10 1/2"
B4	11 1/4"
B5	2 3/4"
B6	1 1/2"
H1	15 3/8"
H2	14 3/8"
H3	14 5/8"
T1 and T2 Plate Thickness	1 1/2"

Galvanized Closed Ended Cast-In-Place (CECIP) Concrete Pile Data				
Bent Number	2	3	4	5
D1, CECIP Pile (O.D.)	24"	24"	24"	24"
Min. Nominal Wall Thickness	1/2"	1/2"	1/2"	1/2"
Closure Plate Thickness	1 1/2"	1 1/2"	1 1/2"	1 1/2"
Pile Point Reinforcement	Cruciform	Cruciform	Cruciform	Cruciform
Vertical Bars	12-#6-V200	12-#6-V200	12-#6-V200	12-#6-V500
L1, Length of Vertical Bars	7'-3"	7'-3"	7'-3"	7'-3"
Upper Stirrup Bars	3-#4-P200	3-#4-P200	3-#4-P200	3-#4-P500
Lower Stirrup Bars	7-#4-P200	7-#4-P200	7-#4-P200	7-#4-P500

Notes:

Welded or seamless steel shell (pipe) shall be ASTM A252 Grade 3 (fy = 45,000 psi).

Concrete for cast-in-place pile shall be Class B-1.

Steel for closure plate shall be ASTM A709 Grade 50.

Steel for cruciform pile point reinforcement shall be ASTM A709 Grade 50.

The minimum wall thickness of any spot or local area of any type shall not be more than 12.5% under the specified nominal wall thickness.

The contractor shall determine the pile wall thickness required to avoid damage from all driving activities, but wall thickness shall not be less than the minimum specified. No additional payment will be made for furnishing a thicker pile wall than specified on the plans.

Closure plate shall not project beyond the outside diameter of the pipe pile. Satisfactory weldments may be made by beveling tip end of pipe or by use of inside backing rings. In either case, proper gaps shall be used to obtain weld penetration full thickness of pipe. Payment for furnishing and installing closure plate will be considered completely covered by the contract unit price for Galvanized Cast-In-Place Concrete Piles.

Splices of pipe for cast-in-place concrete pile shall be made watertight and to the full strength of the pipe above and below the splice to permit hard driving without damage. Pipe damaged during driving shall be replaced without cost to the state. Pipe sections used for splicing shall be at least 5 feet in length.

At the contractor's option, the hooks of vertical bars embedded in the beam cap may be oriented inward or outward.

Closure plate need not be galvanized.

Reinforcing steel for cast-in-place piles is included in the Bill of Reinforcing Steel.

All reinforcement for cast-in-place pile is included in the estimated quantities for bents.

For Foundation Data table, see Sheet No. 3.

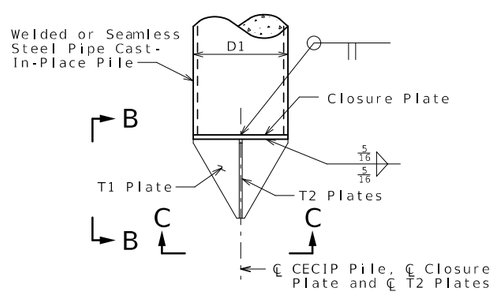

CRUCIFORM PILE POINT

Note: Cost of closure plate is included with cast-in-place concrete pile.

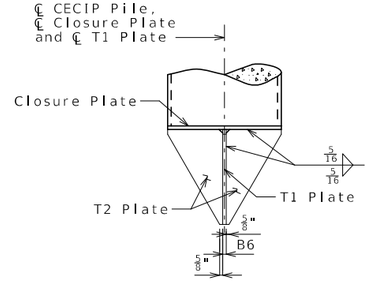

ELEVATION B-B

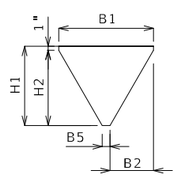

T1 PLATE DETAILS

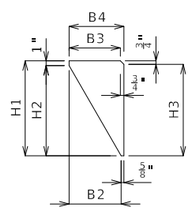

T2 PLATE DETAILS (2 REQUIRED)

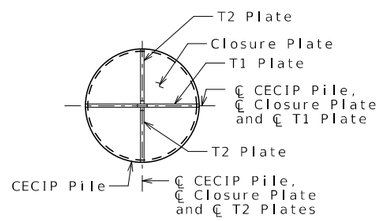

SECTION C-C

CRUCIFORM PILE POINT REINFORCEMENT

GALVANIZED CLOSED ENDED CAST-IN-PLACE (CECIP) CONCRETE PILE

Detailed Jan. 2024
Checked Jan. 2024

Note: This drawing is not to scale. Follow dimensions.

STATE OF MISSOURI
DAVID ANDREW STRAATMANN
NUMBER PE-2004000848
PROFESSIONAL ENGINEER
THIS SHEET HAS BEEN SIGNED, SEALED AND DATED ELECTRONICALLY.

DATE PREPARED 3/20/2024
ROUTE Z | STATE MO
DISTRICT BR | SHEET NO. 10
COUNTY PLATTE
JOB NO. J4S3454
CONTRACT ID.
PROJECT NO.
BRIDGE NO. A9373

DESCRIPTION | DATE

IF A SEAL IS PRESENT ON THIS SHEET IT HAS BEEN ELECTRONICALLY SEALED AND DATED.

MISSOURI HIGHWAYS AND TRANSPORTATION COMMISSION
105 WEST CAPITOL
JEFFERSON CITY, MO 65102
1-888-ASK-MODOT (1-888-275-6636)

Bartlett & West
601 MONROE STREET, SUITE 201 - JEFFERSON CITY, MO 65101
PHONE 573-634-3181 - FAX 573-634-7904
CERTIFICATE OF AUTHORITY NO. 000167 - ENGINEERING
WWW.BARTWEST.COM

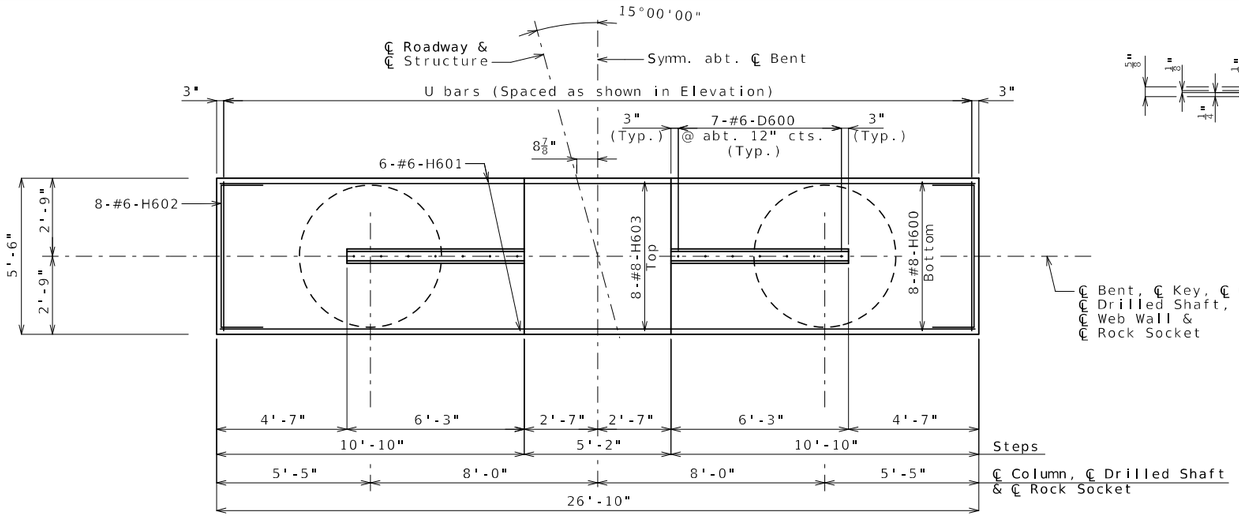

PLAN OF BEAM SHOWING REINFORCEMENT

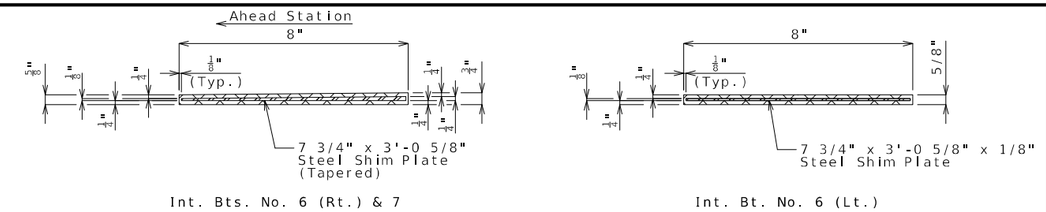

Int. Bts. No. 6 (Rt.) & 7

Int. Bt. No. 6 (Lt.)

DETAILS OF 8" x 3'-0 7/8" LAMINATED NEOPRENE BEARING PADS

Note: The required shim plate shall be placed between layers of elastomer and molded together to form an integral unit.

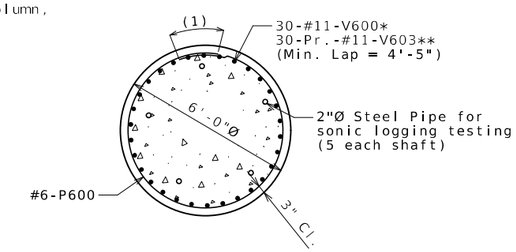

SECTION C-C

(1) Min. Lap = 3'-7" (Stagger adjacent bar splices)

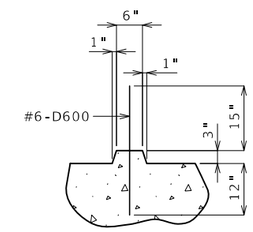

SECTION THRU KEY

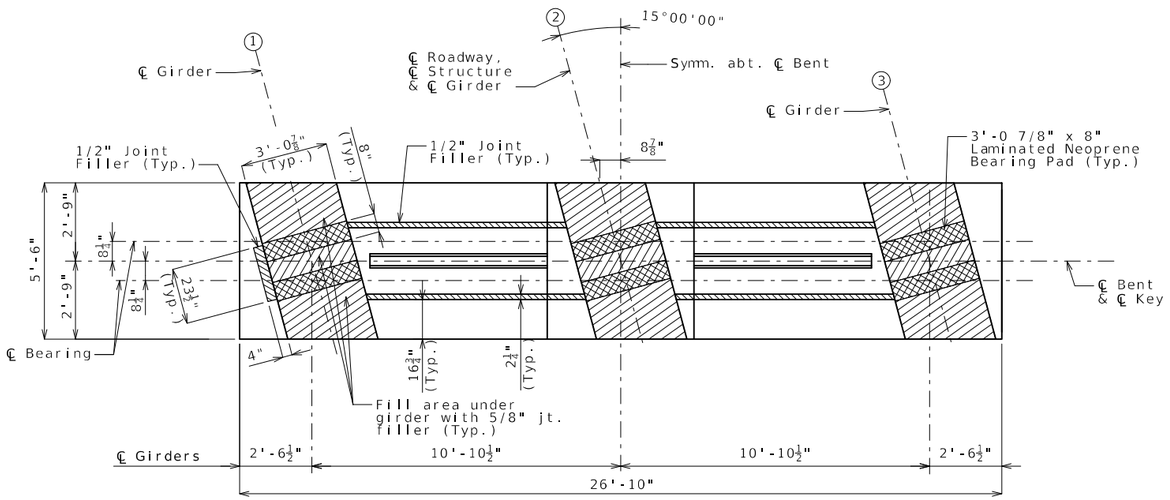

PLAN OF BEAM

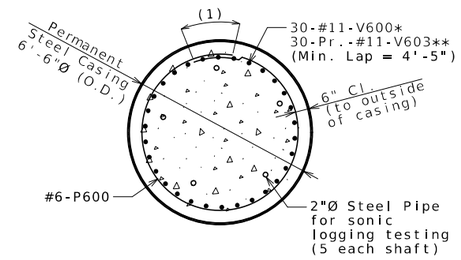

SECTION B-B

Substructure Quantity Table for Bents No. 6 & 7			
Item		Bent No. 6 Quantity	Bent No. 7 Quantity
Drilled Shafts (6 ft. 6 in. Dia.)	linear foot	65.0	82.0
Rock Sockets (6 ft. 0 in. Dia.)	linear foot	32.0	32.0
Video Camera Inspection	each	2	2
Foundation Inspection Holes	linear foot	58.0	58.0
Sonic Logging Testing	each	2	2
Class B Concrete (Substructure)	cu. yard	82.2	57.5
Reinforcing Steel (Bridges)	pound	34,040	35,610

Notes:

These quantities are included in the Estimated Quantities table on Sheet No. 3.

At the contractor's option, the details shown in Optional Part Section A-A may be used for column-web beam at Intermediate Bents No. 6 & 7. No additional payment will be made for this substitution.

Work this sheet with Sheet No. 12.

For steps 2 inches or more, use 2 1/4 x 1/2 inch joint filler up vertical face.

* - Intermediate Bent No. 6
** - Intermediate Bent No. 7

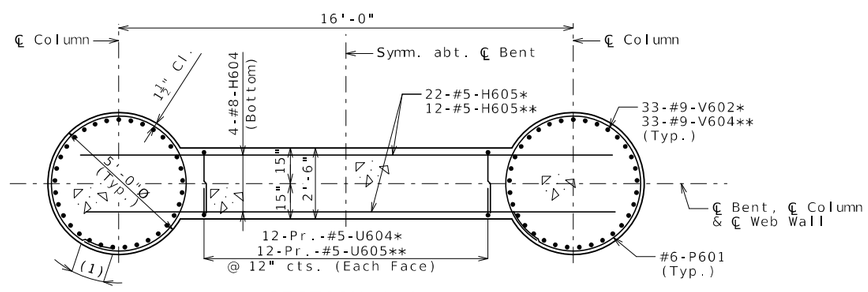

SECTION A-A

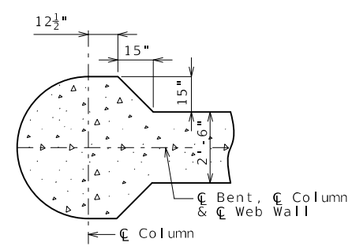

OPTIONAL PART SECTION A-A

DETAILS OF INTERMEDIATE BENTS NO. 6 & 7

Detailed Jan. 2024
Checked Jan. 2024

Note: This drawing is not to scale. Follow dimensions.

STATE OF MISSOURI
DAVID ANDREW STRAATMANN
NUMBER PE-2004000848
PROFESSIONAL ENGINEER
THIS SHEET HAS BEEN SIGNED, SEALED, AND DATED ELECTRONICALLY.

IF A SEAL IS PRESENT ON THIS SHEET IT HAS BEEN ELECTRONICALLY SEALED AND DATED.

DATE PREPARED	
3/20/2024	
ROUTE	STATE
Z	MO
DISTRICT	SHEET NO.
BR	11
COUNTY	
PLATTE	
JOB NO.	
J4S3454	
CONTRACT ID.	
PROJECT NO.	
BRIDGE NO.	
A9373	

DATE	DESCRIPTION

MISSOURI HIGHWAYS AND TRANSPORTATION COMMISSION
105 WEST CAPITOL
JEFFERSON CITY, MO 65102
1-888-ASK-MODOT (1-888-275-6636)

Bartlett & West
601 MONROE STREET, SUITE 201 - JEFFERSON CITY, MO 65101
PHONE 573-634-3181 - FAX 573-634-7904
CERTIFICATE OF AUTHORITY NO. 000167 - ENGINEERING
WWW.BARTWEST.COM

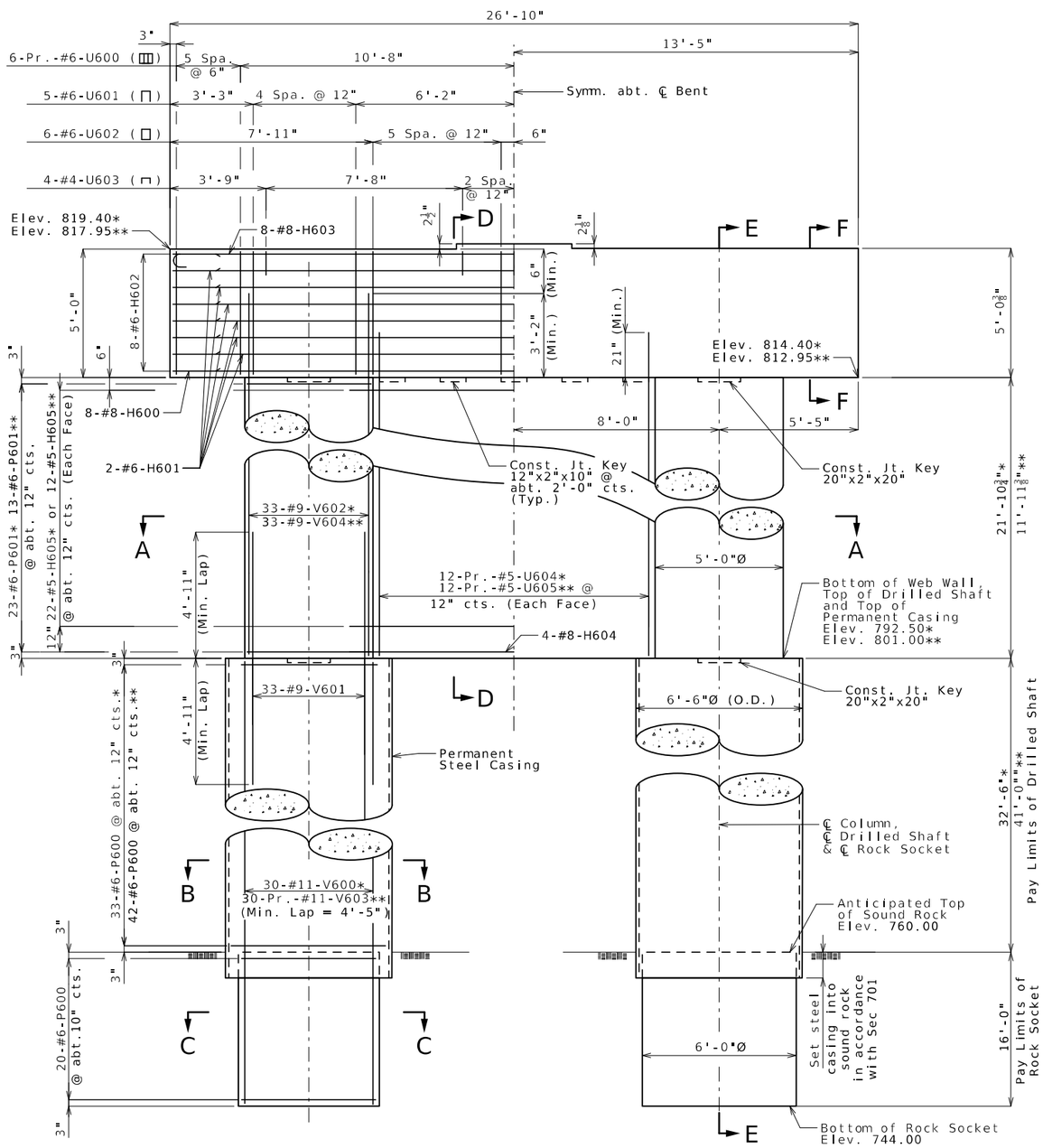

ELEVATION

Note: Key not shown for clarity.

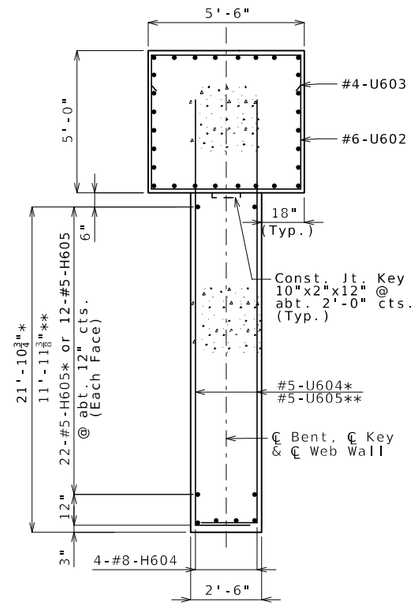

SECTION D-D

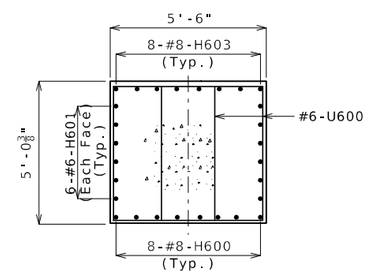

SECTION F-F

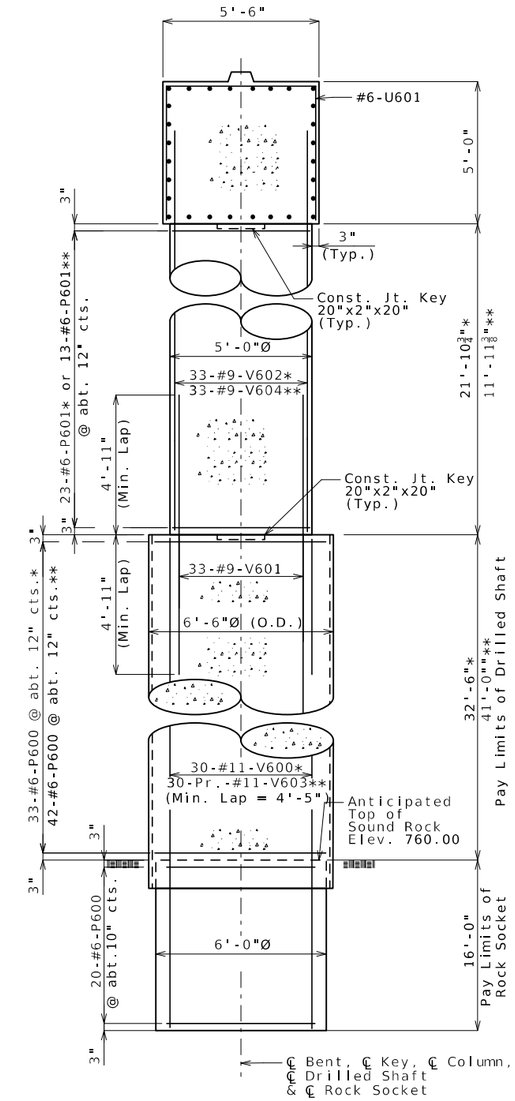

SECTION E-E

Notes:
An additional 4 feet has been added to #11-V600 & #11-V603 lengths and four additional P600 bars have been added in the quantities per shaft, if required, for possible change in drilled shaft or rock socket length. The additional V-bar length shall be cut-off or included in the reinforcment lap if not required. The additional P600 bars shall be spaced similarly to that shown in elevation, if required, or to a lesser spacing if not required but not less than 6" cts.

Sonic logging testing shall be performed on all drilled shafts and rock sockets.

Thickness of permanent steel casing shall be in accordance with Sec 701.

All reinforcement in drilled shafts and rock sockets is included in the substructure quantities.

Work this sheet with Sheet No. 11.

* - Intermediate Bent No. 6
** - Intermediate Bent No. 7

DETAILS OF INTERMEDIATE BENTS NO. 6 & 7

Detailed Jan. 2024
Checked Jan. 2024

Note: This drawing is not to scale. Follow dimensions.

STATE OF MISSOURI
DAVID ANDREW STRAATMANN
NUMBER PE-2004000848
PROFESSIONAL ENGINEER
THIS SHEET HAS BEEN SIGNED, SEALED AND DATED ELECTRONICALLY.

DATE PREPARED	
3/20/2024	
ROUTE	STATE
Z	MO
DISTRICT	SHEET NO.
BR	12
COUNTY	
PLATTE	
JOB NO.	
J4S3454	
CONTRACT ID.	
PROJECT NO.	
BRIDGE NO.	
A9373	

DATE	DESCRIPTION

IF A SEAL IS PRESENT ON THIS SHEET IT HAS BEEN ELECTRONICALLY SEALED AND DATED.

MISSOURI HIGHWAYS AND TRANSPORTATION COMMISSION
105 WEST CAPITOL
JEFFERSON CITY, MO 65102
1-888-ASK-MODOT (1-888-275-6636)

Bartlett & West
601 MONROE STREET, SUITE 201 - JEFFERSON CITY, MO 65101
PHONE 573-634-3181 - FAX 573-634-7904
CERTIFICATE OF AUTHORITY NO. 000167 - ENGINEERING
WWW.BARTWEST.COM

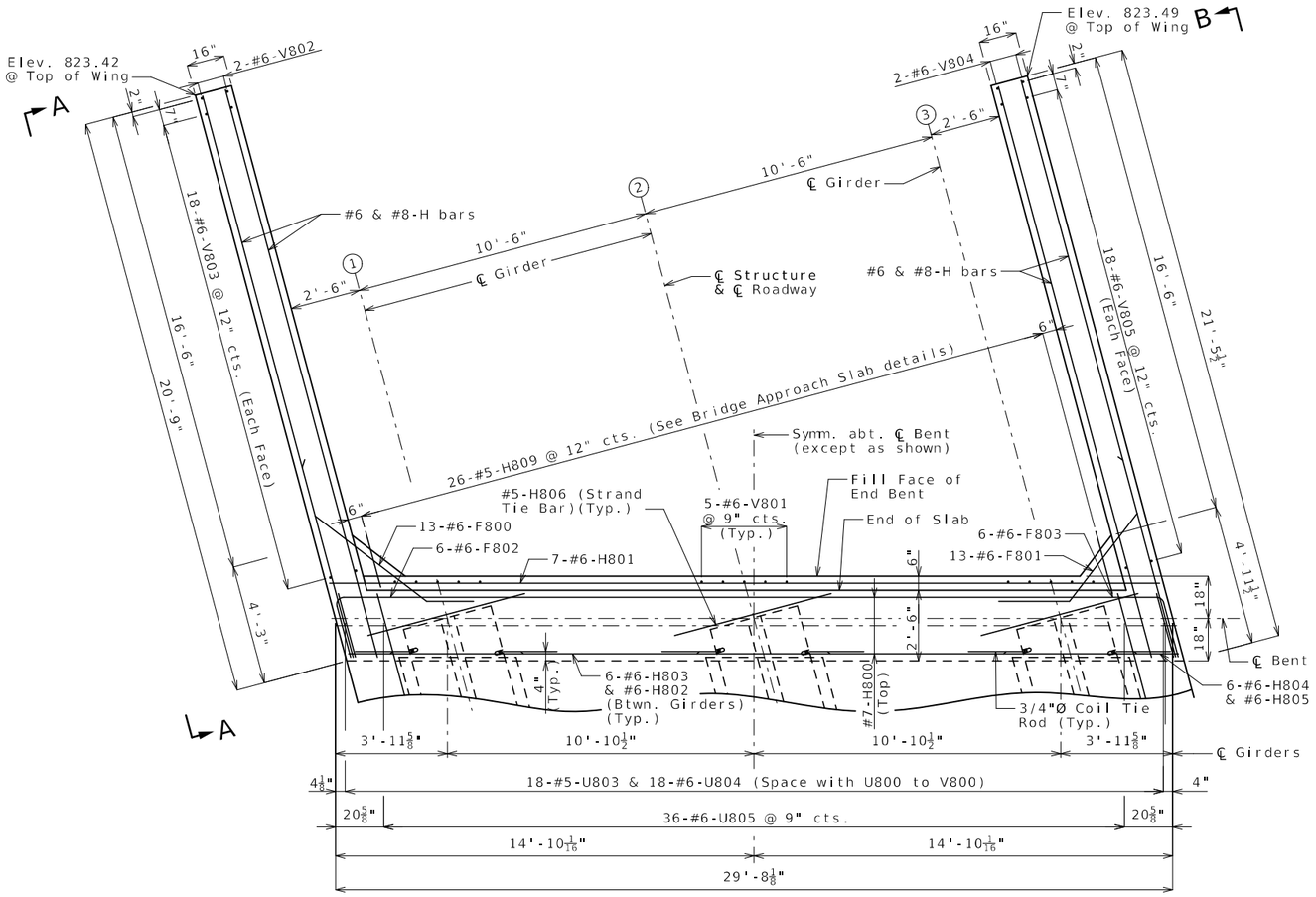

PART PLAN

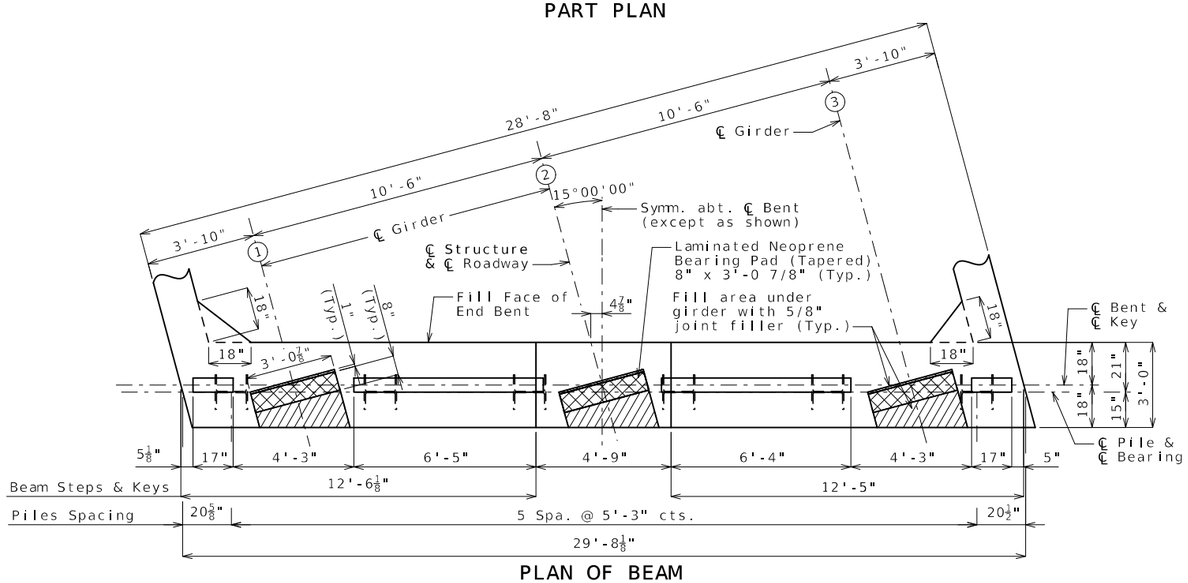

PLAN OF BEAM

DETAILS OF END BENT NO. 8

Note: This drawing is not to scale. Follow dimensions.

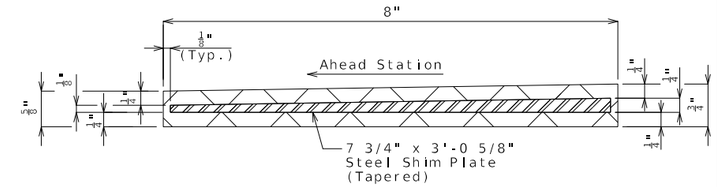

DETAILS OF 8" x 3'-0 7/8" LAMINATED NEOPRENE BEARING PADS (TAPERED)

Note: The required shim plate shall be placed between layers of elastomer and molded together to form an integral unit.

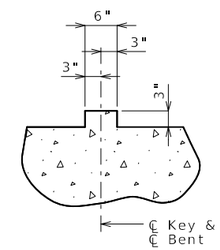

SECTION THRU KEY

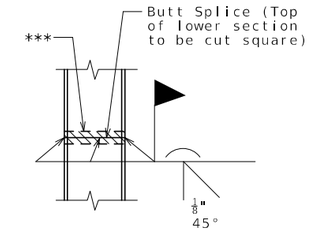

STEEL PILE SPLICE

(If required)

*** Galvanizing material shall be omitted or removed one inch clear of weld locations in accordance with Sec 702.

General Notes:

For details at End Bent not shown, see Sheets No. 14 and 15.

#5-H809 bars shall be used for the concrete bridge approach slab, see Sheet No. 36.

Strands at end of the girders shall be field bent or, if necessary, cut in field to maintain 1 1/2" minimum clearance to fill face of end bent.

For location of #5-H806 (Strand Tie Bar), see Sheets No. 22 or 23.

For Elevations A-A and B-B, see Sheet No. 15.

For Section Near End Bent, see Sheet No. 14.

All concrete in the end bent above top of beam and below top of slab shall be Class B-2.

The U bars and #5-H809 bars shall be placed parallel to centerline of roadway.

Bend #6-F800 & #6-F801 in field to clear girders.

Substructure Quantity Table for Bent No. 8

Item		End Bent No. 8
Class 1 Excavation	cu. yard	65
Galvanized Structural Steel Piles (14 in.)	linear foot	108
Pile Point Reinforcement (H-Pile)	each	6
Class B Concrete (Substructure)	cu. yard	15.7

Note: These quantities are included in the Estimated Quantities table on Sheet No. 3.

STATE OF MISSOURI
DAVID ANDREW STRAATMANN
NUMBER PE-2004000848
PROFESSIONAL ENGINEER
THIS SHEET HAS BEEN SIGNED, SEALED AND DATED ELECTRONICALLY.

DATE PREPARED 3/20/2024

ROUTE	STATE
Z	MO
DISTRICT	SHEET NO.
BR	13

COUNTY: PLATTE
JOB NO.: J4S3454
CONTRACT ID.:
PROJECT NO.:
BRIDGE NO.: A9373

DATE	DESCRIPTION

MISSOURI HIGHWAYS AND TRANSPORTATION COMMISSION
105 WEST CAPITOL
JEFFERSON CITY, MO 65102
1-888-ASK-MODOT (1-888-275-6636)

Bartlett & West
601 MONROE STREET, SUITE 201 - JEFFERSON CITY, MO 65101
PHONE 573-634-3181 - FAX 573-634-7904
CERTIFICATE OF AUTHORITY NO. 000167 - ENGINEERING
WWW.BARTWEST.COM

IF A SEAL IS PRESENT ON THIS SHEET IT HAS BEEN ELECTRONICALLY SEALED AND DATED.

Detailed Jan. 2024
Checked Jan. 2024

pw://bartwest-pw.bentley.com:bartwest-pw-04/Documents/19000/19421.G30 - Platt County Route Z/OpenRoads Designer/A9373/B_A9373_013_J4S3454_end_bt_08.dgn 12:04:19 PM 3/20/2024

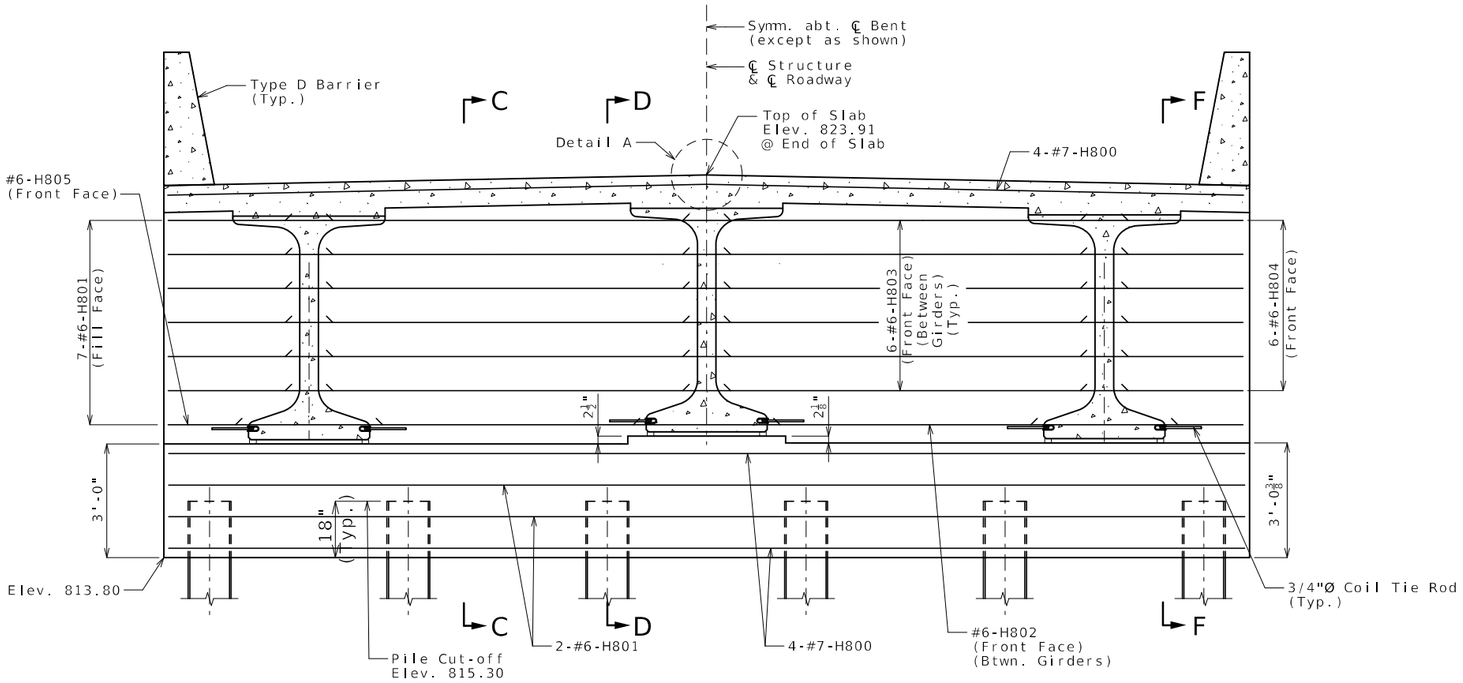

SECTION NEAR END BENT

Note: Keys not shown for clarity.

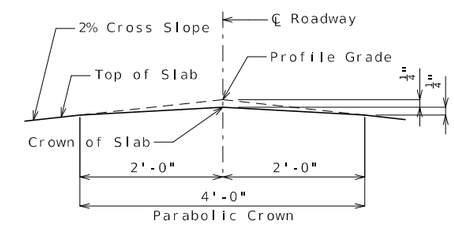

DETAIL A

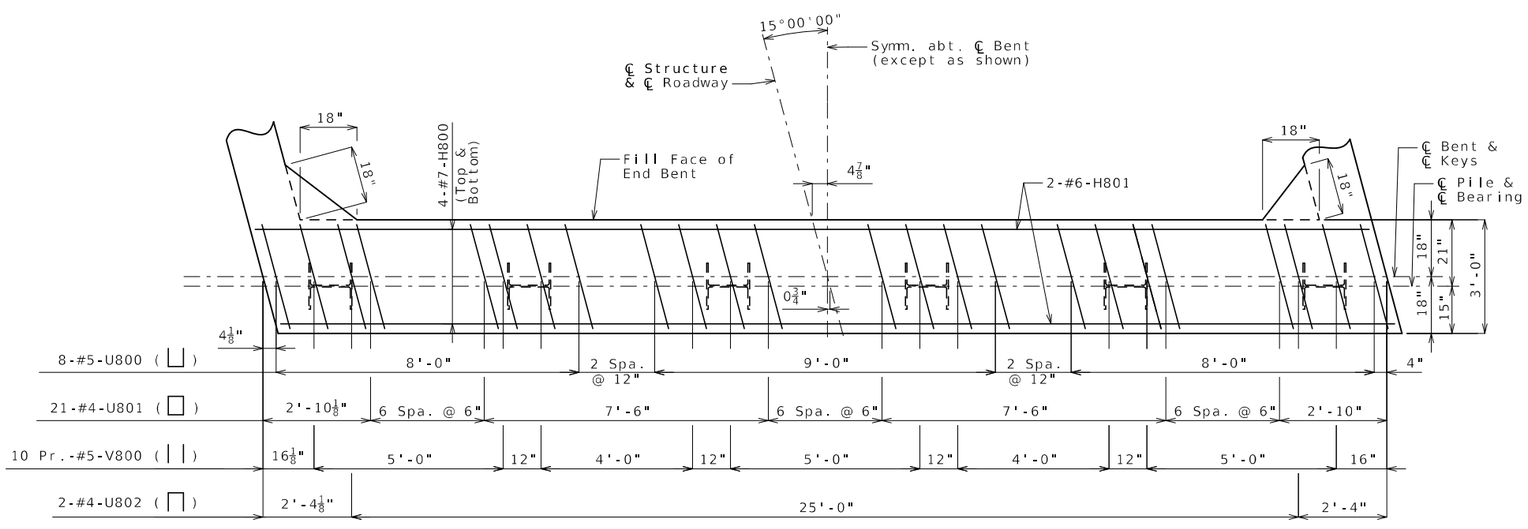

PLAN OF BEAM

Notes:

For details of End Bents not shown, see Sheets No. 13 and 15.

For location of Coil Tie Rods and #5-H806 (Strand Tie Bar), see Sheets No. 22 and 23.

All concrete in the End Bent above top of beam and below top of slab shall be Class B-2.

For Sections C-C thru F-F, see Sheet No. 15.

For details of Bridge Approach Slab, see Sheet No. 36.

Reinforcing steel shall be shifted to clear piles. U bars shall clear piles by at least 1 1/2 inches.

The U bars and pairs of V800 bars shall be placed parallel to centerline of roadway.

DETAILS OF END BENT NO. 8

Detailed Jan. 2024
Checked Jan. 2024

Note: This drawing is not to scale. Follow dimensions.

STATE OF MISSOURI
DAVID ANDREW STRAATMANN
NUMBER PE-2004000848
PROFESSIONAL ENGINEER
THIS SHEET HAS BEEN SIGNED, SEALED AND DATED ELECTRONICALLY.

DATE PREPARED	3/20/2024
ROUTE	Z
STATE	MO
DISTRICT	BR
SHEET NO.	14
COUNTY	PLATTE
JOB NO.	J4S3454
CONTRACT ID.	
PROJECT NO.	
BRIDGE NO.	A9373

DATE	DESCRIPTION

IF A SEAL IS PRESENT ON THIS SHEET IT HAS BEEN ELECTRONICALLY SEALED AND DATED.

MISSOURI HIGHWAYS AND TRANSPORTATION COMMISSION
105 WEST CAPITOL
JEFFERSON CITY, MO 65102
1-888-ASK-MODOT (1-888-275-6636)

Bartlett & West
601 MONROE STREET, SUITE 201 - JEFFERSON CITY, MO 65101
PHONE 573-634-3181 - FAX 573-634-7904
CERTIFICATE OF AUTHORITY NO. 000167 - ENGINEERING
WWW.BARTWEST.COM

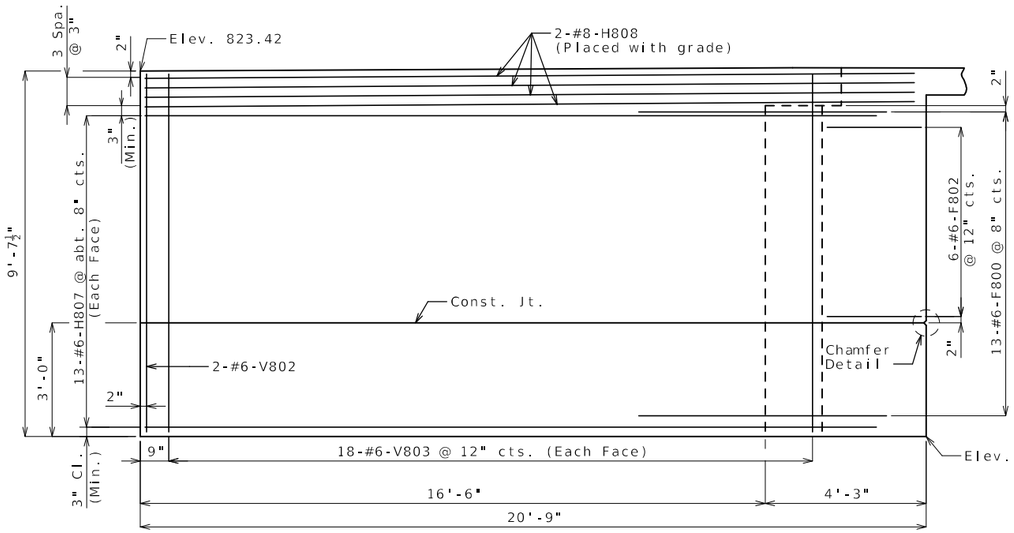

ELEVATION A-A

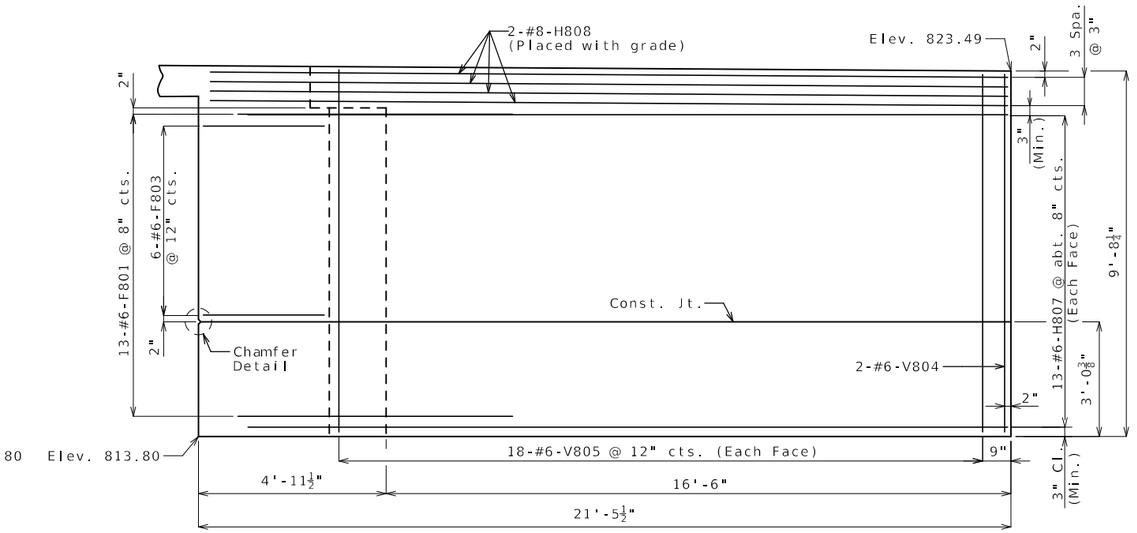

ELEVATION B-B

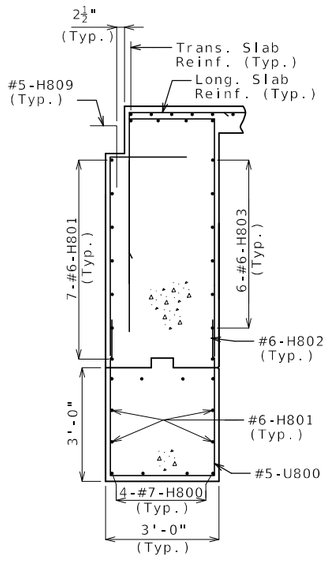

SECTION C-C

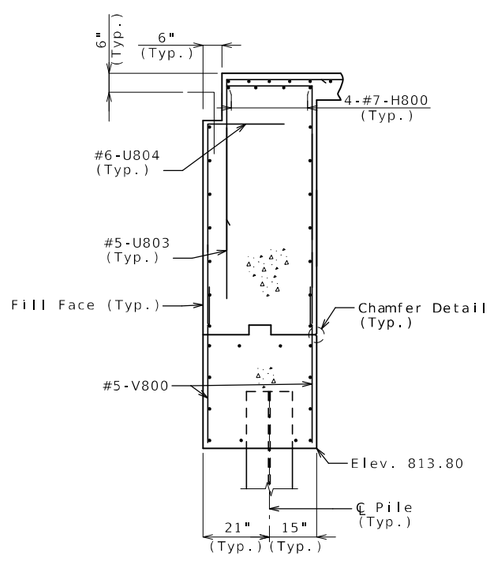

SECTION D-D

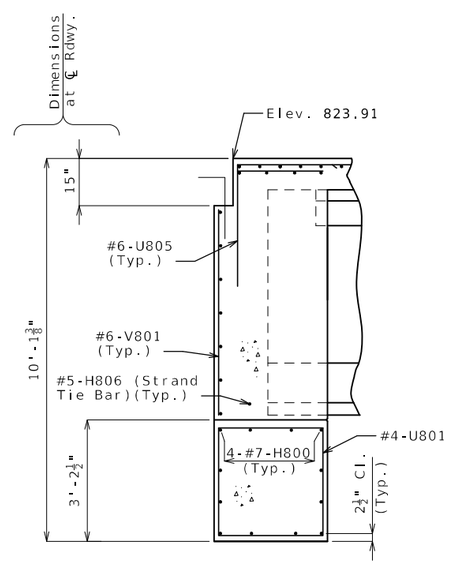

SECTION E-E

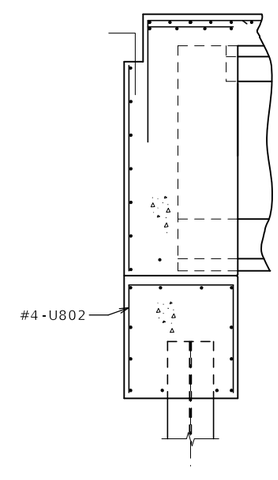

SECTION F-F

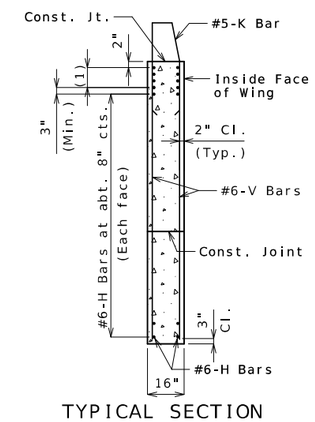

TYPICAL SECTION THRU WING

(1) #8-H Bars at 3" cts. (Each face)(Place with grade)

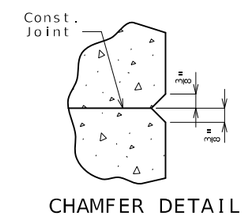

CHAMFER DETAIL

Notes:

For reinforcement of the Type D Barrier not shown, see Sheet No. 35.

For details of Vertical Drain at End Bents, see Sheet No. 7.

For details of End Bents not shown, see Sheets No. 13 and 14.

For details of Bridge Approach Slab, see Sheet No. 36.

DETAILS OF END BENT NO. 8

Detailed Jan. 2024
Checked Jan. 2024

Note: This drawing is not to scale. Follow dimensions.

STATE OF MISSOURI
DAVID ANDREW STRAATMANN
NUMBER PE-2004000848
PROFESSIONAL ENGINEER
THIS SHEET HAS BEEN SIGNED, SEALED AND DATED ELECTRONICALLY.

DATE PREPARED	
3/20/2024	
ROUTE: Z	STATE: MO
DISTRICT: BR	SHEET NO.: 15
COUNTY: PLATTE	
JOB NO.: J4S3454	
CONTRACT ID.	
PROJECT NO.	
BRIDGE NO.: A9373	

DATE	DESCRIPTION

IF A SEAL IS PRESENT ON THIS SHEET IT HAS BEEN ELECTRONICALLY SEALED AND DATED.

MISSOURI HIGHWAYS AND TRANSPORTATION COMMISSION
105 WEST CAPITOL
JEFFERSON CITY, MO 65102
1-888-ASK-MODOT (1-888-275-6636)

Bartlett & West
601 MONROE STREET, SUITE 201 - JEFFERSON CITY, MO 65101
PHONE 573-634-3181 - FAX 573-634-7904
CERTIFICATE OF AUTHORITY NO. 000167 - ENGINEERING
WWW.BARTWEST.COM

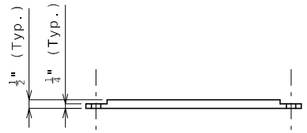

ELEVATION OF GALVANIZED STEEL STOPPER PLATE

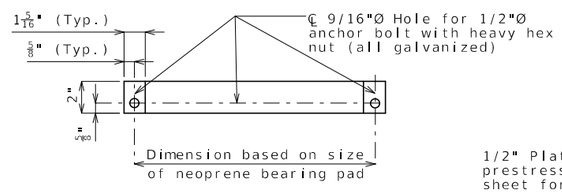

PLAN OF GALVANIZED STEEL STOPPER PLATE

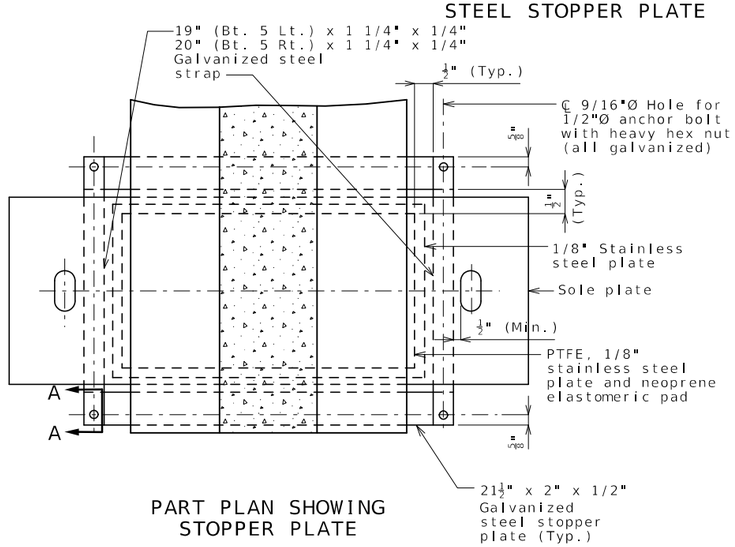

PART PLAN SHOWING STOPPER PLATE

Stopper plates and straps shall be provided to prevent loss of support due to creeping of PTFE bearings. Payment for fabricating and installing the stopper plates and straps will be considered completely covered by the contract unit price for Type N PTFE Bearing.

The bottom face of the 1/8" stainless steel plate that is welded to the sole plate shall be lubricated with a lubricant that is approved by the bearing manufacturer.

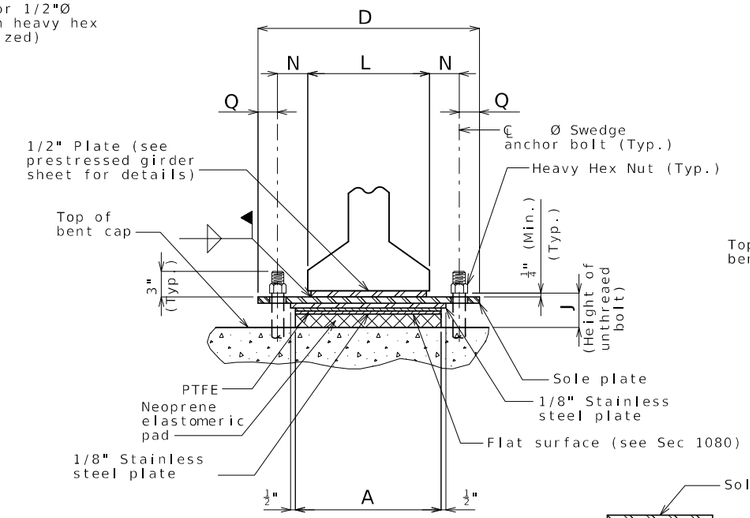

END VIEW

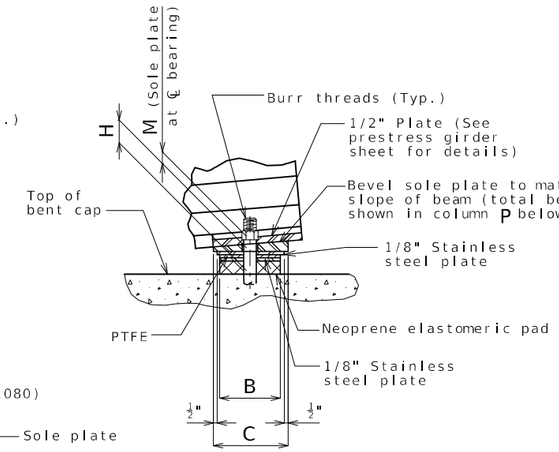

SIDE VIEW

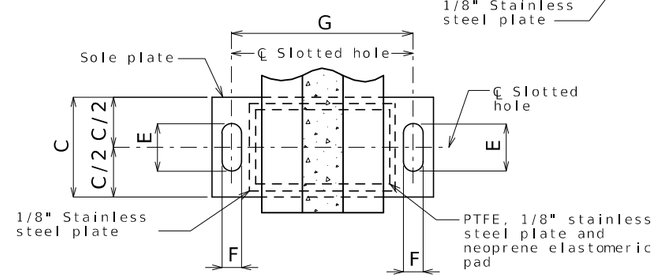

PART PLAN

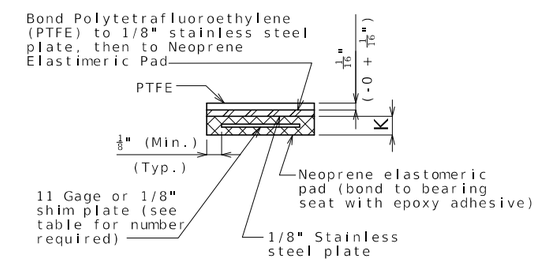

NEOPRENE ELASTOMERIC PAD

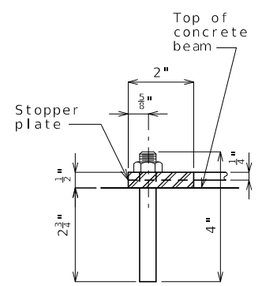

SECTION A-A

PTFE SLIDING BEARINGS																		
BENT NO.	A	B	C	D	E	F	G	H	J	K	L	M	N	P	Q	R	NUMBER OF SHIM PLATES *	NUMBER REQUIRED
5 (Lt.)	18"	14"	24 1/2"	51 1/4"	8 1/2"	2 5/8"	44	--	5 13/16"	3 3/4"	38 3/8"	1 1/2"	2 13/16"	0"	3 3/4"	3/16"	6	3
5 (Rt.)	18"	15"	24 1/2"	51 1/4"	8 1/2"	2 5/8"	44	--	5 13/16"	3 3/4"	38 3/8"	1 1/2"	2 13/16"	0"	3 3/4"	3/16"	6	3
																	TOTAL BEARINGS	6

* The required shim plate shall be placed between layers of elastomer and molded together to form an integral unit.

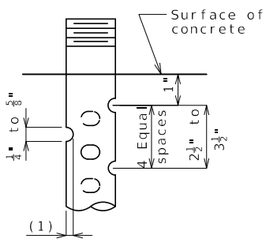

DETAIL FOR 3/4"Ø THRU 2 1/2"Ø ANCHOR BOLTS

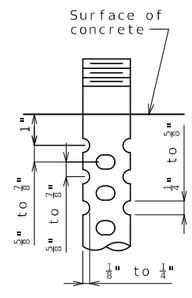

OPTIONAL DETAIL FOR 1 3/8"Ø THRU 2 1/2"Ø ANCHOR BOLTS

SWEDGE ANCHOR BOLT DETAILS

(1) 1/8" for 3/4"Ø thru 1 1/4"Ø anchor bolts

1/8" to 1/4" for 1 3/8"Ø thru 2 1/2"Ø anchor bolts

GENERAL NOTES:

Design coefficient of friction equals 0.06.

Anchor bolts shall be 2 1/2"Ø ASTM F1554 Grade 55 swedged bolts and shall extend 25 in. into the concrete with ASTM A563 Grade A Heavy Hex nuts. Actual manufacturer's certified mill test reports (chemical and mechanical) shall be provided. Swedging shall be 1" less than extension into the concrete.

Anchor bolt shall be at the centerline of slotted hole at 60°F. Bearing position shall be adjusted R for each 10° fall or rise in temperature at installation.

Anchor bolts and heavy hex nuts shall be coated with a minimum of two coats of inorganic zinc primer to provide a total dry film thickness of 4 mils minimum, 6 mils maximum, or galvanized in accordance with Sec 1081.

Neoprene Elastomeric Pads shall be 70 Durometer.

Structural steel for sole plate shall be ASTM A709 Grade 50 and shall be coated with a minimum of two coats of inorganic zinc primer to provide a total dry film thickness of 4 mils minimum, 6 mils maximum. The stainless steel plate shall be protected from any coating.

Type N PTFE Bearings shall be in accordance with Sec 716.

PTFE surface shall be fabricated as a single piece. Splicing will not be permitted.

TYPE N PTFE BEARINGS

Detailed Jan. 2024
Checked Jan. 2024

Note: This drawing is not to scale. Follow dimensions.

STATE OF MISSOURI
DAVID ANDREW STRAATMANN
NUMBER PE-2004000848
PROFESSIONAL ENGINEER
THIS SHEET HAS BEEN SIGNED, SEALED AND DATED ELECTRONICALLY.

DATE PREPARED	
3/20/2024	
ROUTE Z	STATE MO
DISTRICT BR	SHEET NO. 16
COUNTY PLATTE	
JOB NO. J4S3454	
CONTRACT ID.	
PROJECT NO.	
BRIDGE NO. A9373	

DATE	DESCRIPTION

IF A SEAL IS PRESENT ON THIS SHEET IT HAS BEEN ELECTRONICALLY SEALED AND DATED.

MISSOURI HIGHWAYS AND TRANSPORTATION COMMISSION
105 WEST CAPITOL
JEFFERSON CITY, MO 65102
1-888-ASK-MODOT (1-888-275-6636)

Bartlett & West
601 MONROE STREET, SUITE 201 - JEFFERSON CITY, MO 65101
PHONE 573-634-3181 - FAX 573-634-7904
CERTIFICATE OF AUTHORITY NO. 000167 - ENGINEERING
WWW.BARTWEST.COM

(1) Fabricator shall apply a bond breaker to this region.

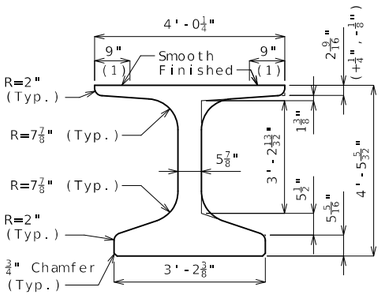

DIMENSIONS

(2) Outer strands tensioned to 2.02 kips/strand and inner strands to 8 kips/strand. Placed symmetrical about ℄ Girder. May be moved laterally in pairs.

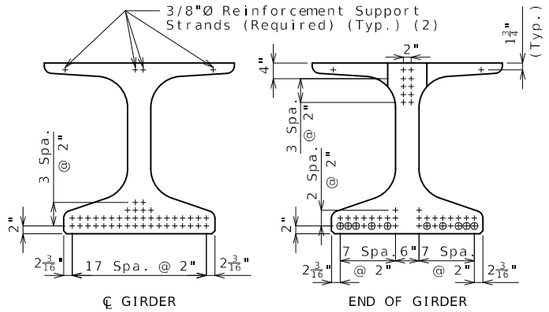

STRAND ARRANGEMENT

+ Indicates prestressing strand.

o Indicates cut & shop bend with 3'-0" projection.

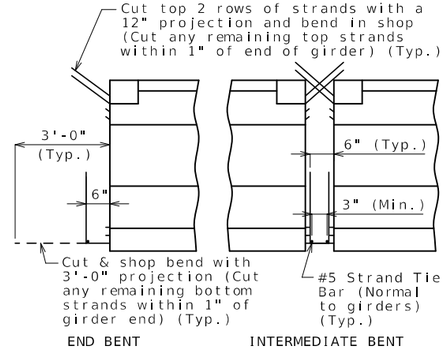

STRANDS AT GIRDER ENDS

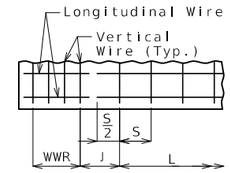

WELDED WIRE PLACEMENT

S = Vertical wire spacing

L = Length of WWR mats

J = Distance between WWR mats

Bill of Reinforcing Steel

Bars Each Girder

No.	Size/Mark		Length	Shape
(D)*	3	G1	2'-10"	8
2	4	G3	3'-11"	20
2	4	G4	2'-3"	20
2	4	G5	2'-9"	20
4	4	G6	Varies	20

Welded Wire Each Girder

Mark	Size	S	W	L	J
WWR1	D20	4"	W8	*	*
WWR2	D20	8"	W8	*	*
WWR3	D20	12"	W8	*	*
WWR6	D31	2"	W12	*	*

Bending Diagrams

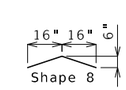

Shape 20

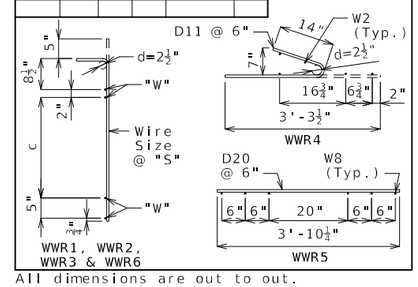

All dimensions are out to out.

Hooks and bends shall be in accordance with the CRSI Manual of Standard Practice for Detailing Reinforced Concrete Structures, Stirrup and Tie Dimensions.

Actual bar lengths are measured along centerline of bar to the nearest inch.

Minimum clearance to reinforcing shall be 1", unless otherwise shown.

All bar reinforcement shall be Grade 60.

WWR shall not be epoxy coated.

G4 and G5 not required for interior girders. G3 and G6 not required for exterior girders of intermediate spans. Half no. of G3, G4, G5 and G6 not required for ext. girders of end spans.

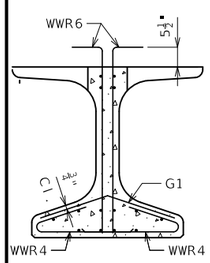

SECTION A-A

Strands not shown for clarity.

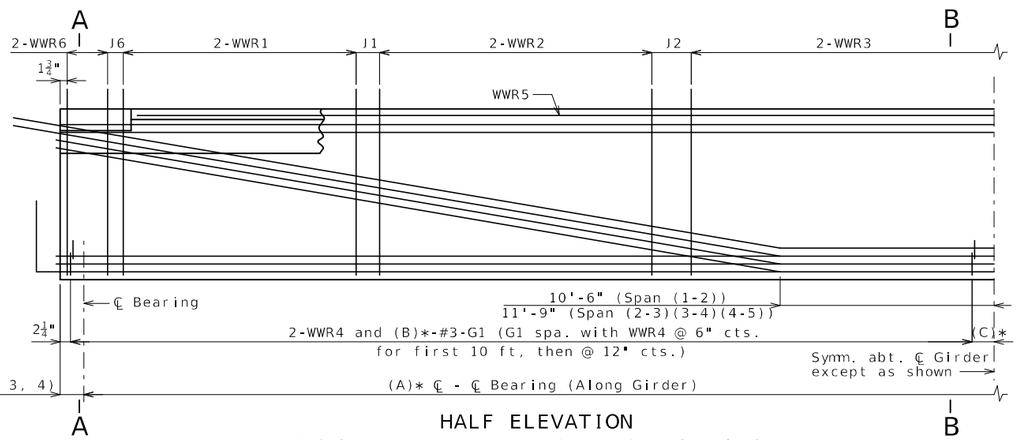

HALF ELEVATION

Reinforcement support strands not shown for clarity.

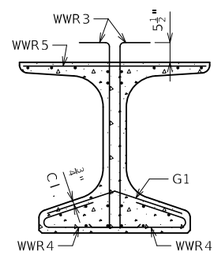

SECTION B-B

Strands not shown for clarity.

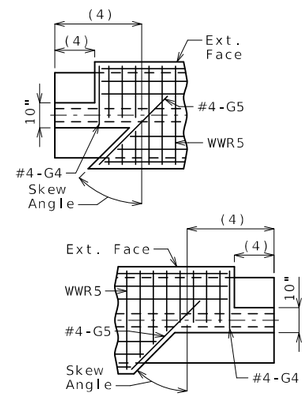

LEFT EXTERIOR GIRDER AT INTERMEDIATE BENT

Rotate 180° for right ext.

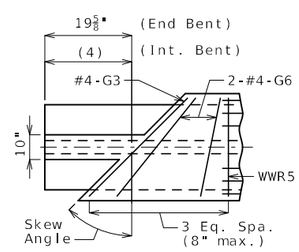

INTERIOR GIRDER AT ALL BENTS & EXTERIOR GIRDER AT END BENT

TOP FLANGE BLOCKOUT

Mirror for right advanced.

(4) See dimension data table on Sheet No. 21.

General Notes:

Concrete for prestressed beams shall be Class A-1 with f'c = 9000 psi and f'ci = 7000 psi.

Use 42 strands, 0.6"Ø Grade 270, with an initial prestress force of 1846 kips.

Pretensioned members shall be in accordance with Sec 1029.

Fabricator shall be responsible for location and design of lifting devices.

Exterior and interior girders are the same except: coil ties, top flange blockout, application of bond breaker, coil inserts for slab drains, holes for steel intermediate diaphragms.

For Girder Camber Diagram, see Sheet No. 30.

The 1 1/2"Ø holes shall be cast in the web for steel intermediate diaphragms. Drilling is not allowed. For location of holes and details of steel intermediate diaphragms, see Sheet No. 24.

For location of coil inserts at slab drains, see Sheet No. 27.

For location of coil ties at concrete diaphragms and integral bents, see Sheets No. 4 and 28.

Alternate bar reinforcing steel details are provided and may be used. The same type of reinforcing steel shall be used for all girders in all spans.

* See data table on Sheet No. 21.

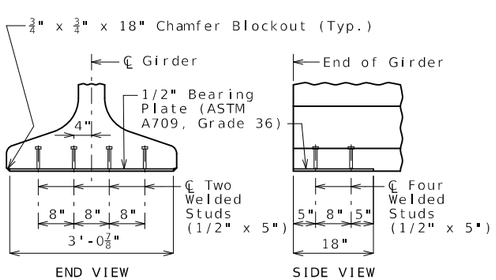

END VIEW

SIDE VIEW

BEARING PLATE

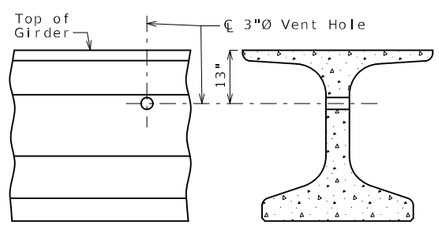

PART ELEVATION

PART SECTION

VENT HOLE

Place vent holes at or near upgrade 1/3 point of girders and clear reinforcing steel or strands by 1 1/2" minimum and steel intermediate diaphragm bolt connections by 6" minimum.

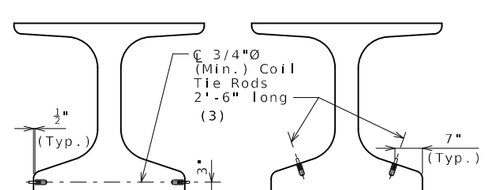

CLOSED DIAPHRAGMS AND INTEGRAL BENTS

OPEN DIAPHRAGMS

COIL TIES

Exclude coil tie at exterior face of exterior girders except at integral end bents.

(3) 2'-4" at exterior face of exterior girders at end bents
4'-0" at open diaphragm at Int. Bent No. 5

NU-GIRDERS - SPANS (1-2)(2-3)(3-4) AND (4-5)

Detailed Jan. 2024
Checked Jan. 2024

Note: This drawing is not to scale. Follow dimensions.

STATE OF MISSOURI
DAVID ANDREW STRAATMANN
NUMBER PE-2004000848
PROFESSIONAL ENGINEER
THIS SHEET HAS BEEN SIGNED, SEALED AND DATED ELECTRONICALLY.

DATE PREPARED	
3/20/2024	
ROUTE Z	STATE MO
DISTRICT BR	SHEET NO. 17
COUNTY PLATTE	
JOB NO. J4S3454	
CONTRACT ID.	
PROJECT NO.	
BRIDGE NO. A9373	

DESCRIPTION

DATE

IF A SEAL IS PRESENT ON THIS SHEET IT HAS BEEN ELECTRONICALLY SEALED AND DATED.

MISSOURI HIGHWAYS AND TRANSPORTATION COMMISSION
105 WEST CAPITOL
JEFFERSON CITY, MO 65102
1-888-ASK-MODOT (1-888-275-6636)

Bartlett & West
601 MONROE STREET, SUITE 201 - JEFFERSON CITY, MO 65101
PHONE 573-634-3181 - FAX 573-634-7904
CERTIFICATE OF AUTHORITY NO. 000167 - ENGINEERING
WWW.BARTWEST.COM

(1) Fabricator shall apply a bond breaker to this region.

(2) Outer strands tensioned to 2.02 kips/strand and inner strands to 8 kips/strand. Placed symmetrical about ℄ Girder. May be moved laterally in pairs.

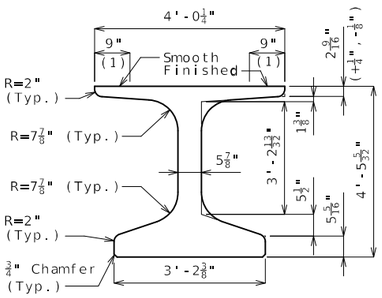

DIMENSIONS

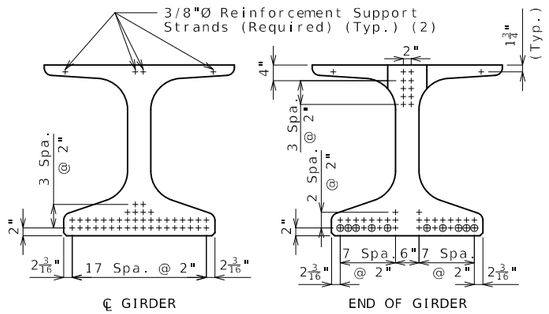

STRAND ARRANGEMENT

+ Indicates prestressing strand.

o Indicates cut & shop bend with 3'-0" projection.

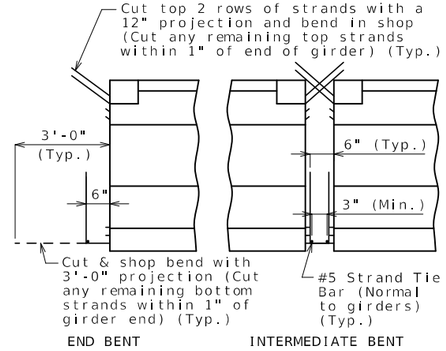

STRANDS AT GIRDER ENDS

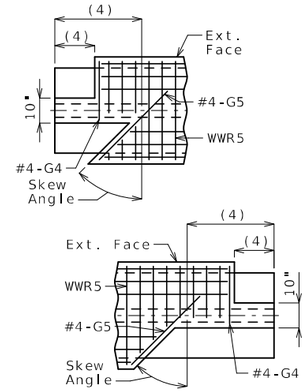

LEFT EXTERIOR GIRDER AT INTERMEDIATE BENT

Rotate 180° for right ext.

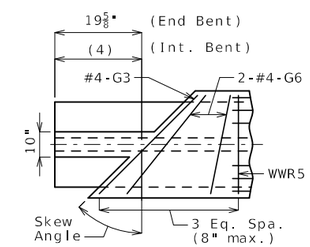

INTERIOR GIRDER AT ALL BENTS & EXTERIOR GIRDER AT END BENT

TOP FLANGE BLOCKOUT

(4) See dimension data table on Sheet No. 21.

Bill of Reinforcing Steel - Each Girder			
No.	Size/ Mark	Length	Shape
(H)*	5 B1	5'-10"	11
(I)*	4 D1	4'-0"	9
2	4 G3	3'-11"	20
2	4 G4	2'-3"	20
2	4 G5	2'-9"	20
4	4 G6	Varies	20

Bending Diagrams

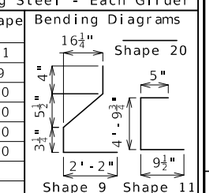

Welded Wire Reinforcement - Each Girder

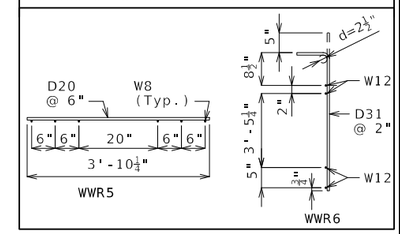

All dimensions are out to out.

Hooks and bends shall be in accordance with the CRSI Manual of Standard Practice for Detailing Reinforced Concrete Structures, Stirrup and Tie Dimensions.

Actual bar lengths are measured along centerline of bar to the nearest inch.

Minimum clearance to reinforcing shall be 1".

All bar reinforcement shall be Grade 60.

The two D1 bars may be furnished as one bar at the fabricator's option.

All B1 bars shall be epoxy coated.

G4 and G5 not required for interior girders. G3 and G6 not required for exterior girders of intermediate spans. Half no. of G3, G4, G5 and G6 not required for ext. girders of end spans.

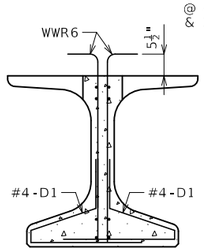

SECTION A-A

Strands not shown for clarity.

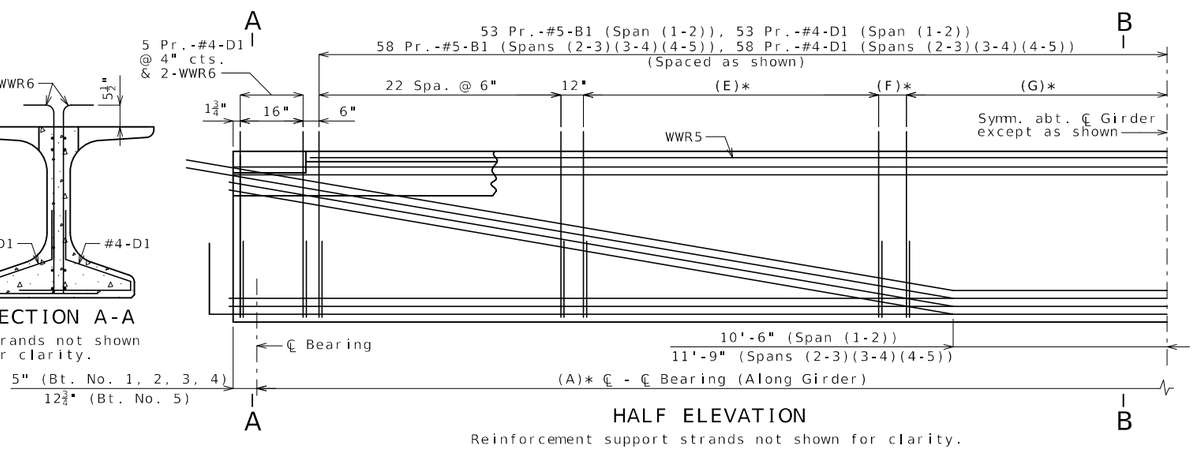

HALF ELEVATION

Reinforcement support strands not shown for clarity.

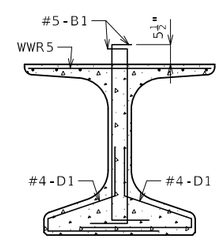

SECTION B-B

Strands not shown for clarity.

General Notes:

Concrete for prestressed girders shall be Class A-1 with f'c = 9000 psi and f'ci = 7000 psi.

Use 42 strands, 0.6"Ø Grade 270, with an initial prestress force of 1846 kips.

Pretensioned members shall be in accordance with Sec 1029.

Fabricator shall be responsible for location and design of lifting devices.

Exterior and interior girders are the same except: coil ties, top flange blockout, application of bond breaker, coil inserts for slab drains, holes for steel intermediate diaphragms.

For Girder Camber Diagram, see Sheet No. 30.

The 1 1/2"Ø holes shall be cast in the web for steel intermediate diaphragms. Drilling is not allowed. For location of holes and details of steel intermediate diaphragms, see Sheet No. 24.

For location of coil inserts at slab drains, see Sheet No. 27.

For location of coil ties at concrete diaphragms and integral bents, see Sheets No. 4 and 28.

Alternate bar reinforcing steel details are provided and may be used. The same type of reinforcing steel shall be used for all girders in all spans.

* See Sheet No. 21 for data table.

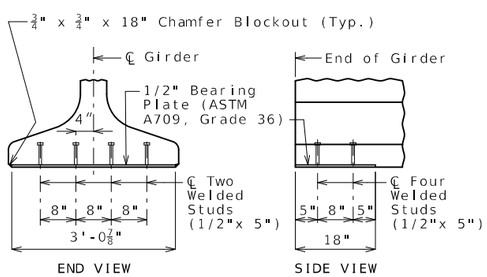

BEARING PLATE

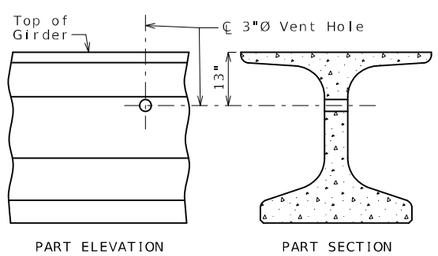

VENT HOLE

Place vent holes at or near upgrade 1/3 point of girders and clear reinforcing steel or strands by 1 1/2" minimum and steel intermediate diaphragm bolt connections by 6" minimum.

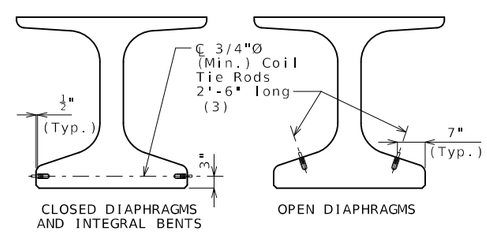

COIL TIES

Exclude coil tie at exterior face of exterior girders except at integral end bents.

(3) 2'-4" at exterior face of exterior girders at end bents. 4'-0" at open diaphragm at Intermediate Bent No. 5.

NU-GIRDERS (ALTERNATE REINFORCEMENT) - SPANS (1-2)(2-3)(3-4) AND (4-5)

Detailed Jan. 2024
Checked Jan. 2024

Note: This drawing is not to scale. Follow dimensions.

STATE OF MISSOURI
DAVID ANDREW STRAATMANN
NUMBER PE-2004000848
PROFESSIONAL ENGINEER
THIS SHEET HAS BEEN SIGNED, SEALED AND DATED ELECTRONICALLY.

DATE PREPARED 3/20/2024

ROUTE	STATE
Z	MO
DISTRICT	SHEET NO.
BR	18

COUNTY: PLATTE
JOB NO.: J4S3454
CONTRACT ID.:
PROJECT NO.:
BRIDGE NO.: A9373

DATE	DESCRIPTION

IF A SEAL IS PRESENT ON THIS SHEET IT HAS BEEN ELECTRONICALLY SEALED AND DATED.

MISSOURI HIGHWAYS AND TRANSPORTATION COMMISSION
105 WEST CAPITOL
JEFFERSON CITY, MO 65102
1-888-ASK-MODOT (1-888-275-6636)

Bartlett & West
601 MONROE STREET, SUITE 201 - JEFFERSON CITY, MO 65101
PHONE 573-634-3181 - FAX 573-634-7904
CERTIFICATE OF AUTHORITY NO. 000167 - ENGINEERING
WWW.BARTWEST.COM

(1) Fabricator shall apply a bond breaker to this region.

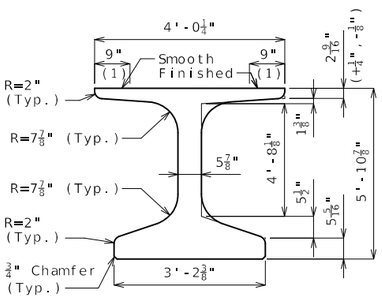

DIMENSIONS

(2) Outer strands tensioned to 2.02 kips/strand and inner strands to 8 kips/strand. Placed symmetrical about ℄ Girder. May be moved laterally in pairs.

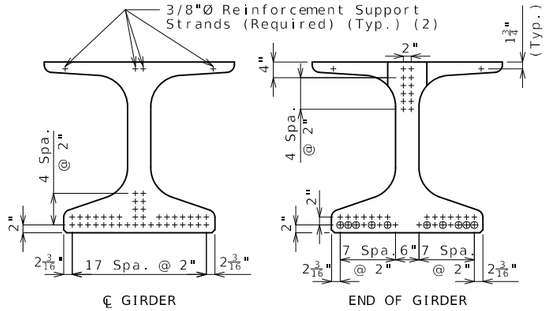

STRAND ARRANGEMENT

+ Indicates prestressing strand.

o Indicates cut & shop bend with 3'-0" projection.

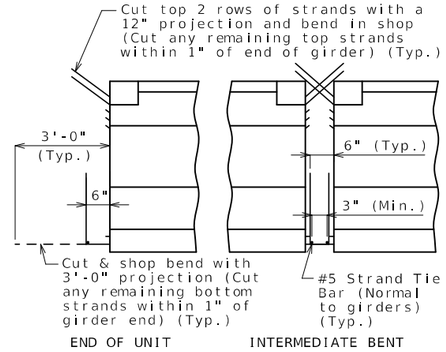

STRANDS AT GIRDER ENDS

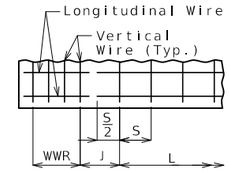

WELDED WIRE PLACEMENT

S = Vertical wire spacing

L = Length of WWR mats

J = Distance between WWR mats

Bill of Reinforcing Steel

Bars Each Girder

No.	Size/Mark		Length	Shape
(D)*	3	G1	2'-10"	8
2	4	G3	3'-11"	20
2	4	G4	2'-3"	20
2	4	G5	2'-9"	20
4	4	G6	Varies	20

Welded Wire Each Girder

Mark	Size	S	W	L	J
WWR1	D20	4"	W8	*	*
WWR2	D20	8"	W8	*	*
WWR3	D20	12"	W8	*	*
WWR6	D31	2"	W12	*	*

Bending Diagrams

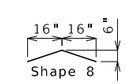

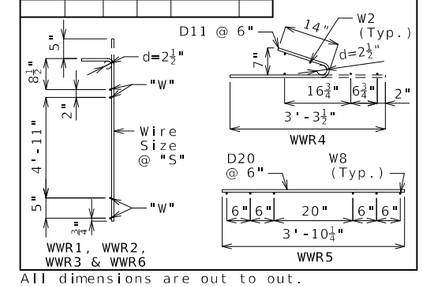

All dimensions are out to out.

Hooks and bends shall be in accordance with the CRSI Manual of Standard Practice for Detailing Reinforced Concrete Structures, Stirrup and Tie Dimensions.

Actual bar lengths are measured along centerline of bar to the nearest inch.

Minimum clearance to reinforcing shall be 1", unless otherwise shown.

All bar reinforcement shall be Grade 60.

WWR shall not be epoxy coated.

G4 and G5 not required for interior girders. G3 and G6 not required for exterior girders of intermediate spans.

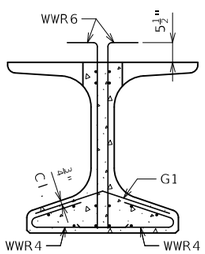

SECTION A-A

Strands not shown for clarity.

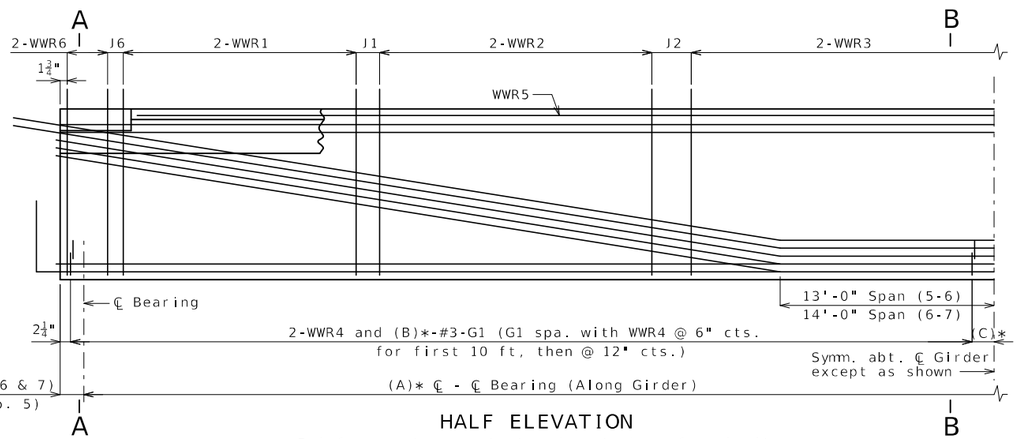

HALF ELEVATION

Reinforcement support strands not shown for clarity.

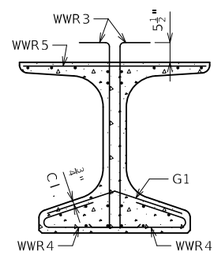

SECTION B-B

Strands not shown for clarity.

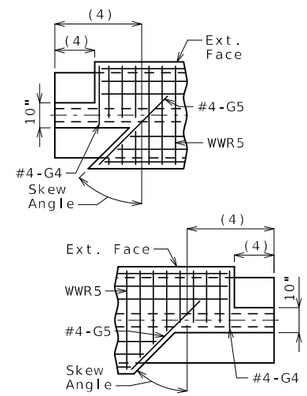

LEFT EXTERIOR GIRDER AT INTERMEDIATE BENT

Rotate 180° for right ext.

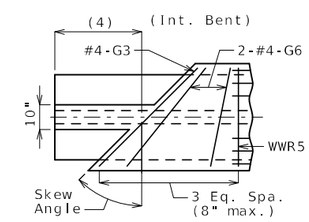

INTERIOR GIRDER AT ALL BENTS

TOP FLANGE BLOCKOUT

Mirror for right advanced.

(4) See dimension data table on Sheet No. 21.

General Notes:

Concrete for prestressed beams shall be Class A-1 with f'c = 9000 psi and f'ci = 7000 psi.

Use 40 strands, 0.6"Ø Grade 270, with an initial prestress force of 1758 kips.

Pretensioned members shall be in accordance with Sec 1029.

Fabricator shall be responsible for location and design of lifting devices.

Exterior and interior girders are the same except: coil ties, top flange blockout, application of bond breaker, coil inserts for slab drains, holes for steel intermediate diaphragms.

For Girder Camber Diagram, see Sheet No. 30.

The 1 1/2"Ø holes shall be cast in the web for steel intermediate diaphragms. Drilling is not allowed. For location of holes and details of steel intermediate diaphragms, see Sheet No. 25.

For location of coil inserts at slab drains, see Sheet No. 27.

For location of coil ties at concrete diaphragms and integral bents, see Sheets No. 28 and 29.

Alternate bar reinforcing steel details are provided and may be used. The same type of reinforcing steel shall be used for all girders in all spans.

* See data table on Sheet No. 21.

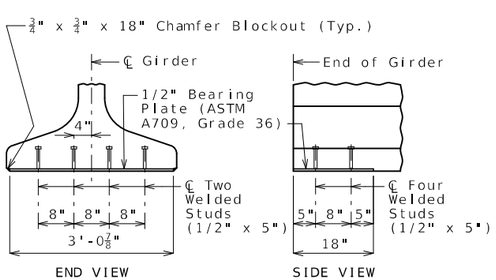

END VIEW

SIDE VIEW

BEARING PLATE

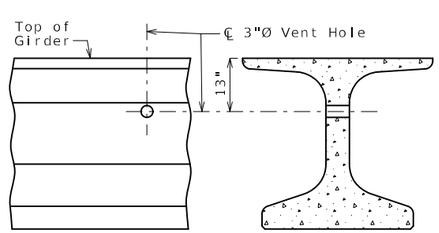

PART ELEVATION

PART SECTION

VENT HOLE

Place vent holes at or near upgrade 1/3 point of girders and clear reinforcing steel or strands by 1 1/2" minimum and steel intermediate diaphragm bolt connections by 6" minimum.

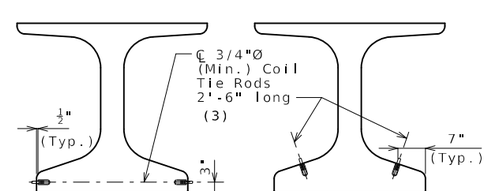

CLOSED DIAPHRAGMS AND INTEGRAL BENTS

OPEN DIAPHRAGMS

COIL TIES

Exclude coil tie at exterior face of exterior girders.

(3) 5'-6" at open diaphragm at Int. Bt. No. 5

NU-GIRDERS - SPANS (5-6) AND (6-7)

Detailed Jan. 2024
Checked Jan. 2024

Note: This drawing is not to scale. Follow dimensions.

STATE OF MISSOURI
DAVID ANDREW STRAATMANN
NUMBER PE-2004000848
PROFESSIONAL ENGINEER
THIS SHEET HAS BEEN SIGNED, SEALED, AND DATED ELECTRONICALLY.

DATE PREPARED	
3/20/2024	
ROUTE	STATE
Z	MO
DISTRICT	SHEET NO.
BR	19
COUNTY	
PLATTE	
JOB NO.	
J4S3454	
CONTRACT ID.	
PROJECT NO.	
BRIDGE NO.	
A9373	

DESCRIPTION

DATE

MISSOURI HIGHWAYS AND TRANSPORTATION COMMISSION

105 WEST CAPITOL
JEFFERSON CITY, MO 65102
1-888-ASK-MODOT (1-888-275-6636)

Bartlett & West
601 MONROE STREET, SUITE 201 - JEFFERSON CITY, MO 65101
PHONE 573-634-3181 - FAX 573-634-7904
CERTIFICATE OF AUTHORITY NO. 000167 - ENGINEERING
WWW.BARTWEST.COM

(1) Fabricator shall apply a bond breaker to this region.

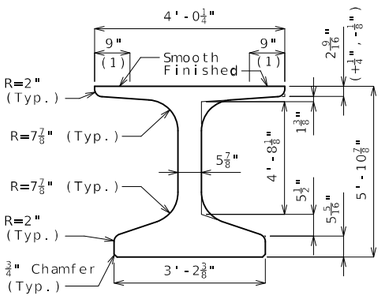

DIMENSIONS

(2) Outer strands tensioned to 2.02 kips/strand and inner strands to 8 kips/strand. Placed symmetrical about ℄ Girder. May be moved laterally in pairs.

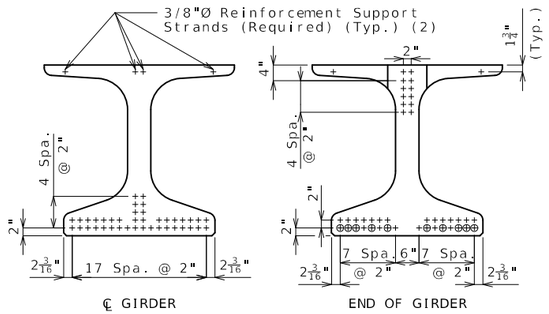

STRAND ARRANGEMENT

+ Indicates prestressing strand.

o Indicates cut & shop bend with 3'-0" projection.

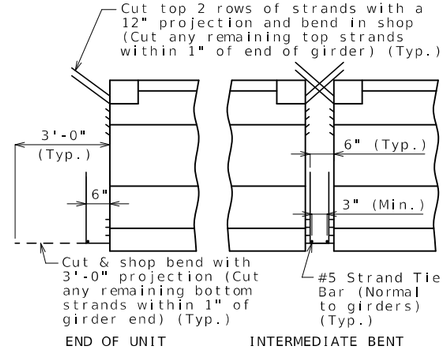

STRANDS AT GIRDER ENDS

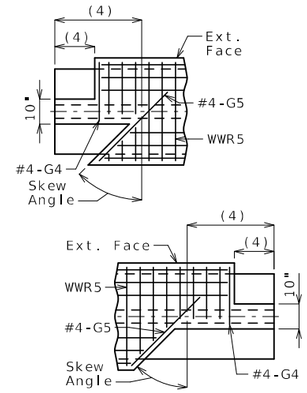

LEFT EXTERIOR GIRDER AT INTERMEDIATE BENT

Rotate 180° for right ext.

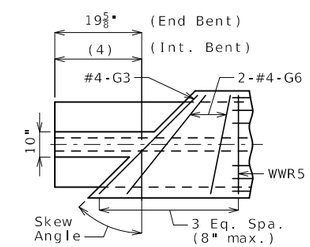

INTERIOR GIRDER AT ALL BENTS

TOP FLANGE BLOCKOUT

(4) See dimension data table on Sheet No. 21.

Bill of Reinforcing Steel - Each Girder			
No.	Size/ Mark	Length	Shape
(H)*	5 B1	7'-3"	11
(I)*	4 D1	4'-0"	9
2	4 G3	3'-11"	20
2	4 G4	2'-3"	20
2	4 G5	2'-9"	20
4	4 G6	Varies	20

Bending Diagrams

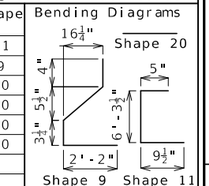

Welded Wire Reinforcement - Each Girder

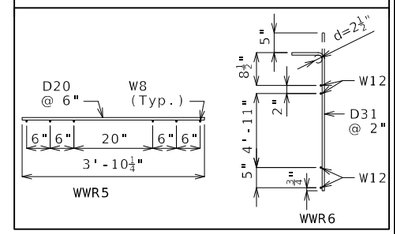

All dimensions are out to out.

Hooks and bends shall be in accordance with the CRSI Manual of Standard Practice for Detailing Reinforced Concrete Structures, Stirrup and Tie Dimensions.

Actual bar lengths are measured along centerline of bar to the nearest inch.

Minimum clearance to reinforcing shall be 1".

All bar reinforcement shall be Grade 60.

The two D1 bars may be furnished as one bar at the fabricator's option.

All B1 bars shall be epoxy coated.

G4 and G5 not required for interior girders. G3 and G6 not required for exterior girders of intermediate spans.

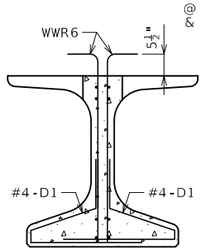

SECTION A-A

Strands not shown for clarity.

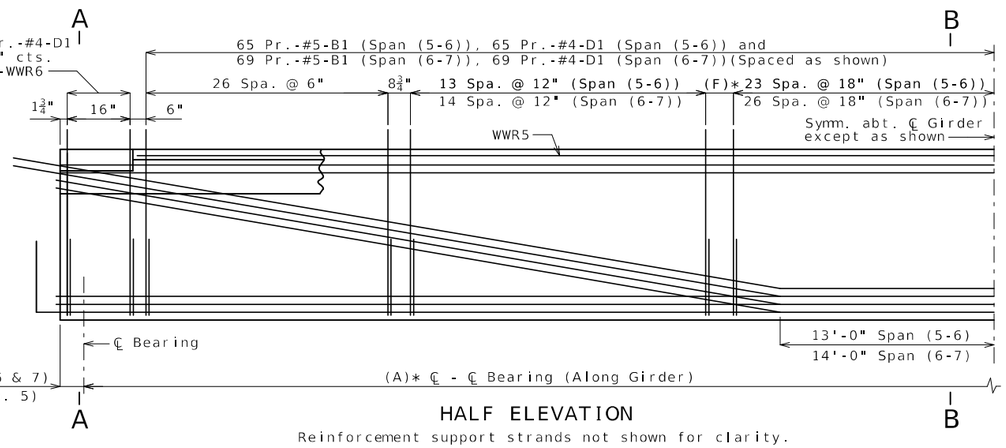

HALF ELEVATION

Reinforcement support strands not shown for clarity.

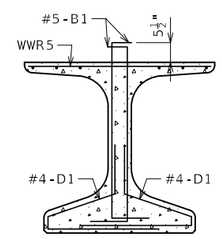

SECTION B-B

Strands not shown for clarity.

General Notes:

Concrete for prestressed girders shall be Class A-1 with f'c = 9000 psi and f'ci = 7000 psi.

Use 40 strands, 0.6"Ø Grade 270, with an initial prestress force of 1758 kips.

Pretensioned members shall be in accordance with Sec 1029.

Fabricator shall be responsible for location and design of lifting devices.

Exterior and interior girders are the same except: coil ties, top flange blockout, application of bond breaker, coil inserts for slab drains, holes for steel intermediate diaphragms.

For Girder Camber Diagram, see Sheet No. 30.

The 1 1/2"Ø holes shall be cast in the web for steel intermediate diaphragms. Drilling is not allowed. For location of holes and details of steel intermediate diaphragms, see Sheet No. 25.

For location of coil inserts at slab drains, see Sheet No. 27.

For location of coil ties at concrete diaphragms and integral bents, see Sheets No. 28 and 29.

Alternate bar reinforcing steel details are provided and may be used. The same type of reinforcing steel shall be used for all girders in all spans.

∗ See Sheet No. 21 for data table.

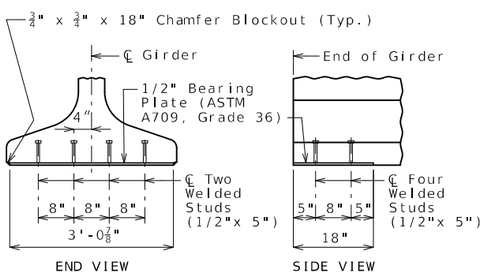

BEARING PLATE

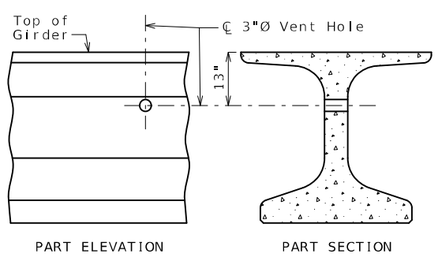

VENT HOLE

Place vent holes at or near upgrade 1/3 point of girders and clear reinforcing steel or strands by 1 1/2" minimum and steel intermediate diaphragm bolt connections by 6" minimum.

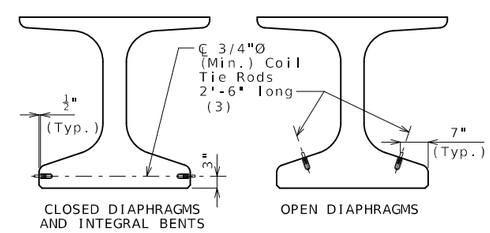

COIL TIES

Exclude coil tie at exterior face of exterior girders.

(3) 5'-6" at open diaphragms at Intermediate Bent No. 5.

NU-GIRDERS (ALTERNATE REINFORCEMENT) - SPANS (5-6) AND (6-7)

Detailed Jan. 2024
Checked Jan. 2024

Note: This drawing is not to scale. Follow dimensions.

STATE OF MISSOURI
DAVID ANDREW STRAATMANN
NUMBER PE-2004000848
PROFESSIONAL ENGINEER
THIS SHEET HAS BEEN SIGNED, SEALED AND DATED ELECTRONICALLY.

DATE PREPARED 3/20/2024

ROUTE	STATE
Z	MO
DISTRICT	SHEET NO.
BR	20

COUNTY: PLATTE
JOB NO.: J4S3454
CONTRACT ID.:
PROJECT NO.:
BRIDGE NO.: A9373

DATE	DESCRIPTION

IF A SEAL IS PRESENT ON THIS SHEET IT HAS BEEN ELECTRONICALLY SEALED AND DATED.

MISSOURI HIGHWAYS AND TRANSPORTATION COMMISSION
105 WEST CAPITOL
JEFFERSON CITY, MO 65102
1-888-ASK-MODOT (1-888-275-6636)

Bartlett & West
601 MONROE STREET, SUITE 201 - JEFFERSON CITY, MO 65101
PHONE 573-634-3181 - FAX 573-634-7904
CERTIFICATE OF AUTHORITY NO. 000167 - ENGINEERING
WWW.BARTWEST.COM

Data Table

	Span (1-2)		Span (2-3)(3-4)		Span (4-5)		Span (5-6)		Span (6-7)	
Mark	L	J	L	J	L	J	L	J	L	J
WWR1	12'-0"	8"	12'-0"	8"	12'-0"	8"	14'-0"	7 1/2"	14'-0"	6 3/4"
WWR2	12'-8"	11 1/8"	13'-4"	10 3/4"	14'-0"	11"	14'-0"	11 3/8"	14'-8"	8"
WWR3	48'-0"	--	60'-0"	--	58'-0"	--	66'-0"	--	76'-0"	--
WWR6	16"	4"	16"	4"	16"	4"	16"	4"	16"	4"
A	103'-3 3/8"		116'-7 1/8"		115'-3 1/2"		127'-3 1/2"		138'-7 1/8"	
B	62		69		69		75		80	
C	10 1/4"		6 1/4"		2 1/2"		2 3/8"		6 1/4"	
D	125		138		138		150		160	
E	10 Spa. @ 12"		12 Spa. @ 12"		13 Spa. @ 12"		--		--	
F	13 1/8"		14 3/4"		17"		14 1/8"		12"	
G	18 Spa. @ 18"		21 Spa. @ 18"		20 Spa. @ 18"		--		--	
H	210		230		230		258		274	
I	230		250		250		278		294	

Top Flange Blockout Dimensions at Intermediate Bents

	Bent No. 2 & 3		Bent No. 4		Bent No. 5		Bent No. 6		Bent No. 7	
	Back	Ahead	Back	Ahead	Back	Ahead	Back	Ahead	Back	Ahead
Int. Girder-Skew Dim.	11 5/8"	13 3/8"	11 7/8"	12 3/4"	12 1/4"	12 1/8"	12 7/8"	11 3/4"	13 1/4"	11 5/8"
Ext. Girder-Square Dim.	6 7/8"	8 1/8"	6 7/8"	7 3/4"	9"	8 7/8"	7 1/8"	6 3/4"	8 1/4"	6 7/8"
Ext. Girder-Skew Dim.	11 7/8"	13 1/8"	11 7/8"	12 3/4"	12 1/4"	12 1/8"	12 7/8"	11 3/4"	13 1/4"	11 5/8"

NU-GIRDERS - SPANS (1-2)(2-3)(3-4)(4-5)(5-6) AND (6-7)

Note: This drawing is not to scale. Follow dimensions.

STATE OF MISSOURI
DAVID ANDREW STRAATMANN
NUMBER PE-2004000848
PROFESSIONAL ENGINEER

THIS SHEET HAS BEEN SIGNED, SEALED AND DATED ELECTRONICALLY.

DATE PREPARED: 3/20/2024

ROUTE	STATE
Z	MO
DISTRICT	SHEET NO.
BR	21

COUNTY: PLATTE

JOB NO.: J4S3454

CONTRACT ID.:

PROJECT NO.:

BRIDGE NO.: A9373

DATE	DESCRIPTION

IF A SEAL IS PRESENT ON THIS SHEET IT HAS BEEN ELECTRONICALLY SEALED AND DATED.

MISSOURI HIGHWAYS AND TRANSPORTATION COMMISSION

105 WEST CAPITOL
JEFFERSON CITY, MO 65102
1-888-ASK-MODOT (1-888-275-6636)

Bartlett & West
601 MONROE STREET, SUITE 201 - JEFFERSON CITY, MO 65101
PHONE 573-634-3181 - FAX 573-634-7904
CERTIFICATE OF AUTHORITY NO. 000167 - ENGINEERING
WWW.BARTWEST.COM

(1) Fabricator shall apply a bond breaker to this region.

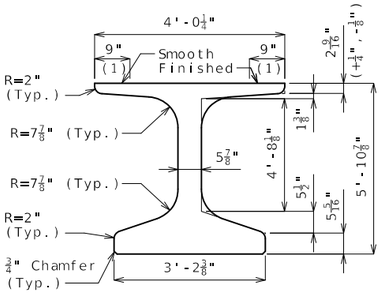

DIMENSIONS

(2) Outer strands tensioned to 2.02 kips/strand and inner strands to 8 kips/strand. Placed symmetrical about ℄ Girder. May be moved laterally in pairs.

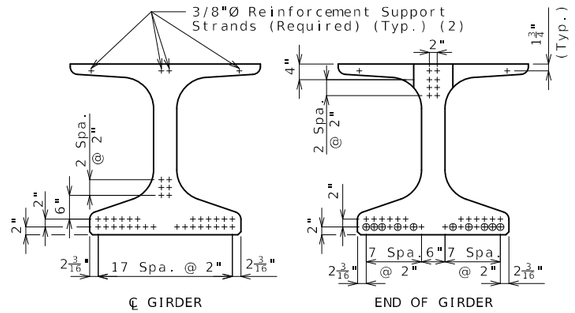

℄ GIRDER END OF GIRDER

STRAND ARRANGEMENT

+ Indicates prestressing strand.

o Indicates cut & shop bend with 3'-0" projection.

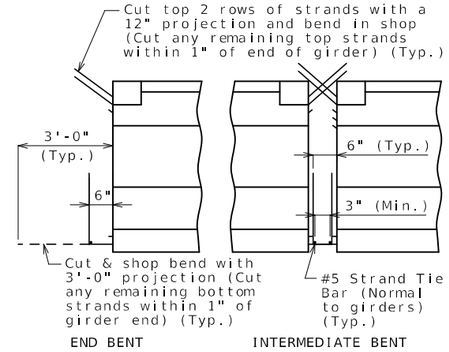

END BENT INTERMEDIATE BENT

STRANDS AT GIRDER ENDS

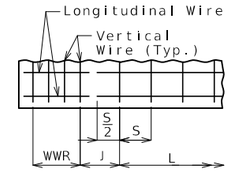

WELDED WIRE PLACEMENT

S = Vertical wire spacing

L = Length of WWR mats

J = Distance between WWR mats

Bill of Reinforcing Steel

Bars Each Girder

No.	Size/Mark		Length	Shape
137	3	G1	2'-10"	8
2	4	G3	3'-11"	20
2	4	G4	2'-3"	20
2	4	G5	2'-9"	20
4	4	G6	Varies	20

Welded Wire Each Girder

Mark	Size	S	W	L	J
WWR1	D20	4"	W8	12'-0"	7⅛"
WWR2	D20	8"	W8	14'-0"	8"
WWR3	D20	12"	W8	58'-0"	--
WWR6	D31	2"	W12	16"	4"

Bending Diagrams

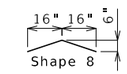

Shape 20

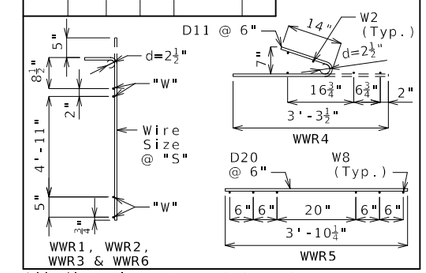

All dimensions are out to out.

Hooks and bends shall be in accordance with the CRSI Manual of Standard Practice for Detailing Reinforced Concrete Structures, Stirrup and Tie Dimensions.

Actual bar lengths are measured along centerline of bar to the nearest inch.

Minimum clearance to reinforcing shall be 1", unless otherwise shown.

All bar reinforcement shall be Grade 60.

WWR shall not be epoxy coated.

G4 and G5 not required for interior girders. Half no. of G3, G4, G5 and G6 not required for ext. girders of end spans.

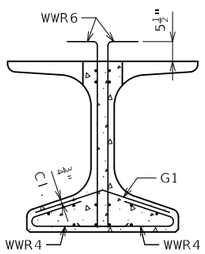

SECTION A-A

Strands not shown for clarity.

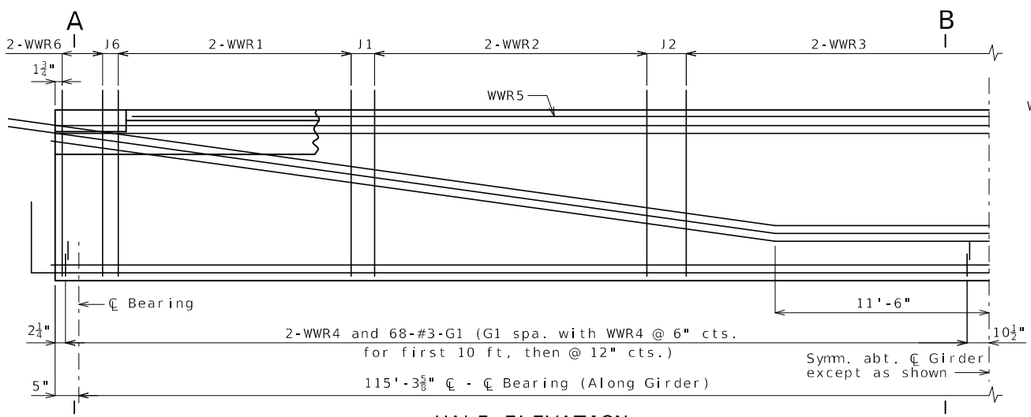

HALF ELEVATION

Reinforcement support strands not shown for clarity.

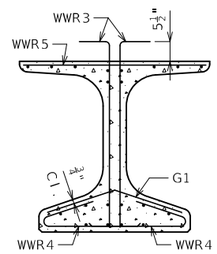

SECTION B-B

Strands not shown for clarity.

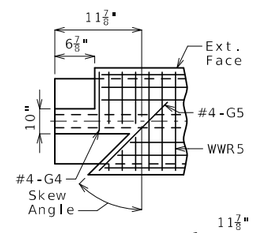

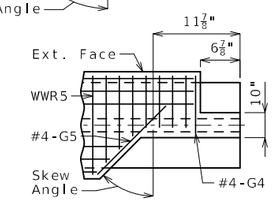

LEFT EXTERIOR GIRDER AT INTERMEDIATE BENT

Rotate 180° for right ext.

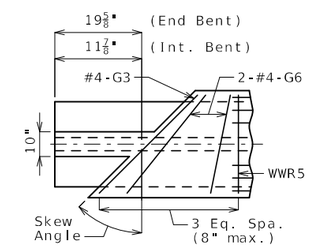

INTERIOR GIRDER AT ALL BENTS & EXTERIOR GIRDER AT END BENT

TOP FLANGE BLOCKOUT

Mirror for right advanced.

General Notes:

Concrete for prestressed beams shall be Class A-1 with f'c = 9000 psi and f'ci = 7000 psi.

Use 34 strands, 0.6"Ø Grade 270, with an initial prestress force of 1494 kips.

Pretensioned members shall be in accordance with Sec 1029.

Fabricator shall be responsible for location and design of lifting devices.

Exterior and interior girders are the same except: coil ties, top flange blockout, application of bond breaker, coil inserts for slab drains, holes for steel intermediate diaphragms.

For Girder Camber Diagram, see Sheet No. 30.

The 1 1/2"Ø holes shall be cast in the web for steel intermediate diaphragms. Drilling is not allowed. For location of holes and details of steel intermediate diaphragms, see Sheet No. 25.

For location of coil inserts at slab drains, see Sheet No. 27.

For location of coil ties at concrete diaphragms and integral bents, see Sheets No. 13 and 28.

Alternate bar reinforcing steel details are provided and may be used. The same type of reinforcing steel shall be used for all girders in all spans.

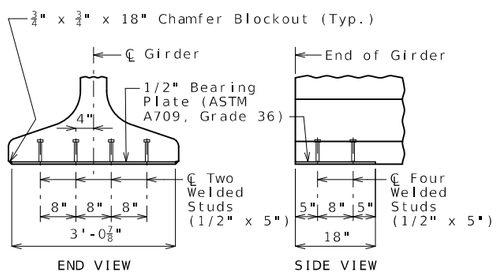

END VIEW SIDE VIEW

BEARING PLATE

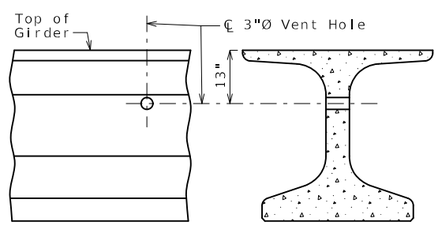

PART ELEVATION PART SECTION

VENT HOLE

Place vent holes at or near upgrade 1/3 point of girders and clear reinforcing steel or strands by 1 1/2" minimum and steel intermediate diaphragm bolt connections by 6" minimum.

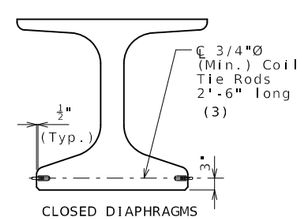

CLOSED DIAPHRAGMS AND INTEGRAL BENTS

COIL TIES

Exclude coil tie at exterior face of exterior girders except at integral end bents.

(3) 2'-4" at exterior face of exterior girders at end bents

NU-GIRDERS - SPAN (7-8)

Detailed Jan. 2024
Checked Jan. 2024

Note: This drawing is not to scale. Follow dimensions.

STATE OF MISSOURI
DAVID ANDREW STRAATMANN
NUMBER PE-2004000848
PROFESSIONAL ENGINEER
THIS SHEET HAS BEEN SIGNED, SEALED, AND DATED ELECTRONICALLY.

DATE PREPARED	
3/20/2024	
ROUTE	STATE
Z	MO
DISTRICT	SHEET NO.
BR	22
COUNTY	
PLATTE	
JOB NO.	
J4S3454	
CONTRACT ID.	
PROJECT NO.	
BRIDGE NO.	
A9373	

DESCRIPTION

DATE

IF A SEAL IS PRESENT ON THIS SHEET IT HAS BEEN ELECTRONICALLY SEALED AND DATED.

MISSOURI HIGHWAYS AND TRANSPORTATION COMMISSION

105 WEST CAPITOL
JEFFERSON CITY, MO 65102
1-888-ASK-MODOT (1-888-275-6636)

Bartlett & West
601 MONROE STREET, SUITE 201 - JEFFERSON CITY, MO 65101
PHONE 573-634-3181 - FAX 573-634-7904
CERTIFICATE OF AUTHORITY NO. 000167 - ENGINEERING
WWW.BARTWEST.COM

(1) Fabricator shall apply a bond breaker to this region.

(2) Outer strands tensioned to 2.02 kips/strand and inner strands to 8 kips/strand. Placed symmetrical about ℄ Girder. May be moved laterally in pairs.

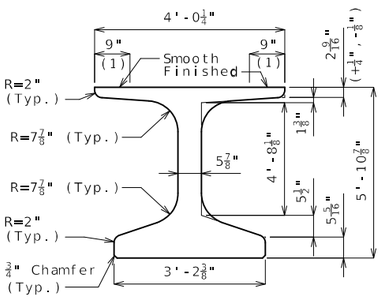

DIMENSIONS

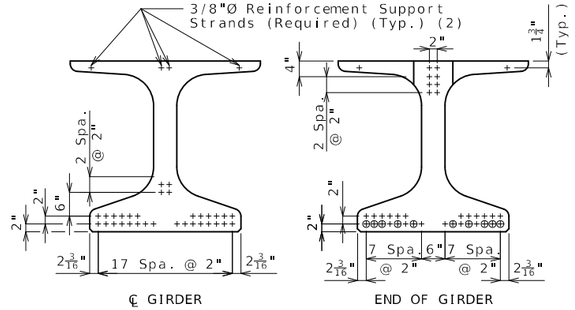

℄ GIRDER END OF GIRDER

STRAND ARRANGEMENT

+ Indicates prestressing strand.

o Indicates cut & shop bend with 3'-0" projection.

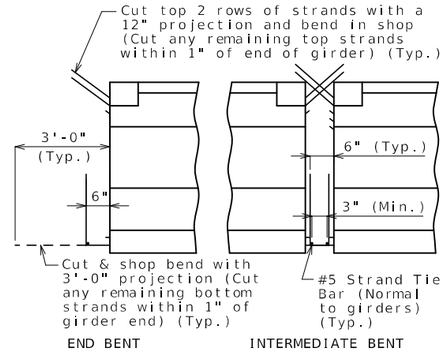

END BENT INTERMEDIATE BENT

STRANDS AT GIRDER ENDS

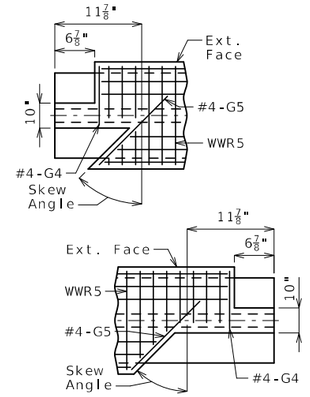

LEFT EXTERIOR GIRDER AT INTERMEDIATE BENT

Rotate 180° for right ext.

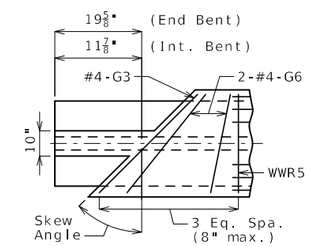

INTERIOR GIRDER AT ALL BENTS & EXTERIOR GIRDER AT END BENT

TOP FLANGE BLOCKOUT

Mirror for right advanced.

Bill of Reinforcing Steel - Each Girder			
No.	Size/ Mark	Length	Shape
230	5 B1	7'-3"	11
250	4 D1	4'-0"	9
2	4 G3	3'-11"	20
2	4 G4	2'-3"	20
2	4 G5	2'-9"	20
4	4 G6	Varies	20

Bending Diagrams

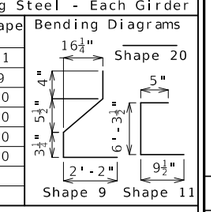

Welded Wire Reinforcement - Each Girder

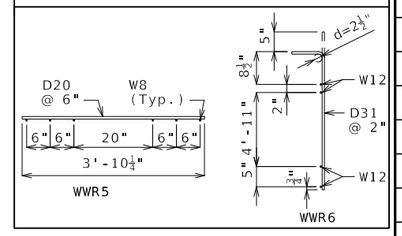

All dimensions are out to out.

Hooks and bends shall be in accordance with the CRSI Manual of Standard Practice for Detailing Reinforced Concrete Structures, Stirrup and Tie Dimensions.

Actual bar lengths are measured along centerline of bar to the nearest inch.

Minimum clearance to reinforcing shall be 1".

All bar reinforcement shall be Grade 60.

The two D1 bars may be furnished as one bar at the fabricator's option.

All B1 bars shall be epoxy coated.

G4 and G5 not required for interior girders. Half no. of G3, G4, G5 and G6 not required for ext. girders of end spans.

General Notes:

Concrete for prestressed girders shall be Class A-1 with f'c = 9000 psi and f'ci = 7000 psi.

Use 34 strands, 0.6"Ø Grade 270, with an initial prestress force of 1494 kips.

Pretensioned members shall be in accordance with Sec 1029.

Fabricator shall be responsible for location and design of lifting devices.

Exterior and interior girders are the same except: coil ties, top flange blockout, application of bond breaker, coil inserts for slab drains, holes for steel intermediate diaphragms.

For Girder Camber Diagram, see Sheet No. 30.

The 1 1/2"Ø holes shall be cast in the web for steel intermediate diaphragms. Drilling is not allowed. For location of holes and details of steel intermediate diaphragms, see Sheet No. 25.

For location of coil inserts at slab drains, see Sheet No. 27.

For location of coil ties at concrete diaphragms and integral bents, see Sheets No. 13 and 28.

Alternate bar reinforcing steel details are provided and may be used. The same type of reinforcing steel shall be used for all girders in all spans.

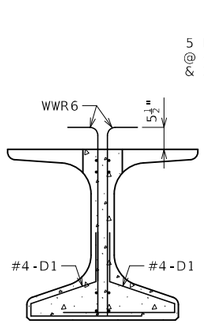

SECTION A-A

Strands not shown for clarity.

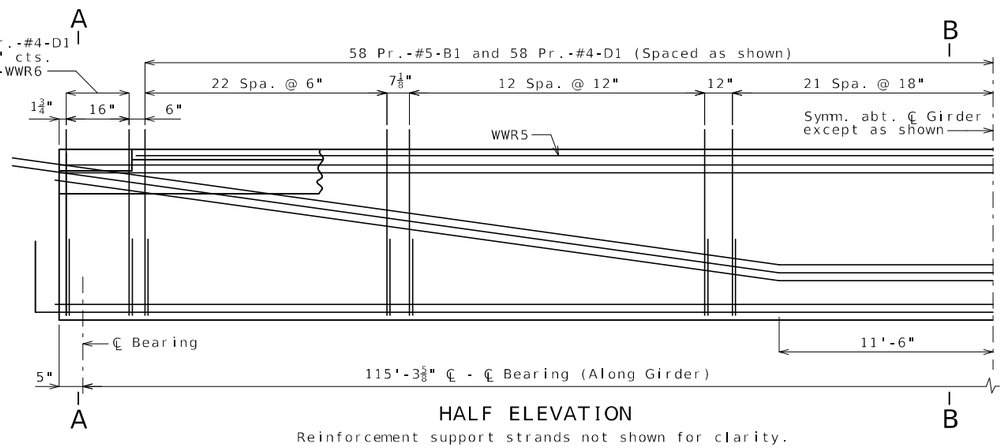

HALF ELEVATION

Reinforcement support strands not shown for clarity.

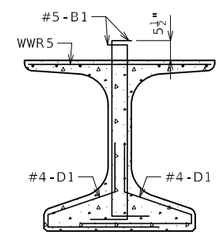

SECTION B-B

Strands not shown for clarity.

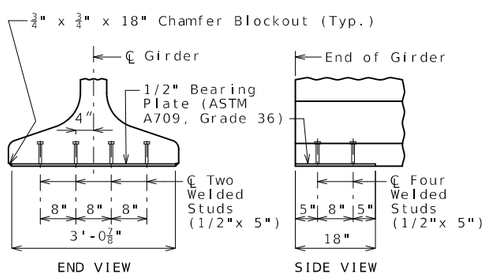

END VIEW SIDE VIEW

BEARING PLATE

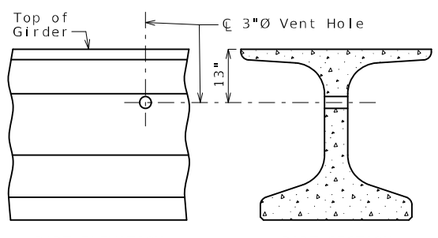

PART ELEVATION PART SECTION

VENT HOLE

Place vent holes at or near upgrade 1/3 point of girders and clear reinforcing steel or strands by 1 1/2" minimum and steel intermediate diaphragm bolt connections by 6" minimum.

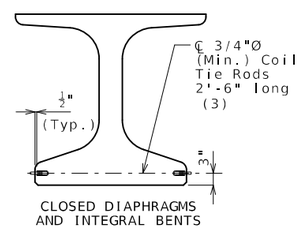

CLOSED DIAPHRAGMS AND INTEGRAL BENTS

COIL TIES

Exclude coil tie at exterior face of exterior girders except at integral end bents.

(3) 2'-4" at exterior face of exterior girders at end bents

NU-GIRDERS (ALTERNATE REINFORCEMENT) - SPAN (7-8)

Detailed Jan. 2024
Checked Jan. 2024

Note: This drawing is not to scale. Follow dimensions.

STATE OF MISSOURI
DAVID ANDREW STRAATMANN
NUMBER PE-2004000848
PROFESSIONAL ENGINEER
THIS SHEET HAS BEEN SIGNED, SEALED AND DATED ELECTRONICALLY.

DATE PREPARED 3/20/2024

ROUTE	STATE
Z	MO
DISTRICT	SHEET NO.
BR	23

COUNTY PLATTE

JOB NO. J4S3454

CONTRACT ID.

PROJECT NO.

BRIDGE NO. A9373

DATE	DESCRIPTION

IF A SEAL IS PRESENT ON THIS SHEET IT HAS BEEN ELECTRONICALLY SEALED AND DATED.

MISSOURI HIGHWAYS AND TRANSPORTATION COMMISSION

105 WEST CAPITOL
JEFFERSON CITY, MO 65102
1-888-ASK-MODOT (1-888-275-6636)

Bartlett & West
601 MONROE STREET, SUITE 201 - JEFFERSON CITY, MO 65101
PHONE 573-634-3181 - FAX 573-634-7904
CERTIFICATE OF AUTHORITY NO. 000167 - ENGINEERING
WWW.BARTWEST.COM

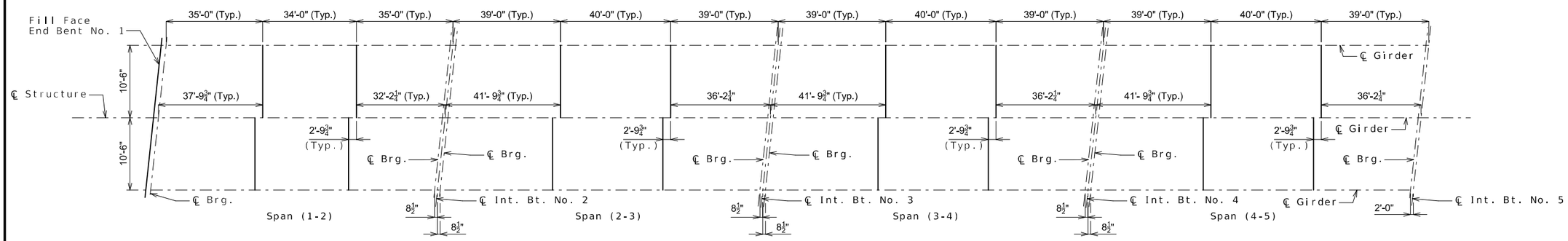

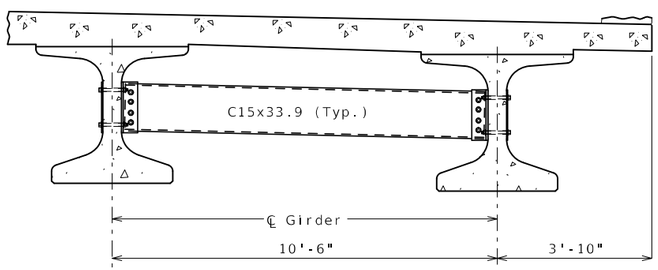

PART SECTION SHOWING
INTERMEDIATE DIAPHRAGMS

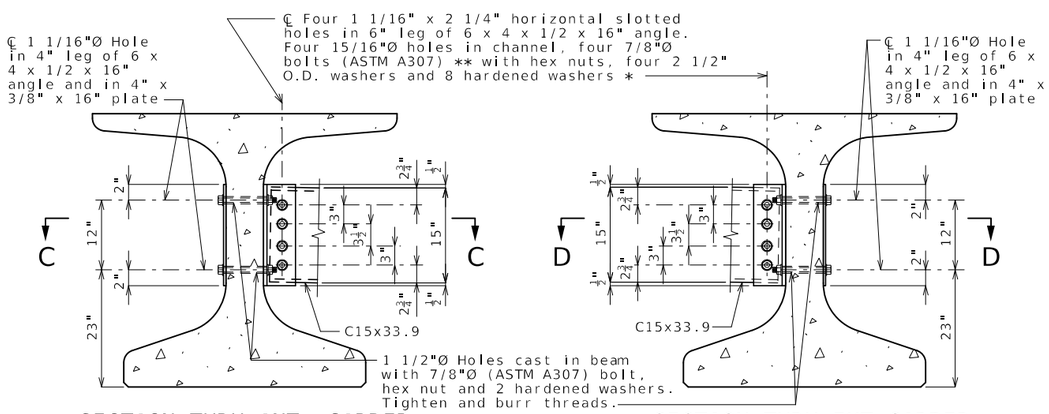

SECTION THRU INT. GIRDER
AT DIAPHRAGM

SECTION THRU EXT.GIRDER
AT DIAPHRAGM

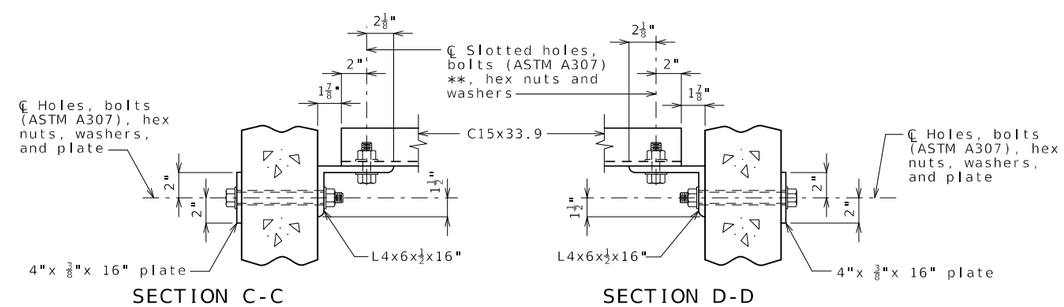

SECTION C-C

SECTION D-D

STEEL DIAPHRAGM NOTES:

* In lieu of 2 1/2" outside diameter washers, contractor may substitute a 3/16" (Min. thickness) plate with four 15/16" Ø holes and one hardened washer per bolt.

** Bolts shall be tightened to provide a tension of one-half that specified in Sec 712 for high strength bolt installation. ASTM F3125 Grade A325 Type 1 bolts may be substituted for and installed in accordance with the requirements for the specified ASTM A307 bolts.

All diaphragm materials including bolts, nuts, and washers shall be galvanized.

Fabricated structural steel shall be ASTM A709 Grade 36 except as noted.

Payment for furnishing and installing steel intermediate diaphragms will be considered completely covered by the contract unit price for Steel Intermediate Diaphragm for P/S Concrete Girders.

Shop drawings will not be required for steel intermediate diaphragms and angle connections.

STEEL INTERMEDIATE DIAPHRAGMS SPANS (1-2)(2-3)(3-4)(4-5)

Detailed Jan. 2024
Checked Jan. 2024

Note: This drawing is not to scale. Follow dimensions.

STATE OF MISSOURI
DAVID ANDREW STRAATMANN
NUMBER PE-2004000848
PROFESSIONAL ENGINEER
THIS SHEET HAS BEEN SIGNED, SEALED, AND DATED ELECTRONICALLY.

DATE PREPARED	
3/20/2024	
ROUTE Z	STATE MO
DISTRICT BR	SHEET NO. 24
COUNTY PLATTE	
JOB NO. J4S3454	
CONTRACT ID.	
PROJECT NO.	
BRIDGE NO. A9373	

DATE	DESCRIPTION

IF A SEAL IS PRESENT ON THIS SHEET IT HAS BEEN ELECTRONICALLY SEALED AND DATED.

MISSOURI HIGHWAYS AND TRANSPORTATION COMMISSION
105 WEST CAPITOL
JEFFERSON CITY, MO 65102
1-888-ASK-MODOT (1-888-275-6636)

Bartlett & West
601 MONROE STREET, SUITE 201 - JEFFERSON CITY, MO 65101
PHONE 573-634-3181 - FAX 573-634-7904
CERTIFICATE OF AUTHORITY NO. 000167 - ENGINEERING
WWW.BARTWEST.COM

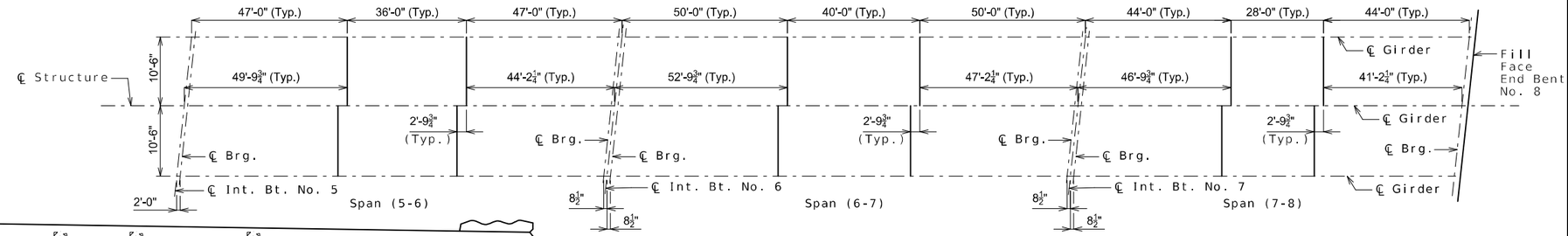

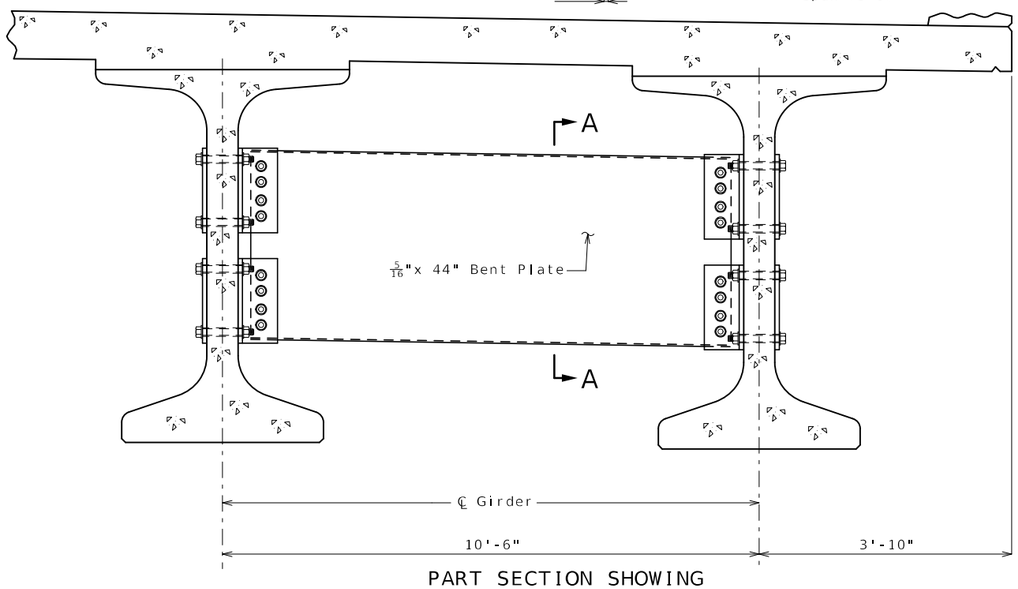

PART SECTION SHOWING INTERMEDIATE DIAPHRAGMS

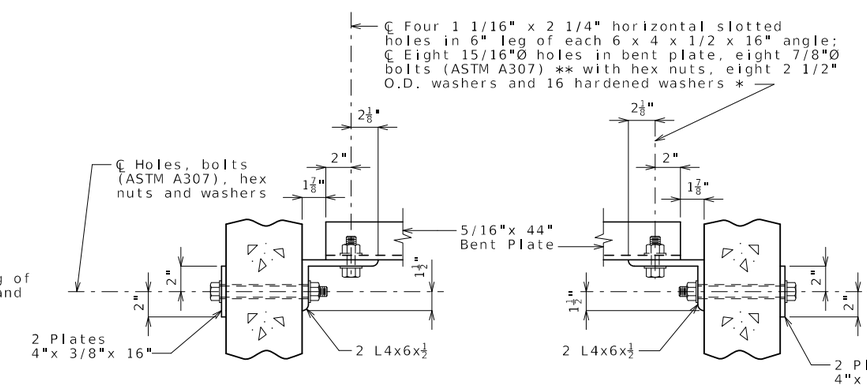

SECTION B-B

SECTION C-C

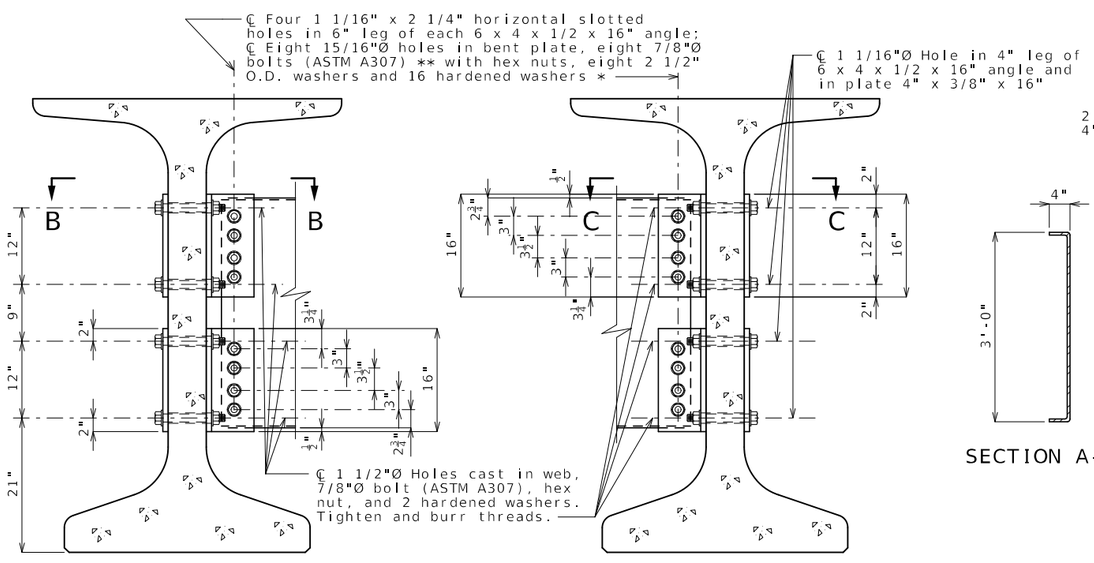

SECTION THRU INT. GIRDER AT DIAPHRAGM

SECTION THRU EXT. GIRDER AT DIAPHRAGM

SECTION A-A

STEEL DIAPHRAGM NOTES:

* In lieu of 2 1/2" outside diameter washers, contractor may substitute a 3/16" (Min. thickness) plate with four 15/16" Ø holes and one hardened washer per bolt.

** Bolts shall be tightened to provide a tension of one-half that specified in Sec 712 for high strength bolt installation. ASTM F3125 Grade A325 Type 1 bolts may be substituted for and installed in accordance with the requirements for the specified ASTM A307 bolts.

All diaphragm materials including bolts, nuts, and washers shall be galvanized.

Fabricated structural steel shall be ASTM A709 Grade 36 except as noted.

Payment for furnishing and installing steel intermediate diaphragms will be considered completely covered by the contract unit price for Steel Intermediate Diaphragm for P/S Concrete Girders.

Shop drawings will not be required for steel intermediate diaphragms and angle connections.

STEEL INTERMEDIATE DIAPHRAGMS SPANS (5-6)(6-7)(7-8)

Detailed Jan. 2024
Checked Jan. 2024

Note: This drawing is not to scale. Follow dimensions.

STATE OF MISSOURI
DAVID ANDREW STRAATMANN
NUMBER PE-2004000848
PROFESSIONAL ENGINEER
THIS SHEET HAS BEEN SIGNED, SEALED, AND DATED ELECTRONICALLY.

DATE PREPARED	3/20/2024
ROUTE	Z
STATE	MO
DISTRICT	BR
SHEET NO.	25
COUNTY	PLATTE
JOB NO.	J4S3454
CONTRACT ID.	
PROJECT NO.	
BRIDGE NO.	A9373

DATE	DESCRIPTION

IF A SEAL IS PRESENT ON THIS SHEET IT HAS BEEN ELECTRONICALLY SEALED AND DATED.

MISSOURI HIGHWAYS AND TRANSPORTATION COMMISSION
105 WEST CAPITOL
JEFFERSON CITY, MO 65102
1-888-ASK-MODOT (1-888-275-6636)

Bartlett & West
601 MONROE STREET, SUITE 201 - JEFFERSON CITY, MO 65101
PHONE 573-634-3181 - FAX 573-634-7904
CERTIFICATE OF AUTHORITY NO. 000167 - ENGINEERING
WWW.BARTWEST.COM

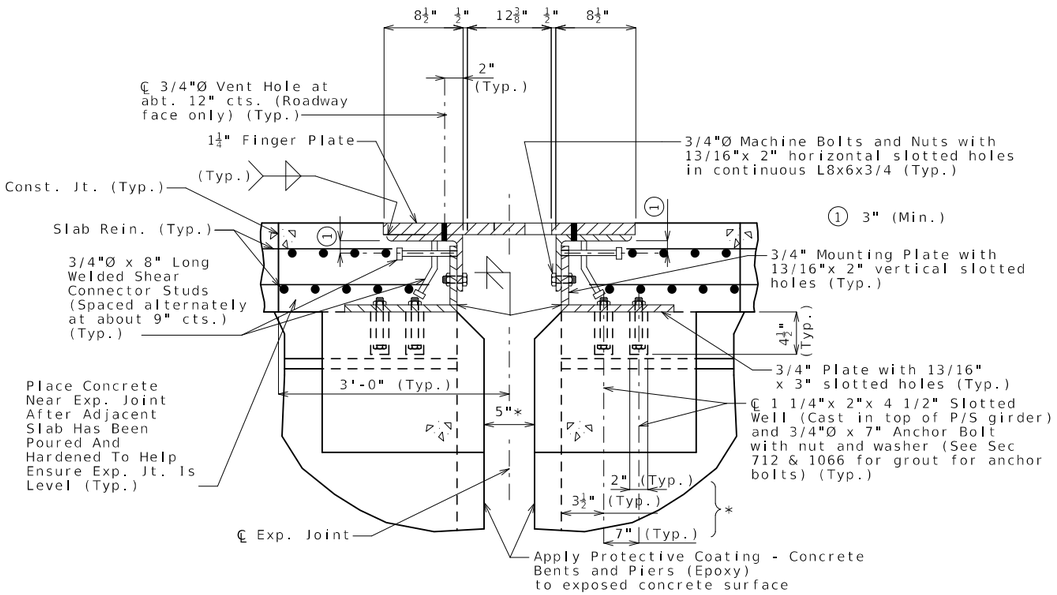

SECTION THRU DEVICE

* Dimension along ℄ Girder

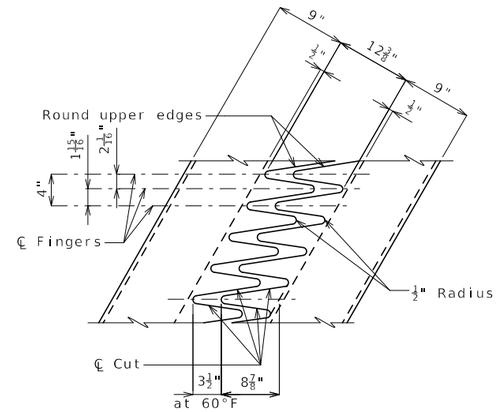

PART PLAN OF FINGER PLATE

GENERAL NOTES:

Finger plate shall be cut with a machine guided gas torch from one plate. The plate from which fingers are cut may be spliced before fingers are cut. The surface of cut shall be perpendicular to the surface of the plate. The cut shall not exceed 1/8" in width. The centerline of cut shall not deviate more than 1/16" from the position of centerline of cut shown. No splicing of finger plate or finger plate assembly will be allowed after fingers are cut. The expansion device shall be fabricated and installed to the crown and grade of the roadway.

Plan dimensions are based on installation at 60°F. The expansion gap and other dimensions shall be increased or decreased 3/8" for each 10° fall or rise in temperature at installation.

Material for the expansion device shall be ASTM A709 Grade 36 structural steel. Anchors for the expansion device shall be in accordance with Sec 1037.

Structural steel for the expansion device and barrier plate shall be coated with a minimum of two coats of inorganic zinc primer to provide a total dry film thickness of 4 mils minimum, 6 mils maximum, or galvanized in accordance with ASTM A123. Anchors need not be protected from overspray.

Payment for furnishing, coating or galvanizing and installing the structural steel for the expansion device will be considered completely covered by the contract unit price for Expansion Device (Finger Plate) per linear foot.

Longitudinal reinforcing steel shall be placed so that ends shall not be more than ±1" from the 3/4" vertical mounting plate at the expansion device.

Complete joint penetration welds utilized in the fabrication of the expansion device shall be nondestructively tested by an approved method.

Note:
Concrete shall be forced under and around finger plate supporting hardware, anchors, angles and bars. Proper consolidation shall be achieved by localized internal vibration.

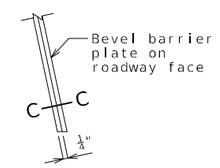

PART ELEVATION AT END OF BARRIER PLATE

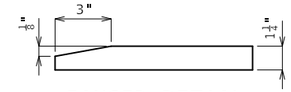

FINGER DETAIL

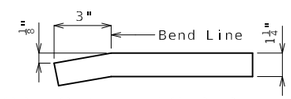

OPTIONAL FINGER DETAIL

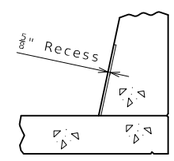

SECTION B-B

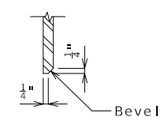

SECTION C-C

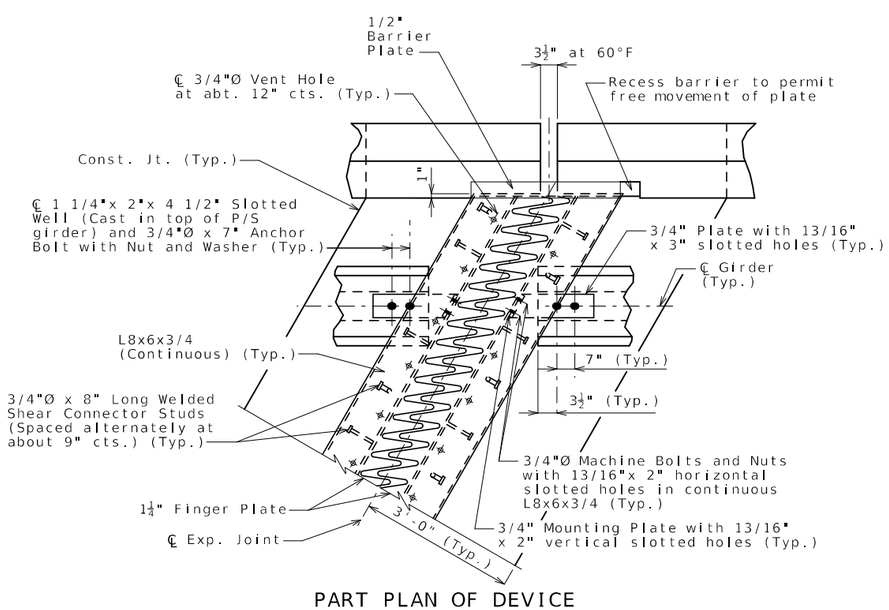

PART PLAN OF DEVICE

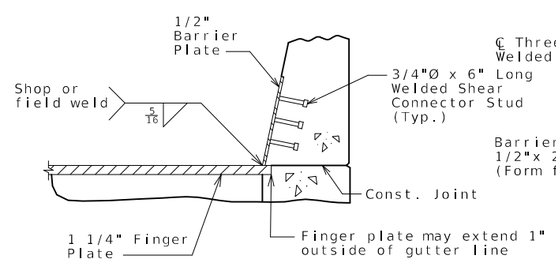

SECTION A-A

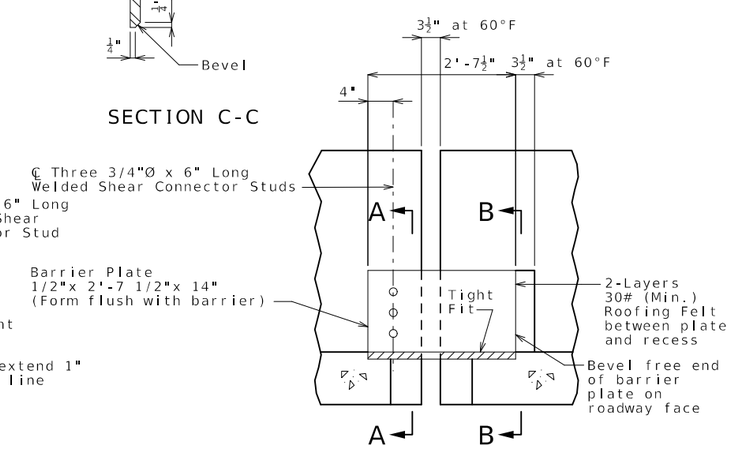

ELEVATION OF BARRIER

FINGER PLATE EXPANSION DEVICE AT INT. BENT NO. 5

Detailed Jan. 2024
Checked Jan. 2024

Note: This drawing is not to scale. Follow dimensions.

STATE OF MISSOURI
DAVID ANDREW STRAATMANN
NUMBER PE-2004000848
PROFESSIONAL ENGINEER
THIS SHEET HAS BEEN SIGNED, SEALED AND DATED ELECTRONICALLY.

DATE PREPARED	
3/21/2024	
ROUTE Z	STATE MO
DISTRICT BR	SHEET NO. 26
COUNTY PLATTE	
JOB NO. J4S3454	
CONTRACT ID.	
PROJECT NO.	
BRIDGE NO. A9373	

DESCRIPTION	DATE

IF A SEAL IS PRESENT ON THIS SHEET IT HAS BEEN ELECTRONICALLY SEALED AND DATED.

MISSOURI HIGHWAYS AND TRANSPORTATION COMMISSION
105 WEST CAPITOL
JEFFERSON CITY, MO 65102
1-888-ASK-MODOT (1-888-275-6636)

Bartlett & West
601 MONROE STREET, SUITE 201 - JEFFERSON CITY, MO 65101
PHONE 573-634-3181 - FAX 573-634-7904
CERTIFICATE OF AUTHORITY NO. 000167 - ENGINEERING
WWW.BARTWEST.COM

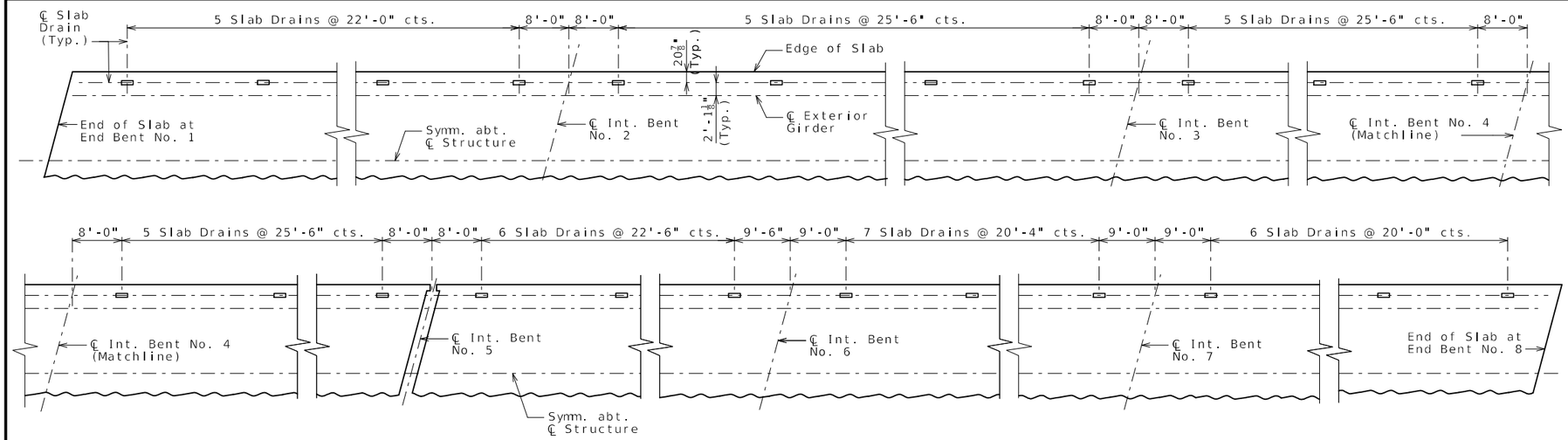

PLAN OF SLAB SHOWING SLAB DRAIN LOCATIONS

Note: Through Spans (1-4) there are 40 Slab Drains.
Through Spans (5-7) there are 38 Slab Drains.

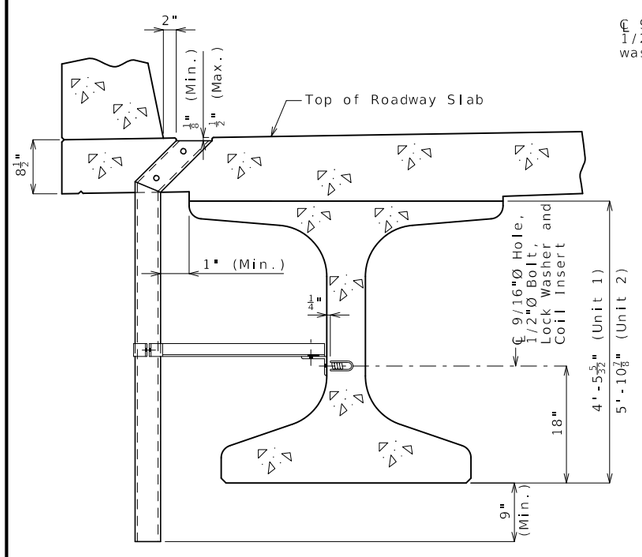

PART SECTION NEAR DRAIN

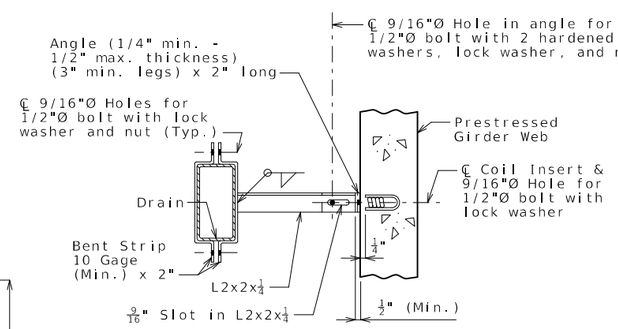

PART SECTION SHOWING BRACKET ASSEMBLY

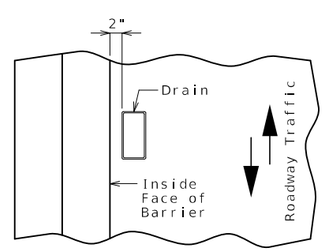

PART PLAN OF SLAB AT DRAIN

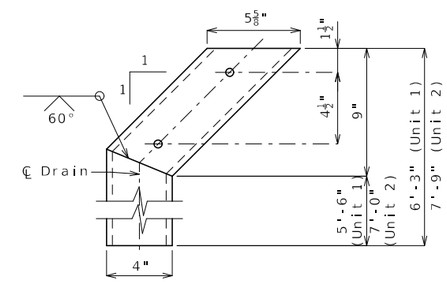

ELEVATION OF DRAIN

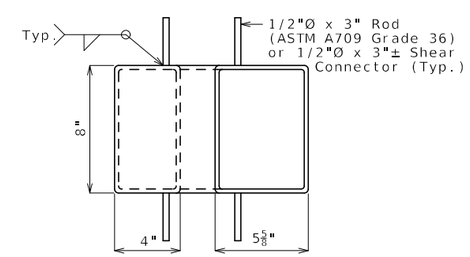

PLAN OF STEEL DRAIN OPTION

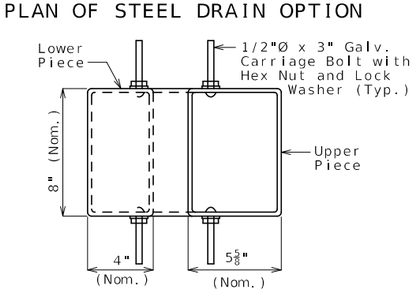

PLAN OF FRP DRAIN OPTION

General Notes:

Contractor shall have the option to construct either steel or FRP slab drains. All drains shall be of same type.

Slab drain bracket assembly shall be ASTM A709 Grade 36 steel.

Locate drains in slab by dimensions shown in Part Section Near Drain.

Reinforcing steel shall be shifted to clear drains.

The coil inserts and bracket assembly shall be galvanized in accordance with ASTM A123.

All bolts, hardened washers, lock washers and nuts shall be galvanized in accordance with AASHTO M 232 (ASTM A153), Class C.

All 1/2"Ø bolts shall be ASTM A307.

Shop drawings will not be required for the slab drains and the bracket assembly.

The coil insert required for the bracket assembly attachment shall be located on the prestressed girder shop drawings.

Coil inserts shall have a concrete pull-out strength (ultimate load) of at least 2,500 pounds in 5,000 psi concrete.

The bolt required to attach the slab drain bracket assembly to the prestressed girder web shall be supplied by the prestressed girder fabricator.

Notes for Steel Drain:

Slab drains may be fabricated of either 1/4" welded sheets of ASTM A709 Grade 36 steel or from 1/4" structural steel tubing ASTM A500 or A501.

Outside dimensions of drains are 8" x 4".

The drains shall be galvanized in accordance with ASTM A123.

Notes for FRP Drain:

Drains shall be machine filament-wound thermosetting resin tubing meeting the requirements of ASTM D2996 with the following exceptions:

Shape of drains shall be rectangular with outside nominal dimensions of 8" x 4".

Minimum reinforced wall thickness shall be 1/4 inch.

The resin used shall be ultraviolet (UV) resistant and/or have UV inhibitors mixed throughout. Drains may have an exterior coating for additional UV resistance.

The color of the slab drain shall be gray (Federal Standard 26373). The color shall be uniform throughout the resin and any coating used.

The combination of materials used in the manufacture of the drains shall be tested for UV resistance in accordance with ASTM D4329 Cycle A. The representative material shall withstand at least 500 hours of testing with only minor discoloration and without any physical deterioration. The contractor shall furnish the results of the required ultraviolet testing prior to acceptance of the slab drains.

At the contractor's option, drains may be field cut. The method of cutting FRP slab drain shall be as recommended by the manufacturer to ensure a smooth, chip free cut.

Both upper and lower drain pieces shall be rigidly connected to each other. Drain flow shall not be obstructed. Approval of the engineer is required.

STATE OF MISSOURI
DAVID ANDREW STRAATMANN
NUMBER PE-2004000848
PROFESSIONAL ENGINEER
THIS SHEET HAS BEEN SIGNED, SEALED AND DATED ELECTRONICALLY.

DATE PREPARED	
3/21/2024	
ROUTE Z	STATE MO
DISTRICT BR	SHEET NO. 27
COUNTY PLATTE	
JOB NO. J4S3454	
CONTRACT ID.	
PROJECT NO.	
BRIDGE NO. A9373	

DESCRIPTION	DATE

IF A SEAL IS PRESENT ON THIS SHEET IT HAS BEEN ELECTRONICALLY SEALED AND DATED.

MISSOURI HIGHWAYS AND TRANSPORTATION COMMISSION
105 WEST CAPITOL
JEFFERSON CITY, MO 65102
1-888-ASK-MODOT (1-888-275-6636)

Bartlett & West
601 MONROE STREET, SUITE 201 - JEFFERSON CITY, MO 65101
PHONE 573-634-3181 - FAX 573-634-7904
CERTIFICATE OF AUTHORITY NO. 000167 - ENGINEERING
WWW.BARTWEST.COM

SLAB DRAINS

Detailed Jan. 2024
Checked Jan. 2024

Note: This drawing is not to scale. Follow dimensions.

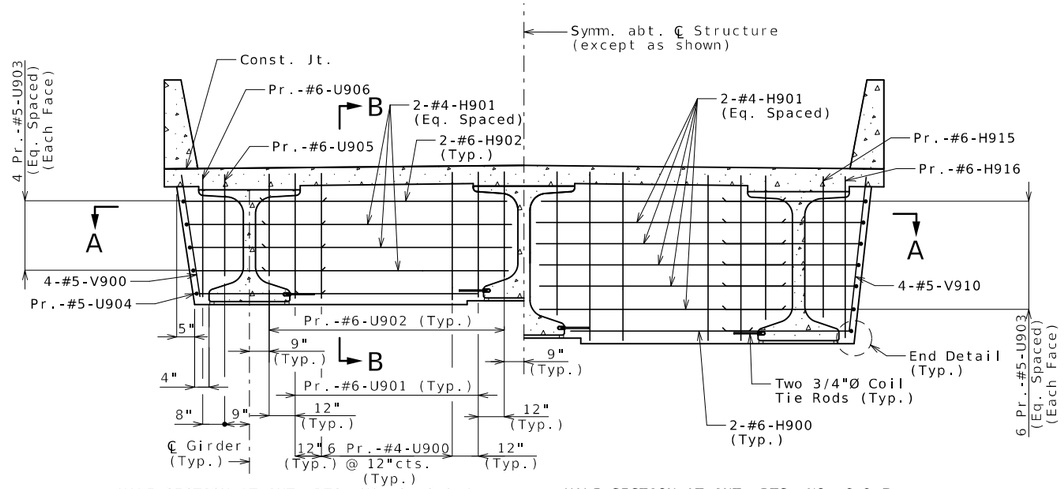

SECTION NEAR INTERMEDIATE BENT

Note: Keys not shown for clarity.

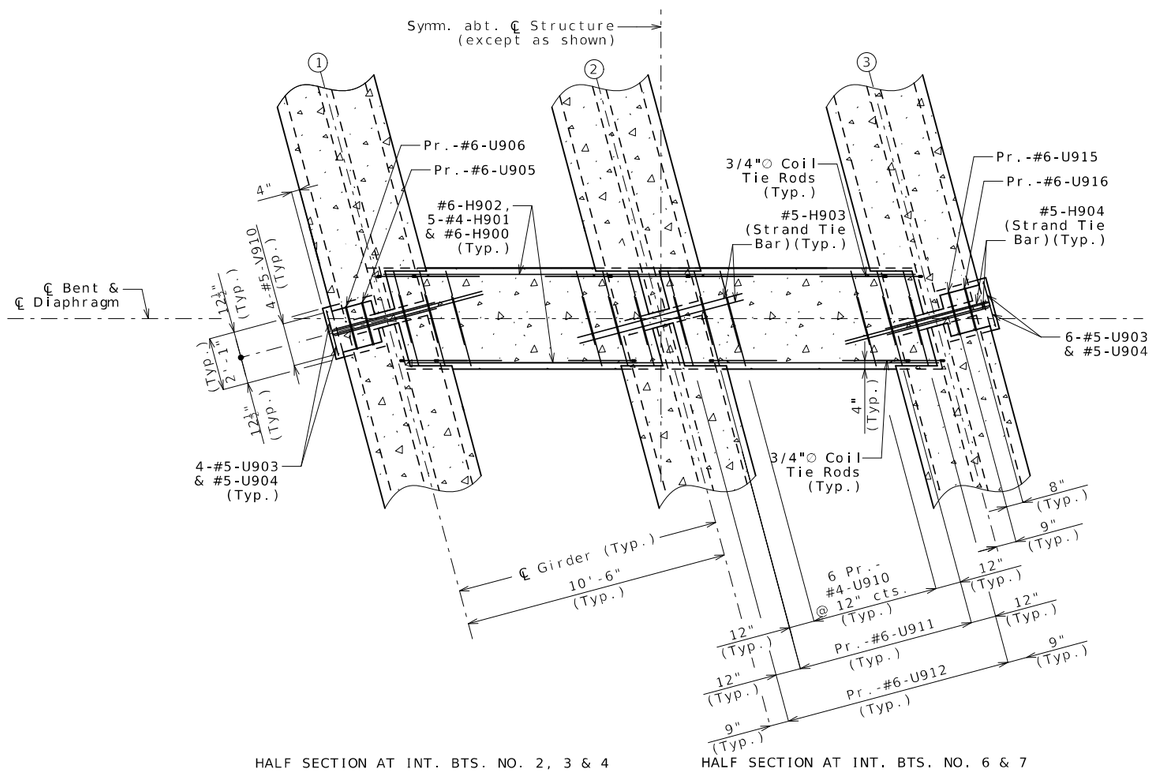

SECTION A-A

Notes:

For location of Strand Tie Bars, see Sheets No. 17 thru 23.

For location and details of Coil Tie Rods, see Sheets No. 17 thru 23.

Diaphragms at intermediate bents shall be built vertical.

All U-bars in diaphragms are to be placed parallel to centerline of Roadway.

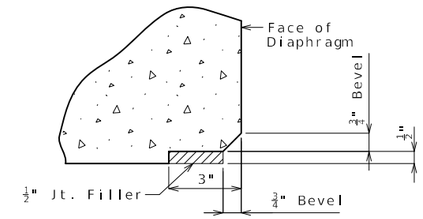

EDGE DETAIL

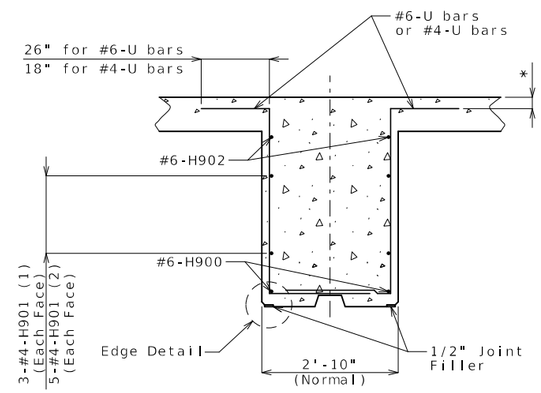

(*) 3" cl. for #6-U bars
3¼" cl. for #4-U bars

SECTION B-B

(1) Int. Bts. No. 2, 3 & 4
(2) Int. Bts. No. 6 & 7

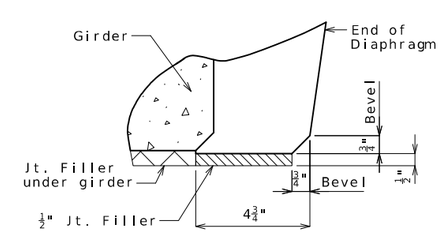

END DETAIL

DETAILS OF CONCRETE DIAPHRAGMS AT INTERMEDIATE BENTS NO. 2, 3, 4, 6 & 7

Detailed Jan. 2024
Checked Jan. 2024

Note; This drawing is not to scale. Follow dimensions.

STATE OF MISSOURI
DAVID ANDREW STRAATMANN
NUMBER PE-2004000848
PROFESSIONAL ENGINEER
THIS SHEET HAS BEEN SIGNED, SEALED AND DATED ELECTRONICALLY.

DATE PREPARED	3/21/2024
ROUTE	Z
STATE	MO
DISTRICT	BR
SHEET NO.	28
COUNTY	PLATTE
JOB NO.	J4S3454
CONTRACT ID.	
PROJECT NO.	
BRIDGE NO.	A9373

DATE	DESCRIPTION

MISSOURI HIGHWAYS AND TRANSPORTATION COMMISSION
105 WEST CAPITOL
JEFFERSON CITY, MO 65102
1-888-ASK-MODOT (1-888-275-6636)

Bartlett & West
601 MONROE STREET, SUITE 201 - JEFFERSON CITY, MO 65101
PHONE 573-634-3181 - FAX 573-634-7904
CERTIFICATE OF AUTHORITY NO. 000167 - ENGINEERING
WWW.BARTWEST.COM

IF A SEAL IS PRESENT ON THIS SHEET IT HAS BEEN ELECTRONICALLY SEALED AND DATED.

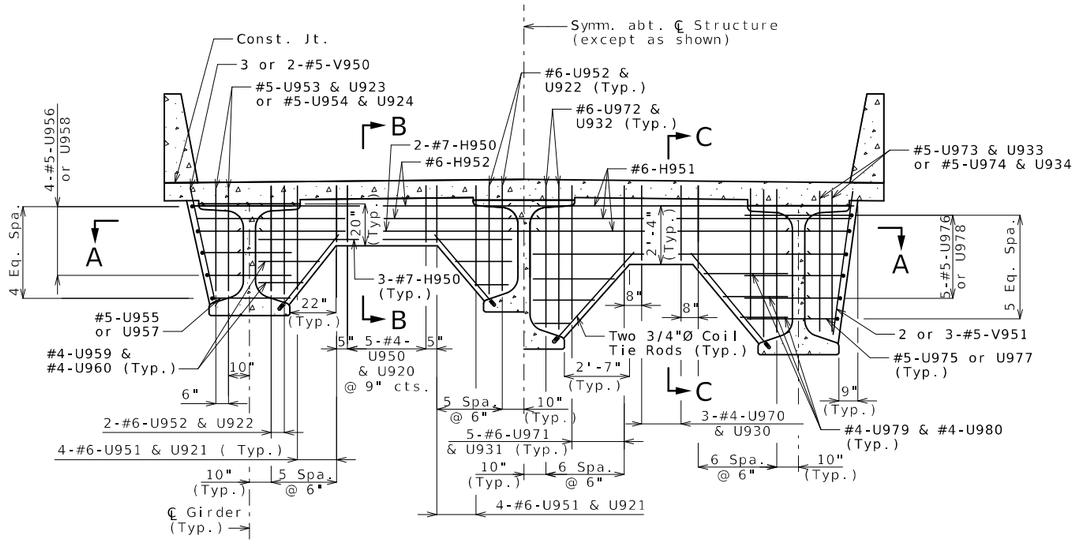

SECTION NEAR INTERMEDIATE BENT
(Normal to ℄ Girder)

Notes:

For location of Strand Tie Bars, see Sheets No. 17 thru 20.

For location and details of Coil Tie Rods, see Sheets No. 17 thru 20.

For details of Finger Plate Expansion Device, see Sheet No. 26.

Diaphragms at intermediate bents shall be built vertical.

All U-bars in diaphragms are to be placed parallel to centerline of Roadway.

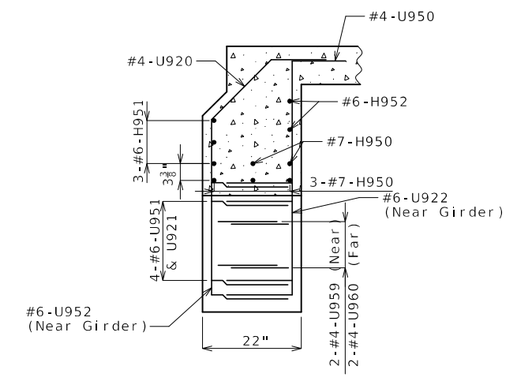

SECTION B-B

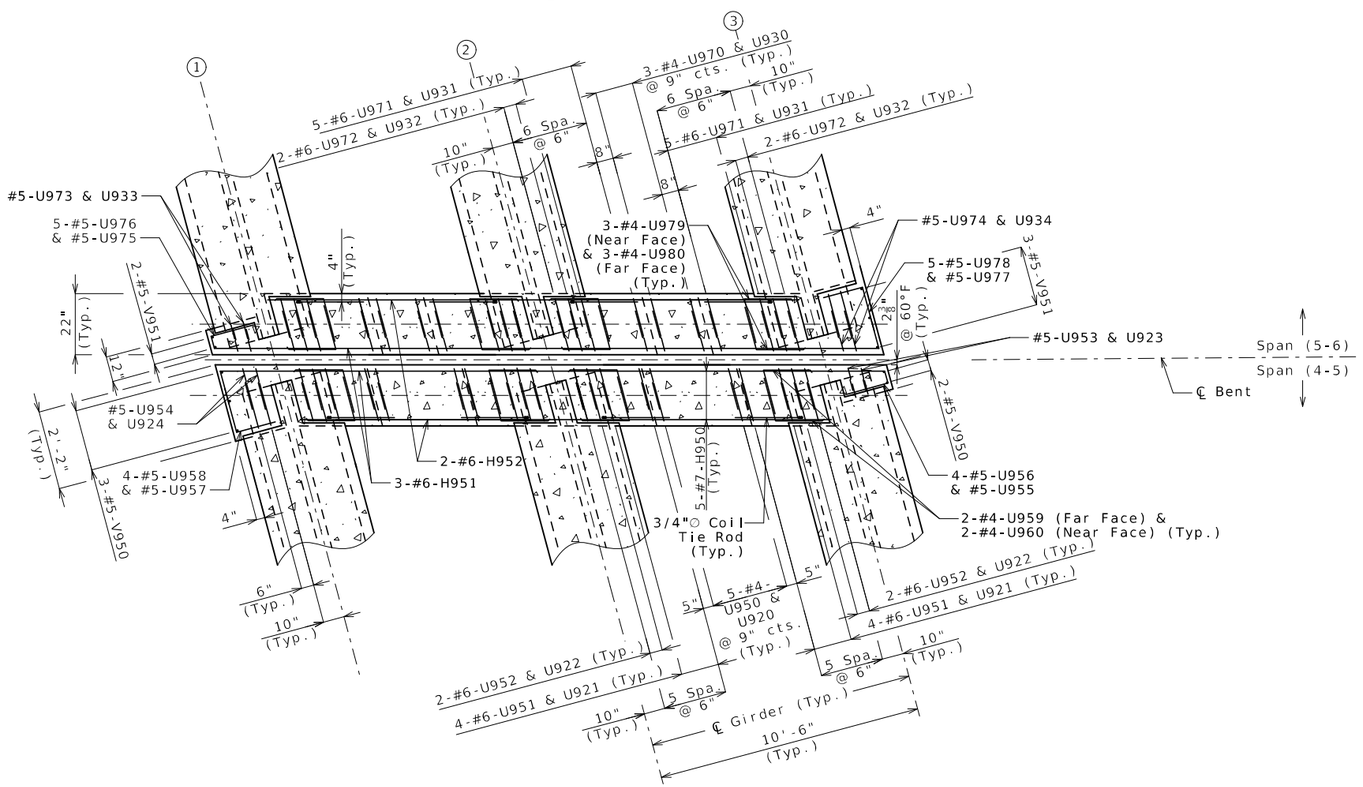

SECTION A-A

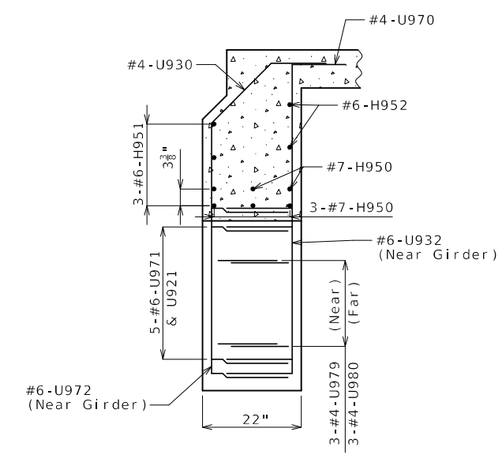

SECTION C-C

DETAILS OF OPEN CONCRETE DIAPHRAGMS AT INTERMEDIATE BENT NO. 5

Detailed Jan. 2024
Checked Jan. 2024

Note: This drawing is not to scale. Follow dimensions.

STATE OF MISSOURI
DAVID ANDREW STRAATMANN
NUMBER PE-2004000848
PROFESSIONAL ENGINEER
THIS SHEET HAS BEEN SIGNED, SEALED AND DATED ELECTRONICALLY.

DATE PREPARED	
3/20/2024	
ROUTE Z	STATE MO
DISTRICT BR	SHEET NO. 29
COUNTY PLATTE	
JOB NO. J4S3454	
CONTRACT ID.	
PROJECT NO.	
BRIDGE NO. A9373	

DESCRIPTION

DATE

IF A SEAL IS PRESENT ON THIS SHEET IT HAS BEEN ELECTRONICALLY SEALED AND DATED.

MISSOURI HIGHWAYS AND TRANSPORTATION COMMISSION
105 WEST CAPITOL
JEFFERSON CITY, MO 65102
1-888-ASK-MODOT (1-888-275-6636)

Bartlett & West
601 MONROE STREET, SUITE 201 - JEFFERSON CITY, MO 65101
PHONE 573-634-3181 - FAX 573-634-7904
CERTIFICATE OF AUTHORITY NO. 000167 - ENGINEERING
WWW.BARTWEST.COM

Theoretical Bottom of Slab Elevations at Centerline of Girder (Prior to forming for slab) **

Girder Number	Span (1-2) (103'-3 1/2" ℄ Brg. - ℄ Brg.)										
	℄ Brg.	.10	.20	.30	.40	.50	.60	.70	.80	.90	℄ Brg.
1	822.10	822.25	822.40	822.54	822.67	822.78	822.89	822.98	823.06	823.14	823.21
2	822.26	822.42	822.57	822.71	822.84	822.96	823.07	823.16	823.23	823.30	823.36
3	822.04	822.19	822.34	822.48	822.61	822.72	822.83	822.92	823.00	823.08	823.15
Girder Number	Span (2-3) (116'-7" ℄ Brg. - ℄ Brg.)										
	℄ Brg.	.10	.20	.30	.40	.50	.60	.70	.80	.90	℄ Brg.
1	823.22	823.41	823.60	823.77	823.92	824.06	824.17	824.27	824.35	824.41	824.47
2	823.38	823.58	823.78	823.95	824.11	824.25	824.36	824.45	824.52	824.58	824.63
3	823.16	823.35	823.54	823.71	823.86	824.00	824.11	824.21	824.29	824.35	824.41
Girder Number	Span (3-4) (116'-7" ℄ Brg. - ℄ Brg.)										
	℄ Brg.	.10	.20	.30	.40	.50	.60	.70	.80	.90	℄ Brg.
1	824.48	824.67	824.86	825.03	825.18	825.32	825.43	825.52	825.60	825.66	825.70
2	824.64	824.84	825.03	825.21	825.37	825.50	825.62	825.71	825.78	825.83	825.87
3	824.42	824.61	824.80	824.97	825.12	825.26	825.37	825.46	825.54	825.61	825.65
Girder Number	Span (4-5) (115'-3 1/2" ℄ Brg. - ℄ Brg.)										
	℄ Brg.	.10	.20	.30	.40	.50	.60	.70	.80	.90	℄ Brg.
1	825.71	825.87	826.01	826.13	826.23	826.29	826.33	826.33	826.31	826.27	826.21
2	825.88	826.05	826.20	826.33	826.43	826.50	826.53	826.54	826.52	826.47	826.40
3	825.66	825.83	825.97	826.10	826.20	826.27	826.31	826.32	826.30	826.27	826.21
Girder Number	Span (5-6) (127'-3 1/2" ℄ Brg. - ℄ Brg.)										
	℄ Brg.	.10	.20	.30	.40	.50	.60	.70	.80	.90	℄ Brg.
1	826.21	826.25	826.27	826.27	826.25	826.19	826.12	826.01	825.89	825.74	825.57
2	826.40	826.45	826.48	826.49	826.47	826.42	826.34	826.24	826.11	825.96	825.79
3	826.21	826.26	826.28	826.29	826.27	826.22	826.15	826.05	825.93	825.79	825.63
Girder Number	Span (6-7) (138'-7" ℄ Brg. - ℄ Brg.)										
	℄ Brg.	.10	.20	.30	.40	.50	.60	.70	.80	.90	℄ Brg.
1	825.56	825.49	825.41	825.31	825.20	825.07	824.92	824.76	824.57	824.37	824.17
2	825.78	825.71	825.64	825.55	825.45	825.32	825.17	825.00	824.81	824.60	824.39
3	825.61	825.54	825.46	825.37	825.26	825.13	824.98	824.81	824.63	824.43	824.22
Girder Number	Span (7-8) (115'-3 1/2" ℄ Brg. - ℄ Brg.)										
	℄ Brg.	.10	.20	.30	.40	.50	.60	.70	.80	.90	℄ Brg.
1	824.15	824.07	823.98	823.89	823.79	823.68	823.56	823.43	823.29	823.14	823.00
2	824.37	824.29	824.21	824.12	824.02	823.91	823.79	823.65	823.51	823.37	823.21
3	824.21	824.13	824.04	823.94	823.84	823.73	823.61	823.48	823.34	823.20	823.05

** Elevations are based on a constant slab thickness of 8 1/2" and include allowance for theoretical dead load deflections due to weight of slab (including stay-in-place corrugated forms) and barrier.

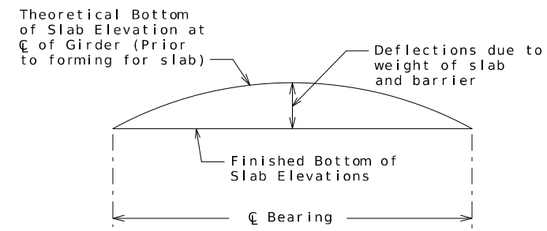

TYPICAL SLAB ELEVATIONS DIAGRAM

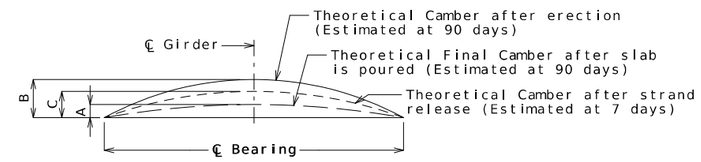

Girder	Span (1-2)			Span (2-3)			Span (3-4)			Span (4-5)			Span (5-6)			Span (6-7)			Span (7-8)		
	A	B	C	A	B	C	A	B	C	A	B	C	A	B	C	A	B	C	A	B	C
Exterior	2 1/2"	4"	2 5/8"	1 3/4"	4 3/8"	2 7/8"	1 3/4"	4 3/8"	2 7/8"	1 7/8"	4 1/4"	2 7/8"	1 5/8"	3 3/8"	2 1/4"	3/4"	3 1/4"	2 1/4"	1 3/8"	2 1/2"	1 5/8"
Interior	2 1/4"			1 3/8"			1 3/8"			1 1/2"			1 3/8"			5/8"			1 1/8"		

GIRDER CAMBER DIAGRAM

Conversion Factors for Girder Camber (Estimated at 90 days):

0.1 pt. = 0.314 x 0.5 pt.
0.2 pt. = 0.593 x 0.5 pt.
0.3 pt. = 0.813 x 0.5 pt.
0.4 pt. = 0.952 x 0.5 pt.

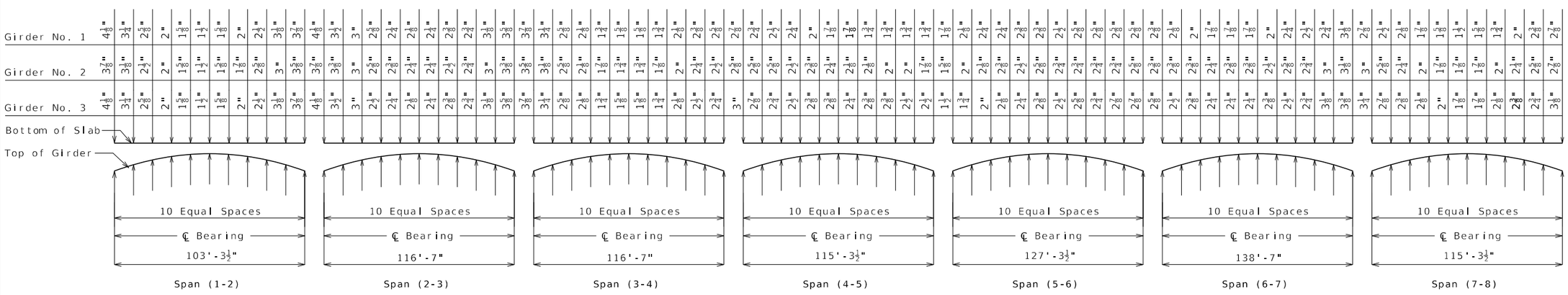

THEORETICAL SLAB HAUNCHING DIAGRAM (ESTIMATED AT 90 DAYS)

Notes:

If girder camber is different from that shown in the camber diagram, in order to maintain minimum slab thickness, an adjustment of the slab haunches, an increase in slab thickness or a raise in grade uniformly throughout the structure shall be necessary. No payment will be made for additional labor or materials required for variation in haunching, slab thickness or grade adjustment.

Concrete in the slab haunches is included in the Estimated Quantities for Slab on Concrete NU-Girder.

Detailed Jan. 2024
Checked Jan. 2024

Note: This drawing is not to scale. Follow dimensions.

STATE OF MISSOURI
DAVID ANDREW STRAATMANN
NUMBER PE-2004000848
PROFESSIONAL ENGINEER
THIS SHEET HAS BEEN SIGNED, SEALED AND DATED ELECTRONICALLY.

DATE PREPARED 3/20/2024
ROUTE Z
STATE MO
DISTRICT BR
SHEET NO. 30
COUNTY PLATTE
JOB NO. J4S3454
CONTRACT ID.
PROJECT NO.
BRIDGE NO. A9373

DESCRIPTION
DATE

IF A SEAL IS PRESENT ON THIS SHEET IT HAS BEEN ELECTRONICALLY SEALED AND DATED.

MISSOURI HIGHWAYS AND TRANSPORTATION COMMISSION
105 WEST CAPITOL
JEFFERSON CITY, MO 65102
1-888-ASK-MODOT (1-888-275-6636)

Bartlett & West
601 MONROE STREET, SUITE 201 - JEFFERSON CITY, MO 65101
PHONE 573-634-3181 - FAX 573-634-7904
CERTIFICATE OF AUTHORITY NO. 000167 - ENGINEERING
WWW.BARTWEST.COM

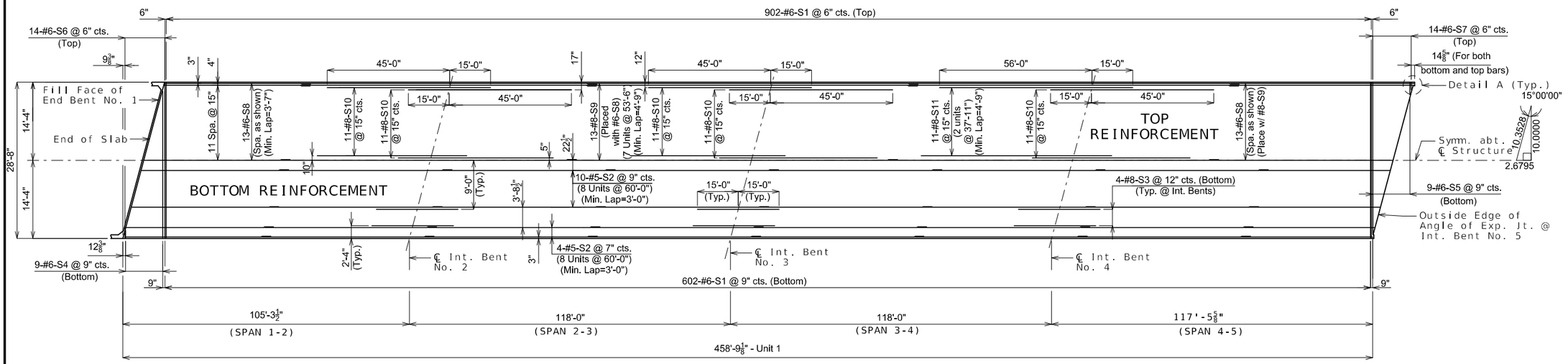

PLAN OF SLAB SHOWING REINFORCEMENT - UNIT 1

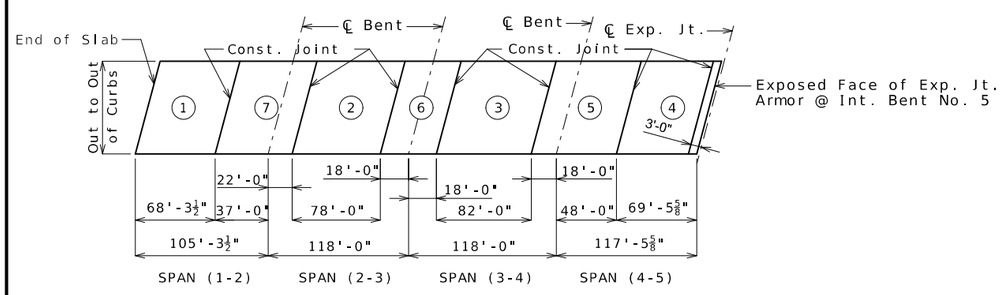

	Sequence of Pours							Min. Rate of Pour Cu. Yds./Hr.	
	Direction							With Retarder	No Retarder
Basic Sequence	1	2	3	4	5	6	7	25	N/A
	Either Direction								
Alternate pours to the basic skip sequence are subject to the approval of the engineer in accordance with Sec 703.									
Alternate A Pours	1	7 + 2		6 + 3		5 + 4		27	N/A
	End to 7	1 to 6		2 to 5		3 to End			
Alternate B Pours	1 + 7 + 2		6 + 3		5 + 4			27	N/A
	End to 6		2 to 5		3 to End				
Alternate C Pours	1 + 7 + 2			6 + 3 + 5 + 4				27	N/A
	End to 6			2 to End					
Alternate D Pours	1 + 7 + 2 + 6 + 3 + 5 + 4							27	N/A
	End to End								

The contractor shall furnish an approved retarder to retard the set of the concrete to 2.5 hours and shall pour and satisfactorily finish the slab pours at the rate given.

The concrete diaphragm at the intermediate bent and integral end bents shall be poured a minimum of 30 minutes and a maximum of 2 hours before the slab is poured.

End diaphragms at expansion devices may be poured with a construction joint between the diaphragm and slab, or monolithic with the slab.

SLAB POURING SEQUENCE

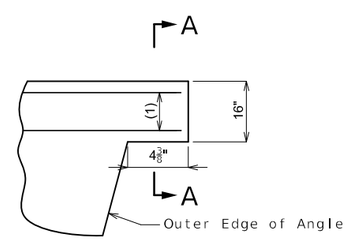

DETAIL A

(Showing Required Slab Bars in Extensions, Typ. of all 4 corners near expansion device)

(1) 3-#5-S12 (Equally spa.) (Top and bottom)

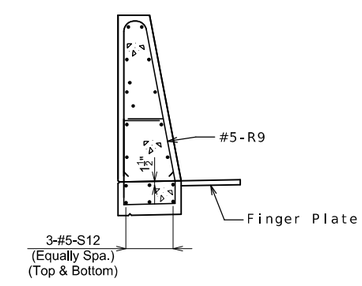

SECTION A-A

Notes:

Longitudinal slab dimensions are measured horizontally.

For Section Through Slab and Slab Construction Joint Details, see Sheet No. 33.

For Theoretical Bottom of Slab Elevations, Theoretical Slab Haunching Diagram and Girder Camber Diagram, see Sheet No. 30.

For details and reinforcement of Type D Barrier not shown, see Sheets No. 34 and 35.

STATE OF MISSOURI
DAVID ANDREW STRAATMANN
NUMBER PE-2004000848
PROFESSIONAL ENGINEER
THIS SHEET HAS BEEN SIGNED, SEALED AND DATED ELECTRONICALLY.

IF A SEAL IS PRESENT ON THIS SHEET IT HAS BEEN ELECTRONICALLY SEALED AND DATED.

DATE PREPARED	
3/21/2024	
ROUTE Z	STATE MO
DISTRICT BR	SHEET NO. 31
COUNTY PLATTE	
JOB NO. J4S3454	
CONTRACT ID.	
PROJECT NO.	
BRIDGE NO. A9373	

DESCRIPTION	DATE

MISSOURI HIGHWAYS AND TRANSPORTATION COMMISSION
105 WEST CAPITOL
JEFFERSON CITY, MO 65102
1-888-ASK-MODOT (1-888-275-6636)

Bartlett & West
601 MONROE STREET, SUITE 201 - JEFFERSON CITY, MO 65101
PHONE 573-634-3181 - FAX 573-634-7904
CERTIFICATE OF AUTHORITY NO. 000167 - ENGINEERING
WWW.BARTWEST.COM

Detailed Jan. 2024
Checked Jan. 2024

Note: This drawing is not to scale. Follow dimensions.

pw://bartwest-pw.bentley.com:bartwest-pw-04/Documents/19000/19421.G30 - Platt County Route Z/OpenRoads Designer/A9373/B_A9373_031_J4S3454_slab_plan1_Unit 1.dgn 2:16:46 PM 3/21/2024

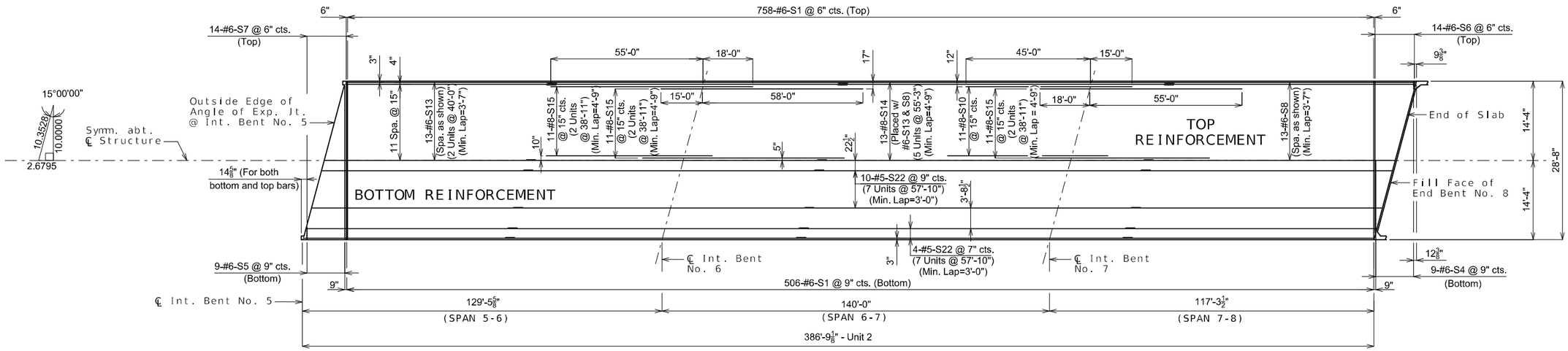

PLAN OF SLAB SHOWING REINFORCEMENT - UNIT 2

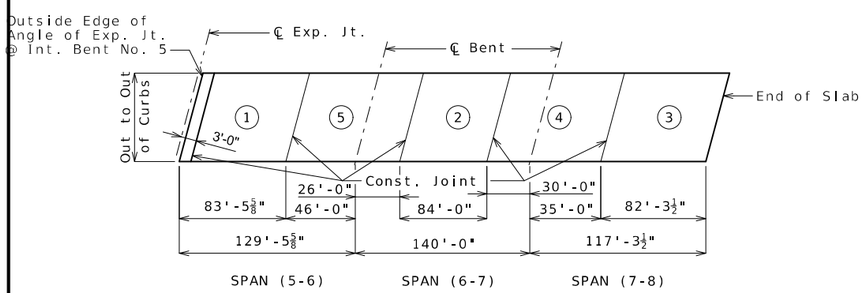

	Sequence of Pours					Min. Rate of Pour Cu. Yds./Hr.	
	Direction					With Retarder	No Retarder
Basic Sequence	1	2	3	4	5	25	N/A
	Either Direction						
Alternate pours to the basic skip sequence are subject to the approval of the engineer in accordance with Sec 703.							
Alternate A Pours	1	5 + 2	4 + 3			32	N/A
	End to 5	1 to 4	2 to End				
Alternate B Pours	1 + 5 + 2	4 + 3				32	N/A
	End to 4	2 to End					
Alternate C Pours	1 + 5 + 2 + 4 + 3					32	N/A
	End to End						

SLAB POURING SEQUENCE

The contractor shall furnish an approved retarder to retard the set of the concrete to 2.5 hours and shall pour and satisfactorily finish the slab pours at the rate given.

The concrete diaphragm at the intermediate bent and integral end bents shall be poured a minimum of 30 minutes and a maximum of 2 hours before the slab is poured.

End diaphragms at expansion devices may be poured with a construction joint between the diaphragm and slab, or monolithic with the slab.

Notes:

Longitudinal slab dimensions are measured horizontally.

For Section Through Slab and Slab Construction Joint Details, see Sheet No. 33.

For Theoretical Bottom of Slab Elevations, Theoretical Slab Haunching Diagram and Girder Camber Diagram, see Sheet No. 30.

For details and reinforcement of Type D Barrier not shown, see Sheets No. 34 and 35.

For details of slab near expansion joints see Sheet No. 32.

STATE OF MISSOURI
DAVID ANDREW STRAATMANN
NUMBER PE-2004000848
PROFESSIONAL ENGINEER
THIS SHEET HAS BEEN SIGNED, SEALED AND DATED ELECTRONICALLY.

IF A SEAL IS PRESENT ON THIS SHEET IT HAS BEEN ELECTRONICALLY SEALED AND DATED.

DATE	DESCRIPTION

DATE PREPARED: 3/21/2024
ROUTE: Z | STATE: MO
DISTRICT: BR | SHEET NO.: 32
COUNTY: PLATTE
JOB NO.: J4S3454
CONTRACT ID.:
PROJECT NO.:
BRIDGE NO.: A9373

MISSOURI HIGHWAYS AND TRANSPORTATION COMMISSION
105 WEST CAPITOL
JEFFERSON CITY, MO 65102
1-888-ASK-MODOT (1-888-275-6636)

Bartlett & West
601 MONROE STREET, SUITE 201 - JEFFERSON CITY, MO 65101
PHONE 573-634-3181 - FAX 573-634-7904
CERTIFICATE OF AUTHORITY NO. 000167 - ENGINEERING
WWW.BARTWEST.COM

Detailed Jan. 2024
Checked Jan. 2024

Note: This drawing is not to scale. Follow dimensions.

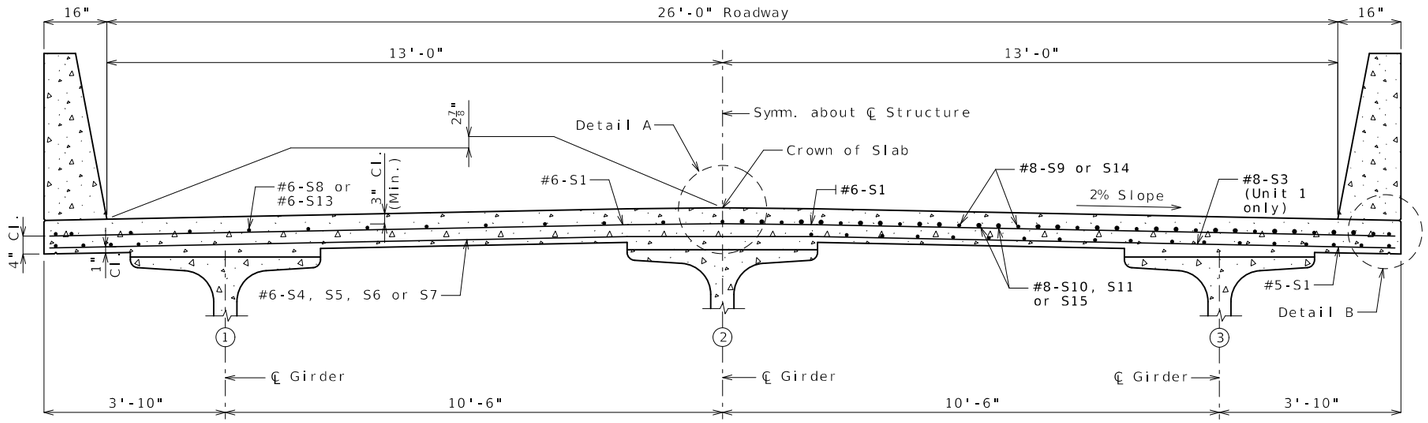

HALF SECTION NEAR END OF SLAB

HALF SECTION NEAR INTERMEDIATE BENT

SECTION THRU SLAB

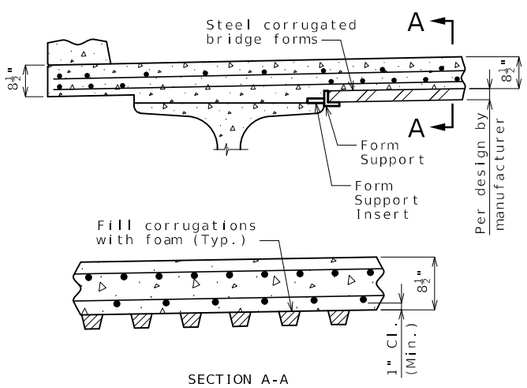

OPTIONAL STAY-IN-PLACE FORM DETAILS

Stay-In-Place Forms:

Corrugated steel forms, supports, closure elements and accessories shall be in accordance with grade requirement and coating designation G165 of ASTM A653. Complete shop drawings of the permanent steel deck forms shall be required in accordance with Sec 1080.

Corrugations of stay-in-place forms shall be filled with an expanded polystyrene material. The polystyrene material shall be placed in the forms with an adhesive in accordance with the manufacturer's recommendations.

Form sheets shall not rest directly on the top of girder flanges. Sheets shall be securely fastened to form supports with a minimum bearing length of one inch on each end. Form supports shall be placed in direct contact with the flange. Drilling holes in the girder flanges will not be permitted. Certified field welders will not be required for welding of the form supports.

The design of stay-in-place corrugated steel forms is per manufacturer which shall be in accordance with Sec 703 for false work and forms. Maximum actual weight of corrugated steel forms allowed shall be 4 psf assumed for girder loading.

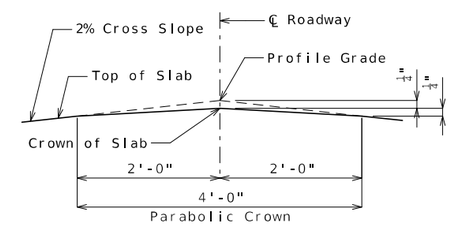

DETAIL A

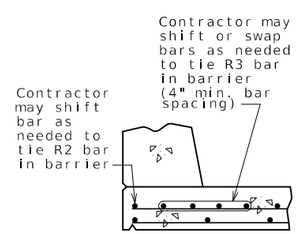

OPTIONAL SHIFTING TOP BARS AT BARRIER

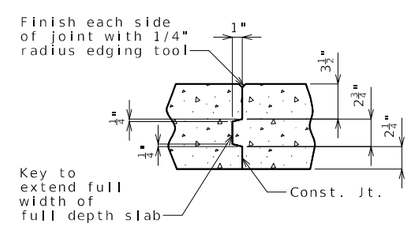

FULL DEPTH SLAB

SLAB CONSTRUCTION JOINT

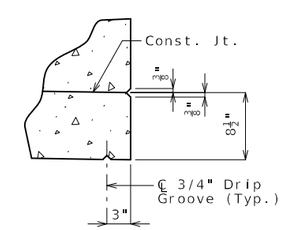

DETAIL B

Notes:

For reinforcement of barrier not shown, see Sheets No. 34 and 35.

For Theoretical Bottom of Slab Elevations, Girder Camber Diagram and Theoretical Slab Haunching Diagram, see Sheet No. 30.

For Plan of Slab Showing Reinforcement, see Sheets No. 31 and 32.

SLAB DETAILS

Detailed Jan. 2024
Checked Jan. 2024

Note: This drawing is not to scale. Follow dimensions.

STATE OF MISSOURI
DAVID ANDREW STRAATMANN
NUMBER PE-2004000848
PROFESSIONAL ENGINEER
THIS SHEET HAS BEEN SIGNED, SEALED AND DATED ELECTRONICALLY.

DATE PREPARED	
3/20/2024	
ROUTE Z	STATE MO
DISTRICT BR	SHEET NO. 33
COUNTY PLATTE	
JOB NO. J4S3454	
CONTRACT ID.	
PROJECT NO.	
BRIDGE NO. A9373	

DATE	DESCRIPTION

IF A SEAL IS PRESENT ON THIS SHEET IT HAS BEEN ELECTRONICALLY SEALED AND DATED.

MISSOURI HIGHWAYS AND TRANSPORTATION COMMISSION
105 WEST CAPITOL
JEFFERSON CITY, MO 65102
1-888-ASK-MODOT (1-888-275-6636)

Bartlett & West
601 MONROE STREET, SUITE 201 - JEFFERSON CITY, MO 65101
PHONE 573-634-3181 - FAX 573-634-7904
CERTIFICATE OF AUTHORITY NO. 000167 - ENGINEERING
WWW.BARTWEST.COM

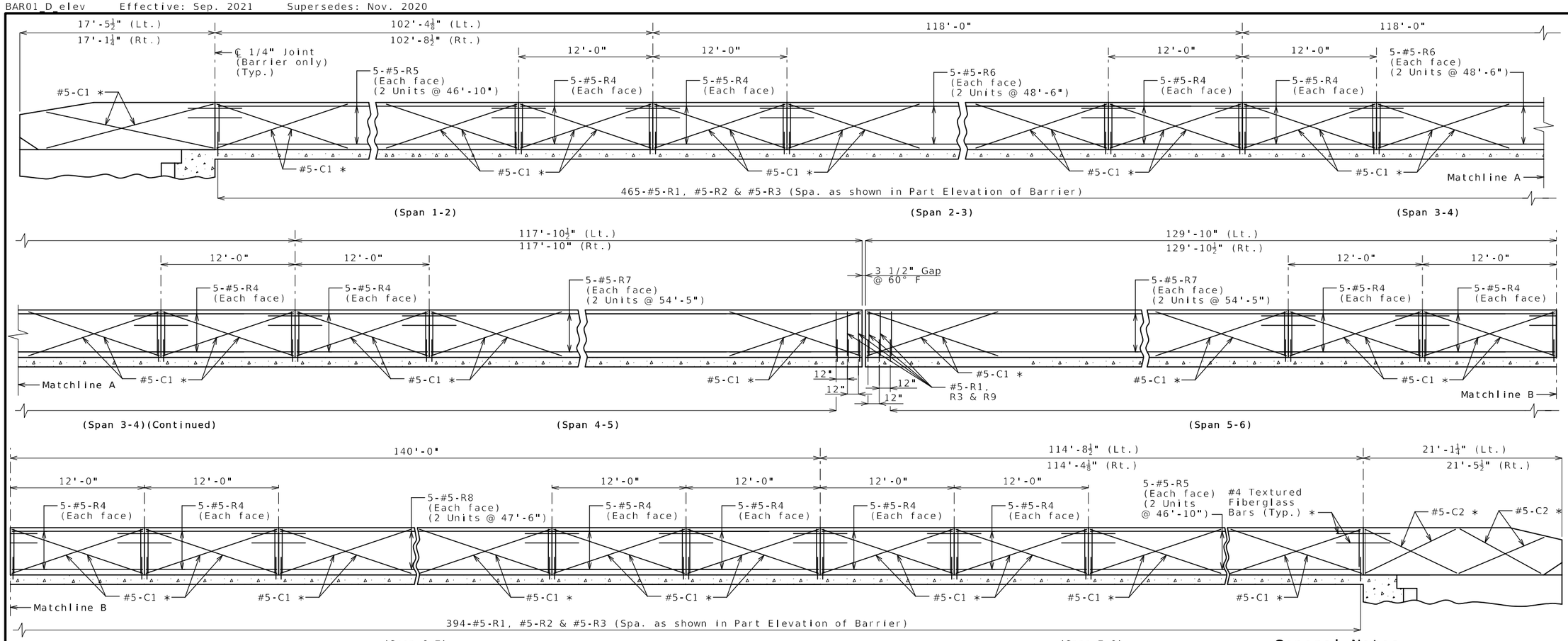

ELEVATION OF BARRIER

(Left barrier shown, right barrier similar, except as shown)

Longitudinal dimensions are horizontal.

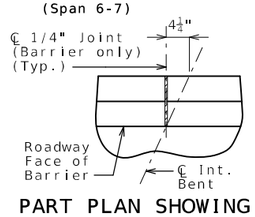

PART PLAN SHOWING JOINT LOCATION

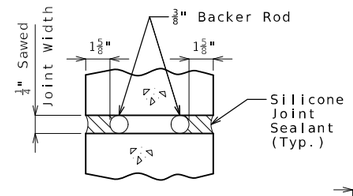

SECTION B-B

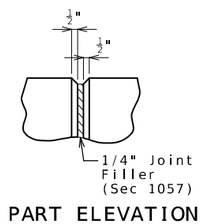

PART ELEVATION AT FORMED JOINT

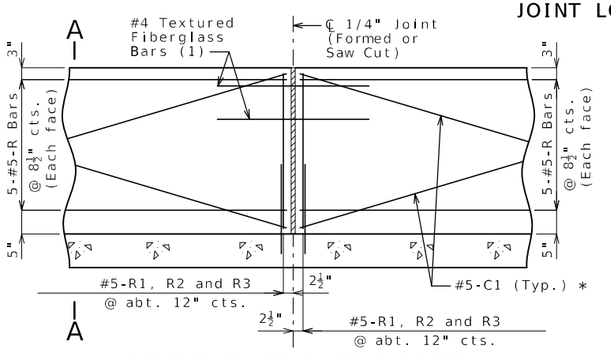

PART ELEVATION OF BARRIER

(1) Four feet long, centered on joint, slip-formed option only

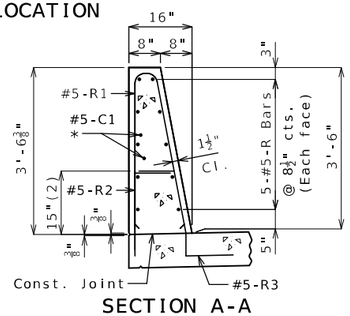

SECTION A-A

Use a minimum lap of 3'-1" for #5 horizontal barrier bars.

The cross-sectional area above the slab is 3.52 square feet.

(2) To top of bar

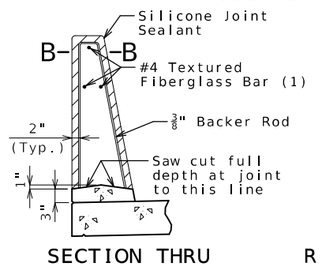

SECTION THRU SAW CUT JOINT

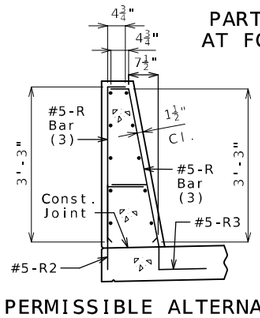

R-BAR PERMISSIBLE ALTERNATE SHAPE

(3) The R1 bar may be separated into two bars as shown, at the contractor's option, only when slip forming is not used. (All dimensions are out to out.)

TYPE D BARRIER

General Notes:

* Slip-formed option only.

Conventional forming or slip forming may be used. Saw cut joints may be used with conventional forming.

Top of barrier shall be built parallel to grade and barrier joints (except at end bents) normal to grade.

All exposed edges of barrier shall have either a 1/2-inch radius or a 3/8-inch bevel, unless otherwise noted.

Payment for all concrete and reinforcement, complete in place, will be considered completely covered by the contract unit price for Type D Barrier per linear foot.

Concrete in barrier shall be Class B-1.

Measurement of barrier is to the nearest linear foot for each structure, measured along the outside top of slab from end of wing to end of wing.

Concrete traffic barrier delineators shall be placed on top of the barrier as shown on Missouri Standard Plan 617.10 and in accordance with Sec 617. Delineators on bridges with two-lane, two-way traffic shall have retroreflective sheeting on both sides. Concrete traffic barrier delineators will be considered completely covered by the contract unit price for Type D Barrier.

Joint sealant and backer rods shall be in accordance with Sec 717 for silicone joint sealant for saw cut and formed joints.

For slip-formed option, both sides of barrier shall have a vertically broomed finish and the top shall have a transversely broomed finish.

Detailed Jan. 2024
Checked Jan. 2024

Note: This drawing is not to scale. Follow dimensions.

STATE OF MISSOURI
DAVID ANDREW STRAATMANN
NUMBER PE-2004000848
PROFESSIONAL ENGINEER
THIS SHEET HAS BEEN SIGNED, SEALED AND DATED ELECTRONICALLY.

DATE PREPARED	
3/20/2024	
ROUTE Z	STATE MO
DISTRICT BR	SHEET NO. 34
COUNTY PLATTE	
JOB NO. J4S3454	
CONTRACT ID.	
PROJECT NO.	
BRIDGE NO. A9373	

DATE	DESCRIPTION

IF A SEAL IS PRESENT ON THIS SHEET IT HAS BEEN ELECTRONICALLY SEALED AND DATED.

MISSOURI HIGHWAYS AND TRANSPORTATION COMMISSION
105 WEST CAPITOL
JEFFERSON CITY, MO 65102
1-888-ASK-MODOT (1-888-275-6636)

Bartlett & West
601 MONROE STREET, SUITE 201 - JEFFERSON CITY, MO 65101
PHONE 573-634-3181 - FAX 573-634-7904
CERTIFICATE OF AUTHORITY NO. 000167 - ENGINEERING
WWW.BARTWEST.COM

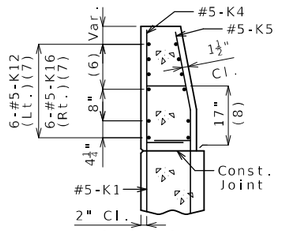

SECTION A-A

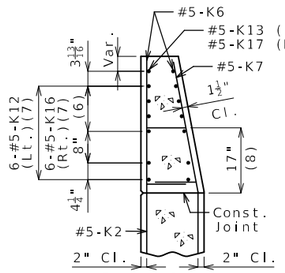

SECTION B-B

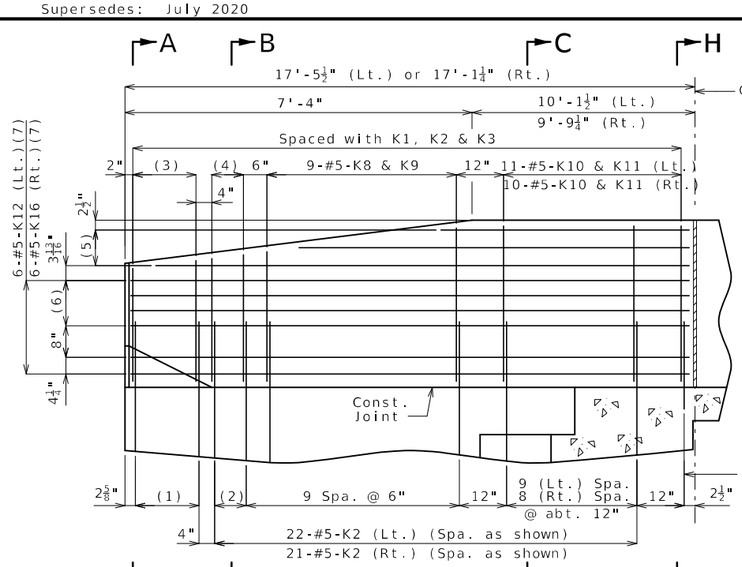

PART ELEVATION

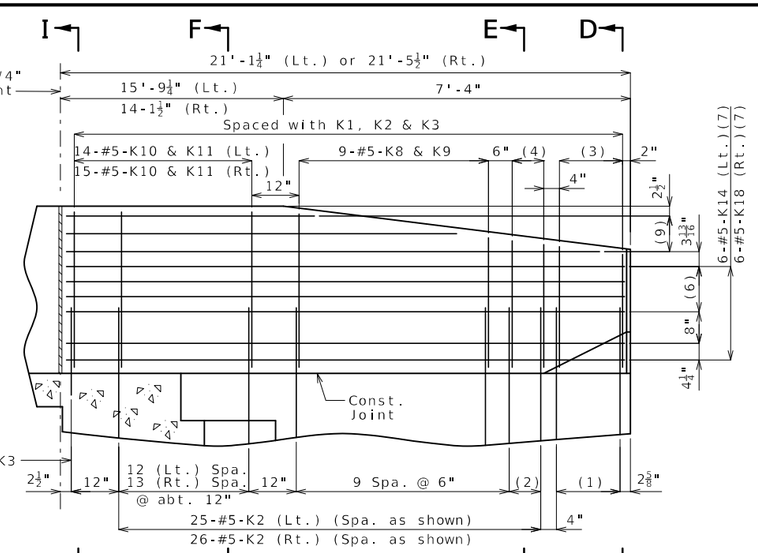

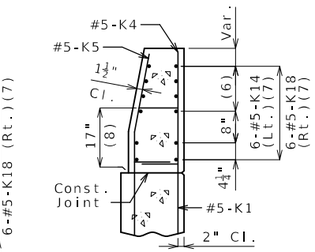

SECTION D-D

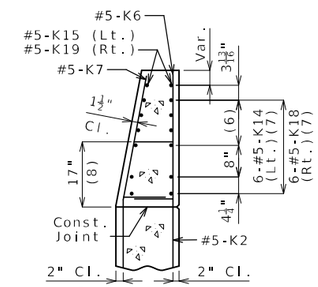

SECTION E-E

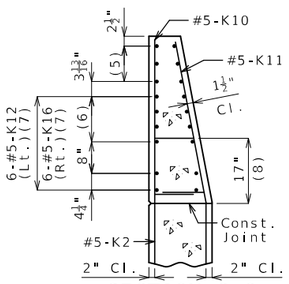

SECTION C-C

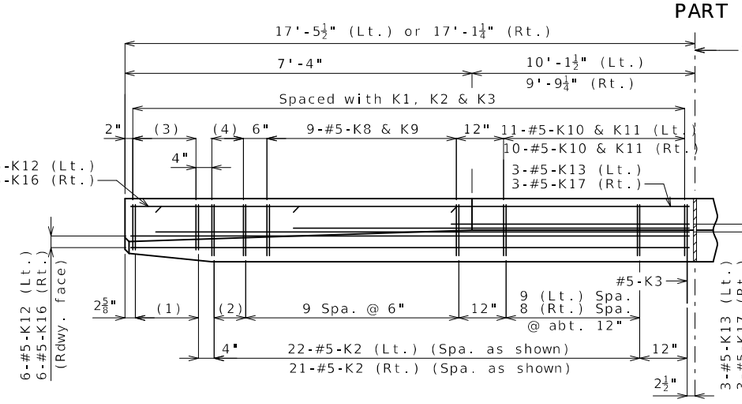

PART PLAN

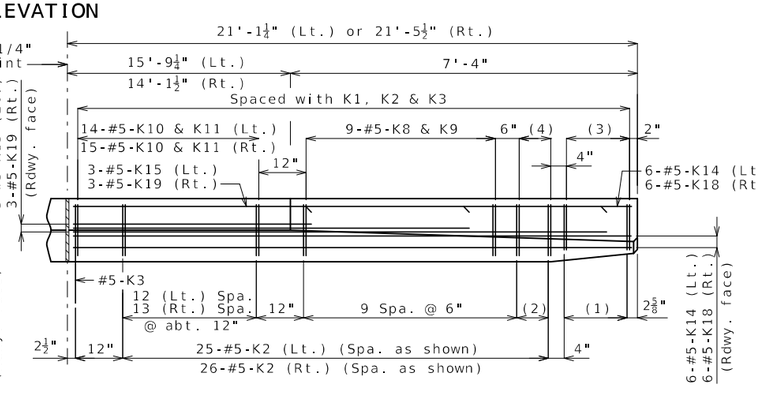

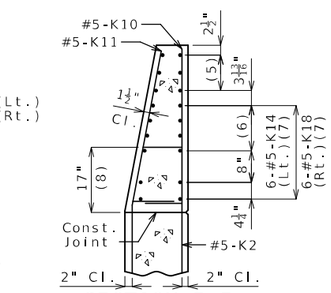

SECTION F-F

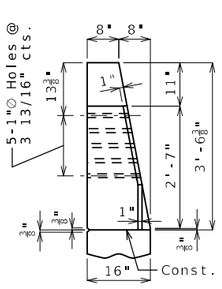

ELEVATION G-G

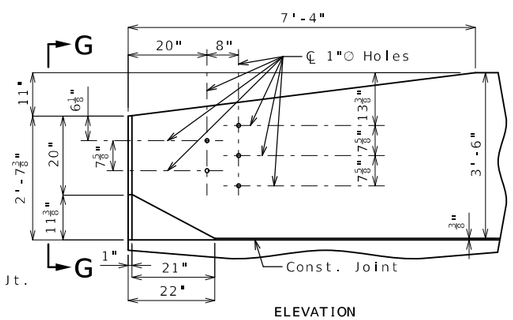

ELEVATION

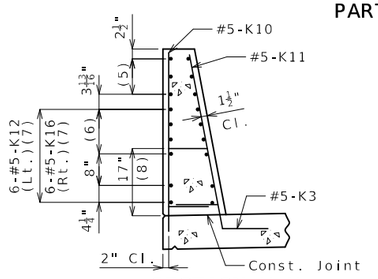

SECTION H-H

(1) 5-#5-K1 @ 4" cts.

(2) 2 spaces @ 4"

(3) 5-#5-K4 & K5

(4) 3-#5-K6 & K7

(5) 3-#5-K13 (Lt.) or K17 (Rt.) @ 4½" cts., each face

(6) 3 spaces @ 3 13/16"

(7) Spaced as shown, each face

(8) To top of bar

(9) 3-#5-K15 (Lt.) or K19 (Rt.) @ 4½" cts., each face

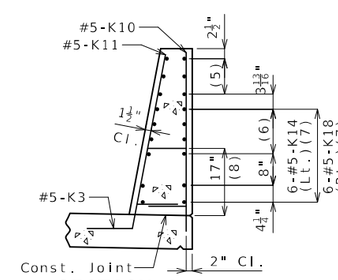

SECTION I-I

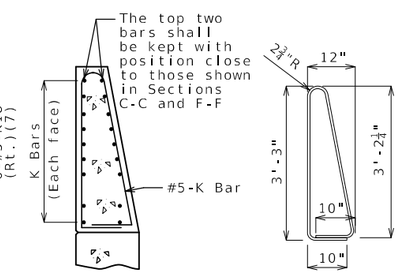

K10-K11 BAR PERMISSIBLE ALTERNATE SHAPE

(Other K bars not shown for clarity)

The K10-K11 bar combination may be furnished as one bar as shown, at the contractor's option.

All dimensions are out to out.

* Transition to zero at Type A curb for gutter lines to match.

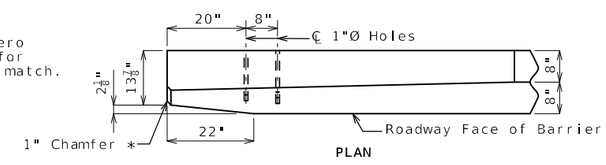

PLAN

DETAILS OF GUARD RAIL ATTACHMENT

General Notes:

Concrete traffic barrier delineators shall be placed on top of the barrier as shown on Missouri Standard Plan 617.10 and in accordance with Sec 617. Delineators on bridges with two-lane, two-way traffic shall have retroreflective sheeting on both sides. Concrete traffic barrier delineators will be considered completely covered by the contract unit price for Type D Barrier.

Reinforcing Steel:
Minimum clearance to reinforcing steel shall be 1 1/2" except as shown for bars embedded into end bent.

TYPE D BARRIER AT END BENTS

(Left barrier shown, right barrier similar)

Detailed Jan. 2024
Checked Jan. 2024

Note: This drawing is not to scale. Follow dimensions.

STATE OF MISSOURI
DAVID ANDREW STRAATMANN
NUMBER PE-2004000848
PROFESSIONAL ENGINEER
THIS SHEET HAS BEEN SIGNED, SEALED AND DATED ELECTRONICALLY.

DATE PREPARED	
3/20/2024	
ROUTE Z	STATE MO
DISTRICT BR	SHEET NO. 35
COUNTY PLATTE	
JOB NO. J4S3454	
CONTRACT ID.	
PROJECT NO.	
BRIDGE NO. A9373	

DATE	DESCRIPTION

IF A SEAL IS PRESENT ON THIS SHEET IT HAS BEEN ELECTRONICALLY SEALED AND DATED.

MISSOURI HIGHWAYS AND TRANSPORTATION COMMISSION
105 WEST CAPITOL
JEFFERSON CITY, MO 65102
1-888-ASK-MODOT (1-888-275-6636)

Bartlett & West
601 MONROE STREET, SUITE 201 - JEFFERSON CITY, MO 65101
PHONE 573-634-3181 - FAX 573-634-7904
CERTIFICATE OF AUTHORITY NO. 000167 - ENGINEERING
WWW.BARTWEST.COM

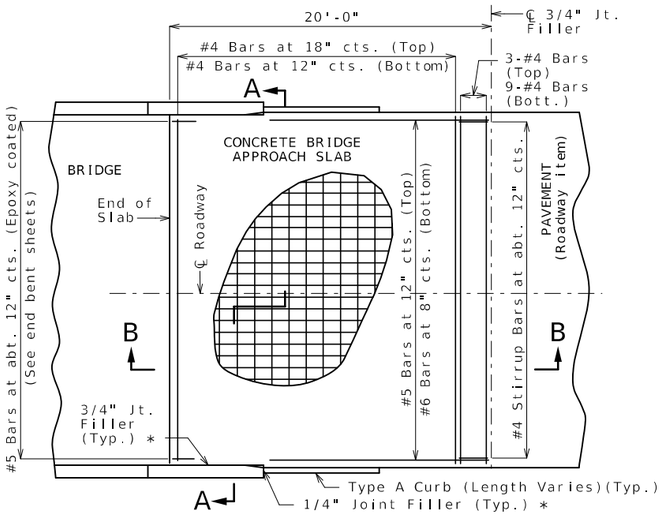

PART PLAN OF SQUARED STRUCTURE
(Skewed structure similar)

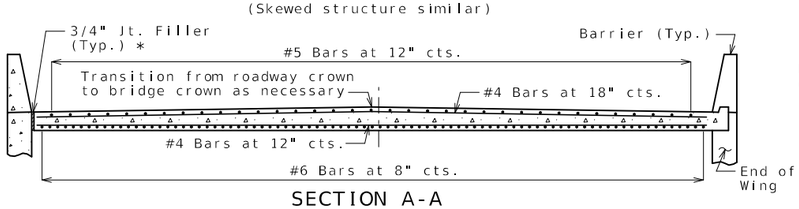

SECTION A-A

With the approval of the engineer, the contractor may crown the bottom of the approach slab to match the crown of the roadway surface.

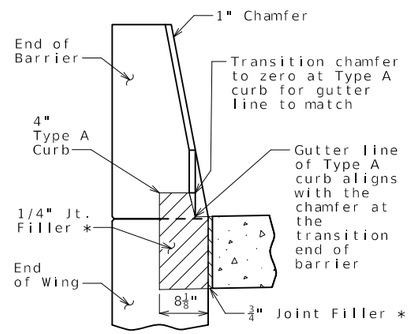

SECTION BETWEEN CURB AND BARRIER

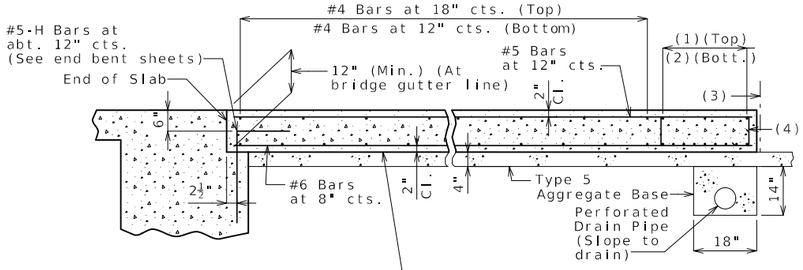

(1) 3-#4 Bars

(2) 9-#4 Bars

(3) ℄ 3/4" Jt. Filler

(4) #4 Stirrup Bars at abt. 12" cts.; 2'-0"x 8" (Min.) out to out; Actual length = 5'-10" (Min.); 90° stirrup hook at bottom; Stirrup height (8") and actual length vary due to crown.

SECTION B-B
(Integral end bent)

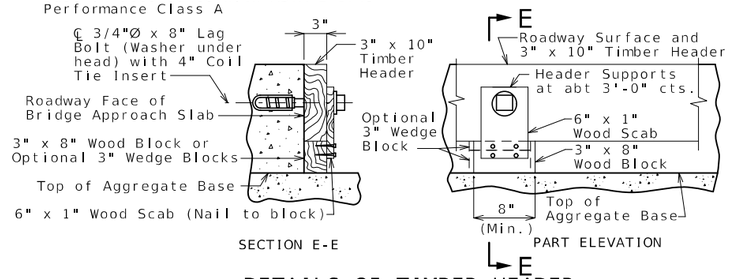

SECTION E-E

PART ELEVATION

DETAILS OF TIMBER HEADER
Remove timber header when concrete pavement is placed.

OPTIONAL CONCRETE SLAB

Notes For Concrete Slab Only:

All concrete for the bridge approach slab shall be in accordance with Sec 503 (f'c = 4,000 psi).

The reinforcing steel in the bridge approach slab shall be epoxy coated Grade 60 with fy = 60,000 psi.

Longitudinal construction joints in bridge approach slab shall be aligned with longitudinal construction joints in bridge slab.

Minimum clearance to reinforcing steel shall be 1 1/2", unless otherwise shown.

The reinforcing steel in the bridge approach slab shall be continuous. The transverse reinforcing steel may be made continuous by providing a minimum lap splice of 23 inches for #4 bars, or by mechanical bar splice.

All joint filler shall be in accordance with Sec 1057 for preformed fiber expansion joint filler except as noted.

Payment for furnishing all materials, labor and excavation necessary to construct the concrete bridge approach slab, including the timber header, underdrain, Type 5 aggregate base, joint filler, and all other appurtenances and incidental work as shown on this sheet, complete in place, will be considered completely covered by the contract unit price for Bridge Approach Slab (Minor) per square yard.

See Missouri Standard Plan 609.00 for details of Type A curb.

Drain pipe may be either 6" diameter corrugated metallic-coated pipe underdrain, 4" diameter corrugated polyvinyl chloride (PVC) drain pipe, or 4" diameter corrugated polyethylene (PE) drain pipe.

Redirect drain pipe around wings at End Bent No. 8 with unperforated pipe and extend unperforated pipe to daylight.

* Seal joint between vertical face of approach slab and wing with sealant in accordance with Sec 717 for silicone joint sealant for saw cut and formed joints.

General Notes:

Contractor shall have the option to construct either slab except as noted.

The contractor shall pour and satisfactorily finish the bridge slab before placing the bridge approach slab.

MoDOT Construction personnel will indicate the bridge approach slab used for this structure:

☐ Concrete Bridge Approach Slab

☐ Asphalt Bridge Approach Slab

Notes For Asphalt Slab Only:

Payment for furnishing all materials, labor and excavation necessary to construct the asphalt bridge approach slab, including tack, curb, and Type 5 aggregate base within the pay limits shown, complete in place, will be considered completely covered by the contract unit price for Bridge Approach Slab (Minor) per square yard.

Application of tack is required between lifts per Sec 403.

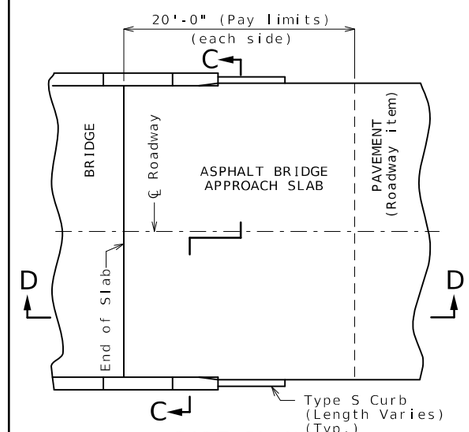

PART PLAN
(Squared structure shown, skewed structure similar)

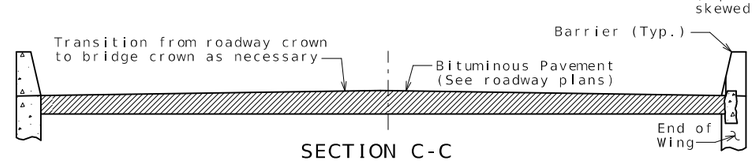

SECTION C-C

With the approval of the engineer, the contractor may crown the bottom of the approach slab to match the crown of the roadway surface.

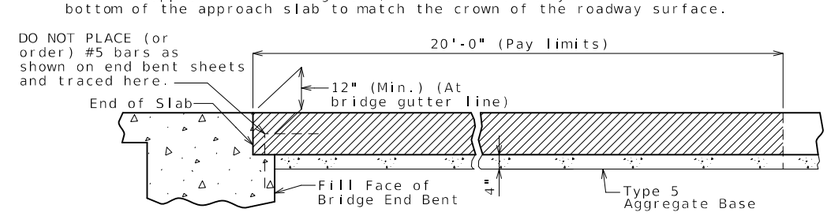

SECTION D-D

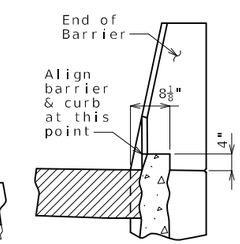

4" TYPE S CURB

See Missouri Standard Plan 609.00 for details of Type S curb.

OPTIONAL ASPHALT SLAB (NOT ALLOWED WITH CONCRETE PAVEMENT)

BRIDGE APPROACH SLAB (MINOR)

Integral end bents shown, non-integral end bents similar.

Detailed Jan. 2024
Checked Jan. 2024

Note: This drawing is not to scale. Follow dimensions.

STATE OF MISSOURI
DAVID ANDREW STRAATMANN
NUMBER PE-2004000848
PROFESSIONAL ENGINEER
THIS SHEET HAS BEEN SIGNED, SEALED AND DATED ELECTRONICALLY.

DATE PREPARED	
3/20/2024	
ROUTE: Z	STATE: MO
DISTRICT: BR	SHEET NO.: 36
COUNTY: PLATTE	
JOB NO.: J4S3454	
CONTRACT ID.	
PROJECT NO.	
BRIDGE NO.: A9373	

DATE	DESCRIPTION

IF A SEAL IS PRESENT ON THIS SHEET IT HAS BEEN ELECTRONICALLY SEALED AND DATED.

MISSOURI HIGHWAYS AND TRANSPORTATION COMMISSION
105 WEST CAPITOL
JEFFERSON CITY, MO 65102
1-888-ASK-MODOT (1-888-275-6636)

Bartlett & West
601 MONROE STREET, SUITE 201 - JEFFERSON CITY, MO 65101
PHONE 573-634-3181 - FAX 573-634-7904
CERTIFICATE OF AUTHORITY NO. 000167 - ENGINEERING
WWW.BARTWEST.COM

BILL OF REINFORCING STEEL

NO. REQ'D.	MARK NO. (SIZE MARK)	LOCATION	GALVANIZED (G)	SHAPE NO.	STIRRUP (S)	SUBSTR. (X)	VARIES (V)	NO. EACH	B FT. IN.	C FT. IN.	D FT. IN.	E FT. IN.	F FT. IN.	H FT. IN.	K FT. IN.	NOMINAL LENGTH FT. IN.	ACTUAL LENGTH FT. IN.	WEIGHT LBS.
		INT. BENTS																
		NO. 2, 3 & 4																
42	6 D200	BEAM		20		X			2 6.000							2 6	2 6	158
36	8 H200	BEAM		18		X			28 3.000							30 1	30 1	2892
18	6 H201	BEAM		20		X			28 3.000							28 3	28 3	764
30	6 H202	BEAM		10	S	X				12.000	3 7.750					5 8	5 4	240
30	6 H203	BEAM		18		X			2 9.000							4 1	4 1	184
180	4 P200	PILE		34	S	X			20.000							6 1	6 1	731
51	5 U200	BEAM		13	S	X			3 9.000	3 9.000	3 9.000	3 9.000				15 11	15 7	829
36	5 U201	BEAM		10	S	X				3 9.000	3 9.000					11 3	11 1	416
36	4 U202	BEAM		10	S	X				6.000	3 9.000					4 9	4 7	110
		INT. BENT																
		NO. 5																
16	8 H500	BEAM	G	18		X			28 3.000							30 1	30 1	1285
22	6 H501	BEAM	G	20		X			28 3.000							28 3	28 3	933
16	6 H502	BEAM	G	10	S	X				12.000	5 10.500					7 11	7 7	182
10	6 H503	BEAM	G	18		X			2 9.000							4 1	4 1	61
6	6 H504	BEAM	G	10	S	X				12.000	2 7.750					4 8	4 4	39
60	4 P500	PILE		34	S	X			20.000							6 1	6 1	244
17	6 U500	BEAM	G	13	S	X			6 0.000	4 9.000	6 0.000	4 9.000				22 10	22 4	570
12	6 U501	BEAM	G	10	S	X				4 9.000	6 0.000					15 6	15 2	273
12	4 U502	BEAM	G	10	S	X				6.000	6 0.000					7 0	6 10	55
29	5 U503	BEAM	G	10	S	X				4 0.000	2 9.000					10 9	10 7	320
12	4 U504	BEAM	G	10	S	X				6.000	2 9.000					3 9	3 7	29
72	6 V500	PILE		17		X			7 3.000							7 11	7 11	856
12	W5 W500	A.B. WELL		22					2 1.000	9.125						33 2	33 2	66
		INT. BENT																
		NO. 6																
14	6 D600	BEAM		20		X			2 6.000							2 6	2 6	53
8	8 H600	BEAM		20		X			26 7.000							26 7	26 7	568
12	6 H601	BEAM		20		X			26 7.000							26 7	26 7	479
16	6 H602	BEAM		10	S	X				12.000	5 1.500					7 2	6 10	164
8	8 H603	BEAM		18		X			26 7.000							28 5	28 5	607
4	8 H604	WEB BEAM		20		X			17 2.000							17 2	17 2	183
44	5 H605	WEB BEAM		20		X			16 2.000							16 2	16 2	742
114	6 P600	SHAFT		16		X			5 6.000	3 7.000						20 8	20 8	3539
46	6 P601	COLUMN		16		X			4 9.000	3 7.000						18 4	18 4	1267
24	6 U600	BEAM		13	S	X			3 6.000	4 9.000	3 6.000	4 9.000				17 10	17 4	625
10	6 U601	BEAM		10	S	X				4 9.000	5 3.000					14 9	14 5	217
12	6 U602	BEAM		13	S	X			5 3.000	4 9.000	5 3.000	4 9.000				21 4	20 10	376
7	4 U603	BEAM		10	S	X				6.000	5 3.000					6 3	6 1	28
24	5 U604	WEB BEAM		19	S	X			23 7.000	2 3.000						25 10	25 9	645
60	11 V600	SHAFT		20		X			52 3.000							52 3	52 3	16656
66	9 V601	SHAFT/COL.		20		X			10 2.000							10 2	10 2	2281
66	9 V602	COLUMN		20		X			25 0.000							25 0	25 0	5610
		INT. BENT																
		NO. 7																
8	6 D600	BEAM		20		X			2 6.000							2 6	2 6	53
8	8 H600	BEAM		20		X			26 7.000							26 7	26 7	568
12	6 H601	BEAM		20		X			26 7.000							26 7	26 7	479
16	6 H602	BEAM		10	S	X				12.000	5 1.500					7 2	6 10	164
8	8 H603	BEAM		18		X			26 7.000							28 5	28 5	607
4	8 H604	WEB BEAM		20		X			17 2.000							17 2	17 2	183
44	5 H605	WEB BEAM		20		X			16 2.000							16 2	16 2	742
132	6 P600	SHAFT		16		X			5 6.000	3 7.000						20 8	20 8	4097
26	6 P601	COLUMN		16		X			4 9.000	3 7.000						18 4	18 4	716
24	6 U600	BEAM		13	S	X			3 6.000	4 9.000	3 6.000	4 9.000				17 10	17 4	625
10	6 U601	BEAM		10	S	X				4 9.000	5 3.000					14 9	14 5	217
12	6 U602	BEAM		13	S	X			5 3.000	4 9.000	5 3.000	4 9.000				21 4	20 10	376
7	4 U603	BEAM		10	S	X				6.000	5 3.000					6 3	6 1	28
24	5 U605	WEB BEAM		19	S	X			13 7.000	2 3.000						15 10	15 9	394
120	11 V603	SHAFT		20		X			32 7.000							32 7	32 7	20774
66	9 V601	SHAFT/COL.		20		X			10 2.000							10 2	10 2	2281
66	9 V604	COLUMN		20		X			14 9.000							14 9	14 9	3310
		END BENT																
		NO. 1																
11	6 F100	WING BRACE	G	15	S				2 2.875	5 9.000	14.000	8.500	11.125	16.375	21.375	9 2	9 1	150
11	6 F101	WING BRACE	G	15	S				14.000	4 6.000	2 2.875	21.375	16.375	11.125	8.500	7 11	7 10	129
5	6 F102	DIAPH.	G	21					2 4.000	5 8.000				2 3.000	7.250	8 0	7 9	58
5	6 F103	DIAPH.	G	15					2 4.000	5 8.000				2 3.000	7.250	8 0	7 11	59
12	7 H100	BEAM/DIAPH.	G	20					29 5.000							29 5	29 5	722
9	6 H101	BEAM/DIAPH.	G	20					29 5.000							29 5	29 5	398
2	6 H102	DIAPH.	G	20					7 3.000							7 3	7 3	22
8	6 H103	DIAPH.	G	20					9 9.000							9 9	9 9	117
8	6 H104	DIAPH.	G	20					3 3.000							3 3	3 3	39
2	6 H105	DIAPH.	G	20					2 0.000							2 0	2 0	6
3	5 H106	STRAND TIE	G	20					5 9.000							5 9	5 9	18
44	6 H107	WING	G	20					15 8.000							15 8	15 8	1035
16	8 H108	WING	G	20					16 6.000							16 6	16 6	705
26	5 H109	DIAPH.	G	19	S				2 0.000	15.000						3 3	3 2	86
8	5 U100	BEAM	G	10	S					6 3.000	2 10.125					15 4	15 2	127
21	4 U101	BEAM	G	13	S				2 10.125	2 8.000	2 10.125	2 8.000				11 9	11 6	161
2	4 U102	BEAM	G	10	S					2 8.000	2 10.125					8 2	8 0	11
18	5 U103	DIAPH.	G	10	S					4 10.000	2 4.000					12 0	11 10	222
18	6 U104	DIAPH.	G	19	S				3 10.000	2 10.000						6 8	6 6	176
36	6 U105	DIAPH.	G	19	S				3 3.000	4 8.000						7 11	7 9	419

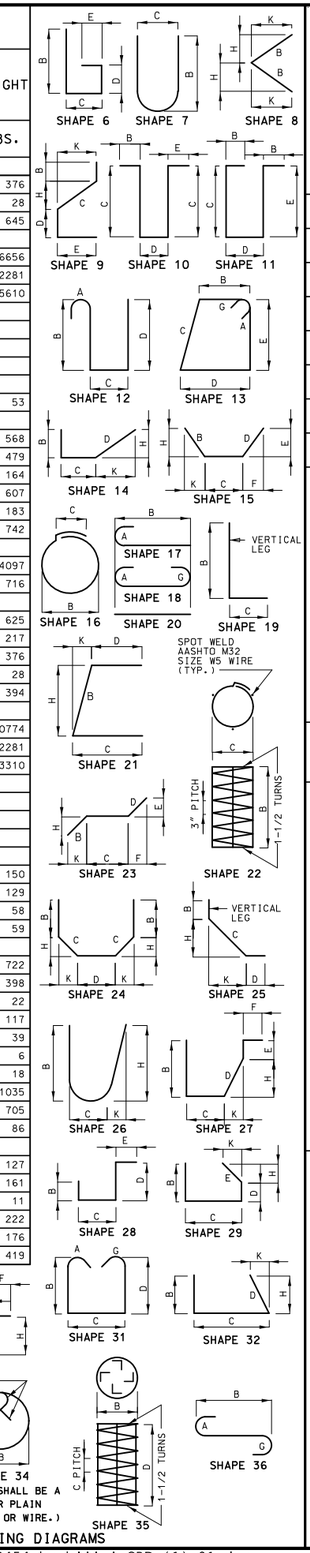

BENDING DIAGRAMS

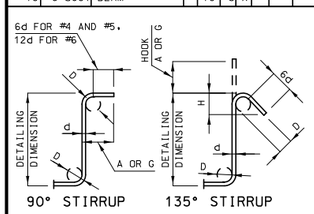

STIRRUP HOOK DIMENSIONS				
GRADES 40 - 50 - 60 KSI				
BAR SIZE	D (IN.)	90° HOOK	135° HOOK	
		HOOK A OR G	HOOK A OR G	APPROX. H
#4	2"	4 1/2"	4 1/2"	3"
#5	2 1/2"	6"	5 1/2"	3 3/4"
#6	4 1/2"	12"	8"	4 1/2"

NOTE: UNLESS OTHERWISE NOTED DIAMETER "D" IS THE SAME FOR ALL BENDS AND HOOKS ON A BAR.

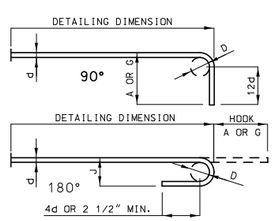

END HOOK DIMENSIONS				
BAR SIZE	D (IN.)	ALL GRADES		
		180° HOOKS		90° HOOKS
		A OR G	J	A OR G
#3	2 1/4"	5"	3"	6"
#4	3"	6"	4"	8"
#5	3 3/4"	7"	5"	10"
#6	4 1/2"	8"	6"	12"
#7	5 1/4"	10"	7"	14"
#8	6"	11"	8"	16"
#9	9 1/2"	15"	11 3/4"	19"
#10	10 3/4"	17"	13 1/4"	22"
#11	12"	19"	14 3/4"	2'-0"
#14	18 1/4"	2'-3"	21 3/4"	2'-7"

NOTE:
ALL STANDARD HOOKS AND BENDS OTHER THAN 180 DEGREE ARE TO BE BENT WITH SAME PROCEDURE AS FOR 90 DEGREE STANDARD HOOKS.
HOOKS AND BENDS SHALL BE IN ACCORDANCE WITH THE PROCEDURES AS SHOWN ON THIS SHEET.
G = GALVANIZED REINFORCEMENT.
S = STIRRUP.
X = BAR IS INCLUDED IN SUBSTRUCTURE QUANTITIES.
V = BAR DIMENSIONS VARY IN EQUAL INCREMENTS BETWEEN DIMENSIONS SHOWN ON THIS LINE AND THE FOLLOWING LINE.
NO. EA. = NUMBER OF BARS OF EACH LENGTH.
NOMINAL LENGTHS ARE BASED ON OUT TO OUT DIMENSIONS SHOWN IN BENDING DIAGRAMS AND ARE LISTED FOR FABRICATORS USE. (NEAREST INCH)
ACTUAL LENGTHS ARE MEASURED ALONG CENTERLINE BAR TO THE NEAREST INCH.
PAYWEIGHTS ARE BASED ON ACTUAL LENGTHS.
FOUR ANGLE OR CHANNEL SPACERS ARE REQUIRED FOR EACH COLUMN SPIRAL. SPACERS ARE TO BE PLACED ON INSIDE OF SPIRALS. LENGTH AND WEIGHT OF COLUMN SPIRALS DO NOT INCLUDE SPLICES OR SPACERS.
REINFORCING STEEL (GRADE 60) FY = 60,000 PSI.

STATE OF MISSOURI
DAVID ANDREW STRAATMANN
NUMBER PE-2004000848
PROFESSIONAL ENGINEER
THIS SHEET HAS BEEN SIGNED, SEALED AND DATED ELECTRONICALLY.

DATE PREPARED 3/20/2024
ROUTE Z | STATE MO
DISTRICT BR | SHEET NO. 37
COUNTY PLATTE
JOB NO. J4S3454
CONTRACT ID.
PROJECT NO.
BRIDGE NO. A9373

DATE	DESCRIPTION

IF A SEAL IS PRESENT ON THIS SHEET IT HAS BEEN ELECTRONICALLY SEALED AND DATED.

MISSOURI HIGHWAYS AND TRANSPORTATION COMMISSION
105 WEST CAPITOL
JEFFERSON CITY, MO 65102
1-888-ASK-MODOT (1-888-275-6636)

Bartlett & West
601 MONROE STREET, SUITE 201 - JEFFERSON CITY, MO 65101
PHONE 573-634-3181 - FAX 573-634-7904
CERTIFICATE OF AUTHORITY NO. 000167 - ENGINEERING
WWW.BARTWEST.COM

Detailed Jan. 2024
Checked Jan. 2024

Note: This drawing is not to scale. Follow dimensions.

BILL OF REINFORCING STEEL

NO. REQ'D.	MARK NO. SIZE MARK	LOCATION	GALVANIZED (G)	SHAPE NO.	STIRRUP (S)	SUBSTR. (X)	VARIES (V)	NO. EACH	B FT. IN.	C FT. IN.	D FT. IN.	E FT. IN.	F FT. IN.	H FT. IN.	K FT. IN.	NOMINAL LENGTH FT. IN.	ACTUAL LENGTH FT. IN.	WEIGHT LBS.
20	5 V100	BEAM	G	20					6 3.000							6 3	6 3	130
15	6 V101	DIAPHRAGM	G	20					3 10.000							3 10	3 10	86
2	6 V102	WING	G	20					8 0.000							8 0	8 0	24
28	6 V103	WING	G	20			V	2	8 2.000							8 2	8 2	
		INCREMENT =							8 0.000							8 0	8 0	340
		0.125 INCH																
2	6 V104	WING	G	20					8 1.000							8 1	8 1	24
28	6 V105	WING	G	20			V	2	8 3.000							8 3	8 3	
		INCREMENT =							8 1.000							8 1	8 1	343
		0.125 INCH																
		CONC. DIAPH.																
		INT. BTS.																
		NO. 2, 3, 4																
		6 & 7																
20	6 H900	DIAPH.	G	20					7 3.000							7 3	7 3	218
76	4 H901	DIAPH.	G	20					9 9.000							9 9	9 9	495
20	6 H902	DIAPH.	G	20					9 9.000							9 9	9 9	293
10	5 H903	STRAND TIE	G	20					5 9.000							5 9	5 9	60
20	5 H904	STRAND TIE	G	20					4 8.000							4 8	4 8	97
72	4 U900	DIAPH.	G	28	S					2 4.000	4 9.000	18.000				8 7	8 5	405
24	6 U901	DIAPH.	G	28	S					2 8.000	4 5.000	2 2.000				9 3	8 11	321
24	6 U902	DIAPH.	G	28	S					2 8.000	4 1.000	2 2.000				8 11	8 7	309
96	5 U903	DIAPH.	G	11	S					4 10.000	12.000	14.000				7 0	6 10	684
20	5 U904	DIAPH.	G	19	S				4 5.000	12.000						5 5	5 4	111
12	6 U905	DIAPH.	G	28	S					21.000	4 1.000	2 2.000				8 0	7 8	138
12	6 U906	DIAPH.	G	28	S					21.000	4 3.000	2 2.000				8 2	7 10	141
48	4 U910	DIAPH.	G	28	S					2 4.000	6 2.000	18.000				10 0	9 10	315
16	6 U911	DIAPH.	G	28	S					2 8.000	5 10.000	2 2.000				10 8	10 4	248
16	6 U912	DIAPH.	G	28	S					2 8.000	5 6.000	2 2.000				10 4	10 0	240
8	6 U915	DIAPH.	G	28	S					21.000	5 6.000	2 2.000				9 5	9 1	109
8	6 U916	DIAPH.	G	28	S					21.000	5 8.000	2 2.000				9 7	9 3	111
24	5 V900	DIAPH.	G	20					4 10.000							4 10	4 10	121
16	5 V910	DIAPH.	G	20					6 3.000							6 3	6 3	104
		CONC. DIAPH.																
		INT. BT. 5																
10	4 U920	DIAPH.	G	27	S				19.000	12.000	18.375	18.000		13.000	13.000	5 7	5 6	37
16	6 U921	DIAPH.	G	27	S		V	4	19.000	12.000	18.375	2 2.000		13.000	13.000	6 3	6 1	
		INCREMENT =								2 11.000						2 11	2 9	106
		13.375 INCH																
8	6 U922	DIAPH.	G	27	S				19.000	2 11.000	18.375	2 2.000		13.000	13.000	8 2	8 0	96
2	5 U923	DIAPH.	G	27	S				12.000	2 11.000	18.375	22.000		13.000	13.000	7 3	7 1	15
2	5 U924	DIAPH.	G	27	S				17.000	2 11.000	18.375	22.000		13.000	13.000	7 8	7 6	16
6	4 U930	DIAPH.	G	27	S				19.000	19.000	18.375	18.000		13.000	13.000	6 2	6 1	24
20	6 U931	DIAPH.	G	27	S		V	4	19.000	23.000	18.375	2 2.000		13.000	13.000	7 2	7 0	
		INCREMENT =								4 4.000						4 4	4 2	168
		8.500 INCH																
8	6 U932	DIAPH.	G	27	S				19.000	4 6.000	18.375	2 2.000		13.000	13.000	9 9	9 7	115
2	5 U933	DIAPH.	G	27	S				12.000	4 6.000	18.375	22.000		13.000	13.000	8 10	8 8	18
2	5 U934	DIAPH.	G	27	S				17.000	4 6.000	18.375	22.000		13.000	13.000	9 3	9 1	19
20	7 H950	DIAPH.	G	20					9 9.000							9 9	9 9	399
6	6 H951	DIAPH.	G	20					25 10.000							25 10	25 10	233
8	6 H952	DIAPH.	G	20					9 9.000							9 9	9 9	117
10	4 U950	DIAPH.	G	28	S					19.000	2 1.000	18.000				5 2	5 0	33
16	6 U951	DIAPH.	G	28	S		V	2		19.000	2 1.000	2 2.000				5 10	5 6	
		INCREMENT =								19.000	4 0.000	2 2.000				7 9	7 5	155
		3.250 INCH																
8	6 U952	DIAPH.	G	28	S					19.000	4 0.000	2 2.000				7 9	7 5	89
2	5 U953	DIAPH.	G	28	S					12.000	4 0.000	22.000				6 10	6 8	14
2	5 U954	DIAPH.	G	28	S					17.000	4 0.000	22.000				7 3	7 1	15
1	5 U955	DIAPH.	G	15	S				5 4.125	9.375				5 1.875	16.625	6 2	6 1	6
4	5 U956	DIAPH.	G	14	S		V	1	14.625	9.375	5 4.125			5 1.875	16.625	7 4	7 2	
		INCREMENT =							20.250	9.375	5 4.125			5 1.875	16.625	7 10	7 8	31
		2.000 INCH																
1	5 U957	DIAPH.	G	21	S				5 4.125	20.375				5 1.875	16.625	7 1	6 10	7
4	5 U958	DIAPH.	G	32	S		V	1	14.250	20.375	5 4.125			5 1.875	16.625	8 3	7 11	
		INCREMENT =							20.125	20.375	5 4.125			5 1.875	16.625	8 9	8 5	34
		2.000 INCH																
8	4 U959	DIAPH.	G	21	S		V	4	2 5.750	19.625				2 4.750	7.625	4 1	4 0	
		INCREMENT =							21.375	19.625				20.625	5.500	3 5	3 3	19
		9.000 INCH																
8	4 U960	DIAPH.	G	15	S		V	4	2 5.750	19.625				2 4.750	7.625	4 1	4 1	
		INCREMENT =							21.375					20.625	5.500	0 21	0 21	16
		28.000 INCH																
6	4 U970	DIAPH.	G	28	S					19.000	2 8.000	18.000				5 9	5 7	22
20	6 U971	DIAPH.	G	28	S		V	4		19.000	3 0.000	2 2.000				6 9	6 5	
		INCREMENT =								19.000	5 5.000	2 2.000				9 2	8 10	229
		7.250 INCH																
8	6 U972	DIAPH.	G	28	S					19.000	5 7.000	2 2.000				9 4	9 0	108
2	5 U973	DIAPH.	G	28	S					12.000	5 7.000	22.000				8 5	8 3	17
2	5 U974	DIAPH.	G	28	S					17.000	5 7.000	22.000				8 10	8 8	18
1	5 U975	DIAPH.	G	15	S				5 4.125	9.375				5 1.875	16.625	6 2	6 1	6
5	5 U976	DIAPH.	G	14	S		V	1	14.625	9.375	5 4.125			5 1.875	16.625	7 4	7 2	
		INCREMENT =							20.250	9.375	5 4.125			5 1.875	16.625	7 10	7 8	39
		1.500 INCH																
1	5 U977	DIAPH.	G	21	S				5 4.125	20.375				5 1.875	16.625	7 1	6 10	7
5	5 U978	DIAPH.	G	32	S		V	1	14.250	20.375	5 4.125			5 1.875	16.625	8 3	7 11	
		INCREMENT =							20.125	20.375	5 4.125			5 1.875	16.625	8 9	8 5	43
		1.500 INCH																
12	4 U979	DIAPH.	G	21	S		V	4	3 2.000	19.625				3 0.750	9.875	4 10	4 8	
		INCREMENT =							21.500	19.625				20.750	5.500	3 5	3 3	32
		8.500 INCH																
12	4 U980	DIAPH.	G	15	S		V	4	3 2.000	19.625				3 0.750	9.875	4 10	4 9	
		INCREMENT =							21.500					20.750	5.500	0 22	0 21	26
		18.000 INCH																
5	5 V950	DIAPH.	G	20					4 4.000							4 4	4 4	23
5	5 V951	DIAPH.	G	20					5 10.000							5 10	5 10	30

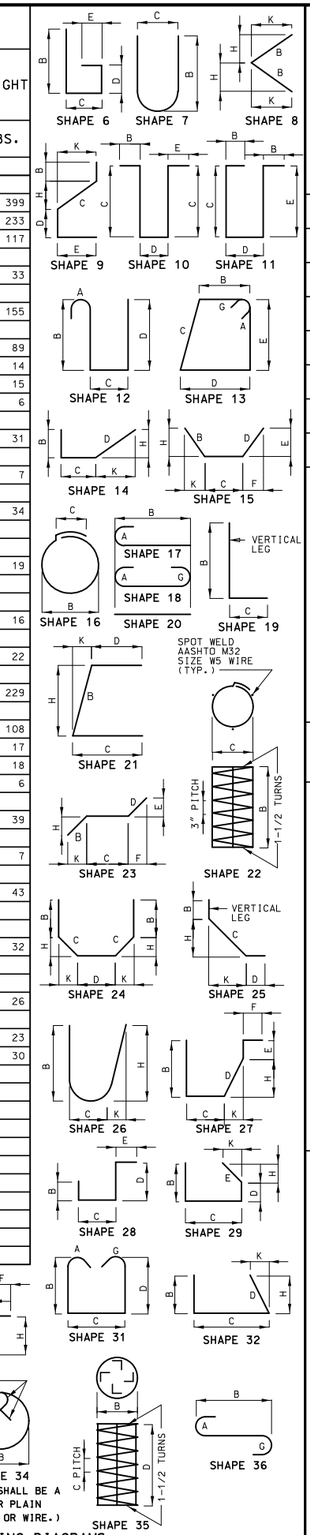

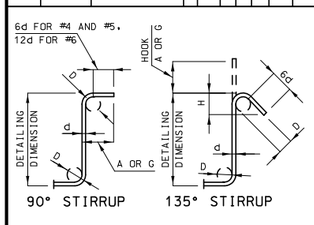

STIRRUP HOOK DIMENSIONS				
GRADES 40 - 50 - 60 KSI				
BAR SIZE	D (IN.)	90° HOOK	135° HOOK	
		HOOK A OR G	HOOK A OR G	APPROX. H
#4	2"	4 1/2"	4 1/2"	3"
#5	2 1/2"	6"	5 1/2"	3 3/4"
#6	4 1/2"	12"	8"	4 1/2"

NOTE: UNLESS OTHERWISE NOTED DIAMETER "D" IS THE SAME FOR ALL BENDS AND HOOKS ON A BAR.

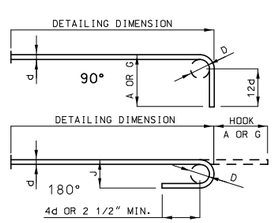

END HOOK DIMENSIONS				
BAR SIZE	D (IN.)	ALL GRADES		
		180° HOOKS		90° HOOKS
		A OR G	J	A OR G
#3	2 1/4"	5"	3"	6"
#4	3"	6"	4"	8"
#5	3 3/4"	7"	5"	10"
#6	4 1/2"	8"	6"	12"
#7	5 1/4"	10"	7"	14"
#8	6"	11"	8"	16"
#9	9 1/2"	15"	11 3/4"	19"
#10	10 3/4"	17"	13 1/4"	22"
#11	12"	19"	14 3/4"	2'-0"
#14	18 1/4"	2'-3"	21 3/4"	2'-7"

NOTE:
ALL STANDARD HOOKS AND BENDS OTHER THAN 180 DEGREE ARE TO BE BENT WITH SAME PROCEDURE AS FOR 90 DEGREE STANDARD HOOKS.
HOOKS AND BENDS SHALL BE IN ACCORDANCE WITH THE PROCEDURES AS SHOWN ON THIS SHEET.
G = GALVANIZED REINFORCEMENT.
S = STIRRUP.
X = BAR IS INCLUDED IN SUBSTRUCTURE QUANTITIES.
V = BAR DIMENSIONS VARY IN EQUAL INCREMENTS BETWEEN DIMENSIONS SHOWN ON THIS LINE AND THE FOLLOWING LINE.
NO. EA. = NUMBER OF BARS OF EACH LENGTH.
NOMINAL LENGTHS ARE BASED ON OUT TO OUT DIMENSIONS SHOWN IN BENDING DIAGRAMS AND ARE LISTED FOR FABRICATORS USE. (NEAREST INCH)
ACTUAL LENGTHS ARE MEASURED ALONG CENTERLINE BAR TO THE NEAREST INCH.
PAYWEIGHTS ARE BASED ON ACTUAL LENGTHS.
FOUR ANGLE OR CHANNEL SPACERS ARE REQUIRED FOR EACH COLUMN SPIRAL. SPACERS ARE TO BE PLACED ON INSIDE OF SPIRALS. LENGTH AND WEIGHT OF COLUMN SPIRALS DO NOT INCLUDE SPLICES OR SPACERS.
REINFORCING STEEL (GRADE 60) FY = 60,000 PSI.

STATE OF MISSOURI
DAVID ANDREW STRAATMANN
NUMBER PE-2004000848
PROFESSIONAL ENGINEER
THIS SHEET HAS BEEN SIGNED, SEALED AND DATED ELECTRONICALLY.

DATE PREPARED 3/20/2024
ROUTE Z | STATE MO
DISTRICT BR | SHEET NO. 38
COUNTY PLATTE
JOB NO. J4S3454
CONTRACT ID.
PROJECT NO.
BRIDGE NO. A9373

DESCRIPTION
DATE

IF A SEAL IS PRESENT ON THIS SHEET IT HAS BEEN ELECTRONICALLY SEALED AND DATED.

MISSOURI HIGHWAYS AND TRANSPORTATION COMMISSION
105 WEST CAPITOL
JEFFERSON CITY, MO 65102
1-888-ASK-MODOT (1-888-275-6636)

Bartlett & West
601 MONROE STREET, SUITE 201 - JEFFERSON CITY, MO 65101
PHONE 573-634-3181 - FAX 573-634-7904
CERTIFICATE OF AUTHORITY NO. 000167 - ENGINEERING
WWW.BARTWEST.COM

Detailed Jan. 2024
Checked Jan. 2024

Note: This drawing is not to scale. Follow dimensions.

BILL OF REINFORCING STEEL

NO. REQ'D.	MARK NO. SIZE	MARK NO. MARK	LOCATION	GALVANIZED (G)	SHAPE NO.	STIRRUP (S)	SUBSTR. (X)	VARIES (V)	NO. EACH	B FT. IN.	C FT. IN.	D FT. IN.	E FT. IN.	F FT. IN.	H FT. IN.	K FT. IN.	NOMINAL LENGTH FT. IN.	ACTUAL LENGTH FT. IN.	WEIGHT LBS.
			UNIT 1																
			SLAB																
1504	6	S1	SLAB	G	20					28 5.000							28 5	28 5	64193
224	5	S2	SLAB	G	20					60 0.000							60 0	60 0	14018
24	8	S3	SLAB	G	20					30 0.000							30 0	30 0	1922
9	6	S4	SLAB	G	20			V	1	3 2.000							3 2	3 2	
			INCREMENT =							25 7.000							25 7	25 7	194
			33.625 INCH																
9	6	S5	SLAB	G	20			V	1	3 6.000							3 6	3 6	
			INCREMENT =							25 11.000							25 11	25 11	199
			33.625 INCH																
14	6	S6	SLAB	G	20			V	1	2 3.000							2 3	2 3	
			INCREMENT =							26 6.000							26 6	26 6	302
			22.375 INCH																
14	6	S7	SLAB	G	20			V	1	3 6.000							3 6	3 6	
			INCREMENT =							27 10.000							27 10	27 10	329
			22.500 INCH																
50	6	S8	SLAB	G	20					60 0.000							60 0	60 0	4506
175	8	S9	SLAB	G	20					53 6.000							53 6	53 6	24998
110	8	S10	SLAB	G	20					60 0.000							60 0	60 0	17622
44	8	S11	SLAB	G	20					37 11.000							37 11	37 11	4454
12	5	S12	SLAB	G	20					2 8.000							2 8	2 8	33
13	6	F800	WING BRACE	G	15	S				2 2.875	5 9.000	14.000	8.500	11.125	16.375	21.375	9 2	9 1	177
13	6	F801	WING BRACE	G	15	S				14.000	4 6.000	2 2.875	21.375	16.375	11.125	8.500	7 11	7 10	153
6	6	F802	DIAPH.	G	21					2 4.000	5 8.000				2 3.000	7.250	8 0	7 9	70
6	6	F803	DIAPH.	G	15					2 4.000	5 8.000				2 3.000	7.250	8 0	7 11	71
12	7	H800	BEAM/DIAPH.	G	20					29 5.000							29 5	29 5	722
11	6	H801	BEAM/DIAPH.	G	20					29 5.000							29 5	29 5	486
2	6	H802	DIAPH.	G	20					7 3.000							7 3	7 3	22
12	6	H803	DIAPH.	G	20					9 9.000							9 9	9 9	176
12	6	H804	DIAPH.	G	20					3 3.000							3 3	3 3	59
2	6	H805	DIAPH.	G	20					2 0.000							2 0	2 0	6
3	5	H806	STRAND TIE	G	20					5 9.000							5 9	5 9	18
52	6	H807	WING	G	20					19 8.000							19 8	19 8	1536
16	8	H808	WING	G	20					20 6.000							20 6	20 6	876
26	5	H809	DIAPH.	G	19	S				2 0.000	15.000						3 3	3 2	86
8	5	U800	BEAM	G	10	S					6 3.000	2 10.125					15 4	15 2	127
21	4	U801	BEAM	G	13	S				2 10.125	2 8.000	2 10.125	2 8.000				11 9	11 6	161
2	4	U802	BEAM	G	10	S					2 8.000	2 10.125					8 2	8 0	11
18	5	U803	DIAPH.	G	10	S					6 4.000	2 4.000					15 0	14 10	278
18	6	U804	DIAPH.	G	19	S				5 4.000	2 10.000						8 2	8 0	216
36	6	U805	DIAPH.	G	19	S				3 3.000	4 8.000						7 11	7 9	419
20	5	V800	BEAM	G	20					6 3.000							6 3	6 3	130
15	6	V801	DIAPHRAGM	G	20					5 4.000							5 4	5 4	120
2	6	V802	WING	G	20					9 4.000							9 4	9 4	28
36	6	V803	WING	G	20			V	2	9 6.000							9 6	9 6	
			INCREMENT =							9 4.000							9 4	9 4	509
			0.125 INCH																
2	6	V804	WING	G	20					9 5.000							9 5	9 5	28
36	6	V805	WING	G	20			V	2	9 7.000							9 7	9 7	
			INCREMENT =							9 5.000							9 5	9 5	514
			0.125 INCH																
			UNIT 2																
			SLAB																
1264	6	S1	SLAB	G	20					28 5.000							28 5	28 5	53950
196	5	S22	SLAB	G	20					57 10.000							57 10	57 10	11823
9	6	S4	SLAB	G	20			V	1	3 2.000							3 2	3 2	
			INCREMENT =							25 7.000							25 7	25 7	194
			33.625 INCH																
9	6	S5	SLAB	G	20			V	1	3 6.000							3 6	3 6	
			INCREMENT =							25 11.000							25 11	25 11	199
			33.625 INCH																
14	6	S6	SLAB	G	20			V	1	2 3.000							2 3	2 3	
			INCREMENT =							26 6.000							26 6	26 6	302
			22.375 INCH																
14	6	S7	SLAB	G	20			V	1	3 6.000							3 6	3 6	
			INCREMENT =							27 10.000							27 10	27 10	329
			22.500 INCH																
25	6	S8	SLAB	G	20					60 0.000							60 0	60 0	2253
22	8	S10	SLAB	G	20					60 0.000							60 0	60 0	3524
12	5	S12	SLAB	G	20					2 8.000							2 8	2 8	33
50	6	S13	SLAB	G	20					40 0.000							40 0	40 0	3004
125	8	S14	SLAB	G	20					55 3.000							55 3	55 3	18440
132	8	S15	SLAB	G	20					38 11.000							38 11	38 11	13716
			END BENT																
			NO. 8																

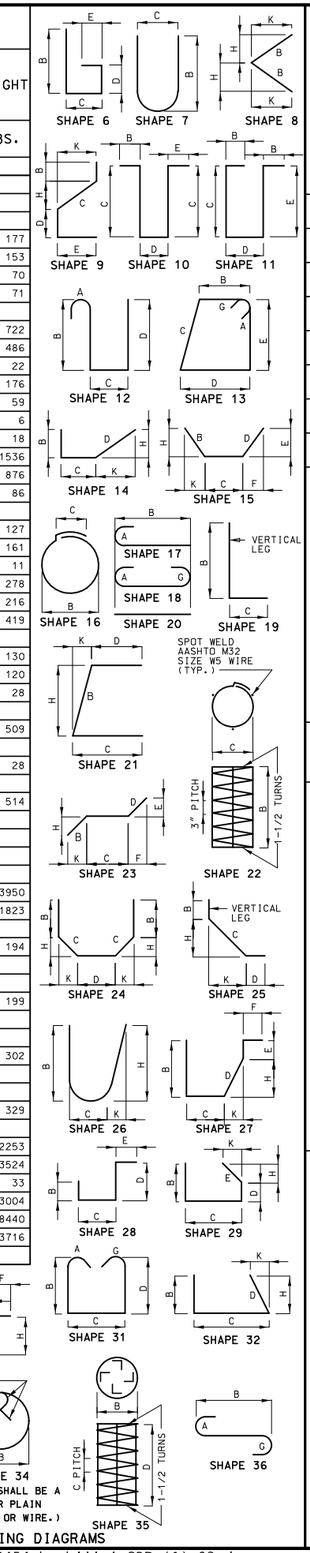

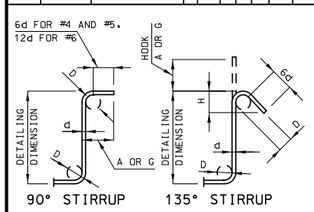

STIRRUP HOOK DIMENSIONS				
GRADES 40 - 50 - 60 KSI				
BAR SIZE	D (IN.)	90° HOOK	135° HOOK	
		HOOK A OR G	HOOK A OR G	APPROX. H
#4	2"	4 1/2"	4 1/2"	3"
#5	2 1/2"	6"	5 1/2"	3 3/4"
#6	4 1/2"	12"	8"	4 1/2"

NOTE: UNLESS OTHERWISE NOTED DIAMETER "D" IS THE SAME FOR ALL BENDS AND HOOKS ON A BAR.

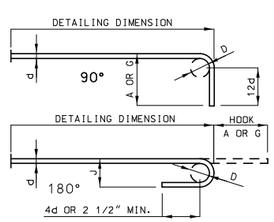

END HOOK DIMENSIONS				
BAR SIZE	D (IN.)	ALL GRADES		
		180° HOOKS		90° HOOKS
		A OR G	J	A OR G
#3	2 1/4"	5"	3"	6"
#4	3"	6"	4"	8"
#5	3 3/4"	7"	5"	10"
#6	4 1/2"	8"	6"	12"
#7	5 1/4"	10"	7"	14"
#8	6"	11"	8"	16"
#9	9 1/2"	15"	11 3/4"	19"
#10	10 3/4"	17"	13 1/4"	22"
#11	12"	19"	14 3/4"	2'-0"
#14	18 1/4"	2'-3"	21 3/4"	2'-7"

NOTE:
ALL STANDARD HOOKS AND BENDS OTHER THAN 180 DEGREE ARE TO BE BENT WITH SAME PROCEDURE AS FOR 90 DEGREE STANDARD HOOKS.
HOOKS AND BENDS SHALL BE IN ACCORDANCE WITH THE PROCEDURES AS SHOWN ON THIS SHEET.
G = GALVANIZED REINFORCEMENT.
S = STIRRUP.
X = BAR IS INCLUDED IN SUBSTRUCTURE QUANTITIES.
V = BAR DIMENSIONS VARY IN EQUAL INCREMENTS BETWEEN DIMENSIONS SHOWN ON THIS LINE AND THE FOLLOWING LINE.
NO. EA. = NUMBER OF BARS OF EACH LENGTH.
NOMINAL LENGTHS ARE BASED ON OUT TO OUT DIMENSIONS SHOWN IN BENDING DIAGRAMS AND ARE LISTED FOR FABRICATORS USE. (NEAREST INCH)
ACTUAL LENGTHS ARE MEASURED ALONG CENTERLINE BAR TO THE NEAREST INCH.
PAYWEIGHTS ARE BASED ON ACTUAL LENGTHS.
FOUR ANGLE OR CHANNEL SPACERS ARE REQUIRED FOR EACH COLUMN SPIRAL. SPACERS ARE TO BE PLACED ON INSIDE OF SPIRALS. LENGTH AND WEIGHT OF COLUMN SPIRALS DO NOT INCLUDE SPLICES OR SPACERS.
REINFORCING STEEL (GRADE 60) FY = 60,000 PSI.

STATE OF MISSOURI
DAVID ANDREW STRAATMANN
NUMBER PE-2004000848
PROFESSIONAL ENGINEER
THIS SHEET HAS BEEN SIGNED, SEALED AND DATED ELECTRONICALLY.

IF A SEAL IS PRESENT ON THIS SHEET IT HAS BEEN ELECTRONICALLY SEALED AND DATED.

DATE PREPARED	
3/20/2024	
ROUTE Z	STATE MO
DISTRICT BR	SHEET NO. 39
COUNTY PLATTE	
JOB NO. J4S3454	
CONTRACT ID.	
PROJECT NO.	
BRIDGE NO. A9373	

DATE	DESCRIPTION

MISSOURI HIGHWAYS AND TRANSPORTATION COMMISSION
105 WEST CAPITOL
JEFFERSON CITY, MO 65102
1-888-ASK-MODOT (1-888-275-6636)

Bartlett & West
601 MONROE STREET, SUITE 201 - JEFFERSON CITY, MO 65101
PHONE 573-634-3181 - FAX 573-634-7904
CERTIFICATE OF AUTHORITY NO. 000167 - ENGINEERING
WWW.BARTWEST.COM

Detailed Jan. 2024
Checked Jan. 2024

Note: This drawing is not to scale. Follow dimensions.

BILL OF REINFORCING STEEL

NO. REQ'D.	MARK NO. SIZE MARK	LOCATION	GALVANIZED (G)	SHAPE NO.	STIRRUP (S)	SUBSTR. (X)	VARIES (V)	NO. EACH	B FT. IN.	C FT. IN.	D FT. IN.	E FT. IN.	F FT. IN.	H FT. IN.	K FT. IN.	NOMINAL LENGTH FT. IN.	ACTUAL LENGTH FT. IN.	WEIGHT LBS.
		BARRIER																
20	5 K1	BARRIER	G	27	S				3 8.000	9.250	5.375	3 2.750		5.250	1.000	8 1	7 11	165
94	5 K2	BARRIER	G	27	S				3 8.000	9.250	14.500	2 5.750		14.250	2.750	8 2	7 11	776
4	5 K3	BARRIER	G	27	S				22.500	9.250	14.500	7.750	12.000	14.250	2.750	5 6	5 3	22
20	5 K4	BARRIER	G	19	S		V	4	2 6.250	10.000						3 4	3 3	
		INCREMENT =							2 4.250	10.000						3 2	3 1	66
		0.500 INCH																
20	5 K5	BARRIER	G	14	S		V	4	8.250	9.500	20.500			4.500	20.000	3 2	3 1	
		INCREMENT =							8.250	9.500	18.500			4.000	18.000	3 0	2 11	63
		0.500 INCH																
12	5 K6	BARRIER	G	19	S		V	4	2 7.750	10.000						3 6	3 5	
		INCREMENT =							2 6.750	10.000						3 5	3 4	42
		0.500 INCH																
12	5 K7	BARRIER	G	21	S		V	4	2 7.625	10.000				2 7.000	6.500	3 6	3 4	
		INCREMENT =							2 6.625	10.000				2 6.000	6.250	3 5	3 3	41
		0.500 INCH																
36	5 K8	BARRIER	G	19	S		V	4	3 2.500	10.000						4 1	3 11	
		INCREMENT =							2 8.500	10.000						3 7	3 5	138
		0.750 INCH																
36	5 K9	BARRIER	G	21	S		V	4	3 2.500	10.000				3 1.750	7.750	4 1	3 11	
		INCREMENT =							2 8.500	10.000				2 7.750	6.750	3 7	3 5	138
		0.750 INCH																
50	5 K10	BARRIER	G	19	S				3 3.000	10.000						4 1	4 0	209
50	5 K11	BARRIER	G	21	S				3 3.000	10.000				3 2.250	7.750	4 1	3 11	204
12	5 K12	BARRIER	G	20					17 2.000							17 2	17 2	215
6	5 K13	BARRIER	G	20			V	2	16 5.000							16 5	16 5	
		INCREMENT =							10 5.000							10 5	10 5	84
		36.000 INCH																
12	5 K14	BARRIER	G	20					20 10.000							20 10	20 10	261
6	5 K15	BARRIER	G	20			V	2	20 1.000							20 1	20 1	
		INCREMENT =							14 1.000							14 1	14 1	107
		36.000 INCH																
12	5 K16	BARRIER	G	20					16 10.000							16 10	16 10	211
6	5 K17	BARRIER	G	20			V	2	16 1.000							16 1	16 1	
		INCREMENT =							10 1.000							10 1	10 1	82
		36.000 INCH																
12	5 K18	BARRIER	G	20					21 2.000							21 2	21 2	265
6	5 K19	BARRIER	G	20			V	2	20 5.000							20 5	20 5	
		INCREMENT =							14 5.000							14 5	14 5	109
		36.000 INCH																
1726	5 R1	BARRIER	G	26					3 3.000	5.500	3 3.625			3 3.000	6.750	6 9	6 9	12151
1718	5 R2	BARRIER	G	19	S				20.500	9.500						2 6	2 5	4330
1726	5 R3	BARRIER	G	27	S					9.500	15.250	5.000	12.000	15.000	3.000	3 6	3 4	6001
280	5 R4	BARRIER	G	20					11 8.000							11 8	11 8	3407
80	5 R5	BARRIER	G	20					46 10.000							46 10	46 10	3908
80	5 R6	BARRIER	G	20					48 6.000							48 6	48 6	4047
80	5 R7	BARRIER	G	20					54 5.000							54 5	54 5	4541
40	5 R8	BARRIER	G	20					47 6.000							47 6	47 6	1982
8	5 R9	BARRIER	G	27	S				12.500	6.000	15.250	9.500		3.000	15.000	3 7	3 5	29
		SLIP FORM																
116	5 C1	SLIP FORM	G	20					12 0.000							12 0	12 0	1452
8	5 C2	SLIP FORM	G	20					8 0.000							8 0	8 0	67

NO. REQ'D.	MARK NO. SIZE MARK	LOCATION	GALVANIZED (G)	SHAPE NO.	STIRRUP (S)	SUBSTR. (X)	VARIES (V)	NO. EACH	B FT. IN.	C FT. IN.	D FT. IN.	E FT. IN.	F FT. IN.	H FT. IN.	K FT. IN.	NOMINAL LENGTH FT. IN.	ACTUAL LENGTH FT. IN.	WEIGHT LBS.
		TOTALS																
	4																	1141
	4		G															1820
	5																	3768
	5		G															74147
	6																	18217
	6		G															143571
	7		G															1843
	8																	5608
	8		G															87542
	9																	13482
	11																	37430
	W5																	66
		TOTAL																79712
		TOTAL	G															308923
		Slab on																
		NU-Girder																
	4		G															1768
	5		G															72258
	6		G															141513
	7		G															1843
	8		G															86257
	W5																	66
		TOTAL																303705
		Reinforcing																
		Steel																
		(Bridges)																
	4																	1141
	5																	3768
	6																	18217
	8																	5608
	9																	13482
	11																	37430
		TOTAL																79646
		Reinforcing																
		Steel																
		(Galvanized)																
	4							G										84
	5							G										320
	6							G										2058
	8							G										1285
		TOTAL																3747
		Slip Form																
		Option																
	5							G										1519
		TOTAL																1519

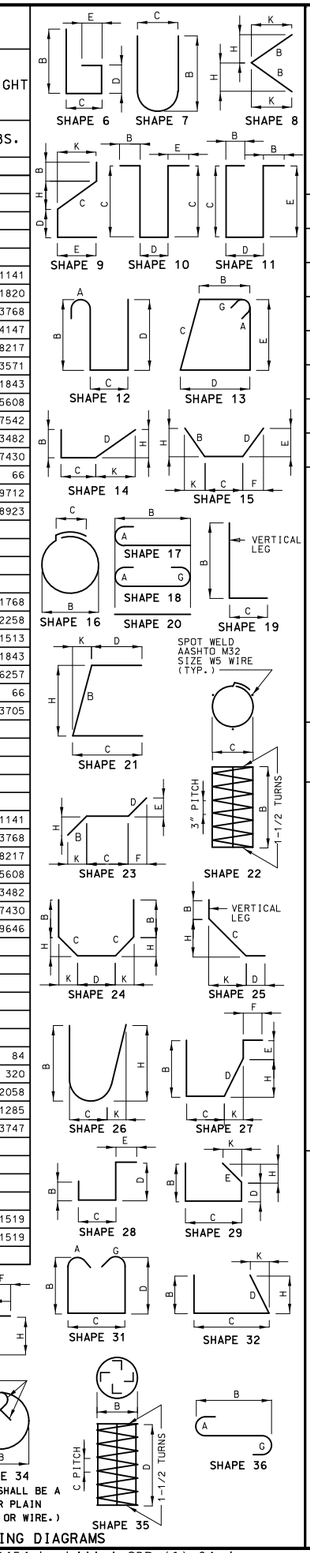

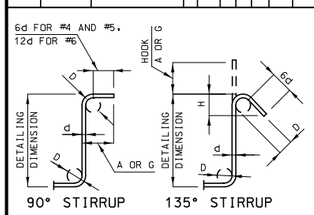

STIRRUP HOOK DIMENSIONS				
GRADES 40 - 50 - 60 KSI				
BAR SIZE	D (IN.)	90° HOOK	135° HOOK	
		HOOK A OR G	HOOK A OR G	APPROX. H
#4	2"	4 1/2"	4 1/2"	3"
#5	2 1/2"	6"	5 1/2"	3 3/4"
#6	4 1/2"	12"	8"	4 1/2"

NOTE: UNLESS OTHERWISE NOTED DIAMETER "D" IS THE SAME FOR ALL BENDS AND HOOKS ON A BAR.

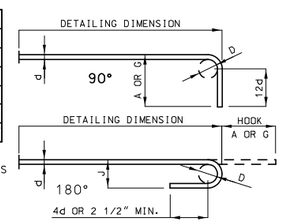

END HOOK DIMENSIONS				
BAR SIZE	D (IN.)	ALL GRADES		
		180° HOOKS		90° HOOKS
		A OR G	J	A OR G
#3	2 1/4"	5"	3"	6"
#4	3"	6"	4"	8"
#5	3 3/4"	7"	5"	10"
#6	4 1/2"	8"	6"	12"
#7	5 1/4"	10"	7"	14"
#8	6"	11"	8"	16"
#9	9 1/2"	15"	11 3/4"	19"
#10	10 3/4"	17"	13 1/4"	22"
#11	12"	19"	14 3/4"	2'-0"
#14	18 1/4"	2'-3"	21 3/4"	2'-7"

NOTE:
ALL STANDARD HOOKS AND BENDS OTHER THAN 180 DEGREE ARE TO BE BENT WITH SAME PROCEDURE AS FOR 90 DEGREE STANDARD HOOKS.
HOOKS AND BENDS SHALL BE IN ACCORDANCE WITH THE PROCEDURES AS SHOWN ON THIS SHEET.
E = EPOXY COATED REINFORCEMENT.
S = STIRRUP.
X = BAR IS INCLUDED IN SUBSTRUCTURE QUANTITIES.
V = BAR DIMENSIONS VARY IN EQUAL INCREMENTS BETWEEN DIMENSIONS SHOWN ON THIS LINE AND THE FOLLOWING LINE.
NO. EA. = NUMBER OF BARS OF EACH LENGTH.
NOMINAL LENGTHS ARE BASED ON OUT TO OUT DIMENSIONS SHOWN IN BENDING DIAGRAMS AND ARE LISTED FOR FABRICATORS USE. (NEAREST INCH)
ACTUAL LENGTHS ARE MEASURED ALONG CENTERLINE BAR TO THE NEAREST INCH.
PAYWEIGHTS ARE BASED ON ACTUAL LENGTHS.
FOUR ANGLE OR CHANNEL SPACERS ARE REQUIRED FOR EACH COLUMN SPIRAL. SPACERS ARE TO BE PLACED ON INSIDE OF SPIRALS. LENGTH AND WEIGHT OF COLUMN SPIRALS DO NOT INCLUDE SPLICES OR SPACERS.
REINFORCING STEEL (GRADE 60) FY = 60,000 PSI.

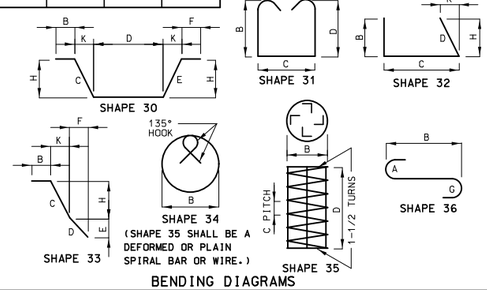

BENDING DIAGRAMS

STATE OF MISSOURI
DAVID ANDREW STRAATMANN
NUMBER PE-2004000848
PROFESSIONAL ENGINEER
THIS SHEET HAS BEEN SIGNED, SEALED AND DATED ELECTRONICALLY.

DATE PREPARED	3/20/2024
ROUTE	Z
STATE	MO
DISTRICT	BR
SHEET NO.	40
COUNTY	PLATTE
JOB NO.	J4S3454
CONTRACT ID.	
PROJECT NO.	
BRIDGE NO.	A9373

DESCRIPTION

DATE

MISSOURI HIGHWAYS AND TRANSPORTATION COMMISSION
105 WEST CAPITOL
JEFFERSON CITY, MO 65102
1-888-ASK-MODOT (1-888-275-6636)

Bartlett & West
601 MONROE STREET, SUITE 201 - JEFFERSON CITY, MO 65101
PHONE 573-634-3181 - FAX 573-634-7904
CERTIFICATE OF AUTHORITY NO. 000167 - ENGINEERING
WWW.BARTWEST.COM

IF A SEAL IS PRESENT ON THIS SHEET IT HAS BEEN ELECTRONICALLY SEALED AND DATED.

Detailed Jan. 2024
Checked Jan. 2024

Note: This drawing is not to scale. Follow dimensions.

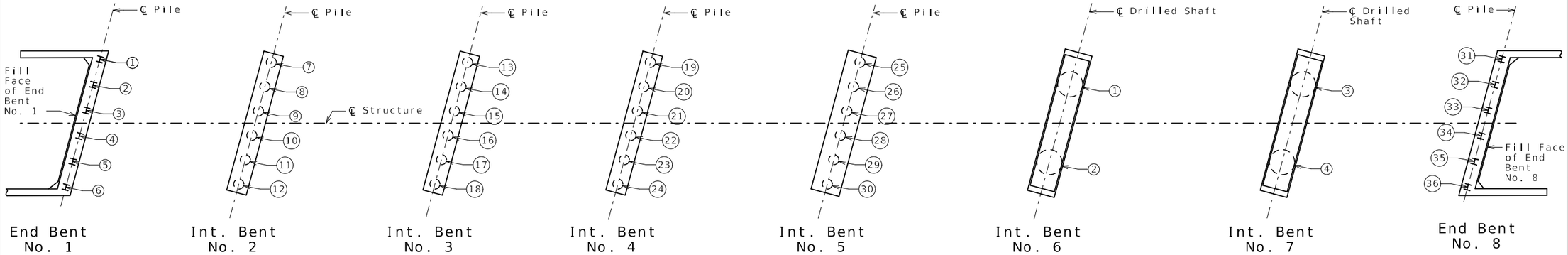

PART PLAN SHOWING PILE NUMBERING FOR RECORDING AS-BUILT PILE DATA

As-Built Pile Data

Pile No.	Length in Place (ft)	Computed Nominal Axial Compressive Resistance (kips)	Remarks
		End Bent No. 1	
1			
2			
3			
4			
5			
6			
		End Bent No. 8	
31			
32			
33			
34			
35			
36			

As-Built Pile Data

Pile No.	Length in Place (ft)	PDA Nom. Axial Compressive Resistance (kips)	PDA End of Drive Blow Count (blows/in.)	Actual End of Drive Blow Count (blows/in.)	Remarks
		Int. Bent No. 2			
7					
8					
9					
10					
11					
12					
		Int. Bent No. 3			
13					
14					
15					
16					
17					
18					

As-Built Pile Data

Pile No.	Length in Place (ft)	PDA Nom. Axial Compressive Resistance (kips)	PDA End of Drive Blow Count (blows/in.)	Actual End of Drive Blow Count (blows/in.)	Remarks
		Int. Bent No. 4			
19					
20					
21					
22					
23					
24					
		Int. Bent No. 5			
25					
26					
27					
28					
29					
30					

As-Built Drilled Shaft Data

Shaft No.	Tip of Sound Rock (Elev.)	Tip of Casing (Elev.)	Bottom of Rock Socket (Elev.)	Remarks
		Int. Bent. No. 6		
1				
2				
		Int. Bent. No. 7		
3				
4				

Note:
Indicate in remarks column:
A. Pile type and grade
B. Batter
C. Driven to practical refusal
D. PDA test pile
E. Minimum tip elevation controlled
(Use when actual blow count is less than PDA blow count due to minimum tip elevation requirement. A plus sign (+) shall be placed after the PDA nominal axial compressive resistance value indicating actual value is higher than PDA value.)

This sheet to be completed by MoDOT construction personnel.

Detailed Jan. 2024
Checked Jan. 2024

Note: This drawing is not to scale. Follow dimensions.

STATE OF MISSOURI
DAVID ANDREW STRAATMANN
NUMBER PE-2004000848
PROFESSIONAL ENGINEER
THIS SHEET HAS BEEN SIGNED, SEALED AND DATED ELECTRONICALLY.

DATE PREPARED 3/20/2024
ROUTE Z | STATE MO
DISTRICT BR | SHEET NO. 41
COUNTY PLATTE
JOB NO. J4S3454
CONTRACT ID.
PROJECT NO.
BRIDGE NO. A9373

DESCRIPTION | DATE

MISSOURI HIGHWAYS AND TRANSPORTATION COMMISSION
105 WEST CAPITOL
JEFFERSON CITY, MO 65102
1-888-ASK-MODOT (1-888-275-6636)

Bartlett & West
601 MONROE STREET, SUITE 201 - JEFFERSON CITY, MO 65101
PHONE 573-634-3181 - FAX 573-634-7904
CERTIFICATE OF AUTHORITY NO. 000167 - ENGINEERING
WWW.BARTWEST.COM

IF A SEAL IS PRESENT ON THIS SHEET IT HAS BEEN ELECTRONICALLY SEALED AND DATED.

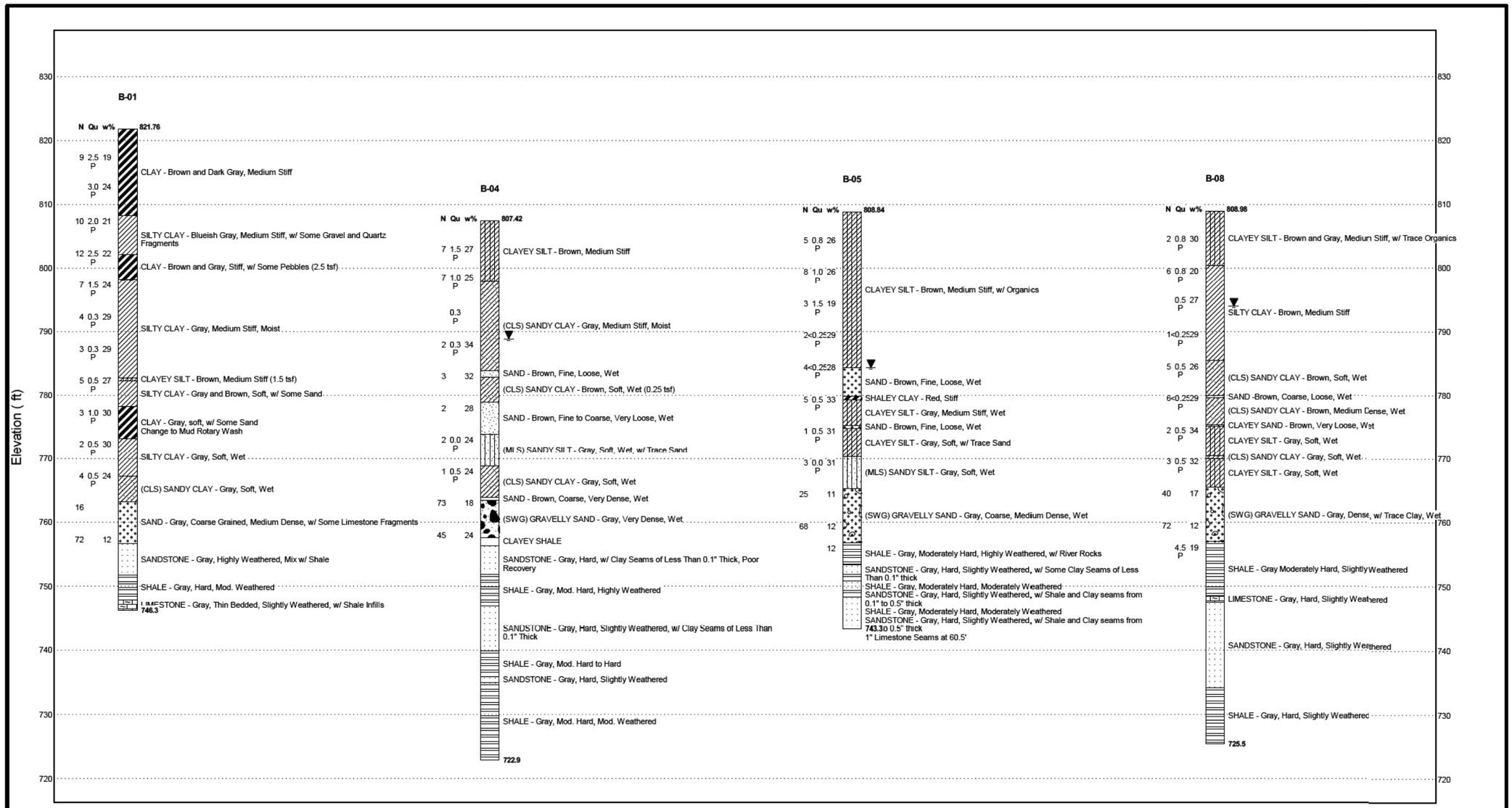

Kaskaskia Engineering Group, LLC
208 E. Main St., Suite 100
Belleville, Illinois 62220
618.233.5877 phone
618.233.5977 fax
www.kaskaskiaeng.com

PROFESSIONAL REGISTRATIONS	LICENSE NO.
Illinois Professional Design Firm	184.004773
Professional Engineering Group	20-5080586

NOT TO HORIZONTAL SCALE

SUBSURFACE DATA PROFILE

Route: Route Z Over Platte River
County: Platte County, MO

BORING DATA

Note: For locations of borings, see Sheet No. 1 and 2.

Note: This drawing is not to scale. Follow dimensions.

Detailed Jan. 2024
Checked Jan. 2024

STATE OF MISSOURI
DAVID ANDREW STRAATMANN
NUMBER PE-2004000848
PROFESSIONAL ENGINEER
THIS SHEET HAS BEEN SIGNED, SEALED AND DATED ELECTRONICALLY.

DATE PREPARED	3/20/2024
ROUTE	Z
STATE	MO
DISTRICT	BR
SHEET NO.	42
COUNTY	PLATTE
JOB NO.	J4S3454
CONTRACT ID.	
PROJECT NO.	
BRIDGE NO.	A9373

DESCRIPTION
DATE

MISSOURI HIGHWAYS AND TRANSPORTATION COMMISSION
MoDOT
105 WEST CAPITOL
JEFFERSON CITY, MO 65102
1-888-ASK-MODOT (1-888-275-6636)

Bartlett & West
601 MONROE STREET, SUITE 201 - JEFFERSON CITY, MO 65101
PHONE 573-634-3181 - FAX 573-634-7904
CERTIFICATE OF AUTHORITY NO. 000167 - ENGINEERING
WWW.BARTWEST.COM

IF A SEAL IS PRESENT ON THIS SHEET IT HAS BEEN ELECTRONICALLY SEALED AND DATED.

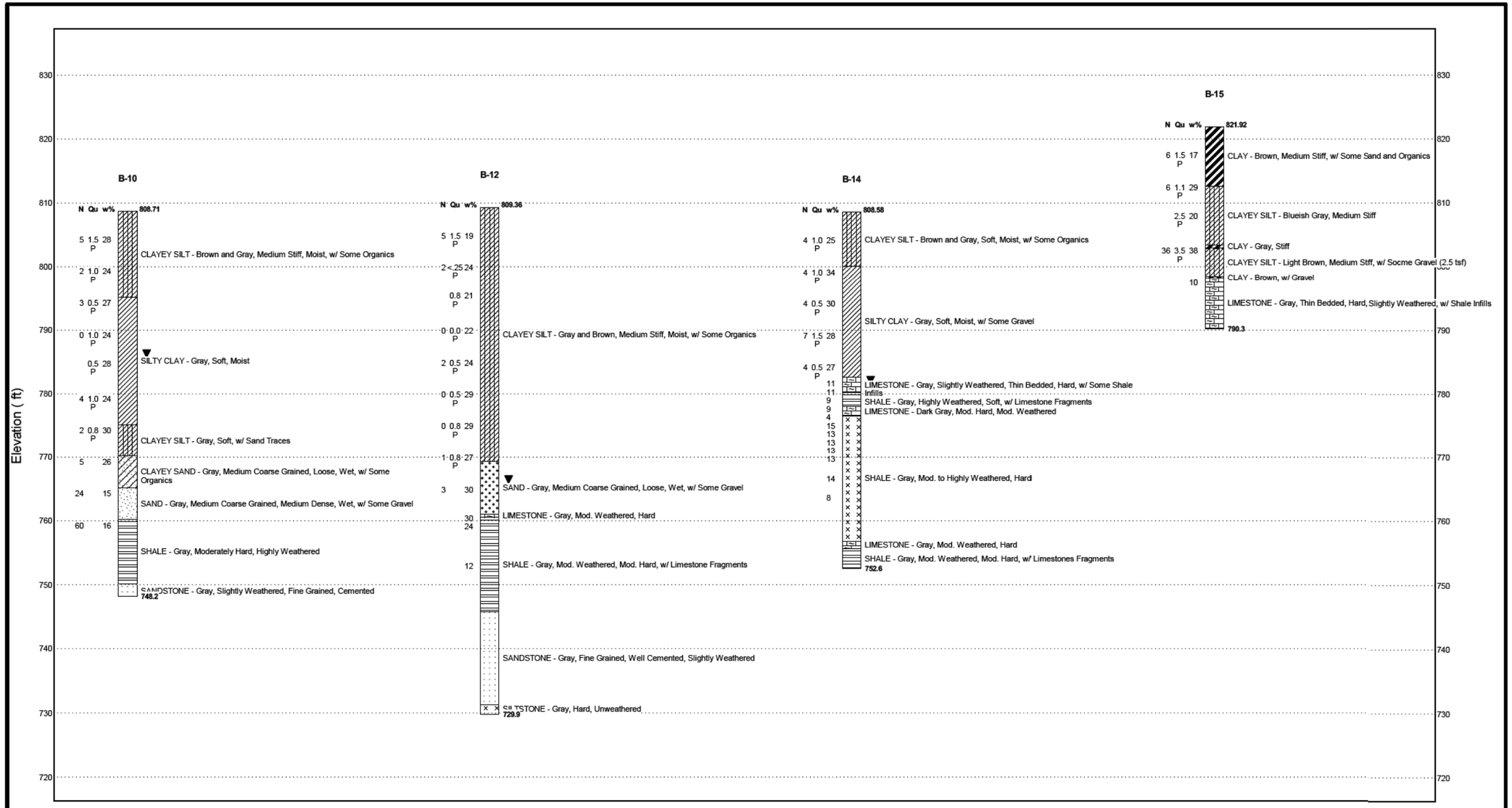

Kaskaskia Engineering Group, LLC
208 E. Main St., Suite 100
Belleville, Illinois 62220
618.233.5877 phone
618.233.5977 fax
www.kaskaskiaeng.com

PROFESSIONAL REGISTRATIONS	LICENSE NO.
Illinois Professional Design Firm	184.004773
Professional Engineering Group	20-5080586

NOT TO HORIZONTAL SCALE

SUBSURFACE DATA PROFILE

Route: Route Z Over Platte River
County: Platte County, MO

STATE OF MISSOURI
DAVID ANDREW STRAATMANN
NUMBER PE-2004000848
PROFESSIONAL ENGINEER
THIS SHEET HAS BEEN SIGNED, SEALED AND DATED ELECTRONICALLY.

DATE PREPARED	
3/20/2024	
ROUTE: Z	STATE: MO
DISTRICT: BR	SHEET NO.: 43
COUNTY: PLATTE	
JOB NO.: J4S3454	
CONTRACT ID.	
PROJECT NO.	
BRIDGE NO.: A9373	

DATE	DESCRIPTION

MISSOURI HIGHWAYS AND TRANSPORTATION COMMISSION
MoDOT
105 WEST CAPITOL
JEFFERSON CITY, MO 65102
1-888-ASK-MODOT (1-888-275-6636)

IF A SEAL IS PRESENT ON THIS SHEET IT HAS BEEN ELECTRONICALLY SEALED AND DATED.

Bartlett & West
601 MONROE STREET, SUITE 201 - JEFFERSON CITY, MO 65101
PHONE 573-634-3181 - FAX 573-634-7904
CERTIFICATE OF AUTHORITY NO. 000167 - ENGINEERING
WWW.BARTWEST.COM

BORING DATA

Note: For locations of borings, see Sheet No. 1 and 2.

Detailed Jan. 2024
Checked Jan. 2024

Note: This drawing is not to scale. Follow dimensions.