Job No.: JSE0089
Route: 62
County: New Madrid

JOB SPECIAL PROVISIONS TABLE OF CONTENTS (ROADWAY)

(Job Special Provisions shall prevail over General Special Provisions whenever in conflict therewith.)

A.	General - Federal JSP-09-02J	1
1 REVISED B.	Contract Liquidated Damages JSP-13-01C	1
C.	Work Zone Traffic Management JSP-02-06N	2
D.	Utilities JSP-93-26F (SE0089 Route 62 – Bridge F0204)	4
E.	Emergency Provisions and Incident Management JSP-90-11A	6
F.	Project Contact for Contractor/Bidder Questions JSP-96-05	6
G.	Removal and Delivery of Existing Signs JSP-12-01C	7
H.	Optional Pavements JSP 06-06H	7
I.	Contractor Quality Control NJSP-15-42	8
J.	Slurry and Residue Produced During Surface Treatment of PCCP and Bridge Decks JSP-06-05A	10
K.	Clean Water Act Requirements	11
L.	Restrictions for Migratory Birds NJSP-16-06A	11
M.	Dewatering	13
N.	Temporary Stream Crossings	14
O.	Flap Gate	14
P.	Supplemental Revisions JSP-18-01AB	17

STATE OF MISSOURI
ROBERT B. GREEN
NUMBER PE-25339
PROFESSIONAL ENGINEER

THIS SHEET HAS BEEN SIGNED, SEALED AND DATED ELECTRONICALLY.

MISSOURI HIGHWAYS AND TRANSPORTATION COMMISSION
105 W. CAPITOL AVE.
JEFFERSON CITY, MO 65102
Phone 1-888-275-6636

Bartlett & West, Inc
601 Monroe St, Suite 201
Jefferson City, MO 65101
Certificate of Authority: 000167 Eng.
Consultant Phone: (573) 634-3181

If a seal is present on this sheet, JSP's have been electronically sealed and dated.

Job Number: JSE0089
New Madrid County, MO
Date Prepared: 11/28/2023

ADDENDUM DATE:
R001 4/12/24

Only the following items of the Job Special Provisions (Roadway) are authenticated by this seal: All

Job No.: JSE0089
Route: 62
County: New Madrid

JOB
SPECIAL PROVISION

A. General - Federal JSP-09-02J

1.0 Description. The Federal Government is participating in the cost of construction of this project. All applicable Federal laws, and the regulations made pursuant to such laws, shall be observed by the contractor, and the work will be subject to the inspection of the appropriate Federal Agency in the same manner as provided in Sec 105.10 of the Missouri Standard Specifications for Highway Construction with all revisions applicable to this bid and contract.

1.1 This contract requires payment of the prevailing hourly rate of wages for each craft or type of work required to execute the contract as determined by the Missouri Department of Labor and Industrial Relations and requires adherence to a schedule of minimum wages as determined by the United States Department of Labor. For work performed anywhere on this project, the contractor and the contractor's subcontractors shall pay the higher of these two applicable wage rates. State Wage Rates, Information on the Required Federal Aid Provisions, and the current Federal Wage Rates are available on the Missouri Department of Transportation web page at www.modot.org under "Doing Business with MoDOT", "Contractor Resources". Effective Wage Rates will be posted 10 days prior to the applicable bid opening. These supplemental bidding documents have important legal consequences. It shall be conclusively presumed that they are in the bidder's possession, and they have been reviewed and used by the bidder in the preparation of any bid submitted on this project.

1.2 The following documents are available on the Missouri Department of Transportation web page at www.modot.org under "Doing Business with MoDOT"; "Standards and Specifications". The effective version shall be determined by the letting date of the project.

General Provisions & Supplemental Specifications

Supplemental Plans to July 2023 Missouri Standard Plans
For Highway Construction

These supplemental bidding documents contain all current revisions to the published versions and have important legal consequences. It shall be conclusively presumed that they are in the bidder's possession, and they have been reviewed and used by the bidder in the preparation of any bid submitted on this project.

1 REVISED B. Contract Liquidated Damages JSP-13-01C

1.0 Description. Liquidated Damages for failure or delay in completing the work on time for this contract shall be in accordance with Sec 108.8. The liquidated damages include separate amounts for road user costs and contract administrative costs incurred by the Commission.

2.0 Period of Performance. Prosecution of work is expected to begin on the date specified below in accordance with Sec 108.2. Regardless of when the work is begun on this contract, all work on all projects (job numbers) shall be completed on or before the Contract Completion date specified below. Completion by this date shall be in accordance with the requirements of Sec 108.7.1.

1 REVISED Notice to Proceed Date: ~~May 6, 2024~~ June 3, 2024
1 REVISED Contract Completion Date: ~~December 1, 2024~~ November 1, 2025

2.1 Calendar Days. The count of calendar days will begin on the date the contractor starts any construction operations on the project.

Job Number	Calendar Days	Daily Road User Cost
JSE0089	135	$1,800

3.0 Liquidated Damages for Contract Administrative Costs. Should the contractor fail to complete the work on or before the contract completion date specified in Section 2.0, or within the number of calendar days specified in Section 2.1, whichever occurs first, the contractor will be charged contract administrative liquidated damages in accordance with Sec 108.8 in the amount of **$2000** per calendar day for each calendar day, or partial day thereof, that the work is not fully completed. For projects in combination, these damages will be charged in full for failure to complete one or more projects within the above specified contract completion date or calendar days.

4.0 Liquidated Damages for Road User Costs. Should the contractor fail to complete the work on or before the contract completion date specified in Section 2.0, or within the number of calendar days specified in Section 2.1, whichever occurs first, the contractor will be charged road user costs in accordance with Sec 108.8 in the amount specified in Section 2.1 for each calendar day, or partial day thereof, that the work is not fully completed. These damages are in addition to the contract administrative damages and any other damages as specified elsewhere in this contract.

C. Work Zone Traffic Management JSP-02-06N

1.0 Description. Work zone traffic management shall be in accordance with applicable portions of Division 100 and Division 600 of the Standard Specifications, and specifically as follows.

1.1 Maintaining Work Zones and Work Zone Reviews. The Work Zone Specialist (WZS) shall maintain work zones in accordance with Sec 616.3.3 and as further stated herein. The WZS shall coordinate and implement any changes approved by the engineer. The WZS shall ensure all traffic control devices are maintained in accordance with Sec 616, the work zone is operated within the hours specified by the engineer, and will not deviate from the specified hours without prior approval of the engineer. The WZS is responsible to manage work zone delay in accordance with these project provisions. When requested by the engineer, the WZS shall submit a weekly report that includes a review of work zone operations for the week. The report shall identify any problems encountered and corrective actions taken. Work zones are subject to unannounced inspections by the engineer and other departmental staff to corroborate the validity of the WZS's review and may require immediate corrective measures and/or additional work zone monitoring.

1.2 Work Zone Deficiencies. Failure to make corrections on time may result in the engineer

1.3 suspending work. The suspension will be non-excusable and non-compensable regardless if road user costs are being charged for closures.

2.0 Traffic Management Schedule.

2.1 Traffic management schedules shall be submitted to the engineer for review prior to the start of work and prior to any revisions to the traffic management schedule. The traffic management schedule shall include the proposed traffic control measures, the hours traffic control will be in place, and work hours.

2.2 The traffic management schedule shall conform to the limitations specified in Sec 616 regarding lane closures, traffic shifts, road closures and other width, height and weight restrictions.

2.3 The engineer shall be notified as soon as practical of any postponement due to weather, material or other circumstances.

2.4 In order to ensure minimal traffic interference, the contractor shall schedule lane closures for the absolute minimum amount of time required to complete the work. Lanes shall not be closed until material is available for continuous construction and the contractor is prepared to diligently pursue the work until the closed lane is opened to traffic.

2.5 Traffic Congestion. The contractor shall, upon approval of the engineer, take proactive measures to reduce traffic congestion in the work zone. The contractor shall immediately implement appropriate mitigation strategies whenever traffic congestion reaches an excess of 10 minutes to prevent congestion from escalating to 15 minute or above threshold. If disruption of the traffic flow occurs and traffic is backed up in queues of 15 minute delays or longer, then the contractor shall immediately review the construction operations which contributed directly to disruption of the traffic flow and make adjustments to the operations to prevent the queues from reoccurring. Traffic delays may be monitored by physical presence on site or by utilizing real-time travel data through the work zone that generate text and/or email notifications where available. The engineer monitoring the work zone may also notify the contractor of delays that require prompt mitigation. The contractor may work with the engineer to determine what other alternative solutions or time periods would be acceptable.

2.5.1 Traffic Safety.

2.5.1.1 Recurring Congestion. Where traffic queues routinely extend to within 1000 feet of the ROAD WORK AHEAD, or similar, sign on a divided highway or to within 500 feet of the ROAD WORK AHEAD, or similar, sign on an undivided highway, the contractor shall extend the advance warning area, as approved by the engineer.

2.5.1.2 Non-Recurring Congestion. When traffic queues extend to within 1000 feet of the ROAD WORK AHEAD, or similar, sign on a divided highway or to within 500 feet of the ROAD WORK AHEAD, or similar, sign on an undivided highway infrequently, the contractor shall deploy a means of providing advance warning of the traffic congestion, as approved by the engineer. The warning location shall be no less than 1000 feet and no more than 0.5 mile in advance of the end of the traffic queue on divided highways and no less than 500 feet and no more than 0.5 mile in advance of the end of the traffic queue on undivided highways.

3.0 Work Hour Restrictions.

3.1 No Work hour restrictions

4.0 Detours and Lane Closures.

4.1 When a changeable message sign (CMS) is provided, the contractor shall use the CMS to notify motorists of future traffic disruption and possible traffic delays one week before traffic is shifted to a detour or prior to lane closures. The CMS shall be installed at a location as approved or directed by the engineer. If a CMS with Communication Interface is required, then the CMS shall be capable of communication prior to installation on right of way. All messages planned for use in the work zone shall be approved and authorized by the engineer or its designee prior to deployment. When permanent dynamic message signs (DMS) owned and operated by MoDOT are located near the project, they may also be used to provide warning and information for the work zone. Permanent DMS shall be operated by the TMC, and any messages planned for use on DMS shall be approved and authorized by the TMC at least 72 hours in advance of the work.

4.2 Route 62 Traffic Shifts and Lane Closures. The contractor shall request approval from the Engineer at least 7 calendar days prior to closing any lanes on Routes 62 and 153, and shifting of Route 62 traffic onto the temporary bypass.

5.0 Basis of Payment. No direct payment will be made to the contractor to recover the cost of equipment, labor, materials, or time required to fulfill the above provisions, unless specified elsewhere in the contract document. All authorized changes in the traffic control plan shall be provided for as specified in Sec 616.

D. Utilities JSP-93-26F (SE0089 Route 62 – Bridge F0204)

1.0 For informational purposes only, the following is a list of names, addresses, and telephone numbers of the known utility companies in the area of the construction work for this improvement:

Utility Name	**Known Required Adjustment**	**Type**
Ameren Missouri Electric Eric Boyer 9123 Coral Dr St. Louis, MO 63132 Phone: 866-992-6619 Cell: 573-624-5982 Email: eboyer@ameren.com	None Section 2.1	Electric
AT&T Distribution Scott Miller 600 W Pine Poplar Bluff, MO 63901 Phone: 573-382-3851 Email: sm6831@att.com	None Section 2.2	Communications

New Madrid County PWSD #5 Karen Smith 11900 Missouri 162 Gideon, MO 63848 Phone: 573-281-8044 Email: pwsd5@yrless.net	None Section 2.3	Water
Pemiscot Dunklin Electric COOP Andy 805 1st St Kennett, MO 63857 Phone: 573-757-6641 Email: andy@pdec.coop	None Section 2.4	Electric
Sho-Me Technologies Brad McGoon 301 W Jackson St Marshfield, MO 65706 Phone: 417-859-3529 Email: dmcgoon@shomepower.com	Yes Section 2.5	Communications

1.1 The existence and approximate location of utility facilities known to exist, as shown on the plans, are based upon the best information available to the Owner at this time. This information is provided by the Owner "as-is" and the Owner expressly disclaims any representation or warranty as to the completeness, accuracy, or suitability of the information for any use. Reliance upon this information is done at the risk and peril of the user, and the Owner shall not be liable for any damages that may arise from any error in the information. It is, therefore, the responsibility of the contractor to verify the above listing information indicating existence, location, and status of any facility. Such verification includes direct contact with the listed utilities.

2.0 Project Specific Provisions:

2.1 Ameren Missouri Electric – Has overhead electric located on the northwest portion of the project limits. No adjustments are anticipated. Contact Eric Boyer, with Ameren, regarding any questions.

2.2 AT&T Distribution - currently has multiple lines located at various locations within the project limits. No relocations are anticipated at this time. Contact Scott Miller, with AT&T with any questions.

2.3 New Madrid County PWSD 5 – has a water line located within the southern portion of the project limits. No adjustments are anticipated. Contact Karen Smith, with New Madrid County PWSD #5 with any questions.

2.4 Pemiscot Dunklin Electric COOP – has overhead electric located on the southeastern portion of the project limits. No adjustments are anticipated. The contractor shall contact Andy, with Pemiscot Dunklin Electric COOP, regarding any questions.

2.5 Sho-Me Technologies – has fiber located along the northern portion of the project limits. The existing fiber will be relocated. Contact Brad McGoon four (4) weeks prior to the start of construction.

E. Emergency Provisions and Incident Management JSP-90-11A

1.0 The contractor shall have communication equipment on the construction site or immediate access to other communication systems to request assistance from law enforcement or other emergency agencies for incident management. In case of traffic accidents or the need for law enforcement to direct or restore traffic flow through the job site, the contractor shall notify law enforcement or other emergency agencies immediately as needed. The area engineer's office shall also be notified when the contractor requests emergency assistance.

2.0 In addition to the 911 emergency telephone number for ambulance, fire or law enforcement services, the following agencies may also be notified for accident or emergency situation within the project limits.

Missouri Highway Patrol, Troop E	(573) 840-9500
Risco City Police Department	(573) 396-5561
Parma Fire Department	(573) 357-2006
Malden Ambulance Services	(573) 276-5111
Malden Police Department	(573) 276-2211

2.1 This list is not all inclusive. Notification of the need for wrecker or tow truck services will remain the responsibility of the appropriate law enforcement agency.

2.2 The contractor shall notify law enforcement and emergency agencies before the start of construction to request their cooperation and to provide coordination of services when emergencies arise during the construction at the project site. When the contractor completes this notification with law enforcement and emergency agencies, a report shall be furnished to the engineer on the status of incident management.

3.0 No direct pay will be made to the contractor to recover the cost of the communication equipment, labor, materials, or time required to fulfill the above provisions.

F. Project Contact for Contractor/Bidder Questions JSP-96-05

All questions concerning this project during the bidding process shall be forwarded to the project contact listed below.

Tim Pickett, Project Contact
MoDOT Southeast District
2675 North Main St.
Sikeston, Mo 63801

Telephone Number: (573) 472-9003
Email: Timothy.Pickett@modot.mo.gov

All questions concerning the bid document preparation can be directed to the Central Office – Design at (573) 751-2876.

G. Removal and Delivery of Existing Signs JSP-12-01C

1.0 Description. All Commission-owned signs removed from the project shall be disassembled, stored, transported, and disposed of as specified herein. Sign supports, structures and hardware removed from the project shall become the property of the contractor.

2.0 Disassembly and Delivery.

2.1 All Commission-owned signs, (excluding abandoned billboard signs), designated for removal in the plans, or any other signs designated by the Engineer, shall be removed from the sign supports and structures, disassembled, stored, transported, and delivered by the contractor to the recycling center for destruction.

2.2 The contractor shall coordinate and make arrangements with the recycling center for delivery of the signs. Sign panels shall be disassembled and/or cut into sizes as required by the recycling center.

2.3 The contractor shall provide the Engineer with a "Sign Delivery Certification" attesting to completion of delivery of all existing sign material from the project to the recycler. In addition, the contractor shall provide to the Engineer a final "Sign Certification of Destruction" from the recycler that documents the total pounds of scrap sign material received from the project and attests that all such material will not be re-purposed and will be destroyed in a recycling process. The contractor can locate the required certification statements from the Missouri Department of Transportation website:

https://www.modot.org/forms-contractor-use

2.4 Funds received from the disposal of the signs from the recycling center shall be retained by the Contractor.

3.0 Basis of Payment. All costs associated with removing, disassembling and/or cutting, storing, transporting, and disposing of signs shall be considered as completely covered by the contract unit price for Item No. 202-20.10, "Removal of Improvements", per lump sum.

H. Optional Pavements JSP 06-06H

1.0 Description. This work shall consist of a pavement composed of either Portland cement concrete or asphaltic concrete constructed on a prepared subgrade. This work shall be performed

in accordance with the standard specifications and as shown on the plans or established by the engineer.

2.0 The quantities shown reflect the total square yards of pavement surface designated for each pavement type as computed and shown on the plans.

2.1 No additional payment will be made for asphaltic concrete mix quantities to construct the required 1:1 slope along the edge of the pavement, or for tack applied between lifts of asphalt.

2.2 No additional payment will be made for aggregate base quantities outside the limits of the final surface area as computed and shown on the plans. When A2 shoulders are specified, payment for aggregate base will be as shown on the plans.

2.3 The grading shown on the plans was designed for the thicker pavement option. For projects with grading in the contract, there will be no adjustment of the earthwork quantities due to adjusting the roadway subgrade for optional pavements.

2.4 The contractor shall comply with Sections 401 through 403 for the asphalt option and Sections 501 and 502 for the concrete option.

2.5 Pavement options composed of Portland cement concrete shall have contrast pavement marking for intermittent markings (skips), dotted lines, and solid intersection lane lines. The pavement markings shall be in accordance with Section 620. No additional payment will be made for the contrast pavement markings.

3.0 Method of Measurement. The quantities of concrete pavement will be measured in accordance with Section 502.14. The quantities of asphaltic concrete pavement will be measured in accordance with Section 403.22.

4.0 Basis of Payment. The accepted quantity of the chosen option will be paid for at the contract unit bid price for Item 401-99.05, Optional Pavement, per square yard.

4.1 For projects with previously graded roadbeds, any additional quantities required to bring the roadway subgrade to the proper elevation will be considered completely covered by the pay item for Subgrading and Shouldering.

4.0 Price Adjustment for Fuel. If the contractor accepts the option for fuel adjustment in the bid proposal, a fuel adjustment will be applied in accordance with Sec 109.14 for the type of pavement constructed.

I. <u>Contractor Quality Control</u> NJSP-15-42

1.0 The contractor shall perform Quality Control (QC) testing in accordance with the specifications and as specified herein. The contractor shall submit a Quality Control Plan (QC Plan) to the engineer for approval that includes all items listed in Section 2.0, prior to beginning work.

2.0 Quality Control Plan.

(a) The name and contact information of the person in responsible charge of the QC testing.
(b) A list of the QC technicians who will perform testing on the project, including the fields in which they are certified to perform testing.
(c) A proposed independent third party testing firm for dispute resolution, including all contact information.
(d) A list of Hold Points, when specified by the engineer.
(e) The MoDOT Standard Inspection and Testing Plan (ITP). This shall be the version that is posted at the time of bid on the MoDOT website (www.modot.org/quality).

3.0 Quality Control Testing and Reporting. Testing shall be performed per the test method and frequency specified in the ITP. All personnel who perform sampling or testing shall be certified in the MoDOT Technician Certification Program for each test that they perform.

3.1 Reporting of Test Results. All QC test reports shall be submitted as soon as practical, but no later than the day following the test. Test data shall be immediately provided to the engineer upon request at any time, including prior to the submission of the test report. No payment will be made for the work performed until acceptable QC test results have been received by the engineer and confirmed by QA test results.

3.1.1 Test results shall be reported on electronic forms provided by MoDOT. Forms and Contractor Reporting Excel2Oracle Reports (CRE2O) can be found on the MoDOT website. All required forms, reports and material certifications shall be uploaded to a Microsoft SharePoint® site provided by MoDOT, and organized in the file structure established by MoDOT.

3.2 Non-Conformance Reporting. A Non-Conformance Report (NCR) shall be submitted by the contractor when the contractor proposes to incorporate material into the work that does not meet the testing requirements or for any work that does not comply with the contract terms or specifications.

3.2.1 Non-Conformance Reporting shall be submitted electronically on the Non-Conformance Report form provided on the MoDOT Website. The NCR shall be uploaded to the MoDOT SharePoint® site and an email notification sent to the engineer.

3.2.2 The contractor shall propose a resolution to the non-conforming material or work. Acceptance of a resolution by the engineer is required before closure of the non-conformance report.

4.0 Work Planning and Scheduling.

4.1 Two-week Schedule. Each week, the contractor shall submit to the engineer a schedule that outlines the planned project activities for the following two-week period. The two-week schedule shall detail all work and traffic control events planned for that period and any Hold Points specified by the engineer.

4.2 Weekly Meeting. When work is active, the contractor shall hold a weekly project meeting with the engineer to review the planned activities for the following week and to resolve any outstanding issues. Attendees shall include the engineer, the contractor superintendent or project manager and any foreman leading major activities. This meeting may be waived when, in the opinion of the engineer, a meeting is not necessary. Attendees may join the meeting in person, by phone or video conference.

4.3 Pre-Activity Meeting. A pre-activity meeting is required in advance of the start of each new activity, except when waived by the engineer. The purpose of this meeting is to review construction details of the new activity. At a minimum, the discussion topics shall include: safety precautions, QC testing, traffic impacts, and any required Hold Points. Attendees shall include the engineer, the contractor superintendent and the foreman who will be leading the new activity. Pre-activity meetings may be held in conjunction with the weekly project meeting.

4.4 Hold Points. Hold Points are events that require approval by the engineer prior to continuation of work. Hold Points occur at definable stages of work when, in the opinion of the engineer, a review of the preceding work is necessary before continuation to the next stage.

4.4.1 A list of typical Hold Point events is available on the MoDOT website. Use of the Hold Point process will only be required for the project-specific list of Hold Points, if any, that the engineer submits to the contractor in advance of the work. The engineer may make changes to the Hold Point list at any time.

4.4.2 Prior to all Hold Point inspections, the contractor shall verify the work has been completed in accordance with the contract and specifications. If the engineer identifies any corrective actions needed during a Hold Point inspection, the corrections shall be completed prior to continuing work. The engineer may require a new Hold Point to be scheduled if the corrections require a follow-up inspection. Re-scheduling of Hold Points require a minimum 24-hour advance notification from the contractor unless otherwise allowed by the engineer.

5.0 Quality Assurance Testing and Inspection. MoDOT will perform quality assurance testing and inspection of the work, except as specified herein. The contractor shall utilize the inspection checklists provided in the ITP as a guide to minimize findings by MoDOT inspection staff. Submittal of completed checklists is not required, except as specified in 5.1.

5.1 Inspection and testing required in the production of concrete for the project shall be the responsibility of the contractor. Submittal of the 501 Concrete Plant Checklist is required.

6.0 Basis of Payment. No direct payment will be made for compliance with this provision.

J. <u>Slurry and Residue Produced During Surface Treatment of PCCP and Bridge Decks</u> JSP-06-05A

1.1 Description. This work covers the requirements for controlling residue or slurry produced by milling, grinding, planing, grooving or other methods of surface treatments on new or existing PCCP and bridge decks in addition to Section 622.

2.0 Construction Requirements. The following shall be considered the minimum requirements for performing this work within the project limits.

2.1 The contractor shall submit to the Engineer for approval in writing prior to the pre-construction meeting, the best management practices (BMP's) to be used to protect the environment, including the method of disposal of the residue whether on right of way or off-site.

2.2 When slurry is dispersed on the right of way, BMP's shall be installed to keep slurry or residue from entering paved ditches or structures discharging within the areas restricted by Section 622.303.8.6, from entering any waterways or from leaving the right of way.

2.3 Upon approval of the contractor's BMP and residue disposal plan and prior to the contractor beginning surface treatment operations, the Engineer will identify slurry or residue "no discharge zones".

2.4 Operations may be suspended by the Engineer during periods of rainfall or during freezing temperatures.

3.0 Basis of Payment. No direct payment for slurry or residue control requirements for BMP's will be made. Compliance with this specification along with the cost of all materials, labor, and equipment necessary for the surface treatment work shall be included in and completely covered by the unit price bid for each of the items of work for surface treatment included in contract.

K. Clean Water Act Requirements

1.0 Description. The Contractor shall be aware that any work within streams, wetlands, or special aquatic sites requires a Clean Water Act Section 404 permit from the United States Army Corps of Engineers (USACE).

2.0 This project meets the conditions of the following listed permits with no pre-construction notification (No PCN) to the USACE:

Section 404 Nationwide Permit (NWP-14)

3.0 The Contractor shall abide by all general and regional conditions of Section 404 Permits, Section 401 Water Quality Certification, and specific conditions of the following listed Nationwide Permit found in the General Provisions and Supplemental Specifications to the current Missouri Standard Specifications for Highway Construction referenced in this contract.

NWP-14-No PCN letter attached to RES

3.1 If the Contractor makes any changes to the scope or limits of the project, the Contractor shall notify the Engineer who shall then notify the MoDOT Environmental Section to verify the project still meets permit conditions.

3.2 No additional time will be added to this contract for the Contractor to obtain any permits unless the need for additional permits is beyond the control of the Contractor.

4.0 Basis of Payment. There will be no direct payment for compliance with this provision.

L. Restrictions for Migratory Birds NJSP-16-06A

1.0 Description. Swallows or other bird species protected by the Migratory Bird Treaty Act may be nesting under the bridge or bridges that will be repaired under this contract.

2.0 Restrictions. To comply with the Migratory Bird Treaty Act, nests of protected species cannot be disturbed when active (eggs or young are present). Generally, nests are active between April 1 and July 31, but active nests can be present outside of these dates.

2.1 MoDOT to Maintain Prior to the Notice to Proceed. The bridge, or bridges, associated with the work for this contract have been evaluated and any inactive nests found have been removed by MoDOT staff. MoDOT staff will maintain the structures to be free of nests until the Notice to Proceed date. At the notice to proceed, the contractor shall be responsible to maintain the structures to be free of nests until the work on the applicable bridge, or bridges, is complete.

3.0 Avoidance Measures. The contractor shall not disturb active nests or destroy adults, eggs or young birds. In an effort to comply with the Migratory Bird Treaty Act, the contractor operations will be limited to the options established in the following sections.

3.1 Inactive or Partially Constructed Nests. If nests are present and MoDOT determines that the nests are inactive or partially constructed, the contractor may remove the nests provided that the colony's inactive or partially constructed nests are completely removed by March 15 and the contractor maintains a nest free condition until the bridge work is complete. Dry removal methods shall be used when practicable. If dry removal is not practicable, hydro cleaning may be used if approved by the Engineer and only if water is free of blasting grit, chemicals, or detergents, and applied using pressure less than 5,000 PSI. Clean water such as that from municipal water treatment plants or wells shall be used. Use of source water from Waters of the State (i.e., streams or lakes), is allowable, if the appropriate methods to prevent the possible spread of invasive aquatic species are implemented.

3.2 Water and Equipment Used for Hydro cleaning. Aquatic invasives such as zebra mussels and some algae species have infested several bodies of water in the United States and can be transported by vessels (barges, boats, tugs, tankers, etc.) and equipment (tanks, tubing, pumps, etc.) that have been used in areas that contain these invasive species. If equipment is not properly inspected and treated to prevent the spread of invasives, these species can be introduced into areas not currently known to have a population. These invasive species are detrimental to existing ecosystems and can outcompete native species. To assist in preventing the introduction and spread of aquatic invasive species through MoDOT projects in Missouri streams and lakes, the following precautions shall be followed.

3.2.1 Use of Water from Streams, Lakes, or Ponds. Contractors shall not use water for nest removal from streams, lakes, or ponds, unless they have implemented appropriate methods to prevent the possible spread of invasive aquatic species. Water sources from municipal water treatment plants or wells may be used without following these measures provided the equipment to be used has not previously contained waters from streams, lakes, or ponds. If the equipment has previously contained waters from other streams or lakes, the following measures must be implemented prior to use.

3.2.1.1 Equipment Washing. Prior to the use or re-use of equipment following any use with water from streams, lakes or ponds, all equipment shall be washed and rinsed thoroughly with hard spray (power wash) and hot (minimum 120° F) water, for at least one minute.

3.2.1.2 Equipment Treating or Drying. Equipment shall be treated or dried in one of the following manners.

3.2.1.2.1 Equipment interior and/or other surfaces shall be treated with a 10% bleach solution to kill any aquatic nuisance species. This solution must also be run through all intake lines and hoses, to sterilize interior components. When chlorine treatment is used, all chlorine runoff from equipment washing must be collected and properly treated and/or disposed of in accordance with Sec 806.

3.2.1.2.2 Equipment interior and/or other surfaces shall be treated with 140º F water for a minimum of 10 seconds contact on all surfaces. 140 º F water must also be run through all intake lines and hoses, to purge any standing water.

3.2.1.2.3 Equipment shall be flushed of all non-municipal water, and dried thoroughly, in the sun before using in or transporting between streams and lakes. Dry times will depend on the season the equipment is being used. Equipment must dry a minimum of 7 days for June-September, 18 days for March-May; 18 days for October-November, and 30 days for December-February. The drying method should be reserved as a last resort option.

3.2.2 Prior to use of equipment, contractors shall provide the MoDOT inspector written documentation of the equipment's geographic origin (including the water body it was last used in), as well as defining the specified treatment method used to adequately ensure protection against invasive species. The written documentation will include a statement indicating the contractor is aware of these provisions and will also treat the equipment appropriately after completion of the project.

3.3 Active Nests. The contractor may work on the bridge if active nests are present, as long as the work does not impact or disturb the birds and/or nests. At a minimum, work shall not be performed within 10 feet of an active nest; however, the contractor is responsible for ensuring their activities do not impact the nests, eggs, or young.

4.0 Additional Responsibilities. If active bird nests remain after all reasonable avoidance measures have been taken, or if bird nests are observed during project construction, the contractor shall notify the Resident Engineer and contact the MoDOT Environmental Section (573-526-4778) to determine if there are other allowable options.

M. Dewatering

1.0 Description. This provision covers dewatering the site as necessary to provide a suitable condition for construction of the box culvert as approved by the engineer. This work will only be performed at the discretion of the engineer and will be underrun if not required by the engineer. If the engineer determines it necessary to provide dewatering, the work shall be performed in accordance with Sec 206 and this job special provision.

2.0 Construction Requirements. Dewatering shall provide a dry work area suitable to construct the box culvert within specifications, as approved by the engineer. Typical dewatering methods consist of, but are not limited to, construction of cofferdams, seal courses, over excavation, well point systems, dewatering and drainage diversion. Any dewatering method utilized shall conform to all environmental laws and regulations.

3.0 Method of Measurement. No measurement will be made.

4.0 Basis of Payment. Payment for dewatering will be made regardless of which dewatering means is utilized. No payment will be made if the work area is not maintained in a dewatered state as approved by the engineer. The lump sum payment for dewatering will be considered full compensation, and no time extensions will be made regardless of which means and methods are utilized by the contractor.

N. Temporary Stream Crossings

1.0 Description. This work shall include construction of a temporary stream crossing or workpad to facilitate the placement of the Contractor's equipment in the stream, in accordance with Division 100 of the General Provisions, Section 806.1 of the Standard Specifications, and as follows.

2.0 Construction Requirements. The Contractor shall be solely responsible for the design, installation, maintenance, and removal of the temporary stream crossing or workpad, as well as any structures installed to maintain proper flow while the temporary crossing or workpad is in place.

2.1 Temporary crossings and workpads shall be constructed of clean rock fill in accordance with Sec 303.2, except Sec 303.2.3 shall not apply.

2.2 The Contractor shall design the temporary crossing or workpad, including the size and number of pipes, to maintain normal flows, prevent upstream flooding, and allow free movement of aquatic life in the stream.

2.3 Storm water from the approaches to temporary crossings or workpads must be diverted to appropriate erosion control devices to allow sediment-laden runoff to be treated prior to entering the stream.

2.4 Pipes shall be anchored to prevent being swept from the project during high flows.

2.5 Temporary stream crossings and workpads shall not conflict with existing utilities. Any utilities that conflict with the construction of a temporary crossing/workpad or operation of equipment on a temporary crossing/workpad shall be relocated at the Contractor's expense.

3.0 Basis of Payment. No direct payment will be made for any equipment, labor, material, or time involved with the design, installation, maintenance, or removal of temporary stream crossings and workpads. The contractor shall be responsible for all costs, including damage and penalties.

O. Flap Gate

1.0 Description. This work shall consist of furnishing and installing flap gates of standard design and fit the opening shown on the plans.

2.0 Materials. Flap gates shall be constructed as follows.

BILL OF MATERIAL		
PC. #	**DESCRIPTION**	**# REQUIRED**
1	CONNECTING BAND - VAR LENGTH (A)	1
2	¼" x 2" BAR x 2 ½" LONG	2
3	¼" PLATE COVER VAR DIA. (B) - UP TO 24" DIA. PIPE 3/8" PLATE COVER VAR DIA. (B) - ALL PIPES GREATER THAN 24" DIA.	1
4	¼" x 2" BAR x VAR LENGTH (C)	2
5	¼" x 2" BAR x 2" LONG W/BRASS BUSHINGS	2

6	$^{7}/_{16}$" Ø ROD x 8½" LONG	1
7	FLAT BAND LUGS	2
8	½" Ø x 6" BAND BOLT & NUT	1
ATTACHMENT BOLTS ($^{3}/_{8}$" Ø x 1½" HEX. HEAD)		4

2.1 As a standard finish all gates shall be painted with a shop coat of red oxide.

3.0 Construction Requirements. Flap gates shall react to any difference in water level, and shall be hinged to seat accurately. Flap gates shall be constructed according to Figure 1 – Dimension Details, Figure 2 – Connecting Band and Figure 3 – Cover Plate.

4.0 Method of Measurement. For the basis of this contract, all materials used in constructing the flag gate shall be considered as a single unit. Measurement will be made per each unit installed by the contractor and accepted by the engineer.

5.0 Basis of Payment. The accepted quantity for flap gates, complete in place including connection to the pipe, will be paid for at the contract unit price of each (6142024). No additional payment will be made for any labor, equipment, or time necessary to fulfill the requirements of this special provision.

DIMENSION DETAILS			
PIPE DIA.	**(A) CONNECTING BAND LENGTH**	**(B) PLATE COVER DIA.**	**(C) BAR LENGTH**
15"	54"	18.5"	16"
18"	64"	21.5"	19"
21"	74"	24.5"	22"
24"	83"	27.5"	25"
30"	102"	33.5"	31"
36"	120"	39.5"	36"
42"	140"	45.5"	42"
48"	159"	51.5"	49"

Figure 1 – Dimension Details

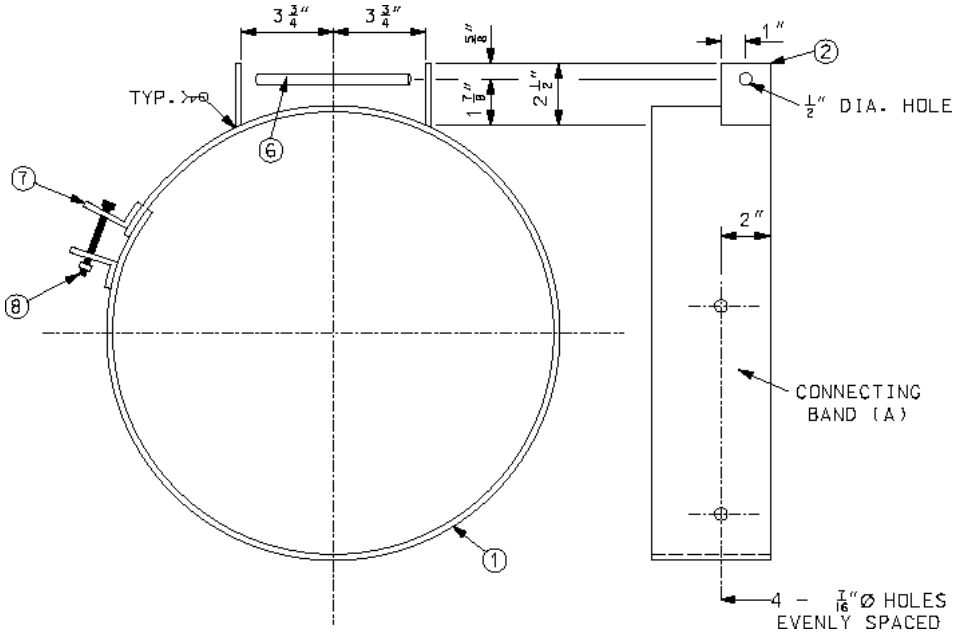

Figure 2 - Connecting Band

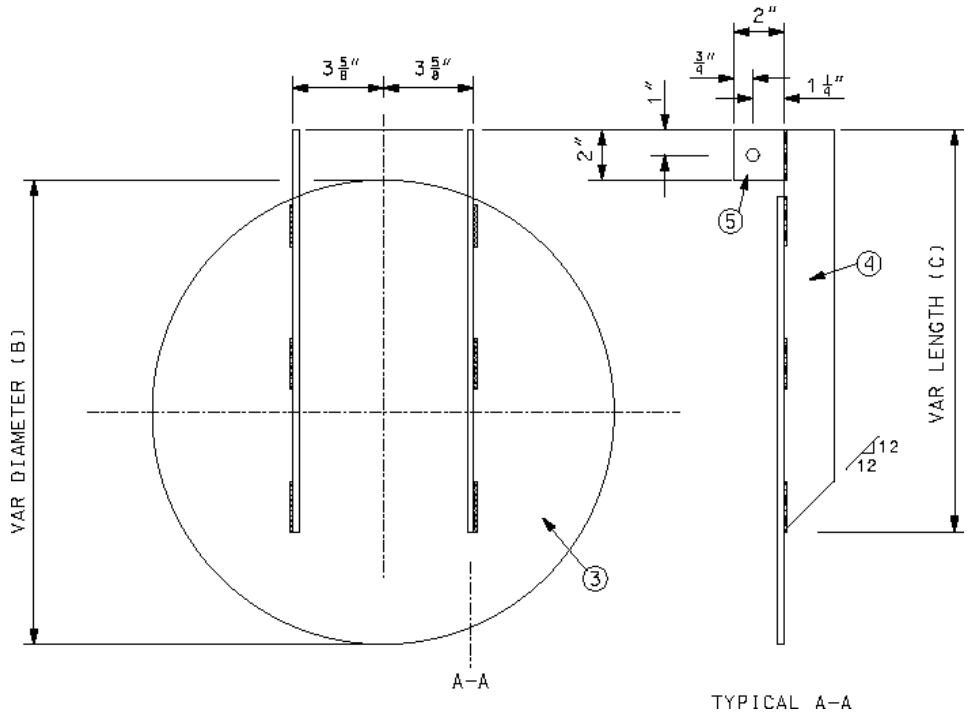

Figure 3 - Cover Plate

P. Supplemental Revisions JSP-18-01AB

Compliance with 2 CFR 200.216 – Prohibition on Certain Telecommunications and Video Surveillance Services or Equipment.

The Missouri Highways and Transportation Commission shall not enter into a contract (or extend or renew a contract) using federal funds to procure or obtain equipment, services, or systems that uses covered telecommunications equipment or services as substantial or as critical technology as part of any system where the video surveillance and telecommunications equipment was produced by Huawei Technologies Company, ZTE Corporation, Hytera Communications Corporation, Hangzhou Hikvision Digital Technology Company, or Dahua Technology Company (or any subsidiary or affiliate of such entities).

Stormwater Compliance Requirements

1.0 Description. This provision requires the contractor to provide a Water Pollution Control Manager (WPCM) for any project that includes land disturbance on the project site and the total area of land disturbance, both on the project site, and all Off-site support areas, is one (1) acre or more. Regardless of the area of Off-site disturbance, if no land disturbance occurs on the project site, these provisions do not apply. When a WPCM is required, all sections within this provision

shall be applicable, including assessment of specified Liquidated Damages for failure to correct Stormwater Deficiencies, as specified herein. This provision is in addition to any other stormwater, environmental, and land disturbance requirements specified elsewhere in the contract.

1.1 Definitions. The project site is defined as all areas designated on the plans, including temporary and permanent easements. The project site is equivalent to the "permitted site", as defined in MoDOT's State Operating Permit. An Off-site area is defined as any location off the project site the contractor utilizes for a dedicated project support function, such as, but not limited to, staging area, plant site, borrow area, or waste area.

1.2 Reporting of Off-Site Land Disturbance. If the project includes any planned land disturbance on the project site, prior to the start of work, the contractor shall submit a written report to the engineer that discloses all Off-site support areas where land disturbance is planned, the total acreage of anticipated land disturbance on those sites, and the land disturbance permit number(s). Upon request by the engineer, the contractor shall submit a copy of its land disturbance permit(s) for Off-site locations. Based on the total acreage of land disturbance, both on and Off-site, the engineer shall determine if these Stormwater Compliance Requirements shall apply. The Contractor shall immediately report any changes to the planned area of Off-site land disturbance. The Contractor is responsible for obtaining its own separate land disturbance permit for Off-site areas.

2.0 Water Pollution Control Manager (WPCM). The Contractor shall designate a competent person to serve as the Water Pollution Control Manager (WPCM) for projects meeting the description in Section 1.0. The Contractor shall ensure the WPCM completes all duties listed in Section 2.1.

2.1 Duties of the WPCM:

(a) Be familiar with the stormwater requirements including the current MoDOT State Operating Permit for construction stormwater discharges/land disturbance activities; MoDOT's statewide Stormwater Pollution Prevention Plan (SWPPP); the Corps of Engineers Section 404 Permit, when applicable; the project specific SWPPP, the Project's Erosion & Sediment Control Plan; all applicable special provisions, specifications, and standard drawings; and this provision;

(b) Successfully complete the MoDOT Stormwater Training Course within the last 4 years. The MoDOT Stormwater Training is a free online course available at MoDOT.org;

(c) Attend the Pre-Activity Meeting for Grading and Land Disturbance and all subsequent Weekly Meetings in which grading activities are discussed;

(d) Oversee and ensure all work is performed in accordance with the Project-specific SWPPP and all updates thereto, or as designated by the engineer;

(e) Review the project site for compliance with the Project SWPPP, as needed, from the start of any grading operations until final stabilization is achieved, and take necessary actions to correct any known deficiencies to prevent pollution of the waters of the state or adjacent property owners prior to the engineer's weekly inspections;

(f) Review and acknowledge receipt of each MoDOT Inspection Report (Land Disturbance Inspection Record) for the Project within forty eight (48) hours of receiving the report and ensure that all Stormwater Deficiencies noted on the report are corrected as soon as possible, but no later than stated in Section 5.0.

3.0 Pre-Activity Meeting for Grading/Land Disturbance and Required Hold Point. A Pre-Activity meeting for grading/land disturbance shall be held prior to the start of any land disturbance operations. No land disturbance operations shall commence prior to the Pre-Activity meeting except work necessary to install perimeter controls and entrances. Discussion items at the pre-activity meeting shall include a review of the Project SWPPP, the planned order of grading operations, proposed areas of initial disturbance, identification of all necessary BMPs that shall be installed prior to commencement of grading operations, and any issues relating to compliance with the Stormwater requirements that could arise in the course of construction activity at the project.

3.1 Hold Point. Following the pre-activity meeting for grading/land disturbance and subsequent installation of the initial BMPs identified at the pre-activity meeting, a Hold Point shall occur prior to the start of any land disturbance operations to allow the engineer and WPCM the time needed to perform an on-site review of the installation of the BMPs to ensure compliance with the SWPPP is met. Land disturbance operations shall not begin until authorization is given by the engineer.

4.0 Inspection Reports. Weekly and post run-off inspections will be performed by the engineer and each Inspection Report (Land Disturbance Inspection Record) will be entered into a web-based Stormwater Compliance database. The WPCM will be granted access to this database and shall promptly review all reports, including any noted deficiencies, and shall acknowledge receipt of the report as required in Section 2.1 (f.).

5.0 Stormwater Deficiency Corrections. All stormwater deficiencies identified in the Inspection Report shall be corrected by the contractor within 7 days of the inspection date or any extended period granted by the engineer when weather or field conditions prohibit the corrective work. If the contractor does not initiate corrective measures within 5 calendar days of the inspection date or any extended period granted by the engineer, all work shall cease on the project except for work to correct these deficiencies, unless otherwise allowed by the engineer. All impact costs related to this halting of work, including, but not limited to stand-by time for equipment, shall be borne by the Contractor. Work shall not resume until the engineer approves the corrective work.

5.1 Liquidated Damages. If the Contractor fails to complete the correction of all Stormwater Deficiencies listed on the MoDOT Inspection Report within the specified time limit, the Commission will be damaged in various ways, including but not limited to, potential liability, required mitigation, environmental clean-up, fines, and penalties. These damages are not reasonably capable of being computed or quantified. Therefore, the contractor will be charged with liquidated damages specified in the amount of $2,000 per day for failure to correct one or more of the Stormwater Deficiencies listed on the Inspection Report within the specified time limit. In addition to the stipulated damages, the stoppage of work shall remain in effect until all corrections are complete.

6.0 Basis of Payment. No direct payment will be made for compliance with this provision.

Anti-Discrimination Against Israel Certification

By signing this contract, the Company certifies it is not currently engaged in and shall not, for the duration of the contract, engage in a boycott of goods or services from the State of Israel, companies doing business in or with Israel or authorized by, licensed by, or organized under the laws of the State of Israel, or persons or entities doing business in the State of Israel as defined by Section 34.600 RSMo. This certification shall not apply to contracts with a total potential value of less than One Hundred Thousand Dollars ($100,000) or to contractors with fewer than ten (10) employees.

Ground Tire Rubber (GTR) Dry Process Modification of Bituminous Pavement Material

1.0 Description. This work shall consist of the dry process of adding ground tire rubber (GTR) to modify bituminous material to be used in highway construction. Existing GTR requirements in Section 1015 pertain to the wet process method of GTR modification that blends GTR with the asphalt binder (terminal blending or blending at HMA plant). The following requirements shall govern for dry process GTR modification. The dry process method adds GTR as a fine aggregate or mineral filler during mix production. All GTR modified asphalt mixtures shall be in accordance with Secs 401, 402, or 403 as specified in the contract; except as revised by this specification.

2.0 Materials. The contractor shall furnish a manufacturer's certification to the engineer for each shipment of GTR furnished stating the name of the manufacturer, the chemical composition, workability additives, and certifying that the GTR supplied is in accordance with this specification.

2.1 Product Approval. The GTR product shall contain a Trans-Polyoctenamer (TOR) added at 4.5 % of the weight of the crumb rubber or an engineered crumb rubber (ECR) workability additive that has proven performance in Missouri. Other GTR additives shall be demonstrated and proven prior to use such as a five-year field performance history in other states or performance on a federal or state-sanctioned accelerated loading facility.

2.2 General. GTR shall be produced from processing automobile or truck tires by ambient or cryogenic grinding methods. Heavy equipment tires, uncured or de-vulcanized rubber will not be permitted. GTR shall also meet the following material requirements:

Table 1 – GTR Material Properties

Property	Test Method	Criteria
Specific Gravity	ASTM D1817	1.02 to 1.20
Metal Contaminates	ASTM D5603	$\leq$ 0.01%
Fiber Content	ASTM D5603	$\leq$ 0.5%
Moisture Content	ASTM D1509	$\leq$ 1.0%*
Mineral Filler	AASHTO M17	$\leq$ 4.0%

*Moisture content of the GTR shall not cause foaming when combined with asphalt binder and aggregate during mix production

2.3 Gradation. The GTR material prior to TOR or ECR workability additives shall meet the following gradation and shall be tested in accordance with ASTM D5603 and ASTM D5644.

Table 2 – GTR Gradation	
Sieve	**Percent Passing by Weight**
No. 20	100
No. 30	98-100
No. 40	50-70
No. 100	5-15

3.0 Delivery, Storage, and Handling. The GTR shall be supplied in moisture-proof packaging or other appropriate bulk containers. GTR shall be stored in a dry location protected from rain before use. Each bag or container shall be properly labeled with the manufacturer's designation for the GTR and specific type, mesh size, weight and manufacturer's batch or Lot designation.

4.0 Feeder System. Dry Process GTR shall be controlled with a feeder system using a proportioning device that is accurate to within ± 3 percent of the amount required. The system shall automatically adjust the feed rate to always maintain the material within this tolerance and shall have a convenient and accurate means of calibration. The system shall provide in-process monitoring, consisting of either a digital display of output or a printout of feed rate, in pounds per minute, to verify feed rate. The supply system shall report the feed in 1-pound increments using load cells that will enable the user to monitor the depletion of the GTR. Monitoring the system volumetrically will not be allowed. The feeder shall interlock with the aggregate weight system and asphalt binder pump to maintain correct mixture proportions at all production rates.

Flow indicators or sensing devices for the system shall be interlocked with the plant controls to interrupt mixture production if GTR introduction rate is not within ± 3 percent. This interlock will immediately notify the operator if GTR introduction rate exceeds introduction tolerances. All plant production will cease if the introduction rate is not brought back within tolerance after 30 seconds. When the interlock system interrupts production and the plant has to be restarted, upon restarting operations; the modifier system shall run until a uniform feed can be observed on the output display. All mix produced prior to obtaining a uniform feed shall be rejected.

4.1 Batch Plants. GTR shall be added to aggregate in the weigh hopper. Mixing times shall be increased per GTR manufacturer recommendations.

4.2 Drum Plants. The feeder system shall add GTR to aggregate and liquid binder during mixing and provide sufficient mixing time to produce a uniform mixture. The feeder system shall ensure GTR does not become entrained in the exhaust system of the drier or plant and is not exposed to the drier flame at any point after introduction.

5.0 Testing During Mixture Production. Testing of asphalt mixes containing GTR shall not begin until at least 30 minutes after production or per additive supplier's recommendation.

6.0 Construction Requirements. Mixes containing GTR shall have a target mixing temperature of 325 F or as directed by the GTR additive supplier. The additive supplier's recommendations shall be followed to allow for GTR binder absorption/reaction. This may include holding mix in the silo to allow time for binder to absorb into the GTR. Rolling operations may need to be modified.

7.0 Mix Design Test Method Modification. A formal mixing procedure from the additive supplier shall be provided to the contractor and engineer that details the proper sample preparation, including blending GTR with the binder or other additives. Samples shall be prepared and

fabricated in accordance with this procedure by the engineer and contractor throughout the duration of the project.

8.0 Mix design Volumetrics. Mix design volumetric equations shall be modified as follows:

8.1 Additional virgin binder added to offset GTR absorption of binder shall be counted as part of the mix virgin binder

8.2 GTR shall be included as part of the aggregate when calculating VMA of the mix.

8.2.1 GTR SPG shall be 1.15

8.3 Mix G_{sb} used to determine VMA shall be calculated as follows:

$$G_{sb\ (JMF)} = \frac{(100 - P_{bmv})}{\left(\frac{P_s}{G_{sb}} + \frac{P_{GTR}}{G_{GTR}}\right)}$$

$where$:

$G_{sb\ (JMF)} = bulk\ specific\ gravity\ of\ the\ combined\ aggregate\ including\ GTR$
$P_{bmv} = percent\ virgin\ binder\ by\ total\ mixture\ weight$
$P_s = percent\ aggregate\ by\ total\ mixture\ weight\ (not\ including\ GTR)$
$P_{GTR} = percent\ GTR\ by\ total\ mixture\ weight$
$G_{sb} = bulk\ specific\ gravity\ of\ the\ combined\ aggregate\ (not\ including\ GTR)$
$G_{GTR} = GTR\ specific\ gravity$

8.4 G_{se} shall be calculated as follows:

$$G_{se} = \frac{(100 - P_b - P_{GTR})}{\left(\frac{100}{G_{mm}} - \frac{P_b}{G_b} - \frac{P_{GTR}}{G_{GTR}}\right)}$$

8.5 P_{be} shall be calculated as follows:

$$P_{be} = P_b - \frac{P_{ba}}{100} * (P_s + P_{GTR})$$

9.0 Minimum GTR Amount. The minimum dosage rate for GTR shall be 5 % by weight of total binder for an acceptable one bump grade or 10 % by weight of total binder for an acceptable two bump grade as detailed in the following table. Varying percentage blends of GTR and approved additives may be used as approved by the engineer with proven performance and meeting the specified requirements of the contract grade.

Contract Binder Grade	Percent Effective Virgin Binder Replacement Limits	Required Virgin Binder Grade	Minimum GTR Dosage Rate
PG 76-22	0 - 20	PG 70-22	5 %
		PG 64-22	10 %
PG 70-22	0 - 30	PG 64-22	5 %
		PG 58-28	10 %
PG 64-22	0 – 40*	PG 58-28	5 %
		PG 52-34	10 %
PG 58-28	0 – 40*	PG 52-34	5 %
		PG 46-34	10 %

* Reclaimed Asphalt Shingles (RAS) may be used when the contract grade is PG 64-22 or PG 58-28. RAS replacement shall follow the 2 x RAS criteria when calculating percent effective binder replacement in accordance Sec 401.

Delete Sec 403.19.2 and substitute the following:

403.19.2 Lots. The lot size shall be designated in the contractor's QC Plan. Each lot shall contain no less than four sublots and the maximum sublot size shall be 1,000 tons. The maximum lot size shall be 4,000 tons for determination of pay factors. Sublots from incomplete lots shall be combined with the previous complete lot for determination of pay factors. When no previous lot exists, the mixture shall be treated in accordance with Sec 403.23.7.4.1. A new lot shall begin when the asphalt content of a mixture is adjusted in accordance with Sec 403.11.

Delete Sec 106.9 in its entirety and substitute the following:

106.9 Buy America Requirements.
Buy America Requirements are waived if the total amount of Federal financial assistance applied to the project, through awards or subawards, is below $500,000.

106.9.1 Buy America Requirements for Iron and Steel.
On all federal-aid projects, the contractor's attention is directed to Title 23 CFR 635.410 *Buy America Requirements*. Where steel or iron products are to be permanently incorporated into the contract work, steel and iron material shall be manufactured, from the initial melting stage through the application of coatings, in the USA except for "minimal use" as described herein. Furthermore, any coating process of the steel or iron shall be performed in the USA. Under a general waiver from FHWA the use of pig iron and processed, pelletized, and reduced iron ore manufactured outside of the USA will be permitted in the domestic manufacturing process for steel or iron material.

106.9.1.1 Buy America Requirements for Iron and Steel for Manufactured items.
A manufactured item will be considered iron and steel if it is "predominantly" iron or steel. Predominantly iron or steel means that the cost of iron or steel content of a product is more than 50 percent of the total cost of all its components.

106.9.2 Any sources other than the USA as defined will be considered foreign. The required domestic manufacturing process shall include formation of ingots and any subsequent process. Coatings shall include any surface finish that protects or adds value to the product.

106.9.3 "Minimal use" of foreign steel, iron or coating processes will be permitted, provided the cost of such products does not exceed 1/10 of one percent (0.1 percent) of the total contract cost or $2,500.00, whichever is greater. If foreign steel, iron, or coating processes are used, invoices to document the cost of the foreign portion, as delivered to the project, shall be provided and the engineer's written approval obtained prior to placing the material in any work.

106.9.4 Buy America requirements include a step certification for all fabrication processes of all steel or iron materials that are accepted per Sec 1000. The AASHTO Product Evaluation and Audit Solutions compliance program verifies that all steel and iron products fabrication processes conform to 23 CFR 635.410 Buy America Requirements and is an acceptable standard per 23 CFR 635.410(d). AASHTO Product Evaluation and Audit Solutions compliant suppliers will not be required to submit step certification documentation with the shipment for some selected steel and iron materials. The AASHTO Product Evaluation and Audit Solutions compliant supplier shall maintain the step certification documentation on file and shall provide this documentation to the engineer upon request.

106.9.4.1 Items designated as Category 1 will consist of steel girders, piling, and reinforcing steel installed on site. Category 1 items require supporting documentation prior to incorporation into the project showing all steps of manufacturing, including coating, as being completed in the United States and in accordance with CFR Title 23 Section 635.410 Buy America Requirements. This includes the Mill Test Report from the original producing steel mill and certifications documenting the manufacturing process for all subsequent fabrication, including coatings. The certification shall include language that certifies the following. That all steel and iron materials permanently incorporated in this project was procured and processed domestically and all manufacturing processes, including coating, as being completed in the United States and in accordance with CFR Title 23 Section 635.410.

106.9.4.2 Items designated as Category 2 will include all other steel or iron products not in Category 1 and permanently incorporated in the project. Category 2 items shall consist of, but not be limited to items such as fencing, guardrail, signing, lighting and signal supports. The prime contractor is required to submit a material of origin form certification prior to incorporation into the project from the fabricator for each item that the product is domestic. The Certificate of Materials Origin form (link to certificate form) from the fabricator must show all steps of manufacturing, including coating, as being completed in the United States and in accordance with CFR Title 23 Section 635.410 Buy America Requirements and be signed by a fabricator representative. The engineer reserves the right to request additional information and documentation to verify that all Buy America requirements have been satisfied. These documents shall be submitted upon request by the engineer and retained for a period of 3 years after the last reimbursement of the material.

106.9.4.3 Any minor miscellaneous steel or iron items that are not included in the materials specifications shall be certified by the prime contractor as being procured domestically. Examples of these items would be bolts for sign posts, anchorage inserts, etc. The certification shall read "I certify that all steel and iron materials permanently incorporated in this project during all manufacturing processes, including coating, as being completed in the United States and in accordance with CFR Title 23 Section 635.410 Buy America Requirements procured and processed domestically in accordance with CFR Title 23 Section 635.410 Buy America

Requirements. Any foreign steel used was submitted and accepted under minor usage". The certification shall be signed by an authorized representative of the prime contractor.

106.9.5 When permitted in the contract, alternate bids may be submitted for foreign steel and iron products. The award of the contract when alternate bids are permitted will be based on the lowest total bid of the contract based on furnishing domestic steel or iron products or 125 percent of the lowest total bid based on furnishing foreign steel or iron products. If foreign steel or iron products are awarded in the contract, domestic steel or iron products may be used; however, payment will be at the contract unit price for foreign steel or iron products.

106.9.6 Buy America Requirements for Construction Materials other than iron and steel materials. Construction materials means articles, materials, or supplies that consist of only one of the items listed. Minor additions of articles, materials, supplies, or binding agents to a construction material do not change the categorization of the construction material. Upon request by the engineer, the contractor shall submit a domestic certification for all construction materials listed that are incorporated into the project.

(a) Non-ferrous metals
(b) Plastic and Polymer-based products (including polyvinylchloride, composite building materials, and polymers used in fiber optic cables)
(c) Glass (including optic glass)
(d) Fiber optic cable (including drop cable)
(e) Optical fiber
(f) Lumber
(g) Engineered wood
(h) Drywall

106.9.6.1 Minimal Use allowance for Construction Materials other than iron or steel.
"The total value of the non-compliant products is no more than the lesser of $1,000,000 or 5% of total applicable costs for the project." The contractor shall submit to the engineer any non-domestic materials and their total material cost to the engineer. The contractor and the engineer will both track these totals to assure that the minimal usage allowance is not exceeded.

106.9.7 Buy America Requirements for Manufactured Products.
Manufactured products means:

(a) Articles, materials, or supplies that have been:

  (i) Processed into a specific form and shape; or
  (ii) Combined with other articles, materials, or supplies to create a product with different properties than the individual articles, materials, or supplies.

(b) If an item is classified as an iron or steel product, a construction material, or a section 70917(c) material under § 184.4(e) and the definitions set forth in this section, then it is not a manufactured product. However, an article, material, or supply classified as a manufactured product under § 184.4(e) and paragraph (1) of this definition may include components that are construction materials, iron or steel products, or section 70917(c) materials.

106.9.7.1 Manufactured products are exempt from Buy America requirements. To qualify as a manufactured product, items that consist of two or more of the listed construction materials that have been combined together through a manufacturing process, and items that include at least one of the listed materials combined with a material that is not listed through a manufacturing

process, should be treated as manufactured products, rather than as construction materials.

106.9.7.2 Manufactured items are covered under a general waiver to exclude them from Buy America Requirements. To qualify for the exemption the components must comprise of 55% of the value of materials in the item. The final assembly must also be performed domestically.

Delete Sec 109.14.1 thru Sec 109.14.8 and substitute the following:

109.14.1 Monthly Fuel Index. Each month, the Monthly Fuel Index will be established as the average retail price per gallon for Ultra Low Sulfur Diesel for the Midwest (PADD 2) area as posted on the first Monday of the month by the U.S. Energy Information Administration (EIA). Should the posted price not be available for any reason, the MoDOT State Construction and Materials Engineer will use reasonable methods, at their sole discretion, to establish the Monthly Fuel Index on an interim basis until the EIA resumes its publication.

109.14.2 Fuel Adjustment Calculation.

B = Base Fuel Index = Monthly Fuel Index in the month in which the project was let
C = Current Index = Monthly Fuel Index in the month in which the work was performed
U = Units of work performed within the current pay estimate period (applicable pay units)
F = Total Fuel Usage Factor (gal./applicable pay units)

Fuel Adjustment (Dollars) = (C – B) x U x F

109.14.3 Each pay estimate period, a fuel adjustment payment or deduction will be applied for the quantity of work performed that period on each qualifying pay item. For calculation of the fuel adjustment, work performed on the first day of a month will generally be included with the second estimate in the previous month to keep fuel adjustments in sync with MoDOT's normal payment estimate period schedule. The Commission reserves the right to include work performed on the first day of the month with the current month to accommodate financial accounting termini, such as the beginning of the state and federal fiscal years (July 1 and October 1).

109.14.4 If the bidder wishes to be bound by these specifications, the bidder shall execute the acceptance form in the proposal. Failure by the bidder to execute the acceptance form will be interpreted to mean election to not participate in the price adjustment for fuel.

Disposal of Blast Media and Paint Residue

1.0 Description. Whereas Sec 1081.10 requires delivery of Blast Media and Paint Residue (BMPR) produced from bridge coating activities to The Doe Run Company for recycling, and considering the amount of BMPR produced on all active MoDOT projects statewide at any given point in time may exceed the recycling capacity of Doe Run, this provision allows for an alternate method of disposal of BMPR. The contractor, at its discretion, can choose this disposal option or the Doe Run recycle option, when both are available. When Doe Run is not currently capable or agreeable to accept the BMPR, this alternate disposal option shall be considered mandatory, and at no additional cost to the Commission.

2.0 Disposal in Landfill. In lieu of delivery to Doe Run for recycling, BMPR material shall be disposed in the appropriate type of approved landfill, as determined by Toxicity Characteristic

Leaching Procedure (TCLP) testing. The material must be TCLP tested to determine if it contains a level of hazardous waste such that requires disposal in a hazardous waste landfill. A sampling plan for testing shall be submitted to MoDOT for review and concurrence. Sampling shall be performed by the contractor. MoDOT will witness the sampling to ensure it is conducted per the plan submitted.

2.1 The contractor shall submit the collected samples to a qualified third-party testing facility to perform TCLP testing. If the sample indicates that the BMPR material qualifies as hazardous waste, then the materials represented by that sample shall be delivered to a licensed hazardous waste landfill for disposal. The contractor shall be responsible for hiring a licensed hazardous waste transporter to transport the hazardous waste to the landfill. The contractor shall comply with all applicable laws and regulations for storage and shipping of the hazardous waste material. If the testing indicates that the BMPR material qualifies as a special waste, it shall be taken to a certified landfill for disposal. The contractor shall be responsible for the transportation of the special waste material to the certified landfill. The requirement to ship the BMPR material by barrels will be waived. Any alternate containers utilized shall comply with all applicable laws and regulations for shipping this type of special waste material. Copies of all shipping manifests, landfill disposal agreements, and any other legally required documentation shall be provided to the engineer.

3.0 Basis of Payment. No payment will be made for any costs associated with this landfill disposal option, including, but not limited to, sampling, testing, delivery, temporary storage, or disposal fees.