MISSOURI HIGHWAYS AND TRANSPORTATION COMMISSION

PLANS FOR PROPOSED STATE HIGHWAY

HOWARD COUNTY

SECTION 8, T51N - R17W

DESIGN DESIGNATION

A.A.D.T. - 2024 = 1324
A.A.D.T. - 2044 = 1500
D.H.V. = 7.7%
T = 7.2%
V = 35 M.P.H.
D = 42.1%/57.9

FUNCTIONAL CLASSIFICATION - MINOR ARTERIAL

NORMAL RIGHT OF WAY

AQUISITION OF NORMAL ACCESS RIGHT OF WAY IS NECESSARY FOR CONSTRUCTION OF THIS PROJECT

CONVENTIONAL SYMBOLS

(USED IN PLANS)

	EXISTING	NEW
BUILDINGS AND STRUCTURES		
GUARD RAIL		
GUARD CABLE		
CONCRETE RIGHT-OF-WAY MARKER		
STEEL RIGHT-OF-WAY MARKER		
LOCATION SURVEY MARKER		
UTILITIES		
FIBER OPTICS	-FO-	~~FO~~
OVERHEAD CABLE TV	-OTV-	~~OTV~~
UNDERGROUND CABLE TV	-UTV-	~~UTV~~
OVERHEAD TELEPHONE	-OT-	~~OT~~
UNDERGROUND TELEPHONE	-UT-	~~UT~~
OVERHEAD POWER	-OE-	~~OE~~
UNDERGROUND POWER	-UE-	~~UE~~
SANITARY SEWER	-S-	~~S~~
STORM SEWER	-SS-	~~SS~~
GAS	-G-	~~G~~
WATER	-W-	~~W~~
MANHOLE	SAN	
FIRE HYDRANT	HYD	
WATER VALVE	WV	
WATER METER	WM	
DROP INLET	D	
DITCH BLOCK		
GROUND MOUNTED SIGN	SIGN	
LIGHT POLE		
H-FRAME POWER POLE		
TELEPHONE PEDESTAL	PED	
FENCE		
CHAIN LINK	-V-	
WOVEN WIRE	-X-	
GATE POST		
BENCHMARK	BM	

NOTE: DASHED OR OPEN SYMBOLS INDICATE EXISTING FEATURES

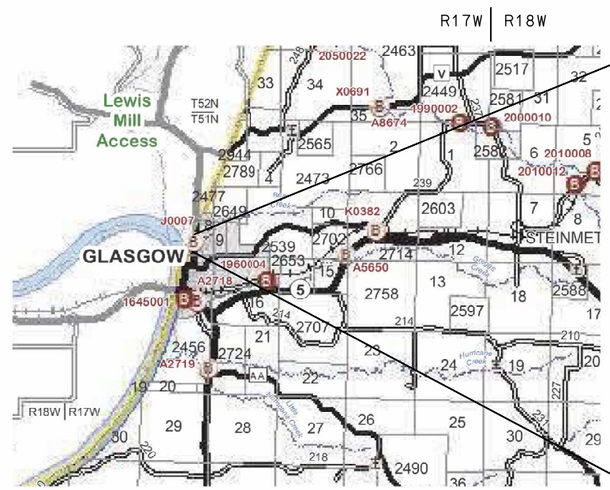

STA. 1087+85.00
LOG MI. 117.425

LOG MI. 117.658
STA. 1100+17.94

BRIDGE REPLACEMENT - BR. A9250 OVER BEAR CREEK
GRADING, DRAINAGE, GUARDRAIL AND SIDEWALKS

PROJECT LENGTH

KEY MAP
SHOWING LOCATION OF HOWARD COUNTY

NOT TO SCALE

THE EXISTENCE AND APPROXIMATE LOCATION OF UTILITY FACILITIES KNOWN TO EXIST, AS SHOWN ON THE PLANS, ARE BASED ON THE BEST INFORMATION AVAILABLE TO THE COMMISSION AT THIS TIME. THIS INFORMATION IS PROVIDED BY THE COMMISSION "AS-IS" AND THE COMMISSION EXPRESSLY DISCLAIMS ANY REPRESENTATION OR WARRANTY AS TO THE COMPLETENESS, ACCURACY, OR SUITABILITY OF THE INFORMATION FOR ANY USE. RELIANCE UPON THIS INFORMATION IS DONE AT THE RISK AND PERIL OF THE USER, AND THE COMMISSION SHALL NOT BE LIABLE FOR ANY DAMAGES THAT MAY ARISE FROM ANY ERROR IN THE INFORMATION. IT IS, THEREFORE, THE RESPONSIBILITY OF THE CONTRACTOR TO VERIFY THE EXISTENCE, LOCATION AND STATUS OF ANY FACILITY. SUCH VERIFICATION INCLUDES DIRECT CONTACT WITH THE LISTED UTILITIES.

INDEX OF SHEETS

DESCRIPTION	SHEET NUMBER
TITLE SHEET	1
TYPICAL SECTIONS (TS) (3 SHEETS)	2
QUANTITIES (QU) (5 SHEETS)	3
PLAN-PROFILE (PP)	4-10
RIGHT OF WAY (RW)	11
REFERENCE POINTS (RP)	12
COORDINATE POINTS (CP)	13
TRAFFIC CONTROL SHEETS (TC)	14-21
EROSION CONTROL SHEETS (EC)	22-23
SIGNING (SN)	24-25
CULVERT SECTIONS (CS)	26-34
BRIDGE DRAWINGS (B)	
A5290	1-33
CROSS SECTIONS (XS)	1-39

LENGTH OF PROJECT

BEGINNING OF PROJECT	STA. 1087+85.00
END OF PROJECT	STA. 1100+17.94
APPARENT LENGTH	1,232.94 FEET
EQUATIONS AND EXCEPTIONS:	NONE
TOTAL CORRECTIONS	1,232.94 FEET
NET LENGTH OF PROJECT	1,232.94 FEET
STATE LENGTH	0.233 MILES
EST. LAND DISTURBANCE =	1.61 ACRES

STATE OF MISSOURI
PATRICK J. HAKE
NUMBER PE-2010000826
PROFESSIONAL ENGINEER
Patrick Hake
8/1/2024
PATRICK J. HAKE - CIVIL
MO-PE-2010000826

DATE PREPARED: 8/1/2024

ROUTE	STATE
5	MO
DISTRICT	SHEET NO.
CD	1

COUNTY: HOWARD
JOB NO.: J5P3498
CONTRACT ID.:
PROJECT NO.:
BRIDGE NO.: A9250

DATE	DESCRIPTION

MISSOURI HIGHWAYS AND TRANSPORTATION COMMISSION
105 WEST CAPITOL
JEFFERSON CITY, MO 65102
1-888-ASK-MODOT (1-888-275-6636)

42.5′- 42.5′- 42.5′- 42.5′-42.5′
DECK GIRDER SPANS

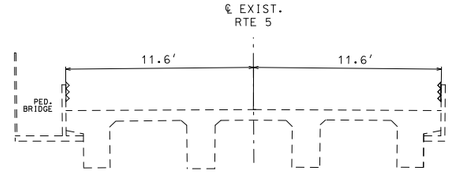

EXISTING BRIDGE TYPICAL SECTION
J0007
STA. 1093+33.00 TO STA. 1095+45.50

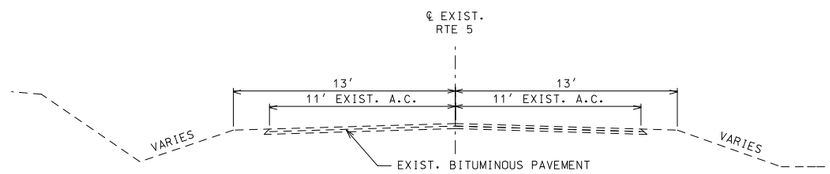

ROUTE 5 NORTH OF BR.
EXISTING ROADWAY TYPICAL SECTION

STA. 1087+85.00 TO STA. 1093+33.00

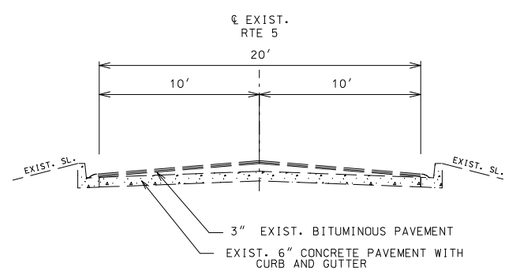

ROUTE 5 SOUTH OF BR.
EXISTING ROADWAY TYPICAL SECTION

STA. 1095+45.50 TO STA. 1100+17.94

NOT TO SCALE

EXISTING
TYPICAL SECTIONS
SHEET 1 OF 3

STATE OF MISSOURI
PATRICK J. HAKE
NUMBER
PE-2010000826
PROFESSIONAL ENGINEER

Patrick Hake
$[Date] $[Time]
PATRICK J. HAKE - CIVIL
MO-PE-2010000826

DATE PREPARED	7/1/2024
ROUTE 5	STATE MO
DISTRICT CD	SHEET NO. 2
COUNTY	HOWARD
JOB NO.	J5P3498
CONTRACT ID.	
PROJECT NO.	
BRIDGE NO.	A9250

DESCRIPTION	DATE

MISSOURI HIGHWAYS AND TRANSPORTATION COMMISSION
105 WEST CAPITOL
JEFFERSON CITY, MO 65102
1-888-ASK-MODOT (1-888-275-6636)

OPTIONAL PAVEMENT

7" HMA
2" BP-1 W/PG 64-22 OVER
5" BB W/PG 64-22

7" PCCP
15' JOINTS AND
1 1/4" DOWELS

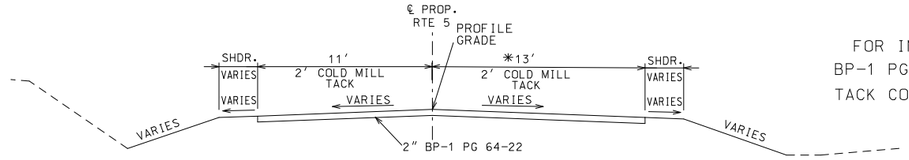

TYPICAL SECTION ON TANGENT
STA. 1087+85.00 TO STA. 1088+25.00

* WIDTH VARIES 13.25' TO 13.00'
STA. 1087+85.00 TO STA. 1088+25.00 RT.

FOR INFORMATIONAL PURPOSES ONLY
BP-1 PG 64-22 ESTIMATE FACTOR = 1.987 TON/CY
TACK COAT ESTIMATE FACTOR = 0.10 GAL/SY

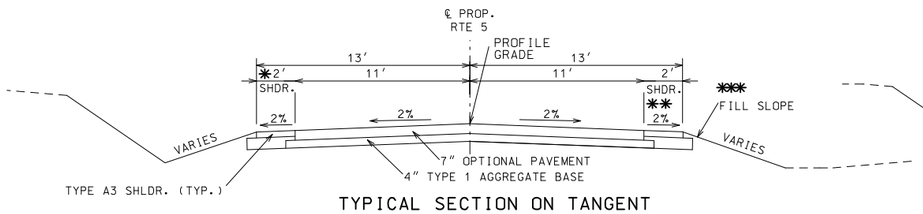

TYPICAL SECTION ON TANGENT

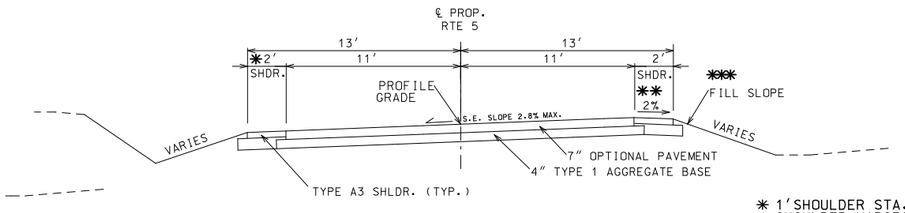

TYPICAL SECTION ON SUPERELEVATED CURVE

* 1' SHOULDER STA. 1088+25.00 TO STA. 1089+65.00 LT.
SHOULDER VARIES 1' TO 2' STA. 1089+65.00 TO STA. 1089+75.00 LT.

** EXTEND SHOULDER SLOPE TO DAYLIGHT TO EXISTING FILL SLOPE. STA. 1090+80.86 TO STA. 1091+63.00 SEE CROSS SECTIONS FOR ADDITIONAL DETAILS.

*** 2' WIDE GRAVEL TAPER TO TIE INTO EXISTING GRAVEL TURN LANE STA. 1089+04.48 TO 1089+72.54 LT.

ROUTE 5 NORTH OF BR.
PROPOSED ROADWAY TYPICAL SECTION

STA. 1088+25.00 TO STA. 1091+63.00

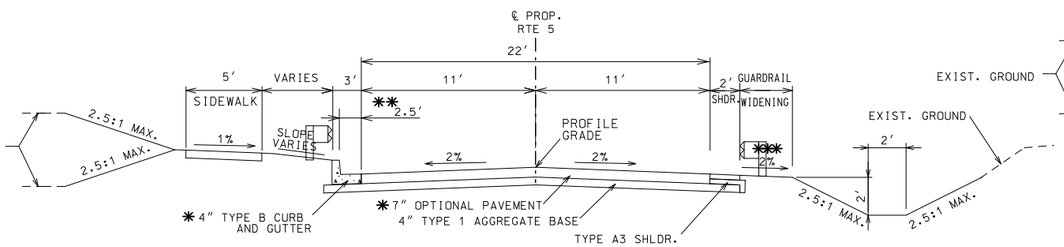

TYPICAL SECTION ON TANGENT

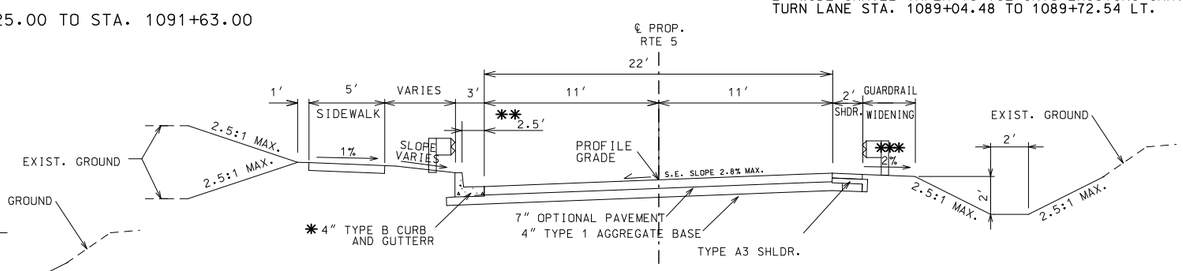

TYPICAL SECTION ON SUPERELEVATED CURVE

* 2" MODIFIED LOW PROFILE CURB ALONG GUARDRAIL CWE SECTION SEE TYPICAL SHEET 3 OF 3 FOR DETAILS.

** GUTTER WIDTH VARIES FROM 2.5' TO 2.44' AND SIDEWALK WIDTH VARIES FROM 6' TO 5.5' STA. 1092+98.74 TO STA. 1093+08.74.

GUTTER WIDTH VARIES FROM 2.44' TO 2.5' AND SIDEWALK WIDTH VARIES FROM 5.5' TO 6' STA. 1095+70.24 TO STA. 1095+80.24.

*** EXTEND GUARDRAIL WIDENING SLOPE TO DAYLIGHT TO EXISTING FILL SLOPE. STA. 1091+63.00 TO STA. 1091+46.50 SEE CROSS SECTIONS FOR ADDITIONAL DETAILS.

PROPOSED TYPICAL SECTION
STA. 1091+63.00 TO STA. 1093+09.24
STA. 1095+69.74 TO STA. 1096+30.44

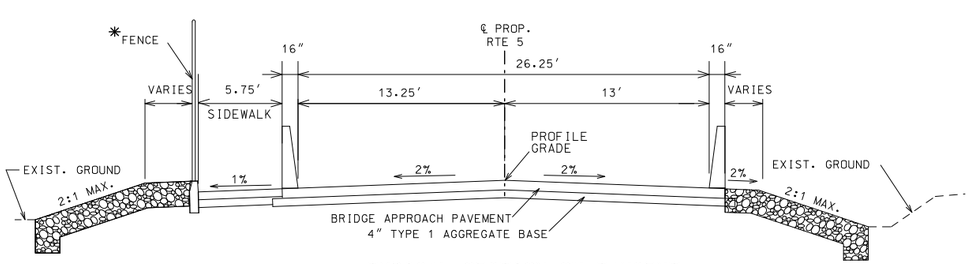

TYPICAL SECTION ON TANGENT

BRIDGE APPROACH PAVEMENT

STA. 1093+09.24 TO STA. 1093+29.24
STA. 1095+49.74 TO STA. 1095+69.74

* FENCE ENDS AT END OF WING WALL

** SIDEWALK WIDTH VARIES FROM 5.75' TO 6.48'

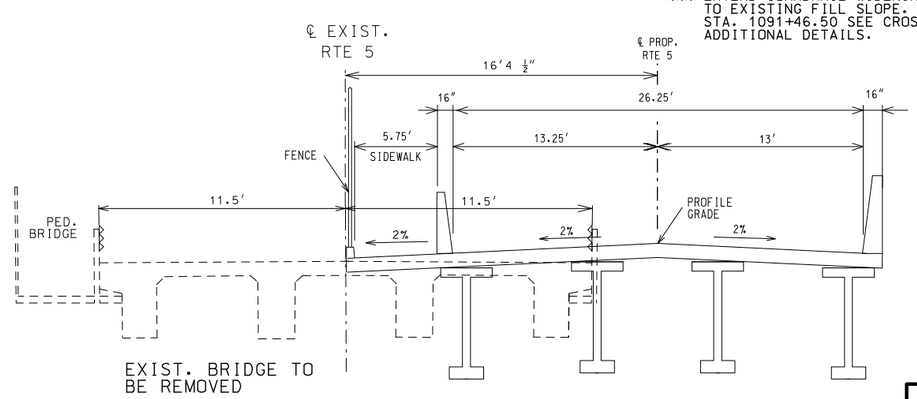

PROPOSED TYPICAL SECTION ACROSS BRIDGE
STA. 1093+28.74 TO STA. 1095+50.24

NOT TO SCALE

TYPICAL SECTIONS
SHEET 2 OF 3

STATE OF MISSOURI
PATRICK J. HAKE
NUMBER PE-2010000826
PROFESSIONAL ENGINEER
Patrick Hake
8/1/2024
PATRICK J. HAKE - CIVIL
MO-PE-2010000826

DATE PREPARED	
8/1/2024	
ROUTE 5	STATE MO
DISTRICT CD	SHEET NO. 2
COUNTY HOWARD	
JOB NO. J5P3498	
CONTRACT ID.	
PROJECT NO.	
BRIDGE NO. A9250	

DESCRIPTION	DATE

MISSOURI HIGHWAYS AND TRANSPORTATION COMMISSION
105 WEST CAPITOL
JEFFERSON CITY, MO 65102
1-888-ASK-MODOT (1-888-275-6636)

OPTIONAL PAVEMENT

7″ HMA
2″ BP-1 W/PG 64-22 OVER
5″ BB W/PG 64-22

7″ PCCP
15′ JOINTS AND
1 ¼″ DOWELS

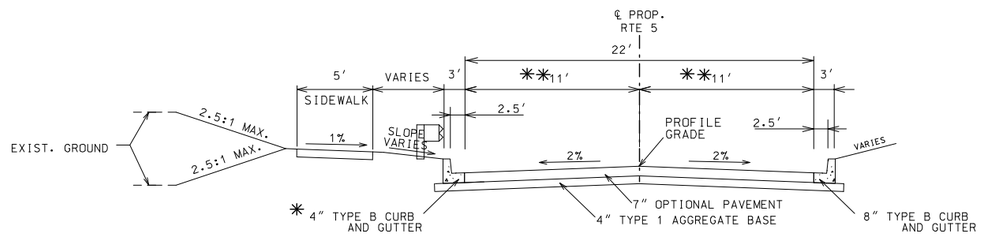

TYPICAL SECTION ON TANGENT

* 2″ MODIFIED LOW PROFILE CURB ALONG GUARDRAIL CWE SECTION

ROUTE 5 SOUTH OF BR.
PROPOSED ROADWAY TYPICAL SECTION
STA. 1096+30.44 TO STA. 1096+88.00

** { STA. 1096+55.00 TO STA. 1096+75.00 VARIES 11′ TO 10′ WIDTH
** { STA. 1096+75.00 TO STA. 1096+88.00 – 10′ WIDTH

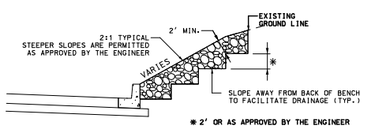

ROCK FILL BENCHING SOUTH OF BRIDGE

TYPICAL SECTION ON TANGENT

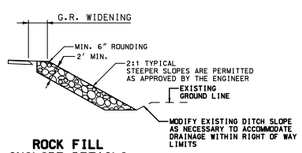

ROCK FILL INSLOPE DETAILS NORTH OF BRIDGE

ROUTE 5 SOUTH OF BR.
PROPOSED ROADWAY TYPICAL SECTION
STA. 1096+88.00 TO STA. 1100+17.94

(A) TIE BARS – 30″ X #5 Ø AT 30" CTRS.
(L2) LONGITUDINAL JOINT WITH TIE BARS.
(R1) ROUND TO 1/4″ RADIUS (EXCEPT FOR SAWED JOINTS).
(R2) ROUND TO 3/4″ RADIUS.
(1) PAY LIMIT FOR PAVEMENT
(2) PAY LIMIT FOR CURB, OR CURB & GUTTER.

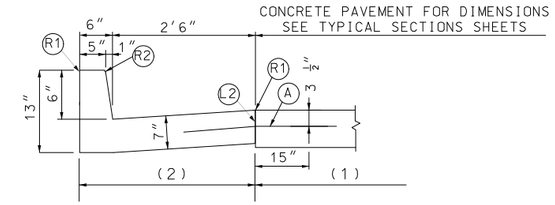

MODIFIED 6″ CURB AND GUTTER TYPE B

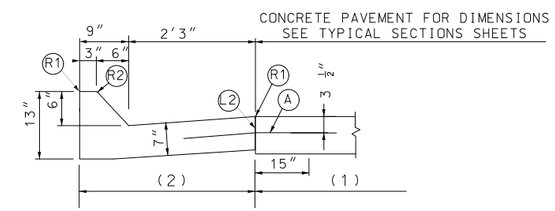

MOUNTABLE 4″ CONCRETE CURB AND GUTTER

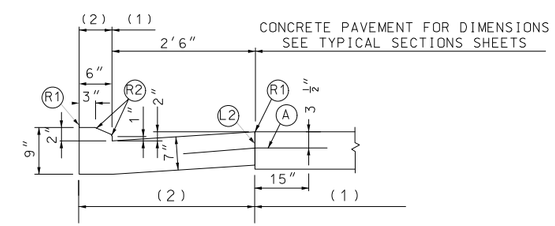

MODIFIED LOW PROFILE CURB AND GUTTER TYPE E

BEGINNING AND ENDING OF INTRODUCED LOW PROFILE CURB SHALL UTILIZE CURB HEIGHT RUNOUT FROM 0 INCHES TO 2 INCHES IN 5 FEET. PAYMENT LENGTH SHALL INCLUDE TAPERS.

TYPICAL SECTIONS
SHEET 3 OF 3

STATE OF MISSOURI
PATRICK J. HAKE
NUMBER
PE-2010000826
PROFESSIONAL ENGINEER
Patrick Hake
8/1/2024
PATRICK J. HAKE - CIVIL
MO-PE-2010000826

DATE PREPARED	
8/1/2024	
ROUTE 5	STATE MO
DISTRICT CD	SHEET NO. 2
COUNTY HOWARD	
JOB NO. J5P3498	
CONTRACT ID.	
PROJECT NO.	
BRIDGE NO. A9250	

DATE	DESCRIPTION

MISSOURI HIGHWAYS AND TRANSPORTATION COMMISSION
105 WEST CAPITOL
JEFFERSON CITY, MO 65102
1-888-ASK-MODOT (1-888-275-6636)

REMOVAL OF IMPROVEMENTS

STA	STA	LOCATION	DESCRIPTION	QUANTITY		REMARKS
1092+90.00	1093+34.00	RTE. 5 - RT	TYPE A GUARDRAIL, 2 TURN DOWN ENDS	45	LF	EXISTING BRIDGE END
1092+90.00	1093+34.00	RTE. 5 - LT	TYPE A GUARDRAIL, 2 TURN DOWN ENDS	45	LF	EXISTING BRIDGE END
1095+44.00	1095+88.00	RTE. 5 - RT	TYPE A GUARDRAIL, 2 TURN DOWN ENDS	45	LF	EXISTING BRIDGE END
1095+44.00	1095+88.00	RTE. 5 - LT	TYPE A GUARDRAIL, 2 TURN DOWN ENDS	45	LF	EXISTING BRIDGE END
1095+88.00	1100+17.94	RTE. 5 - LT AND RT	CURB AND GUTTER	887	LF	
1095+62.00	1095+88.00	RTE. 5 - LT AND RT	CONCRETE PAVED DITCH	37	LF	
1093+09.00		RTE. 5 - RT	OBJECT MARKER AND POST	1	EA	
1095+81.00		RTE. 5 - LT AND RT	OBJECT MARKERS AND POST	2	EA	
1093+24.00		RTE. 5 - RT	BEAR CREEK SIGN AND POST	1	EA	
1095+78.00		RTE. 5 - LT	BEAR CREEK SIGN AND POST	1	EA	
1090+86.00		RTE. 5 - LT	STOP SIGN AND POST	1	EA	ORCHARD RD.
1096+82.00		RTE. 5 - LT	STOP SIGN AND POST	1	EA	PARK ENTRANCE
1087+85.00	1100+17.94	RTE. 5	SAW CUT FOR BEGIN AND END OF NEW PAVEMENT AND ENTRANCES	214	LF	
1087+85.00	1090+20.00	RTE. 5	BITUMINOUS PAVEMENT	653	SY	
1090+20.00	1093+33.00	RTE. 5	BITUMINOUS PAVEMENT	765	SY	
1095+45.00	1100+17.94	RTE. 5	BITUMINOUS PAVEMENT	1156	SY	
		RTE. 5	CONC SIDEWALK	100	SY	
			TOTAL	1 LUMP SUM		

MOBILIZATION
TOTAL = 1 LUMP SUM

RIGHT OF WAY MARKER
14 - EACH
NON-CONTRACTUAL ITEM

7" OPTIONAL PAVEMENT (7" CONCRETE OR ASPHALT)

STA	STA	LOCATION	LENGTH (FEET)	WIDTH (FEET)	OPTIONAL PAVEMENT (SY)	4 IN. TYPE 1 AGGR. FOR BASE (SY)	REMARKS
1088+25.00	1093+09.24	RTE. 5	484.24	22	1183.70	1183.70	
1095+69.74	1096+55.00	RTE. 5	85.26	22	189.58	189.58	
1096+55.00	1096+75.00	RTE. 5	20.00	VARIES	44.56	44.56	
1096+75.00	1100+17.87	RTE. 5	342.87	20	761.93	761.93	
1091+13.20		ORCHARD RD.			194.79	194.79	SIDE ROAD CONNECTION
				SUB TOTAL		2374.56	
				SUB TOTAL - PCCP PAVED APPROACH		225.68	
				SUB TOTAL TYPE A3 SHLDR		168.33	
				TOTAL	2374.56	2768.57	
				USE	2374.6	2769	

CULVERT CLEANOUT

STA.	LOCATION	CULVERT CLEANOUT (EA)	REMARKS
1090+83.00	RTE. 5 NORTH	1.00	CULVERT UNDER RTE. 5
1090+83.00	RTE. 5 NORTH	1.00	CULVERT UNDER RTE. PE
1097+03.05	KUEMMEL PARK DRIVEWAY	1.00	CULVERT UNDER PARK DRIVEWAY
	TOTAL	3.00	
	USE	3	

ADDITIONAL MOBILIZATION FOR SEEDING
4 EACH

BITUMINOUS PAVEMENT MIXTURE BP-1 (P64-22)

STA.	STA.	LOCATION	LENGTH (FT)	AVERAGE WIDTH (FT)	DEPTH (IN)	2 INCH BP-1 (TONS)	TACK (GAL)	REMARKS
1087+85.00	1088+25.00	RTE. 5	40.00	VARIES 24.25 TO 23	2	11.84	8.58	
1089+98.80		RTE. 5	5.00	VARIES	2	3.92	2.84	W. ORCHARD RD.
1093+00.00			14.00	5	2	0.86		QUANTITY FOR TEMPORARY PAVEMENT TO COVER DI 2 AND PIPE 2 DURING STAGE 1 AND 2 CONST.
								BP-1 ESTIMATE FACTOR = 1.987 TON/CY
					TOTAL	16.62	11.42	TACK COAT ESTIMATE FACTOR = 0.10 GAL/SY
					USE	16.6	11	

PAVED APPROACH

STA	LOCATION	LENGTH (FEET)	WIDTH (FEET)	PAVED APPROACH 7 INCH (SY)	INTEGRAL CURB OVER 6 IN, TYPE B (LF)	4 IN. TYPE 1 AGGR. FOR BASE (SY)	REMARKS
1092+33.23	RTE. 5 LT	9.00	VARIES	15.88		15.88	CURB CUT FOR FIELD ENTRANCE
1096+25.17	RTE. 5 RT	6.00	VARIES	12.19	15.94	12.19	CURB CUT FOR FIELD ENTRANCE
1097+03.50	RTE. 5 LT	34.00	VARIES	123.15	15.91	123.15	2" CURB LT SIDE OF ENTRANCE
1097+03.50	RTE. 5 LT		VARIES		15.91		
1098+23.30	RTE. 5 LT	15.73	VARIES	41.33	31.88	41.33	
1099+67.80	RTE. 5 RT	12.00	VARIES	33.13	31.88	33.13	CONNECTION TO AGGREGATE ENTRANCE
			SUB TOTAL		111.52	225.68	
			TOTAL	225.68			
			USE	225.7			

CONTRACTOR SURVEYING AND STAKING
TOTAL = 1 LUMP SUM

SUMMARY OF QUANTITIES
SHEET 1 OF 5

STATE OF MISSOURI
PATRICK J. HAKE
NUMBER PE-2010000826
PROFESSIONAL ENGINEER
Patrick Hake
8/1/2024 8:{Date} 8:{Time}
PATRICK J. HAKE - CIVIL
MO-PE-2010000826

DATE PREPARED 8/1/2024

ROUTE	STATE
5	MO
DISTRICT	SHEET NO.
CD	3

COUNTY: HOWARD
JOB NO.: J5P3498
CONTRACT ID.
PROJECT NO.
BRIDGE NO.: A9250

DESCRIPTION | DATE

MISSOURI HIGHWAYS AND TRANSPORTATION COMMISSION
105 WEST CAPITOL
JEFFERSON CITY, MO 65102
1-888-ASK-MODOT (1-888-275-6636)

SIDEWALK ITEMS

STA.	STA.	LOCATION	WIDTH (FT)	LENGTH (FT)	4" CONCRETE SIDEWALK (SY)	4" TYPE 1 AGGR. BASE (SY)	CONCRETE CURB RAMP (SY)	TRUNCATED DOMES (SF)	REMARKS
1091+45.88	1091+75.58		VARIES	29.7			16.38	10.00	1 - CURB RAMP
1091+75.58	1091+91.37		6	15.8	10.53	10.53			
1091+91.37	1091+98.06		VARIES	6.7	5.44	5.44			
1091+75.56	1091+80.72		5	6.5	3.61	3.61			TIE IN TO PRIVATE SIDEWALK
1091+98.06	1093+09.24		5	111.2	61.78	61.78			
1093+09.24	1093+19.24		VARIES	10.0	5.64	5.64			
1093+19.24	1093+29.24		4.42	10.0	4.91	4.91			SIDEWALK WIDTH
1095+49.74	1095+60.74		4.42	11.0	5.40	5.40			
1095+60.74	1095+69.74		VARIES	9.0	5.08	5.08			
1095+69.74	1096+87.37		5	117.6	65.33	65.33			
1097+17.61	1097+22.70		5	23.5	13.06	13.06			LENGTH ALONG DRIVEWAY
1097+22.61	1097+35.00		4	12.4	5.51	5.51			
1097+35.00	1097+39.00		VARIES	4.0	1.39	1.39			
				TOTAL	187.68	187.68	16.38	10.00	
				USE	187.7	188	16.4	10	

SHOULDERS

STA	STA	LOCATION	LENGTH (FEET)	WIDTH (FEET)	TYPE A3 SHOULDER (SY)	4" TYPE 1 AGGREGATE FOR BASE (SY)	GRAVEL (A) CRUSHED STONE (B) OR CHAT (C) (TON)	REMARKS
1088+25.00	1089+65.00	RTE. 5 - LT	140.00	1	15.56	15.56		
1089+65.00	1089+75.00	RTE. 5 - LT	10.00	VARIES	1.17	1.17		
1089+75.00	1090+24.81	RTE. 5 - LT	49.81	2	11.07	11.07		
1087+25.00	1089+72.54	RTE. 5 - RT	247.54	2	55.01	55.01		
1090+21.68	1093+09.24	RTE. 5 - RT	287.56	2	63.90	63.90		
1095+69.74	1096+12.06	RTE. 5 - RT	42.32	2	9.40	9.40		
1090+25.00	1091+50.00	RTE. 5 - LT	125.00	1		13.89		STAGE 1 LT CONNECTION TO EXIST PAVEMENT
1097+50.00	1098+75.00	RTE. 5 - LT	125.00	1		13.89		STAGE 1 LT CONNECTION TO EXIST PAVEMENT
1089+04.48	1089+72.54	RTE. 5 - RT	68.06	2			2.35	AREA ALONG GRAVEL TURN LANE AT ORCHARD RD. W.
							17.50	QUANTITY FOR TEMPORARY SURFACING AT ENTRANCES
				SUB TOTAL		168.33		DURING STAGED CONSTRUCTION
				TOTAL	140.55		19.85	
				USE	140.6		20	

SEEDING

STA	STA	LOCATION	LENGTH (FEET)	WIDTH (FEET)	SOD - TURF TYPE TALL FESCUE (SY)	SEEDING - COOL SEASON GRASS (AC)	MULCHING (AC)	TEMPORARY SEEDING (AC)	CLEARING AND GRUBBING (AC)	REMARKS
1093+20.00	1095+50.00	RTE. 5 - LT & RT	230.00	VARIES	246.83	0.52	0.52	0.13	0.52	
1097+25.00	1100+17.87	RTE. 5 - LT	292.87	VARIES	548.75				0.02	
				TOTAL	795.58	0.52	0.52	0.13	0.54	
				USE	796	0.5	0.5	0.1	1.0	QUANTITIES ARE APPROXIMATE

GUARDRAIL

STA	STA	TOTAL LENGTH	LOCATION	MGS GUARDRAIL 6 FT. POST (LF)	MASH TYPE A CRASHWORTHY END TERMINAL (EACH)	TYPE B CRASHWORTHY END TERMINAL (EACH)	MGS BRIDGE APPROACH TRANSITION SECTION (EXTENDED CURB) (EACH)	BRIDGE ANCHOR SECTION CURB TYPE (EACH)	REMARKS
1090+31.74	1093+19.24	287.5	RTE. 5 - RT	200	1		1		
1092+58.99	1093+09.24	50.25	RTE. 5 - LT			1		1	
1095+58.74	1096+08.99	50.25	RTE. 5 - RT			1		1	
1095+69.74	1096+69.74	100	RTE. 5 - LT	12.5	1		1		
			TOTAL	212.5	2	2	2	2	
			USE	213	2	2	2	2	

SUMMARY OF QUANTITIES
SHEET 2 OF 5

STATE OF MISSOURI
PATRICK J. HAKE
NUMBER
PE-2010000826
PROFESSIONAL ENGINEER

Patrick Hake
$[Date) &[Time]
PATRICK.J.HAKE-CIVIL
MO-PE-2010000826

DATE PREPARED
8/1/2024

ROUTE	STATE
5	MO
DISTRICT	SHEET NO.
CD	3

COUNTY
HOWARD

JOB NO.
J5P3498

CONTRACT ID.

PROJECT NO.

BRIDGE NO.
A9250

DATE	DESCRIPTION

MISSOURI HIGHWAYS AND TRANSPORTATION COMMISSION
105 WEST CAPITOL
JEFFERSON CITY, MO 65102
1-888-ASK-MODOT (1-888-275-6636)

DRAINAGE

STA	STA	LOCATION	LENGTH (FEET)	CURB AND GUTTER TYPE B (LF)	6" MOD. CURB AND GUTTER TYPE B (LF)	4" CONCRETE CURB AND GUTTER (LF)	2" MODIFIED LOW PROFILE CURB AND GUTTER TYPE E (LF)	INTEGRAL CURB 6 IN AND UNDER, TYPE B (LF)	PAVED DITCH (SY)	REMARKS
1091+50.00	1092+18.20	RTE. 5 - LT	68.20		68.20					6" CURB
1092+18.20	1092+90.00	RTE. 5 - LT	71.80				71.80			2" CURB
1092+90.00	1092+95.00	RTE. 5 - LT	5.00				5.00			2" TO 4" CURB HEIGHT TRANSITION
1092+95.00	1093+09.24	RTE. 5 - LT	14.24			14.24				4" MOUNTABLE CURB
1095+69.74	1096+14.74	RTE. 5 - LT	45.00			45.00				4" MOUNTABLE CURB
1096+14.74	1096+19.74	RTE. 5 - LT	5.00				5.00			4" TO 2" CURB HEIGHT TRANSITION
1096+19.74	1096+77.17	RTE. 5 - LT	57.43				57.43			2" CURB
1098+01.50	1098+48.50	RTE. 5 - LT	47.00		47.00					6" CURB
1097+28.32	1097+52.71	RTE. 5 - LT	24.39		24.39					6" CURB
1097+52.71	1097+98.77	RTE. 5 - LT	46.06					94.20	53.90	6" CURB
1097+98.77	1098+04.21	RTE. 5 - LT	5.44		5.44					6" CURB
1098+42.54	1100+17.87	RTE. 5 - LT	175.33		175.33					6" CURB
1096+38.26	1099+47.23	RTE. 5 - RT	308.97	308.97						8" CURB
1099+89.53	1100+17.87	RTE. 5 - RT	28.34		28.34					6" CURB
			SUB TOTAL					94.20		LOW PROFILE CURB FOR USE IN
			PCCP PAVED APPROACH SUB TOTAL					111.52		GUARDRAIL ENDTERMINAL AREAS
			TOTAL	308.97	348.70	59.24	139.23	205.72	53.90	
			USE	309	349	59	139	206	53.9	

GROUP A AND GROUP B PIPE

STRUCT. NUMBER	FROM STRUCT.	TO STRUCT.	LOCATION	SKEW (DEG)	FILL HEIGHT (FT)	GROUP A 18" PIPE (LF)	GROUP B 18" PIPE (LF)	GROUP B 18" F.E.S (EA)	CLASS 3 EXC. (CY)	CONCRETE SLOPE PROTECTION (SY)	COMMENT
P-1	DI-1	DI-2	RTE.5 LT.	90	7.5		85		83.0		CLASS 3 EXC. INCLUDES VOLUME FOR DROP INLETS
P-2	DI-2	DAYLIGHT EDGE OF FILL	RTE.5 LT.	NONE	7.5	54			22.0	2.0	
P-3	DI-3	DAYLIGHT TO DITCH	RTE.5 RT.	81	7.5		61	1	65.0		
P-4	DI-4	DAYLIGHT TO DITCH	RTE.5 LT.	22	7.5		51	1	97.0		
P-5	DI-4	DI-5	RTE.5 LT.	90	7.5		158		239.0		
P-6	DI-5	DI-6	RTE.5 LT.	90	7.5		48		61.0		
P-7	DI-6	DI-7	RTE.5 RT.	90	7.5		48		55.0		
P-8	DI-7	DI-8	RTE.5 LT.	90	7.5		45		45.0		
P-9	DI-8	DI-9	RTE.5 LT.	90	7.5		44		44.0		
					TOTAL	54	540	2	711	2	
					USE	54	540	2	711	2	

TEMPORARY EROSION CONTROL QUANTITIES

STATION	STATION	LOC.	SEDIMENT TRAP ROCK C.Y.	ALTERNATE DITCH CHECK L.F.	ROCK DITCH CHECK L.F.	CURB INLET CHECK EA.	SILT FENCE L.F.	TYPE C BERM L.F.	TYPE 3B EROSION CONTROL BLANKET S.Y.	SEDIMENT REMOVAL CU.YD.	REMARKS
1087+85.00	1093+28.74	RTE 5 LT	5.0	168.0	40.0	2.0		196		36.0	3 S.T. - 21 A.D.C - 8 R.D.C. - 2 C.I.C.
1087+85.00	1093+28.74	RTE 5 RT	11.7	88.0	120.0		281	190	695.5	37.7	7 S.T. - 4 A.D.C - 22 R.D.C. - 0 C.I.C.
1095+50.24	1100+17.94	RTE 5 LT	3.3	16.0	72.0	2.0		111		16.1	2 S.T. - 2 A.D.C - 9 R.D.C. - 2 C.I.C.
1095+50.24	1100+17.94	RTE 5 RT	1.7	8	16	1.0	689	104	1476.6	12.9	1 S.T. - 1 A.D.C - 2 R.D.C. - 1 C.I.C.
		TOTAL	21.7	280	248	5	970	601	2172.1	102.7	
		USE	21.7	280	248	5	970	601	2172	103	

PRECAST CONCRETE DROP INLETS

STRUCT. NUMBER	STATION	LOCATION	SKEW	PRECAST CONC DROP INLET 2 FT X 2 FT PAY 'D' (FT)	MODIFIED CONC DROP INLET 2 FT X 2 FT PAY 'D' (FT)	ACTUAL 'D' (FT)	TYPE	CURVED VANE GRATE AND FRAME 2 FT X 2 FT (EA)	REMARKS
DI-1	1092+10.23	RTE. 5. - LT	NONE	4	-	3.6	D	1	1-18" OPENING
DI-2	1093+00.16	RTE. 5. - LT	NONE	-	4	4.00	MOD. D	1	2-18" OPENINGS
DI-3	1095+78.82	RTE. 5. - LT	NONE	-	4	4.00	MOD. D	1	1-18" OPENING
DI-4	1096+39.91	RTE. 5. - RT	NONE	3	-	2.6	D	1	2-18" OPENINGS
DI-5	1098+00.00	RTE. 5. - RT	NONE	4	-	4.25	D	1	2-18" OPENINGS
DI-6	1098+50.00	RTE. 5. - RT	NONE	4	-	4.25	D	1	2-18" OPENINGS
DI-7	1099+00.00	RTE. 5. - RT	NONE	4	-	4.25	D	1	2-18" OPENINGS
DI-8	1099+45.00	RTE. 5. - RT	NONE	4	-	4.25	D	1	2-18" OPENINGS
DI-9	1099+90.53	RTE. 5. - RT	NONE	4	-	4.25	D	1	1-18" OPENING
			TOTAL	27.0	8.0			9.0	
			USE	27	8			9	

NOTE: MODIFIED TYPE D DROP INLETS HAVE A 2 INCH OR 4 INCH CURB. SEE CULVERT SHEETS FOR DETAILS.

ADJUST WATER VALVE

STA.	LOCATION	ADJUST WATER VALVE (EA)	REMARKS
1097+46.88	RTE. 5 LT	1.00	
	TOTAL	1.00	
	USE	1	

SUMMARY OF QUANTITIES
SHEET 3 OF 5

STATE OF MISSOURI
PATRICK J. HAKE
NUMBER
PE-2010000826
PROFESSIONAL ENGINEER

{Date} &{Time}
PATRICK J. HAKE - CIVIL
MO-PE-2010000826

DATE PREPARED
8/1/2024

ROUTE	STATE
5	MO
DISTRICT	SHEET NO.
CD	3

COUNTY
HOWARD

JOB NO.
J5P3498

CONTRACT ID.

PROJECT NO.

BRIDGE NO.
A9250

DESCRIPTION

DATE

MISSOURI HIGHWAYS AND TRANSPORTATION COMMISSION
105 WEST CAPITOL
JEFFERSON CITY, MO 65102
1-888-ASK-MODOT (1-888-275-6636)

EARTHWORK

STA.	STA.	LOCATION	LENGTH (FT)	TYPE 2 FURNISH ROCK BLANKET CY	TYPE 2 PLACE ROCK BLANKET CY	FURNISH ROCK FILL CY	PLACE ROCK FILL CY	PERM EROSION CONTROL GEOTEXTILE SY	ROCK LINING CY	CLASS A EXCAVATION CY	COMPACTING EMBANKMENT CY	REMARKS
1088+25.00	1091+00.00	RTE. 5 STAGE 2	275.00							171.00		
1091+00.00	1093+28.24	RTE. 5 STAGE 1B	228.24	116.00	116.00	64.00	64.00	210.10		242.00	874.00	USE 660 CY FROM STAGE 1B SOUTH
1095+49.74	1098+75.00	RTE. 5 STAGE 1B	325.26	151.00	151.00	457.00	457.00	110.40		2778.00	57.00	
1098+75.00	1100+17.87	RTE. 5 STAGE 2	142.87							97.00		
1088+25.00	1093+44.00	RTE. 5 STAGE 3	519.00	153.00	153.00			266.40	2.00	541.00	12.00	
1095+27.00	1100+17.87	RTE. 5 STAGE 3	490.87	98.00	98.00			153.10	2.60	428.00	65.00	
			TOTAL	518.0	518.0	521.0	521.0	740.0	4.6	4257.0	1008.0	
			USE	518	518	521	521	740	5	4257	1008	

NOTE: GEOTEXTILE USED UNDER ROCK BLANKET AT BRIDGE ENDS.

TEMPORARY PAVEMENT MARKING

APPROX STA	APPROX STA	LOCATION	LENGTH FT	WATERBORNE PAINT, TYPE P BEADS 4 INCH SOLID YELLOW LF	4 INCH SOLID WHITE LF	24 INCH SOLID WHITE LF	PAVEMENT MARKING REMOVAL LF	REMARKS
1083+25.00	1088+25.00	ROUTE 5	500.00	1000		11	1011	STAGE 1B
1090+25.00	1099+00.00	ROUTE 5	875.00		875		875	STAGE 1B
1100+65.00	1105+65.00	ROUTE 5	500.00	1000		11	1011	STAGE 1B
1080+50.00	1085+50.00	ROUTE 5	500.00	1000		11	1011	STAGE 2 & 3
1087+50.00	1102+00.00	ROUTE 5	1450.00		1450		1450	STAGE 2
1102+00.00	1107+00.00	ROUTE 5	500.00	1000		11	1011	STAGE 2 & 3
1087+50.00	1092+00.00	ROUTE 5	450.00		900		900	STAGE 3
1092+00.00	1097+00.00	ROUTE 5	500.00		500		500	STAGE 3
1097+00.00	1102+00.00	ROUTE 5	500.00		1000		1000	STAGE 3
			TOTAL	4000	4725	44	8769	
			USE	4000	4725	44	8769	

PERMANENT PAVEMENT MARKING

STA	STA	LOCATION	LENGTH (FT)	WATERBORNE PAINT TYPE P BEADS 4 IN YELLOW LF	REMARKS
1087+85.00	1100+17.87	RTE. 5	1232.87	2465.74	DOUBLE YELLOW CENTER LINE
			TOTAL	2465.74	
			USE	2466	

TEMPORARY SURFACING

LOCATION	CY	REMARKS
ORCHARD RD	10.2	STAGE 2
PE - RT	7.4	STAGE 2
PE - LT	9.3	STAGE 3
TOTAL	26.9	TEMP TRAFFIC CONTROL - ACCESS TO ENTRANCES
USE	27	QTY IS APPROXIMATE

COLDMILLING

STA.	STA.	LOCATION	LENGTH (FT)	AVERAGE WIDTH (FT)	COLDMILL 3 IN THICK OR LESS (SY)	REMARKS
1087+85.00	1088+25.00	RTE. 5	40.00	VARIES 24.25 TO 23	107.22	DEPTH VARIES TO MEET NEW PAVEMENT CROSS SLOPE
1089+98.80		RTE. 5	5.00	VARIES	35.54	W. ORCHARD RD.
				TOTAL	142.76	
				USE	143	

SUMMARY OF QUANTITIES
SHEET 4 OF 5

STATE OF MISSOURI
PATRICK J. HAKE
NUMBER PE-2010000826
PROFESSIONAL ENGINEER
S[Date] &[Time]
PATRICK J. HAKE - CIVIL
MO-PE-2010000826

DATE PREPARED 7/3/2024
ROUTE 5 | STATE MO
DISTRICT CD | SHEET NO. 3
COUNTY HOWARD
JOB NO. J5P3498
CONTRACT ID.
PROJECT NO.
BRIDGE NO. A9250

DESCRIPTION | DATE

MISSOURI HIGHWAYS AND TRANSPORTATION COMMISSION
105 WEST CAPITOL
JEFFERSON CITY, MO 65102
1-888-ASK-MODOT (1-888-275-6636)

EFFECTIVE: 04-01-2024

SIGN	SIZE IN.	AREA SQ.FT.	QTY EACH	TOTAL AREA SQ.FT.	QTY RELOC EACH	TOTAL RELOC SQ.FT.	SIGN NUM.	DESCRIPTION
WARNING SIGNS								
WO1-1L	48X48	16.00						TURN (SYMBOL LEFT)
WO1-1R	48X48	16.00						TURN (SYMBOL RIGHT)
WO1-2L	48X48	16.00						CURVE (SYMBOL LEFT)
WO1-2R	48X48	16.00						CURVE (SYMBOL RIGHT)
WO1-3L	48X48	16.00						REVERSE TURN (SYMBOL LEFT)
WO1-3R	48X48	16.00						REVERSE TURN (SYMBOL RIGHT)
WO1-4L	48X48	16.00						REVERSE CURVE (SYMBOL LEFT)
WO1-4R	48X48	16.00						REVERSE CURVE (SYMBOL RIGHT)
WO1-4bL	48X48	16.00						DOUBLE ARROW REVERSE CURVE (SYMBOL LEFT)
WO1-4bR	48X48	16.00						DOUBLE ARROW REVERSE CURVE (SYMBOL RIGHT)
WO1-4cL	48X48	16.00						TRIPLE ARROW REVERSE CURVE (SYMBOL LEFT)
WO1-4cR	48X48	16.00						TRIPLE ARROW REVERSE CURVE (SYMBOL RIGHT)
WO1-6	60X30	12.50						HORIZONTAL ARROW (SYMBOL)
WO1-6a	72X36	18.00						HORIZ. ARROW (SYMBOL ON PERMANENT BARRICADE)
WO1-7	60X30	12.50						DOUBLE HEAD HORIZONTAL ARROW (SYMBOL)
WO1-7a	72X36	18.00						DOUBLE HEAD HORIZ. ARROW (SYMBOL ON PERM. BARR.)
WO1-8	18X24	3.00						CHEVRON (SYMBOL)
WO1-8a	30X36	7.50						CHEVRON (SYMBOL FOR DIVIDED HIGHWAYS)
WO3-1	48X48	16.00						STOP AHEAD (SYMBOL)
WO3-2	48X48	16.00						YIELD AHEAD (SYMBOL)
WO3-3	48X48	16.00	2	32			12	SIGNAL AHEAD (SYMBOL)
WO3-4	48X48	16.00						BE PREPARED TO STOP
WO3-5	48X48	16.00						SPEED LIMIT AHEAD
WO4-1L	48X48	16.00						MERGE (SYMBOL FROM LEFT)
WO4-1R	48X48	16.00						MERGE (SYMBOL FROM RIGHT)
WO4-1aL	48X48	16.00						MERGE (LEFT)
WO4-1aR	48X48	16.00						MERGE (RIGHT)
WO5-1	48X48	16.00						ROAD/BRIDGE/RAMP NARROWS
WO5-3	48X48	16.00						ONE LANE BRIDGE
WO5-5	48X48	16.00						NARROW LANES
WO6-1	48X48	16.00						DIVIDED HIGHWAY (SYMBOL)
WO6-2	48X48	16.00						DIVIDED HIGHWAY END (SYMBOL)
WO6-3	48X48	16.00						TWO WAY TRAFFIC (SYMBOL)
WO7-3a	30X24	5.00						NEXT XX MILES (PLAQUE)
WO8-1	48X48	16.00						BUMP
WO8-2	48X48	16.00						DIP
WO8-3	48X48	16.00						PAVEMENT ENDS
WO8-4	48X48	16.00						SOFT SHOULDER
WO8-5	48X48	16.00						SLIPPERY WHEN WET (SYMBOL)
WO8-6	48X48	16.00						TRUCK CROSSING
WO8-6c	48X48	16.00						TRUCK ENTRANCE
WO8-7	36X36	9.00						LOOSE GRAVEL
WO8-7a	36X36	9.00						FRESH OIL / LOOSE GRAVEL
WO8-9	48X48	16.00						LOW SHOULDER
WO8-11	48X48	16.00						UNEVEN LANES
WO8-12	48X48	16.00						NO CENTER LINE
WO8-15	48X48	16.00						GROOVED PAVEMENT
WO8-15P	30X24	5.00						MOTORCYCLE (PLAQUE)
WO8-17L	48X48	16.00						SHOULDER DROP-OFF (SYMBOL LEFT)
WO8-17R	48X48	16.00						SHOULDER DROP-OFF (SYMBOL RIGHT)
WO8-17P	30X24	5.00						SHOULDER DROP-OFF (PLAQUE)
W10-1	42RND.	9.62						RAILROAD CROSSING
WO12-1	24X24	4.00						DOUBLE DOWN ARROW (SYMBOL)
WO12-2	48X48	16.00						LOW CLEARANCE (SYMBOL)
W012-2x	24X18	3.00						LOW CLEARANCE (PLAQUE)
WO12-2a	84X24	14.00						OVERHEAD LOW CLEARANCE (FEET AND INCHES)
WO12-4	120X60	50.00						LOW CLEARANCE XX FT XX IN XX MILES AHEAD
WO12-5	120X60	50.00						WIDTH RESTRICTION XX FT XX IN XX MILES AHEAD
WO13-1	30X30	6.25						ADVISORY SPEED (PLAQUE)
WO16-2	30X24	5.00						XXX FEET (PLAQUE)
WO16-3	30X24	5.00						X MILE (PLAQUE)
WO20-1	48X48	16.00	2	32			2	ROAD/BRIDGE/RAMP WORK AHEAD
WO20-2	48X48	16.00						DETOUR AHEAD
WO20-3	48X48	16.00						ROAD CLOSED AHEAD
WO20-4	48X48	16.00	4	64			7	ONE LANE ROAD AHEAD
WO20-5	48X48	16.00						RIGHT/CENTER/LEFT LANE CLOSED AHEAD
WO20-5a	48X48	16.00						2 RIGHT/CENTER/LEFT LANES CLOSED AHEAD
WO20-6a	48X48	16.00						RIGHT/CENTER/LEFT LANE CLOSED
WO20-7a	48X48	16.00	2	32			8	FLAGGER (SYMBOL)
WO21-2	36X36	9.00						FRESH OIL
WO21-5	48X48	16.00						SHOULDER WORK / SHOULDER WORK AHEAD
WO22-1	48X48	16.00						BLASTING ZONE AHEAD
WO22-2	42X36	10.50						TURN OFF 2-WAY RADIO AND PHONE
WO22-3	42X36	10.50						END BLASTING ZONE
GO22-1	21X15	2.19						WET PAINT (ARROW PIVOTS)

SIGN	SIZE IN.	AREA SQ.FT.	QTY EACH	TOTAL SQ.FT.	QTY RELOC EACH	TOTAL RELOC SQ.FT.	SIGN NUM.	DESCRIPTION
GUIDE SIGNS								
E05-1	36X48	12.00						GORE EXIT
E05-2	48X36	12.00						EXIT OPEN
E05-2a	48X36	12.00						EXIT CLOSED
GO20-1	60X24	10.00						ROAD WORK NEXT XX MILES
GO20-2	48X24	8.00	2	16			26	END ROAD WORK
GO20-4	36X18	4.50						PILOT CAR FOLLOW ME
GO20-4a	42X30	8.75						PILOT CAR IN USE WAIT & FOLLOW
GO20-4a	18X12	1.50						PILOT CAR IN USE WAIT & FOLLOW
GO20-5aP	36X24	6.00						WORK ZONE (PLAQUE)
MO4-8a	24X18	3.00						END DETOUR
MO4-9L	48X36	12.00						DETOUR (LEFT)
MO4-9R	48X36	12.00						DETOUR (RIGHT)
MO4-9P	48X12	4.00						STREET NAME (PLAQUE)
MO4-10L	48X18	6.00						DETOUR ARROW (LEFT)
MO4-10R	48X18	6.00						DETOUR ARROW (RIGHT)
REGULATORY SIGNS								
R1-1	48X48	13.25						STOP
R1-2	48TRI.	6.93						YIELD
R1-2a	36X36	9.00						TO ONCOMING TRAFFIC (PLAQUE)
R1-3P	30X12	2.50						ALL WAY (PLAQUE)
R2-1	36X48	12.00						SPEED LIMIT XX
R3-1	48X48	16.00						NO RIGHT TURN (SYMBOL)
R3-2	48X48	16.00						NO LEFT TURN (SYMBOL)
R3-3	36X36	9.00						NO TURNS
R3-4	48X48	16.00						NO U-TURN (SYMBOL)
R3-7L	30X30	6.25						LEFT LANE MUST TURN LEFT
R3-7R	30X30	6.25						RIGHT LANE MUST TURN RIGHT
R4-1	36X48	12.00						DO NOT PASS
R4-2	36X48	12.00						PASS WITH CARE
R4-7a	36X48	12.00						KEEP RIGHT (HORIZONTAL ARROW)
R4-8a	36X48	12.00						KEEP LEFT (HORIZONTAL ARROW)
R5-1	30X30	6.25						DO NOT ENTER
R5-1a	36X24	6.00						WRONG WAY
R6-1L	54X18	6.75						ONE WAY ARROW (LEFT)
R6-1R	54X18	6.75						ONE WAY ARROW (RIGHT)
R6-2L	24X30	5.00						ONE WAY (LEFT)
R6-2R	24X30	5.00						ONE WAY (RIGHT)
R9-9	24X12	2.00	1	2				SIDEWALK CLOSED
R9-11L	24X18	3.00						SIDEWALK CLOSED AHEAD, (ARROW LEFT) CROSS HERE
R9-11R	24X18	3.00						SIDEWALK CLOSED AHEAD, (ARROW RIGHT) CROSS HERE
R10-6	24X36	6.00	4	24			47	STOP HERE ON RED (45^ ARROW)
R11-2	48X30	10.00	6	60			29	ROAD CLOSED
R11-3a	60X30	12.50						ROAD CLOSED XX MILES AHEAD LOCAL TRAFFIC ONLY
R11-4	60X30	12.50						ROAD CLOSED TO THRU TRAFFIC
CONST-3A	60X48	20.00						FINE SIGN
CONST-3X	56X12	4.67						SPEEDING/PASSING (PLATE)
MISCELLANEOUS SIGNS								
CONST-5	48X36	12.00						POINT OF PRESENCE
CONST-5	96X48	32.00	2	64			61	POINT OF PRESENCE
CONST-7	48X24	8.00						RATE OUR WORK ZONE
CONST-7	72X36	18.00						RATE OUR WORK ZONE
CONST-8	48X36	12.00	2	24			33	WORK ZONE NO PHONE ZONE
	30X24	5.00	3	15			50	ONE WAY TRAFFIC WAIT AND FOLLOW

	TOTAL
616-10.05 CONSTRUCTION SIGNS	365
616-10.10 RELOCATED SIGNS	0

ITEM NUMBER	TOTAL QTY	DESCRIPTION
6122008	2	IMPACT ATTENUATOR 40 MPH (SAND BARRELS)
6122009		IMPACT ATTENUATOR 45 MPH (SAND BARRELS)
6122010		IMPACT ATTENUATOR 50 MPH (SAND BARRELS)
6122012		IMPACT ATTENUATOR 55 MPH (SAND BARRELS)
6122014		IMPACT ATTENUATOR 60 MPH (SAND BARRELS)
6122017		IMPACT ATTENUATOR 65 MPH (SAND BARRELS)
6122019		IMPACT ATTENUATOR 70 MPH (SAND BARRELS)
6122020	2	REPLACEMENT SAND BARREL
6122030		IMPACT ATTENUATOR (RELOCATION)
6123001		TRUCK MOUNTED ATTENUATOR (TMA)
6161008	2	ADVANCED WARNING RAIL SYSTEM
6161012		BUOYS (BOATS KEEP OUT)
6161013		BUOYS (NO WAKE)
6161014		SPECIAL SIGN ASSEMBLY (BOATS KEEP OUT)
6161025	62	CHANNELIZER (TRIM LINE)
6161030	38	TYPE III MOVEABLE BARRICADE
6161033		DIRECTION INDICATOR BARRICADE
6161040		FLASHING ARROW PANEL
6161047		TYPE III OBJECT MARKER
6161055		SEQUENTIAL FLASHING WARNING LIGHT
6161070		TUBULAR MARKER
6161095		RADAR SPEED ADVISORY SYSTEM
6161096		CHANGEABLE MESSAGE SIGN, COMMISSION FURNISHED/RETAINED
6161098A	2	CHANGEABLE MESSAGE SIGN W/O COMM. INTERFACE - CONTRACTOR FURNISHED/RETAINED
6161099		CHANGEABLE MESSAGE SIGN WITH COMM. INTERFACE - CONTRACTOR FURNISHED/RETAINED
6162000A	2	WORK ZONE TRAFFIC SIGNAL SYSTEM
6162002		TEMPORARY LONG-TERM RUMBLE STRIPS
6173600D	500	TEMPORARY TRAFFIC BARRIER CONTRACTOR FURNISHED/RETAINED
6173602B		TEMPORARY TRAFFIC BARRIER CONTRACTOR FURNISHED/COMMISSION RETAINED
6174000A		TEMP. TRAFFIC BARRIER HEIGHT TRANSITION
6175010A		RELOCATING TEMPORARY TRAFFIC BARRIER
6176000B		TEMPORARY TRAFFIC BARRIER COMMISSION FURNISHED/RETAINED
6177000B		TEMP. TRAFFIC BARRIER HEIGHT TRANSITION COMMISSION FURNISHED/RETAINED
6208064A		TEMPORARY RAISED PAVEMENT MARKER
9029400		TEMPORARY TRAFFIC SIGNALS
9029401		TEMPORARY TRAFFIC SIGNALS AND LIGHTING

SUMMARY OF QUANTITIES
SHEET 5 OF 5

STATE OF MISSOURI
PATRICK J. HAKE
NUMBER PE-2010000826
PROFESSIONAL ENGINEER
${Date} &{Time}
PATRICK J. HAKE - CIVIL
MO-PE-2010000826

DATE PREPARED 8/1/2024

ROUTE	STATE
5	MO
DISTRICT	SHEET NO.
CD	3

COUNTY: HOWARD
JOB NO.: J5P3498
CONTRACT ID.:
PROJECT NO.:
BRIDGE NO.: A9250

DESCRIPTION	DATE

MISSOURI HIGHWAYS AND TRANSPORTATION COMMISSION
105 WEST CAPITOL
JEFFERSON CITY, MO 65102
1-888-ASK-MODOT (1-888-275-6636)

SEC 8 - T51N-R17W

CORNER:
SOUTHEAST CORNER OF
S8,T51N,R17W CERTIFIED LAND
CORNER DOCUMENT 600-53317

RTE 5 CUR 3

PI	1096+89.62
PC	1096+50.33
PT	1097+28.88
Δ	3°50'47.9" (LT)
D	4°53'49.5"
L	78.55' (ARC)
T	39.29'
R	1,170.00'

PROPOSED BRIDGE A9250:
STA. 1093+28.74 TO STA. 1095+50.24
NEW ALIGNMENT 16'4½" RT
70'-78'-70' PRESTRESSED CONCRETE I-GIRDER SPANS
DRAINAGE AREA: 3.3 SQ. MILES
Q_{100} = 2600 CFS

REMOVE EXIST. BRIDGE J0007
STA. 1093+33.00 TO STA. 1095+45.50
212.5' DECK GIRDER SPANS

RTE 5 CUR 2

PI	1091+94.97
PC	1091+55.68
PT	1092+34.23
Δ	3°50'47.9" (LT)
D	4°53'49.5"
L	78.55' (ARC)
T	39.29'
R	1,170.00'
SE	2.80%

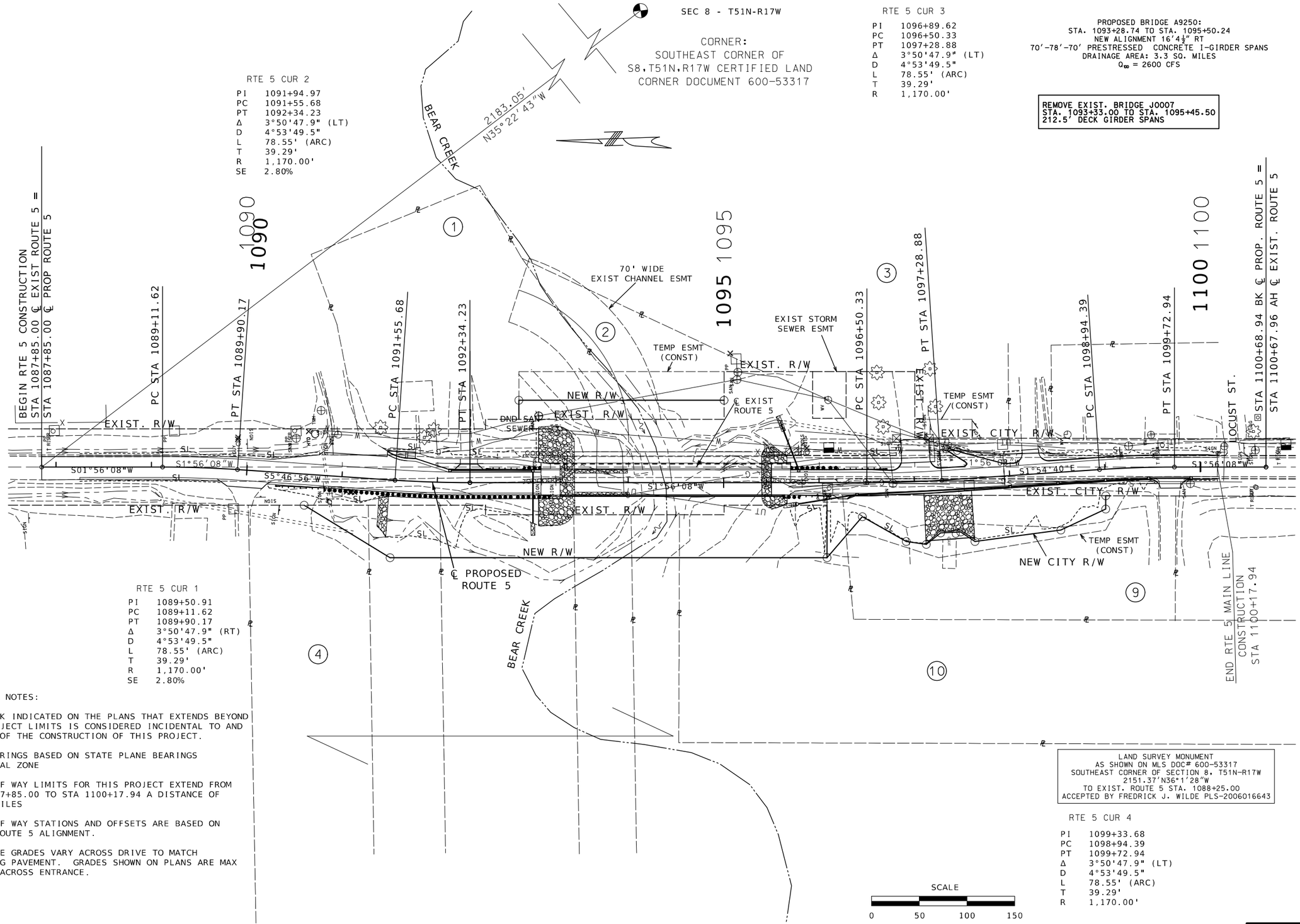

RTE 5 CUR 1

PI	1089+50.91
PC	1089+11.62
PT	1089+90.17
Δ	3°50'47.9" (RT)
D	4°53'49.5"
L	78.55' (ARC)
T	39.29'
R	1,170.00'
SE	2.80%

GENERAL NOTES:

ANY WORK INDICATED ON THE PLANS THAT EXTENDS BEYOND THE PROJECT LIMITS IS CONSIDERED INCIDENTAL TO AND A PART OF THE CONSTRUCTION OF THIS PROJECT.

ALL BEARINGS BASED ON STATE PLANE BEARINGS - CENTRAL ZONE

RIGHT OF WAY LIMITS FOR THIS PROJECT EXTEND FROM STA 1087+85.00 TO STA 1100+17.94 A DISTANCE OF 0.234 MILES

RIGHT OF WAY STATIONS AND OFFSETS ARE BASED ON EXIST ROUTE 5 ALIGNMENT.

ENTRANCE GRADES VARY ACROSS DRIVE TO MATCH EXISTING PAVEMENT. GRADES SHOWN ON PLANS ARE MAX GRADES ACROSS ENTRANCE.

LAND SURVEY MONUMENT
AS SHOWN ON MLS DOC# 600-53317
SOUTHEAST CORNER OF SECTION 8, T51N-R17W
2151.37'N36°1'28"W
TO EXIST. ROUTE 5 STA. 1088+25.00
ACCEPTED BY FREDRICK J. WILDE PLS-2006016643

RTE 5 CUR 4

PI	1099+33.68
PC	1098+94.39
PT	1099+72.94
Δ	3°50'47.9" (LT)
D	4°53'49.5"
L	78.55' (ARC)
T	39.29'
R	1,170.00'

SCALE
0 50 100 150

PLAN
SHEET 1 OF 7

STATE OF MISSOURI
PATRICK J. HAKE
NUMBER
PE-2010000826
PROFESSIONAL ENGINEER
Patrick Hake
8[Date] &[Time]
PATRICK J. HAKE - CIVIL
MO-PE-2010000826

DATE PREPARED	
7/2/2024	
ROUTE 5	STATE MO
DISTRICT CD	SHEET NO. 4
COUNTY HOWARD	
JOB NO. J5P3498	
CONTRACT ID.	
PROJECT NO.	
BRIDGE NO. A9250	

DATE	DESCRIPTION

MISSOURI HIGHWAYS AND TRANSPORTATION COMMISSION
105 WEST CAPITOL
JEFFERSON CITY, MO 65102
1-888-ASK-MODOT (1-888-275-6636)

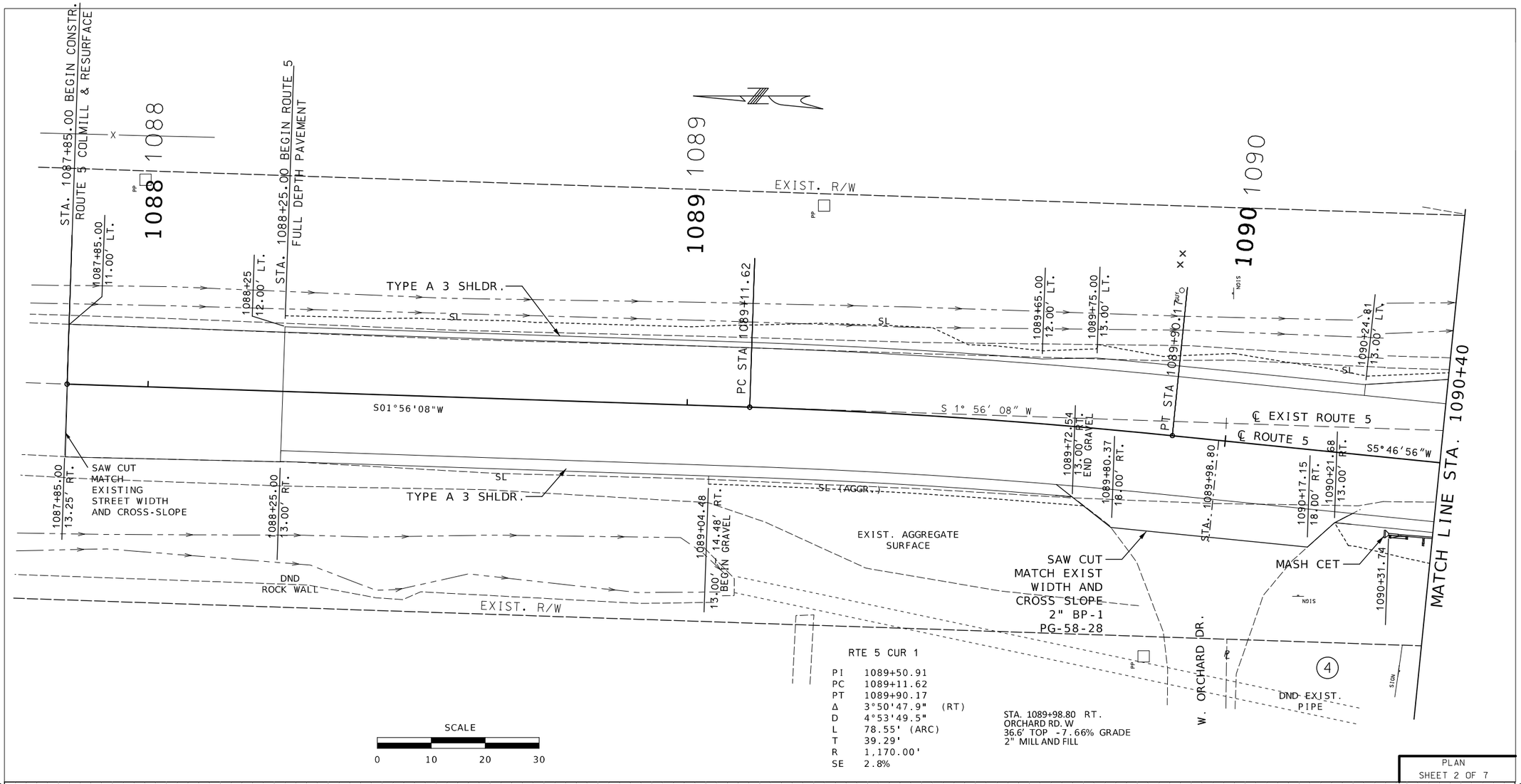

RTE 5 CUR 1

PI	1089+50.91
PC	1089+11.62
PT	1089+90.17
Δ	3°50'47.9" (RT)
D	4°53'49.5"
L	78.55' (ARC)
T	39.29'
R	1,170.00'
SE	2.8%

STA. 1089+98.80 RT.
ORCHARD RD. W
36.6' TOP -7.66% GRADE
2" MILL AND FILL

PLAN
SHEET 2 OF 7

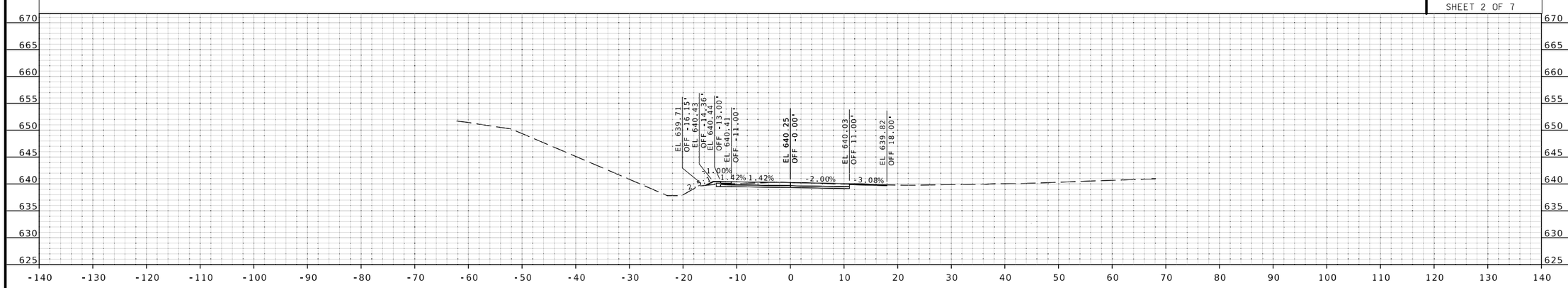

STA 1089+98.80 - DRIVEWAY PROFILE

STATE OF MISSOURI
PATRICK J. HAKE
NUMBER
PE-2010000826
PROFESSIONAL ENGINEER

&{Date} &{Time}
PATRICK.J.HAKE - CIVIL
MO-PE-2010000826

DATE PREPARED
8/1/2024

ROUTE	STATE
5	MO
DISTRICT	SHEET NO.
CD	5

COUNTY
HOWARD

JOB NO.
J5P3498

CONTRACT ID.

PROJECT NO.

BRIDGE NO.
A9250

DATE	DESCRIPTION

MISSOURI HIGHWAYS AND TRANSPORTATION COMMISSION
105 WEST CAPITOL
JEFFERSON CITY, MO 65102
1-888-ASK-MODOT (1-888-275-6636)

RTE 5 CUR 2

PI	1091+94.97
PC	1091+55.68
PT	1092+34.23
Δ	3°50'47.9" (LT)
D	4°53'49.5"
L	78.55' (ARC)
T	39.29'
R	1,170.00'
SE	2.80%

STA. 1091+13.20 LT.
ORCHARD RD.
66.4' TOP 5.84% GRADE
FULL DEPTH PAVEMENT

STA 1092+33.23 LT.
CURB CUT FOR
FIELD ENTRANCE
10% GRADE

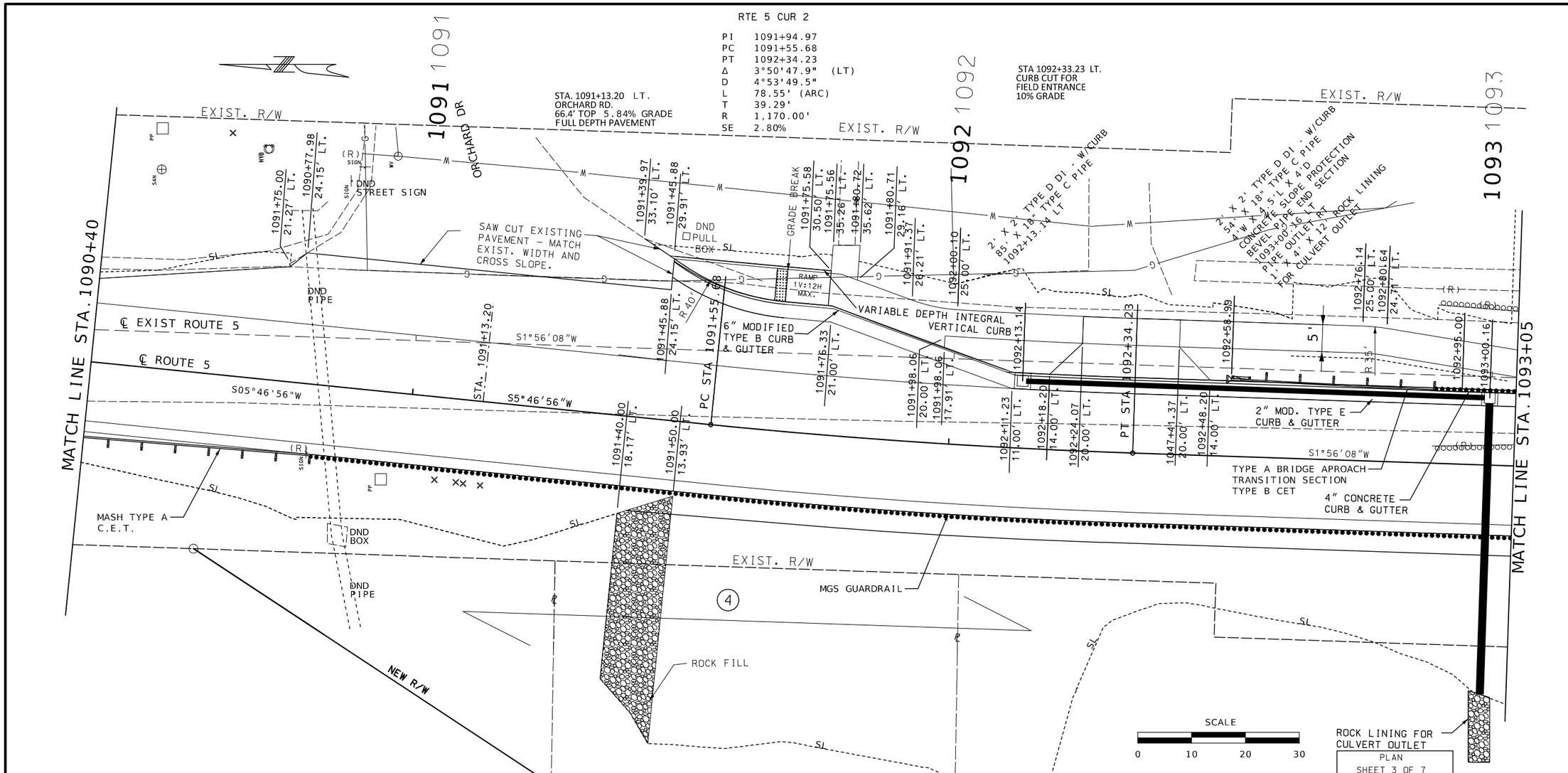

PLAN
SHEET 3 OF 7

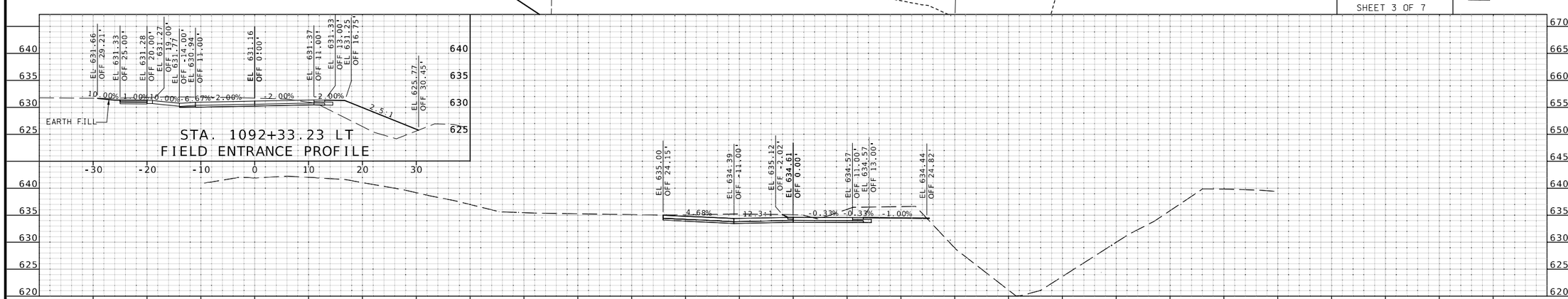

STATE OF MISSOURI
PATRICK J. HAKE
NUMBER PE-2010000826
PROFESSIONAL ENGINEER
&{Date} &{Time}
PATRICK.J.HAKE - CIVIL
MO-PE-2010000826

DATE PREPARED	8/1/2024
ROUTE 5	STATE MO
DISTRICT CD	SHEET NO. 6
COUNTY	HOWARD
JOB NO.	J5P3498
CONTRACT ID.	
PROJECT NO.	
BRIDGE NO.	A9250

DATE | DESCRIPTION

MISSOURI HIGHWAYS AND TRANSPORTATION COMMISSION
105 WEST CAPITOL
JEFFERSON CITY, MO 65102
1-888-ASK-MODOT (1-888-275-6636)

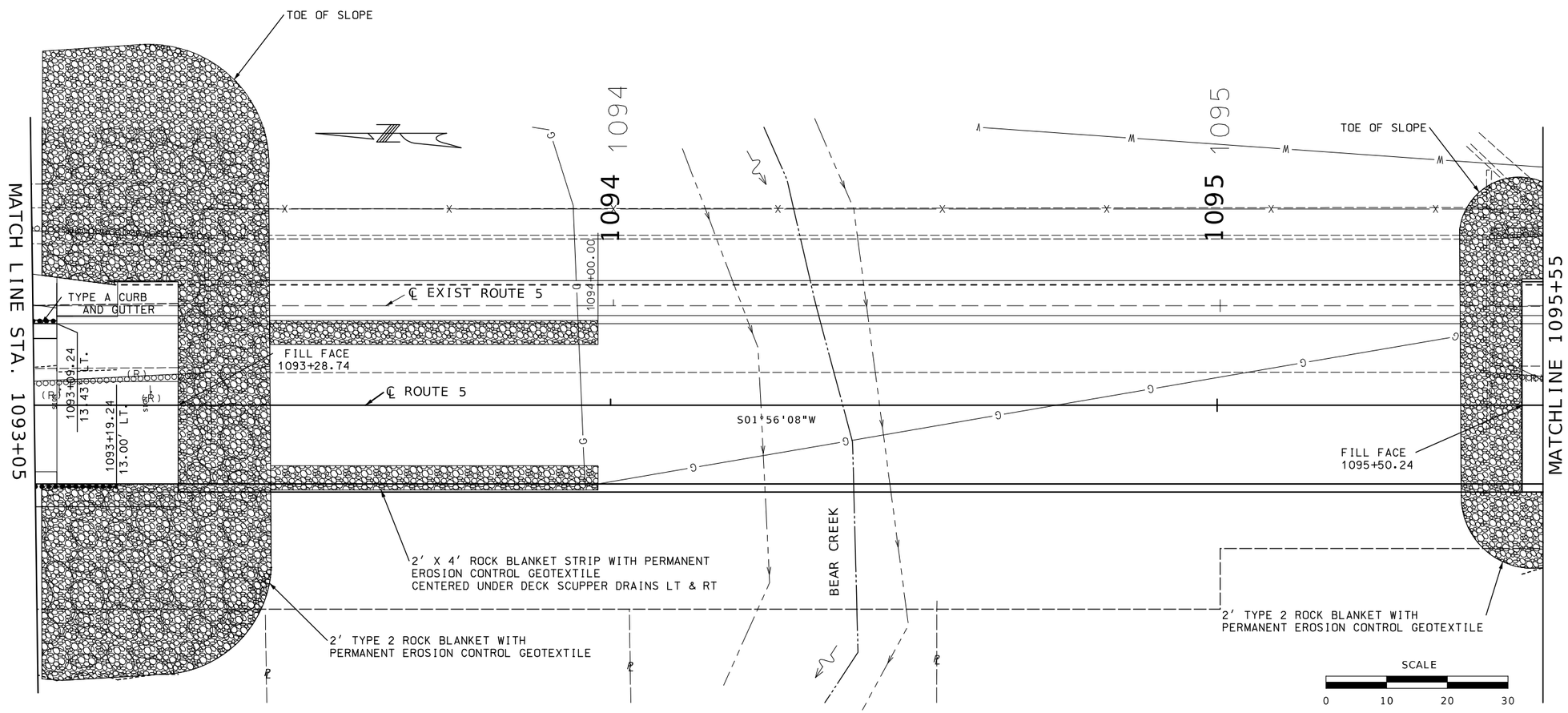

PLAN
SHEET 4 OF 7

STATE OF MISSOURI
PATRICK J. HAKE
NUMBER
PE-2010000826
PROFESSIONAL ENGINEER

Patrick Hake
8/1/2024
PATRICK J. HAKE - CIVIL
MO-PE-2010000826

DATE PREPARED	8/1/2024
ROUTE	5
STATE	MO
DISTRICT	CD
SHEET NO.	7
COUNTY	HOWARD
JOB NO.	J5P3498
CONTRACT ID.	
PROJECT NO.	
BRIDGE NO.	A9250

DATE	DESCRIPTION

MISSOURI HIGHWAYS AND TRANSPORTATION COMMISSION
105 WEST CAPITOL
JEFFERSON CITY, MO 65102
1-888-ASK-MODOT (1-888-275-6636)

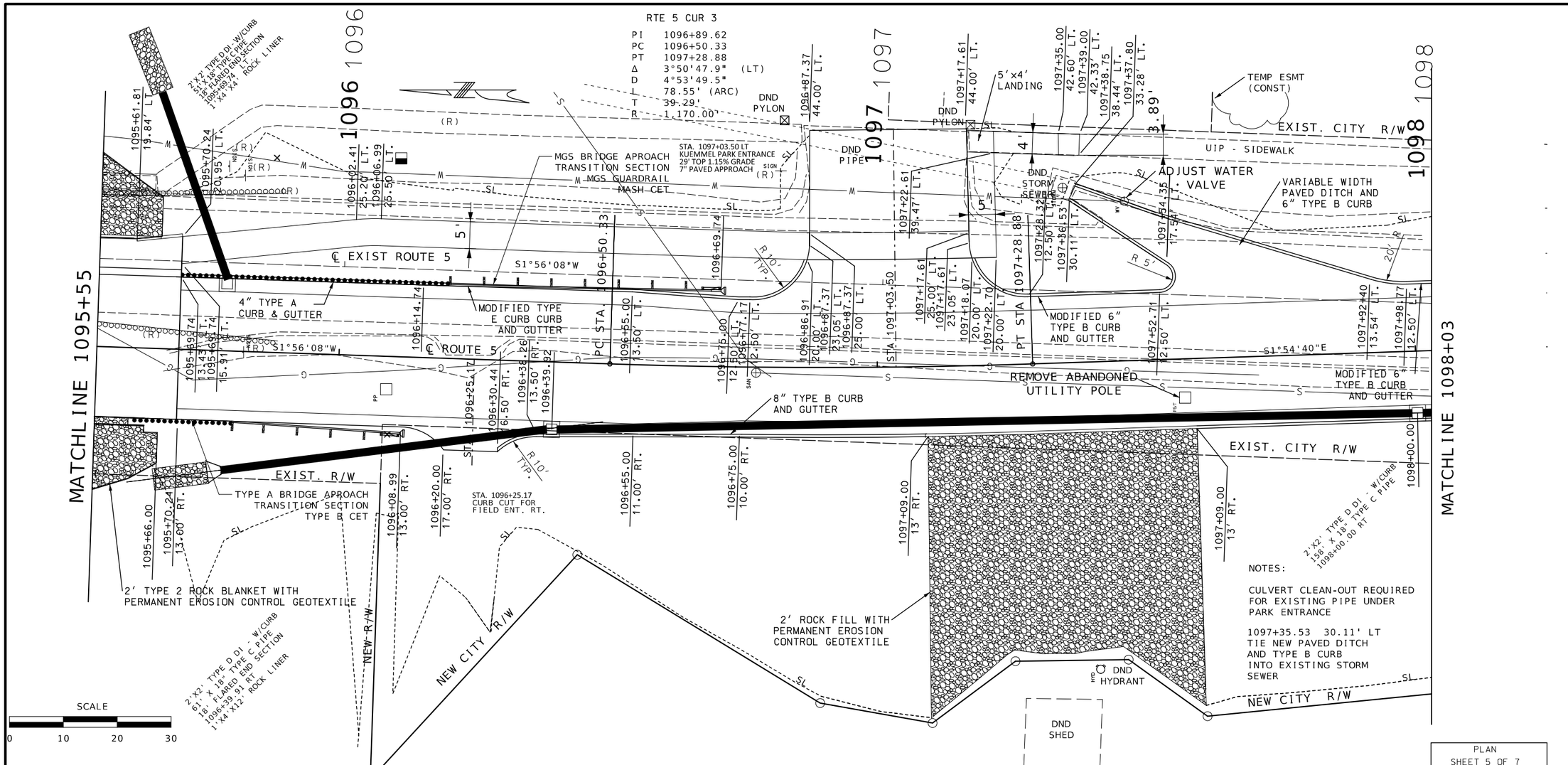

NOTES:

CULVERT CLEAN-OUT REQUIRED FOR EXISTING PIPE UNDER PARK ENTRANCE

1097+35.53 30.11' LT TIE NEW PAVED DITCH AND TYPE B CURB INTO EXISTING STORM SEWER

PLAN
SHEET 5 OF 7

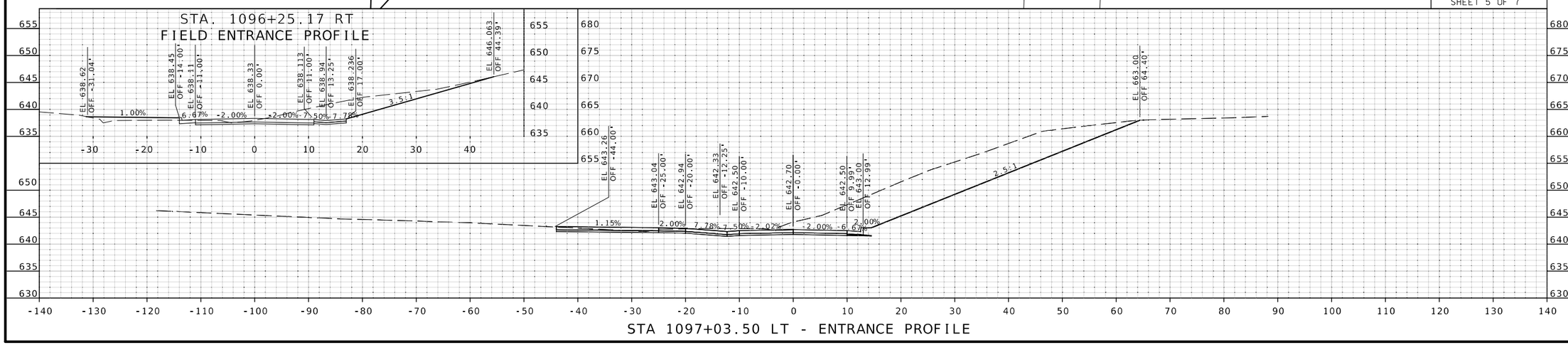

STATE OF MISSOURI
PATRICK J. HAKE
NUMBER PE-2010000826
PROFESSIONAL ENGINEER

&{Date} &{Time}
PATRICK J. HAKE - CIVIL
MO-PE-2010000826

DATE PREPARED	8/1/2024
ROUTE 5	STATE MO
DISTRICT CD	SHEET NO. 8
COUNTY	HOWARD
JOB NO.	J5P3498
CONTRACT ID.	
PROJECT NO.	
BRIDGE NO.	A9250

DATE	DESCRIPTION

MISSOURI HIGHWAYS AND TRANSPORTATION COMMISSION
105 WEST CAPITOL
JEFFERSON CITY, MO 65102
1-888-ASK-MODOT (1-888-275-6636)

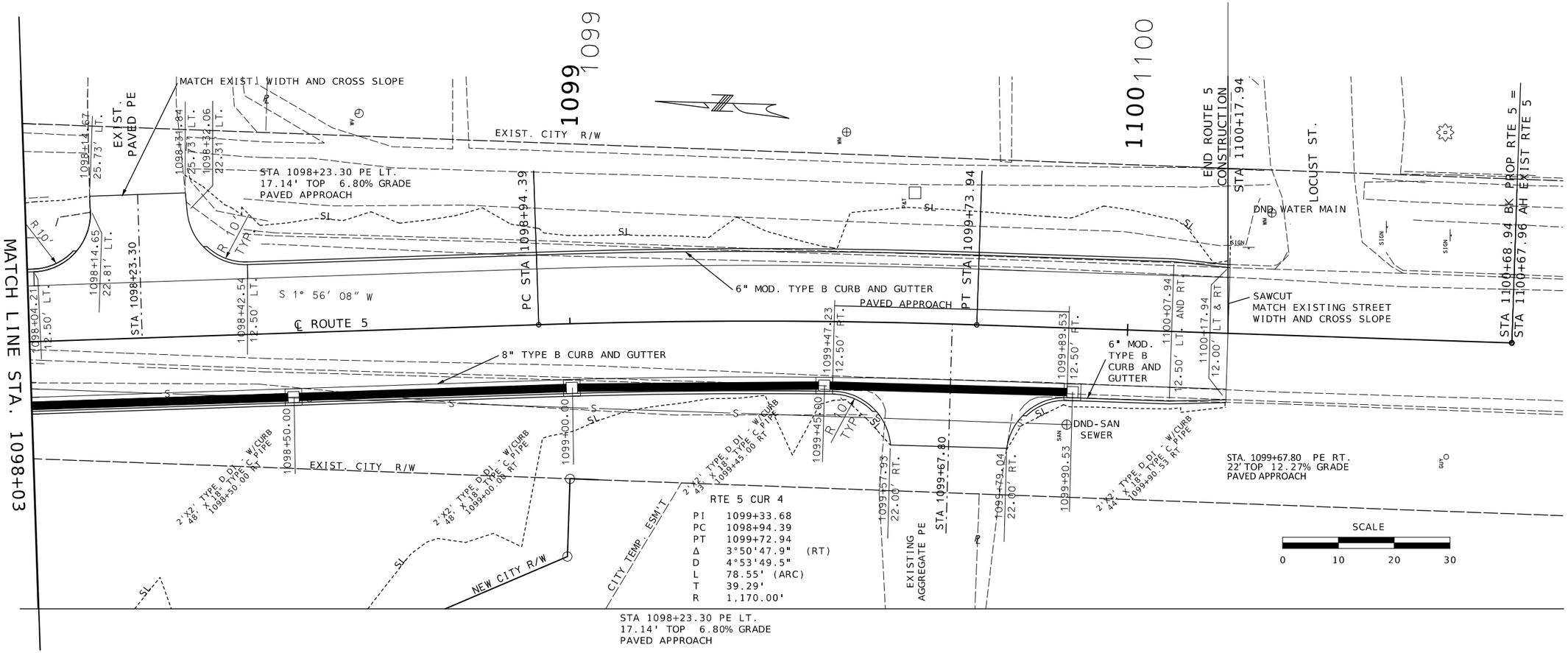

PLAN
SHEET 6 OF 7

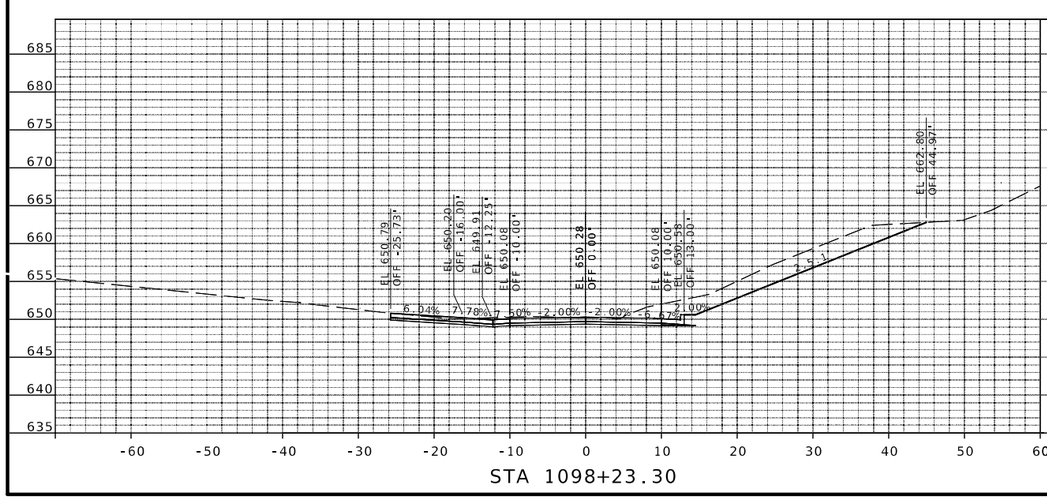

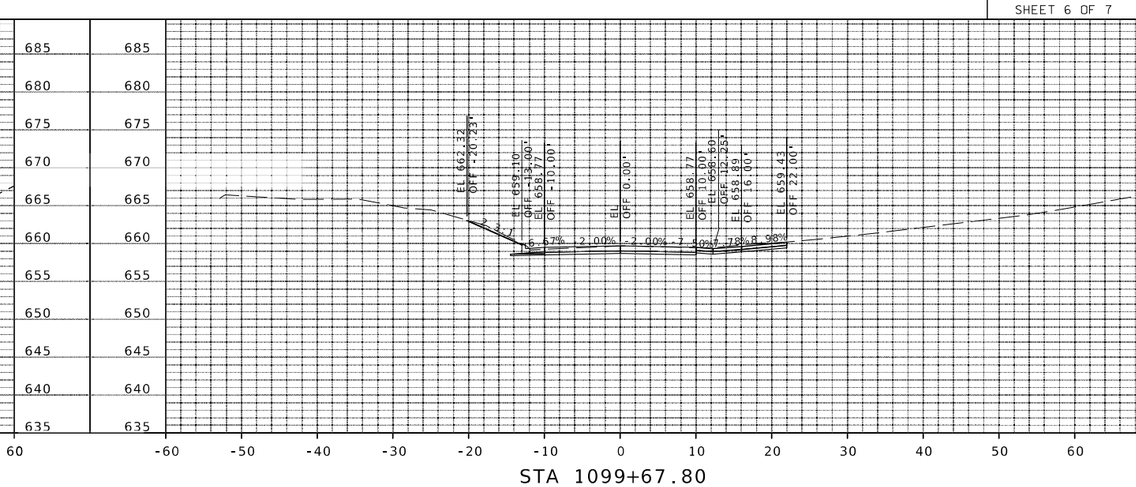

STATE OF MISSOURI
PATRICK J. HAKE
NUMBER PE-2010000826
PROFESSIONAL ENGINEER

&(Date) &(Time)
PATRICK J. HAKE - CIVIL
MO-PE-2010000826

DATE PREPARED	8/1/2024
ROUTE	5
STATE	MO
DISTRICT	CD
SHEET NO.	9
COUNTY	HOWARD
JOB NO.	J5P3498
CONTRACT ID.	
PROJECT NO.	
BRIDGE NO.	A9250

DESCRIPTION

DATE

MISSOURI HIGHWAYS AND TRANSPORTATION COMMISSION
105 WEST CAPITOL
JEFFERSON CITY, MO 65102
1-888-ASK-MODOT (1-888-275-6636)

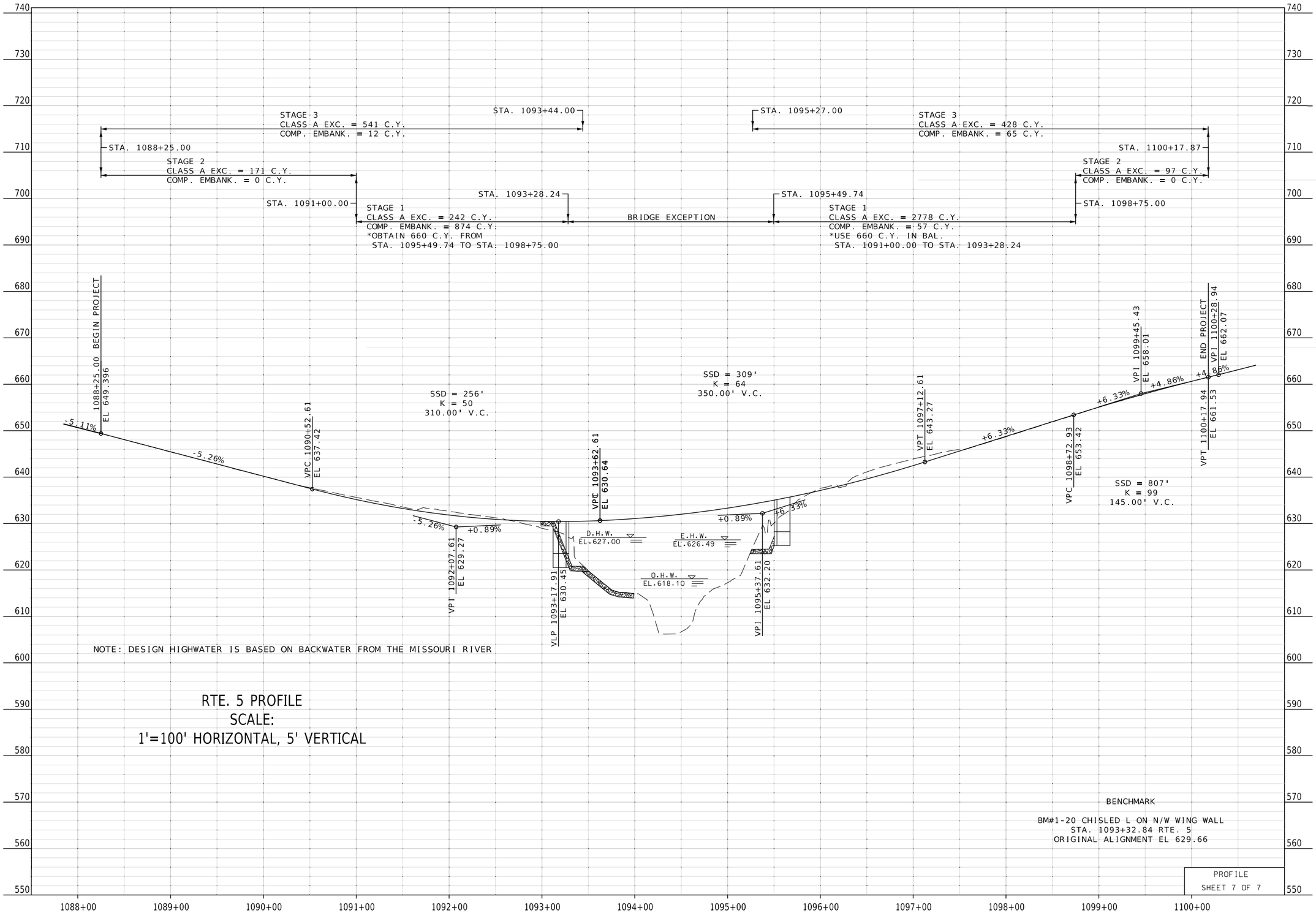

STATE OF MISSOURI
PATRICK J. HAKE
NUMBER
PE-2010000826
PROFESSIONAL ENGINEER

&{Date} &{Time}
PATRICK.J.HAKE - CIVIL
MO-PE-2010000826

DATE PREPARED	7/2/2024
ROUTE	5
STATE	MO
DISTRICT	CD
SHEET NO.	10
COUNTY	HOWARD
JOB NO.	J5P3498
CONTRACT ID.	
PROJECT NO.	
BRIDGE NO.	A9250

DATE	DESCRIPTION

MISSOURI HIGHWAYS AND TRANSPORTATION COMMISSION

105 WEST CAPITOL
JEFFERSON CITY, MO 65102
1-888-ASK-MODOT (1-888-275-6636)

REV.

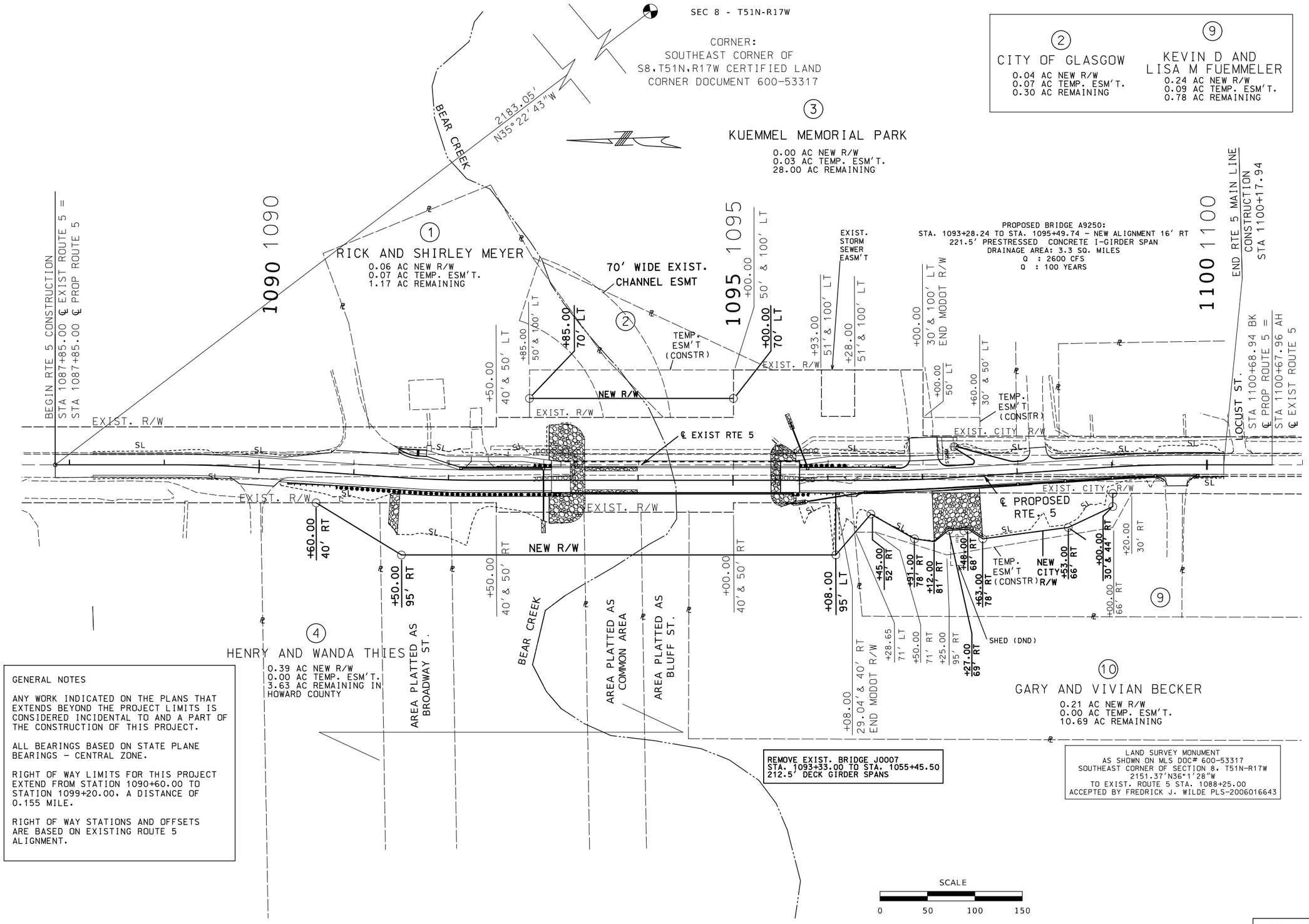

GENERAL NOTES

ANY WORK INDICATED ON THE PLANS THAT EXTENDS BEYOND THE PROJECT LIMITS IS CONSIDERED INCIDENTAL TO AND A PART OF THE CONSTRUCTION OF THIS PROJECT.

ALL BEARINGS BASED ON STATE PLANE BEARINGS - CENTRAL ZONE.

RIGHT OF WAY LIMITS FOR THIS PROJECT EXTEND FROM STATION 1090+60.00 TO STATION 1099+20.00, A DISTANCE OF 0.155 MILE.

RIGHT OF WAY STATIONS AND OFFSETS ARE BASED ON EXISTING ROUTE 5 ALIGNMENT.

RIGHT OF WAY
SHEET 1 OF 1

STATE OF MISSOURI
PATRICK J. HAKE
NUMBER
PE-2010000826
PROFESSIONAL ENGINEER

Patrick Hake
8/1/2024
PATRICK J. HAKE - CIVIL
MO-PE-2010000826

DATE PREPARED	8/1/2024
ROUTE	5
STATE	MO
DISTRICT	CD
SHEET NO.	11
COUNTY	HOWARD
JOB NO.	J5P3498
CONTRACT ID.	
PROJECT NO.	
BRIDGE NO.	A9250

DESCRIPTION

DATE

MISSOURI HIGHWAYS AND TRANSPORTATION COMMISSION

105 WEST CAPITOL
JEFFERSON CITY, MO 65102
1-888-ASK-MODOT (1-888-275-6636)

PT #801

REBAR AND CAP BURRIED 0.20,
14' EAST OF ℄ RTE. 5, 72'
NORTH OF NORTH END OF BRIDGE
OVER BEAR CREAK

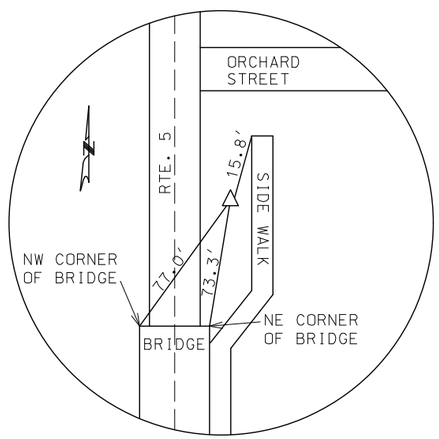

X = 1543068.7306
Y = 1238201.5020
Z = 630.78

PT #804

REBAR AND CAP BURRIED 0.20,
17' EAST OF ℄ RTE. 5, 126'
SOUTH OF SOUTH END OF BRIDGE
OVER BEAR CREEK

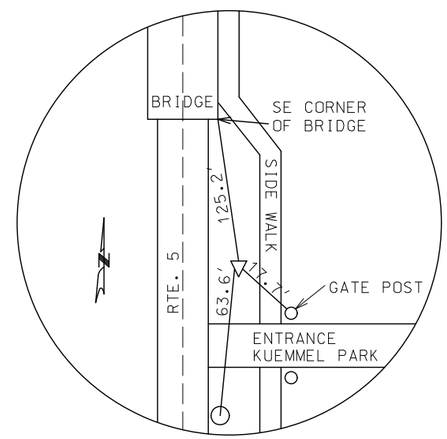

X = 1543057.6994
Y = 1237792.5308
Z = 641.68

REFERENCE POINT
SHEET 1 OF 1

STATE OF MISSOURI
PATRICK J. HAKE
NUMBER
PE-2010000826
PROFESSIONAL ENGINEER

Patrick Hake
8/[Date] &[Time]
PATRICK J. HAKE - CIVIL
MO-PE-2010000826

DATE PREPARED	7/2/2024
ROUTE	5
STATE	MO
DISTRICT	CD
SHEET NO.	12
COUNTY	HOWARD
JOB NO.	J5P3498
CONTRACT ID.	
PROJECT NO.	
BRIDGE NO.	A9250

DATE	DESCRIPTION

MISSOURI HIGHWAYS AND TRANSPORTATION COMMISSION
105 WEST CAPITOL
JEFFERSON CITY, MO 65102
1-888-ASK-MODOT (1-888-275-6636)

COORDINATE POINT LISTING

SHEET NO	STATION	LOCATION	OFFSET (USFT)	MODIFIED STATE PLANE (GROUND) NORTHING (US SURVEY FT)	EASTING (US SURVEY FT)	ELEVATION (US SURVEY FT)	DESCRIPTION	GPK POINT ID
PROJECT CONTROL POINTS								
4	1092+60.32	℄ RTE. 5	-30.93	1,238,201.50	1,543,068.73	630.78		
4	1096+68.99	℄ RTE. 5	-33.78	1,237,792.45	1,543,057.91	641.78		
ALIGNMENTS								
4	1087+85.00	℄ RTE. 5	0	1238676.587	1543070.240		BEGIN NEW RTE. 5 ALIGNMENT	
4	1088+25.00	℄ RTE. 5	0	1238636.610	1543068.889		BEGIN CONSTRUCTION RTE. 5	
4	1089+11.62	℄ RTE. 5	0	1238550.041	1543065.964		PT RTE 5 CUR 1	
4	1089+50.91	℄ RTE. 5	-0.659	1238510.774	1543064.637		PI RTE 5 CUR 1	
4	1089+90.168	℄ RTE. 5	0	1238471.684	1543060.678		PC RTE 5 CUR 1	
4	1091+55.68	℄ RTE. 5	0	1238307.017	1543044.004		PT RTE 5 CUR 2	
4	1091+94.97	℄ RTE. 5	0.659	1238267.927	1543040.046		PI RTE 5 CUR 2	
4	1092+34.23	℄ RTE. 5	0	1238228.66	1543038.719		PC RTE 5 CUR 2	
4	1096+50.33	℄ RTE. 5	0	1237812.79	1543024.665		PT RTE 5 CUR 3	
4	1096+89.62	℄ RTE. 5	0.659	1237773.522	1543023.338		PI RTE 5 CUR 3	
4	1097+28.88	℄ RTE. 5	0	1237734.255	1543024.648		PC RTE 5 CUR 3	
4	1098+94.39	℄ RTE. 5	0	1237568.838	1543030.168		PT RTE 5 CUR 4	
4	1099+33.68	℄ RTE. 5	-0.659	1237529.57	1543031.478		PI RTE 5 CUR 4	
4	1099+72.94	℄ RTE. 5	0	1237490.302	1543030.151		PC RTE 5 CUR 4	
4	1100+17.94	℄ RTE. 5	0	1237445.328	1543028.631		END CONSTRUCTION RTE. 5	
4	1100+68.94	℄ RTE. 5	0	1237394.357	1543026.909		END NEW RTE. 5 ALIGNMENT	

ALL PROJECT COORDINATES HAVE BEEN PROJECTED FROM THE MISSOURI STATE PLANE COORDINATE (SPC) SYSTEM OF 1983 USING AN AVERAGE PROJECT PROJECTION (GRID TO GROUND) FACTOR. TO GET BACK TO STATE PLANE COORDINATES MULTIPY THE PROJECT COORDINATES BY THE AVERAGE GRID FACTOR AS SHOWN IN THE "REFERENCE CONTROL INFORMATION" PORTION OF THIS TABLE.

PROJECT COORDINATE INFORMATION	
COORDINATE SYSTEM	MODIFIED STATE PLANE (GROUND)
HORIZONTAL DATUM	NAD 83 (2011) EPOCH 2010
VERTICAL DATUM	NAVD 88: GNSSS DERIVED
GEOID MODEL	GEOID12B
ELEVATIONS DETERMINED BY	DIFFERENTIAL LEVELING
PROJECT PROJECTION FACTOR	1.00000914

REFERENCE CONTROL INFORMATION	
COORDINATE SYSTEM	MO COORDINATE SYSTEM OF 1983
CONTROL STATION	MISSOURI CORS
DESIGNATION	MODOT BOONVILLE CORS ARP
CORS_ID	MOBO
PID	DN6077
LATITUDE	38° 55' 52.53367"
LONGITUDE	92° 46' 43.65919"
NORTHING (M)	343,837.027
EASTING (M)	475,827.300
ZONE	2402 (MO-CENTRAL)
PROJECT AVERAGE GRID FACTOR	0.99990860

EXAMPLE OF PROJECT COORDINATE TO S.P.C.

PROJECT NORTHING X AVERAGE GRID FACTOR
= STATE PLANE NORTHING
PROJECT EASTING X AVERAGE GRID FACTOR
= STATE PLANE EASTING

EXAMPLE: CONTROL POINT #801
N 1,238,201.5020 X 0.99990860 = N 1,238,088.3304
E 1,543,068.7306 X 0.99990860 = E 1,542,927.6941

LINEAR UNIT CONVERSION

1 METER = 3.280833333 US SURVEY FEET (USFT)

COORDINATE POINT SHEET
SHEET 1 OF 1

STATE OF MISSOURI
PATRICK J. HAKE
NUMBER
PE-2010000826
PROFESSIONAL ENGINEER

Patrick Hake
8/[Date] &[Time]
PATRICK.J.HAKE - CIVIL
MO-PE-2010000826

DATE PREPARED
7/1/2024

ROUTE	STATE
5	MO
DISTRICT	SHEET NO.
CD	13

COUNTY
HOWARD

JOB NO.
J5P3498

CONTRACT ID.

PROJECT NO.

BRIDGE NO.
A9250

DATE	DESCRIPTION

MISSOURI HIGHWAYS AND TRANSPORTATION COMMISSION
105 WEST CAPITOL
JEFFERSON CITY, MO 65102
1-888-ASK-MODOT (1-888-275-6636)

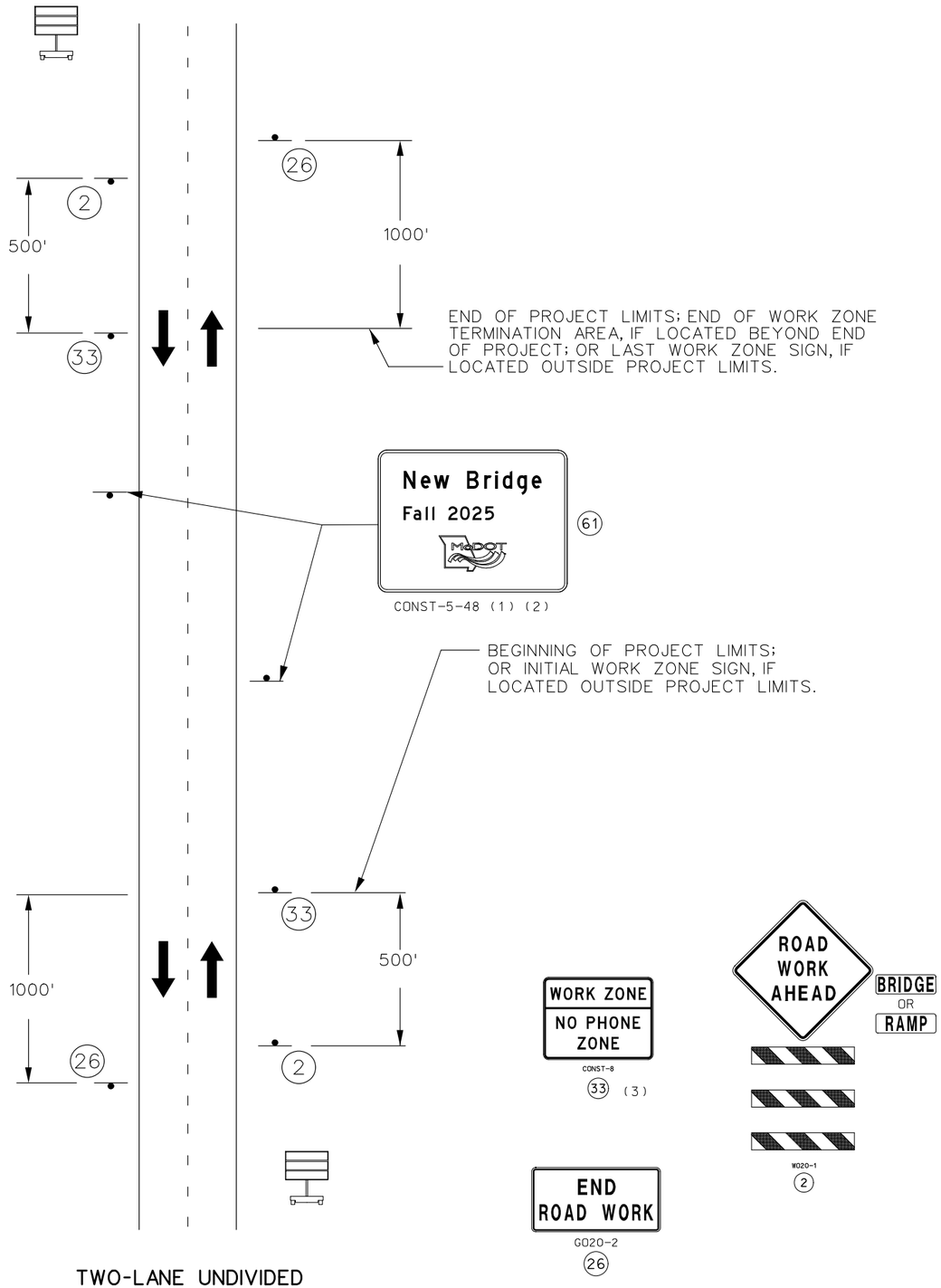

TWO-LANE UNDIVIDED
BEGIN/END OF PROJECT SIGNING

TRAFFIC CONTROL GENERAL NOTES:

OTHER SIGNS SUCH AS DETOUR OR ALTERNATE ROUTE SIGNING MAY BE USED OUTSIDE THE PROJECT LIMITS.

ANY EXISTING SIGNING THAT CONFLICTS WITH THE TRAFFIC CONTROL SIGNING SHALL BE COMPLETELY COVERED OR REMOVED.

SIGN AND DEVICE SPACING MAY BE ADJUSTED ACCORDING TO FIELD CONDITIONS AND AS APPROVED BY THE ENGINEER.

WHERE TRAFFIC BACKUPS ARE EXPECTED BEYOND THE ADVANCE WARNING AREA, ADDITIONAL SIGNING MAY BE NEEDED.

CMS TO BE LOCATED AS APPROVED BY THE ENGINEER.

TRAFFIC CONTROL STAGING MAY BE MODIFIED FROM WHAT IS SHOWN IN THESE PLANS AS REQUIRED BY CONTRACTOR'S OPERATIONS AND AS APPROVED BY THE ENGINEER. NO DIRECT PAY WILL BE MADE FOR ANY ADDITIONAL TRAFFIC CONTROL SIGNS OR DEVICES OR FOR ADDITIONAL RELOCATION OF TRAFFIC COTNROL SIGNS OR DEVICES.

NOTES:

(1) SIGN CONST-5-96 IS PLACED IN A VISIBLE AREA WITHIN THE PROJECT LIMITS PROVIDED ITS PLACEMENT DOES NOT DISRUPT A SEQUENCE OF SIGNS. IF A VISIBLE LOCATION WITHIN THE PROJECT IS NOT AVAILABLE, THE SIGN MAY BE PLACED 500 FEET BEFORE SIGN CONST-7-48.

(2) THE "POINT OF PRESENCE" SIGN IS AVAILABLE IN TWO SIZES DEPENDING ON ROADWAY CONDITION. THE 48 IN. X 36 IN. SIGN IS USED ON LOW VOLUME ROUTES THAT CARRY 400 AADT OR LESS, ON PROJECTS THAT HAVE A DURATION OF 4 WEEKS OR LESS OR IN URBAN AREAS WHERE THERE IS INSUFFICIENT RIGHT OF WAY FOR AN EIGHT FOOT WIDE SIGN. THE 96IN. X 48 IN. VERSION OF THE SIGN IS USED IN ALL OTHER APPLICATIONS. BUT CAN ALSO BE USED IN PLACE OF THE 48 IN. X 36 IN. SIGN IF ADDED EMPHASIS IS DEEMED NECESSARY.

(3) THE "WORK ZONE NO PHONE ZONE" SIGN IS PLACED A MINIMUM OF 500 FEET BEFORE THE ROAD WORK AHEAD SIGN.

TRAFFIC CONTROL LEGEND

- BARRICADE
- CHANGEABLE MESSAGE BOARD
- SIGN (SINGLE SIDED)

TRAFFIC CONTROL
BEGIN/END PROJECT
SHEET 1 OF 8

STATE OF MISSOURI
PATRICK J. HAKE
NUMBER
PE-2010000826
PROFESSIONAL ENGINEER
S[Date] &[Time]
PATRICK J. HAKE - CIVIL
MO-PE-2010000826

DATE PREPARED	
7/1/2024	
ROUTE 5	STATE MO
DISTRICT CD	SHEET NO. 14
COUNTY HOWARD	
JOB NO. J5P3498	
CONTRACT ID.	
PROJECT NO.	
BRIDGE NO. A9250	

DATE	DESCRIPTION

MISSOURI HIGHWAYS AND TRANSPORTATION COMMISSION
105 WEST CAPITOL
JEFFERSON CITY, MO 65102
1-888-ASK-MODOT (1-888-275-6636)

STAGE 1A CONSTRUCTION

BEGIN STAGE 1 BRIDGE CONSTRUCTION

SEE TRAFFIC CONTROL SHEET 7 OF 8 FOR FLAGGER LANE CLOSURE THAT MAY BE USED DURING WORKING HOURS.

NB & SB TRAFFIC USE EXISTING LANES.

SEE TRAFFIC CONTROL SHEET 1 OF 8 FOR BEGIN/END PROJECT SIGNING.

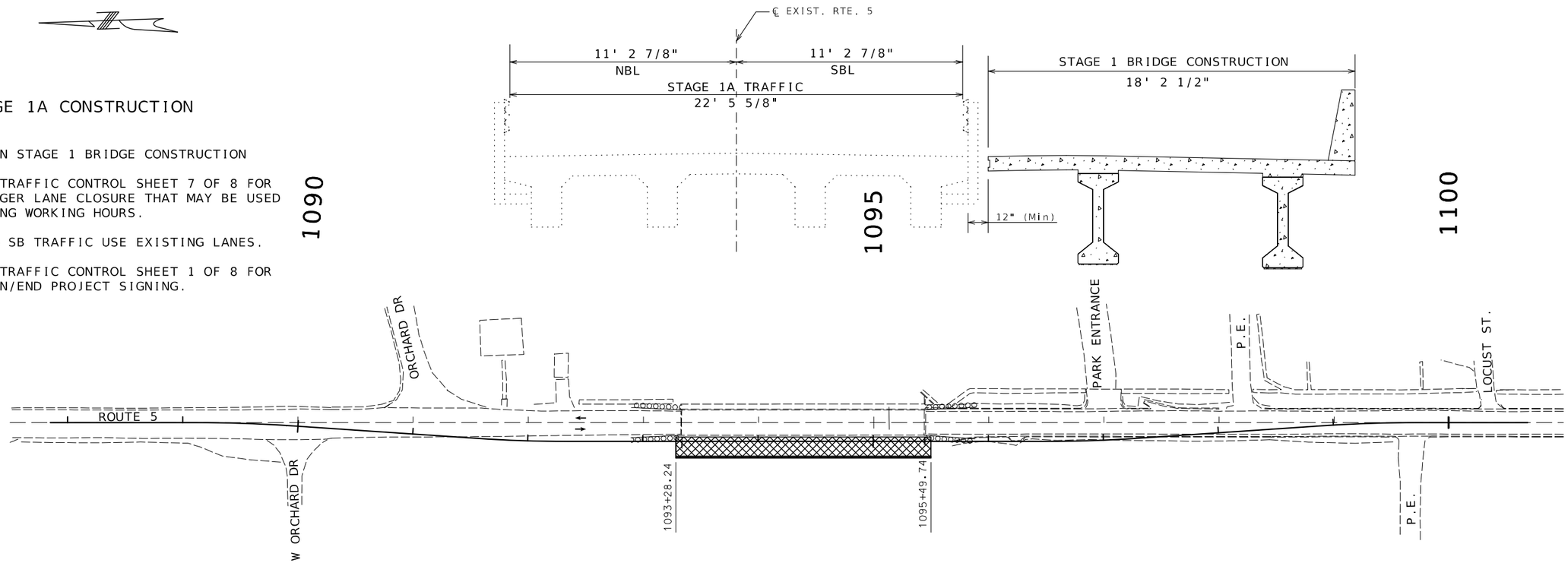

TRAFFIC CONTROL LEGEND

- SIGN (SINGLE SIDED)
- SIGN (DOUBLE SIDED)
- FLAGGER
- CONE
- CHANNELIZER
- BARRICADE
- CHANGEABLE MESSAGE BOARD
- TEMPORARY TRAFFIC SIGNAL

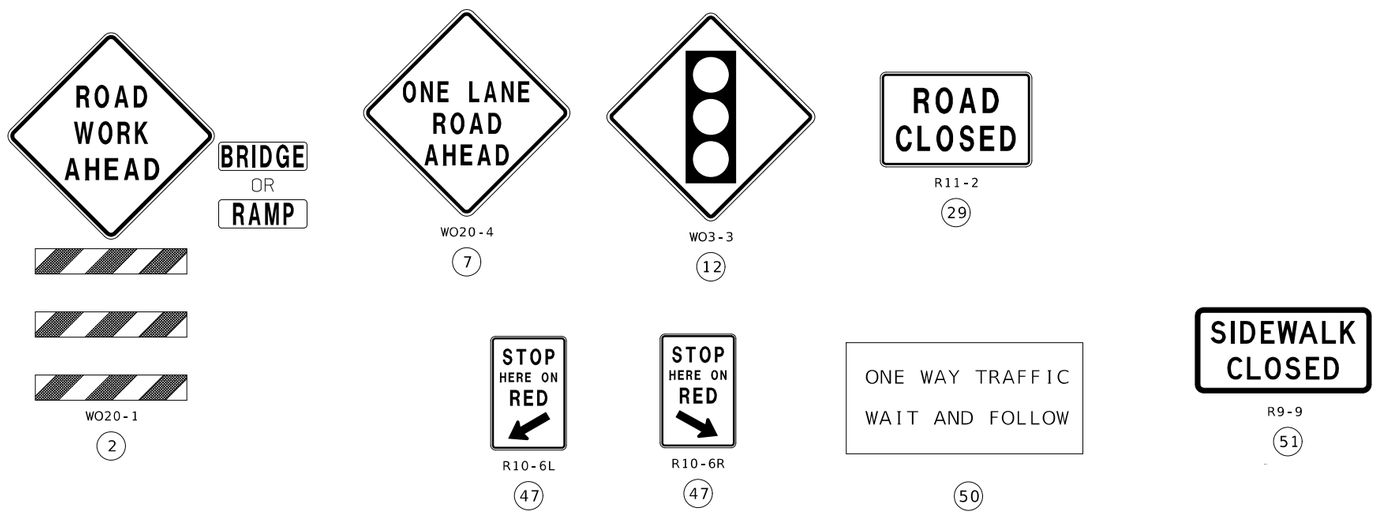

NOT TO SCALE

TRAFFIC CONTROL
STAGE 1A
SIGN LEGEND
SHEET 2 OF 8

STATE OF MISSOURI
PATRICK J. HAKE
NUMBER PE-2010000826
PROFESSIONAL ENGINEER
Patrick Hake
8/[Date] &[Time]
PATRICK J. HAKE - CIVIL
MO-PE-2010000826

DATE PREPARED	7/1/2024
ROUTE 5	STATE MO
DISTRICT CD	SHEET NO. 15
COUNTY	HOWARD
JOB NO.	J5P3498
CONTRACT ID.	
PROJECT NO.	
BRIDGE NO.	A9250

DATE	DESCRIPTION

MISSOURI HIGHWAYS AND TRANSPORTATION COMMISSION
105 WEST CAPITOL
JEFFERSON CITY, MO 65102
1-888-ASK-MODOT (1-888-275-6636)

STAGE 1B CONSTRUCTION

CONTINUE STAGE 1 BRIDGE CONSTRUCTION

PROPOSED ROUTE 5 STAGE 1B ROADWAY CONSTRUCTION.

STAGE 1 BRIDGE CONSTRUCTION

STAGE 1B BRIDGE CONSTRUCTION

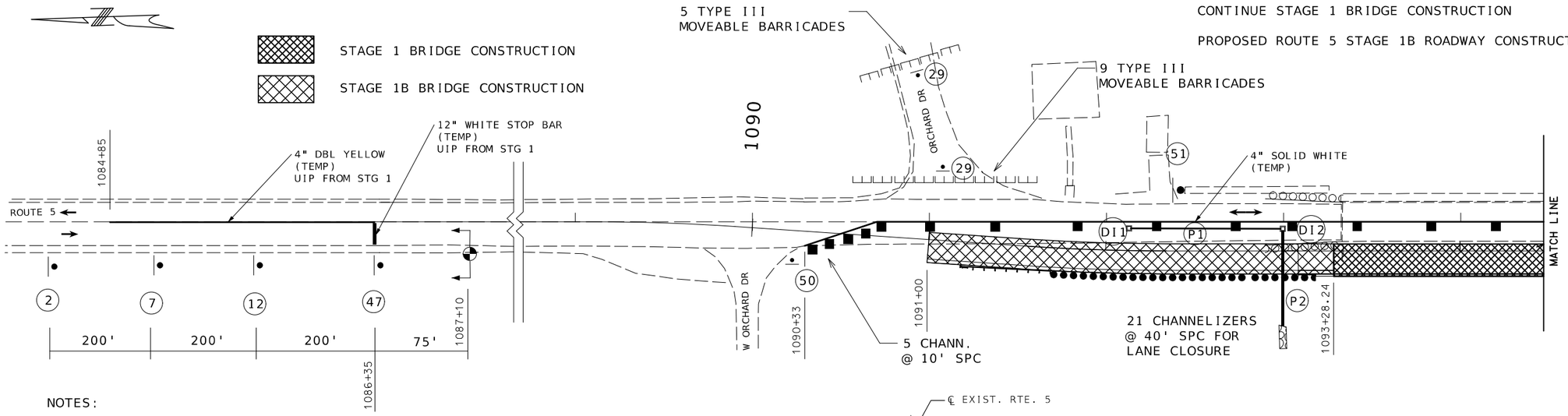

NOTES:

CONTRACTOR SHALL MAINTAIN INGRESS AND EGRESS TO ALL PRIVATE ENTRANCES AND SIDE ROADS UNLESS SHOWN AS CLOSED ON THIS SHEET OR UNLESS APPROVED BY THE ENGINEER.

ORCHARD DR AND PARK ENTRANCE CLOSED BEGINNING IN STAGE 1B AND REMAIN CLOSED FOR DURATION OF PROJECT.

PLACE DI2 (WITHOUT THE VANE GRATE) AND P2 IN THIS PHASE COVER WITH TEMP SURFACING.

ONE LANE TRAFFIC IN EXISTING NB LANE CONTROLLED BY WORK ZONE TRAFFIC SIGNALS.

CONSTRUCTION SHALL BE STAGED TO MINIMIZE INGRESS/EGRESS IMPACTS TO SIDE ROADS AND PRIVATE ENTRANCES.

SEE SHEET 2 OF 8 FOR TRAFFIC CONTROL DEVICES.

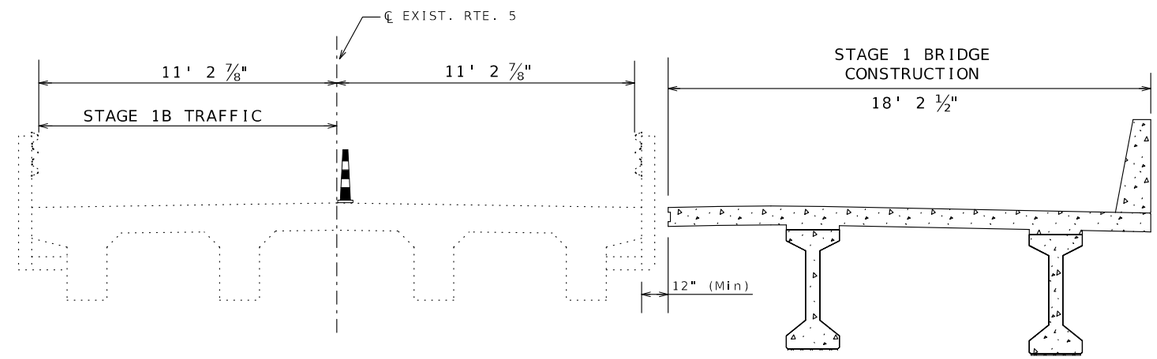

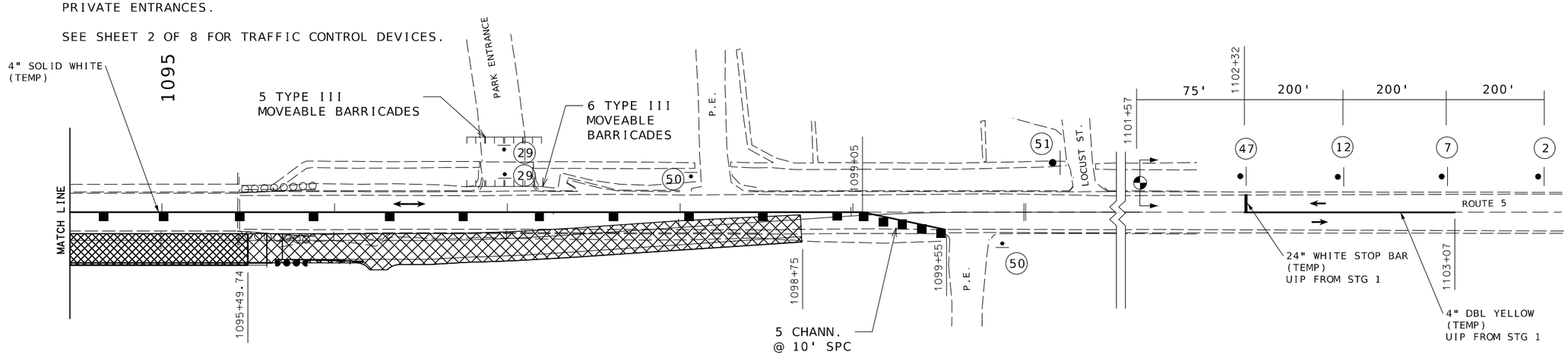

NOT TO SCALE

TRAFFIC CONTROL
STAGE 1B
SHEET 3 OF 8

STATE OF MISSOURI
PATRICK J. HAKE
NUMBER
PE-2010000826
PROFESSIONAL ENGINEER

Patrick Hake
8/[Date] &[Time]
PATRICK J. HAKE - CIVIL
MO-PE-2010000826

DATE PREPARED	7/1/2024
ROUTE 5	STATE MO
DISTRICT CD	SHEET NO. 16
COUNTY	HOWARD
JOB NO.	J5P3498
CONTRACT ID.	
PROJECT NO.	
BRIDGE NO.	A9250

DESCRIPTION	DATE

MISSOURI HIGHWAYS AND TRANSPORTATION COMMISSION

105 WEST CAPITOL
JEFFERSON CITY, MO 65102
1-888-ASK-MODOT (1-888-275-6636)

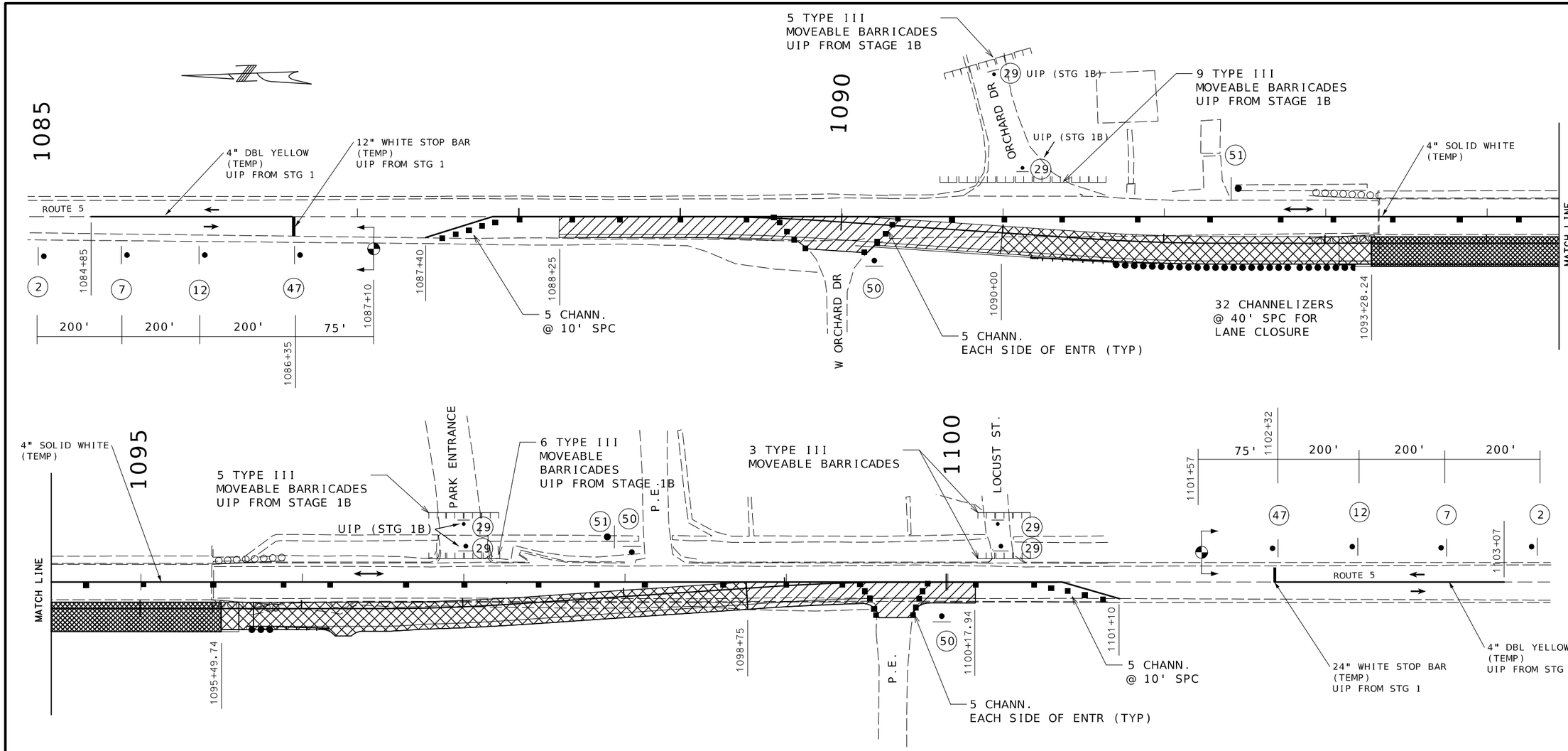

STAGE 1 BRIDGE CONSTRUCTION

STAGE 1B ROADWAY CONSTRUCTION

STAGE 2 ROADWAY CONSTRUCTION

STAGE 2 CONSTRUCTION

BRIDGE AND ROADWAY STAGE 1 CONSTRUCTION SHALL BE COMPLETE AND READY TO OPEN TO TRAFFICE PRIOR TO THE START OF STAGE 2.

COMPLETE PAVEMENT TIE-INS ON NORTH AND SOUTH END OF PROJECT.

NOTES:

CONTRACTOR SHALL MAINTAIN INGRESS AND EGRESS TO ALL PRIVATE ENTRANCES AND SIDE ROADS UNLESS SHOWN AS CLOSED ON THIS SHEET OR UNLESS APPROVED BY THE ENGINEER.

ONE LANE TRAFFIC IN EXISTING NB LANE CONTROLLED BY WORK ZONE TRAFFIC SIGNALS.

CONSTRUCTION SHALL BE STAGED TO MINIMIZE INGRESS/EGRESS IMPACTS TO SIDE ROADS AND PRIVATE ENTRANCES.

SEE SHEET 2 OF 8 FOR TRAFFIC CONTROL DEVICES.

NOT TO SCALE

TRAFFIC CONTROL
STAGE 2
SHEET 4 OF 8

STATE OF MISSOURI
PATRICK J. HAKE
NUMBER
PE-2010000826
PROFESSIONAL ENGINEER

Patrick Hake
8/[Date] &[Time]
PATRICK J. HAKE - CIVIL
MO-PE-2010000826

DATE PREPARED	7/1/2024
ROUTE 5	STATE MO
DISTRICT CD	SHEET NO. 17
COUNTY HOWARD	
JOB NO. J5P3498	
CONTRACT ID.	
PROJECT NO.	
BRIDGE NO. A9250	

DESCRIPTION

DATE

MISSOURI HIGHWAYS AND TRANSPORTATION COMMISSION
105 WEST CAPITOL
JEFFERSON CITY, MO 65102
1-888-ASK-MODOT (1-888-275-6636)

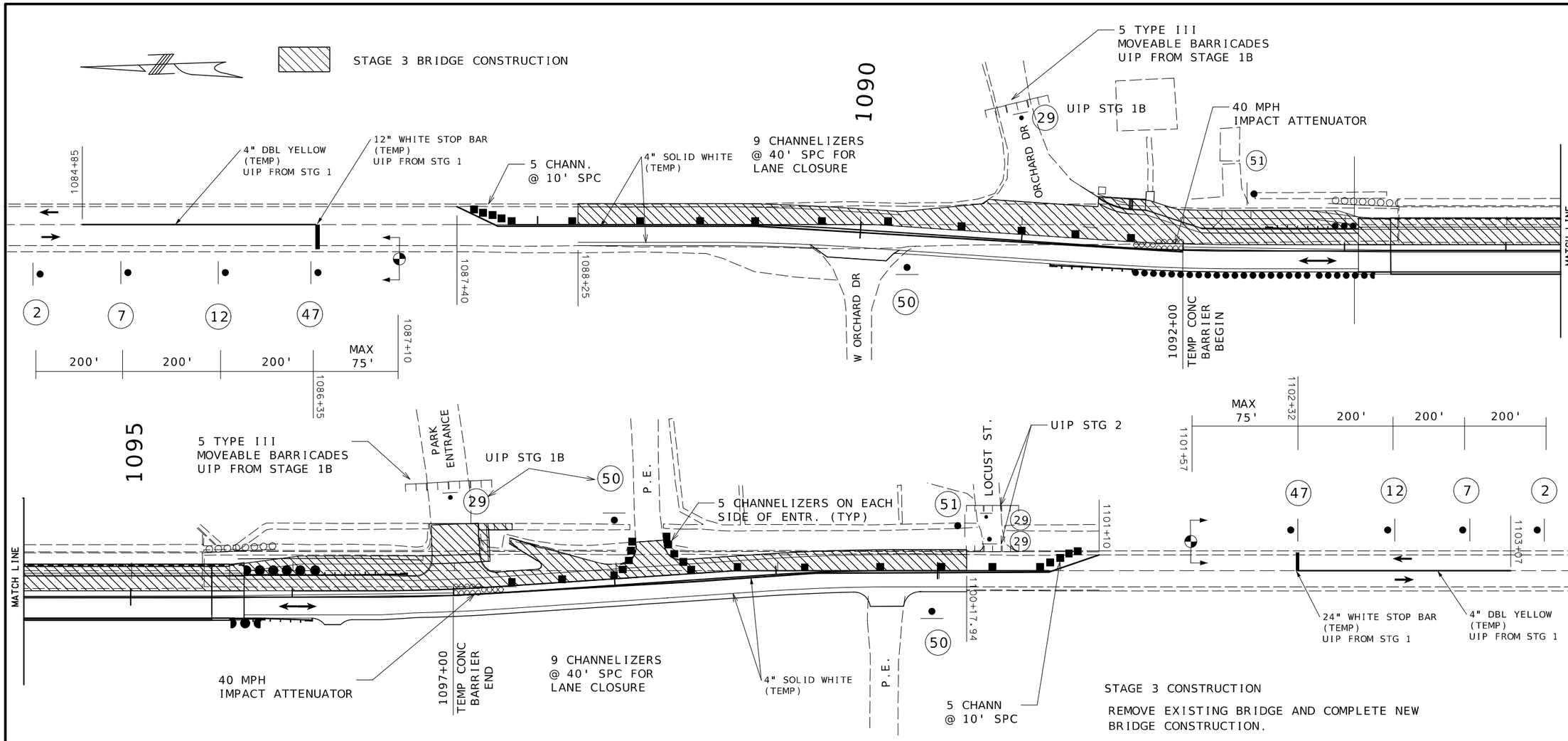

STAGE 3 CONSTRUCTION

REMOVE EXISTING BRIDGE AND COMPLETE NEW BRIDGE CONSTRUCTION.

PROPOSED ROUTE 5 ROADWAY CONSTRUCTION.

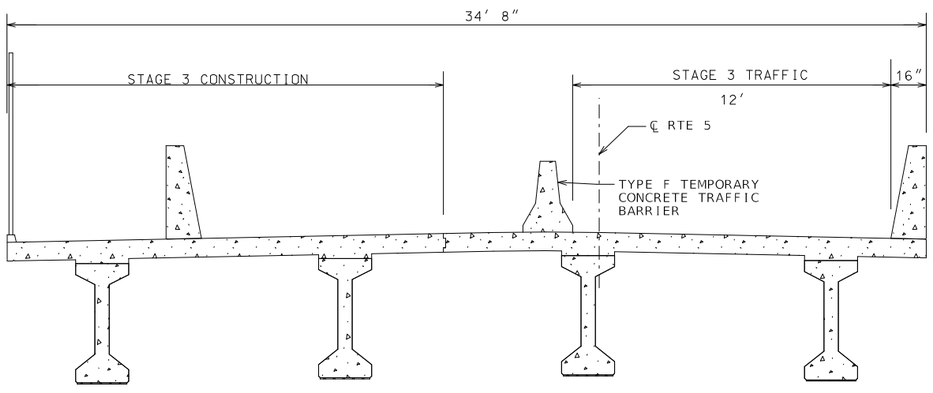

NOTES:

CONTRACTOR SHALL MAINTAIN INGRESS AND EGRESS TO ALL PRIVATE ENTRANCES AND SIDE ROADS UNLESS SHOWN AS CLOSED ON THIS SHEET OR UNLESS APPROVED BY THE ENGINEER.

ONE LANE TRAFFIC IN NEW SB LANE CONTROLLED BY WORK ZONE TRAFFIC SIGNALS.

CONSTRUCTION SHALL BE STAGED TO MINIMIZE INGRESS/EGRESS IMPACTS TO SIDE ROADS AND PRIVATE ENTRANCES.

SEE SHEET 2 OF 8 FOR TRAFFIC CONTROL DEVICES.

TRAFFIC CONTROL
STAGE 3
SHEET 5 OF 8

STATE OF MISSOURI
PATRICK J. HAKE
NUMBER
PE-2010000826
PROFESSIONAL ENGINEER
&{Date} &{Time}
PATRICK.J.HAKE - CIVIL
MO-PE-2010000826

DATE PREPARED	7/1/2024
ROUTE 5	STATE MO
DISTRICT CD	SHEET NO. 18
COUNTY HOWARD	
JOB NO. J5P3498	
CONTRACT ID.	
PROJECT NO.	
BRIDGE NO. A9250	

DESCRIPTION

DATE

MISSOURI HIGHWAYS AND TRANSPORTATION COMMISSION

105 WEST CAPITOL
JEFFERSON CITY, MO 65102
1-888-ASK-MODOT (1-888-275-6636)

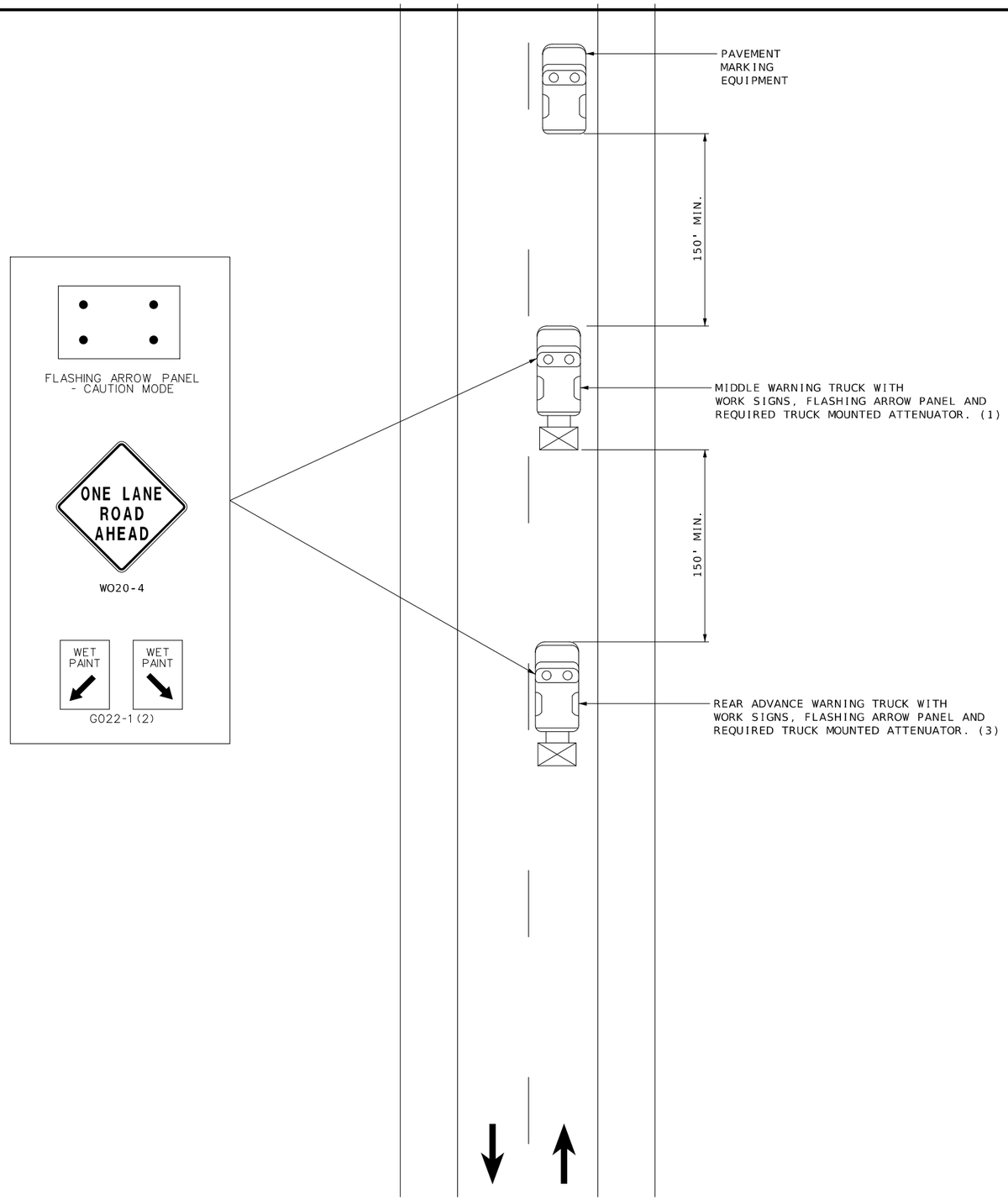

STRIPING ON TWO-LANE HIGHWAY

NOT TO SCALE

NOTES:

UPON APPROVAL OF THE ENGINEER, THE CONTRACTOR MAY PROVIDE ADDITIONAL PROTECTIVE TRUCKS EQUIPPED WITH PROPER WARNING DEVICES.

PROTECTIVE TRUCKS AND WORK VEHICLES SHALL DISPLAY HIGH-INTENSITY ROTATING, FLASHING, OSCILLATING, OR STROBE LIGHTS.

VEHICLE HAZARD WARNING SIGNALS SHALL NOT BE USED INSTEAD OF THE VEHICLE'S HIGH-INTENSITY ROTATING, FLASHING, OSCILLATING, OR STROBE LIGHTS.

VEHICLE-MOUNTED SIGNS SHALL BE MOUNTED IN A MANNER SUCH THAT THEY ARE NOT OBSCURED BY EQUIPMENT OR SUPPLIES. SIGN LEGENDS ON VEHICLE-MOUNTED SIGNS SHALL BE COVERED OR TURNED FROM VIEW WHEN WORK IS NOT IN PROGRESS.

FLASHING ARROW PANELS SHALL BE INCIDENTAL TO TRUCK MOUNTED ATTENUATORS, WHEREVER USED. NO ADDITIONAL PAYMENT WILL BE MADE.

(1) TRUCK IS OPTIONAL ON TWO-LANE UNDIVIDED HIGHWAYS IF SIGNING AND ARROW BOARD ARE MOUNTED ON THE PAVEMENT MARKING EQUIPMENT.

(2) WET PAINT SIGNS ARE INSTALLED TO INDICATE THE SIDE IN WHICH THE PAVEMENT MARKING MATERIAL IS BEING APPLIED. AT THE CONTRACTOR'S OPTION, A FRONT FACING WET PAINT SIGN MAY BE INSTALLED ON THE LEFT SIDE OF THE PAVEMENT MARKING EQUIPMENT.

(3) REAR WARNING TRUCK IS POSITIONED AT THE NO TRACK POINT OF THE PAVEMENT MARKING MATERIAL, OR VERTICAL OR HORIZONTAL CURVES THAT RESTRICT SIGHT DISTANCE, OR SPACING SHOWN, WHICHEVER IS GREATER.

STATE OF MISSOURI
PATRICK J. HAKE
NUMBER
PE-2010000826
PROFESSIONAL ENGINEER

Patrick Hake
$[Date] $[Time]
PATRICK J. HAKE - CIVIL
MO-PE-2010000826

DATE PREPARED	
7/1/2024	
ROUTE 5	STATE MO
DISTRICT CD	SHEET NO. 19
COUNTY HOWARD	
JOB NO. J5P3498	
CONTRACT ID.	
PROJECT NO.	
BRIDGE NO. A9250	

DATE	DESCRIPTION

MISSOURI HIGHWAYS AND TRANSPORTATION COMMISSION
105 WEST CAPITOL
JEFFERSON CITY, MO 65102
1-888-ASK-MODOT (1-888-275-6636)

TRAFFIC CONTROL
MOVING OPERATION
SHEET 6 OF 8

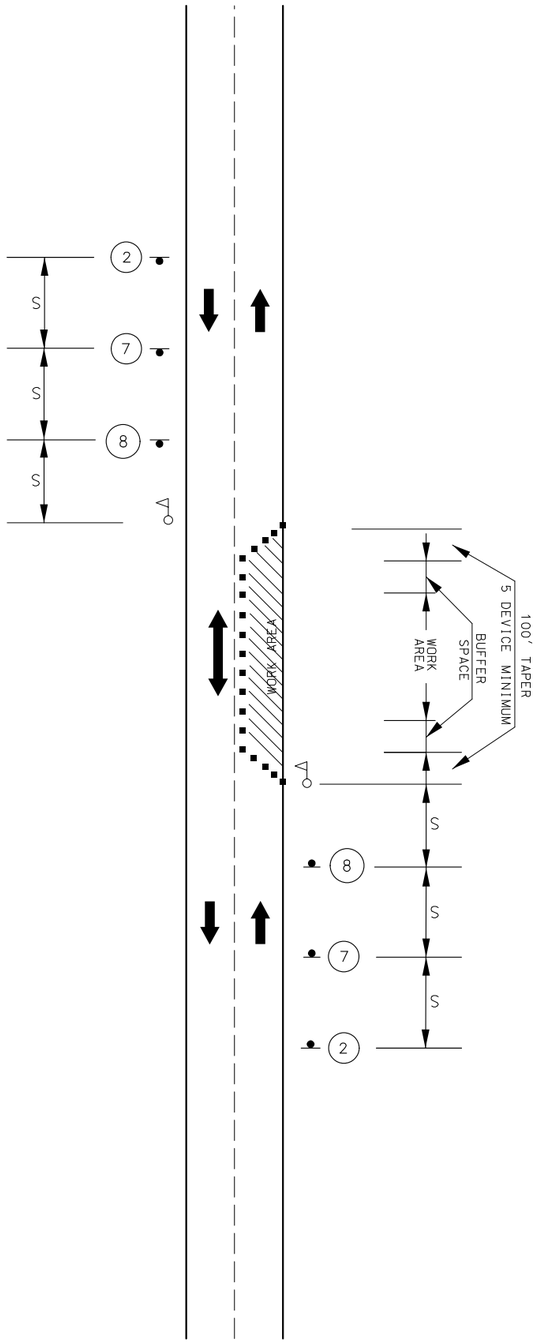

LANE CLOSURE
ON TWO-LANE
ROAD USING FLAGGERS

NOTE TO SCALE

SPEED	SIGN SPACING	BUFFER LENGTH	CHANNELIZER SPACING
PERMANENT POSTED (MPH)	UNDIVIDED (S)(FT)	(FT)	BUFFER/WORK AREAS (FT)
0-35	200	250	40
40-45	350	360	80
50-55	500	495	80
60-70	1000	730	120

NOTES:

SIGN SPACING MAY BE ADJUSTED TO FIT FIELD CONDITIONS.

DAYLIGHT FLAGGING OPERATIONS ONLY.

TRAFFIC CONTROL LEGEND

- SIGN (SINGLE SIDED)
- FLAGGER
- CHANNELIZER

TRAFFIC CONTROL
SHEET 7 OF 8

STATE OF MISSOURI
PATRICK J. HAKE
NUMBER
PE-2010000826
PROFESSIONAL ENGINEER

Patrick Hake
&{Date} &{Time}
PATRICK.J.HAKE - CIVIL
MO-PE-2010000826

DATE PREPARED
8/1/2024

ROUTE	STATE
5	MO
DISTRICT	SHEET NO.
CD	20

COUNTY
HOWARD

JOB NO.
J5P3498

CONTRACT ID.

PROJECT NO.

BRIDGE NO.
A9250

DATE	DESCRIPTION

MISSOURI HIGHWAYS AND TRANSPORTATION COMMISSION
105 WEST CAPITOL
JEFFERSON CITY, MO 65102
1-888-ASK-MODOT (1-888-275-6636)

61

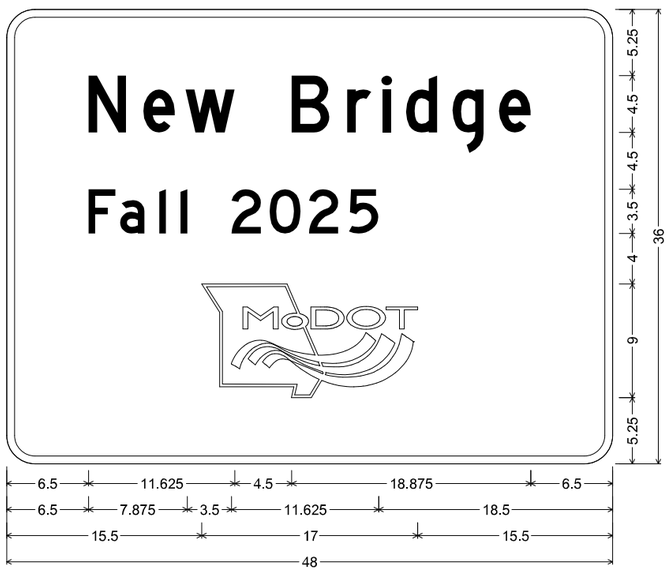

CONST-5-48 SH-FLAT SHEET;
2.250" Radius, 0.625" Border, White on, Blue;
"New", D; "Bridge", D; "Fall 2025", D;
Table of letter and object lefts

N 6.500	e 10.875	w 14.125	B 22.625	r 27.000	i 29.750	d 31.625	g 35.375	e 39.000

F 6.500	a 9.000	l 12.125	l 13.750	2 17.875	0 20.875	2 24.000	5 27.125

15.500

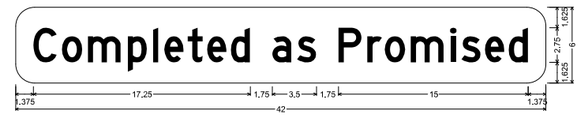

CONST-SP-42 SHF-FLAT SHEET FLUORESCENT:
1.500" Radius, No border, Yellow;
"Completed as Promised" Black, D 65% spacing;
Table of letter and object lefts

C 1.375	o 3.625	m 5.750	p 8.875	l 10.875	e 11.750	t 13.625	e 15.125	d 17.000	a 20.375	s 22.250	

P 25.625	r 27.875	o 29.250	m 31.250	l 34.500	s 35.250	e 37.125	d 39.000	

SPECIAL SHF-FLAT SHEET FLUORESCENT;
1.500" Radius, 0.500" Border, 0.375" Indent, Black on, Orange;
"ONE WAY", D; "TRAFFIC", D; "WAIT & FOLLOW", C;
Table of letter and object lefts

O 3.000	N 6.750	E 10.375	W 16.250	A 20.000	Y 23.625

T 4.375	R 7.500	A 11.000	F 15.000	F 18.250	I 21.375	C 23.000

2.250

W 2.250	A 4.625	I 7.000	T 8.000	& 11.250

F 14.875	O 16.875	L 19.250	L 21.250	O 23.250	W 25.500

TRAFFIC CONTROL
SIGN DETAILS
SHEET 8 OF 8

STATE OF MISSOURI
PATRICK J. HAKE
NUMBER
PE-2010000826
PROFESSIONAL ENGINEER

Patrick Hake
8{Date} &{Time}
PATRICK J. HAKE - CIVIL
MO-PE-2010000826

DATE PREPARED	
7/1/2024	
ROUTE 5	STATE MO
DISTRICT CD	SHEET NO. 21
COUNTY HOWARD	
JOB NO. J5P3498	
CONTRACT ID.	
PROJECT NO.	
BRIDGE NO. A9250	

DATE	DESCRIPTION

MISSOURI HIGHWAYS AND TRANSPORTATION COMMISSION
105 WEST CAPITOL
JEFFERSON CITY, MO 65102
1-888-ASK-MODOT (1-888-275-6636)

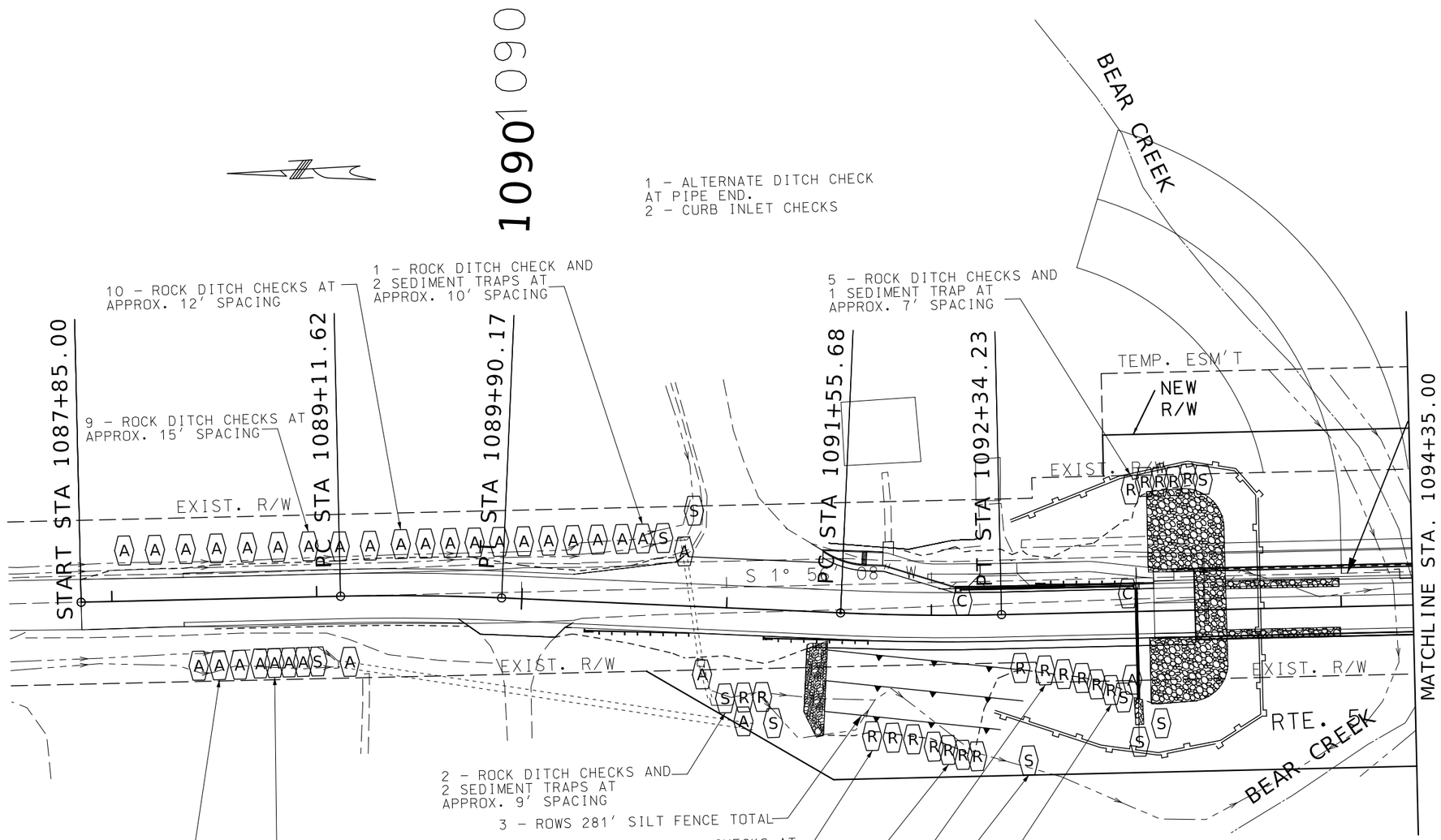

TEMPORARY EROSION CONTROL LEGEND

A	ALTERNATE DITCH CHECK
C	CURB INLET CHECK
R	ROCK DITCH CHECK
S	SEDIMENT TRAP
	TEMPORARY BERM TYPE C
	SILT FENCE

EROSION CONTROL
SHEET 1 OF 2

STATE OF MISSOURI
PATRICK J. HAKE
NUMBER
PE-2010000826
PROFESSIONAL ENGINEER

Patrick Hake
8/[Date] &[Time]
PATRICK J. HAKE - CIVIL
MO-PE-2010000826

DATE PREPARED	7/1/2024
ROUTE	5
STATE	MO
DISTRICT	CD
SHEET NO.	22
COUNTY	HOWARD
JOB NO.	J5P3498
CONTRACT ID.	
PROJECT NO.	
BRIDGE NO.	A9250

DATE	DESCRIPTION

MISSOURI HIGHWAYS AND TRANSPORTATION COMMISSION

105 WEST CAPITOL
JEFFERSON CITY, MO 65102
1-888-ASK-MODOT (1-888-275-6636)

NOTES:

USE TYPE 3B EROSION CONTROL MAT ON ALL SLOPES GREATER THAN 3:1.

EROSION CONTROL QUANTITIES ARE APPROXIMATE ADJUST TO MEET FIELD CONDITIONS AS APPROVED BY THE ENGINEER.

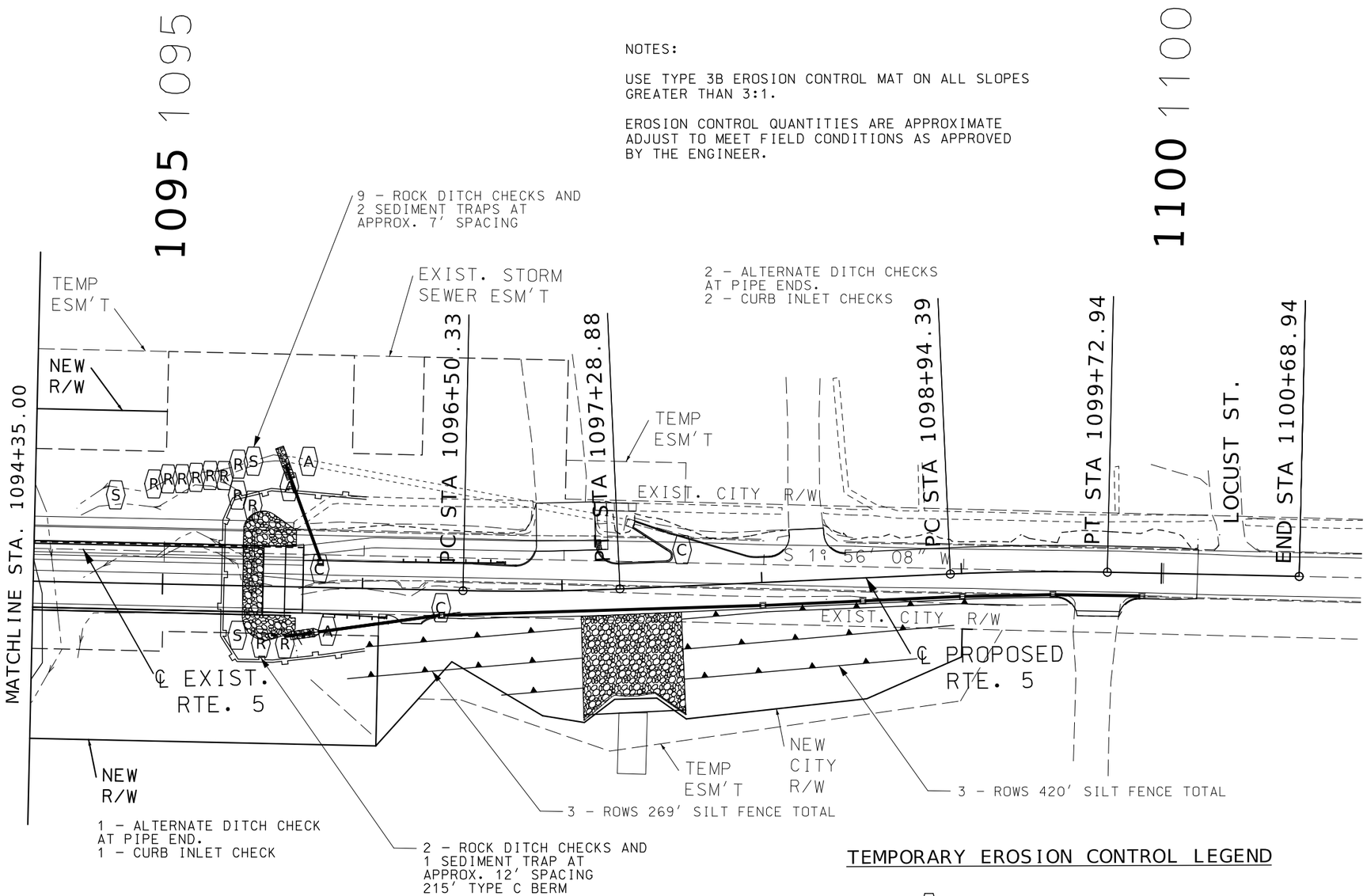

SCALE

0 30 60 90

TEMPORARY EROSION CONTROL LEGEND

A	ALTERNATE DITCH CHECK
C	CURB INLET CHECK
R	ROCK DITCH CHECK
S	SEDIMENT TRAP
	TEMPORARY BERM TYPE C
	SILT FENCE

EROSION CONTROL
SHEET 2 OF 2

STATE OF MISSOURI
PATRICK J. HAKE
NUMBER
PE-2010000826
PROFESSIONAL ENGINEER

Patrick Hake
8/1/2024
PATRICK J. HAKE - CIVIL
MO-PE-2010000826

DATE PREPARED	
8/1/2024	
ROUTE 5	STATE MO
DISTRICT CD	SHEET NO. 23
COUNTY HOWARD	
JOB NO. J5P3498	
CONTRACT ID.	
PROJECT NO.	
BRIDGE NO. A9250	

DATE	DESCRIPTION

MISSOURI HIGHWAYS AND TRANSPORTATION COMMISSION
105 WEST CAPITOL
JEFFERSON CITY, MO 65102
1-888-ASK-MODOT (1-888-275-6636)

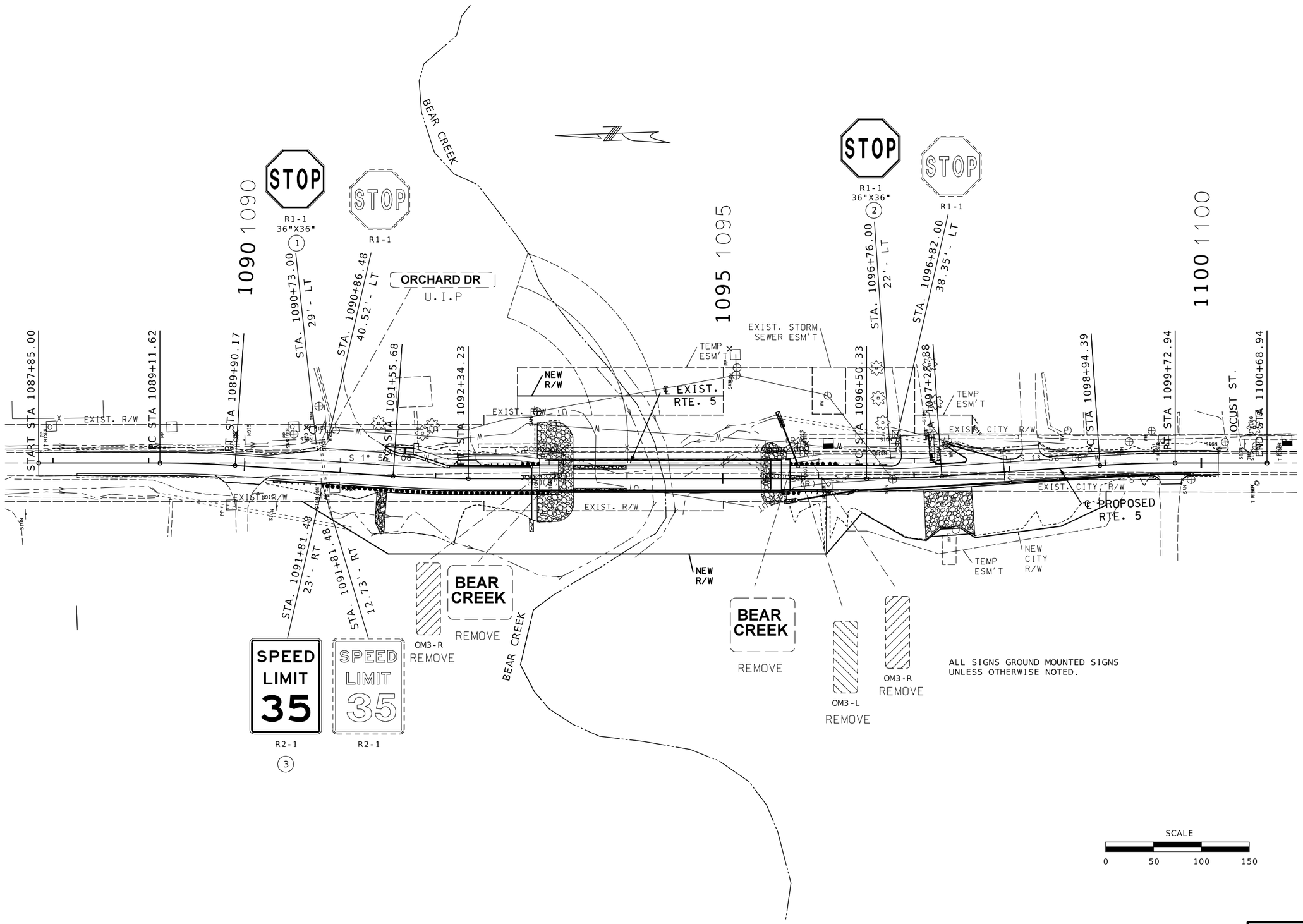

SIGNING
SHEET 1 OF 2

STATE OF MISSOURI
PATRICK J. HAKE
NUMBER
PE-2010000826
PROFESSIONAL ENGINEER

Patrick Hake
8/[Date] &[Time]
PATRICK.J.HAKE - CIVIL
MO-PE-2010000826

DATE PREPARED	8/1/2024
ROUTE	5
STATE	MO
DISTRICT	CD
SHEET NO.	24
COUNTY	HOWARD
JOB NO.	J5P3498
CONTRACT ID.	
PROJECT NO.	
BRIDGE NO.	A9250

DATE	DESCRIPTION

MISSOURI HIGHWAYS AND TRANSPORTATION COMMISSION

105 WEST CAPITOL
JEFFERSON CITY, MO 65102
1-888-ASK-MODOT (1-888-275-6636)

EFFECTIVE: 10-01-2016

STANDARD SIGN ASSEMBLIES

SIGN NUMBER	STATION	LOCATION	TYPE: R1-1 36"X36"	TYPE: R2-1 36"X48"													
			SIGN DESCRIPTION, SIZES & NUMBER OF EACH														
			STOP R1-1	SPEED LIMIT 35 R2-1													
1	1090+73.00	RTE. 5 - LT	1														
2	1096+76.00	RTE. 5 - LT	1														
3	1091+81.48	RTE. 5 - RT		1													

SIGN SUMMARY

STANDARD SIGN OR SPECIAL SIGN NUMBER	SIGN DETAIL SHEET NO.	NO. EACH	SIZE, TYPE & SQUARE FEET: SIZE	FLAT SHEET SH	FLAT SHEET FLUORESCENT SHF *	STRUCTURAL ST	STRUCTURAL FLUORESCENT STF *
				ITEM NO. 9035004A	ITEM NO. 9035069A	ITEM NO. 9035011A	ITEM NO. 9035071A
STOP (R1-1)		1	36"X36"	9.00			
STOP (R1-1)		1	36"X36"	9.00			
SPEED LIMIT (R2-1)		1	36"X48"	12.00			
			TOTAL	30.00			

* ORANGE, YELLOW & YELLOW/GREEN

D-30

EFFECTIVE: 07-01-2022

SIGNS: SIGN NO.	SIGN SIZE	STATION	HORZ CLEAR IF NOT STD	LOCATION	SIGN DTL. SHT. NO.	CONCRETE FOOTINGS EMBEDDED: ITEM NO. 9031010 CY	STRUCTURAL STEEL POSTS *: POST DES NO.	POST NO.1 LF	POST NO.2 LF	POST NO.3 LF	LBS PER FT	TOTAL ITEM NO. 9031210 LBS	PIPE POSTS *: PIPE SIZE IN.	POST NO.1 LF	POST NO.2 LF	LBS PER FT	TOTAL ITEM NO. 9031220 LBS	BACKING BARS **: 2" X 3/8" BARS @ 2.55 LBS PER FT: NO. EACH	LGTH IN.	TOTAL LF	TOTAL LBS	U-CHANNEL POST: ITEM NO. 9031250A LF	PERFORATED SQUARE STEEL TUBE: 2 IN. POST: POST NO.1 LF	POST NO.2 LF	TOTAL ITEM NO. 9031270A LF	ANCHORS: DRIVEN 12-GA. ITEM NO. 9031271A EA	DRIVEN 7-GA. ITEM NO. 9031273A EA	CONCRETE 7-GA. ITEM NO. 9031274 EA	2.5 IN. POST: POST NO.1 LF	POST NO.2 LF	TOTAL ITEM NO. 9031280 LF	2.25" INSERT (6 FT) ITEM NO. 9031272A EA	ANCHORS: DRIVEN 7-GA. ITEM NO. 9031281A EA	CONCRETE 7-GA. ITEM NO. 9031285 EA	BREAK-AWAY ASSEMBLY ITEM NO. 9031241 EA	REMARKS AND OTHER REQUIRED ITEMS
1	3X3	1090+73.00		29' LT																									16		16	1	1			
2	3X3	1096+76.00		22' LT																									16		16	1	1			
3	3X4	1091+81.48		23' RT																									16		16	1	1			
SUBTOTAL																																					
TOTAL																					**										48	3	3			

* BREAKAWAY ASSEMBLY IS INCIDENTAL FOR STRUCTURAL STEEL AND PIPE POSTS.
** BACKING BARS ARE TOTALED WITH STRUCTURAL STEEL OR PIPE POSTS.

D-29

SIGNING
SHEET 2 OF 2

STATE OF MISSOURI
PATRICK J. HAKE
NUMBER
PE-2010000826
PROFESSIONAL ENGINEER

Patrick Hake
8/[Date] &[Time]
PATRICK J. HAKE - CIVIL
MO-PE-2010000826

DATE PREPARED
8/1/2024

ROUTE	STATE
5	MO
DISTRICT	SHEET NO.
CD	25

COUNTY
HOWARD

JOB NO.
J5P3498

CONTRACT ID.

PROJECT NO.

BRIDGE NO.
A9250

DATE	DESCRIPTION

MISSOURI HIGHWAYS AND TRANSPORTATION COMMISSION
105 WEST CAPITOL
JEFFERSON CITY, MO 65102
1-888-ASK-MODOT (1-888-275-6636)

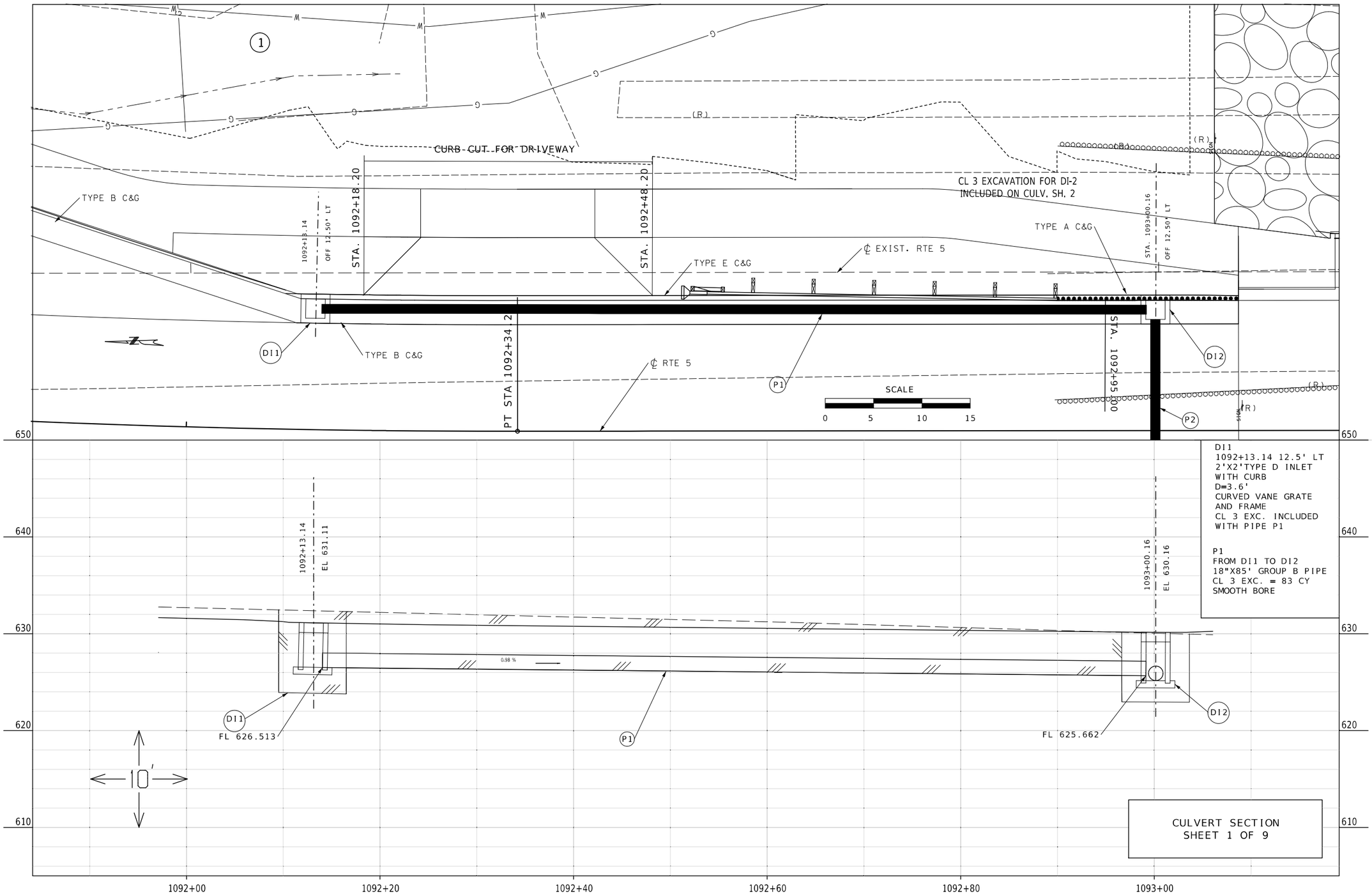

DI1
1092+13.14 12.5' LT
2'X2'TYPE D INLET
WITH CURB
D=3.6'
CURVED VANE GRATE
AND FRAME
CL 3 EXC. INCLUDED
WITH PIPE P1

P1
FROM DI1 TO DI2
18"X85' GROUP B PIPE
CL 3 EXC. = 83 CY
SMOOTH BORE

CULVERT SECTION
SHEET 1 OF 9

STATE OF MISSOURI
PATRICK J. HAKE
NUMBER
PE-2010000826
PROFESSIONAL ENGINEER

&{Date} &{Time}
PATRICK.J.HAKE - CIVIL
MO-PE-2010000826

DATE PREPARED
8/1/2024

ROUTE	STATE
5	MO
DISTRICT	SHEET NO.
CD	26

COUNTY
HOWARD

JOB NO.
J5P3498

CONTRACT ID.

PROJECT NO.

BRIDGE NO.
A9250

DATE	DESCRIPTION

MISSOURI HIGHWAYS AND TRANSPORTATION COMMISSION
105 WEST CAPITOL
JEFFERSON CITY, MO 65102
1-888-ASK-MODOT (1-888-275-6636)

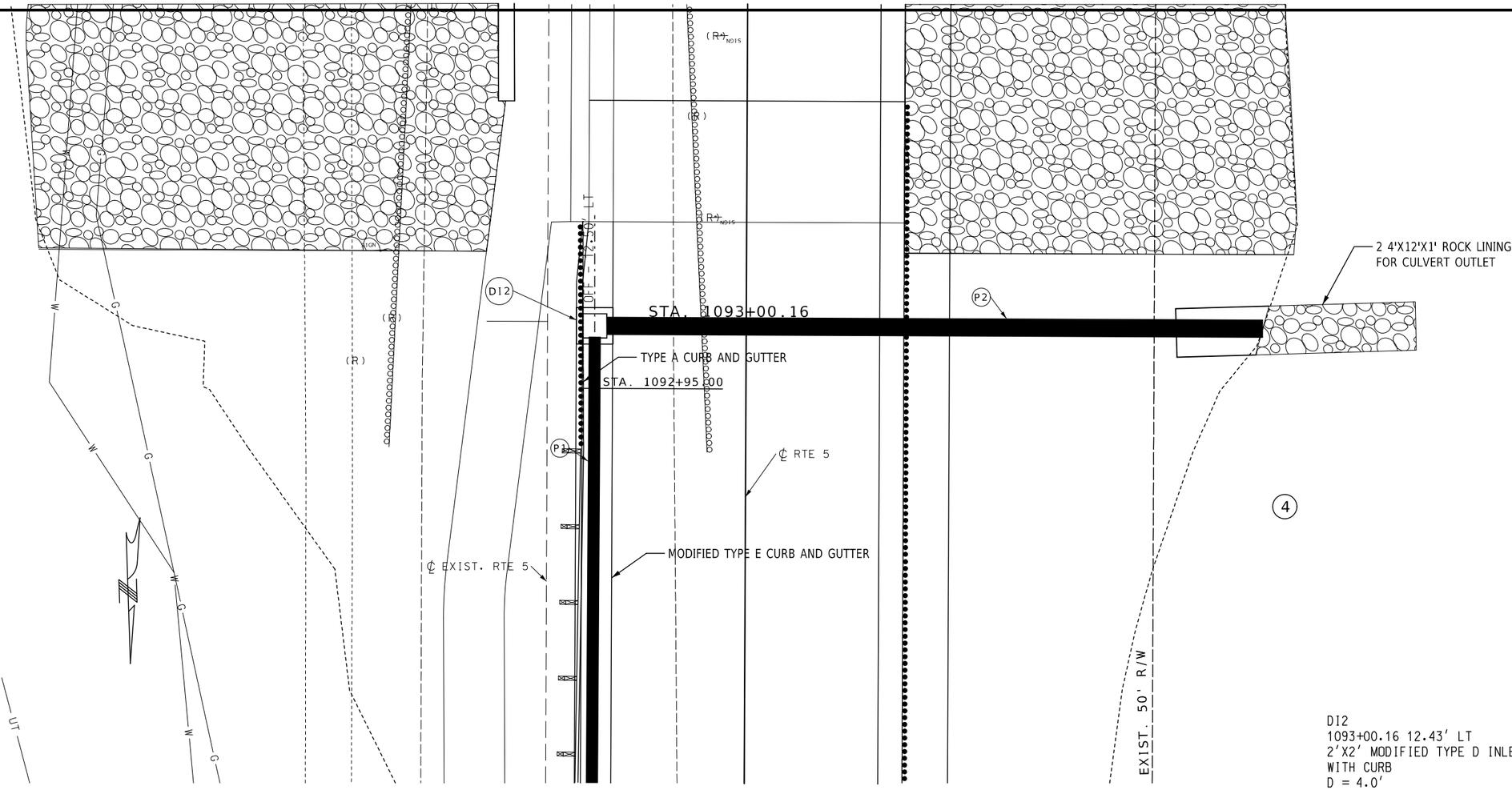

PLACE DI2 AND P2 DURING STAGE 1B CONSTRUCTION WITHOUT VANE GRATE TOP, BACKFILL AND PROTECT DI2 AND PIPE 2 THAT IS NOT UNDER NEW PAVEMENT DURING CONSTRUCTION UNTIL STAGE 3 CONSTRUCTION.

SCALE
0 5 10 15

DI2
1093+00.16 12.43' LT
2'X2' MODIFIED TYPE D INLET
WITH CURB
D = 4.0'
CURVED VANE GRATE AND FRAME
CL 3 EXC. INCLUDED WITH PIPE P2

P2
FROM DI2 TO OUT
18" X 54' GROUP A PIPE
CL 3 EXC. = 22 CY
1- BEVELED END TREATMENT FOR 18" PIPE
ROCK LINING FOR CULVERT OUTLET - 2 CY
2 - 160.5° ELBOWS
SMOOTHE BORE

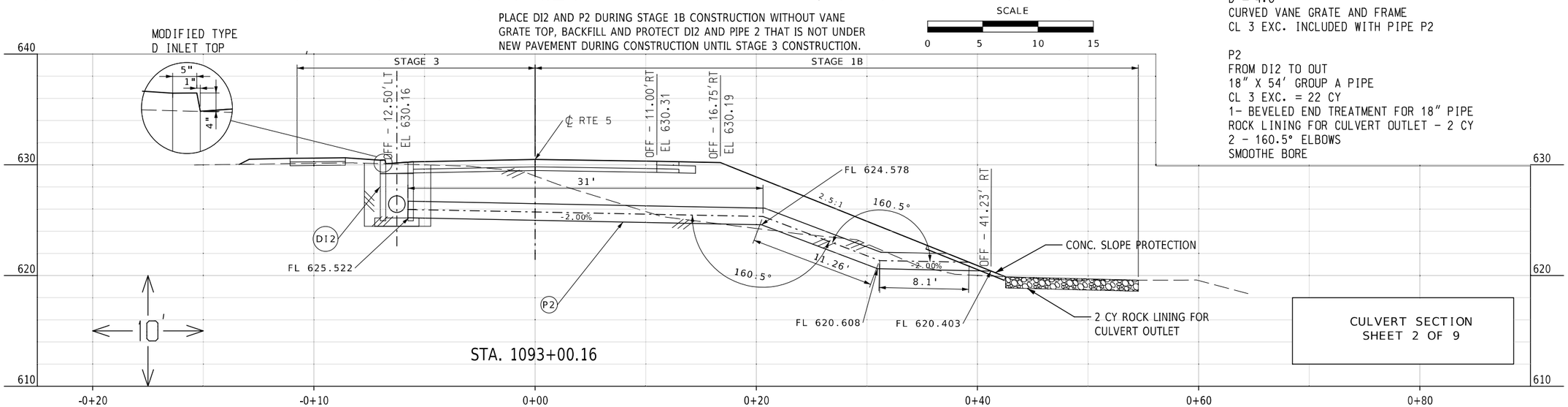

CULVERT SECTION
SHEET 2 OF 9

STATE OF MISSOURI
PATRICK J. HAKE
NUMBER
PE-2010000826
PROFESSIONAL ENGINEER

&{Date} &{Time}
PATRICK.J.HAKE - CIVIL
MO-PE-2010000826

DATE PREPARED	8/1/2024
ROUTE	5
STATE	MO
DISTRICT	CD
SHEET NO.	27
COUNTY	HOWARD
JOB NO.	J5P3498
CONTRACT ID.	
PROJECT NO.	
BRIDGE NO.	A9250

DATE	DESCRIPTION

MISSOURI HIGHWAYS AND TRANSPORTATION COMMISSION
105 WEST CAPITOL
JEFFERSON CITY, MO 65102
1-888-ASK-MODOT (1-888-275-6636)

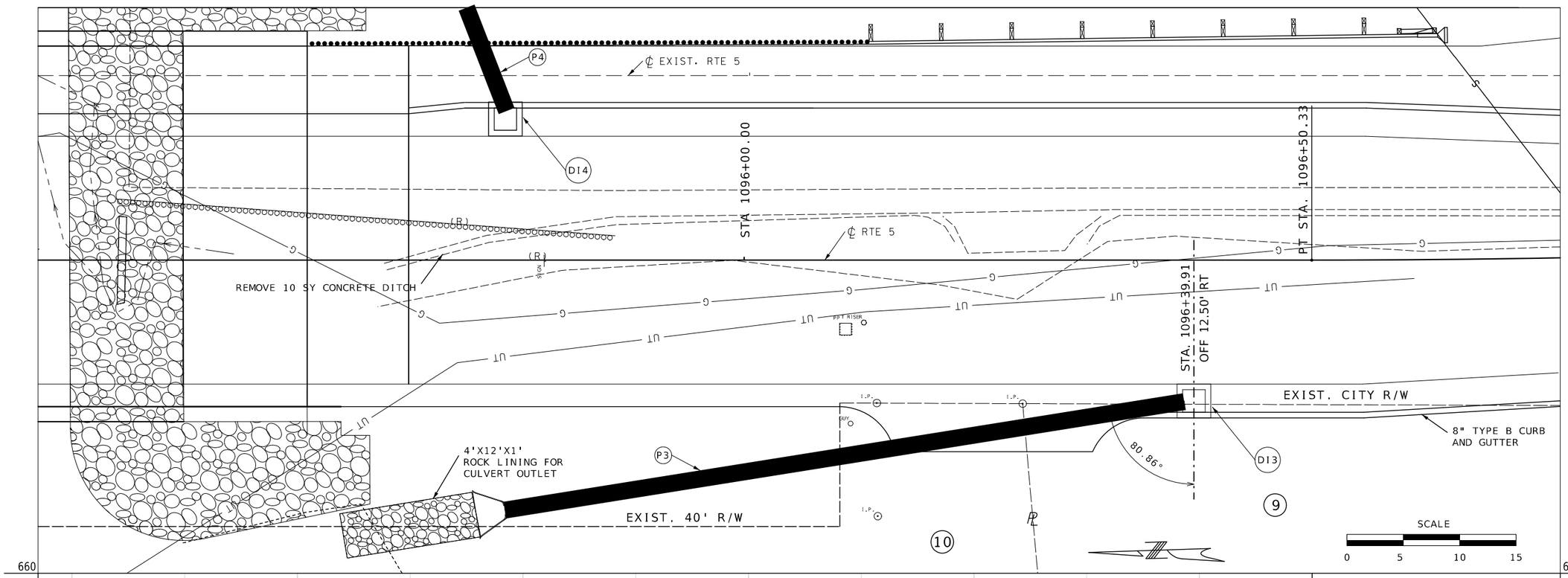

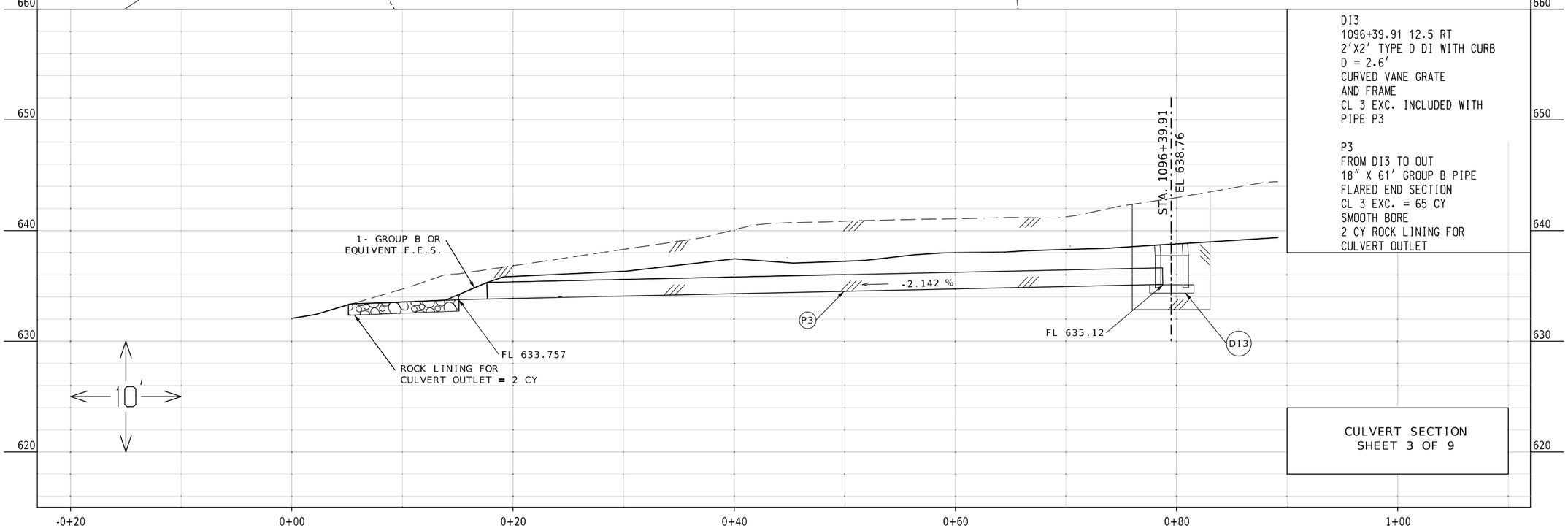

DI3
1096+39.91 12.5 RT
2'X2' TYPE D DI WITH CURB
D = 2.6'
CURVED VANE GRATE
AND FRAME
CL 3 EXC. INCLUDED WITH
PIPE P3

P3
FROM DI3 TO OUT
18" X 61' GROUP B PIPE
FLARED END SECTION
CL 3 EXC. = 65 CY
SMOOTH BORE
2 CY ROCK LINING FOR
CULVERT OUTLET

CULVERT SECTION
SHEET 3 OF 9

STATE OF MISSOURI
PATRICK J. HAKE
NUMBER
PE-2010000826
PROFESSIONAL ENGINEER

&{Date} &{Time}
PATRICK_J_HAKE - CIVIL
MO-PE-2010000826

DATE PREPARED	
8/1/2024	
ROUTE 5	STATE MO
DISTRICT CD	SHEET NO. 28
COUNTY HOWARD	
JOB NO. J5P3498	
CONTRACT ID.	
PROJECT NO.	
BRIDGE NO. A9250	

DATE	DESCRIPTION

MISSOURI HIGHWAYS AND TRANSPORTATION COMMISSION
105 WEST CAPITOL
JEFFERSON CITY, MO 65102
1-888-ASK-MODOT (1-888-275-6636)

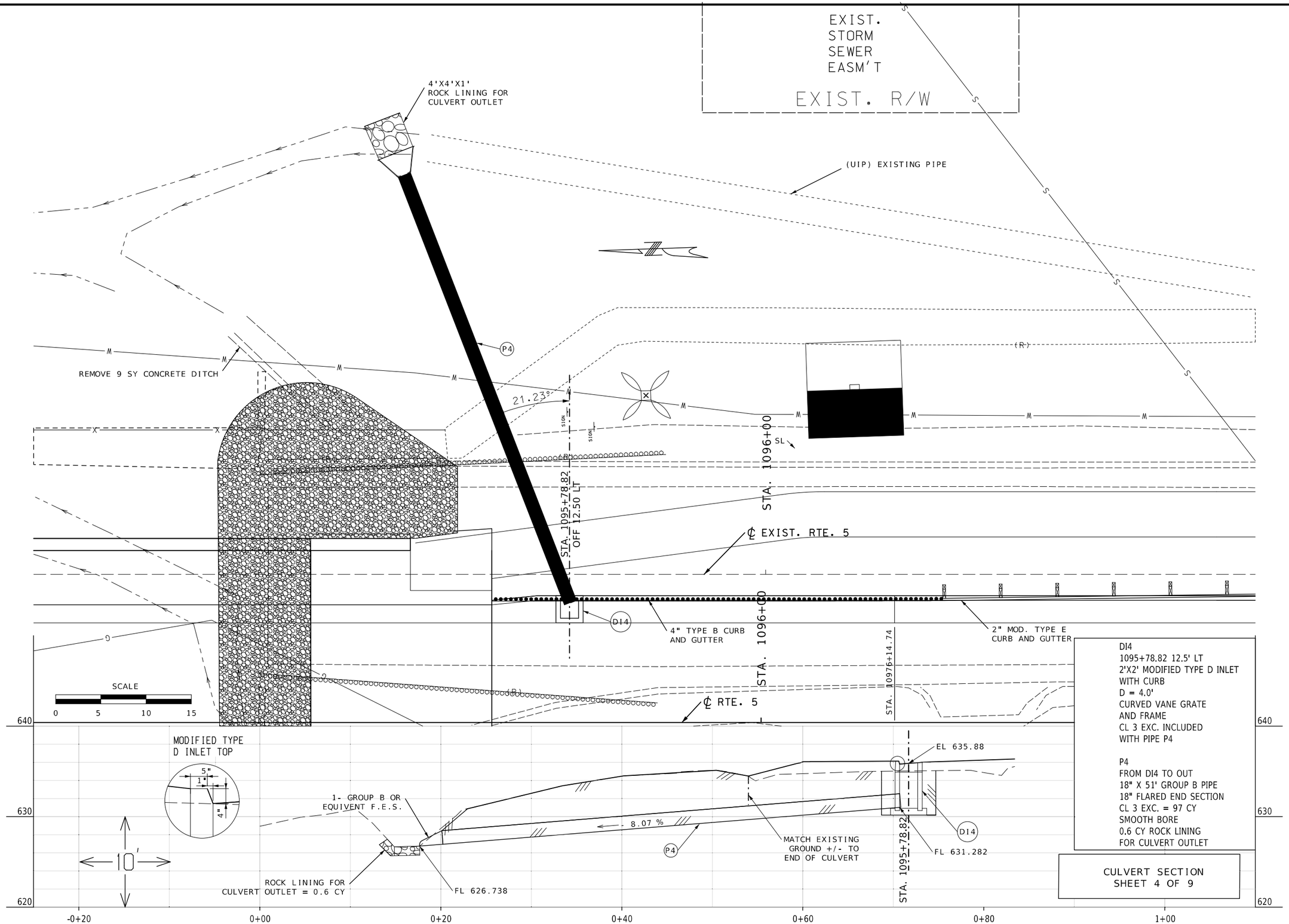

DI4
1095+78.82 12.5' LT
2'X2' MODIFIED TYPE D INLET
WITH CURB
D = 4.0'
CURVED VANE GRATE
AND FRAME
CL 3 EXC. INCLUDED
WITH PIPE P4

P4
FROM DI4 TO OUT
18" X 51' GROUP B PIPE
18" FLARED END SECTION
CL 3 EXC. = 97 CY
SMOOTH BORE
0.6 CY ROCK LINING
FOR CULVERT OUTLET

CULVERT SECTION
SHEET 4 OF 9

STATE OF MISSOURI
PATRICK J. HAKE
NUMBER
PE-2010000826
PROFESSIONAL ENGINEER

&{Date} &{Time}
PATRICK.J.HAKE - CIVIL
MO-PE-2010000826

DATE PREPARED	8/1/2024
ROUTE	5
STATE	MO
DISTRICT	CD
SHEET NO.	29
COUNTY	HOWARD
JOB NO.	J5P3498
CONTRACT ID.	
PROJECT NO.	
BRIDGE NO.	A9250

DATE	DESCRIPTION

MISSOURI HIGHWAYS AND TRANSPORTATION COMMISSION
105 WEST CAPITOL
JEFFERSON CITY, MO 65102
1-888-ASK-MODOT (1-888-275-6636)

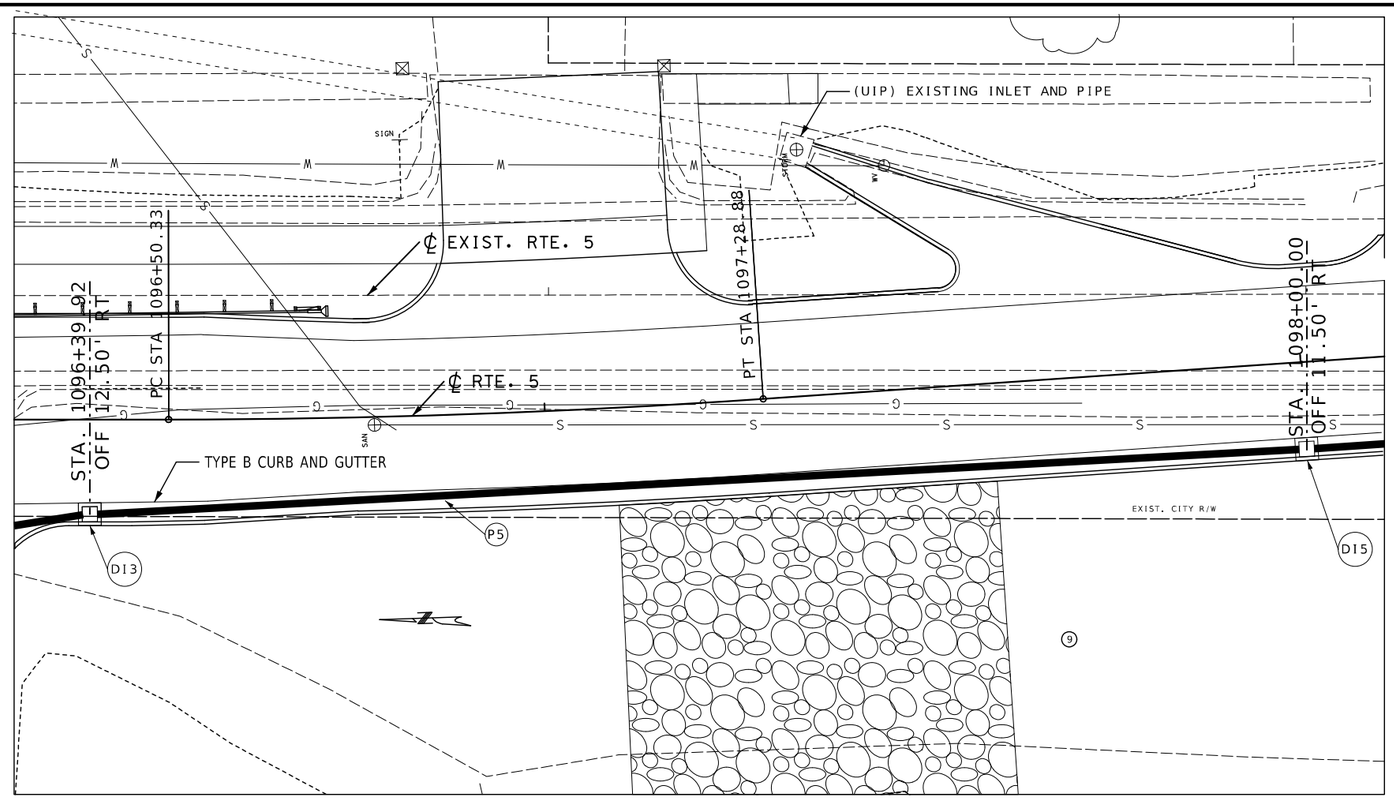

SCALE

0 10 20 30

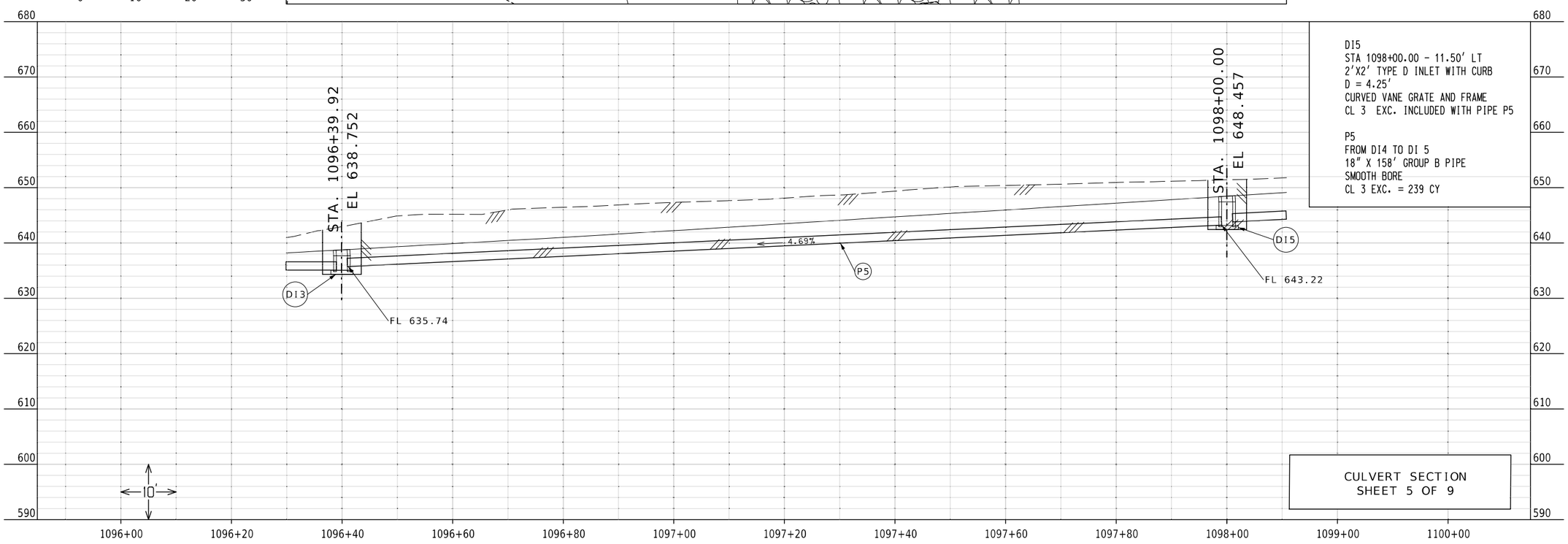

DI5
STA 1098+00.00 - 11.50' LT
2'X2' TYPE D INLET WITH CURB
D = 4.25'
CURVED VANE GRATE AND FRAME
CL 3 EXC. INCLUDED WITH PIPE P5

P5
FROM DI4 TO DI 5
18" X 158' GROUP B PIPE
SMOOTH BORE
CL 3 EXC. = 239 CY

CULVERT SECTION
SHEET 5 OF 9

STATE OF MISSOURI
PATRICK J. HAKE
NUMBER
PE-2010000826
PROFESSIONAL ENGINEER

&{Date} &{Time}
PATRICK.J.HAKE - CIVIL
MO-PE-2010000826

DATE PREPARED	
8/1/2024	
ROUTE 5	STATE MO
DISTRICT CD	SHEET NO. 30
COUNTY HOWARD	
JOB NO. J5P3498	
CONTRACT ID.	
PROJECT NO.	
BRIDGE NO.	

DATE	DESCRIPTION

MISSOURI HIGHWAYS AND TRANSPORTATION COMMISSION

105 WEST CAPITOL
JEFFERSON CITY, MO 65102
1-888-ASK-MODOT (1-888-275-6636)

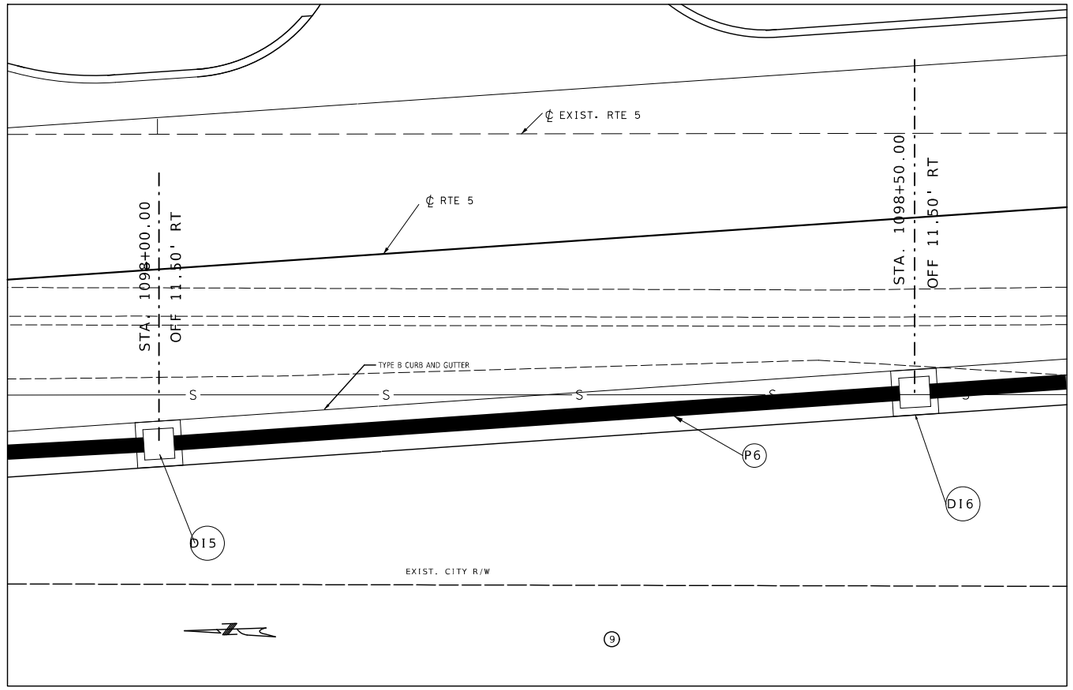

SCALE

0 5 10 15

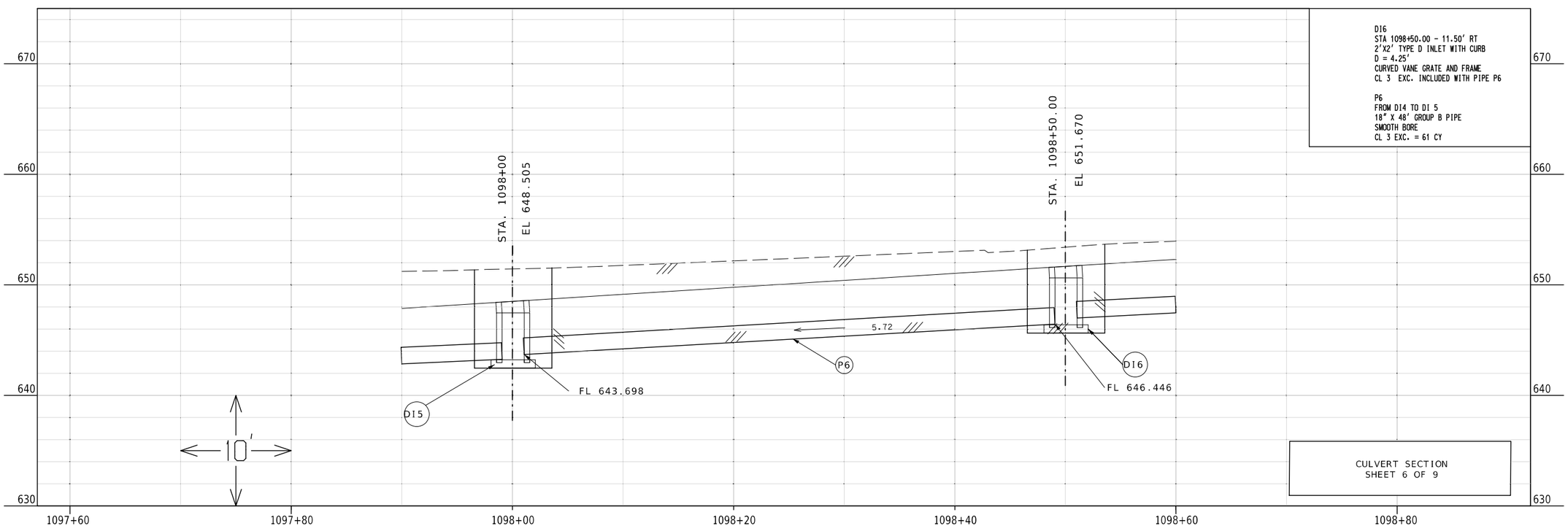

DI6
STA 1098+50.00 - 11.50' RT
2'X2' TYPE D INLET WITH CURB
D = 4.25'
CURVED VANE GRATE AND FRAME
CL 3 EXC. INCLUDED WITH PIPE P6

P6
FROM DI4 TO DI 5
18" X 48' GROUP B PIPE
SMOOTH BORE
CL 3 EXC. = 61 CY

CULVERT SECTION
SHEET 6 OF 9

STATE OF MISSOURI
PATRICK J. HAKE
NUMBER
PE-2010000826
PROFESSIONAL ENGINEER

&{Date} &{Time}
PATRICK.J.HAKE - CIVIL
MO-PE-2010000826

DATE PREPARED	
8/1/2024	
ROUTE 5	STATE MO
DISTRICT CD	SHEET NO. 31
COUNTY HOWARD	
JOB NO. J5P3498	
CONTRACT ID.	
PROJECT NO.	
BRIDGE NO.	

DATE	DESCRIPTION

MISSOURI HIGHWAYS AND TRANSPORTATION COMMISSION

105 WEST CAPITOL
JEFFERSON CITY, MO 65102
1-888-ASK-MODOT (1-888-275-6636)

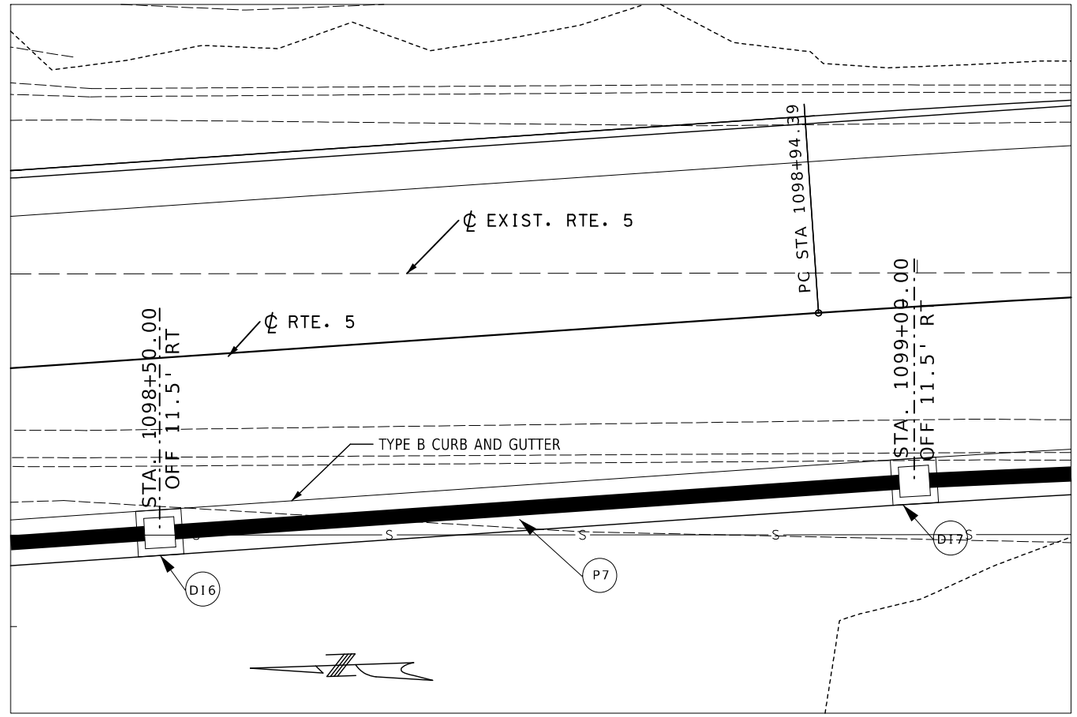

SCALE

0 5 10 15

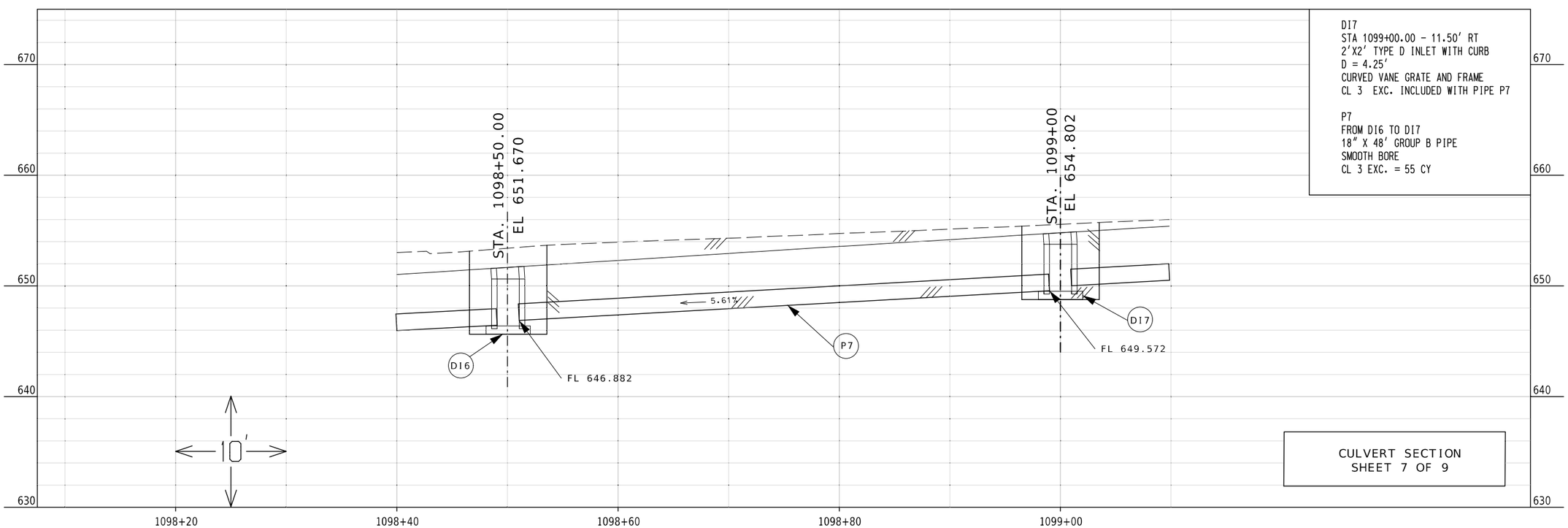

DI7
STA 1099+00.00 - 11.50' RT
2'X2' TYPE D INLET WITH CURB
D = 4.25'
CURVED VANE GRATE AND FRAME
CL 3 EXC. INCLUDED WITH PIPE P7

P7
FROM DI6 TO DI7
18" X 48' GROUP B PIPE
SMOOTH BORE
CL 3 EXC. = 55 CY

CULVERT SECTION
SHEET 7 OF 9

STATE OF MISSOURI
PATRICK J. HAKE
NUMBER
PE-2010000826
PROFESSIONAL ENGINEER

&{Date} &{Time}
PATRICK.J.HAKE - CIVIL
MO-PE-2010000826

DATE PREPARED	8/1/2024
ROUTE	5
STATE	MO
DISTRICT	CD
SHEET NO.	32
COUNTY	HOWARD
JOB NO.	J5P3498
CONTRACT ID.	
PROJECT NO.	
BRIDGE NO.	

DESCRIPTION	DATE

MISSOURI HIGHWAYS AND TRANSPORTATION COMMISSION
105 WEST CAPITOL
JEFFERSON CITY, MO 65102
1-888-ASK-MODOT (1-888-275-6636)

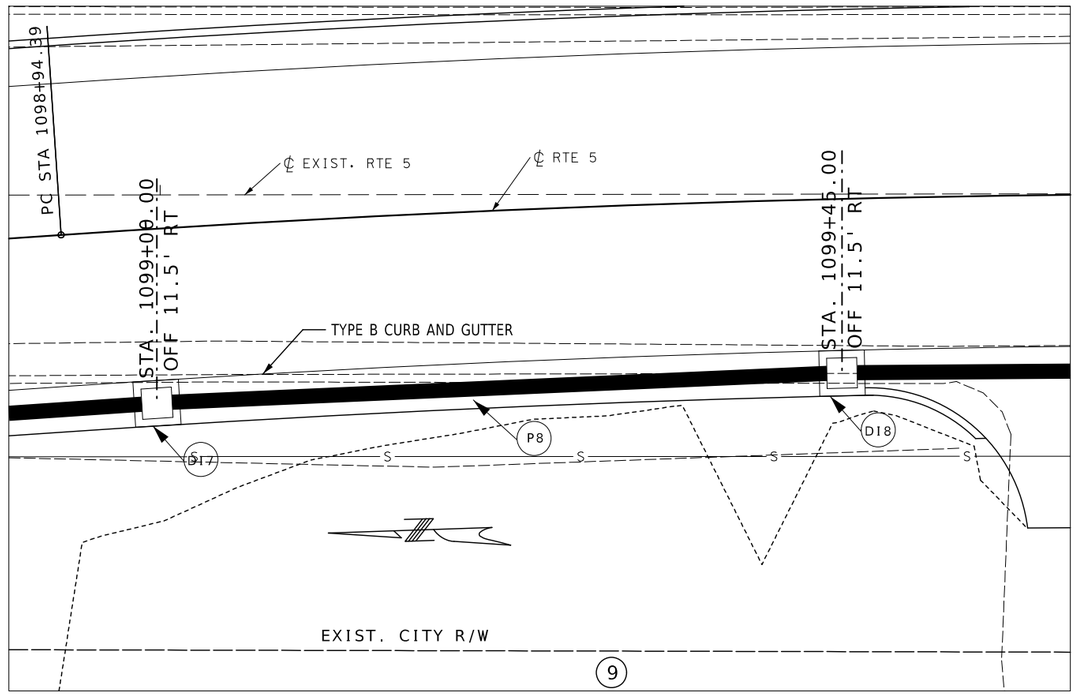

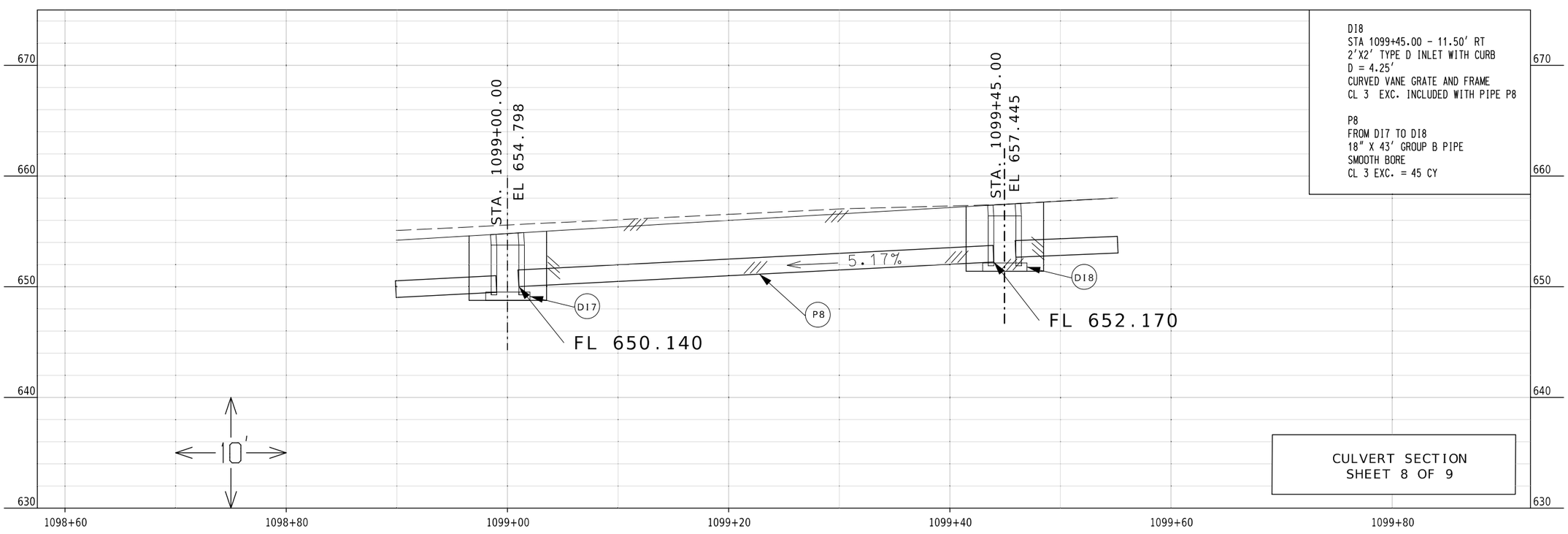

DI8
STA 1099+45.00 - 11.50' RT
2'X2' TYPE D INLET WITH CURB
D = 4.25'
CURVED VANE GRATE AND FRAME
CL 3 EXC. INCLUDED WITH PIPE P8

P8
FROM DI7 TO DI8
18" X 43' GROUP B PIPE
SMOOTH BORE
CL 3 EXC. = 45 CY

CULVERT SECTION
SHEET 8 OF 9

STATE OF MISSOURI
PATRICK J. HAKE
NUMBER
PE-2010000826
PROFESSIONAL ENGINEER

&{Date} &{Time}
PATRICK.J.HAKE - CIVIL
MO-PE-2010000826

DATE PREPARED	8/1/2024
ROUTE	5
STATE	MO
DISTRICT	CD
SHEET NO.	33
COUNTY	HOWARD
JOB NO.	J5P3498
CONTRACT ID.	
PROJECT NO.	
BRIDGE NO.	

DATE	DESCRIPTION

MISSOURI HIGHWAYS AND TRANSPORTATION COMMISSION
105 WEST CAPITOL
JEFFERSON CITY, MO 65102
1-888-ASK-MODOT (1-888-275-6636)

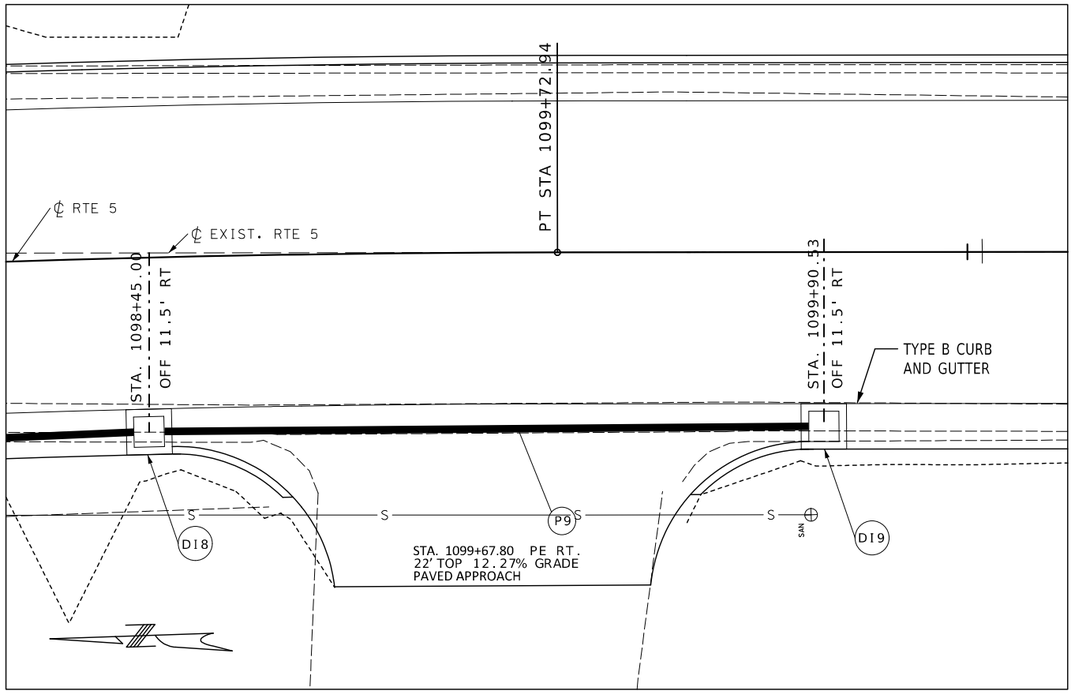

SCALE

0 5 10 15

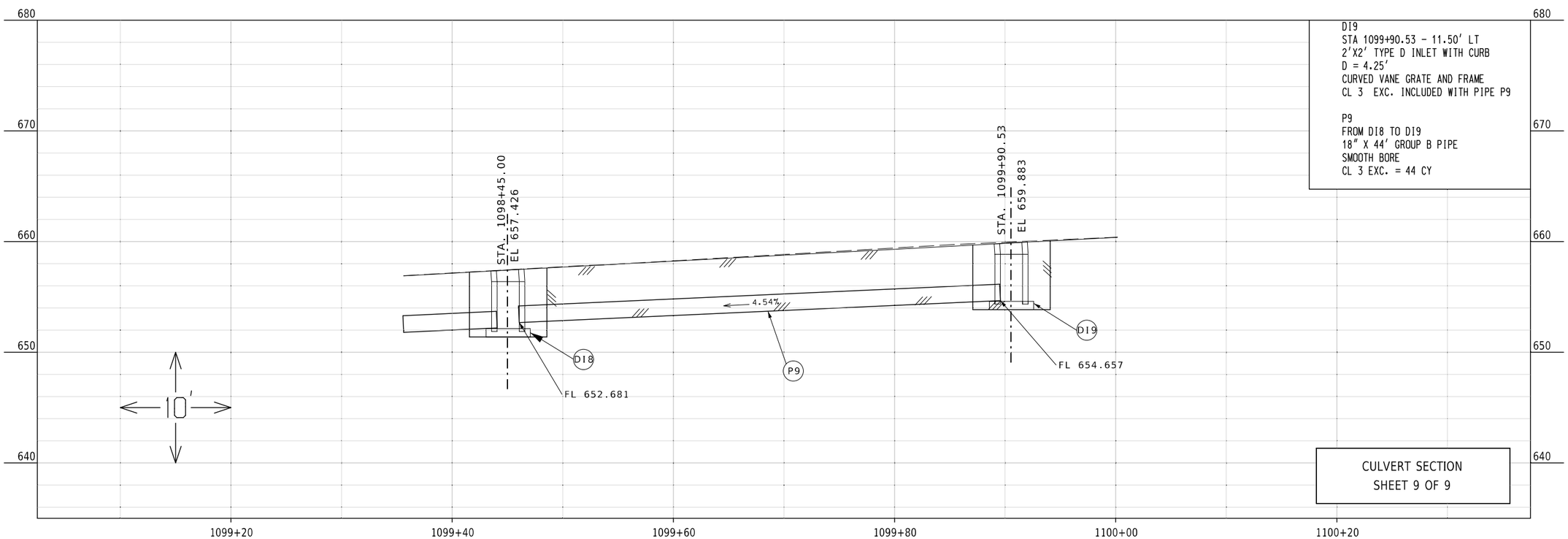

DI9
STA 1099+90.53 - 11.50' LT
2'X2' TYPE D INLET WITH CURB
D = 4.25'
CURVED VANE GRATE AND FRAME
CL 3 EXC. INCLUDED WITH PIPE P9

P9
FROM DI8 TO DI9
18" X 44' GROUP B PIPE
SMOOTH BORE
CL 3 EXC. = 44 CY

CULVERT SECTION
SHEET 9 OF 9

STATE OF MISSOURI
PATRICK J. HAKE
NUMBER
PE-2010000826
PROFESSIONAL ENGINEER

&(Date) &(Time)
PATRICK.J.HAKE - CIVIL
MO-PE-2010000826

DATE PREPARED
8/1/2024

ROUTE	STATE
5	MO
DISTRICT	SHEET NO.
CD	34

COUNTY
HOWARD

JOB NO.
J5P3498

CONTRACT ID.

PROJECT NO.

BRIDGE NO.

DATE	DESCRIPTION

MISSOURI HIGHWAYS AND TRANSPORTATION COMMISSION
105 WEST CAPITOL
JEFFERSON CITY, MO 65102
1-888-ASK-MODOT (1-888-275-6636)

SEC/SUR 8 TWP 51N RGE 17W

(70'-78'-70') PRESTRESSED CONCRETE I-GIRDER SPANS

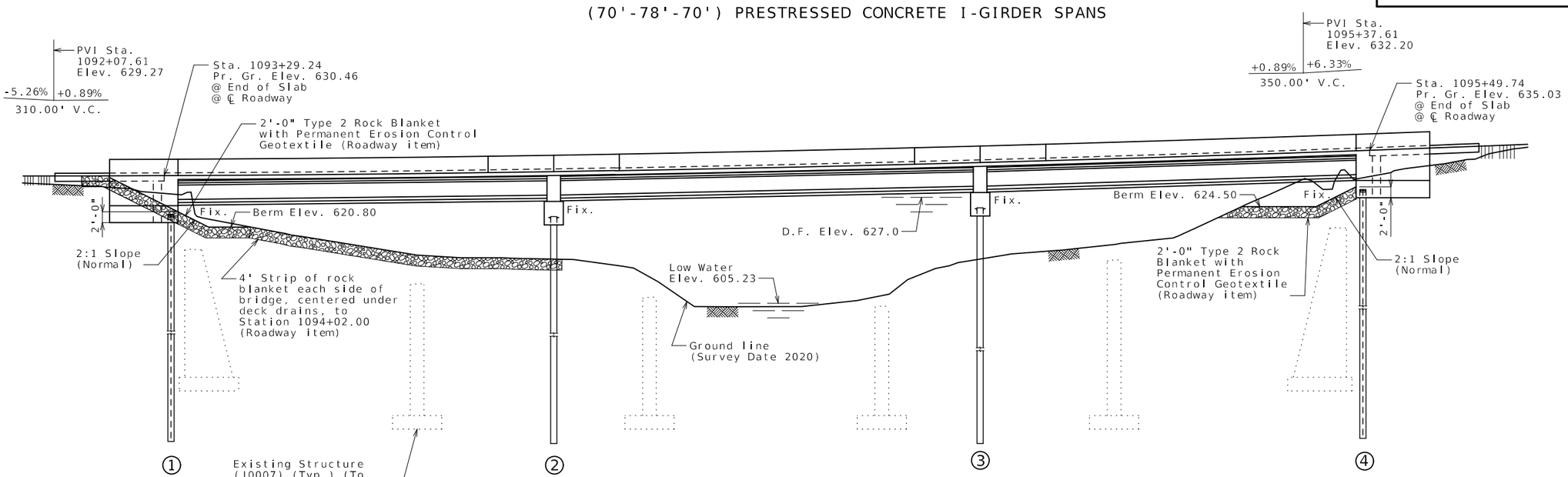

GENERAL ELEVATION

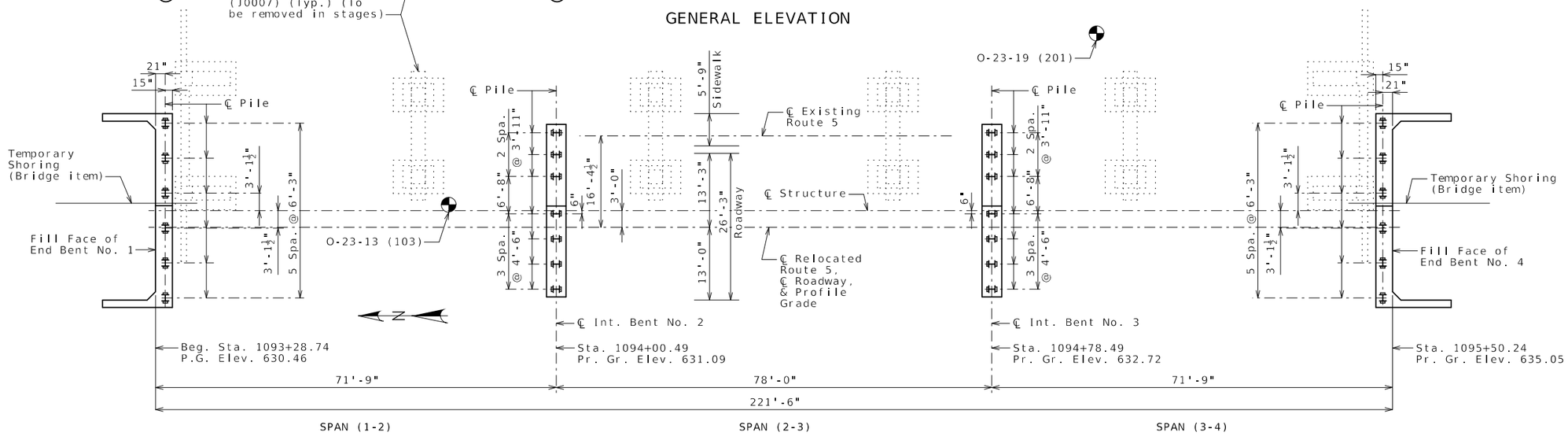

PLAN

◐ Indicates location of borings.

Notice and Disclaimer Regarding Boring Log Data

The locations of all subsurface borings for this structure are shown on the plan sheet(s) for this structure. The boring data for all locations indicated, as well as any other boring logs or other factual records of subsurface data and investigations performed by the department for the design of the project, are shown on Sheet No. 33 and may be included in the Electronic Bridge Deliverables. They will also be available from the Project Contact upon written request. No greater significance or weight should be given to the boring data depicted on the plan sheets than is given to the subsurface data available from the district or elsewhere.

The Commission does not represent or warrant that any such boring data accurately depicts the conditions to be encountered in constructing this project. A contractor assumes all risks it may encounter in basing its bid prices, time or schedule of performance on the boring data depicted here or those available from the district, or on any other documentation not expressly warranted, which the contractor may obtain from the Commission.

Note: Roadway fill shall be completed to the final roadway section and up to the elevation of the bottom of the concrete approach beam within the limits of the structure and for not less than 25 feet in back of the fill face of the end bents before any piles are driven for any bents falling within the embankment section.

BM #1-20 CHISELED L ON N/W WING WALL STA. 1093+32.84 RTE. 5 ORIGINAL ALIGNMENT E 629.66

BRIDGE: ROUTE 5 OVER BEAR CREEK

ROUTE 5 FROM ROUTE 240 TO ROUTE V
ABOUT 0.9 MILE NORTH OF ROUTE 240
BEGINNING STATION 1093+28.74

Designed Sep. 2023
Detailed Jan. 2024
Checked Jan. 2024

Note: This drawing is not to scale. Follow dimensions.

STATE OF MISSOURI
TYLER R. LINDSAY
NUMBER PE-2019000128
PROFESSIONAL ENGINEER
07/01/2024 2:03:56 PM
TYLER R. LINDSAY - CIVIL
MO-PE-2019000128

DATE PREPARED	7/1/2024
ROUTE	5
STATE	MO
DISTRICT	BR
SHEET NO.	1
COUNTY	HOWARD
JOB NO.	J5P3498
CONTRACT ID.	
PROJECT NO.	
BRIDGE NO.	A9250

DESCRIPTION | DATE

MISSOURI HIGHWAYS AND TRANSPORTATION COMMISSION
105 WEST CAPITOL
JEFFERSON CITY, MO 65102
1-888-ASK-MODOT (1-888-275-6636)

Estimated Quantities

Item		Substr.	Superstr.	Total
Class 1 Excavation	cu. yard	80		80
Temporary Shoring	lump sum	1		1
Removal of Bridges (J0007)	lump sum			1
Bridge Approach Slab (Minor)	sq. yard		123	123
(72 in.) Pedestrian Fence (Structures)	linear foot		242	242
Galvanized Structural Steel Piles (14 in.)	linear foot	1682		1682
Pile Point Reinforcement	each	26		26
Class B Concrete (Substructure)	cu. yard	64.5		64.5
Slab on Concrete I-Girder	sq. yard		849	849
Type D Barrier	linear foot		503	503
Type 6 (54 in.), Prestressed Concrete I-Girder	linear foot		871	871
Reinforcing Steel (Bridges)	pound	5600		5600
Mechanical Bar Splice	each	72	742	814
Protective Coating-Concrete Bents and Piers (Epoxy)	lump sum			1
Steel Intermediate Diaphragm for P/S Concrete Girders	each		9	9
Slab Drain	each		14	14
Vertical Drain at End Bents	each			2
Plain Neoprene Bearing Pad	each		4	4
Laminated Neoprene Bearing Pad	each		4	4
Laminated Neoprene Bearing Pad (Tapered)	each		16	16

All concrete above the construction joint in the end bents is included in the Estimated Quantities for Slab on Concrete I-Girder.

All reinforcement in the end bents is included in the Estimated Quantities for Slab on Concrete I-Girder.

All reinforcement in the intermediate bent concrete diaphragms except reinforcement embedded in the beam cap is included in the Estimated Quantities for Slab on Concrete I-Girder.

All concrete above the intermediate beam cap is included in the Estimated Quantities for Slab on Concrete I-Girder.

Cost of L4x4 ASTM A709 Grade 36 HP pile anchors and 3/4-inch diameter ASTM F3125 Grade A325 Type 1 bolts, complete in place, will be considered completely covered by the contract unit price for Galvanized Structural Steel Piles (14 in.).

Foundation Data

Type	Design Data		Bent Number 1	2	3	4
Load Bearing Pile	Pile Type and Size		HP 14x73	HP 14x73	HP 14x73	HP 14x73
	Number	ea	6	7	7	6
	Approximate Length Per Each	ft	63	63	65	68
	Pile Point Reinforcement	ea	All	All	All	All
	Min. Galvanized Penetration (Elev.)	ft	601.8	594.9	594.9	605.5
	Pile Driving Verification Method		DF	DF	DF	DF
	Resistance Factor		0.40	0.40	0.40	0.40
	Minimum Nominal Axial Compressive Resistance	kip	433	538	538	435

DF = FHWA-modified Gates Dynamic Pile Formula

$$\text{Minimum Nominal Axial Compressive Resistance} = \frac{\text{Maximum Factored Loads}}{\text{Resistance Factor}}$$

All piles shall be galvanized down to the minimum galvanized penetration (elevation).

Pile point reinforcement need not be galvanized. Shop drawings will not be required for pile point reinforcement.

The contractor shall make every effort to achieve the minimum galvanized penetration (elevation) shown on the plans for all piles. Deviations in penetration less than 5 feet of the minimum will be considered acceptable provided the contractor makes the necessary corrections to ensure the minimum penetration is achieved on subsequent piles.

HP piles are anticipated to be driven to refusal on rock. Review all borings for depth of rock and restrict driving as appropriate to comply with hard rock driving criteria in accordance with Sec 702. When pile refusal on rock occurs, as approved by the engineer, the minimum nominal axial compressive resistance is verified and no additional pile driving verification method is required.

Estimated Quantities for Slab on Concrete I-Girder

Item		Total
Class B-2 Concrete	cu. yard	283
Reinforcing Steel (Epoxy Coated)	pound	70,330

The table of Estimated Quantities for Slab on Concrete I-Girder represents the quantities used by the State in preparing the cost estimate for concrete slabs. The area of the concrete slab will be measured to the nearest square yard longitudinally from end of slab to end of slab and transversely from out to out of bridge slab (or with the horizontal dimensions as shown on the plan of slab). Payment for stay-in-place corrugated steel forms, conventional forms, all concrete and epoxy coated reinforcing steel will be considered completely covered by the contract unit price for the slab. Variations may be encountered in the estimated quantities but the variations cannot be used for an adjustment in the contract unit price.

Method of forming the slab shall be as shown on the plans and in accordance with Sec 703. All hardware for forming the slab to be left in place as a permanent part of the structure shall be coated in accordance with ASTM A123 or ASTM B633 with a thickness class SC 4 and a finish type I, II or III.

Slab shall be cast-in-place with conventional forms or stay-in-place corrugated steel forms. Precast prestressed panels will not be permitted.

For details of optional stay-in-place forming, see Sheet No. 21.

Hydrologic Data

Drainage Area = 3.3 mi^2 (Bear Creek)
Design Flood Data (Missouri River)
Design Flood Frequency = 50 years
Design Flood (D.F.) Elevation = 627.0
Base Flood Data (100-year) (Missouri River)
Base Flood Elevation = 628.0
Base Flood Data (100-year) (Bear Creek)
Base Flood Elevation = 615.8
Base Flood Discharge = 2600 cfs
Estimated Backwater = 0.0 ft
Average Velocity thru Opening = 5.3 ft/s
Freeboard (50-year)
Freeboard = -2.7 ft (Missouri River backwater)
Freeboard = 9.5 ft (Bear Creek headwater)
Roadway Overtopping
Overtopping Flood Frequency = 378 years
Overtopping Flood Elevation = 630.4

General Notes:

Design Specifications:
2020 AASHTO LRFD Bridge Design Specifications (9th ed.)
2011 AASHTO Guide Specifications for LRFD Seismic Bridge Design (2nd Ed.) and 2014 Interim Revisions (Seismic Details)
Seismic Design Category = B
Design earthquake response spectral acceleration coefficient at 1.0 second period, S_{D1} = 0.156g
Acceleration Coefficient (effective peak ground acceleration coefficient), A_S = 0.098g

Design Loading:
Vehicular = HL-93
35 lb/sf Future Wearing Surface
Earth 120 lb/cf, Equivalent Fluid Pressure 45 lb/cf (Min.)
Superstructure: Simply-Supported, Non-composite for dead load.
Continuous Composite for live load.

Design Unit Stresses:

Class B Concrete (Substructure)	f'c =	3,000 psi
Class B-2 Concrete (Superstructure, except Prestressed Girders and Barrier)	f'c =	4,000 psi
Class B-1 Concrete (Barrier)	f'c =	4,000 psi
Reinforcing Steel (Grade 60)	fy =	60,000 psi
Structural Steel HP Pile (ASTM A709 Grade 50S)	fy =	50,000 psi

For prestressed girder stresses, see Sheets No. 13 & 14.

Neoprene Pads:
Neoprene bearing pads shall be 60 durometer and shall be in accordance with Sec 716.

Joint Filler:
All joint filler shall be in accordance with Sec 1057 for preformed sponge rubber expansion and partition joint filler, except as noted.

Reinforcing Steel:
Minimum clearance to reinforcing steel shall be 1 1/2", unless otherwise shown.

Minimum clearance between galvanized piles and uncoated (plain) reinforcing steel including bar supports shall be 1 1/2". Nylon, PVC, or polyethylene spacers shall be used to maintain clearance. Nylon cable ties shall be used to bind the spacers to the reinforcement.

MBS refers to mechanical bar splices. Mechanical bar splices shall be in accordance with Sec 706 or 710.

Concrete Protective Coatings:
Protective coating for concrete bents and piers (Epoxy) shall be applied as shown on the bridge plans and in accordance with Sec 711.

Traffic Handling:
Traffic to be maintained on structure during construction. See roadway plans for traffic control and Sheet No. 3 for staged construction details.

Miscellaneous:
Outline of existing work is indicated by light dashed lines. Heavy lines indicate new work.

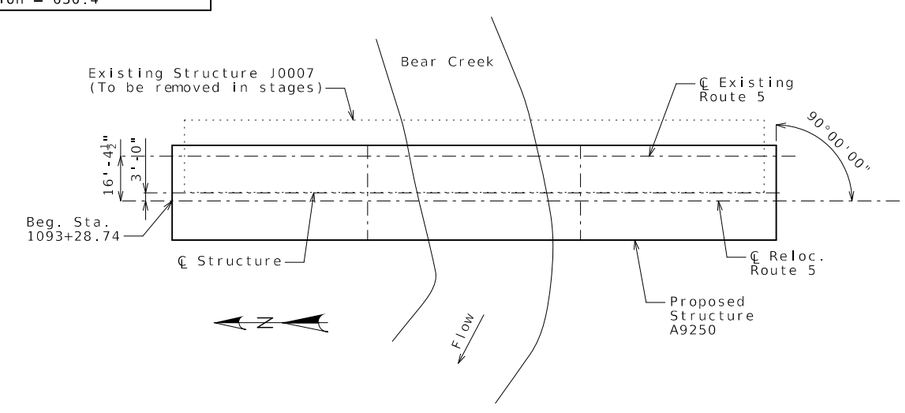

LOCATION SKETCH

STATE OF MISSOURI
TYLER R. LINDSAY
NUMBER PE-2019000128
PROFESSIONAL ENGINEER
07/01/2024 2:06:56 PM
TYLER R. LINDSAY - CIVIL
MO-PE-2019000128

DATE PREPARED 7/1/2024

ROUTE	STATE
5	MO
DISTRICT	SHEET NO.
BR	2

COUNTY HOWARD
JOB NO. J5P3498
CONTRACT ID.
PROJECT NO.
BRIDGE NO. A9250

DESCRIPTION
DATE

MISSOURI HIGHWAYS AND TRANSPORTATION COMMISSION
105 WEST CAPITOL
JEFFERSON CITY, MO 65102
1-888-ASK-MODOT (1-888-275-6636)

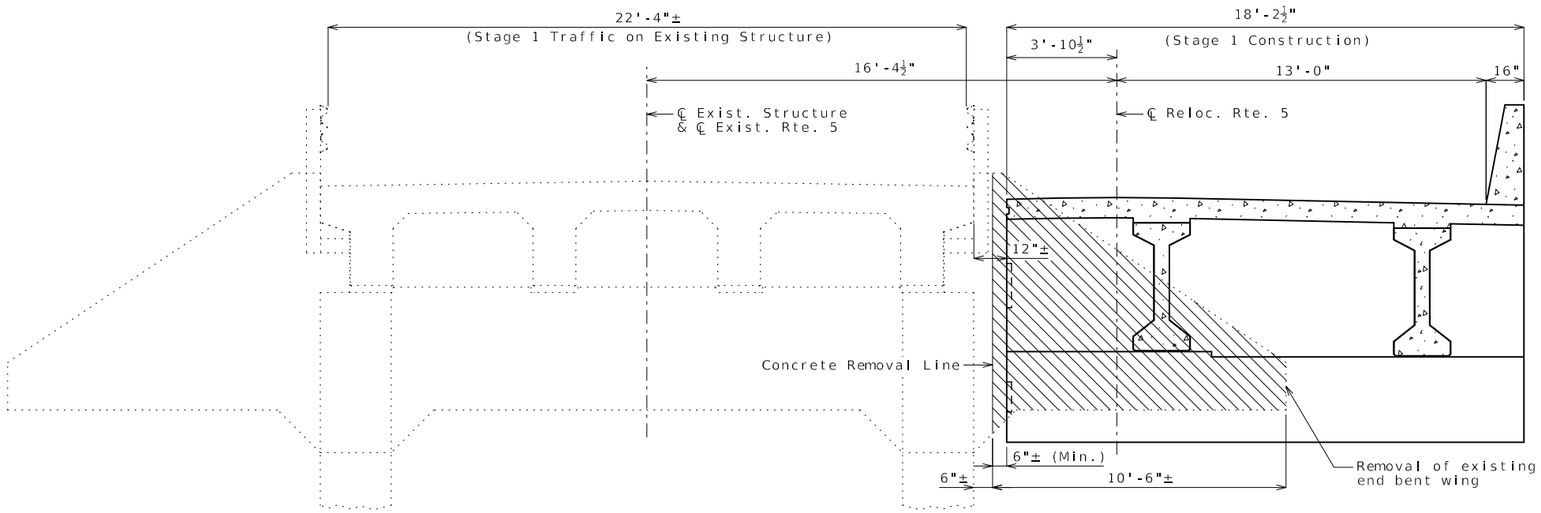

TYPICAL SECTION SHOWING STAGE 1 CONSTRUCTION AND REMOVAL AT END BENTS

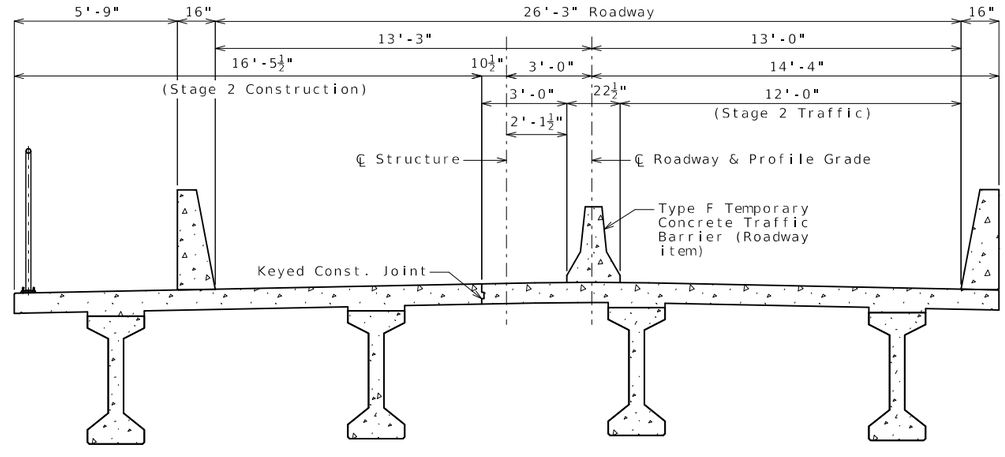

TYPICAL SECTION SHOWING STAGE 2 CONSTRUCTION

Notes:

Type F temporary barrier shall not be attached to the bridge deck.

The cost of any removals necessary to construct Stage 1, as shown, will be considered completely covered by contract lump sum price for Removal of Bridges (J0007).

STAGE CONSTRUCTION

Detailed Jan. 2024
Checked Jan. 2024

Note: This drawing is not to scale. Follow dimensions.

STATE OF MISSOURI
TYLER R. LINDSAY
NUMBER PE-2019000128
PROFESSIONAL ENGINEER
07/01/2024 2:07:15 PM
TYLER R. LINDSAY - CIVIL
MO-PE-2019000128

DATE PREPARED	7/1/2024
ROUTE	5
STATE	MO
DISTRICT	BR
SHEET NO.	3
COUNTY	HOWARD
JOB NO.	J5P3498
CONTRACT ID.	
PROJECT NO.	
BRIDGE NO.	A9250

DESCRIPTION	DATE

MISSOURI HIGHWAYS AND TRANSPORTATION COMMISSION

105 WEST CAPITOL
JEFFERSON CITY, MO 65102
1-888-ASK-MODOT (1-888-275-6636)

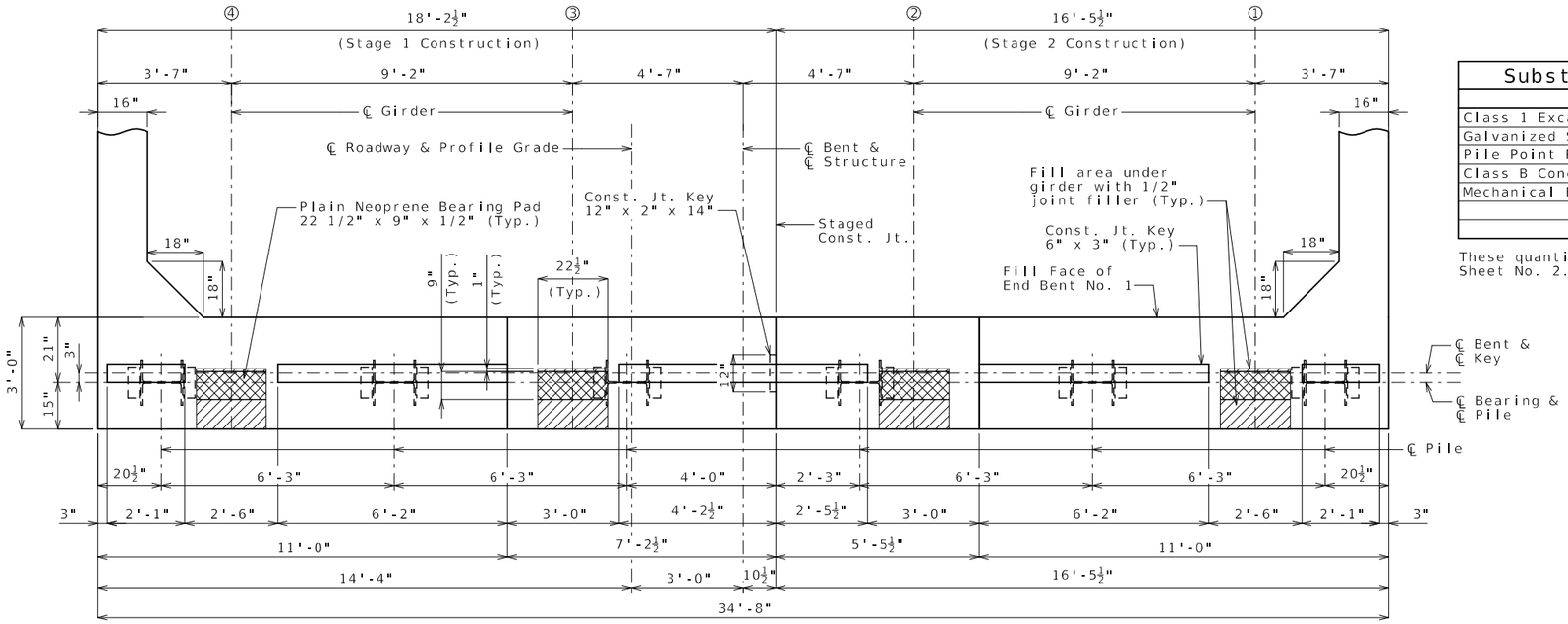

PLAN OF BEAM SHOWING DIMENSIONS

Substructure Quantity Table for Bent No. 1		
Item		Quantity
Class 1 Excavation	cu. yard	40
Galvanized Structural Steel Piles (14 in.)	linear foot	378
Pile Point Reinforcement	each	6
Class B Concrete (Substructure)	cu. yard	15.4
Mechanical Bar Splice	each	13

These quantities are included in the Estimated Quantities table on Sheet No. 2.

General Notes:

Work this sheet with Sheets No. 5 & 6.

Reinforcing steel shall be shifted to clear piles. U bars shall clear piles by at least 1 1/2 inches.

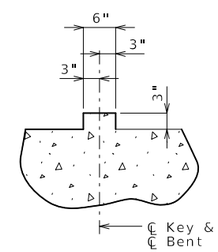

SECTION THRU KEY

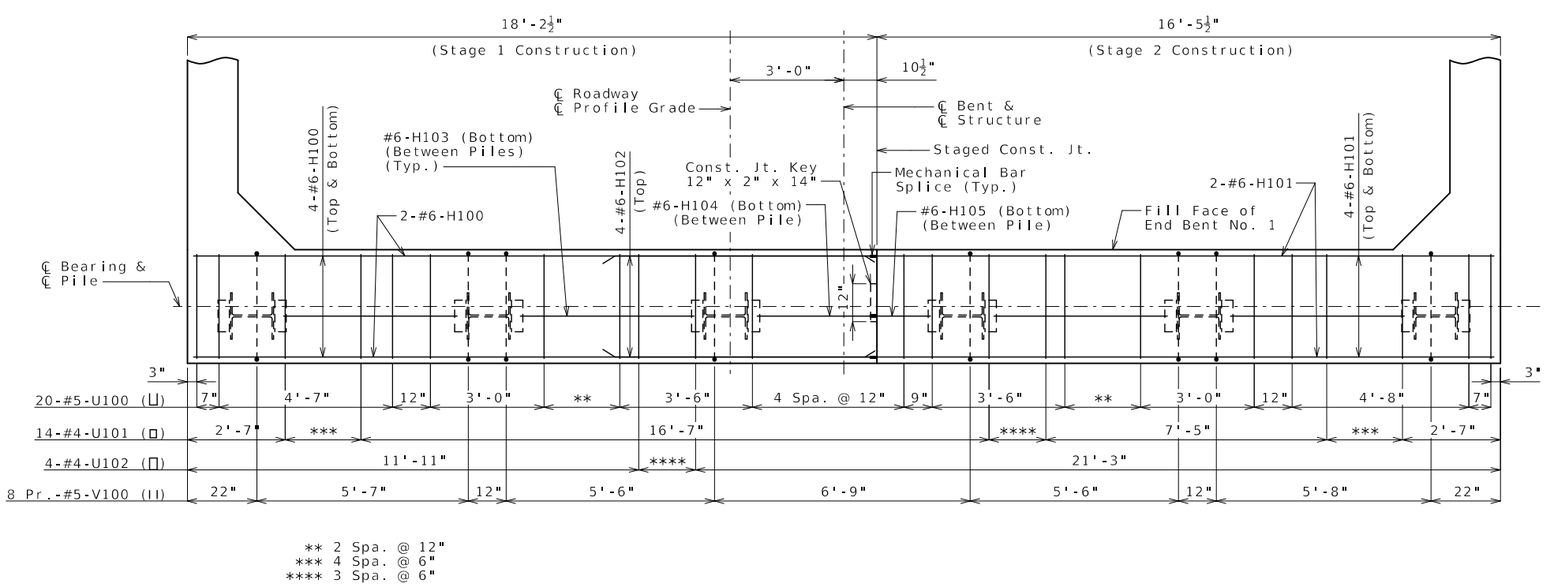

** 2 Spa. @ 12"
*** 4 Spa. @ 6"
**** 3 Spa. @ 6"

PLAN OF BEAM SHOWING REINFORCEMENT

Note: Keys at top of beam and steps not shown for clarity.

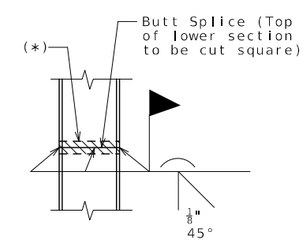

STEEL PILE SPLICE

(If required)

(*) Galvanizing material shall be omitted or removed one inch clear of weld locations in accordance with Sec 702.

DETAILS OF END BENT NO. 1

Detailed Dec. 2023
Checked May 2024

Note: This drawing is not to scale. Follow dimensions.

STATE OF MISSOURI
TYLER R. LINDSAY
NUMBER PE-2019000128
PROFESSIONAL ENGINEER
07/01/2024 2:07:36 PM
TYLER R LINDSAY - CIVIL
MO-PE-2019000128

DATE PREPARED 7/1/2024

ROUTE	STATE
5	MO
DISTRICT	SHEET NO.
BR	4

COUNTY HOWARD

JOB NO. J5P3498

CONTRACT ID.

PROJECT NO.

BRIDGE NO. A9250

DESCRIPTION	DATE

MISSOURI HIGHWAYS AND TRANSPORTATION COMMISSION
105 WEST CAPITOL
JEFFERSON CITY, MO 65102
1-888-ASK-MODOT (1-888-275-6636)

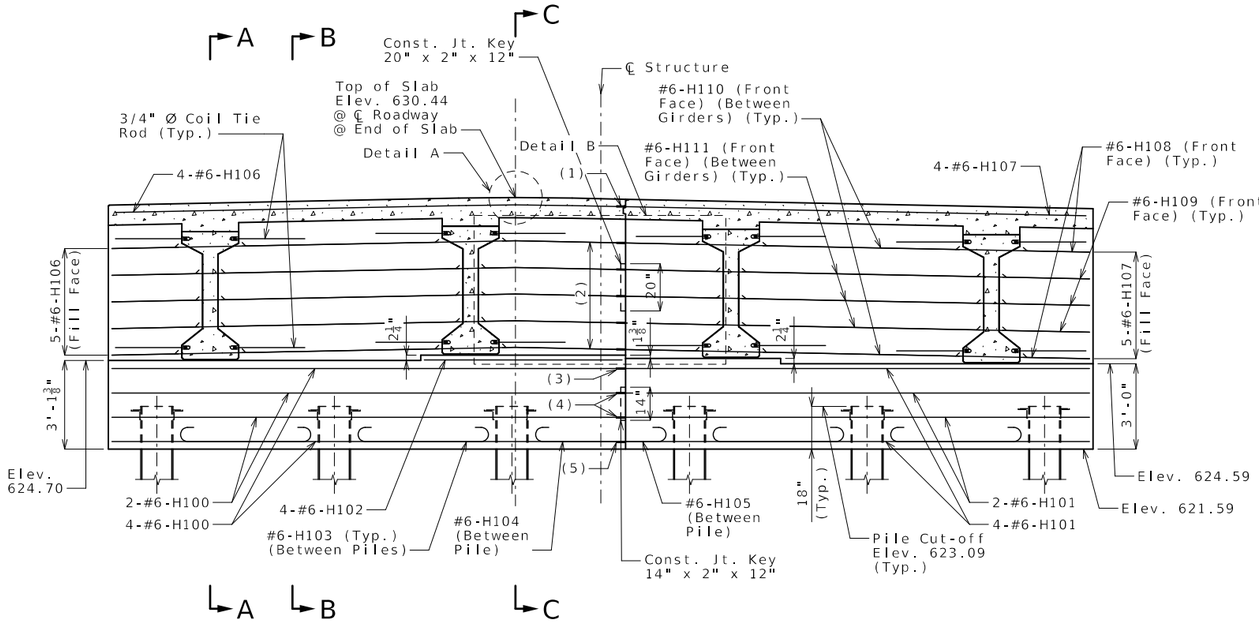

SECTION NEAR END BENT

Note: Keys at top of beam not shown for clarity.

(1) 4-MBS H106-H107

(2) 5-MBS H106-H107
(Fill Face)

(3) 4-MBS H100-H101

(4) 2-MBS H100-H101

(5) 4-MBS H100-H101 &
1-MBS H104-H105

(6) 3-MBS H113-H114
(Front Face)

(7) 1-MBS H112-H115
(Front Face)

(8) 1-MBS H112-H115
(Front Face)

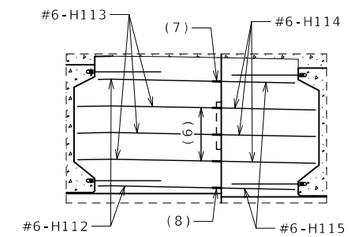

DETAIL B
SHOWING REINFORCEMENT IN
FRONT FACE OF DIAPHRAGM

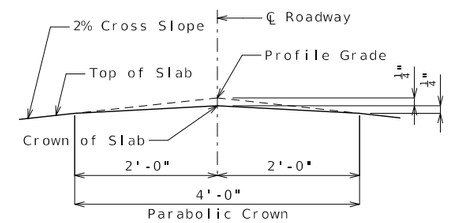

DETAIL A

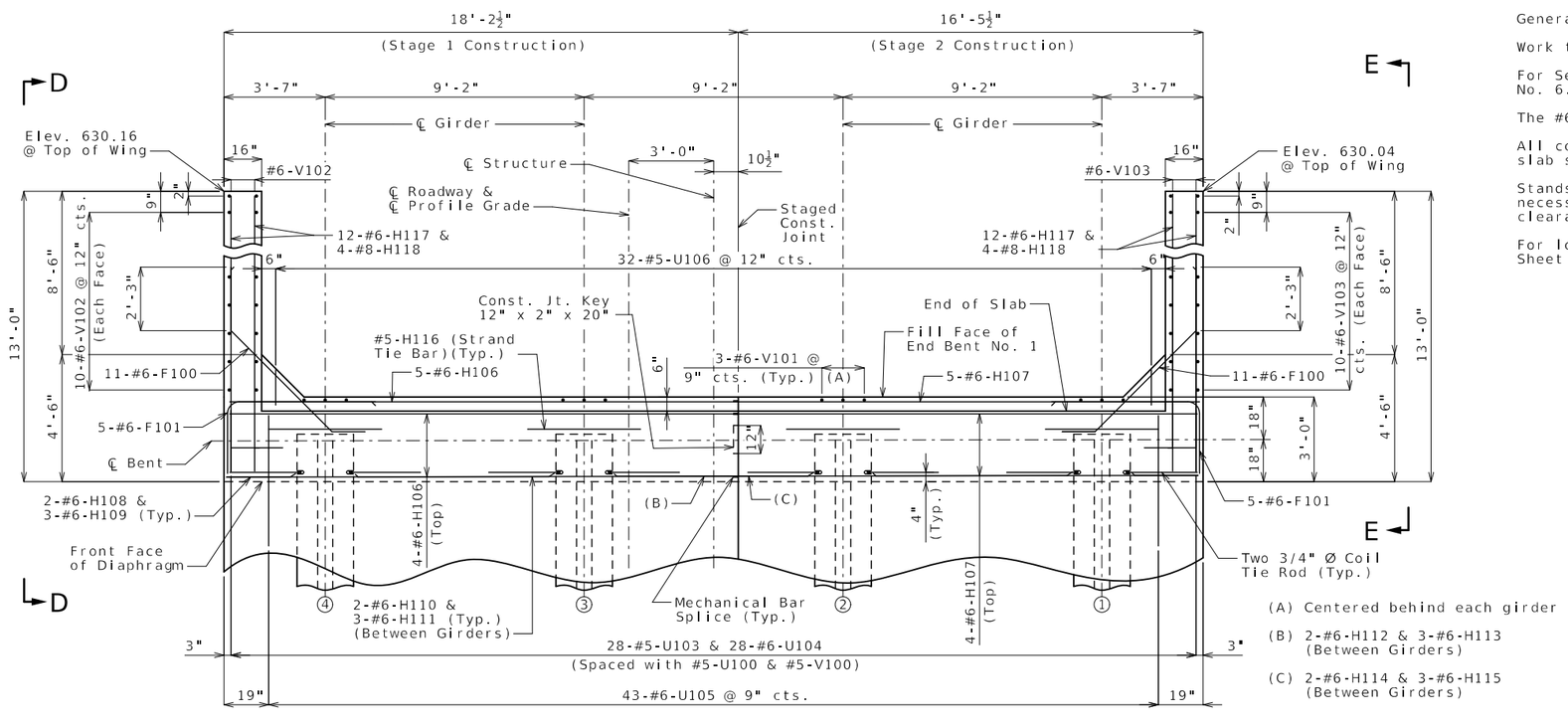

PART PLAN

(A) Centered behind each girder

(B) 2-#6-H112 & 3-#6-H113
(Between Girders)

(C) 2-#6-H114 & 3-#6-H115
(Between Girders)

General Notes:

Work this sheet with Sheets No. 4 & 6.

For Sections A-A, B-B, C-C, and Elevations D-D & E-E, see Sheet No. 6.

The #6-F100 bars shall be bent in the field to clear girders.

All concrete in the end bent above top of beam and below top of slab shall be Class B-2.

Stands at end of the girders shall be field bent or, if necessary, cut in field to maintain 1 1/2-inch minimum clearance to fill face of end bent.

For location of coil tie rods and #5-H116 (Strand tie bar), see Sheet No. 13.

DETAILS OF END BENT NO. 1

Detailed Dec. 2023
Checked May 2024

Note: This drawing is not to scale. Follow dimensions.

STATE OF MISSOURI
TYLER R. LINDSAY
NUMBER
PE-2019000128
PROFESSIONAL ENGINEER
07/01/2024 2:07:46 PM
TYLER R. LINDSAY - CIVIL
MO-PE-2019000128

DATE PREPARED	7/1/2024
ROUTE 5	STATE MO
DISTRICT BR	SHEET NO. 5
COUNTY	HOWARD
JOB NO.	J5P3498
CONTRACT ID.	
PROJECT NO.	
BRIDGE NO.	A9250

DATE	DESCRIPTION

MISSOURI HIGHWAYS AND TRANSPORTATION COMMISSION
105 WEST CAPITOL
JEFFERSON CITY, MO 65102
1-888-ASK-MODOT (1-888-275-6636)

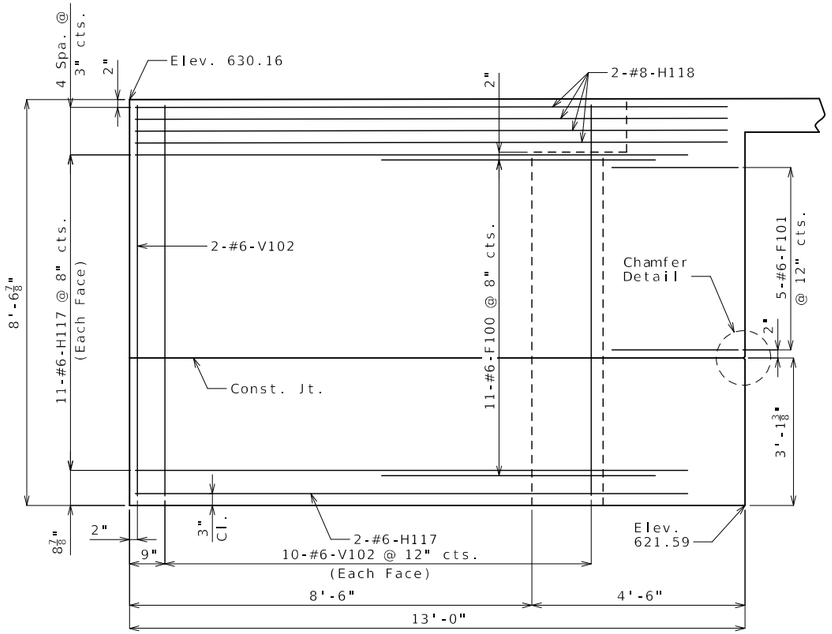

ELEVATION D-D

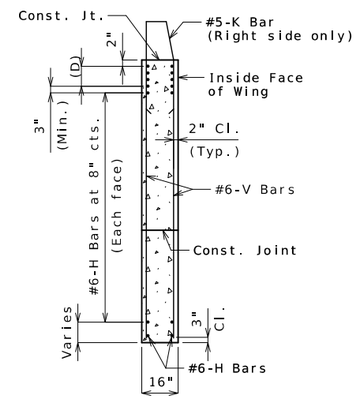

TYPICAL SECTION THRU WING

(D) #8-H Bars at 3" cts. (Each face)(Place with grade)

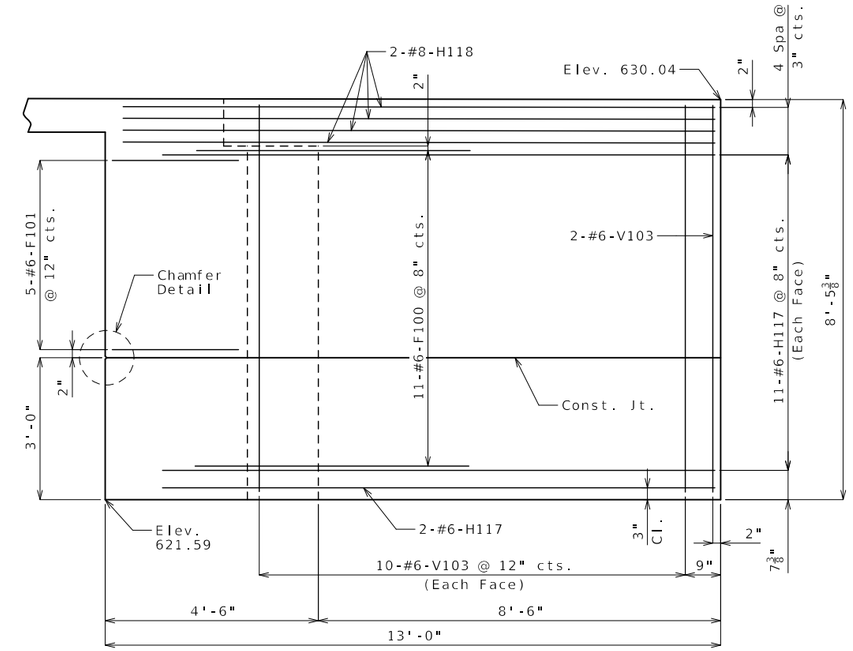

ELEVATION E-E

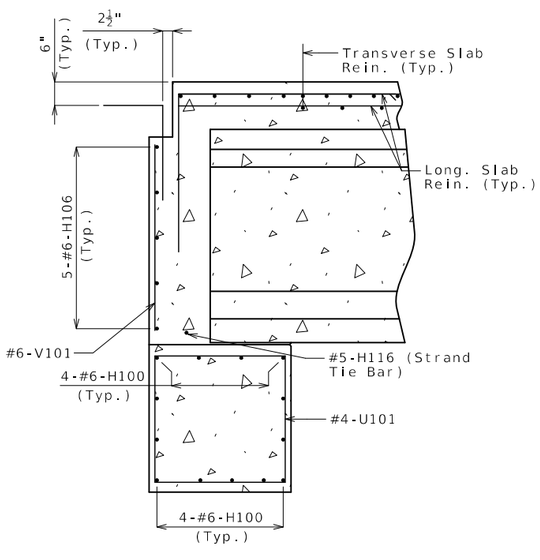

SECTION A-A

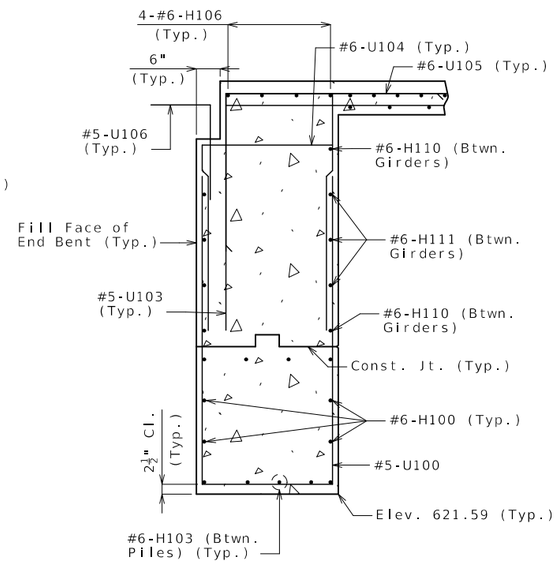

SECTION B-B

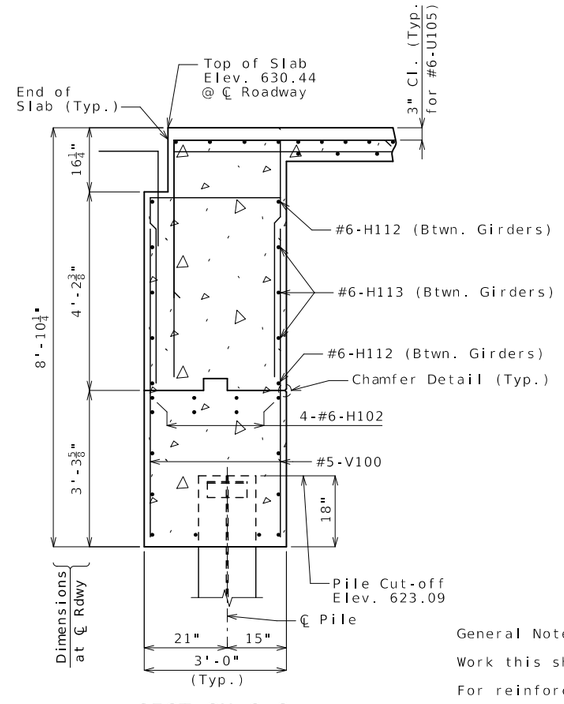

SECTION C-C

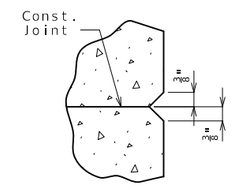

CHAMFER DETAIL

General Notes:

Work this sheet with Sheets No. 4 & 5.

For reinforcement of barrier, see Sheets No. 24 & 25.

Seal all surfaces of left side wing, diaphragm and beam above groundline with Protective Coating - Concrete Bents and Piers (Epoxy).

DETAILS OF END BENT NO. 1

Detailed Jan. 2024
Checked May 2024

Note: This drawing is not to scale. Follow dimensions.

STATE OF MISSOURI
TYLER R. LINDSAY
NUMBER PE-2019000128
PROFESSIONAL ENGINEER
07/01/2024 2:08:06 PM
TYLER R. LINDSAY - CIVIL
MO-PE-2019000128

DATE PREPARED	7/1/2024
ROUTE	5
STATE	MO
DISTRICT	BR
SHEET NO.	6
COUNTY	HOWARD
JOB NO.	J5P3498
CONTRACT ID.	
PROJECT NO.	
BRIDGE NO.	A9250

DATE	DESCRIPTION

MISSOURI HIGHWAYS AND TRANSPORTATION COMMISSION

105 WEST CAPITOL
JEFFERSON CITY, MO 65102
1-888-ASK-MODOT (1-888-275-6636)

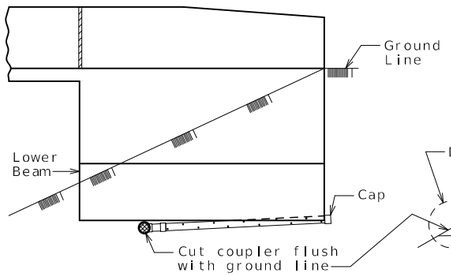

ELEVATION OF WING

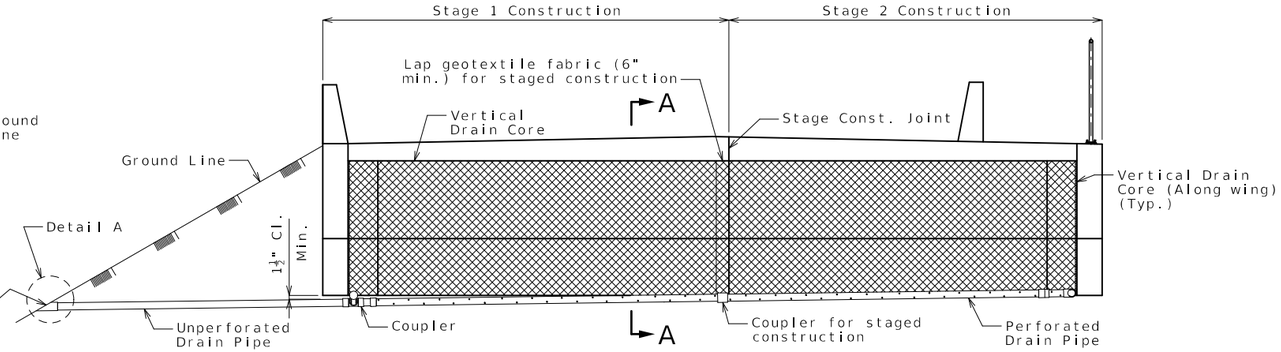

ELEVATION OF END BENT

End Bent No. 4 shown; End Bent No. 1 similar.

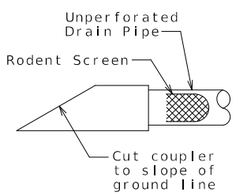

DETAIL A

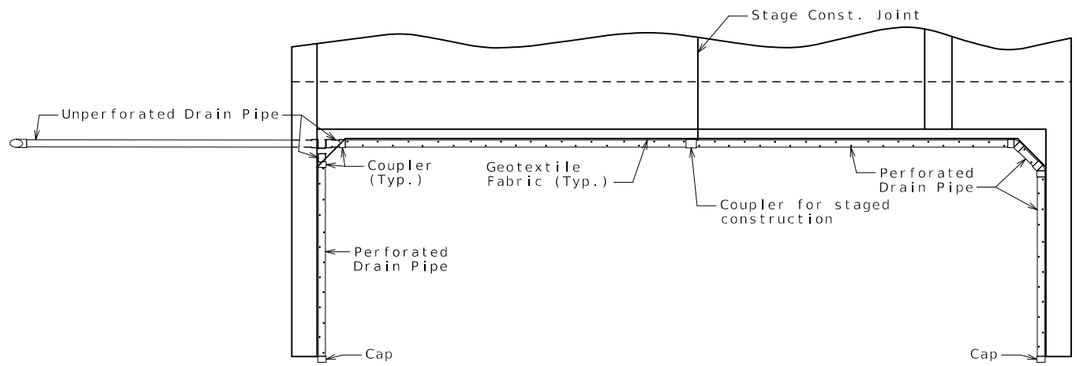

PLAN OF END BENT

End Bent No. 4 shown; End Bent No. 1 similar.

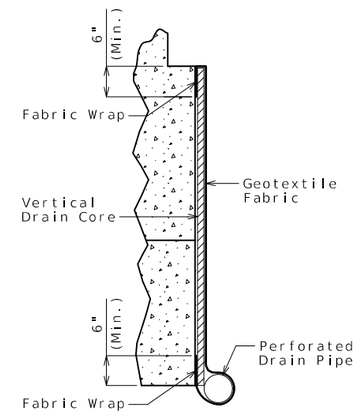

PART SECTION A-A

(Section thru wing similar)

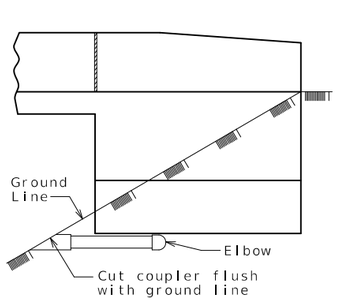

ELEVATION OF WING

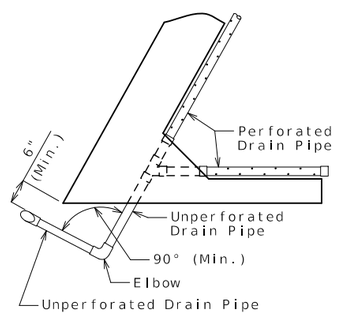

PART PLAN

OPTIONAL TURNED DRAIN

(Use only when straight drain is not practical.)

General Notes:

All drain pipe shall be sloped 1 to 2 percent.

Drain pipe may be either 6-inch diameter corrugated metallic-coated steel pipe underdrain, 4-inch diameter corrugated polyvinyl chloride (PVC) drain pipe, or 4-inch diameter corrugated polyethylene (PE) drain pipe.

Drain pipe shall be placed at fill face of end bent and inside face of wings. The pipe shall slope to lowest grade of ground line, also missing the lower beam of end bent by a minimum of 1 1/2 inches.

Perforated pipe shall be placed at fill face side and inside face of wings at the bottom of end bent and plain pipe shall be used where the vertical drain ends to the exit at ground line.

VERTICAL DRAIN AT END BENTS

Detailed Aug. 2023
Checked Jan. 2024

Note: This drawing is not to scale. Follow dimensions.

STATE OF MISSOURI
TYLER R. LINDSAY
NUMBER PE-2019000128
PROFESSIONAL ENGINEER
07/01/2024 2:08:37 PM
TYLER.R.LINDSAY - CIVIL
MO-PE-2019000128

DATE PREPARED	7/1/2024
ROUTE	5
STATE	MO
DISTRICT	BR
SHEET NO.	7
COUNTY	HOWARD
JOB NO.	J5P3498
CONTRACT ID.	
PROJECT NO.	
BRIDGE NO.	A9250

DATE	DESCRIPTION

MISSOURI HIGHWAYS AND TRANSPORTATION COMMISSION
105 WEST CAPITOL
JEFFERSON CITY, MO 65102
1-888-ASK-MODOT (1-888-275-6636)

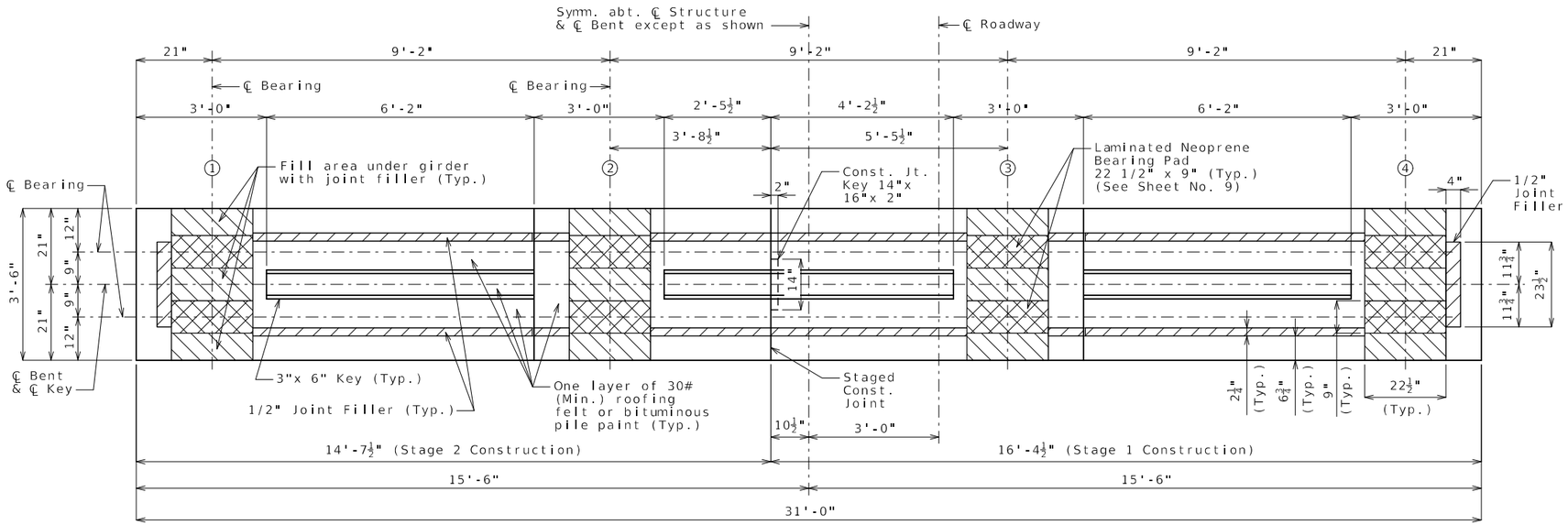

PLAN OF BEAM

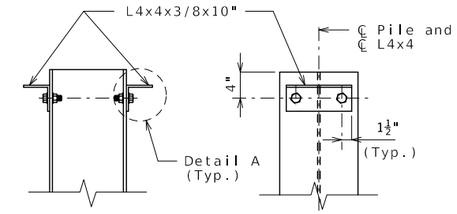

DETAILS OF HP PILE ANCHORS

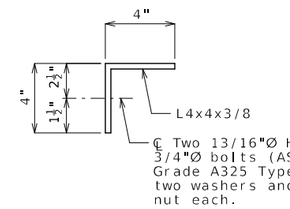

DETAIL A

Angles shall be coated with a minimum of two coats of non-aluminum epoxy mastic primer to provide a dry film thickness of 4 mils minimum, 8 mils maximum, or galvanized in accordance with Sec 1081. Bolts, washers and nuts shall be galvanized in accordance with AASHTO M 232 (ASTM A153), Class C.

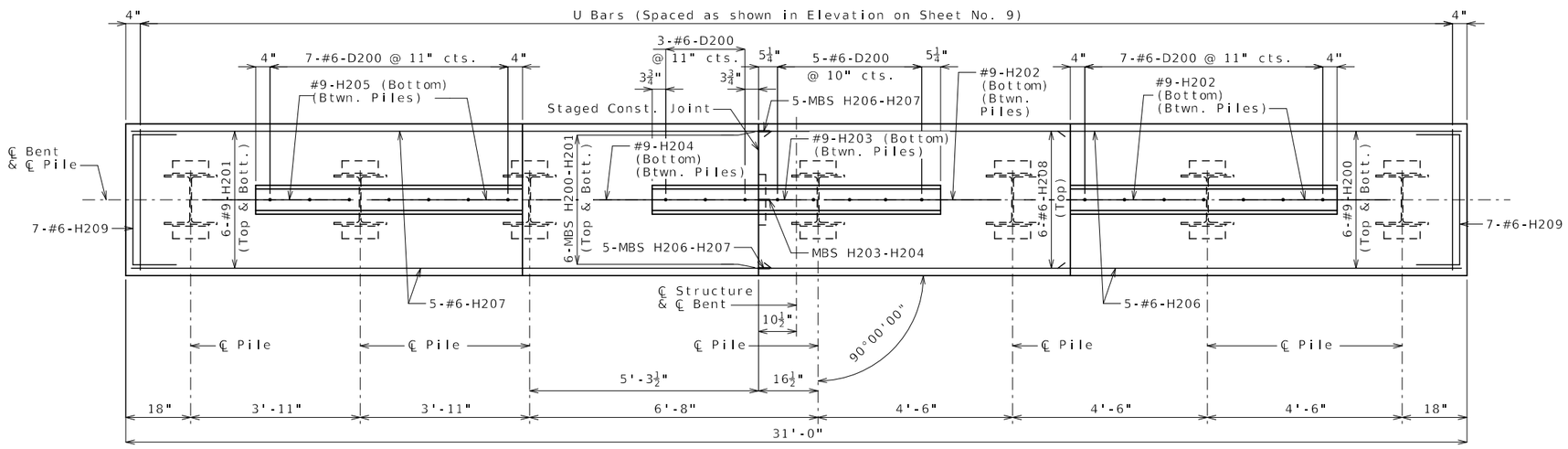

PLAN OF BEAM SHOWING REINFORCEMENT AND PILE SPACING

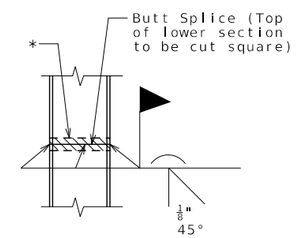

STEEL PILE SPLICE

(If required)

* Galvanizing material shall be omitted or removed one inch clear of weld locations in accordance with Sec 702.

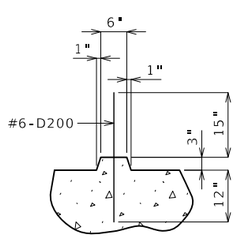

SECTION THRU KEY

Notes:

Work this sheet with Sheet No. 9.

For steps 2 inches or more, use 2 1/4 x 1/2 inch joint filler up vertical face.

Substructure Quantity Table for Bent No. 2

Item		Quantity
Galvanized Structural Steel Piles (14 in.)	linear foot	441
Pile Point Reinforcement	each	7
Class B Concrete (Substructure)	cu. yard	16.7
Reinforcing Steel (Bridges)	pound	2800
Mechanical Bar Splice	each	23

Substructure Quantity Table for Bent No. 3

Item		Quantity
Galvanized Structural Steel Piles (14 in.)	linear foot	455
Pile Point Reinforcement	each	7
Class B Concrete (Substructure)	cu. yard	16.7
Reinforcing Steel (Bridges)	pound	2800
Mechanical Bar Splice	each	23

These quantities are included in the Estimated Quantities table on Sheet No. 2.

INTERMEDIATE BENTS NO. 2 & 3

Detailed Jan. 2024
Checked Feb. 2024

Note: This drawing is not to scale. Follow dimensions.

STATE OF MISSOURI
TYLER R. LINDSAY
NUMBER PE-2019000128
PROFESSIONAL ENGINEER
07/01/2024 2:08:46 PM
TYLER R. LINDSAY - CIVIL
MO-PE-2019000128

DATE PREPARED	
7/1/2024	
ROUTE 5	STATE MO
DISTRICT BR	SHEET NO. 8
COUNTY HOWARD	
JOB NO. J5P3498	
CONTRACT ID.	
PROJECT NO.	
BRIDGE NO. A9250	

DESCRIPTION	DATE

MISSOURI HIGHWAYS AND TRANSPORTATION COMMISSION
105 WEST CAPITOL
JEFFERSON CITY, MO 65102
1-888-ASK-MODOT (1-888-275-6636)

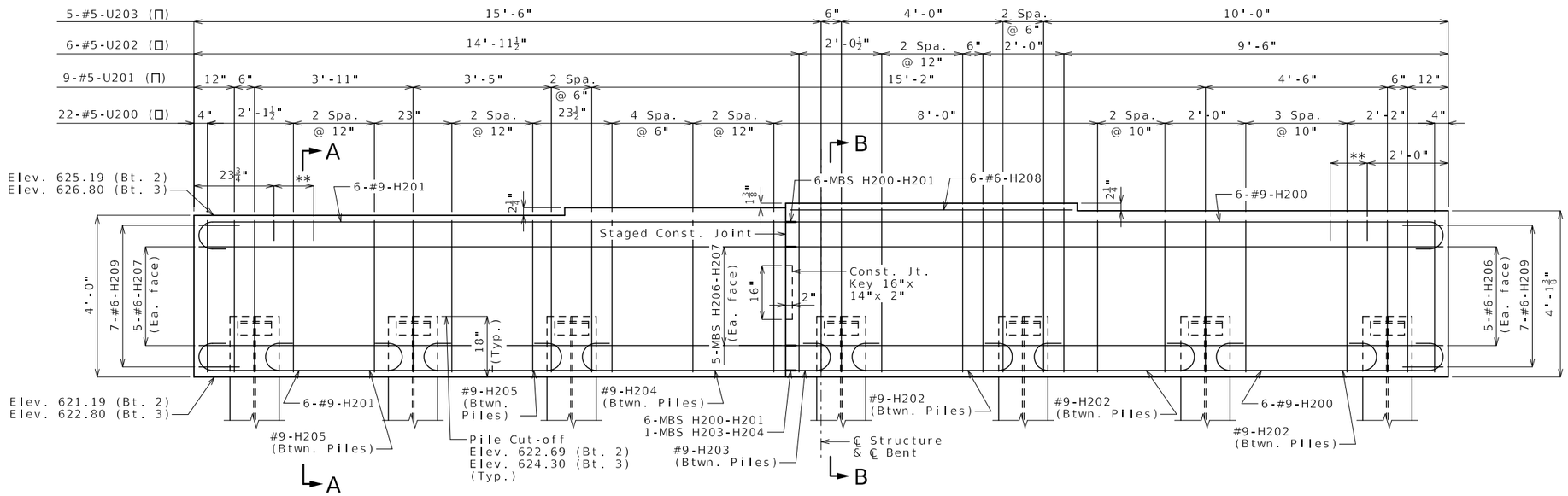

** 2-#4-U204 (Centered between #5-U bars; 6" max. distance from #5 bar)

ELEVATION

Beam keys not shown for clarity.

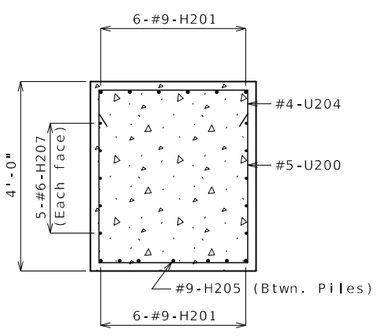

SECTION A-A

(Stage 2)

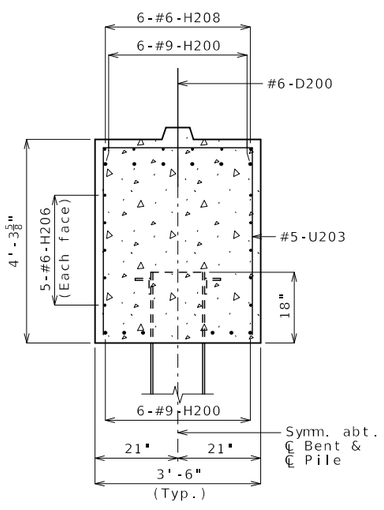

SECTION B-B

(Stage 1)

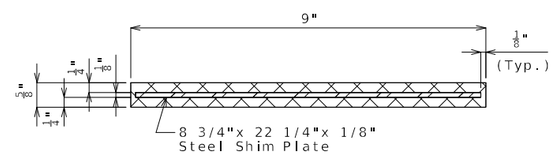

SECTION THRU 22 1/2"x 9"x 5/8" LAMINATED NEOPRENE BEARING PAD

Int. Bent No. 2, Span (1-2)

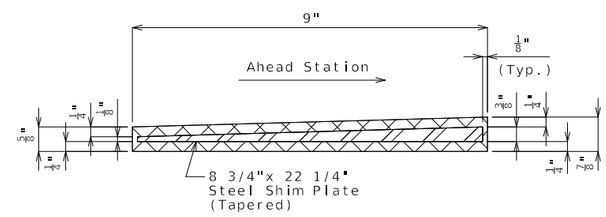

SECTION THRU 22 1/2"x 9" LAMINATED NEOPRENE BEARING PAD (TAPERED)

Int. Bent No. 2, Span (2-3)

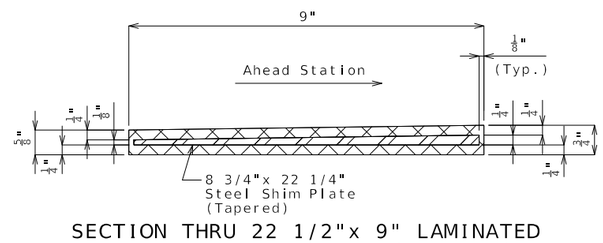

SECTION THRU 22 1/2"x 9" LAMINATED NEOPRENE BEARING PAD (TAPERED)

Int. Bent No. 3, Span (2-3)

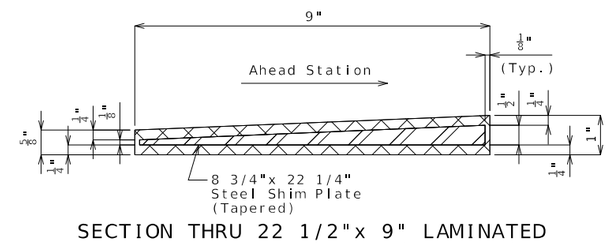

SECTION THRU 22 1/2"x 9" LAMINATED NEOPRENE BEARING PAD (TAPERED)

Int. Bent No. 3, Span (3-4)

Notes:

Work this sheet with Sheet No. 8.

Reinforcing steel shall be shifted to clear piles. U bars shall clear piles by at least 1 1/2 inches.

INTERMEDIATE BENTS NO. 2 & 3

Detailed Jan. 2024
Checked Feb. 2024

Note: This drawing is not to scale. Follow dimensions.

STATE OF MISSOURI
TYLER R. LINDSAY
NUMBER PE-2019000128
PROFESSIONAL ENGINEER
07/01/2024 2:09:26 PM
TYLER R. LINDSAY - CIVIL
MO-PE-2019000128

DATE PREPARED	7/1/2024
ROUTE	5
STATE	MO
DISTRICT	BR
SHEET NO.	9
COUNTY	HOWARD
JOB NO.	J5P3498
CONTRACT ID.	
PROJECT NO.	
BRIDGE NO.	A9250

DATE	DESCRIPTION

MISSOURI HIGHWAYS AND TRANSPORTATION COMMISSION
105 WEST CAPITOL
JEFFERSON CITY, MO 65102
1-888-ASK-MODOT (1-888-275-6636)

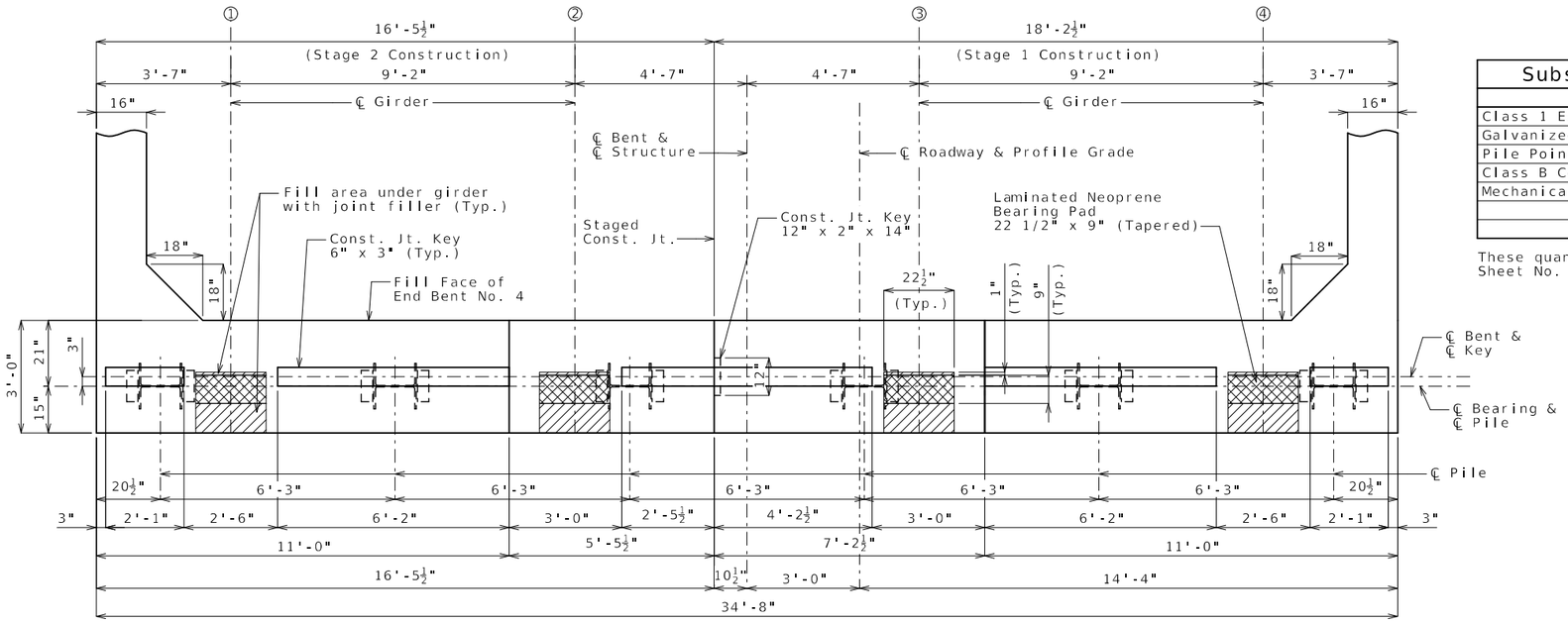

PLAN OF BEAM SHOWING DIMENSIONS

Substructure Quantity Table for Bent No. 4		
Item		Quantity
Class 1 Excavation	cu. yard	40
Galvanized Structural Steel Piles (14 in.)	linear foot	408
Pile Point Reinforcement	each	6
Class B Concrete (Substructure)	cu. yard	15.7
Mechanical Bar Splice	each	13

These quantities are included in the Estimated Quantities table on Sheet No. 2.

General Notes:

Work this sheet with Sheets No. 11 & 12.

Reinforcing steel shall be shifted to clear piles. U bars shall clear piles by at least 1 1/2 inches.

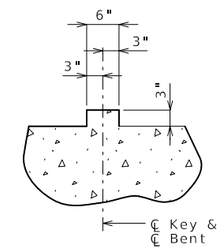

SECTION THRU KEY

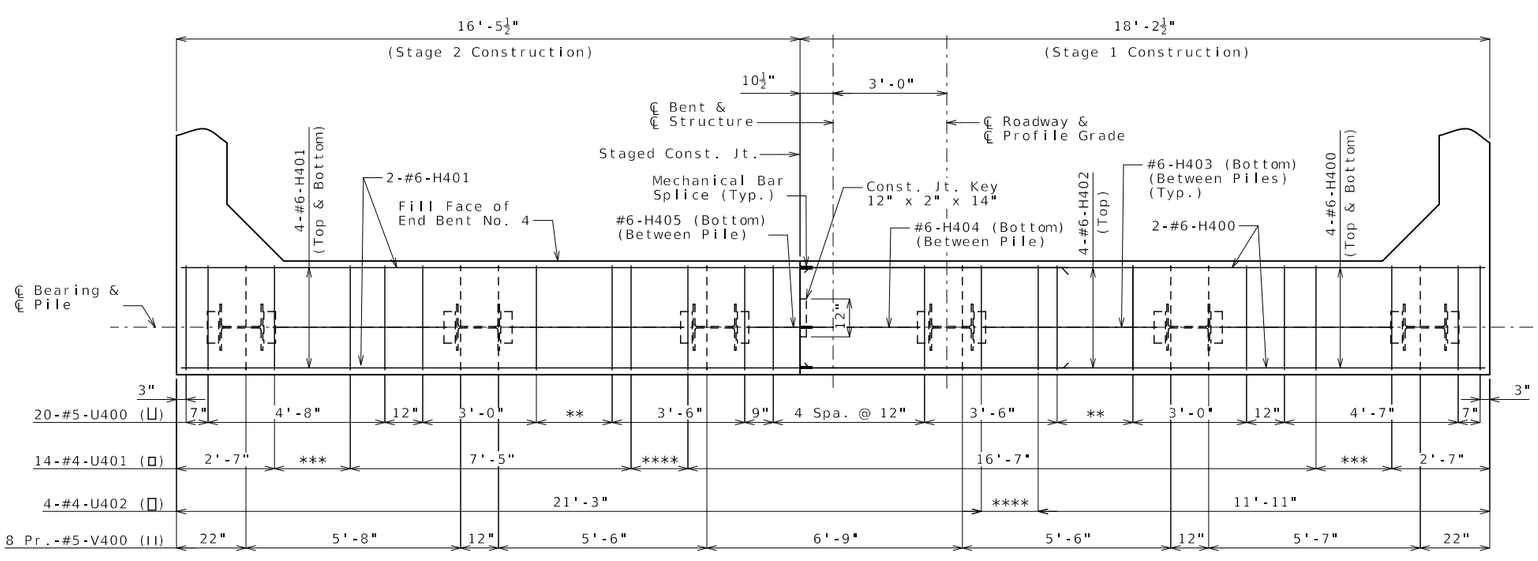

** 2 Spa. @ 12"
*** 4 Spa. @ 6"
**** 3 Spa. @ 6"

PLAN OF BEAM SHOWING REINFORCEMENT

Note: Keys at top of beam and steps not shown for clarity.

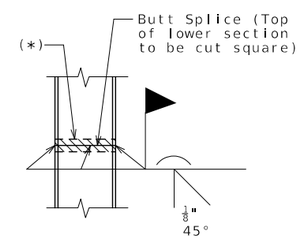

STEEL PILE SPLICE

(If required)

(*) Galvanizing material shall be omitted or removed one inch clear of weld locations in accordance with Sec 702.

DETAILS OF END BENT NO. 4

Detailed Feb. 2024
Checked May 2024

Note: This drawing is not to scale. Follow dimensions.

STATE OF MISSOURI
TYLER R. LINDSAY
NUMBER PE-2019000128
PROFESSIONAL ENGINEER
07/01/2024 2:00:47 PM
TYLER R. LINDSAY - CIVIL
MO-PE-2019000128

DATE PREPARED	
7/1/2024	
ROUTE 5	STATE MO
DISTRICT BR	SHEET NO. 10
COUNTY HOWARD	
JOB NO. J5P3498	
CONTRACT ID.	
PROJECT NO.	
BRIDGE NO. A9250	

DESCRIPTION

DATE

MISSOURI HIGHWAYS AND TRANSPORTATION COMMISSION
105 WEST CAPITOL
JEFFERSON CITY, MO 65102
1-888-ASK-MODOT (1-888-275-6636)

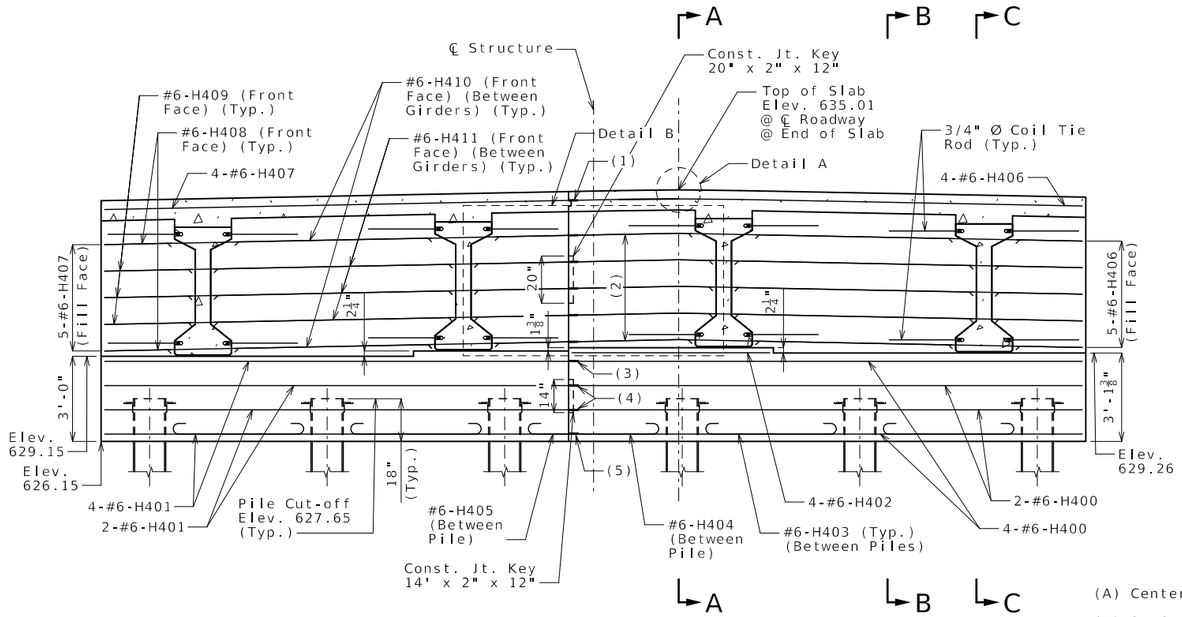

SECTION NEAR END BENT

Note: Keys at top of beam not shown for clarity.

(1) 4-MBS H406-H407

(2) 5-MBS H406-H407 (Fill Face)

(3) 4-MBS H400-H401

(4) 2-MBS H400-H401

(5) 4-MBS H400-H401 & 1-MBS H404-H405

(6) 3-MBS H413-H414 (Front Face)

(7) 1-MBS H412-H415 (Front Face)

(8) 1-MBS H412-H415 (Front Face)

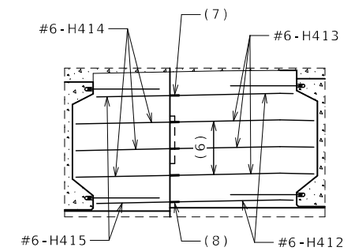

DETAIL B
SHOWING REINFROCEMENT IN FRONT FACE OF DIAPHRAGM

(A) Centered behind each girder

(B) 2-#6-H412 & 3-#6-H413 (Between Girders)

(C) 2-#6-H414 & 3-#6-H415 (Between Girders)

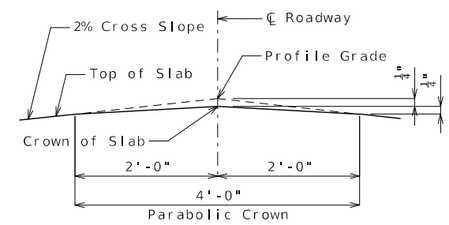

DETAIL A

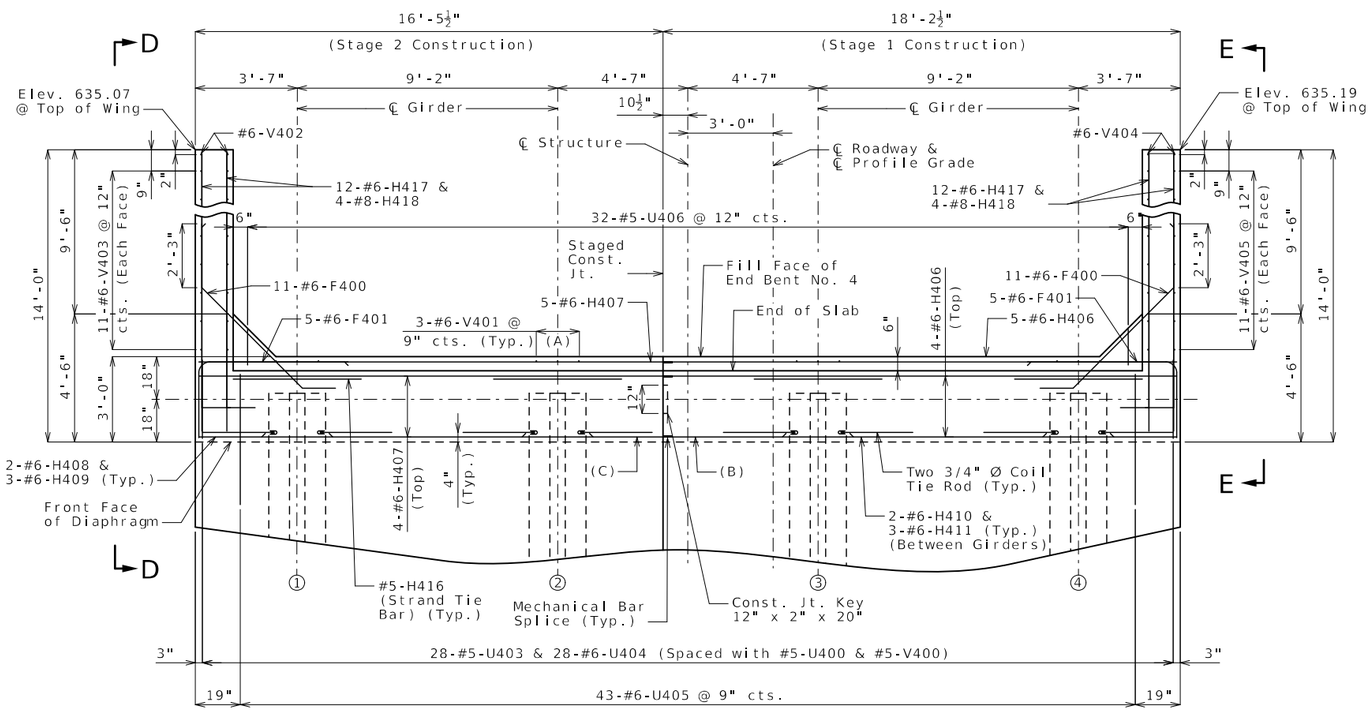

PART PLAN

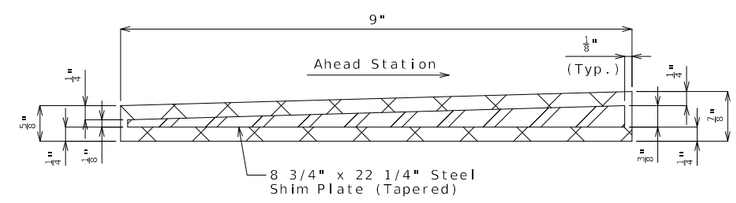

SECTION THRU 22 1/2" X 9" LAMINATED NEOPRENE BEARING PAD (TAPERED)

General Notes:

Work this sheet with Sheets No. 10 & 12.

For Sections A-A, B-B, C-C, and Elevations D-D & E-E, see Sheet No. 12.

The #6-F400 bars shall be bent in the field to clear girders.

All concrete in the end bent above top of beam and below top of slab shall be Class B-2.

Stands at end of the girders shall be field bent or, if necessary, cut in field to maintain 1 1/2-inch minimum clearance to fill face of end bent.

For location of coil tie rods and #5-H416 (Strand tie bar), see Sheet No. 13.

DETAILS OF END BENT NO. 4

Detailed Feb. 2024
Checked May 2024

Note: This drawing is not to scale. Follow dimensions.

STATE OF MISSOURI
TYLER R. LINDSAY
NUMBER PE-2019000128
PROFESSIONAL ENGINEER
07/01/2024 2:10:16 PM
TYLER R. LINDSAY - CIVIL
MO-PE-2019000128

DATE PREPARED	7/1/2024
ROUTE 5	STATE MO
DISTRICT BR	SHEET NO. 11
COUNTY	HOWARD
JOB NO.	J5P3498
CONTRACT ID.	
PROJECT NO.	
BRIDGE NO.	A9250

DESCRIPTION

DATE

MISSOURI HIGHWAYS AND TRANSPORTATION COMMISSION

105 WEST CAPITOL
JEFFERSON CITY, MO 65102
1-888-ASK-MODOT (1-888-275-6636)

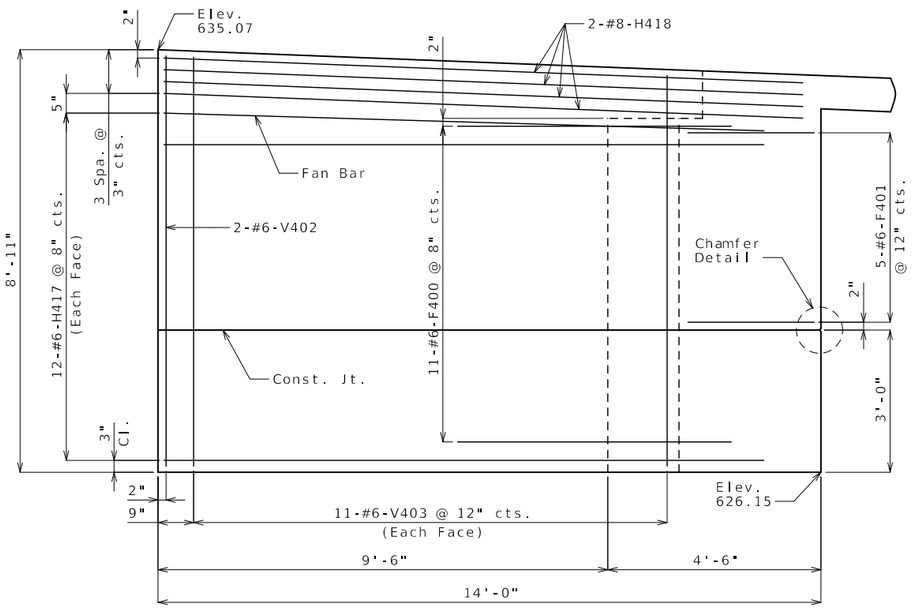

ELEVATION D-D

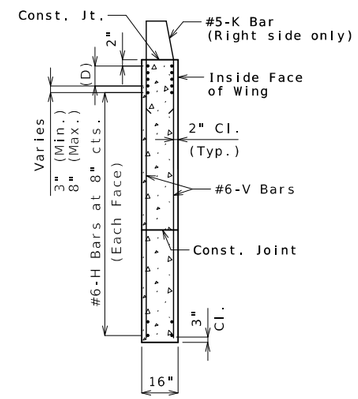

TYPICAL SECTION THRU WING

(D) #8-H Bars at 3" cts. (Each face)(Place with grade)

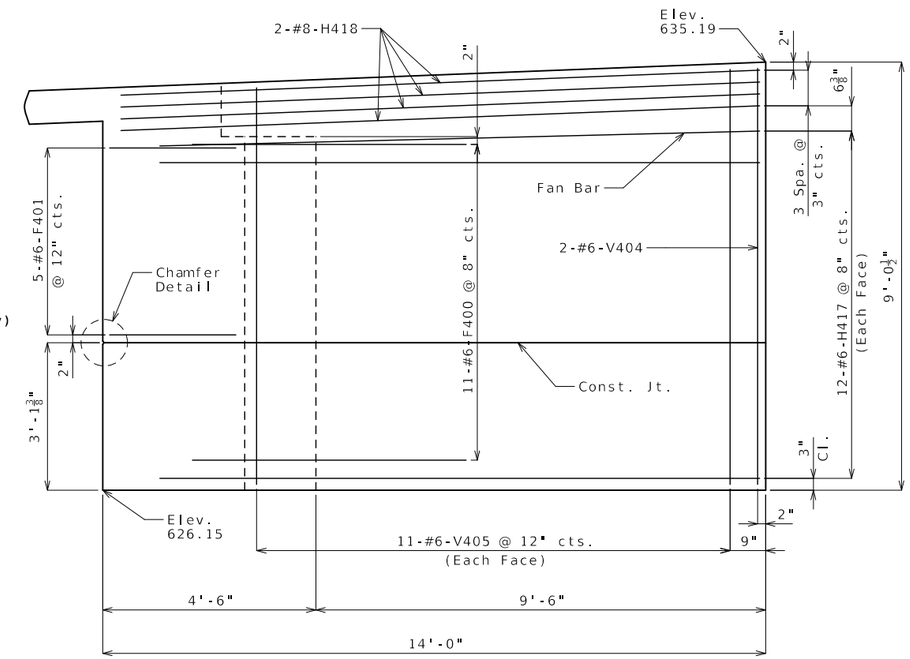

ELEVATION E-E

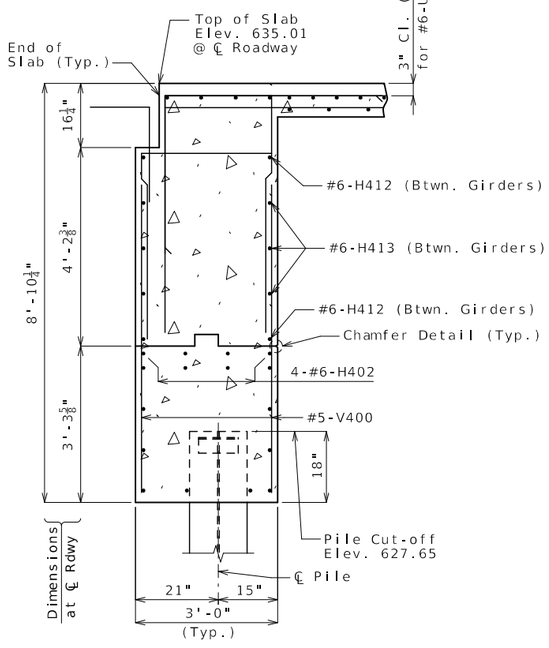

SECTION A-A

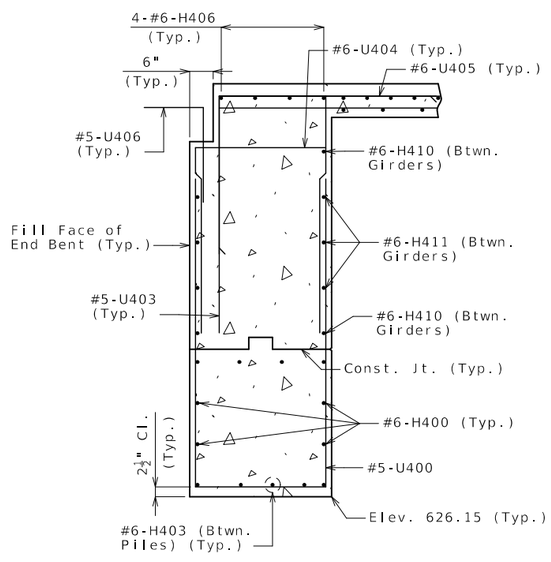

SECTION B-B

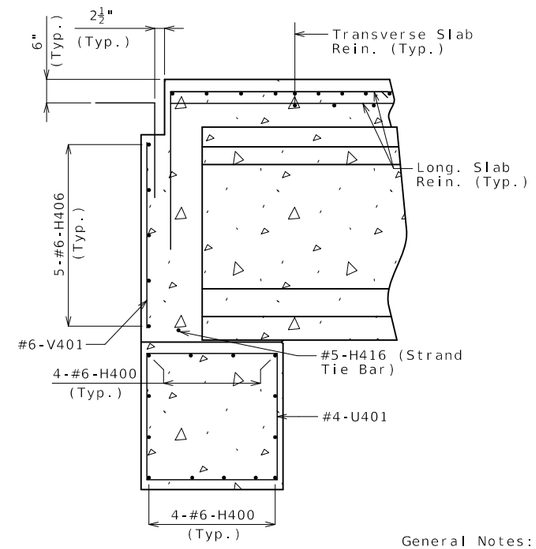

SECTION C-C

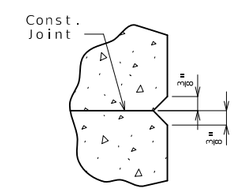

CHAMFER DETAIL

General Notes:

Work this sheet with sheets No. 10 & 11.

For reinforcement of barrier, see Sheets No. 24 & 25.

Seal all surfaces of left side wing, diaphragm and beam above groundline with Protective Coating - Concrete Bents and Piers (Epoxy).

DETAILS OF END BENT NO. 4

Detailed Feb. 2024
Checked May 2024

Note: This drawing is not to scale. Follow dimensions.

STATE OF MISSOURI
TYLER R. LINDSAY
NUMBER PE-2019000128
PROFESSIONAL ENGINEER
07/01/2024 2:14:36 PM
TYLER R LINDSAY-CIVIL
MO-PE-2019000128

DATE PREPARED	7/1/2024
ROUTE 5	STATE MO
DISTRICT BR	SHEET NO. 12
COUNTY	HOWARD
JOB NO.	J5P3498
CONTRACT ID.	
PROJECT NO.	
BRIDGE NO.	A9250

DESCRIPTION

DATE

MISSOURI HIGHWAYS AND TRANSPORTATION COMMISSION

105 WEST CAPITOL
JEFFERSON CITY, MO 65102
1-888-ASK-MODOT (1-888-275-6636)

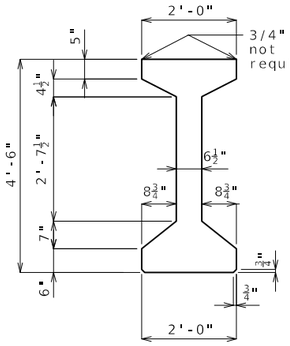

DIMENSIONS

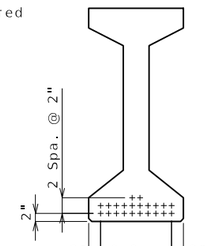

℄ GIRDER

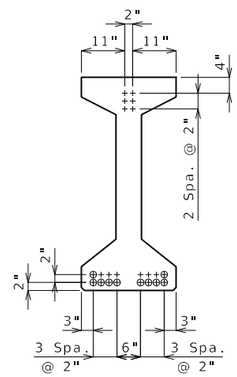

END OF GIRDER

STRAND ARRANGEMENT

+ Indicates prestressing strand.

○ Indicates cut & shop bend with 2'-6" projection.

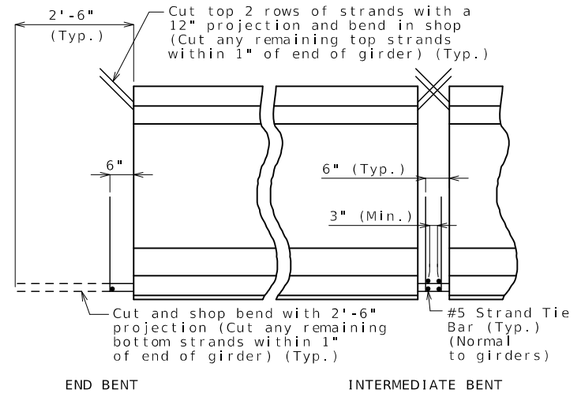

END BENT

INTERMEDIATE BENT

STRANDS AT GIRDER ENDS

BILL OF REINFORCING STEEL - EACH GIRDER				
NO.	SIZE & MARK	ACTUAL LENGTH	SHAPE	BENDING DIAGRAM
4	6 A1	36'-3"	20	
148	4 B1	5'-11"	11	
16	6 B2	5'-3"	11	
82	4 C1	2'-2"	10	
164	4 D1	3'-0"	9	

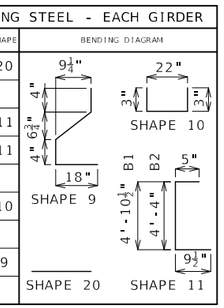

All dimensions are out to out.

Hooks and bends shall be in accordance with the CRSI Manual of Standard Practice for Detailing Reinforced Concrete Structures, Stirrup and Tie Dimensions.

Actual lengths are measured along centerline of bar to the nearest inch.

Minimum clearance to reinforcing shall be 1 inch.

All reinforcement shall be Grade 60.

The two D1 bars may be furnished as one bar at the fabricator's option.

All B1 bars shall be epoxy coated.

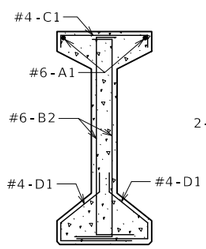

SECTION A-A

Strands not shown for clarity.

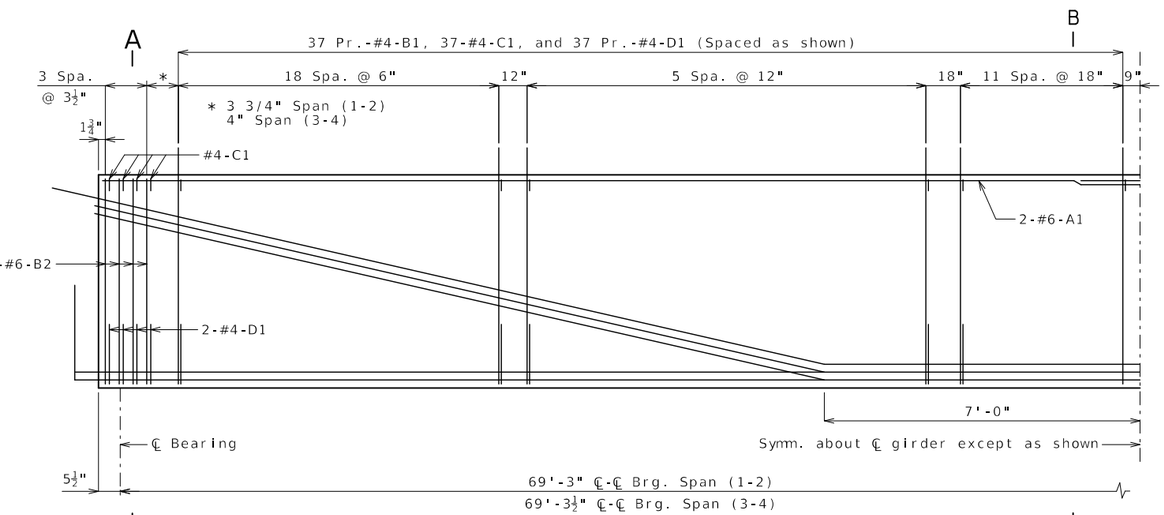

HALF ELEVATION

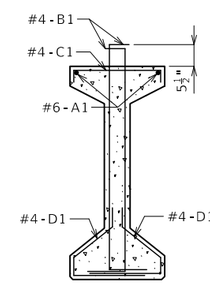

SECTION B-B

Strands not shown for clarity.

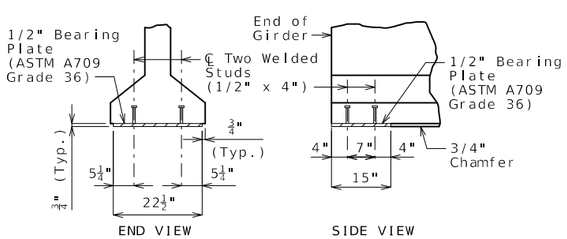

BEARING PLATE

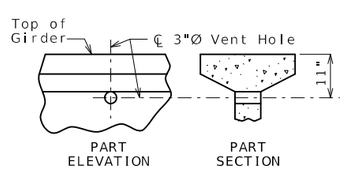

VENT HOLE

Place vent holes at or near upgrade 1/3 point of girders and clear reinforcing steel or strands by 1 1/2" minimum and steel intermediate diaphragm bolt connections by 6" minimum.

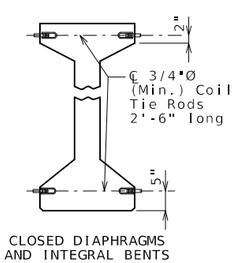

CLOSED DIAPHRAGMS AND INTEGRAL BENTS

COIL TIES

Exclude coil tie at exterior face of exterior girders except at integral end bents.

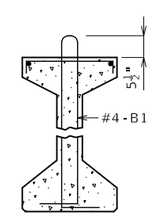

B1 BAR PERMISSIBLE ALTERNATE SHAPE

General Notes:

Concrete for prestressed girders shall be Class A-1 with f'c = 6,000 psi and f'ci = 4,500 psi.

Use 22 strands, 1/2"Ø Grade 270, with an initial prestress force of 682 kips.

Pretensioned members shall be in accordance with Sec 1029.

Fabricator shall be responsible for location and design of lifting devices.

Exterior and interior girders are the same except: coil ties, coil inserts for slab drains, holes for steel intermediate diaphragms.

For Girder Camber Diagram, see Sheet No. 18.

The 1 1/2"Ø holes shall be cast in the web for steel intermediate diaphragms. Drilling is not allowed. For location of holes and details of steel intermediate diaphragms, see Sheet No. 15.

For location of coil inserts at slab drains, see Sheet No. 17.

For location of coil ties at concrete bent diaphragms, see Sheets No. 5, 11 & 16.

PRESTRESSED I-GIRDERS - SPANS (1-2) AND (3-4)

Detailed Aug. 2023
Checked Jan. 2023

Note: This drawing is not to scale. Follow dimensions.

STATE OF MISSOURI
TYLER R. LINDSAY
NUMBER PE-2019000128
PROFESSIONAL ENGINEER
07/01/2024 2:14:46 PM
TYLER R.LINDSAY - CIVIL
MO-PE-2019000128

DATE PREPARED	
7/1/2024	
ROUTE 5	STATE MO
DISTRICT BR	SHEET NO. 13
COUNTY HOWARD	
JOB NO. J5P3498	
CONTRACT ID.	
PROJECT NO.	
BRIDGE NO. A9250	

DESCRIPTION

DATE

MISSOURI HIGHWAYS AND TRANSPORTATION COMMISSION
105 WEST CAPITOL
JEFFERSON CITY, MO 65102
1-888-ASK-MODOT (1-888-275-6636)

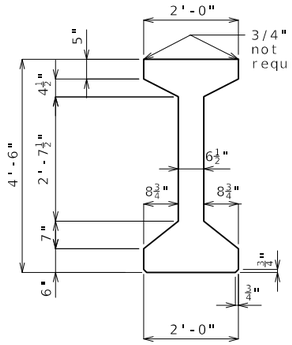

DIMENSIONS

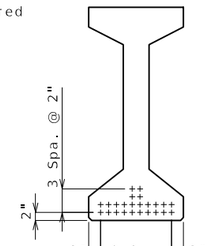

℄ GIRDER

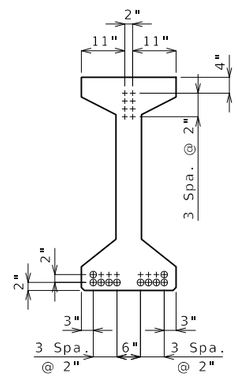

END OF GIRDER

STRAND ARRANGEMENT

+ Indicates prestressing strand.

○ Indicates cut & shop bend with 2'-6" projection.

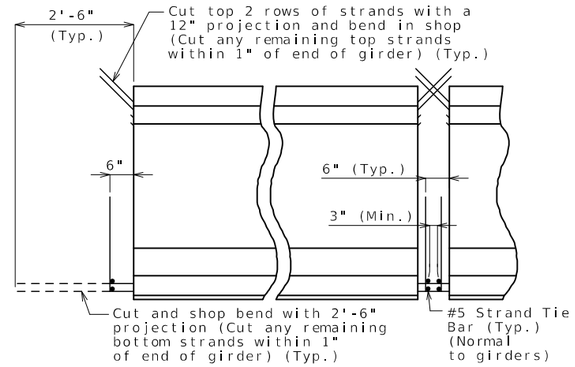

STRANDS AT GIRDER ENDS

BILL OF REINFORCING STEEL - EACH GIRDER				
NO.	SIZE & MARK	ACTUAL LENGTH	SHAPE	BENDING DIAGRAM
4	6 A1	40'-8"	20	
156	4 B1	5'-11"	11	
16	6 B2	5'-3"	11	
86	4 C1	2'-2"	10	
172	4 D1	3'-0"	9	

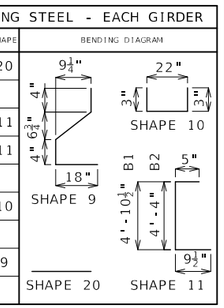

All dimensions are out to out.

Hooks and bends shall be in accordance with the CRSI Manual of Standard Practice for Detailing Reinforced Concrete Structures, Stirrup and Tie Dimensions.

Actual lengths are measured along centerline of bar to the nearest inch.

Minimum clearance to reinforcing shall be 1".

All reinforcement shall be Grade 60.

The two D1 bars may be furnished as one bar at the fabricator's option.

All B1 bars shall be epoxy coated.

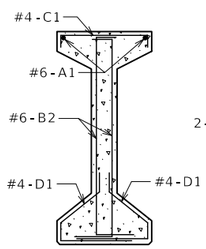

SECTION A-A

Strands not shown for clarity.

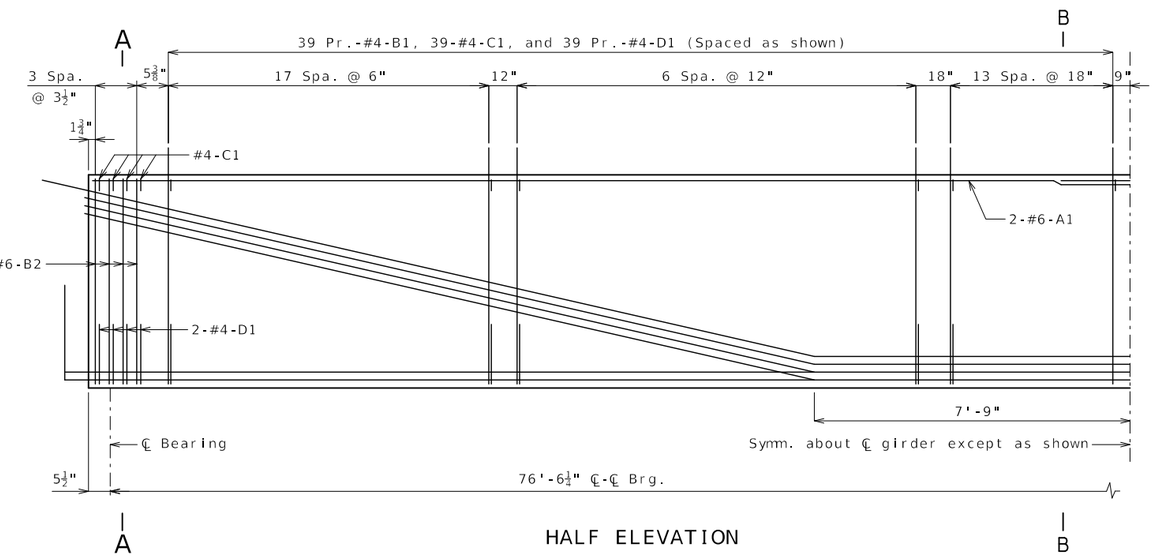

HALF ELEVATION

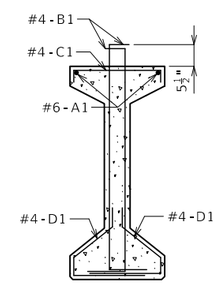

SECTION B-B

Strands not shown for clarity.

General Notes:

Concrete for prestressed girders shall be Class A-1 with f'c = 6,000 psi and f'ci = 4,500 psi.

Use 24 strands, 1/2"Ø Grade 270, with an initial prestress force of 744 kips.

Pretensioned members shall be in accordance with Sec 1029.

Fabricator shall be responsible for location and design of lifting devices.

Exterior and interior girders are the same except: coil ties, coil inserts for slab drains, holes for steel intermediate diaphragms.

For Girder Camber Diagram, see Sheet No. 18.

The 1 1/2"Ø holes shall be cast in the web for steel intermediate diaphragms. Drilling is not allowed. For location of holes and details of steel intermediate diaphragms, see Sheet No. 15.

For location of coil inserts at slab drains, see Sheet No. 17.

For location of coil ties at concrete bent diaphragms, see Sheet No. 16.

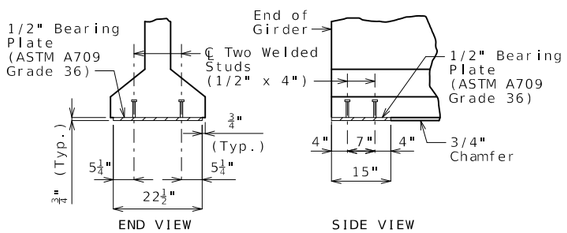

END VIEW SIDE VIEW

BEARING PLATE

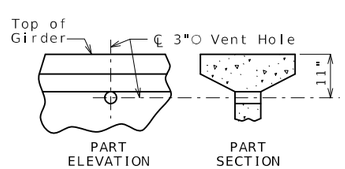

PART ELEVATION PART SECTION

VENT HOLE

Place vent holes at or near upgrade 1/3 point of girders and clear reinforcing steel or strands by 1 1/2" minimum and steel intermediate diaphragm bolt connections by 6" minimum.

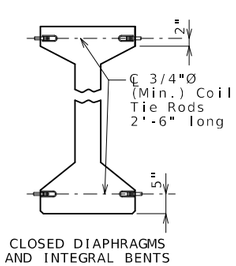

CLOSED DIAPHRAGMS AND INTEGRAL BENTS

COIL TIES

Exclude coil tie at exterior face of exterior girders except at integral end bents.

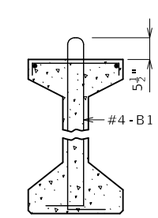

B1 BAR PERMISSIBLE ALTERNATE SHAPE

PRESTRESSED I-GIRDERS - SPAN (2-3)

Detailed Aug. 2023
Checked Jan. 2024

Note: This drawing is not to scale. Follow dimensions.

STATE OF MISSOURI
TYLER R. LINDSAY
NUMBER PE-2019000128
PROFESSIONAL ENGINEER
07/01/2024 2:14:56 PM
TYLER R. LINDSAY - CIVIL
MO-PE-2019000128

DATE PREPARED	
7/1/2024	
ROUTE 5	STATE MO
DISTRICT BR	SHEET NO. 14
COUNTY HOWARD	
JOB NO. J5P3498	
CONTRACT ID.	
PROJECT NO.	
BRIDGE NO. A9250	

DESCRIPTION

DATE

MISSOURI HIGHWAYS AND TRANSPORTATION COMMISSION
105 WEST CAPITOL
JEFFERSON CITY, MO 65102
1-888-ASK-MODOT (1-888-275-6636)

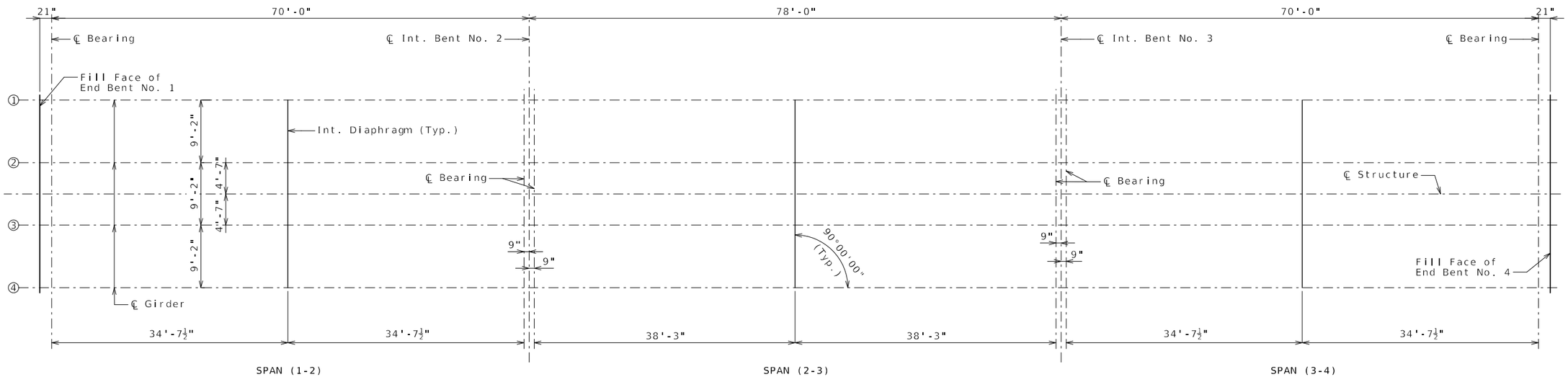

PLAN SHOWING LOCATION OF STEEL INTERMEDIATE DIAPHRAGMS

Longitudinal dimensions are horizontal.

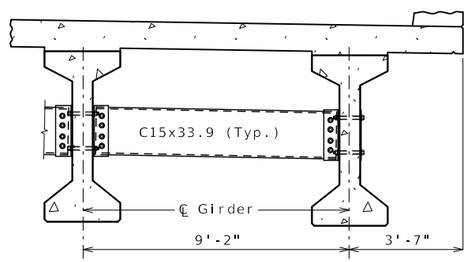

PART SECTION SHOWING INTERMEDIATE DIAPHRAGMS

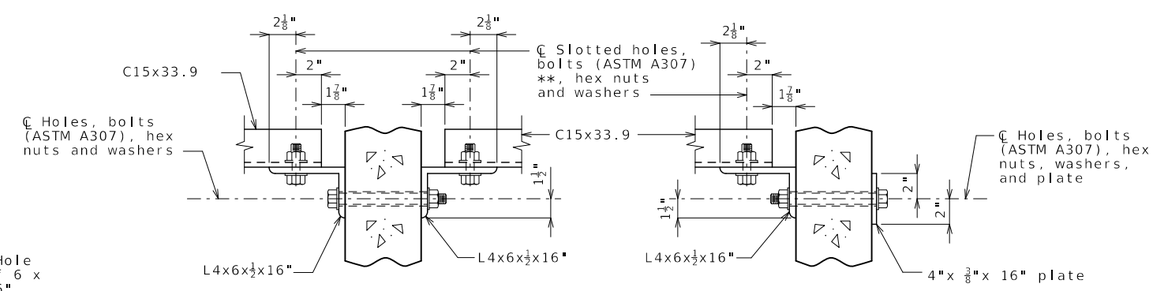

SECTION C-C

SECTION D-D

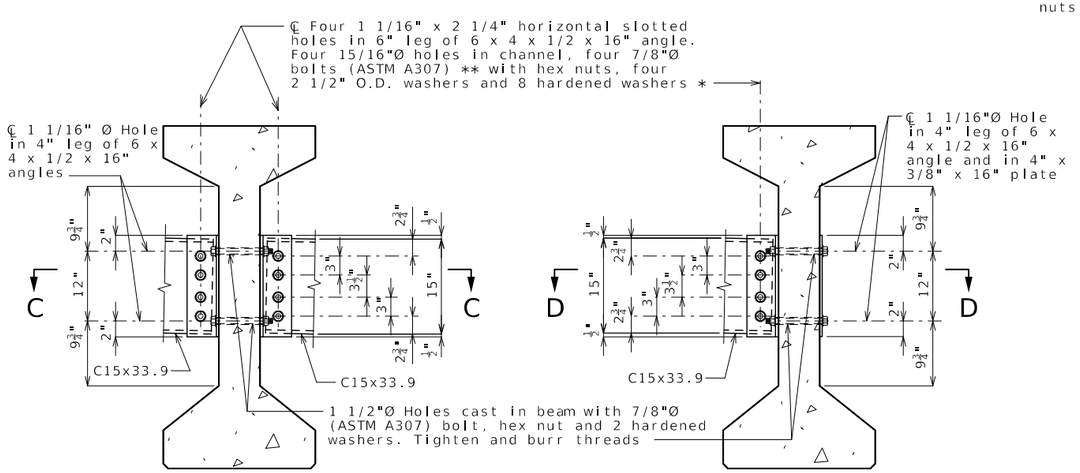

SECTION THRU INT. GIRDER AT DIAPHRAGM

SECTION THRU EXT. GIRDER AT DIAPHRAGM

STEEL DIAPHRAGM NOTES:

* In lieu of 2 1/2" outside diameter washers, contractor may substitute a 3/16" (Min. thickness) plate with four 15/16" Ø holes and one hardened washer per bolt.

** Bolts shall be tightened to provide a tension of one-half that specified in Sec 712 for high strength bolt installation. ASTM F3125 Grade A325 Type 1 bolts may be substituted for and installed in accordance with the requirements for the specified ASTM A307 bolts.

All diaphragm materials including bolts, nuts, and washers shall be galvanized.

Fabricated structural steel shall be ASTM A709 Grade 36 except as noted.

Payment for furnishing and installing steel intermediate diaphragms will be considered completely covered by the contract unit price for Steel Intermediate Diaphragm for P/S Concrete Girders.

Shop drawings will not be required for steel intermediate diaphragms and angle connections.

STEEL INTERMEDIATE DIAPHRAGMS

Detailed Aug. 2023
Checked Jan. 2024

Note: This drawing is not to scale. Follow dimensions.

STATE OF MISSOURI
TYLER R. LINDSAY
NUMBER PE-2019000128
PROFESSIONAL ENGINEER
07/01/2024 2:15:16 PM
TYLER R. LINDSAY - CIVIL
MO-PE-2019000128

DATE PREPARED	7/1/2024
ROUTE	5
STATE	MO
DISTRICT	BR
SHEET NO.	15
COUNTY	HOWARD
JOB NO.	J5P3498
CONTRACT ID.	
PROJECT NO.	
BRIDGE NO.	A9250

DATE	DESCRIPTION

MISSOURI HIGHWAYS AND TRANSPORTATION COMMISSION
105 WEST CAPITOL
JEFFERSON CITY, MO 65102
1-888-ASK-MODOT (1-888-275-6636)

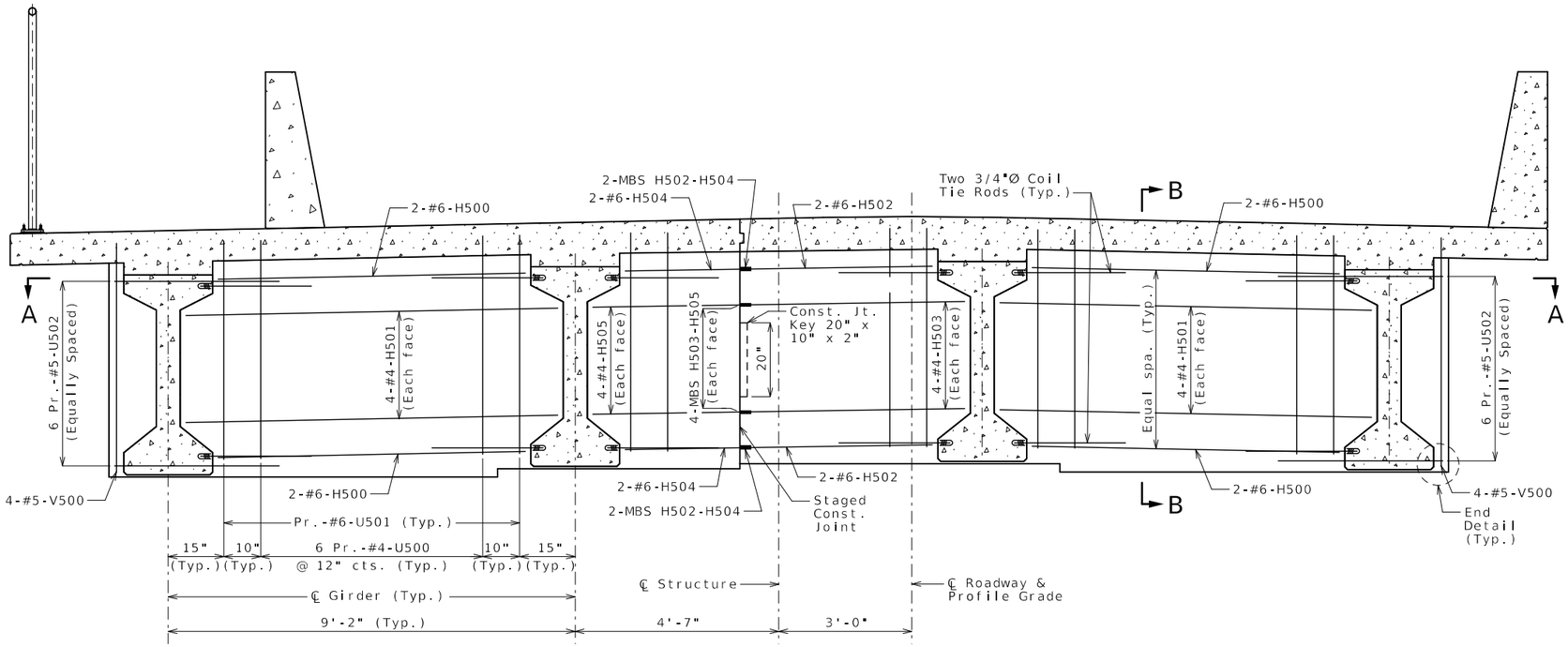

SECTION NEAR INTERMEDIATE BENT

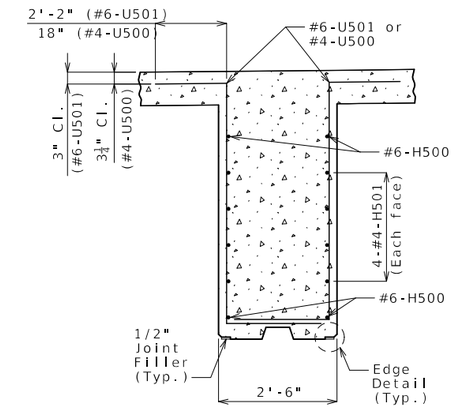

SECTION B-B

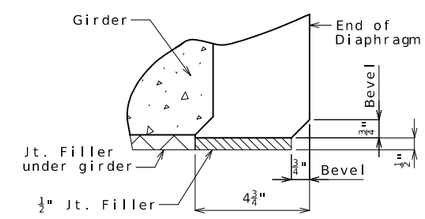

END DETAIL

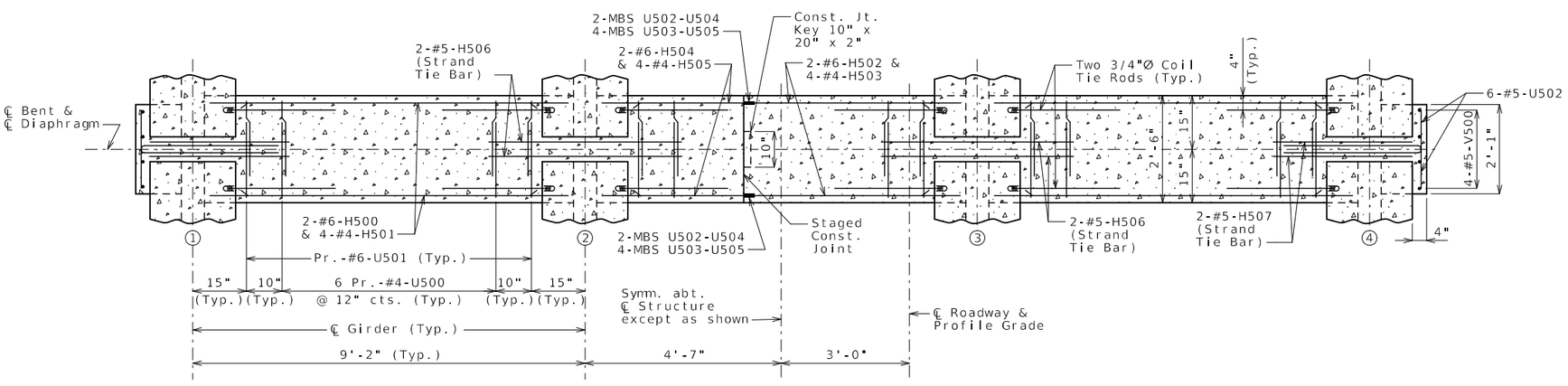

SECTION A-A

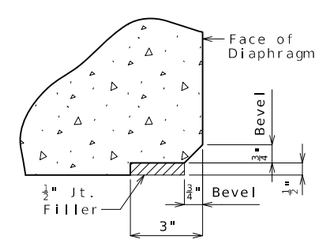

EDGE DETAIL

Notes:

For locations of strand tie bars and coil tie rods, see Sheets No. 13 & 14.

Diaphragms at intermediate bents shall be built vertical.

CONCRETE DIAPHRAGM AT INTERMEDIATE BENTS NO. 2 & 3

Detailed Jan. 2024
Checked Jan. 2024

Note: This drawing is not to scale. Follow dimensions.

STATE OF MISSOURI
TYLER R. LINDSAY
NUMBER PE-2019000128
PROFESSIONAL ENGINEER
07/01/2024 2:15:36 PM
TYLER R. LINDSAY - CIVIL
MO-PE-2019000128

DATE PREPARED	7/1/2024
ROUTE 5	STATE MO
DISTRICT BR	SHEET NO. 16
COUNTY	HOWARD
JOB NO.	J5P3498
CONTRACT ID.	
PROJECT NO.	
BRIDGE NO.	A9250

DESCRIPTION

DATE

MISSOURI HIGHWAYS AND TRANSPORTATION COMMISSION

105 WEST CAPITOL
JEFFERSON CITY, MO 65102
1-888-ASK-MODOT (1-888-275-6636)

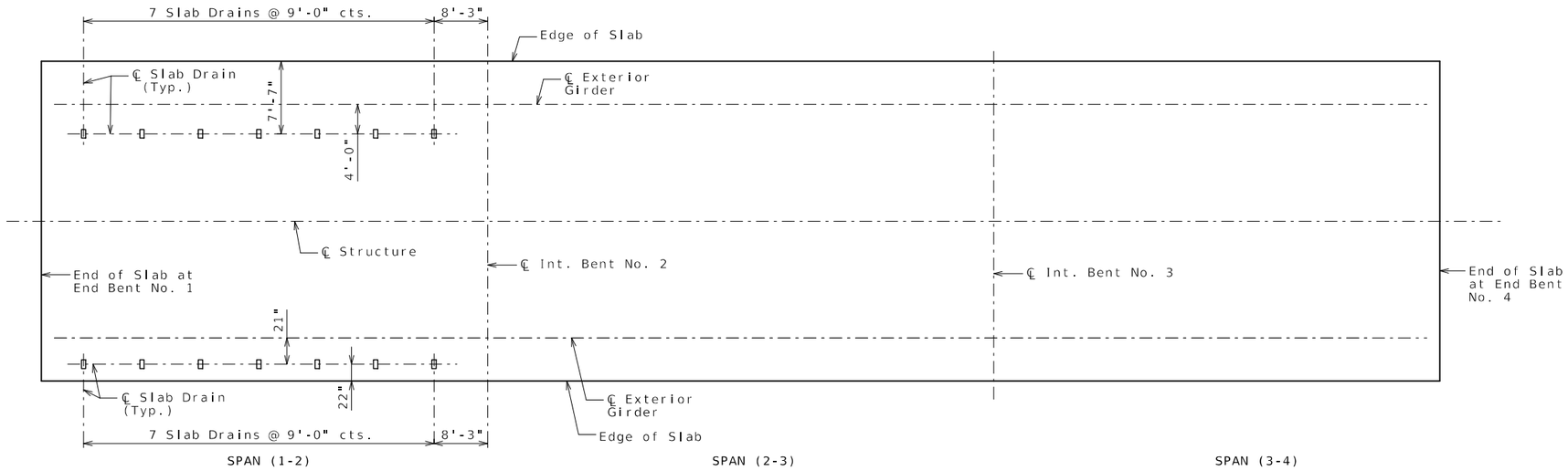

PLAN OF SLAB SHOWING SLAB DRAIN LOCATIONS

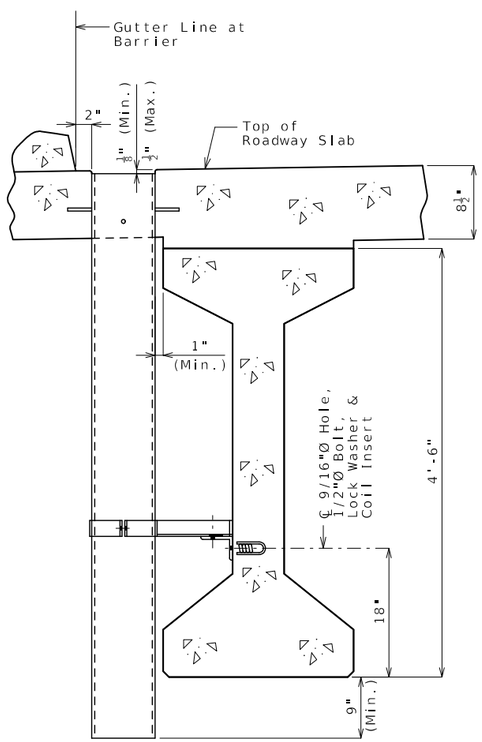

PART SECTION NEAR DRAIN

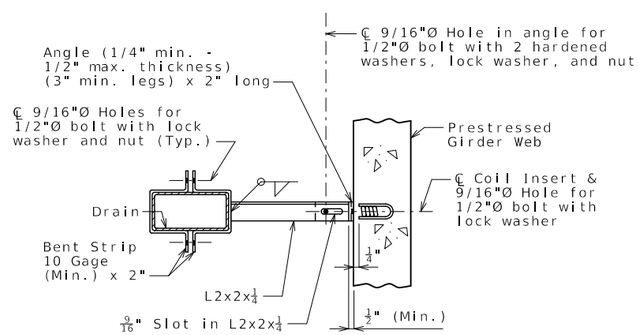

PART SECTION SHOWING BRACKET ASSEMBLY

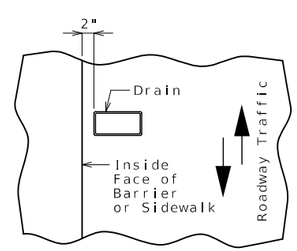

PART PLAN OF SLAB AT DRAIN

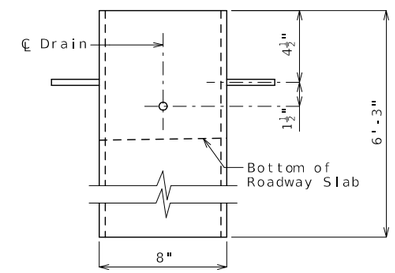

ELEVATION OF DRAIN

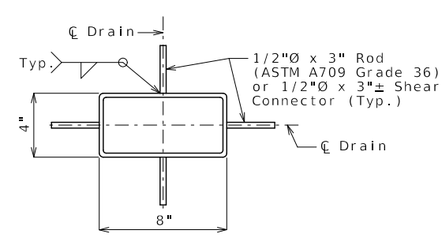

PLAN OF STEEL DRAIN OPTION

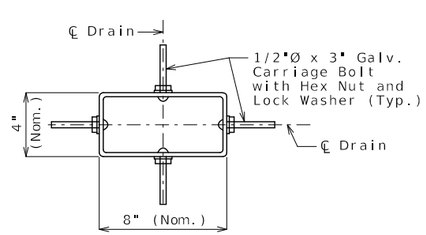

PLAN OF FRP DRAIN OPTION

General Notes:

Contractor shall have the option to construct either steel or FRP slab drains. All drains shall be of same type.

Slab drain bracket assembly shall be ASTM A709 Grade 36 steel.

Locate drains in slab by dimensions shown in Part Section Near Drain.

Reinforcing steel shall be shifted to clear drains.

The coil inserts and bracket assembly shall be galvanized in accordance with ASTM A123.

All bolts, hardened washers, lock washers and nuts shall be galvanized in accordance with AASHTO M 232 (ASTM A153), Class C.

All 1/2"Ø bolts shall be ASTM A307.

Shop drawings will not be required for the slab drains and the bracket assembly.

The coil insert required for the bracket assembly attachment shall be located on the prestressed girder shop drawings.

Coil inserts shall have a concrete pull-out strength (ultimate load) of at least 2,500 pounds in 5,000 psi concrete.

The bolt required to attach the slab drain bracket assembly to the prestressed girder web shall be supplied by the prestressed girder fabricator.

Notes for Steel Drain:

Slab drains may be fabricated of either 1/4" welded sheets of ASTM A709 Grade 36 steel or from 1/4" structural steel tubing ASTM A500 or A501.

Outside dimensions of drains are 8" x 4".

The drains shall be galvanized in accordance with ASTM A123.

Notes for FRP Drain:

Drains shall be machine filament-wound thermosetting resin tubing meeting the requirements of ASTM D2996 with the following exceptions:

Shape of drains shall be rectangular with outside nominal dimensions of 8" x 4".

Minimum reinforced wall thickness shall be 1/4 inch.

The resin used shall be ultraviolet (UV) resistant and/or have UV inhibitors mixed throughout. Drains may have an exterior coating for additional UV resistance.

The color of the slab drain shall be gray (Federal Standard 26373). The color shall be uniform throughout the resin and any coating used.

The combination of materials used in the manufacture of the drains shall be tested for UV resistance in accordance with ASTM D4329 Cycle A. The representative material shall withstand at least 500 hours of testing with only minor discoloration and without any physical deterioration. The contractor shall furnish the results of the required ultraviolet testing prior to acceptance of the slab drains.

At the contractor's option, drains may be field cut. The method of cutting FRP slab drain shall be as recommended by the manufacturer to ensure a smooth, chip free cut.

STATE OF MISSOURI
TYLER R. LINDSAY
NUMBER PE-2019000128
PROFESSIONAL ENGINEER
07/01/2024 2:15:46 PM
TYLER R. LINDSAY - CIVIL
MO-PE-2019000128

DATE PREPARED	7/1/2024
ROUTE 5	STATE MO
DISTRICT BR	SHEET NO. 17
COUNTY	HOWARD
JOB NO.	J5P3498
CONTRACT ID.	
PROJECT NO.	
BRIDGE NO.	A9250

DATE	DESCRIPTION

MISSOURI HIGHWAYS AND TRANSPORTATION COMMISSION
105 WEST CAPITOL
JEFFERSON CITY, MO 65102
1-888-ASK-MODOT (1-888-275-6636)

SLAB DRAINS

Detailed Aug. 2023
Checked Jan. 2024

Note: This drawing is not to scale. Follow dimensions.

Theoretical Bottom of Slab Elevations at Centerline of Girder
(Prior to forming for slab) (Estimated at 90 days)

Girder Number	Span (1-2) (69'-3" ℄ Brg. - ℄ Brg.)					Span (2-3) (76'-6" ℄ Brg. - ℄ Brg.)											Span (3-4) (69'-3" ℄ Brg. - ℄ Brg.)				
	℄ Brg.	.25	.50	.75	℄ Brg.	℄ Brg.	.10	.20	.30	.40	.50	.60	.70	.80	.90	℄ Brg.	℄ Brg.	.25	.50	.75	℄ Brg.
1	629.42	629.52	629.65	629.83	630.03	630.06	630.19	630.33	630.48	630.64	630.79	630.95	631.12	631.29	631.47	631.65	631.69	632.21	632.76	633.33	633.94
2	629.60	629.71	629.84	630.02	630.22	630.24	630.38	630.52	630.67	630.83	630.98	631.14	631.31	631.48	631.65	631.83	631.88	632.40	632.94	633.52	634.12
3	629.72	629.83	629.96	630.14	630.34	630.36	630.50	630.64	630.79	630.95	631.10	631.26	631.43	631.60	631.77	631.95	632.00	632.52	633.06	633.64	634.24
4	629.54	629.64	629.77	629.95	630.15	630.18	630.31	630.45	630.60	630.76	630.91	631.07	631.24	631.41	631.59	631.77	631.81	632.33	632.88	633.45	634.06

Elevations are based on a constant slab thickness of 8 1/2" and include allowance for theoretical dead load deflections due to weight of slab and barrier.

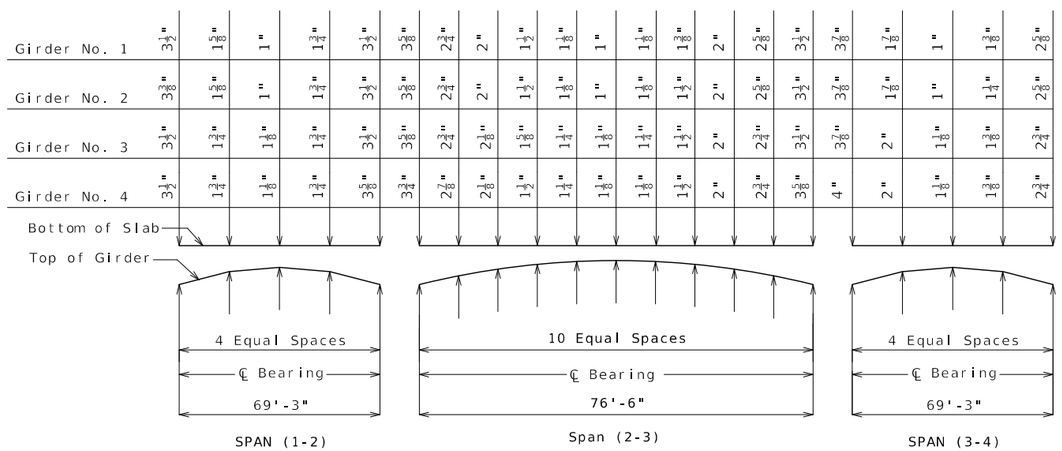

THEORETICAL SLAB HAUNCHING DIAGRAM (ESTIMATED AT 90 DAYS)

If girder camber is different from that shown in the camber diagram, in order to maintain minimum slab thickness, an adjustment of the slab haunches, an increase in slab thickness or a raise in grade uniformly throughout the structure shall be necessary. No payment will be made for additional labor or materials required for variation in haunching, slab thickness or grade adjustment.

Concrete in the slab haunches is included in the Estimated Quantities for Slab on Concrete I-Girder.

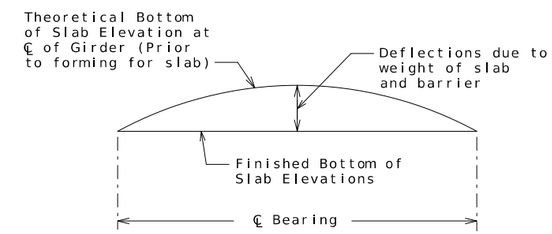

TYPICAL SLAB ELEVATIONS DIAGRAM

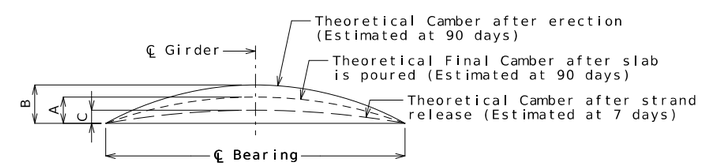

Girder	Span (1-2)			Span (2-3)			Span (3-4)		
	A	B	C	A	B	C	A	B	C
Exterior	1 1/8"	1 5/8"	1"	1 1/4"	1 7/8"	1 1/8"	1 1/8"	1 5/8"	1"
Interior	1 1/8"			1 1/8"			1 1/8"		

GIRDER CAMBER DIAGRAM

Conversion Factors for Girder Camber (Estimated at 90 days):

0.1 pt. = 0.314 x 0.5 pt.
0.2 pt. = 0.593 x 0.5 pt.
0.3 pt. = 0.813 x 0.5 pt.
0.4 pt. = 0.952 x 0.5 pt.

0.25 pt. = 0.7125 x 0.5 pt.

Detailed Jan. 2024
Checked Jan. 2024

Note: This drawing is not to scale. Follow dimensions.

STATE OF MISSOURI
TYLER R. LINDSAY
NUMBER PE-2019000128
PROFESSIONAL ENGINEER
07/01/2024 2:18:07 PM
TYLER R. LINDSAY - CIVIL
MO-PE-2019000128

DATE PREPARED	7/1/2024
ROUTE	5
STATE	MO
DISTRICT	BR
SHEET NO.	18
COUNTY	HOWARD
JOB NO.	J5P3498
CONTRACT ID.	
PROJECT NO.	
BRIDGE NO.	A9250

DESCRIPTION

DATE

MISSOURI HIGHWAYS AND TRANSPORTATION COMMISSION
105 WEST CAPITOL
JEFFERSON CITY, MO 65102
1-888-ASK-MODOT (1-888-275-6636)

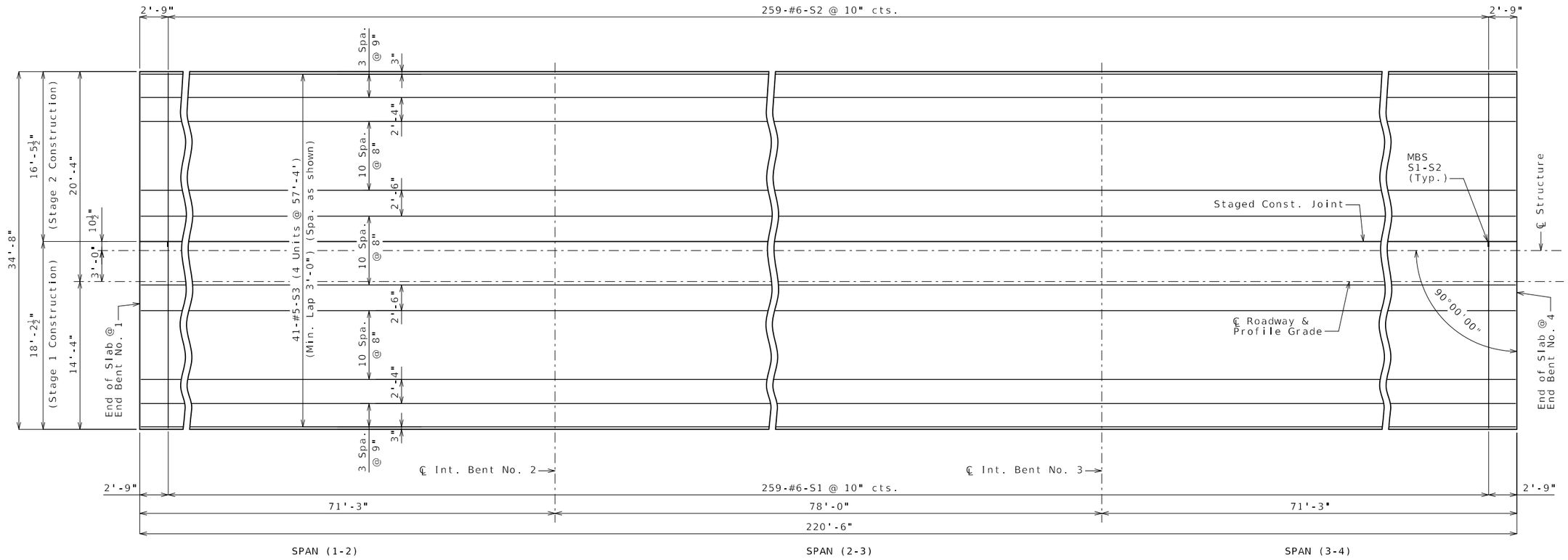

Notes:

Longitudinal slab dimensions are measured horizontally.

For Plan of Slab Showing Top Reinforcement, see Sheet No. 20.

For Section thru Slab, see Sheet No. 21.

For details and reinforcement of barrier not shown, see Sheets No. 22 thru 25.

For Theoretical Slab Haunching Diagram, see Sheet No. 18.

For Theoretical Bottom of Slab Elevations, see Sheet No. 18.

For details and locations of slab drains, see Sheet No. 17.

For details of fencing, see Sheet No. 26.

PLAN OF SLAB SHOWING BOTTOM REINFORCEMENT

Detailed Jan. 2024
Checked Jan. 2024

Note: This drawing is not to scale. Follow dimensions.

STATE OF MISSOURI
TYLER R. LINDSAY
NUMBER PE-2019000128
PROFESSIONAL ENGINEER

07/01/2024 2:16:17 PM
TYLER.R.LINDSAY-CIVIL
MO-PE-2019000128

DATE PREPARED	7/1/2024
ROUTE	5
STATE	MO
DISTRICT	BR
SHEET NO.	19
COUNTY	HOWARD
JOB NO.	J5P3498
CONTRACT ID.	
PROJECT NO.	
BRIDGE NO.	A9250

DATE	DESCRIPTION

MISSOURI HIGHWAYS AND TRANSPORTATION COMMISSION

105 WEST CAPITOL
JEFFERSON CITY, MO 65102
1-888-ASK-MODOT (1-888-275-6636)

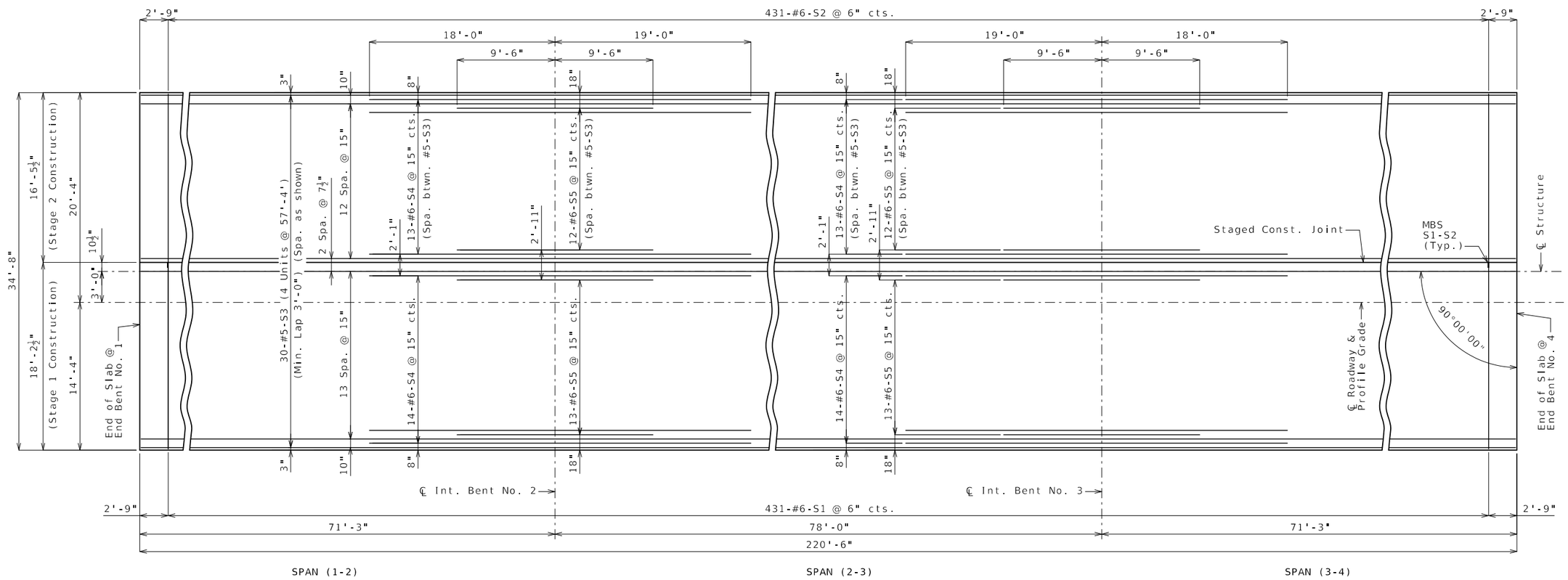

Notes:

Longitudinal slab dimensions are measured horizontally.

For Plan of Slab Showing Bottom Reinforcement, see Sheet No. 19.

For Section thru Slab, see Sheet No. 21.

For details and reinforcement of barrier not shown, see Sheets No. 22 thru 25.

For Theoretical Slab Haunching Diagram, see Sheet No. 18.

For Theoretical Bottom of Slab Elevations, see Sheet No. 18.

For details and locations of slab drains, see Sheet No. 17.

For details of fencing, see Sheet No. 26.

PLAN OF SLAB SHOWING TOP REINFORCEMENT

Detailed Jan. 2024
Checked Jan. 2024

Note: This drawing is not to scale. Follow dimensions.

STATE OF MISSOURI
TYLER R. LINDSAY
NUMBER
PE-2019000128
PROFESSIONAL ENGINEER

07/01/2024 2:16:26 PM
TYLER R. LINDSAY - CIVIL
MO-PE-2019000128

DATE PREPARED	7/1/2024
ROUTE	5
STATE	MO
DISTRICT	BR
SHEET NO.	20
COUNTY	HOWARD
JOB NO.	J5P3498
CONTRACT ID.	
PROJECT NO.	
BRIDGE NO.	A9250

DATE	DESCRIPTION

MISSOURI HIGHWAYS AND TRANSPORTATION COMMISSION

105 WEST CAPITOL
JEFFERSON CITY, MO 65102
1-888-ASK-MODOT (1-888-275-6636)

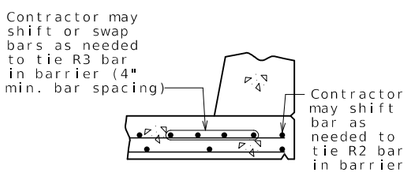

OPTIONAL SHIFTING TOP BARS AT BARRIER

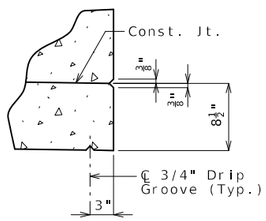

DETAIL B

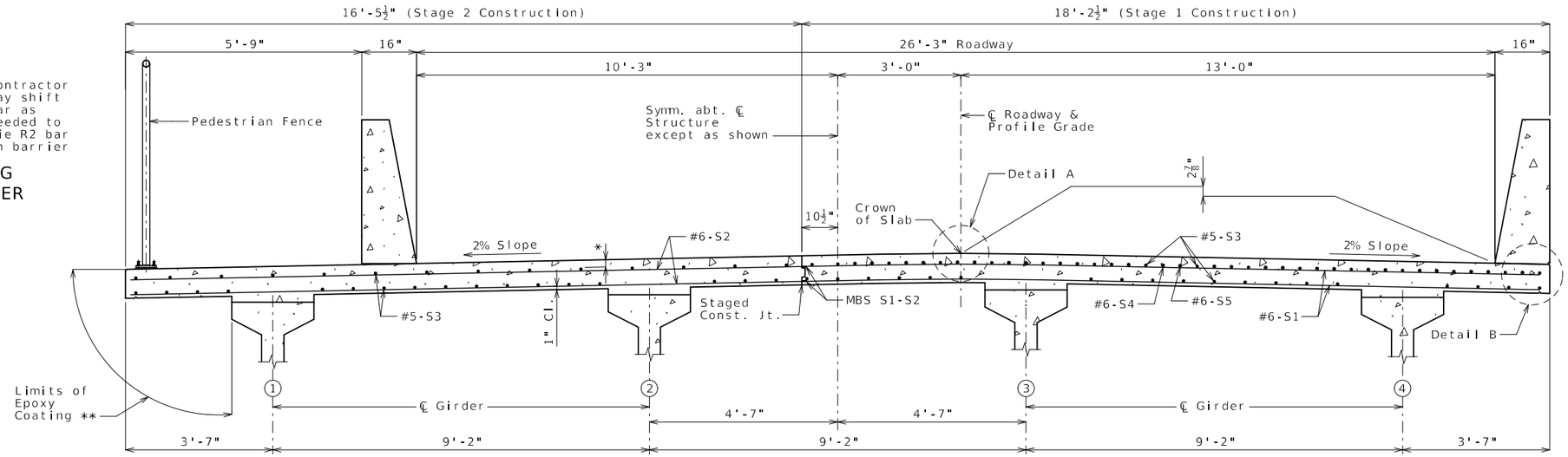

* 3 1/8" Cl. (#5 bar)
3" Cl. (#6 bar)

HALF SECTION NEAR MIDSPAN

HALF SECTION NEAR INTERMEDIATE BENT

SECTION THRU SLAB

** Epoxy Coat entire left side slab edge and cantilever. Cost will be considered covered by the contract lump sum price for Protective Coating-Conrete Bents and Piers (Epoxy).

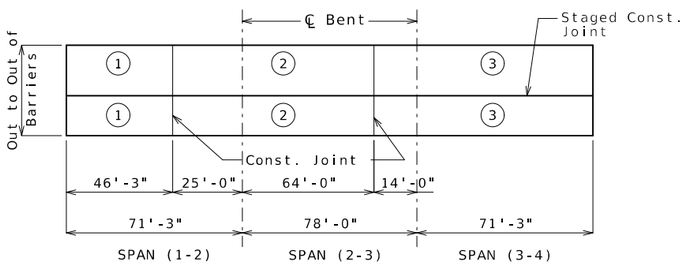

	Sequence of Pours			Min. Rate of Pour Cu. Yds./Hr.
	Direction			With Retarder
Basic Sequence	1	2	3	25
	End to 2	1 to 3	2 to End	
Alternate pours to the basic sequence are subject to the approval of the engineer in accordance with Sec 703.				
Alternate A Pours	1 + 2		3	25
	End to 3		2 to End	
Alternate B Pours	1 + 2 + 3			25
	End to End			

The contractor shall furnish an approved retarder to retard the set of the concrete to 2.5 hours, and shall pour and satisfactorily finish the slab pours at the rate given.

The concrete diaphragm at the intermediate bents and integral end bents shall be poured a minimum of 30 minutes and a maximum of 2 hours before the slab is poured.

SLAB POURING SEQUENCE

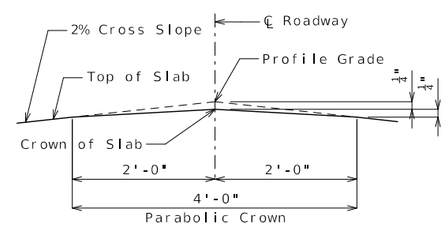

DETAIL A

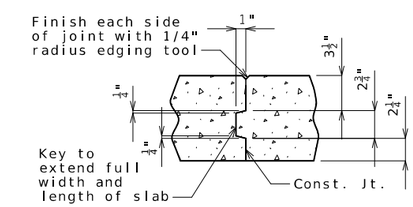

SLAB CONSTRUCTION JOINT

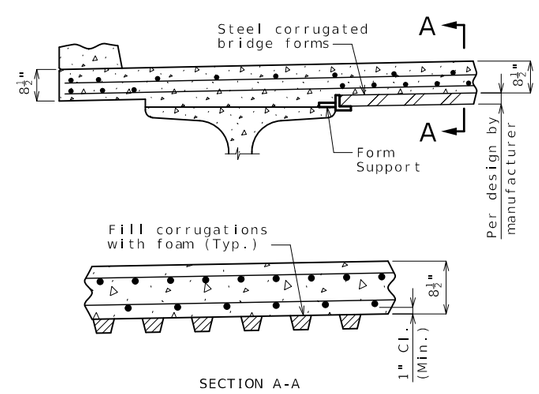

OPTIONAL STAY-IN-PLACE FORM DETAILS

Stay-In-Place Forms:

Corrugated steel forms, supports, closure elements and accessories shall be in accordance with grade requirement and coating designation G165 of ASTM A653. Complete shop drawings of the permanent steel deck forms shall be required in accordance with Sec 1080.

Corrugations of stay-in-place forms shall be filled with an expanded polystyrene material. The polystyrene material shall be placed in the forms with an adhesive in accordance with the manufacturer's recommendations.

Form sheets shall not rest directly on the top of girder flanges. Sheets shall be securely fastened to form supports with a minimum bearing length of one inch on each end. Form supports shall be placed in direct contact with the flange. Drilling holes in the girder flanges will not be permitted. All steel fabrication and construction shall be in accordance with Sec 1080 and 712. Certified field welders will not be required for welding of the form supports.

The design of stay-in-place corrugated steel forms is per manufacturer which shall be in accordance with Sec 703 for false work and forms. Maximum actual weight of corrugated steel forms allowed shall be 4 psf assumed for girder loading.

Notes:

For reinforcement of barrier not shown. see Sheets No. 22 & 23.

For Theoretical Bottom of Slab Elevations, Girder Camber Diagramm and Theoritical Slab Haunching Diagram, see Sheet No. 18.

For Plans of Slab Showing Reinforcement. see Sheets No. 19 & 20.

For details and locations of slab drains, see Sheet No. 17.

For details of fencing, see Sheet No. 26.

Detailed Jan. 2024
Checked Jan. 2024

Note: This drawing is not to scale. Follow dimensions.

SLAB

STATE OF MISSOURI
TYLER R. LINDSAY
NUMBER PE-2019000128
PROFESSIONAL ENGINEER
07/01/2024 2:16:46 PM
TYLER R. LINDSAY - CIVIL
MO-PE-2019000128

DATE PREPARED	
7/1/2024	
ROUTE 5	STATE MO
DISTRICT BR	SHEET NO. 21
COUNTY HOWARD	
JOB NO. J5P3498	
CONTRACT ID.	
PROJECT NO.	
BRIDGE NO. A9250	

DESCRIPTION

DATE

MISSOURI HIGHWAYS AND TRANSPORTATION COMMISSION
105 WEST CAPITOL
JEFFERSON CITY, MO 65102
1-888-ASK-MODOT (1-888-275-6636)

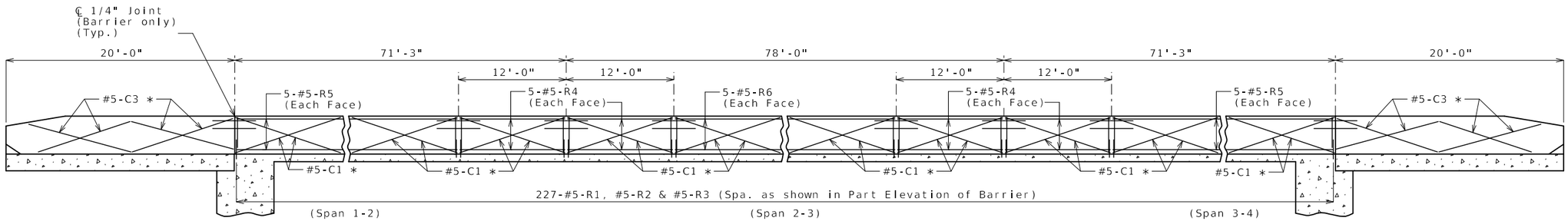

ELEVATION OF BARRIER

Longitudinal dimensions are horizontal.

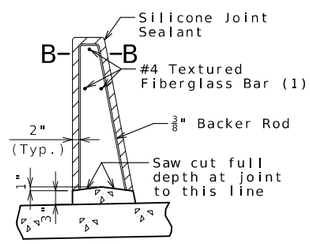

SECTION THRU SAW CUT JOINT

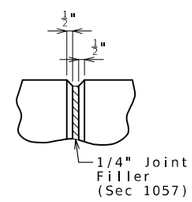

PART ELEVATION AT FORMED JOINT

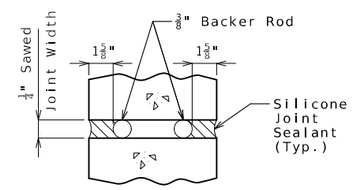

SECTION B-B

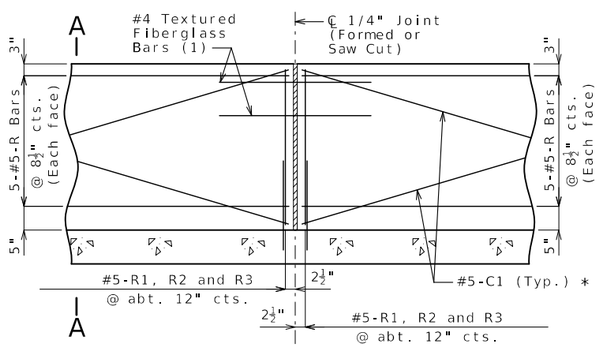

PART ELEVATION OF BARRIER

(1) Four feet long, centered on joint, slip-formed option only

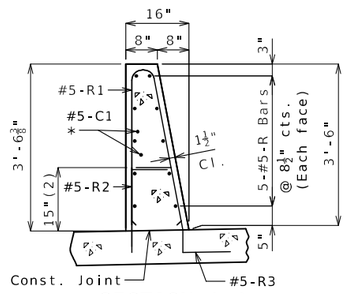

SECTION A-A

Use a minimum lap of 3'-1" for #5 horizontal barrier bars.

The cross-sectional area above the slab is 3.52 square feet.

(2) To top of bar

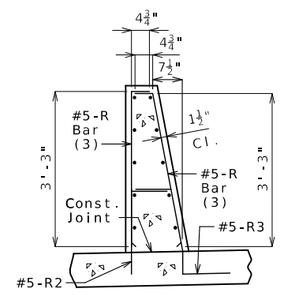

R-BAR PERMISSIBLE ALTERNATE SHAPE

(3) The R1 bar may be separated into two bars as shown, at the contractor's option, only when slip forming is not used. (All dimensions are out to out.)

General Notes:

* Slip-formed option only.

Conventional forming or slip forming may be used. Saw cut joints may be used with conventional forming.

Top of barrier shall be built parallel to grade and barrier joints normal to grade.

All exposed edges of barrier shall have either a 1/2-inch radius or a 3/8-inch bevel, unless otherwise noted.

Payment for all concrete and reinforcement, complete in place, will be considered completely covered by the contract unit price for Type D Barrier per linear foot.

Concrete in barrier shall be Class B-1.

Measurement of barrier is to the nearest linear foot for each structure, measured along the top of slab from end of approach slab to end of approach slab.

Concrete traffic barrier delineators shall be placed on top of the barrier as shown on Missouri Standard Plan 617.10 and in accordance with Sec 617. Delineators on bridges with two-lane, two-way traffic shall have retroreflective sheeting on both sides. Concrete traffic barrier delineators will be considered completely covered by the contract unit price for Type D Barrier.

Joint sealant and backer rods shall be in accordance with Sec 717 for silicone joint sealant for saw cut and formed joints.

For slip-formed option, both sides of barrier shall have a vertically broomed finish and the top shall have a transversely broomed finish.

TYPE D BARRIER (LEFT)

Detailed Jan. 2024
Checked Jan. 2024

Note: This drawing is not to scale. Follow dimensions.

STATE OF MISSOURI
TYLER R. LINDSAY
NUMBER PE-2019000128
PROFESSIONAL ENGINEER
07/01/2024 2:10:56 PM
TYLER R. LINDSAY - CIVIL
MO-PE-2019000128

DATE PREPARED	
7/1/2024	
ROUTE 5	STATE MO
DISTRICT BR	SHEET NO. 22
COUNTY HOWARD	
JOB NO. J5P3498	
CONTRACT ID.	
PROJECT NO.	
BRIDGE NO. A9250	

DESCRIPTION	DATE

MISSOURI HIGHWAYS AND TRANSPORTATION COMMISSION
105 WEST CAPITOL
JEFFERSON CITY, MO 65102
1-888-ASK-MODOT (1-888-275-6636)

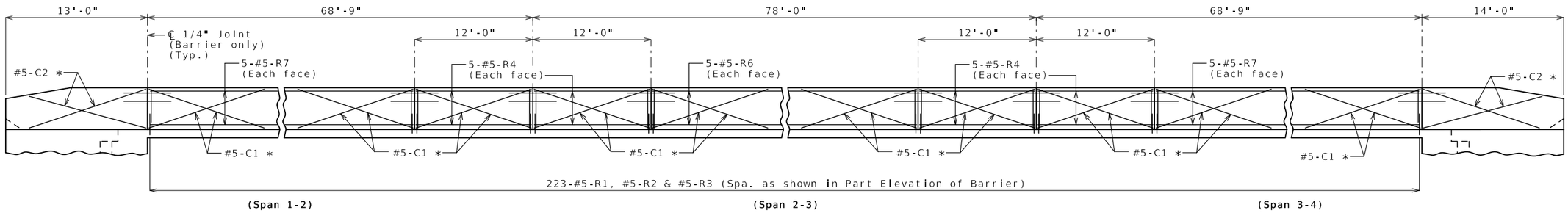

ELEVATION OF BARRIER

Longitudinal dimensions are horizontal.

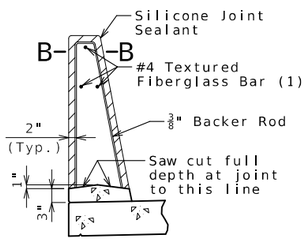

SECTION THRU SAW CUT JOINT

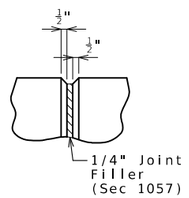

PART ELEVATION AT FORMED JOINT

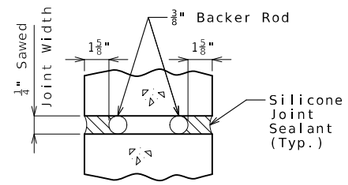

SECTION B-B

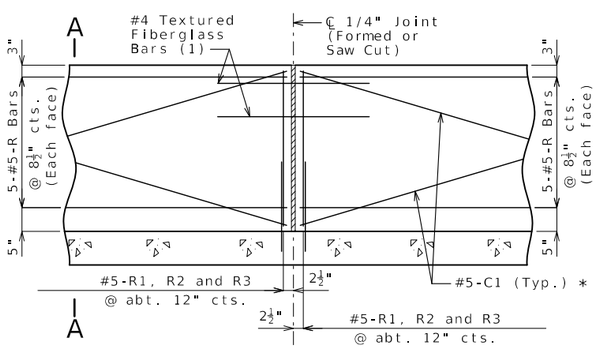

PART ELEVATION OF BARRIER

(1) Four feet long, centered on joint, slip-formed option only

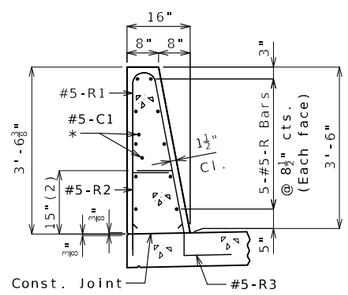

SECTION A-A

Use a minimum lap of 3'-1" for #5 horizontal barrier bars.

The cross-sectional area above the slab is 3.52 square feet.

(2) To top of bar

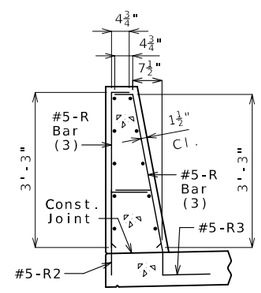

R-BAR PERMISSIBLE ALTERNATE SHAPE

(3) The R1 bar may be separated into two bars as shown, at the contractor's option, only when slip forming is not used. (All dimensions are out to out.)

General Notes:

* Slip-formed option only.

Conventional forming or slip forming may be used. Saw cut joints may be used with conventional forming.

Top of barrier shall be built parallel to grade and barrier joints (except at end bents) normal to grade.

All exposed edges of barrier shall have either a 1/2-inch radius or a 3/8-inch bevel, unless otherwise noted.

Payment for all concrete and reinforcement, complete in place, will be considered completely covered by the contract unit price for Type D Barrier per linear foot.

Concrete in barrier shall be Class B-1.

Measurement of barrier is to the nearest linear foot for each structure, measured along the outside top of slab from end of wing to end of wing.

Concrete traffic barrier delineators shall be placed on top of the barrier as shown on Missouri Standard Plan 617.10 and in accordance with Sec 617. Delineators on bridges with two-lane, two-way traffic shall have retroreflective sheeting on both sides. Concrete traffic barrier delineators will be considered completely covered by the contract unit price for Type D Barrier.

Joint sealant and backer rods shall be in accordance with Sec 717 for silicone joint sealant for saw cut and formed joints.

For slip-formed option, both sides of barrier shall have a vertically broomed finish and the top shall have a transversely broomed finish.

TYPE D BARRIER (RIGHT)

Detailed Aug. 2023
Checked Jan. 2024

Note: This drawing is not to scale. Follow dimensions.

STATE OF MISSOURI
TYLER R. LINDSAY
NUMBER PE-2019000128
PROFESSIONAL ENGINEER
07/01/2024 2:19:27 PM
TYLER R. LINDSAY - CIVIL
MO-PE-2019000128

DATE PREPARED	7/1/2024
ROUTE	5
STATE	MO
DISTRICT	BR
SHEET NO.	23
COUNTY	HOWARD
JOB NO.	J5P3498
CONTRACT ID.	
PROJECT NO.	
BRIDGE NO.	A9250

DATE	DESCRIPTION

MISSOURI HIGHWAYS AND TRANSPORTATION COMMISSION
105 WEST CAPITOL
JEFFERSON CITY, MO 65102
1-888-ASK-MODOT (1-888-275-6636)

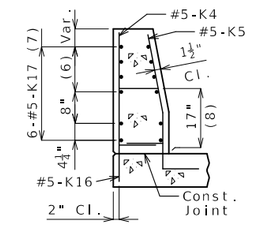

SECTION A-A

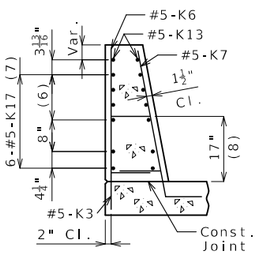

SECTION B-B

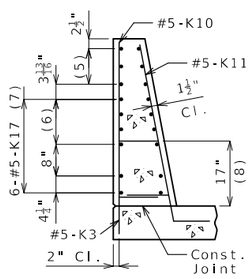

SECTION C-C

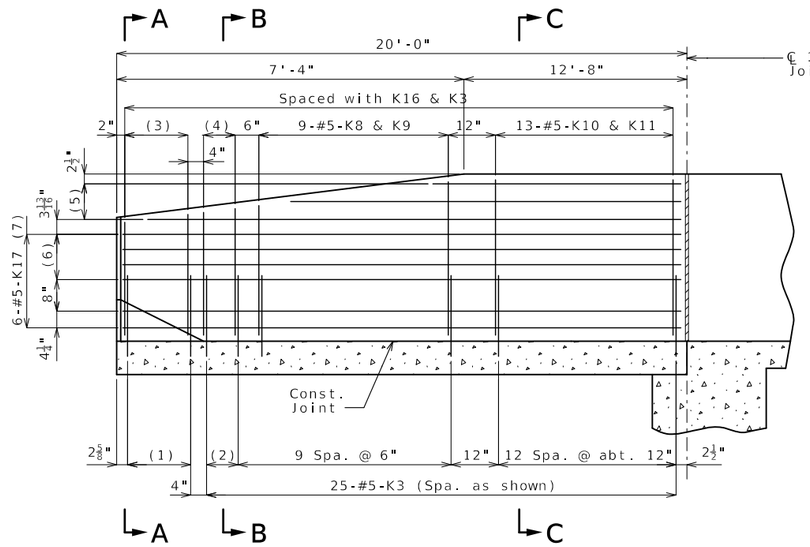

END BENT NO. 1

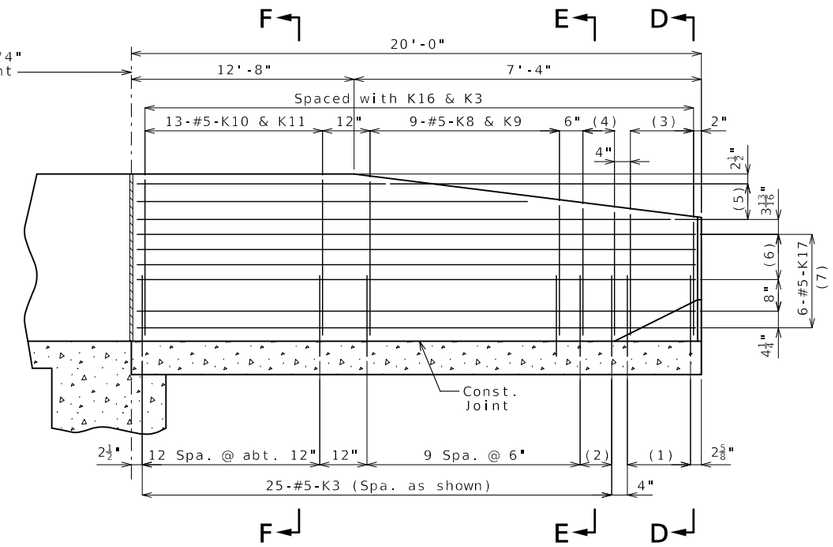

END BENT NO. 4

PART ELEVATION

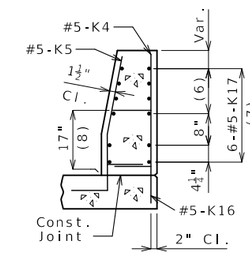

SECTION D-D

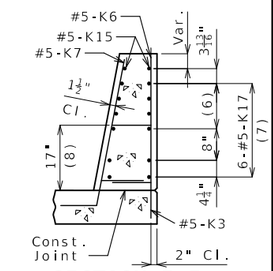

SECTION E-E

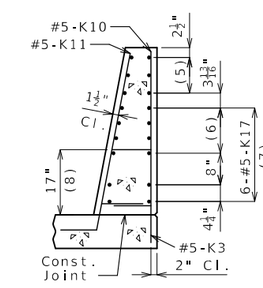

SECTION F-F

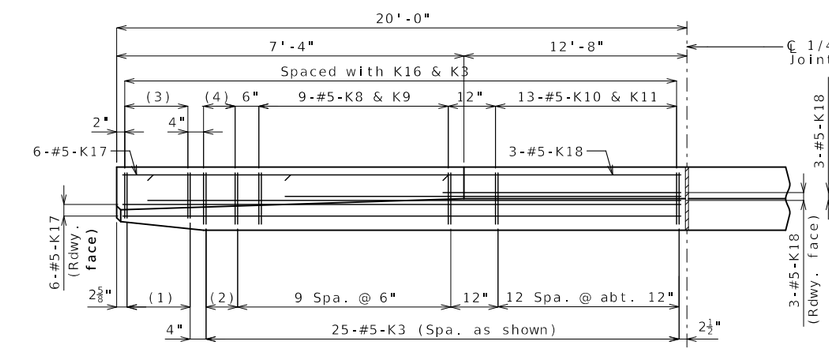

END BENT NO. 1

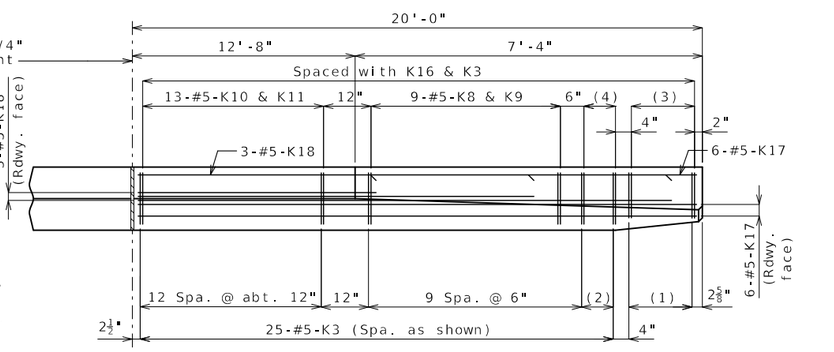

END BENT NO. 4

PART PLAN

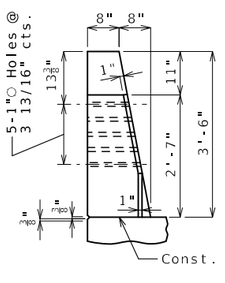

ELEVATION G-G

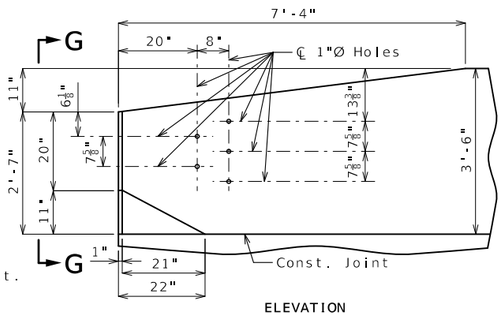

ELEVATION

* Transition to zero at Type A curb for gutter lines to match.

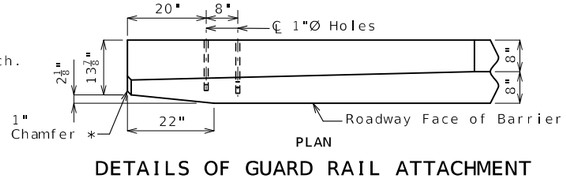

PLAN

DETAILS OF GUARD RAIL ATTACHMENT

General Notes:

Concrete traffic barrier delineators shall be placed on top of the barrier as shown on Missouri Standard Plan 617.10 and in accordance with Sec 617. Delineators on bridges with two-lane, two-way traffic shall have retroreflective sheeting on both sides. Concrete traffic barrier delineators will be considered completely covered by the contract unit price for Type D Barrier.

Reinforcing Steel:
Minimum clearance to reinforcing steel shall be 1 1/2" except as shown for bars embedded into end bent.

(1) 5-#5-K16 @ 4" cts.

(2) 2 spaces @ 4"

(3) 5-#5-K4 & K5

(4) 3-#5-K6 & K7

(5) 3-#5-K18 @ 4½" cts., each face

(6) 3 spaces @ 3 13/16"

(7) Spaced as shown, each face

(8) To top of bar

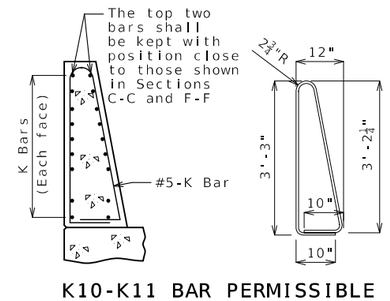

K10-K11 BAR PERMISSIBLE ALTERNATE SHAPE

(Other K bars not shown for clarity)

The K10-K11 bar combination may be furnished as one bar as shown, at the contractor's option.

All dimensions are out to out.

TYPE D BARRIER AT END BENTS (LEFT)

Detailed Jan. 2024
Checked Jan. 2024

Note: This drawing is not to scale. Follow dimensions.

STATE OF MISSOURI
TYLER R. LINDSAY
NUMBER PE-2019000128
PROFESSIONAL ENGINEER
07/01/2024 2:19:45 PM
TYLER R. LINDSAY - CIVIL
MO-PE-2019000128

DATE PREPARED	7/1/2024
ROUTE 5	STATE MO
DISTRICT BR	SHEET NO. 24
COUNTY	HOWARD
JOB NO.	J5P3498
CONTRACT ID.	
PROJECT NO.	
BRIDGE NO.	A9250

DESCRIPTION

DATE

MISSOURI HIGHWAYS AND TRANSPORTATION COMMISSION
105 WEST CAPITOL
JEFFERSON CITY, MO 65102
1-888-ASK-MODOT (1-888-275-6636)

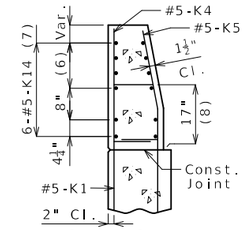

SECTION A-A

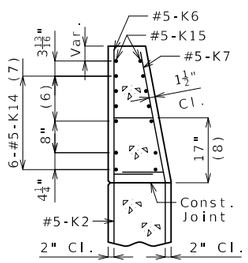

SECTION B-B

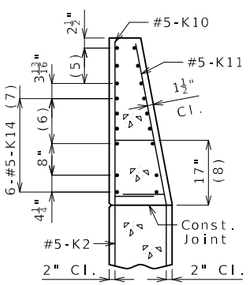

SECTION C-C

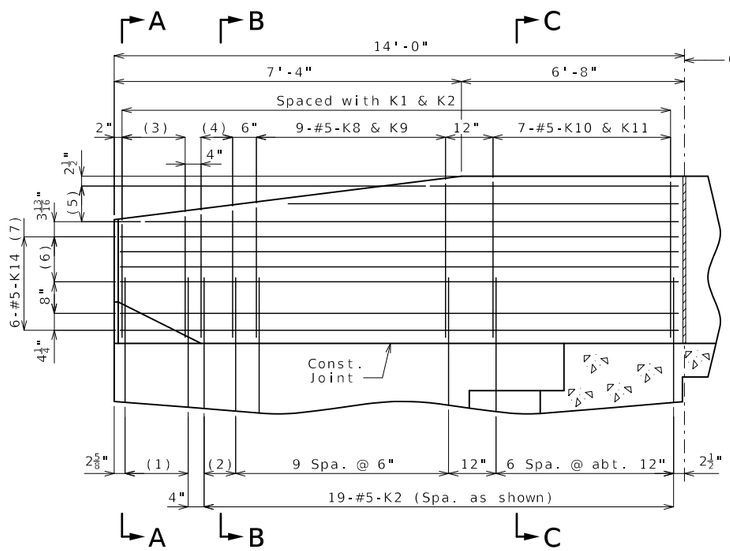

END BENT NO. 4

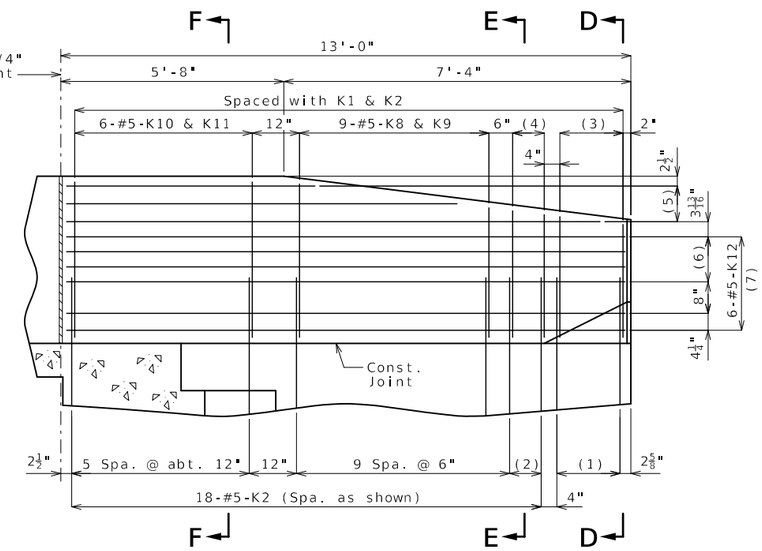

END BENT NO. 1

PART ELEVATION

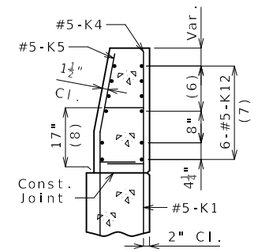

SECTION D-D

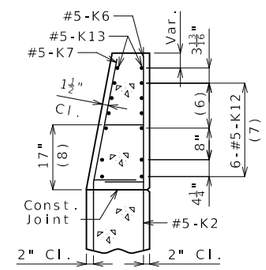

SECTION E-E

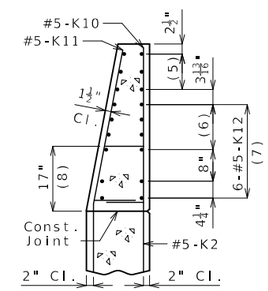

SECTION F-F

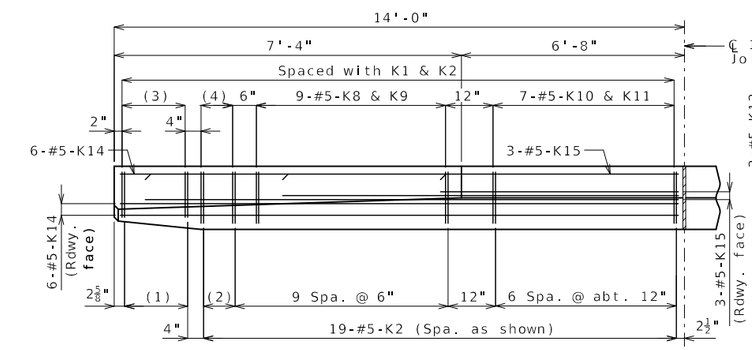

END BENT NO. 4

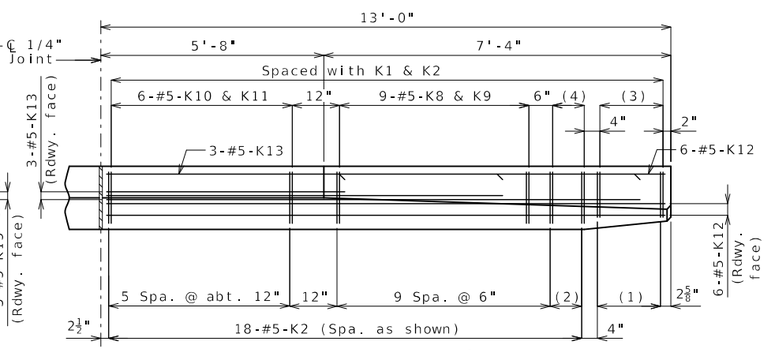

END BENT NO. 1

PART PLAN

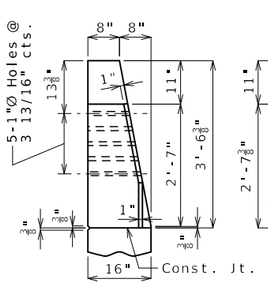

ELEVATION G-G

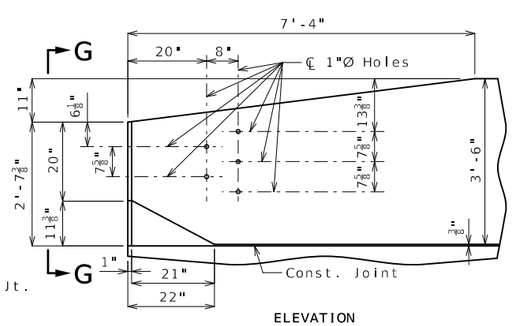

ELEVATION

(1) 5-#5-K1 @ 4" cts.

(2) 2 spaces @ 4"

(3) 5-#5-K4 & K5

(4) 3-#5-K6 & K7

(5) 3-#5-K13 or K15 @ 4½" cts., each face

(6) 3 spaces @ 3 13/16"

(7) Spaced as shown, each face

(8) To top of bar

K10-K11 BAR PERMISSIBLE ALTERNATE SHAPE

(Other K bars not shown for clarity)

The K10-K11 bar combination may be furnished as one bar as shown, at the contractor's option.

All dimensions are out to out.

* Transition to zero at Type A curb for gutter lines to match.

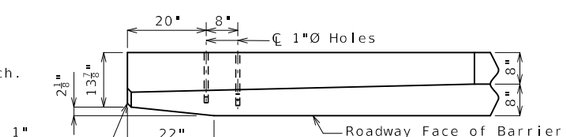

PLAN

DETAILS OF GUARD RAIL ATTACHMENT

General Notes:

Concrete traffic barrier delineators shall be placed on top of the barrier as shown on Missouri Standard Plan 617.10 and in accordance with Sec 617. Delineators on bridges with two-lane, two-way traffic shall have retroreflective sheeting on both sides. Concrete traffic barrier delineators will be considered completely covered by the contract unit price for Type D Barrier.

Reinforcing Steel:
Minimum clearance to reinforcing steel shall be 1 1/2" except as shown for bars embedded into end bent.

TYPE D BARRIER AT END BENTS (RIGHT)

Detailed Jan. 2024
Checked Jan. 2024

Note: This drawing is not to scale. Follow dimensions.

STATE OF MISSOURI
TYLER R. LINDSAY
NUMBER PE-2019000128
PROFESSIONAL ENGINEER
07/01/2024 2:19:57 PM
TYLER R. LINDSAY - CIVIL
MO-PE-2019000128

DATE PREPARED	7/1/2024
ROUTE 5	STATE MO
DISTRICT BR	SHEET NO. 25
COUNTY	HOWARD
JOB NO.	J5P3498
CONTRACT ID.	
PROJECT NO.	
BRIDGE NO.	A9250

DESCRIPTION

DATE

MISSOURI HIGHWAYS AND TRANSPORTATION COMMISSION
105 WEST CAPITOL
JEFFERSON CITY, MO 65102
1-888-ASK-MODOT (1-888-275-6636)

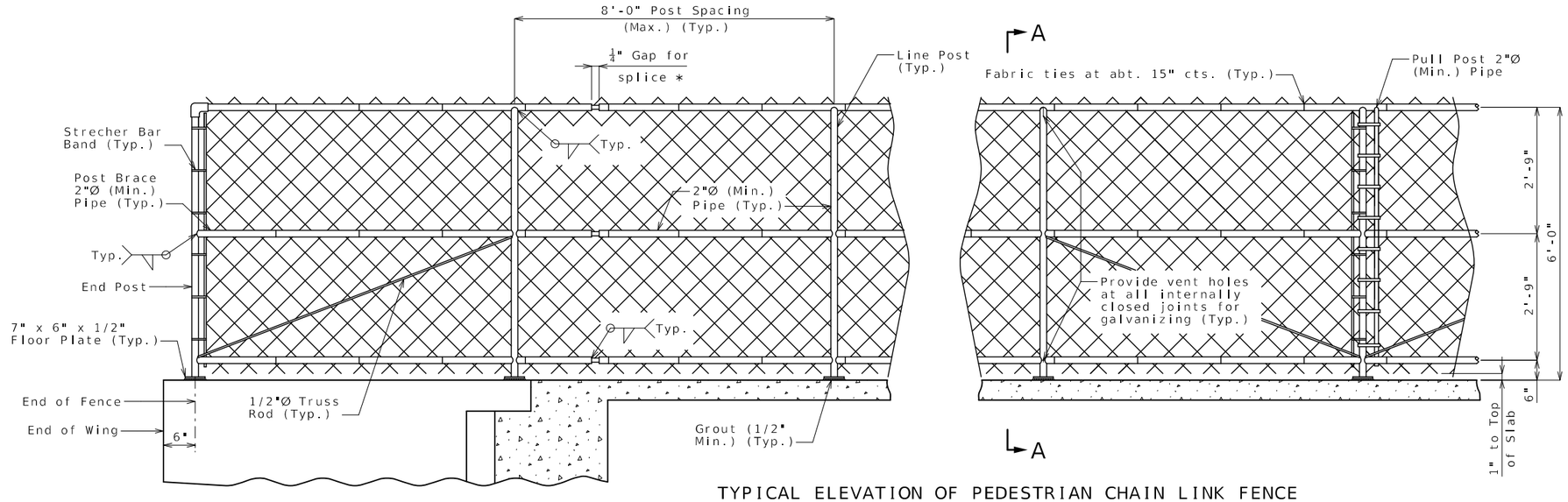

TYPICAL ELEVATION OF PEDESTRIAN CHAIN LINK FENCE

* At about 30'-0" centers with at least one splice gap between pull or end post.

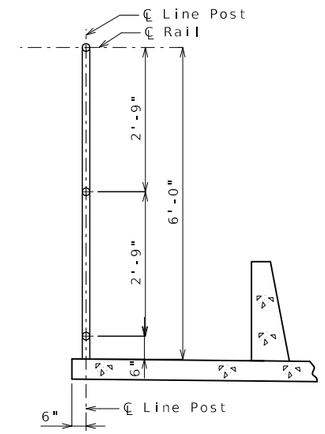

SECTION A-A

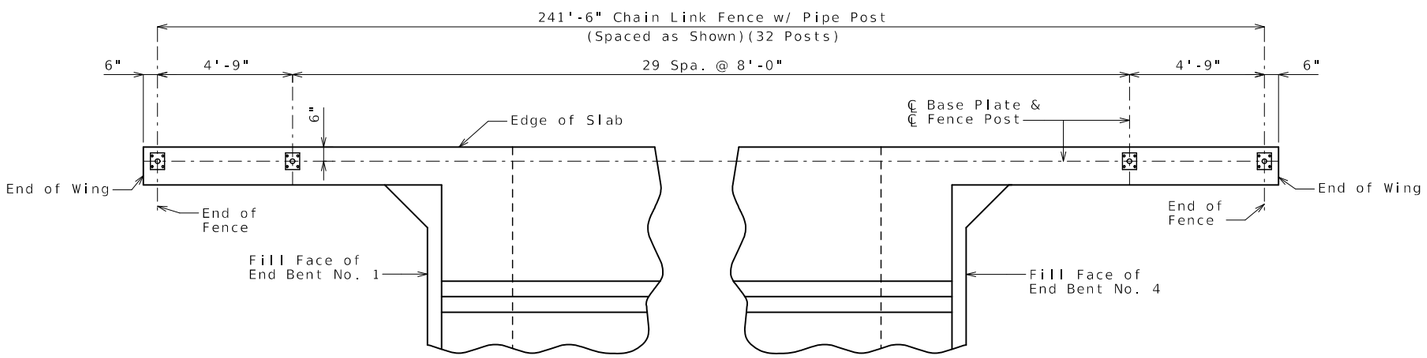

PART PLAN OF LEFT EDGE OF SLAB SHOWING PEDESTRIAN FENCE POST SPACING

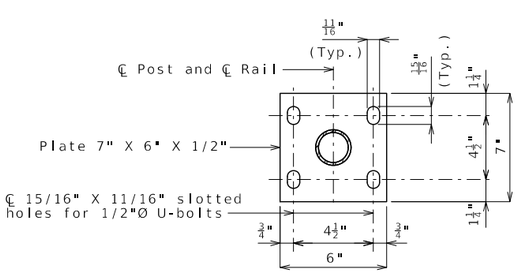

PLAN OF FLOOR PLATE

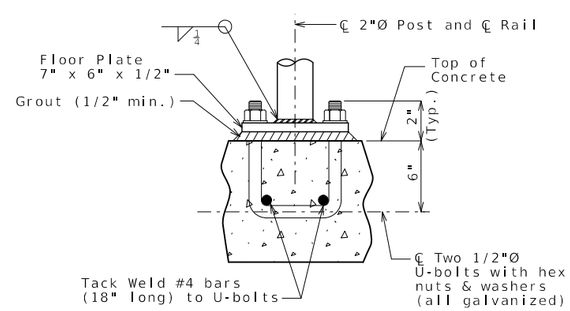

POST CONNECTION
(TYPICAL)

DETAILS OF PEDESTRIAN CHAIN LINK FENCE

GENERAL NOTES:

Pedestrian guard fence (Chain link type) shall be in accordance with Sec 1043 except all fabric shall have the top and bottom edges knuckled.

All posts shall be vertical. Grout of 1/2" minimum thickness shall be placed under floor plates to provide for vertical alignment of posts.

Payment for furnishing, galvanizing and erecting the fence and frame complete in place will be considered completely covered by the contract unit price for (72 in.) Pedestrian Fence (Structures) per linear foot.

Dimensions of pedestrian guard fence are measured horizontally.

The maximum spacing allowed between pull posts and end posts is 100 ft. Post brace and 1/2"Ø truss rod are required for panels adjacent to pull posts and end posts only.

Connect the lower end of the 1/2"Ø truss rod to the bottom of the pull posts and end posts to which the stretcher bar is attached.

(72 in.) Pedestrian Fence (Structures) will be measured to the nearest linear foot for each structure measured along the centerline fence from end of fence to end of fence.

Core wire size for wire fabric shall be 6 gage minimum.

STATE OF MISSOURI
TYLER R. LINDSAY
NUMBER PE-2019000128
PROFESSIONAL ENGINEER
07/01/2024 2:20:47 PM
TYLER R. LINDSAY - CIVIL
MO-PE-2019000128

DATE PREPARED	
7/1/2024	
ROUTE 5	STATE MO
DISTRICT BR	SHEET NO. 26
COUNTY HOWARD	
JOB NO. J5P3498	
CONTRACT ID.	
PROJECT NO.	
BRIDGE NO. A9250	

DATE	DESCRIPTION

MISSOURI HIGHWAYS AND TRANSPORTATION COMMISSION
105 WEST CAPITOL
JEFFERSON CITY, MO 65102
1-888-ASK-MODOT (1-888-275-6636)

Detailed June 2024
Checked June 2024

Note: This drawing is not to scale. Follow dimensions.

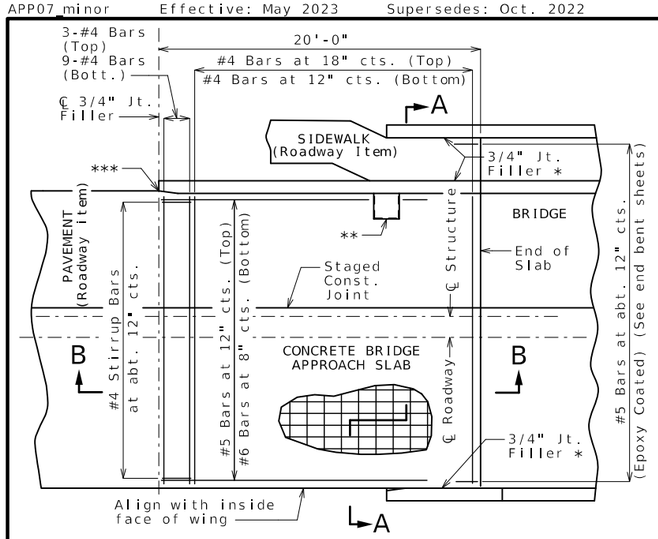

PART PLAN

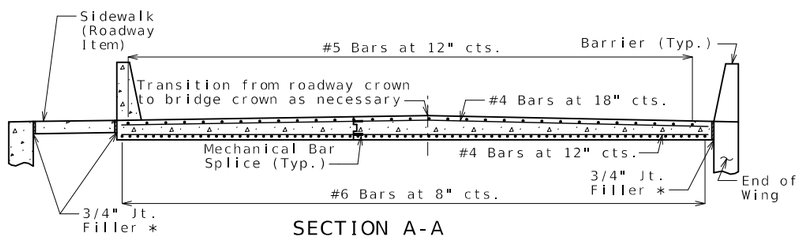

SECTION A-A

With the approval of the engineer, the contractor may crown the bottom of the approach slab to match the crown of the roadway surface.

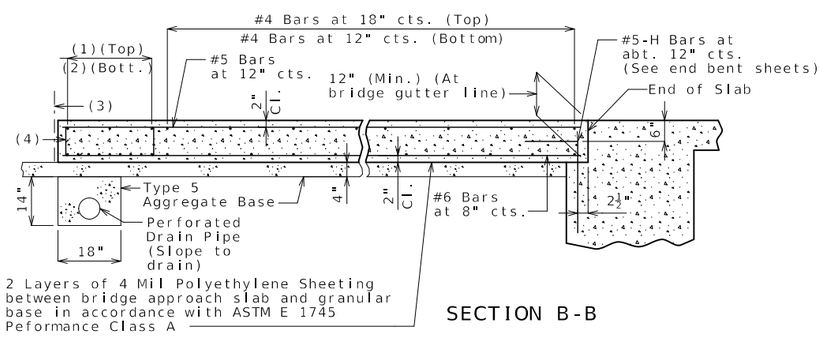

SECTION B-B

(1) 3-#4 Bars

(2) 9-#4 Bars

(3) ℄ 3/4" Jt. Filler

(4) #4 Stirrup Bars at abt. 12" cts.; 2'-0"x 8" (Min.) out to out; Actual length = 5'-10" (Min.); 90° stirrup hook at bottom; Stirrup height (8") and actual length vary due to crown.

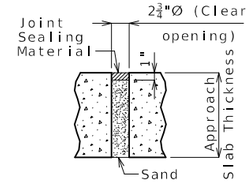

UNDERSEAL ACCESS HOLE DETAIL

(If required)

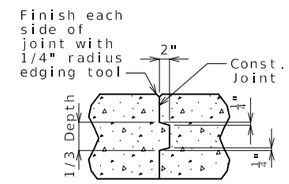

CONSTRUCTION JOINT DETAIL

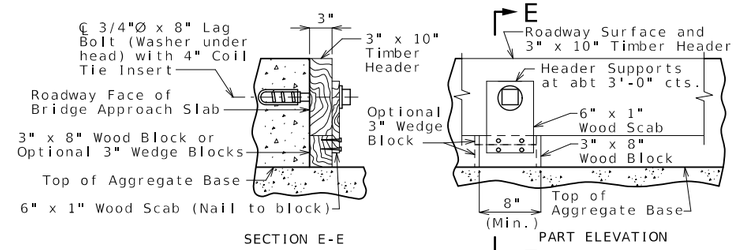

DETAILS OF TIMBER HEADER

Remove timber header when concrete pavement is placed.

General Notes:

The contractor shall pour and satisfactorily finish the bridge slab before placing the bridge approach slab.

All concrete for the bridge approach slab shall be in accordance with Sec 503 (f'c = 4,000 psi).

The reinforcing steel in the bridge approach slab shall be epoxy coated Grade 60 with fy = 60,000 psi.

Longitudinal construction joints in bridge approach slab shall be aligned with longitudinal construction joints in bridge slab.

Minimum clearance to reinforcing steel shall be 1 1/2", unless otherwise shown.

The reinforcing steel in the bridge approach slab shall be continuous. The transverse reinforcing steel may be made continuous by providing a minimum lap splice of 23 inches for #4 bars, or by mechanical bar splice.

Mechanical bar splices shall be in accordance with Sec 710.

All joint filler shall be in accordance with Sec 1057 for preformed fiber expansion joint filler except as noted.

Payment for furnishing all materials, labor and excavation necessary to construct the concrete bridge approach slab, including the timber header, underdrain, Type 5 aggregate base, joint filler, and all other appurtenances and incidental work as shown on this sheet, complete in place, will be considered completely covered by the contract unit price for Bridge Approach Slab (Minor) per square yard.

Drain pipe may be either 6" diameter corrugated metallic-coated pipe underdrain, 4" diameter corrugated polyvinyl chloride (PVC) drain pipe, or 4" diameter corrugated polyethylene (PE) drain pipe.

* Seal joint between vertical faces with sealant in accordance with Sec 717 for silicone joint sealant for saw cut and formed joints.

** 2' x 2' Type A Drop Inlet near Sta. 1093+18.00. See Standard Drawing 731.10 for additional reinforcement of drop inlet.

*** Align gutter line of roadway curb with the chamfer at the transition end of barrier. 1/4" joint filler shall be used between roadway curb and end of barrier and joint sealed with sealant in accordance with Sec 717 for silicone joint sealant for saw cut and formed joints.

STATE OF MISSOURI
TYLER R. LINDSAY
NUMBER PE-2019000128
PROFESSIONAL ENGINEER
07/01/2024 2:20:26 PM
TYLER.R.LINDSAY-CIVIL
MO-PE-2019000128

DATE PREPARED	
7/1/2024	
ROUTE 5	STATE MO
DISTRICT BR	SHEET NO. 27
COUNTY HOWARD	
JOB NO. J5P3498	
CONTRACT ID.	
PROJECT NO.	
BRIDGE NO. A9250	

DATE	DESCRIPTION

MISSOURI HIGHWAYS AND TRANSPORTATION COMMISSION
105 WEST CAPITOL
JEFFERSON CITY, MO 65102
1-888-ASK-MODOT (1-888-275-6636)

BRIDGE APPROACH SLAB (MINOR) AT END BENT NO. 1

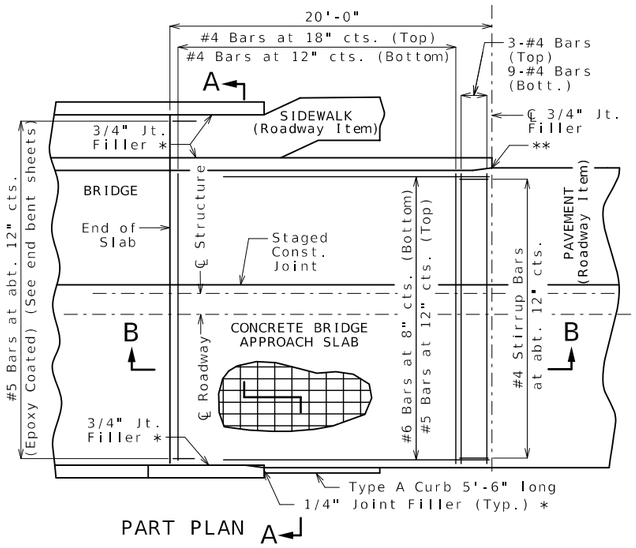

PART PLAN A

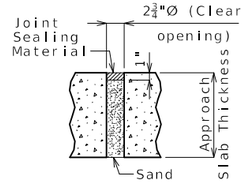

UNDERSEAL ACCESS HOLE DETAIL

(If required)

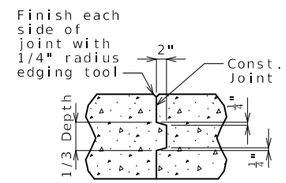

CONSTRUCTION JOINT DETAIL

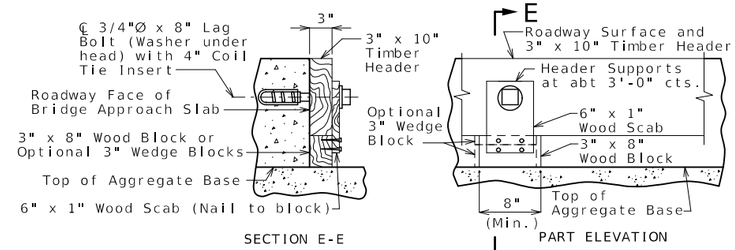

DETAILS OF TIMBER HEADER

Remove timber header when concrete pavement is placed.

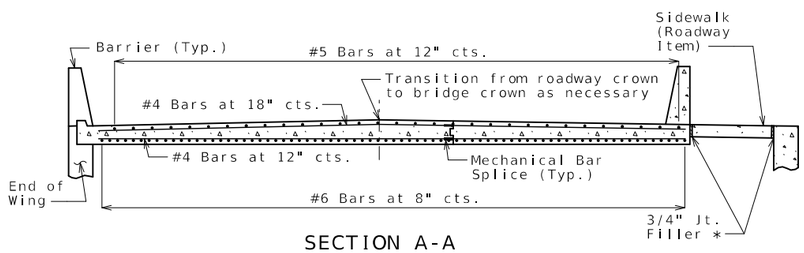

SECTION A-A

With the approval of the engineer, the contractor may crown the bottom of the approach slab to match the crown of the roadway surface.

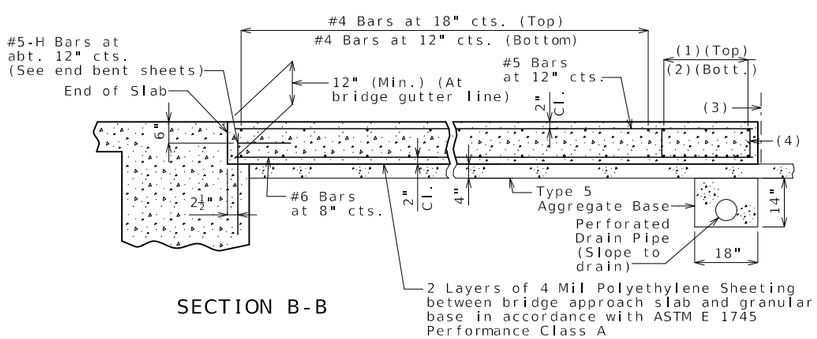

SECTION B-B

(1) 3-#4 Bars

(2) 9-#4 Bars

(3) ℄ 3/4" Jt. Filler

(4) #4 Stirrup Bars at abt. 12" cts.; 2'-0"x 8" (Min.) out to out; Actual length = 5'-10" (Min.); 90° stirrup hook at bottom; Stirrup height (8") and actual length vary due to crown.

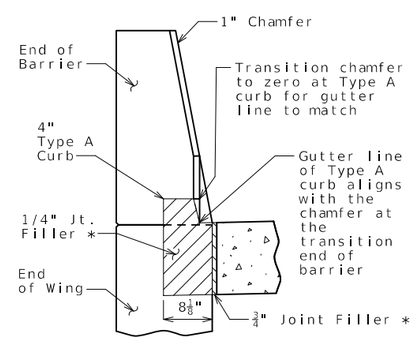

SECTION BETWEEN CURB AND BARRIER

(RIGHT SIDE ONLY)

General Notes:

The contractor shall pour and satisfactorily finish the bridge slab before placing the bridge approach slab.

All concrete for the bridge approach slab shall be in accordance with Sec 503 (f'c = 4,000 psi).

The reinforcing steel in the bridge approach slab shall be epoxy coated Grade 60 with fy = 60,000 psi.

Longitudinal construction joints in bridge approach slab shall be aligned with longitudinal construction joints in bridge slab.

Minimum clearance to reinforcing steel shall be 1 1/2", unless otherwise shown.

The reinforcing steel in the bridge approach slab shall be continuous. The transverse reinforcing steel may be made continuous by providing a minimum lap splice of 23 inches for #4 bars, or by mechanical bar splice.

Mechanical bar splices shall be in accordance with Sec 710.

All joint filler shall be in accordance with Sec 1057 for preformed fiber expansion joint filler except as noted.

Payment for furnishing all materials, labor and excavation necessary to construct the concrete bridge approach slab, including the timber header, underdrain, Type 5 aggregate base, joint filler, and all other appurtenances and incidental work as shown on this sheet, complete in place, will be considered completely covered by the contract unit price for Bridge Approach Slab (Minor) per square yard.

Drain pipe may be either 6" diameter corrugated metallic-coated pipe underdrain, 4" diameter corrugated polyvinyl chloride (PVC) drain pipe, or 4" diameter corrugated polyethylene (PE) drain pipe.

* Seal joint between vertical faces with sealant in accordance with Sec 717 for silicone joint sealant for saw cut and formed joints.

** Align gutter line of roadway curb with the chamfer at the transition end of barrier. 1/4" joint filler shall be used between roadway curb and end of barrier and joint sealed with sealant in accordance with Sec 717 for silicone joint sealant for saw cut and formed joints.

STATE OF MISSOURI
TYLER R. LINDSAY
NUMBER PE-2019000128
PROFESSIONAL ENGINEER
07/01/2024 2:30:36 PM
TYLER R.LINDSAY-CIVIL
MO-PE-2019000128

DATE PREPARED	
7/1/2024	
ROUTE 5	STATE MO
DISTRICT BR	SHEET NO. 28
COUNTY HOWARD	
JOB NO. J5P3498	
CONTRACT ID.	
PROJECT NO.	
BRIDGE NO. A9250	

DATE	DESCRIPTION

MISSOURI HIGHWAYS AND TRANSPORTATION COMMISSION
105 WEST CAPITOL
JEFFERSON CITY, MO 65102
1-888-ASK-MODOT (1-888-275-6636)

BRIDGE APPROACH SLAB (MINOR) AT END BENT NO. 4

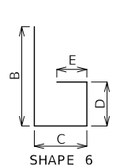

SHAPE 6
or 6S

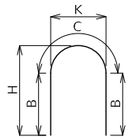

SHAPE 7

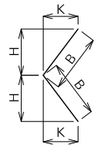

SHAPE 8
or 8S

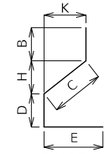

SHAPE 9
or 9S

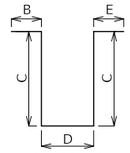

SHAPE 10
or 10S

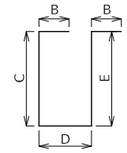

SHAPE 11
or 11S

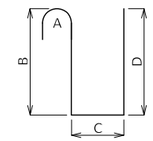

SHAPE 12

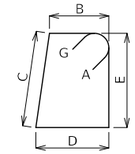

SHAPE 13S

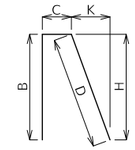

SHAPE 14
or 14S

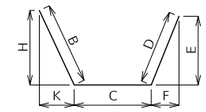

SHAPE 15
or 15S

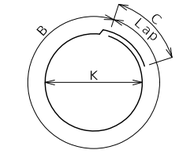

SHAPE 16

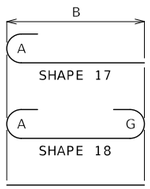

SHAPE 17
SHAPE 18
SHAPE 20

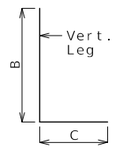

SHAPE 19
or 19S

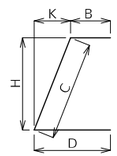

SHAPE 21
or 21S

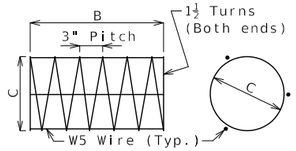

SHAPE 22

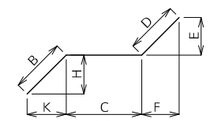

SHAPE 23
or 23S

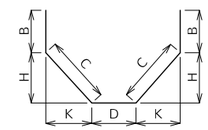

SHAPE 24
or 24S

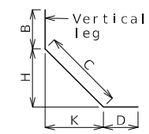

SHAPE 25
or 25S

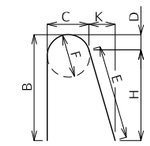

SHAPE 26

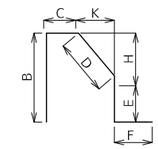

SHAPE 27S

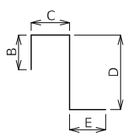

SHAPE 28
or 28S

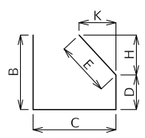

SHAPE 29
or 29S

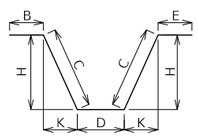

SHAPE 30
or 30S

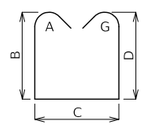

SHAPE 31S

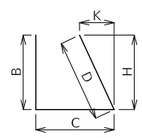

SHAPE 32
or 32S

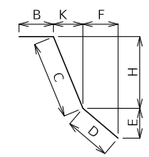

SHAPE 33
or 33S

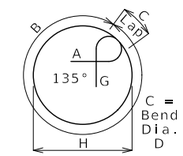

SHAPE 34S

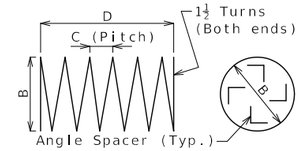

SHAPE 35 (1)

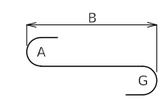

SHAPE 36

Finished Bend Diameters D and Hook Dimensions

Standard Pin Bend Shapes

Size	Case	D	A or G 90°	A or G 180°	J 180°
#4	1	3"	8"	6"	4"
#5	1	3¾"	10"	7"	5"
#6	1	4½"	12"	8¼"	6"
#7	2	5¼"	14"	9¾"	7"
	3	7"	15"	11½"	8¾"
#8	2	6"	16"	11"	8"
	3	8"	17"	13¼"	10"
#9	1	9½"	19½"	15½"	11¾"
#10	1	10¾"	22"	17½"	13¼"
#11	1	12"	24½"	19½"	14⅞"
#14	1	18¼"	31¼"	27½"	21⅝"
#18	1	24"	41½"	36¼"	28½"

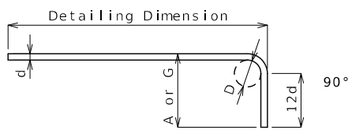

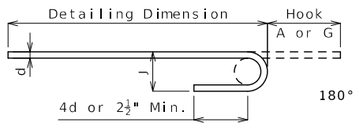

Stirrup Pin Bend Shapes (S)

Size	Case	D	A or G 90°	A or G 135°	A or G 180°	H 135°	J 180°
#4	2	2"	4½"	4½"	5"	2⅞"	3"
	3	3"	5"	5¼"	6"	3"	4"
#5	2	2½"	5¾"	5¾"	5¾"	3⅝"	3¾"
	3	3¾"	6¼"	6½"	7"	3⅞"	5"
#6	1	4½"	12"	7¾"	8¼"	4⅜"	6"

Applicable for all grades of steel.

Case 1 applies to all reinforcement. Case 2 applies to all reinforcement except for galvanized bars. Case 3 applies to galvanized bars only.

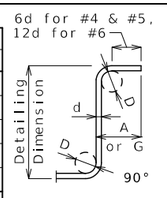

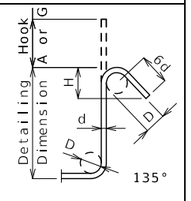

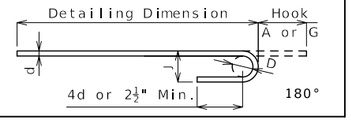

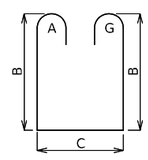

SHAPE 37S

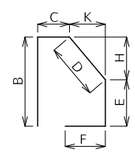

SHAPE 38S

BENDING DIAGRAMS

All dimensions are out to out.

Shapes ending with an S shall be bent in accordance with stirrup pin bend shapes.

Unless otherwise noted, finished bending diameter D is the same for all bends of a shape.

(1) Shall be a deformed or plain spiral bar or wire.

Four angle or channel spacers are required for each column spiral. Spacers are to be placed on inside of spirals. Length and weight of column spirals do not include splices or spacers.

Reinforcing Steel Totals (Pounds)

	Size	Substructure Plain	Substructure Epoxy	Superstructure Slab	Superstructure Barrier	Superstructure Slip Form	Entire Bridge Plain	Entire Bridge Epoxy
By Size	W5	0	0	0	0	0	0	0
	4	22	0	955	0	0	22	955
	5	1,172	0	19,218	13,089	612	1,172	32,919
	6	1,417	0	48,952	0	0	1,417	48,952
	7	0	0	0	0	0	0	0
	8	0	0	1,203	0	0	0	1,203
	9	2,982	0	0	0	0	2,982	0
	10	0	0	0	0	0	0	0
	11	0	0	0	0	0	0	0
	14	0	0	0	0	0	0	0
	18	0	0	0	0	0	0	0
By Type		5,593	0	70,328	13,089	612	5,593	84,029

All superstructure reinforcing steel shall be epoxy coated unless otherwise specified.

BENDING DIAGRAMS AND REINFORCING STEEL TOTALS

Detailed May 2024
Checked May 2024

Note: This drawing is not to scale. Follow dimensions.

STATE OF MISSOURI
TYLER R. LINDSAY
NUMBER PE-2019000128
PROFESSIONAL ENGINEER
07/01/2024 2:20:07 PM
TYLER R. LINDSAY - CIVIL
MO-PE-2019000128

DATE PREPARED	7/1/2024
ROUTE	5
STATE	MO
DISTRICT	BR
SHEET NO.	29
COUNTY	HOWARD
JOB NO.	J5P3498
CONTRACT ID.	
PROJECT NO.	
BRIDGE NO.	A9250

DESCRIPTION

DATE

MISSOURI HIGHWAYS AND TRANSPORTATION COMMISSION

105 WEST CAPITOL
JEFFERSON CITY, MO 65102
1-888-ASK-MODOT (1-888-275-6636)

Bill of Reinforcing Steel

No. Req.	Size/ Mark	Location	Codes C	Codes SH	Codes V	Dimensions B ft in.	C ft in.	D ft in.	E ft in.	F ft in.	H ft in.	K ft in.	Nom. Length ft in.	Actual Length ft in.	Weight lb
		Substructure													
		Int Bent 2													
44	6 D200	BEAM		20		2 6.00							2 6	2 6	165
24	9 H200	BEAM		17		16 3.00							17 6	17 6	1,428
24	9 H201	BEAM		17		14 6.00							15 9	15 9	1,285
6	9 H202	BEAM		18		3 11.00							6 5	6 5	131
2	9 H203	BEAM		17		13.00							2 4	2 4	16
2	9 H204	BEAM		17		5 0.00							6 3	6 3	43
4	9 H205	BEAM		18		3 4.00							5 10	5 10	79
20	6 H206	BEAM		20		16 3.00							16 3	16 3	488
20	6 H207	BEAM		20		14 6.00							14 6	14 6	436
12	6 H208	BEAM		20		6 11.00							6 11	6 11	125
28	6 H209	BEAM		10S			12.00	3 1.75					5 2	4 10	203
44	5 U200	BEAM		13S		3 3.00	3 9.00	3 3.00	3 9.00				14 11	14 7	669
18	5 U201	BEAM		10S			3 9.00	3 3.00					10 9	10 6	197
12	5 U202	BEAM		13S		3 3.00	4 0.50	3 3.00	4 0.50				15 6	15 2	190
10	5 U203	BEAM		10S			4 0.50	3 3.00					11 4	11 1	116
8	4 U204	BEAM		10S			6.00	3 3.00					4 3	4 1	22
		Superstructure													
		End Bent 1													
22	6 F100	WING BRACE	E	15S		14.25	5 0.00	2 2.75	19.00	19.00	10.00	10.00	8 5	8 4	275
10	6 F101	DIAPHRAGM	E	19S		5 3.00	2 8.00						7 11	7 9	116
12	6 H100	BEAM	E	20		18 1.00							18 1	18 1	326
12	6 H101	BEAM	E	20		16 4.00							16 4	16 4	294
4	6 H102	BEAM	E	20		6 11.00							6 11	6 11	42
4	6 H103	BEAM	E	18		4 7.00							5 11	5 11	36
1	6 H104	BEAM	E	17		3 2.00							3 10	3 10	6
1	6 H105	BEAM	E	17		17.00							2 1	2 1	3
9	6 H106	DIAPHRAGM	E	20		18 1.00							18 1	18 1	244
9	6 H107	DIAPHRAGM	E	20		16 4.00							16 4	16 4	221
4	6 H108	DIAPHRAGM	E	20		2 4.00							2 4	2 4	14
6	6 H109	DIAPHRAGM	E	20		3 0.00							3	3	27
4	6 H110	DIAPHRAGM	E	20		6 11.00							6 11	6 11	42
6	6 H111	DIAPHRAGM	E	20		8 4.00							8 4	8 4	75
2	6 H112	DIAPHRAGM	E	20		4 4.00							4 4	4 4	13
3	6 H113	DIAPHRAGM	E	20		5 0.00							5	5	23
3	6 H114	DIAPHRAGM	E	20		3 3.00							3 3	3 3	15
2	6 H115	DIAPHRAGM	E	20		2 7.00							2 7	2 7	8
4	5 H116	STRAND TIE	E	20		4 6.00							4 6	4 6	19
48	6 H117	WING	E	19S		11 8.00	12.00						12 8	12 6	901
16	8 H118	WING	E	19		12 6.00	16.00						13 10	13 7	580
20	5 U100	BEAM	E	10S			6 6.00	2 9.00					15 9	15 6	323
14	4 U101	BEAM	E	13S		2 9.00	2 8.00	2 9.00	2 8.00				11 7	11 4	106
4	4 U102	BEAM	E	13S		2 9.00	2 11.50	2 9.00	2 11.50				12 2	11 11	32
28	5 U103	DIAPHRAGM	E	10S			5 0.00	2 3.00					12 3	12	350
28	6 U104	DIAPHRAGM	E	19S		3 11.00	2 9.00						6 8	6 6	273
43	6 U105	DIAPHRAGM	E	19S		3 4.00	4 7.00						7 11	7 9	501
32	5 U106	DIAPHRAGM	E	19S		2 0.00	15.00						3 3	3 2	106
16	5 V100	BEAM	E	20		6 6.00							6 6	6 6	108
12	6 V101	DIAPHRAGM	E	20		3 11.00							3 11	3 11	71
22	6 V102	WING	E	20		8 3.00							8 3	8 3	273
22	6 V103	WING	E	20		8 2.00							8 2	8 2	270
		End Bent 4													
22	6 F400	WING BRACE	E	15S		14.25	5 0.00	2 2.75	19.00	19.00	10.00	10.00	8 5	8 4	275
10	6 F401	DIAPHRAGM	E	19S		5 3.00	2 8.00						7 11	7 9	116
12	6 H400	BEAM	E	20		18 1.00							18 1	18 1	326
12	6 H401	BEAM	E	20		16 4.00							16 4	16 4	294
4	6 H402	BEAM	E	20		6 11.00							6 11	6 11	42
4	6 H403	BEAM	E	18		4 7.00							5 11	5 11	36
1	6 H404	BEAM	E	17		3 2.00							3 10	3 10	6
1	6 H405	BEAM	E	17		17.00							2 1	2 1	3
9	6 H406	DIAPHRAGM	E	20		18 1.00							18 1	18 1	244
9	6 H407	DIAPHRAGM	E	20		16 4.00							16 4	16 4	221
4	6 H408	DIAPHRAGM	E	20		2 4.00							2 4	2 4	14

Bill of Reinforcing Steel

No. Req.	Size/ Mark	Location	Codes C	Codes SH	Codes V	Dimensions B ft in.	C ft in.	D ft in.	E ft in.	F ft in.	H ft in.	K ft in.	Nom. Length ft in.	Actual Length ft in.	Weight lb
6	6 H409	DIAPHRAGM	E	20		3 0.00							3	3	27
4	6 H410	DIAPHRAGM	E	20		6 11.00							6 11	6 11	42
6	6 H411	DIAPHRAGM	E	20		8 4.00							8 4	8 4	75
2	6 H412	DIAPHRAGM	E	20		4 4.00							4 4	4 4	13
3	6 H413	DIAPHRAGM	E	20		5 0.00							5	5	23
3	6 H414	DIAPHRAGM	E	20		3 3.00							3 3	3 3	15
2	6 H415	DIAPHRAGM	E	20		2 7.00							2 7	2 7	8
4	5 H416	STRAND TIE	E	20		4 6.00							4 6	4 6	19
48	6 H417	WING	E	19S		12 8.00	12.00						13 8	13 6	973
16	8 H418	WING	E	19		13 6.00	16.00						14 10	14 7	623
20	5 U400	BEAM	E	10S			6 6.00	2 9.00					15 9	15 6	323
14	4 U401	BEAM	E	13S		2 9.00	2 8.00	2 9.00	2 8.00				11 7	11 4	106
4	4 U402	BEAM	E	13S		2 9.00	2 11.50	2 9.00	2 11.50				12 2	11 11	32
28	5 U403	DIAPHRAGM	E	10S			5 0.00	2 3.00					12 3	12	350
28	6 U404	DIAPHRAGM	E	19S		3 11.00	2 9.00						6 8	6 6	273
43	6 U405	DIAPHRAGM	E	19S		3 4.00	4 7.00						7 11	7 9	501
32	5 U406	DIAPHRAGM	E	19S		2 0.00	15.00						3 3	3 2	106
16	5 V400	BEAM	E	20		6 6.00							6 6	6 6	108
12	6 V401	DIAPHRAGM	E	20		3 11.00							3 11	3 11	71
2	6 V402	WING	E	20		8 8.00							8 8	8 8	26
22	6 V403	WING	E	20	2	8 7.00							8 7	8 7	
		Incr. = 0.375"				8 3.00							8 3	8 3	278
2	6 V404	WING	E	20		8 9.00							8 9	8 9	26
22	6 V405	WING	E	20	2	8 9.00							8 9	8 9	
		Incr. = 0.500"				8 4.00							8 4	8 4	282
		Int Diaphragms													
16	6 H500	DIAPHRAGM	E	20		6 11.00							6 11	6 11	166
32	4 H501	DIAPHRAGM	E	20		8 4.00							8 4	8 4	178
8	6 H502	DIAPHRAGM	E	20		4 4.00							4 4	4 4	52
16	4 H503	DIAPHRAGM	E	20		5 0.00							5	5	53
8	6 H504	DIAPHRAGM	E	20		2 7.00							2 7	2 7	31
16	4 H505	DIAPHRAGM	E	20		3 3.00							3 3	3 3	35
16	5 H506	STRAND TIE	E	20		4 6.00							4 6	4 6	75
16	5 H507	STRAND TIE	E	20		3 3.00							3 3	3 3	54
24	6 U500	DIAPHRAGM	E	28S			2 3.00	5 0.00	2 2.00				9 5	9 1	327
72	4 U501	DIAPHRAGM	E	28S			2 3.00	5 0.00	18.00				8 9	8 7	413
48	5 U502	DIAPHRAGM	E	19S		3 3.00	12.00						4 3	4 2	209
16	5 V500	DIAPHRAGM	E	20		5 1.00							5 1	5 1	85
		Slab													
690	6 S1	SLAB	E	20		18 1.00							18 1	18 1	18,741
690	6 S2	SLAB	E	20		16 4.00							16 4	16 4	16,928
284	5 S3	SLAB	E	20		57 4.00							57 4	57 4	16,983
54	6 S4	SLAB	E	20		37 0.00							37	37	3,001
50	6 S5	SLAB	E	20		19 0.00							19	19	1,427
		Barrier													
		Type D													
10	5 K1	BARRIER	E	27S		3 8.00	9.25	5.25	3 2.75		5.25	1.00	8 1	7 11	83
37	5 K2	BARRIER	E	27S		3 8.00	9.25	14.50	2 5.75		14.25	2.75	8 2	7 11	306
50	5 K3	BARRIER	E	27S		2 2.00	9.25	14.50	11.25	12.00	14.25	2.75	6 1	5 9	300
20	5 K4	BARRIER	E	19S	4	2 4.25	10.00						3 2	3 1	
		Incr. = 0.500"				2 6.25	10.00						3 4	3 3	66
20	5 K5	BARRIER	E	38S	4			18.50	9.50	8.25	18.00	4.00	3	2 11	
		Incr. = 0.500"						20.50	9.50	8.25	20.00	4.50	3 2	3 1	63
12	5 K6	BARRIER	E	19S		2 6.75	10.00						3 5	3 3	41
12	5 K7	BARRIER	E	21S			2 6.75	10.00			2 6.00	6.25	3 5	3 4	42
36	5 K8	BARRIER	E	19S	4	2 8.50	10.00						3 7	3 5	
		Incr. = 0.750"				3 2.50	10.00						4 1	3 11	138
36	5 K9	BARRIER	E	21S	4		2 8.50	10.00			2 7.75	6.75	3 7	3 6	
		Incr. = 0.750"					3 2.50	10.00			3 1.75	7.75	4 1	4	141
39	5 K10	BARRIER	E	19S		3 3.00	10.00						4 1	4	163
39	5 K11	BARRIER	E	21S			3 3.00	10.00			2 2.25	7.75	4 1	4	163
12	5 K12	BARRIER	E	20		12 9.00							12 9	12 9	160

Nominal lengths are based on out to out dimensions shown in bending diagrams and are listed to the nearest inch for fabricator's use. Actual lengths are measured along centerline bar to the nearest inch. Weights are based on actual lengths.

For bending diagrams and steel reinforcing totals, see Sheet No. 28.

Detailed May 2024
Checked May 2024

All bars shall be Grade 60.

Codes: C = Required coatings, where E = Epoxy Coated and G = Galvanized.

SH = Required shape, see bending diagrams.

V = Sets of varied bars and number of bars of each length. Bar dimensions vary in equal increments between dimensions shown on this line and the following line and the actual length dimension shown on this line and the following line vary by the specified increment.

BILL OF REINFORCING STEEL

Note: This drawing is not to scale. Follow dimensions.

STATE OF MISSOURI
TYLER R. LINDSAY
NUMBER PE-2019000128
PROFESSIONAL ENGINEER
07/01/2024 2:21:06 PM
TYLER.R.LINDSAY-CIVIL
MO-PE-2019000128

DATE PREPARED 7/1/2024

ROUTE	STATE
5	MO
DISTRICT	SHEET NO.
BR	30

COUNTY HOWARD

JOB NO. J5P3498

CONTRACT ID.

PROJECT NO.

BRIDGE NO. A9250

DESCRIPTION	DATE

MISSOURI HIGHWAYS AND TRANSPORTATION COMMISSION
105 WEST CAPITOL
JEFFERSON CITY, MO 65102
1-888-ASK-MODOT (1-888-275-6636)

Bill of Reinforcing Steel

No. Req.	Size/ Mark	Location	Codes C	Codes SH	Codes V	Dimensions B ft in.	C ft in.	D ft in.	E ft in.	F ft in.	H ft in.	K ft in.	Nom. Length ft in.	Actual Length ft in.	Weight lb
6	5 K13	BARRIER	E	20	2	12 0.00							12	12	
		Incr. = 36.000"				6 0.00							6	6	56
12	5 K14	BARRIER	E	20		13 9.00							13 9	13 9	172
6	5 K15	BARRIER	E	20	2	13 0.00							13	13	
		Incr. = 36.000"				7 0.00							7	7	63
10	5 K16	BARRIER	E	27S		2 2.00	9.25	5.25	20.25	12.00	5.25	1.00	6 1	5 9	60
24	5 K17	BARRIER	E	20		19 9.00							19 9	19 9	494
12	5 K18	BARRIER	E	20	4	19 0.00							19	19	
		Incr. = 36.000"				13 0.00							13	13	200
450	5 R1	BARRIER	E	26		3 3.00	5.50	2.25	3 1.25	5.50	3 0.75	6.75	7	6 9	3,168
450	5 R2	BARRIER	E	19S		20.50	9.50						2 6	2 5	1,134
450	5 R3	BARRIER	E	27S			9.50	15.25	5.00	12.00	15.00	3.00	3 6	3 4	1,565
80	5 R4	BARRIER	E	20		11 9.00							11 9	11 9	980
20	5 R5	BARRIER	E	20		59 0.00							59	59	1,231
20	5 R6	BARRIER	E	20		53 9.00							53 9	53 9	1,121
20	5 R7	BARRIER	E	20		56 6.00							56 6	56 6	1,179
		Slip-Form													
40	5 C1	SLIP FORM	E	20		12 0.00							12	12	501
4	5 C2	SLIP FORM	E	20		10 6.00							10 6	10 6	44
8	5 C3	SLIP FORM	E	20		8 0.00							8	8	67

Bill of Reinforcing Steel

No. Req.	Size/ Mark	Location	Codes C	Codes SH	Codes V	Dimensions B ft in.	C ft in.	D ft in.	E ft in.	F ft in.	H ft in.	K ft in.	Nom. Length ft in.	Actual Length ft in.	Weight lb

Nominal lengths are based on out to out dimensions shown in bending diagrams and are listed to the nearest inch for fabricator's use. Actual lengths are measured along centerline bar to the nearest inch. Weights are based on actual lengths.

For bending diagrams and steel reinforcing totals, see Sheet No. 28.

All bars shall be Grade 60.

Codes: C = Required coatings, where E = Epoxy Coated and G = Galvanized.

SH = Required shape, see bending diagrams.

V = Sets of varied bars and number of bars of each length. Bar dimensions vary in equal increments between dimensions shown on this line and the following line and the actual length dimension shown on this line and the following line vary by the specified increment.

BILL OF REINFORCING STEEL

Detailed May 2024
Checked May 2024

Note: This drawing is not to scale. Follow dimensions.

STATE OF MISSOURI
TYLER R. LINDSAY
NUMBER PE-2019000128
PROFESSIONAL ENGINEER
07/01/2024 2:21:24 PM
TYLER R. LINDSAY - CIVIL
MO-PE-2019000128

DATE PREPARED
7/1/2024

ROUTE	STATE
5	MO
DISTRICT	SHEET NO.
BR	31

COUNTY
HOWARD

JOB NO.
J5P3498

CONTRACT ID.

PROJECT NO.

BRIDGE NO.
A9250

DESCRIPTION	DATE

MISSOURI HIGHWAYS AND TRANSPORTATION COMMISSION
105 WEST CAPITOL
JEFFERSON CITY, MO 65102
1-888-ASK-MODOT (1-888-275-6636)

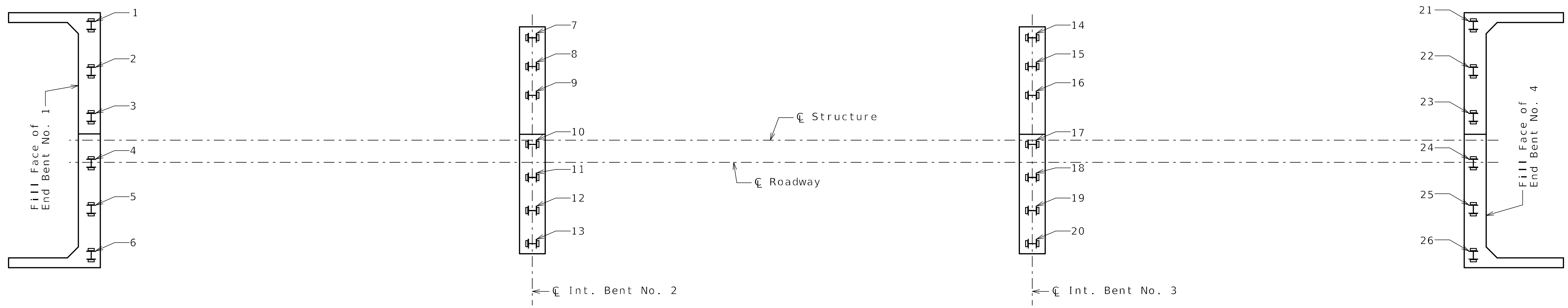

PART PLAN SHOWING PILE NUMBERING FOR RECORDING AS-BUILT PILE DATA

As-Built Pile Data

Pile No.	Length in Place (ft)	Computed Nominal Axial Compressive Resistance (kips)	Remarks
			End Bent No. 1
1			
2			
3			
4			
5			
6			
			Int. Bent No. 2
7			
8			
9			
10			
11			
12			
13			

As-Built Pile Data

Pile No.	Length in Place (ft)	Computed Nominal Axial Compressive Resistance (kips)	Remarks
			Int. Bent No. 3
14			
15			
16			
17			
18			
19			
20			

As-Built Pile Data

Pile No.	Length in Place (ft)	Computed Nominal Axial Compressive Resistance (kips)	Remarks
			End Bent No. 4
21			
22			
23			
24			
25			
26			

Note:
Indicate in remarks column:
A. Pile type and grade
B. Batter
C. Driven to practical refusal

This sheet to be completed by MoDOT construction personnel.

STATE OF MISSOURI
TYLER R. LINDSAY
NUMBER PE-2019000128
PROFESSIONAL ENGINEER
07/01/2024 2:21:35 PM
TYLER R. LINDSAY - CIVIL
MO-PE-2019000128

DATE PREPARED	
7/1/2024	
ROUTE 5	STATE MO
DISTRICT BR	SHEET NO. 32
COUNTY HOWARD	
JOB NO. J5P3498	
CONTRACT ID.	
PROJECT NO.	
BRIDGE NO. A9250	

DESCRIPTION

DATE

MISSOURI HIGHWAYS AND TRANSPORTATION COMMISSION
105 WEST CAPITOL
JEFFERSON CITY, MO 65102
1-888-ASK-MODOT (1-888-275-6636)

Detailed Jan. 2024
Checked Jan. 2024

Note: This drawing is not to scale. Follow dimensions.

MoDOT-Geotechnical Section
1617 Missouri Blvd.
Jefferson City, MO 65109

SUBSURFACE DIAGRAM

PROJECT NAME Bridge Replacement
PROJECT LOCATION Howard
CLIENT
PROJECT NUMBER J5P3498-A9250

USCS Low Plasticity Silty Clay
Shale
USCS Silt
Fill (made ground)
USCS Poorly-graded Sand
USCS Low Plasticity Clay

MODOT DYNAMIC FENCE - J7P0677-A8701.GPJ - 4/24/23 16:16 - Z:\SG\GINT\PROJECT FILES\J5P3498_A9250_HOWARD_RT5_BEARCREEK.GPJ

BORING DATA

Note: For locations of borings, see Sheet No. 1.

Note: This drawing is not to scale. Follow dimensions.

Sheet No. 33 of 33

Detailed Jan. 2024
Checked Jan. 2024

STATE OF MISSOURI
TYLER R. LINDSAY
NUMBER PE-2019000128
PROFESSIONAL ENGINEER
07/01/2024 2:31:56 PM
TYLER R LINDSAY - CIVIL
MO-PE-2019000128

DATE PREPARED	7/1/2024
ROUTE	5
STATE	MO
DISTRICT	BR
SHEET NO.	33
COUNTY	HOWARD
JOB NO.	J5P3498
CONTRACT ID.	
PROJECT NO.	
BRIDGE NO.	A9250

DESCRIPTION
DATE

MISSOURI HIGHWAYS AND TRANSPORTATION COMMISSION
105 WEST CAPITOL
JEFFERSON CITY, MO 65102
1-888-ASK-MODOT (1-888-275-6636)