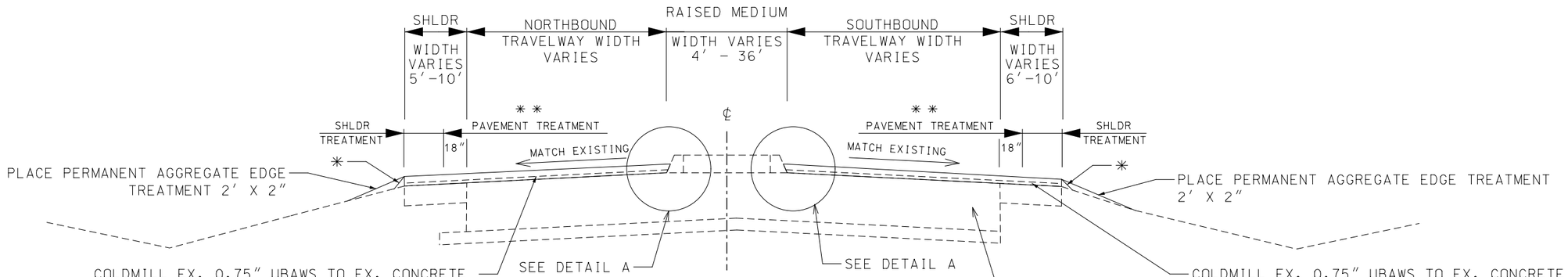

TYPICAL SECTION
NOT TO SCALE

VARIOUS LOCATIONS THROUGHOUT LIMITS
SOME LOCATIONS HAVE CURB AND GUTTER

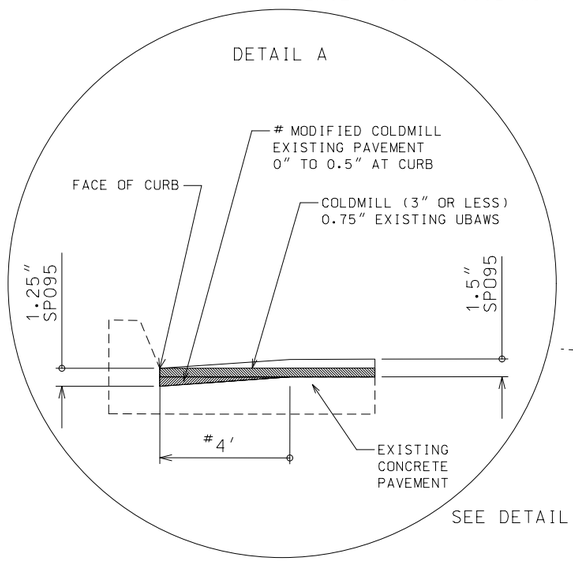

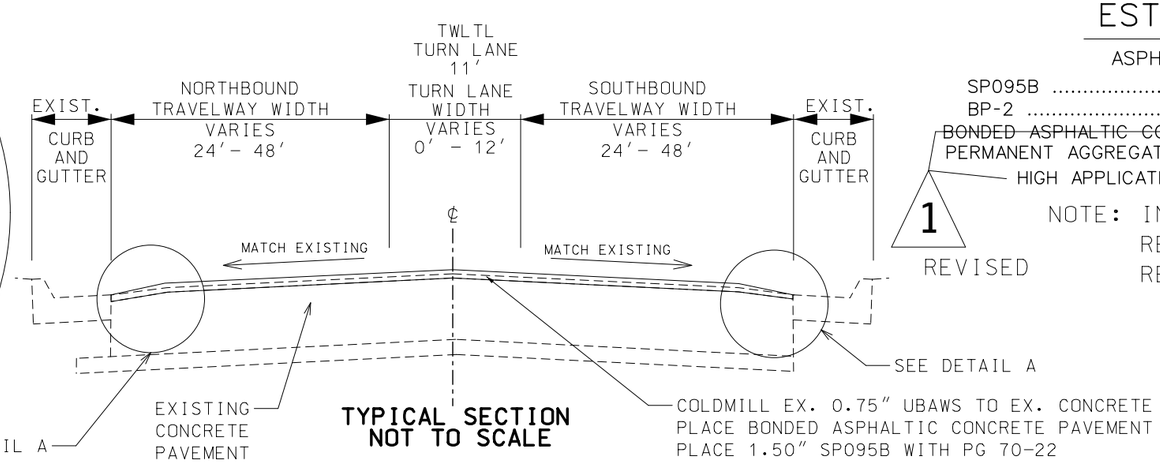

TYPICAL SECTION
NOT TO SCALE

SB LOG MILE 1.638 TO 1.770

ESTIMATE FACTORS

ASPHALT PAVEMENT MIXTURE

SP095B .....1.974 TONS/CU.YD.
BP-2 .....1.984 TONS/CU.YD.
~~BONDED ASPHALTIC CONCRETE PAVEMENT~~.....0.2 GAL./SQ. YD.
PERMANENT AGGREGATE EDGE TREATMENT.....1.88 TONS/CU.YD.
HIGH APPLICATION RATE TACK COAT

1 REVISED

NOTE: INCLUDE COLDMILLING AND RESURFACING THE RADIUS RETURNS AT INTERSECTIONS

NOTE: DETAIL "A" SHOWS TO RAISED MEDIAN CURB. FOR CURB AND GUTTER STOP AT THE GUTTER.

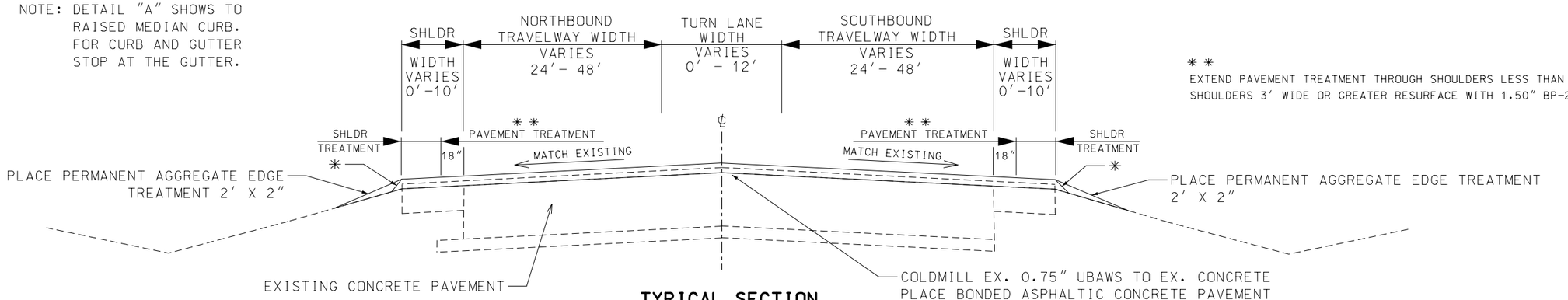

** EXTEND PAVEMENT TREATMENT THROUGH SHOULDERS LESS THAN 3' WIDE
SHOULDERS 3' WIDE OR GREATER RESURFACE WITH 1.50" BP-2

TYPICAL SECTION
NOT TO SCALE

SB LOG MILE 0.666 TO 1.570

* SEE SAFETY EDGE STD PLANS 401.00 SHEET 3 OF 3

ROUTE 1
TYPICAL SECTION SHEET
SHEET 1 OF 1

STATE OF MISSOURI
CHRISTOPHER ALAN WEST
NUMBER PE-2014017034
PROFESSIONAL ENGINEER
09/12/2024 9:47:20 AM
CHRISTOPHER ALAN WEST - CIVIL
MO-PE-2014017034

DATE PREPARED	9/12/2024
ROUTE 1	STATE MO
DISTRICT KC	SHEET NO. 2
COUNTY CLAY	
JOB NO. JKU0046	
CONTRACT ID.	
PROJECT NO.	
BRIDGE NO.	

DESCRIPTION
DATE

MISSOURI HIGHWAYS AND TRANSPORTATION COMMISSION
105 WEST CAPITOL
JEFFERSON CITY, MO 65102
1-888-ASK-MODOT (1-888-275-6636)

PAVING AND COLDMILLING

SB BEGIN LOG MILE	SB END LOG MILE	LENGTH FT	PAVEMENT AREA SY	SHOULDERS AREA SY	1.5" SP095B MAINLINE 1.974 TONS/CY TONS	1.5" BP-2 SHOULDER 1.984 TONS/CY TONS	~~BONDED ASPHALTIC CONCRETE PAVEMENT 0.20 GAL/SY GAL~~	COLDMILLING BIT. PVM'T 3" OR LESS FOR EXISTING UBAWS SY	COLDMILLING DEPTH TRANSITION BEGINNING AND ENDING SY	COLDMILLING MODIFIED TRANSITION 4' AT ISLANDS SY	COLDMILLING MODIFIED TRANSITION 4' - 10' GUTTER/ CROSSROADS SY	REMARKS
-0.040	0.241	1,483.68	13,792.62	676.79	1,134.4	55.9	2,893.9	14,469.41	291.16	1,033.65	1,586.60	BEGINNING OF ASPHALT ON INDIANA AVE
0.241	0.413	908.16	7,539.77	1,220.43	620.1	100.9	1,752.0	8,760.20		711.40	570.39	82ND TERRACE & 82ND STREET
0.413	0.481	359.04	1,915.66	797.87	157.6	66.0	542.7	2,713.53		319.15		BETWEEN 82ND AND 80TH STREET
0.481	0.626	765.60	7,437.03	1,222.08	611.7	101.0	1,731.8	8,659.11		678.29	10,399.07	80TH STREET
0.626	1.452	4,361.28	23,260.94	9,691.73	1,913.2	801.2	6,590.5	32,952.67		220.59		BETWEEN 80TH AND 72ND TERRACE
1.452	1.770	1,679.04	15,283.38	1,977.34	1,257.1	163.5	3,452.1	17,260.72	123.77	870.61	1,332.32	72ND TERRACE TO 72ND STREET
	TOTAL	9,556.80	69,229.40	15,586.24	5,694.1	1,288.5	16,963.0	84,815.64	414.93	3,833.69	13,888.38	
				PAY TOTAL	5,694.1	1,288.5	16,963	84,816	18,137			

1 REVISED

HIGH APPLICATION RATE TACK COAT 0.20 GAL/SY

GAL

CLASS B PARTIAL DEPTH PAVEMENT REPAIR

LENGTH FT	WIDTH FT	DEPTH IN	FURNISH AND PLACE TONS	REMOVAL SY	REMARKS
ROUTE 1 SOUTHBOUND					
2	2	4	0.10	0.44	
50	2	4	2.45	11.11	
625	2	4	30.62	138.89	LONGITUDINAL JOINT
3	2	4	0.15	0.67	
2	2	4	0.10	0.44	
14	2	4	0.69	3.11	
3	2	4	0.15	0.67	
2	2	4	0.10	0.44	
15	2	4	0.73	3.33	
6	2	4	0.29	1.33	
10	2	4	0.49	2.22	80TH STREET - TURN LANE
3	2	4	0.15	0.67	
12	2	4	0.59	2.67	
3	2	4	0.15	0.67	
15	2	4	0.73	3.33	
3	2	4	0.15	0.67	
240	2	4	11.76	53.33	LONGITUDINAL JOINT BETWEEN LANES
8	2	4	0.39	1.78	
12	2	4	0.59	2.67	
3	2	4	0.15	0.67	
500	2	4	24.49	111.11	
6	2	4	0.29	1.33	
2	2	4	0.10	0.44	
3	2	4	0.15	0.67	
8	2	4	0.39	1.78	
6	2	4	0.29	1.33	
8	2	4	0.39	1.78	
6	2	4	0.29	1.33	
160	2	4	7.84	35.56	LONGITUDINAL JOINT BETWEEN LANES
3	2	4	0.15	0.67	
3	2	4	0.15	0.67	
2	2	4	0.10	0.44	
6	2	4	0.29	1.33	
2	2	4	0.10	0.44	
6	2	4	0.29	1.33	
2	2	4	0.10	0.44	
2	24	4	1.17	5.33	AT BRIDGE - NORTH END
2	24	4	1.17	5.33	AT BRIDGE - SOUTH END
6	2	4	0.29	1.33	
3	2	4	0.15	0.67	
3	2	4	0.15	0.67	
2	2	4	0.10	0.44	
8	2	4	0.39	1.78	
2	2	4	0.10	0.44	
4	2	4	0.20	0.89	
3	2	4	0.15	0.67	
2	2	4	0.10	0.44	
3	2	4	0.15	0.67	
2	24	4	1.17	5.33	
SUBTOTAL 1			91.23	413.75	

CLASS B PARTIAL DEPTH PAVEMENT REPAIR

LENGTH FT	WIDTH FT	DEPTH IN	FURNISH AND PLACE TONS	REMOVAL SY	REMARKS
ROUTE 1 SOUTHBOUND					
3	2	4	0.15	0.67	
2	2	4	0.10	0.44	
6	2	4	0.29	1.33	
6	2	4	0.29	1.33	
6	2	4	0.29	1.33	
12	2	4	0.59	2.67	
12	2	4	0.59	2.67	
4	2	4	0.20	0.89	
14	2	4	0.69	3.11	
12	2	4	0.59	2.67	
3	2	4	0.15	0.67	
6	2	4	0.29	1.33	
10	2	4	0.49	2.22	
14	2	4	0.69	3.11	
12	2	4	0.59	2.67	
40	2	4	1.96	8.89	LONGITUDINAL JOINT BETWEEN LANES
12	2	4	0.59	2.67	
10	2	4	0.49	2.22	
3	2	4	0.15	0.67	
14	2	4	0.69	3.11	
3	2	4	0.15	0.67	
6	2	4	0.29	1.33	
12	2	4	0.59	2.67	
2	2	4	0.10	0.44	
2	2	4	0.10	0.44	
3	2	4	0.15	0.67	
4	2	4	0.20	0.89	
4	2	4	0.20	0.89	
2	2	4	0.10	0.44	
200	2	4	9.80	44.44	LONGITUDINAL JOINT BETWEEN LANES
8	2	4	0.39	1.78	
2	2	4	0.10	0.44	
6	2	4	0.29	1.33	
3	2	4	0.15	0.67	
40	2	4	1.96	8.89	LONGITUDINAL JOINT BETWEEN LANES
6	2	4	0.29	1.33	
6	4	4	0.59	2.67	
18	2	4	0.88	4.00	
300	2	4	14.70	66.67	LONG. JOINT BETWEEN LANES AT 73RD TERR.
20	2	4	0.98	4.44	
10	2	4	0.49	2.22	
8	2	4	0.39	1.78	
6	2	4	0.29	1.33	
6	2	4	0.29	1.33	
24	2	4	1.18	5.33	
300	2	4	14.70	66.67	LONGITUDINAL JOINT BETWEEN LANES
24	2	4	1.18	5.33	
24	2	4	1.18	5.33	
24	2	4	1.18	5.33	END OF 72ND STREET
SUBTOTAL 2			62.76	284.420	

MOBILIZATION
1 LUMP SUM

SUMMARY OF QUANTITIES
SHEET 1 OF 5

STATE OF MISSOURI
CHRISTOPHER ALAN WEST
NUMBER PE-2014017034
PROFESSIONAL ENGINEER
09/12/2024 9:50:38 AM
CHRISTOPHER ALAN WEST - CIVIL
MO-PE-2014017034

DATE PREPARED 9/12/2024

ROUTE	STATE
1	MO
DISTRICT	SHEET NO.
KC	3

COUNTY CLAY

JOB NO. JKU0046

CONTRACT ID.

PROJECT NO.

BRIDGE NO.

DATE	DESCRIPTION

MISSOURI HIGHWAYS AND TRANSPORTATION COMMISSION
105 WEST CAPITOL
JEFFERSON CITY, MO 65102
1-888-ASK-MODOT (1-888-275-6636)