MISSOURI HIGHWAYS AND TRANSPORTATION COMMISSION

PLANS FOR PROPOSED STATE HIGHWAY

DUNKLIN COUNTY

DESIGN DESIGNATION

US 62-WEST OF RTE B

A.A.D.T. - 2025 = 1123
A.A.D.T. - 2045 = 1240
D.H.V. = 10.01%
T = 9.86%
V = 55 M.P.H.
D = 50%

US 62-EAST OF RTE B

A.A.D.T. - 2025 = 3153
A.A.D.T. - 2045 = 3485
D.H.V. = 7.27%
T = 17.89%
V = 55 M.P.H.
D = 50%

US 62-BETWEEN MO 53-MO 25

A.A.D.T. - 2025 = 2073
A.A.D.T. - 2045 = 2290
D.H.V. = 8.28%
T = 10.74%
V = 55 M.P.H.
D = 50%

FUNCTIONAL CLASSIFICATION-MINOR ARTERIAL

NO NEW R/W

KEY MAP
LOCATION OF DUNKLIN COUNTY

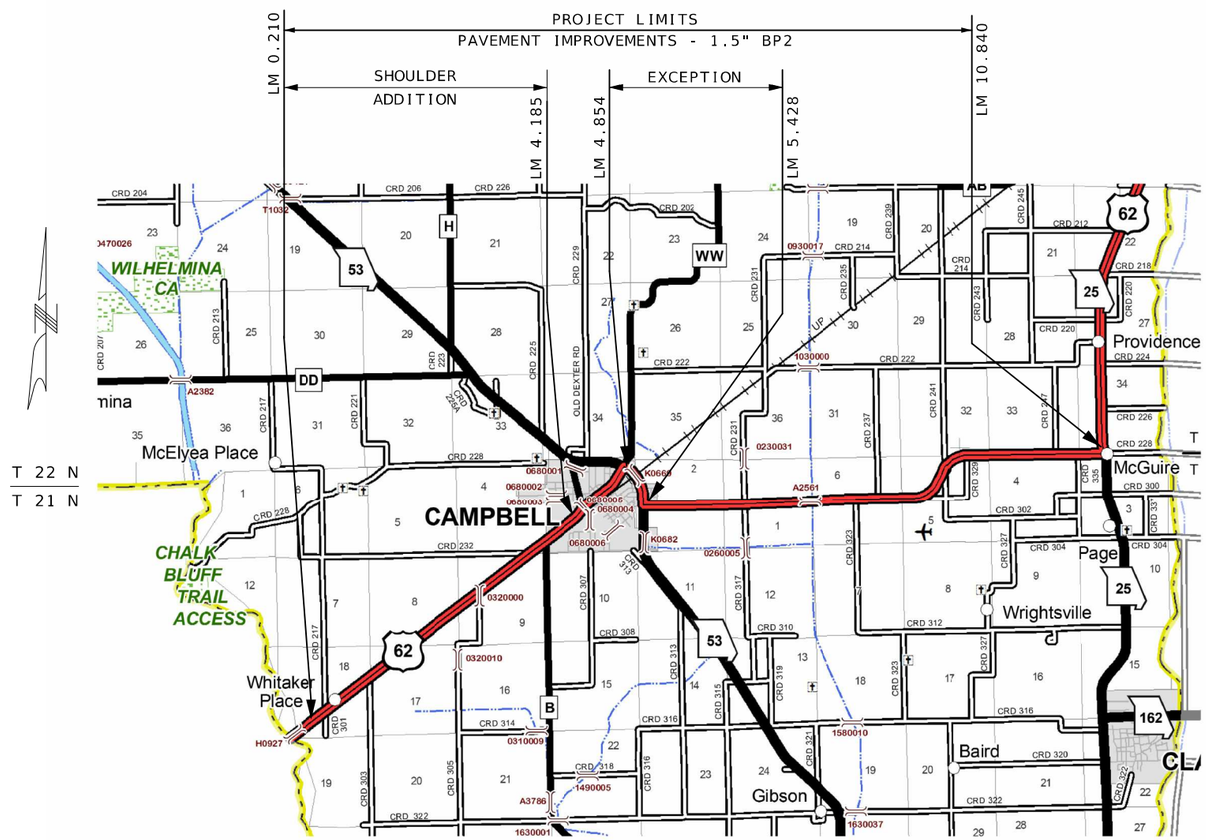

THE EXISTENCE AND APPROXIMATE LOCATION OF UTILITY FACILITIES KNOWN TO EXIST, AS SHOWN ON THE PLANS, ARE BASED ON THE BEST INFORMATION AVAILABLE TO THE COMMISSION AT THIS TIME. THIS INFORMATION IS PROVIDED BY THE COMMISSION "AS-IS" AND THE COMMISSION EXPRESSLY DISCLAIMS ANY REPRESENTATION OR WARRANTY AS TO THE COMPLETENESS, ACCURACY, OR SUITABILITY OF THE INFORMATION FOR ANY USE. RELIANCE UPON THIS INFORMATION IS DONE AT THE RISK AND PERIL OF THE USER, AND THE COMMISSION SHALL NOT BE LIABLE FOR ANY DAMAGES THAT MAY ARISE FROM ANY ERROR IN THE INFORMATION. IT IS, THEREFORE, THE RESPONSIBILITY OF THE CONTRACTOR TO VERIFY THE EXISTENCE, LOCATION AND STATUS OF ANY FACILITY. SUCH VERIFICATION INCLUDES DIRECT CONTACT WITH THE LISTED UTILITIES.

CONVENTIONAL SYMBOLS
(USED IN PLANS)

	EXISTING	NEW
BUILDINGS AND STRUCTURES		
GUARD RAIL		
GUARD CABLE		
CONCRETE RIGHT-OF-WAY MARKER		
STEEL RIGHT-OF-WAY MARKER		
LOCATION SURVEY MARKER		
UTILITIES		
FIBER OPTICS	—FO—	—FO—
OVERHEAD CABLE TV	—OTV—	—OTV—
UNDERGROUND CABLE TV	—UTV—	—UTV—
OVERHEAD TELEPHONE	—OT—	—OT—
UNDERGROUND TELEPHONE	—UT—	—UT—
OVERHEAD POWER	—OE—	—OE—
UNDERGROUND POWER	—UE—	—UE—
SANITARY SEWER	—S—	—S—
STORM SEWER	—SS—	—SS—
GAS	—G—	—G—
WATER	—W—	—W—
MANHOLE	SAN	
FIRE HYDRANT	HYD	
WATER VALVE	WV	
WATER METER	WM	
DROP INLET	DI	
DITCH BLOCK		
GROUND MOUNTED SIGN	SIGN	
LIGHT POLE		
H-FRAME POWER POLE		
TELEPHONE PEDESTAL	PED	
FENCE		
CHAIN LINK	—V—	
WOVEN WIRE	—X—	
GATE POST		
BENCHMARK	BM	

NOTE: DASHED OR OPEN SYMBOLS INDICATE EXISTING FEATURES

INDEX OF SHEETS

DESCRIPTION	SHEET NUMBER
TITLE SHEET	1
TYPICAL SECTIONS (TS) (1 SHEET)	2
QUANTITIES (QU) (3 SHEETS)	3
SPECIAL SHEETS (SS)	4-9
TRAFFIC CONTROL SHEETS (TC)	10-11
EROSION CONTROL SHEETS (EC)	12
SIGNING SHEETS (SN)	13-15
BRIDGE DRAWINGS (B)	
A25612	1-5

LENGTH OF PROJECT

BEGINNING OF PROJECT	LM 0.210	
END OF PROJECT	LM 10.840	
APPARENT LENGTH	10.630	MILES
EQUATIONS AND EXCEPTIONS:		
EXCEPTION:	-0.574	MILES
LM 4.854 TO LM 5.428		
TOTAL CORRECTIONS	-0.574	MILES
NET LENGTH OF PROJECT	10.056	MILES
STATE LENGTH	10.056	MILES
FOR INFORMATION ONLY ESTIMATED DISTURBED ACRES	10	ACRES

STATE OF MISSOURI
DONNA RENE PHILPOT
NUMBER PE-2019000205
PROFESSIONAL ENGINEER

Donna Rene Philpot
DONNA RENE PHILPOT - CIVIL
MO-PE-2019000205

DATE PREPARED
9/30/2024

ROUTE	STATE
62	MO

DISTRICT	SHEET NO.
SE	1

COUNTY
DUNKLIN

JOB NO.
J9P3667

CONTRACT ID.

PROJECT NO.

BRIDGE NO.

DESCRIPTION	DATE

MISSOURI HIGHWAYS AND TRANSPORTATION COMMISSION
105 WEST CAPITOL
JEFFERSON CITY, MO 65102
1-888-ASK-MODOT (1-888-275-6636)

REV.

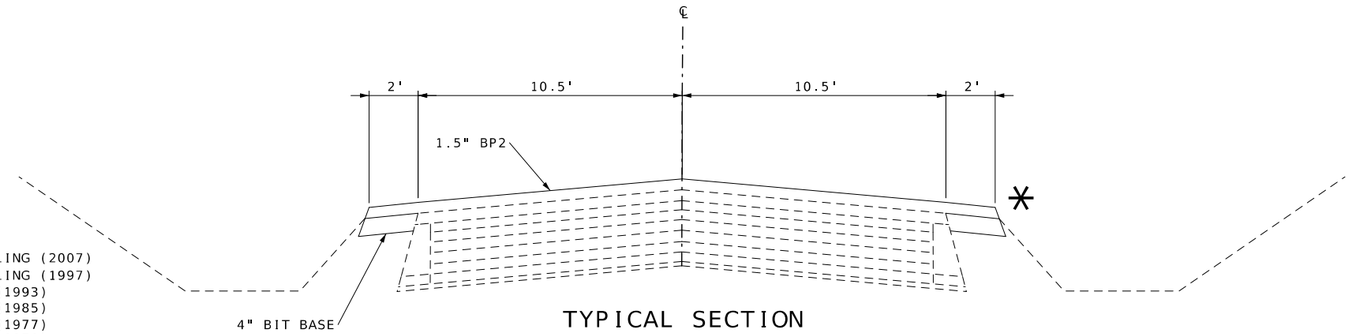

1" SURFACE LEVELING (2007)
1" SURFACE LEVELING (1997)
BIT. MAT. RES. (1993)
BIT. MAT. RES. (1985)
BIT. MAT. RES. (1977)
BIT. MAT. RES. (1971)
BIT. MAT. RES. (1957)
OIL AGGREGATE (1941)
G.E. & GRAVEL (1931)

TYPICAL SECTION
RTE 62
LM 0.210 TO 4.185

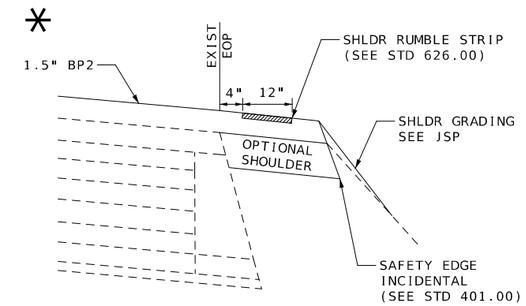

OPTIONAL 2' SHOULDER DETAIL

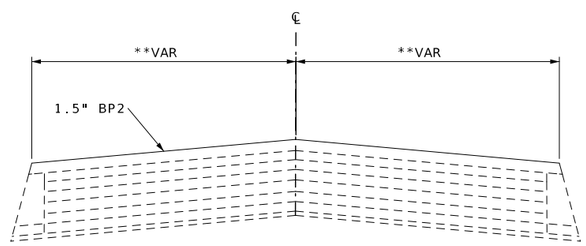

1" SURFACE LEVELING (2007)
1" SURFACE LEVELING (1997)
BIT. MAT. RES. (1993)
BIT. MAT. RES. (1985)
BIT. MAT. RES. (1977)
BIT. MAT. RES. (1971)
BIT. MAT. RES. (1957)
OIL AGGREGATE (1941)
G.E. & GRAVEL (1931)

TYPICAL SECTION
MILL/FILL
RTE 62
LM 4.185 TO 4.488

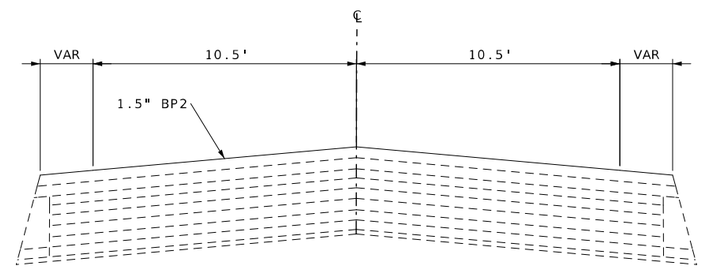

1" SURFACE LEVELING (2007)
1" SURFACE LEVELING (1997)
BIT. MAT. RES. (1993)
BIT. MAT. RES. (1985)
BIT. MAT. RES. (1977)
BIT. MAT. RES. (1971)
BIT. MAT. RES. (1957)
OIL AGGREGATE (1941)
G.E. & GRAVEL (1931)

TYPICAL SECTION
RTE 62
LM 4.488 TO 4.853

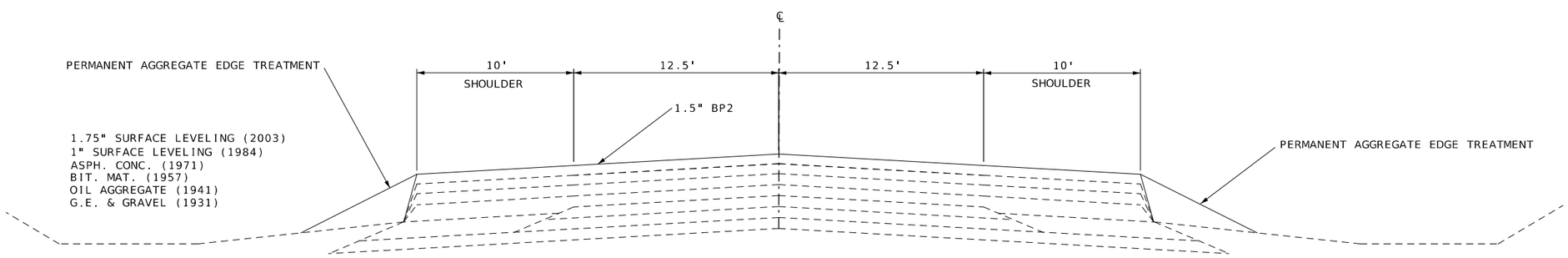

TYPICAL SECTION
RTE 62
LM 5.428 TO 10.840

**SEE QUANTITIES FOR WIDTHS

DRAWING NOT TO SCALE

STATE OF MISSOURI
DONNA RENE PHILPOT
NUMBER
PE-2019000205
PROFESSIONAL ENGINEER

Donna Rene Philpot
09/30/2024 3:41:46 PM
DONNA RENE PHILPOT - CIVIL
MO-PE-2019000205

DATE PREPARED	
9/30/2024	
ROUTE 62	STATE MO
DISTRICT SE	SHEET NO. 2
COUNTY DUNKLIN	
JOB NO. J9P3667	
CONTRACT ID.	
PROJECT NO.	
BRIDGE NO.	

DESCRIPTION	DATE

MISSOURI HIGHWAYS AND TRANSPORTATION COMMISSION
105 WEST CAPITOL
JEFFERSON CITY, MO 65102
1-888-ASK-MODOT (1-888-275-6636)

TYPICAL SECTION
SHEET 1 OF 1

MOBILIZATION - LUMP SUM 1

ADDITIONAL MOBILIZATION FOR SEEDING - 2 EACH

REMOVAL OF IMPROVEMENTS - LUMP SUM 1

LM	LM	LOC	DESCRIPTION	REMARKS
7.215	7.328	LT & RT	APPROACH GUARDRAIL	BR A2561
0.210	10.840	LT & RT	SIGNS	44 SIGNS
0.210	10.840	LT & RT	ISLANDS	RTE OO

LOCATIONS AND QUANTITIES ARE APPROXIMATE FOLLOW SEC 202.30

TEMPORARY PAVEMENT MARKING

	TEMPORARY REMOVABLE TAPE			PAVEMENT MARKING REMOVAL	
	WHITE		YELLOW		
LOC	4" LF	24" LF	4" LF	LF	REMARKS
BR A2561	686.0	25.0	2000.0	3121.0	
TOTAL	686	25	2000	3121	

PERMANENT AGGREGATE EDGE TREATMENT

LM	LM	LOC	LENGTH FT	WIDTH FT	AVG DEPTH IN	PERM AGG EDGE TREATMENT 1.7 TON/CY TONS	REMARKS
5.428	10.840	LT	28576	2	1.5	449.8	
5.428	10.840	RT	28576	2	1.5	449.8	
					TOTAL	899.6	

APPLICATION RATE MAY BE ADJUSTED AS APPROVED BY ENGINEER

GRAVEL A OR CRUSHED STONE B

LM	LM	LOC	LENGTH FT	WIDTH FT	DEPTH IN	GRAVEL A OR CRUSHED STONE B 1.75 TON/CY TONS	REMARKS
0.210	10.840	LT & RT	2690	4	1.5	87.2	PRIVATE & COMM ENTRANCES (UNPAVED)
ADD QUANTITY		LT & RT	VAR	VAR	VAR	5.0	ENTRANCES AS DIRECTED BY ENGINEER
					TOTAL	93	

OPTIONAL SHOULDER AND GRADING

LM	LM	LOC	LENGTH FT	WIDTH FT	DEPTH IN	BITUMINOUS BASE 2.067 TON/CY CY	TON	SHOULDER GRADING 100 FT	REMARKS
0.210	4.185	LT	20988	2	4	518.22	1071.16	209.9	SHOULDER BASE
0.210	4.185	RT	20988	2	4	518.22	1071.16	209.9	SHOULDER BASE
						TOTAL	2142.4	420	

LOW PROFILE ISLAND

LM	LM	LOC	CONC MEDIAN STRIP 3" SY	REMARKS
4.200		LT	7.27	STOP SIGN IN ISLAND
4.212		LT	24.30	
		TOTAL	31.6	

PAVEMENT MARKING

	WATERBORNE PAINT					PREFORMED THERMOPLASTIC		
	YELLOW		WHITE	BLUE	ACCESSIBLE SYMBOL			
LOC	4" SOLID LF	4" INTER LF	4" SOLID LF	4" SOLID LF	WHITE WITH BLUE SOLID EACH	6" WHITE CROSSWALK LF	24" WHITE CROSSWALK LF	REMARKS
RTE 62	11594.4	48628.8	105094.4			56.0	42.0	
RTE 62			1140.0	80.0	4			CAMPBELL CITY PARKING
RTE B	110.0							
RTE OO	50.0							
TOTAL	60384		106235	80	4	56	42	

SEE JSP FOR CONTRACTOR'S RESPONSIBILITY TO CREATE A PAVEMENT MARKING LOG PRIOR TO ANY CONSTRUCTION OPERATIONS THAT MAY AFFECT EXISTING PAVEMENT MARKING.

GUARDRAIL

				MGS		CRASHWORTHY END TERMINAL	
LM	LM	BR#	OFFSET	BRIDGE APPROACH TRANSITION EACH	6' POST GUARDRAIL LF	TYPE A (MASH) EACH	REMARKS
7.249	7.273	A2561	RT	1	37.5	1	
7.256	7.273	A2561	LT	1	0.0	1	
7.295	7.312	A2561	RT	1	0.0	1	
7.295	7.319	A2561	LT	1	37.5	1	
			TOTAL	4	75	4	

ANY ADDITIONAL MATERIAL AND LABOR REQUIRED TO INSTALL PER MANUFACTURER'S RECOMMENDATION SHALL BE CONSIDERED COMPLETELY COVERED BY THE ABOVE PAY ITEMS. SEE SPECIAL SHEETS FOR ADDITIONAL DETAIL.

RUMBLE STRIPS

LM	LM	LOC	LENGTH FT	BITUMINOUS SHOULDER STA	REMARKS
0.210	3.624	LT & RT	18025.92	360.52	
5.428	7.273	LT & RT	9741.60	194.83	
7.295	10.840	LT & RT	18717.60	374.35	
		TOTAL		929.7	

BRIDGE SEAL COAT

LM	LM	LOC	LENGTH FT	WIDTH FT	SEAL COAT AGGREGATE GRADE C SY	EMULSIFIED ASPHALT SEAL COAT 0.3 GAL/SY GAL	REMARKS
7.273	7.295	℄	141	44	689.3	206.8	BR A2561
				TOTAL	690	207	

SHAPING SLOPES CLASS II

			APPROX EARTHWORK		SHAPING SLOPES CLASS II	
STA	STA	ALIGN	CUT CY	FILL CY	STA	REMARKS
0+0.00	1+0.00	LT	0.0	3.5	1.0	RTE B
0+0.00	1+0.00	RT	0.0	3.5	1.0	RTE B
				TOTAL	2	

STATE OF MISSOURI
DONNA RENE PHILPOT
NUMBER PE-2019000205
PROFESSIONAL ENGINEER
Donna Rene Philpot
05/31/2024 10:24:01 AM
DONNA RENE PHILPOT - CIVIL
MO-PE-2019000205

DATE PREPARED	
8/6/2024	
ROUTE 62	STATE MO
DISTRICT SE	SHEET NO. 3
COUNTY DUNKLIN	
JOB NO. J9P3667	
CONTRACT ID.	
PROJECT NO.	
BRIDGE NO.	

DESCRIPTION

DATE

MISSOURI HIGHWAYS AND TRANSPORTATION COMMISSION
105 WEST CAPITOL
JEFFERSON CITY, MO 65102
1-888-ASK-MODOT (1-888-275-6636)

SUMMARY OF QUANTITIES
SHEET 1 OF 3

COLDMILLING

LM	LM	LOC	LENGTH FT	WIDTH FT	DEPTH IN	COLDMILLING DEPTH TRANSITIONS SY	COLDMILLING ≤3" SY	REMARKS
0.210	0.224	℄	75	25	VAR	208.3		BEGIN PROJECT
3.634		RT	VAR	VAR	VAR		235.9	RTE B - JOINT WITH RR
4.171	4.185	℄	75	26	VAR	216.7		RTE OO
4.185	4.225	℄	212	VAR	1.5		1477.0	RTE OO
4.225	4.474	℄	1315	VAR	1.5		5651.6	THROUGH CAMPBELL
4.474	4.488	℄	75	32	VAR	266.7		THROUGH CAMPBELL
4.271	4.428	LT & RT	827	18	1.5		1654.0	CAMPBELL CITY PARKING
4.807	4.821	℄	75	28	VAR	233.3		RTE 53 N
4.821	4.853	℄	169	VAR	1.5		604.1	RTE 53 N
5.428	5.442	℄	75	32	VAR	266.7		RTE 53 S
7.259	7.273	℄	75	45	VAR	375.0		BRIDGE A2561
7.273	7.295	℄	141	45	1.5		501.3	BRIDGE A2561
7.295	7.309	℄	75	45	VAR	375.0		BRIDGE A2561
9.027		RT	75	20	VAR	166.7		COUNTY ROAD 327
10.798	10.812	℄	75	28	VAR	233.3		END PROJECT (RTE 25)
10.812	10.840	℄	VAR	28	1.5		907.7	END PROJECT (RTE 25)
0.210	10.840	LT & RT	2	3640	VAR	808.9		PRIVATE & COMM ENTRANCES (PAVED)
0.210	10.840	LT & RT	10	795	VAR	883.3		COUNTY RD & CITY ST (PAVED)
0.210	10.840	LT & RT	VAR	VAR	VAR			ENTRANCES AS DIRECTED BY ENGINEER
					TOTAL	4034	11032	

BITUMINOUS PAVEMENT

LM	LM	LOC	LENGTH FT	WIDTH FT	DEPTH IN	SURFACE LEVEL BP-2 2.040 TON/CY CY	SURFACE LEVEL BP-2 2.040 TON/CY TON	6" TYPE 5 AGGR SY	TACK 0.08 GAL/SY GAL	REMARKS
0.210	4.185	℄	20988.00	25	1.5	2429.17	4955.51		4664.0	2 - 10' LANE & 2 - 2' SHOULDER (NEW)
4.185	4.488	℄	1599.84	32	1.5	237.01	483.50		455.1	2 - 16' LANE
4.225	4.271	LT & RT	243.00	18	1.5	20.25	41.31		38.9	2 - 9' SHOULDER
4.271	4.428	LT & RT	827.00	18	1.5	68.92	140.60		132.3	CAMPBELL CITY PARKING
4.428	4.474	LT & RT	270.00	18	1.5	22.50	45.90		43.2	2 - 9' SHOULDER
4.488	4.853	℄	1927.20	26	1.5	233.09	475.50		445.4	2 - 11' LANE & 2 - 2' SHOULDER
5.428	10.840	℄	28575.36	45	1.5	5969.74	12178.27		11430.1	2 - 12.5' LANE & 2 - 10' SHOULDER
ADD QUANTITY		℄	VAR	VAR	VAR		1005.50			100 TON/MILE IRREGULARITIES
3.634		RT	VAR	VAR	VAR	65.35	133.31	56.7	22.6	RTE B
4.206		LT	VAR	VAR	1.5	70.77	144.37		135.9	RTE OO
9.027		RT	776.16	20	1.5	71.87	146.61		138.0	COUNTY ROAD 327
10.840		℄	VAR	VAR	1.5	76.68	156.43		147.2	RTE 25
0.210	10.840	LT & RT	3640.00	2	1.5	33.70	68.75		64.7	PRIVATE & COMM ENTRANCES (PAVED)
0.210	10.840	LT & RT	795.00	10	1.5	36.81	75.09		70.7	CITY ST & COUNTY RD (PAVED)
0.210	10.840	LT & RT	615.00	10	3	42.71	87.13		54.7	CITY ST & COUNTY RD (UNPAVED)
						TOTAL	20137.8	57	17843	

SEEDING AND MULCHING

LM	LM	LOC	SEED COOL SEASON AC	MULCH AC	REMARKS
0.210	4.185	LT & RT	9.64	9.64	
		TOTAL	9.7	9.7	

MAILBOX POST

LM	LM	LOC	WOOD POST LF	REMARKS
0.210	4.185	LT & RT	96.0	POSTS - 8' LONG
		TOTAL	96	

TEMPORARY EROSION CONTROL

LM	LM	SILT FENCE LF	ROCK DITCH CHECK LF	ALT DITCH CHECK LF	SEDIMENT REMOVAL CY	TEMP SEED AC	MULCH AC	REMARKS
0.210	4.185	1000	540	120	65	4.82	4.82	
	TOTAL	1000	540	120	65	4.9	4.9	

ALT DITCH CHECKS ARE TO BE USED IN RESIDENTIAL/FINISHED MOWED LOCATIONS

PIPE CULVERTS

SHEET	LOC	GROUP B PIPE 30" LF	GROUP B FLARED END 30" EACH	EXCAVATION CLASS III CY	REMARKS
5	℄	49.0	2	90.0	RTE B CULVERT
	TOTAL	49	2	90	

STATE OF MISSOURI
DONNA RENE PHILPOT
NUMBER PE-2019000205
PROFESSIONAL ENGINEER

Donna Rene Philpot
VERIFIED 11:03:06 PM
DONNA RENE PHILPOT - CIVIL
MO-PE-2019000205

DATE PREPARED	
8/6/2024	
ROUTE 62	STATE MO
DISTRICT SE	SHEET NO. 3
COUNTY DUNKLIN	
JOB NO. J9P3667	
CONTRACT ID.	
PROJECT NO.	
BRIDGE NO.	

DESCRIPTION

DATE

MISSOURI HIGHWAYS AND TRANSPORTATION COMMISSION

105 WEST CAPITOL
JEFFERSON CITY, MO 65102
1-888-ASK-MODOT (1-888-275-6636)

SUMMARY OF QUANTITIES
SHEET 2 OF 3

EFFECTIVE: 07-01-2024

SIGN	SIZE IN.	AREA SQ.FT.	QTY EACH	TOTAL AREA SQ.FT.	QTY RELOC EACH	TOTAL RELOC SQ.FT.	SIGN NUM.	DESCRIPTION
WARNING SIGNS								
WO1-1L	48X48	16.00						TURN (SYMBOL LEFT)
WO1-1R	48X48	16.00						TURN (SYMBOL RIGHT)
WO1-2L	48X48	16.00						CURVE (SYMBOL LEFT)
WO1-2R	48X48	16.00						CURVE (SYMBOL RIGHT)
WO1-3L	48X48	16.00						REVERSE TURN (SYMBOL LEFT)
WO1-3R	48X48	16.00						REVERSE TURN (SYMBOL RIGHT)
WO1-4L	48X48	16.00						REVERSE CURVE (SYMBOL LEFT)
WO1-4R	48X48	16.00						REVERSE CURVE (SYMBOL RIGHT)
WO1-4bL	48X48	16.00						DOUBLE ARROW REVERSE CURVE (SYMBOL LEFT)
WO1-4bR	48X48	16.00						DOUBLE ARROW REVERSE CURVE (SYMBOL RIGHT)
WO1-4cL	48X48	16.00						TRIPLE ARROW REVERSE CURVE (SYMBOL LEFT)
WO1-4cR	48X48	16.00						TRIPLE ARROW REVERSE CURVE (SYMBOL RIGHT)
WO1-6	60X30	12.50						HORIZONTAL ARROW (SYMBOL)
WO1-6a	72X36	18.00						HORIZ. ARROW (SYMBOL ON PERMANENT BARRICADE)
WO1-7	60X30	12.50						DOUBLE HEAD HORIZONTAL ARROW (SYMBOL)
WO1-7a	72X36	18.00						DOUBLE HEAD HORIZ. ARROW (SYMBOL ON PERM. BARR.)
WO1-8	18X24	3.00						CHEVRON (SYMBOL)
WO1-8a	30X36	7.50						CHEVRON (SYMBOL FOR DIVIDED HIGHWAYS)
WO3-1	48X48	16.00						STOP AHEAD (SYMBOL)
WO3-2	48X48	16.00						YIELD AHEAD (SYMBOL)
WO3-3	48X48	16.00	2	32				SIGNAL AHEAD (SYMBOL)
WO3-4	48X48	16.00	24	384				BE PREPARED TO STOP
WO3-5	48X48	16.00						SPEED LIMIT AHEAD
WO4-1L	48X48	16.00						MERGE (SYMBOL FROM LEFT)
WO4-1R	48X48	16.00						MERGE (SYMBOL FROM RIGHT)
WO4-1aL	48X48	16.00						MERGE (LEFT)
WO4-1aR	48X48	16.00						MERGE (RIGHT)
WO5-1	48X48	16.00						ROAD/BRIDGE/RAMP NARROWS
WO5-3	48X48	16.00						ONE LANE BRIDGE
WO5-5	48X48	16.00						NARROW LANES
WO6-1	48X48	16.00						DIVIDED HIGHWAY (SYMBOL)
WO6-2	48X48	16.00						DIVIDED HIGHWAY END (SYMBOL)
WO6-3	48X48	16.00						TWO WAY TRAFFIC (SYMBOL)
WO7-3a	30X24	5.00						NEXT XX MILES (PLAQUE)
WO8-1	48X48	16.00						BUMP
WO8-2	48X48	16.00						DIP
WO8-3	48X48	16.00						PAVEMENT ENDS
WO8-4	48X48	16.00						SOFT SHOULDER
WO8-5	48X48	16.00						SLIPPERY WHEN WET (SYMBOL)
WO8-6	48X48	16.00						TRUCK CROSSING
WO8-6c	48X48	16.00						TRUCK ENTRANCE
WO8-7	36X36	9.00						LOOSE GRAVEL
WO8-7a	36X36	9.00						FRESH OIL / LOOSE GRAVEL
WO8-9	48X48	16.00						LOW SHOULDER
WO8-11	48X48	16.00	20	320				UNEVEN LANES
WO8-12	48X48	16.00	10	160				NO CENTER LINE
WO8-15	48X48	16.00						GROOVED PAVEMENT
WO8-15P	30X24	5.00						MOTORCYCLE (PLAQUE)
WO8-17L	48X48	16.00						SHOULDER DROP-OFF (SYMBOL LEFT)
WO8-17R	48X48	16.00						SHOULDER DROP-OFF (SYMBOL RIGHT)
WO8-17P	30X24	5.00						SHOULDER DROP-OFF (PLAQUE)
W10-1	42RND.	9.62						RAILROAD CROSSING
WO12-1	24X24	4.00						DOUBLE DOWN ARROW (SYMBOL)
WO12-2	48X48	16.00						LOW CLEARANCE (SYMBOL)
W012-2x	24X18	3.00						LOW CLEARANCE (PLAQUE)
WO12-2a	84X24	14.00						OVERHEAD LOW CLEARANCE (FEET AND INCHES)
WO12-4	120X60	50.00						LOW CLEARANCE XX FT XX IN XX MILES AHEAD
WO12-5	120X60	50.00						WIDTH RESTRICTION XX FT XX IN XX MILES AHEAD
WO13-1	30X30	6.25						ADVISORY SPEED (PLAQUE)
WO16-2	30X24	5.00						XXX FEET (PLAQUE)
WO16-3	30X24	5.00						X MILE (PLAQUE)
WO20-1	48X48	16.00	26	416				ROAD/BRIDGE/RAMP WORK AHEAD
WO20-2	48X48	16.00						DETOUR AHEAD
WO20-3	48X48	16.00						ROAD CLOSED AHEAD
WO20-4	48X48	16.00	8	128				ONE LANE ROAD AHEAD
WO20-5	48X48	16.00						RIGHT/CENTER/LEFT LANE CLOSED AHEAD
WO20-5a	48X48	16.00						2 RIGHT/CENTER/LEFT LANES CLOSED AHEAD
WO20-6a	48X48	16.00						RIGHT/CENTER/LEFT LANE CLOSED
WO20-7a	48X48	16.00	24	384				FLAGGER (SYMBOL)
WO21-2	36X36	9.00						FRESH OIL
WO21-5	48X48	16.00	3	48				SHOULDER WORK / SHOULDER WORK AHEAD
WO22-1	48X48	16.00						BLASTING ZONE AHEAD
WO22-2	42X36	10.50						TURN OFF 2-WAY RADIO AND PHONE
WO22-3	42X36	10.50						END BLASTING ZONE
GO22-1	21X15	2.19	2	4.38				WET PAINT (ARROW PIVOTS)

SIGN	SIZE IN.	AREA SQ.FT.	QTY EACH	TOTAL SQ.FT.	QTY RELOC EACH	TOTAL RELOC SQ.FT.	SIGN NUM.	DESCRIPTION
GUIDE SIGNS								
E05-1	36X48	12.00						GORE EXIT
E05-2	48X36	12.00						EXIT OPEN
E05-2a	48X36	12.00						EXIT CLOSED
GO20-1	60X24	10.00	2	20				ROAD WORK NEXT XX MILES
GO20-2	48X24	8.00	2	16				END ROAD WORK
GO20-4	36X18	4.50	1	4.5				PILOT CAR FOLLOW ME
GO20-4a	42X30	8.75	24	210				PILOT CAR IN USE WAIT & FOLLOW
GO20-4a	18X12	1.50	3	4.5				PILOT CAR IN USE WAIT & FOLLOW
GO20-5aP	36X24	6.00						WORK ZONE (PLAQUE)
MO4-8a	24X18	3.00						END DETOUR
MO4-9L	48X36	12.00						DETOUR (LEFT)
MO4-9R	48X36	12.00						DETOUR (RIGHT)
MO4-9P	48X12	4.00						STREET NAME (PLAQUE)
MO4-10L	48X18	6.00						DETOUR ARROW (LEFT)
MO4-10R	48X18	6.00						DETOUR ARROW (RIGHT)
REGULATORY SIGNS								
R1-1	48X48	13.25						STOP
R1-2	48TRI.	6.93						YIELD
R1-2a	36X36	9.00						TO ONCOMING TRAFFIC (PLAQUE)
R1-3P	30X12	2.50						ALL WAY (PLAQUE)
R2-1	36X48	12.00						SPEED LIMIT XX
R3-1	48X48	16.00						NO RIGHT TURN (SYMBOL)
R3-2	48X48	16.00						NO LEFT TURN (SYMBOL)
R3-3	36X36	9.00						NO TURNS
R3-4	48X48	16.00						NO U-TURN (SYMBOL)
R3-7L	30X30	6.25						LEFT LANE MUST TURN LEFT
R3-7R	30X30	6.25						RIGHT LANE MUST TURN RIGHT
R4-1	36X48	12.00						DO NOT PASS
R4-2	36X48	12.00						PASS WITH CARE
R4-7a	36X48	12.00						KEEP RIGHT (HORIZONTAL ARROW)
R4-8a	36X48	12.00						KEEP LEFT (HORIZONTAL ARROW)
R5-1	30X30	6.25						DO NOT ENTER
R5-1a	36X24	6.00						WRONG WAY
R6-1L	54X18	6.75						ONE WAY ARROW (LEFT)
R6-1R	54X18	6.75						ONE WAY ARROW (RIGHT)
R6-2L	24X30	5.00						ONE WAY (LEFT)
R6-2R	24X30	5.00						ONE WAY (RIGHT)
R9-9	24X12	2.00						SIDEWALK CLOSED
R9-11L	24X18	3.00						SIDEWALK CLOSED AHEAD, (ARROW LEFT) CROSS HERE
R9-11R	24X18	3.00						SIDEWALK CLOSED AHEAD, (ARROW RIGHT) CROSS HERE
R10-6	24X36	6.00	2	12				STOP HERE ON RED (45^ ARROW)
R11-2	48X30	10.00						ROAD CLOSED
R11-3a	60X30	12.50						ROAD CLOSED XX MILES AHEAD LOCAL TRAFFIC ONLY
R11-4	60X30	12.50						ROAD CLOSED TO THRU TRAFFIC
CONST-3A	60X48	20.00						FINE SIGN
CONST-3X	56X12	4.67						SPEEDING/PASSING (PLATE)
MISCELLANEOUS SIGNS								
CONST-5	48X36	12.00						POINT OF PRESENCE
CONST-5	96X48	32.00						POINT OF PRESENCE
CONST-8	48X36	12.00	2	24				WORK ZONE NO PHONE ZONE

	TOTAL
616-10.05 CONSTRUCTION SIGNS	2168
616-10.10 RELOCATED SIGNS	0

NOTE:
SEE STANDARD PLANS 616.20 FOR ADDITIONAL TRAFFIC CONTROL PLANS.
NO DIRECT PAY FOR RELOCATION OF CONSTRUCTION SIGNS.

ITEM NUMBER	TOTAL QTY	DESCRIPTION
6122008		IMPACT ATTENUATOR 40 MPH (SAND BARRELS)
6122009		IMPACT ATTENUATOR 45 MPH (SAND BARRELS)
6122010		IMPACT ATTENUATOR 50 MPH (SAND BARRELS)
6122012	2	IMPACT ATTENUATOR 55 MPH (SAND BARRELS)
6122014		IMPACT ATTENUATOR 60 MPH (SAND BARRELS)
6122017		IMPACT ATTENUATOR 65 MPH (SAND BARRELS)
6122019		IMPACT ATTENUATOR 70 MPH (SAND BARRELS)
6122020	2	REPLACEMENT SAND BARREL
6122030	2	IMPACT ATTENUATOR (RELOCATION)
6123001		TRUCK MOUNTED ATTENUATOR (TMA)
6161008		ADVANCED WARNING RAIL SYSTEM
6161012		BUOYS (BOATS KEEP OUT)
6161013		BUOYS (NO WAKE)
6161014		SPECIAL SIGN ASSEMBLY (BOATS KEEP OUT)
6161025	150	CHANNELIZER (TRIM LINE)
6161030		TYPE III MOVEABLE BARRICADE
6161033		DIRECTION INDICATOR BARRICADE
6161040		FLASHING ARROW PANEL
6161047		TYPE III OBJECT MARKER
6161055		SEQUENTIAL FLASHING WARNING LIGHT
6161070		TUBULAR MARKER
6161095		RADAR SPEED ADVISORY SYSTEM
6161096		CHANGEABLE MESSAGE SIGN, COMMISSION FURNISHED/RETAINED
6161098A	2	CHANGEABLE MESSAGE SIGN W/O COMM. INTERFACE - CONTRACTOR FURNISHED/RETAINED
6161099		CHANGEABLE MESSAGE SIGN WITH COMM. INTERFACE - CONTRACTOR FURNISHED/RETAINED
6162000A	1	WORK ZONE TRAFFIC SIGNAL SYSTEM
6162002		TEMPORARY LONG-TERM RUMBLE STRIPS
6173600D		TEMPORARY TRAFFIC BARRIER CONTRACTOR FURNISHED/RETAINED
6173602B		TEMPORARY TRAFFIC BARRIER CONTRACTOR FURNISHED/COMMISSION RETAINED
6174000A		TEMP. TRAFFIC BARRIER HEIGHT TRANSITION
6175010A		RELOCATING TEMPORARY TRAFFIC BARRIER
6176000B		TEMPORARY TRAFFIC BARRIER COMMISSION FURNISHED/RETAINED
6177000B		TEMP. TRAFFIC BARRIER HEIGHT TRANSITION COMMISSION FURNISHED/RETAINED
6208064A		TEMPORARY RAISED PAVEMENT MARKER
9029400		TEMPORARY TRAFFIC SIGNALS
9029401		TEMPORARY TRAFFIC SIGNALS AND LIGHTING

STATE OF MISSOURI
DONNA RENE PHILPOT
NUMBER PE-2019000205
PROFESSIONAL ENGINEER

Donna Rene Philpot
05/08/2024 10:33:31 AM
DONNA RENE PHILPOT - CIVIL
MO-PE-2019000205

DATE PREPARED
8/6/2024

ROUTE	STATE
62	MO
DISTRICT	SHEET NO.
SE	3

COUNTY
DUNKLIN

JOB NO.
J9P3667

CONTRACT ID.

PROJECT NO.

BRIDGE NO.

DESCRIPTION	DATE

MISSOURI HIGHWAYS AND TRANSPORTATION COMMISSION
105 WEST CAPITOL
JEFFERSON CITY, MO 65102
1-888-ASK-MODOT (1-888-275-6636)

SUMMARY OF QUANTITIES
SHEET 3 OF 3

BEGIN PROJECT

END PROJECT

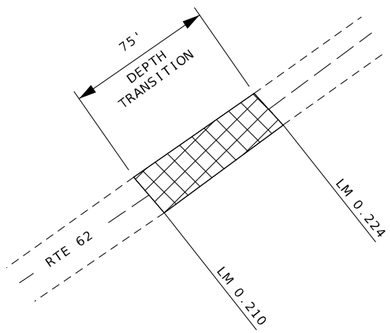

PLAN VIEW AT RTE 62

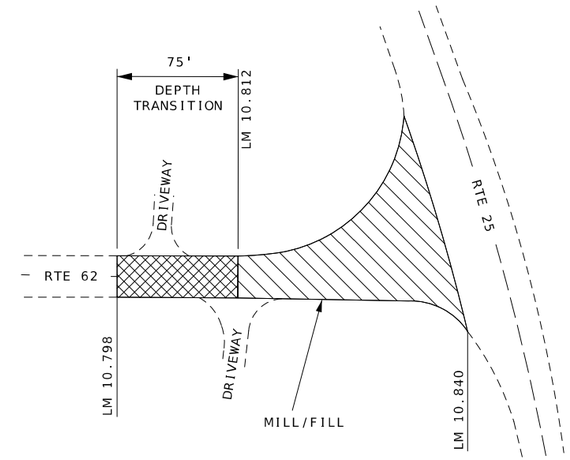

PLAN VIEW AT RTE 25

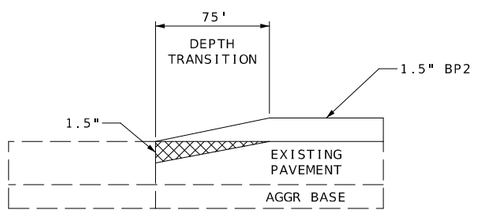

TYPICAL
RTE 62

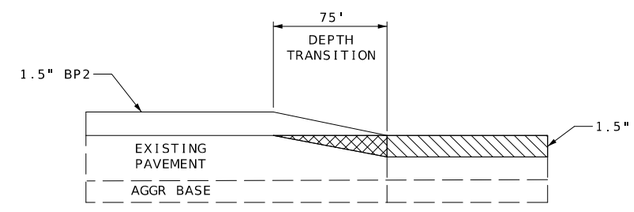

TYPICAL
RTE 62 AT RTE 25

MILL/FILL

MODIFIED
COLDMILLING

NOTE: DRAWING NOT TO SCALE. FOLLOW DIMENSIONS

STATE OF MISSOURI
DONNA RENE PHILPOT
NUMBER
PE-2019000205
PROFESSIONAL ENGINEER

Donna Rene Philpot
DONNA RENE PHILPOT - CIVIL
MO-PE-2019000205

DATE PREPARED	
8/6/2024	
ROUTE	STATE
62	MO
DISTRICT	SHEET NO.
SE	4
COUNTY	
DUNKLIN	
JOB NO.	
J9P3667	
CONTRACT ID.	
PROJECT NO.	
BRIDGE NO.	

DATE	DESCRIPTION

MISSOURI HIGHWAYS AND TRANSPORTATION COMMISSION

105 WEST CAPITOL
JEFFERSON CITY, MO 65102
1-888-ASK-MODOT (1-888-275-6636)

SPECIAL SHEET
SHEET 1 OF 6

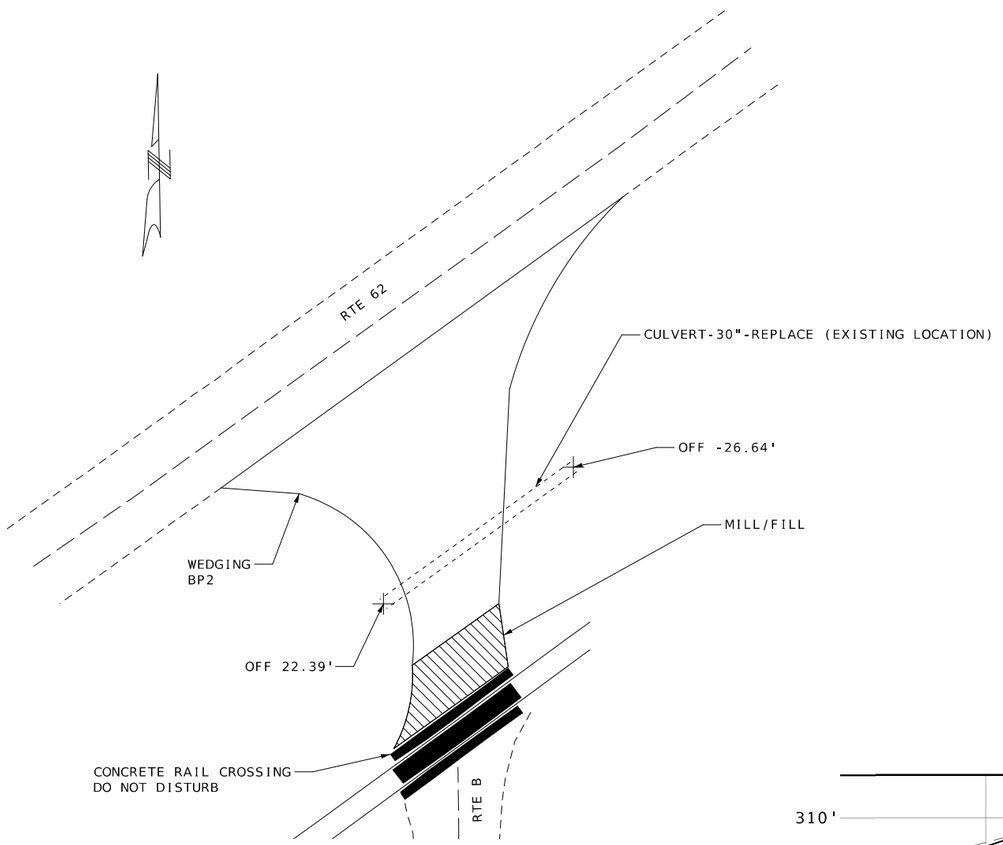

PLAN VIEW
WEDGING RTE B AT US 62 JUNCTION

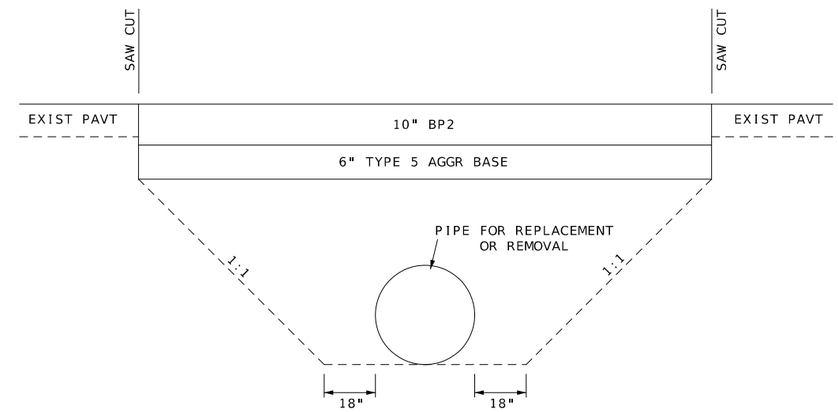

CROSSROAD CULVERT
REMOVAL/INSTALLATION

BASELINE EXIST CL

49'X30" GRP B PIPE
2-30" GRP B FES
INSTALLATION TYPE 3
CATEGORY 3 BEDDING
CLASS 3 = 90CY

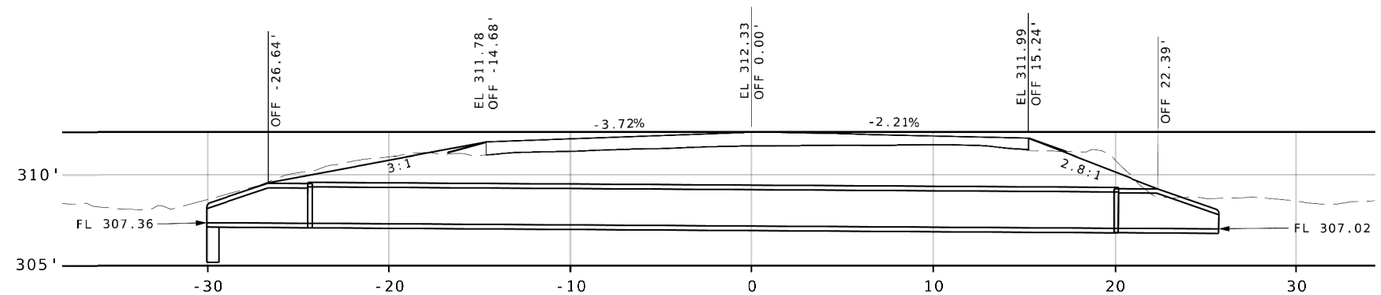

CULVERT SECTION
REPLACE IN EXISTING LOCATION

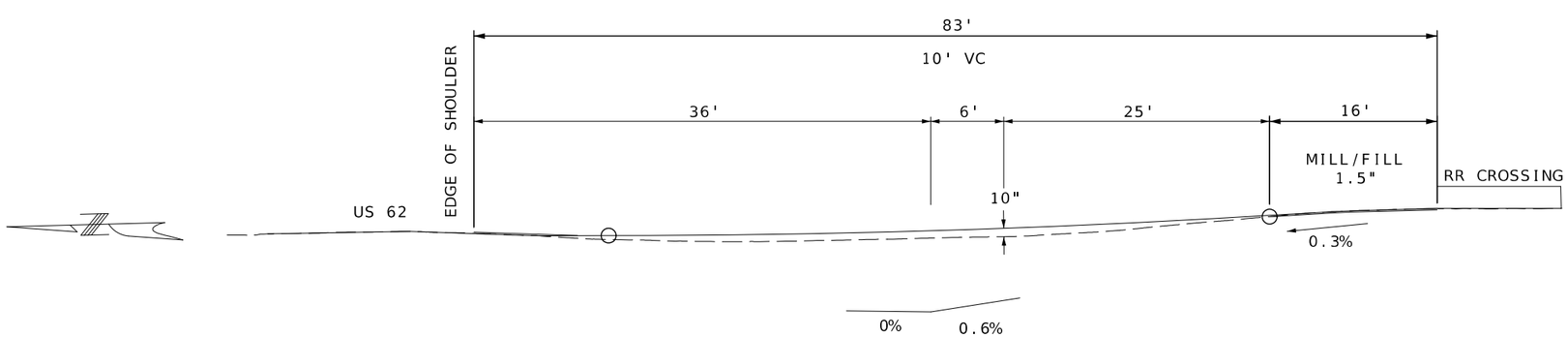

PROFILE
BP2 WEDGING RTE B AT US 62 JUNCTION

MILL/FILL

MODIFIED
COLDMILLING

NOTE: DRAWING NOT TO SCALE. FOLLOW DIMENSIONS

STATE OF MISSOURI
DONNA RENE PHILPOT
NUMBER
PE-2019000205
PROFESSIONAL ENGINEER

Donna Rene Philpot
DONNA RENE PHILPOT - CIVIL
MO-PE-2019000205

DATE PREPARED	
8/6/2024	
ROUTE	STATE
62	MO
DISTRICT	SHEET NO.
SE	5
COUNTY	
DUNKLIN	
JOB NO.	
J9P3667	
CONTRACT ID.	
PROJECT NO.	
BRIDGE NO.	

DESCRIPTION	DATE

MISSOURI HIGHWAYS AND TRANSPORTATION COMMISSION
105 WEST CAPITOL
JEFFERSON CITY, MO 65102
1-888-ASK-MODOT (1-888-275-6636)

SPECIAL SHEET
SHEET 2 OF 6

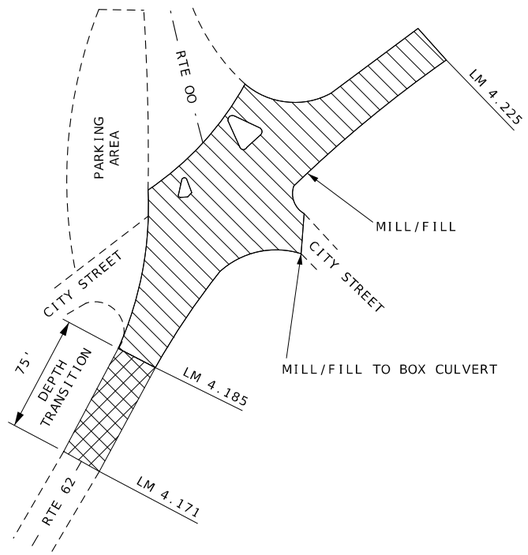

PLAN VIEW AT RTE OO

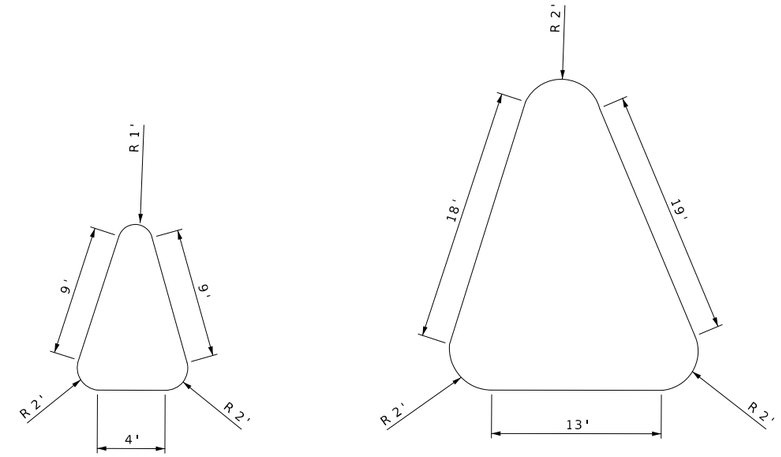

REPLACE IN EXISTING ISLAND LOCATIONS

RTE OO
ISLAND DETAIL

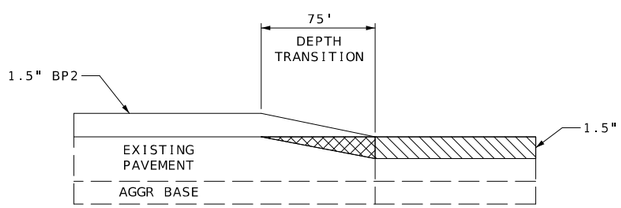

TYPICAL
RTE 62 AT RTE OO

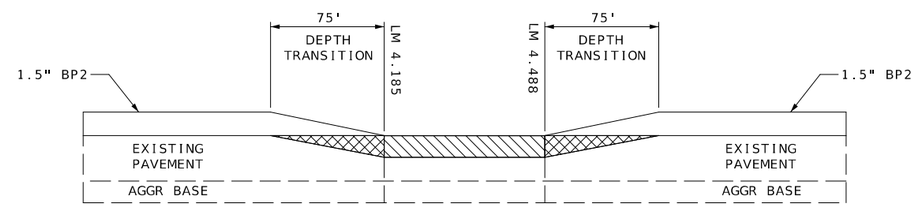

MILL/FILL
THROUGH CAMPBELL
LM 4.185 TO LM 4.488

MILL/FILL

MODIFIED COLDMILLING

NOTE: DRAWING NOT TO SCALE. FOLLOW DIMENSIONS

STATE OF MISSOURI
DONNA RENE PHILPOT
NUMBER
PE-2019000205
PROFESSIONAL ENGINEER

Donna Rene Philpot
DONNA RENE PHILPOT - CIVIL
MO-PE-2019000205

DATE PREPARED	
8/6/2024	
ROUTE 62	STATE MO
DISTRICT SE	SHEET NO. 6
COUNTY DUNKLIN	
JOB NO. J9P3667	
CONTRACT ID.	
PROJECT NO.	
BRIDGE NO.	

DESCRIPTION	DATE

MISSOURI HIGHWAYS AND TRANSPORTATION COMMISSION
105 WEST CAPITOL
JEFFERSON CITY, MO 65102
1-888-ASK-MODOT (1-888-275-6636)

SPECIAL SHEET
SHEET 3 OF 6

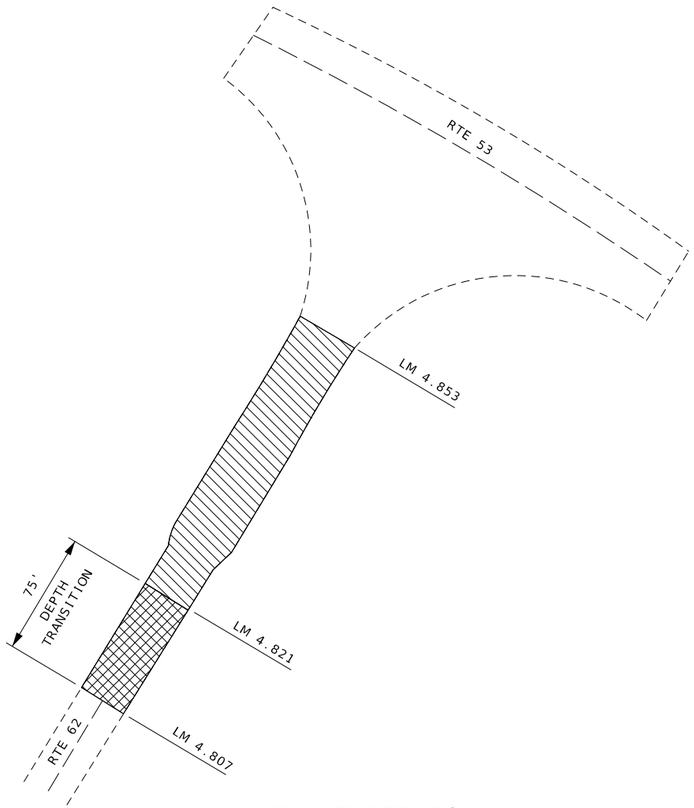

PLAN VIEW AT RTE 53

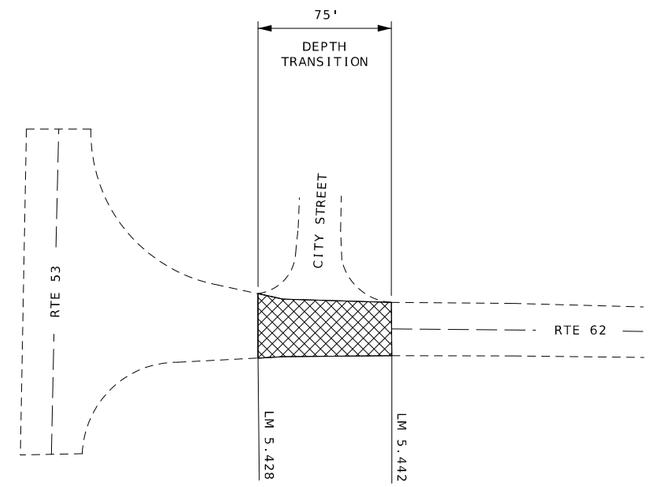

PLAN VIEW AT RTE 53

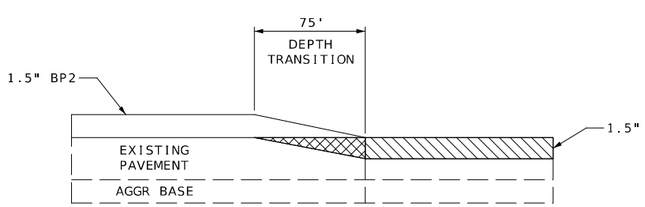

TYPICAL
RTE 62 AT RTE 53

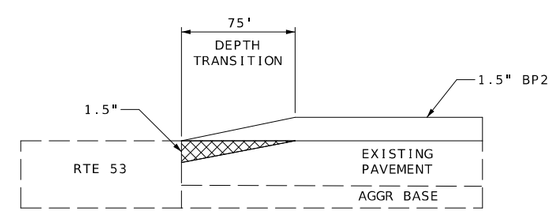

TYPICAL
RTE 62 AT RTE 53

MILL/FILL

MODIFIED
COLDMILLING

NOTE: DRAWING NOT TO SCALE. FOLLOW DIMENSIONS

STATE OF MISSOURI
DONNA RENE PHILPOT
NUMBER
PE-2019000205
PROFESSIONAL ENGINEER

Donna Rene Philpot
DONNA RENE PHILPOT - CIVIL
MO-PE-2019000205

DATE PREPARED	
8/6/2024	
ROUTE 62	STATE MO
DISTRICT SE	SHEET NO. 7
COUNTY DUNKLIN	
JOB NO. J9P3667	
CONTRACT ID.	
PROJECT NO.	
BRIDGE NO.	

DATE	DESCRIPTION

MISSOURI HIGHWAYS AND TRANSPORTATION COMMISSION
105 WEST CAPITOL
JEFFERSON CITY, MO 65102
1-888-ASK-MODOT (1-888-275-6636)

SPECIAL SHEET
SHEET 4 OF 6

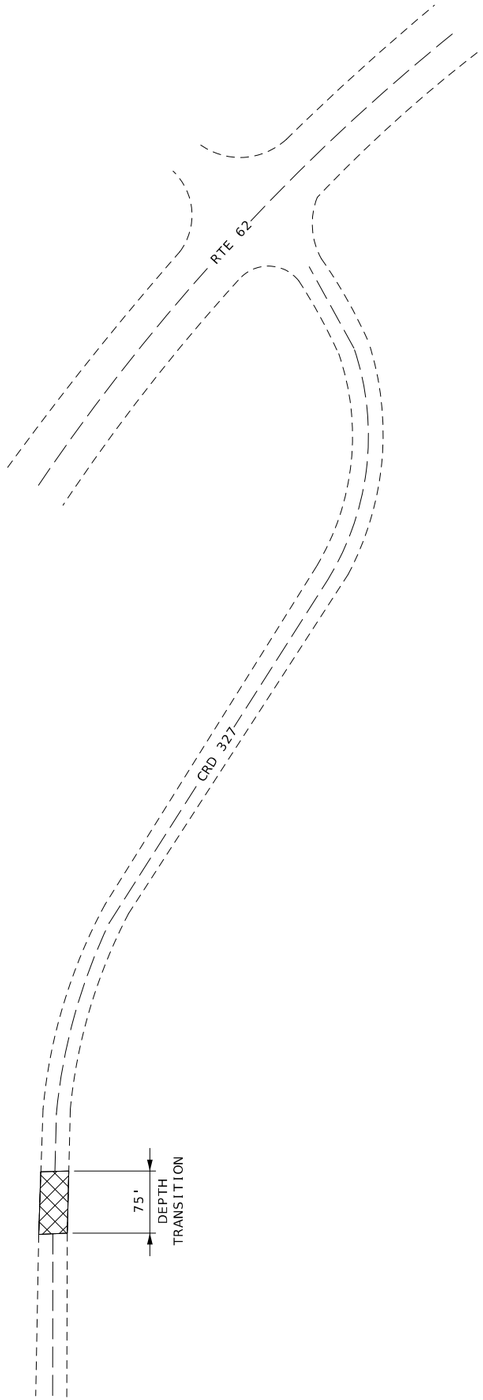

PLAN VIEW AT CRD 327

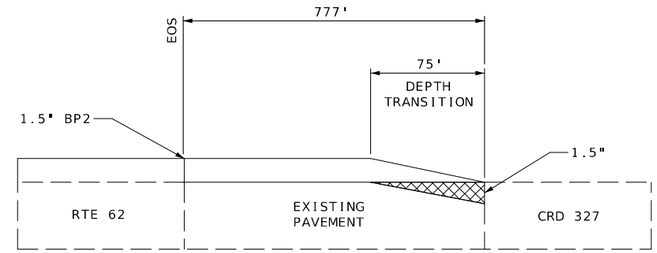

TYPICAL CRD 327

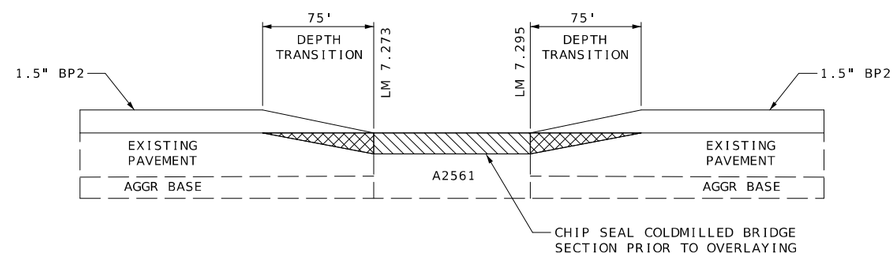

TYPICAL AT BRIDGE
LM 7.273 TO LM 7.295

MILL/FILL

MODIFIED
COLDMILLING

NOTE: DRAWING NOT TO SCALE. FOLLOW DIMENSIONS

STATE OF MISSOURI
DONNA RENE PHILPOT
NUMBER
PE-2019000205
PROFESSIONAL ENGINEER

Donna Rene Philpot
DONNA RENE PHILPOT - CIVIL
MO-PE-2019000205

DATE PREPARED	
8/6/2024	
ROUTE 62	STATE MO
DISTRICT SE	SHEET NO. 8
COUNTY DUNKLIN	
JOB NO. J9P3667	
CONTRACT ID.	
PROJECT NO.	
BRIDGE NO.	

DATE	DESCRIPTION

MISSOURI HIGHWAYS AND TRANSPORTATION COMMISSION

105 WEST CAPITOL
JEFFERSON CITY, MO 65102
1-888-ASK-MODOT (1-888-275-6636)

SPECIAL SHEET
SHEET 5 OF 6

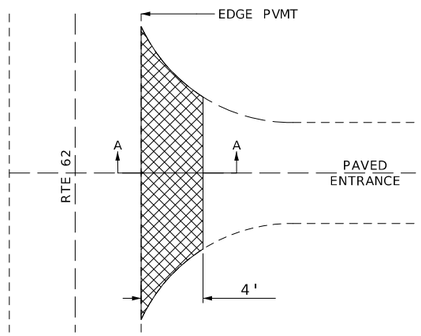

PLAN VIEW FOR PAVED
PRIVATE AND COMMERCIAL ENTRANCES

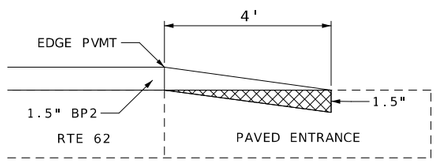

TYPICAL
SECTION A-A

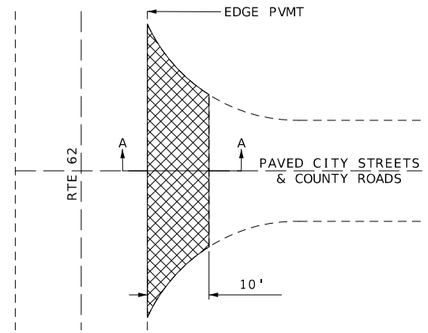

PLAN VIEW FOR PAVED
CITY STREETS AND COUNTY ROADS

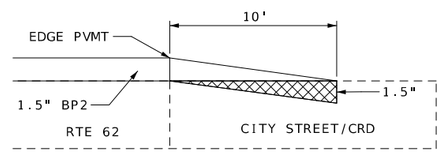

TYPICAL
SECTION A-A

NOTES:

ALL GRADING NECESSARY FOR THE PROPER CONSTRUCTION OF HOT MIX AND AGGREGATE APRONS SHALL BE CONSIDERED INCIDENTAL WORK AND AT NO DIRECT PAY.

THE WIDTH OF ALL HOT MIX AND AGGREGATE APRONS MAY BE ADJUSTED BY THE ENGINEER AS NECESSARY TO OBTAIN SUITABLE TRANSITIONS.

GRAVEL A OR CRUSHED STONE B

GRADING

COLDMILLING

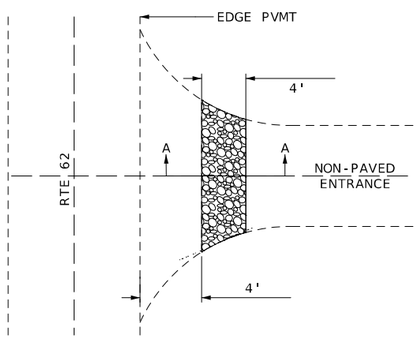

PLAN VIEW FOR NON-PAVED PRIVATE
AND COMMERCIAL ENTRANCES WITH EXISTING APRON

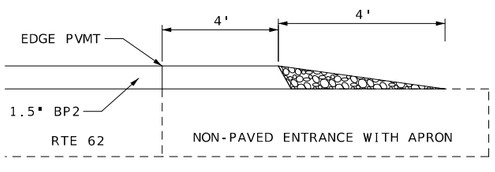

TYPICAL
SECTION A-A

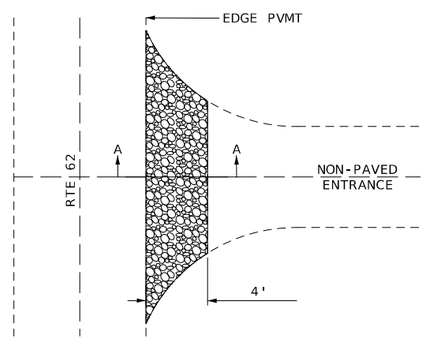

PLAN VIEW FOR NON-PAVED PRIVATE
AND COMMERCIAL ENTRANCES WITHOUT EXISTING APRON

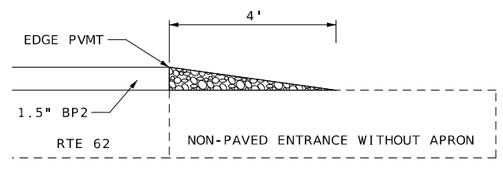

TYPICAL
SECTION A-A

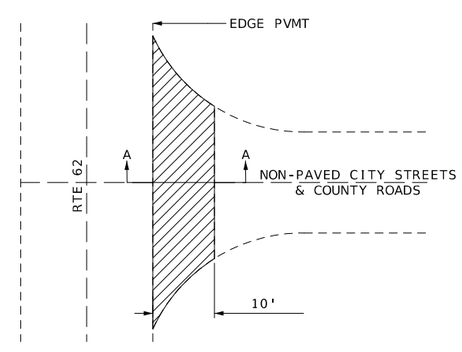

PLAN VIEW FOR NON-PAVED
CITY STREETS AND COUNTY ROADS

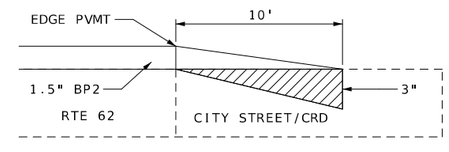

TYPICAL
SECTION A-A

NOTE: DRAWING NOT TO SCALE. FOLLOW DIMENSIONS

STATE OF MISSOURI
DONNA RENE PHILPOT
NUMBER
PE-2019000205
PROFESSIONAL ENGINEER

Donna Rene Philpot
10/31/2024 10:21:10 AM
DONNA RENE PHILPOT - CIVIL
MO-PE-2019000205

DATE PREPARED	8/6/2024
ROUTE	62
STATE	MO
DISTRICT	SE
SHEET NO.	9
COUNTY	DUNKLIN
JOB NO.	J9P3667
CONTRACT ID.	
PROJECT NO.	
BRIDGE NO.	

DESCRIPTION	DATE

MISSOURI HIGHWAYS AND TRANSPORTATION COMMISSION

105 WEST CAPITOL
JEFFERSON CITY, MO 65102
1-888-ASK-MODOT (1-888-275-6636)

SPECIAL SHEET
SHEET 6 OF 6

W020-1

(2)

W020-4

(7)

W020-7a

(8)

W021-5

(21)

TRAFFIC CONTROL LEGEND

- SIGN (SINGLE SIDED)
- CHANNELIZER
- FLAGGER

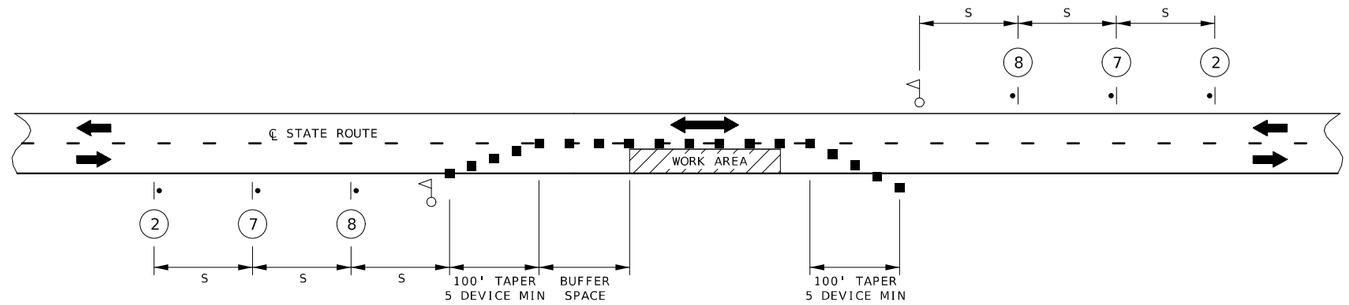

LANE CLOSURE WITH FLAGGER CONTROL

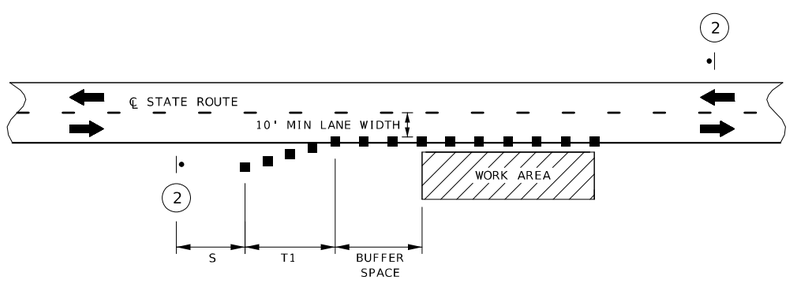

SHOULDER WORK WITH MINOR ENCROACHMENT

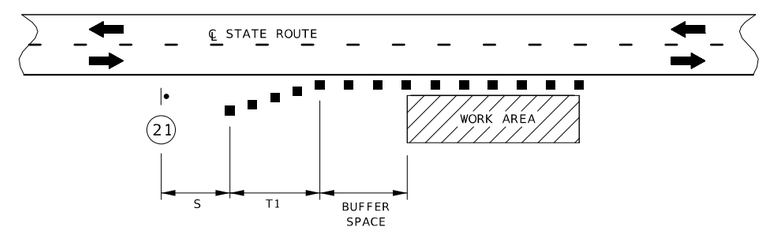

SHOULDER WORK

NOTES:

DAYLIGHT FLAGGING OPERATIONS ONLY.

DISTANCE MAY BE ADJUSTED ACCORDING TO FIELD CONDITIONS.

NO PAYMENT WILL BE MADE FOR RELOCATION OF CONSTRUCTION SIGNS.

ANY EXISTING SIGNING THAT CONFLICTS WITH THE TRAFFIC CONTROL SIGNING SHALL BE COMPLETELY COVERED OR REMOVED.

AUTOMATED FLAGGER ASSISTANCE DEVICES AND PORTABLE SIGNAL FLAGGING DEVICES MAY BE USED AS AN ALTERNATIVE FLAGGING OPERATION.

FOR ADDITIONAL TRAFFIC CONTROL PLANS FOR THIS PROJECT, USE STANDARD PLANS 616.20 (SHEETS 1 THROUGH 5).

DRAWING NOT TO SCALE. FOLLOW DIMENSIONS.

PERMANENT POSTED SPEED (MPH)	SIGN SPACING (1) (FT)	
	NON-DIVIDED HIGHWAYS (S)	DIVIDED HIGHWAYS (S)
0 - 35	200 FT	200 FT
40 - 45	350 FT	500 FT
50 - 55	500 FT	1000 FT
60 - 70	1000 FT	SA - 1000 FT SB - 1500 FT SC - 2640 FT

(1) SPACING BETWEEN SIGNS, BETWEEN LAST SIGN AND FLAGGER, BEGINNING OF TAPER OR SIGNED CONDITION. SPACINGS MAY BE ADJUSTED AS NECESSARY TO MEET FIELD CONDITIONS.

TAPER LENGTH AND SPACING							
PERMANENT POSTED SPEED (MPH)	TAPER LENGTH T1 SHOULDER (1)	TAPER LENGTH L FOR LATERAL SHIFTS (2)			BUFFER SPACE LENGTH	CHANNELIZER SPACING (3)	
		10 FT	11 FT	12 FT		TAPERS	BUFFER SPACE WORK AREA
0 - 35	70 FT	205 FT	225 FT	245 FT	280 FT	35 FT (4)	40 FT (4)
40 - 45	150 FT	450 FT	495 FT	540 FT	400 FT	40 FT (4)	80 FT (4)
50 - 55	185 FT	550 FT	605 FT	660 FT	560 FT	50 FT (5)	80 FT (5)
60 - 70	235 FT	700 FT	770 FT	840 FT	840 FT	60 FT (5)	120 FT (5)

(1) SHOULDER TAPER LENGTH BASED ON 10' (STANDARD SHOULDER WIDTH) OFFSET.

(2) TAPER LENGTHS MAY BE ADJUSTED TO ACCOMMODATE CROSSROADS, CURVES, RAMPS, INTERSECTIONS, OR OTHER GEOMETIC FEATURES.

(3) SPACING MAY BE REDUCED TO DISCOURAGE TRAFFIC ENCROACHMENT.

(4) SPACING REDUCED TO ONE-HALF AT INTERSECTIONS.

(5) SPACING MAY BE REDUCED TO ONE-HALF AT INTERSECTIONS.

STATE OF MISSOURI
DONNA RENE PHILPOT
NUMBER PE-2019000205
PROFESSIONAL ENGINEER

Donna Rene Philpot
DONNA RENE PHILPOT - CIVIL
MO-PE-2019000205

DATE PREPARED	
8/6/2024	
ROUTE 62	STATE MO
DISTRICT SE	SHEET NO. 10
COUNTY DUNKLIN	
JOB NO. J9P3667	
CONTRACT ID.	
PROJECT NO.	
BRIDGE NO.	

DATE	DESCRIPTION

MISSOURI HIGHWAYS AND TRANSPORTATION COMMISSION

105 WEST CAPITOL
JEFFERSON CITY, MO 65102
1-888-ASK-MODOT (1-888-275-6636)

TRAFFIC CONTROL
SHEET 1 OF 2

WO20-1

(2)

WO20-4

(7)

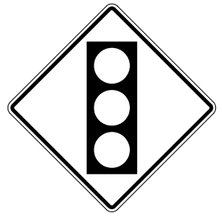

WO3-3

(12)

R10-6L

(47)

TRAFFIC CONTROL LEGEND

- SIGN (SINGLE SIDED)
- CHANNELIZER
- PORTABLE TRAFFIC SIGNAL
- SAND FILLED IMPACT ATTENUATORS

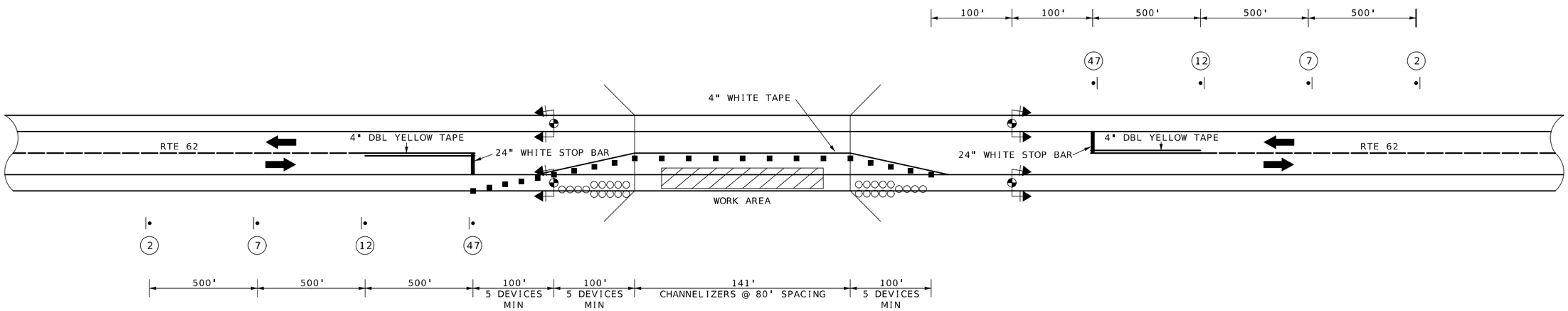

LANE CLOSURE WITH SIGNALS
FOR CURB BLOCKOUT

NOTES:

DISTANCE MAY BE ADJUSTED ACCORDING TO FIELD CONDITIONS.

ANY EXISTING SIGNING THAT CONFLICTS WITH THE TRAFFIC CONTROL SIGNING SHALL BE COMPLETELY COVERED OR REMOVED.

NO PAYMENT WILL BE MADE FOR RELOCATION OF CONSTRUCTION SIGNS.

CONTRACTOR SHALL CONSULT WITH THE ENGINEER REGARDING PHASING, INTERCONNECTION AND OPERATION OF SIGNALS PRIOR TO ENGINEER'S APPROVAL OF SIGNAL INSTALLATIONS

DRAWING NOT TO SCALE. FOLLOW DIMENSIONS

STATE OF MISSOURI
DONNA RENE PHILPOT
NUMBER PE-2019000205
PROFESSIONAL ENGINEER

Donna Rene Philpot
DONNA RENE PHILPOT - CIVIL
MO-PE-2019000205

DATE PREPARED	8/8/2024
ROUTE	62
STATE	MO
DISTRICT	SE
SHEET NO.	11
COUNTY	DUNKLIN
JOB NO.	J9P3667
CONTRACT ID.	
PROJECT NO.	
BRIDGE NO.	

DESCRIPTION

DATE

MISSOURI HIGHWAYS AND TRANSPORTATION COMMISSION

105 WEST CAPITOL
JEFFERSON CITY, MO 65102
1-888-ASK-MODOT (1-888-275-6636)

TRAFFIC CONTROL
SHEET 2 OF 2

EROSION CONTROL AT DRIVEWAYS

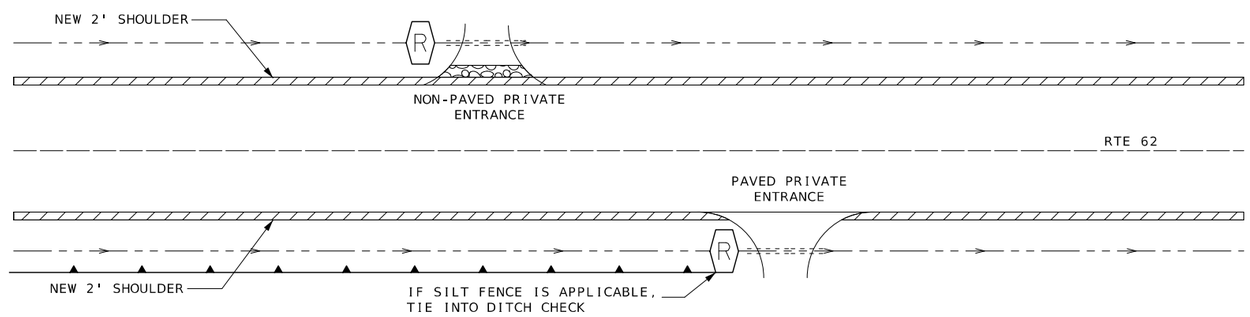

PLAN VIEW

NOTE:

TIE SILT FENCE INTO SEDIMENT TRAP WHEN DITCH IS NOT DEFINED

DRAWING NOT TO SCALE. FOLLOW DIMENSIONS.

STATE OF MISSOURI
DONNA RENE PHILPOT
NUMBER PE-2019000205
PROFESSIONAL ENGINEER

Donna Rene Philpot
08/06/2024 10:30:36 AM
DONNA RENE PHILPOT - CIVIL
MO-PE-2019000205

DATE PREPARED	8/6/2024
ROUTE	62
STATE	MO
DISTRICT	SE
SHEET NO.	12
COUNTY	DUNKLIN
JOB NO.	J9P3667
CONTRACT ID.	
PROJECT NO.	
BRIDGE NO.	

DESCRIPTION	DATE

MISSOURI HIGHWAYS AND TRANSPORTATION COMMISSION

105 WEST CAPITOL
JEFFERSON CITY, MO 65102
1-888-ASK-MODOT (1-888-275-6636)

EROSION CONTROL
SHEET 1 OF 1

SIGNS						**BACKING BARS				PERFORATED SQUARE STEEL TUBE												
902 SIGNAL SIGNS TABULATED ON D37-1 SHEET						ITEM NO. 9031210				2 IN. POST						2.5 IN. POST						BREAK AWAY ASSEMBLY
													ANCHORS						2.25"	ANCHORS		
SIGN NO.	SIGN SIZE	LOG MILE	HORZ CLEAR IF NOT STD	LOCATION	SIGN DTL. SHT. NO.	2" X 3/8" BARS @ 2.55 LBS PER FT NO. EACH	LGTH IN.	TOTAL LF	TOTAL LBS	POST NO.1	POST NO.2	TOTAL ITEM NO. 9031270A	DRIVEN 12-GA. ITEM NO. 9031271A	DRIVEN 7-GA. ITEM NO. 9031273A	CONCRETE 7-GA. ITEM NO. 9031274	POST NO.1	POST NO.2	TOTAL ITEM NO. 9031280	INSERT (6 FT) ITEM NO. 9031272A	DRIVEN 7-GA. ITEM NO. 9031281A	CONCRETE 7-GA. ITEM NO. 9031285	ITEM NO. 9031241
						EACH	IN.	LF	LBS	LF	LF	LF	EA	EA	EA	LF	LF	LF	EA	EA	EA	EA
1	36X36	0.216		RT						11.00		11.00	1									
2	24X24	0.238		RT						10.00		10.00	1									
3	36X48	0.338		RT						12.00		12.00	1									
4	36X36	0.370		RT						12.50		12.50	1									
5	ASSEMBLY	0.418		RT						11.00		11.00	1									
6	12X36	0.441		RT						9.75		9.75	1									
7	12X36	0.441		LT						9.75		9.75	1									
8	36X36	0.500		RT						11.00		11.00	1									
9	36X36	0.502		LT						11.00		11.00	1									
10	12X36	0.584		RT						9.75		9.75	1									
11	12X36	0.588		LT						9.75		9.75	1									
12	36X36	0.656		LT						12.50		12.50	1									
13	12X36	0.746		LT						9.75		9.75	1									
14	12X36	0.749		RT						9.75		9.75	1									
15	36X36	1.006		RT						12.50		12.50	1									
16	36X36	1.113		RT						11.00		11.00	1									
17	36X36	1.214		LT						12.50		12.50	1									
18	36X36	2.458		RT						12.50		12.50	1									
19	36X36	2.677		RT						11.00		11.00	1									
20	12X36	2.720		RT						9.75		9.75	1									
21	36X36	2.891		LT						12.50		12.50	1									
22	12X36	2.973		LT						9.75		9.75	1									
23	12X36	2.975		RT						9.75		9.75	1									
24	36X36	3.404		LT						11.00		11.00	1									
25	ASSEMBLY	3.530		RT						11.25		11.25	1									
26	ASSEMBLY	3.598		LT												14.50		14.25		1		
27	ASSEMBLY	3.625		RT		4	50	16.67	42.51							10.75		10.75		1		
28	42X42	3.626		RT												11.50		11.50		1		
29	36X48	3.626		LT						12.00		12.00	1									
30	48X24	3.635		LT						9.50	9.50	19.00	2									
31	ASSEMBLY	3.636		LT						11.25		11.25	1									
32	ASSEMBLY	3.637		LT		4	50	16.67	42.51							10.75		10.75		1		
33	36X36	3.641		RT						11.00		11.00	1									
34	ASSEMBLY	3.644		RT						13.25	13.25	26.50	2									
35	ASSEMBLY	3.680		RT												14.50		14.25		1		
36	ASSEMBLY	3.813		LT						11.25		11.25	1									
37	36X36	3.817		RT						12.50		12.50	1									
38	36X36	3.986		RT						11.00		11.00	1									
39	36X36	4.058		LT						12.50		12.50	1									
40	36X48	4.113		LT						12.00		12.00	1									
41	36X36	4.117		LT						11.00		11.00	1									
42	36X48	4.125		RT						12.00		12.00	1									
43	36X36	4.141		RT						12.50		12.50	1									
44	ASSEMBLY	4.164		LT												14.50		14.25		1		
45	ASSEMBLY	4.198		RT		4	50	16.67	42.51							10.75		10.75		1		
46	ASSEMBLY	4.199		RT						11.25		11.25	1									
47	36X36	4.207		LT						13.00		13.00	1									
50	ASSEMBLY	4.658		RT		2	50	8.33	21.24							10.75		10.75		1		
51	ASSEMBLY	4.709		RT						13.25		13.25	1									
52	ASSEMBLY	5.476		LT						11.25		11.25	1									
53	36X48	10.668		LT						12.00		12.00	1									
				SUBTOTAL				148.8				508.3	45					97.3		8		
				TOTAL				150				509	45					98		8		

**BACKING BARS ARE TOTALED WITH STRUCTURAL STEEL
AND/OR PIPE POSTS

STATE OF MISSOURI
DONNA RENE PHILPOT
NUMBER
PE-2019000205
PROFESSIONAL ENGINEER

Donna Rene Philpot
DONNA RENE PHILPOT - CIVIL
MO-PE-2019000205

DATE PREPARED
8/6/2024

ROUTE	STATE
62	MO
DISTRICT	SHEET NO.
SE	13

COUNTY
DUNKLIN

JOB NO.
J9P3667

CONTRACT ID.

PROJECT NO.

BRIDGE NO.

DATE	DESCRIPTION

MISSOURI HIGHWAYS AND TRANSPORTATION COMMISSION
105 WEST CAPITOL
JEFFERSON CITY, MO 65102
1-888-ASK-MODOT (1-888-275-6636)

SIGNING
SHEET 1 OF 3

STANDARD SIGN ASSEMBLIES

SIGN NUMBER	LOG MILE	LOCATION	TYPE																												REMARKS
			SH	SH	SH	SH	SH	SH	SH	SH	SH	SH	SH	SH	SH	SH	SH	SH	SH	SHF	SH	SH	SH	SH	SH	SH	SHF	SHF	SHF	SHF	
			SIGN DESCRIPTION, SIZES & NUMBER OF EACH																												
			AMERICA'S BYWAYS	MISSOURI BYWAY	EMERGENCY DIAL *55	CAMPBELL CITY LIMIT	62	25	53	B	00	WW	JCT	EAST	WEST						STOP FOR SCHOOL BUS LOADING UNLOADING CHILDREN STATE LAW	STOP	SPEED LIMIT 55	SPEED LIMIT 45	SPEED LIMIT 35		ALL LANES		R R	
			D6-4a 24X12	D6-4c 24X16	D12-4a 36X36	I4-1 54X24	M1-4 24X24	M1-5 24X24	M1-5 24X24	M1-5a 24X24	M1-5a 30X24	M1-5a 30X24	M2-1 21X15	M3-2 24X12	M3-4 24X12	M5-1R 21X15	M6-1 21X15	M6-3 21X15	M6-4 21X15	OM-3R 12X36	R0-1 24X24	R1-1 36X36	R2-1 36X48	R2-1 36X48	R2-1 36X48	R3-4 36X36	W0-1 24X12	W1-7 48X24	W10-1 42X42	W10-3 36X36	
1	0.216	RT			1																										
2	0.238	RT					1																								
3	0.338	RT																					1								
4	0.370	RT																												1	
5	0.418	RT																			1						1				
6	0.441	RT																		1											
7	0.441	LT																		1											
8	0.500	RT																				1									
9	0.502	LT																				1									
10	0.584	RT																		1											
11	0.588	LT																		1											
12	0.656	LT																												1	
13	0.746	LT																		1											
14	0.749	RT																		1											
15	1.006	RT																												1	
16	1.113	RT																				1									
17	1.214	LT																												1	
18	2.458	RT																												1	
19	2.677	RT																				1									
20	2.720	RT																		1											
21	2.891	LT																												1	
22	2.973	LT																		1											
23	2.975	RT																		1											
24	3.404	LT																				1									
25	3.530	RT								1			1																		
26	3.598	LT	1	1			1								1																
27	3.625	RT					1			1							1	1													
28	3.626	RT																											1		
29	3.626	LT																					1								
30	3.635	LT																										1			
31	3.636	LT					1												1												
32	3.637	LT					1			1							1	1													
33	3.641	RT																				1									
34	3.644	RT				1																		1							
35	3.680	RT	1	1			1							1																	
36	3.813	LT								1			1																		
37	3.817	RT																												1	
38	3.986	RT																				1									
39	4.058	LT																												1	
40	4.113	LT																						1							
41	4.117	LT																				1									
42	4.125	RT																							1						
43	4.141	RT																												1	
44	4.164	LT	1	1			1								1																
45	4.198	RT					1				1						1	1													
46	4.199	RT					1												1												
47	4.207	LT																				1									
48	4.326	RT																								1					USE EXISTING LIGHT POLE
49	4.380	RT																								1					USE EXISTING LIGHT POLE
50	4.658	RT							1			1	1																		
51	4.709	RT					1									1															
52	5.476	LT					1									1															
53	10.664	RT						1					1																		
54	10.668	LT																					1								USE EXISTING POST
	TOTAL		3	3	1	1	11	1	1	4	1	1	4	1	2	2	3	3	2	9	1	9	3	2	1	2	1	1	1	9	

STATE OF MISSOURI
DONNA RENE PHILPOT
NUMBER PE-2019000205
PROFESSIONAL ENGINEER

Donna Rene Philpot
DONNA RENE PHILPOT - CIVIL
MO-PE-2019000205

DATE PREPARED
8/6/2024

ROUTE	STATE
62	MO
DISTRICT	SHEET NO.
SE	14

COUNTY
DUNKLIN

JOB NO.
J9P3667

CONTRACT ID.

PROJECT NO.

BRIDGE NO.

DATE	DESCRIPTION

MISSOURI HIGHWAYS AND TRANSPORTATION COMMISSION
105 WEST CAPITOL
JEFFERSON CITY, MO 65102
1-888-ASK-MODOT (1-888-275-6636)

SIGNING
SHEET 2 OF 3

SIGN SUMMARY

STANDARD SIGN OR SPECIAL SIGN NUMBER	SIGN DETAIL SHEET NO.	NO. EACH	SIZE, TYPE & SQUARE FEET				
			SIZE	FLAT SHEET SH ITEM NO. 9035004A	FLAT SHEET FLORESCENT SHF* ITEM NO. 9035069A	STRUCTURAL ST ITEM NO. 9035011A	STRUCTURAL FLORESCENT STF* ITEM NO. 9035071A
D6-4a	STD	3	24X12	6.00			
D6-4c	STD	3	24X16	8.00			
D12-4a	STD	1	36X36	9.00			
I4-1	14	1	54X24	9.00			
M1-4	STD	11	24X24	44.00			
M1-5 (25)	STD	1	24X24	4.00			
M1-5 (53)	STD	1	24X24	4.00			
M1-5a (B)	STD	4	24X24	16.00			
M1-5a (OO)	STD	1	30X24	5.00			
M1-5a (WW)	STD	1	30X24	5.00			
M2-1	STD	4	21X15	8.75			
M3-2	STD	1	24X12	2.00			
M3-4	STD	2	24X12	4.00			
M5-1R	STD	2	21X15	4.38			
M6-1	STD	3	21X15	6.56			
M6-3	STD	3	21X15	6.56			
M6-4	STD	2	21X15	4.38			
OM-3R	STD	9	12X36		27.00		
R0-1	STD	1	24X24	4.00			
R1-1	STD	9	36X36	81.00			
R2-1 (55)	STD	3	36X48	36.00			
R2-1 (45)	STD	2	36X48	24.00			
R2-1 (35)	STD	1	36X48	12.00			
R3-4	STD	2	36X36	18.00			
W0-1	STD	1	24X12		2.00		
W1-7	STD	1	48X24		8.00		
W10-1	STD	1	42X42		9.60		
W10-3	STD	9	36X36		81.00		
			TOTAL	322	128		

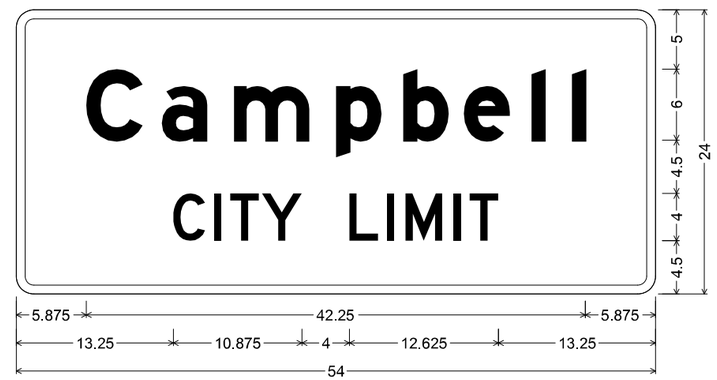

I4-1 SH-FLAT SHEET;
1.500" Radius, 0.750" Border, White on, Green;
"Campbell", E Mod; "CITY LIMIT", D;
Table of letter and object lefts

C	a	m	p	b	e	l	l	
5.875	12.250	18.375	27.000	32.750	37.875	43.500	47.000	
C	I	T	Y	L	I	M	I	T
13.250	16.750	18.125	20.750	28.125	31.375	32.875	36.875	38.250

STATE OF MISSOURI
DONNA RENE PHILPOT
NUMBER PE-2019000205
PROFESSIONAL ENGINEER

Donna Rene Philpot
08/06/2024 10:24:36 AM
DONNA RENE PHILPOT - CIVIL
MO-PE-2019000205

DATE PREPARED	
8/6/2024	
ROUTE 62	STATE MO
DISTRICT SE	SHEET NO. 15
COUNTY DUNKLIN	
JOB NO. J9P3667	
CONTRACT ID.	
PROJECT NO.	
BRIDGE NO.	

DATE	DESCRIPTION

MISSOURI HIGHWAYS AND TRANSPORTATION COMMISSION
105 WEST CAPITOL
JEFFERSON CITY, MO 65102
1-888-ASK-MODOT (1-888-275-6636)

SIGNING
SHEET 3 OF 3

SEC/SUR 1 TWP 22N RGE 9E

U.I.P. AND REHABILITATE EXISTING (43'-53'-43') CONTINUOUS COMPOSITE WIDE FLANGE BEAM SPANS

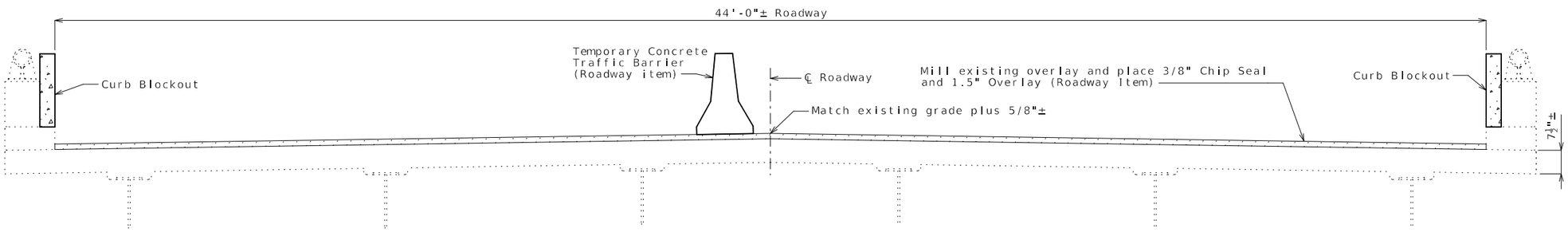

TYPICAL SECTION THRU EXISTING DECK

Estimated Quantities		
Item		Total
Curb Blockout	linear foot	314

General Notes:

Design Specifications:

2002 AASHTO LFD (17th Ed.) Standard Specifications
Bridge Deck Rating = 7

Design Loading:

H20-44 (1965), HS20-44 (New Construction)

Design Unit Stresses:

Class B-1 Concrete (Curb Blockout) f'c = 4,000 psi
Reinforcing Steel (Grade 60) fy = 60,000 psi

Miscellaneous:

Roadway surfacing adjacent to bridge ends shall match new bridge wearing surface (roadway item).

Outline of existing work is indicated by light dashed lines. Heavy lines indicate new work.

Contractor shall verify all dimensions in field before finalizing the shop drawings.

In order to maintain grade and a minimum thickness of wearing surface as shown on plans it may be necessary to use additional quantities of wearing surface at various locations throughout the structure. The cost of furnishing and installing the wearing surface will be considered completely covered in the contract unit price, including all additional labor, materials or equipment for variations in thickness of wearing surface.

Traffic Handling:

Traffic to be maintained on structure during construction. See roadway plans for traffic control.

REPAIRS TO BRIDGE: ROUTE 62
OVER DRAINAGE DITCH NO. 1

ROUTE 62 FROM ROUTE 53 TO ROUTE 25
ABOUT 1.9 MILES EAST OF ROUTE 53
BEGINNING STATION 99+41.00± (Match Existing)

STATE OF MISSOURI
TED S. KOESTER
NUMBER PE-2013000591
PROFESSIONAL ENGINEER
THIS SHEET HAS BEEN SIGNED, SEALED AND DATED ELECTRONICALLY.

DATE PREPARED 10/9/2024
ROUTE 62 STATE MO
DISTRICT BR SHEET NO. 1
COUNTY DUNKLIN
JOB NO. J9P3667
CONTRACT ID.
PROJECT NO.
BRIDGE NO. A25612

DATE	DESCRIPTION

MISSOURI HIGHWAYS AND TRANSPORTATION COMMISSION
105 WEST CAPITOL
JEFFERSON CITY, MO 65102
1-888-ASK-MODOT (1-888-275-6636)

Detailed Jun. 2024
Checked Jun. 2024

Note: This drawing is not to scale. Follow dimensions.

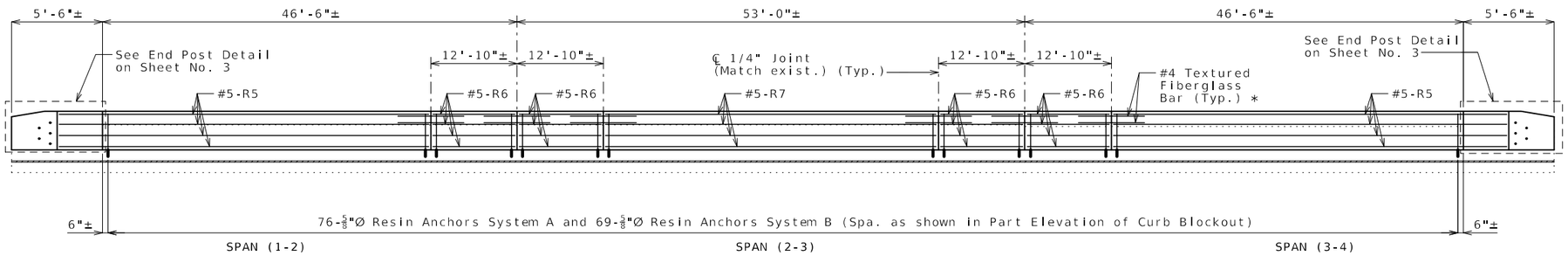

ELEVATION OF LEFT CURB BLOCKOUT

(Right curb blockout similar)

Longitudinal dimensions are along grade and are taken at top outside edge of parapet.

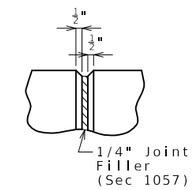

PART ELEVATION AT FORMED JOINT

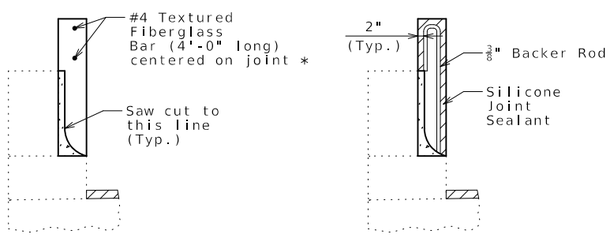

SECTION THRU SAW CUT JOINT

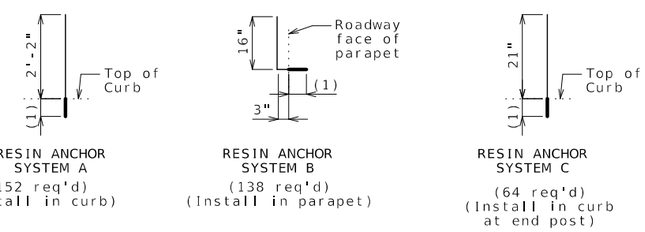

(1) Use manufacturer's embedment length (5" minimum embedment).

DETAILS OF RESIN ANCHORS

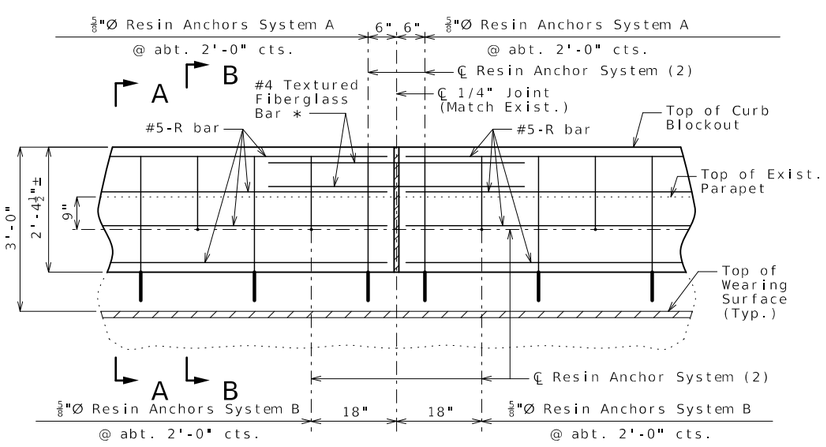

PART ELEVATION OF CURB BLOCKOUT

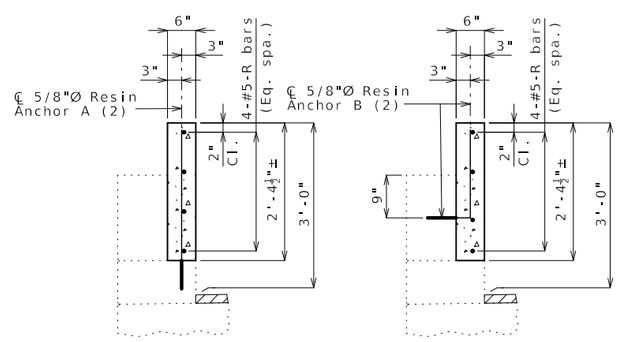

SECTION A-A

SECTION B-B

CURB BLOCKOUT

Notes:

* Slip-formed option only.

Conventional forming or slip forming may be used. Saw cut joints may be used with conventional forming.

Bridge rail not shown for clarity.

Concrete in curb blockout shall be Class B-1.

Measurement of curb blockout is to the nearest linear foot, measured at the top outside edge of parapet. (Match existing curb and parapet)

All exposed edges of curb blockout shall have either a 1/2-inch radius or 3/8-inch bevel, unless otherwise noted.

Payment for concrete, reinforcement, resin anchor systems and any other work incidental to the curb blockout, complete in place, will be considered completely covered by the contract unit price for Curb Blockout per linear foot.

Cost of any concrete curb or parapet repair will be considered completely covered by the contract unit price for Curb Blockout.

All curb blockout reinforcement shall be epoxy coated.

(2) Shift resin anchors where necessary to clear existing anchor bolts for bridge rail, miss curb outlets (if present) and clear existing reinforcement.

Use a minimum lap of 3'-1" for #5 horizontal curb blockout bars.

Concrete traffic barrier delineators shall be placed on top of the curb blockout similarly as shown on Missouri Standard Plans 617.10 and in accordance with Sec 617. Delineators on bridges with two-lane, two-way traffic shall have retroflective sheeting on both sides. Concrete traffic barrier delineators will be considered completely covered by the contract unit price for Curb Blockout.

The contractor shall use one of the qualified resin anchor systems in accordance with Sec 1039.

The minimum embedment depth in concrete with f'c = 4,000 psi for the resin anchor system shall be that required to meet the minimum ultimate pullout strength in accordance with Sec 1039 but shall not be less than 5 inches.

An epoxy coated #5 Grade 60 reinforcing bar shall be substituted for the 5/8"Ø threaded rod.

For slip-formed option, both sides of the curb blockout shall have a vertically broomed finish and the top shall have a transversely broomed finish.

Detailed Jun. 2024
Checked Jun. 2024

Note: This drawing is not to scale. Follow dimensions.

STATE OF MISSOURI
TED S. KOESTER
NUMBER PE-2013000591
PROFESSIONAL ENGINEER
THIS SHEET HAS BEEN SIGNED, SEALED AND DATED ELECTRONICALLY.

DATE PREPARED 7/11/2024	
ROUTE 62	STATE MO
DISTRICT BR	SHEET NO. 2
COUNTY DUNKLIN	
JOB NO. J9P3667	
CONTRACT ID.	
PROJECT NO.	
BRIDGE NO. A25612	

DESCRIPTION

DATE

MISSOURI HIGHWAYS AND TRANSPORTATION COMMISSION
105 WEST CAPITOL
JEFFERSON CITY, MO 65102
1-888-ASK-MODOT (1-888-275-6636)

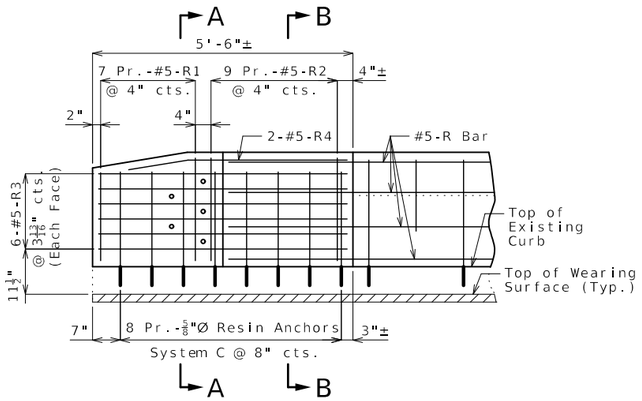

ELEVATION SHOWING REINFORCEMENT

(Right End Post at End Bent No. 4 similar)

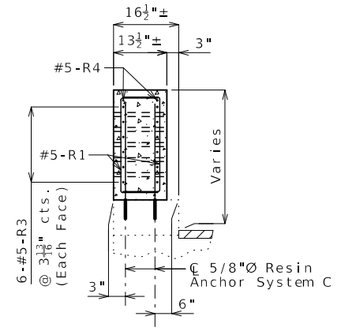

SECTION A-A

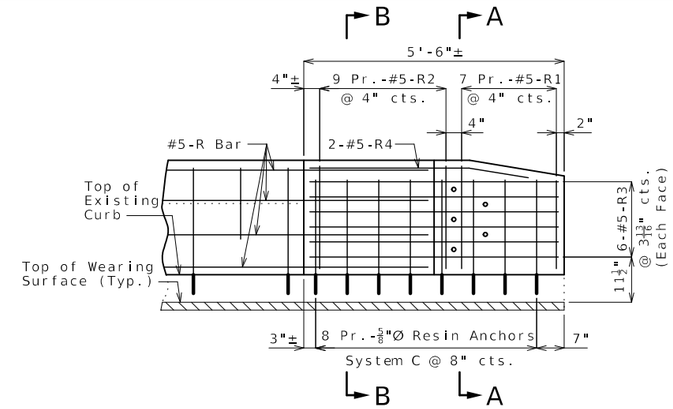

ELEVATION SHOWING REINFORCEMENT

(Right End Post at End Bent No. 1 similar)

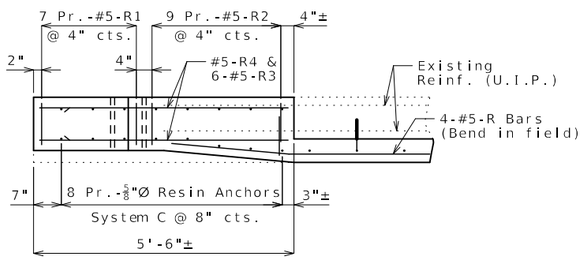

PLAN SHOWING REINFORCEMENT

LEFT END POST AT END BENT NO. 1

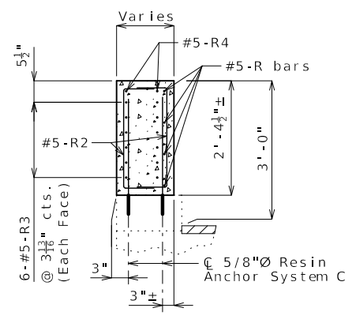

SECTION B-B

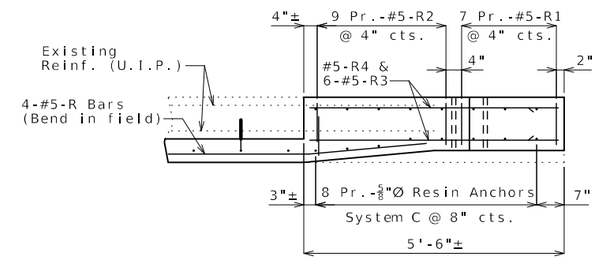

PLAN SHOWING REINFORCEMENT

LEFT END POST AT END BENT NO. 4

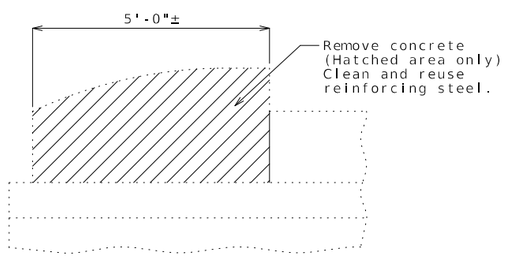

PART ELEVATION SHOWING END POST
CONCRETE REMOVAL

Cost of removing existing end posts will be considered completely covered by the contract unit price for Curb Blockout.

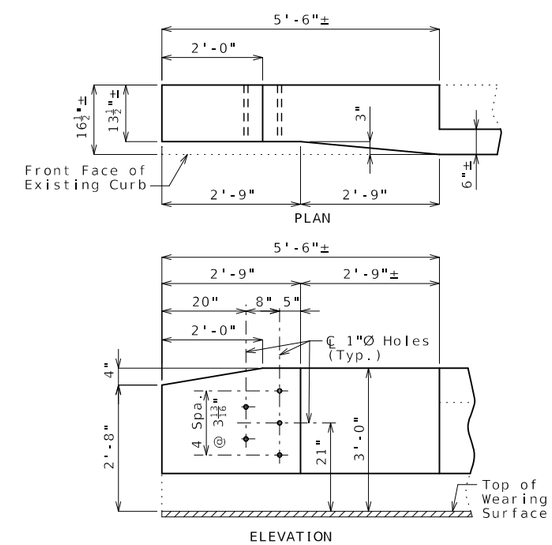

DETAILS OF END POST AND
GUARD RAIL ATTACHMENT

Notes:

Work this sheet with Sheet No. 2.

For details of resin anchors, see Sheet No. 2.

Resin anchors shall be shifted or bent in field to clear one-inch diameter holes by at least 1/2 inch.

CURB BLOCKOUT AT END BENTS

Detailed Jun. 2024
Checked Jun. 2024

Note: This drawing is not to scale. Follow dimensions.

STATE OF MISSOURI
TED S. KOESTER
NUMBER PE-2013000591
PROFESSIONAL ENGINEER
THIS SHEET HAS BEEN SIGNED, SEALED AND DATED ELECTRONICALLY.

DATE PREPARED	7/11/2024
ROUTE	62
STATE	MO
DISTRICT	BR
SHEET NO.	3
COUNTY	DUNKLIN
JOB NO.	J9P3667
CONTRACT ID.	
PROJECT NO.	
BRIDGE NO.	A25612

DESCRIPTION

DATE

MISSOURI HIGHWAYS AND TRANSPORTATION COMMISSION

105 WEST CAPITOL
JEFFERSON CITY, MO 65102
1-888-ASK-MODOT (1-888-275-6636)

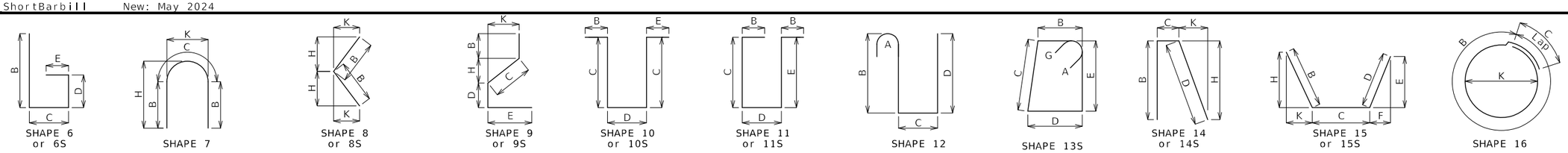

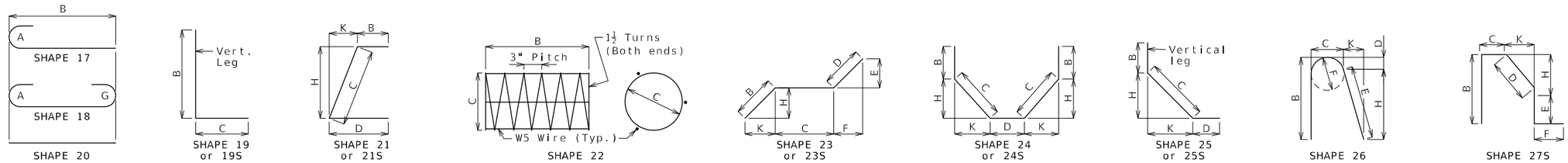

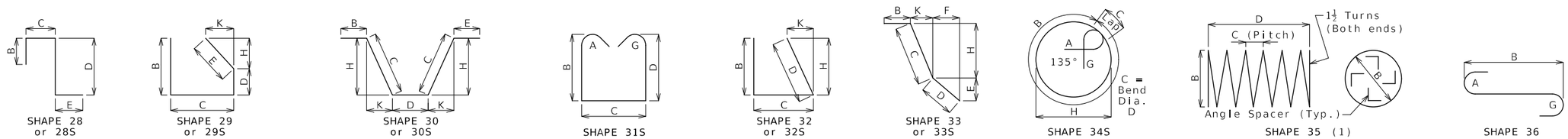

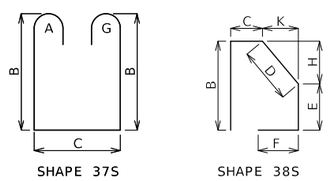

All dimensions are out to out.

Shapes ending with an S shall be bent in accordance with stirrup pin bend shapes.

Unless otherwise noted, finished bending diameter D is the same for all bends of a shape.

(1) Shall be a deformed or plain spiral bar or wire.

Four angle or channel spacers are required for each column spiral. Spacers are to be placed on inside of spirals. Length and weight of column spirals do not include splices or spacers.

Finished Bend Diameters D and Hook Dimensions

Standard Pin Bend Shapes

Size	Case	D	A or G 90°	A or G 180°	J 180°
#4	1	3"	8"	6"	4"
#5	1	3¾"	10"	7"	5"
#6	1	4½"	12"	8¼"	6"
#7	2	5¼"	14"	9¾"	7"
	3	7"	15"	11½"	8¾"
#8	2	6"	16"	11"	8"
	3	8"	17"	13¼"	10"
#9	1	9½"	19½"	15½"	11¾"
#10	1	10¾"	22"	17½"	13¼"
#11	1	12"	24½"	19½"	14⅞"
#14	1	18¼"	31¼"	27½"	21⅝"
#18	1	24"	41½"	36¼"	28½"

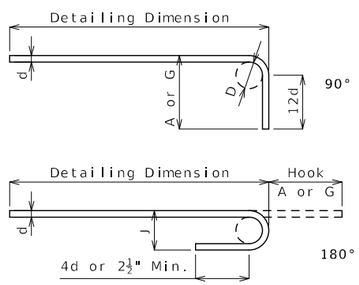

Stirrup Pin Bend Shapes (S)

Size	Case	D	A or G 90°	A or G 135°	A or G 180°	H 135°	J 180°
#4	2	2"	4½"	4½"	5"	2⅞"	3"
	3	3"	5"	5¼"	6"	3"	4"
#5	2	2½"	5¾"	5¾"	5¾"	3⅝"	3¾"
	3	3¾"	6¼"	6½"	7"	3⅞"	5"
#6	1	4½"	12"	7¾"	8¼"	4⅝"	6"

Applicable for all grades of steel.

Case 1 applies to all reinforcement. Case 2 applies to all reinforcement except for galvanized bars. Case 3 applies to galvanized bars only.

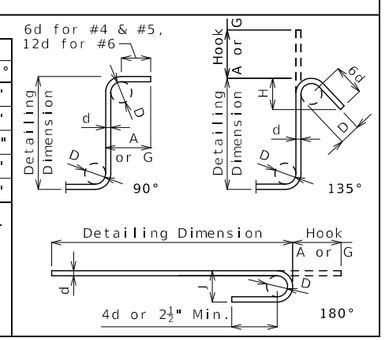

BENDING DIAGRAMS

Nominal lengths are based on out to out dimensions shown in bending diagrams and are listed to the nearest inch for fabricator's use. Actual lengths are measured along centerline bar to the nearest inch. Weights are based on actual lengths.

All bars shall be Grade 60.

Codes: C = Required coatings, where E = Epoxy Coated and G = Galvanized.

SH = Required shape, see bending diagrams.

V = Sets of varied bars and number of bars of each length. Bar dimensions vary in equal increments between dimensions shown on this line and the following line and the actual length dimension shown on this line and the following line vary by the specified increment.

Reinforcing Steel Totals (Pounds)

	Size	Substructure Plain	Substructure Epoxy	Superstructure Slab	Superstructure Barrier	Superstructure Slip Form	Entire Bridge Plain	Entire Bridge Epoxy
By Size	W5	0	0	0	0	0	0	0
	4	0	0	0	0	0	0	0
	5	0	0	0	2,194	0	0	2,194
	6	0	0	0	0	0	0	0
	7	0	0	0	0	0	0	0
By Type		0	0	0	2,194	0	0	2,194

All superstructure reinforcing steel shall be epoxy coated unless otherwise specified.

STATE OF MISSOURI
TED S. KOESTER
NUMBER PE-2013000591
PROFESSIONAL ENGINEER
THIS SHEET HAS BEEN SIGNED, SEALED AND DATED ELECTRONICALLY.

DATE PREPARED 7/11/2024

ROUTE	STATE
62	MO
DISTRICT	SHEET NO.
BR	4

COUNTY DUNKLIN

JOB NO. J9P3667

CONTRACT ID.

PROJECT NO.

BRIDGE NO. A25612

DATE	DESCRIPTION

MISSOURI HIGHWAYS AND TRANSPORTATION COMMISSION
105 WEST CAPITOL
JEFFERSON CITY, MO 65102
1-888-ASK-MODOT (1-888-275-6636)

BENDING DIAGRAMS AND REINFORCING STEEL TOTALS

Detailed Jun. 2024
Checked Jun. 2024

Note: This drawing is not to scale. Follow dimensions.

Bill of Reinforcing Steel

No. Req.	Size/ Mark	Location	Codes C	Codes SH	Codes V	Dimensions B ft in.	C ft in.	D ft in.	E ft in.	F ft in.	H ft in.	K ft in.	Nom. Length ft in.	Actual Length ft in.	Weight lb
		BLOCKOUT													
56	5 R1	BLOCKOUT	E	10S	8		21.00	9.75					4 4	4 1	
		Incr. = 1.000"					2 0.00	9.75					4 10	4 7	253
72	5 R2	BLOCKOUT	E	10S			2 1.00	13.50					5 4	5 1	382
48	5 R3	BLOCKOUT	E	20		5 3.00							5 3	5 3	263
8	5 R4	BLOCKOUT	E	23S		16.25	3 4.00				2.75	16.00	4 8	4 7	38
16	5 R5	BLOCKOUT	E	20		36 2.00							36 2	36 2	604
32	5 R6	BLOCKOUT	E	20		12 7.00							12 7	12 7	420
8	5 R7	BLOCKOUT	E	20		27 1.00							27 1	27 1	226

Bill of Reinforcing Steel

No. Req.	Size/ Mark	Location	Codes C	Codes SH	Codes V	Dimensions B ft in.	C ft in.	D ft in.	E ft in.	F ft in.	H ft in.	K ft in.	Nom. Length ft in.	Actual Length ft in.	Weight lb

Nominal lengths are based on out to out dimensions shown in bending diagrams and are listed to the nearest inch for fabricator's use. Actual lengths are measured along centerline bar to the nearest inch. Weights are based on actual lengths.

For bending diagrams and steel reinforcing totals, see Sheet No. 4.

Detailed Jun. 2024
Checked Jun. 2024

All bars shall be Grade 60.

Codes: C = Required coatings, where E = Epoxy Coated and G = Galvanized.

SH = Required shape, see bending diagrams.

V = Sets of varied bars and number of bars of each length. Bar dimensions vary in equal increments between dimensions shown on this line and the following line and the actual length dimension shown on this line and the following line vary by the specified increment.

BILL OF REINFORCING STEEL

Note: This drawing is not to scale. Follow dimensions.

STATE OF MISSOURI
TED S. KOESTER
NUMBER PE-2013000591
PROFESSIONAL ENGINEER

THIS SHEET HAS BEEN SIGNED, SEALED AND DATED ELECTRONICALLY.

DATE PREPARED 7/11/2024

ROUTE	STATE
62	MO
DISTRICT	SHEET NO.
BR	5

COUNTY DUNKLIN

JOB NO. J9P3667

CONTRACT ID.

PROJECT NO.

BRIDGE NO. A25612

DESCRIPTION	DATE

MISSOURI HIGHWAYS AND TRANSPORTATION COMMISSION
105 WEST CAPITOL
JEFFERSON CITY, MO 65102
1-888-ASK-MODOT (1-888-275-6636)