MISSOURI HIGHWAYS AND TRANSPORTATION COMMISSION
PLANS FOR PROPOSED
STATE HIGHWAY
WEBSTER COUNTY

ROUTE NN OVER BNSF
SUBDIVISION: THAYER NORTH
CITY: DIGGINS, MO
LAT: 37° 10′ 20″ N
LONG: 92° 51′ 42″ W

NEW RIGHT OF WAY REQUIRED
NEW RIGHT OF WAY – 85.70 ACRES
NEW PERM. ESM'T REQUIRED
NEW PERM. ESM'T – 3.21 ACRES
NEW TEMP. ESM'T REQUIRED
NEW TEMP. CONSTRUCTION ESM'T – 23.76 ACRES

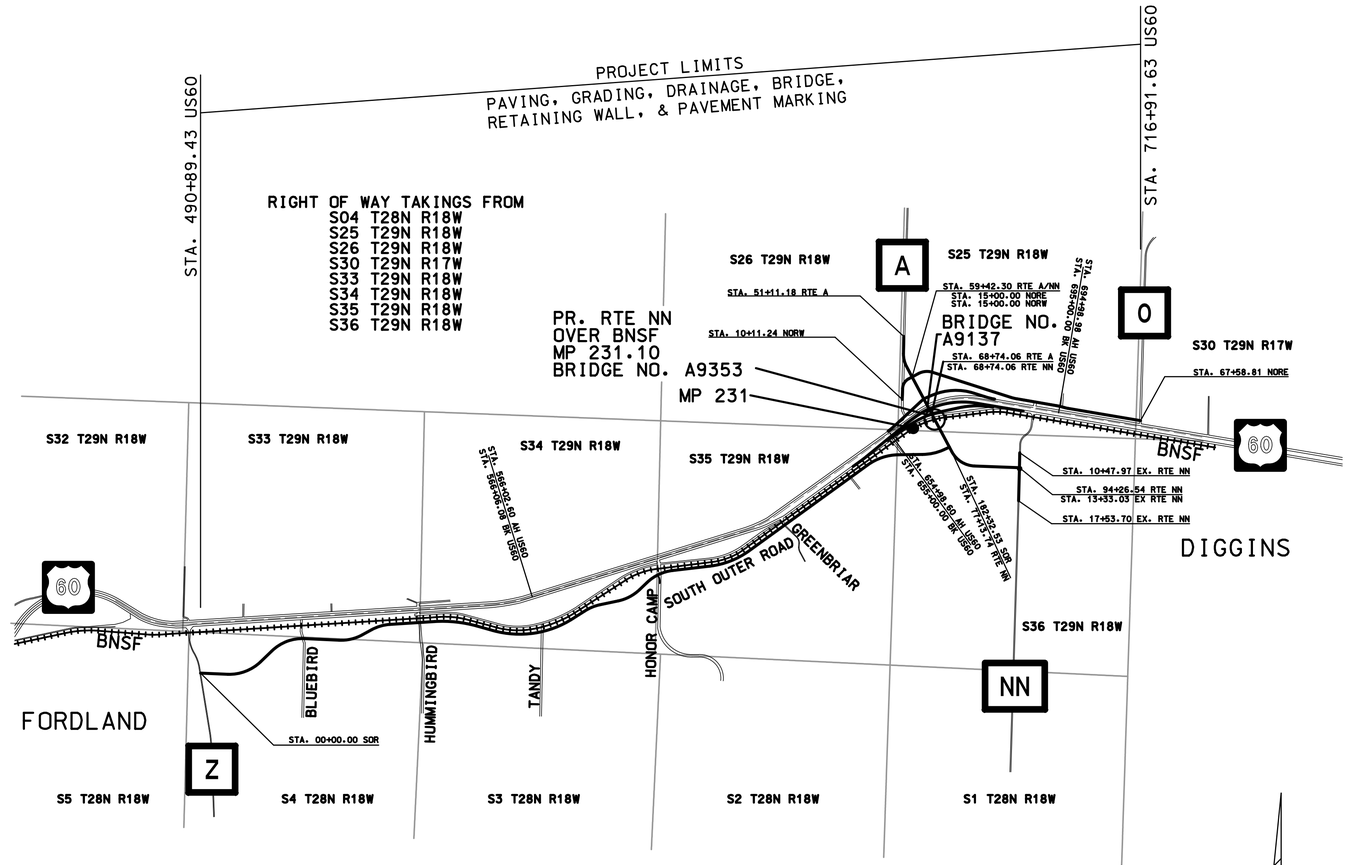

FOR INFORMATION ONLY
ESTIMATED DISTURBED ACRES 92.305 ACRES

ANY WORK INDICATED ON THE PLANS THAT EXTENDS BEYOND THE PROJECT LIMITS IS CONSIDERED INCIDENTAL TO AND A PART OF THE CONSTRUCTION OF THIS PROJECT.

THE EXISTENCE AND APPROXIMATE LOCATION OF UTILITY FACILITIES KNOWN TO EXIST, AS SHOWN ON THE PLANS, ARE BASED ON THE BEST INFORMATION AVAILABLE TO THE COMMISSION AT THIS TIME. THIS INFORMATION IS PROVIDED BY THE COMMISSION "AS-IS" AND THE COMMISSION EXPRESSLY DISCLAIMS ANY REPRESENTATION OR WARRANTY AS TO THE COMPLETENESS, ACCURACY, OR SUITABILITY OF THE INFORMATION FOR ANY USE. RELIANCE UPON THIS INFORMATION IS DONE AT THE RISK AND PERIL OF THE USER, AND THE COMMISSION SHALL NOT BE LIABLE FOR ANY DAMAGES THAT MAY ARISE FROM ANY ERROR IN THE INFORMATION.

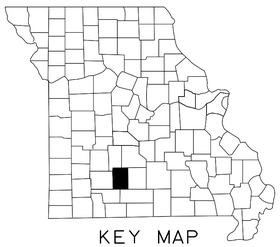

KEY MAP

SHOWING LOCATION OF WEBSTER COUNTY

N.T.S.

DISCLAIMER
THE PROFESSIONAL WHOSE SIGNATURE AND PERSONAL SEAL APPEAR HEREON ASSUMES RESPONSIBILITY ONLY FOR WHAT APPEARS ON THIS PAGE, AND DISCLAIMS (PURSUANT TO SECTION 327.411 RSMO) SPECIFICATION, ESTIMATES, REPORTS, OR OTHER DOCUMENTS OR INSTRUMENTS NOT SEALED BY THE UNDERSIGNED PROFESSIONAL RELATING TO OR INTENDED TO BE USED FOR ANY PART OR PARTS OF THE PROJECT TO WHICH THIS PAGE REFERS.

DESIGN DESIGNATION

US 60

A.A.D.T. 2023 = 14070	T = 20.56%
A.A.D.T. 2043 = 18851	V = 65 M.P.H.
D.H.V. = 8.67%	D = 59.8%

FUNCTIONAL CLASSIFICATION – FREEWAY/EXPRESSWAY

RTE A

A.A.D.T. 2023 = 3133	T = 10.80%
A.A.D.T. 2043 = 3823	V = 55 M.P.H.
D.H.V. = 10.96%	D = 52.8%

FUNCTIONAL CLASSIFICATION – MAJOR COLLECTOR

RTE NN

A.A.D.T. 2023 = 894	T = 6.71%
A.A.D.T. 2043 = 1323	V = 55 M.P.H.
D.H.V. = 7.16%	D = 50.0%

FUNCTIONAL CLASSIFICATION – MINOR COLLECTOR

FULLY CONTROLLED ACCESS HIGHWAY

THIS SHALL BE A FULLY CONTROLLED ACCESS HIGHWAY. NO ABUTTING OWNER SHALL HAVE THE RIGHT OF DIRECT ACCESS TO SAID HIGHWAY OR ITS RIGHT-OF-WAY EXCEPT THAT ACCESS WILL BE PERMITTED TO ANY ADJACENT OUTER ROADWAY OR SERVICE ROAD TO WHICH ACCESS IS NOT SPECIFICALLY PROHIBITED BY THE SPECIAL SYMBOL DENOTING "NO RIGHT OF ACCESS" AS SHOWN ON THE PLANS. NO ACCESS WILL BE PERMITTED FROM OUTER ROADWAYS AND SERVICE ROADS TO THROUGHWAYS EXCEPT ALONG ROUTES CONSTRUCTED FOR THAT PURPOSE. OUTER ROADWAYS AND SERVICE ROADS, AS THE CASE MAY BE, ARE SO DESIGNATED ON THE PLANS.

- BEGINNING AND ENDING OF CONTROLLED ACCESS
- CONTROLLED ACCESS
- NO RIGHT OF ACCESS OR CROSSING OF LINES BEARING THIS SYMBOL WILL BE PERMITTED UNDER ANY CIRCUMSTANCES.
- TEMPORARY ACCESS THROUGH FUTURE NO RIGHT OF ACCESS

CONVENTIONAL SYMBOLS
(USED IN PLANS)

	EXISTING	NEW
BUILDINGS AND STRUCTURES		
GUARD RAIL		
GUARD CABLE		
CONCRETE RIGHT-OF-WAY MARKER		
STEEL RIGHT-OF-WAY MARKER		
LOCATION SURVEY MARKER		
UTILITIES		
FIBER OPTICS	-FO-	FO
OVERHEAD CABLE TV	-OTV-	OTV
UNDERGROUND CABLE TV	-UTV-	UTV
OVERHEAD TELEPHONE	-OT-	OT
UNDERGROUND TELEPHONE	-UT-	UT
OVERHEAD POWER	-OE-	OE
UNDERGROUND POWER	-UE-	UE
SANITARY SEWER	-S-	S
STORM SEWER	-SS-	SS
GAS	-G-	G
WATER	-W-	W
MANHOLE	SAN	
FIRE HYDRANT	HYD	
WATER VALVE	WV	
WATER METER	WM	
DROP INLET	D	
DITCH BLOCK		
GROUND MOUNTED SIGN	SIGN	
LIGHT POLE		
H-FRAME POWER POLE		
TELEPHONE PEDESTAL	PED	
FENCE		
CHAIN LINK	-V-	
WOVEN WIRE	-X-	
GATE POST		
BENCHMARK	BM	
REMOVE	(R)	
USE IN PLACE	(UIP)	
ADJUST TO GRADE	(ATG)	
DO NOT DISTURB	(DND)	
BY OTHERS	(BO)	
TO BE ABANDONED	(TBA)	
SLOPE LIMITS	SL	

NOTE: DASHED OR OPEN SYMBOLS INDICATE EXISTING FEATURES

INDEX OF SHEETS

DESCRIPTION	SHEET NUMBER
TITLE SHEET	1
TYPICAL SECTIONS (TS) (17 SHEETS)	2
SUMMARY OF QUANTITIES (QU) (26 SHEETS)	3
PLAN SHEETS (PS)	4-31
PROFILE SHEETS (PR)	32-50
RIGHT OF WAY SHEETS (RW)	51-72
REFERENCE POINTS (RP)	73
COORDINATE POINTS (CP)	74-79
SPECIAL SHEETS (SS)	80-89
TRAFFIC CONTROL (TC)	90-119
EROSION CONTROL (EC)	120-179
LIGHTING (LT)	180-184
SIGNING (SN)	185-208
PAVEMENT MARKING (PM)	209-231
CULVERT SECTIONS (CS)	232-238
BRIDGE DRAWINGS (B)	
A9137	1-38
A9351	1-8
A9352	1-10
A9353	1-31
A9354	1-13
A9355	1-8
CROSS SECTIONS (XS)	1-378

LENGTH OF PROJECT

US 60

BEGINNING OF PROJECT	STA. 490+89.43
END OF PROJECT	STA. 716+91.63
APPARENT LENGTH	22,602.20 FEET
EQUATIONS AND EXCEPTIONS:	5.90 FEET
TOTAL PROJECT CORRECTIONS	5.90 FEET
NET LENGTH OF PROJECT	22,608.10 FEET
STATE LENGTH	4.282 MILES

ROUTE A

BEGINNING OF PROJECT	STA. 51+11.18
END OF PROJECT	STA. 68+74.06
APPARENT LENGTH	1,762.88 FEET
EQUATIONS AND EXCEPTIONS:	0.00 FEET
TOTAL PROJECT CORRECTIONS	0.00 FEET
NET LENGTH OF PROJECT	1,762.88 FEET
STATE LENGTH	0.334 MILES

NORTH OUTER ROAD

BEGINNING OF PROJECT	STA. 10+11.24
END OF PROJECT	STA. 67+58.81
APPARENT LENGTH	5,747.57 FEET
EQUATIONS AND EXCEPTIONS:	0.00 FEET
TOTAL PROJECT CORRECTIONS	0.00 FEET
NET LENGTH OF PROJECT	5,747.57 FEET
STATE LENGTH	1.089 MILES

ROUTE NN

BEGINNING OF PROJECT	STA. 68+74.06
END OF PROJECT	STA. 94+26.54
APPARENT LENGTH	2,552.48 FEET
EQUATIONS AND EXCEPTIONS:	0.00 FEET
TOTAL PROJECT CORRECTIONS	0.00 FEET
NET LENGTH OF PROJECT	2,552.48 FEET
STATE LENGTH	0.483 MILES

SOUTH OUTER ROAD

BEGINNING OF PROJECT	STA. 00+00.00
END OF PROJECT	STA. 182+32.53
APPARENT LENGTH	18,232.53 FEET
EQUATIONS AND EXCEPTIONS:	0.00 FEET
TOTAL PROJECT CORRECTIONS	0.00 FEET
NET LENGTH OF PROJECT	18,232.53 FEET
STATE LENGTH	3.453 MILES

EXISTING ROUTE NN

BEGINNING OF PROJECT	STA. 10+47.97
END OF PROJECT	STA. 17+53.70
APPARENT LENGTH	705.73 FEET
EQUATIONS AND EXCEPTIONS:	0.00 FEET
TOTAL PROJECT CORRECTIONS	0.00 FEET
NET LENGTH OF PROJECT	705.73 FEET
STATE LENGTH	0.134 MILES

STATE OF MISSOURI
DALLAS P. JOPLIN
NUMBER PE-2011015760
PROFESSIONAL ENGINEER

THIS SHEET HAS BEEN SIGNED, SEALED AND DATED ELECTRONICALLY.

DATE PREPARED: 9/10/2024
ROUTE: 60 | STATE: MO
DISTRICT: SW | SHEET NO.: 1
COUNTY: WEBSTER
JOB NO.: J7P3425C
CONTRACT ID.:
PROJECT NO.:
BRIDGE NO.:

DATE	DESCRIPTION	REV.

IF A SEAL IS PRESENT ON THIS SHEET IT HAS BEEN ELECTRONICALLY SEALED AND DATED.

MISSOURI HIGHWAYS AND TRANSPORTATION COMMISSION
105 WEST CAPITOL
JEFFERSON CITY, MO 65102
1-888-ASK-MODOT (1-888-275-6636)

CMT
© Copyright CMT, Inc.
CRAWFORD, MURPHY & TILLY, INC.
1631 WEST ELFINDALE STREET
SPRINGFIELD, MO 65807 (417) 869-6009
ENGINEERING CORPORATION - 000631

DISCLAIMER
THE PROFESSIONAL WHOSE SIGNATURE AND PERSONAL SEAL APPEAR HEREON ASSUMES RESPONSIBILITY ONLY FOR WHAT APPEARS ON THIS PAGE, AND DISCLAIMS (PURSUANT TO SECTION 327.411 RSMO) SPECIFICATION, ESTIMATES, REPORTS, OR OTHER DOCUMENTS OR INSTRUMENTS NOT SEALED BY THE UNDERSIGNED PROFESSIONAL RELATING TO OR INTENDED TO BE USED FOR ANY PART OR PARTS OF THE PROJECT TO WHICH THIS PAGE REFERS.

CATEGORY	BASE TYPE	HMA DESIGN	PCCP DESIGN
US 60 MAINLINE	12" ROCK BASE **	12" HMA 1-3/4" SP125B W/ PG 76-22 OVER 3" SP250B W/ PG 76-22 OVER 7-1/4" SP250C W/ PG 64-22	9.5" PCCP W/ 1-1/4" DOWELS 15 FT JOINT SPACING
	6" TYPE 5 AGGREGATE BASE **	13.5" HMA 1-3/4" SP125B W/ PG 76-22 OVER 3" SP250B W/ PG 76-22 OVER 8-3/4" SP250C W/ PG 64-22	10.0" PCCP W/ 1-1/4" DOWELS 15 FT JOINT SPACING
ROUTE A/NN RAMPS 1-4	6" TYPE 5 AGGREGATE BASE	11.5" HMA 1-3/4" SP125C W/ PG 70-22 OVER 3" SP250C W/ PG 70-22 OVER 6-3/4" SP250C W/ PG 64-22	8.5" PCCP W/ 1-1/4" DOWELS 15 FT JOINT SPACING
NORTH AND SOUTH OUTER ROADS	4" TYPE 1 OR 5 AGGREGATE BASE	8.5" HMA 1-3/4" BP-1 W/ PG 64-22 OVER 6-3/4" BB W/ PG 64-22	7.5" PCCP W/ 1-1/4" DOWELS 15 FT JOINT SPACING

** DESIGNS FOR ALTERNATE TECHNICAL CONCEPT - GRADING, BASE AND PAVING
SEE JOB SPECIAL PROVISIONS
PAY LIMITS FOR ROCK BASE END AT OUTSIDE EDGE OF SHOULDER

ASPHALT APPLICATION RATES:
ASPHALTIC CONCRETE MIXTURE PG 76-22 (SP125B MIX)= 1.985 @ 5.0%
ASPHALTIC CONCRETE MIXTURE PG 76-22 (SP250B MIX)= 2.010 @ 4.1%
ASPHALTIC CONCRETE MIXTURE PG 70-22 (SP125C MIX)= 1.970 @ 5.2%
ASPHALTIC CONCRETE MIXTURE PG 70-22 (SP250C MIX)= 2.000 @ 4.3%
ASPHALTIC CONCRETE MIXTURE PG 64-22 (SP250C MIX)= 2.000 @ 4.7%
ASPHALTIC CONCRETE MIXTURE PG 64-22 (BP-1 MIX)= 1.990 @ 5.1%

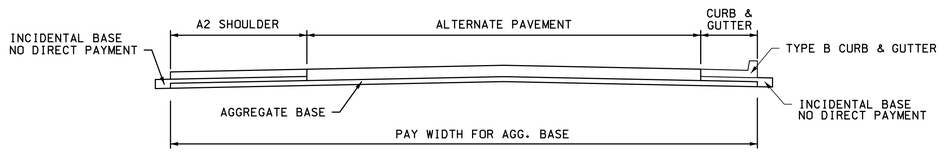

TYPICAL PAY WIDTHS

STATE OF MISSOURI
DALLAS P. JOPLIN
NUMBER PE-2011015760
PROFESSIONAL ENGINEER

THIS SHEET HAS BEEN SIGNED, SEALED AND DATED ELECTRONICALLY.

DATE PREPARED
8/2/2024

ROUTE	STATE
60	MO
DISTRICT	SHEET NO.
SW	2

COUNTY
WEBSTER

JOB NO.
J7P3425C

CONTRACT ID.

PROJECT NO.

BRIDGE NO.

DESCRIPTION	DATE

IF A SEAL IS PRESENT ON THIS SHEET IT HAS BEEN ELECTRONICALLY SEALED AND DATED.

MISSOURI HIGHWAYS AND TRANSPORTATION COMMISSION
105 WEST CAPITOL
JEFFERSON CITY, MO 65102
1-888-ASK-MODOT (1-888-275-6636)

CMT
© Copyright CMT, Inc.
CRAWFORD, MURPHY & TILLY, INC.
1631 WEST ELFINDALE STREET
SPRINGFIELD, MO 65807 (417) 869-6009
ENGINEERING CORPORATION - 000631

US 60
TYPICAL SECTIONS
SHEET 1 OF 17

REV.

DISCLAIMER
THE PROFESSIONAL WHOSE SIGNATURE AND PERSONAL SEAL APPEAR HEREON ASSUMES RESPONSIBILITY ONLY FOR WHAT APPEARS ON THIS PAGE, AND DISCLAIMS (PURSUANT TO SECTION 327.411 RSMO) SPECIFICATION, ESTIMATES, REPORTS, OR OTHER DOCUMENTS OR INSTRUMENTS NOT SEALED BY THE UNDERSIGNED PROFESSIONAL RELATING TO OR INTENDED TO BE USED FOR ANY PART OR PARTS OF THE PROJECT TO WHICH THIS PAGE REFERS.

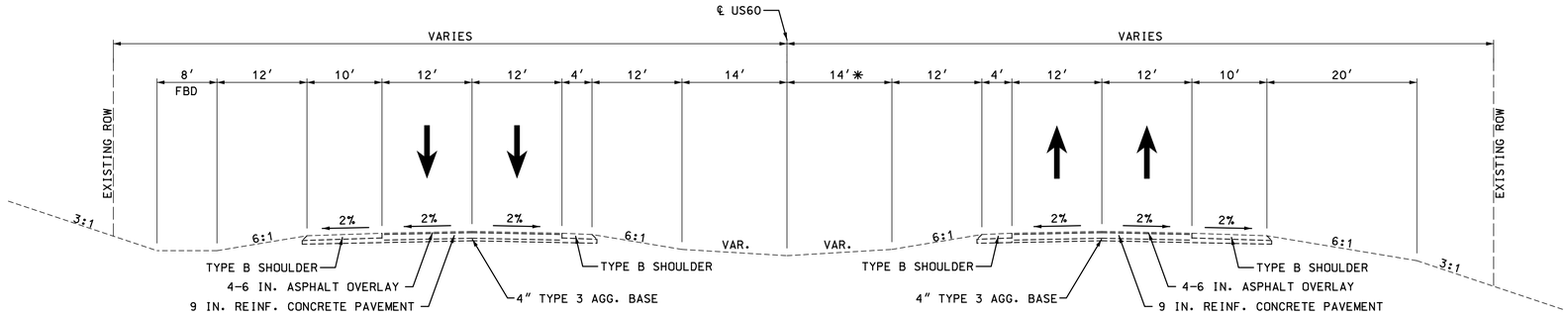

1 EXISTING US60

STA. 490+89.43 TO STA. 716+91.63

✳ VARIES 14′-268′ STA. 615+34.30 TO STA 685+38.56

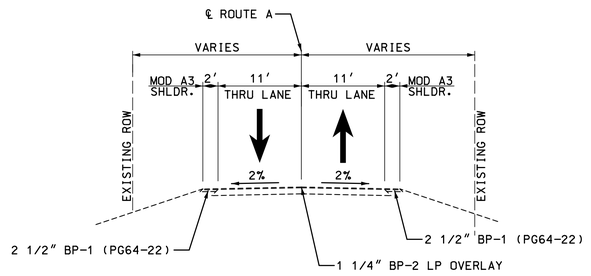

2 EXISTING ROUTE A

STA. 660+93.30 TO STA. 663+61.40

STATE OF MISSOURI
DALLAS P. JOPLIN
NUMBER PE-2011015760
PROFESSIONAL ENGINEER
THIS SHEET HAS BEEN SIGNED, SEALED AND DATED ELECTRONICALLY.

DATE PREPARED: 8/2/2024

ROUTE	STATE
60	MO
DISTRICT	SHEET NO.
SW	2

COUNTY: WEBSTER

JOB NO.: J7P3425C

CONTRACT ID.:

PROJECT NO.:

BRIDGE NO.:

DESCRIPTION	DATE

MISSOURI HIGHWAYS AND TRANSPORTATION COMMISSION
105 WEST CAPITOL
JEFFERSON CITY, MO 65102
1-888-ASK-MODOT (1-888-275-6636)

CMT
© Copyright CMT, Inc.
CRAWFORD, MURPHY & TILLY, INC.
1631 WEST ELFINDALE STREET
SPRINGFIELD, MO 65807 (417) 869-6009
ENGINEERING CORPORATION - 000631

IF A SEAL IS PRESENT ON THIS SHEET IT HAS BEEN ELECTRONICALLY SEALED AND DATED.

US60

TYPICAL SECTIONS
SHEET 2 OF 17

REV.

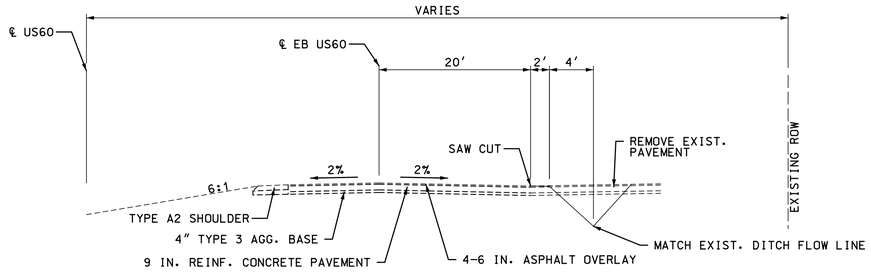

3 EXIST. US 60 (EB)

STA. 524+10.34 TO STA. 525+39.27
STA. 539+84.04 TO STA. 541+24.44
STA. 594+62.23 TO STA. 596+12.25
STA. 623+73.40 TO STA. 625+69.50
STA. 641+62.60 TO STA. 642+43.57

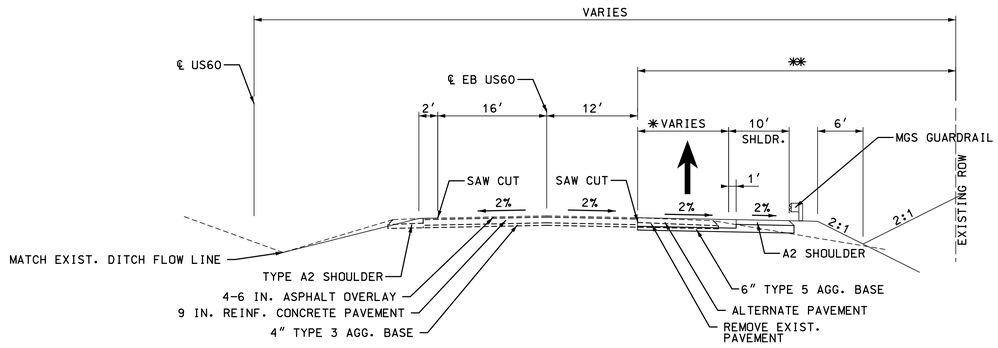

4 EXIST. US60 (EB)

STA. 687+10.00 TO STA. 687+33.65
✳ VARIES 8.67′ TO 7.66′ STA. 687+10.00 TO STA. 687+33.65
STA. 708+92.75 TO STA. 712+85.32
✳✳ NO WIDENING STA. 708+92.75 TO STA. 712+85.32

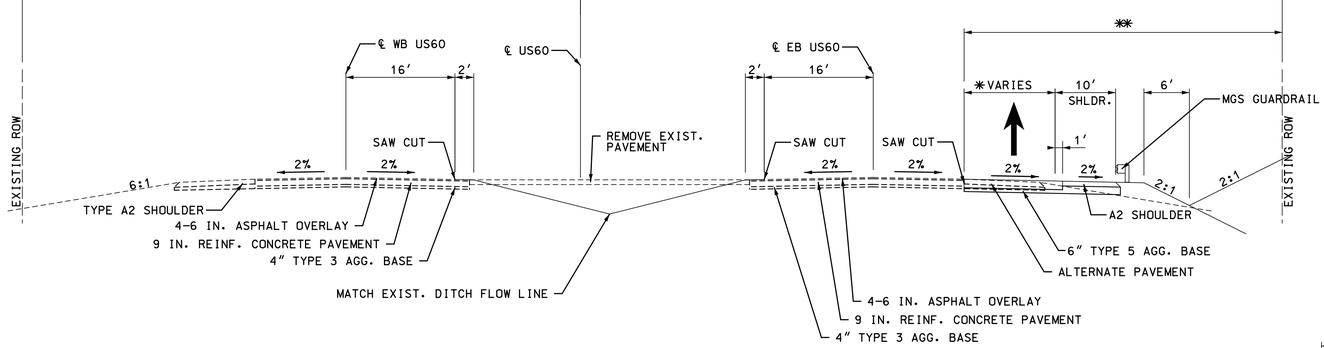

5 EXIST. US60

STA. 687+33.65 TO STA. 690+25.11
✳ VARIES 7.66′ TO 0′ STA. 687+33.65 TO STA. 689+10.39
STA. 712+85.32 TO STA. 714+02.06
✳✳ NO WIDENING STA. 712+85.32 TO STA 714+02.06

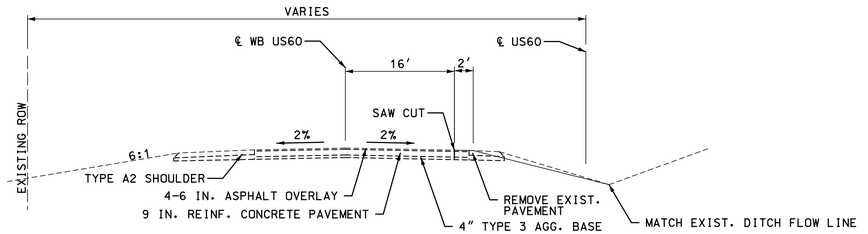

6 EXIST. US60 (WB)

STA. 690+25.11 TO STA. 694+81.54
STA. 714+02.06 TO STA. 716+19.63

DISCLAIMER
THE PROFESSIONAL WHOSE SIGNATURE AND PERSONAL SEAL APPEAR HEREON ASSUMES RESPONSIBILITY ONLY FOR WHAT APPEARS ON THIS PAGE, AND DISCLAIMS (PURSUANT TO SECTION 327.411 RSMO) SPECIFICATION, ESTIMATES, REPORTS, OR OTHER DOCUMENTS OR INSTRUMENTS NOT SEALED BY THE UNDERSIGNED PROFESSIONAL RELATING TO OR INTENDED TO BE USED FOR ANY PART OR PARTS OF THE PROJECT TO WHICH THIS PAGE REFERS.

STATE OF MISSOURI
DALLAS P. JOPLIN
NUMBER PE-2011015760
PROFESSIONAL ENGINEER

THIS SHEET HAS BEEN SIGNED, SEALED AND DATED ELECTRONICALLY.

DATE PREPARED 8/2/2024
ROUTE 60 | STATE MO
DISTRICT SW | SHEET NO. 2
COUNTY WEBSTER
JOB NO. J7P3425C
CONTRACT ID.
PROJECT NO.
BRIDGE NO.

DESCRIPTION | DATE

MISSOURI HIGHWAYS AND TRANSPORTATION COMMISSION
105 WEST CAPITOL
JEFFERSON CITY, MO 65102
1-888-ASK-MODOT (1-888-275-6636)

CMT
© Copyright CMT, Inc.
CRAWFORD, MURPHY & TILLY, INC.
1631 WEST ELFINDALE STREET
SPRINGFIELD, MO 65807 (417) 869-6009
ENGINEERING CORPORATION - 000631

IF A SEAL IS PRESENT ON THIS SHEET IT HAS BEEN ELECTRONICALLY SEALED AND DATED.

US60
TYPICAL SECTIONS
SHEET 3 OF 17

REV.

L:\MoDOT\20092124-00\Draw\Roadway\Sheets\002_TS_J7P3425C_i10.dgn 8:33:18 AM 8/2/2024

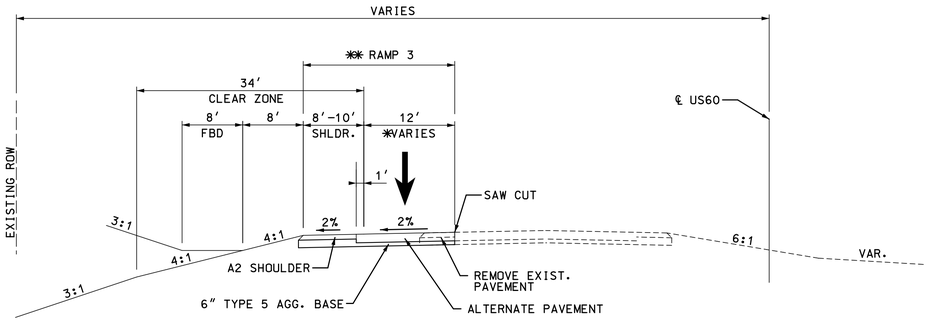

7 EXIST. US60 (WB)

STA. 646+58.07 TO STA. 654+91.93
STA. 673+47.78 TO STA. 677+43.47
STA. 677+95.11 TO STA. 686+37.93

STA. 680+37.93 TO STA. 686+37.93 - 10′ SHOULDER
✱ VARIES 1′ TO 12′ STA. 646+58.07 TO STA. 649+11.92
✱ VARIES 0′ TO 11′ STA. 673+47.78 TO STA. 677+95.10
✱ VARIES 31.2′ TO 12′ STA. 677+95.10 TO STA. 680+37.93
✱ VARIES 12′ TO 2′ STA. 683+87.93 TO STA. 686+37.93
✱✱ RAMP 3 STA. 13+98.89 TO STA. 16+40.45

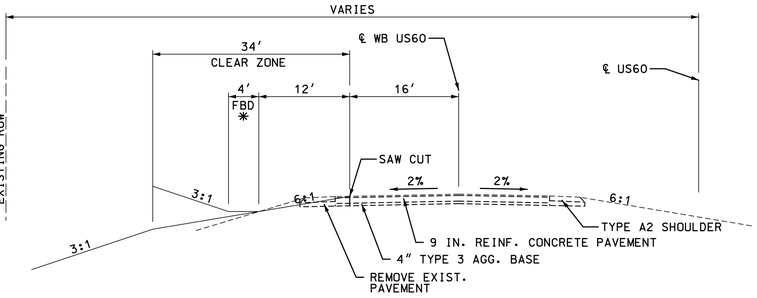

8 EXIST. US60 (WB)

STA. 659+01.14 TO STA. 664+52.55
✱ 0′ STA. 659+01.14 TO STA. 660+24.76
✱ 0′ TO 4′ STA. 660+24.76 TO STA. 664+52.55

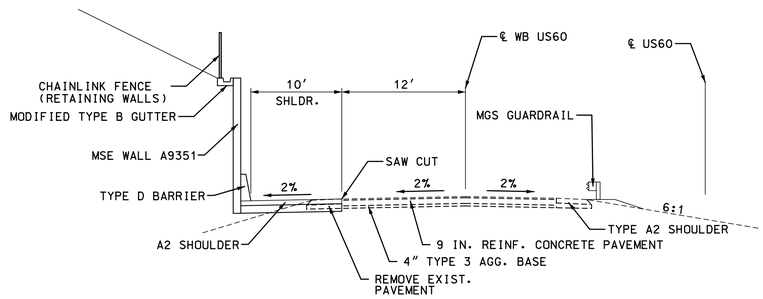

9 EXIST. US60 (WB)

STA. 664+52.55 TO STA. 666+06.04
GUARDRAIL RT. BEGINS STA. 664+93.77

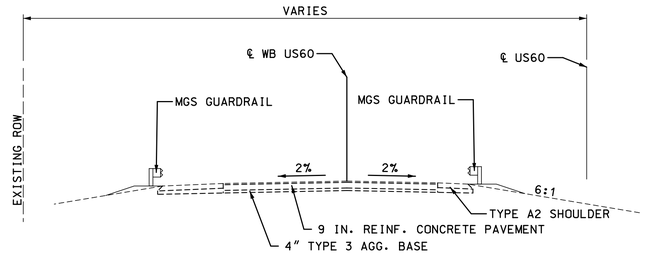

10 EXIST. US60 (WB)

STA. 666+06.04 TO STA. 668+74.14
GUARDRAIL RT. ENDS STA. 668+13.57

DISCLAIMER
THE PROFESSIONAL WHOSE SIGNATURE AND PERSONAL SEAL APPEAR HEREON ASSUMES RESPONSIBILITY ONLY FOR WHAT APPEARS ON THIS PAGE, AND DISCLAIMS (PURSUANT TO SECTION 327.411 RSMO) SPECIFICATION, ESTIMATES, REPORTS, OR OTHER DOCUMENTS OR INSTRUMENTS NOT SEALED BY THE UNDERSIGNED PROFESSIONAL RELATING TO OR INTENDED TO BE USED FOR ANY PART OR PARTS OF THE PROJECT TO WHICH THIS PAGE REFERS.

STATE OF MISSOURI
DALLAS P. JOPLIN
NUMBER PE-2011015760
PROFESSIONAL ENGINEER

THIS SHEET HAS BEEN SIGNED, SEALED AND DATED ELECTRONICALLY.

DATE PREPARED	
8/2/2024	
ROUTE	STATE
60	MO
DISTRICT	SHEET NO.
SW	2
COUNTY	
WEBSTER	
JOB NO.	
J7P3425C	
CONTRACT ID.	
PROJECT NO.	
BRIDGE NO.	

IF A SEAL IS PRESENT ON THIS SHEET IT HAS BEEN ELECTRONICALLY SEALED AND DATED.

REV.	DESCRIPTION	DATE

MISSOURI HIGHWAYS AND TRANSPORTATION COMMISSION
105 WEST CAPITOL
JEFFERSON CITY, MO 65102
1-888-ASK-MODOT (1-888-275-6636)

CMT
© Copyright CMT, Inc.
CRAWFORD, MURPHY & TILLY, INC.
1631 WEST ELFINDALE STREET
SPRINGFIELD, MO 65807 (417) 869-6009
ENGINEERING CORPORATION - 000631

US60
TYPICAL SECTIONS
SHEET 4 OF 17

L:\MoDOT\20092124-00\Draw\Roadway\Sheets\002_TS_J7P3425C_i10.dgn 8:33:19 AM 8/2/2024

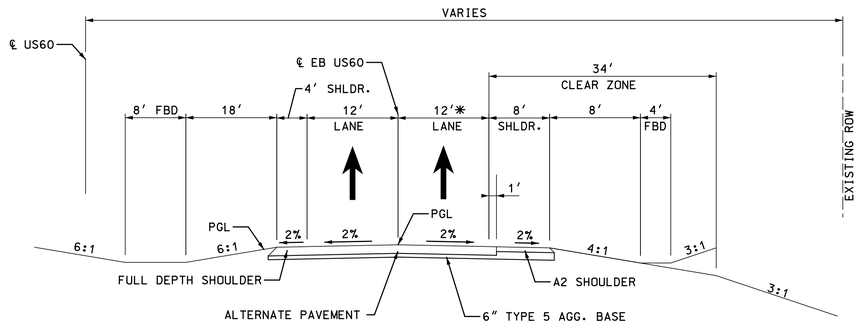

11 EASTBOUND US60

STA. 0+00.00 TO STA. 9+64.42
STA. 22+48.65 TO STA. 33+35.72
*VARIES 12′ TO 24′ STA. 3+74.42 TO STA. 6+24.42
* 24′ STA. 6+24.42 TO STA. 9+64.42

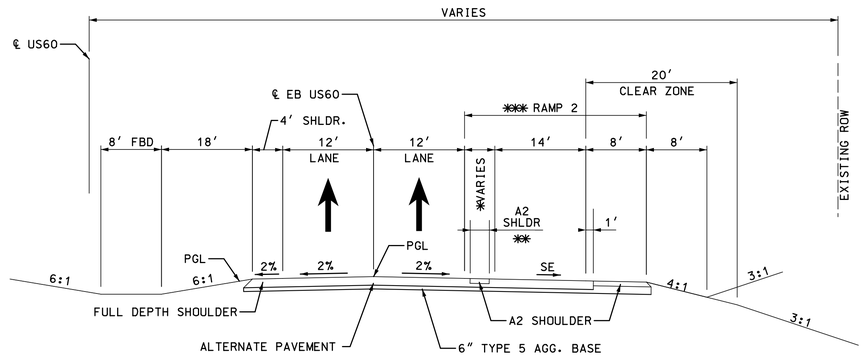

12 EASTBOUND US60

STA. 9+64.42 TO STA. 13+69.78
* VARIES 0′ TO 21.6′ STA. 10+92.58 TO STA. 13+69.78
** A2 SHLDR VARIES 2′ TO 12′ STA. 12+98.54 TO STA. 13+69.78
*** RAMP 2 STA. 0+00.00 TO STA. 4+05.10

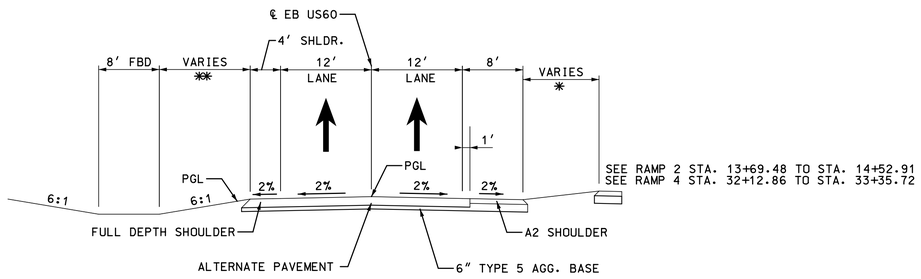

13 EASTBOUND US60

STA. 13+69.78 TO STA. 14+52.91
STA. 32+12.86 TO STA. 33+35.72
*VARIES 2′ TO 10.8′ STA. 13+69.78 TO STA. 14+52.91 (RAMP 2)
* VARIES 21.2′ TO 2′ STA. 32+12.86 TO STA. 33+35.72 (RAMP 4)
**VARIES 18′ TO 20′ STA. 13+69.78 TO 14+52.91

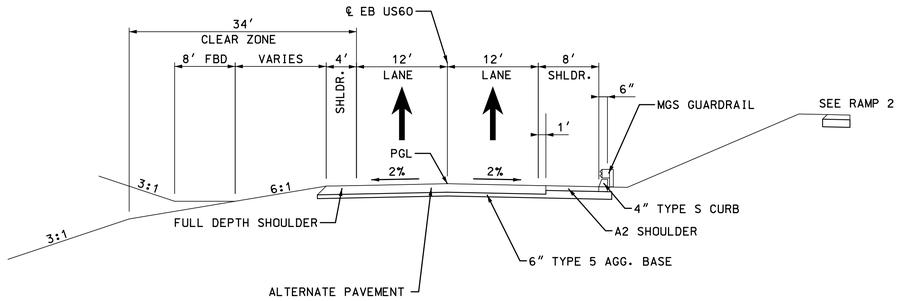

14 EASTBOUND US60

STA. 14+52.91 TO STA. 15+98.55

DISCLAIMER
THE PROFESSIONAL WHOSE SIGNATURE AND PERSONAL SEAL APPEAR HEREON ASSUMES RESPONSIBILITY ONLY FOR WHAT APPEARS ON THIS PAGE. AND DISCLAIMS (PURSUANT TO SECTION 327.411 RSMO) SPECIFICATION, ESTIMATES, REPORTS, OR OTHER DOCUMENTS OR INSTRUMENTS NOT SEALED BY THE UNDERSIGNED PROFESSIONAL RELATING TO OR INTENDED TO BE USED FOR ANY PART OR PARTS OF THE PROJECT TO WHICH THIS PAGE REFERS.

STATE OF MISSOURI
DALLAS P. JOPLIN
NUMBER PE-2011015760
PROFESSIONAL ENGINEER

THIS SHEET HAS BEEN SIGNED, SEALED AND DATED ELECTRONICALLY.

DATE PREPARED 8/2/2024
ROUTE 60 | STATE MO
DISTRICT SW | SHEET NO. 2
COUNTY WEBSTER
JOB NO. J7P3425C
CONTRACT ID.
PROJECT NO.
BRIDGE NO.

IF A SEAL IS PRESENT ON THIS SHEET IT HAS BEEN ELECTRONICALLY SEALED AND DATED.

REV.	DATE	DESCRIPTION

MISSOURI HIGHWAYS AND TRANSPORTATION COMMISSION
105 WEST CAPITOL
JEFFERSON CITY, MO 65102
1-888-ASK-MODOT (1-888-275-6636)

CMT
© Copyright CMT, Inc.
CRAWFORD, MURPHY & TILLY, INC.
1631 WEST ELFINDALE STREET
SPRINGFIELD, MO 65807 (417) 869-6009
ENGINEERING CORPORATION - 000631

US60
TYPICAL SECTIONS
SHEET 5 OF 17

L:\MoDOT\20092124-00\Draw\Roadway\Sheets\002_TS_J7P3425C_i10.dgn 8:33:19 AM 8/2/2024

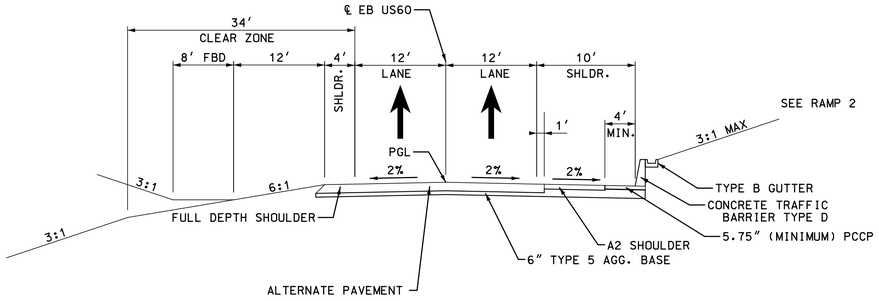

NOTE:
SEE STANDARD PLAN 617.10M FOR TYPE D BARRIER AS RETAING WALL DETAILS

15 EASTBOUND US60

STA. 15+98.55 TO STA. 17+52.96

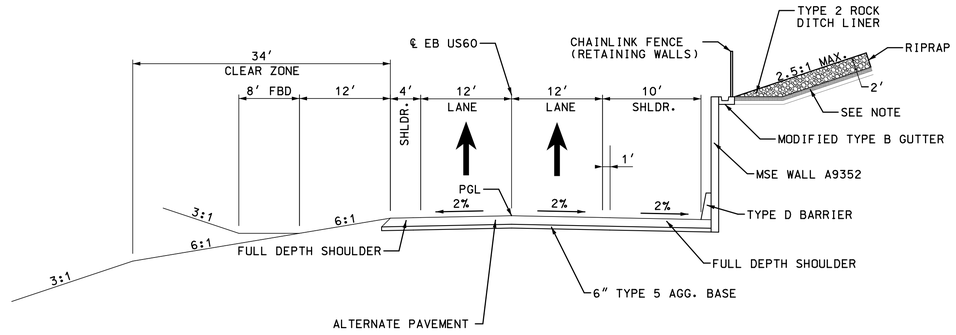

16 EASTBOUND US60

STA. 17+52.96 TO STA. 22+48.65

NOTE:
IF ROCK FILL IS USED, USE IMPERMEABLE GEOTEXTILE UNDER ROCK LINING AND ALIGN TOP OF GUTTER TO BOTTOM OF ROCK LINING TO DRAIN.

TYPE 2 ROCK DITCH LINER

IMPERMEABLE SOIL OR IMPERMEABLE GEOTEXTILE MEMBRANE

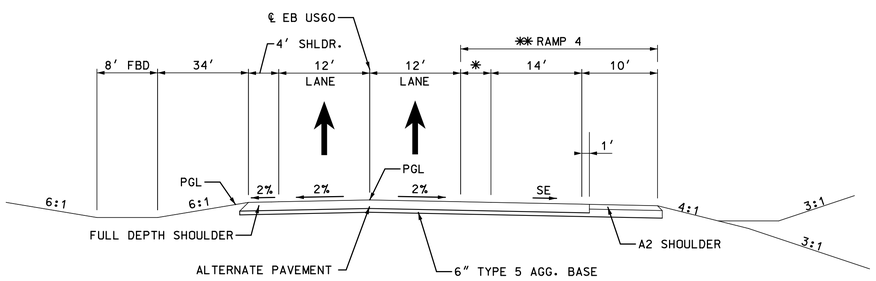

17 EASTBOUND US60

STA. 33+35.72 TO STA. 35+91.84
✳ VARIES 14′ TO 2′ STA. 33+35.72 TO STA. 35+91.84
✳✳ RAMP 4 STA. 11+32.56 TO STA. 13+87.11

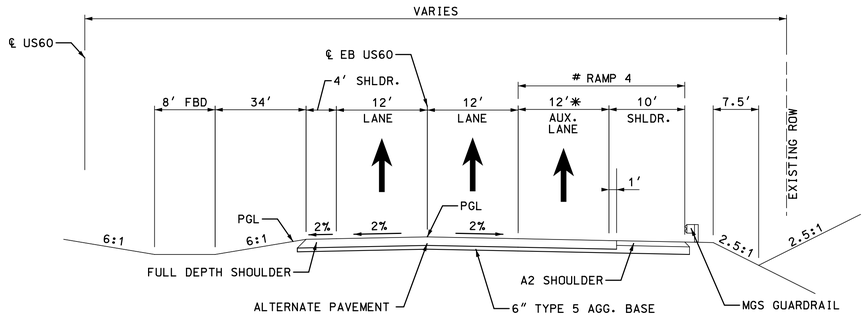

18 EASTBOUND US60

STA. 35+91.84 TO STA. 42+71.66
✳ VARIES 12′ TO 8.7′′ STA. 41+74.84 TO STA. 42+71.66

EB US60
TYPICAL SECTIONS
SHEET 6 OF 17

DISCLAIMER
THE PROFESSIONAL WHOSE SIGNATURE AND PERSONAL SEAL APPEAR HEREON ASSUMES RESPONSIBILITY ONLY FOR WHAT APPEARS ON THIS PAGE, AND DISCLAIMS (PURSUANT TO SECTION 327.411 RSMO) SPECIFICATION, ESTIMATES, REPORTS, OR OTHER DOCUMENTS OR INSTRUMENTS NOT SEALED BY THE UNDERSIGNED PROFESSIONAL RELATING TO OR INTENDED TO BE USED FOR ANY PART OR PARTS OF THE PROJECT TO WHICH THIS PAGE REFERS.

STATE OF MISSOURI
DALLAS P. JOPLIN
NUMBER PE-2011015760
PROFESSIONAL ENGINEER

THIS SHEET HAS BEEN SIGNED, SEALED AND DATED ELECTRONICALLY.

DATE PREPARED	
9/3/2024	
ROUTE	STATE
60	MO
DISTRICT	SHEET NO.
SW	2

COUNTY: WEBSTER
JOB NO.: J7P3425C
CONTRACT ID.:
PROJECT NO.:
BRIDGE NO.:

DESCRIPTION	DATE

IF A SEAL IS PRESENT ON THIS SHEET IT HAS BEEN ELECTRONICALLY SEALED AND DATED.

MISSOURI HIGHWAYS AND TRANSPORTATION COMMISSION
105 WEST CAPITOL
JEFFERSON CITY, MO 65102
1-888-ASK-MODOT (1-888-275-6636)

CMT
©Copyright CMT, Inc.
CRAWFORD, MURPHY & TILLY, INC.
1631 WEST ELFINDALE STREET
SPRINGFIELD, MO 65807 (417) 869-6009
ENGINEERING CORPORATION - 000631

REV.

L:\MoDOT\20092124-00\Draw\Roadway\Sheets\002_TS_J7P3425C_i10.dgn 1:55:35 PM 9/3/2024

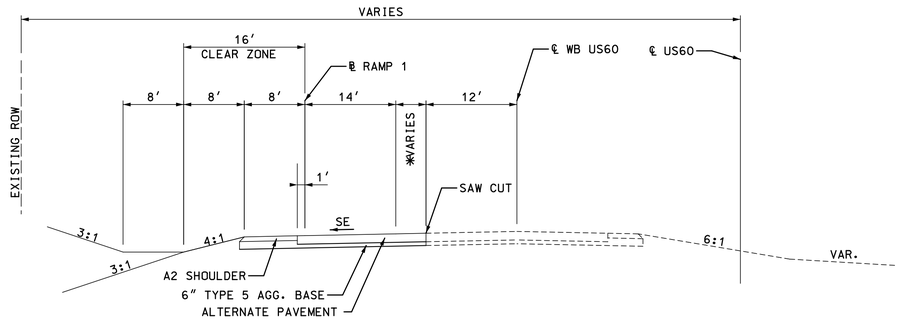

19 RAMP 1 (WB ONRAMP)

STA. 0+00.00 TO STA. 2+39.86

* VARIES 0' TO 15.8' STA. 0+00.00 TO STA. 1+24.18

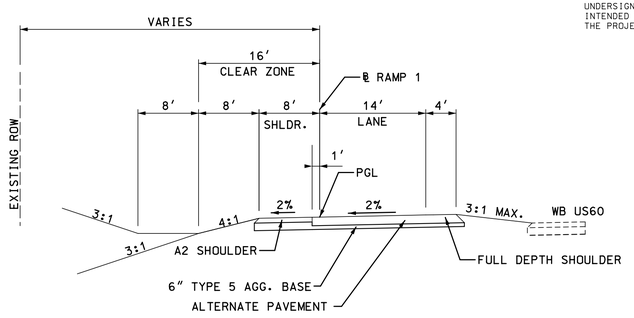

20 RAMP 1 (WB ONRAMP)

STA. 2+39.86 TO STA. 4+08.83

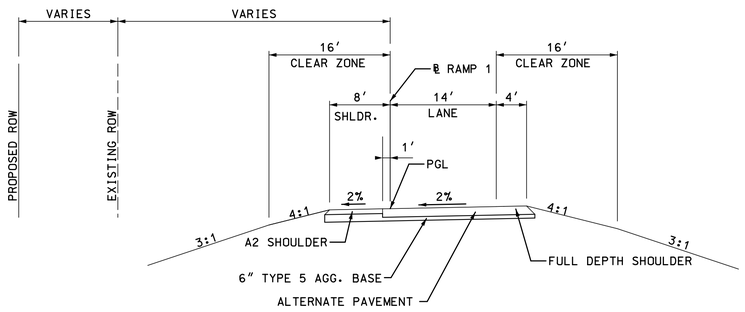

21 RAMP 1 (WB ONRAMP)

STA. 4+08.83 TO STA. 9+64.57

PROP. ROW BEGINS STA. 6+31.35

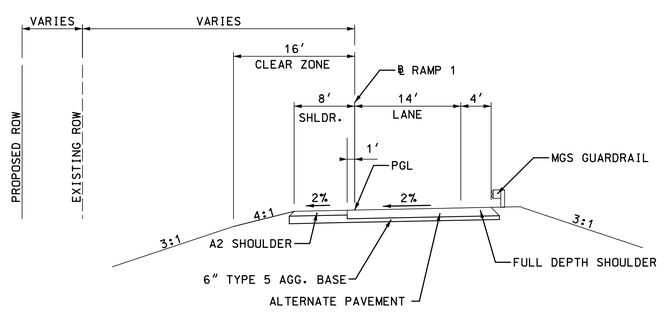

22 RAMP 1 (WB ONRAMP)

STA. 9+64.57 TO STA. 10+36.24

DISCLAIMER
THE PROFESSIONAL WHOSE SIGNATURE AND PERSONAL SEAL APPEAR HEREON ASSUMES RESPONSIBILITY ONLY FOR WHAT APPEARS ON THIS PAGE, AND DISCLAIMS (PURSUANT TO SECTION 327.411 RSMO) SPECIFICATION, ESTIMATES, REPORTS, OR OTHER DOCUMENTS OR INSTRUMENTS NOT SEALED BY THE UNDERSIGNED PROFESSIONAL RELATING TO OR INTENDED TO BE USED FOR ANY PART OR PARTS OF THE PROJECT TO WHICH THIS PAGE REFERS.

STATE OF MISSOURI
DALLAS P. JOPLIN
NUMBER PE-2011015760
PROFESSIONAL ENGINEER

THIS SHEET HAS BEEN SIGNED, SEALED AND DATED ELECTRONICALLY.

DATE PREPARED 8/2/2024

ROUTE	STATE
60	MO
DISTRICT	SHEET NO.
SW	2

COUNTY: WEBSTER
JOB NO.: J7P3425C
CONTRACT ID.:
PROJECT NO.:
BRIDGE NO.:

NO.	DESCRIPTION	DATE

MISSOURI HIGHWAYS AND TRANSPORTATION COMMISSION
105 WEST CAPITOL
JEFFERSON CITY, MO 65102
1-888-ASK-MODOT (1-888-275-6636)

CMT
© Copyright CMT, Inc.
CRAWFORD, MURPHY & TILLY, INC.
1631 WEST ELFINDALE STREET
SPRINGFIELD, MO 65807 (417) 869-6009
ENGINEERING CORPORATION - 000631

IF A SEAL IS PRESENT ON THIS SHEET IT HAS BEEN ELECTRONICALLY SEALED AND DATED.

RAMP 1

TYPICAL SECTIONS
SHEET 7 OF 17

L:\MoDOT\20092124-00\Draw\Roadway\Sheets\002_TS_J7P3425C_i10.dgn 8:33:20 AM 8/2/2024

REV.

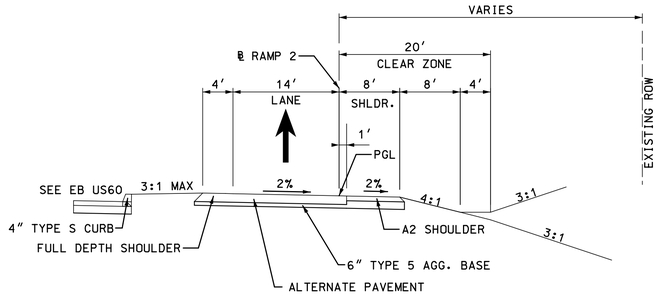

23 RAMP 2 (EB OFFRAMP)

STA. 4+05.10 TO STA. 4+86.02

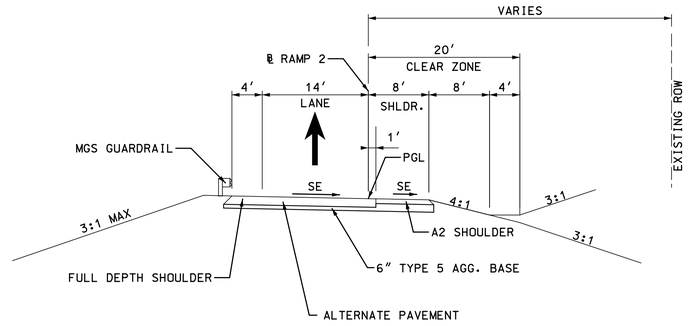

24 RAMP 2 (EB OFFRAMP)

STA. 4+86.02 TO STA. 6+12.42

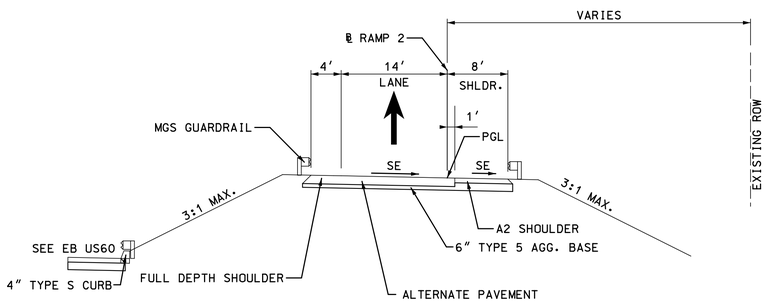

25 RAMP 2 (EB OFFRAMP)

STA. 6+12.42 TO STA. 6+29.90

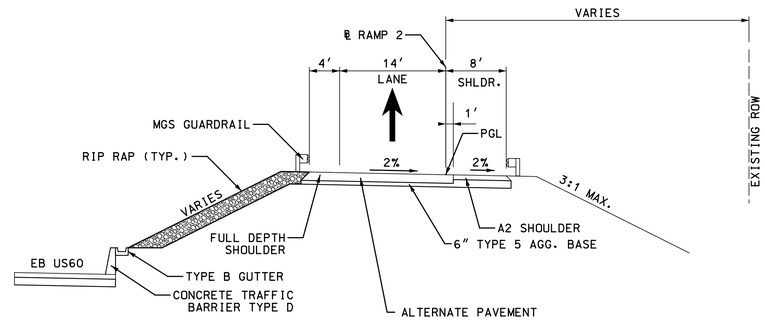

26 RAMP 2 (EB OFFRAMP)

STA. 6+29.90 TO STA. 7+32.14

NOTE:
IF ROCK FILL IS USED, USE IMPERMEABLE GEOTEXTILE UNDER ROCK LINING AND ALIGN TOP OF GUTTER TO BOTTOM OF ROCK LINING TO DRAIN.

TYPE 2 ROCK DITCH LINER

IMPERMEABLE SOIL OR IMPERMEABLE GEOTEXTILE MEMBRANE

DISCLAIMER
THE PROFESSIONAL WHOSE SIGNATURE AND PERSONAL SEAL APPEAR HEREON ASSUMES RESPONSIBILITY ONLY FOR WHAT APPEARS ON THIS PAGE, AND DISCLAIMS (PURSUANT TO SECTION 327.411 RSMO) SPECIFICATION, ESTIMATES, REPORTS, OR OTHER DOCUMENTS OR INSTRUMENTS NOT SEALED BY THE UNDERSIGNED PROFESSIONAL RELATING TO OR INTENDED TO BE USED FOR ANY PART OR PARTS OF THE PROJECT TO WHICH THIS PAGE REFERS.

STATE OF MISSOURI
DALLAS P. JOPLIN
NUMBER PE-2011015760
PROFESSIONAL ENGINEER

THIS SHEET HAS BEEN SIGNED, SEALED AND DATED ELECTRONICALLY.

DATE PREPARED
8/2/2024

ROUTE	STATE
60	MO
DISTRICT	SHEET NO.
SW	2

COUNTY
WEBSTER

JOB NO.
J7P3425C

CONTRACT ID.

PROJECT NO.

BRIDGE NO.

DESCRIPTION	DATE

IF A SEAL IS PRESENT ON THIS SHEET IT HAS BEEN ELECTRONICALLY SEALED AND DATED.

MISSOURI HIGHWAYS AND TRANSPORTATION COMMISSION
105 WEST CAPITOL
JEFFERSON CITY, MO 65102
1-888-ASK-MODOT (1-888-275-6636)

CMT
© Copyright CMT, Inc.
CRAWFORD, MURPHY & TILLY, INC.
1631 WEST ELFINDALE STREET
SPRINGFIELD, MO 65807 (417) 869-6009
ENGINEERING CORPORATION - 000631

RAMP 2
TYPICAL SECTIONS
SHEET 8 OF 17

REV.

L:\MoDOT\20092124-00\Draw\Roadway\Sheets\002_TS_J7P3425C_i10.dgn 8:33:21 AM 8/2/2024

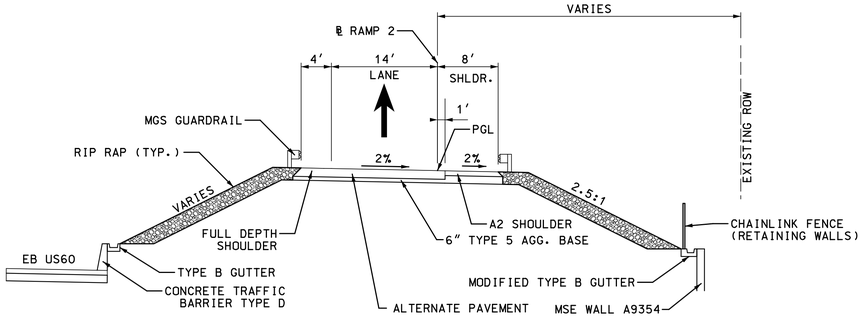

27 RAMP 2 (EB OFFRAMP)

STA. 7+32.14 TO STA. 7+79.44

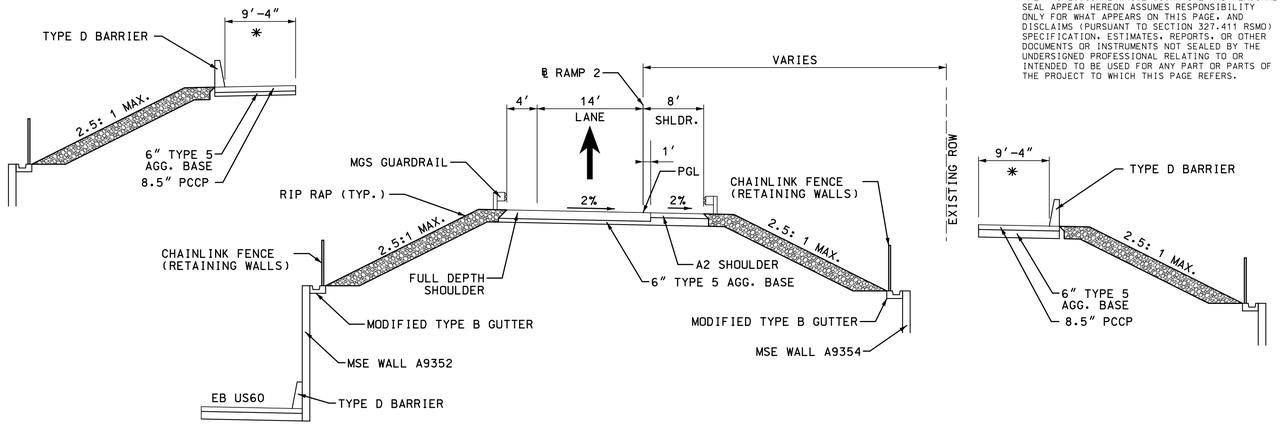

28 RAMP 2 (EB OFFRAMP)

STA. 7+79.44 TO STA. 11+56.88

✳ TYPE D BARRIER RT STA. 10+68.27 TO STA. 11+56.88

✳ TYPE D BARRIER LT STA. 10+91.32 TO STA. 11+56.88

NOTE:
IF ROCK FILL IS USED, USE IMPERMEABLE GEOTEXTILE UNDER ROCK LINING AND ALIGN TOP OF GUTTER TO BOTTOM OF ROCK LINING TO DRAIN.

TYPE 2 ROCK DITCH LINER

IMPERMEABLE SOIL OR IMPERMEABLE GEOTEXTILE MEMBRANE

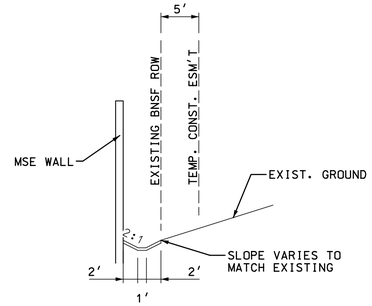

PAVED DITCH DETAIL

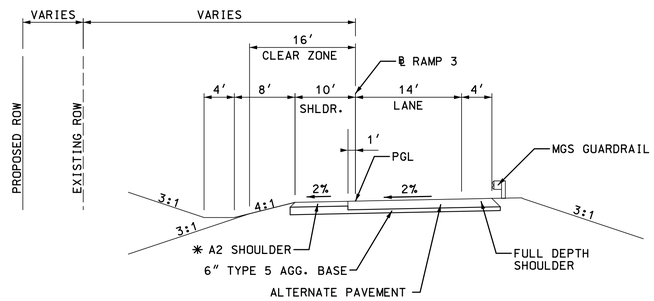

29 RAMP 3 (WB OFFRAMP)

STA. 0+28.45 TO STA. 2+18.90

✳ FULL DEPTH SHOULDER STA. 0+28.48 TO STA. 1+09.83

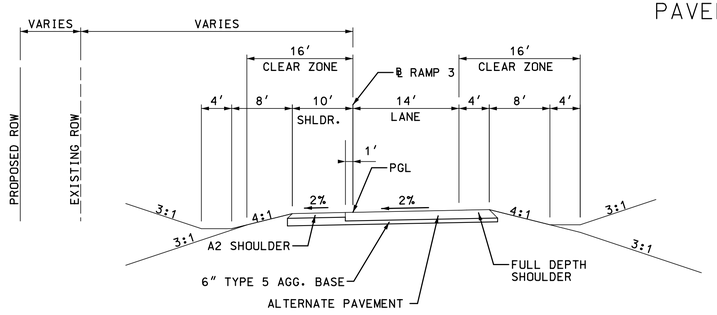

30 RAMP 3 (WB OFFRAMP)

STA. 2+18.90 TO STA. 12+25.00

RAMP 2/RAMP 3

TYPICAL SECTIONS
SHEET 9 OF 17

DISCLAIMER
THE PROFESSIONAL WHOSE SIGNATURE AND PERSONAL SEAL APPEAR HEREON ASSUMES RESPONSIBILITY ONLY FOR WHAT APPEARS ON THIS PAGE, AND DISCLAIMS (PURSUANT TO SECTION 327.411 RSMO) SPECIFICATION, ESTIMATES, REPORTS, OR OTHER DOCUMENTS OR INSTRUMENTS NOT SEALED BY THE UNDERSIGNED PROFESSIONAL RELATING TO OR INTENDED TO BE USED FOR ANY PART OR PARTS OF THE PROJECT TO WHICH THIS PAGE REFERS.

STATE OF MISSOURI
DALLAS P. JOPLIN
NUMBER PE-2010015760
PROFESSIONAL ENGINEER

THIS SHEET HAS BEEN SIGNED, SEALED AND DATED ELECTRONICALLY.

DATE PREPARED 8/2/2024

ROUTE	STATE
60	MO
DISTRICT	SHEET NO.
SW	2

COUNTY: WEBSTER
JOB NO.: J7P3425C
CONTRACT ID.:
PROJECT NO.:
BRIDGE NO.:

DESCRIPTION	DATE

IF A SEAL IS PRESENT ON THIS SHEET IT HAS BEEN ELECTRONICALLY SEALED AND DATED.

MISSOURI HIGHWAYS AND TRANSPORTATION COMMISSION
105 WEST CAPITOL
JEFFERSON CITY, MO 65102
1-888-ASK-MODOT (1-888-275-6636)

CMT
©Copyright CMT, Inc.
CRAWFORD, MURPHY & TILLY, INC.
1631 WEST ELFINDALE STREET
SPRINGFIELD, MO 65807 (417) 869-6009
ENGINEERING CORPORATION - 000631

REV.

L:\MoDOT\20092124-00\Draw\Roadway\Sheets\002_TS_J7P3425C_i10.dgn 8:33:21 AM 8/2/2024

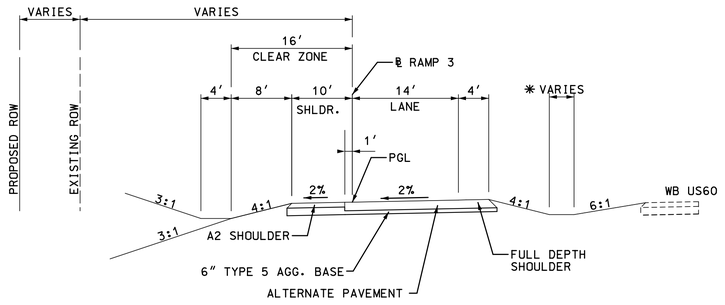

(31) RAMP 3 (WB OFFRAMP)

STA. 12+25.00 TO STA. 13+46.20

✳ DITCH VARIES - SEE PLAN

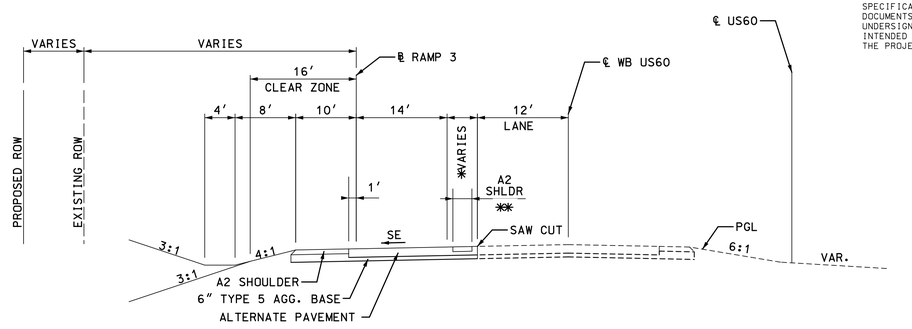

(32) RAMP 3 (WB OFFRAMP)

STA. 13+46.20 TO STA. 13+98.89

✳ VARIES 15.3' TO 4' STA. 13+46.20 TO STA. 13+98.89

✳✳ VARIES 13.3' TO 2' STA. 13+56.20 TO STA. 13+98.89

PROP. ROW ENDS STA. 15+10.00

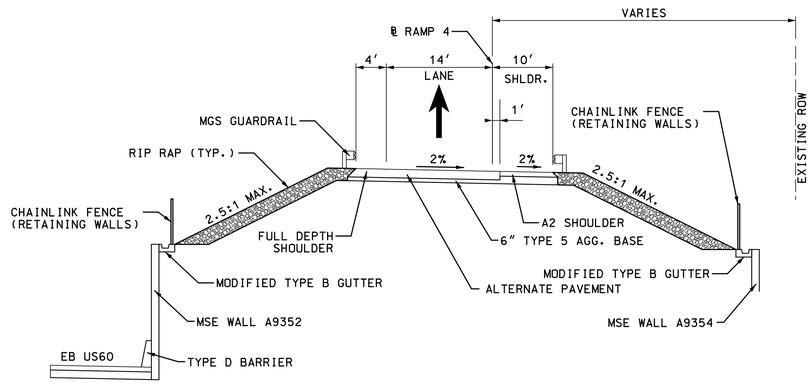

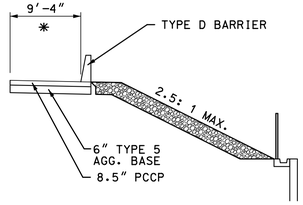

(33) RAMP 4 (EB ONRAMP)

STA. 0+16.16 TO STA. 0+83.58

✳ TYPE D BARRIER RT STA. 0+00.00 TO STA. 0+83.58

NOTE:
IF ROCK FILL IS USED, USE IMPERMEABLE GEOTEXTILE UNDER ROCK LINING AND ALIGN TOP OF GUTTER TO BOTTOM OF ROCK LINING TO DRAIN.

TYPE 2 ROCK DITCH LINER

IMPERMEABLE SOIL OR IMPERMEABLE GEOTEXTILE MEMBRANE

DISCLAIMER
THE PROFESSIONAL WHOSE SIGNATURE AND PERSONAL SEAL APPEAR HEREON ASSUMES RESPONSIBILITY ONLY FOR WHAT APPEARS ON THIS PAGE. AND DISCLAIMS (PURSUANT TO SECTION 327.411 RSMO) SPECIFICATION, ESTIMATES, REPORTS, OR OTHER DOCUMENTS OR INSTRUMENTS NOT SEALED BY THE UNDERSIGNED PROFESSIONAL RELATING TO OR INTENDED TO BE USED FOR ANY PART OR PARTS OF THE PROJECT TO WHICH THIS PAGE REFERS.

STATE OF MISSOURI
DALLAS P. JOPLIN
NUMBER PE-2011015760
PROFESSIONAL ENGINEER

THIS SHEET HAS BEEN SIGNED, SEALED AND DATED ELECTRONICALLY.

DATE PREPARED
8/2/2024

ROUTE	STATE
60	MO
DISTRICT	SHEET NO.
SW	2

COUNTY
WEBSTER

JOB NO.
J7P3425C

CONTRACT ID.

PROJECT NO.

BRIDGE NO.

DESCRIPTION	DATE

IF A SEAL IS PRESENT ON THIS SHEET IT HAS BEEN ELECTRONICALLY SEALED AND DATED.

MISSOURI HIGHWAYS AND TRANSPORTATION COMMISSION
105 WEST CAPITOL
JEFFERSON CITY, MO 65102
1-888-ASK-MODOT (1-888-275-6636)

CMT
© Copyright CMT, Inc.
CRAWFORD, MURPHY & TILLY, INC.
1631 WEST ELFINDALE STREET
SPRINGFIELD, MO 65807 (417) 869-6009
ENGINEERING CORPORATION - 000631

REV.

RAMP 3/RAMP 4

TYPICAL SECTIONS
SHEET 10 OF 17

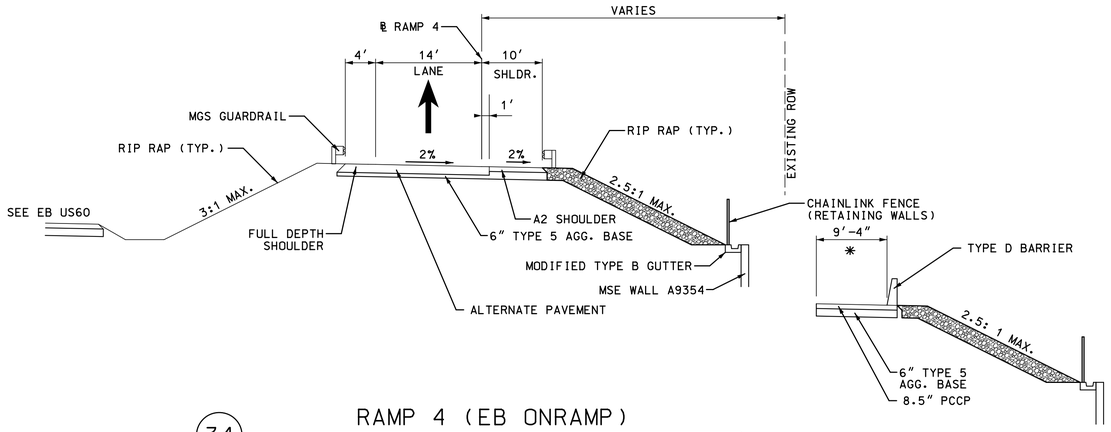

34 RAMP 4 (EB ONRAMP)

STA. 0+83.58 TO STA. 2+62.12

* TYPE D BARRIER RT STA. 0+83.58 TO STA. 0+89.86

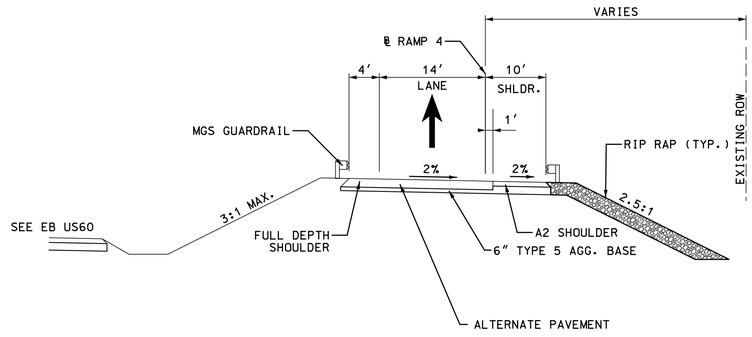

35 RAMP 4 (EB ONRAMP)

STA. 2+67.12 TO STA. 2+66.33

NOTE:
IF ROCK FILL IS USED, USE IMPERMEABLE GEOTEXTILE UNDER ROCK LINING AND ALIGN TOP OF GUTTER TO BOTTOM OF ROCK LINING TO DRAIN.

TYPE 2 ROCK DITCH LINER

IMPERMEABLE SOIL OR IMPERMEABLE GEOTEXTILE MEMBRANE

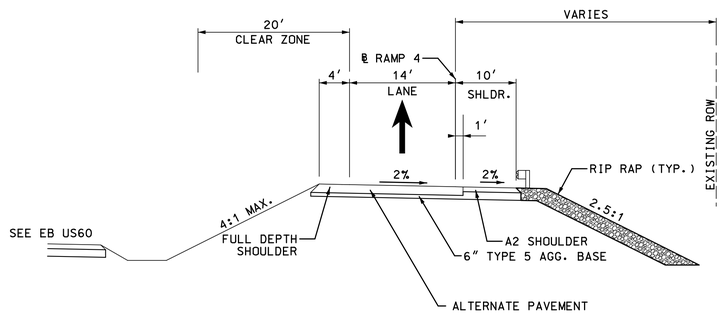

36 RAMP 4 (EB ONRAMP)

STA. 2+66.33 TO STA. 10+11.04

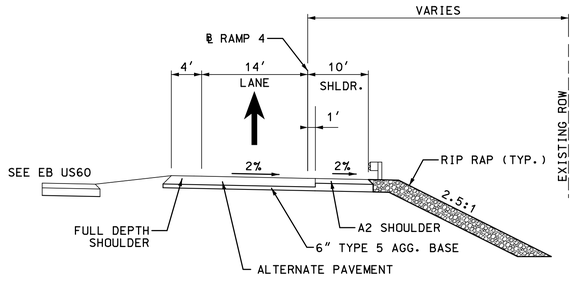

37 RAMP 4 (EB OFFRAMP)

STA. 10+11.04 TO STA. 11+32.56

DISCLAIMER
THE PROFESSIONAL WHOSE SIGNATURE AND PERSONAL SEAL APPEAR HEREON ASSUMES RESPONSIBILITY ONLY FOR WHAT APPEARS ON THIS PAGE, AND DISCLAIMS (PURSUANT TO SECTION 327.411 RSMO) SPECIFICATION, ESTIMATES, REPORTS, OR OTHER DOCUMENTS OR INSTRUMENTS NOT SEALED BY THE UNDERSIGNED PROFESSIONAL RELATING TO OR INTENDED TO BE USED FOR ANY PART OR PARTS OF THE PROJECT TO WHICH THIS PAGE REFERS.

STATE OF MISSOURI
DALLAS P. JOPLIN
NUMBER PE-2011015760
PROFESSIONAL ENGINEER

THIS SHEET HAS BEEN SIGNED, SEALED AND DATED ELECTRONICALLY.

DATE PREPARED: 8/2/2024
ROUTE: 60 | STATE: MO
DISTRICT: SW | SHEET NO.: 2
COUNTY: WEBSTER
JOB NO.: J7P3425C
CONTRACT ID.:
PROJECT NO.:
BRIDGE NO.:

IF A SEAL IS PRESENT ON THIS SHEET IT HAS BEEN ELECTRONICALLY SEALED AND DATED.

REV.	DESCRIPTION	DATE

MISSOURI HIGHWAYS AND TRANSPORTATION COMMISSION
105 WEST CAPITOL
JEFFERSON CITY, MO 65102
1-888-ASK-MODOT (1-888-275-6636)

CMT
© Copyright CMT, Inc.
CRAWFORD, MURPHY & TILLY, INC.
1631 WEST ELFINDALE STREET
SPRINGFIELD, MO 65807 (417) 869-6009
ENGINEERING CORPORATION - 000631

RAMP 4
TYPICAL SECTIONS
SHEET 11 OF 17

L:\MoDOT\20092124-00\Draw\Roadway\Sheets\002_TS_J7P3425C_i10.dgn 8:33:22 AM 8/2/2024

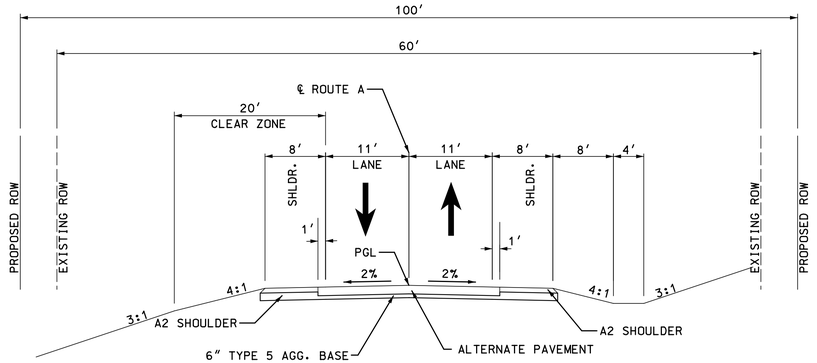

38 ROUTE A

STA. 51+11.18 TO STA. 64+95.19

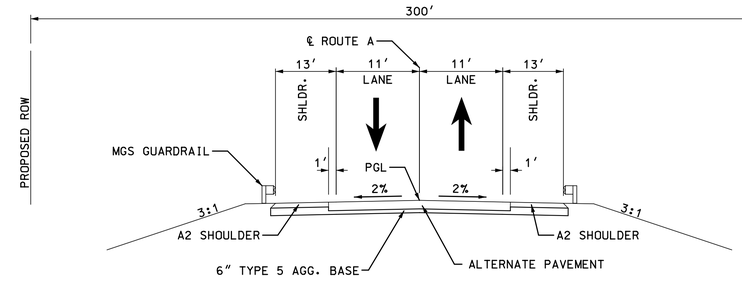

39 ROUTE A

STA. 64+95.19 TO STA. 66+15.00
STA. 68+07.33 TO STA. 68+74.06

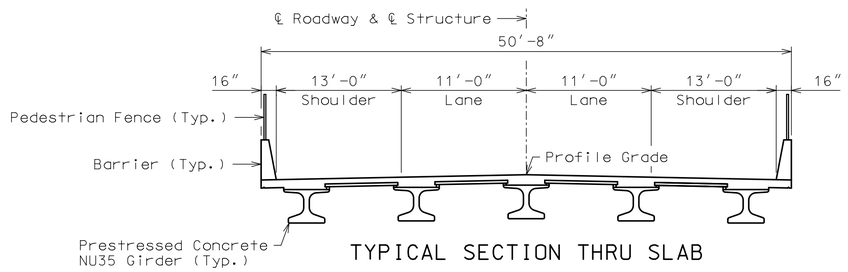

TYPICAL SECTION THRU SLAB

40 ROUTE A BRIDGE A9137 OVER US60

STA. 66+15.00 TO STA. 68+07.33

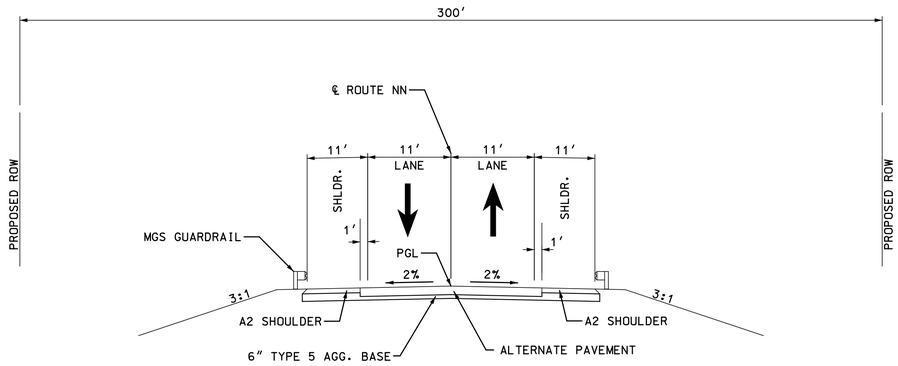

41 ROUTE NN

STA. 68+74.06 TO STA. 69+37.44
STA. 71+09.00 TO STA. 72+93.69

DISCLAIMER
THE PROFESSIONAL WHOSE SIGNATURE AND PERSONAL SEAL APPEAR HEREON ASSUMES RESPONSIBILITY ONLY FOR WHAT APPEARS ON THIS PAGE, AND DISCLAIMS (PURSUANT TO SECTION 327.411 RSMO) SPECIFICATION, ESTIMATES, REPORTS, OR OTHER DOCUMENTS OR INSTRUMENTS NOT SEALED BY THE UNDERSIGNED PROFESSIONAL RELATING TO OR INTENDED TO BE USED FOR ANY PART OR PARTS OF THE PROJECT TO WHICH THIS PAGE REFERS.

STATE OF MISSOURI
DALLAS P. JOPLIN
NUMBER PE-2011015760
PROFESSIONAL ENGINEER

THIS SHEET HAS BEEN SIGNED, SEALED AND DATED ELECTRONICALLY.

DATE PREPARED
8/2/2024

ROUTE	STATE
60	MO
DISTRICT	SHEET NO.
SW	2

COUNTY
WEBSTER

JOB NO.
J7P3425C

CONTRACT ID.

PROJECT NO.

BRIDGE NO.

IF A SEAL IS PRESENT ON THIS SHEET IT HAS BEEN ELECTRONICALLY SEALED AND DATED.

DESCRIPTION	DATE

MISSOURI HIGHWAYS AND TRANSPORTATION COMMISSION
105 WEST CAPITOL
JEFFERSON CITY, MO 65102
1-888-ASK-MODOT (1-888-275-6636)

CMT
© Copyright CMT, Inc.
CRAWFORD, MURPHY & TILLY, INC.
1631 WEST ELFINDALE STREET
SPRINGFIELD, MO 65807 (417) 869-6009
ENGINEERING CORPORATION - 000631

ROUTE A
TYPICAL SECTIONS
SHEET 12 OF 17

REV.

L:\MoDOT\20092124-00\Draw\Roadway\Sheets\002_TS_J7P3425C_i10.dgn 8:33:23 AM 8/2/2024

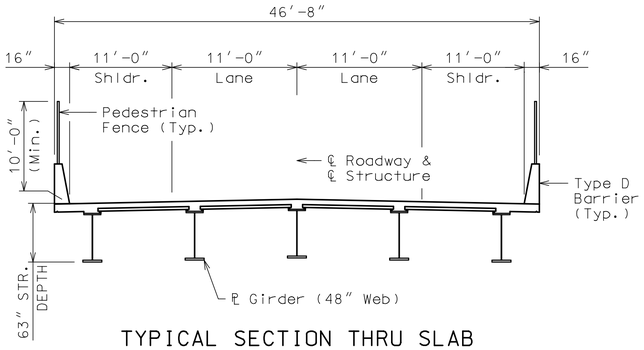

TYPICAL SECTION THRU SLAB

42 ROUTE NN BRIDGE A9353 OVER BNSF RR

STA. 69+37.44 TO STA. 71+09.00

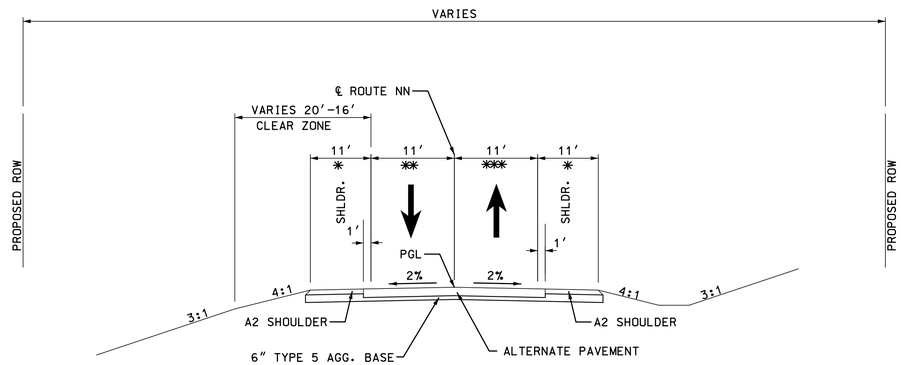

43 ROUTE NN

STA. 72+93.69 TO STA. 91+37.26
✳ VARIES 11′ TO 8′ STA. 72+93.69 TO STA. 74+28.69
✳✳ VARIES 11′ TO 13.9′ STA. 90+39.63 TO STA. 91+37.26
✳✳✳ VARIES 11′ TO 17.8′ STA. 90+39.63 TO STA. 91+37.26

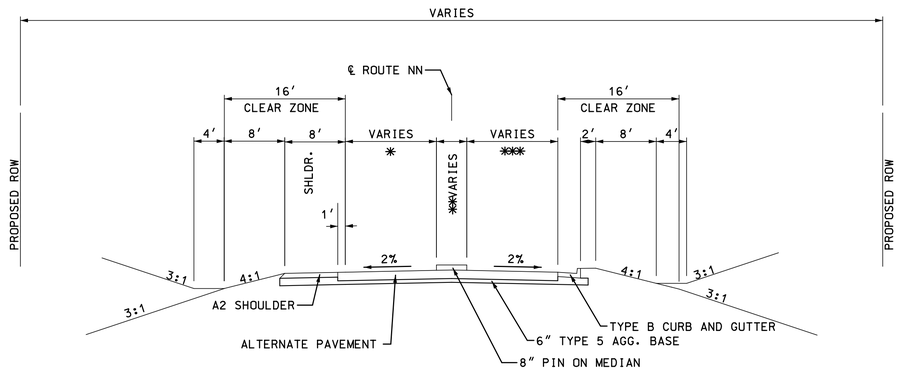

44 ROUTE NN

STA. 91+37.26 TO 93+12.11
✳ VARIES 13′ TO 14.7′
✳✳ VARIES 4′ TO 19.1′
✳✳✳ VARIES 15′ TO 13.1′

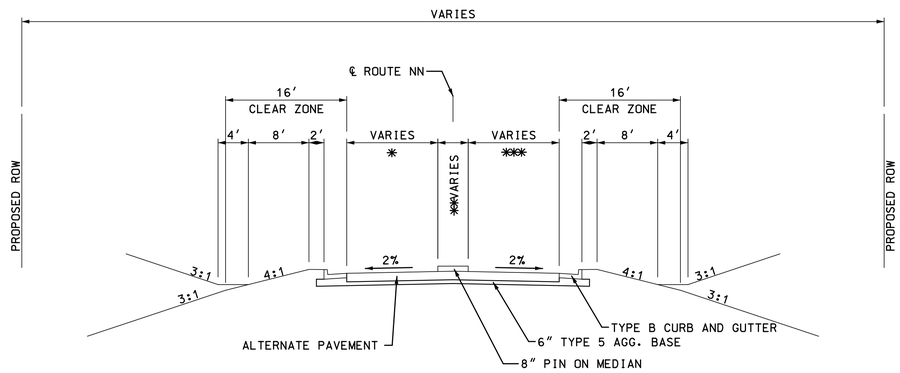

45 ROUTE NN

STA. 93+12.11 TO 94+26.54
✳ VARIES 14.7′ TO 32.5′
✳✳ VARIES 13.9′ TO 28.2′
✳✳✳ VARIES 16.2′ TO 29.4′

DISCLAIMER
THE PROFESSIONAL WHOSE SIGNATURE AND PERSONAL SEAL APPEAR HEREON ASSUMES RESPONSIBILITY ONLY FOR WHAT APPEARS ON THIS PAGE, AND DISCLAIMS (PURSUANT TO SECTION 327.411 RSMO) SPECIFICATION, ESTIMATES, REPORTS, OR OTHER DOCUMENTS OR INSTRUMENTS NOT SEALED BY THE UNDERSIGNED PROFESSIONAL RELATING TO OR INTENDED TO BE USED FOR ANY PART OR PARTS OF THE PROJECT TO WHICH THIS PAGE REFERS.

STATE OF MISSOURI
DALLAS P. JOPLIN
NUMBER PE-2011015760
PROFESSIONAL ENGINEER

THIS SHEET HAS BEEN SIGNED, SEALED AND DATED ELECTRONICALLY.

DATE PREPARED 8/2/2024

ROUTE	STATE
60	MO
DISTRICT	SHEET NO.
SW	2

COUNTY: WEBSTER
JOB NO.: J7P3425C
CONTRACT ID.:
PROJECT NO.:
BRIDGE NO.:

DESCRIPTION	DATE

IF A SEAL IS PRESENT ON THIS SHEET IT HAS BEEN ELECTRONICALLY SEALED AND DATED.

MISSOURI HIGHWAYS AND TRANSPORTATION COMMISSION
105 WEST CAPITOL
JEFFERSON CITY, MO 65102
1-888-ASK-MODOT (1-888-275-6636)

CMT
© Copyright CMT, Inc.
CRAWFORD, MURPHY & TILLY, INC.
1631 WEST ELFINDALE STREET
SPRINGFIELD, MO 65807 (417) 869-6009
ENGINEERING CORPORATION - 000631

REV.

ROUTE NN
TYPICAL SECTIONS
SHEET 13 OF 17

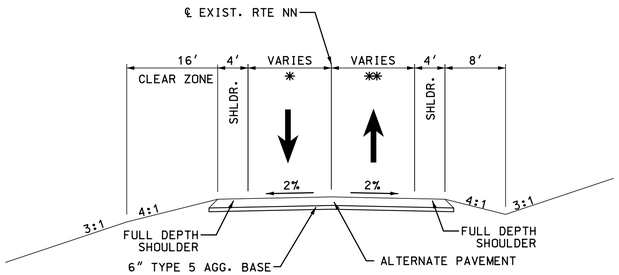

46 EXIST. RTE NN

STA. 10+47.96 TO 11+28.79
STA. 16+53.82 TO 17+53.65
* VARIES 13.1′ TO 12.6′ STA. 10+47.96 TO STA. 11+11.32
* VARIES 12.6′ TO 14.7′ STA. 11+11.32 TO STA. 11+28.79
* VARIES 18.5′ TO 10.9′ STA. 16+53.82 TO STA. 17+53.65
** VARIES 12.4′ TO 12.6′ STA. 10+47.96 TO STA. 11+28.79
** VARIES 16.8′ TO 11.3′ STA. 16+53.82 TO STA. 17+53.65

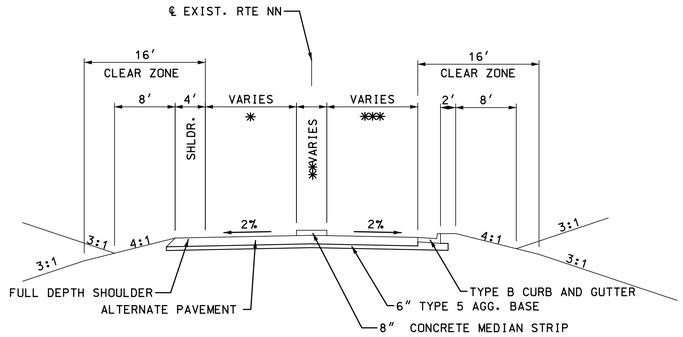

47 EXIST. RTE NN

STA. 11+28.79 TO 12+87.61
* VARIES 15.8′ TO 38.7′
** 0′ STA. 11+28.79 TO STA. 11+92.33
** VARIES 4′ TO 23.5′ STA. 11+92.33 TO STA. 12+87.61
*** VARIES 12.6′ TO 37.6′

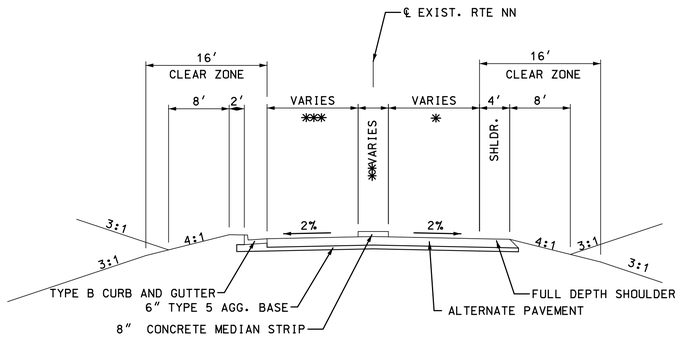

48 EXIST. RTE NN

STA. 14+17.84 TO 16+53.82
* VARIES 21.7′ TO 13.1′
** VARIES 23.7 TO 17.8′
** NO MEDIAN STA. 14+74.30 TO STA. 14+97.36
*** VARIES 37.8′ TO 15.1′

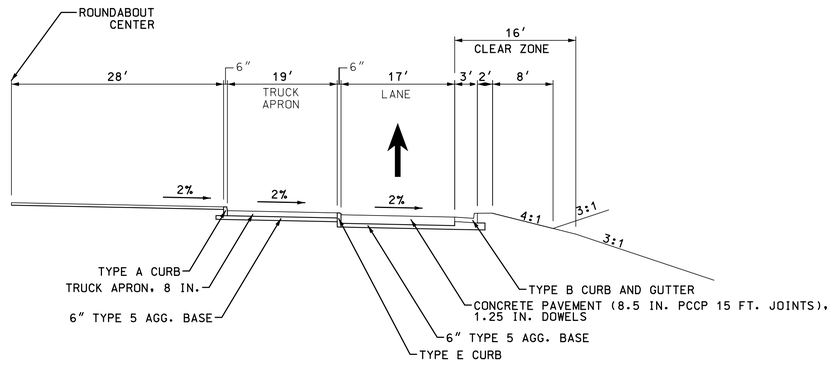

49 ROUTE NN ROUNDABOUT

STA. 0+00.00 TO STA. 1+75.93

DISCLAIMER
THE PROFESSIONAL WHOSE SIGNATURE AND PERSONAL SEAL APPEAR HEREON ASSUMES RESPONSIBILITY ONLY FOR WHAT APPEARS ON THIS PAGE, AND DISCLAIMS (PURSUANT TO SECTION 327.411 RSMO) SPECIFICATION, ESTIMATES, REPORTS, OR OTHER DOCUMENTS OR INSTRUMENTS NOT SEALED BY THE UNDERSIGNED PROFESSIONAL RELATING TO OR INTENDED TO BE USED FOR ANY PART OR PARTS OF THE PROJECT TO WHICH THIS PAGE REFERS.

STATE OF MISSOURI
DALLAS P. JOPLIN
NUMBER PE-2011015760
PROFESSIONAL ENGINEER

THIS SHEET HAS BEEN SIGNED, SEALED AND DATED ELECTRONICALLY.

DATE PREPARED 8/2/2024
ROUTE 60 | STATE MO
DISTRICT SW | SHEET NO. 2
COUNTY WEBSTER
JOB NO. J7P3425C
CONTRACT ID.
PROJECT NO.
BRIDGE NO.

IF A SEAL IS PRESENT ON THIS SHEET IT HAS BEEN ELECTRONICALLY SEALED AND DATED.

REV.	DESCRIPTION	DATE

MISSOURI HIGHWAYS AND TRANSPORTATION COMMISSION
105 WEST CAPITOL
JEFFERSON CITY, MO 65102
1-888-ASK-MODOT (1-888-275-6636)

CMT
© Copyright CMT, Inc.
CRAWFORD, MURPHY & TILLY, INC.
1631 WEST ELFINDALE STREET
SPRINGFIELD, MO 65807 (417) 869-6009
ENGINEERING CORPORATION - 000631

EXIST. RTE NN
TYPICAL SECTIONS
SHEET 14 OF 17

L:\MoDOT\20092124-00\Draw\Roadway\Sheets\002_TS_J7P3425C_i10.dgn 8:33:23 AM 8/2/2024

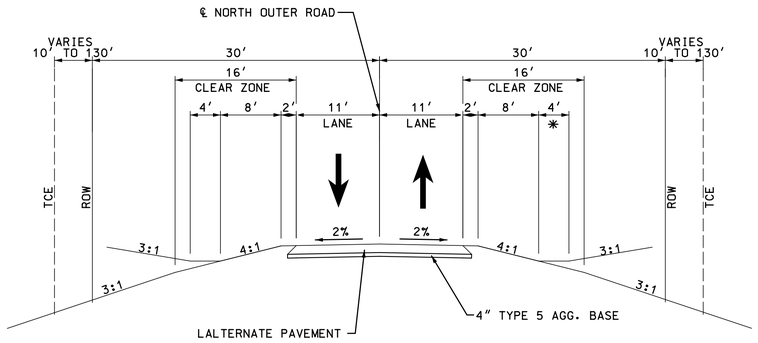

50 NORTH OUTER ROAD

STA. 10+11.24 TO STA. 41+11.02

✳ 0′ STA. 10+11.24 TO STA. 15+00.00

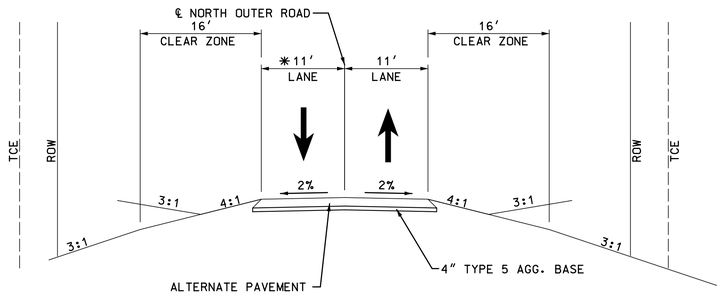

51 NORTH OUTER ROAD

STA. 41+11.02 TO STA. 67+57.90

✳ VARIES 11′ TO 116′ STA. 65+88.63 TO STA. 67+57.90

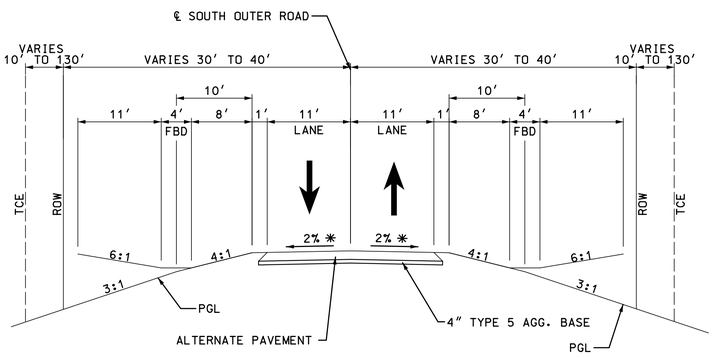

52 SOUTH OUTER ROAD

STA. 0+00.00 TO STA. 182+32.53

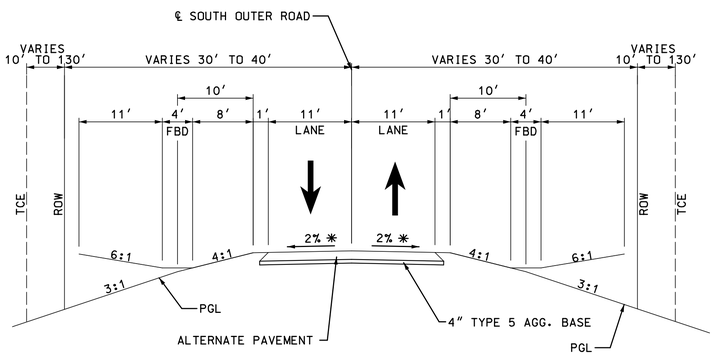

53 SOUTH OUTER ROAD – SIDEROADS

BLUEBIRD LANE

STA. 0+00.00 TO STA. 0+93.58

HUMMINGBIRD LANE

STA. 0+00.00 TO STA. 0+77.94

TANDY ROAD

STA. 0+00.00 TO STA. 2+45.33

HONOR CAMP LANE

STA. 0+00.00 TO STA. 1+90.43

OUTER ROADS

TYPICAL SECTIONS

SHEET 15 OF 17

DISCLAIMER

THE PROFESSIONAL WHOSE SIGNATURE AND PERSONAL SEAL APPEAR HEREON ASSUMES RESPONSIBILITY ONLY FOR WHAT APPEARS ON THIS PAGE, AND DISCLAIMS (PURSUANT TO SECTION 327.411 RSMO) SPECIFICATION, ESTIMATES, REPORTS, OR OTHER DOCUMENTS OR INSTRUMENTS NOT SEALED BY THE UNDERSIGNED PROFESSIONAL RELATING TO OR INTENDED TO BE USED FOR ANY PART OR PARTS OF THE PROJECT TO WHICH THIS PAGE REFERS.

STATE OF MISSOURI
DALLAS P. JOPLIN
NUMBER PE-2011015760
PROFESSIONAL ENGINEER

THIS SHEET HAS BEEN SIGNED, SEALED AND DATED ELECTRONICALLY.

DATE PREPARED: 11/4/2024

ROUTE	STATE
60	MO
DISTRICT	SHEET NO.
SW	2

COUNTY: WEBSTER

JOB NO.: J7P3425C

CONTRACT ID.:

PROJECT NO.:

BRIDGE NO.:

DATE	DESCRIPTION

IF A SEAL IS PRESENT ON THIS SHEET IT HAS BEEN ELECTRONICALLY SEALED AND DATED.

MISSOURI HIGHWAYS AND TRANSPORTATION COMMISSION
105 WEST CAPITOL
JEFFERSON CITY, MO 65102
1-888-ASK-MODOT (1-888-275-6636)

CMT
© Copyright CMT, Inc.
CRAWFORD, MURPHY & TILLY, INC.
1631 WEST ELFINDALE STREET
SPRINGFIELD, MO 65807 (417) 869-6009
ENGINEERING CORPORATION - 000631

REV.

SUPERELEVATION TABLE EB US60
CURVE EB60_3

-2%	-2%	STA. 0+00.00
-2%	2%	STA. 1+20.00
-6%	6%	STA. 2+40.07
-6%	6%	STA. 3+14.74
-2%	2%	STA. 4+34.81
-2%	-2%	STA. 5+54.81

SUPERELEVATION TABLE EB US60
CURVE EB60_6

-2%	-2%	STA. 13+20.02
2%	-2%	STA. 14+40.01
6%	-6%	STA. 15+60.08
6%	-6%	STA. 16+38.25
6%	-6%	STA. 16+96.67

SUPERELEVATION TABLE EB US60
CURVE EB60_9

6%	-6%	STA. 16+96.67
6%	-6%	STA. 17+80.87
8%	-8%	STA. 18+40.87
8%	-8%	STA. 31+20.16
2%	-2%	STA. 33+00.16
-2%	-2%	STA. 34+20.16

SUPERELEVATION TABLE RAMP 1
CURVE RAMP1_1

-4.02%	4.02%	STA. 0+00.00
-6%	6%	STA. 0+55.48
-6%	6%	STA. 1+36.22
-2%	2%	STA. 2+48.35

SUPERELEVATION TABLE RAMP 2
CURVE RAMP2_1

3.35%	-3.35%	STA. 0+00.00
5.1%	-5.1%	STA. 0+46.20
5.1%	-5.1%	STA. 1+14.79
2%	-2%	STA. 1+98.78

SUPERELEVATION TABLE RAMP 2
CURVE RAMP2_4

2%	-2%	STA. 4+81.36
4.2%	-4.2%	STA. 5+42.93
4.2%	-4.2%	STA. 9+95.72
2%	-2%	STA. 10+57.29

SUPERELEVATION TABLE RAMP 3
CURVE RAMP3_3

-2%	2%	STA. 0+32.09
2%	-2%	STA. 1+44.09
6.6%	-6.6%	STA. 2+72.98
6.6%	-6.6%	STA. 10+97.50
2%	-2%	STA. 12+26.39
-2%	2%	STA. 13+38.39

SUPERELEVATION TABLE RAMP 3
CURVE RAMP3_6

-2%	2%	STA. 13+60.30
-6%	6%	STA. 14+72.43
-6%	6%	STA. 15+84.97
-4.02%	4.02%	STA. 16+97.10

SUPERELEVATION TABLE RAMP 4
CURVE RAMP4_3

2%	-2%	STA. 5+69.79
5%	-5%	STA. 6+53.78
5%	-5%	STA. 13+40.91
3.35%	-3.35%	STA. 14+24.90

SUPERELEVATION TABLE ROUTE A
CURVE RTEA_3

-2%	-2%	STA. 51+13.93
-2%	2%	STA. 52+07.55
-8%	8%	STA. 53+47.97
-8%	8%	STA. 57+13.32
-2%	2%	STA. 58+53.74
-2%	-2%	STA. 59+47.36

SUPERELEVATION TABLE ROUTE NN
CURVE RTEA_6

-2%	-2%	STA. 74+56.96
-2%	2%	STA. 75+50.58
-8%	8%	STA. 76+91.00
-8%	8%	STA. 85+68.75
-2%	2%	STA. 87+09.17
-2%	-2%	STA. 88+02.79

SUPERELEVATION TABLE NOR
CURVE NORE_6

-2%	-2%	STA. 37+04.75
-2%	2%	STA. 37+80.61
-6%	6%	STA. 38+56.52
-6%	6%	STA. 39+18.18
-2%	2%	STA. 39+94.09
-2%	-2%	STA. 40+69.95

DISCLAIMER
THE PROFESSIONAL WHOSE SIGNATURE AND PERSONAL SEAL APPEAR HEREON ASSUMES RESPONSIBILITY ONLY FOR WHAT APPEARS ON THIS PAGE, AND DISCLAIMS (PURSUANT TO SECTION 327.411 RSMO) SPECIFICATION, ESTIMATES, REPORTS, OR OTHER DOCUMENTS OR INSTRUMENTS NOT SEALED BY THE UNDERSIGNED PROFESSIONAL RELATING TO OR INTENDED TO BE USED FOR ANY PART OR PARTS OF THE PROJECT TO WHICH THIS PAGE REFERS.

STATE OF MISSOURI
DALLAS P. JOPLIN
NUMBER PE-2011015760
PROFESSIONAL ENGINEER

THIS SHEET HAS BEEN SIGNED, SEALED AND DATED ELECTRONICALLY.

DATE PREPARED 9/3/2024

ROUTE	STATE
60	MO
DISTRICT	SHEET NO.
SW	2

COUNTY: WEBSTER
JOB NO.: J7P3425C
CONTRACT ID.:
PROJECT NO.:
BRIDGE NO.:

DESCRIPTION	DATE

IF A SEAL IS PRESENT ON THIS SHEET IT HAS BEEN ELECTRONICALLY SEALED AND DATED.

MISSOURI HIGHWAYS AND TRANSPORTATION COMMISSION
105 WEST CAPITOL
JEFFERSON CITY, MO 65102
1-888-ASK-MODOT (1-888-275-6636)

CMT
©Copyright CMT, Inc.
CRAWFORD, MURPHY & TILLY, INC.
1631 WEST ELFINDALE STREET
SPRINGFIELD, MO 65807 (417) 869-6009
ENGINEERING CORPORATION - 000631

SUPERELEVATION TABLES
TYPICAL SECTIONS
SHEET 16 OF 17

REV.

DISCLAIMER
THE PROFESSIONAL WHOSE SIGNATURE AND PERSONAL SEAL APPEAR HEREON ASSUMES RESPONSIBILITY ONLY FOR WHAT APPEARS ON THIS PAGE, AND DISCLAIMS (PURSUANT TO SECTION 327.411 RSMO) SPECIFICATION, ESTIMATES, REPORTS, OR OTHER DOCUMENTS OR INSTRUMENTS NOT SEALED BY THE UNDERSIGNED PROFESSIONAL RELATING TO OR INTENDED TO BE USED FOR ANY PART OR PARTS OF THE PROJECT TO WHICH THIS PAGE REFERS.

SUPERELEVATION TABLE SOR
CURVE SOR_3

-2%	-2%
STA. 4+94.86	
-2%	2%
STA. 5+76.34	
-5.4%	5.4%
STA. 6+45.83	
-5.4%	5.4%
STA. 13+77.11	
-2%	2%
STA. 14+46.60	
-2%	-2%
STA. 15+28.08	

SUPERELEVATION TABLE SOR
CURVE SOR_6

-2%	-2%
STA. 16+47.42	
2%	-2%
STA. 17+28.90	
5.4%	-5.4%
STA. 17+98.39	
5.4%	-5.4%
STA. 25+36.15	
2%	-2%
STA. 26+05.64	
-2%	-2%
STA. 26+87.12	

SUPERELEVATION TABLE SOR
CURVE SOR_9

-2%	-2%
STA. 32+21.21	
-2%	2%
STA. 33+02.69	
-5.4%	5.4%
STA. 33+72.18	
-5.4%	5.4%
STA. 38+49.01	
-2%	2%
STA. 39+18.50	
-2%	-1.78%
STA. 39+95.54	

SUPERELEVATION TABLE SOR
CURVE SOR_12

-2%	-1.78%
STA. 39+95.54	
2%	-2%
STA. 40+77.02	
5.4%	-5.4%
STA. 41+46.51	
5.4%	-5.4%
STA. 45+11.64	
2%	-2%
STA. 45+81.13	
-2%	-2%
STA. 46+62.61	

SUPERELEVATION TABLE SOR
CURVE SOR_15

-2%	-2%
STA. 54+61.28	
2%	-2%
STA. 55+42.76	
3%	-3%
STA. 55+63.24	
3%	-3%
STA. 64+79.83	
2%	-2%
STA. 65+00.31	
-2%	-2%
STA. 65+81.79	

SUPERELEVATION TABLE SOR
CURVE SOR_18

-2%	-2%
STA. 67+90.32	
-2%	2%
STA. 68+71.80	
-3.6%	3.6%
STA. 69+04.35	
-3.6%	3.6%
STA. 87+15.03	
-2%	2%
STA. 87+47.58	
-2%	-2%
STA. 88+29.06	

SUPERELEVATION TABLE SOR
CURVE SOR_21

-2%	-2%
STA. 89+35.47	
2%	-2%
STA. 90+16.95	
5.4%	-5.4%
STA. 90+86.44	
5.4%	-5.4%
STA. 93+76.24	
2%	-2%
STA. 94+45.73	
-2%	-2%
STA. 95+27.21	

SUPERELEVATION TABLE SOR
CURVE SOR_24

-2%	-2%
STA. 97+19.22	
-2%	2%
STA. 98+00.70	
-5.4%	5.4%
STA. 98+70.19	
-5.4%	5.4%
STA. 103+50.66	
-2%	2%
STA. 104+20.15	
-2%	-1.78%
STA. 104+97.10	

SUPERELEVATION TABLE SOR
CURVE SOR_27

-2%	-1.78%
STA. 104+97.10	
2%	-2%
STA. 105+78.58	
5.4%	-5.4%
STA. 106+48.07	
5.4%	-5.4%
STA. 112+18.88	
2%	-2%
STA. 112+88.37	
-2%	-2%
STA. 113+69.85	

SUPERELEVATION TABLE SOR
CURVE SOR_30

-2%	-2%
STA. 120+08.69	
-2%	2%
STA. 120+90.17	
4%	4%
STA. 121+31.10	
4%	4%
STA. 130+13.58	
-2%	2%
STA. 130+54.51	
-2%	-2%
STA. 131+35.99	

SUPERELEVATION TABLE SOR
CURVE SOR_33

-2%	-2%
STA. 162+19.13	
2%	-2%
STA. 163+00.61	
5%	-5%
STA. 163+61.86	
5%	-5%
STA. 170+27.16	
2%	-2%
STA. 170+88.41	
-2%	-2%
STA. 171+69.89	

SUPERELEVATION TABLE SOR
CURVE SOR_36

-2%	-2%
STA. 176+02.32	
-2%	2%
STA. 176+83.80	
-6%	6%
STA. 177+65.27	
-6%	6%
STA. 179+96.28	
-2%	2%
STA. 180+77.75	
-2%	-2%
STA. 181+59.23	

STATE OF MISSOURI
DALLAS P. JOPLIN
NUMBER PE-2011015760
PROFESSIONAL ENGINEER

THIS SHEET HAS BEEN SIGNED, SEALED AND DATED ELECTRONICALLY.

DATE PREPARED: 8/2/2024
ROUTE: 60 | STATE: MO
DISTRICT: SW | SHEET NO.: 2
COUNTY: WEBSTER
JOB NO.: J7P3425C
CONTRACT ID.:
PROJECT NO.:
BRIDGE NO.:

IF A SEAL IS PRESENT ON THIS SHEET IT HAS BEEN ELECTRONICALLY SEALED AND DATED.

REV.	DESCRIPTION	DATE

MISSOURI HIGHWAYS AND TRANSPORTATION COMMISSION
105 WEST CAPITOL
JEFFERSON CITY, MO 65102
1-888-ASK-MODOT (1-888-275-6636)

CMT
©Copyright CMT, Inc.
CRAWFORD, MURPHY & TILLY, INC.
1631 WEST ELFINDALE STREET
SPRINGFIELD, MO 65807 (417) 869-6009
ENGINEERING CORPORATION - 000631

SUPERELEVATION TABLES
TYPICAL SECTIONS
SHEET 17 OF 17

SEE LIGHTING AND SIGNING SHEETS FOR ADDITIONAL QUANTITIES

REMOVAL OF IMPROVEMENTS

SHEET	FROM STATION	TO STATION	BASELINE	LOCATION	DESCRIPTION	UNIT	QUANTITY	REMARKS
4	513+08.19	-	EX_US-60	RT	SIGNS, POSTS, AND FOOTINGS	EA	4.0	
4	513+08.19	-	EX_US-60	RT	GUARDRAIL	LF	26.3	
4	513+08.19	524.08.72	EX_US-60	RT	GUARDRAIL	LF	1,100.1	
4	513+08.19	524.78.17	EX_US-60	RT	ASPHALT PAVEMENT	SY	4,705.6	
4	513+93.09	514+22.08	EX_US-60	RT	FENCE	LF	1,803.2	BLUEBIRD LN
4	513+99.28	514+47	EX_US-60	RT	12" PIPE	LF	47.7	
4	514+01.16	514+17.97	EX_US-60	RT	SAWCUT	LF	16.8	BLUEBIRD LN
4	514+05.67	514+17.97	EX_US-60	RT	ASPHALT PAVEMENT	SY	74.9	BLUEBIRD LN
4	514+09.52	514.77.94	EX_US-60	RT	ASPHALT PAVEMENT	SY	116.8	BLUEBIRD LN
4	524+31.05	524+86.45	EX_US-60	RT	SAWCUT	LF	55.4	
4	524+31.71	-	EX_US-60	RT	SIGN, POST, AND FOOTING	EA	1.0	
4	524+62.36	-	EX_US-60	RT	SIGN, POST, AND FOOTING	EA	1.0	
4	524.76.12	-	EX_US-60	RT	SIGN, POST, AND FOOTING	EA	1.0	
4	524+80.00	-	EX_US-60	RT	SIGNS, POSTS, AND FOOTINGS	EA	4.0	
4	524+80.00	-	EX_US-60	RT	GUARDRAIL	LF	23.6	
5	539+47.91	-	EX_US-60	RT	SIGNS, POSTS, AND FOOTINGS	EA	4.0	
5	539+50.47	-	EX_US-60	RT	GUARDRAIL	LF	26.2	
5	539+53.16	549+04.75	EX_US-60	RT	ASPHALT PAVEMENT	SY	4,142.4	
5	539+84.04	540.63.03	EX_US-60	RT	SAWCUT	LF	79.1	
5	540+17.06	-	EX_US-60	RT	SIGN, POST, AND FOOTING	EA	1.0	
5	540+52.57	-	EX_US-60	RT	SIGN, POST, AND FOOTING	EA	1.0	
5	540+60.91	-	EX_US-60	RT	SIGN, POST, AND FOOTING	EA	1.0	
5	540+84.26	-	EX_US-60	RT	SIGN, POST, AND FOOTING	EA	1.0	
5	543+55.93		EX_US-60	RT	SIGN, POST, AND FOOTING	EA	1.0	
5	544+05.84	547+57.47	EX_US-60	RT	GUARDRAIL	LF	352.1	
5	545.64.96	-	EX_US-60	RT	SIGN, POST, AND FOOTING	EA	1.0	
5	548+97.19	549+04.76	EX_US-60	RT	SAWCUT	LF	35.0	
6	592+89.41	597+73.87	EX_US-60	RT	ASPHALT PAVEMENT	SY	2,652.6	
6	594+79.57	595+89.37	EX_US-60	RT	SAWCUT	LF	109.6	
6	594+80.03	595+77.81	EX_US-60	RT	18" PIPE	LF	88.3	
6	594+81.13	594+85.94	EX_US-60	RT	GUARDRAIL	LF	19.3	
6	594+87.06	594+94.17	EX_US-60	RT	SIGNS, POSTS, AND FOOTINGS	EA	2.0	
6	594+91.00	595+66.51	EX_US-60	RT	SAWCUT	LF	78.5	
6	595+39.16	-	EX_US-60	RT	SIGN, POST, AND FOOTING	EA	1.0	
6	595+62.42	-	EX_US-60	RT	SIGN, POST, AND FOOTING	EA	1.0	
6	595+65.38	595+79.02	EX_US-60	RT	SIGNS, POSTS, AND FOOTINGS	EA	2.0	
7	623+73.40	625+44.35	EX_US-60	RT	ASPHALT PAVEMENT	SY	307.3	
7	623+73.40	625+44.35	EX_US-60	RT	SAWCUT	LF	175.3	
7	623+79.94	-	EX_US-60	RT	SIGN, POST, AND FOOTING	EA	1.0	
7	623+90.06	624+34.78	EX_US-60	RT	18" PIPE	LF	47.0	
7	624+25.18	-	EX_US-60	RT	SIGN, POST, AND FOOTING	EA	1.0	
7	624+28.56	-	EX_US-60	RT	SIGN, POST, AND FOOTING	EA	1.0	
8	641+82.20	642+18.46	EX_US-60	RT	ASPHALT PAVEMENT	SY	109.9	
8	641+82.21	642+18.47	EX_US-60	RT	SAWCUT	LF	36.3	
8	158+40.50	-	EX_US-60	RT	SIGN, POST, AND FOOTING	EA	1.0	
8	641+68.44	642+20.55	EX_US-60	RT	SIGNS, POSTS, AND FOOTINGS	EA	3.0	
8	158+39.55	-	SOUTH OUTER ROAD	LT	T RISER	EA	1.0	
9-12	643+94.98	681+38.66	EX_US-60	RT	ASPHALT PAVEMENT	SY	21,698.8	
9	644+02.72	-	EX_US-60	RT	SIGN, POST, AND FOOTING	EA	1.0	
9	644+49.08	-	EX_US-60	RT	SIGN, POST, AND FOOTING	EA	1.0	
9	645+90.23	-	EX_US-60	RT	SIGN, POST, AND FOOTING	EA	2.0	
9-10	646+58.07	657+31.77	EX_US-60	RT	ASPHALT PAVEMENT	SY	1,097.7	
9	648+50.83	-	EX_US-60	RT	SIGN, POST, AND FOOTING	EA	1.0	
9	650+49.65	-	EX_US-60	RT	SIGN, POST, AND FOOTING	EA	1.0	

DISCLAIMER
THE PROFESSIONAL WHOSE SIGNATURE AND PERSONAL SEAL APPEAR HEREON ASSUMES RESPONSIBILITY ONLY FOR WHAT APPEARS ON THIS PAGE, AND DISCLAIMS (PURSUANT TO SECTION 327.411 RSMO) SPECIFICATION, ESTIMATES, REPORTS, OR OTHER DOCUMENTS OR INSTRUMENTS NOT SEALED BY THE UNDERSIGNED PROFESSIONAL RELATING TO OR INTENDED TO BE USED FOR ANY PART OR PARTS OF THE PROJECT TO WHICH THIS PAGE REFERS.

STATE OF MISSOURI
DALLAS P. JOPLIN
NUMBER PE-2011015760
PROFESSIONAL ENGINEER

THIS SHEET HAS BEEN SIGNED, SEALED AND DATED ELECTRONICALLY.

DATE PREPARED
9/3/2024

ROUTE	STATE
60	MO
DISTRICT	SHEET NO.
SW	3

COUNTY
WEBSTER

JOB NO.
J7P3425C

CONTRACT ID.

PROJECT NO.

BRIDGE NO.

IF A SEAL IS PRESENT ON THIS SHEET IT HAS BEEN ELECTRONICALLY SEALED AND DATED.

REV.	DATE	DESCRIPTION

MISSOURI HIGHWAYS AND TRANSPORTATION COMMISSION
105 WEST CAPITOL
JEFFERSON CITY, MO 65102
1-888-ASK-MODOT (1-888-275-6636)

CMT
© Copyright CMT, Inc.
CRAWFORD, MURPHY & TILLY, INC.
1631 WEST ELFINDALE STREET
SPRINGFIELD, MO 65807 (417) 869-6009
ENGINEERING CORPORATION - 000631

SUMMARY OF QUANTITIES
1 OF 26

REMOVAL OF IMPROVEMENTS (CONT'D.)

SHEET	FROM STATION	TO STATION	BASELINE	LOCATION	DESCRIPTION	UNIT	QUANTITY	REMARKS
9	653+05.30	-	EX_US-60	RT	SIGN, POST, AND FOOTING	EA	1.0	
9	654+25.39	654+41.24	EX_US-60	RT	ASPHALT PAVEMENT	SY	64.9	
9	654+20.35	654+58.31	EX_US-60	RT	15" PIPE	LF	38.0	
9	655+19.68	-	EX_US-60	RT	SIGN, POST, AND FOOTING	EA	1.0	
10	656+28.68	-	EX_US-60	RT	SIGN, POST, AND FOOTING	EA	1.0	
10	656+68.08	-	EX_US-60	RT	SIGN, POST, AND FOOTING	EA	1.0	
10	658+86.83	-	EX_US-60	LT	SIGN, POST, AND FOOTING	EA	1.0	
10	658+98.74		EX_US-60	RT	AREA INLET	EA	1.0	
10	659+92.66	659+92.66	EX_US-60	RT	SIGNS, POSTS, AND FOOTINGS	EA	2.0	
10	659+92.66	-	EX_US-60	RT	SIGN, POST, AND FOOTING	EA	1.0	
10	662+07.66	-	EX_US-60	RT	SIGN, POST, AND FOOTING	EA	1.0	
10	662+35.24	-	EX_US-60	RT	24" FES	EA	1.0	
10	662+35.24	662+20.60	EX_US-60	RT	24" CULVERT PIPE	EA	1.0	
10	663+43.13	663+43.78	EX_US-60	RT	SIGNS, POSTS, AND FOOTINGS	EA	2.0	
10	664+49.17	-	EX_US-60	LT	SIGN, POST, AND FOOTING	EA	1.0	
10	657+21.74	-	EX_US-60	LT	SIGN, POST, AND FOOTING	EA	1.0	
10	657+79.14	-	EX_US-60	LT	SIGN, POST, AND FOOTING	EA	1.0	
10	658+91.96	-	EX_US-60	LT	SIGN, POST, AND FOOTING	EA	1.0	
10	658+99.47	-	EX_US-60	LT	24" FES	EA	1.0	
10	659+30.77	664+52.63	EX_US-60	LT	ASPHALT PAVEMENT	SY	1,332.1	
10	659+58.70	660+21.60	EX_US-60	LT	SAWCUT	LF	63.3	
10	659+83.32	660+14.94	EX_US-60	LT	SIGNS, POSTS, AND FOOTINGS	EA	2.0	
10	659+73.81	660+23.53	EX_US-60	LT	SIGNS, POSTS, AND FOOTINGS	EA	2.0	
10	660+99.43	668+83.37	EX_US-60	LT	FENCE	LF	896.1	
10	661+28.52	-	EX_US-60	LT	SIGN, POST, AND FOOTING	EA	1.0	
10	665+00.91	-	EX_US-60	LT	SIGN, POST, AND FOOTING	EA	1.0	
10,16	71+64.34	73+42.74	ROUTE NN	RT	FENCE	LF	281.9	
10	71+61.73	72+09.08	ROUTE NN	RT	BUILDING	EA	1.0	
11	4+20.11	-	RAMP 3	RT	SIGN, POST, AND FOOTING	EA	1.0	
11	4+05.72	16+40.45	RAMP 3	RT	FENCE	LF	1,736.8	
11	6+51.86	-	RAMP 3	RT	SIGN, POST, AND FOOTING	EA	1.0	
11-12	9+35.01	16+40.45	RAMP 3	RT	ASPHALT PAVEMENT	SY	1,259.5	
11	4+77.37	-	RAMP 4	RT	18" FES	EA	1.0	
11	4+77.37	-	RAMP 4	RT	18" CULVERT PIPE	EA	1.0	
11	12+67.04	-	RAMP 4	RT	SIGN, POST, AND FOOTING	EA	1.0	
11	13+87.11	-	RAMP 4	RT	SIGN, POST, AND FOOTING	EA	1.0	
12	37+82.54	38+77.19	NORTH OUTER ROAD	LT	POND	SY	441.9	
12	39+66.40	49+93.60	NORTH OUTER ROAD	LT AND RT	ASPHALT PAVEMENT	SY	3,082.4	
12	40+74.91	-	NORTH OUTER ROAD	LT	SIGN, POST, AND FOOTING	EA	1.0	
12	40+82.88	-	NORTH OUTER ROAD	RT	SIGN, POST, AND FOOTING	EA	1.0	
12-13	688+83.88	694+81.54	EX_US-60	LT	ASPHALT PAVEMENT	SY	821.0	
12	688+83.88	694+81.55	EX_US-60	LT	SAWCUT	LF	597.3	
12	689+17.54	690+06.69	EX_US-60	LT	SAWCUT	LF	89.0	
12	689+68.64	-	EX_US-60	LT	SIGN, POST, AND FOOTING	EA	1.0	
12	689+73.76	-	EX_US-60	LT	SIGN, POST, AND FOOTING	EA	1.0	
12	690+71.27	-	EX_US-60	LT	SIGN, POST, AND FOOTING	EA	1.0	
12	687+10.21	690+05.98	EX_US-60	RT	SAWCUT	LF	618.5	
12	688+65.24	-	EX_US-60	RT	SIGN, POST, AND FOOTING	EA	1.0	
12	689+13.68	-	EX_US-60	RT	SIGN, POST, AND FOOTING	EA	1.0	
12	689+21.99	-	EX_US-60	RT	SIGN, POST, AND FOOTING	EA	1.0	
12	689+28.12	-	EX_US-60	RT	SIGN, POST, AND FOOTING	EA	1.0	
12	689+33.03	689+64.05	EX_US-60	RT	ASPHALT PAVEMENT	SY	131.4	
12-14	690+20.98	707+24.28	EX_US-59	RT	SAWCUT	LF	1,713.4	
12-14	690+20.98	707+24.28	EX_US-60	RT	ASPHALT PAVEMENT	SY	1,666.9	

DISCLAIMER
THE PROFESSIONAL WHOSE SIGNATURE AND PERSONAL SEAL APPEAR HEREON ASSUMES RESPONSIBILITY ONLY FOR WHAT APPEARS ON THIS PAGE, AND DISCLAIMS (PURSUANT TO SECTION 327.411 RSMO) SPECIFICATION, ESTIMATES, REPORTS, OR OTHER DOCUMENTS OR INSTRUMENTS NOT SEALED BY THE UNDERSIGNED PROFESSIONAL RELATING TO OR INTENDED TO BE USED FOR ANY PART OR PARTS OF THE PROJECT TO WHICH THIS PAGE REFERS.

STATE OF MISSOURI
DALLAS P. JOPLIN
NUMBER PE-2011015760
PROFESSIONAL ENGINEER

THIS SHEET HAS BEEN SIGNED, SEALED AND DATED ELECTRONICALLY.

DATE PREPARED
9/3/2024

ROUTE	STATE
60	MO
DISTRICT	SHEET NO.
SW	3

COUNTY
WEBSTER

JOB NO.
J7P3425C

CONTRACT ID.

PROJECT NO.

BRIDGE NO.

DATE	DESCRIPTION

MISSOURI HIGHWAYS AND TRANSPORTATION COMMISSION
105 WEST CAPITOL
JEFFERSON CITY, MO 65102
1-888-ASK-MODOT (1-888-275-6636)

CMT
© Copyright CMT, Inc.
CRAWFORD, MURPHY & TILLY, INC.
1631 WEST ELFINDALE STREET
SPRINGFIELD, MO 65807 (417) 869-6009
ENGINEERING CORPORATION - 000631

IF A SEAL IS PRESENT ON THIS SHEET IT HAS BEEN ELECTRONICALLY SEALED AND DATED.

SUMMARY OF QUANTITIES
2 OF 26

REV.

REMOVAL OF IMPROVEMENTS (CONT'D.)

SHEET	FROM STATION	TO STATION	BASELINE	LOCATION	DESCRIPTION	UNIT	QUANTITY	REMARKS
12	689+70.21	-	EX_US-60	RT	SIGN, POST, AND FOOTING	EA	1.0	
12	690+70.70	-	EX_US-60	RT	SIGN, POST, AND FOOTING	EA	1.0	
13	695+51.49	713+06.23	EX_US-59	RT	SAWCUT	LF	1,767.8	
13	695+51.49	713+06.23	EX_US-60	RT	ASPHALT PAVEMENT	SY	1,588.2	
13-14	704+23.33	711+42.58	EX_US-59	LT	SAWCUT	LF	723.4	
13-14	704+23.33	711+42.58	EX_US-60	LT	ASPHALT PAVEMENT	SY	252.3	
13	49+38.80	-	NORTH OUTER ROAD	LT AND RT	24" CMP	LF	50.1	
13	49+75.35	50+14.80	NORTH OUTER ROAD	RT	GUARDRAIL	LF	39.7	
13	50+60.27	50+61.53	NORTH OUTER ROAD	RT	BILLBOARD	LF	11.5	
13	50+92.26	-	NORTH OUTER ROAD	RT	FLAG	EA	1.0	
13	51+98.99	-	NORTH OUTER ROAD	RT	SIGN, POST, AND FOOTING	EA	1.0	
13	52+20.57	-	NORTH OUTER ROAD	CL	POWER POLE	EA	1.0	
13	53+40.36	53+70.82	NORTH OUTER ROAD	LT	BUILDING	EA	1.0	
13	55+88.79	56+40.09	NORTH OUTER ROAD	LT	BUILDING	EA	1.0	
13	697+55.43	-	EX_US-60	LT	SIGN, POST, AND FOOTING	EA	1.0	
13	63+79.29	-	NORTH OUTER ROAD	RT	SIGN, POST, AND FOOTING	EA	1.0	
14	65+24.56	67+18.94	NORTH OUTER ROAD	LT AND RT	FENCE	LF	365.9	
14	67+69.05	-	NORTH OUTER ROAD	CL	SIGN, POST, AND FOOTING	EA	1.0	
14	713+08.71	714+04.61	EX_US-60	LT	ASPHALT PAVEMENT	SY	738.2	
14	713+08.72	714+04.62	EX_US-60	LT	SAWCUT	LF	123.9	
14	709+03.82	716+91.63	EX_US-60	LT AND RT	ASPHALT PAVEMENT	SY	1,212.1	
14	709+03.82	714+02.16	EX_US-60	RT	SAWCUT	LF	498.3	
14	712+85.32	716+91.63	EX_US-60	LT	SAWCUT	LF	406.3	
14	712+30.30	-	EX_US-60	RT	SIGN, POST, AND FOOTING	EA	1.0	
14	713+17.99	-	EX_US-60	RT	SIGN, POST, AND FOOTING	EA	1.0	
14	713+29.67	-	EX_US-60	RT	SIGN, POST, AND FOOTING	EA	1.0	
14	713+75.89	-	EX_US-60	RT	SIGN, POST, AND FOOTING	EA	1.0	
15	51+11.18	61+85.22	ROUTE A	RT	ASPHALT PAVEMENT	SY	3,102.4	
15	51+57.88	-	ROUTE A	LT AND RT	12" PLASTIC PIPE	LF	34.3	
15	16+76.45	-	ROUTE A	LT	HEADWALL	EA	1.0	
15	16+66.57	-	ROUTE A	RT	HEADWALL	EA	1.0	
15	55+23.44	60+62.63	ROUTE A	LT AND RT	FENCE	LF	628.9	
15	55+24.49	-	ROUTE A	LT	POWER POLE	EA	1.0	
15	56+10.59	-	ROUTE A	RT	SIGN, POST, AND FOOTING	EA	1.0	
15	56+60.56	56+73.87	ROUTE A	RT	48" PIPE	EA	1.0	
15	56+60.57	56+73.88	ROUTE A	RT	BOX CULVERT COLLARS	EA	2.0	
15	57+02.28	57+11.57	ROUTE A	RT	24" PIPE	EA	1.0	
15	57+12.77	-	ROUTE A	RT	POWER POLE	EA	1.0	
15	12+09.67	-	NORTH OUTER ROAD	RT	SIGN, POST, AND FOOTING	EA	1.0	
15	13+52.53	-	NORTH OUTER ROAD	LT	POWER POLE	EA	1.0	
17	90+53.93	91+38.96	ROUTE NN	RT	POND AND TREES	EA	1.0	
17	91+58.17	92+01.19	ROUTE NN	LT	BUILDING	EA	1.0	
17	91+86.53	92+98.34	ROUTE NN	LT AND RT	BUILDING	EA	1.0	
17	92+96.42	93+53.13	ROUTE NN	LT AND RT	FENCE	LF	127.4	
17	10+47.79	17+53.65	EXISTING ROUTE NN	LT AND RT	ASPHALT PAVEMENT	SY	2,142.0	
17	13+96.37	14+04.46	EXISTING ROUTE NN	RT	MANHOLE	EA	1.0	
19	24+93.66	25+74.66	SOUTH OUTER ROAD	LT AND RT	ASPHALT PAVEMENT	SY	403.0	
21	46+90.04	47+24.62	SOUTH OUTER ROAD	LT AND RT	FENCE	LF	120.9	
21-22	49+49.93	52+23.71	SOUTH OUTER ROAD	LT AND RT	ASPHALT PAVEMENT	SY	698.8	
22	52+52.78	52+64.30	SOUTH OUTER ROAD	LT AND RT	FENCE	LF	65.1	
22	63+76.58	63+80.62	SOUTH OUTER ROAD	LT AND RT	FENCE	LF	89.0	
23	65+77.27	66+05.58	SOUTH OUTER ROAD	LT AND RT	ASPHALT PAVEMENT	SY	175.3	
23	65+71.86	66+16.45	SOUTH OUTER ROAD	LT	ASPHALT PAVEMENT	SY	105.0	
23	66+61.21	66+74.05	SOUTH OUTER ROAD	LT AND RT	FENCE	LF	68.5	
23	68+58.58	68+80.16	SOUTH OUTER ROAD	LT AND RT	FENCE	LF	71.3	

DISCLAIMER
THE PROFESSIONAL WHOSE SIGNATURE AND PERSONAL SEAL APPEAR HEREON ASSUMES RESPONSIBILITY ONLY FOR WHAT APPEARS ON THIS PAGE, AND DISCLAIMS (PURSUANT TO SECTION 327.411 RSMO) SPECIFICATION, ESTIMATES, REPORTS, OR OTHER DOCUMENTS OR INSTRUMENTS NOT SEALED BY THE UNDERSIGNED PROFESSIONAL RELATING TO OR INTENDED TO BE USED FOR ANY PART OR PARTS OF THE PROJECT TO WHICH THIS PAGE REFERS.

STATE OF MISSOURI
DALLAS P. JOPLIN
NUMBER PE-2011015760
PROFESSIONAL ENGINEER

THIS SHEET HAS BEEN SIGNED, SEALED AND DATED ELECTRONICALLY.

DATE PREPARED
9/3/2024

ROUTE	STATE
60	MO
DISTRICT	SHEET NO.
SW	3

COUNTY
WEBSTER

JOB NO.
J7P3425C

CONTRACT ID.

PROJECT NO.

BRIDGE NO.

DATE	DESCRIPTION

MISSOURI HIGHWAYS AND TRANSPORTATION COMMISSION
105 WEST CAPITOL
JEFFERSON CITY, MO 65102
1-888-ASK-MODOT (1-888-275-6636)

CMT
©Copyright CMT, Inc.
CRAWFORD, MURPHY & TILLY, INC.
1631 WEST ELFINDALE STREET
SPRINGFIELD, MO 65807 (417) 869-6009
ENGINEERING CORPORATION - 000631

IF A SEAL IS PRESENT ON THIS SHEET IT HAS BEEN ELECTRONICALLY SEALED AND DATED.

SUMMARY OF QUANTITIES
3 OF 26

REV.

DISCLAIMER
THE PROFESSIONAL WHOSE SIGNATURE AND PERSONAL SEAL APPEAR HEREON ASSUMES RESPONSIBILITY ONLY FOR WHAT APPEARS ON THIS PAGE, AND DISCLAIMS (PURSUANT TO SECTION 327.411 RSMO) SPECIFICATION, ESTIMATES, REPORTS, OR OTHER DOCUMENTS OR INSTRUMENTS NOT SEALED BY THE UNDERSIGNED PROFESSIONAL RELATING TO OR INTENDED TO BE USED FOR ANY PART OR PARTS OF THE PROJECT TO WHICH THIS PAGE REFERS.

REMOVAL OF IMPROVEMENTS (CONT'D.)

SHEET	FROM STATION	TO STATION	BASELINE	LOCATION	DESCRIPTION	UNIT	QUANTITY	REMARKS
23	72+17.02	72+25.88	SOUTH OUTER ROAD	LT AND RT	FENCE	LF	29.5	
24	0+00.00	2+45.62	TANDY ROAD	RT	FENCE	LF	250.0	
24	79+64.60	80+65.31	SOUTH OUTER ROAD	LT	ASPHALT PAVEMENT	SY	203.0	
24-25	79+24.77	95+42.47	SOUTH OUTER ROAD	LT AND RT	ASPHALT PAVEMENT	SY	3,308.7	
24	79+60.11	79+66.95	SOUTH OUTER ROAD	LT AND RT	FENCE	LF	30.0	
24	79+60.85	-	SOUTH OUTER ROAD	LT	T RISER	EA	1.0	
24	80+57.07	83+92.48	SOUTH OUTER ROAD	RT	FENCE	LF	732.5	
24	83+86.81	84+54.25	SOUTH OUTER ROAD	RT	BUILDING	EA	4.0	
24-25	84+49.27	94+81.06	SOUTH OUTER ROAD	LT	FENCE	LF	1,328.8	
24	PARCEL 39		LAKES, LLC	-	TRAILER	EA	2.0	S34 - T29N - R18W
24	PARCEL 39		LAKES, LLC	-	TRASH	SY	3,388.0	S34 - T29N - R18W
24	PARCEL 39		LAKES, LLC	-	HOUSE	EA	1.0	S34 - T29N - R18W
25	PARCEL 31		SCOTT, MARK J. & LETECIA	-	HOUSE	EA	1.0	S34 - T29N - R18W
25	PARCEL 31		SCOTT, MARK J. & LETECIA	-	SHED	EA	2.0	S34 - T29N - R18W
26	0+11.95	-	HONOR CAMP	LT	SIGN, POST, AND FOOTING	EA	1.0	
26	0+11.96	1+90.76	HONOR CAMP	LT	GUARDRAIL	LF	201.2	
26	0+09.26	1+90.29	HONOR CAMP	RT	GUARDRAIL	LF	187.9	
26	0+88.62	-	HONOR CAMP	LT	SIGN, POST, AND FOOTING	EA	1.0	
26	0+74.18	-	HONOR CAMP	RT	SIGN, POST, AND FOOTING	EA	1.0	
26	108+45.50	112+97.33	SOUTH OUTER ROAD	LT AND RT	ASPHALT PAVEMENT	LF	4,295.1	
26	116+76.09	116+87.58	SOUTH OUTER ROAD	LT AND RT	FENCE	LF	62.6	
28	137+49.10	138+94.13	SOUTH OUTER ROAD	LT AND RT	FENCE	LF	223.6	
28-29	138+38.31	147+18.30	SOUTH OUTER ROAD	LT AND RT	ASPHALT PAVEMENT	SY	1,646.2	
28	138+51.35	140+21.18	SOUTH OUTER ROAD	RT	FENCE	LF	264.6	
28-29	140+34.28	147+00.56	SOUTH OUTER ROAD	RT	FENCE	LF	834.6	
28	141+48.25	-	SOUTH OUTER ROAD	RT	SIGN, POST, AND FOOTING	EA	1.0	
29	146+97.25	14745+54	SOUTH OUTER ROAD	LT AND RT	FENCE	LF	197.6	
30	156+78.73	163+70.10	SOUTH OUTER ROAD	LT AND RT	FENCE	LF	868.8	
30	157+80.42	158+27.87	SOUTH OUTER ROAD	RT	BUILDING	EA	1.0	
30	158+34.56	158+89.60	SOUTH OUTER ROAD	LT AND RT	ASPHALT PAVEMENT	SY	227.3	
31	169+23.27	177+50.22	SOUTH OUTER ROAD	LT AND RT	FENCE	LF	890.4	
10	664+00	665+50	EXIST. US60	LT	TRANSVERSE RUMBLE STRIPS	LS	1	MILL AND FILL
				TOTAL	1 LUMP SUM			

REMOVAL OF IMPROVEMENTS (BY OTHERS)

SHEET	ROADWAY	FROM STATION	TO STATION	LOCATION	DESCRIPTION	UNIT	QUANTITY	REMARKS
4 & 19	EX_US 60	514+00.72	514+28.63	RT	RR CROSSING PANELS & SIGNALS	EA	2	
5 & 21-22	EX_US 60	540+22.11	540+50.04	RT	RR CROSSING PANELS & SIGNALS	EA	2	
6 & 26	EX_US 60	594+92.05	595+24.80	RT	RR CROSSING PANELS & SIGNALS	EA	2	
6	EX_US 60	594+92.05	-	RT	FLAG	EA	1	
7 & 28	EX_US 60	623+79.84	624+05.61	RT	RR CROSSING PANELS & SIGNALS	EA	2	
8	EX_US 60	641+86.82	642+20.53	RT	RR CROSSING PANELS & SIGNALS	EA	2	
9	EX_US 60	654+19.39	654+49.98	RT	RR CROSSING PANELS & SIGNALS	EA	2	
12	EB US 60	42+71.66	42+71.66	RT	RR CROSSING PANELS & SIGNALS	EA	2	
23	SOUTH OUTER ROAD	65+82.09	66+13.95	LT	RR CROSSING PANELS & SIGNALS	EA	2	
24	SOUTH OUTER ROAD	79+87.68	80+27.78	LT	RR CROSSING PANELS & SIGNALS	EA	2	

STATE OF MISSOURI
DALLAS P. JOPLIN
NUMBER PE-2011015760
PROFESSIONAL ENGINEER

THIS SHEET HAS BEEN SIGNED, SEALED AND DATED ELECTRONICALLY.

DATE PREPARED: 9/3/2024
ROUTE: 60 | STATE: MO
DISTRICT: SW | SHEET NO.: 3
COUNTY: WEBSTER
JOB NO.: J7P3425C
CONTRACT ID.:
PROJECT NO.:
BRIDGE NO.:

DATE | DESCRIPTION

MISSOURI HIGHWAYS AND TRANSPORTATION COMMISSION
105 WEST CAPITOL
JEFFERSON CITY, MO 65102
1-888-ASK-MODOT (1-888-275-6636)

CMT
© Copyright CMT, Inc.
CRAWFORD, MURPHY & TILLY, INC.
1631 WEST ELFINDALE STREET
SPRINGFIELD, MO 65807 (417) 869-6009
ENGINEERING CORPORATION - 000631

IF A SEAL IS PRESENT ON THIS SHEET IT HAS BEEN ELECTRONICALLY SEALED AND DATED.

SUMMARY OF QUANTITIES
4 OF 26

REV.

L:\MoDOT\20092124-00\Draw\Roadway\Sheets\003_QU_J7P3425C_i1.dgn 1:55:41 PM 9/3/2024

CLEARING AND GRUBBING

SHEET	FROM STATION	TO STATION	ROADWAY	LOCATION	CLEARING AND GRUBBING (ACRE)	REMARKS
10	7+25	9+97	RAMP 1	LT AND RT	0.1	
10	1+55	4+00	RAMP 3	LT AND RT	0.1	
10	70+68	73+00	ROUTE NN	LT AND RT	0.8	
11	4+00	13+46	RAMP 3	LT AND RT	0.1	
11	23+28	31+77	NORTH OUTER ROAD	LT AND RT	0.1	
12	34+00	40+64	NORTH OUTER ROAD	LT AND RT	0.1	
13	52+00	56+45	NORTH OUTER ROAD	LT AND RT	0.2	
15	20+25	21+90	NORTH OUTER ROAD	LT	0.1	
15	53+15	56+50	ROUTE A	LT	0.1	
16	73+00	86+50	ROUTE NN	LT AND RT	6.1	
17	86+50	94+25	ROUTE NN	LT AND RT	0.7	
17	12+33	16+67	EXISTING ROUTE NN	LT	0.1	
18	0+00	13+00	SOUTH OUTER ROAD	LT AND RT	3.8	
19	13+00	26+00	SOUTH OUTER ROAD	LT AND RT	4.3	
20	26+00	39+00	SOUTH OUTER ROAD	LT AND RT	2.2	
21	39+00	52+00	SOUTH OUTER ROAD	LT AND RT	1.5	
22	52+00	65+00	SOUTH OUTER ROAD	LT AND RT	1.5	
23	65+00	78+00	SOUTH OUTER ROAD	LT AND RT	0.7	
24	78+00	91+00	SOUTH OUTER ROAD	LT AND RT	1.3	
25	91+00	104+00	SOUTH OUTER ROAD	LT AND RT	3.6	
26	104+00	117+00	SOUTH OUTER ROAD	LT AND RT	1.6	
27	117+00	130+00	SOUTH OUTER ROAD	LT AND RT	0.3	
28	130+00	143+00	SOUTH OUTER ROAD	LT AND RT	0.3	
29	143+00	156+00	SOUTH OUTER ROAD	LT AND RT	0.6	
30	156+00	169+00	SOUTH OUTER ROAD	LT AND RT	0.4	
				TOTALS	31	

ROCK BLANKET

PLAN SHEET	FROM STATION	TO STATION	BASELINE	LOCATION	FURNISHING ROCK BLANKET (CUYD)	PLACING ROCK BLANKET (CUYD)	REMARKS
10	7+79.44	11+27.28	RAMP 2	LT	1533.9	1533.9	
10	7+32.14	11+38.56	RAMP 2	RT	1443.6	1443.6	
10	0+41.20	3+00.00	RAMP 4	RT	1220.4	1220.4	
11	3+00.00	13+87.11	RAMP 4	RT	2432.5	2432.5	
11	35+91.84	37+00.00	EB US60	RT	198.1	198.1	
12	37+00.00	42+71.66	EB US60	RT	584.2	584.2	
				TOTALS	7,413	7,413	

EARTHWORK

FROM STATION	TO STATION	BASELINE	CUT (CUYD)	FILL (CUYD)	UNCLASSIFIED EXCAVATION (CUYD)	COMPACTING EMBANKMENT (CUYD)	EMBANKMENT IN PLACE (CUYD)	REMARKS
0+00.00	42+71.66	EB US60	55,963	8,160				INCLUDES RAMP 2 AND RAMP 4 GORE
0+00.00	9+73.93	RAMP 1	182	64,018				
0+00.00	10+68.27	RAMP 2	2,586	42,776				
0+00.00	16+40.45	RAMP 3	7,606	93,385				
0+00.00	13+87.11	RAMP 4	12,848	55,066				
51+11.18	66+61.17	RTE A	1,155	148,521				NORTH OF US60
66+61.17	70+23.22	RTE A/NN	0	9,694				SOUTH OF US60/NORTH OF BNSF
70+23.22	93+12.73	RTE NN	494	449,819				SOUTH OF BNSF
10+47.96	17+53.70	EXISTING RTE NN	2,618	997				
10+11.24	14+81.00	NORTH OUTER ROAD	58	14,317				WEST OF RTE A
15+19.00	67+58.81	NORTH OUTER ROAD	52,138	40,055				EAST OF RTE A
0+00.00	26+05.89	SOUTH OUTER ROAD	14,991	104,625				RTE Z TO BLUEBIRD
26+05.89	52+70.70	SOUTH OUTER ROAD	16,122	29,810				BLUEBIRD TO HUMMINGBIRD
52+70.70	79+99.07	SOUTH OUTER ROAD	8,380	15,366				HUMMINGBIRD TO TANDY
79+99.07	109+48.51	SOUTH OUTER ROAD	25,747	29,278				TANDY TO HONOR CAMP
109+48.51	140+51.69	SOUTH OUTER ROAD	15,052	118				HONOR CAMP TO GREENBRIAR
140+51.69	182+19.60	SOUTH OUTER ROAD	15,052	118				GREENBRIAR TO RTE NN
524+10.34	717+11.68	EXISTING US60	3,622	1,239				INCLUDES WB ACCEL/DECEL LANES
		RETAING WALLS	1,761					2' BELOW FOOTING
		UTILITY TRENCHING	222					
				TOTALS	243,714	207,157	1,035,830	

DISCLAIMER
THE PROFESSIONAL WHOSE SIGNATURE AND PERSONAL SEAL APPEAR HEREON ASSUMES RESPONSIBILITY ONLY FOR WHAT APPEARS ON THIS PAGE. AND DISCLAIMS (PURSUANT TO SECTION 327.411 RSMO) SPECIFICATION, ESTIMATES, REPORTS, OR OTHER DOCUMENTS OR INSTRUMENTS NOT SEALED BY THE UNDERSIGNED PROFESSIONAL RELATING TO OR INTENDED TO BE USED FOR ANY PART OR PARTS OF THE PROJECT TO WHICH THIS PAGE REFERS.

STATE OF MISSOURI
DALLAS P. JOPLIN
NUMBER PE-2011015760
PROFESSIONAL ENGINEER

THIS SHEET HAS BEEN SIGNED, SEALED AND DATED ELECTRONICALLY.

DATE PREPARED
12/3/2024

ROUTE	STATE
60	MO
DISTRICT	SHEET NO.
SW	3

COUNTY
WEBSTER

JOB NO.
J7P3425C

CONTRACT ID.

PROJECT NO.

BRIDGE NO.

IF A SEAL IS PRESENT ON THIS SHEET IT HAS BEEN ELECTRONICALLY SEALED AND DATED.

DESCRIPTION	DATE

MISSOURI HIGHWAYS AND TRANSPORTATION COMMISSION
105 WEST CAPITOL
JEFFERSON CITY, MO 65102
1-888-ASK-MODOT (1-888-275-6636)

CMT
© Copyright CMT, Inc.
CRAWFORD, MURPHY & TILLY, INC.
1631 WEST ELFINDALE STREET
SPRINGFIELD, MO 65807 (417) 869-6009
ENGINEERING CORPORATION - 000631

SUMMARY OF QUANTITIES
5 OF 26

REV.

FENCE

PLAN SHEET	FROM STATION	TO STATION	BASELINE	LOCATION	CHAINLINK FENCE (RETAINING WALL) (LF)	TEMP/PERMANENT FENCE (LF)	REMARKS
10	17+52.96	22+48.65	EB US60	RT	489		RETAINING WALL A9352
10	664+52.54	666+06.04	EXISTING US60	LT	159		RETAINING WALL A9351
10	7+32.14	11+56.88	RAMP 2	RT	423		RETAINING WALL A9354
10	0+16.20	2+62.12	RAMP 4	RT	251		RETAINING WALL A9355
12	40+15.27	40+36.77	NOR	LT		66	TEMPORARY
12	40+15.66	40+42.45	NOR	LT		76	PERMANENT
				TOTALS	1,322	142	

GROUND IMPROVEMENT

SHEET	LOCATION	AGGREGATE PIERS MOBILIZATION AND TESTING (LS)	AGGREGATE PIERS (LF)	JET GROUTING MOBILIZATION AND TESTING (LS)	GROUT (TON)	REMARKS
89	A9351	1	1,443			
89	A9352		4,902			
89	A9354		6,132			
89	A9355		3,823			
89	AS SHOWN ON PLANS			1	7,100	
	TOTALS	1	16,300	1	7,100	

GUARDRAIL

PLAN SHEET	FROM STATION	TO STATION	BASELINE	LOCATION	MGS GUARDRAIL (LF)	TYPE D GUARDRAIL (LF)	MGS END ANCHOR (EA)	TYPE A CRASHWORTHY END TERMINAL (MASH) (EA)	MGS BRIDGE APPROACH TRANSITION SECTION (REGULAR/NO CURB) (EA)	REMARKS
10	14+52.90	15+98.55	EB US60	RT	100.0			1	1	ATTACH TO TYPE D BARRIER
10	19+23.30	21+70.31	EB US60	LT	187.5		1	1		BRIDGE PROTECTION
10	664+93.77	668+13.57	EXISTING US60	LT	262.5		1	1		BRIDGE PROTECTION
10	666+05.49	668+74.15	EXISTING US60	LT	237.5			1	1	ATTACH TO TYPE D BARRIER
10	9+64.57	10+36.24	RAMP 1	RT	75.0		1			
10	4+86.02	10+68.27	RAMP 2	LT	537.5			1	1	ATTACH TO TYPE D BARRIER
10	6+12.42	10+91.32	RAMP 2	RT	425.0			1	1	ATTACH TO TYPE D BARRIER
10	0+28.22	2+18.91	RAMP 3	RT	150.0			1		
10	0+16.16	2+66.32	RAMP 4	LT	250.0		1			
10	0+89.86	3+00.00	RAMP 4	RT	212.5				1	ATTACH TO TYPE D BARRIER
10	65+44.70	66+25.10	RTE A	LT	87.5				1	
10	65+57.33	66+23.57	RTE A	RT	75.0				1	
10	67+98.77	68+48.32	RTE A	LT	50.0				1	
10	70+96.54	72+92.23	RTE NN	RT	150.0			1	1	
10	71+06.83	72+93.23	RTE NN	LT	137.5			1	1	
11	3+00.00	13+87.11	RAMP 4	RT	1087.5					
11	35+91.84	37+00.00	EB US60	RT	112.5					
12	37+00.00	42+71.66	EB US60	RT	575.0					
12	687+10.22	689+10.40	EXISTING US60	RT	200.0		1			
12	689+36.11	689+64.96	EXISTING US60	RT		37.5				
14	713+23.20	713+46.17	EXISTING US60	LT		25.5				
18	51+43.35	52+00.00	SOUTH OUTER ROAD	LT	62.5			1		
19	52+00.00	52+63.78	SOUTH OUTER ROAD	LT	75.0			1		
26	0+43.30	1+90.29	HONOR CAMP	RT	150.0			1		CONNECT TO EXISTING GUARDRAIL
26	0+41.57	1+89.84	HONOR CAMP	LT	150.0			1		CONNECT TO EXISTING GUARDRAIL
				TOTALS	5350.0	63.0	5	13	10	

MOBILIZATION

1 LUMP SUM

CONTRACTOR FURNISHED SURVEYING AND STAKING

1 LUMP SUM

SAWCUTS FOR PAVEMENT REMOVAL

ALL SAWCUTS NOT SHOWN ARE INCIDENTAL TO REMOVAL OF IMPROVEMENTS

RAILROAD PLAN SUBMITTAL

1 LUMP SUM

TYPE B PORE PRESSURE MONITORING DEVICE

4 EA	PLACED AS DIRECTED BY ENGINEER

DISCLAIMER
THE PROFESSIONAL WHOSE SIGNATURE AND PERSONAL SEAL APPEAR HEREON ASSUMES RESPONSIBILITY ONLY FOR WHAT APPEARS ON THIS PAGE, AND DISCLAIMS (PURSUANT TO SECTION 327.411 RSMO) SPECIFICATION, ESTIMATES, REPORTS, OR OTHER DOCUMENTS OR INSTRUMENTS NOT SEALED BY THE UNDERSIGNED PROFESSIONAL RELATING TO OR INTENDED TO BE USED FOR ANY PART OR PARTS OF THE PROJECT TO WHICH THIS PAGE REFERS.

STATE OF MISSOURI
DALLAS P. JOPLIN
NUMBER PE-2011015760
PROFESSIONAL ENGINEER

THIS SHEET HAS BEEN SIGNED, SEALED AND DATED ELECTRONICALLY.

DATE PREPARED
9/3/2024

ROUTE	STATE
60	MO
DISTRICT	SHEET NO.
SW	3

COUNTY
WEBSTER

JOB NO.
J7P3425C

CONTRACT ID.

PROJECT NO.

BRIDGE NO.

IF A SEAL IS PRESENT ON THIS SHEET IT HAS BEEN ELECTRONICALLY SEALED AND DATED.

REV.	DESCRIPTION	DATE

MISSOURI HIGHWAYS AND TRANSPORTATION COMMISSION
105 WEST CAPITOL
JEFFERSON CITY, MO 65102
1-888-ASK-MODOT (1-888-275-6636)

CMT
© Copyright CMT, Inc.
CRAWFORD, MURPHY & TILLY, INC.
1631 WEST ELFINDALE STREET
SPRINGFIELD, MO 65807 (417) 869-6009
ENGINEERING CORPORATION - 000631

SUMMARY OF QUANTITIES
6 OF 26

DISCLAIMER
THE PROFESSIONAL WHOSE SIGNATURE AND PERSONAL SEAL APPEAR HEREON ASSUMES RESPONSIBILITY ONLY FOR WHAT APPEARS ON THIS PAGE, AND DISCLAIMS (PURSUANT TO SECTION 327.411 RSMO) SPECIFICATION, ESTIMATES, REPORTS, OR OTHER DOCUMENTS OR INSTRUMENTS NOT SEALED BY THE UNDERSIGNED PROFESSIONAL RELATING TO OR INTENDED TO BE USED FOR ANY PART OR PARTS OF THE PROJECT TO WHICH THIS PAGE REFERS.

PAVEMENT MARKING REMOVALS

SHEET	FROM STATION	TO STATION	BASELINE	LOCATION	PAVEMENT MARKING REMOVAL (LF)	PAVEMENT MARKING REMOVAL (SYMBOLS) (EA)	REMARKS
9	643+94.98	655+57.81	EX US-60	LT & RT	3,492		
10	655+57.81	668+60.11	EX US-60	LT & RT	3,722		
11	668+60.11	681+38.57	EX US-60	LT & RT	3,521		
12	681+38.57	687+10.21	EX US-60	LT & RT	1,720		
12	689+48.58	689+52.10	EX US-60	RT	112		RTE NN
12	689+48.58		EX US-60	RT		2	RTE NN RR CROSSING
15	51+11.18	61+85.95	RTE A	LT & RT	3,552		
				TOTAL	16,119	2	

PAVEMENT (NON-ALTERNATE)

SHEET	FROM STATION	TO STATION	BASELINE	LOCATION	CONCRETE PAVEMENT (5.75 IN. 15 FT JOINTS) (SQYD)	CONCRETE PAVEMENT (8.5 IN. 15 FT JOINTS) (SQYD)	8 IN. TRUCK APRON (SQYD)	CONCRETE MEDIAN (SQYD)	8 IN. CONCRETE MEDIAN STRIP (SQYD)	REMARKS
10	15+98.55	17+52.96	EB US60	RT	91.2					UNDER TYPE D USED AS RETAINING WALL
17	91+37.26	93+76.39	RTE NN	LT AND RT		1,302.4				ROUNDABOUT PAVEMENT
17	11+90.28	16+53.68	EXISTING RTE NN	LT AND RT		2,855.5				ROUNDABOUT PAVEMENT
17	13+05.90	14+01.90	EXISTING RTE NN	LT AND RT			513.9			
17	13+26.40	13+81.40	EXISTING RTE NN	LT AND RT				264.0		
17	91+37.63	93+68.55	RTE NN	LT AND RT					398.3	
17	11+90.28	12+87.52	EXISTING RTE NN	LT AND RT					106.4	
17	14+18.01	14+74.30	EXISTING RTE NN	LT AND RT					78.1	
17	14+97.36	16+53.54	EXISTING RTE NN	LT AND RT					252.8	
				TOTALS	91	4,158	513.9	264	835.6	

NON-ALTERNATE CURB & GUTTER

SHEET	FROM STATION	TO STATION	BASELINE	LOCATION	CURB & GUTTER TYPE B (LF)	INTEGRAL CURB (6 IN. HEIGHT AND UNDER) TYPE A (LF)	CONCRETE CURB LOW PROFILE TYPE E (LF)	CONCRETE GUTTER TYPE B (LF)	MODIFIED CONCRETE GUTTER TYPE B (LF)	PAVED DITCH (SY)	REMARKS
10	15+98.65	17+52.96	EB US60	RT				154			
10	17+52.96	22+48.65	EB US60	RT					489		RETAINING WALL A9352
10	664+52.54	666+06.04	EXISTING US60	LT					159		RETAINING WALL A9351
10	7+32.14	11+56.88	RAMP 2	RT					423		RETAINING WALL A9354
10	0+16.20	2+62.12	RAMP 4	RT					251		RETAINING WALL A9355
10	69+59.08	69+77.75	RTE NN	LT AND RT						33.1	IN FRONT OF RET WALL A9354
10	70+46.31	71.23.26	RTE NN	LT AND RT						185.7	IN FRONT OF RET WALL A9355
17	91+37.26	93+84.89	RTE NN	RT	276						
17	93+12.20	93+86.41	RTE NN	LT	79						
17	11+28.79	12+88.12	EXISTING RTE NN	RT	172						
17	12+88.05	13+46.77	EXISTING RTE NN	LT	88						
17	13+96.92	14+71.99	EXISTING RTE NN	LT	134						
17	15+10.56	16+53.68	EXISTING RTE NN	LT	144						
17	13+25.90	13+81.90	EXISTING RTE NN	LT AND RT		176					
17	13+05.90	14+01.90	EXISTING RTE NN	LT AND RT			302				
				TOTALS	893	176	302	154	1,322	218.8	

SUMMARY OF QUANTITIES
7 OF 26

STATE OF MISSOURI
DALLAS P. JOPLIN
NUMBER PE-2011015760
PROFESSIONAL ENGINEER

THIS SHEET HAS BEEN SIGNED, SEALED AND DATED ELECTRONICALLY.

DATE PREPARED 9/3/2024
ROUTE 60 | STATE MO
DISTRICT SW | SHEET NO. 3
COUNTY WEBSTER
JOB NO. J7P3425C
CONTRACT ID.
PROJECT NO.
BRIDGE NO.

DESCRIPTION | DATE | REVISION

MISSOURI HIGHWAYS AND TRANSPORTATION COMMISSION
105 WEST CAPITOL
JEFFERSON CITY, MO 65102
1-888-ASK-MODOT (1-888-275-6636)

CMT
©Copyright CMT, Inc.
CRAWFORD, MURPHY & TILLY, INC.
1631 WEST ELFINDALE STREET
SPRINGFIELD, MO 65807 (417) 869-6009
ENGINEERING CORPORATION - 000631

IF A SEAL IS PRESENT ON THIS SHEET IT HAS BEEN ELECTRONICALLY SEALED AND DATED.

REV.

DISCLAIMER
THE PROFESSIONAL WHOSE SIGNATURE AND PERSONAL SEAL APPEAR HEREON ASSUMES RESPONSIBILITY ONLY FOR WHAT APPEARS ON THIS PAGE, AND DISCLAIMS (PURSUANT TO SECTION 327.411 RSMO) SPECIFICATION, ESTIMATES, REPORTS, OR OTHER DOCUMENTS OR INSTRUMENTS NOT SEALED BY THE UNDERSIGNED PROFESSIONAL RELATING TO OR INTENDED TO BE USED FOR ANY PART OR PARTS OF THE PROJECT TO WHICH THIS PAGE REFERS.

CONCRETE TRAFFIC BARRIER

SHEET	FROM STATION	TO STATION	BASELINE	LOCATION	CONCRETE TRAFFIC BARRIER, TYPE D (LF)	CONCRETE TRAFFIC BARRIER, TYPE D (RETAINING WALL) (LF)	CONCRETE TRAFFIC BARRIER, TYPE D (MOMENT SLAB) (LF)	REMARKS
10	15+98.60	17+52.96	EB US60	RT		153		
10	17+52.96	22+48.65	EB US60	RT	490			IN FRONT OF MSE WALL
10	661+52.54	666+06.04	EXISTING US60	LT	159			IN FRONT OF MSE WALL
10	10+68.27	11+28.66	RAMP 2	LT			87	
10	10+91.32	11+39.86	RAMP 2	RT			78	
10	0+39.86	0+89.86	RAMP 4	RT			76	
				TOTALS	649	153	241	

BOX CULVERTS

SHEET	CULVERT SECTION SHEET	CENTERLINE STATION	BASELINE	LOCATION	LENGTH (FT)	CLASS 4 EXCAVATION (CUYD)	CLASS B-1 CONCRETE (CULVERTS) (CUYD)	REINFORCING STEEL (CULVERTS) (LB)	REMARKS
238	7	56+55.07	RTE A	RT	174.83	190	79.0	10,840	
				TOTALS		190	79.0	10,840	

CULVERT CLEANOUT

PLAN SHEET	STATION	ROUTE	LOCATION	CULVERT CLEANOUT (EA)	REMARKS
7	658+98.71	EXISTING US 60	LT	1.0	24" RCP
7	662+34.53	EXISTING US 60	LT	1.0	24" RCP
7	666+71.30	EXISTING US 60	LT	1.0	24" RCP
			TOTALS	3	

TEMPORARY PAVEMENT MARKING

PHASE	FROM STATION	TO STATION	BASELINE	LOCATION	TEMPORARY PAVEMENT MARKING PAINT 4 IN., WHITE (LF)	TEMPORARY PAVEMENT MARKING PAINT 4 IN., YELLOW (LF)	REMARKS
PHASE 2B	627+19.12	688+44.22	EXISTING US-60	RT		5960.00	
PHASE 2C	627+20.14	689+17.64	EXISTING US-60	RT	6150.00		
				TOTALS	6,150.0	5960.0	
					12,110.0		

RIGID GEOGRID AND SEPARATION TEXTILE

FROM STATION	TO STATION	BASELINE	LOCATION	RIGID GEOGRID TO ENHANCE AGGREGATE OR ROCK BASE (SQYD)	SEPARATION TEXTILE (SQYD)	REMARKS
0+00	182+32	SOUTH OUTER ROAD	LT AND RT	11,900.0	11,900.0	PLACED AS DIRECTED BY THE ENGINEER
			TOTALS	11,900.0	11,900.0	

STATE OF MISSOURI
DALLAS P. JOPLIN
NUMBER PE-2011015760
PROFESSIONAL ENGINEER

THIS SHEET HAS BEEN SIGNED, SEALED AND DATED ELECTRONICALLY.

DATE PREPARED 9/3/2024

ROUTE	STATE
60	MO
DISTRICT	SHEET NO.
SW	3

COUNTY: WEBSTER
JOB NO.: J7P3425C
CONTRACT ID.:
PROJECT NO.:
BRIDGE NO.:

IF A SEAL IS PRESENT ON THIS SHEET IT HAS BEEN ELECTRONICALLY SEALED AND DATED.

DESCRIPTION	DATE

MISSOURI HIGHWAYS AND TRANSPORTATION COMMISSION
105 WEST CAPITOL
JEFFERSON CITY, MO 65102
1-888-ASK-MODOT (1-888-275-6636)

©Copyright CMT, Inc.
CMT
CRAWFORD, MURPHY & TILLY, INC.
1631 WEST ELFINDALE STREET
SPRINGFIELD, MO 65807 (417) 869-6009
ENGINEERING CORPORATION - 000631

SUMMARY OF QUANTITIES
8 OF 26

REV.

TEMPORARY PAVEMENT

STAGE	FROM STATION	TO STATION	BASELINE	LOCATION	7" BITUMINOUS PAVEMENT (SQYD)	TYPE 1 OR 5 AGGREGATE FOR BASE (4 IN. THICK) (SQYD)	REMARKS
1B	49+46	64+07	ROUTE A	RT	2,724.0	2,724.0	
2A	689+64	713+06	EXISTING US60	LT AND RT	5,035.1	5,035.1	TEMPORARY J-TURN
3B	9+48	18+53	EXISTING RTE NN	LT	1,770.8	1,770.8	
				TOTALS	9,529.9	--	*SEE SHEET 23 OF 26 FOR TOTAL

NOTE:
TYPE 1 OR 5 AGGREGATE FOR BASE (4 IN. THICK)
PAID FOR AS TYPE 5 AGGREGATE FOR BASE (4 IN. THICK)

WATERBORNE PAVEMENT MARKING

PAVEMENT MARKING SHEET	FROM STATION	TO STATION	BASELINE	LOCATION	6 IN. WHITE HIGH BUILD WATERBORNE PAVEMENT MARKING PAINT, TYPE L BEADS (LF)	6 IN. YELLOW HIGH BUILD WATERBORNE PAVEMENT MARKING PAINT, TYPE L BEADS (LF)	12 IN. WHITE HIGH BUILD WATERBORNE PAVEMENT MARKING PAINT, TYPE L BEADS (LF)	12 IN. WHITE STANDARD WATERBORNE PAVEMENT MARKING PAINT, TYPE L BEADS (LF)	12 IN. YELLOW STANDARD WATERBORNE PAVEMENT MARKING PAINT, TYPE L BEADS (LF)	4 IN. WHITE STANDARD WATERBORNE PAVEMENT MARKING PAINT, TYPE P BEADS (LF)	4 IN. YELLOW STANDARD WATERBORNE PAVEMENT MARKING PAINT, TYPE P BEADS (LF)	PERFORMED THERMOPLASTIC PAVEMENT MARKING, 12" WHITE, YIELD LINE TRIANGLES (EA)	PERFORMED THERMOPLASTIC PAVEMENT MARKING, 24" WHITE (LF)	PREFORMED THERMOPLASTIC PAVEMENT MARKING, 24 IN. YELLOW (LF)	REMARKS
1-4	0+00.00	42+71.66	EB US60	LT		4,272									
1-4	0+00.00	42+71.66	EB US60	LT	1,068										INTERMITTENT STRIPE - EASTBOUND LANES
1	6+24.42	9+64.42	EB US60	RT	85										INTERMITTENT STRIPE - (3' STRIPE, 9' GAP)
1	0+00.00	9+64.42	EB US60	RT	966										
1-2	9+64.42	13+78.46	EB US60	RT			314								GORE STRIPES - RAMP 2
1-2	0+00.00	4+08.20	RAMP 2	LT			359								GORE STRIPES - RAMP 2
1-2	0+00.00	11+50.71	RAMP 2	LT	1,019										
1	646+58.10	654+91.93	EX US60	LT	834										
1	649+11.95	655+69.84	EX US60	LT	165										INTERMITTENT STRIPE - (3' STRIPE, 9' GAP)
1-2	655+69.70	657+32.52	EX US60	LT			162								GORE STRIPES - RAMP 1
1-2	0+00.00	10+75.35	RAMP 1	LT	1,104										
1-2	0+78.65	2+42.22	RAMP 1	RT			162								GORE STRIPES - RAMP 1
2	2+42.22	10+46.29	RAMP 1	RT		830									
2	664+52.32	666+05.49	EX US60	LT	158										
2-3	13+78.46	33+35.28	EB US60	RT	3,378										
2	4+08.20	11+40.70	RAMP 2	LT		753									
2, 7-9	51+11.18	90+85.87	ROUTE A & ROUTE NN	CL							7,932				CL OF ROUTE NN, DOUBLE STRIPED
2, 7	64+21.93	15+49.00	ROUTE NN	LT						486					
2, 7	64+39.62	14+58.99	ROUTE NN	RT						503					
2	65+67.17	68+14.12	ROUTE NN	RT						247					
2	65+55.12	68+38.07	ROUTE NN	LT						283					
2, 8	68+28.99	76+98.34	ROUTE NN	RT						1,501					
2, 8	69+57.60	93+95.63	ROUTE NN	LT						2,428					
2-3	0+04.57	16+40.45	RAMP 3	LT	1,675										
2-3	0+16.18	13+46.33	RAMP 3	RT		1,330									
2-3	0+00.88	11+32.06	RAMP 4	LT		1,141									
2-3	0+33.15	13+87.11	RAMP 4	RT	1,388										
3-4, 7	15+49.00	42+33.21	NORTH OUTER ROAD	CL							5,384				CL OF NORTH OUTER ROAD, DOUBLE STRIPED
3	673+47.78	677+36.01	EX US60	LT	388										
3	677+36.01	680+37.93	EX US60	LT			303								GORE STRIPES - RAMP 3
3	13+46.33	16+40.45	RAMP 3	RT			340								GORE STRIPES - RAMP 3
3-4	680+37.93	683+87.94	EX US60	LT	88										INTERMITTENT STRIPE - (3' STRIPE, 9' GAP)
3-4	680+37.93	686+18.68	EX US60	LT	581										
3	11+32.06	13+87.11	RAMP 4	LT			256								GORE STRIPES - RAMP 4
3	33+35.28	35+91.84	EB US60	RT			256								GORE STRIPES - RAMP 4
3-4	35+91.84	41+71.80	EB US60	RT	145										INTERMITTENT STRIPE - (3' STRIPE, 9' GAP)
3-4	35+91.84	41+71.80	EB US60	RT	580										
4	686+10.36	690+24.58	EX US60	RT	415										
4	687+10.21	690+24.58	EX US60	RT		314									
4-5	689+10.36	694+56.84	EX US60	LT		573									
4	689+17.59	690+92.59	EX US60	LT	175										
4	42+88.60	43+64.95	NORTH OUTER ROAD	CL							153				CL OF NORTH OUTER ROAD, DOUBLE STRIPED
4	44+23.04	45+85.47	NORTH OUTER ROAD	CL							325				CL OF NORTH OUTER ROAD, DOUBLE STRIPED
4-5	46+45.47	49+55.23	NORTH OUTER ROAD	CL							620				CL OF NORTH OUTER ROAD, DOUBLE STRIPED
5	49+72.69	-	NORTH OUTER ROAD	LT									14		STOP BAR FOR PATTERSON ST.
5-6	50+17.50	67+31.87	NORTH OUTER ROAD	CL							3,364				CL OF NORTH OUTER ROAD, DOUBLE STRIPED
6	67+31.87	-	NORTH OUTER ROAD	RT									12		STOP BAR
6	67+42.54	-	NORTH OUTER ROAD	LT									19		STOP BAR
6	67+60.87	67+56.98	NORTH OUTER ROAD	LT							61				CL OF ROUTE O, DOUBLE STRIPED
6	709+19.83	714+03.86	EX US60	RT		484									

SUMMARY OF QUANTITIES
9 OF 26

DISCLAIMER
THE PROFESSIONAL WHOSE SIGNATURE AND PERSONAL SEAL APPEAR HEREON ASSUMES RESPONSIBILITY ONLY FOR WHAT APPEARS ON THIS PAGE, AND DISCLAIMS (PURSUANT TO SECTION 327.411 RSMO) SPECIFICATION, ESTIMATES, REPORTS, OR OTHER DOCUMENTS OR INSTRUMENTS NOT SEALED BY THE UNDERSIGNED PROFESSIONAL RELATING TO OR INTENDED TO BE USED FOR ANY PART OR PARTS OF THE PROJECT TO WHICH THIS PAGE REFERS.

STATE OF MISSOURI
DALLAS P. JOPLIN
NUMBER PE-2011015760
PROFESSIONAL ENGINEER

THIS SHEET HAS BEEN SIGNED, SEALED AND DATED ELECTRONICALLY.

DATE PREPARED 9/3/2024
ROUTE 60 | STATE MO
DISTRICT SW | SHEET NO. 3
COUNTY WEBSTER
JOB NO. J7P3425C
CONTRACT ID.
PROJECT NO.
BRIDGE NO.

IF A SEAL IS PRESENT ON THIS SHEET IT HAS BEEN ELECTRONICALLY SEALED AND DATED.

REV.	DATE	DESCRIPTION

MISSOURI HIGHWAYS AND TRANSPORTATION COMMISSION
105 WEST CAPITOL
JEFFERSON CITY, MO 65102
1-888-ASK-MODOT (1-888-275-6636)

CMT
© Copyright CMT, Inc.
CRAWFORD, MURPHY & TILLY, INC.
1631 WEST ELFINDALE STREET
SPRINGFIELD, MO 65807 (417) 869-6009
ENGINEERING CORPORATION - 000631

DISCLAIMER
THE PROFESSIONAL WHOSE SIGNATURE AND PERSONAL SEAL APPEAR HEREON ASSUMES RESPONSIBILITY ONLY FOR WHAT APPEARS ON THIS PAGE, AND DISCLAIMS (PURSUANT TO SECTION 327.411 RSMO) SPECIFICATION, ESTIMATES, REPORTS, OR OTHER DOCUMENTS OR INSTRUMENTS NOT SEALED BY THE UNDERSIGNED PROFESSIONAL RELATING TO OR INTENDED TO BE USED FOR ANY PART OR PARTS OF THE PROJECT TO WHICH THIS PAGE REFERS.

WATERBORNE PAVEMENT MARKING (CONT'D.)

PAVEMENT MARKING SHEET	FROM STATION	TO STATION	BASELINE	LOCATION	6 IN. WHITE HIGH BUILD WATERBORNE PAVEMENT MARKING PAINT, TYPE L BEADS (LF)	6 IN. YELLOW HIGH BUILD WATERBORNE PAVEMENT MARKING PAINT, TYPE L BEADS (LF)	12 IN. WHITE HIGH BUILD WATERBORNE PAVEMENT MARKING PAINT, TYPE L BEADS (LF)	12 IN. WHITE STANDARD WATERBORNE PAVEMENT MARKING PAINT, TYPE L BEADS (LF)	12 IN. YELLOW STANDARD WATERBORNE PAVEMENT MARKING PAINT, TYPE L BEADS (LF)	4 IN. WHITE STANDARD WATERBORNE PAVEMENT MARKING PAINT, TYPE P BEADS (LF)	4 IN. YELLOW STANDARD WATERBORNE PAVEMENT MARKING PAINT, TYPE P BEADS (LF)	PERFORMED THERMOPLASTIC PAVEMENT MARKING, 12" WHITE, YIELD LINE TRIANGLES (EA)	PREFORMED THERMOPLASTIC PAVEMENT MARKING, 24 IN. WHITE (LF)	PREFORMED THERMOPLASTIC PAVEMENT MARKING, 24 IN. YELLOW (LF)	REMARKS (LF)
6	711+80.55	714+28.68	EX US60	LT	248										
6	712+85.71	716+95.42	EX US60	LT		410									
7	51+11.18	59+31.29	ROUTE A	LT						1,042					
7	51+11.18	59+31.30	ROUTE A	RT						851					
7	15+41.01	-	NORTH OUTER ROAD	LT									12		STOP BAR
7	14+59.00	-	NORTH OUTER ROAD	LT									12		STOP BAR
7	10+11.24	14+56.38	NORTH OUTER ROAD	CL							897				CL OF NORTH OUTER ROAD, DOUBLE STRIPED
8-9	77+19.32	93+74.82	ROUTE NN	RT						1,700					
9	90+85.82	93+76.39	ROUTE NN	LT							292				
9	90+85.82	93+66.38	ROUTE NN	RT							285				
9	90+94.25	91+39.09	ROUTE NN	CL										19	MIN. 3 LINES
9	91+37.63	93+65.32	ROUTE NN	CL					460						SPLITTER ISLAND
9	93+54.49	-	ROUTE NN	RT								9			ROUTE NN ROUNDABOUT
9	93+59.77	94+12.21	ROUTE NN	LT									36		MIN. 3 LINES
9	93+63.39	93+65.32	ROUTE NN	CL				32							SPLITTER ISLAND
9	13+18.40	13+54.68	EXISTING ROUTE NN	RT						38					ROUTE NN ROUNDABOUT
9	13+54.68	13+86.60	EXISTING ROUTE NN	RT						11					ROUTE NN ROUNDABOUT, INTERMEDIATE STRIPE - (2' STRIPE, 4' GAP)
9	14+10.61	14+18.90	EXISTING ROUTE NN	CL						34					ROUTE NN ROUNDABOUT
9	14+18.90	14+03.10	EXISTING ROUTE NN	LT						15					ROUTE NN ROUNDABOUT, INTERMEDIATE STRIPE - (2' STRIPE, 4' GAP)
9	12+94.34	12+89.34	EXISTING ROUTE NN	CL						34					ROUTE NN ROUNDABOUT
9	12+89.34	12+98.32	EXISTING ROUTE NN	RT						9					ROUTE NN ROUNDABOUT
9	13+52.73	13+52.73	EXISTING ROUTE NN	CL							308				ROUTE NN ROUNDABOUT
9	12+84.16	-	EXISTING ROUTE NN	RT								9			ROUTE NN ROUNDABOUT
9	14+27.54	-	EXISTING ROUTE NN	LT								9			ROUTE NN ROUNDABOUT
9	14+18.04	14+21.30	EXISTING ROUTE NN	CL				28							SPLITTER ISLAND
9	14+21.30	14+74.31	EXISTING ROUTE NN	CL					112						SPLITTER ISLAND
9	14+97.66	15+03.53	EXISTING ROUTE NN	CL				16							SPLITTER ISLAND
9	15+03.53	16+53.54	EXISTING ROUTE NN	CL					311						SPLITTER ISLAND
9	16+50.70	16+99.98	EXISTING ROUTE NN	CL										28	MIN. 3 LINES
9	11+23.30	11+90.57	EXISTING ROUTE NN	CL										24	MIN. 3 LINES
9	11+90.29	12+84.17	EXISTING ROUTE NN	CL					195						SPLITTER ISLAND
9	12+84.16	12+87.10	EXISTING ROUTE NN	CL				28							SPLITTER ISLAND
9	10+47.96	12+96.38	EXISTING ROUTE NN	RT						254					
9	10+47.96	11+11.27	EXISTING ROUTE NN	CL							127				CL OF ROUTE NN, DOUBLE STRIPED
9	11+11.27	12+94.34	EXISTING ROUTE NN	LT							186				
9	11+11.27	12+89.34	EXISTING ROUTE NN	RT							180				
9	10+47.96	17+53.70	EXISTING ROUTE NN	LT						734					
9	13+87.10	17+53.60	EXISTING ROUTE NN	RT						370					
9	14+10.61	17+10.19	EXISTING ROUTE NN	CL						301					
9	14+18.90	17+10.19	EXISTING ROUTE NN	CL						297					
9	17+10.19	17+53.65	EXISTING ROUTE NN	CL						87					CL OF ROUTE NN, DOUBLE STRIPED
10	0+30.54	-	SOUTH OUTER ROAD	LT									22		STOP BAR
10-11	0+30.54	25+38.29	SOUTH OUTER ROAD	CL							5,011				CL OF SOUTH OUTER ROAD, DOUBLE STRIPED
11	0+30.18	-	BLUEBIRD	LT									12		STOP BAR
11	0+30.18	0+93.58	BLUEBIRD	CL							61				CL OF BLUEBIRD LN
11-13	25+94.57	51+74.54	SOUTH OUTER ROAD	CL							5,632				CL OF SOUTH OUTER ROAD, DOUBLE STRIPED
14	0+23.05	-	HUMMINGBIRD LANE	LT									14		STOP BAR
14	0+23.05	0+77.94	HUMMINGBIRD LANE	CL							52				CL OF HUMMINGBIRD LN
14-16	52+42.01	79+46.05	SOUTH OUTER ROAD	CL							5,408				CL OF SOUTH OUTER ROAD, DOUBLE STRIPED
16	0+23.74	-	TANDY	LT									11		STOP BAR
16	0+26.36	2+35.33	TANDY	CL							219				CL OF TANDY RD
16-18	80+16.33	108+77.01	SOUTH OUTER ROAD	CL							6,465				CL OF SOUTH OUTER ROAD, DOUBLE STRIPED
18	0+19.34	-	HONOR CAMP	LT									19		STOP BAR
18	0+21.96	1+90.43	HONOR CAMP	CL							168				CL OF HONOR CAMP
18-23	109+33.47	181+98.41	SOUTH OUTER ROAD	CL							14,529				CL OF SOUTH OUTER ROAD, DOUBLE STRIPED
23	182+01.03	-	SOUTH OUTER ROAD	RT									16		STOP BAR
				TOTALS	14,460	10,107	2,152	104	1,078	11,225	57,659	27	199	71	

SUMMARY OF QUANTITIES
10 OF 26

STATE OF MISSOURI
DALLAS P. JOPLIN
NUMBER PE-2011015760
PROFESSIONAL ENGINEER

THIS SHEET HAS BEEN SIGNED, SEALED AND DATED ELECTRONICALLY.

DATE PREPARED
9/3/2024

ROUTE	STATE
60	MO
DISTRICT	SHEET NO.
SW	3

COUNTY
WEBSTER

JOB NO.
J7P3425C

CONTRACT ID.

PROJECT NO.

BRIDGE NO.

DESCRIPTION	DATE

MISSOURI HIGHWAYS AND TRANSPORTATION COMMISSION
105 WEST CAPITOL
JEFFERSON CITY, MO 65102
1-888-ASK-MODOT (1-888-275-6636)

CMT
©Copyright CMT, Inc.
CRAWFORD, MURPHY & TILLY, INC.
1631 WEST ELFINDALE STREET
SPRINGFIELD, MO 65807 (417) 869-6009
ENGINEERING CORPORATION - 000631

IF A SEAL IS PRESENT ON THIS SHEET IT HAS BEEN ELECTRONICALLY SEALED AND DATED.

REV.

DISCLAIMER
THE PROFESSIONAL WHOSE SIGNATURE AND PERSONAL SEAL APPEAR HEREON ASSUMES RESPONSIBILITY ONLY FOR WHAT APPEARS ON THIS PAGE. AND DISCLAIMS (PURSUANT TO SECTION 327.411 RSMO) SPECIFICATION, ESTIMATES, REPORTS, OR OTHER DOCUMENTS OR INSTRUMENTS NOT SEALED BY THE UNDERSIGNED PROFESSIONAL RELATING TO OR INTENDED TO BE USED FOR ANY PART OR PARTS OF THE PROJECT TO WHICH THIS PAGE REFERS.

DRAINAGE PIPES

SHEET	CULVERT SECTION SHEET	FROM STRUCT.	TO STRUCT.	15 IN. PIPE GROUP B (LF)	18 IN. PIPE GROUP A (LF)	18 IN. PIPE GROUP B (LF)	24 IN. PIPE GROUP A (LF)	30 IN. PIPE GROUP A (LF)	36 IN. PIPE GROUP A (LF)	48 IN. PIPE GROUP A (LF)	PIPE COLLAR, TYPE A (EA)	CLASS 3 EXCAVATION (CUYD)	REMARKS
10	1	FES-1	COL-1				48				1	4	
10	1	COL-2	A-1				11				1	10	
10	1	A-1	SPC-1				56					49	
10	1	SPC-1	C-1		91							71	
10	1	FES-2	A-2					174				105	
10	1	COL-3	SPC-2				45				1	8	
10	1	SPC-2	FES-3				129					89	
10	1	SPC-3	SPC-4		196							67	
10	1	SPC-4	SPC-5		135							80	
10	1	SPC-5	A-4		69							37	
10	1	A-4	A-5				114					235	
10	1	A-5	FES-4					209				1	
11	2	FES-5	FES-6				66					76	
12	2	COL-4	FES-7						6		1	2	
11	2	FES-8	FES-9				147					106	
15	2	FES-10	FES-11		45							16	
16	2	FES-12	FES-13					294				1	
16	2	FES-14	FES-15							317		5	
15	3	FES-16	FES-17				125					10	
15	3	FES-18	FES-19		188							1	
15	3	FES-20	FES-21				67						
13	3	FES-22	FES-23				39					31	
13	3	FES-24	FES-25						37			30	
14	3	FES-26	FES-27		52							5	
18	4	FES-28	FES-29						183			34	
19	4	FES-30	FES-31					234				12	
19	4	FES-32	FES-33				199					56	
20	4	FES-34	FES-35				115						
20	4	FES-36	FES-37				38					26	
21	4	FES-38	FES-39		95								
21	4	FES-40	FES-41		45								
22	4	FES-42	FES-43				88						
23	5	B-1	B-2				84					38	
23	5	B-2	B-3				87					73	
23	5	B-2	B-4				42					22	
23	5	B-3	B-5				222					504	

STATE OF MISSOURI
DALLAS P. JOPLIN
NUMBER PE-2011015760
PROFESSIONAL ENGINEER

THIS SHEET HAS BEEN SIGNED, SEALED AND DATED ELECTRONICALLY.

DATE PREPARED: 9/3/2024
ROUTE: 60 | STATE: MO
DISTRICT: SW | SHEET NO.: 3
COUNTY: WEBSTER
JOB NO.: J7P3425C
CONTRACT ID.:
PROJECT NO.:
BRIDGE NO.:

DESCRIPTION | DATE

MISSOURI HIGHWAYS AND TRANSPORTATION COMMISSION
105 WEST CAPITOL
JEFFERSON CITY, MO 65102
1-888-ASK-MODOT (1-888-275-6636)

CMT
© Copyright CMT, Inc.
CRAWFORD, MURPHY & TILLY, INC.
1631 WEST ELFINDALE STREET
SPRINGFIELD, MO 65807 (417) 869-6009
ENGINEERING CORPORATION - 000631

IF A SEAL IS PRESENT ON THIS SHEET IT HAS BEEN ELECTRONICALLY SEALED AND DATED.

SUMMARY OF QUANTITIES
11 OF 26

REV.

L:\MoDOT\20092124-00\Draw\Roadway\Sheets\003_QU_J7P3425C_i1.dgn 1:55:46 PM 9/3/2024

DISCLAIMER
THE PROFESSIONAL WHOSE SIGNATURE AND PERSONAL SEAL APPEAR HEREON ASSUMES RESPONSIBILITY ONLY FOR WHAT APPEARS ON THIS PAGE, AND DISCLAIMS (PURSUANT TO SECTION 327.411 RSMO) SPECIFICATION, ESTIMATES, REPORTS, OR OTHER DOCUMENTS OR INSTRUMENTS NOT SEALED BY THE UNDERSIGNED PROFESSIONAL RELATING TO OR INTENDED TO BE USED FOR ANY PART OR PARTS OF THE PROJECT TO WHICH THIS PAGE REFERS.

DRAINAGE PIPES

SHEET	CULVERT SECTION SHEET	FROM STRUCT.	TO STRUCT.	15 IN. PIPE GROUP B (LF)	18 IN. PIPE GROUP A (LF)	18 IN. PIPE GROUP B (LF)	24 IN. PIPE GROUP A (LF)	30 IN. PIPE GROUP A (LF)	36 IN. PIPE GROUP A (LF)	48 IN. PIPE GROUP A (LF)	PIPE COLLAR, TYPE A (EA)	CLASS 3 EXCAVATION (CUYD)	REMARKS
23	5	B-5	FES-44				63					123	
26	5	FES-45	FES-46					180				78	
27	5	FES-47	B-6				33					27	
27	5	B-6	FES-48				196					272	
29	5	FES-49	FES-50					42					
30	5	FES-51	FES-52		35								
31	5	FES-53	FES-54		31							16	
31	6	FES-55	FES-56				98						
16, 31	6	FES-57	FES-58					331				44	
15	-	18" FES	18" FES			31							DRIVEWAY STA. 54+05 LT RTE A
11	-	18" FES	18" FES			32							DRIVEWAY STA. 23+60 LT NOR
11	-	18" FES	18" FES			32							DRIVEWAY STA. 23+60 RT NOR
11	-	18" FES	18" FES			32							DRIVEWAY STA. 25+80 LT NOR
11	-	18" FES	18" FES			32							DRIVEWAY STA. 25+80 RT NOR
12	-	15" FES	15" FES	25									DRIVEWAY STA. 37+41 LT NOR
12	-	15" FES	15" FES	30									DRIVEWAY STA. 39+61 LT NOR
12	-	15" FES	15" FES	31									DRIVEWAY STA. 40+58 LT NOR
12	-	15" FES	15" FES	37									DRIVEWAY STA. 42+61 LT NOR
12	-	15" FES	15" FES	39									DRIVEWAY STA. 43+94 LT NOR
12	-	15" FES	15" FES	44									DRIVEWAY STA. 46+15 LT NOR
13	-	15" FES	15" FES	37									DRIVEWAY STA. 48+37 LT NOR
13	-	15" FES	15" FES	42									DRIVEWAY STA. 49+85 LT NOR
13	-	18" FES	18" FES			38							DRIVEWAY STA. 53+55 LT NOR
19	-	18" FES	18" FES			76							BLUEBIRD LN
20	-	18" FES	18" FES			32							DRIVEWAY STA. 37+68 LT SOR
21	-	18" FES	18" FES			36							DRIVEWAY STA. 49+94 RT SOR
22	-	18" FES	18" FES			79							HUMMINGIRD LN
23	-	18" FES	18" FES			32							DRIVEWAY STA. 65+99 RT SOR
23	-	18" FES	18" FES			39							DRIVEWAY STA. 70+10 RT SOR
24	-	18" FES	18" FES			58							TANDY RD
25	-	18" FES	18" FES			52							DRIVEWAY STA. 94+35 LT SOR
25	-	18" FES	18" FES			32							DRIVEWAY STA. 97+45 RT SOR
26	-	18" FES	18" FES			64							HONOR CAMP RD
26	-	18" FES	18" FES			36							DRIVEWAY STA. 111+78 RT SOR
28	-	18" FES	18" FES			42							DRIVEWAY STA. 138+69 RT SOR
28	-	18" FES	18" FES			32							DRIVEWAY STA. 140+19 RT SOR
29	-	18" FES	18" FES			54							DRIVEWAY STA. 147+26 RT SOR
30	-	18" FES	18" FES			50							DRIVEWAY STA. 158+83 RT SOR
30	-	18" FES	18" FES			39							DRIVEWAY STA. 161+50 RT SOR
31	-	18" FES	18" FES			48							DRIVEWAY STA. 169+91 LT SOR
31	-	18" FES	18" FES			51							DRIVEWAY STA. 169+91 RT SOR
												2364	SEE STRUCTURES FOR TOTAL
			TOTALS:	285	982	1,049	2,112	1,464	226	317	4	--	

SUMMARY OF QUANTITIES
12 OF 26

STATE OF MISSOURI
DALLAS P. JOPLIN
NUMBER PE-2011015760
PROFESSIONAL ENGINEER

THIS SHEET HAS BEEN SIGNED, SEALED AND DATED ELECTRONICALLY.

DATE PREPARED 11/22/2024

ROUTE	STATE
60	MO
DISTRICT	SHEET NO.
SW	3

COUNTY: WEBSTER
JOB NO.: J7P3425C
CONTRACT ID.:
PROJECT NO.:
BRIDGE NO.:

DATE	DESCRIPTION

MISSOURI HIGHWAYS AND TRANSPORTATION COMMISSION
105 WEST CAPITOL
JEFFERSON CITY, MO 65102
1-888-ASK-MODOT (1-888-275-6636)

© Copyright CMT, Inc.
CMT
CRAWFORD, MURPHY & TILLY, INC.
1631 WEST ELFINDALE STREET
SPRINGFIELD, MO 65807 (417) 869-6009
ENGINEERING CORPORATION - 000631

IF A SEAL IS PRESENT ON THIS SHEET IT HAS BEEN ELECTRONICALLY SEALED AND DATED.

REV.

L:\MoDOT\20092124-00\Draw\Roadway\Sheets\003_QU_J7P3425C_i1.dgn 11:52:38 AM 11/22/2024

FLARED END SECTIONS

SHEET	CULVERT SECTION SHEET	FROM STRUCT.	TO STRUCT.	18 IN. OR ALLOWED SUBSTITUTE GROUP A FLARED END SECTION (EA)	18 IN. OR ALLOWED SUBSTITUTE GROUP B FLARED END SECTION (EA)	24 IN. OR ALLOWED SUBSTITUTE GROUP A FLARED END SECTION (EA)	30 IN. OR ALLOWED SUBSTITUTE GROUP A FLARED END SECTION (EA)	36 IN. OR ALLOWED SUBSTITUTE GROUP A FLARED END SECTION (EA)	48 IN. OR ALLOWED SUBSTITUTE GROUP A FLARED END SECTION (EA)	FURNISHING TYPE 2 ROCK DITCH LINER (CUYD)	PLACING TYPE 2 ROCK DITCH LINER (CUTD)	REMARKS
10	1	FES-1	COL-1			1				3	3	
10	1	FES-2	A-2				1			4	4	
10	1	SPC-2	FES-3			1				3	3	
10	1	A-5	FES-4				1			4	4	
11	2	FES-5	FES-6			2				3	3	
12	2	COL-4	FES-7					1				
11	2	FES-8	FES-9			2				3	3	
15	2	FES-10	FES-11	2								
16	2	FES-12	FES-13				2			4	4	
16	2	FES-14	FES-15						2	18	18	
15	3	FES-16	FES-17			2				3	3	
15	3	FES-18	FES-19	2						2	2	
15	3	FES-20	FES-21			2				3	3	
13	3	FES-22	FES-23			2				3	3	
13	3	FES-24	FES-25					2		9	9	
14	3	FES-26	FES-27	2						2	2	
18	4	FES-28	FES-29					2		9	9	
19	4	FES-30	FES-31				2			4	4	
19	4	FES-32	FES-33			2				3	3	
20	4	FES-34	FES-35			2				3	3	
20	4	FES-36	FES-37			2				3	3	
21	4	FES-38	FES-39	2						2	2	
21	4	FES-40	FES-41	2						2	2	
22	4	FES-42	FES-43			2				3	3	
23	5	B-5	FES-44			1				3	3	
26	5	FES-45	FES-46			2				3	3	
27	5	FES-47	B-6			1				3	3	
27	5	B-6	FES-48			1				3	3	
29	5	FES-49	FES-50				2			4	4	
30	5	FES-51	FES-52	2						2	2	
31	5	FES-53	FES-54	2						2	2	
31	6	FES-55	FES-56			2				3	3	
16 , 31	6	FES-57	FES-58				2			4	4	
11	-	18" FES	18" FES		2							DRIVEWAY STA. 23+60 LT NOR
11	-	18" FES	18" FES		2							DRIVEWAY STA. 23+60 RT NOR
11	-	18" FES	18" FES		2							DRIVEWAY STA. 25+80 LT NOR
11	-	18" FES	18" FES		2							DRIVEWAY STA. 25+80 RT NOR
15	-	18" FES	18" FES		2							DRIVEWAY STA. 54+05 LT RTE A
19	-	18" FES	18" FES		2							BLUEBIRD LN
20	-	18" FES	18" FES		2							DRIVEWAY STA. 37+68 LT SOR
21	-	18" FES	18" FES		2							DRIVEWAY STA. 49+94 RT SOR
22	-	18" FES	18" FES		2							HUMMINGIRD LN
23	-	18" FES	18" FES		2							DRIVEWAY STA. 65+99 RT SOR
23	-	18" FES	18" FES		2							DRIVEWAY STA. 70+10 RT SOR
24	-	18" FES	18" FES		2							TANDY RD
25	-	18" FES	18" FES		2							DRIVEWAY STA. 94+35 LT SOR
25	-	18" FES	18" FES		2							DRIVEWAY STA. 97+45 RT SOR
26	-	18" FES	18" FES		2							HONOR CAMP RD
26	-	18" FES	18" FES		2							DRIVEWAY STA. 111+78 RT SOR
28	-	18" FES	18" FES		2							DRIVEWAY STA. 138+69 RT SOR
28	-	18" FES	18" FES		2							DRIVEWAY STA. 140+19 RT SOR
29	-	18" FES	18" FES		2							DRIVEWAY STA. 147+26 RT SOR
30	-	18" FES	18" FES		2							DRIVEWAY STA. 158+83 RT SOR
30	-	18" FES	18" FES		2							DRIVEWAY STA. 161+50 RT SOR
31	-	18" FES	18" FES		2							DRIVEWAY STA. 169+91 LT SOR
31	-	18" FES	18" FES		2							DRIVEWAY STA. 169+91 RT SOR
			TOTALS:	14	46	27	10	5	2	120	120	

DISCLAIMER
THE PROFESSIONAL WHOSE SIGNATURE AND PERSONAL SEAL APPEAR HEREON ASSUMES RESPONSIBILITY ONLY FOR WHAT APPEARS ON THIS PAGE. AND DISCLAIMS (PURSUANT TO SECTION 327.411 RSMO) SPECIFICATION, ESTIMATES, REPORTS, OR OTHER DOCUMENTS OR INSTRUMENTS NOT SEALED BY THE UNDERSIGNED PROFESSIONAL RELATING TO OR INTENDED TO BE USED FOR ANY PART OR PARTS OF THE PROJECT TO WHICH THIS PAGE REFERS.

STATE OF MISSOURI
DALLAS P. JOPLIN
NUMBER PE-2010015760
PROFESSIONAL ENGINEER

THIS SHEET HAS BEEN SIGNED, SEALED AND DATED ELECTRONICALLY.

DATE PREPARED
11/22/2024

ROUTE	STATE
60	MO
DISTRICT	SHEET NO.
SW	3

COUNTY
WEBSTER

JOB NO.
J7P3425C

CONTRACT ID.

PROJECT NO.

BRIDGE NO.

DESCRIPTION	DATE

IF A SEAL IS PRESENT ON THIS SHEET IT HAS BEEN ELECTRONICALLY SEALED AND DATED.

MISSOURI HIGHWAYS AND TRANSPORTATION COMMISSION

MoDOT

105 WEST CAPITOL
JEFFERSON CITY, MO 65102
1-888-ASK-MODOT (1-888-275-6636)

CMT
© Copyright CMT, Inc.
CRAWFORD, MURPHY & TILLY, INC.
1631 WEST ELFINDALE STREET
SPRINGFIELD, MO 65807 (417) 869-6009
ENGINEERING CORPORATION - 000631

SUMMARY OF QUANTITIES
13 OF 26

DRAINAGE STRUCTURE LIDS

STRUCT. NO.	SHEET	CULVERT SECTION SHEET	STATION	ROADWAY	LOCATION	GRATE AND BEARING PLATE (3 FT. X 2 FT. OR 914 MM X 610 MM) (EA)	GRATE AND BEARING PLATE (3 FT. X 3 FT. OR 914 MM X 914 MM) (EA)	GRATE AND BEARING PLATE (5 FT. X 3 FT. OR 1524 MM X 914 MM) (EA)	REMARKS
A-1	10	1	658+98.72	EX. US60	4.90' LT			1	
SPC-1	10	1	15+06.42	EB US60	16.59' RT				
C-1	10	1	16+00.67	EB US60	26.78' RT	1			
A-2	10	1	662+34.70	EX. US60	76.50' LT			1	
A-3	10	1	662+34.56	EX. US60	7.49' LT			1	
SPC-2	10	1	18+43.02	EB US60	20.50' RT				
SPC-3	10	1	19+02.49	EB US60	20.00' RT				
SPC-4	10	1	21+05.55	EB US60	20.00' RT				
SPC-5	10	1	22+46.22	EB US60	20.00' RT				
A-4	10	1	666+71.34	EX. US60	0.98' LT			1	
A-5	10	1	667+15.13	EX. US60	110.01' LT			1	
B-1	23	5	69+89.46	SOR	21.01' LT		1		
B-2	23	5	70+76.52	SOR	23.00' LT		1		
B-3	23	5	71+66.51	SOR	21.01' LT		1		
B-4	23	5	70+78.53	SOR	21.00' RT		1		
B-5	23	5	73+86.98	SOR	21.00' RT		1		
B-6	23	5	120+09.28	SOR	21.00' RT		1		
					TOTALS	1	6	5	

DRAINAGE STRUCTURES

STRUCT. NO.	SHEET	CULVERT SECTION SHEET	STATION	ROADWAY	LOCATION	STD.	TYPE	PRECAST CONCRETE DROP INLET 3 FT X 2 FT (FT)	PRECAST CONCRETE DROP INLET 3 FT X 3 FT (FT)	PRECAST CONCRETE DROP INLET 5 FT X 3 FT (FT)	SPECIAL INLET NO. 1 (FT)	CLASS 3 EXCAVATION (CUYD)	CLASS 3 EXCAVATION IN ROCK (CUYD)	PIPE OPENINGS (NUMBER - SIZE)	REMARKS
A-1	10	1	658+98.72	EX. US60	4.90' LT	731.10S	S-1 5 x 3			4		13		2 - 24"	
SPC-1	10	1	15+06.42	EB US60	16.59' RT	SPC-1	SPC-1				5	10		1 - 18", 1 - 24"	
C-1	10	1	16+00.67	EB US60	26.78' RT	731.10S	S-1 3 x 2	6				10		1 - 18"	
A-2	10	1	662+34.70	EX. US60	76.50' LT	731.10S	S-1 5 x 3			12		32		1 - 30", 1 - 24"	
A-3	10	1	662+34.56	EX. US60	7.49' LT	731.10S	S-1 5 x 3			8		22		2 - 24"	
SPC-2	10	1	18+43.02	EB US60	20.50' RT	SPC-1	SPC-1				6	4		2 - 24"	
SPC-3	10	1	19+02.49	EB US60	20.00' RT	SPC-1	SPC-1				4	6		1 - 18"	
SPC-4	10	1	21+05.55	EB US60	20.00' RT	SPC-1	SPC-1				5	8		2 - 18"	
SPC-5	10	1	22+46.22	EB US60	20.00' RT	SPC-1	SPC-1				5	11		2 - 18"	
A-4	10	1	666+71.34	EX. US60	0.98' LT	731.10S	S-1 5 x 3			5		14		1 - 18", 1 - 24"	
A-5	10	1	667+15.13	EX. US60	110.01' LT	731.10S	S-1 5 x 3			4		14		1 - 24", 1 - 30"	
B-1	23	5	69+89.46	SOR	21.01' LT	731.10S	S-1 3 x 3		4			10		1 - 24"	
B-2	23	5	70+76.52	SOR	23.00' LT	731.10S	S-3 3 x 3		5			8		3 - 24"	
B-3	23	5	71+66.51	SOR	21.01' LT	731.10S	S-1 3 x 3		8			17		2 - 24"	
B-4	23	5	70+78.53	SOR	21.00' RT	731.10S	S-3 3 x 3		4			9		1 - 24"	
B-5	23	5	73+86.98	SOR	21.00' RT	731.10S	S-1 3 x 3		13			28		2 - 24"	
B-6	23	5	120+09.28	SOR	21.00' RT	731.10S	S-1 3 x 3		4			10		2 - 24"	
												2364			TOTAL FROM PIPES
													259		10% OF CLASS 3 EXC.
							SUBTOTALS:	6	38	33	25	2,590	259		
							TOTALS:	6	38	33	25	2,331*	259		

* CLASS 3 EXCAVATION IN ROCK SUBTRACTED FROM PAY TOTAL
NOTE: EXCAVATION QUANTITIES ASSUME PRECAST CONCRETE STRUCTURES

DISCLAIMER
THE PROFESSIONAL WHOSE SIGNATURE AND PERSONAL SEAL APPEAR HEREON ASSUMES RESPONSIBILITY ONLY FOR WHAT APPEARS ON THIS PAGE, AND DISCLAIMS (PURSUANT TO SECTION 327.411 RSMO) SPECIFICATION, ESTIMATES, REPORTS, OR OTHER DOCUMENTS OR INSTRUMENTS NOT SEALED BY THE UNDERSIGNED PROFESSIONAL RELATING TO OR INTENDED TO BE USED FOR ANY PART OR PARTS OF THE PROJECT TO WHICH THIS PAGE REFERS.

STATE OF MISSOURI
DALLAS P. JOPLIN
NUMBER PE-2011015760
PROFESSIONAL ENGINEER

THIS SHEET HAS BEEN SIGNED, SEALED AND DATED ELECTRONICALLY.

DATE PREPARED: 9/3/2024
ROUTE: 60 | STATE: MO
DISTRICT: SW | SHEET NO.: 3
COUNTY: WEBSTER
JOB NO.: J7P3425C
CONTRACT ID.:
PROJECT NO.:
BRIDGE NO.:

IF A SEAL IS PRESENT ON THIS SHEET IT HAS BEEN ELECTRONICALLY SEALED AND DATED.

DESCRIPTION	DATE

MISSOURI HIGHWAYS AND TRANSPORTATION COMMISSION
105 WEST CAPITOL
JEFFERSON CITY, MO 65102
1-888-ASK-MODOT (1-888-275-6636)

CMT
© Copyright CMT, Inc.
CRAWFORD, MURPHY & TILLY, INC.
1631 WEST ELFINDALE STREET
SPRINGFIELD, MO 65807 (417) 869-6009
ENGINEERING CORPORATION - 000631

SUMMARY OF QUANTITIES
14 OF 26

REV.

DISCLAIMER
THE PROFESSIONAL WHOSE SIGNATURE AND PERSONAL SEAL APPEAR HEREON ASSUMES RESPONSIBILITY ONLY FOR WHAT APPEARS ON THIS PAGE, AND DISCLAIMS (PURSUANT TO SECTION 327.411 RSMO) SPECIFICATION, ESTIMATES, REPORTS, OR OTHER DOCUMENTS OR INSTRUMENTS NOT SEALED BY THE UNDERSIGNED PROFESSIONAL RELATING TO OR INTENDED TO BE USED FOR ANY PART OR PARTS OF THE PROJECT TO WHICH THIS PAGE REFERS.

CONCRETE AND ASPHALT JOINT SEALER

PLAN SHEET	FROM STATION	TO STATION	BASELINE	LOCATION	CONCRETE AND ASPHALT JOINT SEALER, HOT-POURED ELASTIC TYPE (LF)	REMARKS
9	0+00.00	--	EB US60	LT AND RT	36	
9	646+58.07	655+91.43	EXISTING US60	LT	935	RAMP 1 ACCEL LANE
10	655+91.43	657+31.78	EXISTING US60	LT	141	RAMP 1 ACCEL LANE
10	664+52.54	666+06.04	EXISTING US60	LT	181	
10	64+21.93	65+55.41	RTE A	LT	134	AT RAMP 3 CONNECTION
10	64+39.61	65+67.46	RTE A	RT	128	AT RAMP 1 CONNECTION
10	66+14.23	66+15.77	RTE A	LT AND RT	49	BRIDGE APPROACH SLAB
10	68+06.56	68+08.11	RTE A	LT AND RT	49	BRIDGE APPROACH SLAB
10	68+06.95	69+34.63	RTE A/NN	RT	128	AT RAMP 2 CONNECTION
10	68+07.72	69+40.24	RTE A/NN	LT	133	AT RAMP 4 CONNECTION
10	69+32.29	69+42.58	RTE NN	LT AND RT	46	BRIDGE APPROACH SLAB
10	71+03.82	71+14.19	RTE NN	LT AND RT	46	BRIDGE APPROACH SLAB
11	673+47.78	681+38.45	EXISTING US60	LT	801	RAMP 3 DECEL LANE
12	681+38.45	686+37.93	EXISTING US60	LT	500	RAMP 3 DECEL LANE
12	42+71.66	--	EB US60	LT AND RT	28	
12	687+10.22	689+10.39	EXISTING US60	RT	210	
14	67+42.95	67+58.81	NORTH OUTER ROAD	LT AND RT	128	AT ROUTE O CONNECTION
15	51+11.18	--	RTE A	LT AND RT	38	
15	59+01.30	59+83.30	RTE A	RT	82	AT NORTH OUTER ROAD CONNECTION
15	59+01.30	59+83.30	RTE A	LT	82	AT NORTH OUTER ROAD CONNECTION
16	76+51.11	77+65.38	RTE NN	RT	117	AT SOUTH OUTER ROAD CONNECTION
17	93+12.20	--	RTE NN	LT AND RT	45	ROUNDABOUT
17	12+45.82	--	EXISTING RTE NN	LT AND RT	41	ROUNDABOUT
17	14+71.99	--	EXISTING RTE NN	LT AND RT	42	ROUNDABOUT
17	10+47.96	--	EXISTING RTE NN	LT AND RT	34	
17	17+53.65	--	EXISTING RTE NN	LT AND RT	30	
18	0+00.00	0+23.18	SOUTH OUTER ROAD	LT AND RT	125	AT ROUTE Z CONNECTION
19	25+25.49	26+07.45	SOUTH OUTER ROAD	RT	82	AT BLUEBIRD CONNECTION
19	0+93.58	--	BLUEBIRD LN	LT AND RT	16	
21-22	51+71.54	52+52.67	SOUTH OUTER ROAD	RT	78	AT HUMMINGBIRD CONNECTION
22	0+77.94	--	HUMMINGBIRD LN	LT AND RT	18	
24	79+35.63	80+16.33	SOUTH OUTER ROAD	RT	81	AT TANDY CONNECTION
24	2+45.33	--	TANDY RD	LT AND RT	18	
26	108+65.58	109+51.12	SOUTH OUTER ROAD	RT	85	AT HONOR CAMP CONNECTION
26	1+90.43	--	HONOR CAMP	LT AND RT	21	
				TOTALS	4,708	*NO DIRECT PAY FOR CONCRETE AND ASPHALT JOINT SEALER SEE JOB SPECIAL PROVISIONS

STATE OF MISSOURI
DALLAS P. JOPLIN
NUMBER PE-2011015760
PROFESSIONAL ENGINEER

THIS SHEET HAS BEEN SIGNED, SEALED AND DATED ELECTRONICALLY.

DATE PREPARED
9/3/2024

ROUTE	STATE
60	MO
DISTRICT	SHEET NO.
SW	3

COUNTY
WEBSTER

JOB NO.
J7P3425C

CONTRACT ID.

PROJECT NO.

BRIDGE NO.

DESCRIPTION	DATE

MISSOURI HIGHWAYS AND TRANSPORTATION COMMISSION
105 WEST CAPITOL
JEFFERSON CITY, MO 65102
1-888-ASK-MODOT (1-888-275-6636)

© Copyright CMT, Inc.

CMT
CRAWFORD, MURPHY & TILLY, INC.
1631 WEST ELFINDALE STREET
SPRINGFIELD, MO 65807 (417) 869-6009
ENGINEERING CORPORATION - 000631

IF A SEAL IS PRESENT ON THIS SHEET IT HAS BEEN ELECTRONICALLY SEALED AND DATED.

SUMMARY OF QUANTITIES
15 OF 26

REV.

L:\MoDOT\20092124-00\Draw\Roadway\Sheets\003_QU_J7P3425C_i1.dgn 1:55:50 PM 9/3/2024

NON-CONTRACTUAL ITEMS

SHEET	STEEL RIGHT OF WAY MARKERS (EA)	2 IN. ALUMINUM CAP WITH MODOT R/W IMPRINT (EA)	24 IN. SURVEY PIN (EA)	REMARKS
10	3	3	3	
11	4	4	4	
12	2	2	2	
13	7	9	9	
14	4	6	6	
15	22	34	34	
16	10	10	10	2 EA FOR SOUTH OUTER ROAD R/W
17	29	43	43	
18	6	14	14	
19	11	27	27	
20	5	17	17	
21	7	19	19	
22	4	8	8	
23	1	5	5	
24	4	11	11	
25	7	10	10	
26	6	13	13	
27	1	5	5	
28	1	3	3	
29	0	6	6	
30	2	9	9	
31	2	17	17	2 EA FOR SOUTH OUTER ROAD R/W INCLUDED IN SHEET 16 QTY
TOTALS	138	275	275	

GRAVEL DRIVE

SHEET	FROM STATION	TO STATION	BASELINE	LOCATION	GRAVEL (A) OR CRUSHED STONE (B) (SY)	REMARKS
11	23+50.00	23+70.00	NORTH OUTER ROAD	LT	12.1	
11	23+50.00	23+70.00	NORTH OUTER ROAD	RT	17.3	
11	25+70.00	25+90.00	NORTH OUTER ROAD	LT	17.9	
12	37+36.40	37+46.40	NORTH OUTER ROAD	LT	25.6	
12	39+56.38	39+66.40	NORTH OUTER ROAD	LT	21.6	
12	40+52.61	40+62.95	NORTH OUTER ROAD	LT	19.8	
14	61+54.73	61+84.78	NORTH OUTER ROAD	LT	118.9	
18	2+45.73	2+60.73	SOUTH OUTER ROAD	RT	31.9	
18	4+68.21	4+78.26	SOUTH OUTER ROAD	RT	93.5	
18	9+59.60	9+79.01	SOUTH OUTER ROAD	RT	45.5	
19	14+20.22	14+30.27	SOUTH OUTER ROAD	RT	54.1	
19	14+20.21	14+30.27	SOUTH OUTER ROAD	LT	22.2	
19	23+91.80	24+02.20	SOUTH OUTER ROAD	RT	12.8	
19	24+86.74	25+72.07	SOUTH OUTER ROAD	RT	255.5	
21	39+82.79	39+92.84	SOUTH OUTER ROAD	RT	5.6	
21	39+82.79	39+92.84	SOUTH OUTER ROAD	LT	65.7	
21	49+49.93	49+96.33	SOUTH OUTER ROAD	RT	99.7	
23	65+77.27	65+97.58	SOUTH OUTER ROAD	RT	54.0	
23	70+05.28	70+28.67	SOUTH OUTER ROAD	RT	33.9	
25	94+28.24	95+47.97	SOUTH OUTER ROAD	LT	221.9	
26	111+74.16	112+97.33	SOUTH OUTER ROAD	RT	191.6	
28	138+38.31	138+71.95	SOUTH OUTER ROAD	RT	54.3	
28	140+19.21	140+36.77	SOUTH OUTER ROAD	RT	39.7	
29	146+85.52	147+22.62	SOUTH OUTER ROAD	RT	107.7	
30	158+73.48	158+93.48	SOUTH OUTER ROAD	RT	64.4	
30	161+40.00	161+60.00	SOUTH OUTER ROAD	RT	48.9	
31	169+85.69	169+96.03	SOUTH OUTER ROAD	RT	79.5	
31	169+75.74	169+95.75	SOUTH OUTER ROAD	LT	153.4	
				TOTAL	1,969	

DISCLAIMER
THE PROFESSIONAL WHOSE SIGNATURE AND PERSONAL SEAL APPEAR HEREON ASSUMES RESPONSIBILITY ONLY FOR WHAT APPEARS ON THIS PAGE, AND DISCLAIMS (PURSUANT TO SECTION 327.411 RSMO) SPECIFICATION, ESTIMATES, REPORTS, OR OTHER DOCUMENTS OR INSTRUMENTS NOT SEALED BY THE UNDERSIGNED PROFESSIONAL RELATING TO OR INTENDED TO BE USED FOR ANY PART OR PARTS OF THE PROJECT TO WHICH THIS PAGE REFERS.

GATES

PLAN SHEET	LOCATION	20' UTILITY GATE (EA)	REMARKS
1	SOUTH OUTER ROAD	1.0	AT BNSF ROW
3	US60/HONOR CAMP	1.0	FOR UTILITY ACCESS TO BURLINGTON
	TOTALS	2	

PAVED APPROACH

SHEET	FROM STATION	TO STATION	BASELINE	LOCATION	PAVED APPROACH, 7 IN. (SQYD)	REMARKS
11	23+35.00	23+85.00	NORTH OUTER ROAD	LT	53.0	
11	23+35.00	23+85.00	NORTH OUTER ROAD	RT	53.0	
11	25+55.00	26+05.00	NORTH OUTER ROAD	LT	53.0	
11	25+55.00	26+05.00	NORTH OUTER ROAD	RT	53.0	
12	37+26.40	37+56.40	NORTH OUTER ROAD	LT	25.9	
12	39+46.17	39+76.40	NORTH OUTER ROAD	LT	25.8	
12	40+42.61	40+72.95	NORTH OUTER ROAD	LT	26.6	
12	42+33.39	42+88.55	NORTH OUTER ROAD	LT	56.3	
12	43+64.95	44+23.04	NORTH OUTER ROAD	LT	62.5	
12	45+85.47	46+45.47	NORTH OUTER ROAD	LT	64.0	
13	48+11.55	48+53.98	NORTH OUTER ROAD	LT	40.2	
13	53+25.31	53+85.31	NORTH OUTER ROAD	LT	74.1	
14	61+34.75	62+04.75	NORTH OUTER ROAD	LT	82.4	
15	53+88.88	54+24.79	RTE A	LT	61.5	
17	89+54.77	90+45.00	RTE NN	LT	212.1	
17	10+66.28	11+28.79	EXISTING RTE NN	RT	75.4	
17	10+83.56	11+16.85	EXISTING RTE NN	LT	36.9	
17	14+71.99	15+10.56	EXISTING RTE NN	LT	75.0	
17	16+58.34	16+86.64	EXISTING RTE NN	RT	66.0	
18	2+30.73	2+75.73	SOUTH OUTER ROAD	RT	42.4	
18	4+48.23	4+98.23	SOUTH OUTER ROAD	RT	40.2	
18	9+44.94	9+93.67	SOUTH OUTER ROAD	RT	52.5	
18	9+43.63	9+94.98	SOUTH OUTER ROAD	LT	53.4	
19	14+00.64	14+50.24	SOUTH OUTER ROAD	RT	40.2	
19	13+99.82	14+50.24	SOUTH OUTER ROAD	LT	40.3	
19	23+71.19	24+22.80	SOUTH OUTER ROAD	RT	41.1	
19	24+67.10	25+72.53	SOUTH OUTER ROAD	LT	53.4	
20	37+47.38	37+88.24	SOUTH OUTER ROAD	LT	47.2	
21	39+62.81	40+12.81	SOUTH OUTER ROAD	RT	40.2	
21	39+62.81	40+12.81	SOUTH OUTER ROAD	LT	40.2	
21	49+65.13	50+16.51	SOUTH OUTER ROAD	RT	43.1	
23	65+66.66	66+17.83	SOUTH OUTER ROAD	RT	42.6	
23	69+89.96	70+40.21	SOUTH OUTER ROAD	RT	54.4	
25	94+00.79	94+73.54	SOUTH OUTER ROAD	LT	70.2	
25	97+25.00	97+65.00	SOUTH OUTER ROAD	RT	47.0	
26	111+53.37	112.07.22	SOUTH OUTER ROAD	RT	45.7	
28	138+33.80	138+92.60	SOUTH OUTER ROAD	RT	58.6	
28	139+99.03	140+52.01	SOUTH OUTER ROAD	RT	46.5	
29	146+91.08	147+43.16	SOUTH OUTER ROAD	RT	44.5	
30	158+58.48	159+08.48	SOUTH OUTER ROAD	RT	53.0	
30	158+58.48	159+08.48	SOUTH OUTER ROAD	RT	53.0	
31	169+65.19	170+16.53	SOUTH OUTER ROAD	RT	40.9	
31	169+66.49	170+15.22	SOUTH OUTER ROAD	LT	39.5	
				TOTAL	2,326.7	

SUMMARY OF QUANTITIES
16 OF 26

STATE OF MISSOURI
DALLAS P. JOPLIN
NUMBER PE-2011015760
PROFESSIONAL ENGINEER

THIS SHEET HAS BEEN SIGNED, SEALED AND DATED ELECTRONICALLY.

DATE PREPARED: 11/22/2024
ROUTE: 60 | STATE: MO
DISTRICT: SW | SHEET NO.: 3
COUNTY: WEBSTER
JOB NO.: J7P3425C
CONTRACT ID.:
PROJECT NO.:
BRIDGE NO.:

IF A SEAL IS PRESENT ON THIS SHEET IT HAS BEEN ELECTRONICALLY SEALED AND DATED.

REV.	DESCRIPTION	DATE

MISSOURI HIGHWAYS AND TRANSPORTATION COMMISSION
105 WEST CAPITOL
JEFFERSON CITY, MO 65102
1-888-ASK-MODOT (1-888-275-6636)

CMT
©Copyright CMT, Inc.
CRAWFORD, MURPHY & TILLY, INC.
1631 WEST ELFINDALE STREET
SPRINGFIELD, MO 65807 (417) 869-6009
ENGINEERING CORPORATION - 000631

ALTERNATE PAVEMENT A (ASPHALT) PAVEMENT

SHEET	FROM STATION	TO STATION	BASELINE	LOCATION	13.5 INCHES, BITUMINOUS PAVEMENT (SQYD)	BITUMINOUS SHOULDER RUMBLE STRIP (STA)	REMARKS
9	0+00.00	12+00.00	EB US60	LT AND RT	4,702.5		INCLUDES DECEL LANE FOR RAMP 2
9	0+00.00	12+00.00	EB US60	LT		12.0	
9	0+00.00	3+74.42	EB US60	RT		3.7	
9	646+58.07	655+91.43	EXISTING US60	LT	1,178.1		RAMP 1 ACCEL LANE
10	12+00.00	25+00.00	EB US60	LT AND RT	5,167.4		INCLUDES FULL DEPTH TO RETAINING WALL
10	664+52.54	666+06.04	EXISTING US60	LT	199.4		FULL DEPTH TO RETAINING WALL
10	664+52.54	666+06.04	EXISTING US60	LT		1.5	
10	12+00	25+00	EB US60	LT		13.0	
10	13+69.71	25+00.00	EB US60	RT		11.3	
10	655+90.40	657+31.78	EXISTING US60	LT	354.8		RAMP 1 ACCEL LANE
11	25+00.00	37+00.00	EB US60	LT AND RT	4,504.7		INCLUDES ACCEL LANE FOR RAMP 4
11	25+00.00	37+00.00	EB US60	LT		13.0	
11	25+00.00	33+35.72	EB US60	RT		8.4	
11	33+37.96	37+00.00	EB US60	RT		3.6	OUTSIDE RAMP 4 ACCEL LANE
11	673+47.78	681+38.45	EXISTING US60	LT	991.8		
11	673+47.78	677+95.10	EXISTING US60	LT		4.5	
11	677+97.68	681+38.44	EXISTING US60	LT		3.4	OUTSIDE RAMP 3 DECEL LANE
12	37+00.00	42+71.66	EB US60	LT AND RT	2,580.3		INCLUDES ACCEL LANE FOR RAMP 4
12	37+00.00	42+71.66	EB US60	LT		5.7	
12	37+00.00	42+71.66	EB US60	RT		5.7	OUTSIDE RAMP 4 ACCEL LANE
12	687+10.22	689+10.39	EXISTING US60	RT	96.3		ACCEL LANE FOR RAMP 4
12	687+10.212	689+10.39	EXISTING US60	RT		2.0	OUTSIDE RAMP 4 ACCEL LANE
12	681+38.45	686+37.93	EXISTING US60	LT	540.9		DECEL LANE FOR RAMP 3
12	681+38.45	686+37.93	EXISTING US60	LT		5.0	OUTSIDE RAMP 3 DECEL LANE
				TOTAL	20,316	92.8	

ALTERNATE PAVEMENT B (CONCRETE) PAVEMENT

SHEET	FROM STATION	TO STATION	BASELINE	LOCATION	CONCRETE PAVEMENT (10 IN. NON-REINFORCED, 15 FT. JOINTS) (SQYD)	PORTLAND CEMENT CONCRETE SHOULDER RUMBLE STRIP (STA)	REMARKS
9	0+00.00	12+00.00	EB US60	LT AND RT	4,702.5		INCLUDES DECEL LANE FOR RAMP 2
9	0+00.00	12+00.00	EB US60	LT		12.0	
9	0+00.00	3+74.42	EB US60	RT		3.7	
9	646+58.07	655+91.43	EXISTING US60	LT	1,178.1		RAMP 1 ACCEL LANE
10	12+00.00	25+00.00	EB US60	LT AND RT	5,167.4		INCLUDES FULL DEPTH TO RETAINING WALL
10	664+52.54	666+06.04	EXISTING US60	LT	199.4		FULL DEPTH TO RETAINING WALL
10	664+52.54	666+06.04	EXISTING US60	LT		1.5	
10	12+00	25+00	EB US60	LT		13.0	
10	13+69.71	25+00.00	EB US60	RT		11.3	
10	655+90.40	657+31.78	EXISTING US60	LT	354.8		RAMP 1 ACCEL LANE
11	25+00.00	37+00.00	EB US60	LT AND RT	4,504.7		INCLUDES ACCEL LANE FOR RAMP 4
11	25+00.00	37+00.00	EB US60	LT		13.0	
11	25+00.00	33+35.72	EB US60	RT		8.4	
11	33+37.96	37+00.00	EB US60	RT		3.6	OUTSIDE RAMP 4 ACCEL LANE
11	673+47.78	681+38.45	EXISTING US60	LT	991.8		
11	673+47.78	677+95.10	EXISTING US60	LT		4.5	
11	677+97.68	681+38.44	EXISTING US60	LT		3.4	OUTSIDE RAMP 3 DECEL LANE
12	37+00.00	42+71.66	EB US60	LT AND RT	2,580.3		INCLUDES ACCEL LANE FOR RAMP 4
12	37+00.00	42+71.66	EB US60	LT		5.7	
12	37+00.00	42+71.66	EB US60	RT		5.7	OUTSIDE RAMP 4 ACCEL LANE
12	687+10.22	689+10.39	EXISTING US60	RT	96.3		ACCEL LANE FOR RAMP 4
12	687+10.212	689+10.39	EXISTING US60	RT		2.0	OUTSIDE RAMP 4 ACCEL LANE
12	681+38.45	686+37.93	EXISTING US60	LT	540.9		DECEL LANE FOR RAMP 3
12	681+38.45	686+37.93	EXISTING US60	LT		5.0	OUTSIDE RAMP 3 DECEL LANE
				TOTAL	20,316	92.8	

NOTE:
THE GRADING SHOWN ON THE PLANS WAS DESIGNED FOR THE ASPHALT PAVEMENT ALTERNATE

SUMMARY OF QUANTITIES
17 OF 26

DISCLAIMER
THE PROFESSIONAL WHOSE SIGNATURE AND PERSONAL SEAL APPEAR HEREON ASSUMES RESPONSIBILITY ONLY FOR WHAT APPEARS ON THIS PAGE, AND DISCLAIMS (PURSUANT TO SECTION 327.411 RSMO) SPECIFICATION, ESTIMATES, REPORTS, OR OTHER DOCUMENTS OR INSTRUMENTS NOT SEALED BY THE UNDERSIGNED PROFESSIONAL RELATING TO OR INTENDED TO BE USED FOR ANY PART OR PARTS OF THE PROJECT TO WHICH THIS PAGE REFERS.

STATE OF MISSOURI
DALLAS P. JOPLIN
NUMBER PE-2011015760
PROFESSIONAL ENGINEER

THIS SHEET HAS BEEN SIGNED, SEALED AND DATED ELECTRONICALLY.

DATE PREPARED: 9/3/2024
ROUTE: 60 | STATE: MO
DISTRICT: SW | SHEET NO.: 3
COUNTY: WEBSTER
JOB NO.: J7P3425C
CONTRACT ID.:
PROJECT NO.:
BRIDGE NO.:

DESCRIPTION | DATE

IF A SEAL IS PRESENT ON THIS SHEET IT HAS BEEN ELECTRONICALLY SEALED AND DATED.

MISSOURI HIGHWAYS AND TRANSPORTATION COMMISSION
105 WEST CAPITOL
JEFFERSON CITY, MO 65102
1-888-ASK-MODOT (1-888-275-6636)

CMT
©Copyright CMT, Inc.
CRAWFORD, MURPHY & TILLY, INC.
1631 WEST ELFINDALE STREET
SPRINGFIELD, MO 65807 (417) 869-6009
ENGINEERING CORPORATION - 000631

REV.

DISCLAIMER
THE PROFESSIONAL WHOSE SIGNATURE AND PERSONAL SEAL APPEAR HEREON ASSUMES RESPONSIBILITY ONLY FOR WHAT APPEARS ON THIS PAGE, AND DISCLAIMS (PURSUANT TO SECTION 327.411 RSMO) SPECIFICATION, ESTIMATES, REPORTS, OR OTHER DOCUMENTS OR INSTRUMENTS NOT SEALED BY THE UNDERSIGNED PROFESSIONAL RELATING TO OR INTENDED TO BE USED FOR ANY PART OR PARTS OF THE PROJECT TO WHICH THIS PAGE REFERS.

ALTERNATE C (ASPHALT) SHOULDER

SHEET	FROM STATION	TO STATION	BASELINE	LOCATION	TYPE A2 SHOULDER (SQYD)	CONCRETE CURB (6 IN. HEIGHT AND UNDER) TYPE S (LF)	REMARKS
9	0+00.00	10+91.58	EB US60	RT	849.9		
9	646+58.07	655+90.40	EX US60	LT	715.2		
10	12+98.54	17+52.96	EB US60	RT	319.8		
10	13+69.71	15+98.55	EB US60	RT		229.0	
10	655+90.40	657+29.44	EX US60	LT	108.6		
10	22+48.65	25+00.00	EB US60	RT	193.7		
11	25+00.00	33+35.72	EB US60	RT	645.1		
11	673+47.78	677+95.10	EX US60	LT	405.3		
11	33+38.08	37+00.00	EB US60	RT	362.0		
11	677+97.54	681+38.44	EX US60	LT	341.3		
12	37+00.00	42+71.66	EB US60	RT	772.1		
12	681+38.44	686+37.93	EX US60	LT	517.3		
12	687+10.22	689+10.40	EX US60	RT	200.4		
				TOTAL	5,430.7	229	

ALTERNATE D (CONCRETE) SHOULDER

SHEET	FROM STATION	TO STATION	BASELINE	LOCATION	TYPE A2 SHOULDER (SQYD)	CONCRETE CURB (6 IN. HEIGHT AND UNDER) TYPE A (LF)	REMARKS
9	0+00.00	10+91.58	EB US60	RT	849.9		
9	646+58.07	655+90.40	EX US60	LT	715.2		
10	12+98.54	17+52.96	EB US60	RT	319.8		
10	13+69.71	15+98.55	EB US60	RT		229.0	
10	655+90.40	657+29.44	EX US60	LT	108.6		
10	22+48.65	25+00.00	EB US60	RT	193.7		
11	25+00.00	33+35.72	EB US60	RT	645.1		
11	673+47.78	677+95.10	EX US60	LT	405.3		
11	33+38.08	37+00.00	EB US60	RT	362.0		
11	677+97.54	681+38.44	EX US60	LT	341.3		
12	37+00.00	42+71.66	EB US60	RT	772.1		
12	681+38.44	686+37.93	EX US60	LT	517.3		
12	687+10.22	689+10.40	EX US60	RT	200.4		
				TOTAL	5,430.7	229	

NOTE:
THE GRADING SHOWN ON THE PLANS WAS DESIGNED FOR THE ASPHALT PAVEMENT ALTERNATE

SUMMARY OF QUANTITIES
18 OF 26

STATE OF MISSOURI
DALLAS P. JOPLIN
NUMBER PE-2011015760
PROFESSIONAL ENGINEER

THIS SHEET HAS BEEN SIGNED, SEALED AND DATED ELECTRONICALLY.

DATE PREPARED: 9/3/2024
ROUTE: 60 | STATE: MO
DISTRICT: SW | SHEET NO.: 3
COUNTY: WEBSTER
JOB NO.: J7P3425C
CONTRACT ID.:
PROJECT NO.:
BRIDGE NO.:

IF A SEAL IS PRESENT ON THIS SHEET IT HAS BEEN ELECTRONICALLY SEALED AND DATED.

REV.	DESCRIPTION	DATE

MISSOURI HIGHWAYS AND TRANSPORTATION COMMISSION
105 WEST CAPITOL
JEFFERSON CITY, MO 65102
1-888-ASK-MODOT (1-888-275-6636)

CMT
© Copyright CMT, Inc.
CRAWFORD, MURPHY & TILLY, INC.
1631 WEST ELFINDALE STREET
SPRINGFIELD, MO 65807 (417) 869-6009
ENGINEERING CORPORATION - 000631

DISCLAIMER
THE PROFESSIONAL WHOSE SIGNATURE AND PERSONAL SEAL APPEAR HEREON ASSUMES RESPONSIBILITY ONLY FOR WHAT APPEARS ON THIS PAGE, AND DISCLAIMS (PURSUANT TO SECTION 327.411 RSMO) SPECIFICATION, ESTIMATES, REPORTS, OR OTHER DOCUMENTS OR INSTRUMENTS NOT SEALED BY THE UNDERSIGNED PROFESSIONAL RELATING TO OR INTENDED TO BE USED FOR ANY PART OR PARTS OF THE PROJECT TO WHICH THIS PAGE REFERS.

ALTERNATE PAVEMENT E (ASPHALT) PAVEMENT

SHEET	FROM STATION	TO STATION	BASELINE	LOCATION	11.5 INCHES, ASPHALTIC CONCRETE PAVEMENT (SQYD)	BITUMINOUS SHOULDER RUMBLE STRIP (STA)	REMARKS
9	1+27.30	2+00.00	RAMP 2	LT AND RT	129.4		
10	2+39.86	10+62.94	RAMP 1	LT AND RT	1,960.4		
10	2+00.00	11+44.84	RAMP 2	LT AND RT	2,284.7		INCLUDES FULL DEPTH TO TYPE D BARRIER
10	0+12.05	4+00.00	RAMP 3	LT AND RT	1,056.7		
10	0+85.26	4+00.00	RAMP 3	LT		3.1	
10	0+12.46	3+00.00	RAMP 4	LT AND RT	946.7		INCLUDES FULL DEPTH TO TYPE D BARRIER
10	0+91.88	3+00	RAMP 4	RT		2.1	
10	64+00.00	66+15.00	RTE A	LT AND RT	573.3		
10	68+07.33	68+74.06	RTE A	LT AND RT	177.9		
10	68+74.06	69+37.44	RTE NN	LT AND RT	169.0		
10	71+09.00	73+00.00	RTE NN	LT AND RT	509.3		
11	4+00.00	13+98.89	RAMP 3	LT AND RT	2,095.2		
11	4+00.00	13+98.89	RAMP 3	LT		10.0	
11	3+00.00	11+32.56	RAMP 4	LT AND RT	1,762.2		
11	3+00.00	11+32.56	RAMP 4	RT		8.3	
15	51+11.18	64+00.00	RTE A	LT AND RT	3,564.4		
16	73+00.00	86+50.00	RTE NN	LT AND RT	3,690.3		
17	86+50.00	91+37.26	RTE NN	LT AND RT	1,338.4		
17	10+47.96	11+90.28	EXISTING RTE NN	LT AND RT	506.8		INCLUDES FULL DEPTH SHOULDER
17	16+53.68	17+53.65	EXISTING RTE NN	LT AND RT	388.3		INCLUDES FULL DEPTH SHOULDER
				TOTAL	21,153	23.5	

ALTERNATE PAVEMENT F (CONCRETE) PAVEMENT

SHEET	FROM STATION	TO STATION	BASELINE	LOCATION	CONCRETE PAVEMENT (8.5 IN. NON-REINFORCED, 15 FT. JOINTS) (SQYD)	PORTLAND CEMENT CONCRETE SHOULDER RUMBLE STRIP (STA)	REMARKS
9	1+27.30	2+00.00	RAMP 2	LT AND RT	129.4		
10	2+39.86	10+62.94	RAMP 1	LT AND RT	1,960.4		
10	2+00.00	11+44.84	RAMP 2	LT AND RT	2,284.7		INCLUDES FULL DEPTH TO TYPE D BARRIER
10	0+12.05	4+00.00	RAMP 3	LT AND RT	1,056.7		
10	0+85.26	4+00.00	RAMP 3	LT		3.1	
10	0+12.46	3+00.00	RAMP 4	LT AND RT	946.7		INCLUDES FULL DEPTH TO TYPE D BARRIER
10	0+91.88	3+00	RAMP 4	RT		2.1	
10	64+00.00	66+15.00	RTE A	LT AND RT	573.3		
10	68+07.33	68+74.06	RTE A	LT AND RT	177.9		
10	68+74.06	69+37.44	RTE NN	LT AND RT	169.0		
10	71+09.00	73+00.00	RTE NN	LT AND RT	509.3		
11	4+00.00	13+98.89	RAMP 3	LT AND RT	2,095.2		
11	4+00.00	13+98.89	RAMP 3	LT		10.0	
11	3+00.00	11+32.56	RAMP 4	LT AND RT	1,762.2		
11	3+00.00	11+32.56	RAMP 4	RT		8.3	
15	51+11.18	64+00.00	RTE A	LT AND RT	3,564.4		
16	73+00.00	86+50.00	RTE NN	LT AND RT	3,690.3		
17	86+50.00	91+37.26	RTE NN	LT AND RT	1,338.4		
17	10+47.96	11+90.28	EXISTING RTE NN	LT AND RT	506.8		
17	16+53.68	17+53.65	EXISTING RTE NN	LT AND RT	388.3		
				TOTAL	21,153	23.5	

NOTE:
THE GRADING SHOWN ON THE PLANS WAS DESIGNED FOR THE ASPHALT PAVEMENT ALTERNATE

SUMMARY OF QUANTITIES
19 OF 26

STATE OF MISSOURI
DALLAS P. JOPLIN
NUMBER PE-2011015760
PROFESSIONAL ENGINEER

THIS SHEET HAS BEEN SIGNED, SEALED AND DATED ELECTRONICALLY.

DATE PREPARED
9/3/2024

ROUTE	STATE
60	MO
DISTRICT	SHEET NO.
SW	3

COUNTY
WEBSTER

JOB NO.
J7P3425C

CONTRACT ID.

PROJECT NO.

BRIDGE NO.

IF A SEAL IS PRESENT ON THIS SHEET IT HAS BEEN ELECTRONICALLY SEALED AND DATED.

REV.	DESCRIPTION	DATE

MISSOURI HIGHWAYS AND TRANSPORTATION COMMISSION
105 WEST CAPITOL
JEFFERSON CITY, MO 65102
1-888-ASK-MODOT (1-888-275-6636)

CMT
© Copyright CMT, Inc.
CRAWFORD, MURPHY & TILLY, INC.
1631 WEST ELFINDALE STREET
SPRINGFIELD, MO 65807 (417) 869-6009
ENGINEERING CORPORATION - 000631

ALTERNATE G (ASPHALT) SHOULDER

SHEET	FROM STATION	TO STATION	BASELINE	LOCATION	TYPE A2 SHOULDER (SQYD)	REMARKS
9	1+27.30	2+00.00	RAMP 2	RT	56.5	
10	2+39.86	10+75.35	RAMP 1	LT	681.0	
10	2+00.00	10+91.32	RAMP 2	RT	692.4	
10	1+09.83	4+00.00	RAMP 3	LT	290.9	
10	0+89.86	3+00.00	RAMP 4	RT	210.1	
10	64+00.00	64+39.61	RTE A	RT	30.8	
10	65+55.41	66+15.77	RTE A	LT	80.2	
10	65+67.46	66+14.62	RTE A	RT	62.6	
10	70+13.86	73+00.00	RTE NN	RT	216.5	
10	71+11.81	73+00.00	RTE NN	LT	207.7	
11	4+00.00	13+98.89	RAMP 3	LT	1,002.0	
11	3+00.00	11+32.56	RAMP 4	RT	831.1	
15	51+11.18	59+01.30	RTE A	LT	608.4	
15	51+11.18	59+01.30	RTE A	RT	620.7	
15	59+83.30	64+00.00	RTE A	LT	324.1	
15	59+83.30	64+00.00	RTE A	RT	324.1	
16	73+00.00	86+50.00	RTE NN	LT	1,057.9	
16	73+00.00	76+51.11	RTE NN	RT	293.8	
16	77+65.38	86+50.00	RTE NN	RT	698.9	
17	86+50.00	93+12.11	RTE NN	LT	494.5	
17	86+50.00	91+37.12	RTE NN	RT	364.1	
				TOTAL	9,148.6	

ALTERNATE H (CONCRETE) SHOULDER

SHEET	FROM STATION	TO STATION	BASELINE	LOCATION	TYPE A2 SHOULDER (SQYD)	REMARKS
9	1+27.30	2+00.00	RAMP 2	RT	56.5	
10	2+39.86	10+75.35	RAMP 1	LT	681.0	
10	2+00.00	10+91.32	RAMP 2	RT	692.4	
10	1+09.83	4+00.00	RAMP 3	LT	290.9	
10	0+89.86	3+00.00	RAMP 4	RT	210.1	
10	64+00.00	64+39.61	RTE A	RT	30.8	
10	65+55.41	66+15.77	RTE A	LT	80.2	
10	65+67.46	66+14.62	RTE A	RT	62.6	
10	70+13.86	73+00.00	RTE NN	RT	216.5	
10	71+11.81	73+00.00	RTE NN	LT	207.7	
11	4+00.00	13+98.89	RAMP 3	LT	1,002.0	
11	3+00.00	11+32.56	RAMP 4	RT	831.1	
15	51+11.18	59+01.30	RTE A	LT	608.4	
15	51+11.18	59+01.30	RTE A	RT	620.7	
15	59+83.30	64+00.00	RTE A	LT	324.1	
15	59+83.30	64+00.00	RTE A	RT	324.1	
16	73+00.00	86+50.00	RTE NN	LT	1,057.9	
16	73+00.00	76+51.11	RTE NN	RT	293.8	
16	77+65.38	86+50.00	RTE NN	RT	698.9	
17	86+50.00	93+12.11	RTE NN	LT	494.5	
17	86+50.00	91+37.12	RTE NN	RT	364.1	
				TOTAL	9,148.6	

NOTE:
THE GRADING SHOWN ON THE PLANS WAS DESIGNED FOR THE ASPHALT PAVEMENT ALTERNATE

SUMMARY OF QUANTITIES
20 OF 26

DISCLAIMER
THE PROFESSIONAL WHOSE SIGNATURE AND PERSONAL SEAL APPEAR HEREON ASSUMES RESPONSIBILITY ONLY FOR WHAT APPEARS ON THIS PAGE, AND DISCLAIMS (PURSUANT TO SECTION 327.411 RSMO) SPECIFICATION, ESTIMATES, REPORTS, OR OTHER DOCUMENTS OR INSTRUMENTS NOT SEALED BY THE UNDERSIGNED PROFESSIONAL RELATING TO OR INTENDED TO BE USED FOR ANY PART OR PARTS OF THE PROJECT TO WHICH THIS PAGE REFERS.

STATE OF MISSOURI
DALLAS P. JOPLIN
NUMBER PE-2011015760
PROFESSIONAL ENGINEER

THIS SHEET HAS BEEN SIGNED, SEALED AND DATED ELECTRONICALLY.

DATE PREPARED
9/3/2024

ROUTE	STATE
60	MO
DISTRICT	SHEET NO.
SW	3

COUNTY
WEBSTER

JOB NO.
J7P3425C

CONTRACT ID.

PROJECT NO.

BRIDGE NO.

DESCRIPTION	DATE

IF A SEAL IS PRESENT ON THIS SHEET IT HAS BEEN ELECTRONICALLY SEALED AND DATED.

MISSOURI HIGHWAYS AND TRANSPORTATION COMMISSION
105 WEST CAPITOL
JEFFERSON CITY, MO 65102
1-888-ASK-MODOT (1-888-275-6636)

CMT
© Copyright CMT, Inc.
CRAWFORD, MURPHY & TILLY, INC.
1631 WEST ELFINDALE STREET
SPRINGFIELD, MO 65807 (417) 869-6009
ENGINEERING CORPORATION - 000631

REV.

ALTERNATE PAVEMENT I (ASPHALT) PAVEMENT

SHEET	FROM STATION	TO STATION	BASELINE	LOCATION	8.5 INCHES, BITUMINOUS PAVEMENT (SQYD)	REMARKS
11	22+00.00	34+00.00	NORTH OUTER ROAD EAST	LT AND RT	2,933.4	
12	34+00.00	47+50.00	NORTH OUTER ROAD EAST	LT AND RT	3,482.8	
13	47+50.00	60+50.00	NORTH OUTER ROAD EAST	LT AND RT	3,384.3	
14	60+50.00	67+58.81	NORTH OUTER ROAD EAST	LT AND RT	1,990.3	
15	10+11.24	14+81.00	NORTH OUTER ROAD WEST	LT AND RT	1,191.2	
15	15+19.00	22+00.00	NORTH OUTER ROAD EAST	LT AND RT	1,707.6	
18	0+00.00	13+00.00	SOUTH OUTER ROAD	LT AND RT	3,286.8	
19	13+00.00	26+00.00	SOUTH OUTER ROAD	LT AND RT	3,184.7	
19	0+12.01	0+93.58	BLUEBIRD	LT AND RT	225.8	
20	26+00.00	39+00.00	SOUTH OUTER ROAD	LT AND RT	3,178.0	
21	39+00.00	52+00.00	SOUTH OUTER ROAD	LT AND RT	3,177.8	
21	0+08.89	0+24.25	HUMMMINGBIRD	RT	11.8	
22	52+00.00	65+00.00	SOUTH OUTER ROAD	LT AND RT	3,177.8	
22	0+13.34	0+77.94	HUMMMINGBIRD	LT AND RT	165.3	
23	65+00.00	78+00.00	SOUTH OUTER ROAD	LT AND RT	3,177.8	
24	78+00.00	91+00.00	SOUTH OUTER ROAD	LT AND RT	3,180.4	
24	0+03.25	2+45.33	TANDY	LT AND RT	566.0	
25	91+00.00	104+00.00	SOUTH OUTER ROAD	LT AND RT	3,177.8	
26	104+00.00	117+00.00	SOUTH OUTER ROAD	LT AND RT	3,177.8	
26	0+11.91	1+90.43	HONOR CAMP	LT AND RT	483.8	
27	117+00.00	130+00.00	SOUTH OUTER ROAD	LT AND RT	3,177.8	
28	130+00.00	143+00.00	SOUTH OUTER ROAD	LT AND RT	3,177.8	
29	143+00.00	156+00.00	SOUTH OUTER ROAD	LT AND RT	3,177.8	
30	156+00.00	169+00.00	SOUTH OUTER ROAD	LT AND RT	3,177.7	
31	169+00.00	182+19.60	SOUTH OUTER ROAD	LT AND RT	3,320.1	
				TOTAL	60,892	

ALTERNATE PAVEMENT J (CONCRETE) PAVEMENT

SHEET	FROM STATION	TO STATION	BASELINE	LOCATION	CONCRETE PAVEMENT (7.5 IN. NON-REINFORCED, 15 FT. JOINTS) (SQYD)	REMARKS
11	22+00.00	34+00.00	NORTH OUTER ROAD EAST	LT AND RT	2,933.4	
12	34+00.00	47+50.00	NORTH OUTER ROAD EAST	LT AND RT	3,482.8	
13	47+50.00	60+50.00	NORTH OUTER ROAD EAST	LT AND RT	3,384.3	
14	60+50.00	67+58.81	NORTH OUTER ROAD EAST	LT AND RT	1,990.3	
15	10+11.24	14+81.00	NORTH OUTER ROAD WEST	LT AND RT	1,191.2	
15	15+19.00	22+00.00	NORTH OUTER ROAD EAST	LT AND RT	1,707.6	
18	0+00.00	13+00.00	SOUTH OUTER ROAD	LT AND RT	3,286.8	
19	13+00.00	26+00.00	SOUTH OUTER ROAD	LT AND RT	3,184.7	
19	0+12.01	0+93.58	BLUEBIRD	LT AND RT	225.8	
20	26+00.00	39+00.00	SOUTH OUTER ROAD	LT AND RT	3,178.0	
21	39+00.00	52+00.00	SOUTH OUTER ROAD	LT AND RT	3,177.8	
21	0+08.89	0+24.25	HUMMMINGBIRD	RT	11.8	
22	52+00.00	65+00.00	SOUTH OUTER ROAD	LT AND RT	3,177.8	
22	0+13.34	0+77.94	HUMMMINGBIRD	LT AND RT	165.3	
23	65+00.00	78+00.00	SOUTH OUTER ROAD	LT AND RT	3,177.8	
24	78+00.00	91+00.00	SOUTH OUTER ROAD	LT AND RT	3,180.4	
24	0+03.25	2+45.33	TANDY	LT AND RT	566.0	
25	91+00.00	104+00.00	SOUTH OUTER ROAD	LT AND RT	3,177.8	
26	104+00.00	117+00.00	SOUTH OUTER ROAD	LT AND RT	3,177.8	
26	0+11.91	1+90.43	HONOR CAMP	LT AND RT	483.8	
27	117+00.00	130+00.00	SOUTH OUTER ROAD	LT AND RT	3,177.8	
28	130+00.00	143+00.00	SOUTH OUTER ROAD	LT AND RT	3,177.8	
29	143+00.00	156+00.00	SOUTH OUTER ROAD	LT AND RT	3,177.8	
30	156+00.00	169+00.00	SOUTH OUTER ROAD	LT AND RT	3,177.7	
31	169+00.00	182+19.60	SOUTH OUTER ROAD	LT AND RT	3,320.1	
				TOTAL	60,892	

NOTE:
THE GRADING SHOWN ON THE PLANS WAS DESIGNED FOR THE ASPHALT PAVEMENT ALTERNATE

DISCLAIMER
THE PROFESSIONAL WHOSE SIGNATURE AND PERSONAL SEAL APPEAR HEREON ASSUMES RESPONSIBILITY ONLY FOR WHAT APPEARS ON THIS PAGE, AND DISCLAIMS (PURSUANT TO SECTION 327.411 RSMO) SPECIFICATION, ESTIMATES, REPORTS, OR OTHER DOCUMENTS OR INSTRUMENTS NOT SEALED BY THE UNDERSIGNED PROFESSIONAL RELATING TO OR INTENDED TO BE USED FOR ANY PART OR PARTS OF THE PROJECT TO WHICH THIS PAGE REFERS.

STATE OF MISSOURI
DALLAS P. JOPLIN
NUMBER PE-2011015760
PROFESSIONAL ENGINEER

THIS SHEET HAS BEEN SIGNED, SEALED AND DATED ELECTRONICALLY.

DATE PREPARED
9/3/2024

ROUTE	STATE
60	MO
DISTRICT	SHEET NO.
SW	3

COUNTY
WEBSTER

JOB NO.
J7P3425C

CONTRACT ID.

PROJECT NO.

BRIDGE NO.

DATE	DESCRIPTION

MISSOURI HIGHWAYS AND TRANSPORTATION COMMISSION
105 WEST CAPITOL
JEFFERSON CITY, MO 65102
1-888-ASK-MODOT (1-888-275-6636)

CMT
© Copyright CMT, Inc.
CRAWFORD, MURPHY & TILLY, INC.
1631 WEST ELFINDALE STREET
SPRINGFIELD, MO 65807 (417) 869-6009
ENGINEERING CORPORATION - 000631

IF A SEAL IS PRESENT ON THIS SHEET IT HAS BEEN ELECTRONICALLY SEALED AND DATED.

SUMMARY OF QUANTITIES
21 OF 26

REV.

L:\MoDOT\20092124-00\Draw\Roadway\Sheets\003_QU_J7P3425C_i1.dgn 1:55:55 PM 9/3/2024

AGGREGATE BASE

SHEET	FROM STATION	TO STATION	BASELINE	LOCATION	OPTIONAL BASE (SQYD)	TYPE 5 AGGREGATE FOR BASE (6 IN. THICK) (SQYD)	TYPE 1 OR 5 AGGREGATE FOR BASE (4 IN. THICK) (SQYD)	REMARKS
9	0+00.00	12+00.00	EB US60	LT AND RT	4,702.5			ALTERNATE A/B PAVEMENTS
9	646+58.07	655+91.43	EXISTING US60	LT	1,178.1			
10	12+00.00	25+00.00	EB US60	LT AND RT	5,167.4			
10	664+52.54	666+06.04	EXISTING US60	LT	199.4			
10	655+90.40	657+31.78	EXISTING US60	LT	354.8			
11	25+00.00	37+00.00	EB US60	LT AND RT	4,504.7			
11	673+47.78	681+38.45	EXISTING US60	LT	991.8			
12	37+00.00	42+71.66	EB US60	LT AND RT	2,580.3			
12	687+10.22	689+10.39	EXISTING US60	RT	96.3			
12	681+38.45	686+37.93	EXISTING US60	LT	540.9			
9	0+00.00	10+91.58	EB US60	RT	849.9			ALTERNATE C/D SHOULDERS
9	646+58.07	655+90.40	EX US60	LT	715.2			
10	12+98.54	17+52.96	EB US60	RT	319.8			
10	655+90.40	657+29.44	EX US60	LT	108.6			
10	22+48.65	25+00.00	EB US60	RT	193.7			
11	25+00.00	33+35.72	EB US60	RT	645.1			
11	673+47.78	677+95.10	EX US60	LT	405.3			
11	33+38.08	37+00.00	EB US60	RT	362.0			
11	677+97.54	681+38.44	EX US60	LT	341.3			
12	37+00.00	42+71.66	EB US60	RT	772.1			
12	681+38.44	686+37.93	EX US60	LT	517.3			
12	687+10.22	689+10.40	EX US60	RT	200.4			
9	1+27.30	2+00.00	RAMP 2	LT AND RT		129.4		ALTERNATE E/F PAVEMENTS
10	2+39.86	10+62.94	RAMP 1	LT AND RT		1,960.4		
10	2+00.00	11+44.84	RAMP 2	LT AND RT		2,284.7		
10	0+12.05	4+00.00	RAMP 3	LT AND RT		1,056.7		
10	0+12.46	3+00.00	RAMP 4	LT AND RT		946.7		
10	64+00.00	66+15.00	RTE A	LT AND RT		573.3		
10	68+07.33	68+74.06	RTE A	LT AND RT		177.9		
10	68+74.06	69+37.44	RTE NN	LT AND RT		169.0		
10	71+09.00	73+00.00	RTE NN	LT AND RT		509.3		
11	4+00.00	13+98.89	RAMP 3	LT AND RT		2,095.2		
11	3+00.00	11+32.56	RAMP 4	LT AND RT		1,762.2		
15	51+11.18	64+00.00	RTE A	LT AND RT		3,564.4		
16	73+00.00	86+50.00	RTE NN	LT AND RT		3,690.3		
17	86+50.00	91+37.26	RTE NN	LT AND RT		1,338.4		
17	10+47.96	11+90.28	EXISTING RTE NN	LT AND RT		506.8		
17	16+53.68	17+53.65	EXISTING RTE NN	LT AND RT		388.3		
9	1+27.30	2+00.00	RAMP 2	RT		56.5		ALTERNATE G/H SHOULDERS
10	2+39.86	10+75.35	RAMP 1	LT		681.0		
10	2+00.00	10+91.32	RAMP 2	RT		692.4		
10	1+09.83	4+00.00	RAMP 3	LT		290.9		
10	0+89.86	3+00.00	RAMP 4	RT		210.1		
10	64+00.00	64+39.61	RTE A	RT		30.8		
10	65+55.41	66+15.77	RTE A	LT		80.2		
10	65+67.46	66+14.62	RTE A	RT		62.6		
10	70+13.86	73+00.00	RTE NN	RT		216.5		
10	71+11.81	73+00.00	RTE NN	LT		207.7		
11	4+00.00	13+98.89	RAMP 3	LT		1,002.0		
11	3+00.00	11+32.56	RAMP 4	RT		831.1		
15	51+11.18	59+01.30	RTE A	LT		608.4		
15	51+11.18	59+01.30	RTE A	RT		620.7		
15	59+83.30	64+00.00	RTE A	LT		324.1		
15	59+83.30	64+00.00	RTE A	RT		324.1		
16	73+00.00	86+50.00	RTE NN	LT		1,057.9		
16	73+00.00	76+51.11	RTE NN	RT		293.8		
16	77+65.38	86+50.00	RTE NN	RT		698.9		
17	86+50.00	93+12.11	RTE NN	LT		494.5		
17	86+50.00	91+37.12	RTE NN	RT		364.1		
11	22+00.00	34+00.00	NORTH OUTER ROAD EAST	LT AND RT			2,933.4	ALTERNATE I/J PAVEMENTS
12	34+00.00	47+50.00	NORTH OUTER ROAD EAST	LT AND RT			3,482.8	
13	47+50.00	60+50.00	NORTH OUTER ROAD EAST	LT AND RT			3,384.3	
14	60+50.00	67+58.81	NORTH OUTER ROAD EAST	LT AND RT			1,990.3	
15	10+11.24	14+81.00	NORTH OUTER ROAD WEST	LT AND RT			1,191.2	
15	15+19.00	22+00.00	NORTH OUTER ROAD EAST	LT AND RT			1,707.6	

NOTE:
TYPE 1 OR 5 AGGREGATE FOR BASE (4 IN. THICK)
PAID FOR AS TYPE 5 AGGREGATE FOR BASE (4 IN. THICK)

DISCLAIMER
THE PROFESSIONAL WHOSE SIGNATURE AND PERSONAL SEAL APPEAR HEREON ASSUMES RESPONSIBILITY ONLY FOR WHAT APPEARS ON THIS PAGE, AND DISCLAIMS (PURSUANT TO SECTION 327.411 RSMO) SPECIFICATION, ESTIMATES, REPORTS, OR OTHER DOCUMENTS OR INSTRUMENTS NOT SEALED BY THE UNDERSIGNED PROFESSIONAL RELATING TO OR INTENDED TO BE USED FOR ANY PART OR PARTS OF THE PROJECT TO WHICH THIS PAGE REFERS.

STATE OF MISSOURI
DALLAS P. JOPLIN
NUMBER PE-2011015760
PROFESSIONAL ENGINEER
THIS SHEET HAS BEEN SIGNED, SEALED AND DATED ELECTRONICALLY.

DATE PREPARED: 9/3/2024
ROUTE: 60 | STATE: MO
DISTRICT: SW | SHEET NO.: 3
COUNTY: WEBSTER
JOB NO.: J7P3425C
CONTRACT ID.:
PROJECT NO.:
BRIDGE NO.:

IF A SEAL IS PRESENT ON THIS SHEET IT HAS BEEN ELECTRONICALLY SEALED AND DATED.

DESCRIPTION | DATE | REV.

MISSOURI HIGHWAYS AND TRANSPORTATION COMMISSION
105 WEST CAPITOL
JEFFERSON CITY, MO 65102
1-888-ASK-MODOT (1-888-275-6636)

CMT
CRAWFORD, MURPHY & TILLY, INC.
1631 WEST ELFINDALE STREET
SPRINGFIELD, MO 65807 (417) 869-6009
ENGINEERING CORPORATION - 000631
© Copyright CMT, Inc.

SUMMARY OF QUANTITIES
22 OF 26

AGGREGATE BASE (CONT'D.)								
SHEET	FROM STATION	TO STATION	BASELINE	LOCATION	OPTIONAL BASE (SQYD)	TYPE 5 AGGREGATE FOR BASE (6 IN. THICK) (SQYD)	TYPE 1 OR 5 AGGREGATE FOR BASE (4 IN. THICK) (SQYD)	REMARKS
18	0+00.00	13+00.00	SOUTH OUTER ROAD	LT AND RT			3,286.8	ALTERNATE I/J PAVEMENTS
19	13+00.00	26+00.00	SOUTH OUTER ROAD	LT AND RT			3,184.7	
19	0+12.01	0+93.58	BLUEBIRD	LT AND RT			225.8	
20	26+00.00	39+00.00	SOUTH OUTER ROAD	LT AND RT			3,178.0	
21	39+00.00	52+00.00	SOUTH OUTER ROAD	LT AND RT			3,177.8	
21	0+08.89	0+24.25	HUMMMINGBIRD	RT			11.8	
22	52+00.00	65+00.00	SOUTH OUTER ROAD	LT AND RT			3,177.8	
22	0+13.34	0+77.94	HUMMMINGBIRD	LT AND RT			165.3	
23	65+00.00	78+00.00	SOUTH OUTER ROAD	LT AND RT			3,177.8	
24	78+00.00	91+00.00	SOUTH OUTER ROAD	LT AND RT			3,180.4	
24	0+03.25	2+45.33	TANDY	LT AND RT			566.0	
25	91+00.00	104+00.00	SOUTH OUTER ROAD	LT AND RT			3,177.8	
26	104+00.00	117+00.00	SOUTH OUTER ROAD	LT AND RT			3,177.8	
26	0+11.91	1+90.43	HONOR CAMP	LT AND RT			483.8	
27	117+00.00	130+00.00	SOUTH OUTER ROAD	LT AND RT			3,177.8	
28	130+00.00	143+00.00	SOUTH OUTER ROAD	LT AND RT			3,177.8	
29	143+00.00	156+00.00	SOUTH OUTER ROAD	LT AND RT			3,177.8	
30	156+00.00	169+00.00	SOUTH OUTER ROAD	LT AND RT			3,177.7	
31	169+00.00	182+19.60	SOUTH OUTER ROAD	LT AND RT			3,320.1	
11	23+35.00	23+85.00	NORTH OUTER ROAD	LT			53.0	
11	23+35.00	23+85.00	NORTH OUTER ROAD	RT			53.0	
11	25+55.00	26+05.00	NORTH OUTER ROAD	LT			53.0	
11	25+55.00	26+05.00	NORTH OUTER ROAD	RT			53.0	
12	37+26.40	37+56.40	NORTH OUTER ROAD	LT			25.9	
12	39+46.35	39+76.40	NORTH OUTER ROAD	LT			25.8	
12	40+42.61	40+72.95	NORTH OUTER ROAD	LT			26.6	
12	42+33.39	42+88.55	NORTH OUTER ROAD	LT			56.3	
12	43+64.95	44+23.04	NORTH OUTER ROAD	LT			62.5	
12	45+85.47	46+45.47	NORTH OUTER ROAD	LT			64.0	
13	48+11.55	48+53.98	NORTH OUTER ROAD	LT			40.2	
13	53+25.31	53+85.31	NORTH OUTER ROAD	LT			74.1	
14	61+34.75	62+04.75	NORTH OUTER ROAD	LT			82.4	
15	53+88.88	54+24.79	RTE A	LT			61.5	
17	89+54.77	90+45.00	RTE NN	LT			212.1	
17	10+66.28	11+28.79	EXISTING RTE NN	RT			75.4	
17	10+83.56	11+16.85	EXISTING RTE NN	LT			36.9	
17	14+71.99	15+10.56	EXISTING RTE NN	LT			75.0	
17	16+58.34	16+86.64	EXISTING RTE NN	RT			66.0	
18	2+30.73	2+75.73	SOUTH OUTER ROAD	RT			42.4	PAVED APPROACHES
18	4+48.23	4+98.23	SOUTH OUTER ROAD	RT			40.2	
18	9+44.94	9+93.67	SOUTH OUTER ROAD	RT			52.5	
18	9+43.63	9+94.98	SOUTH OUTER ROAD	LT			53.4	
19	14+00.64	14+50.24	SOUTH OUTER ROAD	RT			40.2	
19	13+99.82	14+50.24	SOUTH OUTER ROAD	LT			40.3	
19	23+71.19	24+22.80	SOUTH OUTER ROAD	RT			41.1	
19	24+67.10	25+72.53	SOUTH OUTER ROAD	LT			53.4	
20	37+47.38	37+88.24∠	SOUTH OUTER ROAD	LT			47.2	
21	39+62.81	40+12.81	SOUTH OUTER ROAD	RT			40.2	
21	39+62.81	40+12.81	SOUTH OUTER ROAD	LT			40.2	
21	49+65.13	50+16.51	SOUTH OUTER ROAD	RT			43.1	
23	65+66.66	66+17.83	SOUTH OUTER ROAD	RT			42.6	
25	94+00.79	94+73.54	SOUTH OUTER ROAD	LT			70.2	
25	97+25.00	97+65.00	SOUTH OUTER ROAD	RT			47.0	
26	111+53.37	112.07.22	SOUTH OUTER ROAD	RT			45.7	
28	138+33.80	138+92.60	SOUTH OUTER ROAD	RT			58.6	
28	139+99.03	140+52.01	SOUTH OUTER ROAD	RT			46.5	
29	146+91.08	147+43.16	SOUTH OUTER ROAD	RT			44.5	
30	158+58.48	159+08.48	SOUTH OUTER ROAD	RT			40.2	
31	169+65.19	170+16.53	SOUTH OUTER ROAD	RT			40.9	
31	169+66.49	170+15.22	SOUTH OUTER ROAD	LT			39.5	
10	15+98.55	17+52.96	EB US60	RT	91.2			UNDER TYPE D AS RETAINING WALL
17	91+37.26	93+76.39	RTE NN	LT AND RT		1,302.4		ROUNDABOUT PAVEMENT BASE
17	11+90.28	16+53.68	EXISTING RTE NN	LT AND RT		2,855.5		
17	13+05.90	14+01.90	EXISTING RTE NN	LT AND RT		513.9		TRUCK APRON
17	91+37.26	93+84.89	RTE NN	RT		828.0		CURB AND GUTTER
17	93+12.20	93+86.41	RTE NN	LT		237.0		
17	11+28.79	12+88.12	EXISTING RTE NN	RT		516.0		
17	12+88.05	13+46.77	EXISTING RTE NN	LT		264.0		
17	13+96.92	14+71.99	EXISTING RTE NN	LT		402.0		
17	15+10.56	16+53.68	EXISTING RTE NN	LT		432.0		
17	13+25.90	13+81.90	EXISTING RTE NN	LT AND RT		88.0		
17	13+05.90	14+01.90	EXISTING RTE NN	LT AND RT		151.0		
							9,529.9	TEMPORARY PAVEMENT SEE SHEET 9 OF 26
				TOTALS	25,837.9	37,891.6	72,628.7	

DISCLAIMER
THE PROFESSIONAL WHOSE SIGNATURE AND PERSONAL SEAL APPEAR HEREON ASSUMES RESPONSIBILITY ONLY FOR WHAT APPEARS ON THIS PAGE, AND DISCLAIMS (PURSUANT TO SECTION 327.411 RSMO) SPECIFICATION, ESTIMATES, REPORTS, OR OTHER DOCUMENTS OR INSTRUMENTS NOT SEALED BY THE UNDERSIGNED PROFESSIONAL RELATING TO OR INTENDED TO BE USED FOR ANY PART OR PARTS OF THE PROJECT TO WHICH THIS PAGE REFERS.

NOTE:
TYPE 1 OR 5 AGGREGATE FOR BASE (4 IN. THICK)
PAID FOR AS TYPE 5 AGGREGATE FOR BASE (4 IN. THICK)

STATE OF MISSOURI
DALLAS P. JOPLIN
NUMBER PE-2011015760
PROFESSIONAL ENGINEER

THIS SHEET HAS BEEN SIGNED, SEALED AND DATED ELECTRONICALLY.

DATE PREPARED: 9/6/2024
ROUTE: 60 | STATE: MO
DISTRICT: SW | SHEET NO.: 3
COUNTY: WEBSTER
JOB NO.: J7P3425C
CONTRACT ID.:
PROJECT NO.:
BRIDGE NO.:

DATE	DESCRIPTION	REV.

MISSOURI HIGHWAYS AND TRANSPORTATION COMMISSION
105 WEST CAPITOL
JEFFERSON CITY, MO 65102
1-888-ASK-MODOT (1-888-275-6636)

CMT
©Copyright CMT, Inc.
CRAWFORD, MURPHY & TILLY, INC.
1631 WEST ELFINDALE STREET
SPRINGFIELD, MO 65807 (417) 869-6009
ENGINEERING CORPORATION - 000631

IF A SEAL IS PRESENT ON THIS SHEET IT HAS BEEN ELECTRONICALLY SEALED AND DATED.

SUMMARY OF QUANTITIES
23 OF 26

DISCLAIMER
THE PROFESSIONAL WHOSE SIGNATURE AND PERSONAL SEAL APPEAR HEREON ASSUMES RESPONSIBILITY ONLY FOR WHAT APPEARS ON THIS PAGE, AND DISCLAIMS (PURSUANT TO SECTION 327.411 RSMO) SPECIFICATION, ESTIMATES, REPORTS, OR OTHER DOCUMENTS OR INSTRUMENTS NOT SEALED BY THE UNDERSIGNED PROFESSIONAL RELATING TO OR INTENDED TO BE USED FOR ANY PART OR PARTS OF THE PROJECT TO WHICH THIS PAGE REFERS.

TRENCHING FOR UTILITIES

PLAN SHEET	LOCATION	TRENCHING TYPE 1 (LF)	REMARKS
17	EXISTING RTE NN	978	
	TOTALS	978	*SEE LIGHTING QUANITITY SHEETS FOR ADDITIONAL QUANTITIES

UTILITY RELOCATIONS

PLAN SHEET	FROM STATION	TO STATION	BASELINE	LOCATION	RELOCATE FIRE HYDRANT (EA)	RELOCATE WATER METER (EA)	RELOCATE 4 IN. PVC WATER MAIN (LF)	RELOCATE 6 IN. PVC WATER MAIN (LF)	RELOCATE 6 IN. PVC WATER MAIN IN 12 IN. CASING (LF)	RELOCATE 4 IN. PVC FORCE MAIN (LF)	RELOCATE 4 IN PVC FORCE MAIN IN 10 IN. STEEL CASING (LF)	ADJUSTING MANOLE (EA)	REMARKS
9	40+57.88	45+89.32	NORTH OUTER ROAD	LT AND RT						289			ALL LOCATIONS ARE APPROXIMATE, VERIFY WITH SURVEY BEFORE BEGINNING CONSTRUCTION
9	41+81.00	41+81.00	NORTH OUTER ROAD	RT			24						
9	42+29.23	-	NORTH OUTER ROAD	LT								1	
9	42+97.52	-	NORTH OUTER ROAD	LT	1								
9	42+97.52	42+97.52	NORTH OUTER ROAD	LT AND RT				45					
9	43+30.00	-	NORTH OUTER ROAD	LT								1	
9	45+89.10	-	NORTH OUTER ROAD	LT								1	
9	46+40.00	46+40.00	NORTH OUTER ROAD	LT AND RT				75					
10	48+67.98	50+69.05	NORTH OUTER ROAD	LT AND RT				328					
10	49+97.12	-	NORTH OUTER ROAD	LT								1	
17	10+16.30	13+15.17	EXISTING RTE NN	LT				309					
17	10+78.21	-	EXISTING RTE NN	LT		1							
17	11+63.25	12+60.00	EXISTING RTE NN	RT						95			
17	12+41.63	-	EXISTING RTE NN	RT	1								
17	12+60.00	16+46.00	EXISTING RTE NN	RT							386		
17	13+15.17	14+19.79	EXISTING RTE NN	LT					105				
17	14+00.57	-	EXISTING RTE NN	RT								1	
17	14+19.79	17+61.82	EXISTING RTE NN	LT				422					
17	14+55.01	-	EXISTING RTE NN	LT		1							
17	15+97.73	-	EXISTING RTE NN	RT								1	
17	16+46.00	17+01.00	EXISTING RTE NN	RT						54			
				TOTALS	2	2	24	1179	105	438	386	6	

STATE OF MISSOURI
DALLAS P. JOPLIN
NUMBER PE-2011015760
PROFESSIONAL ENGINEER

THIS SHEET HAS BEEN SIGNED, SEALED AND DATED ELECTRONICALLY.

DATE PREPARED 9/3/2024

ROUTE	STATE
60	MO
DISTRICT	SHEET NO.
SW	3

COUNTY: WEBSTER
JOB NO.: J7P3425C
CONTRACT ID.:
PROJECT NO.:
BRIDGE NO.:

DATE	DESCRIPTION

IF A SEAL IS PRESENT ON THIS SHEET IT HAS BEEN ELECTRONICALLY SEALED AND DATED.

MISSOURI HIGHWAYS AND TRANSPORTATION COMMISSION
105 WEST CAPITOL
JEFFERSON CITY, MO 65102
1-888-ASK-MODOT (1-888-275-6636)

CMT
© Copyright CMT, Inc.
CRAWFORD, MURPHY & TILLY, INC.
1631 WEST ELFINDALE STREET
SPRINGFIELD, MO 65807 (417) 869-6009
ENGINEERING CORPORATION - 000631

SUMMARY OF QUANTITIES
24 OF 26

REV.

DISCLAIMER
THE PROFESSIONAL WHOSE SIGNATURE AND PERSONAL SEAL APPEAR HEREON ASSUMES RESPONSIBILITY ONLY FOR WHAT APPEARS ON THIS PAGE, AND DISCLAIMS (PURSUANT TO SECTION 327.411 RSMO) SPECIFICATION, ESTIMATES, REPORTS, OR OTHER DOCUMENTS OR INSTRUMENTS NOT SEALED BY THE UNDERSIGNED PROFESSIONAL RELATING TO OR INTENDED TO BE USED FOR ANY PART OR PARTS OF THE PROJECT TO WHICH THIS PAGE REFERS.

EROSION CONTROL

EROSION CONTROL SHEET NO.	LOCATION	ROADWAY	STA	STA	LOC	ROCK DITCH CHECK L.F.	SEDIMENT TRAP EXCAVATION C.Y	SEDIMENT TRAP ROCK C.Y	SILT FENCE L.F.	SEDIMENT REMOVAL C.Y.	REMARKS
1		US 60 & N OUTER RD			LT & RT	658	5.34	7.12	2692	83.92	
2		RTE A & N OUTER RD			LT & RT	0	11.12	14.82	2045	40.45	
3		US 60 & RTE NN & RTE A			LT & RT	42	0	0	871	11.71	
4		RTE NN & S OUTER RD			LT & RT	0	10.22	13.63	3103	46.03	
5		RTE NN			LT & RT	0	0	0	1716	56.16	
6		S OUTER RD			LT & RT	672	3.56	4.74	1513	68.13	
7		S OUTER RD			LT & RT	112	8	10.67	1740	40.40	
8		S OUTER RD			LT & RT	182	7.56	10.08	338	31.38	
9		S OUTER RD			LT & RT	140	4.44	5.92	751	27.51	
10		US 60 & S OUTER RD			LT & RT	434	2.67	3.56	508	41.08	
11		US 60 & S OUTER RD			LT & RT	364	0	0	700	33.00	
12		S OUTER RD			LT & RT	168	0	0	893	25.93	
13		US 60 & S OUTER RD			LT & RT	490	2.22	2.96	320	43.20	
14		RTE NN			LT & RT	126	5.78	7.71	1482	33.82	
15		US 60			LT & RT	616	2.22	2.96	508	54.08	
16		US 60			LT & RT	504	2.22	2.96	2420	65.20	
17		US 60 & N OUTER RD			LT & RT	630	5.34	7.12	338	58.38	
18		US 60 & N OUTER RD			LT & RT	168	0	0	0	12.00	
19		N OUTER RD			LT & RT	196	2.67	3.56	149	20.49	
20		N OUTER RD			LT & RT	112	8.22	11.26	2049	28.49	
21		N OUTER RD & RTE A			LT & RT	0	0	0	872	8.72	
22		US 60 & RTE A & RTE NN			LT & RT	42	7.11	9.48	3160	34.60	
23		RTE NN & S OUTER RD			LT & RT	378	10.22	13.63	1716	44.16	
24		RTE NN			LT & RT	392	0	0	1351	41.51	
25		S OUTER RD			LT & RT	112	3.56	4.74	1740	25.40	
26		S OUTER RD			LT & RT	182	5.34	7.12	338	16.38	
27		S OUTER RD			LT & RT	140	4.44	5.92	751	17.51	
28		S OUTER RD			LT & RT	406	2.67	3.56	432	33.32	
29		S OUTER RD			LT & RT	336	3.56	4.74	0	24.00	
30		S OUTER RD			LT & RT	336	0	0	0	24.00	
31		S OUTER RD			LT & RT	392	0	0	700	35.00	
32		S OUTER RD			LT & RT	140	3.11	4.15	893	18.93	
33		S OUTER RD			LT & RT	196	0	0		14.00	
34		S OUTER RD			LT & RT	476	0	0	0	34.00	
35		S OUTER RD			LT & RT	336	3.11	4.15	0	24.00	
36		S OUTER RD			LT & RT	462	2.22	2.96	0	33.00	
37		S OUTER RD			LT & RT	112	5.78	7.71	2025	28.25	
					SUB TOTAL	10052	132.7	177.23	38114	1278.14	
					PAY TOTAL	10052	132.7	177	38114	1278	

SEEDING - COOL SEASON	78.6 ACRES
TEMPORARY SEEDING	39.3 ACRES
MULCHING	117.9 ACRES
ADDITIONAL MOBILIZATION FOR SEEDING	8 EACH

STATE OF MISSOURI
PAUL JOSEPH KRONLAGE
NUMBER EN 023328
REGISTERED PROFESSIONAL ENGINEER

09/03/2024 9:09:07 AM
Paul J. Kronlage - Civil
MO PE - 023328

DATE PREPARED 9/3/2024
ROUTE 60 | STATE MO
DISTRICT SW | SHEET NO. 3
COUNTY WEBSTER
JOB NO. J7P3425C
CONTRACT ID.
PROJECT NO.
BRIDGE NO.

IF A SEAL IS PRESENT ON THIS SHEET IT HAS BEEN ELECTRONICALLY SEALED AND DATED.

REV. | DATE | DESCRIPTION

MISSOURI HIGHWAYS AND TRANSPORTATION COMMISSION
105 WEST CAPITOL
JEFFERSON CITY, MO 65102
1-888-ASK-MODOT (1-888-275-6636)

EFK•Moen
Civil Engineering Design
13523 Barrett Parkway Dr
Suite 250
St. Louis, MO 63021
Phone 314-394-3100
Fax 314-394-3199
Missouri Certificate of Authority: 001578

SUMMARY QUANTITY SHEET
SHEET 25 OF 26

SIGN	SIZE IN.	AREA SQ. FT.	QTY EACH	TOTAL SQ. FT.	QTY RELOC EACH	TOTAL RELOC SQ. FT.	SIGN NUM.	DESCRIPTION
WARNING SIGNS								
W01-1L	48X48	16.00		0.00		0.00		TURN (SYMBOL LEFT ARROW)
W01-1R	48X48	16.00		0.00		0.00		TURN (SYMBOL RIGHT ARROW)
W01-2L	48X48	16.00		0.00		0.00		CURVE (SYMBOL LEFT ARROW)
W01-2R	48X48	16.00		0.00		0.00		CURVE (SYMBOL RIGHT ARROW)
W01-3L	48X48	16.00		0.00		0.00		REVERSE TURN (SYMBOL LEFT ARROW)
W01-3R	48X48	16.00		0.00		0.00		REVERSE TURN (SYMBOL RIGHT ARROW)
W01-4L	48X48	16.00	4	64.00		0.00	15a	REVERSE CURVE (SYMBOL LEFT ARROW)
W01-4R	48X48	16.00	4	64.00		0.00	15b	REVERSE CURVE (SYMBOL RIGHT ARROW)
W01-4bL	48X48	16.00		0.00		0.00		DOUBLE ARROW REVERSE CURVE (SYMBOL LT ARROWS)
W01-4bR	48X48	16.00		0.00		0.00		DOUBLE ARROW REVERSE CURVE (SYMBOL RT ARROWS)
W01-4cL	48X48	16.00		0.00		0.00		TRIPLE ARROW REVERSE CURVE (SYMBOL LT ARROWS)
W01-4cR	48X48	16.00		0.00		0.00		TRIPLE ARROW REVERSE CURVE (SYMBOL RT ARROWS)
W01-6	60X30	12.50		0.00		0.00		HORIZONTAL ARROW (SYMBOL)
W01-6a	72X36	18.00		0.00		0.00		HORIZ. ARROW (SYMBOL ON PERMANENT BARRICADE)
W01-7	60X30	12.50		0.00		0.00		DOUBLE HEAD HORIZONTAL ARROW (SYMBOL)
W01-7a	72X36	3.00		0.00		0.00		DOUBLE HEAD HORIZ. ARROW (SYMBOL ON PERM. BARR.)
W01-8	18X24	7.50		0.00		0.00		CHEVRON (SYMBOL)
W01-8a	30X36	16.00		0.00		0.00		CHEVRON (SYMBOL FOR DIVIDED HIGHWAYS)
W03-1	48X48	16.00	1	16.00		0.00	39	STOP AHEAD (SYMBOL)
W03-2	48X48	16.00		0.00		0.00		YIELD AHEAD (SYMBOL)
W03-3	48X48	16.00		0.00		0.00		SIGNAL AHEAD (SYMBOL)
W03-4	48X48	16.00		0.00		0.00		BE PREPARED TO STOP
W03-5	48X48	16.00		0.00		0.00		SPEED LIMIT AHEAD
W04-1L	48X48	16.00		0.00		0.00		MERGE (SYMBOL FROM LEFT)
W04-1R	48X48	16.00		0.00		0.00		MERGE (SYMBOL FROM RIGHT)
W04-1aL	48X48	16.00	1	16.00		0.00	7L	MERGE (ARROW SYMBOL)
W04-1aR	48X48	16.00	1	32.00		0.00	7R	MERGE (ARROW SYMBOL)
W05-1	48X48	16.00		0.00		0.00		ROAD/BRIDGE/RAMP NARROWS
W05-3	48X48	16.00		0.00		0.00		ONE LANE BRIDGE
W05-5	48X48	16.00		0.00		0.00		NNARROW LANES
W06-1	48X48	16.00		0.00		0.00		DIVIDED HIGHWAY (SYMBOL)
W06-2	48X48	16.00		0.00		0.00		DIVIDED HIGHWAY END (SYMBOL)
W06-3	48X48	16.00		0.00		0.00		TWO WAY TRAFFIC (SYMBOL)
W07-3a	30X24	5.00		0.00		0.00		NEXT XX MILES (PLAQUE)
W08-1	48X48	16.00		0.00		0.00		BUMP
W08-2	48X48	16.00		0.00		0.00		DIP
W08-3	48X48	16.00		0.00		0.00		PAVEMENT ENDS
W08-4	48X48	16.00		0.00		0.00		SOFT SHOULDER
W08-5	48X48	16.00		0.00		0.00		SLIPPERY WHEN WET (SYMBOL)
W08-6	48X48	16.00		0.00		0.00		TRUCK CROSSING (WITH FLAGS)
W08-6c	48X48	16.00		0.00		0.00		TRUCK ENTRANCE
W08-7	36X36	9.00		0.00		0.00		LOOSE GRAVEL
W08-7a	36X36	9.00		0.00		0.00		FRESH OIL/LOOSE GRAVEL
W08-9	48X48	16.00		0.00		0.00		LOW SHOULDER
W08-11	48X48	16.00		0.00		0.00		UNEVEN LANES
W08-12	48X48	16.00		0.00		0.00		NO CENTER LINE
W08-15	48X48	16.00		0.00		0.00		GROOVED PAVEMENT
W08-15P	30X24	5.00		0.00		0.00		MOTORCYCLE (PLAQUE)
W08-17	48X48	16.00	1	16.00		0.00	14	SHOULDER DROP-OFF (SYMBOL)
W08-17P	30X24	5.00	1	5.00		0.00	14a	SHOULDER DROP-OFF (PLAQUE)
W010-1	42RND.	9.62		0.00		0.00		RAILROAD CROSSING
W012-1	24X24	4.00		0.00		0.00		DOUBLE DOWN ARROW (SYMBOL)
W012-2	48X48	16.00		0.00		0.00		LOW CLEARANCE (SYMBOL)
W012-2X	24X18	3.00		0.00		0.00		LOW CLEARANCE (PLAQUE)
W012-2a	84X24	14.00		0.00		0.00		OVERHEAD LOW CLEARANCE (FEET AND INCHES)
W012-4	120X60	50.00		0.00		0.00		LOW CLEARANCE XX FT XX IN XX MILES AHEAD
W012-5	120X60	50.00		0.00		0.00		WIDTH RESTRICTION XX FEET XX IN XX MILES AHEAD
W013-1	30X30	6.25		0.00		0.00		ADVISORY SPEED (PLAQUE)
W016-2	30X24	5.00		0.00		0.00		XXX FEET (PLAQUE)
W016-3	30X24	5.00		0.00		0.00		X MILE (PLAQUE)
W020-1	48X48	16.00	18	288.00		0.00	2	ROAD/BRIDGE/RAMP WORK AHEAD
W020-2	48X48	16.00	5	80.00		0.00	11	DETOUR AHEAD
W020-3	48X48	16.00		0.00		0.00		ROAD CLOSED AHEAD
W020-4	48X48	16.00		0.00		0.00		ONE LANE ROAD AHEAD
W020-5	48X48	16.00	4	64.00		0.00	10	RIGHT/CENTER/LEFT LANE CLOSED AHEAD
W020-5a	48X48	16.00		0.00		0.00		2 RIGHT/CENTER/LEFT LANE CLOSED AHEAD
W020-6a	48X48	16.00	2	32.00		0.00	6	RIGHT/CENTER/LEFT LANE CLOSED
W020-7a	48X48	16.00		0.00		0.00		FLAGGER (SYMBOL, WITH FLAGS)
W021-2	36X36	9.00		0.00		0.00		FRESH OIL
W021-5	48X48	16.00	2	32.00		0.00	21	SHOULDER WORK/SHOULDER WORK AHEAD
W021-5a	48X48	16.00		0.00		0.00		RIGHT SHOULDER CLOSED
W021-5b	48X48	16.00		0.00		0.00		RIGHT SHOULDER CLOSED AHEAD
W022-1	48X48	16.00		0.00		0.00		BLASTING ZONE AHEAD
W022-2	48X36	10.50		0.00		0.00		TURN OFF 2-WAY RADIO AND PHONE
W022-3	42X36	10.50		0.00		0.00		END BLASTING ZONE
G022-1	21X15	2.19		0.00		0.00		WET PAINT (ARROW PIVOTS)
GUIDE SIGNS								
E05-1	36X48	12.00		0.00		0.00		GORE EXIT
E05-2	48X36	12.00		0.00		0.00		EXIT OPEN
E05-2a	48X36	12.00		0.00		0.00		EXIT CLOSED
G020-1	60X24	10.00	4	40.00		0.00	1	ROAD WORK NEXT XX MILES
G020-2	48X24	8.00	2	16.00		0.00	26	END ROAD WORK
G020-4	36X18	4.50		0.00		0.00		PILOT CAR FOLLOW ME
G020-4a	42X30	8.75		0.00		0.00		PILOT CAR IN USE WAIT & FOLLOW
G020-4a	18X12	1.50		0.00		0.00		PILOT CAR IN USE WAIT & FOLLOW
G020-5aP	36X24	6.00	4	24.00		0.00	54	WORK ZONE (PLAQUE)
M04-8a	24X18	3.00	1	3.00		0.00	52	END DETOUR
M04-9L	48X36	12.00		0.00		0.00		DETOUR (LEFT ARROW)
M04-9R	48X36	12.00		0.00		0.00		DETOUR (RIGHT ARROW)
M04-9P	48X12	4.00		0.00		0.00		STREET NAME (PLAQUE)
M04-10L	48X18	6.00		0.00		0.00		DETOUR (ARROW LEFT)
M04-10R	48X18	6.00		0.00		0.00		DETOUR (ARROW RIGHT)
REGULATORY SIGNS								
R1-1	48X48	13.25	4	53.00		0.00	41	STOP
R1-2	48TRI.	6.93		0.00		0.00		YIELD
R1-2a	36X36	9.00		0.00		0.00		TO ONCOMING TRAFFIC (PLAQUE)
R1-3P	30X12	2.50		0.00		0.00		ALL WAY (PLAQUE)
R2-1	36X48	12.00	4	48.00		0.00	44	SPEED LIMIT XX
R3-1	48X48	16.00		0.00		0.00		NO RIGHT TURN (SYMBOL)
R3-2	48X48	16.00		0.00		0.00		NO LEFT TURN (SYMBOL)
R3-3	36X36	9.00		0.00		0.00		NO TURNS
R3-4	48X48	16.00		0.00		0.00		NO U-TURN (SYMBOL)
R3-7L	30X30	6.25		0.00		0.00		LEFT LANE MUST TURN LEFT
R3-7R	30X30	6.25		0.00		0.00		RIGHT LANE MUST TURN RIGHT
R4-1	36X48	12.00	4	48.00		0.00	46	DO NOT PASS
R4-2	36X48	12.00		0.00		0.00		PASS WITH CARE
R4-8a	36X48	12.00		0.00		0.00		KEEP LEFT (HORIZONTAL ARROW)
R4-7a	36X48	12.00		0.00		0.00		KEEP RIGHT (HORIZONTAL ARROW)
R5-1	30X30	6.25		0.00		0.00		DO NOT ENTER
R5-1a	36X24	6.00		0.00		0.00		WRONG WAY
R6-1L	54X18	6.75		0.00		0.00		ONE WAY ARROW (LEFT)
R6-1R	54X18	6.75		0.00		0.00		ONE WAY ARROW (RIGHT)
R6-2L	24X30	5.00		0.00		0.00		ONE WAY (LEFT)
R6-2R	24X30	5.00		0.00		0.00		ONE WAY (RIGHT)
R9-9	24X12	2.00		0.00		0.00		SIDEWALK CLOSED
R9-11L	24X18	3.00		0.00		0.00		SIDEWALK CLOSED AHEAD, (ARROW LEFT) CROSS HERE
R9-11-R	24X18	3.00		0.00		0.00		SIDEWALK CLOSED AHEAD, (ARROW RIGHT) CROSS HERE
R10-6	24X36	6.00		0.00		0.00		STOP HERE ON RED (45# ARROW)
R11-2	48X30	10.00	3	30.00		0.00	29	ROAD CLOSED
R11-3a	60X30	12.50		0.00		0.00		ROAD CLOSED XX MILES AHEAD LOCAL TRAFFIC ONLY
R11-4	60X30	12.50		0.00		0.00		ROAD CLOSED TO THRU TRAFFIC
CONST-3A	40X48	20.00	4	80.00		0.00	53	FINE SIGN
COSNT-3X	56X12	4.67		0.00		0.00		SPEEDING/PASSING (PLATE)
MISCELLANEOUS SIGNS								
CONST-5	48X36	12.00		0.00		0.00		POINT OF PRESENCE
CONST-5	96X48	32.00		0.00		0.00		POINT OF PRESENCE
CONST-7	48X24	8.00		0.00		0.00		RATE OUR WORK ZONE
CONST-7	72X36	18.00		0.00		0.00		RATE OUR WORK ZONE
CONST-8	48X36	12.00	4	48.00		0.00	9a	WORK ZONE NO PHONE ZONE
DETOUR	60X36	15.00	18	270		0	50	DETOUR SIGNS

616-10.05 CONSTRUCTION SIGNS	TOTAL 1369
616-10.10 RELOCATED SIGNS	TOTAL 0.00

ITEM NUMBER	TOTAL QTY	DESCRIPTION
6122008		IMPACT ATTENUATOR 40 MPH (SAND BARRELS)
6122009		IMPACT ATTENUATOR 45 MPH (SAND BARRELS)
6122010		IMPACT ATTENUATOR 50 MPH (SAND BARRELS)
6122012		IMPACT ATTENUATOR 55 MPH (SAND BARRELS)
6122014		IMPACT ATTENUATOR 60 MPH (SAND BARRELS)
6122017	2	IMPACT ATTENUATOR 65 MPH (SAND BARRELS)
6122019		IMPACT ATTENUATOR 70 MPH (SAND BARRELS)
6122020		REPLACEMENT SAND BARREL
6122030	1	IMPACT ATTENUATOR (RELOCATION)
6123000A		TRUCK OR TRAILER MOUNTED ATTENUATOR (TMA)
6161008		ADVANCED WARNING RAIL SYSTEM
6161012		BUOYS (BOATS KEEP OUT)
6161013		BUOYS (NO WAKE)
6161014		SPECIAL SIGN ASSEMBLY (BOATS KEEP OUT)
6161025	134	CHANNELIZER (TRIM LINE)
6161030	12	TYPE III MOVEABLE BARRICADE
6161033		DIRECTION INDCATOR BARRICADE
6161040	2	FLASHING ARROW PANEL
6161047		TYPE III OBJECT MARKER
6161051		WARNING LIGHT TYPE A
6161052		WARNING LIGHT TYPE B
6161053		WARNING LIGHT TYPE C
6161055		SEQUENTIAL FLASHING WARNING LIGHT
6161070		TUBULAR MARKER
6161095		RADAR SPEED ADVISORY SYSTEM
6161096		CHANGEABLE MESSAGE SIGN, COMMISSION FURNISHED/RETAINED
6161098A		CHANGEABLE MESSAGE SIGN W/O COMM. INTERFACE, CONTRACTOR FURNISHED/RETAINED
6161099	4	CHANGEABLE MESSAGE SIGN WITH COMM. INTERFACE, CONTRACTOR FURNISHED/RETAINED
6162000A		WORK ZONE TRAFFIC SIGNAL SYSTEM
6162002	4	TEMPORARY LONG-TERM RUMBLE STRIPS
6162004		TEMPORARY SHORT-TERM RUMBLE STRIPS
6173600D	801	TEMPORARY TRAFFIC BARRIER CONTRACTOR FURNISHED/CONTRACTOR RETAINED
6173700B	2034	TEMPORARY TRAFFIC BARRIER ANCHORED CONTRACTOR FURNISHED/CONTRACTOR RETAINED
6174000A		TEMP. TRAFFIC BARRIER HEIGHT TRANSITION
6175010A	1240	RELOCATING TEMPORARY TRAFFIC BARRIER
6176000B		TEMPORARY TRAFFIC BARRIER COMMISSION FURNISHED/RETAINED
6177000B		TEMP. TRAFFIC BARRIER HEIGHT TRANSITION COMMISSION FURNISHED/RETAINED
6208064A		TEMPORARY RAISED PAVEMENT MARKER
9029400		TEMPORARY TRAFFIC SIGNALS
9029401		TEMPORARY TRAFFIC SIGNALS AND LIGHTING

DISCLAIMER
THE PROFESSIONAL WHOSE SIGNATURE AND PERSONAL SEAL APPEAR HEREON ASSUMES RESPONSIBILITY ONLY FOR WHAT APPEARS ON THIS PAGE, AND DISCLAIMS (PURSUANT TO SECTION 327.411 RSMO) SPECIFICATION, ESTIMATES, REPORTS, OR OTHER DOCUMENTS OR INSTRUMENTS NOT SEALED BY THE UNDERSIGNED PROFESSIONAL RELATING TO OR INTENDED TO BE USED FOR ANY PART OR PARTS OF THE PROJECT TO WHICH THIS PAGE REFERS.

STATE OF MISSOURI
DALLAS P. JOPLIN
NUMBER PE-2011015760
PROFESSIONAL ENGINEER

THIS SHEET HAS BEEN SIGNED, SEALED AND DATED ELECTRONICALLY.

DATE PREPARED
9/3/2024

ROUTE	STATE
60	MO
DISTRICT	SHEET NO.
SW	3

COUNTY
WEBSTER

JOB NO.
J7P3425C

CONTRACT ID.

PROJECT NO.

BRIDGE NO.

DATE	DESCRIPTION

IF A SEAL IS PRESENT ON THIS SHEET IT HAS BEEN ELECTRONICALLY SEALED AND DATED.

MISSOURI HIGHWAYS AND TRANSPORTATION COMMISSION
105 WEST CAPITOL
JEFFERSON CITY, MO 65102
1-888-ASK-MODOT (1-888-275-6636)

CMT
CRAWFORD, MURPHY & TILLY, INC.
1631 WEST ELFINDALE STREET
SPRINGFIELD, MO 65807 (417) 869-6009
ENGINEERING CORPORATION - 000631
©Copyright CMT, Inc.

REV.

D-31

SUMMARY OF QUANTITIES
26 OF 26

GENERAL NOTES

1. THE BASIS OF BEARING IS U.S. STATE PLANE NAD83 ZONE 2401 (MISSOURI CENTRAL). VERTICAL DATUM IS NAVD88.

2. RIGHT OF WAY LIMITS FOR THIS PROJECT EXTEND FROM:
   US60 – STA. 490+89.43 TO STA. 717+11.68, 4.28 MILES
   RTE A – STA. 51+11.18 TO STA. 68+74.06, 0.33 MILES
   RTE NN – STA. 68+74.06 TO STA. 94+26.54, 0.48 MILES
   EXISTING RTE NN – STA. 10+47.97 TO STA. 17+53.70, 0.13 MILES
   NORTH OUTER ROAD – STA. 10+11.24 TO STA. 67+58.81, 1.09 MILES
   SOUTH OUTER ROAD – STA. 0+00.00 TO STA. 182+32.53, 3.45 MILES
   WORK INDICATED ON THE PLANS THAT EXTENDS BEYOND THE PROJECT LIMITS IS CONSIDERED INCIDENTAL TO AND A PART OF THE CONSTRUCTION OF THIS PROJECT.

3. SEE GEOMETRIC SHEETS FOR INTERSECTION STATION TIES, CURVE DATA, ANGLES, BEARINGS, AND COORDINATE POINT INFORMATION.

4. THE APPROXIMATE LOCATION OF PROPERTY LINES AS SHOWN ON THE PLANS ARE BASED ON THE BEST INFORMATION AVAILABLE TO THE COMMISSION AT THIS TIME. THIS INFORMATION IS PROVIDED BY THE COMMISSION AS-IS AND THE COMMISSION EXPRESSLY DISCLAIMS ANY REPRESENTATION OR WARRANTY AS TO THE COMPLETENESS, ACCURACY, OR SUITABILITY OF THE INFORMATION FOR ANY USE.

5. ANY WORK INDICATED ON THE PLANS THAT EXTENDS BEYOND THE PROJECT LIMITS IS CONSIDERED INCIDENTAL TO AND A PART OF THE CONSTRUCTION OF THIS PROJECT.

GRADE CROSSING ELIMINATION SUMMARY

DOT #	M.P.	TYPE	ROADWAY	EX. WARNING DEVICE	PR. CROSSING CLOSURE ROAD IMPROVEMENTS
667641B	228.13	PUBLIC	BLUEBIRD LN.	CROSSBUCKS	(R) PVMT & RESTORE DITCH. TYPE D GUARDRAIL W/ OM4-1 ON S. SIDE
667642H	228.64	PUBLIC	HUMMINGBIRD LN.	CROSSBUCKS	(R) PVMT & RESTORE DITCH
667643P	228.92	PRIVATE	–	STOP SIGN	RESTORE DITCH
667644W	229.17	PUBLIC	TANDY RD.	LIGHTS & GATES	(R) PVMT & RESTORE DITCH
667645D	229.73	PUBLIC	HONOR CAMP LN.	LIGHTS & GATES	(R) PVMT & RESTORE DITCH
667646K	230.32	PRIVATE	–	STOP SIGN	(R) PVMT & RESTORE DITCH
667647S	230.66	PRIVATE	–	STOP SIGN	(R) PVMT & RESTORE DITCH
667648Y	230.89	PRIVATE	–	STOP SIGN	(R) PVMT & RESTORE DITCH
667650A	231.51	PUBLIC	DIGGINS MAIN ST/ RTE NN	LIGHTS & GATES	(R) PVMT & RESTORE DITCH. TYPE D GUARDRAIL W/ OM4-1 ON S. SIDE

DISCLAIMER
THE PROFESSIONAL WHOSE SIGNATURE AND PERSONAL SEAL APPEAR HEREON ASSUMES RESPONSIBILITY ONLY FOR WHAT APPEARS ON THIS PAGE, AND DISCLAIMS (PURSUANT TO SECTION 327.411 RSMO) SPECIFICATION, ESTIMATES, REPORTS, OR OTHER DOCUMENTS OR INSTRUMENTS NOT SEALED BY THE UNDERSIGNED PROFESSIONAL RELATING TO OR INTENDED TO BE USED FOR ANY PART OR PARTS OF THE PROJECT TO WHICH THIS PAGE REFERS.

DRAINAGE LEGEND

FES	GROUP A FLARED END SECTION
A	5'X3' AREA INLET (TYPE S)
B	3'X3' AREA INLET (TYPE S)
C	3'X2' AREA INLET (TYPE S)
SPC	SPECIAL INLET NO. 1

SCALE
0 50 100 150

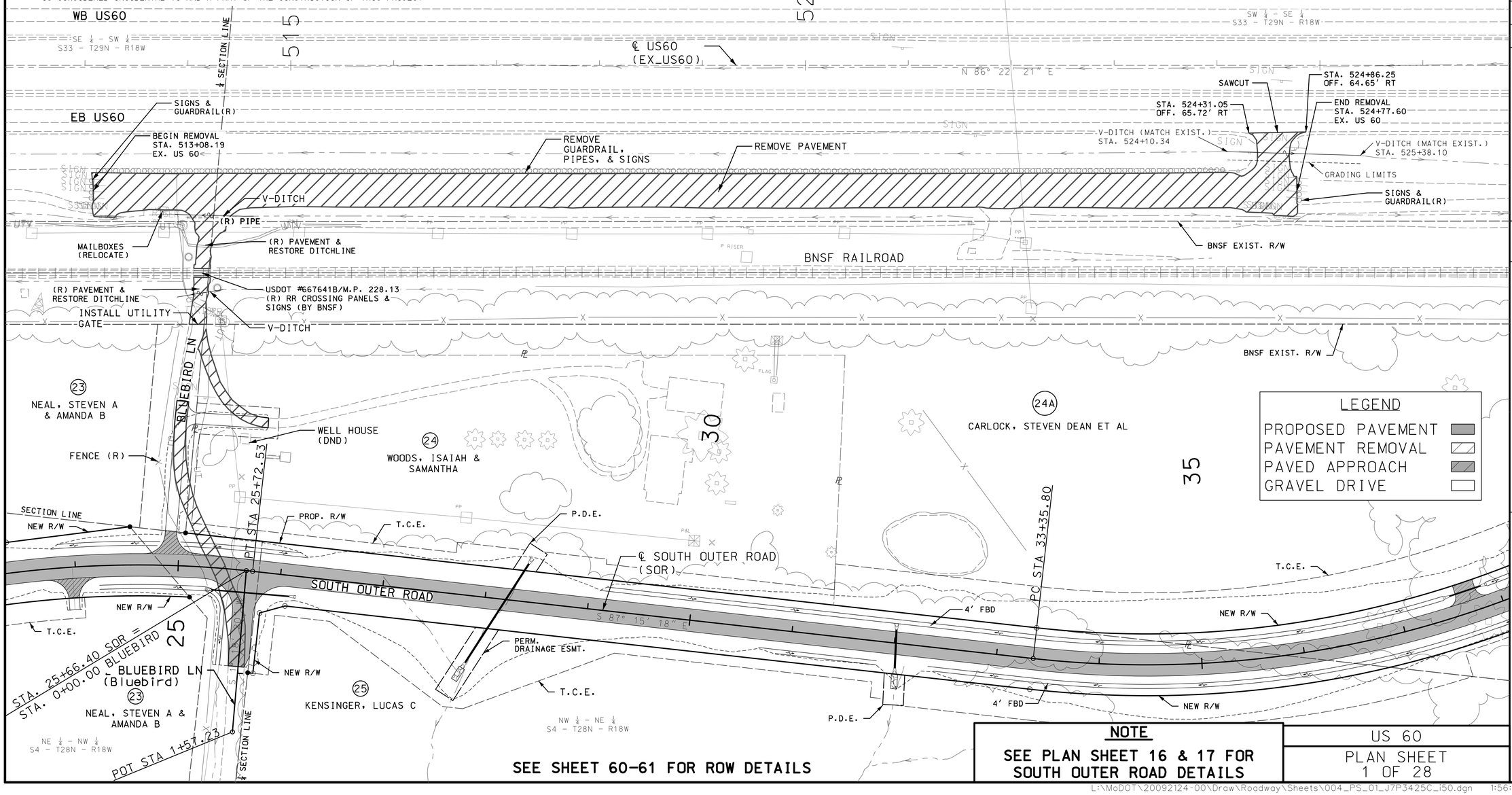

NOTE
SEE PLAN SHEET 16 & 17 FOR SOUTH OUTER ROAD DETAILS

SEE SHEET 60-61 FOR ROW DETAILS

US 60
PLAN SHEET 1 OF 28

STATE OF MISSOURI
DALLAS P. JOPLIN
NUMBER PE-2011015760
PROFESSIONAL ENGINEER
THIS SHEET HAS BEEN SIGNED, SEALED AND DATED ELECTRONICALLY.

DATE PREPARED	
9/3/2024	
ROUTE	STATE
60	MO
DISTRICT	SHEET NO.
SW	4
COUNTY	
WEBSTER	
JOB NO.	
J7P3425C	
CONTRACT ID.	
PROJECT NO.	
BRIDGE NO.	

IF A SEAL IS PRESENT ON THIS SHEET IT HAS BEEN ELECTRONICALLY SEALED AND DATED.

REV.	DATE	DESCRIPTION

MISSOURI HIGHWAYS AND TRANSPORTATION COMMISSION
105 WEST CAPITOL
JEFFERSON CITY, MO 65102
1-888-ASK-MODOT (1-888-275-6636)

CMT
CRAWFORD, MURPHY & TILLY, INC.
1631 WEST ELFINDALE STREET
SPRINGFIELD, MO 65807 (417) 869-6009
ENGINEERING CORPORATION - 000631
©Copyright CMT, Inc.

L:\MoDOT\20092124-00\Draw\Roadway\Sheets\004_PS_01_J7P3425C_i50.dgn 1:56:07 PM 9/3/2024

GENERAL NOTES

1. THE BASIS OF BEARING IS U.S. STATE PLANE NAD83 ZONE 2401 (MISSOURI CENTRAL). VERTICAL DATUM IS NAVD88.

2. RIGHT OF WAY LIMITS FOR THIS PROJECT EXTEND FROM:
   US60 – STA. 490+89.43 TO STA. 717+11.68, 4.28 MILES
   RTE A – STA. 51+11.18 TO STA. 68+74.06, 0.33 MILES
   RTE NN – STA. 68+74.06 TO STA. 94+26.54, 0.48 MILES
   EXISTING RTE NN – STA. 10+47.97 TO STA. 17+53.70, 0.13 MILES
   NORTH OUTER ROAD – STA. 10+11.24 TO STA. 67+58.81, 1.09 MILES
   SOUTH OUTER ROAD – STA. 0+00.00 TO STA. 182+32.53, 3.45 MILES
   WORK INDICATED ON THE PLANS THAT EXTENDS BEYOND THE PROJECT LIMITS IS CONSIDERED INCIDENTAL TO AND A PART OF THE CONSTRUCTION OF THIS PROJECT.

3. SEE GEOMETRIC SHEETS FOR INTERSECTION STATION TIES, CURVE DATA, ANGLES, BEARINGS, AND COORDINATE POINT INFORMATION.

4. THE APPROXIMATE LOCATION OF PROPERTY LINES AS SHOWN ON THE PLANS ARE BASED ON THE BEST INFORMATION AVAILABLE TO THE COMMISSION AT THIS TIME. THIS INFORMATION IS PROVIDED BY THE COMMISSION AS-IS AND THE COMMISSION EXPRESSLY DISCLAIMS ANY REPRESENTATION OR WARRANTY AS TO THE COMPLETENESS, ACCURACY, OR SUITABILITY OF THE INFORMATION FOR ANY USE.

5. ANY WORK INDICATED ON THE PLANS THAT EXTENDS BEYOND THE PROJECT LIMITS IS CONSIDERED INCIDENTAL TO AND A PART OF THE CONSTRUCTION OF THIS PROJECT.

LEGEND
- PROPOSED PAVEMENT
- PAVEMENT REMOVAL
- PAVED APPROACH
- GRAVEL DRIVE

DISCLAIMER
THE PROFESSIONAL WHOSE SIGNATURE AND PERSONAL SEAL APPEAR HEREON ASSUMES RESPONSIBILITY ONLY FOR WHAT APPEARS ON THIS PAGE, AND DISCLAIMS (PURSUANT TO SECTION 327.411 RSMO) SPECIFICATION, ESTIMATES, REPORTS, OR OTHER DOCUMENTS OR INSTRUMENTS NOT SEALED BY THE UNDERSIGNED PROFESSIONAL RELATING TO OR INTENDED TO BE USED FOR ANY PART OR PARTS OF THE PROJECT TO WHICH THIS PAGE REFERS.

SCALE 0 50 100 150

WB US60
EB US60
℄ US60 (EX_US60)
N 86° 22' 21" E
SECTION LINE
CR 417B
EXIST. R/W
SAWCUT
STA. 539+84.04 OFF. 64.05' RT
STA. 540+63.03 OFF. 64.20' RT
V-DITCH (MATCH EXIST.) STA. 539+84.04
V-DITCH (MATCH EXIST.) STA. 541+24.44
(R) SIGN
GRADING LIMITS
V-DITCH
SIGNS (R)
MAILBOXES (RELOCATE)
USDOT #667642H/M.P. 228.64 (R) RR CROSSING PANELS & SIGNS (BY BNSF)
(R) GUARDRAIL
BNSF EXIST. R/W
BURLINGTON RD
BNSF RAILROAD
PC STA 55+43.04
(R) PAVEMENT & RESTORE DITCHLINE
120 LF MGS GUARDRAIL W/ 3-TYPE 4 OBJECT MARKERS ON PSST POST
FENCE (R)
4' FBD
SOUTH OUTER ROAD
N 86° 18' 47" E
NEW R/W
T.C.E.
P.D.E.
STA 52+11.27 SOR = STA 0+00.00 HUMMINGBIRD
℄ SOUTH OUTER ROAD (SOR)
POT STA 1+26.30
GRADING LIMITS (TYP.)
HUMMINGBIRD LN
(26) KENSINGER, LUCAS C & LESLIE E
(27) SMITH, WILLIAM G
SE ¼ – SE ¼ S33 – T29N – R18W
SW ¼ – SW ¼ S34 – T29N – R18W

NOTE
SEE PLAN SHEET 18 & 19 FOR SOUTH OUTER ROAD DETAILS

SEE SHEET 62-63 FOR ROW DETAILS

STATE OF MISSOURI — DALLAS P. JOPLIN — NUMBER PE-2011015760 — PROFESSIONAL ENGINEER

THIS SHEET HAS BEEN SIGNED, SEALED AND DATED ELECTRONICALLY.

DATE PREPARED	
9/3/2024	
ROUTE	STATE
60	MO
DISTRICT	SHEET NO.
SW	5
COUNTY	
WEBSTER	
JOB NO.	
J7P3425C	
CONTRACT ID.	
PROJECT NO.	
BRIDGE NO.	

IF A SEAL IS PRESENT ON THIS SHEET IT HAS BEEN ELECTRONICALLY SEALED AND DATED.

DESCRIPTION	DATE

MISSOURI HIGHWAYS AND TRANSPORTATION COMMISSION
105 WEST CAPITOL
JEFFERSON CITY, MO 65102
1-888-ASK-MODOT (1-888-275-6636)

CMT
©Copyright CMT, Inc.
CRAWFORD, MURPHY & TILLY, INC.
1631 WEST ELFINDALE STREET
SPRINGFIELD, MO 65807 (417) 869-6009
ENGINEERING CORPORATION - 000631

US 60
PLAN SHEET 2 OF 28

REV.

L:\MoDOT\20092124-00\Draw\Roadway\Sheets\005_PS_02_J7P3425C_150.dgn 1:56:09 PM 9/3/2024

GENERAL NOTES

1. THE BASIS OF BEARING IS U.S. STATE PLANE NAD83 ZONE 2401 (MISSOURI CENTRAL). VERTICAL DATUM IS NAVD88.
2. RIGHT OF WAY LIMITS FOR THIS PROJECT EXTEND FROM:
   US60 – STA. 490+89.43 TO STA. 717+11.68, 4.28 MILES
   RTE A – STA. 51+11.18 TO STA. 68+74.06, 0.33 MILES
   RTE NN – STA. 68+74.06 TO STA. 94+26.54, 0.48 MILES
   EXISTING RTE NN – STA. 10+47.97 TO STA. 17+53.70, 0.13 MILES
   NORTH OUTER ROAD – STA. 10+11.24 TO STA. 67+58.81, 1.09 MILES
   SOUTH OUTER ROAD – STA. 0+00.00 TO STA. 182+32.53, 3.45 MILES
   WORK INDICATED ON THE PLANS THAT EXTENDS BEYOND THE PROJECT LIMITS IS CONSIDERED INCIDENTAL TO AND A PART OF THE CONSTRUCTION OF THIS PROJECT.
3. SEE GEOMETRIC SHEETS FOR INTERSECTION STATION TIES, CURVE DATA, ANGLES, BEARINGS, AND COORDINATE POINT INFORMATION.
4. THE APPROXIMATE LOCATION OF PROPERTY LINES AS SHOWN ON THE PLANS ARE BASED ON THE BEST INFORMATION AVAILABLE TO THE COMMISSION AT THIS TIME. THIS INFORMATION IS PROVIDED BY THE COMMISSION AS-IS AND THE COMMISSION EXPRESSLY DISCLAIMS ANY REPRESENTATION OR WARRANTY AS TO THE COMPLETENESS, ACCURACY, OR SUITABILITY OF THE INFORMATION FOR ANY USE.
5. ANY WORK INDICATED ON THE PLANS THAT EXTENDS BEYOND THE PROJECT LIMITS IS CONSIDERED INCIDENTAL TO AND A PART OF THE CONSTRUCTION OF THIS PROJECT.

LEGEND
- PROPOSED PAVEMENT
- PAVEMENT REMOVAL
- PAVED APPROACH
- GRAVEL DRIVE

SCALE 0 50 100 150

DISCLAIMER
THE PROFESSIONAL WHOSE SIGNATURE AND PERSONAL SEAL APPEAR HEREON ASSUMES RESPONSIBILITY ONLY FOR WHAT APPEARS ON THIS PAGE, AND DISCLAIMS (PURSUANT TO SECTION 327.411 RSMO) SPECIFICATION, ESTIMATES, REPORTS, OR OTHER DOCUMENTS OR INSTRUMENTS NOT SEALED BY THE UNDERSIGNED PROFESSIONAL RELATING TO OR INTENDED TO BE USED FOR ANY PART OR PARTS OF THE PROJECT TO WHICH THIS PAGE REFERS.

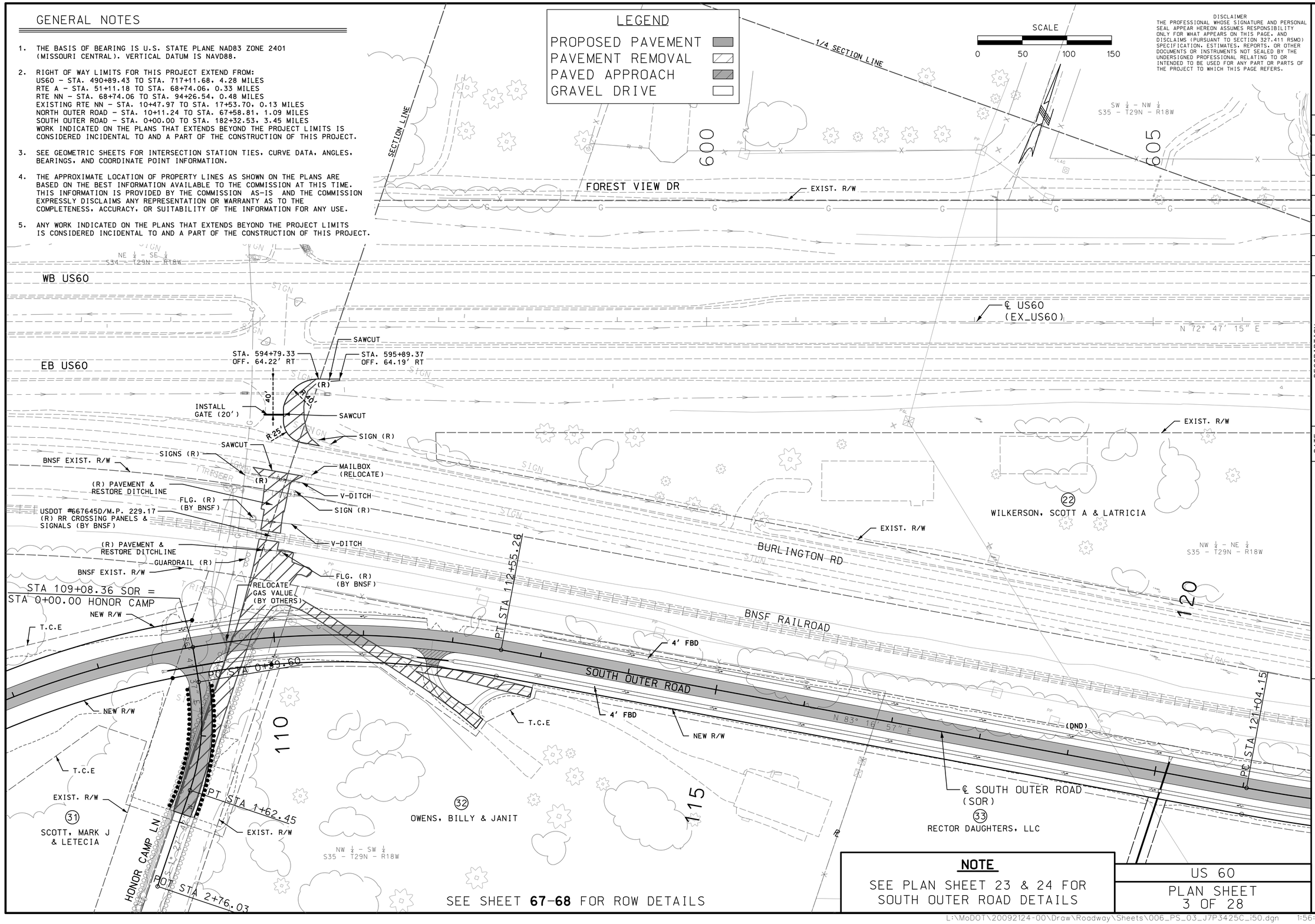

NOTE

SEE PLAN SHEET 23 & 24 FOR SOUTH OUTER ROAD DETAILS

SEE SHEET **67–68** FOR ROW DETAILS

US 60

PLAN SHEET 3 OF 28

STATE OF MISSOURI
DALLAS P. JOPLIN
NUMBER PE-2011015760
PROFESSIONAL ENGINEER

THIS SHEET HAS BEEN SIGNED, SEALED AND DATED ELECTRONICALLY.

DATE PREPARED	
9/3/2024	
ROUTE	STATE
60	MO
DISTRICT	SHEET NO.
SW	6
COUNTY	
WEBSTER	
JOB NO.	
J7P3425C	
CONTRACT ID.	
PROJECT NO.	
BRIDGE NO.	

DESCRIPTION	DATE

IF A SEAL IS PRESENT ON THIS SHEET IT HAS BEEN ELECTRONICALLY SEALED AND DATED.

MISSOURI HIGHWAYS AND TRANSPORTATION COMMISSION
105 WEST CAPITOL
JEFFERSON CITY, MO 65102
1-888-ASK-MODOT (1-888-275-6636)

CMT
© Copyright CMT, Inc.
CRAWFORD, MURPHY & TILLY, INC.
1631 WEST ELFINDALE STREET
SPRINGFIELD, MO 65807 (417) 869-6009
ENGINEERING CORPORATION - 000631

REV.

SCALE

0 50 100 150

CURVE EX_US60_13	
PI	620+04.47
PC	615+34.30
PT	624+66.30
Δ	18° 39' 55.5" (LT)
D	2° 00' 09.8"
L	932.00'
T	470.16'
R	2,860.89'
DS	65 MPH
emax	8%

GENERAL NOTES

1. THE BASIS OF BEARING IS U.S. STATE PLANE NAD83 ZONE 2401 (MISSOURI CENTRAL). VERTICAL DATUM IS NAVD88.
2. RIGHT OF WAY LIMITS FOR THIS PROJECT EXTEND FROM:
   US60 – STA. 490+89.43 TO STA. 717+11.68, 4.28 MILES
   RTE A – STA. 51+11.18 TO STA. 68+74.06, 0.33 MILES
   RTE NN – STA. 68+74.06 TO STA. 94+26.54, 0.48 MILES
   EXISTING RTE NN – STA. 10+47.97 TO STA. 17+53.70, 0.13 MILES
   NORTH OUTER ROAD – STA. 10+11.24 TO STA. 67+58.81, 1.09 MILES
   SOUTH OUTER ROAD – STA. 0+00.00 TO STA. 182+32.53, 3.45 MILES
   WORK INDICATED ON THE PLANS THAT EXTENDS BEYOND THE PROJECT LIMITS IS CONSIDERED INCIDENTAL TO AND A PART OF THE CONSTRUCTION OF THIS PROJECT.
3. SEE GEOMETRIC SHEETS FOR INTERSECTION STATION TIES, CURVE DATA, ANGLES, BEARINGS, AND COORDINATE POINT INFORMATION.
4. THE APPROXIMATE LOCATION OF PROPERTY LINES AS SHOWN ON THE PLANS ARE BASED ON THE BEST INFORMATION AVAILABLE TO THE COMMISSION AT THIS TIME. THIS INFORMATION IS PROVIDED BY THE COMMISSION AS-IS AND THE COMMISSION EXPRESSLY DISCLAIMS ANY REPRESENTATION OR WARRANTY AS TO THE COMPLETENESS, ACCURACY, OR SUITABILITY OF THE INFORMATION FOR ANY USE.
5. ANY WORK INDICATED ON THE PLANS THAT EXTENDS BEYOND THE PROJECT LIMITS IS CONSIDERED INCIDENTAL TO AND A PART OF THE CONSTRUCTION OF THIS PROJECT.

LEGEND

- PROPOSED PAVEMENT
- PAVEMENT REMOVAL
- PAVED APPROACH
- GRAVEL DRIVE

CURVE EX_US60_13	
PI	620+04.47
PC	615+34.30
PT	624+66.30
Δ	18° 39' 55.5" (LT)
D	2° 00' 09.8"
L	932.00'
T	470.16'
R	2,860.89'
DS	65 MPH
emax	8%

DISCLAIMER
THE PROFESSIONAL WHOSE SIGNATURE AND PERSONAL SEAL APPEAR HEREON ASSUMES RESPONSIBILITY ONLY FOR WHAT APPEARS ON THIS PAGE, AND DISCLAIMS (PURSUANT TO SECTION 327.411 RSMO) SPECIFICATION, ESTIMATES, REPORTS, OR OTHER DOCUMENTS OR INSTRUMENTS NOT SEALED BY THE UNDERSIGNED PROFESSIONAL RELATING TO OR INTENDED TO BE USED FOR ANY PART OR PARTS OF THE PROJECT TO WHICH THIS PAGE REFERS.

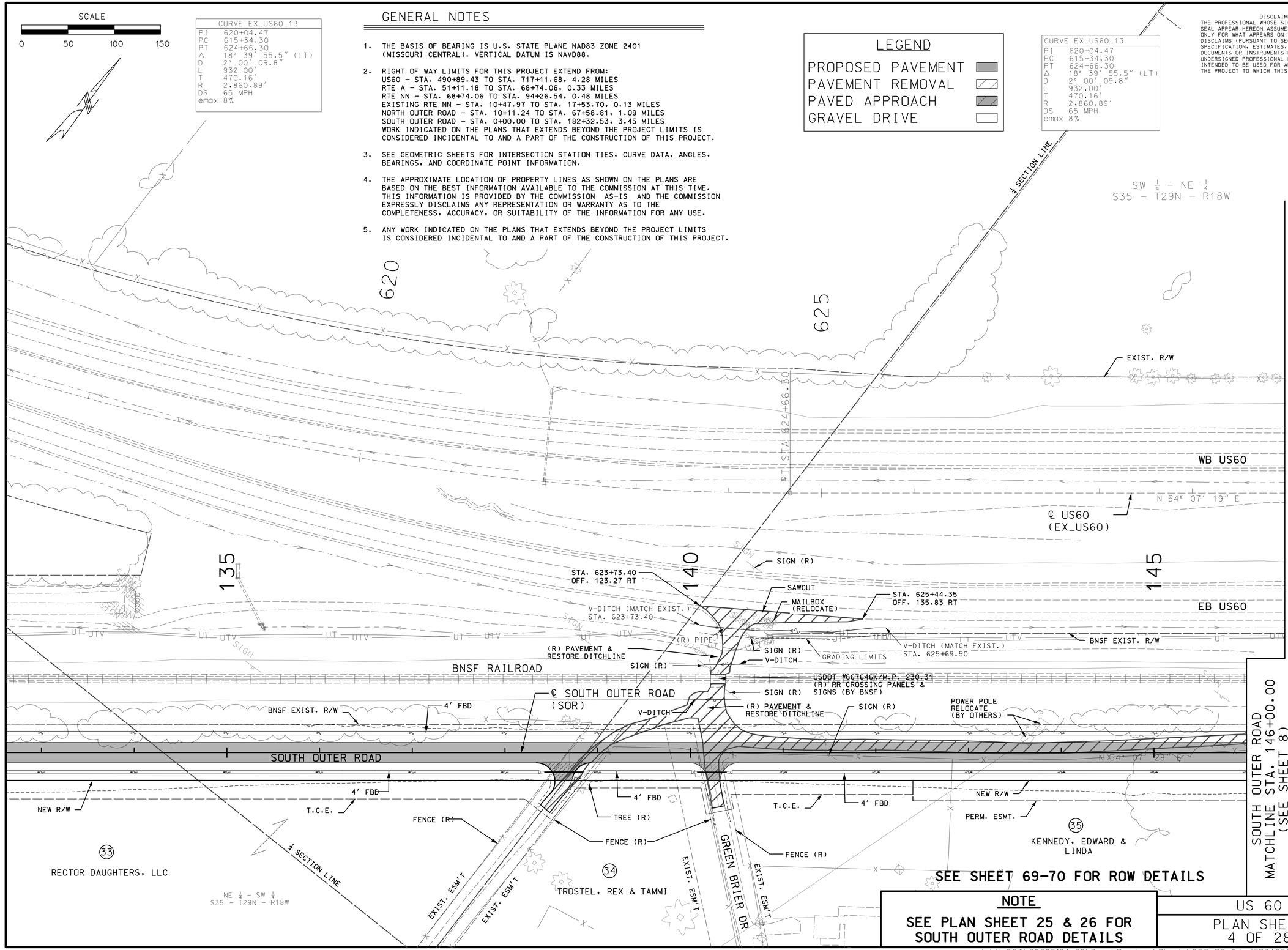

NOTE

SEE PLAN SHEET 25 & 26 FOR SOUTH OUTER ROAD DETAILS

US 60

PLAN SHEET
4 OF 28

STATE OF MISSOURI
DALLAS P. JOPLIN
NUMBER PE-2011015760
PROFESSIONAL ENGINEER

THIS SHEET HAS BEEN SIGNED, SEALED AND DATED ELECTRONICALLY.

DATE PREPARED
9/3/2024

ROUTE	STATE
60	MO
DISTRICT	SHEET NO.
SW	7

COUNTY
WEBSTER

JOB NO.
J7P3425C

CONTRACT ID.

PROJECT NO.

BRIDGE NO.

REV.	DESCRIPTION	DATE

IF A SEAL IS PRESENT ON THIS SHEET IT HAS BEEN ELECTRONICALLY SEALED AND DATED.

MISSOURI HIGHWAYS AND TRANSPORTATION COMMISSION
105 WEST CAPITOL
JEFFERSON CITY, MO 65102
1-888-ASK-MODOT (1-888-275-6636)

CMT
© Copyright CMT, Inc.
CRAWFORD, MURPHY & TILLY, INC.
1631 WEST ELFINDALE STREET
SPRINGFIELD, MO 65807 (417) 869-6009
ENGINEERING CORPORATION - 000631

SCALE
0 50 100 150

GENERAL NOTES

1. THE APPROXIMATE LOCATION OF PROPERTY LINES AS SHOWN ON THE PLANS ARE BASED ON THE BEST INFORMATION AVAILABLE TO THE COMMISSION AT THIS TIME. THIS INFORMATION IS PROVIDED BY THE COMMISSION AS-IS AND THE COMMISSION EXPRESSLY DISCLAIMS ANY REPRESENTATION OR WARRANTY AS TO THE COMPLETENESS, ACCURACY, OR SUITABILITY OF THE INFORMATION FOR ANY USE.
2. SEE GEOMETRIC SHEETS FOR INTERSECTION STATION TIES, CURVE DATA, ANGLES, BEARINGS, AND COORDINATE POINT INFORMATION.

LEGEND

- PROPOSED PAVEMENT
- PAVEMENT REMOVAL
- PAVED APPROACH
- GRAVEL DRIVE

DISCLAIMER
THE PROFESSIONAL WHOSE SIGNATURE AND PERSONAL SEAL APPEAR HEREON ASSUMES RESPONSIBILITY ONLY FOR WHAT APPEARS ON THIS PAGE, AND DISCLAIMS (PURSUANT TO SECTION 327.411 RSMO) SPECIFICATION, ESTIMATES, REPORTS, OR OTHER DOCUMENTS OR INSTRUMENTS NOT SEALED BY THE UNDERSIGNED PROFESSIONAL RELATING TO OR INTENDED TO BE USED FOR ANY PART OR PARTS OF THE PROJECT TO WHICH THIS PAGE REFERS.

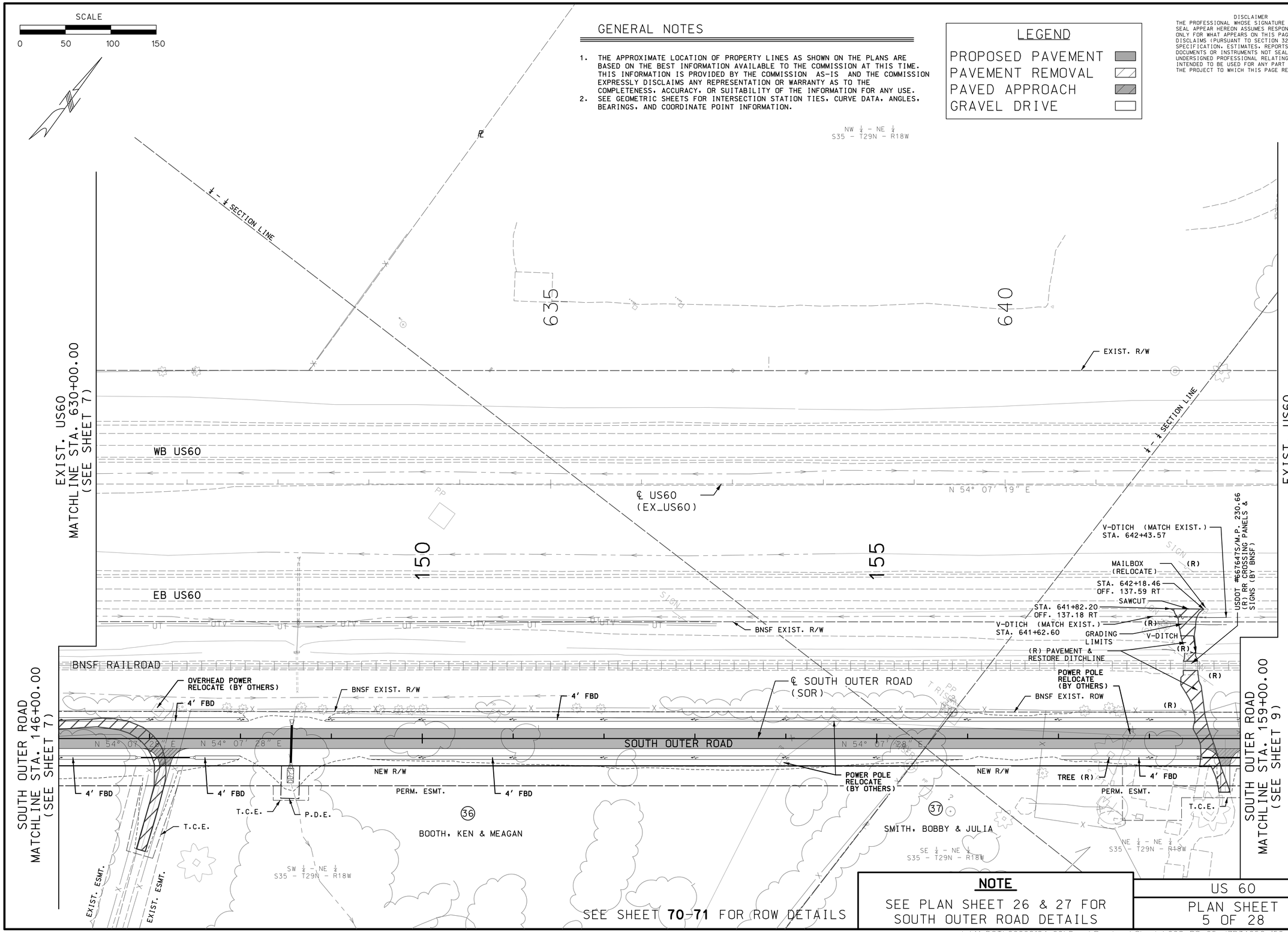

SEE SHEET 70-71 FOR ROW DETAILS

NOTE
SEE PLAN SHEET 26 & 27 FOR SOUTH OUTER ROAD DETAILS

US 60
PLAN SHEET 5 OF 28

STATE OF MISSOURI
DALLAS P. JOPLIN
NUMBER PE-2011015760
PROFESSIONAL ENGINEER
THIS SHEET HAS been SIGNED, SEALED AND DATED ELECTRONICALLY.

DATE PREPARED	
9/3/2024	
ROUTE	STATE
60	MO
DISTRICT	SHEET NO.
SW	8
COUNTY	
WEBSTER	
JOB NO.	
J7P3425C	
CONTRACT ID.	
PROJECT NO.	
BRIDGE NO.	

DATE	DESCRIPTION

IF A SEAL IS PRESENT ON THIS SHEET IT HAS BEEN ELECTRONICALLY SEALED AND DATED.

MISSOURI HIGHWAYS AND TRANSPORTATION COMMISSION
MoDOT
105 WEST CAPITOL
JEFFERSON CITY, MO 65102
1-888-ASK-MODOT (1-888-275-6636)

CMT
© Copyright CMT, Inc.
CRAWFORD, MURPHY & TILLY, INC.
1631 WEST ELFINDALE STREET
SPRINGFIELD, MO 65807 (417) 869-6009
ENGINEERING CORPORATION - 000631

REV.

L:\MoDOT\20092124-00\Draw\Roadway\Sheets\008_PS_05_J7P3425C_150.dgn 1:56:18 PM 9/3/2024

GENERAL NOTES

1. THE APPROXIMATE LOCATION OF PROPERTY LINES AS SHOWN ON THE PLANS ARE BASED ON THE BEST INFORMATION AVAILABLE TO THE COMMISSION AT THIS TIME. THIS INFORMATION IS PROVIDED BY THE COMMISSION AS-IS AND THE COMMISSION EXPRESSLY DISCLAIMS ANY REPRESENTATION OR WARRANTY AS TO THE COMPLETENESS, ACCURACY, OR SUITABILITY OF THE INFORMATION FOR ANY USE.
2. SEE GEOMETRIC SHEETS FOR INTERSECTION STATION TIES, CURVE DATA, ANGLES, BEARINGS, AND COORDINATE POINT INFORMATION.

CURVE EB60_3	
PI	2+77.43
PC	1+80.65
PT	3+74.16
Δ	3° 31′ 11.1″ (LT)
D	1° 49′ 08.1″
L	193.51′
T	96.78′
R	3,150.00′
DS	70 MPH
emax	8%
e	6%

CURVE RAMP1_1	
PI	0+95.97
PC	0+00.00
PT	1+91.70
Δ	7° 02′ 26.8″ (LT)
D	3° 40′ 22.1″
L	191.70′
T	95.97′
R	1,560.00′
DS	50 MPH
emax	8%
e	6%

CURVE RAMP2_1	
PI	0+80.54
PC	0+00.00
PT	1+60.99
Δ	4° 31′ 17.6″ (RT)
D	2° 48′ 31.0″
L	160.99′
T	80.54′
R	2,040.00′
DS	50 MPH
emax	8%
e	5.0%

LEGEND

PROPOSED PAVEMENT
PAVEMENT REMOVAL
PAVED APPROACH
GRAVEL DRIVE

SCALE 0 50 100 150

DISCLAIMER
THE PROFESSIONAL WHOSE SIGNATURE AND PERSONAL SEAL APPEAR HEREON ASSUMES RESPONSIBILITY ONLY FOR WHAT APPEARS ON THIS PAGE, AND DISCLAIMS (PURSUANT TO SECTION 327.411 RSMO) SPECIFICATION, ESTIMATES, REPORTS, OR OTHER DOCUMENTS OR INSTRUMENTS NOT SEALED BY THE UNDERSIGNED PROFESSIONAL RELATING TO OR INTENDED TO BE USED FOR ANY PART OR PARTS OF THE PROJECT TO WHICH THIS PAGE REFERS.

SE ¼ - SE ¼ S26 - T29N - R18W
NW ¼ - NE ¼ S35 - T29N - R18W
¼ SECTION LINE
SECTION LINE
645
650
655
EXIST. US60 MATCHLINE STA. 643+00.00 (SEE SHEET 8)
RAMP 1 MATCHLINE STA. 1+00.00 (SEE SHEET 10)
EB US60 MATCHLINE STA. 12+00.00 (SEE SHEET 10)
RAMP 2 MATCHLINE STA. 2+00.00 (SEE SHEET 10)
SOUTH OUTER ROAD MATCHLINE STA. 159+00.00 (SEE SHEET 8)
WB US60
EB US60
SOUTH OUTER ROAD
BNSF RAILROAD
BEGIN CONST. STA 646+58.07 EX. US60 MATCH EXIST.
END 8′ FBD STA 647+25.65 EX. US60
EXIST. R/W
8′ FBD
END 8′ FBD STA 647+85.59 EX. US 60
GRADING LIMITS
STA. 0+00.00 RAMP 1 = STA. 654+91.93 EX US60
+11.92 R 3 67.97′ LT
℄ US60 (EX_US60)
EQUATION: ℄ RAMP 1 (Ramp1) Sta 655+00.00 BK = Sta 654+98.60 AH
PT STA 1+60.99
BEGIN V-DITCH STA 643+94.98 EX. US 60
BEGIN CONST. STA. 00+00.00 EB US 60 = STA 643+94.98 EX. US 60 MATCH EXIST.
N 54° 07′ 19″ E
PC STA 1+80.65
END V-DITCH BEGIN 8′ FBD STA 647+35.36 EX. US60
PT STA 3+74.16
℄ EB US60 (EB60)
℄ RAMP 2 (Ramp2)
N 50° 34′ 42″ E
END 4′ FBD STA 4+87.24 EB60
124.42′ 25.00′ RT
4′ FBD
N 54° 05′ 33″ E
SIGN (R)
SIGNS (R)
BNSF EXIST. R/W
SIGN (R) 250′ TAPER
UT SIGN (R)
STA. 0+00.00 RAMP 2 = STA. 9+64.42 EB US60 = STA. 653+59.63 EX US60
(R) SIGN
(R) PIPE
(R) PAVEMENT & RESTORE DITCHLINE
USDOT #667648Y/M.P. 230.89 (R) RR CROSSING PANELS & SIGNS (BY BNSF)
PC STA 163+28.20
FENCE (R)
℄ SOUTH OUTER ROAD (SOR)
POWER POLE (R) (BY OTHERS)
NEW R/W
N 54° 07′ 28″ E
TREE (R)
PERM. ESM′T.
P.D.E.
T.C.E.
(DND)
PT STA 170+60.83
37 SMITH, BOBBY & JULIA
38 FLEETWOOD, RICHARD & CLARA
PROP. R/W

NOTE
SEE PLAN SHEET 30 & 31 FOR SOUTH OUTER ROAD DETAILS

SEE SHEET 71-72 FOR ROW DETAILS

US 60
PLAN SHEET 6 OF 28

STATE OF MISSOURI
DALLAS P. JOPLIN
NUMBER PE-2011015760
PROFESSIONAL ENGINEER
THIS SHEET HAS BEEN SIGNED, SEALED AND DATED ELECTRONICALLY.

DATE PREPARED	
8/2/2024	
ROUTE	STATE
60	MO
DISTRICT	SHEET NO.
SW	9
COUNTY	
WEBSTER	
JOB NO.	
J7P3425C	
CONTRACT ID.	
PROJECT NO.	
BRIDGE NO.	

DESCRIPTION	DATE

IF A SEAL IS PRESENT ON THIS SHEET IT HAS BEEN ELECTRONICALLY SEALED AND DATED.

MISSOURI HIGHWAYS AND TRANSPORTATION COMMISSION
105 WEST CAPITOL
JEFFERSON CITY, MO 65102
1-888-ASK-MODOT (1-888-275-6636)

CMT
© Copyright CMT, Inc.
CRAWFORD, MURPHY & TILLY, INC.
1631 WEST ELFINDALE STREET
SPRINGFIELD, MO 65807 (417) 869-6009
ENGINEERING CORPORATION - 000631

REV.

LEGEND

- PROPOSED PAVEMENT
- PAVEMENT REMOVAL
- PAVED APPROACH
- GRAVEL DRIVE

GENERAL NOTES

1. THE APPROXIMATE LOCATION OF PROPERTY LINES AS SHOWN ON THE PLANS ARE BASED ON THE BEST INFORMATION AVAILABLE TO THE COMMISSION AT THIS TIME. THIS INFORMATION IS PROVIDED BY THE COMMISSION AS-IS AND THE COMMISSION EXPRESSLY DISCLAIMS ANY REPRESENTATION OR WARRANTY AS TO THE COMPLETENESS, ACCURACY, OR SUITABILITY OF THE INFORMATION FOR ANY USE.
2. SEE GEOMETRIC SHEETS FOR INTERSECTION STATION TIES, CURVE DATA, ANGLES, BEARINGS, AND COORDINATE POINT INFORMATION.

SE ¼ - SE ¼ S26 - T29N - R18W

ROUTE A MATCHLINE STA. 64+00.00 (SEE SHEET 15)

POT STA 9+00.00

ROUTE A

(57) SUMMIT NATURAL GAS

(56) GLENN, LARRY & DELLA

(61) OWENS, JAMES

STA. 64+95.19 RTE. A =
STA. 10+75.35 RAMP 1 =
STA. 0+00.00 RAMP3

FULL DEPTH SHOULDER

℄ ROUTE A (RTEA)

℄ RAMP 3 (RAMP3)

65 PC STA 2+11.97

FES-4

RAMP 3 MATCHLINE STA. 4+00.00 (SEE SHEET 11)

TREE (R)

EXIST. R/W

A-5

GRADING LIMITS (TYP.)

STA. 67+11.17 RTE. A =
STA. 665+30.92 EX US60

℄ US60 (EX_US60)

WB US60

BEGIN 8' FBD STA 668+73.29 EX. US60

BRIDGE A9137

END 8' FBD STA 666+00.66 EX. US 60

A-4

STA. 67+55.02 RTE. A =
STA. 21+34.84 EB US60

SPC-5

EB US60 MATCHLINE STA. 25+00.00 (SEE SHEET 11)

MSE WALL A9352

STA. 68+74.06 RTE. A =
STA. 11+56.88 RAMP 2 =
STA. 0+00.00 RAMP 4 =
STA. 68+74.06 RTE. NN

RTE. A
RTE. NN

℄ RAMP 4 (RAMP4)

TYPE D BARRIER W/MOMENT SLAB

END MSE WALL +61.90, 83.33' RT RAMP 4

MSE WALL A9354

BRIDGE A9353

RAMP 4 MATCHLINE STA. 3+00.00 (SEE SHEET 11)

2780
2020
1850
1390
470
510
1390
1510
1380

ROUTE A NORTH

RAMP 1 (WB ON) WEST

RAMP 3 (WB OFF) EAST

ROUTE A SOUTH

TRAFFIC FLOW DIAGRAM
ESTIMATED - 2043
TRAFFIC VOLUME

NORMANDY RD.

EXIST. UTIL. ESW'T

EXIST. UTIL. ESW'T

SECTION LINE

EXIST. R/W

NEW R/W

T.C.E.

FES-2

℄ RAMP 1 (RAMP1)

FENCE (R)

MSE WALL A9351

END 4' FBD STA 664+52.55 EX. US60

GRADING LIMITS (TYP.)

SIGNS (R)

SIGN (R)

A-2

A-3

SAWCUT

FES-1

GAS UTILITY RELOCATE (BY OTHERS)

FES (R)

BEGIN V-DITCH STA 659+01.45 EX. US60

SIGNS (R)

℄ EB US60 (EB60)

24" FES (R)

℄ RAMP 2 (RAMP2)

SPC-2

SPC-3

A-1

SIGNS (R)

AREA INLET (R)

C-1

24" CULVERT PIPE (R)

TYPE D BARRIER W/MOMENT SLAB

SPC-1

SIGNS (R)

SIGN (R)

FES-3

BEGIN MSE WALL +32.01, 47.67' RT RAMP 2

BNSF EXIST. R/W

BNSF RAILROAD

SECTION LINE

(88) BNSF RAILROAD

(38) FLEETWOOD, RICHARD & CLARA

NW ¼ - NW ¼ S36 - T29N - R18W

END 8' FBD STA 5+33.65 RAMP 2

4' FBD

8' FBD

+52.91

+69.78

+98.54

RAMP 1 MATCHLINE STA. 1+00.00 (SEE SHEET 9)

EB US60 MATCHLINE 12+00.00 (SEE SHEET 9)

RAMP 2 MATCHLINE STA. 2+00.00 (SEE SHEET 9)

CHAIN LINK FENCE ON TYPE D BARRIER - 132 LF

PAVED DITCH (SEE DETAIL)

PERM. ESM'T

BEGIN MSE WALL +51.28 134.00' RT

MSE WALL A9355

MSE WALL A9355

END MSE WALL +25.16, 145.15' LT

NEW R/W

℄ RTE. NN (RTEA)

POWER POLE RELOCATE (BY OTHERS)

TREE (R)

(42) MARCH, GOLDIE

GRADING LIMITS (TYP.)

TCE

FENCE (R)

BUILDING (R)

GRADING LIMITS (TYP.)

ROUTE A NORTH

RAMP 2 (EB OFF) WEST

RAMP 4 (EB ON) EAST

ROUTE NN SOUTH

1500
1240
1920
1360
0
500
1930
1000
560
690

TRAFFIC FLOW DIAGRAM
ESTIMATED - 2043
TRAFFIC VOLUME

ROUTE NN MATCHLINE STA. 73+00.00 (SEE SHEET 16)

SCALE
0 50 100 150

STA.666+71.30 EXIST. US60
CONST. 18" X 400' GRP A PIPE
CONST. 24" X 114' GRP A PIPE
CONST. 30" X 209' GRP A PIPE
W/ FES LT
DA = 7.0 AC
Q25 = 19.8 CFS

STA.658+98.71 EXIST. US60
0.0° L/A
CONST. 24" X 115' GRP A PIPE
CONST. 18" X 91' GRP A PIPE
W/ FES LT
DA = 7.0 AC
Q25 = 19.8 CFS

STA.662+34.53 EXIST. US60
0.0° L/A
CONST. 24" X 174' GRP A PIPE
CONST. 30" X 174' GRP A PIPE
W/ FES LT/RT
DA = 8.55 AC
Q25 = 19.3 CFS

CURVE EB60_6	
PI	15+98.70
PC	15+00.66
PT	16+96.67
Δ	3° 33' 54.8" (RT)
D	1° 49' 08.1"
L	196.01'
T	98.04'
R	3,150.00'
DS	70 MPH
emax	8%
e	6%

SPIRAL EX_US60_16	
PI	662+50.21
Ls	250.00'
Ys	5.46'
Xs	249.89'
LT	166.70'
ST	83.37'
DS	65 MPH
e	NC (OR)

CURVE RAMP2_4	
PI	7+70.27
PC	5+04.13
PT	10+34.52
Δ	11° 52' 14.7" (RT)
D	2° 14' 17.2"
L	530.39'
T	266.15'
R	2,560.00'
DS	50 MPH
emax	8%
e	4.2%

BRIDGE A9353
BEGIN STATION: 69+56.92
TYPE: COMPOSITE STEEL PLATE GIRDER
SPAN: 129'

BRIDGE A9137
TIE STATION: 665+30.92
TYPE: NU GIRDER
SPAN: 154'

DISCLAIMER
THE PROFESSIONAL WHOSE SIGNATURE AND PERSONAL SEAL APPEAR HEREON ASSUMES RESPONSIBILITY ONLY FOR WHAT APPEARS ON THIS PAGE, AND DISCLAIMS (PURSUANT TO SECTION 327.411 RSMO) SPECIFICATION, ESTIMATES, REPORTS, OR OTHER DOCUMENTS OR INSTRUMENTS NOT SEALED BY THE UNDERSIGNED PROFESSIONAL RELATING TO OR INTENDED TO BE USED FOR ANY PART OR PARTS OF THE PROJECT TO WHICH THIS PAGE REFERS.

SEE SHEET **51** FOR ROW DETAILS

STATE OF MISSOURI
DALLAS P. JOPLIN
NUMBER PE-2011015760
PROFESSIONAL ENGINEER

THIS SHEET HAS BEEN SIGNED, SEALED AND DATED ELECTRONICALLY.

DATE PREPARED	
9/3/2024	
ROUTE	STATE
60	MO
DISTRICT	SHEET NO.
SW	10
COUNTY	
WEBSTER	
JOB NO.	
J7P3425C	
CONTRACT ID.	
PROJECT NO.	
BRIDGE NO.	

DATE	DESCRIPTION	REV.

IF A SEAL IS PRESENT ON THIS SHEET IT HAS BEEN ELECTRONICALLY SEALED AND DATED.

MISSOURI HIGHWAYS AND TRANSPORTATION COMMISSION

105 WEST CAPITOL
JEFFERSON CITY, MO 65102
1-888-ASK-MODOT (1-888-275-6636)

CMT

© Copyright CMT, Inc.

CRAWFORD, MURPHY & TILLY, INC.
1631 WEST ELFINDALE STREET
SPRINGFIELD, MO 65807 (417) 869-6009
ENGINEERING CORPORATION - 000631

US 60

PLAN SHEET
7 OF 28

GENERAL NOTES

1. THE APPROXIMATE LOCATION OF PROPERTY LINES AS SHOWN ON THE PLANS ARE BASED ON THE BEST INFORMATION AVAILABLE TO THE COMMISSION AT THIS TIME. THIS INFORMATION IS PROVIDED BY THE COMMISSION AS-IS AND THE COMMISSION EXPRESSLY DISCLAIMS ANY REPRESENTATION OR WARRANTY AS TO THE COMPLETENESS, ACCURACY, OR SUITABILITY OF THE INFORMATION FOR ANY USE.
2. SEE GEOMETRIC SHEETS FOR INTERSECTION STATION TIES, CURVE DATA, ANGLES, BEARINGS, AND COORDINATE POINT INFORMATION.

TYPE I DRWY. LT. (ASPHALT) 23+60.00 GR = -0.5% CONST. 20' X 24.5' 18" X 32' GRP B PIPE	
TYPE I DRWY. LT. (ASPHALT) 25+80.00 GR = 2.0% CONST. 20' X 27.1' 18" X 32' GRP B PIPE	
TYPE I DRWY. RT. (ASPHALT) 23+60.00 GR = -5.0% CONST. 20' X 26.8' 18" X 32' GRP B PIPE	
TYPE I DRWY. RT. (ASPHALT) 23+60.00 GR = 4.0% CONST. 20' X 19' 18" X 32' GRP B PIPE	

CURVE RAMP3_3	
PI	7+06.28
PC	2+11.97
PT	11+58.51
Δ	40° 46' 34.3" (RT)
D	4° 18' 28.6"
L	946.53'
T	494.31'
R	1,330.00'
DS	50 MPH
emax	8%
e	6.6%

CURVE RAMP3_6	
PI	15+28.89
PC	14+16.95
PT	16+40.45
Δ	8° 12' 30.5" (LT)
D	3° 40' 22.1"
L	223.49'
T	111.94'
R	1,560.00'
DS	50 MPH
emax	8%
e	6%

CURVE RAMP4_3	
PI	10+02.15
PC	6+07.58
PT	13+87.11
Δ	21° 53' 38.4" (RT)
D	2° 48' 31.0"
L	779.53'
T	394.58'
R	2,040.00'
DS	50 MPH
emax	8%
e	5%

CURVE EB60_9	
PI	25+20.62
PC	17+61.67
PT	31+99.36
Δ	45° 23' 05.3" (RT)
D	3° 09' 24.5"
L	1,437.69'
T	758.95'
R	1,815.00'
DS	70 MPH
emax	8%
e	8%

CURVE EX_US60_17	
PI	669+89.61
SC	663+33.51
CS	675+97.41
Δ	37° 56' 20.5" (RT)
D	3° 00' 06.3"
L	1,263.90'
T	656.10'
R	1,908.75'
DS	65 MPH
emax	8%

SPIRAL EX_US60_18	
PI	676+80.78
Ls	250.00'
Ys	5.46'
Xs	249.89'
LT	166.70'
ST	83.37'
DS	65 MPH
e	NC (OR)

LABEL KEY

1. BEGIN 4' FBD 9+00.00, RAMP3 — END 4' FBD
2. BEGIN V-DITCH 10+97.49, RAMP3 — END V-DITCH
3. 12+25.00, RAMP3

LEGEND

- PROPOSED PAVEMENT
- PAVEMENT REMOVAL
- PAVED APPROACH
- GRAVEL DRIVE

STA.30+44.06 0.0° R/A CONST. 24" X 66' GRP A PIPE W/ FES LT/RT 3 CY ROCK LINING DA = 3.13 AC Q25 = 15.9 CFS	STA.13+55.23 RAMP 3 70.6° L/A CONST. 24" X 147' GRP A PIPE W/ FES LT/RT 3 CY ROCK LINING DA = 3.74 AC Q25 = 13.8 CFS

DISCLAIMER
THE PROFESSIONAL WHOSE SIGNATURE AND PERSONAL SEAL APPEAR HEREON ASSUMES RESPONSIBILITY ONLY FOR WHAT APPEARS ON THIS PAGE. AND DISCLAIMS (PURSUANT TO SECTION 327.411 RSMO) SPECIFICATION, ESTIMATES, REPORTS, OR OTHER DOCUMENTS OR INSTRUMENTS NOT SEALED BY THE UNDERSIGNED PROFESSIONAL RELATING TO OR INTENDED TO BE USED FOR ANY PART OR PARTS OF THE PROJECT TO WHICH THIS PAGE REFERS.

STATE OF MISSOURI
DALLAS P. JOPLIN
NUMBER PE-2011015760
PROFESSIONAL ENGINEER
THIS SHEET HAS BEEN SIGNED, SEALED AND DATED ELECTRONICALLY.

DATE PREPARED 9/3/2024

ROUTE	STATE
60	MO
DISTRICT	SHEET NO.
SW	11

COUNTY: WEBSTER
JOB NO.: J7P3425C
CONTRACT ID.:
PROJECT NO.:
BRIDGE NO.:

IF A SEAL IS PRESENT ON THIS SHEET IT HAS BEEN ELECTRONICALLY SEALED AND DATED.

DATE | DESCRIPTION | REV.

MISSOURI HIGHWAYS AND TRANSPORTATION COMMISSION
105 WEST CAPITOL
JEFFERSON CITY, MO 65102
1-888-ASK-MODOT (1-888-275-6636)

CMT
© Copyright CMT, Inc.
CRAWFORD, MURPHY & TILLY, INC.
1631 WEST ELFINDALE STREET
SPRINGFIELD, MO 65807 (417) 869-6009
ENGINEERING CORPORATION - 000631

US 60
PLAN SHEET
8 OF 28

SEE SHEET 52 FOR ROW DETAILS

L:\MoDOT\20092124-00\Draw\Roadway\Sheets\011_PS_08_J7P3425C_i50.dgn 1:56:24 PM 9/3/2024

GENERAL NOTES

1. THE APPROXIMATE LOCATION OF PROPERTY LINES AS SHOWN ON THE PLANS ARE BASED ON THE BEST INFORMATION AVAILABLE TO THE COMMISSION AT THIS TIME. THIS INFORMATION IS PROVIDED BY THE COMMISSION AS-IS AND THE COMMISSION EXPRESSLY DISCLAIMS ANY REPRESENTATION OR WARRANTY AS TO THE COMPLETENESS, ACCURACY, OR SUITABILITY OF THE INFORMATION FOR ANY USE.
2. SEE GEOMETRIC SHEETS FOR INTERSECTION STATION TIES, CURVE DATA, ANGLES, BEARINGS, AND COORDINATE POINT INFORMATION.

LEGEND

- PROPOSED PAVEMENT
- PAVEMENT REMOVAL
- PAVED APPROACH
- GRAVEL DRIVE

SCALE 0 50 100 150

NORTH OUTER ROAD MATCHLINE STA. 34+00.00 (SEE SHEET 11)

SE ¼ - SW ¼ S25 - T29N - R18W

63 BOWERS, WILLIAM

CHAINLINK FENCE
TEMP. FENCE (CHAINLINK)
64 SUMMIT NATURAL GAS
STA. 40+64.39 NOR= STA. 686+00.00 SPRINGFIELD AVE
STATE ST.
66 BOWERS, DAVID & JEAN
67 BOWERS, WILLIAM
N. DIGGINS MAIN
69 BIBLICAL LIFE ASSEMBLY, INC.
68 BOWERS, WILLIAM
65 NEWMAN, MICHAEL & NICOLE

35 40 45

PC STA 38+17.68
PT STA 39+57.02
PC STA 41+11.02

T.C.E. GRADING LIMITS (TYP.) 4' FBD NEW R/W TREE AND POND (R)
S 72° 15' 12" E
℄ NORTH OUTER ROAD EAST (NORE)
EXIST. R/W SAN. SEWER (RELOCATE) T.C.E. V-DITCH
HYDRANT (RELOCATE) ADJUST MANHOLE
V-DITCH SIGN (DND) 6" WATER (RELOCATE) EXIST. R/W
SPRINGFIELD AVE.
S 80° 14' 28" E

SIGN (R) SAN. SEWER (RELOCATE) ADJUST MANHOLE GRADING LIMITS (TYP.) 4" WATER (RELOCATE) 6" WATER (RELOCATE)
+49.49 160.05' LT
BEGIN CONST. STA. 686+37.93 US 60
STA. 689+26.20 OFF. 66.27' LT
STA. 689+93.37 OFF. 67.95' LT
EXIST. R/W

250'
685 690
STA. 688+83.88 OFF. 26.01' LT
SAWCUT WB US60 SAWCUT
(R)

GRADING LIMITS (TYP.)
℄ US60 (EX_US60)
V-DITCH (MATCH EXIST.) STA. 687+33.65
POT STA 42+71.66
℄ EB US60 (EB60)
8' FBD
END 8' FBD STA 42+71.33 EB60
V-DITCH (MATCH EXIST.) STA. 687+10.00
STA. 689+83.66 OFF. 72.34' RT
V-DITCH (MATCH EXIST.) STA. 690+94.82
V-DITCH (MATCH EXIST.) STA. 690+25.11
S 80° 26' 05" E
SAWCUT SAWCUT END CONST. STA. 689+10.39 US 60
300'
EB US60

BEGIN V-DITCH STA 689+03.58 US 60
END V-DITCH STA 691+13.60 US 60 (MATCH EXIST.)
(R) PAVEMENT & RESTORE DITCHLINE
BNSF EXIST. R/W GRADING LIMITS (TYP.) V-DITCH
FES-7 PERM. ESM'T
+71.84 25.00' RT
END V-DITCH STA 40+25.00 EB60
END CONST. STA. 42+71.66 EB US 60 = STA. 687+10.21 US 60
BNSF RAILROAD
USDOT #667650A/M.P. 231.51 (R) RR CROSSING PANELS & SIGNALS (BY BNSF)
TYPE 4 OBJECT MARKER (3 EACH)
BEGIN V-DITCH STA 42+30.00 EB60
88 BNSF RAILROAD
TYPE D GUARDRAIL (30 LF)
(R) PAVEMENT & RESTORE DITCHLINE
BNSF EXIST. R/W
END V-DITCH STA 687+10.24 US 60
SECTION LINE
ROUTE NN
PRIVATE PROPERTY NO TRESPASSING BNSF RAILWAY
SIGN ON OBJECT MARKER (SEE JSP)
SE ¼ - SW ¼ S25 - T29N - R18W
SW ¼ - SE ¼ S25 - T29N - R18W

EXIST. US60 MATCHLINE STA. 693+00.00 (SEE SHEET 13)

EB US60 MATCHLINE STA. 37+00.00 (SEE SHEET 11)

LABEL KEY

1	END 4' FBD BEGIN V-DITCH 41+11.02, NORE	5	END V-DITCH 43+77.11, NORE
2	END 4' FBD BEGIN V-DITCH 41+11.02, NORE	6	BEGIN V-DITCH 44+11.06, NORE
3	END V-DITCH 42+45.36, NORE	7	END V-DITCH 45+97.47, NORE
4	BEGIN V-DITCH 42+76.26, NORE	8	BEGIN V-DITCH 46+33.47, NORE

TYPE I DRWY. LT. (GRAVEL)
STA. 39+61.40 GR = 7.5%
CONST. 10' X 38.52'
15" X 30' GRP B PIPE

TYPE I DRWY. LT. (GRAVEL)
STA. 40+57.78 GR = 4.0%
CONST. 10.34' X 36.30'
15" X 30' GRP B PIPE

TYPE I DRWY. LT. (GRAVEL)
STA. 42+60.81 GR = 4.0%
CONST. 15' X 22.70'
15" X 37' GRP B PIPE

TYPE I DRWY. LT. (GRAVEL)
STA. 44+94.08 GR = 3.8%
CONST. 18' X 21.10'
15" X 49' GRP B PIPE

TYPE I DRWY. LT. (ASPHALT)
46+15.47 GR = 6.6%
CONST. 20' X 20.14'
15" X 44' GRP B PIPE

CURVE NORE_6	
PI	38+87.46
PC	38+17.68
PT	39+57.02
Δ	7° 59' 01.9" (LT)
D	5° 43' 46.5"
L	139.34'
T	69.79'
R	1,000.00'
DS	40 MPH
emax	8%
e	5.9%

STA.40+72.15 EB US60
89.9° L/A
CONST. 36" X 6' GRP A PIPE
W/ FES RT
1.3 CY ROCK LINING
DA = 9.9 AC
Q25 = 33.0 CFS

DISCLAIMER
THE PROFESSIONAL WHOSE SIGNATURE AND PERSONAL SEAL APPEAR HEREON ASSUMES RESPONSIBILITY ONLY FOR WHAT APPEARS ON THIS PAGE, AND DISCLAIMS (PURSUANT TO SECTION 327.411 RSMO) SPECIFICATION, ESTIMATES, REPORTS, OR OTHER DOCUMENTS OR INSTRUMENTS NOT SEALED BY THE UNDERSIGNED PROFESSIONAL RELATING TO OR INTENDED TO BE USED FOR ANY PART OR PARTS OF THE PROJECT TO WHICH THIS PAGE REFERS.

SEE SHEET 53 FOR ROW DETAILS

US 60
PLAN SHEET 9 OF 28

STATE OF MISSOURI — DALLAS P. JOPLIN — NUMBER PE-2011015760 — PROFESSIONAL ENGINEER
THIS SHEET HAS BEEN SIGNED, SEALED AND DATED ELECTRONICALLY.

DATE PREPARED	
9/3/2024	
ROUTE	STATE
60	MO
DISTRICT	SHEET NO.
SW	12
COUNTY	
WEBSTER	
JOB NO.	
J7P3425C	
CONTRACT ID.	
PROJECT NO.	
BRIDGE NO.	

IF A SEAL IS PRESENT ON THIS SHEET IT HAS BEEN ELECTRONICALLY SEALED AND DATED.

NO.	DESCRIPTION	DATE

MISSOURI HIGHWAYS AND TRANSPORTATION COMMISSION
105 WEST CAPITOL
JEFFERSON CITY, MO 65102
1-888-ASK-MODOT (1-888-275-6636)

CMT
© Copyright CMT, Inc.
CRAWFORD, MURPHY & TILLY, INC.
1631 WEST ELFINDALE STREET
SPRINGFIELD, MO 65807 (417) 869-6009
ENGINEERING CORPORATION - 000631

REV.

GENERAL NOTES

1. THE APPROXIMATE LOCATION OF PROPERTY LINES AS SHOWN ON THE PLANS ARE BASED ON THE BEST INFORMATION AVAILABLE TO THE COMMISSION AT THIS TIME. THIS INFORMATION IS PROVIDED BY THE COMMISSION AS-IS AND THE COMMISSION EXPRESSLY DISCLAIMS ANY REPRESENTATION OR WARRANTY AS TO THE COMPLETENESS, ACCURACY, OR SUITABILITY OF THE INFORMATION FOR ANY USE.
2. SEE GEOMETRIC SHEETS FOR INTERSECTION STATION TIES, CURVE DATA, ANGLES, BEARINGS, AND COORDINATE POINT INFORMATION.

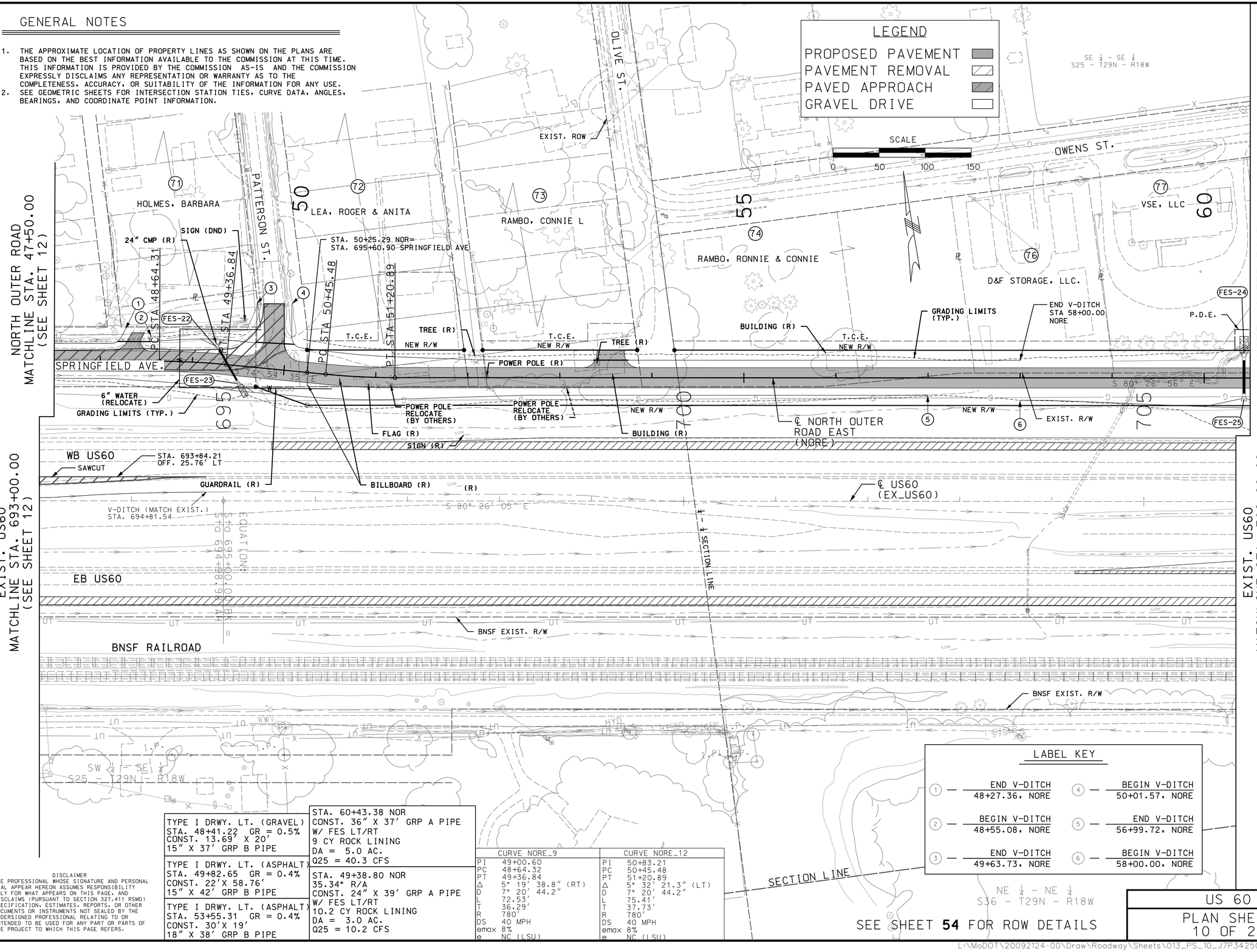

LABEL KEY

1	END V-DITCH 48+27.36, NORE	4	BEGIN V-DITCH 50+01.57, NORE
2	BEGIN V-DITCH 48+55.08, NORE	5	END V-DITCH 56+99.72, NORE
3	END V-DITCH 49+63.73, NORE	6	BEGIN V-DITCH 58+00.00, NORE

TYPE I DRWY. LT. (GRAVEL)
STA. 48+41.22 GR = 0.5%
CONST. 13.69' X 20'
15" X 37' GRP B PIPE

TYPE I DRWY. LT. (ASPHALT)
STA. 49+82.65 GR = 0.4%
CONST. 22'X 58.76'
15" X 42' GRP B PIPE

TYPE I DRWY. LT. (ASPHALT)
STA. 53+55.31 GR = 0.4%
CONST. 30'X 19'
18" X 38' GRP B PIPE

STA. 60+43.38 NOR
CONST. 36" X 37' GRP A PIPE
W/ FES LT/RT
9 CY ROCK LINING
DA = 5.0 AC.
Q25 = 40.3 CFS

STA. 49+38.80 NOR
35.34° R/A
CONST. 24" X 39' GRP A PIPE
W/ FES LT/RT
10.2 CY ROCK LINING
DA = 3.0 AC.
Q25 = 10.2 CFS

CURVE NORE_9	
PI	49+00.60
PC	48+64.32
PT	49+36.84
Δ	5° 19' 38.8" (RT)
D	7° 20' 44.2"
L	72.53'
T	36.29'
R	780'
DS	40 MPH
emax	8%
e	NC (LSU)

CURVE NORE_12	
PI	50+83.21
PC	50+45.48
PT	51+20.89
Δ	5° 32' 21.3" (LT)
D	7° 20' 44.2"
L	75.41'
T	37.73'
R	780'
DS	40 MPH
emax	8%
e	NC (LSU)

SEE SHEET **54** FOR ROW DETAILS

DISCLAIMER
THE PROFESSIONAL WHOSE SIGNATURE AND PERSONAL SEAL APPEAR HEREON ASSUMES RESPONSIBILITY ONLY FOR WHAT APPEARS ON THIS PAGE, AND DISCLAIMS (PURSUANT TO SECTION 327.411 RSMO) SPECIFICATION, ESTIMATES, REPORTS, OR OTHER DOCUMENTS OR INSTRUMENTS NOT SEALED BY THE UNDERSIGNED PROFESSIONAL RELATING TO OR INTENDED TO BE USED FOR ANY PART OR PARTS OF THE PROJECT TO WHICH THIS PAGE REFERS.

STATE OF MISSOURI
DALLAS P. JOPLIN
NUMBER PE-2011015760
PROFESSIONAL ENGINEER

THIS SHEET HAS BEEN SIGNED, SEALED AND DATED ELECTRONICALLY.

DATE PREPARED 9/5/2024

ROUTE	STATE
60	MO
DISTRICT	SHEET NO.
SW	13

COUNTY: WEBSTER
JOB NO.: J7P3425C
CONTRACT ID.:
PROJECT NO.:
BRIDGE NO.:

DESCRIPTION	DATE

IF A SEAL IS PRESENT ON THIS SHEET IT HAS BEEN ELECTRONICALLY SEALED AND DATED.

MISSOURI HIGHWAYS AND TRANSPORTATION COMMISSION
105 WEST CAPITOL
JEFFERSON CITY, MO 65102
1-888-ASK-MODOT (1-888-275-6636)

CMT
CRAWFORD, MURPHY & TILLY, INC.
1631 WEST ELFINDALE STREET
SPRINGFIELD, MO 65807 (417) 869-6009
ENGINEERING CORPORATION - 000631
©Copyright CMT, Inc.

US 60
PLAN SHEET 10 OF 28

REV.

L:\MoDOT\20092124-00\Draw\Roadway\Sheets\013_PS_10_J7P3425C_i50.dgn 3:47:55 PM 9/5/2024

GENERAL NOTES

1. THE APPROXIMATE LOCATION OF PROPERTY LINES AS SHOWN ON THE PLANS ARE BASED ON THE BEST INFORMATION AVAILABLE TO THE COMMISSION AT THIS TIME. THIS INFORMATION IS PROVIDED BY THE COMMISSION AS-IS AND THE COMMISSION EXPRESSLY DISCLAIMS ANY REPRESENTATION OR WARRANTY AS TO THE COMPLETENESS, ACCURACY, OR SUITABILITY OF THE INFORMATION FOR ANY USE.
2. SEE GEOMETRIC SHEETS FOR INTERSECTION STATION TIES, CURVE DATA, ANGLES, BEARINGS, AND COORDINATE POINT INFORMATION.

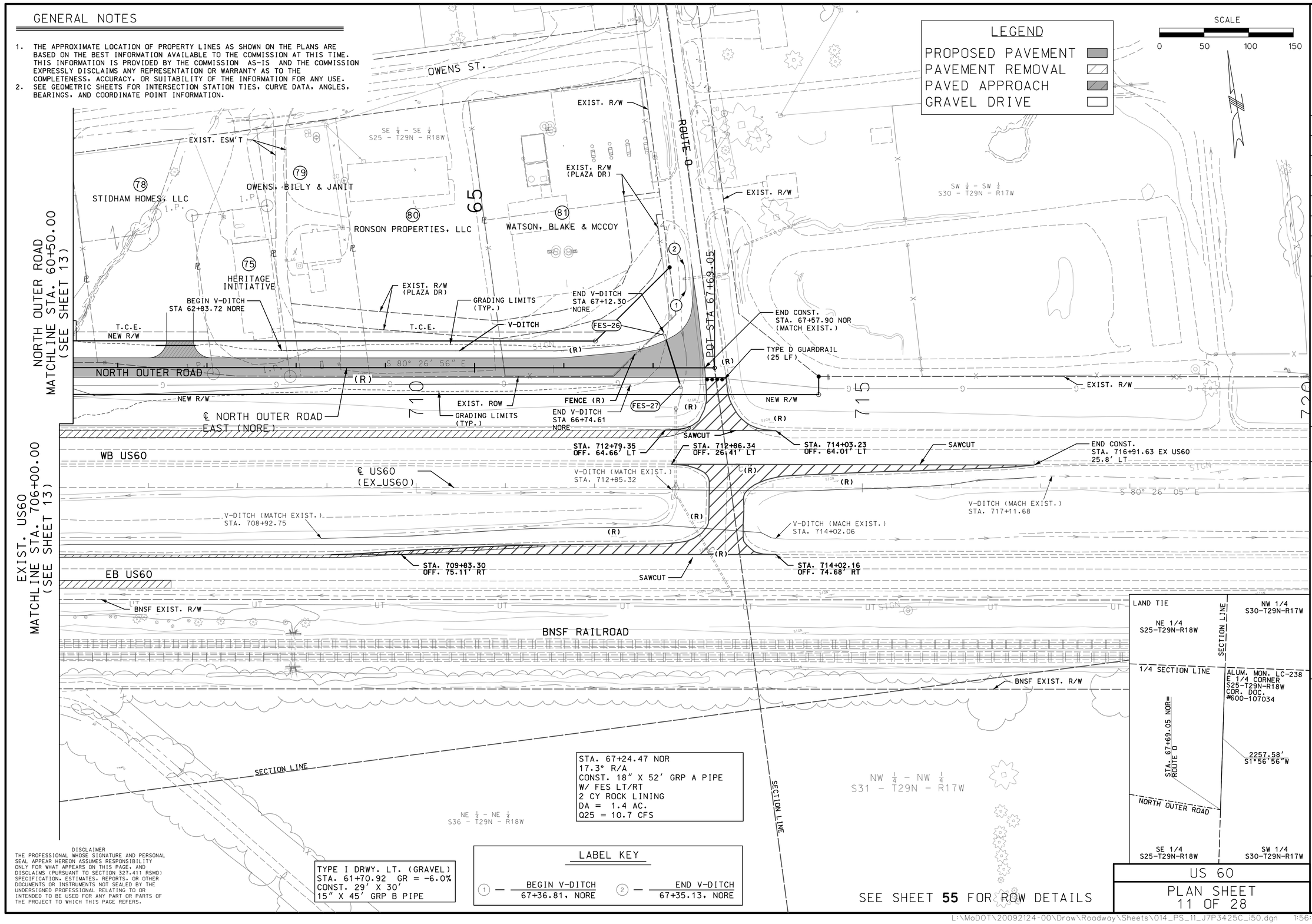

SEE SHEET **55** FOR ROW DETAILS

PLAN SHEET
11 OF 28

DISCLAIMER
THE PROFESSIONAL WHOSE SIGNATURE AND PERSONAL SEAL APPEAR HEREON ASSUMES RESPONSIBILITY ONLY FOR WHAT APPEARS ON THIS PAGE, AND DISCLAIMS (PURSUANT TO SECTION 327.411 RSMO) SPECIFICATION, ESTIMATES, REPORTS, OR OTHER DOCUMENTS OR INSTRUMENTS NOT SEALED BY THE UNDERSIGNED PROFESSIONAL RELATING TO OR INTENDED TO BE USED FOR ANY PART OR PARTS OF THE PROJECT TO WHICH THIS PAGE REFERS.

STATE OF MISSOURI
DALLAS P. JOPLIN
NUMBER PE-2011015760
PROFESSIONAL ENGINEER

THIS SHEET HAS BEEN SIGNED, SEALED AND DATED ELECTRONICALLY.

DATE PREPARED	
9/3/2024	
ROUTE	STATE
60	MO
DISTRICT	SHEET NO.
SW	14
COUNTY	
WEBSTER	
JOB NO.	
J7P3425C	
CONTRACT ID.	
PROJECT NO.	
BRIDGE NO.	

DESCRIPTION	DATE

IF A SEAL IS PRESENT ON THIS SHEET IT HAS BEEN ELECTRONICALLY SEALED AND DATED.

MISSOURI HIGHWAYS AND TRANSPORTATION COMMISSION
105 WEST CAPITOL
JEFFERSON CITY, MO 65102
1-888-ASK-MODOT (1-888-275-6636)

CMT
CRAWFORD, MURPHY & TILLY, INC.
1631 WEST ELFINDALE STREET
SPRINGFIELD, MO 65807 (417) 869-6009
ENGINEERING CORPORATION - 000631

©Copyright CMT, Inc.

REV.

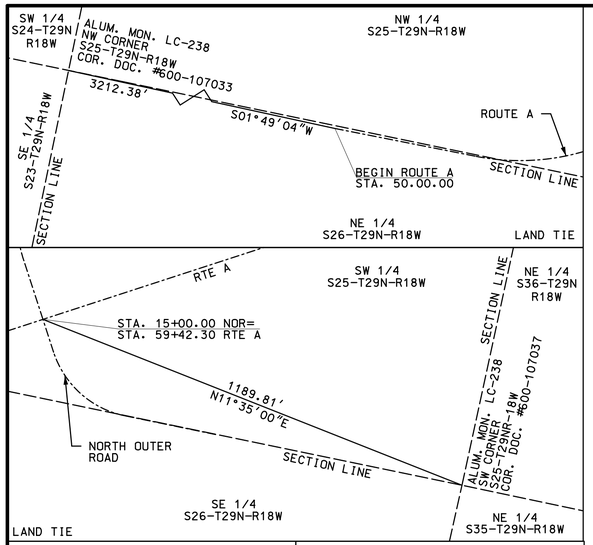

STA 13+71.75 NOR 6.0° R/A CONST. 24" X 125' GRP A PIPE W/ FES LT/RT 3 CY ROCK LINING DA = 15.8 AC Q25 = 16.8 CFS	STA 21+16.44 NOR 1.8° R/A CONST. 24" X 67' GRP A PIPE W/ FES LT/RT 3 CY ROCK LINING DA = 8.1 AC Q25 = 17.2 CFS
STA 16+46.03 NOR 8.3° R/A CONST. 18" X 188' GRP A PIPE W/ FES LT/RT 2 CY ROCK LINING DA = 3.7 AC Q25 = 10.1 CFS	STA 56+55.07 RTE A CONST. 4' X 4' X 175' BOX CULVERT 44 CY ROCK LINING DA = 6.1 AC Q25 = 88.0 CFS

GENERAL NOTES

1. THE BASIS OF BEARING IS U.S. STATE PLANE NAD83 ZONE 2401 (MISSOURI CENTRAL). VERTICAL DATUM IS NAVD88.
2. RIGHT OF WAY LIMITS FOR THIS PROJECT EXTEND FROM:
   US60 - STA. 490+89.43 TO STA. 717+11.68, 4.28 MILES
   RTE A - STA. 51+11.18 TO STA. 68+74.06, 0.33 MILES
   RTE NN - STA. 68+74.06 TO STA. 94+26.54, 0.48 MILES
   EXISTING RTE NN - STA. 10+47.97 TO STA. 17+53.70, 0.13 MILES
   NORTH OUTER ROAD - STA. 10+11.24 TO STA. 67+58.81, 1.09 MILES
   SOUTH OUTER ROAD - STA. 0+00.00 TO STA. 182+32.53, 3.45 MILES
   WORK INDICATED ON THE PLANS THAT EXTENDS BEYOND THE PROJECT LIMITS IS CONSIDERED INCIDENTAL TO AND A PART OF THE CONSTRUCTION OF THIS PROJECT.
3. SEE GEOMETRIC SHEETS FOR INTERSECTION STATION TIES, CURVE DATA, ANGLES, BEARINGS, AND COORDINATE POINT INFORMATION.
4. THE APPROXIMATE LOCATION OF PROPERTY LINES AS SHOWN ON THE PLANS ARE BASED ON THE BEST INFORMATION AVAILABLE TO THE COMMISSION AT THIS TIME. THIS INFORMATION IS PROVIDED BY THE COMMISSION AS-IS AND THE COMMISSION EXPRESSLY DISCLAIMS ANY REPRESENTATION OR WARRANTY AS TO THE COMPLETENESS, ACCURACY, OR SUITABILITY OF THE INFORMATION FOR ANY USE.
5. ANY WORK INDICATED ON THE PLANS THAT EXTENDS BEYOND THE PROJECT LIMITS IS CONSIDERED INCIDENTAL TO AND A PART OF THE CONSTRUCTION OF THIS PROJECT.

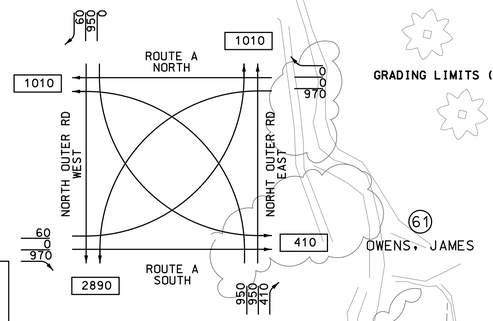

TRAFFIC FLOW DIAGRAM
ESTIMATED - 2043
TRAFFIC VOLUME

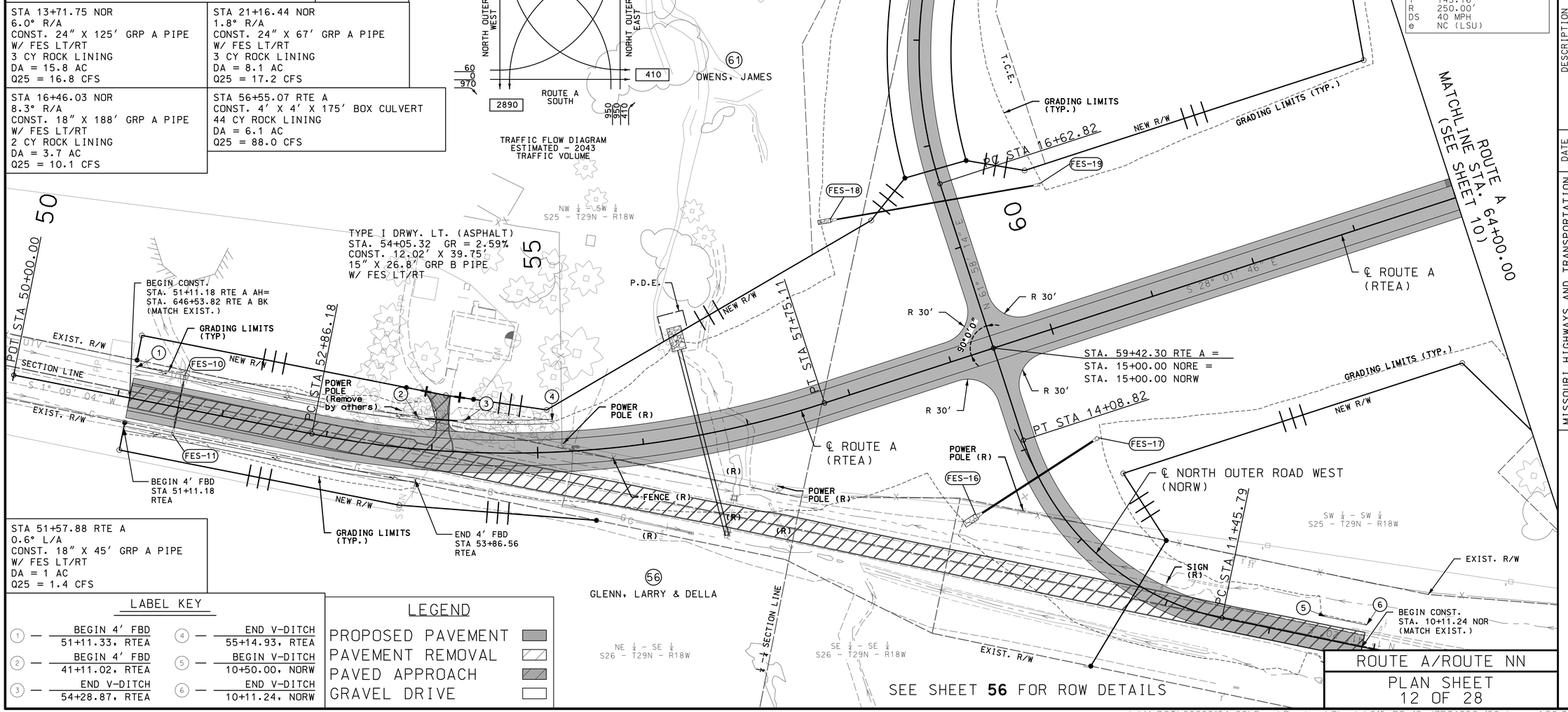

LABEL KEY

1	BEGIN 4' FBD 51+11.33, RTEA	4	END V-DITCH 55+14.93, RTEA
2	BEGIN 4' FBD 41+11.02, RTEA	5	BEGIN V-DITCH 10+50.00, NORW
3	END V-DITCH 54+28.87, RTEA	6	END V-DITCH 10+11.24, NORW

LEGEND

- PROPOSED PAVEMENT
- PAVEMENT REMOVAL
- PAVED APPROACH
- GRAVEL DRIVE

SEE SHEET **56** FOR ROW DETAILS

DISCLAIMER
THE PROFESSIONAL WHOSE SIGNATURE AND PERSONAL SEAL APPEAR HEREON ASSUMES RESPONSIBILITY ONLY FOR WHAT APPEARS ON THIS PAGE, AND DISCLAIMS (PURSUANT TO SECTION 327.411 RSMO) SPECIFICATION, ESTIMATES, REPORTS, OR OTHER DOCUMENTS OR INSTRUMENTS NOT SEALED BY THE UNDERSIGNED PROFESSIONAL RELATING TO OR INTENDED TO BE USED FOR ANY PART OR PARTS OF THE PROJECT TO WHICH THIS PAGE REFERS.

STATE OF MISSOURI
DALLAS P. JOPLIN
NUMBER PE-2011015760
PROFESSIONAL ENGINEER

THIS SHEET HAS BEEN SIGNED, SEALED AND DATED ELECTRONICALLY.

DATE PREPARED 9/3/2024

ROUTE	STATE
60	MO
DISTRICT	SHEET NO.
SW	15

COUNTY: WEBSTER
JOB NO.: J7P3425C
CONTRACT ID.:
PROJECT NO.:
BRIDGE NO.:

DESCRIPTION	DATE

IF A SEAL IS PRESENT ON THIS SHEET IT HAS BEEN ELECTRONICALLY SEALED AND DATED.

MISSOURI HIGHWAYS AND TRANSPORTATION COMMISSION
105 WEST CAPITOL
JEFFERSON CITY, MO 65102
1-888-ASK-MODOT (1-888-275-6636)

CMT
©Copyright CMT, Inc.
CRAWFORD, MURPHY & TILLY, INC.
1631 WEST ELFINDALE STREET
SPRINGFIELD, MO 65807 (417) 869-6009
ENGINEERING CORPORATION - 000631

REV.

L:\MoDOT\20092124-00\Draw\Roadway\Sheets\015_PS_12_J7P3425C_150.dgn 1:56:36 PM 9/3/2024

ROUTE NN
MATCHLINE STA. 73+00.00
(SEE SHEET 10)

SW ¼ - SW ¼
S25 - T29N - R18W

SE ¼ - SW ¼
S25 - T29N - R18W

SECTION LINE

S 28° 01' 46" E

℄ RTE. NN
(RTEA)

NEW R/W

¼ - ¼ SECTION LINE

NW ¼ - NW ¼
S36 - T29N - R18W

GRADING LIMITS (TYP.)

FES-57

PC STA 76+29.21

TREE (R)

R 50'

STA. 77+13.74 RTE NN =
STA. 182+32.53 SOR

T.C.E.

180

N 61° 55' 32" E

95°0'0"

R 50'

PC STA 177+24.94

GRADING LIMITS (TYP.)

NEW R/W

NEW R/W

℄ SOUTH OUTER
ROAD
(SOR)

T.C.E.

GRADING LIMITS (TYP.)

GRADING LIMITS (TYP.)

80

NE ¼ - NW ¼
S36 - T29N - R18W

FES-12

FES-58

NEW R/W

℄ RTE. NN
(RTEA)

85

FES-14

PT STA 86+30.54

ROUTE NN MATCHLINE
STA. 86+50.00
(SEE SHEET 17)

TREE (R)

FES-13

FES-15

NEW R/W

38
FLEETWOOD, RICHARD &
CLARA

44
COOK, BRANDON

46
DICKSON, GREG &
BRIDGETTE

CURVE RTEA_6	
PI	81+80.81
PC	76+29.21
PT	86+30.54
Δ	59° 45' 44.2" (LT)
D	5° 58' 05.9"
L	1,001.33'
T	551.60'
R	960.00'
DS	55 MPH
emax	8%
e	8%

CURVE SOR_36	
PI	178+83.83
PC	177+24.94
PT	180+36.61
Δ	27° 28' 22.1" (LT)
D	8° 48' 53.0"
L	311.67'
T	158.89'
R	650.00'
DS	45 MPH
emax	6%
e	6%

NOTE

SEE PLAN SHEET 31 FOR
SOUTH OUTER ROAD DETAILS

SEE SHEET **57**&**72** FOR ROW DETAILS

STA. 180+64.20 SOR 7.6° R/A CONST. 30" X 331' GRP A PIPE W/ FES LT/RT 4 CY ROCK LINING DA = 9.28 AC Q25 = 21.3 CFS	STA. 85+25.02 RTE NN 41.2° L/A CONST. 48" X 317' GRP A PIPE W/ FES LT/RT 18 CY ROCK LINING DA = 55.4 AC Q25 = 64.0 CFS	STA. 81+79.18 RTE NN 8.8° R/A CONST. 30" X 294' GRP A PIPE W/ FES LT/RT 4 CY ROCK LINING DA = 14.9 AC Q25 = 42 CFS

LEGEND

- PROPOSED PAVEMENT
- PAVEMENT REMOVAL
- PAVED APPROACH
- GRAVEL DRIVE

DISCLAIMER
THE PROFESSIONAL WHOSE SIGNATURE AND PERSONAL SEAL APPEAR HEREON ASSUMES RESPONSIBILITY ONLY FOR WHAT APPEARS ON THIS PAGE, AND DISCLAIMS (PURSUANT TO SECTION 327.411 RSMO) SPECIFICATION, ESTIMATES, REPORTS, OR OTHER DOCUMENTS OR INSTRUMENTS NOT SEALED BY THE UNDERSIGNED PROFESSIONAL RELATING TO OR INTENDED TO BE USED FOR ANY PART OR PARTS OF THE PROJECT TO WHICH THIS PAGE REFERS.

GENERAL NOTES

1. THE BASIS OF BEARING IS U.S. STATE PLANE NAD83 ZONE 2401 (MISSOURI CENTRAL). VERTICAL DATUM IS NAVD88.
2. RIGHT OF WAY LIMITS FOR THIS PROJECT EXTEND FROM:
   US60 – STA. 490+89.43 TO STA. 717+11.68, 4.28 MILES
   RTE A – STA. 51+11.18 TO STA. 68+74.06, 0.33 MILES
   RTE NN – STA. 68+74.06 TO STA. 94+26.54, 0.48 MILES
   EXISTING RTE NN – STA. 10+47.97 TO STA. 17+53.70, 0.13 MILES
   NORTH OUTER ROAD – STA. 10+11.24 TO STA. 67+58.81, 1.09 MILES
   SOUTH OUTER ROAD – STA. 0+00.00 TO STA. 182+32.53, 3.45 MILES
   WORK INDICATED ON THE PLANS THAT EXTENDS BEYOND THE PROJECT LIMITS IS CONSIDERED INCIDENTAL TO AND A PART OF THE CONSTRUCTION OF THIS PROJECT.
3. SEE GEOMETRIC SHEETS FOR INTERSECTION STATION TIES, CURVE DATA, ANGLES, BEARINGS, AND COORDINATE POINT INFORMATION.
4. THE APPROXIMATE LOCATION OF PROPERTY LINES AS SHOWN ON THE PLANS ARE BASED ON THE BEST INFORMATION AVAILABLE TO THE COMMISSION AT THIS TIME. THIS INFORMATION IS PROVIDED BY THE COMMISSION AS-IS AND THE COMMISSION EXPRESSLY DISCLAIMS ANY REPRESENTATION OR WARRANTY AS TO THE COMPLETENESS, ACCURACY, OR SUITABILITY OF THE INFORMATION FOR ANY USE.
5. ANY WORK INDICATED ON THE PLANS THAT EXTENDS BEYOND THE PROJECT LIMITS IS CONSIDERED INCIDENTAL TO AND A PART OF THE CONSTRUCTION OF THIS PROJECT.

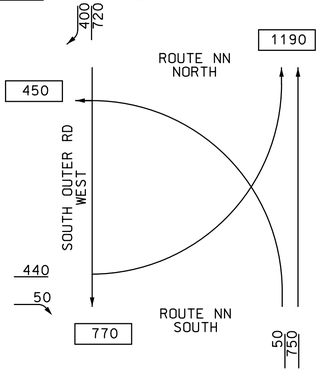

TRAFFIC FLOW DIAGRAM
ESTIMATED – 2043
TRAFFIC VOLUME

SCALE
0 50 100 150

ROUTE A/ROUTE NN
PLAN SHEET
13 OF 28

STATE OF MISSOURI
DALLAS P. JOPLIN
NUMBER PE-2011015760
PROFESSIONAL ENGINEER
THIS SHEET HAS BEEN SIGNED, SEALED AND DATED ELECTRONICALLY.

DATE PREPARED 9/3/2024

ROUTE	STATE
60	MO
DISTRICT	SHEET NO.
SW	16

COUNTY: WEBSTER
JOB NO.: J7P3425C
CONTRACT ID.:
PROJECT NO.:
BRIDGE NO.:

REV.	DESCRIPTION	DATE

IF A SEAL IS PRESENT ON THIS SHEET IT HAS BEEN ELECTRONICALLY SEALED AND DATED.

MISSOURI HIGHWAYS AND TRANSPORTATION COMMISSION
105 WEST CAPITOL
JEFFERSON CITY, MO 65102
1-888-ASK-MODOT (1-888-275-6636)

CMT
CRAWFORD, MURPHY & TILLY, INC.
1631 WEST ELFINDALE STREET
SPRINGFIELD, MO 65807 (417) 869-6009
ENGINEERING CORPORATION - 000631
© Copyright CMT, Inc.

L:\MoDOT\20092124-00\Draw\Roadway\Sheets\016_PS_13_J7P3425C_i50.dgn 1:56:38 PM 9/3/2024

GENERAL NOTES

1. THE APPROXIMATE LOCATION OF PROPERTY LINES AS SHOWN ON THE PLANS ARE BASED ON THE BEST INFORMATION AVAILABLE TO THE COMMISSION AT THIS TIME. THIS INFORMATION IS PROVIDED BY THE COMMISSION AS-IS AND THE COMMISSION EXPRESSLY DISCLAIMS ANY REPRESENTATION OR WARRANTY AS TO THE COMPLETENESS, ACCURACY, OR SUITABILITY OF THE INFORMATION FOR ANY USE.
2. SEE GEOMETRIC SHEETS FOR INTERSECTION STATION TIES, CURVE DATA, ANGLES, BEARINGS, AND COORDINATE POINT INFORMATION.

LEGEND

- PROPOSED PAVEMENT
- PAVEMENT REMOVAL
- PAVED APPROACH
- GRAVEL DRIVE

SCALE: 0 50 100 150

DISCLAIMER
THE PROFESSIONAL WHOSE SIGNATURE AND PERSONAL SEAL APPEAR HEREON ASSUMES RESPONSIBILITY ONLY FOR WHAT APPEARS ON THIS PAGE, AND DISCLAIMS (PURSUANT TO SECTION 327.411 RSMO) SPECIFICATION, ESTIMATES, REPORTS, OR OTHER DOCUMENTS OR INSTRUMENTS NOT SEALED BY THE UNDERSIGNED PROFESSIONAL RELATING TO OR INTENDED TO BE USED FOR ANY PART OR PARTS OF THE PROJECT TO WHICH THIS PAGE REFERS.

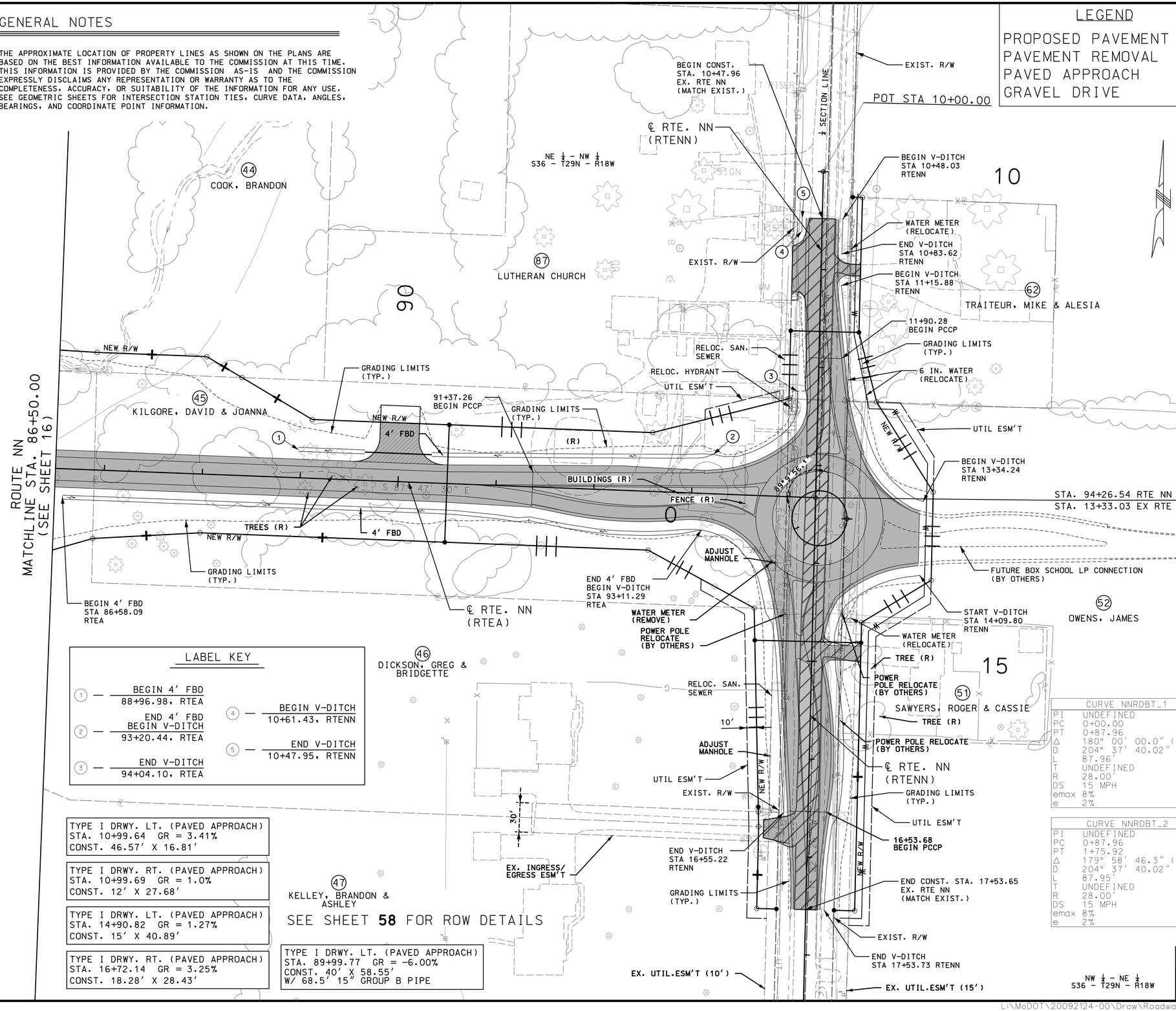

LABEL KEY

1. BEGIN 4' FBD — 88+96.98, RTEA
2. END 4' FBD / BEGIN V-DITCH — 93+20.44, RTEA
3. END V-DITCH — 94+04.10, RTEA
4. BEGIN V-DITCH — 10+61.43, RTENN
5. END V-DITCH — 10+47.95, RTENN

TYPE I DRWY. LT. (PAVED APPROACH)
STA. 10+99.64 GR = 3.41%
CONST. 46.57' X 16.81'

TYPE I DRWY. RT. (PAVED APPROACH)
STA. 10+99.69 GR = 1.0%
CONST. 12' X 27.68'

TYPE I DRWY. LT. (PAVED APPROACH)
STA. 14+90.82 GR = 1.27%
CONST. 15' X 40.89'

TYPE I DRWY. RT. (PAVED APPROACH)
STA. 16+72.14 GR = 3.25%
CONST. 18.28' X 28.43'

TYPE I DRWY. LT. (PAVED APPROACH)
STA. 89+99.77 GR = -6.00%
CONST. 40' X 58.55'
W/ 68.5' 15" GROUP B PIPE

SEE SHEET **58** FOR ROW DETAILS

CURVE NNRDBT_1	
PI	UNDEFINED
PC	0+00.00
PT	0+87.96
Δ	180° 00' 00.0" (LT)
D	204° 37' 40.02"
L	87.96'
T	UNDEFINED
R	28.00'
DS	15 MPH
emax	8%
e	2%

CURVE NNRDBT_2	
PI	UNDEFINED
PC	0+87.96
PT	1+75.92
Δ	179° 58' 46.3" (RT)
D	204° 37' 40.02"
L	87.95'
T	UNDEFINED
R	28.00'
DS	15 MPH
emax	8%
e	2%

LAND TIE
SW 1/4 S25-T29N-R18W — SE 1/4 S25-T29N-R18W
SECTION LINE — ALUM. MON. LC-238 N 1/4 CORNER S36-T29N-R18W COR. DOC. #600-107036
427.22' S02°14'18"W
EXIST. RTE NN STA. 10+00.00
EX. RTE NN 1/4 SECTION LINE
NW 1/4 S36-T29N-R18W — NE 1/4 S36-T29N-R18W

LAND TIE
SW 1/4 S25-T29N-R18W — SE 1/4 S25-T29N-R18W
SECTION LINE — ALUM. MON. LC-238 N 1/4 CORNER S36-T29N-R18W COR. DOC. #600-107036
760.23' S1°54'03"W
1/4 SECTION LINE
STA. 13+33.03 EX. RTE NN= STA. 94+26.54 RTE NN
RTE NN
EX. RTE NN
NW 1/4 S36-T29N-R18W — NE 1/4 S36-T29N-R18W

LAND TIE
NE 1/4 NW 1/4 S36-T29N-R18W — NW 1/4 NE 1/4 S36-T29N-R18W
RTE NN
1/4 SECTION LINE
EX. RTE NN
93.73' N1°57'55"W
18+00
1/4 1/4 SECTION LINE
ALUM. MON. LC-238 SW CORNER NW 1/4 NE 1/4 S36-T29N-R18W COR. DOC. #600-107035
SE 1/4 NW 1/4 S36-T29N-R18W — SW 1/4 NE 1/4 S36-T29N-R18W

ROUTE NN/EXIST. RTE NN
PLAN SHEET
14 OF 28

STATE OF MISSOURI
DALLAS P. JOPLIN
NUMBER PE-2011015760
PROFESSIONAL ENGINEER
THIS SHEET HAS BEEN SIGNED, SEALED AND DATED ELECTRONICALLY.

DATE PREPARED: 9/3/2024

ROUTE	STATE
60	MO
DISTRICT	SHEET NO.
SW	17

COUNTY: WEBSTER
JOB NO.: J7P3425C
CONTRACT ID.:
PROJECT NO.:
BRIDGE NO.:

DATE	DESCRIPTION

IF A SEAL IS PRESENT ON THIS SHEET IT HAS BEEN ELECTRONICALLY SEALED AND DATED.

MISSOURI HIGHWAYS AND TRANSPORTATION COMMISSION
105 WEST CAPITOL
JEFFERSON CITY, MO 65102
1-888-ASK-MODOT (1-888-275-6636)

CMT
© Copyright CMT, Inc.
CRAWFORD, MURPHY & TILLY, INC.
1631 WEST ELFINDALE STREET
SPRINGFIELD, MO 65807 (417) 869-6009
ENGINEERING CORPORATION - 000631

REV.

GENERAL NOTES

1. THE BASIS OF BEARING IS U.S. STATE PLANE NAD83 ZONE 2401 (MISSOURI CENTRAL). VERTICAL DATUM IS NAVD88.
2. RIGHT OF WAY LIMITS FOR THIS PROJECT EXTEND FROM:
   US60 – STA. 490+89.43 TO STA. 717+11.68, 4.28 MILES
   RTE A – STA. 51+11.18 TO STA. 68+74.06, 0.33 MILES
   RTE NN – STA. 68+74.06 TO STA. 94+26.54, 0.48 MILES
   EXISTING RTE NN – STA. 10+47.97 TO STA. 17+53.70, 0.13 MILES
   NORTH OUTER ROAD – STA. 10+11.24 TO STA. 67+58.81, 1.09 MILES
   SOUTH OUTER ROAD – STA. 0+00.00 TO STA. 182+32.53, 3.45 MILES
   WORK INDICATED ON THE PLANS THAT EXTENDS BEYOND THE PROJECT LIMITS IS CONSIDERED INCIDENTAL TO AND A PART OF THE CONSTRUCTION OF THIS PROJECT.
3. SEE GEOMETRIC SHEETS FOR INTERSECTION STATION TIES, CURVE DATA, ANGLES, BEARINGS, AND COORDINATE POINT INFORMATION.
4. THE APPROXIMATE LOCATION OF PROPERTY LINES AS SHOWN ON THE PLANS ARE BASED ON THE BEST INFORMATION AVAILABLE TO THE COMMISSION AT THIS TIME. THIS INFORMATION IS PROVIDED BY THE COMMISSION AS-IS AND THE COMMISSION EXPRESSLY DISCLAIMS ANY REPRESENTATION OR WARRANTY AS TO THE COMPLETENESS, ACCURACY, OR SUITABILITY OF THE INFORMATION FOR ANY USE.
5. ANY WORK INDICATED ON THE PLANS THAT EXTENDS BEYOND THE PROJECT LIMITS IS CONSIDERED INCIDENTAL TO AND A PART OF THE CONSTRUCTION OF THIS PROJECT.

LEGEND
- PROPOSED PAVEMENT
- PAVEMENT REMOVAL
- PAVED APPROACH
- GRAVEL DRIVE

DISCLAIMER
THE PROFESSIONAL WHOSE SIGNATURE AND PERSONAL SEAL APPEAR HEREON ASSUMES RESPONSIBILITY ONLY FOR WHAT APPEARS ON THIS PAGE, AND DISCLAIMS (PURSUANT TO SECTION 327.411 RSMO) SPECIFICATION, ESTIMATES, REPORTS, OR OTHER DOCUMENTS OR INSTRUMENTS NOT SEALED BY THE UNDERSIGNED PROFESSIONAL RELATING TO OR INTENDED TO BE USED FOR ANY PART OR PARTS OF THE PROJECT TO WHICH THIS PAGE REFERS.

SCALE
0 50 100 150

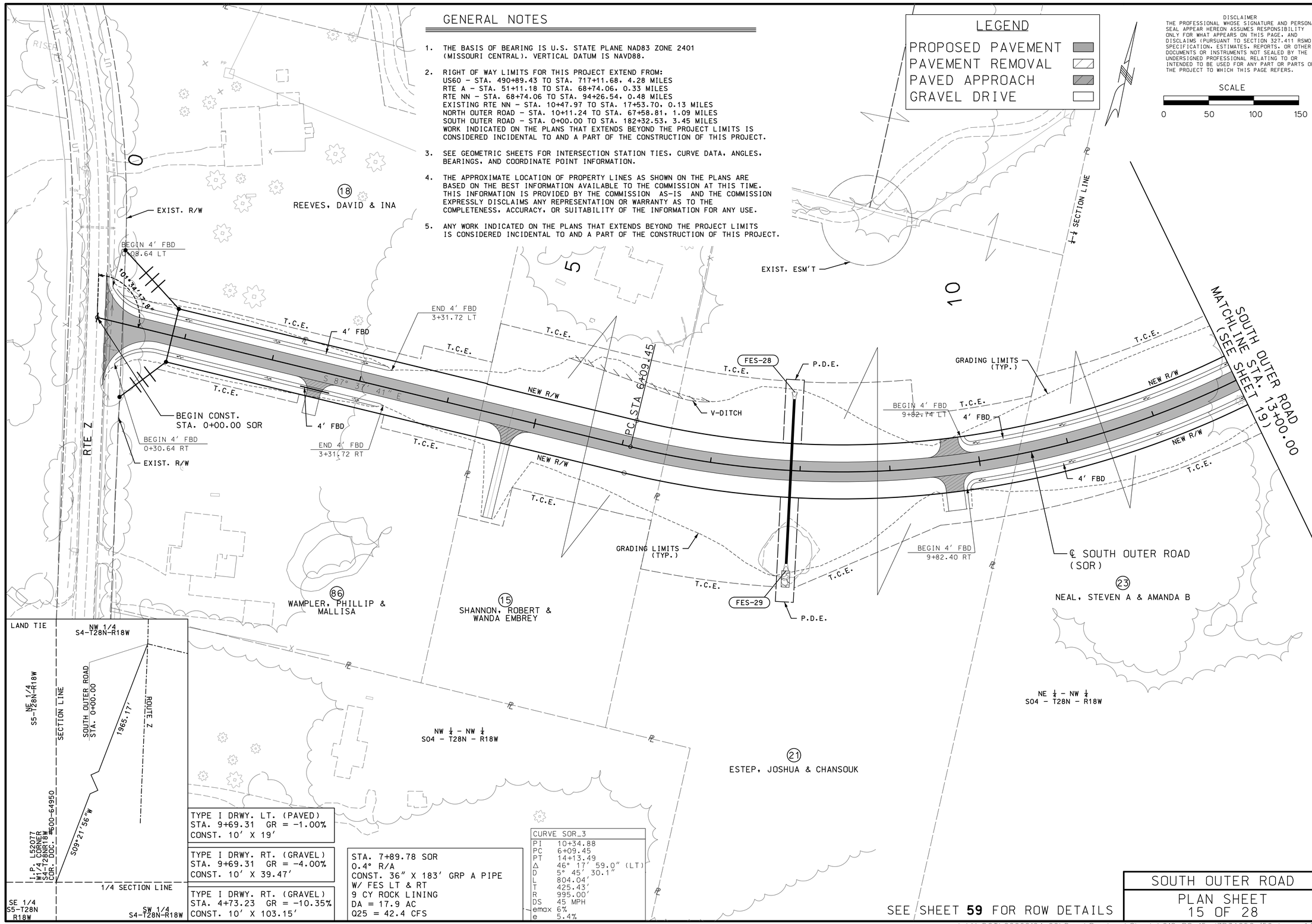

TYPE I DRWY. LT. (PAVED)
STA. 9+69.31 GR = -1.00%
CONST. 10' X 19'

TYPE I DRWY. RT. (GRAVEL)
STA. 9+69.31 GR = -4.00%
CONST. 10' X 39.47'

TYPE I DRWY. RT. (GRAVEL)
STA. 4+73.23 GR = -10.35%
CONST. 10' X 103.15'

STA. 7+89.78 SOR
0.4° R/A
CONST. 36" X 183' GRP A PIPE
W/ FES LT & RT
9 CY ROCK LINING
DA = 17.9 AC
Q25 = 42.4 CFS

CURVE SOR_3	
PI	10+34.88
PC	6+09.45
PT	14+13.49
Δ	46° 17' 59.0" (LT)
D	5° 45' 30.1"
L	804.04'
T	425.43'
R	995.00'
DS	45 MPH
emax	6%
e	5.4%

SEE SHEET **59** FOR ROW DETAILS

SOUTH OUTER ROAD
PLAN SHEET
15 OF 28

STATE OF MISSOURI
DALLAS P. JOPLIN
NUMBER PE-2011015760
PROFESSIONAL ENGINEER
THIS SHEET HAS BEEN SIGNED, SEALED AND DATED ELECTRONICALLY.

DATE PREPARED	
9/3/2024	
ROUTE	STATE
60	MO
DISTRICT	SHEET NO.
SW	18
COUNTY	
WEBSTER	
JOB NO.	
J7P3425C	
CONTRACT ID.	
PROJECT NO.	
BRIDGE NO.	

DATE	DESCRIPTION

IF A SEAL IS PRESENT ON THIS SHEET IT HAS BEEN ELECTRONICALLY SEALED AND DATED.

MISSOURI HIGHWAYS AND TRANSPORTATION COMMISSION
105 WEST CAPITOL
JEFFERSON CITY, MO 65102
1-888-ASK-MODOT (1-888-275-6636)

CMT
CRAWFORD, MURPHY & TILLY, INC.
1631 WEST ELFINDALE STREET
SPRINGFIELD, MO 65807 (417) 869-6009
ENGINEERING CORPORATION - 000631
©Copyright CMT, Inc.

REV.

SCALE
0 50 100 150

DISCLAIMER
THE PROFESSIONAL WHOSE SIGNATURE AND PERSONAL SEAL APPEAR HEREON ASSUMES RESPONSIBILITY ONLY FOR WHAT APPEARS ON THIS PAGE, AND DISCLAIMS (PURSUANT TO SECTION 327.411 RSMO) SPECIFICATION, ESTIMATES, REPORTS, OR OTHER DOCUMENTS OR INSTRUMENTS NOT SEALED BY THE UNDERSIGNED PROFESSIONAL RELATING TO OR INTENDED TO BE USED FOR ANY PART OR PARTS OF THE PROJECT TO WHICH THIS PAGE REFERS.

LAND TIE
SW 1/4 S33-T29N-R18W
SE 1/4 S33-T29N-R18W
SECTION LINE
1/4 SECTION LINE
16+00
17+00
18+00
806.27'
N67°37'32"W
ALUM. MON. LC-238
FND 1/4 CORNER S4-T28N-R18W
CDR. DOC. #600-107433
SOUTH OUTER ROAD
PC STA. 17+62.01
SOUTH OUTER ROAD
STA. 25+72.53
1/4 SECTION LINE
S14°26'35"W
30.64'
NW 1/4 S4-T28N-R18W
NE 1/4 S4-T28N-R18W

SE ¼ - SW ¼
S33 - T29N - R18W

23 NEAL, STEVEN A & AMANDA B

15 20

BNSF RR
(R) PAVEMENT & RESTORE DITCHLINE
USDOT #667641B/M.P. 228.13
(R) RR CROSSING PANELS & SIGNALS (BY BNSF)
(R) PAVEMENT & RESTORE DITCHLINE
INSTALL UTILITY GATE

SOUTH OUTER ROAD
MATCHLINE STA. 13+00.00
(SEE SHEET 18)

P.D.E.
T.C.E.
FES-30
GRADING LIMITS (TYP.)
PC STA 17+62.01
PI STA 14+13.49
END 4' FBD
14+51.89 LT
NEW R/W
N 46° 04' 20" E
℄ SOUTH OUTER ROAD (SOR)
FES-32
BEGIN 4' FBD
23+77.92 LT
FES-33
FES-31
END 4' FBD
14+03.67 RT

24 WOODS, ISAIAH & SAMANTHA
WELL HOUSE (DND)
BEGIN 4' FBD
24+22.86 RT
FENCE (R)
PI STA 25+72.53
STA. 25+66.40 SOR =
STA. 0+00.00 BLUEBIRD
91°55'11.6"
END CONSTRUCTION
STA. 0+93.58 BLUEBIRD
(MATCH EXIST.)
NE ¼ - NW ¼
S04 - T28N - R18W
25 KENSINGER, LUCAS C
POT STA 1+57.23
EXIST. R/W
BLUEBIRD LN
℄ SECTION LINE
SOUTH OUTER ROAD
MATCHLINE STA. 26+00.00
(SEE SHEET 20)

CURVE SOR_6	
PI	21+91.28
PC	17+62.01
PT	25+72.53
Δ	46° 40' 21.9" (RT)
D	5° 45' 30.1"
L	810.52'
T	429.26'
R	995.00'
DS	45 MPH
emax	6%
e	5.4%

TYPE I DRWY. LT.
STA. 14+25.24 GR = 8.50%
CONST. 10' X 39.00'

TYPE I DRWY. RT.
STA. 14+25.24 GR = -4.00%
CONST. 10' X 67.62'

TYPE I DRWY. RT.
STA. 23+97.00 GR = -6.34%
CONST. 10' X 30.49'

TYPE I DRWY. LT.
STA. 24+90.08 GR = -3.92%
CONST. 11.54' X 109.09'

TYPE I DRWY. RT.
STA. 25+66.40 GR = -4.00%
CONST. 20' X 82.57'
18" X 76' GRP B PIPE

STA. 16+94.30 SOR
0.8° L/A
CONST. 30" X 234' GRP A PIPE
W/ FES LT/RT
4 CY ROCK LINING
DA = 11.79 AC
Q25 = 35.5 CFS

STA. 21+05.66 SOR
27.4° L/A
CONST. 24" X 199' GRP A PIPE
W/ FES LT/RT
2 CY ROCK LINING
DA = 4.07 AC
Q25 = 14.0 CFS

GENERAL NOTES

1. THE APPROXIMATE LOCATION OF PROPERTY LINES AS SHOWN ON THE PLANS ARE BASED ON THE BEST INFORMATION AVAILABLE TO THE COMMISSION AT THIS TIME. THIS INFORMATION IS PROVIDED BY THE COMMISSION AS-IS AND THE COMMISSION EXPRESSLY DISCLAIMS ANY REPRESENTATION OR WARRANTY AS TO THE COMPLETENESS, ACCURACY, OR SUITABILITY OF THE INFORMATION FOR ANY USE.
2. SEE GEOMETRIC SHEETS FOR INTERSECTION STATION TIES, CURVE DATA, ANGLES, BEARINGS, AND COORDINATE POINT INFORMATION.

SEE SHEET **60** FOR ROW DETAILS

LEGEND
PROPOSED PAVEMENT
PAVEMENT REMOVAL
PAVED APPROACH
GRAVEL DRIVE

SOUTH OUTER ROAD
PLAN SHEET 16 OF 28

STATE OF MISSOURI
DALLAS P. JOPLIN
NUMBER PE-2011015760
PROFESSIONAL ENGINEER
THIS SHEET HAS BEEN SIGNED, SEALED AND DATED ELECTRONICALLY.

DATE PREPARED 9/3/2024
ROUTE 60 | STATE MO
DISTRICT SW | SHEET NO. 19
COUNTY WEBSTER
JOB NO. J7P3425C
CONTRACT ID.
PROJECT NO.
BRIDGE NO.

DATE	DESCRIPTION	REV.

IF A SEAL IS PRESENT ON THIS SHEET IT HAS BEEN ELECTRONICALLY SEALED AND DATED.

MISSOURI HIGHWAYS AND TRANSPORTATION COMMISSION
105 WEST CAPITOL
JEFFERSON CITY, MO 65102
1-888-ASK-MODOT (1-888-275-6636)

CMT
©Copyright CMT, Inc.
CRAWFORD, MURPHY & TILLY, INC.
1631 WEST ELFINDALE STREET
SPRINGFIELD, MO 65807 (417) 869-6009
ENGINEERING CORPORATION - 000631

L:\MoDOT\20092124-00\Draw\Roadway\Sheets\019_PS_16_J7P3425C_i50.dgn 1:56:47 PM 9/3/2024

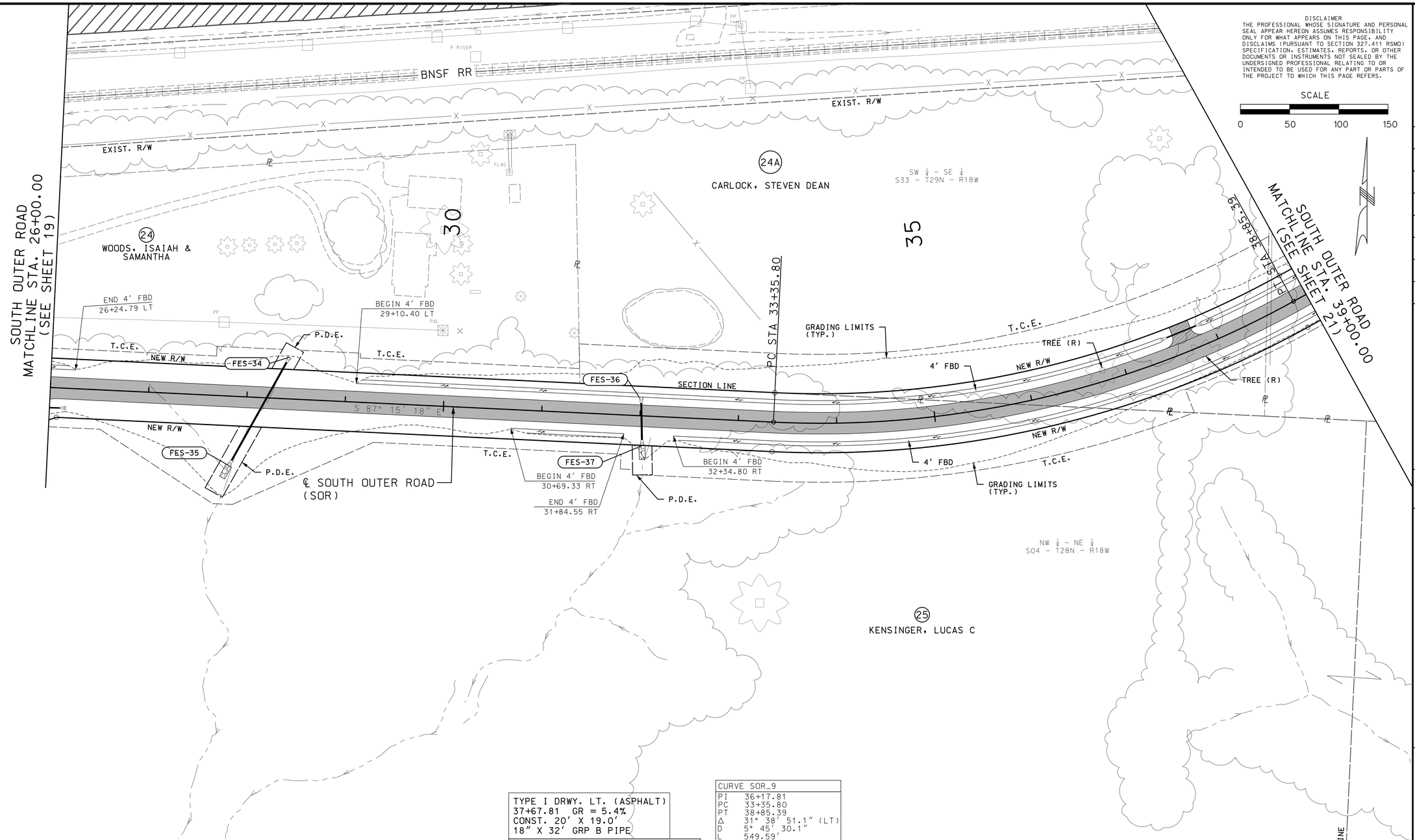

DISCLAIMER
THE PROFESSIONAL WHOSE SIGNATURE AND PERSONAL SEAL APPEAR HEREON ASSUMES RESPONSIBILITY ONLY FOR WHAT APPEARS ON THIS PAGE, AND DISCLAIMS (PURSUANT TO SECTION 327.411 RSMO) SPECIFICATION, ESTIMATES, REPORTS, OR OTHER DOCUMENTS OR INSTRUMENTS NOT SEALED BY THE UNDERSIGNED PROFESSIONAL RELATING TO OR INTENDED TO BE USED FOR ANY PART OR PARTS OF THE PROJECT TO WHICH THIS PAGE REFERS.

SCALE
0 50 100 150

STATE OF MISSOURI
DALLAS P. JOPLIN
NUMBER PE-2011015760
PROFESSIONAL ENGINEER

THIS SHEET HAS BEEN SIGNED, SEALED AND DATED ELECTRONICALLY.

DATE PREPARED	
9/3/2024	
ROUTE	STATE
60	MO
DISTRICT	SHEET NO.
SW	20
COUNTY	
WEBSTER	
JOB NO.	
J7P3425C	
CONTRACT ID.	
PROJECT NO.	
BRIDGE NO.	

IF A SEAL IS PRESENT ON THIS SHEET IT HAS BEEN ELECTRONICALLY SEALED AND DATED.

DATE	DESCRIPTION	REV.

TYPE I DRWY. LT. (ASPHALT)
37+67.81 GR = 5.4%
CONST. 20' X 19.0'
18" X 32' GRP B PIPE

STA. 28+20.11 SOR
26.5° L/A
CONST. 24" X 115' GRP A PIPE
W/ FES LT/RT
2 CY ROCK LINING
DA = 3.7 AC
Q25 = 10.7 CFS

STA. 32+01.50 SOR
3.7° R/A
CONST. 24" X 38' GRP A PIPE
W/ FES LT/RT
3 CY ROCK LINING
DA = 6.2 AC
Q25 = 14.2 CFS

CURVE SOR_9	
PI	36+17.81
PC	33+35.80
PT	38+85.39
Δ	31° 38' 51.1" (LT)
D	5° 45' 30.1"
L	549.59'
T	282.00'
R	995.00'
DS	45 MPH
emax	6%
e	5.4%

LEGEND
PROPOSED PAVEMENT
PAVEMENT REMOVAL
PAVED APPROACH
GRAVEL DRIVE

GENERAL NOTES

1. THE APPROXIMATE LOCATION OF PROPERTY LINES AS SHOWN ON THE PLANS ARE BASED ON THE BEST INFORMATION AVAILABLE TO THE COMMISSION AT THIS TIME. THIS INFORMATION IS PROVIDED BY THE COMMISSION AS-IS AND THE COMMISSION EXPRESSLY DISCLAIMS ANY REPRESENTATION OR WARRANTY AS TO THE COMPLETENESS, ACCURACY, OR SUITABILITY OF THE INFORMATION FOR ANY USE.
2. SEE GEOMETRIC SHEETS FOR INTERSECTION STATION TIES, CURVE DATA, ANGLES, BEARINGS, AND COORDINATE POINT INFORMATION.

SEE SHEET **61** FOR ROW DETAILS

SOUTH OUTER ROAD
PLAN SHEET
17 OF 28

MISSOURI HIGHWAYS AND TRANSPORTATION COMMISSION
105 WEST CAPITOL
JEFFERSON CITY, MO 65102
1-888-ASK-MODOT (1-888-275-6636)

© Copyright CMT, Inc.
CMT
CRAWFORD, MURPHY & TILLY, INC.
1631 WEST ELFINDALE STREET
SPRINGFIELD, MO 65807 (417) 869-6009
ENGINEERING CORPORATION - 000631

L:\MoDOT\20092124-00\Draw\Roadway\Sheets\020_PS_17_J7P3425C_150.dgn 1:56:50 PM 9/3/2024

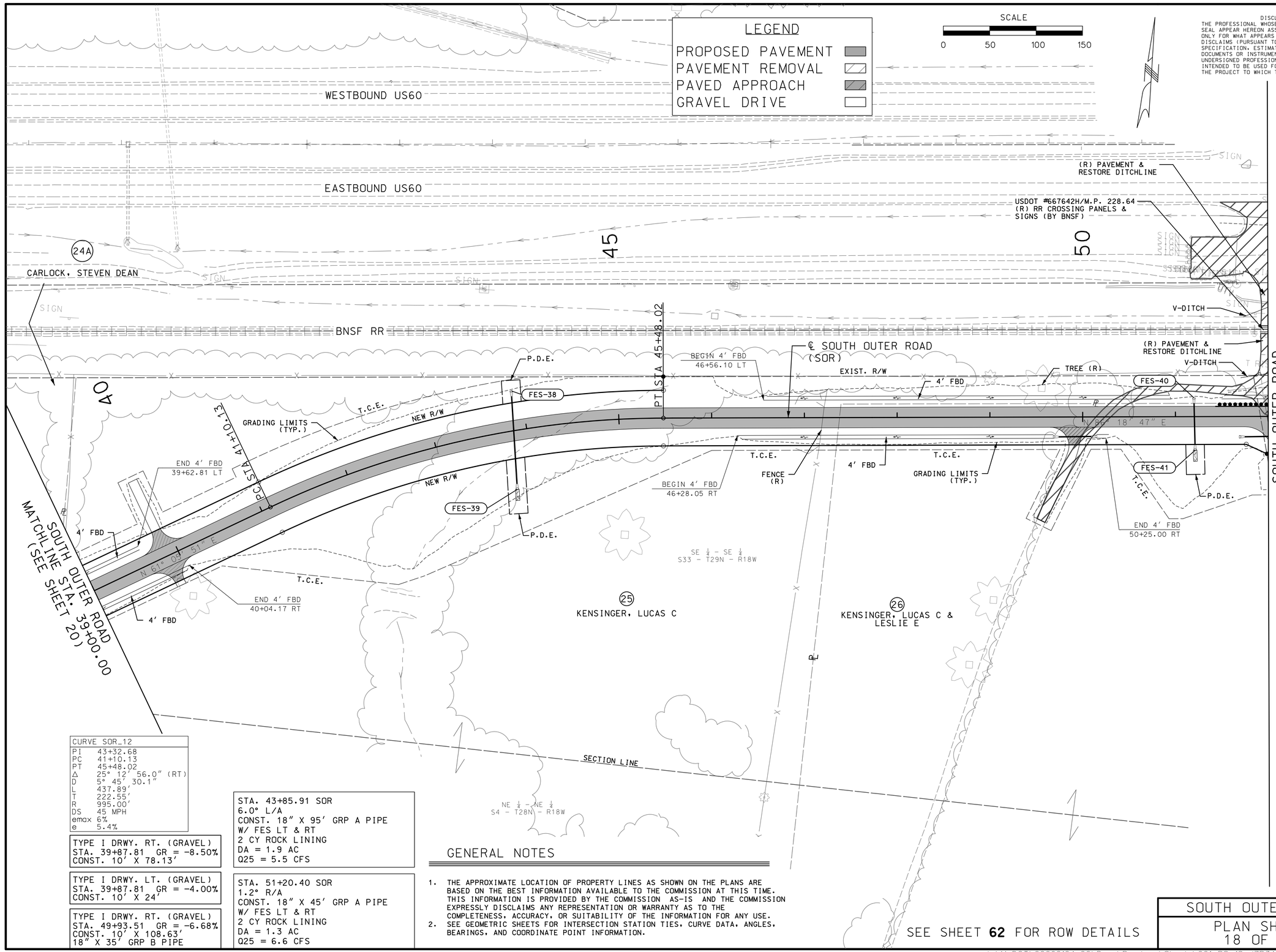

CURVE SOR_12	
PI	43+32.68
PC	41+10.13
PT	45+48.02
Δ	25° 12' 56.0" (RT)
D	5° 45' 30.1"
L	437.89'
T	222.55'
R	995.00'
DS	45 MPH
emax	6%
e	5.4%

TYPE I DRWY. RT. (GRAVEL)
STA. 39+87.81 GR = -8.50%
CONST. 10' X 78.13'

TYPE I DRWY. LT. (GRAVEL)
STA. 39+87.81 GR = -4.00%
CONST. 10' X 24'

TYPE I DRWY. RT. (GRAVEL)
STA. 49+93.51 GR = -6.68%
CONST. 10' X 108.63'
18" X 35' GRP B PIPE

STA. 43+85.91 SOR
6.0° L/A
CONST. 18" X 95' GRP A PIPE
W/ FES LT & RT
2 CY ROCK LINING
DA = 1.9 AC
Q25 = 5.5 CFS

STA. 51+20.40 SOR
1.2° R/A
CONST. 18" X 45' GRP A PIPE
W/ FES LT & RT
2 CY ROCK LINING
DA = 1.3 AC
Q25 = 6.6 CFS

GENERAL NOTES

1. THE APPROXIMATE LOCATION OF PROPERTY LINES AS SHOWN ON THE PLANS ARE BASED ON THE BEST INFORMATION AVAILABLE TO THE COMMISSION AT THIS TIME. THIS INFORMATION IS PROVIDED BY THE COMMISSION AS-IS AND THE COMMISSION EXPRESSLY DISCLAIMS ANY REPRESENTATION OR WARRANTY AS TO THE COMPLETENESS, ACCURACY, OR SUITABILITY OF THE INFORMATION FOR ANY USE.
2. SEE GEOMETRIC SHEETS FOR INTERSECTION STATION TIES, CURVE DATA, ANGLES, BEARINGS, AND COORDINATE POINT INFORMATION.

SEE SHEET **62** FOR ROW DETAILS

SOUTH OUTER ROAD
PLAN SHEET
18 OF 28

DISCLAIMER
THE PROFESSIONAL WHOSE SIGNATURE AND PERSONAL SEAL APPEAR HEREON ASSUMES RESPONSIBILITY ONLY FOR WHAT APPEARS ON THIS PAGE, AND DISCLAIMS (PURSUANT TO SECTION 327.411 RSMO) SPECIFICATION, ESTIMATES, REPORTS, OR OTHER DOCUMENTS OR INSTRUMENTS NOT SEALED BY THE UNDERSIGNED PROFESSIONAL RELATING TO OR INTENDED TO BE USED FOR ANY PART OR PARTS OF THE PROJECT TO WHICH THIS PAGE REFERS.

STATE OF MISSOURI
DALLAS P. JOPLIN
NUMBER PE-2011015760
PROFESSIONAL ENGINEER

THIS SHEET HAS BEEN SIGNED, SEALED AND DATED ELECTRONICALLY.

DATE PREPARED	
9/3/2024	
ROUTE	STATE
60	MO
DISTRICT	SHEET NO.
SW	21
COUNTY	
WEBSTER	
JOB NO.	
J7P3425C	
CONTRACT ID.	
PROJECT NO.	
BRIDGE NO.	

IF A SEAL IS PRESENT ON THIS SHEET IT HAS BEEN ELECTRONICALLY SEALED AND DATED.

DESCRIPTION	DATE

MISSOURI HIGHWAYS AND TRANSPORTATION COMMISSION
105 WEST CAPITOL
JEFFERSON CITY, MO 65102
1-888-ASK-MODOT (1-888-275-6636)

CMT
© Copyright CMT, Inc.
CRAWFORD, MURPHY & TILLY, INC.
1631 WEST ELFINDALE STREET
SPRINGFIELD, MO 65807 (417) 869-6009
ENGINEERING CORPORATION - 000631

REV.

L:\MoDOT\20092124-00\Draw\Roadway\Sheets\021_PS_18_J7P3425C_i50.dgn 1:56:53 PM 9/3/2024

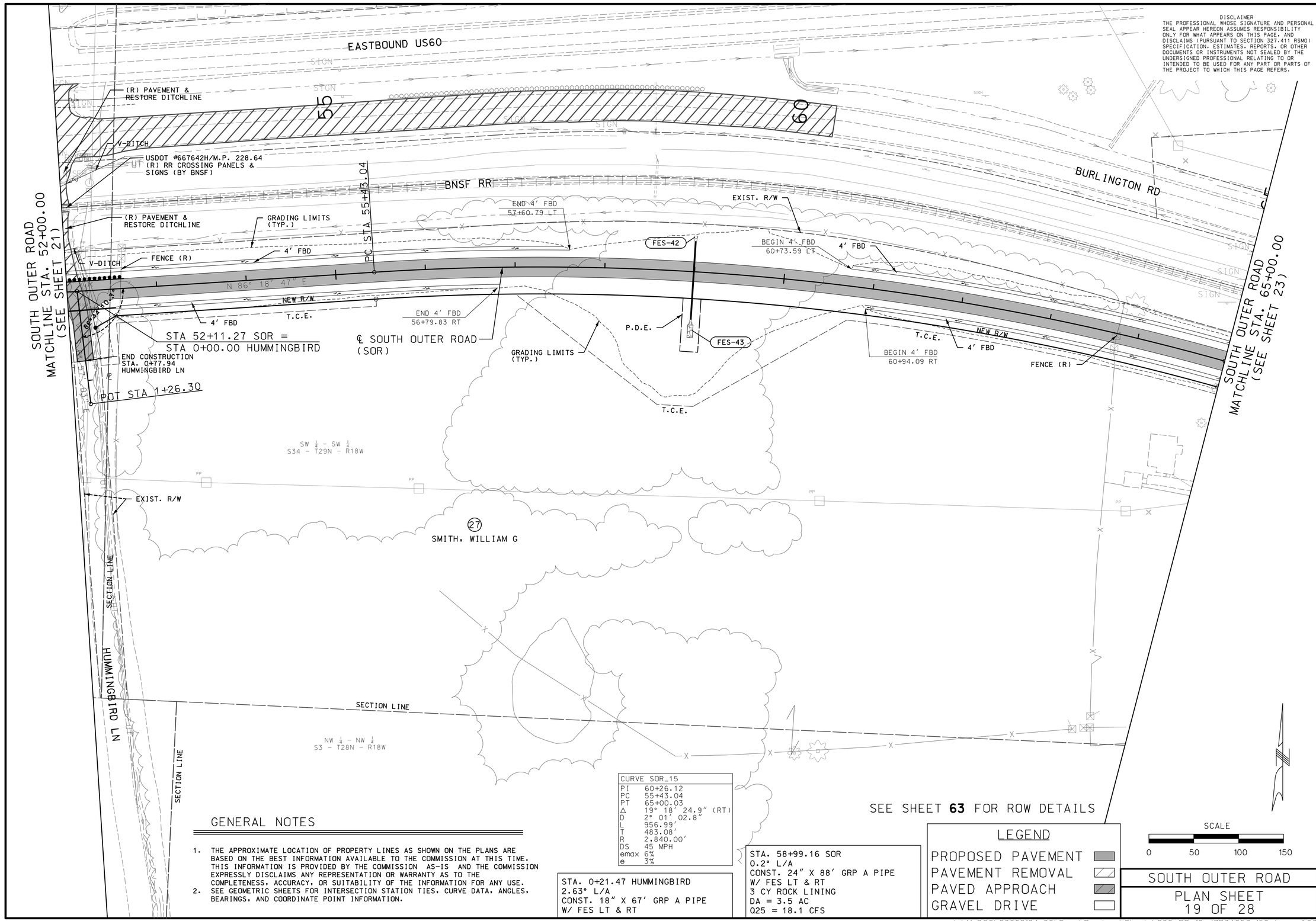

DISCLAIMER
THE PROFESSIONAL WHOSE SIGNATURE AND PERSONAL SEAL APPEAR HEREON ASSUMES RESPONSIBILITY ONLY FOR WHAT APPEARS ON THIS PAGE, AND DISCLAIMS (PURSUANT TO SECTION 327.411 RSMO) SPECIFICATION, ESTIMATES, REPORTS, OR OTHER DOCUMENTS OR INSTRUMENTS NOT SEALED BY THE UNDERSIGNED PROFESSIONAL RELATING TO OR INTENDED TO BE USED FOR ANY PART OR PARTS OF THE PROJECT TO WHICH THIS PAGE REFERS.

STATE OF MISSOURI
DALLAS P. JOPLIN
NUMBER PE-2011015760
PROFESSIONAL ENGINEER

THIS SHEET HAS BEEN SIGNED, SEALED AND DATED ELECTRONICALLY.

DATE PREPARED	
9/3/2024	
ROUTE	STATE
60	MO
DISTRICT	SHEET NO.
SW	22
COUNTY	
WEBSTER	
JOB NO.	
J7P3425C	
CONTRACT ID.	
PROJECT NO.	
BRIDGE NO.	

IF A SEAL IS PRESENT ON THIS SHEET IT HAS BEEN ELECTRONICALLY SEALED AND DATED.

CURVE SOR_15	
PI	60+26.12
PC	55+43.04
PT	65+00.03
Δ	19° 18' 24.9" (RT)
D	2° 01' 02.8"
L	956.99'
T	483.08'
R	2,840.00'
DS	45 MPH
emax	6%
e	3%

STA. 0+21.47 HUMMINGBIRD
2.63° L/A
CONST. 18" X 67' GRP A PIPE
W/ FES LT & RT

STA. 58+99.16 SOR
0.2° L/A
CONST. 24" X 88' GRP A PIPE
W/ FES LT & RT
3 CY ROCK LINING
DA = 3.5 AC
Q25 = 18.1 CFS

GENERAL NOTES

1. THE APPROXIMATE LOCATION OF PROPERTY LINES AS SHOWN ON THE PLANS ARE BASED ON THE BEST INFORMATION AVAILABLE TO THE COMMISSION AT THIS TIME. THIS INFORMATION IS PROVIDED BY THE COMMISSION AS-IS AND THE COMMISSION EXPRESSLY DISCLAIMS ANY REPRESENTATION OR WARRANTY AS TO THE COMPLETENESS, ACCURACY, OR SUITABILITY OF THE INFORMATION FOR ANY USE.
2. SEE GEOMETRIC SHEETS FOR INTERSECTION STATION TIES, CURVE DATA, ANGLES, BEARINGS, AND COORDINATE POINT INFORMATION.

SEE SHEET **63** FOR ROW DETAILS

LEGEND
- PROPOSED PAVEMENT
- PAVEMENT REMOVAL
- PAVED APPROACH
- GRAVEL DRIVE

SCALE
0 50 100 150

SOUTH OUTER ROAD
PLAN SHEET 19 OF 28

DESCRIPTION	DATE

MISSOURI HIGHWAYS AND TRANSPORTATION COMMISSION
105 WEST CAPITOL
JEFFERSON CITY, MO 65102
1-888-ASK-MODOT (1-888-275-6636)

CMT
CRAWFORD, MURPHY & TILLY, INC.
1631 WEST ELFINDALE STREET
SPRINGFIELD, MO 65807 (417) 869-6009
ENGINEERING CORPORATION - 000631
©Copyright CMT, Inc.

REV.

L:\MoDOT\20092124-00\Draw\Roadway\Sheets\022_PS_19_J7P3425C_150.dgn 1:56:55 PM 9/3/2024

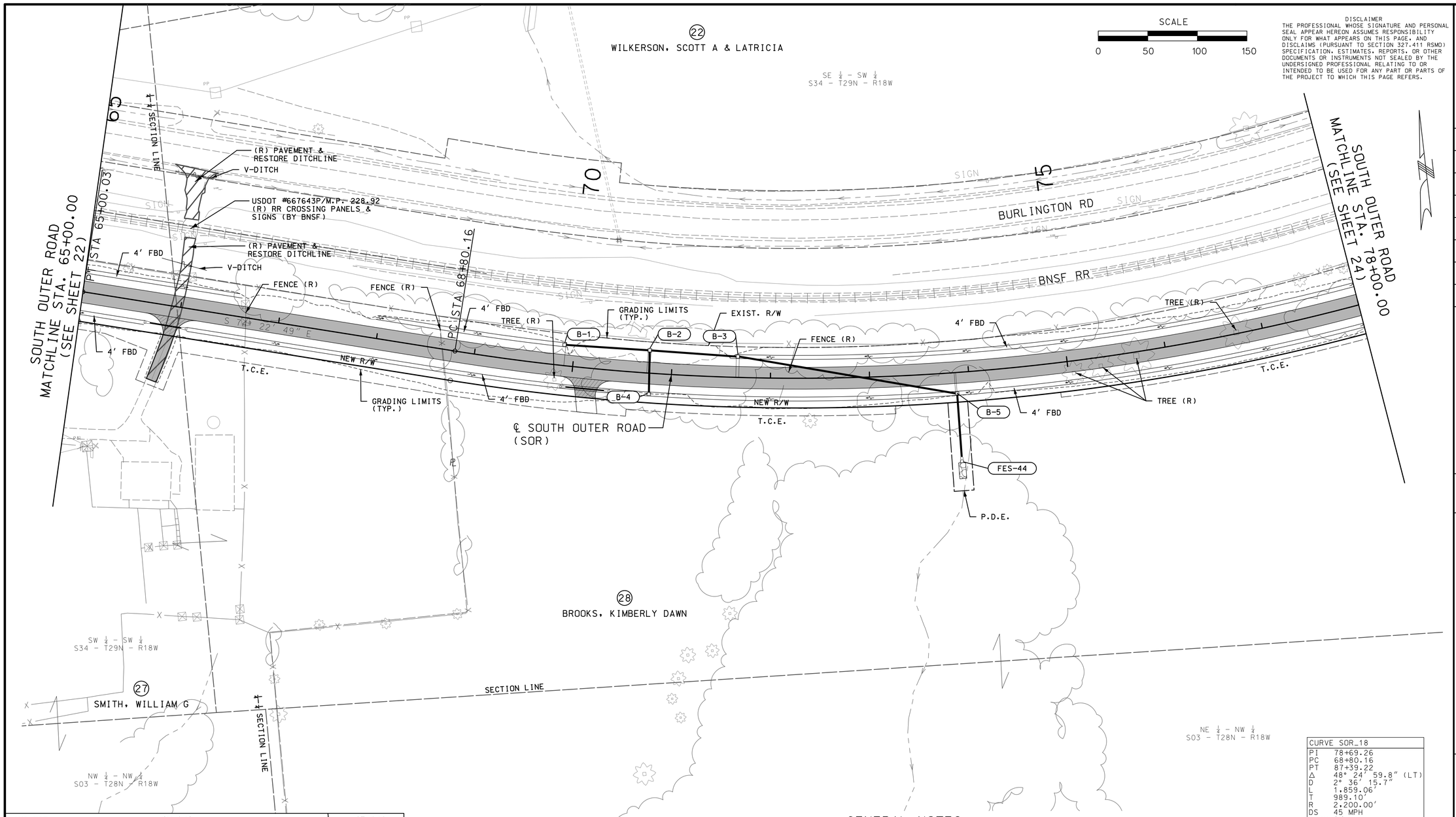

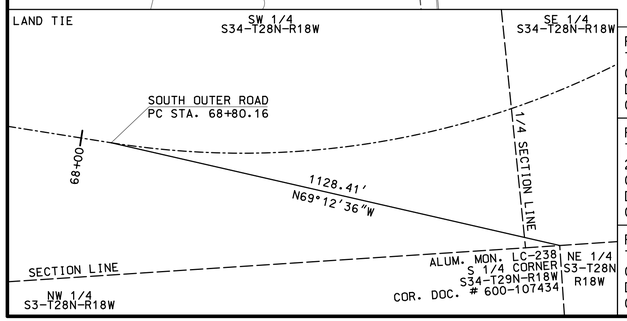

FROM STA. 69+90.98 SOR (B-1) TO STA. 70+75.01 SOR (B-2) CONST. 24" X 84' GRP A PIPE DA = 1.1 AC Q25 = 4.7 CFS
FROM STA. 70+78.53 SOR (B-2) TO STA. 70+76.53 SOR (B-4) 2.8° R/A CONST. 24" X 42' GRP A PIPE DA = 1.6 AC Q25 = 5.5 CFS
FROM STA. 70+78.04 SOR (B-2) TO STA. 71+64.99 SOR (B-3) CONST. 24" X 87' GRP A PIPE DA = 2.7 AC Q25 = 10.2 CFS
FROM STA. 71+68.02 SOR (B-3) TO STA. 73+86.98 SOR (B-5) 79.05° R/A CONST. 24" X 222' GRP A PIPE DA = 4.1 AC Q25 = 16.1 CFS
FROM STA. 73+86.98 SOR (B-5) TO STA. 73+86.98 SOR (FES-44) 0.0° L/A CONST. 24" X 63' GRP A PIPE W/ FES RT 2 CY ROCK LINING DA = 4.25 AC Q25 = 16.1 CFS

TYPE I DRWY. RT. (ASPHALT) STA. 65+98.99 GR = 1.17% CONST. 10.9' X 67.90' 18" X 31.86' GRP B PIPE
TYPE I DRWY. RT. (GRAVEL) STA. 70+00.00 GR = 5.15% CONST. 20' X 35.12' 18" X 38.6' GRP B PIPE

CURVE SOR_18	
PI	78+69.26
PC	68+80.16
PT	87+39.22
Δ	48° 24' 59.8" (LT)
D	2° 36' 15.7"
L	1,859.06'
T	989.10'
R	2,200.00'
DS	45 MPH
emax	6%
e	3.6%

GENERAL NOTES

1. THE APPROXIMATE LOCATION OF PROPERTY LINES AS SHOWN ON THE PLANS ARE BASED ON THE BEST INFORMATION AVAILABLE TO THE COMMISSION AT THIS TIME. THIS INFORMATION IS PROVIDED BY THE COMMISSION AS-IS AND THE COMMISSION EXPRESSLY DISCLAIMS ANY REPRESENTATION OR WARRANTY AS TO THE COMPLETENESS, ACCURACY, OR SUITABILITY OF THE INFORMATION FOR ANY USE.
2. SEE GEOMETRIC SHEETS FOR INTERSECTION STATION TIES, CURVE DATA, ANGLES, BEARINGS, AND COORDINATE POINT INFORMATION.

LEGEND

- PROPOSED PAVEMENT
- PAVEMENT REMOVAL
- PAVED APPROACH
- GRAVEL DRIVE

SOUTH OUTER ROAD

PLAN SHEET
20 OF 28

SEE SHEET **64** FOR ROW DETAILS

DISCLAIMER
THE PROFESSIONAL WHOSE SIGNATURE AND PERSONAL SEAL APPEAR HEREON ASSUMES RESPONSIBILITY ONLY FOR WHAT APPEARS ON THIS PAGE, AND DISCLAIMS (PURSUANT TO SECTION 327.411 RSMO) SPECIFICATION, ESTIMATES, REPORTS, OR OTHER DOCUMENTS OR INSTRUMENTS NOT SEALED BY THE UNDERSIGNED PROFESSIONAL RELATING TO OR INTENDED TO BE USED FOR ANY PART OR PARTS OF THE PROJECT TO WHICH THIS PAGE REFERS.

STATE OF MISSOURI
DALLAS P. JOPLIN
NUMBER PE-2011015760
PROFESSIONAL ENGINEER

THIS SHEET HAS BEEN SIGNED, SEALED AND DATED ELECTRONICALLY.

DATE PREPARED
11/22/2024

ROUTE	STATE
60	MO
DISTRICT	SHEET NO.
SW	23

COUNTY
WEBSTER

JOB NO.
J7P3425C

CONTRACT ID.

PROJECT NO.

BRIDGE NO.

DESCRIPTION	DATE

IF A SEAL IS PRESENT ON THIS SHEET IT HAS BEEN ELECTRONICALLY SEALED AND DATED.

MISSOURI HIGHWAYS AND TRANSPORTATION COMMISSION
105 WEST CAPITOL
JEFFERSON CITY, MO 65102
1-888-ASK-MODOT (1-888-275-6636)

CMT
©Copyright CMT, Inc.
CRAWFORD, MURPHY & TILLY, INC.
1631 WEST ELFINDALE STREET
SPRINGFIELD, MO 65807 (417) 869-6009
ENGINEERING CORPORATION - 000631

REV.

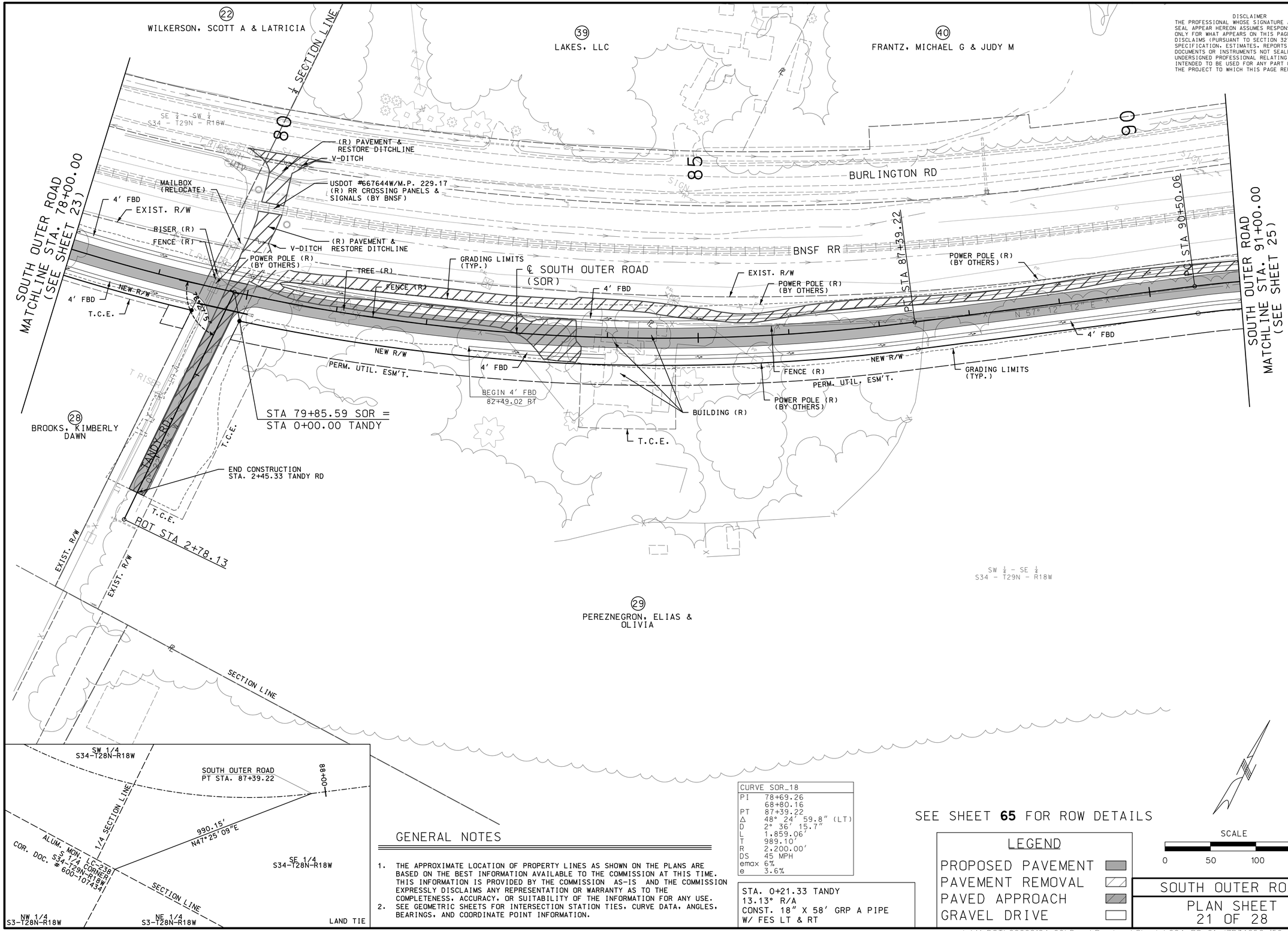

DISCLAIMER
THE PROFESSIONAL WHOSE SIGNATURE AND PERSONAL SEAL APPEAR HEREON ASSUMES RESPONSIBILITY ONLY FOR WHAT APPEARS ON THIS PAGE, AND DISCLAIMS (PURSUANT TO SECTION 327.411 RSMO) SPECIFICATION, ESTIMATES, REPORTS, OR OTHER DOCUMENTS OR INSTRUMENTS NOT SEALED BY THE UNDERSIGNED PROFESSIONAL RELATING TO OR INTENDED TO BE USED FOR ANY PART OR PARTS OF THE PROJECT TO WHICH THIS PAGE REFERS.

STATE OF MISSOURI
DALLAS P. JOPLIN
NUMBER PE-2011015760
PROFESSIONAL ENGINEER

THIS SHEET HAS BEEN SIGNED, SEALED AND DATED ELECTRONICALLY.

DATE PREPARED	
9/3/2024	
ROUTE	STATE
60	MO
DISTRICT	SHEET NO.
SW	24
COUNTY	
WEBSTER	
JOB NO.	
J7P3425C	
CONTRACT ID.	
PROJECT NO.	
BRIDGE NO.	

IF A SEAL IS PRESENT ON THIS SHEET IT HAS BEEN ELECTRONICALLY SEALED AND DATED.

REV.	DATE	DESCRIPTION

MISSOURI HIGHWAYS AND TRANSPORTATION COMMISSION

105 WEST CAPITOL
JEFFERSON CITY, MO 65102
1-888-ASK-MODOT (1-888-275-6636)

CMT
© Copyright CMT, Inc.
CRAWFORD, MURPHY & TILLY, INC.
1631 WEST ELFINDALE STREET
SPRINGFIELD, MO 65807 (417) 869-6009
ENGINEERING CORPORATION - 000631

CURVE SOR_18	
PI	78+69.26
	68+80.16
PT	87+39.22
Δ	48° 24' 59.8" (LT)
D	2° 36' 15.7"
L	1,859.06'
T	989.10'
R	2,200.00'
DS	45 MPH
emax	6%
e	3.6%

STA. 0+21.33 TANDY
13.13° R/A
CONST. 18" X 58' GRP A PIPE
W/ FES LT & RT

SEE SHEET **65** FOR ROW DETAILS

GENERAL NOTES

1. THE APPROXIMATE LOCATION OF PROPERTY LINES AS SHOWN ON THE PLANS ARE BASED ON THE BEST INFORMATION AVAILABLE TO THE COMMISSION AT THIS TIME. THIS INFORMATION IS PROVIDED BY THE COMMISSION AS-IS AND THE COMMISSION EXPRESSLY DISCLAIMS ANY REPRESENTATION OR WARRANTY AS TO THE COMPLETENESS, ACCURACY, OR SUITABILITY OF THE INFORMATION FOR ANY USE.
2. SEE GEOMETRIC SHEETS FOR INTERSECTION STATION TIES, CURVE DATA, ANGLES, BEARINGS, AND COORDINATE POINT INFORMATION.

LEGEND
- PROPOSED PAVEMENT
- PAVEMENT REMOVAL
- PAVED APPROACH
- GRAVEL DRIVE

SCALE
0 50 100 150

SOUTH OUTER ROAD
PLAN SHEET
21 OF 28

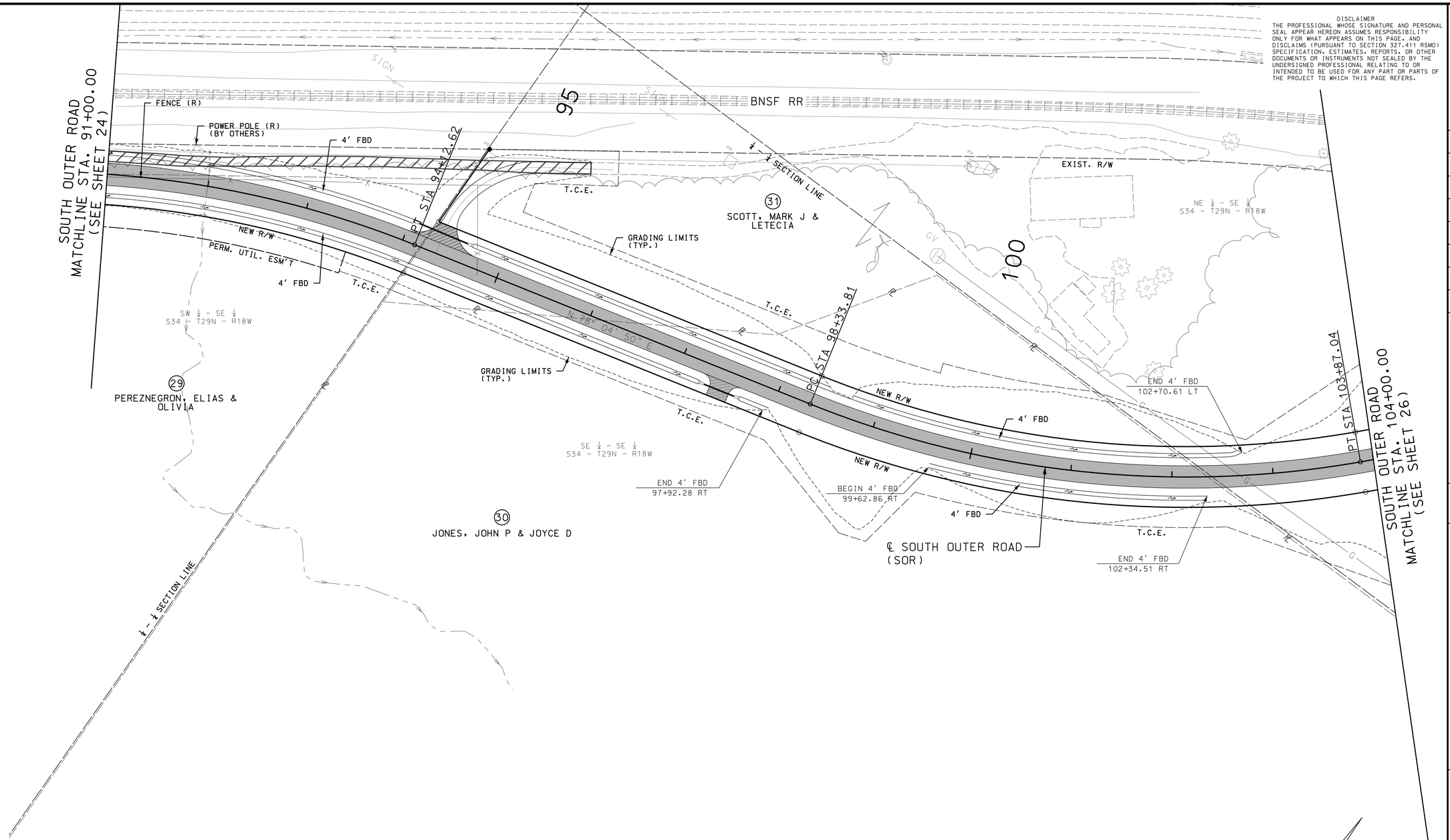

DISCLAIMER
THE PROFESSIONAL WHOSE SIGNATURE AND PERSONAL SEAL APPEAR HEREON ASSUMES RESPONSIBILITY ONLY FOR WHAT APPEARS ON THIS PAGE, AND DISCLAIMS (PURSUANT TO SECTION 327.411 RSMO) SPECIFICATION, ESTIMATES, REPORTS, OR OTHER DOCUMENTS OR INSTRUMENTS NOT SEALED BY THE UNDERSIGNED PROFESSIONAL RELATING TO OR INTENDED TO BE USED FOR ANY PART OR PARTS OF THE PROJECT TO WHICH THIS PAGE REFERS.

STATE OF MISSOURI
DALLAS P. JOPLIN
NUMBER PE-2011015760
PROFESSIONAL ENGINEER

THIS SHEET HAS BEEN SIGNED, SEALED AND DATED ELECTRONICALLY.

DATE PREPARED	
11/22/2024	
ROUTE	STATE
60	MO
DISTRICT	SHEET NO.
SW	25
COUNTY	
WEBSTER	
JOB NO.	
J7P3425C	
CONTRACT ID.	
PROJECT NO.	
BRIDGE NO.	

IF A SEAL IS PRESENT ON THIS SHEET IT HAS BEEN ELECTRONICALLY SEALED AND DATED.

DESCRIPTION	DATE

MISSOURI HIGHWAYS AND TRANSPORTATION COMMISSION

105 WEST CAPITOL
JEFFERSON CITY, MO 65102
1-888-ASK-MODOT (1-888-275-6636)

CMT
© Copyright CMT, Inc.
CRAWFORD, MURPHY & TILLY, INC.
1631 WEST ELFINDALE STREET
SPRINGFIELD, MO 65807 (417) 869-6009
ENGINEERING CORPORATION - 000631

REV.

TYPE I DRWY. RT. (ASPHALT)
97+45.00 GR = 2.0%
CONST. 20' X 19.0'
18" X 32' GRP B PIPE

CURVE SOR_21	
PI	92+33.37
PC	90+50.06
PT	94+12.62
Δ	20° 52' 37.9" (RT)
D	5° 45' 30.1"
L	362.55'
T	183.31'
R	995.00'
DS	45 MPH
emax	6%
e	5.4%

CURVE SOR_24	
PI	101+17.78
PC	98+33.81
PT	103+87.04
Δ	31° 51' 26.1" (LT)
D	5° 45' 30.1"
L	553.23'
T	283.97'
R	995.00'
DS	45 MPH
emax	6%
e	5.4%

GENERAL NOTES

1. THE APPROXIMATE LOCATION OF PROPERTY LINES AS SHOWN ON THE PLANS ARE BASED ON THE BEST INFORMATION AVAILABLE TO THE COMMISSION AT THIS TIME. THIS INFORMATION IS PROVIDED BY THE COMMISSION AS-IS AND THE COMMISSION EXPRESSLY DISCLAIMS ANY REPRESENTATION OR WARRANTY AS TO THE COMPLETENESS, ACCURACY, OR SUITABILITY OF THE INFORMATION FOR ANY USE.
2. SEE GEOMETRIC SHEETS FOR INTERSECTION STATION TIES, CURVE DATA, ANGLES, BEARINGS, AND COORDINATE POINT INFORMATION.

SEE SHEET **66** FOR ROW DETAILS

TYPE I DRWY. RT. (ASPHALT)
97+45.00 GR = 2.0%
CONST. 20' X 19.0'
18" X 32' GRP B PIPE

TYPE I DRWY. LT. (GRAVEL)
STA. 94+35.25 GR = 5.50%
CONST. 11.15' X 183.42'
18" X 52' GRP B PIPE
W/ FES LT & RT

LEGEND

- PROPOSED PAVEMENT
- PAVEMENT REMOVAL
- PAVED APPROACH
- GRAVEL DRIVE

SCALE
0 50 100 150

SOUTH OUTER ROAD
PLAN SHEET
22 OF 28

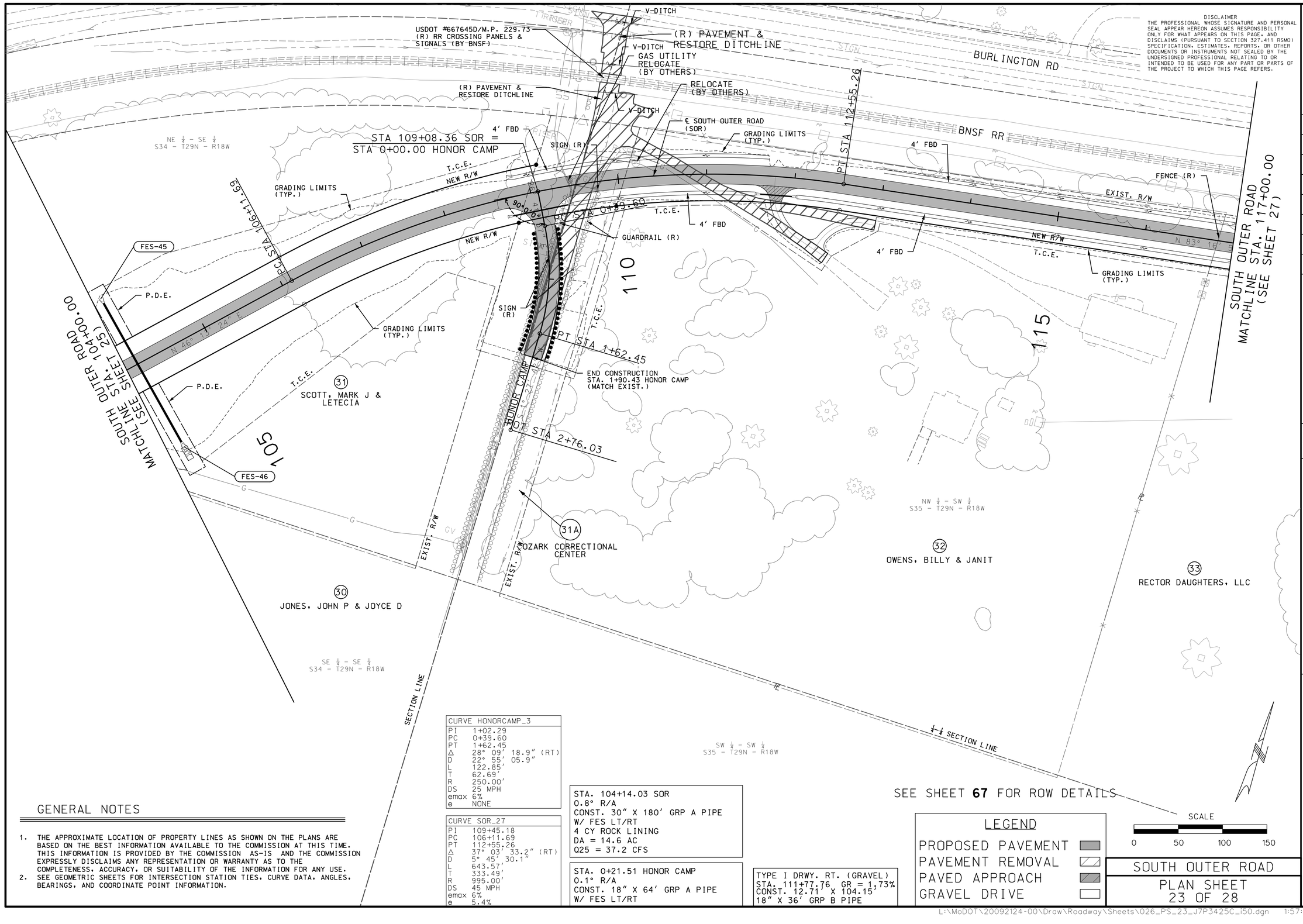

CURVE HONORCAMP_3	
PI	1+02.29
PC	0+39.60
PT	1+62.45
Δ	28° 09' 18.9" (RT)
D	22° 55' 05.9"
L	122.85'
T	62.69'
R	250.00'
DS	25 MPH
emax	6%
e	NONE

CURVE SOR_27	
PI	109+45.18
PC	106+11.69
PT	112+55.26
Δ	37° 03' 33.2" (RT)
D	5° 45' 30.1"
L	643.57'
T	333.49'
R	995.00'
DS	45 MPH
emax	6%
e	5.4%

STA. 104+14.03 SOR
0.8° R/A
CONST. 30" X 180' GRP A PIPE
W/ FES LT/RT
4 CY ROCK LINING
DA = 14.6 AC
Q25 = 37.2 CFS

STA. 0+21.51 HONOR CAMP
0.1° R/A
CONST. 18" X 64' GRP A PIPE
W/ FES LT/RT

TYPE I DRWY. RT. (GRAVEL)
STA. 111+77.76 GR = 1.73%
CONST. 12.71' X 104.15'
18" X 36' GRP B PIPE

GENERAL NOTES

1. THE APPROXIMATE LOCATION OF PROPERTY LINES AS SHOWN ON THE PLANS ARE BASED ON THE BEST INFORMATION AVAILABLE TO THE COMMISSION AT THIS TIME. THIS INFORMATION IS PROVIDED BY THE COMMISSION AS-IS AND THE COMMISSION EXPRESSLY DISCLAIMS ANY REPRESENTATION OR WARRANTY AS TO THE COMPLETENESS, ACCURACY, OR SUITABILITY OF THE INFORMATION FOR ANY USE.
2. SEE GEOMETRIC SHEETS FOR INTERSECTION STATION TIES, CURVE DATA, ANGLES, BEARINGS, AND COORDINATE POINT INFORMATION.

SEE SHEET **67** FOR ROW DETAILS

LEGEND

- PROPOSED PAVEMENT
- PAVEMENT REMOVAL
- PAVED APPROACH
- GRAVEL DRIVE

SCALE
0 50 100 150

SOUTH OUTER ROAD
PLAN SHEET
23 OF 28

DISCLAIMER
THE PROFESSIONAL WHOSE SIGNATURE AND PERSONAL SEAL APPEAR HEREON ASSUMES RESPONSIBILITY ONLY FOR WHAT APPEARS ON THIS PAGE, AND DISCLAIMS (PURSUANT TO SECTION 327.411 RSMO) SPECIFICATION, ESTIMATES, REPORTS, OR OTHER DOCUMENTS OR INSTRUMENTS NOT SEALED BY THE UNDERSIGNED PROFESSIONAL RELATING TO OR INTENDED TO BE USED FOR ANY PART OR PARTS OF THE PROJECT TO WHICH THIS PAGE REFERS.

STATE OF MISSOURI
DALLAS P. JOPLIN
NUMBER PE-2011015760
PROFESSIONAL ENGINEER

THIS SHEET HAS BEEN SIGNED, SEALED AND DATED ELECTRONICALLY.

DATE PREPARED 9/3/2024

ROUTE	STATE
60	MO
DISTRICT	SHEET NO.
SW	26

COUNTY: WEBSTER
JOB NO.: J7P3425C
CONTRACT ID.:
PROJECT NO.:
BRIDGE NO.:

DATE	DESCRIPTION

MISSOURI HIGHWAYS AND TRANSPORTATION COMMISSION
105 WEST CAPITOL
JEFFERSON CITY, MO 65102
1-888-ASK-MODOT (1-888-275-6636)

CMT
CRAWFORD, MURPHY & TILLY, INC.
1631 WEST ELFINDALE STREET
SPRINGFIELD, MO 65807 (417) 869-6009
ENGINEERING CORPORATION - 000631
©Copyright CMT, Inc.

IF A SEAL IS PRESENT ON THIS SHEET IT HAS BEEN ELECTRONICALLY SEALED AND DATED.

REV.

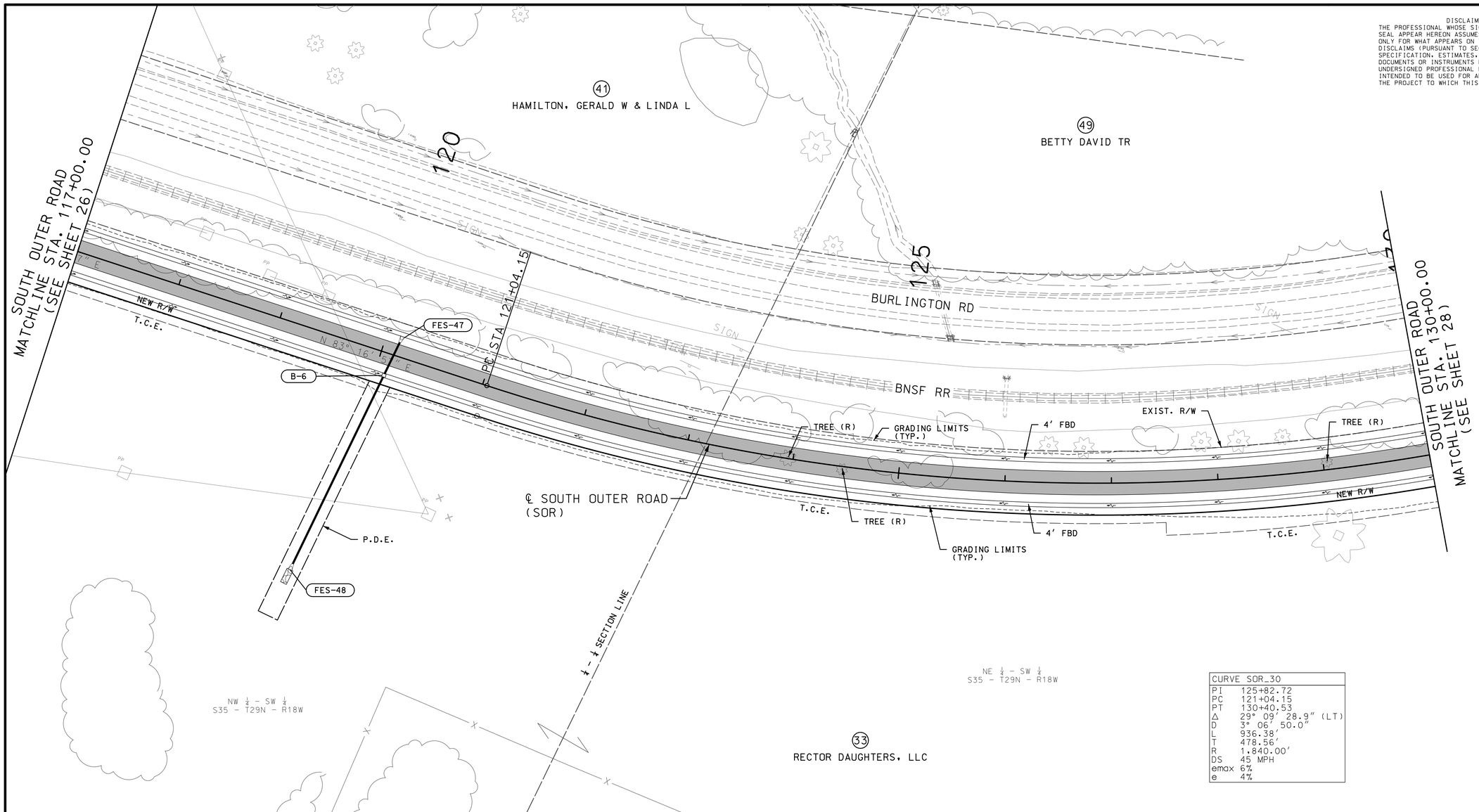

DISCLAIMER
THE PROFESSIONAL WHOSE SIGNATURE AND PERSONAL SEAL APPEAR HEREON ASSUMES RESPONSIBILITY ONLY FOR WHAT APPEARS ON THIS PAGE, AND DISCLAIMS (PURSUANT TO SECTION 327.411 RSMO) SPECIFICATION, ESTIMATES, REPORTS, OR OTHER DOCUMENTS OR INSTRUMENTS NOT SEALED BY THE UNDERSIGNED PROFESSIONAL RELATING TO OR INTENDED TO BE USED FOR ANY PART OR PARTS OF THE PROJECT TO WHICH THIS PAGE REFERS.

CURVE SOR_30	
PI	125+82.72
PC	121+04.15
PT	130+40.53
Δ	29° 09' 28.9" (LT)
D	3° 06' 50.0"
L	936.38'
T	478.56'
R	1,840.00'
DS	45 MPH
emax	6%
e	4%

GENERAL NOTES

1. THE APPROXIMATE LOCATION OF PROPERTY LINES AS SHOWN ON THE PLANS ARE BASED ON THE BEST INFORMATION AVAILABLE TO THE COMMISSION AT THIS TIME. THIS INFORMATION IS PROVIDED BY THE COMMISSION AS-IS AND THE COMMISSION EXPRESSLY DISCLAIMS ANY REPRESENTATION OR WARRANTY AS TO THE COMPLETENESS, ACCURACY, OR SUITABILITY OF THE INFORMATION FOR ANY USE.
2. SEE GEOMETRIC SHEETS FOR INTERSECTION STATION TIES, CURVE DATA, ANGLES, BEARINGS, AND COORDINATE POINT INFORMATION.

STA.120+12.10 SOR
7.6° L/A
CONST. 24" X 229' GRP A PIPE
W/ FES LT/RT
3 CY ROCK LINING
DA = 6.07 AC
Q25 = 18.9 CFS

LEGEND
PROPOSED PAVEMENT
PAVEMENT REMOVAL
PAVED APPROACH
GRAVEL DRIVE

SCALE
0 50 100 150

SEE SHEET **68** FOR ROW DETAILS

SOUTH OUTER ROAD
PLAN SHEET
24 OF 28

STATE OF MISSOURI
DALLAS P. JOPLIN
NUMBER PE-2011015760
PROFESSIONAL ENGINEER
THIS SHEET HAS BEEN SIGNED, SEALED AND DATED ELECTRONICALLY.

DATE PREPARED	
9/3/2024	
ROUTE	STATE
60	MO
DISTRICT	SHEET NO.
SW	27
COUNTY	
WEBSTER	
JOB NO.	
J7P3425C	
CONTRACT ID.	
PROJECT NO.	
BRIDGE NO.	

IF A SEAL IS PRESENT ON THIS SHEET IT HAS BEEN ELECTRONICALLY SEALED AND DATED.

DATE	DESCRIPTION	REV.

MISSOURI HIGHWAYS AND TRANSPORTATION COMMISSION
105 WEST CAPITOL
JEFFERSON CITY, MO 65102
1-888-ASK-MODOT (1-888-275-6636)

CMT
CRAWFORD, MURPHY & TILLY, INC.
1631 WEST ELFINDALE STREET
SPRINGFIELD, MO 65807 (417) 869-6009
ENGINEERING CORPORATION - 000631
©Copyright CMT, Inc.

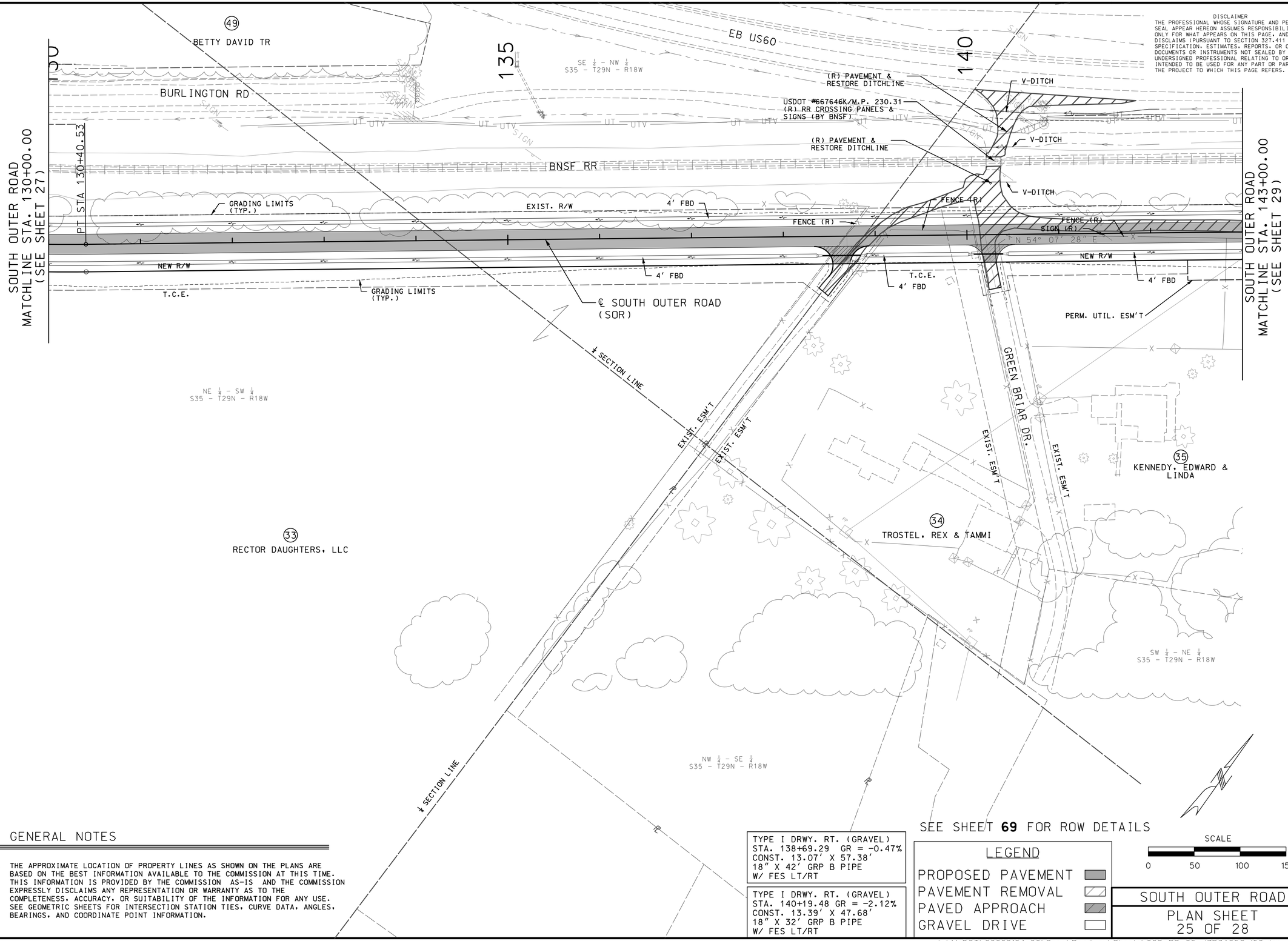

DISCLAIMER
THE PROFESSIONAL WHOSE SIGNATURE AND PERSONAL SEAL APPEAR HEREON ASSUMES RESPONSIBILITY ONLY FOR WHAT APPEARS ON THIS PAGE, AND DISCLAIMS (PURSUANT TO SECTION 327.411 RSMO) SPECIFICATION, ESTIMATES, REPORTS, OR OTHER DOCUMENTS OR INSTRUMENTS NOT SEALED BY THE UNDERSIGNED PROFESSIONAL RELATING TO OR INTENDED TO BE USED FOR ANY PART OR PARTS OF THE PROJECT TO WHICH THIS PAGE REFERS.

STATE OF MISSOURI
DALLAS P. JOPLIN
NUMBER PE-2011015760
PROFESSIONAL ENGINEER

THIS SHEET HAS BEEN SIGNED, SEALED AND DATED ELECTRONICALLY.

DATE PREPARED	
9/3/2024	
ROUTE	STATE
60	MO
DISTRICT	SHEET NO.
SW	28
COUNTY	
WEBSTER	
JOB NO.	
J7P3425C	
CONTRACT ID.	
PROJECT NO.	
BRIDGE NO.	

IF A SEAL IS PRESENT ON THIS SHEET IT HAS BEEN ELECTRONICALLY SEALED AND DATED.

DATE	DESCRIPTION	REV.

MISSOURI HIGHWAYS AND TRANSPORTATION COMMISSION
105 WEST CAPITOL
JEFFERSON CITY, MO 65102
1-888-ASK-MODOT (1-888-275-6636)

CMT
© Copyright CMT, Inc.
CRAWFORD, MURPHY & TILLY, INC.
1631 WEST ELFINDALE STREET
SPRINGFIELD, MO 65807 (417) 869-6009
ENGINEERING CORPORATION - 000631

GENERAL NOTES

1. THE APPROXIMATE LOCATION OF PROPERTY LINES AS SHOWN ON THE PLANS ARE BASED ON THE BEST INFORMATION AVAILABLE TO THE COMMISSION AT THIS TIME. THIS INFORMATION IS PROVIDED BY THE COMMISSION AS-IS AND THE COMMISSION EXPRESSLY DISCLAIMS ANY REPRESENTATION OR WARRANTY AS TO THE COMPLETENESS, ACCURACY, OR SUITABILITY OF THE INFORMATION FOR ANY USE.
2. SEE GEOMETRIC SHEETS FOR INTERSECTION STATION TIES, CURVE DATA, ANGLES, BEARINGS, AND COORDINATE POINT INFORMATION.

TYPE I DRWY. RT. (GRAVEL)
STA. 138+69.29 GR = -0.47%
CONST. 13.07' X 57.38'
18" X 42' GRP B PIPE
W/ FES LT/RT

TYPE I DRWY. RT. (GRAVEL)
STA. 140+19.48 GR = -2.12%
CONST. 13.39' X 47.68'
18" X 32' GRP B PIPE
W/ FES LT/RT

SEE SHEET **69** FOR ROW DETAILS

LEGEND
PROPOSED PAVEMENT
PAVEMENT REMOVAL
PAVED APPROACH
GRAVEL DRIVE

SCALE
0 50 100 150

SOUTH OUTER ROAD

PLAN SHEET
25 OF 28

L:\MoDOT\20092124-00\Draw\Roadway\Sheets\028_PS_25_J7P3425C_150.dgn 1:57:12 PM 9/3/2024

SOUTH OUTER ROAD
MATCHLINE STA. 143+00.00
(SEE SHEET 28)

SW ¼ - NE ¼
S35 - T29N - R18W

145 150 155

¼ - ¼ SECTION LINE

EB US60

BNSF RR

POWER POLE (R)
(BY OTHERS)

FENCE (R)

4' FBD

NEW R/W

PERM. UTIL. ESM'T.

N 54° 07' 28" E

BEGIN 4' FBD
148+93.00 LT

EXIST. R/W

FES-49

FES-50

P.D.E.

T.C.E.

℄ SOUTH OUTER ROAD
(SOR)

BEGIN 4' FBD
149+42.37 RT

GRADING LIMITS
(TYP.)

END 4' FBD
155+94.41 RT

GRAVESITE
(APPROX.)

SOUTH OUTER ROAD
MATCHLINE STA. 156+00.00
(SEE SHEET 30)

35
KENNEDY, EDWARD &
LINDA

EXIST. ESM'T

36
BOOTH, KEN & MEAGAN

SE ¼ - NE ¼
S35 - T29N - R18W

37
SMITH, BOBBY & JULIA

DISCLAIMER
THE PROFESSIONAL WHOSE SIGNATURE AND PERSONAL SEAL APPEAR HEREON ASSUMES RESPONSIBILITY ONLY FOR WHAT APPEARS ON THIS PAGE, AND DISCLAIMS (PURSUANT TO SECTION 327.411 RSMO) SPECIFICATION, ESTIMATES, REPORTS, OR OTHER DOCUMENTS OR INSTRUMENTS NOT SEALED BY THE UNDERSIGNED PROFESSIONAL RELATING TO OR INTENDED TO BE USED FOR ANY PART OR PARTS OF THE PROJECT TO WHICH THIS PAGE REFERS.

GENERAL NOTES

1. THE APPROXIMATE LOCATION OF PROPERTY LINES AS SHOWN ON THE PLANS ARE BASED ON THE BEST INFORMATION AVAILABLE TO THE COMMISSION AT THIS TIME. THIS INFORMATION IS PROVIDED BY THE COMMISSION AS-IS AND THE COMMISSION EXPRESSLY DISCLAIMS ANY REPRESENTATION OR WARRANTY AS TO THE COMPLETENESS, ACCURACY, OR SUITABILITY OF THE INFORMATION FOR ANY USE.
2. SEE GEOMETRIC SHEETS FOR INTERSECTION STATION TIES, CURVE DATA, ANGLES, BEARINGS, AND COORDINATE POINT INFORMATION.

TYPE I DRWY. RT. (GRAVEL)
STA. 147+26.15 GR = -2.02%
CONST. 10.10' X 116.47'
18" X 54' GRP B PIPE
W/ FES LT/RT

STA. 148+56.08 SOR
1.6° L/A
CONST. 30" X 42' GRP A PIPE
W/ FES LT/RT
3 CY ROCK LINING
DA = 8.4 AC
Q25 = 28.0 CFS

SEE SHEET **70** FOR ROW DETAILS

LEGEND
- PROPOSED PAVEMENT
- PAVEMENT REMOVAL
- PAVED APPROACH
- GRAVEL DRIVE

SCALE
0 50 100 150

SOUTH OUTER ROAD
PLAN SHEET
26 OF 28

STATE OF MISSOURI
DALLAS P. JOPLIN
NUMBER PE-2011015760
PROFESSIONAL ENGINEER
THIS SHEET HAS BEEN SIGNED, SEALED AND DATED ELECTRONICALLY.

DATE PREPARED	
9/3/2024	
ROUTE	STATE
60	MO
DISTRICT	SHEET NO.
SW	29
COUNTY	
WEBSTER	
JOB NO.	
J7P3425C	
CONTRACT ID.	
PROJECT NO.	
BRIDGE NO.	

IF A SEAL IS PRESENT ON THIS SHEET IT HAS BEEN ELECTRONICALLY SEALED AND DATED.

DATE	DESCRIPTION	REV.

MISSOURI HIGHWAYS AND TRANSPORTATION COMMISSION
105 WEST CAPITOL
JEFFERSON CITY, MO 65102
1-888-ASK-MODOT (1-888-275-6636)

©Copyright CMT, Inc.
CMT
CRAWFORD, MURPHY & TILLY, INC.
1631 WEST ELFINDALE STREET
SPRINGFIELD, MO 65807 (417) 869-6009
ENGINEERING CORPORATION - 000631

L:\MoDOT\20092124-00\Draw\Roadway\Sheets\029_PS_26_J7P3425C_150.dgn 1:57:15 PM 9/3/2024

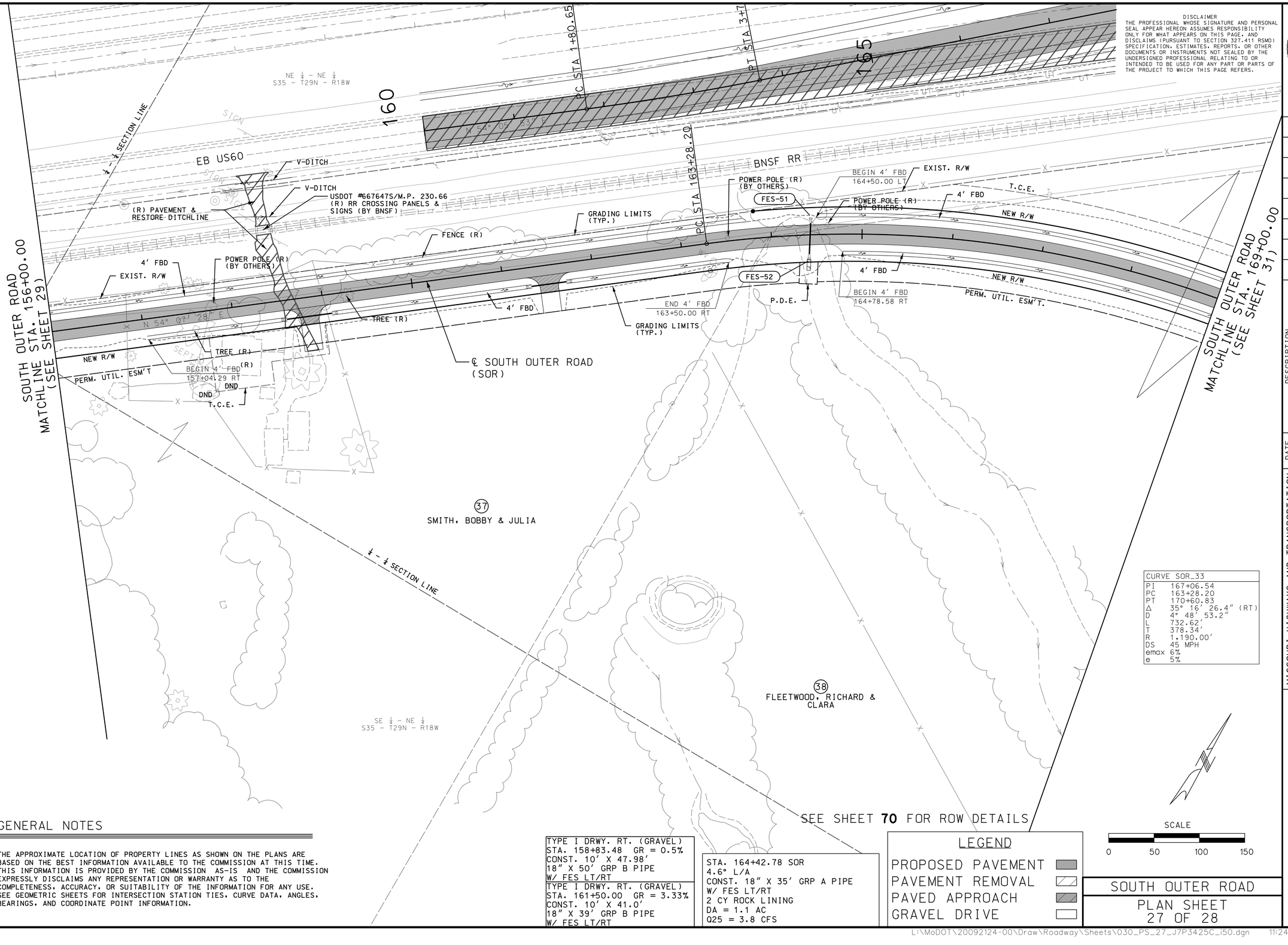

SEE SHEET **70** FOR ROW DETAILS

CURVE SOR_33	
PI	167+06.54
PC	163+28.20
PT	170+60.83
Δ	35° 16' 26.4" (RT)
D	4° 48' 53.2"
L	732.62'
T	378.34'
R	1,190.00'
DS	45 MPH
emax	6%
e	5%

TYPE I DRWY. RT. (GRAVEL)
STA. 158+83.48 GR = 0.5%
CONST. 10' X 47.98'
18" X 50' GRP B PIPE
W/ FES LT/RT

TYPE I DRWY. RT. (GRAVEL)
STA. 161+50.00 GR = 3.33%
CONST. 10' X 41.0'
18" X 39' GRP B PIPE
W/ FES LT/RT

STA. 164+42.78 SOR
4.6° L/A
CONST. 18" X 35' GRP A PIPE
W/ FES LT/RT
2 CY ROCK LINING
DA = 1.1 AC
Q25 = 3.8 CFS

LEGEND

- PROPOSED PAVEMENT
- PAVEMENT REMOVAL
- PAVED APPROACH
- GRAVEL DRIVE

SCALE

0 50 100 150

GENERAL NOTES

1. THE APPROXIMATE LOCATION OF PROPERTY LINES AS SHOWN ON THE PLANS ARE BASED ON THE BEST INFORMATION AVAILABLE TO THE COMMISSION AT THIS TIME. THIS INFORMATION IS PROVIDED BY THE COMMISSION AS-IS AND THE COMMISSION EXPRESSLY DISCLAIMS ANY REPRESENTATION OR WARRANTY AS TO THE COMPLETENESS, ACCURACY, OR SUITABILITY OF THE INFORMATION FOR ANY USE.
2. SEE GEOMETRIC SHEETS FOR INTERSECTION STATION TIES, CURVE DATA, ANGLES, BEARINGS, AND COORDINATE POINT INFORMATION.

SOUTH OUTER ROAD

PLAN SHEET
27 OF 28

DISCLAIMER
THE PROFESSIONAL WHOSE SIGNATURE AND PERSONAL SEAL APPEAR HEREON ASSUMES RESPONSIBILITY ONLY FOR WHAT APPEARS ON THIS PAGE, AND DISCLAIMS (PURSUANT TO SECTION 327.411 RSMO) SPECIFICATION, ESTIMATES, REPORTS, OR OTHER DOCUMENTS OR INSTRUMENTS NOT SEALED BY THE UNDERSIGNED PROFESSIONAL RELATING TO OR INTENDED TO BE USED FOR ANY PART OR PARTS OF THE PROJECT TO WHICH THIS PAGE REFERS.

STATE OF MISSOURI
DALLAS P. JOPLIN
NUMBER PE-2011015760
PROFESSIONAL ENGINEER

THIS SHEET HAS BEEN SIGNED, SEALED AND DATED ELECTRONICALLY.

DATE PREPARED	
11/4/2024	
ROUTE	STATE
60	MO
DISTRICT	SHEET NO.
SW	30
COUNTY	
WEBSTER	
JOB NO.	
J7P3425C	
CONTRACT ID.	
PROJECT NO.	
BRIDGE NO.	

DESCRIPTION	DATE

IF A SEAL IS PRESENT ON THIS SHEET IT HAS BEEN ELECTRONICALLY SEALED AND DATED.

MISSOURI HIGHWAYS AND TRANSPORTATION COMMISSION

105 WEST CAPITOL
JEFFERSON CITY, MO 65102
1-888-ASK-MODOT (1-888-275-6636)

CMT
© Copyright CMT, Inc.
CRAWFORD, MURPHY & TILLY, INC.
1631 WEST ELFINDALE STREET
SPRINGFIELD, MO 65807 (417) 869-6009
ENGINEERING CORPORATION - 000631

REV.

GENERAL NOTES

1. THE APPROXIMATE LOCATION OF PROPERTY LINES AS SHOWN ON THE PLANS ARE BASED ON THE BEST INFORMATION AVAILABLE TO THE COMMISSION AT THIS TIME. THIS INFORMATION IS PROVIDED BY THE COMMISSION AS-IS AND THE COMMISSION EXPRESSLY DISCLAIMS ANY REPRESENTATION OR WARRANTY AS TO THE COMPLETENESS, ACCURACY, OR SUITABILITY OF THE INFORMATION FOR ANY USE.
2. SEE GEOMETRIC SHEETS FOR INTERSECTION STATION TIES, CURVE DATA, ANGLES, BEARINGS, AND COORDINATE POINT INFORMATION.

SCALE
0 50 100 150

(R) PAVEMENT & RESTORE DITCHLINE
USDOT #667648Y/M.P. 230.89 (R) RR CROSSING PANELS & SIGNS (BY BNSF)
(R) PAVEMENT & RESTORE DITCHLINE

NW ¼ - NW ¼ S36 - T29N - R18W

SOUTH OUTER ROAD MATCHLINE STA. 169+00.00 (SEE SHEET 30)

170
T.C.E.
(DND)
PI STA 170+60.83
NEW R/W
TREE (R)
PERM. ESM'T.
T.C.E.
4' FBD
POWER POLE (R/ (BY OTHERS)
(DND)
END 4' FBD 171+92.97 RT
P.D.E.

175
END 4' FBD 172+85.75 LT
℄ SOUTH OUTER ROAD (SOR)
FES-53
4' FBD
T.C.E.
FES-54
FES-55
P.D.E.
N 89° 23' 54" E
FENCE (R)
FES-56
P.D.E.
T.C.E.
PC STA 177+24.94
GRADING LIMITS (TYP.)
NEW R/W
TREE (R)
NEW R/W
GRADING LIMITS (TYP.)
T.C.E.

180
℄ ROUTE NN (RTEA)
NEW R/W
FES-57
STA. 182+32.53 SOR = STA. 77+13.74 RTE NN
PC STA
19.93° RT
84°58'23.35"
N 61° 55' 32" E
END CONST. STA. 182+20.48 SOR
FES-58
NEW R/W

SECTION LINE
NE ¼ - NE ¼ S35 - T29N - R18W

LAND TIE
SE 1/4 S26-T29N-R18W
ALUM. MON. LC-238 NW CORNER S36-T29N-R18W COR. DOC. #600-107037
SECTION LINE
SECTION LINE
1145.31' S69°45'32"E
SW 1/4 S25-T29N-R18W
ROUTE NN
STA. 182+32.53 SOR= STA. 77+13.74 RTE NN
NE 1/4 S35-T29N-R18W
SOUTH OUTER ROAD
NW 1/4 S36-T29N-R18W

38
FLEETWOOD, RICHARD & CLARA

STA. 171+86.83 SOR
27.4° R/A
CONST. 18" X 31' GRP A PIPE
W/ FES LT/RT
4 CY ROCK LINING
DA = 1.06 AC
Q25 = 3.1 CFS

STA. 175+34.74 SOR
4.2° R/A
CONST. 24" X 98' GRP A PIPE
W/ FES LT/RT
3 CY ROCK LINING
DA = 5.09 AC
Q25 = 11.8 CFS

STA. 180+64.20 SOR
7.6° R/A
CONST. 30" X 331' GRP A PIPE
W/ FES LT/RT
4 CY ROCK LINING
DA = 9.28 AC
Q25 = 21.3 CFS

TYPE I DRWY. LT. (GRAVEL)
STA. 169+90.86 GR = -9.50%
CONST. 10.31' X 156.45'
18" X 48' GRP B PIPE
W/ FES LT/RT

TYPE I DRWY. RT. (GRAVEL)
STA. 169+90.86 GR = -4.00%
CONST. 10' X 90.53'
18" X 51' GRP B PIPE
W/ FES LT/RT

CURVE SOR_36	
PI	178+83.83
PC	177+24.94
PT	180+36.61
Δ	27° 28' 22.1" (LT)
D	8° 48' 53.0"
L	311.67'
T	158.89'
R	650.00'
DS	45 MPH
emax	6%
e	6%

SEE SHEET **57**&**72** FOR ROW DETAILS

LEGEND
PROPOSED PAVEMENT
PAVEMENT REMOVAL
PAVED APPROACH
GRAVEL DRIVE

SOUTH OUTER ROAD
PLAN SHEET 28 OF 28

DISCLAIMER
THE PROFESSIONAL WHOSE SIGNATURE AND PERSONAL SEAL APPEAR HEREON ASSUMES RESPONSIBILITY ONLY FOR WHAT APPEARS ON THIS PAGE, AND DISCLAIMS (PURSUANT TO SECTION 327.411 RSMO) SPECIFICATION, ESTIMATES, REPORTS, OR OTHER DOCUMENTS OR INSTRUMENTS NOT SEALED BY THE UNDERSIGNED PROFESSIONAL RELATING TO OR INTENDED TO BE USED FOR ANY PART OR PARTS OF THE PROJECT TO WHICH THIS PAGE REFERS.

STATE OF MISSOURI
DALLAS P. JOPLIN
NUMBER PE-2011015760
PROFESSIONAL ENGINEER

THIS SHEET HAS BEEN SIGNED, SEALED AND DATED ELECTRONICALLY.

DATE PREPARED 9/3/2024

ROUTE	STATE
60	MO
DISTRICT	SHEET NO.
SW	31

COUNTY: WEBSTER
JOB NO.: J7P3425C
CONTRACT ID.:
PROJECT NO.:
BRIDGE NO.:

DATE	DESCRIPTION

IF A SEAL IS PRESENT ON THIS SHEET IT HAS BEEN ELECTRONICALLY SEALED AND DATED.

MISSOURI HIGHWAYS AND TRANSPORTATION COMMISSION
105 WEST CAPITOL
JEFFERSON CITY, MO 65102
1-888-ASK-MODOT (1-888-275-6636)

CMT
© Copyright CMT, Inc.
CRAWFORD, MURPHY & TILLY, INC.
1631 WEST ELFINDALE STREET
SPRINGFIELD, MO 65807 (417) 869-6009
ENGINEERING CORPORATION - 000631

REV.

L:\MoDOT\20092124-00\Draw\Roadway\Sheets\031_PS_28_J7P3425C_i50.dgn 1:57:20 PM 9/3/2024

EB US60

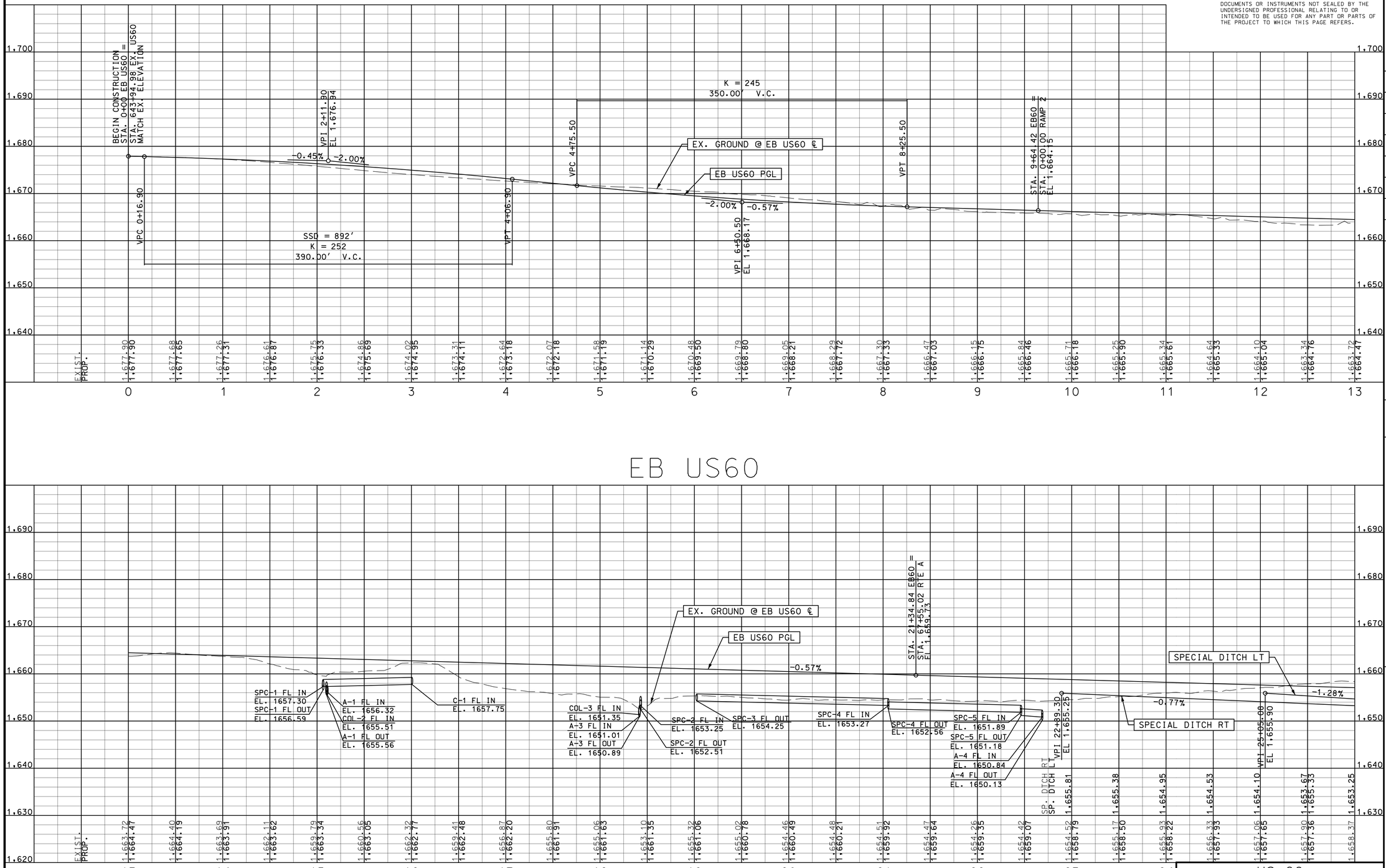

EB US60

DISCLAIMER
THE PROFESSIONAL WHOSE SIGNATURE AND PERSONAL SEAL APPEAR HEREON ASSUMES RESPONSIBILITY ONLY FOR WHAT APPEARS ON THIS PAGE, AND DISCLAIMS (PURSUANT TO SECTION 327.411 RSMO) SPECIFICATION, ESTIMATES, REPORTS, OR OTHER DOCUMENTS OR INSTRUMENTS NOT SEALED BY THE UNDERSIGNED PROFESSIONAL RELATING TO OR INTENDED TO BE USED FOR ANY PART OR PARTS OF THE PROJECT TO WHICH THIS PAGE REFERS.

STATE OF MISSOURI
DALLAS P. JOPLIN
NUMBER PE-2011015760
PROFESSIONAL ENGINEER

THIS SHEET HAS BEEN SIGNED, SEALED AND DATED ELECTRONICALLY.

DATE PREPARED
8/2/2024

ROUTE	STATE
60	MO
DISTRICT	SHEET NO.
SW	32

COUNTY
WEBSTER

JOB NO.
J7P3425C

CONTRACT ID.

PROJECT NO.

BRIDGE NO.

IF A SEAL IS PRESENT ON THIS SHEET IT HAS BEEN ELECTRONICALLY SEALED AND DATED.

REV.	DATE	DESCRIPTION

MISSOURI HIGHWAYS AND TRANSPORTATION COMMISSION
105 WEST CAPITOL
JEFFERSON CITY, MO 65102
1-888-ASK-MODOT (1-888-275-6636)

CMT
© Copyright CMT, Inc.
CRAWFORD, MURPHY & TILLY, INC.
1631 WEST ELFINDALE STREET
SPRINGFIELD, MO 65807 (417) 869-6009
ENGINEERING CORPORATION - 000631

US 60

PROFILE SHEET
1 OF 19

L:\MoDOT\20092124-00\Draw\Roadway\Sheets\032_PR_01_J7P3425C_i50.dgn 8:21:57 AM 8/2/2024

EB US60

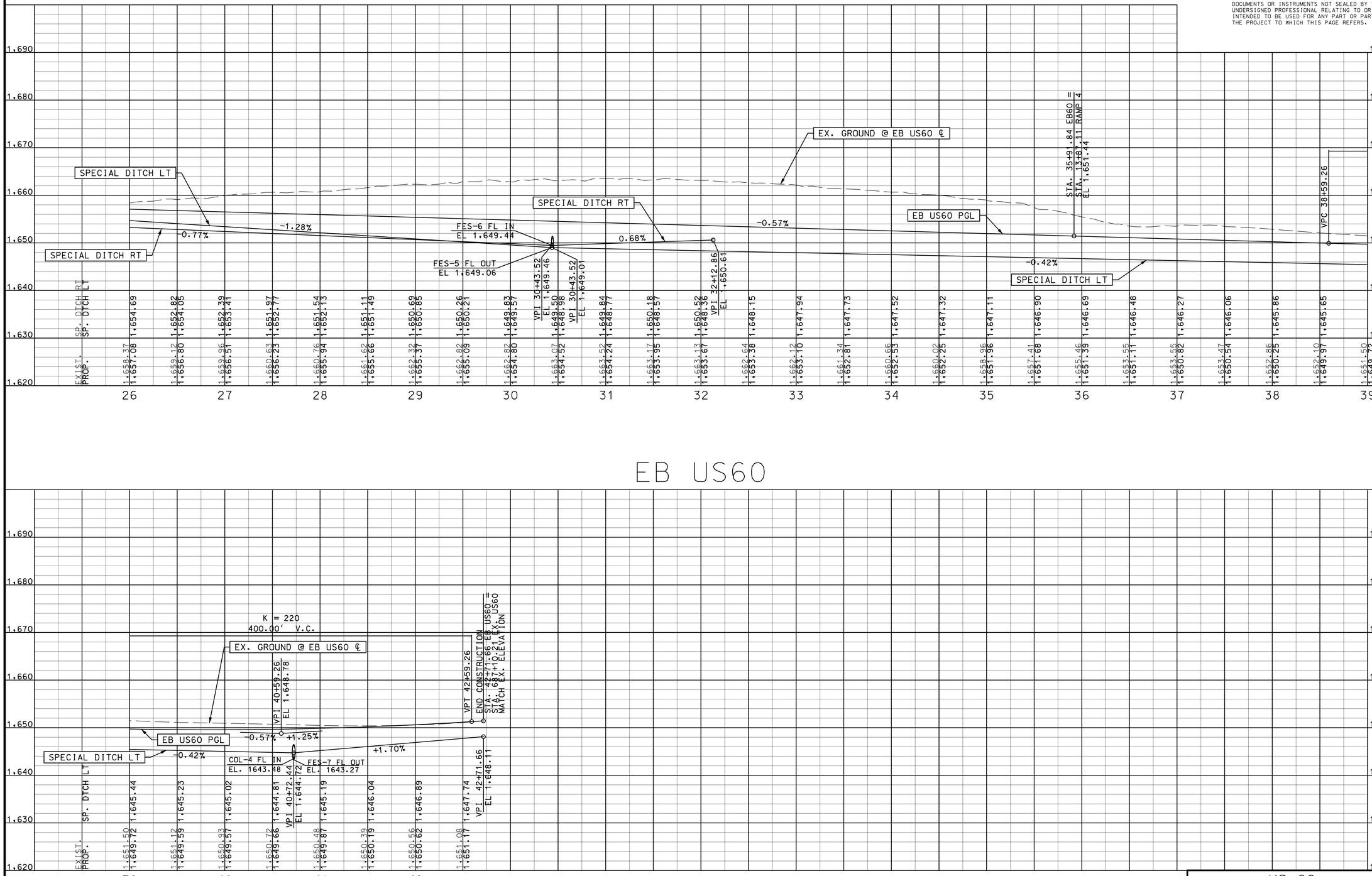

EB US60

DISCLAIMER
THE PROFESSIONAL WHOSE SIGNATURE AND PERSONAL SEAL APPEAR HEREON ASSUMES RESPONSIBILITY ONLY FOR WHAT APPEARS ON THIS PAGE, AND DISCLAIMS (PURSUANT TO SECTION 327.411 RSMO) SPECIFICATION, ESTIMATES, REPORTS, OR OTHER DOCUMENTS OR INSTRUMENTS NOT SEALED BY THE UNDERSIGNED PROFESSIONAL RELATING TO OR INTENDED TO BE USED FOR ANY PART OR PARTS OF THE PROJECT TO WHICH THIS PAGE REFERS.

STATE OF MISSOURI
DALLAS P. JOPLIN
NUMBER PE-2010015760
PROFESSIONAL ENGINEER

THIS SHEET HAS BEEN SIGNED, SEALED AND DATED ELECTRONICALLY.

DATE PREPARED
8/2/2024

ROUTE	STATE
60	MO
DISTRICT	SHEET NO.
SW	33

COUNTY
WEBSTER

JOB NO.
J7P3425C

CONTRACT ID.

PROJECT NO.

BRIDGE NO.

IF A SEAL IS PRESENT ON THIS SHEET IT HAS BEEN ELECTRONICALLY SEALED AND DATED.

REV.	DESCRIPTION	DATE

MISSOURI HIGHWAYS AND TRANSPORTATION COMMISSION
105 WEST CAPITOL
JEFFERSON CITY, MO 65102
1-888-ASK-MODOT (1-888-275-6636)

CMT
© Copyright CMT, Inc.
CRAWFORD, MURPHY & TILLY, INC.
1631 WEST ELFINDALE STREET
SPRINGFIELD, MO 65807 (417) 869-6009
ENGINEERING CORPORATION - 000631

US 60
PROFILE SHEET
2 OF 19

L:\MoDOT\20092124-00\Draw\Roadway\Sheets\033_PR_02_J7P3425C_i50.dgn 8:21:58 AM 8/2/2024

RAMP 1 (WB ON)

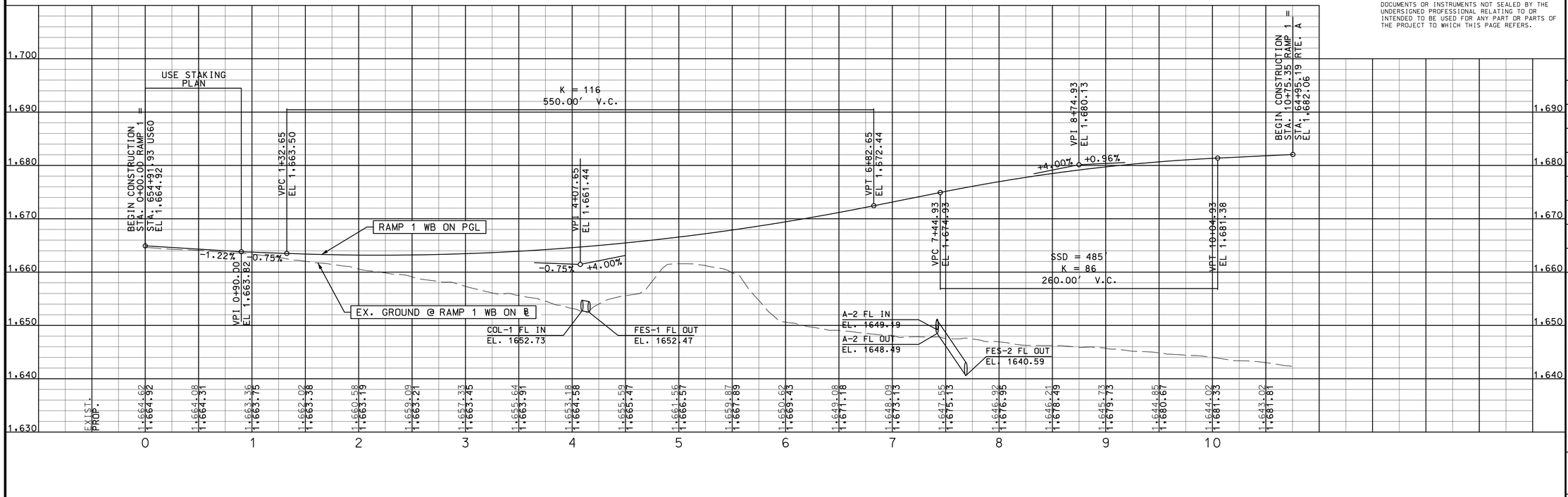

RAMP 2 (EB OFF)

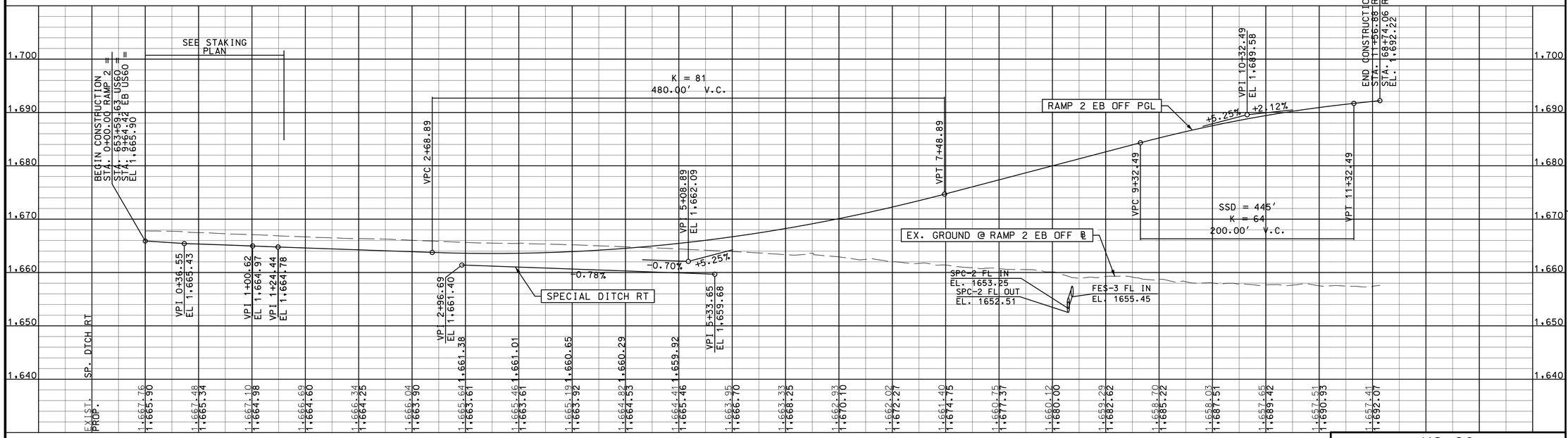

DISCLAIMER
THE PROFESSIONAL WHOSE SIGNATURE AND PERSONAL SEAL APPEAR HEREON ASSUMES RESPONSIBILITY ONLY FOR WHAT APPEARS ON THIS PAGE, AND DISCLAIMS (PURSUANT TO SECTION 327.411 RSMO) SPECIFICATION, ESTIMATES, REPORTS, OR OTHER DOCUMENTS OR INSTRUMENTS NOT SEALED BY THE UNDERSIGNED PROFESSIONAL RELATING TO OR INTENDED TO BE USED FOR ANY PART OR PARTS OF THE PROJECT TO WHICH THIS PAGE REFERS.

STATE OF MISSOURI
DALLAS P. JOPLIN
NUMBER PE-2011015760
PROFESSIONAL ENGINEER

THIS SHEET HAS BEEN SIGNED, SEALED AND DATED ELECTRONICALLY.

DATE PREPARED
8/2/2024

ROUTE	STATE
60	MO
DISTRICT	SHEET NO.
SW	34

COUNTY
WEBSTER

JOB NO.
J7P3425C

CONTRACT ID.

PROJECT NO.

BRIDGE NO.

DATE	DESCRIPTION	REV.

IF A SEAL IS PRESENT ON THIS SHEET IT HAS BEEN ELECTRONICALLY SEALED AND DATED.

MISSOURI HIGHWAYS AND TRANSPORTATION COMMISSION
105 WEST CAPITOL
JEFFERSON CITY, MO 65102
1-888-ASK-MODOT (1-888-275-6636)

CMT
CRAWFORD, MURPHY & TILLY, INC.
1631 WEST ELFINDALE STREET
SPRINGFIELD, MO 65807 (417) 869-6009
ENGINEERING CORPORATION - 000631

© Copyright CMT, Inc.

US 60

PROFILE SHEET
3 OF 19

RAMP 3 (WB OFF)

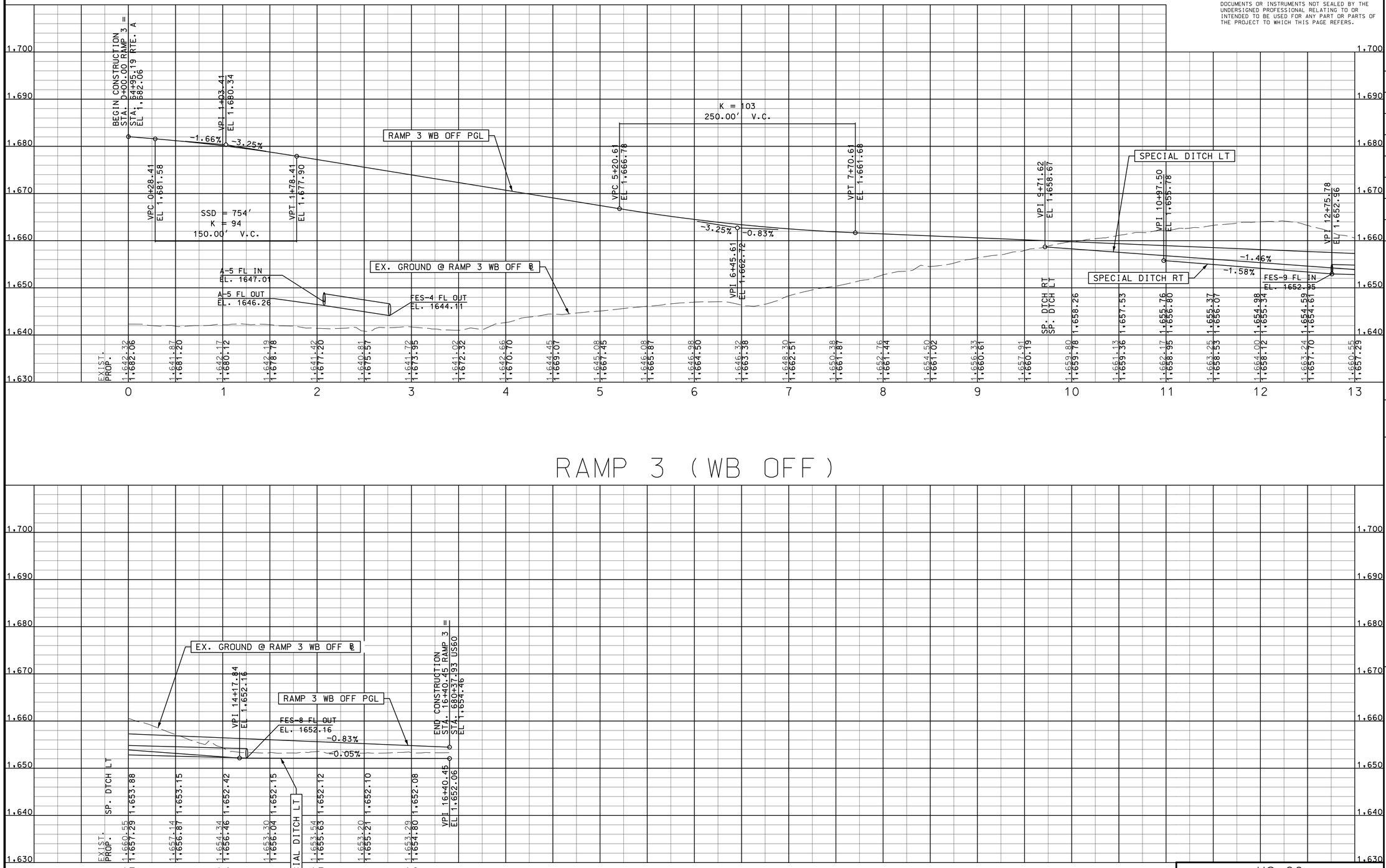

RAMP 3 (WB OFF)

DISCLAIMER
THE PROFESSIONAL WHOSE SIGNATURE AND PERSONAL SEAL APPEAR HEREON ASSUMES RESPONSIBILITY ONLY FOR WHAT APPEARS ON THIS PAGE, AND DISCLAIMS (PURSUANT TO SECTION 327.411 RSMO) SPECIFICATION, ESTIMATES, REPORTS, OR OTHER DOCUMENTS OR INSTRUMENTS NOT SEALED BY THE UNDERSIGNED PROFESSIONAL RELATING TO OR INTENDED TO BE USED FOR ANY PART OR PARTS OF THE PROJECT TO WHICH THIS PAGE REFERS.

STATE OF MISSOURI
DALLAS P. JOPLIN
NUMBER PE-2010015760
PROFESSIONAL ENGINEER

THIS SHEET HAS BEEN SIGNED, SEALED AND DATED ELECTRONICALLY.

DATE PREPARED	
8/2/2024	
ROUTE	STATE
60	MO
DISTRICT	SHEET NO.
SW	35

COUNTY
WEBSTER

JOB NO.
J7P3425C

CONTRACT ID.

PROJECT NO.

BRIDGE NO.

DATE	DESCRIPTION

IF A SEAL IS PRESENT ON THIS SHEET IT HAS BEEN ELECTRONICALLY SEALED AND DATED.

MISSOURI HIGHWAYS AND TRANSPORTATION COMMISSION
105 WEST CAPITOL
JEFFERSON CITY, MO 65102
1-888-ASK-MODOT (1-888-275-6636)

CMT
© Copyright CMT, Inc.
CRAWFORD, MURPHY & TILLY, INC.
1631 WEST ELFINDALE STREET
SPRINGFIELD, MO 65807 (417) 869-6009
ENGINEERING CORPORATION - 000631

US 60

PROFILE SHEET
4 OF 19

REV.

L:\MoDOT\20092124-00\Draw\Roadway\Sheets\035_PR_04_J7P3425C_i50.dgn 8:22:01 AM 8/2/2024

RAMP 4 (EB ON)

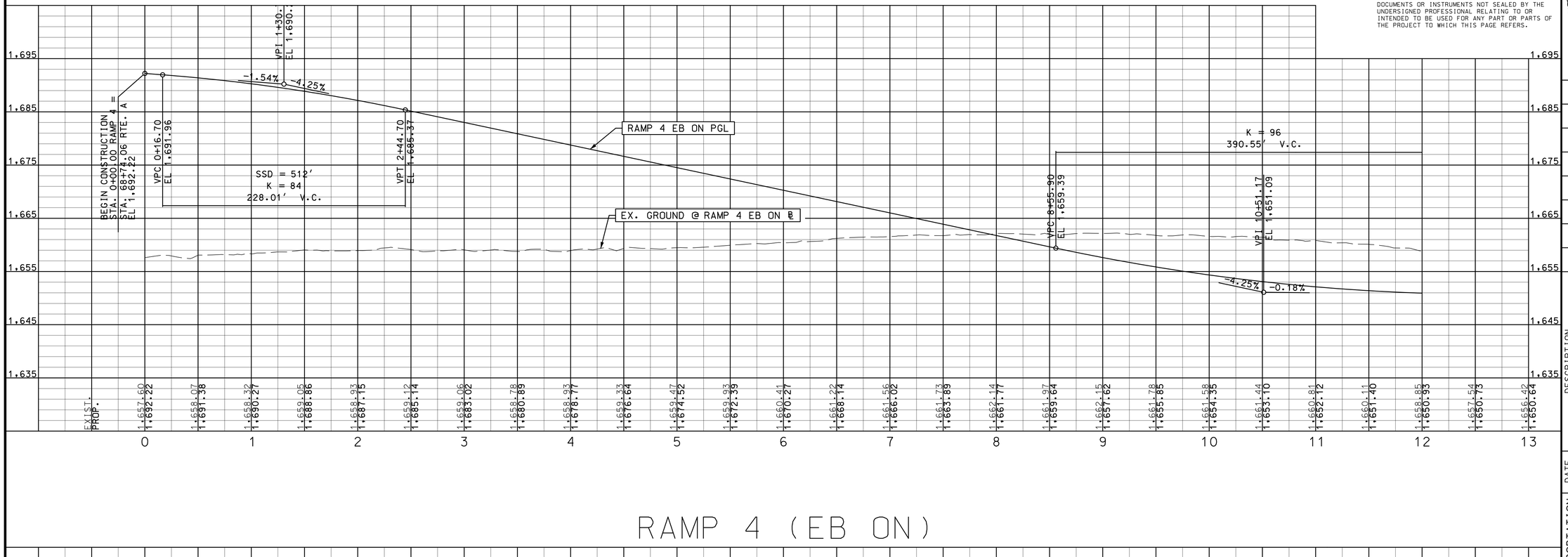

RAMP 4 (EB ON)

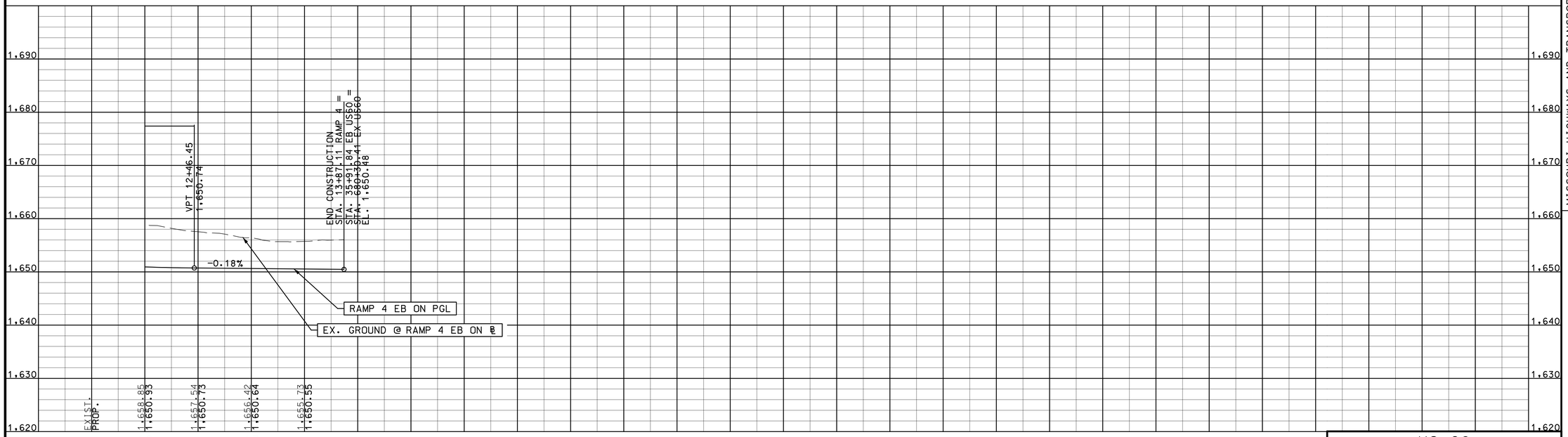

DISCLAIMER
THE PROFESSIONAL WHOSE SIGNATURE AND PERSONAL SEAL APPEAR HEREON ASSUMES RESPONSIBILITY ONLY FOR WHAT APPEARS ON THIS PAGE, AND DISCLAIMS (PURSUANT TO SECTION 327.411 RSMO) SPECIFICATION, ESTIMATES, REPORTS, OR OTHER DOCUMENTS OR INSTRUMENTS NOT SEALED BY THE UNDERSIGNED PROFESSIONAL RELATING TO OR INTENDED TO BE USED FOR ANY PART OR PARTS OF THE PROJECT TO WHICH THIS PAGE REFERS.

STATE OF MISSOURI
DALLAS P. JOPLIN
NUMBER PE-2011015760
PROFESSIONAL ENGINEER

THIS SHEET HAS BEEN SIGNED, SEALED AND DATED ELECTRONICALLY.

DATE PREPARED
8/2/2024

ROUTE	STATE
60	MO
DISTRICT	SHEET NO.
SW	36

COUNTY
WEBSTER

JOB NO.
J7P3425C

CONTRACT ID.

PROJECT NO.

BRIDGE NO.

DATE	DESCRIPTION	REV.

IF A SEAL IS PRESENT ON THIS SHEET IT HAS BEEN ELECTRONICALLY SEALED AND DATED.

MISSOURI HIGHWAYS AND TRANSPORTATION COMMISSION
105 WEST CAPITOL
JEFFERSON CITY, MO 65102
1-888-ASK-MODOT (1-888-275-6636)

CMT
© Copyright CMT, Inc.
CRAWFORD, MURPHY & TILLY, INC.
1631 WEST ELFINDALE STREET
SPRINGFIELD, MO 65807 (417) 869-6009
ENGINEERING CORPORATION - 000631

US 60

PROFILE SHEET
5 OF 19

L:\MoDOT\20092124-00\Draw\Roadway\Sheets\036_PR_05_J7P3425C_i50.dgn 8:22:03 AM 8/2/2024

DISCLAIMER
THE PROFESSIONAL WHOSE SIGNATURE AND PERSONAL SEAL APPEAR HEREON ASSUMES RESPONSIBILITY ONLY FOR WHAT APPEARS ON THIS PAGE, AND DISCLAIMS (PURSUANT TO SECTION 327.411 RSMO) SPECIFICATION, ESTIMATES, REPORTS, OR OTHER DOCUMENTS OR INSTRUMENTS NOT SEALED BY THE UNDERSIGNED PROFESSIONAL RELATING TO OR INTENDED TO BE USED FOR ANY PART OR PARTS OF THE PROJECT TO WHICH THIS PAGE REFERS.

ROUTE A

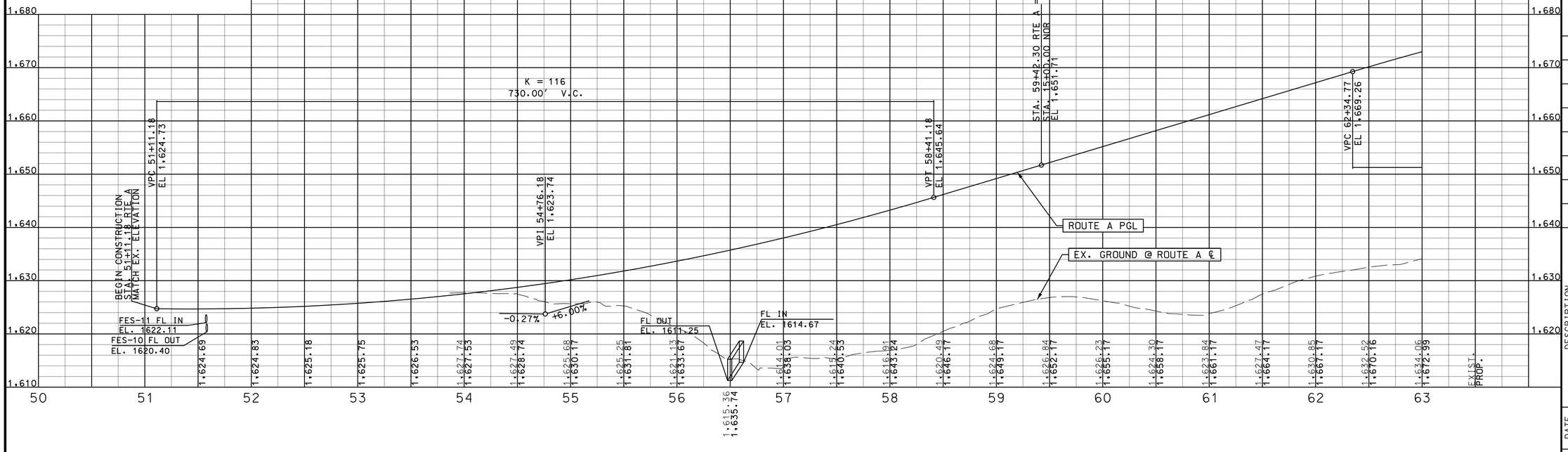

ROUTE A/ROUTE NN

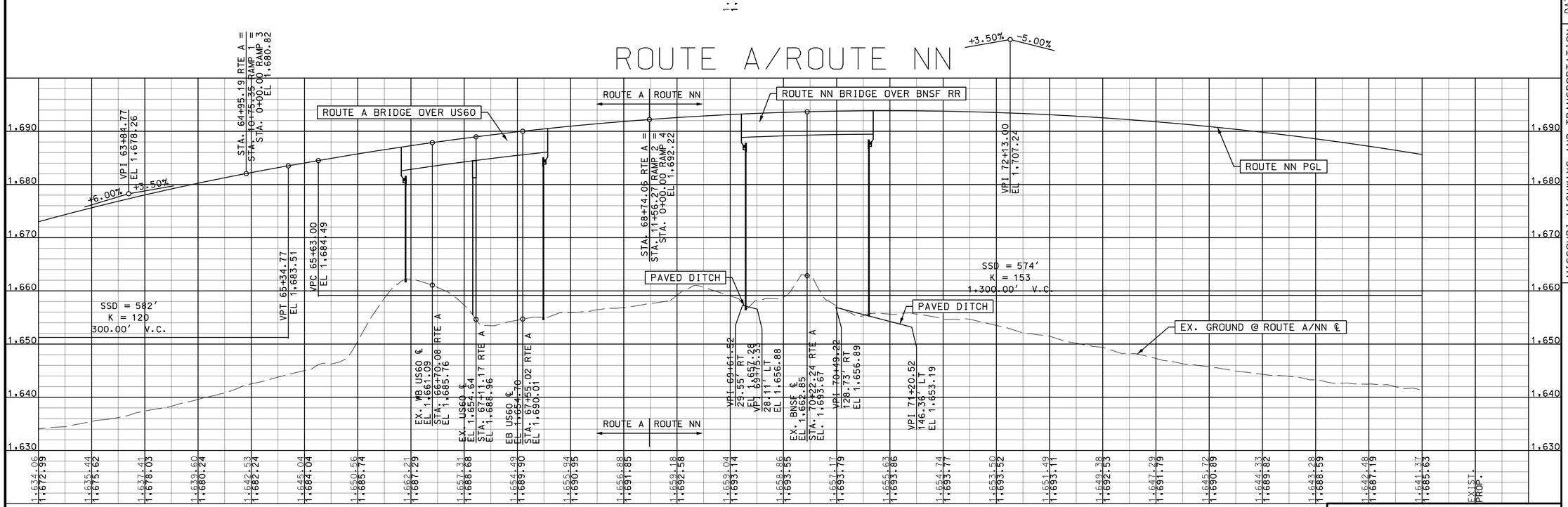

ROUTE A / ROUTE NN

PROFILE SHEET
6 OF 19

STATE OF MISSOURI
DALLAS P. JOPLIN
NUMBER PE-2011015760
PROFESSIONAL ENGINEER
THIS SHEET HAS BEEN SIGNED, SEALED AND DATED ELECTRONICALLY.

DATE PREPARED	
8/2/2024	
ROUTE	STATE
60	MO
DISTRICT	SHEET NO.
SW	37

COUNTY: WEBSTER
JOB NO.: J7P3425C
CONTRACT ID.:
PROJECT NO.:
BRIDGE NO.:

DESCRIPTION	DATE

MISSOURI HIGHWAYS AND TRANSPORTATION COMMISSION
105 WEST CAPITOL
JEFFERSON CITY, MO 65102
1-888-ASK-MODOT (1-888-275-6636)

© Copyright CMT, Inc.

CMT
CRAWFORD, MURPHY & TILLY, INC.
1631 WEST ELFINDALE STREET
SPRINGFIELD, MO 65807 (417) 869-6009
ENGINEERING CORPORATION - 000631

IF A SEAL IS PRESENT ON THIS SHEET IT HAS BEEN ELECTRONICALLY SEALED AND DATED.

REV.

L:\MoDOT\20092124-00\Draw\Roadway\Sheets\037_PR_06_J7P3425C_i50.dgn 8:22:04 AM 8/2/2024

ROUTE NN

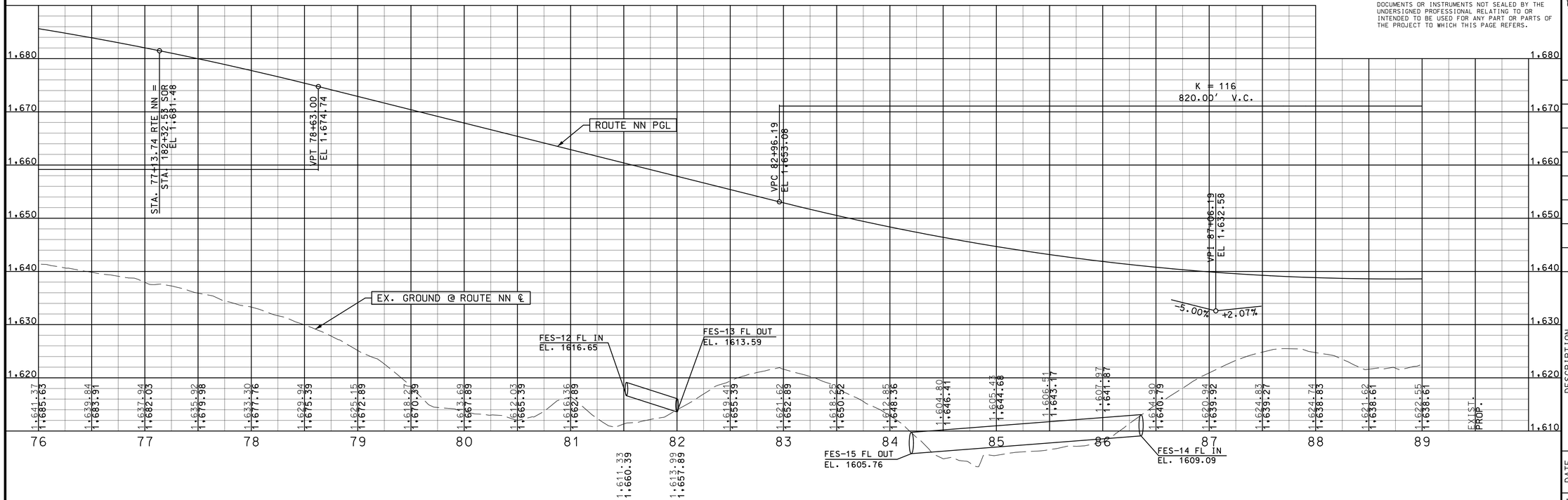

ROUTE NN

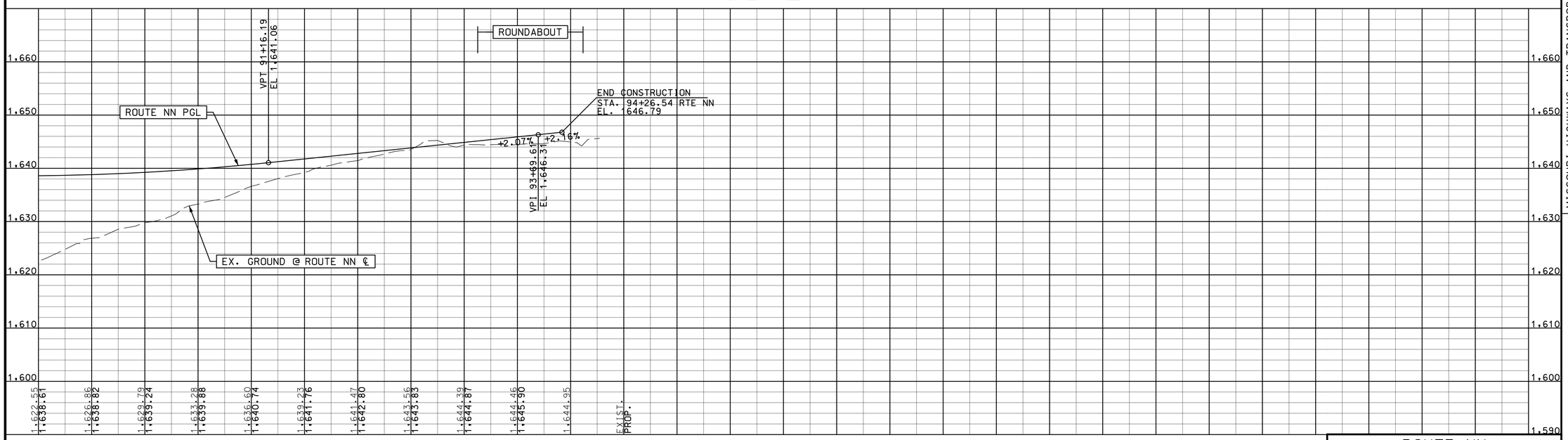

DISCLAIMER
THE PROFESSIONAL WHOSE SIGNATURE AND PERSONAL SEAL APPEAR HEREON ASSUMES RESPONSIBILITY ONLY FOR WHAT APPEARS ON THIS PAGE, AND DISCLAIMS (PURSUANT TO SECTION 327.411 RSMO) SPECIFICATION, ESTIMATES, REPORTS, OR OTHER DOCUMENTS OR INSTRUMENTS NOT SEALED BY THE UNDERSIGNED PROFESSIONAL RELATING TO OR INTENDED TO BE USED FOR ANY PART OR PARTS OF THE PROJECT TO WHICH THIS PAGE REFERS.

STATE OF MISSOURI
DALLAS P. JOPLIN
NUMBER PE-2011015760
PROFESSIONAL ENGINEER

THIS SHEET HAS BEEN SIGNED, SEALED AND DATED ELECTRONICALLY.

DATE PREPARED
8/2/2024

ROUTE	STATE
60	MO
DISTRICT	SHEET NO.
SW	38

COUNTY
WEBSTER

JOB NO.
J7P3425C

CONTRACT ID.

PROJECT NO.

BRIDGE NO.

IF A SEAL IS PRESENT ON THIS SHEET IT HAS BEEN ELECTRONICALLY SEALED AND DATED.

REV.	DATE	DESCRIPTION

MISSOURI HIGHWAYS AND TRANSPORTATION COMMISSION
105 WEST CAPITOL
JEFFERSON CITY, MO 65102
1-888-ASK-MODOT (1-888-275-6636)

CMT
© Copyright CMT, Inc.
CRAWFORD, MURPHY & TILLY, INC.
1631 WEST ELFINDALE STREET
SPRINGFIELD, MO 65807 (417) 869-6009
ENGINEERING CORPORATION - 000631

ROUTE NN
PROFILE SHEET
7 OF 19

L:\MoDOT\20092124-00\Draw\Roadway\Sheets\038_PR_07_J7P3425C_i50.dgn 8:22:06 AM 8/2/2024

EXISTING ROUTE NN

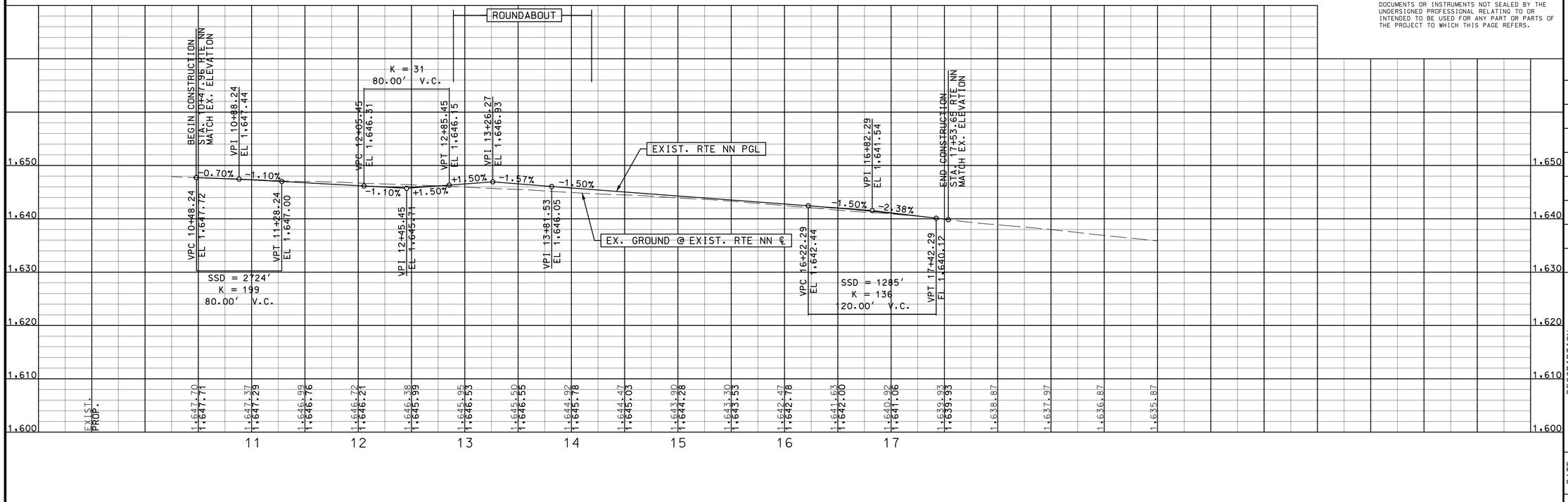

ROUTE NN ROUNDABOUT

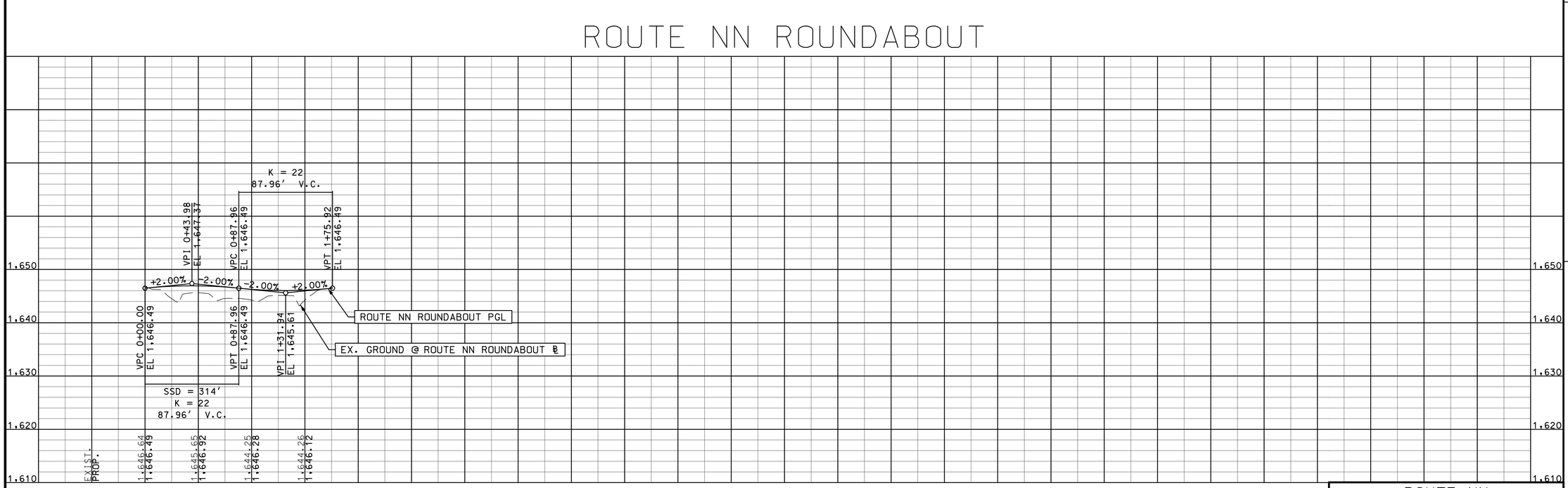

DISCLAIMER
THE PROFESSIONAL WHOSE SIGNATURE AND PERSONAL SEAL APPEAR HEREON ASSUMES RESPONSIBILITY ONLY FOR WHAT APPEARS ON THIS PAGE, AND DISCLAIMS (PURSUANT TO SECTION 327.411 RSMO) SPECIFICATION, ESTIMATES, REPORTS, OR OTHER DOCUMENTS OR INSTRUMENTS NOT SEALED BY THE UNDERSIGNED PROFESSIONAL RELATING TO OR INTENDED TO BE USED FOR ANY PART OR PARTS OF THE PROJECT TO WHICH THIS PAGE REFERS.

STATE OF MISSOURI
DALLAS P. JOPLIN
NUMBER PE-2011015760
PROFESSIONAL ENGINEER

THIS SHEET HAS BEEN SIGNED, SEALED AND DATED ELECTRONICALLY.

DATE PREPARED	
8/2/2024	
ROUTE	STATE
60	MO
DISTRICT	SHEET NO.
SW	39
COUNTY	
WEBSTER	
JOB NO.	
J7P3425C	
CONTRACT ID.	
PROJECT NO.	
BRIDGE NO.	

IF A SEAL IS PRESENT ON THIS SHEET IT HAS BEEN ELECTRONICALLY SEALED AND DATED.

REV.	DATE	DESCRIPTION

MISSOURI HIGHWAYS AND TRANSPORTATION COMMISSION
105 WEST CAPITOL
JEFFERSON CITY, MO 65102
1-888-ASK-MODOT (1-888-275-6636)

CMT
© Copyright CMT, Inc.
CRAWFORD, MURPHY & TILLY, INC.
1631 WEST ELFINDALE STREET
SPRINGFIELD, MO 65807 (417) 869-6009
ENGINEERING CORPORATION - 000631

ROUTE NN

PROFILE SHEET
8 OF 19

L:\MoDOT\20092124-00\Draw\Roadway\Sheets\039_PR_08_J7P3425C_i50.dgn 8:22:08 AM 8/2/2024

NORTH OUTER ROAD WEST

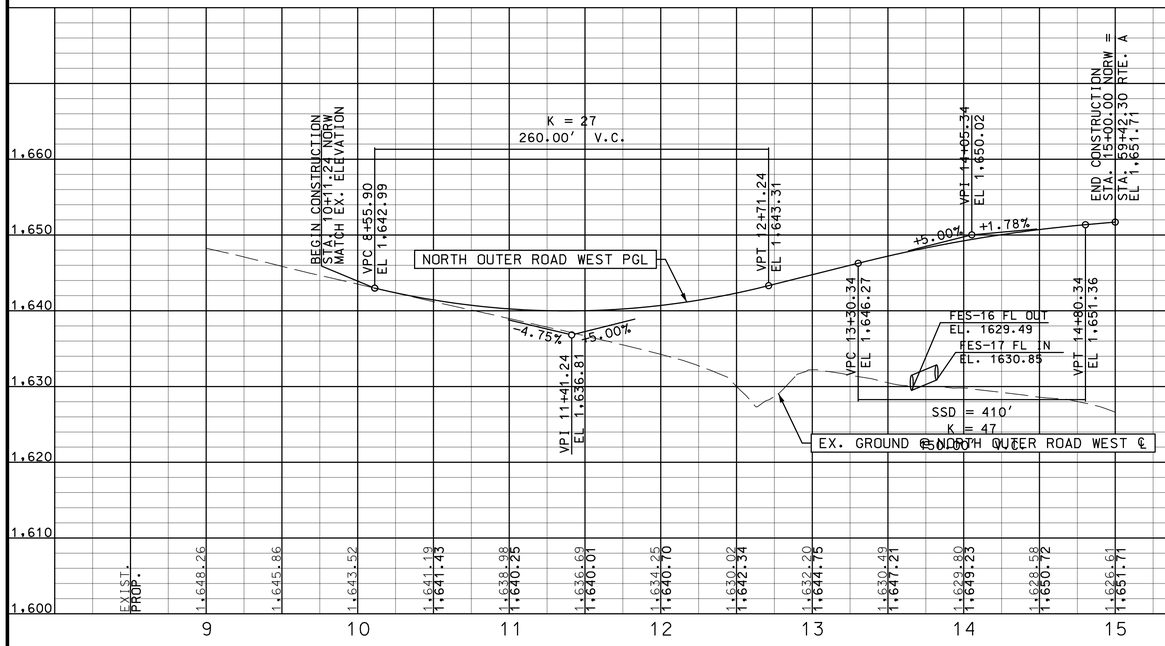

NORTH OUTER ROAD EAST

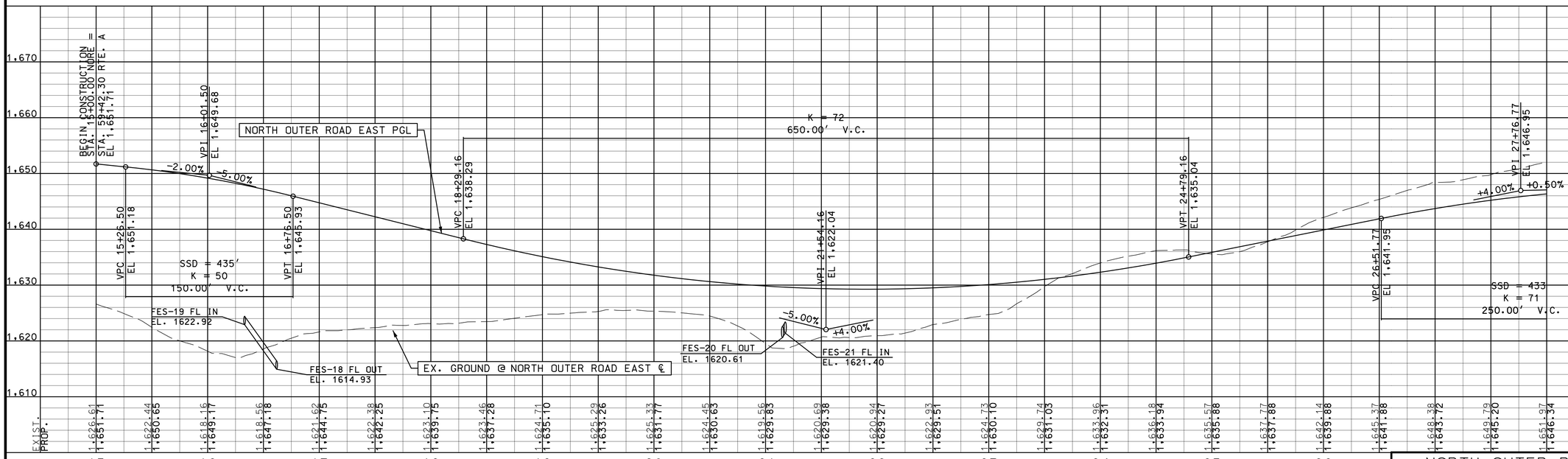

DISCLAIMER
THE PROFESSIONAL WHOSE SIGNATURE AND PERSONAL SEAL APPEAR HEREON ASSUMES RESPONSIBILITY ONLY FOR WHAT APPEARS ON THIS PAGE, AND DISCLAIMS (PURSUANT TO SECTION 327.411 RSMO) SPECIFICATION, ESTIMATES, REPORTS, OR OTHER DOCUMENTS OR INSTRUMENTS NOT SEALED BY THE UNDERSIGNED PROFESSIONAL RELATING TO OR INTENDED TO BE USED FOR ANY PART OR PARTS OF THE PROJECT TO WHICH THIS PAGE REFERS.

STATE OF MISSOURI
DALLAS P. JOPLIN
NUMBER PE-2011015760
PROFESSIONAL ENGINEER

THIS SHEET HAS BEEN SIGNED, SEALED AND DATED ELECTRONICALLY.

DATE PREPARED
8/2/2024

ROUTE	STATE
60	MO
DISTRICT	SHEET NO.
SW	40

COUNTY
WEBSTER

JOB NO.
J7P3425C

CONTRACT ID.

PROJECT NO.

BRIDGE NO.

IF A SEAL IS PRESENT ON THIS SHEET IT HAS BEEN ELECTRONICALLY SEALED AND DATED.

REV.	DATE	DESCRIPTION

MISSOURI HIGHWAYS AND TRANSPORTATION COMMISSION
105 WEST CAPITOL
JEFFERSON CITY, MO 65102
1-888-ASK-MODOT (1-888-275-6636)

CMT
© Copyright CMT, Inc.
CRAWFORD, MURPHY & TILLY, INC.
1631 WEST ELFINDALE STREET
SPRINGFIELD, MO 65807 (417) 869-6009
ENGINEERING CORPORATION - 000631

NORTH OUTER ROAD
PROFILE SHEET
9 OF 19

L:\MoDOT\20092124-00\Draw\Roadway\Sheets\040_PR_09_J7P3425C_i50.dgn 8:22:09 AM 8/2/2024

NORTH OUTER ROAD EAST

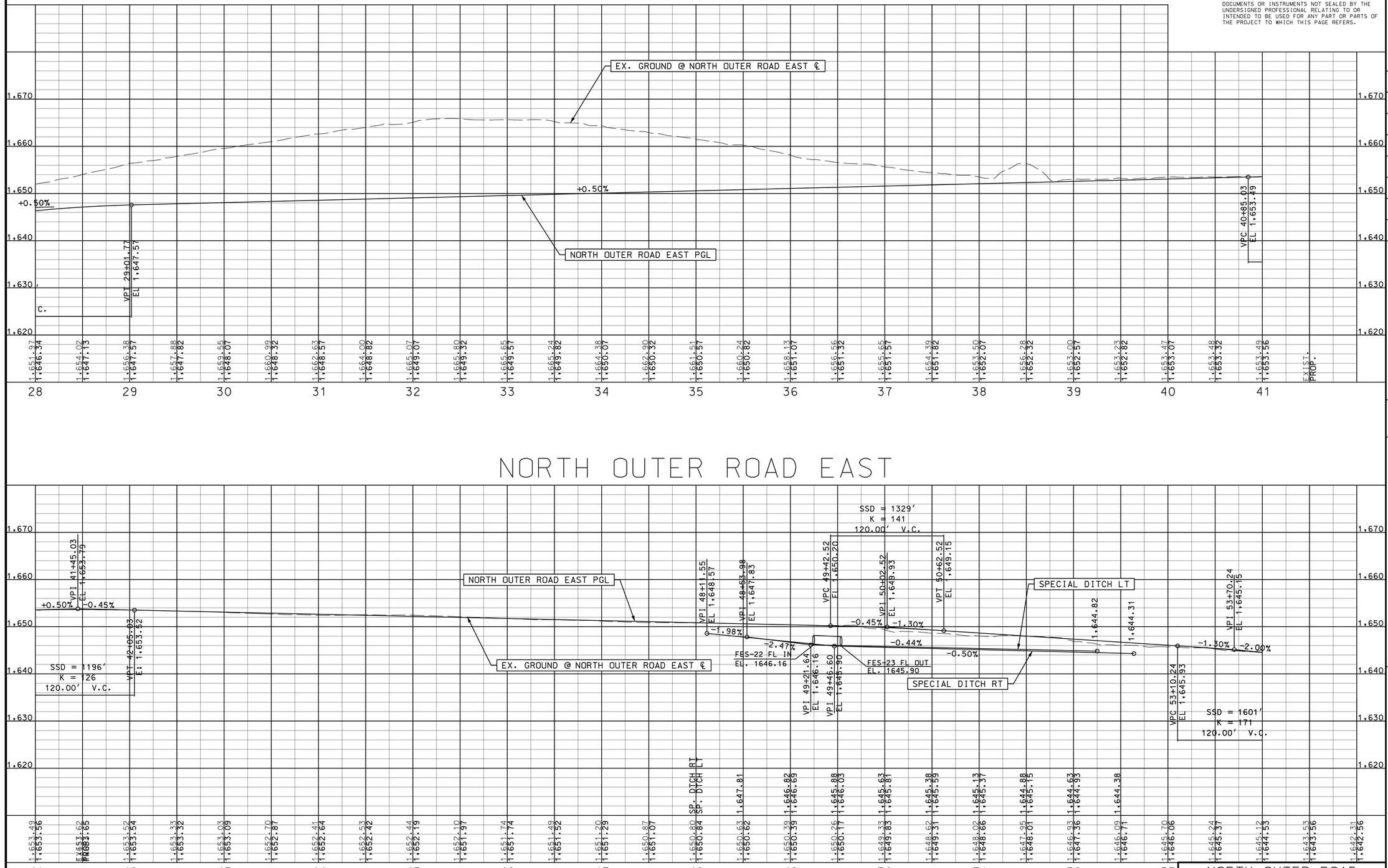

NORTH OUTER ROAD EAST

DISCLAIMER
THE PROFESSIONAL WHOSE SIGNATURE AND PERSONAL SEAL APPEAR HEREON ASSUMES RESPONSIBILITY ONLY FOR WHAT APPEARS ON THIS PAGE, AND DISCLAIMS (PURSUANT TO SECTION 327.411 RSMO) SPECIFICATION, ESTIMATES, REPORTS, OR OTHER DOCUMENTS OR INSTRUMENTS NOT SEALED BY THE UNDERSIGNED PROFESSIONAL RELATING TO OR INTENDED TO BE USED FOR ANY PART OR PARTS OF THE PROJECT TO WHICH THIS PAGE REFERS.

STATE OF MISSOURI
DALLAS P. JOPLIN
NUMBER PE-2011015760
PROFESSIONAL ENGINEER

THIS SHEET HAS BEEN SIGNED, SEALED AND DATED ELECTRONICALLY.

DATE PREPARED	
8/2/2024	
ROUTE	STATE
60	MO
DISTRICT	SHEET NO.
SW	41
COUNTY	
WEBSTER	
JOB NO.	
J7P3425C	
CONTRACT ID.	
PROJECT NO.	
BRIDGE NO.	

DESCRIPTION	DATE

IF A SEAL IS PRESENT ON THIS SHEET IT HAS BEEN ELECTRONICALLY SEALED AND DATED.

MISSOURI HIGHWAYS AND TRANSPORTATION COMMISSION
105 WEST CAPITOL
JEFFERSON CITY, MO 65102
1-888-ASK-MODOT (1-888-275-6636)

CMT
© Copyright CMT, Inc.
CRAWFORD, MURPHY & TILLY, INC.
1631 WEST ELFINDALE STREET
SPRINGFIELD, MO 65807 (417) 869-6009
ENGINEERING CORPORATION - 000631

NORTH OUTER ROAD
PROFILE SHEET
10 OF 19

REV.

L:\MoDOT\20092124-00\Draw\Roadway\Sheets\041_PR_10_J7P3425C_i50.dgn 8:22:11 AM 8/2/2024

NORTH OUTER ROAD EAST

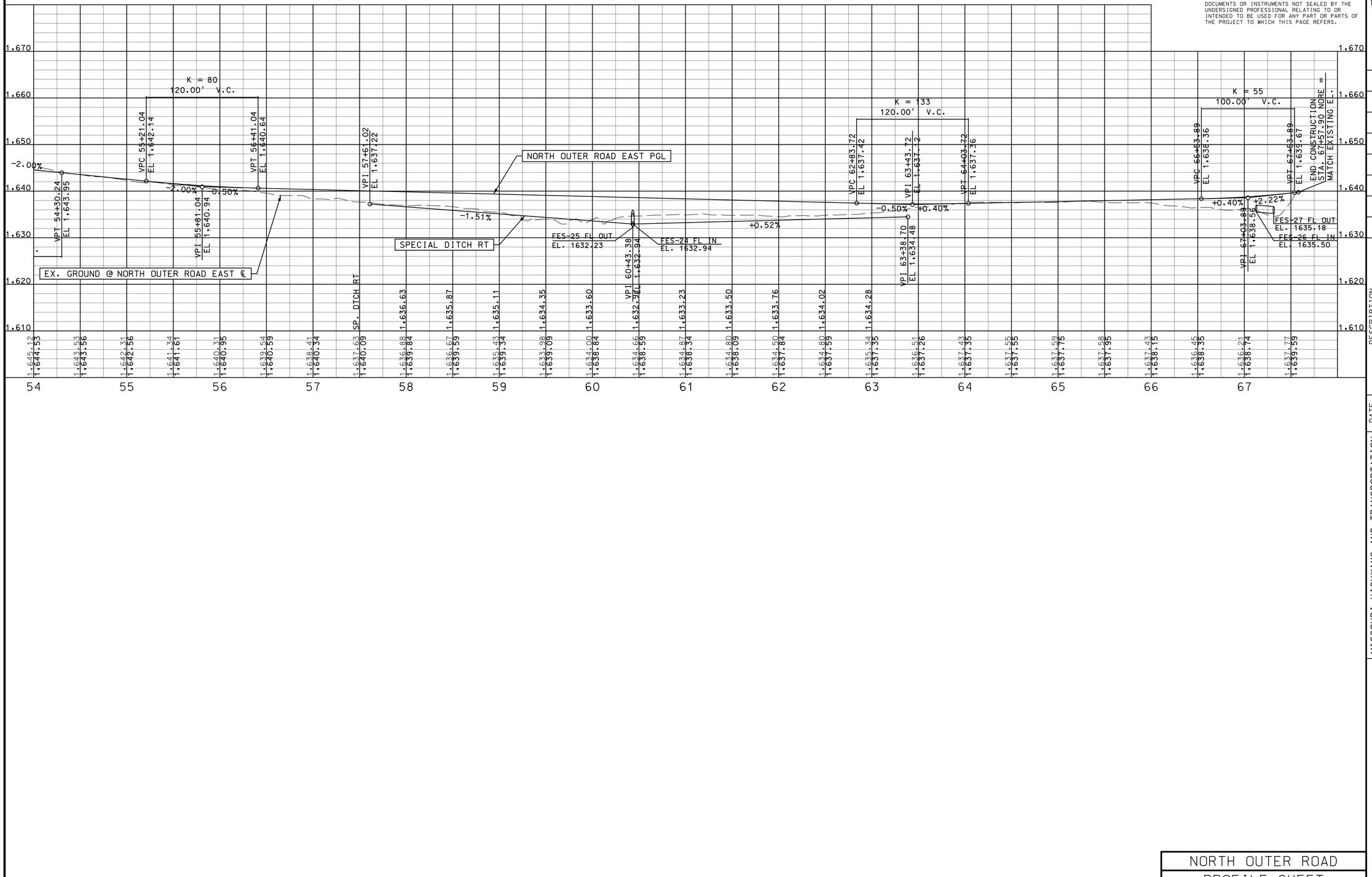

DISCLAIMER
THE PROFESSIONAL WHOSE SIGNATURE AND PERSONAL SEAL APPEAR HEREON ASSUMES RESPONSIBILITY ONLY FOR WHAT APPEARS ON THIS PAGE, AND DISCLAIMS (PURSUANT TO SECTION 327.411 RSMO) SPECIFICATION, ESTIMATES, REPORTS, OR OTHER DOCUMENTS OR INSTRUMENTS NOT SEALED BY THE UNDERSIGNED PROFESSIONAL RELATING TO OR INTENDED TO BE USED FOR ANY PART OR PARTS OF THE PROJECT TO WHICH THIS PAGE REFERS.

STATE OF MISSOURI
DALLAS P. JOPLIN
NUMBER PE-2011015760
PROFESSIONAL ENGINEER

THIS SHEET HAS BEEN SIGNED, SEALED AND DATED ELECTRONICALLY.

DATE PREPARED
8/2/2024

ROUTE	STATE
60	MO
DISTRICT	SHEET NO.
SW	42

COUNTY
WEBSTER

JOB NO.
J7P3425C

CONTRACT ID.

PROJECT NO.

BRIDGE NO.

IF A SEAL IS PRESENT ON THIS SHEET IT HAS BEEN ELECTRONICALLY SEALED AND DATED.

DESCRIPTION	DATE

MISSOURI HIGHWAYS AND TRANSPORTATION COMMISSION

105 WEST CAPITOL
JEFFERSON CITY, MO 65102
1-888-ASK-MODOT (1-888-275-6636)

CRAWFORD, MURPHY & TILLY, INC.
1631 WEST ELFINDALE STREET
SPRINGFIELD, MO 65807 (417) 869-6009
ENGINEERING CORPORATION - 000631

© Copyright CMT, Inc.

NORTH OUTER ROAD
PROFILE SHEET
11 OF 19

L:\MoDOT\20092124-00\Draw\Roadway\Sheets\042_PR_11_J7P3425C_i50.dgn 8:22:12 AM 8/2/2024

REV.

SOUTH OUTER ROAD

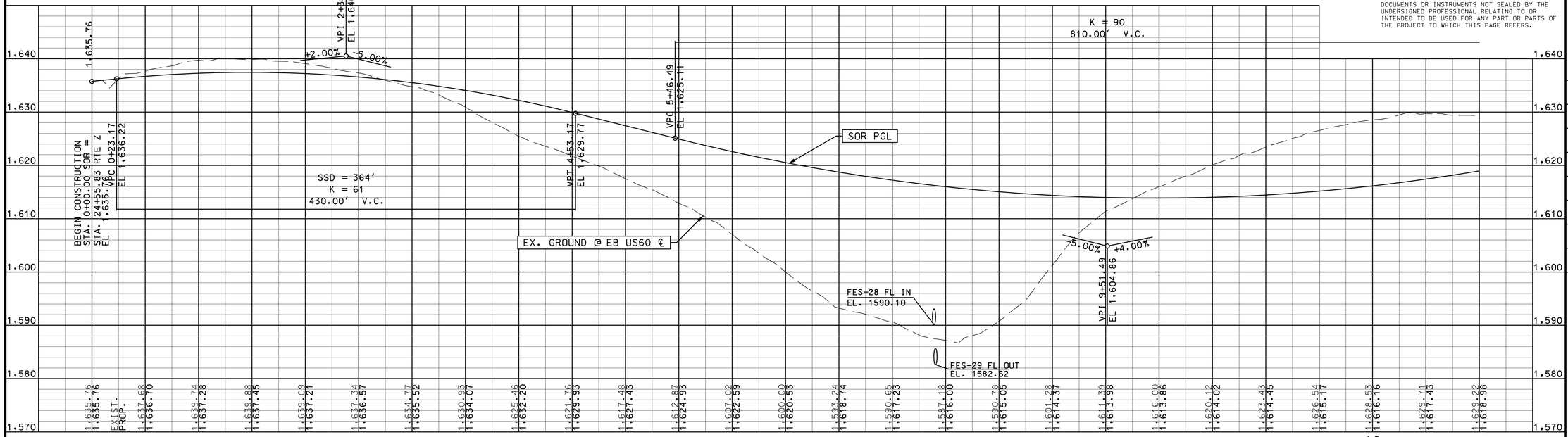

SOUTH OUTER ROAD

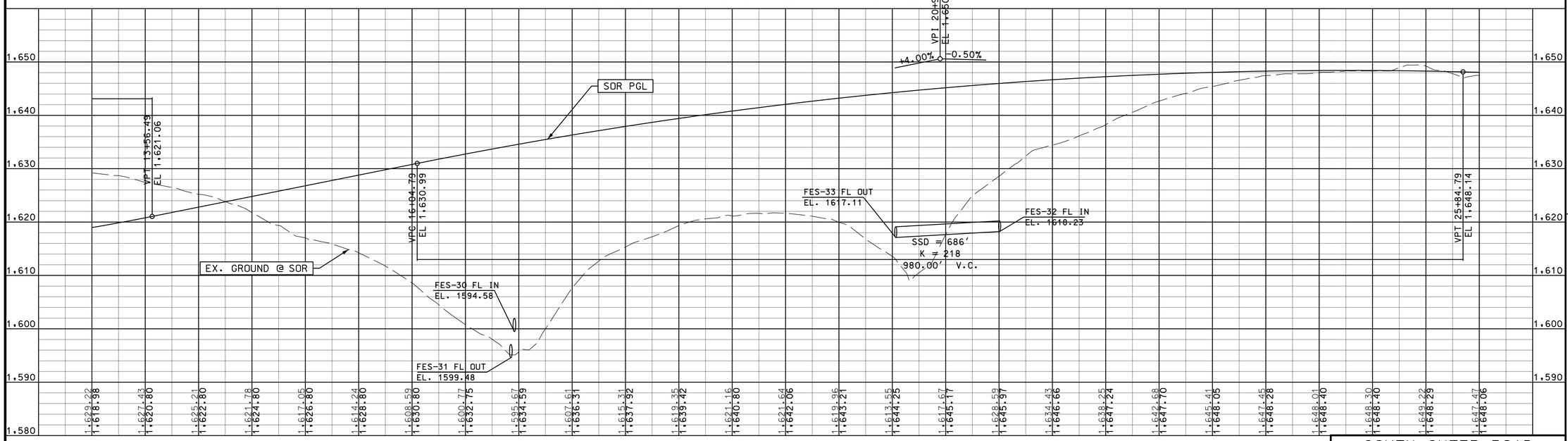

DISCLAIMER
THE PROFESSIONAL WHOSE SIGNATURE AND PERSONAL SEAL APPEAR HEREON ASSUMES RESPONSIBILITY ONLY FOR WHAT APPEARS ON THIS PAGE, AND DISCLAIMS (PURSUANT TO SECTION 327.411 RSMO) SPECIFICATION, ESTIMATES, REPORTS, OR OTHER DOCUMENTS OR INSTRUMENTS NOT SEALED BY THE UNDERSIGNED PROFESSIONAL RELATING TO OR INTENDED TO BE USED FOR ANY PART OR PARTS OF THE PROJECT TO WHICH THIS PAGE REFERS.

STATE OF MISSOURI
DALLAS P. JOPLIN
NUMBER PE-2011015760
PROFESSIONAL ENGINEER

THIS SHEET HAS BEEN SIGNED, SEALED AND DATED ELECTRONICALLY.

DATE PREPARED: 8/2/2024

ROUTE	STATE
60	MO
DISTRICT	SHEET NO.
SW	43

COUNTY: WEBSTER
JOB NO.: J7P3425C
CONTRACT ID.:
PROJECT NO.:
BRIDGE NO.:

DESCRIPTION	DATE

IF A SEAL IS PRESENT ON THIS SHEET IT HAS BEEN ELECTRONICALLY SEALED AND DATED.

MISSOURI HIGHWAYS AND TRANSPORTATION COMMISSION
105 WEST CAPITOL
JEFFERSON CITY, MO 65102
1-888-ASK-MODOT (1-888-275-6636)

CMT
© Copyright CMT, Inc.
CRAWFORD, MURPHY & TILLY, INC.
1631 WEST ELFINDALE STREET
SPRINGFIELD, MO 65807 (417) 869-6009
ENGINEERING CORPORATION - 000631

SOUTH OUTER ROAD
PROFILE SHEET
12 OF 19

REV.

L:\MoDOT\20092124-00\Draw\Roadway\Sheets\043_PR_12_J7P3425C_i50.dgn 8:22:14 AM 8/2/2024

SOUTH OUTER ROAD

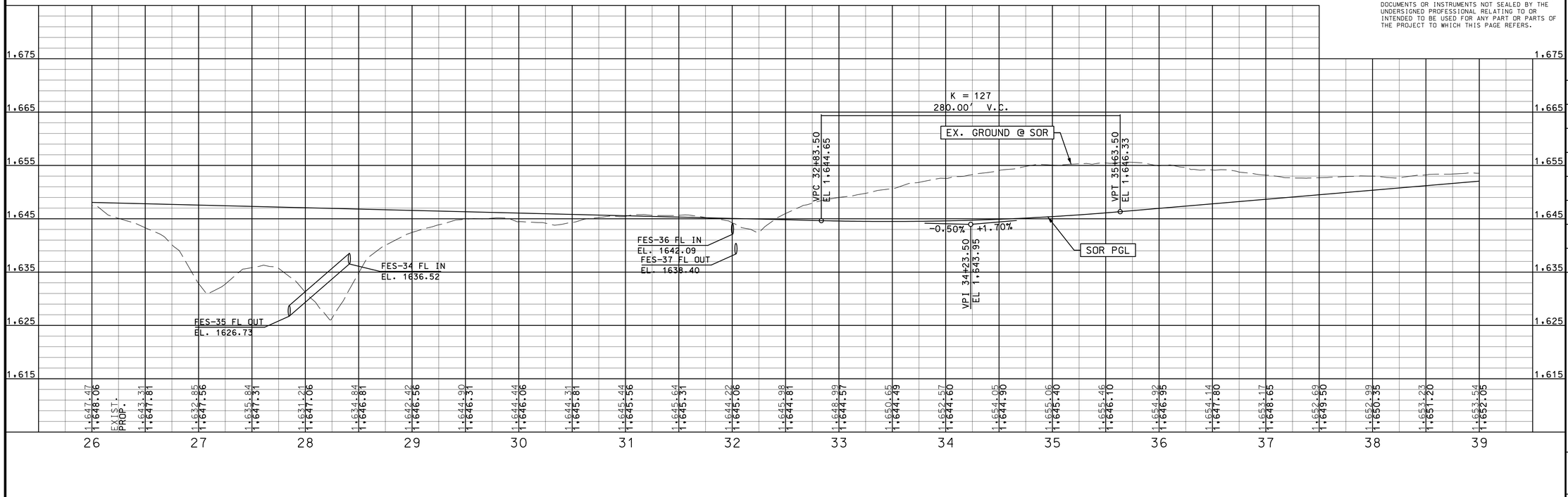

SOUTH OUTER ROAD

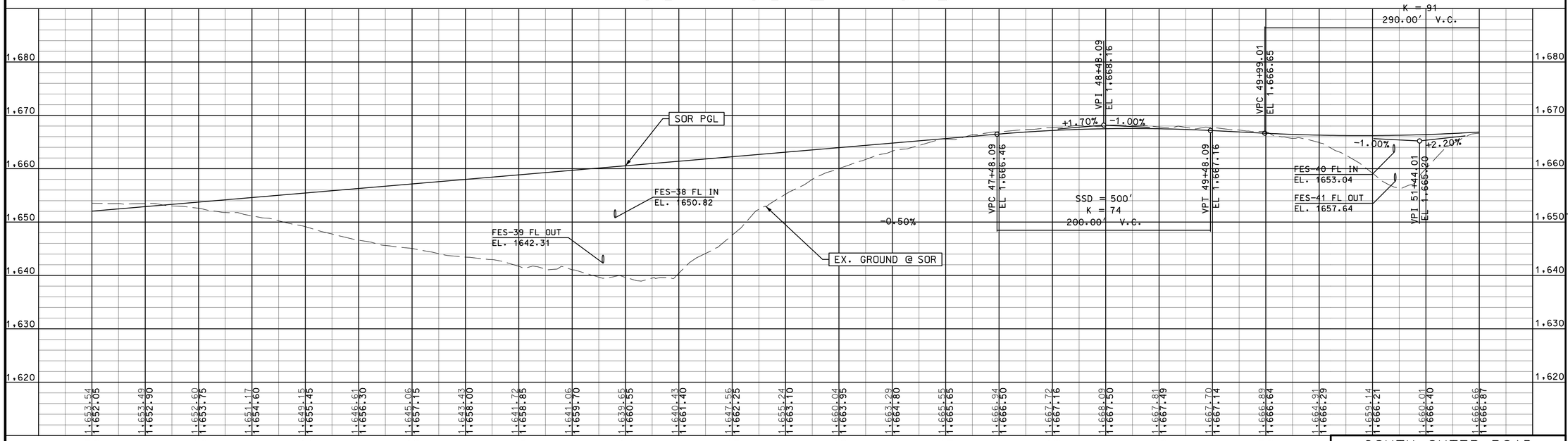

DISCLAIMER
THE PROFESSIONAL WHOSE SIGNATURE AND PERSONAL SEAL APPEAR HEREON ASSUMES RESPONSIBILITY ONLY FOR WHAT APPEARS ON THIS PAGE, AND DISCLAIMS (PURSUANT TO SECTION 327.411 RSMO) SPECIFICATION, ESTIMATES, REPORTS, OR OTHER DOCUMENTS OR INSTRUMENTS NOT SEALED BY THE UNDERSIGNED PROFESSIONAL RELATING TO OR INTENDED TO BE USED FOR ANY PART OR PARTS OF THE PROJECT TO WHICH THIS PAGE REFERS.

STATE OF MISSOURI
DALLAS P. JOPLIN
NUMBER PE-2011015760
PROFESSIONAL ENGINEER

THIS SHEET HAS BEEN SIGNED, SEALED AND DATED ELECTRONICALLY.

DATE PREPARED
8/2/2024

ROUTE	STATE
60	MO
DISTRICT	SHEET NO.
SW	44

COUNTY
WEBSTER

JOB NO.
J7P3425C

CONTRACT ID.

PROJECT NO.

BRIDGE NO.

IF A SEAL IS PRESENT ON THIS SHEET IT HAS BEEN ELECTRONICALLY SEALED AND DATED.

REV.	DESCRIPTION	DATE

MISSOURI HIGHWAYS AND TRANSPORTATION COMMISSION
105 WEST CAPITOL
JEFFERSON CITY, MO 65102
1-888-ASK-MODOT (1-888-275-6636)

CMT
© Copyright CMT, Inc.
CRAWFORD, MURPHY & TILLY, INC.
1631 WEST ELFINDALE STREET
SPRINGFIELD, MO 65807 (417) 869-6009
ENGINEERING CORPORATION - 000631

SOUTH OUTER ROAD
PROFILE SHEET
13 OF 19

L:\MoDOT\20092124-00\Draw\Roadway\Sheets\044_PR_13_J7P3425C_i50.dgn 8:22:15 AM 8/2/2024

SOUTH OUTER ROAD

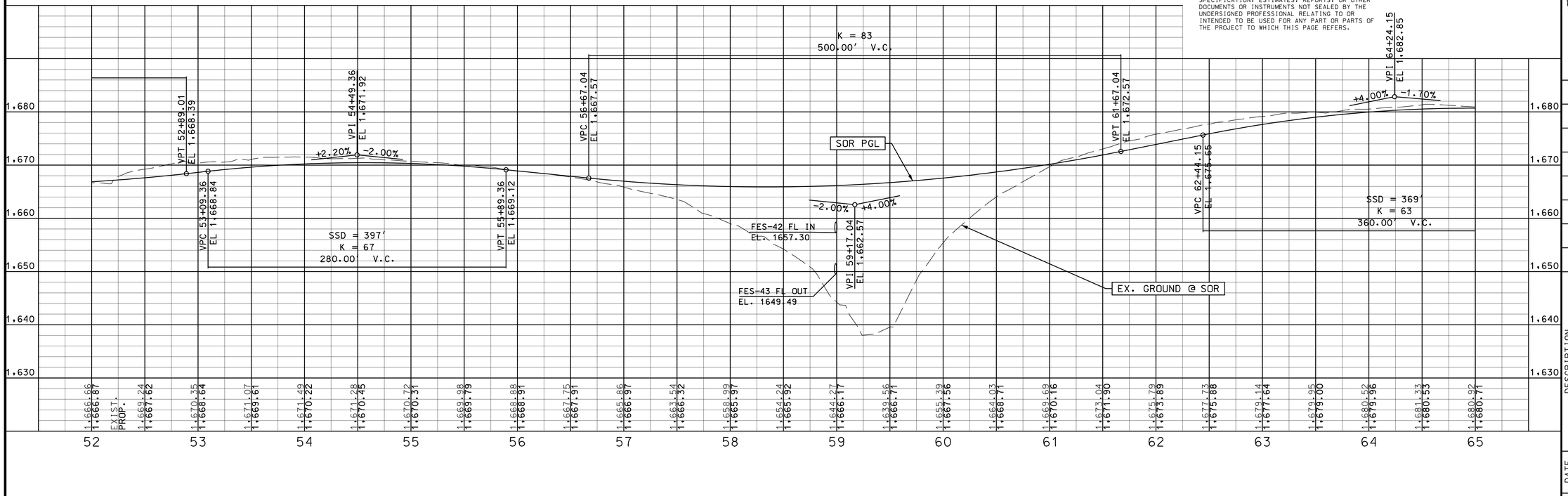

SOUTH OUTER ROAD

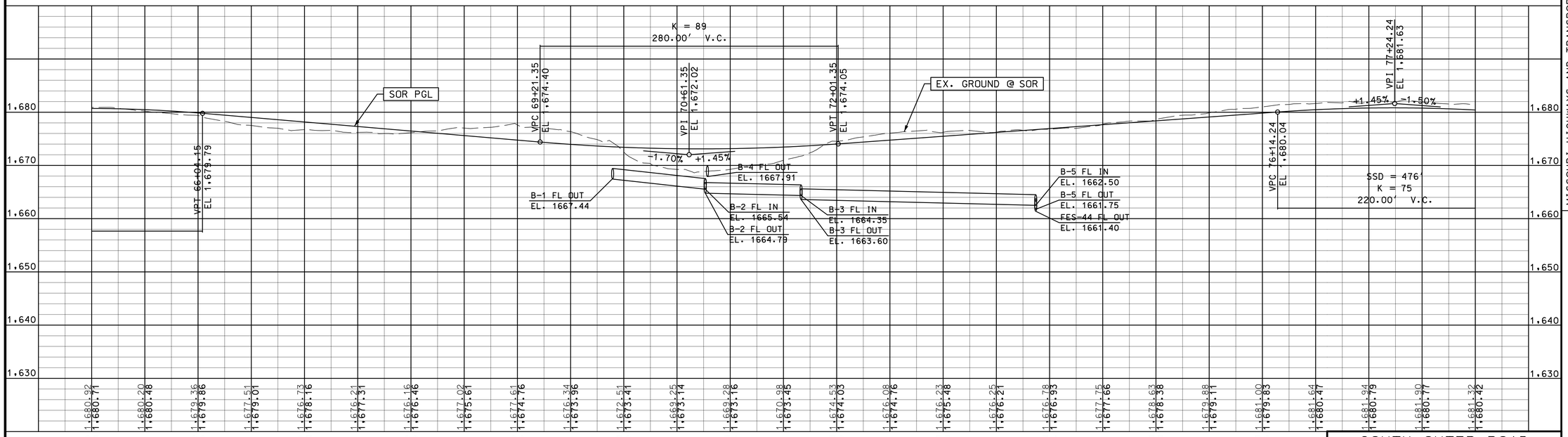

DISCLAIMER
THE PROFESSIONAL WHOSE SIGNATURE AND PERSONAL SEAL APPEAR HEREON ASSUMES RESPONSIBILITY ONLY FOR WHAT APPEARS ON THIS PAGE, AND DISCLAIMS (PURSUANT TO SECTION 327.411 RSMO) SPECIFICATION, ESTIMATES, REPORTS, OR OTHER DOCUMENTS OR INSTRUMENTS NOT SEALED BY THE UNDERSIGNED PROFESSIONAL RELATING TO OR INTENDED TO BE USED FOR ANY PART OR PARTS OF THE PROJECT TO WHICH THIS PAGE REFERS.

STATE OF MISSOURI
DALLAS P. JOPLIN
NUMBER PE-2011015760
PROFESSIONAL ENGINEER

THIS SHEET HAS BEEN SIGNED, SEALED AND DATED ELECTRONICALLY.

DATE PREPARED	
8/2/2024	
ROUTE	STATE
60	MO
DISTRICT	SHEET NO.
SW	45

COUNTY: WEBSTER
JOB NO.: J7P3425C
CONTRACT ID.:
PROJECT NO.:
BRIDGE NO.:

DESCRIPTION	DATE

IF A SEAL IS PRESENT ON THIS SHEET IT HAS BEEN ELECTRONICALLY SEALED AND DATED.

MISSOURI HIGHWAYS AND TRANSPORTATION COMMISSION
105 WEST CAPITOL
JEFFERSON CITY, MO 65102
1-888-ASK-MODOT (1-888-275-6636)

CMT
© Copyright CMT, Inc.
CRAWFORD, MURPHY & TILLY, INC.
1631 WEST ELFINDALE STREET
SPRINGFIELD, MO 65807 (417) 869-6009
ENGINEERING CORPORATION - 000631

SOUTH OUTER ROAD
PROFILE SHEET
14 OF 19

REV.

L:\MoDOT\20092124-00\Draw\Roadway\Sheets\045_PR_14_J7P3425C_i50.dgn 8:22:17 AM 8/2/2024

SOUTH OUTER ROAD

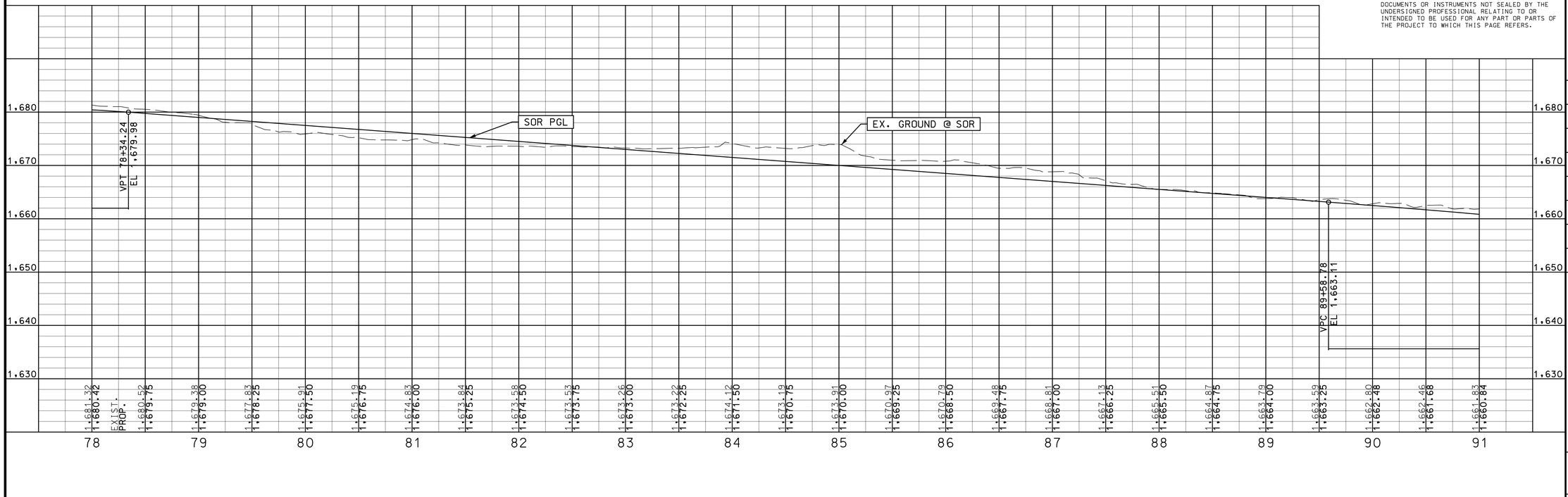

SOUTH OUTER ROAD

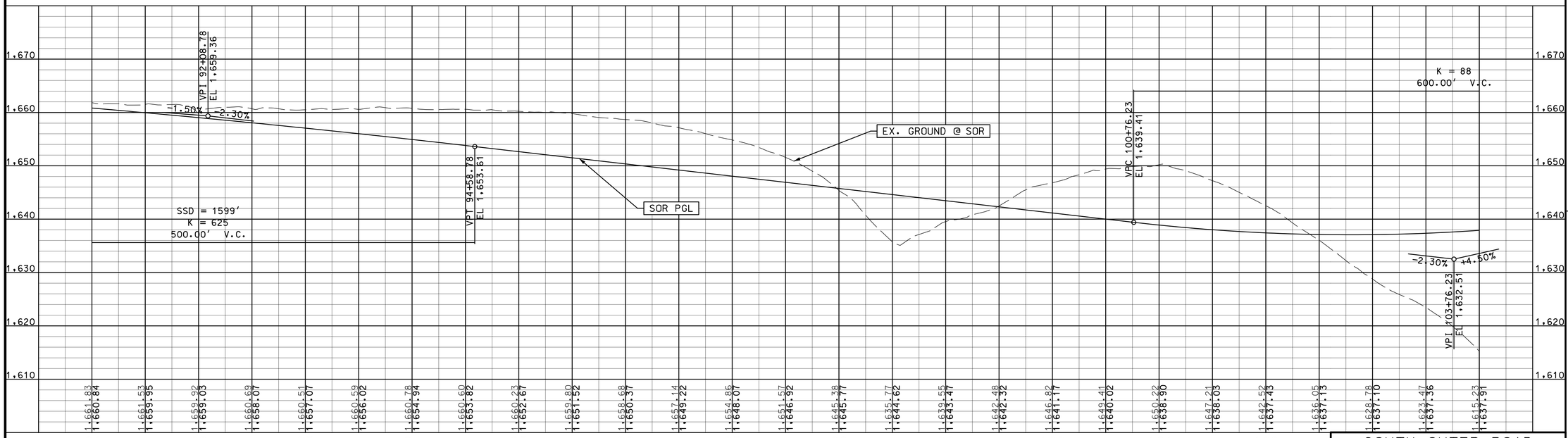

DISCLAIMER
THE PROFESSIONAL WHOSE SIGNATURE AND PERSONAL SEAL APPEAR HEREON ASSUMES RESPONSIBILITY ONLY FOR WHAT APPEARS ON THIS PAGE, AND DISCLAIMS (PURSUANT TO SECTION 327.411 RSMO) SPECIFICATION, ESTIMATES, REPORTS, OR OTHER DOCUMENTS OR INSTRUMENTS NOT SEALED BY THE UNDERSIGNED PROFESSIONAL RELATING TO OR INTENDED TO BE USED FOR ANY PART OR PARTS OF THE PROJECT TO WHICH THIS PAGE REFERS.

STATE OF MISSOURI
DALLAS P. JOPLIN
NUMBER PE-2011015760
PROFESSIONAL ENGINEER

THIS SHEET HAS BEEN SIGNED, SEALED AND DATED ELECTRONICALLY.

DATE PREPARED
8/2/2024

ROUTE	STATE
60	MO
DISTRICT	SHEET NO.
SW	46

COUNTY
WEBSTER

JOB NO.
J7P3425C

CONTRACT ID.

PROJECT NO.

BRIDGE NO.

DESCRIPTION	DATE

IF A SEAL IS PRESENT ON THIS SHEET IT HAS BEEN ELECTRONICALLY SEALED AND DATED.

MISSOURI HIGHWAYS AND TRANSPORTATION COMMISSION

105 WEST CAPITOL
JEFFERSON CITY, MO 65102
1-888-ASK-MODOT (1-888-275-6636)

CMT
© Copyright CMT, Inc.
CRAWFORD, MURPHY & TILLY, INC.
1631 WEST ELFINDALE STREET
SPRINGFIELD, MO 65807 (417) 869-6009
ENGINEERING CORPORATION - 000631

SOUTH OUTER ROAD

PROFILE SHEET
15 OF 19

REV.

L:\MoDOT\20092124-00\Draw\Roadway\Sheets\046_PR_15_J7P3425C_i50.dgn 8:22:18 AM 8/2/2024

SOUTH OUTER ROAD

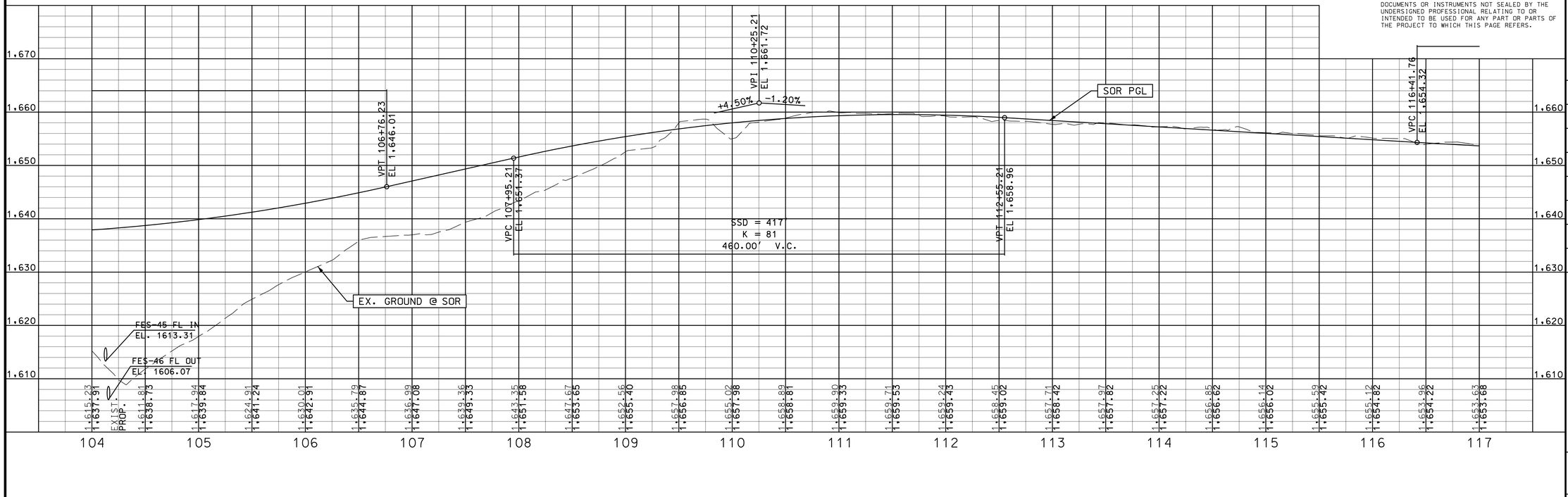

SOUTH OUTER ROAD

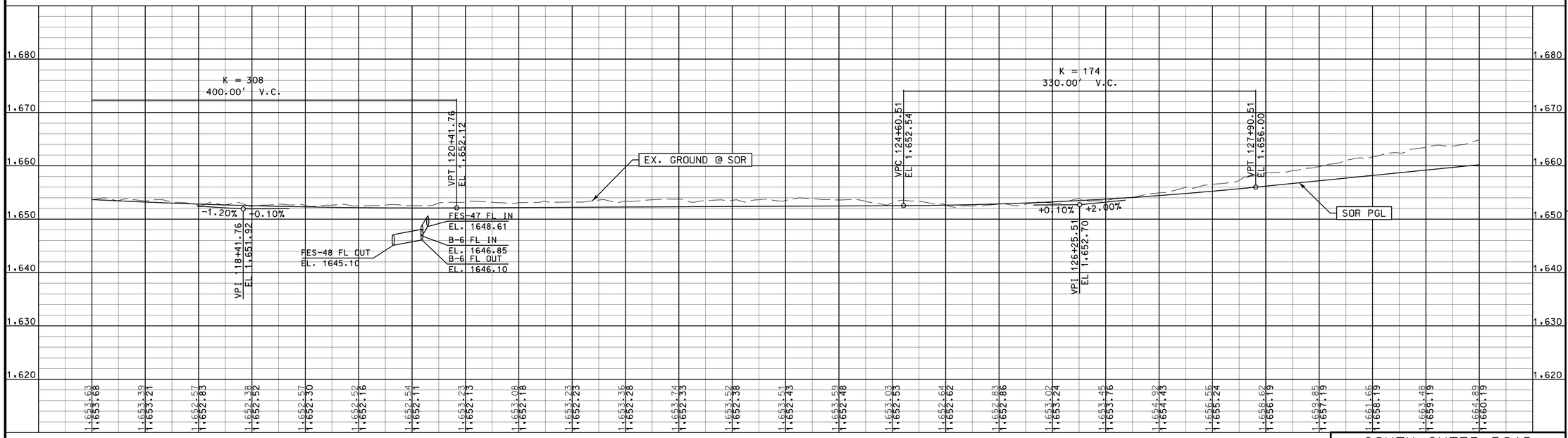

SOUTH OUTER ROAD

PROFILE SHEET
16 OF 19

DISCLAIMER
THE PROFESSIONAL WHOSE SIGNATURE AND PERSONAL SEAL APPEAR HEREON ASSUMES RESPONSIBILITY ONLY FOR WHAT APPEARS ON THIS PAGE, AND DISCLAIMS (PURSUANT TO SECTION 327.411 RSMO) SPECIFICATION, ESTIMATES, REPORTS, OR OTHER DOCUMENTS OR INSTRUMENTS NOT SEALED BY THE UNDERSIGNED PROFESSIONAL RELATING TO OR INTENDED TO BE USED FOR ANY PART OR PARTS OF THE PROJECT TO WHICH THIS PAGE REFERS.

STATE OF MISSOURI
DALLAS P. JOPLIN
NUMBER PE-2011015760
PROFESSIONAL ENGINEER

THIS SHEET HAS BEEN SIGNED, SEALED AND DATED ELECTRONICALLY.

DATE PREPARED
8/2/2024

ROUTE	STATE
60	MO
DISTRICT	SHEET NO.
SW	47

COUNTY
WEBSTER

JOB NO.
J7P3425C

CONTRACT ID.

PROJECT NO.

BRIDGE NO.

REV.	DESCRIPTION	DATE

MISSOURI HIGHWAYS AND TRANSPORTATION COMMISSION
105 WEST CAPITOL
JEFFERSON CITY, MO 65102
1-888-ASK-MODOT (1-888-275-6636)

CMT
© Copyright CMT, Inc.
CRAWFORD, MURPHY & TILLY, INC.
1631 WEST ELFINDALE STREET
SPRINGFIELD, MO 65807 (417) 869-6009
ENGINEERING CORPORATION - 000631

IF A SEAL IS PRESENT ON THIS SHEET IT HAS BEEN ELECTRONICALLY SEALED AND DATED.

L:\MoDOT\20092124-00\Draw\Roadway\Sheets\047_PR_16_J7P3425C_i50.dgn 8:22:20 AM 8/2/2024

SOUTH OUTER ROAD

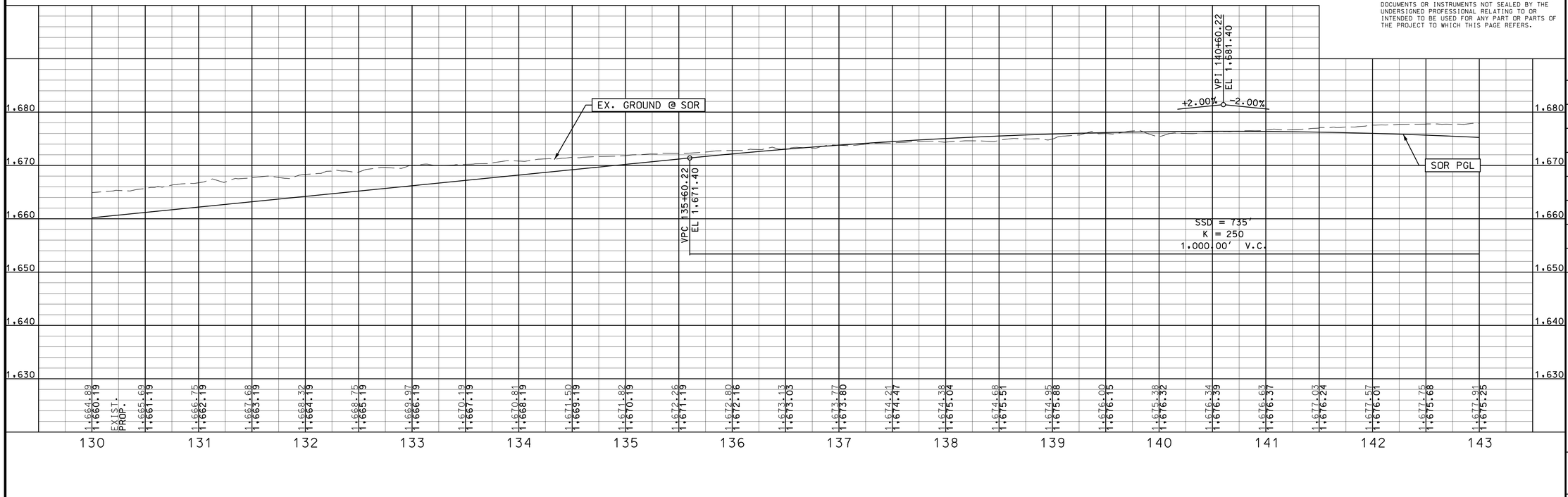

SOUTH OUTER ROAD

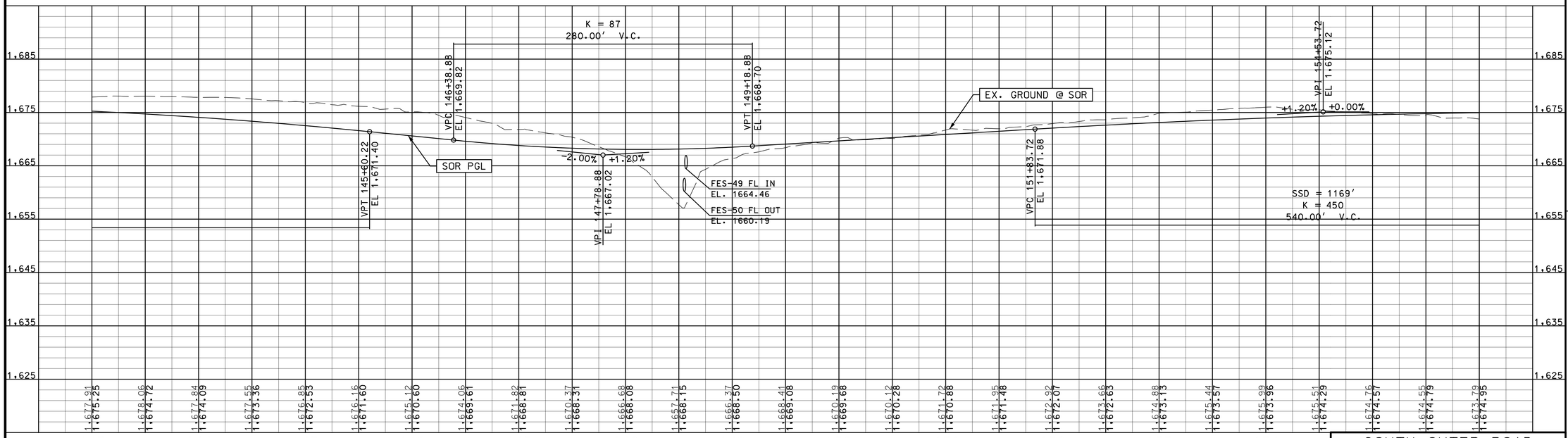

DISCLAIMER
THE PROFESSIONAL WHOSE SIGNATURE AND PERSONAL SEAL APPEAR HEREON ASSUMES RESPONSIBILITY ONLY FOR WHAT APPEARS ON THIS PAGE, AND DISCLAIMS (PURSUANT TO SECTION 327.411 RSMO) SPECIFICATION, ESTIMATES, REPORTS, OR OTHER DOCUMENTS OR INSTRUMENTS NOT SEALED BY THE UNDERSIGNED PROFESSIONAL RELATING TO OR INTENDED TO BE USED FOR ANY PART OR PARTS OF THE PROJECT TO WHICH THIS PAGE REFERS.

STATE OF MISSOURI
DALLAS P. JOPLIN
NUMBER PE-2010015760
PROFESSIONAL ENGINEER

THIS SHEET HAS BEEN SIGNED, SEALED AND DATED ELECTRONICALLY.

DATE PREPARED
8/2/2024

ROUTE	STATE
60	MO
DISTRICT	SHEET NO.
SW	48

COUNTY
WEBSTER

JOB NO.
J7P3425C

CONTRACT ID.

PROJECT NO.

BRIDGE NO.

IF A SEAL IS PRESENT ON THIS SHEET IT HAS BEEN ELECTRONICALLY SEALED AND DATED.

REV.	DESCRIPTION	DATE

MISSOURI HIGHWAYS AND TRANSPORTATION COMMISSION
105 WEST CAPITOL
JEFFERSON CITY, MO 65102
1-888-ASK-MODOT (1-888-275-6636)

CMT
© Copyright CMT, Inc.
CRAWFORD, MURPHY & TILLY, INC.
1631 WEST ELFINDALE STREET
SPRINGFIELD, MO 65807 (417) 869-6009
ENGINEERING CORPORATION - 000631

SOUTH OUTER ROAD
PROFILE SHEET
17 OF 19

L:\MoDOT\20092124-00\Draw\Roadway\Sheets\048_PR_17_J7P3425C_i50.dgn 8:22:22 AM 8/2/2024

SOUTH OUTER ROAD

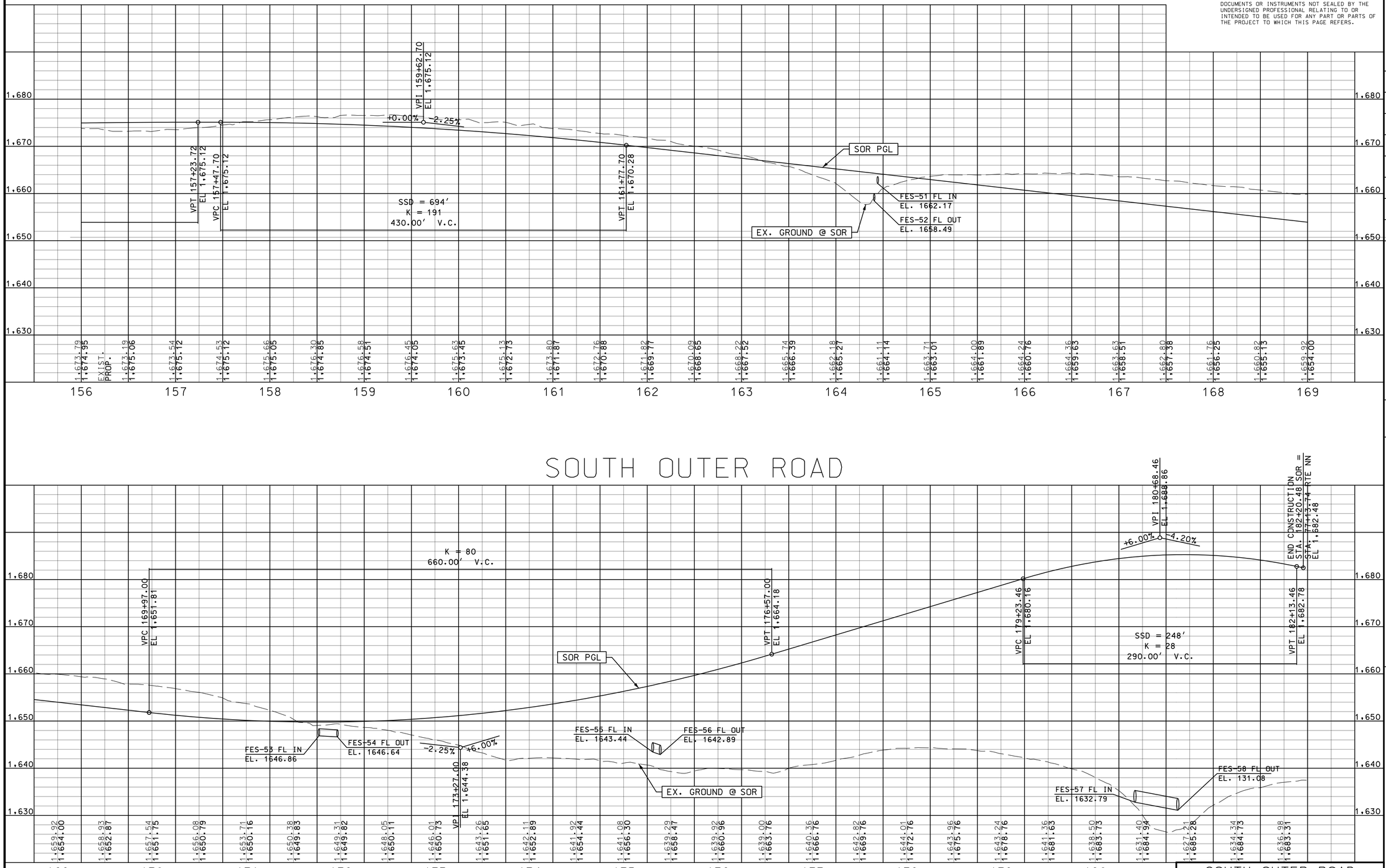

SOUTH OUTER ROAD

DISCLAIMER
THE PROFESSIONAL WHOSE SIGNATURE AND PERSONAL SEAL APPEAR HEREON ASSUMES RESPONSIBILITY ONLY FOR WHAT APPEARS ON THIS PAGE, AND DISCLAIMS (PURSUANT TO SECTION 327.411 RSMO) SPECIFICATION, ESTIMATES, REPORTS, OR OTHER DOCUMENTS OR INSTRUMENTS NOT SEALED BY THE UNDERSIGNED PROFESSIONAL RELATING TO OR INTENDED TO BE USED FOR ANY PART OR PARTS OF THE PROJECT TO WHICH THIS PAGE REFERS.

STATE OF MISSOURI
DALLAS P. JOPLIN
NUMBER PE-2011015760
PROFESSIONAL ENGINEER

THIS SHEET HAS BEEN SIGNED, SEALED AND DATED ELECTRONICALLY.

DATE PREPARED
8/2/2024

ROUTE	STATE
60	MO
DISTRICT	SHEET NO.
SW	49

COUNTY
WEBSTER

JOB NO.
J7P3425C

CONTRACT ID.

PROJECT NO.

BRIDGE NO.

DESCRIPTION	DATE

IF A SEAL IS PRESENT ON THIS SHEET IT HAS BEEN ELECTRONICALLY SEALED AND DATED.

MISSOURI HIGHWAYS AND TRANSPORTATION COMMISSION
105 WEST CAPITOL
JEFFERSON CITY, MO 65102
1-888-ASK-MODOT (1-888-275-6636)

CMT
© Copyright CMT, Inc.
CRAWFORD, MURPHY & TILLY, INC.
1631 WEST ELFINDALE STREET
SPRINGFIELD, MO 65807 (417) 869-6009
ENGINEERING CORPORATION - 000631

SOUTH OUTER ROAD
PROFILE SHEET
18 OF 19

REV.

L:\MoDOT\20092124-00\Draw\Roadway\Sheets\049_PR_18_J7P3425C_i50.dgn 8:22:23 AM 8/2/2024

BLUEBIRD LN

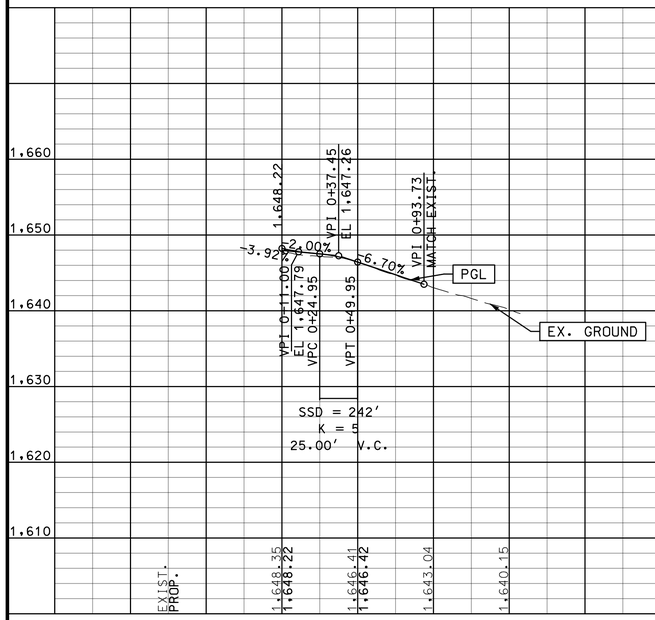

HUMMINGBIRD

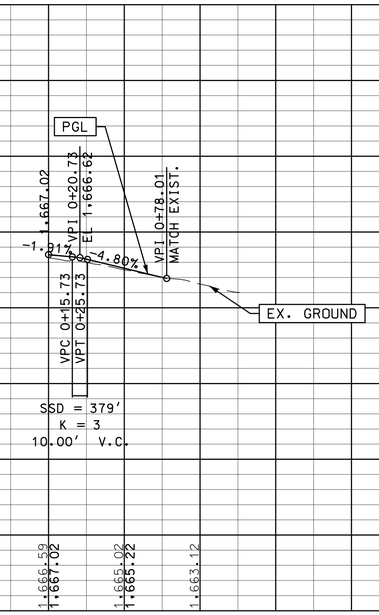

TANDY

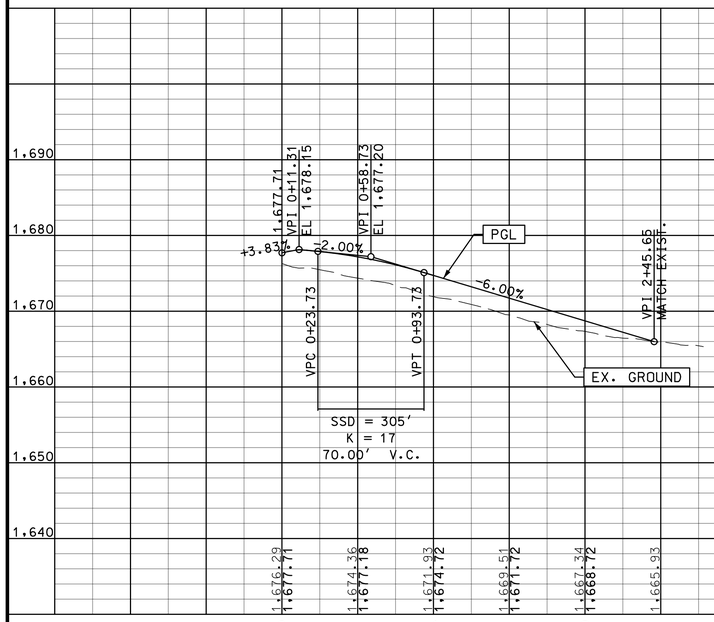

HONOR CAMP

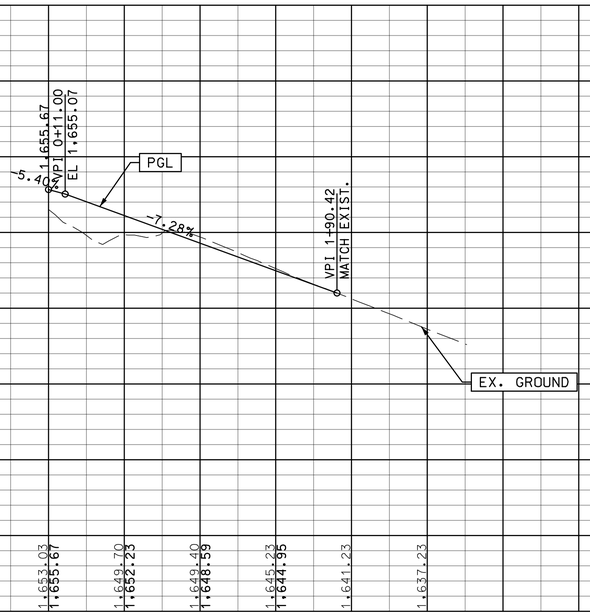

SOUTH OUTER ROAD

PROFILE SHEET
19 OF 19

DISCLAIMER
THE PROFESSIONAL WHOSE SIGNATURE AND PERSONAL SEAL APPEAR HEREON ASSUMES RESPONSIBILITY ONLY FOR WHAT APPEARS ON THIS PAGE, AND DISCLAIMS (PURSUANT TO SECTION 327.411 RSMO) SPECIFICATION, ESTIMATES, REPORTS, OR OTHER DOCUMENTS OR INSTRUMENTS NOT SEALED BY THE UNDERSIGNED PROFESSIONAL RELATING TO OR INTENDED TO BE USED FOR ANY PART OR PARTS OF THE PROJECT TO WHICH THIS PAGE REFERS.

STATE OF MISSOURI
DALLAS P. JOPLIN
NUMBER PE-2011015760
PROFESSIONAL ENGINEER

THIS SHEET HAS BEEN SIGNED, SEALED AND DATED ELECTRONICALLY.

DATE PREPARED
8/2/2024

ROUTE	STATE
60	MO
DISTRICT	SHEET NO.
SW	50

COUNTY
WEBSTER

JOB NO.
J7P3425C

CONTRACT ID.

PROJECT NO.

BRIDGE NO.

DESCRIPTION	DATE

IF A SEAL IS PRESENT ON THIS SHEET IT HAS BEEN ELECTRONICALLY SEALED AND DATED.

MISSOURI HIGHWAYS AND TRANSPORTATION COMMISSION
105 WEST CAPITOL
JEFFERSON CITY, MO 65102
1-888-ASK-MODOT (1-888-275-6636)

CMT
© Copyright CMT, Inc.
CRAWFORD, MURPHY & TILLY, INC.
1631 WEST ELFINDALE STREET
SPRINGFIELD, MO 65807 (417) 869-6009
ENGINEERING CORPORATION - 000631

REV.

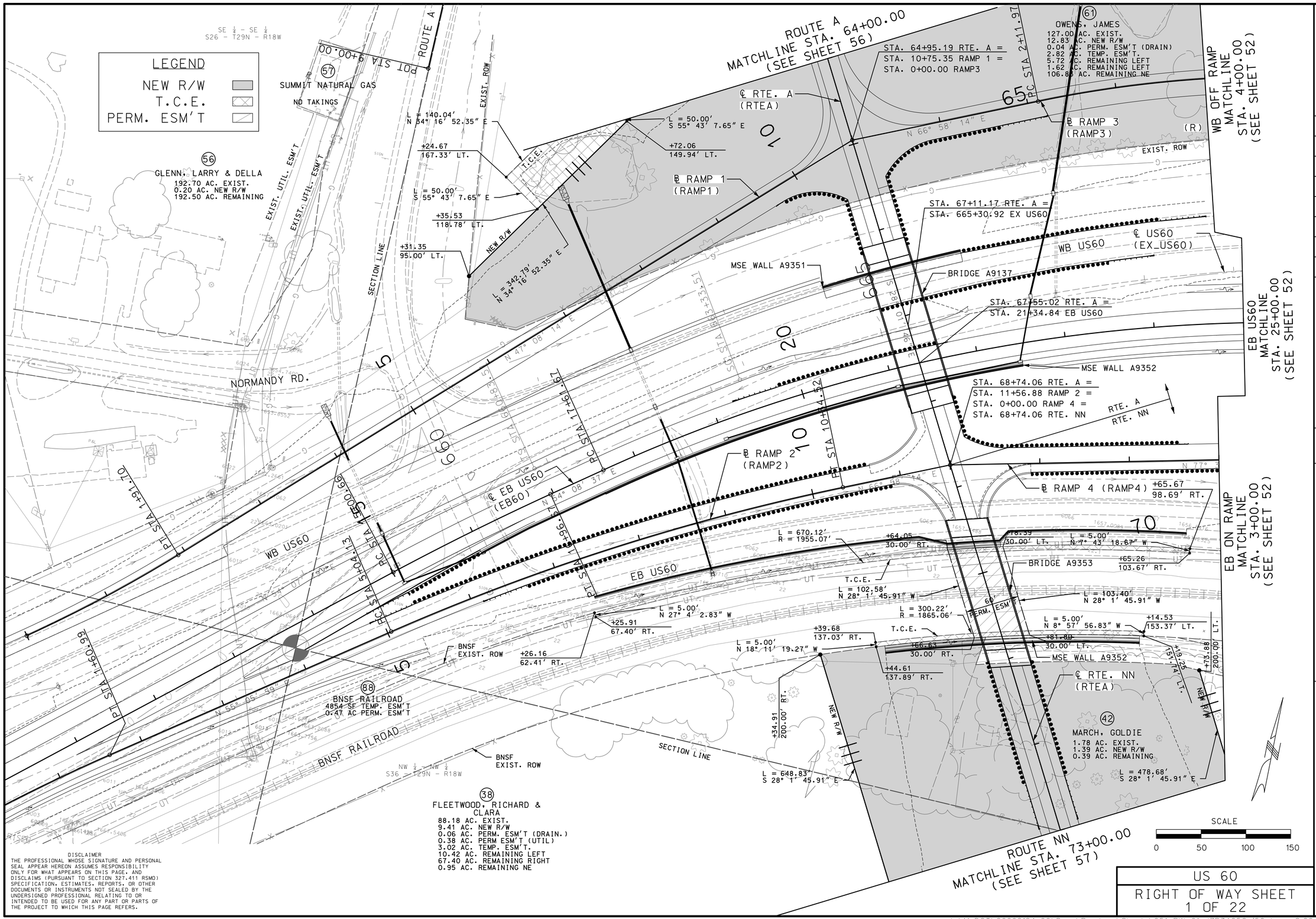

DISCLAIMER
THE PROFESSIONAL WHOSE SIGNATURE AND PERSONAL SEAL APPEAR HEREON ASSUMES RESPONSIBILITY ONLY FOR WHAT APPEARS ON THIS PAGE, AND DISCLAIMS (PURSUANT TO SECTION 327.411 RSMO) SPECIFICATION, ESTIMATES, REPORTS, OR OTHER DOCUMENTS OR INSTRUMENTS NOT SEALED BY THE UNDERSIGNED PROFESSIONAL RELATING TO OR INTENDED TO BE USED FOR ANY PART OR PARTS OF THE PROJECT TO WHICH THIS PAGE REFERS.

STATE OF MISSOURI
DALLAS P. JOPLIN
NUMBER PE-2011015760
PROFESSIONAL ENGINEER

THIS SHEET HAS BEEN SIGNED, SEALED AND DATED ELECTRONICALLY.

DATE PREPARED	
8/2/2024	
ROUTE	STATE
60	MO
DISTRICT	SHEET NO.
SW	51
COUNTY	
WEBSTER	
JOB NO.	
J7P3425C	
CONTRACT ID.	
PROJECT NO.	
BRIDGE NO.	

DATE	DESCRIPTION	REV.

MISSOURI HIGHWAYS AND TRANSPORTATION COMMISSION

105 WEST CAPITOL
JEFFERSON CITY, MO 65102
1-888-ASK-MODOT (1-888-275-6636)

CMT
©Copyright CMT, Inc.
CRAWFORD, MURPHY & TILLY, INC.
1631 WEST ELFINDALE STREET
SPRINGFIELD, MO 65807 (417) 869-6009
ENGINEERING CORPORATION - 000631

IF A SEAL IS PRESENT ON THIS SHEET IT HAS BEEN ELECTRONICALLY SEALED AND DATED.

US 60

RIGHT OF WAY SHEET
1 OF 22

L:\MoDOT\20092124-00\Draw\Roadway\Sheets\051_RW_01_J7P3425C_i50.dgn 8:22:30 AM 8/2/2024

ENTRANCES CONSTRUCTED THROUGH NEW LIMITED ACCESS RIGHT OF WAY BETWEEN STATION 9+00.00 TO STATION 67+69.05 NORTH OUTER ROAD MAY BE WIDENED BY PERMIT TO A MAXIMUM WIDTH OF (12M OR 40FT.) UNLESS OTHERWISE NOTED

SCALE
0 50 100 150

DISCLAIMER
THE PROFESSIONAL WHOSE SIGNATURE AND PERSONAL SEAL APPEAR HEREON ASSUMES RESPONSIBILITY ONLY FOR WHAT APPEARS ON THIS PAGE, AND DISCLAIMS (PURSUANT TO SECTION 327.411 RSMO) SPECIFICATION, ESTIMATES, REPORTS, OR OTHER DOCUMENTS OR INSTRUMENTS NOT SEALED BY THE UNDERSIGNED PROFESSIONAL RELATING TO OR INTENDED TO BE USED FOR ANY PART OR PARTS OF THE PROJECT TO WHICH THIS PAGE REFERS.

LEGEND
NEW R/W
T.C.E.
PERM. ESM'T

NORTH OUTER ROAD MATCHLINE STA. 22+00.00 (SEE SHEET 56)

SECTION LINE

SW¼ - SW¼ S25 - T29N - R18W

61 OWENS, JAMES
SEE ROW SHEET 1 OF 22

℄ NORTH OUTER ROAD (NORE)

63 BOWERS, WILLIAM
9.97 AC. EXIST.
1.22 AC. NEW R/W
1.49 AC. TEMP. ESM'T.
8.26 AC. REMAINING LEFT
0.49 AC. REMAINING RIGHT

WB OFF RAMP MATCHLINE STA. 4+00.00 (SEE SHEET 51)

℄ RAMP 3 (RAMP3)

℄ EB US60 (EB60)

℄ US60 (EX_US60)

℄ RAMP 4 (RAMP4)

WB US60

EB US60 MATCHLINE STA. 25+00.00 (SEE SHEET 51)

EB ON RAMP MATCHLINE STA. 3+00.00 (SEE SHEET 51)

EB US60 MATCHLINE STA. 37+00.00 (SEE SHEET 53)

NORTH OUTER ROAD MATCHLINE STA. 34+00.00 (SEE SHEET 53)

EXISTING EB US60

BNSF EXIST. ROW

BNSF RAILROAD

T.C.E.

NEW R/W

L = 1835.28′ S 72° 15′ 11.60″ E

L = 625.00 S 72° 15′ 11.60″ E

L = 1835.28′ S 72° 15′ 11.60″ E

L = 432.00′ S 72° 15′ 11.60″ E

L = 319.11′ N 85° 1′ 43.35″ E

+10.00 105.00′ LT.

+60.00 50.00′ RT.

+00.00 50.00′ LT.

L = 343.97′ S 80° 36′ 40.79″ E

+40.32 100.00′ LT.

L = 239.68′ S 72° 15′ 11.60″ E

L = 580.94′ S 79° 12′ 18.17″ E

L = 537.44′ N 66° 47′ 43.21″ W

+60.00 55.00′ LT.

PT STA 11+58.51

+45.95 60.92′ LT.

L = 346.22′ S 76° 11′ 40.52″ E

+16.95

+10.00 76.16′ LT.

PC STA 4+16.41

PT STA 16+40.45

PC STA 6+07.58

PT STA 31+99.36

PT STA 13+87.11

S 72° 15′ 12″ E

N 77° 38′ 03″ E

S 80° 28′ 18″ E

S 80° 26′ 05″ E

CSP STA 6+75.92

STM STA 6+54.41

25 30 5 10 15 20 25 30 35

670 671 672 673 674 675 676

1655.899 1656.338 1657.436 1656.401

6070 6071 6072 6073 6074

UT

SIGN

DISCLAIMER
THE PROFESSIONAL WHOSE SIGNATURE AND PERSONAL SEAL APPEAR HEREON ASSUMES RESPONSIBILITY ONLY FOR WHAT APPEARS ON THIS PAGE, AND DISCLAIMS (PURSUANT TO SECTION 327.411 RSMO) SPECIFICATION, ESTIMATES, REPORTS, OR OTHER DOCUMENTS OR INSTRUMENTS NOT SEALED BY THE UNDERSIGNED PROFESSIONAL RELATING TO OR INTENDED TO BE USED FOR ANY PART OR PARTS OF THE PROJECT TO WHICH THIS PAGE REFERS.

STATE OF MISSOURI
DALLAS P. JOPLIN
NUMBER PE-2011015760
PROFESSIONAL ENGINEER

THIS SHEET HAS BEEN SIGNED, SEALED AND DATED ELECTRONICALLY.

DATE PREPARED	
9/3/2024	
ROUTE	STATE
60	MO
DISTRICT	SHEET NO.
SW	52

COUNTY
WEBSTER

JOB NO.
J7P3425C

CONTRACT ID.

PROJECT NO.

BRIDGE NO.

DATE	DESCRIPTION

IF A SEAL IS PRESENT ON THIS SHEET IT HAS BEEN ELECTRONICALLY SEALED AND DATED.

MISSOURI HIGHWAYS AND TRANSPORTATION COMMISSION

MoDOT

105 WEST CAPITOL
JEFFERSON CITY, MO 65102
1-888-ASK-MODOT (1-888-275-6636)

CMT

© Copyright CMT, Inc.

CRAWFORD, MURPHY & TILLY, INC.
1631 WEST ELFINDALE STREET
SPRINGFIELD, MO 65807 (417) 869-6009
ENGINEERING CORPORATION - 000631

US 60
RIGHT OF WAY SHEET
2 OF 22

REV.

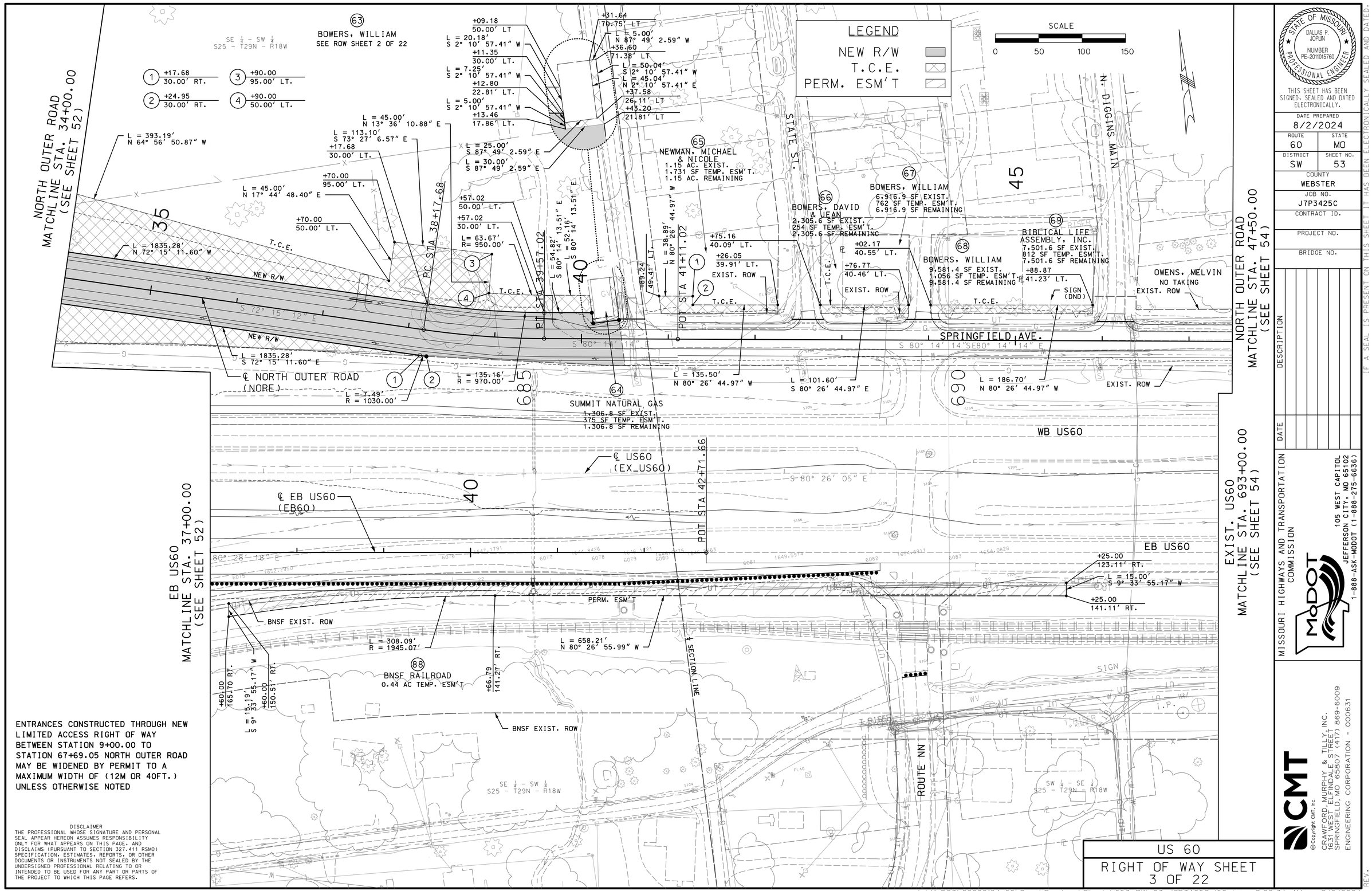

ENTRANCES CONSTRUCTED THROUGH NEW LIMITED ACCESS RIGHT OF WAY BETWEEN STATION 9+00.00 TO STATION 67+69.05 NORTH OUTER ROAD MAY BE WIDENED BY PERMIT TO A MAXIMUM WIDTH OF (12M OR 40FT.) UNLESS OTHERWISE NOTED

DISCLAIMER
THE PROFESSIONAL WHOSE SIGNATURE AND PERSONAL SEAL APPEAR HEREON ASSUMES RESPONSIBILITY ONLY FOR WHAT APPEARS ON THIS PAGE, AND DISCLAIMS (PURSUANT TO SECTION 327.411 RSMO) SPECIFICATION, ESTIMATES, REPORTS, OR OTHER DOCUMENTS OR INSTRUMENTS NOT SEALED BY THE UNDERSIGNED PROFESSIONAL RELATING TO OR INTENDED TO BE USED FOR ANY PART OR PARTS OF THE PROJECT TO WHICH THIS PAGE REFERS.

STATE OF MISSOURI
DALLAS P. JOPLIN
NUMBER PE-2011015760
PROFESSIONAL ENGINEER
THIS SHEET HAS BEEN SIGNED, SEALED AND DATED ELECTRONICALLY.

DATE PREPARED	
8/2/2024	
ROUTE	STATE
60	MO
DISTRICT	SHEET NO.
SW	53
COUNTY	
WEBSTER	
JOB NO.	
J7P3425C	
CONTRACT ID.	
PROJECT NO.	
BRIDGE NO.	

REV.	DATE	DESCRIPTION

IF A SEAL IS PRESENT ON THIS SHEET IT HAS BEEN ELECTRONICALLY SEALED AND DATED.

MISSOURI HIGHWAYS AND TRANSPORTATION COMMISSION
105 WEST CAPITOL
JEFFERSON CITY, MO 65102
1-888-ASK-MODOT (1-888-275-6636)

CMT
© Copyright CMT, Inc.
CRAWFORD, MURPHY & TILLY, INC.
1631 WEST ELFINDALE STREET
SPRINGFIELD, MO 65807 (417) 869-6009
ENGINEERING CORPORATION - 000631

US 60
RIGHT OF WAY SHEET
3 OF 22

L:\MoDOT\20092124-00\Draw\Roadway\Sheets\053_RW_03_J7P3425C_i50.dgn 8:22:34 AM 8/2/2024

SCALE
0 50 100 150

LEGEND
NEW R/W
T.C.E.
PERM. ESM'T

NORTH OUTER ROAD
MATCHLINE STA. 47+50.00
(SEE SHEET 53)

EXIST. US60
MATCHLINE STA. 693+00.00
(SEE SHEET 53)

NORTH OUTER ROAD
MATCHLINE STA. 60+50.00
(SEE SHEET 55)

EXIST. US60
MATCHLINE STA. 706+00.00
(SEE SHEET 55)

SE ¼ - SE ¼
S25 - T29N - R18W

SW ¼ - SE ¼
S25 - T29N - R18W

(72) LEA, ROGER & ANITA
1.11 AC. EXIST.
0.16 AC. NEW R/W
0.19 AC. TEMP. ESM'T.
0.95 AC REMAINING

(73) RAMBO, PAUL D
0.49 AC. EXIST.
0.15 AC. NEW R/W
2,652 SF TEMP. ESM'T.
0.34 AC REMAINING

(74) RAMBO, PAUL D
1.34 AC. EXIST.
0.26 AC. NEW R/W
3,230 SF TEMP. ESM'T.
1.08 AC REMAINING

(76) D&F STORAGE, LLC.
0.70 AC. EXIST.
3,730 SF NEW R/W
1,511 SF TEMP. ESM'T.
0.61 AC REMAINING

(77) VSE, LLC
0.90 AC. EXIST.
0.10 AC. NEW R/W
451 SF PERM. ESM'T (DRAIN.)
1,557 SF TEMP. ESM'T.
0.80 AC REMAINING

(71) HOLMES, BARBARA
NO TAKING

OWENS, MELVIN
NO TAKING
EXIST. ROW

EXIST. ROW

PATTERSON ST.

OLIVE ST.

OWENS ST.

SPRINGFIELD AVE.

WB US60

EB US60

BNSF RAILROAD

PC STA 48+64.31

PT STA 49+36.84

PC STA 50+45.48

PT STA 51+20.89

L = 170.40'
N 80° 26' 55.99" W

L = 77.08'
N 80° 26' 55.99" W

L = 74.59'
N 9° 33' 4.01" E

L = 66.40'
N 80° 26' 55.99" W

L = 85.27'
S 2° 19' 7.77" W

L = 168.05'
N 80° 26' 55.99" W

L = 115.57'
N 80° 26' 55.99" W

L = 18.99'
N 9° 33' 4.01" E

L = 49.89'
N 80° 26' 55.99" W

L = 29.24'
S 1° 58' 46.36" W

L = 610.25'
S 80° 26' 55.99" E

L = 1210.96'
N 80° 26' 55.99" W

L = 22.53'
N 9° 33' 4.01" E

L = 20.00'
S 80° 29' 55.99" E

L = 1860.19'
S 80° 26' 55.99" E

L = 1860.19'
N 80° 26' 55.99" W

S 74° 54' 35" E

S 80° 26' 56" E

S 80° 26' 05" E

T.C.E.
NEW R/W
TREE (R)

PERM. DRAINAGE ESMT.

+33.38
52.53' LT.

+33.38
40.00' LT.

+33.38
30.00' LT.

NOR: +71.32
20.90' RT.

L = 59.21'
N 60° 42' 34.30" W

NOR: +28.72
35.43' RT.

EX 60: +98.98
104.00' LT.

+01.59
39.77' LT.

℄ NORTH OUTER ROAD (NORE)

℄ US60 (EX_US60)

SECTION LINE

EQUATION
STA 693+98.98 BK
= STA 700+00.00 AH

BNSF EXIST. ROW

ENTRANCES CONSTRUCTED THROUGH NEW LIMITED ACCESS RIGHT OF WAY BETWEEN STATION 9+00.00 TO STATION 67+69.05 NORTH OUTER ROAD MAY BE WIDENED BY PERMIT TO A MAXIMUM WIDTH OF (12M OR 40FT.) UNLESS OTHERWISE NOTED

(1)	+22.93 24.30' LT.	(2)	+21.97 34.25' LT.	(10)	+30.36 58.99' LT.
(6)	+95.90 30.00' LT.	(3)	+01.59 39.77' LT.	(11)	+80.26 58.99' LT.
(8)	+16.06 30.00' LT.	(4)	+99.43 114.34' LT.	(13)	+23.13 40.00' LT.
(12)	+84.11 30.00' LT.	(5)	+85.16 114.59' LT.		
(14)	+24.46 30.00' LT.	(7)	+14.79 40.00' LT.		
(15)	EX 60: +98.98 123.99' LT.	(9)	+30.36 40.00' LT.		

DISCLAIMER
THE PROFESSIONAL WHOSE SIGNATURE AND PERSONAL SEAL APPEAR HEREON ASSUMES RESPONSIBILITY ONLY FOR WHAT APPEARS ON THIS PAGE, AND DISCLAIMS (PURSUANT TO SECTION 327.411 RSMO) SPECIFICATION, ESTIMATES, REPORTS, OR OTHER DOCUMENTS OR INSTRUMENTS NOT SEALED BY THE UNDERSIGNED PROFESSIONAL RELATING TO OR INTENDED TO BE USED FOR ANY PART OR PARTS OF THE PROJECT TO WHICH THIS PAGE REFERS.

US 60
RIGHT OF WAY SHEET
4 OF 22

STATE OF MISSOURI
DALLAS P. JOPLIN
NUMBER PE-2011015760
PROFESSIONAL ENGINEER

THIS SHEET HAS BEEN SIGNED, SEALED AND DATED ELECTRONICALLY.

DATE PREPARED
9/6/2024

ROUTE	STATE
60	MO
DISTRICT	SHEET NO.
SW	54

COUNTY
WEBSTER

JOB NO.
J7P3425C

CONTRACT ID.

PROJECT NO.

BRIDGE NO.

DATE	DESCRIPTION

IF A SEAL IS PRESENT ON THIS SHEET IT HAS BEEN ELECTRONICALLY SEALED AND DATED.

MISSOURI HIGHWAYS AND TRANSPORTATION COMMISSION
105 WEST CAPITOL
JEFFERSON CITY, MO 65102
1-888-ASK-MODOT (1-888-275-6636)

CMT
© Copyright CMT, Inc.
CRAWFORD, MURPHY & TILLY, INC.
1631 WEST ELFINDALE STREET
SPRINGFIELD, MO 65807 (417) 869-6009
ENGINEERING CORPORATION - 000631

REV.

L:\MoDOT\20092124-00\Draw\Roadway\Sheets\054_RW_04_J7P3425C_150.dgn 12:23:58 PM 9/6/2024

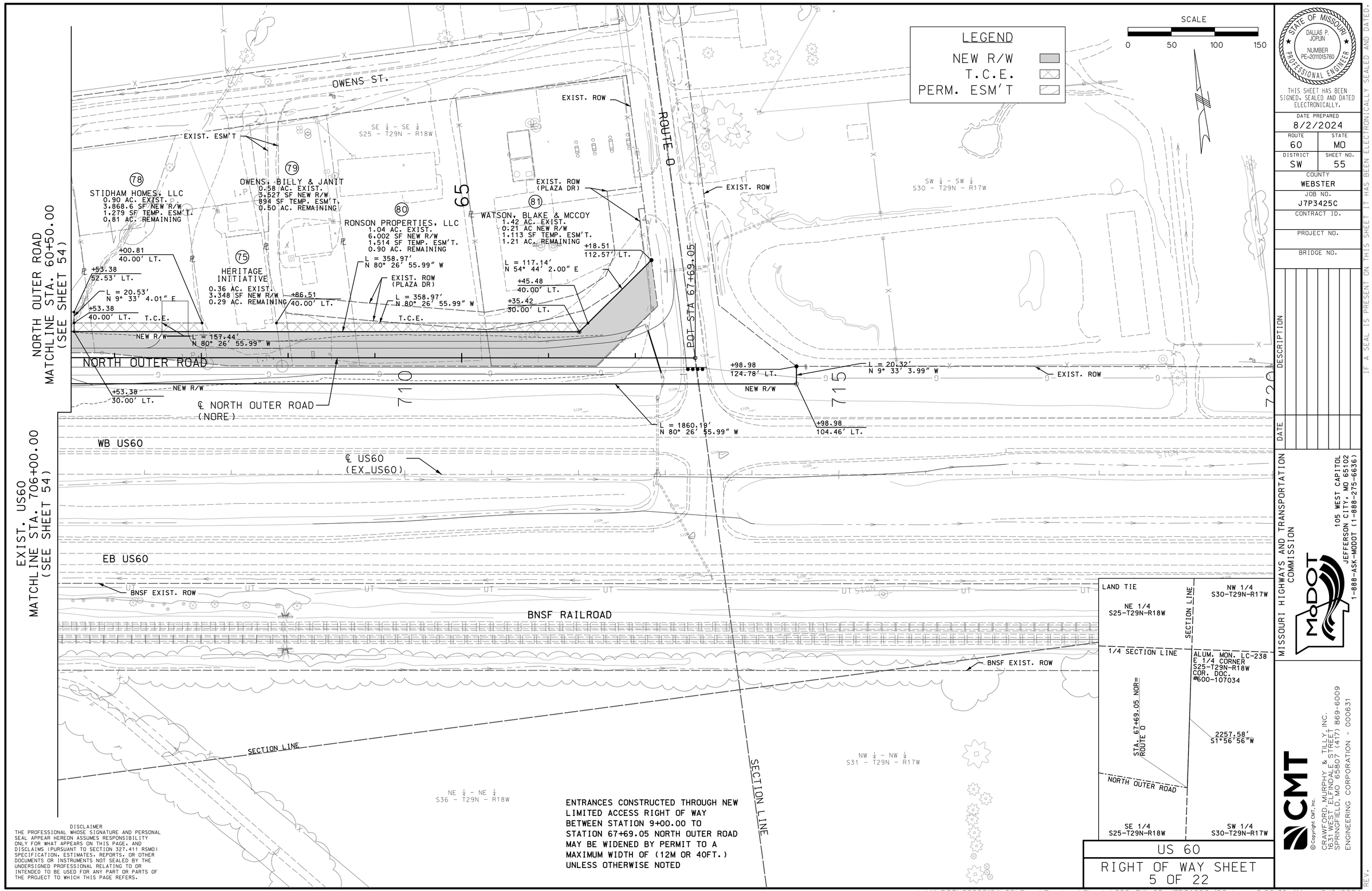

ENTRANCES CONSTRUCTED THROUGH NEW LIMITED ACCESS RIGHT OF WAY BETWEEN STATION 9+00.00 TO STATION 67+69.05 NORTH OUTER ROAD MAY BE WIDENED BY PERMIT TO A MAXIMUM WIDTH OF (12M OR 40FT.) UNLESS OTHERWISE NOTED

DISCLAIMER
THE PROFESSIONAL WHOSE SIGNATURE AND PERSONAL SEAL APPEAR HEREON ASSUMES RESPONSIBILITY ONLY FOR WHAT APPEARS ON THIS PAGE. AND DISCLAIMS (PURSUANT TO SECTION 327.411 RSMO) SPECIFICATION. ESTIMATES. REPORTS. OR OTHER DOCUMENTS OR INSTRUMENTS NOT SEALED BY THE UNDERSIGNED PROFESSIONAL RELATING TO OR INTENDED TO BE USED FOR ANY PART OR PARTS OF THE PROJECT TO WHICH THIS PAGE REFERS.

STATE OF MISSOURI
DALLAS P. JOPLIN
NUMBER PE-2011015760
PROFESSIONAL ENGINEER

THIS SHEET HAS BEEN SIGNED, SEALED AND DATED ELECTRONICALLY.

DATE PREPARED	
8/2/2024	
ROUTE	STATE
60	MO
DISTRICT	SHEET NO.
SW	55
COUNTY	
WEBSTER	
JOB NO.	
J7P3425C	
CONTRACT ID.	
PROJECT NO.	
BRIDGE NO.	

DESCRIPTION	DATE

IF A SEAL IS PRESENT ON THIS SHEET IT HAS BEEN ELECTRONICALLY SEALED AND DATED.

MISSOURI HIGHWAYS AND TRANSPORTATION COMMISSION
105 WEST CAPITOL
JEFFERSON CITY, MO 65102
1-888-ASK-MODOT (1-888-275-6636)

CMT
© Copyright CMT, Inc.
CRAWFORD, MURPHY & TILLY, INC.
1631 WEST ELFINDALE STREET
SPRINGFIELD, MO 65807 (417) 869-6009
ENGINEERING CORPORATION - 000631

US 60

RIGHT OF WAY SHEET
5 OF 22

REV.

L:\MoDOT\20092124-00\Draw\Roadway\Sheets\055_RW_05_J7P3425C_i50.dgn 8:22:39 AM 8/2/2024

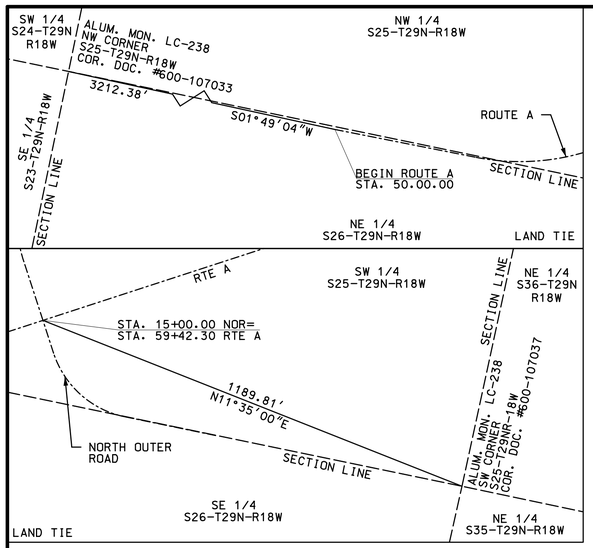

1	L = 45.70′ S 15° 58′ 26.74″ W	7	+07.37 30.00′ RT.
2	+25.52 30.00′ LT.	8	L = 20.01′ S 15° 58′ 26.74″ W
3	+27.38 30.00′ RT.	9	+65.00 100.00′ LT.
4	L = 20.01′ S 15° 58′ 26.74″ W	10	L = 45.00′ N 17° 44′ 48.40″ E
5	L = 45.09′ S 15° 58′ 26.74″ W	11	+65.00 55.00′ LT.
6	+05.51 30.00′ LT.		

LEGEND

NEW R/W

T.C.E.

PERM. ESM'T

NORTH OUTER ROAD MATCHLINE
STA. 22+00.00
(SEE SHEET 52)

DISCLAIMER
THE PROFESSIONAL WHOSE SIGNATURE AND PERSONAL SEAL APPEAR HEREON ASSUMES RESPONSIBILITY ONLY FOR WHAT APPEARS ON THIS PAGE, AND DISCLAIMS (PURSUANT TO SECTION 327.411 RSMO) SPECIFICATION, ESTIMATES, REPORTS, OR OTHER DOCUMENTS OR INSTRUMENTS NOT SEALED BY THE UNDERSIGNED PROFESSIONAL RELATING TO OR INTENDED TO BE USED FOR ANY PART OR PARTS OF THE PROJECT TO WHICH THIS PAGE REFERS.

SCALE
0 50 100 150

(61) OWENS, JAMES
SEE ROW SHEET 1 OF 22

NW ¼ – SW ¼
S25 – T29N – R18W

℄ NORTH OUTER ROAD
(NORE)

POT STA 50+00.00

PC STA 52+86.18

PT STA 19+82.40

PT STA 57+75.11

PC STA 16+62.82

PT STA 14+08.82

PC STA 11+45.79

℄ NORTH OUTER ROAD
(NORW)

℄ RTE. A
(RTEA)

ROUTE A
MATCHLINE STA. 64+00.00
(SEE SHEET 51)

STA. 59+42.30 RTE A =
STA. 15+00.00 NORE =
STA. 15+00.00 NORW

SECTION LINE

NE ¼ – SE ¼
S26 – T29N – R18W

SE ¼ – SE ¼
S26 – T29N – R18W

SW ¼ – SW ¼
S25 – T29N – R18W

(56) GLENN, LARRY & DELLA
SEE ROW SHEET 1 OF 22

ENTRANCES CONSTRUCTED THROUGH NEW LIMITED ACCESS RIGHT OF WAY BETWEEN STATION 9+00.00 TO STATION 67+69.05 NORTH OUTER ROAD MAY BE WIDENED BY PERMIT TO A MAXIMUM WIDTH OF (12M OR 40FT.) UNLESS OTHERWISE NOTED

EXIST. R/W

EXIST. ROW

STATE OF MISSOURI
DALLAS P. JOPLIN
NUMBER PE-2011015760
PROFESSIONAL ENGINEER

THIS SHEET HAS BEEN SIGNED, SEALED AND DATED ELECTRONICALLY.

DATE PREPARED	
8/2/2024	
ROUTE	STATE
60	MO
DISTRICT	SHEET NO.
SW	56

COUNTY
WEBSTER

JOB NO.
J7P3425C

CONTRACT ID.

PROJECT NO.

BRIDGE NO.

DESCRIPTION	DATE

IF A SEAL IS PRESENT ON THIS SHEET IT HAS BEEN ELECTRONICALLY SEALED AND DATED.

MISSOURI HIGHWAYS AND TRANSPORTATION COMMISSION
105 WEST CAPITOL
JEFFERSON CITY, MO 65102
1-888-ASK-MODOT (1-888-275-6636)

CMT
©Copyright CMT, Inc.
CRAWFORD, MURPHY & TILLY, INC.
1631 WEST ELFINDALE STREET
SPRINGFIELD, MO 65807 (417) 869-6009
ENGINEERING CORPORATION - 000631

ROUTE A/ROUTE NN
RIGHT OF WAY SHEET
6 OF 22

REV.

L:\MoDOT\20092124-00\Draw\Roadway\Sheets\056_RW_06_J7P3425C_150.dgn 8:22:41 AM 8/2/2024

ROUTE NN
MATCHLINE STA. 73+00.00
(SEE SHEET 51)

SW ¼ - SW ¼
S25 - T29N - R18W

SE ¼ - SW ¼
S25 - T29N - R18W

SECTION LINE

L = 472.68'
S 28° 1' 45.91" E

75

NEW R/W

L = 532.29'
S 28° 1' 45.91" E

NW ¼ - NW ¼
S36 - T29N - R18W

+51.11
199.80' LT.

+23.70
195.00' LT.

¼ - ¼ SECTION LINE

L = 57.84'
S 26° 44' 39.99" E

PC STA 76+29.21

+41.89
200.00' RT.

L = 264.86'
N 49° 57' 58.31" E

L = 264.86'
N 49° 57' 58.31" E

+62.31
114.39' LT.

T.C.E.

180

STA. 77+13.74 RTE NN =
STA. 182+32.53 SOR

L = 648.83'
S 28° 1' 45.91" E

+74.31
201.28' RT.

L = 425.69'
R = 1160.00'

N 61° 55' 32" E

PC STA 177+24.94

NEW R/W

L = 447.71'
R = 1220.00'

℄ SOUTH OUTER
ROAD
(SOR)

T.C.E.

+18.64
136.79' RT.

L = 200.54'
N 80° 34' 6.49" E

+84.34
188.10' RT.

L = 355.57'
N 88° 31' 48.73" E

L = 598.38'
S 47° 36' 30.21" E

NEW R/W

L = 408.64'
N 41° 0' 8.99" W

NE ¼ - NW ¼
S36 - T29N - R18W

(44)
COOK, BRANDON
12.30 AC. EXIST.
1.44 AC. NEW R/W
10.86 AC. REMAINING

+20.00
140.00' LT.

L = 201.8'
S 61° 39' 53.55" E

NEW R/W

L = 216.41'
S 86° 28' 17.27" E

85

+50.00
110.00' LT.

℄ RTE. NN
(RTEA)

PT STA 86+35.54

ROUTE NN MATCHLINE
STA. 86+50.00
(SEE SHEET 58)

L = 278.83'
N 77° 18' 44.44" W

L = 287.66'
N 73° 59' 49.32" E

+20.00
215.00' RT.

+50.00
180.00' RT.

(38)
FLEETWOOD, RICHARD &
CLARA
SEE SHEET 1 OF 22

(46)
DICKSON, GREG &
BRIDGETTE
SEE ROW SHEET 8 OF 22

ENTRANCES CONSTRUCTED THROUGH NEWLIMITED ACCESS RIGHT OF WAY BETWEEN STATION 82+20.00 TO STATION 90+50.00 RTE NN MAY BE WIDENED BY PERMIT TO A MAXIMUM WIDTH OF (12M OR 40FT.) UNLESS OTHERWISE NOTED

ENTRANCES CONSTRUCTED THROUGH NEW LIMITED ACCESS RIGHT OF WAY BETWEEN STATION 0+85.84 TO STATION 180+28.83 SOUTH OUTER ROAD MAY BE WIDENED BY PERMIT TO A MAXIMUM WIDTH OF (12M OR 40FT.) UNLESS OTHERWISE NOTED

DISCLAIMER
THE PROFESSIONAL WHOSE SIGNATURE AND PERSONAL SEAL APPEAR HEREON ASSUMES RESPONSIBILITY ONLY FOR WHAT APPEARS ON THIS PAGE, AND DISCLAIMS (PURSUANT TO SECTION 327.411 RSMO) SPECIFICATION, ESTIMATES, REPORTS, OR OTHER DOCUMENTS OR INSTRUMENTS NOT SEALED BY THE UNDERSIGNED PROFESSIONAL RELATING TO OR INTENDED TO BE USED FOR ANY PART OR PARTS OF THE PROJECT TO WHICH THIS PAGE REFERS.

LEGEND
NEW R/W
T.C.E.
PERM. ESM'T

SCALE
0 50 100 150

STATE OF MISSOURI
DALLAS P. JOPLIN
NUMBER PE-2011015760
PROFESSIONAL ENGINEER

THIS SHEET HAS BEEN SIGNED, SEALED AND DATED ELECTRONICALLY.

DATE PREPARED	
8/2/2024	
ROUTE	STATE
60	MO
DISTRICT	SHEET NO.
SW	57
COUNTY	
WEBSTER	
JOB NO.	
J7P3425C	
CONTRACT ID.	
PROJECT NO.	
BRIDGE NO.	

DESCRIPTION	DATE

IF A SEAL IS PRESENT ON THIS SHEET IT HAS BEEN ELECTRONICALLY SEALED AND DATED.

MISSOURI HIGHWAYS AND TRANSPORTATION COMMISSION
105 WEST CAPITOL
JEFFERSON CITY, MO 65102
1-888-ASK-MODOT (1-888-275-6636)

CMT
©Copyright CMT, Inc.
CRAWFORD, MURPHY & TILLY, INC.
1631 WEST ELFINDALE STREET
SPRINGFIELD, MO 65807 (417) 869-6009
ENGINEERING CORPORATION - 000631

ROUTE A/ROUTE NN
RIGHT OF WAY SHEET
7 OF 22

REV.

L:\MoDOT\20092124-00\Draw\Roadway\Sheets\057_RW_07_J7P3425C_150.dgn 8:22:43 AM 8/2/2024

ROUTE NN
MATCHLINE STA. 86+50.00
(SEE SHEET 57)

LEGEND
NEW R/W
T.C.E.
PERM. ESM'T

DISCLAIMER
THE PROFESSIONAL WHOSE SIGNATURE AND PERSONAL SEAL APPEAR HEREON ASSUMES RESPONSIBILITY ONLY FOR WHAT APPEARS ON THIS PAGE, AND DISCLAIMS (PURSUANT TO SECTION 327.411 RSMO) SPECIFICATION, ESTIMATES, REPORTS, OR OTHER DOCUMENTS OR INSTRUMENTS NOT SEALED BY THE UNDERSIGNED PROFESSIONAL RELATING TO OR INTENDED TO BE USED FOR ANY PART OR PARTS OF THE PROJECT TO WHICH THIS PAGE REFERS.

SCALE
0 50 100 150

STATE OF MISSOURI
DALLAS P. JOPLIN
NUMBER PE-2010015760
PROFESSIONAL ENGINEER
THIS SHEET HAS BEEN SIGNED, SEALED AND DATED ELECTRONICALLY.

DATE PREPARED
8/2/2024

ROUTE	STATE
60	MO
DISTRICT	SHEET NO.
SW	58

COUNTY
WEBSTER

JOB NO.
J7P3425C

CONTRACT ID.

PROJECT NO.

BRIDGE NO.

DATE	DESCRIPTION

IF A SEAL IS PRESENT ON THIS SHEET IT HAS BEEN ELECTRONICALLY SEALED AND DATED.

MISSOURI HIGHWAYS AND TRANSPORTATION COMMISSION
105 WEST CAPITOL
JEFFERSON CITY, MO 65102
1-888-ASK-MODOT (1-888-275-6636)

CMT
© Copyright CMT, Inc.
CRAWFORD, MURPHY & TILLY, INC.
1631 WEST ELFINDALE STREET
SPRINGFIELD, MO 65807 (417) 869-6009
ENGINEERING CORPORATION - 000631

BEGIN CONST.
STA. 10+47.96
EX. RTE NN

℄ ROUTE NN
(RTENN_05)

POT STA 10+00.00

EXIST. R/W

℄ SECTION LINE

NE ¼ - NW ¼
S36 - T29N - R18W

(44) COOK, BRANDON
SEE SHEET 14 OF 29

(87) LUTHERAN CHURCH
3.10 AC EXIST.
97 SF PERM ESM'T (UTIL)
3.10 AC REMAINING
ACCESS RIGHTS

(45) KILGORE, DAVID & JOANNA
3.50 AC. EXIST.
2.30 AC. NEW R/W
1,189 SF PERM. ESM'T (UTIL)
0.42 AC. REMAINING LEFT
0.78 AC. REMAINING RIGHT

(62) TRAITEUR, MIKE & ALESIA
1.00 AC. EXIST.
2,778 SF NEW R/W
0.94 AC. REMAINING

(52) OWENS, JAMES
49.41 AC. EXIST.
0.45 AC. NEW R/W
5,891 SF PERM. ESM'T (UTIL)
48.96 AC. REMAINING

(51) SAWYERS, ROGER & CASSIE
0.58 AC. EXIST.
2,458 SF NEW R/W
1,955 SF PERM. ESM'T (UTIL)
0.52 AC. REMAINING

(46) DICKSON, GREG & BRIDGETTE
8.11 AC. EXIST.
3.15 AC. NEW R/W
2,268 SF PERM. ESM'T (UTIL)
4.96 AC. REMAINING

(47) KELLEY, BRANDON & ASHLEY
8.11 AC. EXIST.
1,685 SF NEW R/W
1,039 SF PERM. ESM'T (UTIL)
8.07 AC. REMAINING

10 15 90 0

+87.98 120.00' LT. L = 112.02' S 87° 47' 30.09" E
+00.00 120.00' LT. L = 41.77' S 59° 10' 52.44" E
+36.67 100.00' LT. L = 83.53' S 59° 10' 52.44" E
+10.00 60.00' LT. L = 140.00' S 87° 47' 30.09" E
+50.00 60.00' LT. L = 207.73' S 87° 47' 30.09" E
+63.25 29.43' RT. L = 78.01' N 76° 1' 44.74" E
+10.57 85.74' LT. L = 57.59' N 1° 24' 56.61" E
+10.71 75.37' LT. L = 10.37' S 1° 24' 56.61" W
+57.73 60.00' LT.
+57.73 60.00' RT. L = 123.41' S 61° 19' 45.97" E
+13.12 98.74' RT. L = 11.25' N 1° 29' 56.61" E
+13.12 98.74' RT. L = 50.76' N 61° 19' 45.97" W
+47.16 60.00' RT.
+47.16 60.00' RT. L = 170.17' N 1° 11' 44.97" W
PROP. UTIL ESM'T L = 216.66' N 1° 12' 0.74" W
+85.49 107.48' LT. L = 69.35' N 1° 24' 56.61" E
+37.87 100.00' LT.
+90.66 70.00' RT. L = 109.79 N 86° 58' 56.89" E
+00.00 60.00' RT. L = 250.00 S 87° 47' 30.09" E
+50.00 60.00' RT. L = 207.73' S 87° 47' 30.09" E
+25.35 30.57' LT.
+25.49 40.57' LT. L = 10.00' N 87° 49' 59.88" W
L = 137.76' N 1° 29' 46.09" E
+63.25 40.27' LT. L = 73.24' N 14° 15' 11.06" W
+33.78 60.00' LT.
+34.11 84.21' LT. L = 108.74' N 32° 7' 0.12" W
L = 91.66' N 32° 7' 0.12" W
+88.21 120.00' LT. L = 36.25' N 1° 22' 26.04" E
+24.46 120.00' LT.
+14.46 120.00' LT. L = 23.74' S 1° 22' 26.04" W
+38.20 120.00' LT. L = 83.10' S 58° 45' 39.98" W
L = 65.29' S 58° 45' 39.98" W
+73.39 65.00' LT.
+80.00 50.00' LT.
+53.70 50.00' LT. L = 21.02' S 88° 37' 33.96" E
+68.70 65.00' LT.
+68.70 43.98' LT. L = 20.99' S 88° 37' 33.96" E
+53.70 29.01' LT.
+53.70 29.86' RT.
+63.70 39.87' RT.
+63.70 60.00' RT. L = 20.13' S 88° 37' 33.96" E
L = 20.14' S 88° 37' 33.96" E
+53.70 50.00' LT. L = 93.87' N 1° 22' 26.04" E
L = 68.72' N 1° 22' 26.04" E
+69.98 50.00' RT.
L = 15.00' S 1° 22' 26.04" W
+84.98 50.00' RT.
+59.25 50.00' LT.
L = 20.75' S 1° 22' 26.04" W
L = 32.87' S 1° 11' 44.97" E
+80.00 58.53' RT.
+50.00 50.90' RT.
L = 4.97' S 1° 11' 44.97" E
+54.97 50.67' RT.
L = 15.03' S 1° 11' 44.97" E

STA. 94+26.54 RTE NN = STA. 13+33.03 EX RTE NN
STA. 0+00.00 RDBT = STA. 1+75.92 RDBT
L = 90.00' S 1° 22' 26.04" W

BUILDINGS (R)
FENCE (R)
TREE (R)
MANHOLE (R)
WATER MAIN (R)
POWER POLE (R)
EX. INGRESS/ EGRESS ESM'T
EX. UTIL.ESM'T (10')
EX. UTIL.ESM'T (15')
NEW R/W
EXIST. R/W
30'
10'
15'

ENTRANCES CONSTRUCTED THROUGH NEW LIMITED ACCESS RIGHT OF WAY BETWEEN STATION 10+00.00 TO STATION 11+63.25 (LT & RT), BETWEEN STATION 14+80.00 TO STATION 16+50.00 (RT), AND BETWEEN STATION 16+50.00 TO STATION 17+53.65 (LT & RT) EXIST. RTE NN MAY BE WIDENED BY PERMIT TO A MAXIMUM WIDTH OF (12M OR 40FT.) UNLESS OTHERWISE NOTED

ENTRANCES CONSTRUCTED THROUGH NEWLIMITED ACCESS RIGHT OF WAY BETWEEN STATION 82+20.00 TO STATION 90+50.00 RTE NN MAY BE WIDENED BY PERMIT TO A MAXIMUM WIDTH OF (12M OR 40FT.) UNLESS OTHERWISE NOTED

END CONST.
STA. 17+53.65
EX. RTE NN

℄ ROUTE NN
(RTENN_05)
L = 273.70' N 1° 22' 26.04" E
L = 295.31' N 1° 22' 26.04" E

NW ¼ - NE ¼
S36 - T29N - R18W

LAND TIE
SW 1/4 S25-T29N-R18W | SE 1/4 S25-T29N-R18W
SECTION LINE
ALUM. MON. LC-238 N 1/4 CORNER S36-T29N-R18W COR. DOC. #600-107036
427.22' S02°14'18"W
EXIST. RTE NN STA. 10+00.00
EX. RTE NN 1/4 SECTION LINE
NW 1/4 S36-T29N-R18W | NE 1/4 S36-T29N-R18W

LAND TIE
SW 1/4 S25-T29N-R18W | SE 1/4 S25-T29N-R18W
SECTION LINE
ALUM. MON. LC-238 N 1/4 CORNER S36-T29N-R18W COR. DOC. #600-107036
760.23' S1°54'03"W
EX. RTE NN 1/4 SECTION LINE
STA. 13+33.03 EX. RTE NN= STA. 94+26.54 RTE NN
RTE NN
NW 1/4 S36-T29N-R18W | EX. RTE NN | NE 1/4 S36-T29N-R18W

LAND TIE
NE 1/4 NW 1/4 S36-T29N-R18W | NW 1/4 NE 1/4 S36-T29N-R18W
RTE NN
EX. RTE NN 1/4 SECTION LINE
93.73' N1°57'55"W
18+00
1/4 1/4 SECTION LINE
ALUM. MON. LC-238 SW CORNER NW 1/4 NE 1/4 S36-T29N-R18W COR. DOC. #600-107035
SE 1/4 NW 1/4 S36-T29N-R18W | SW 1/4 NE 1/4 S36-T29N-R18W

ROUTE NN/EXIST. RTE NN
RIGHT OF WAY SHEET
8 OF 22

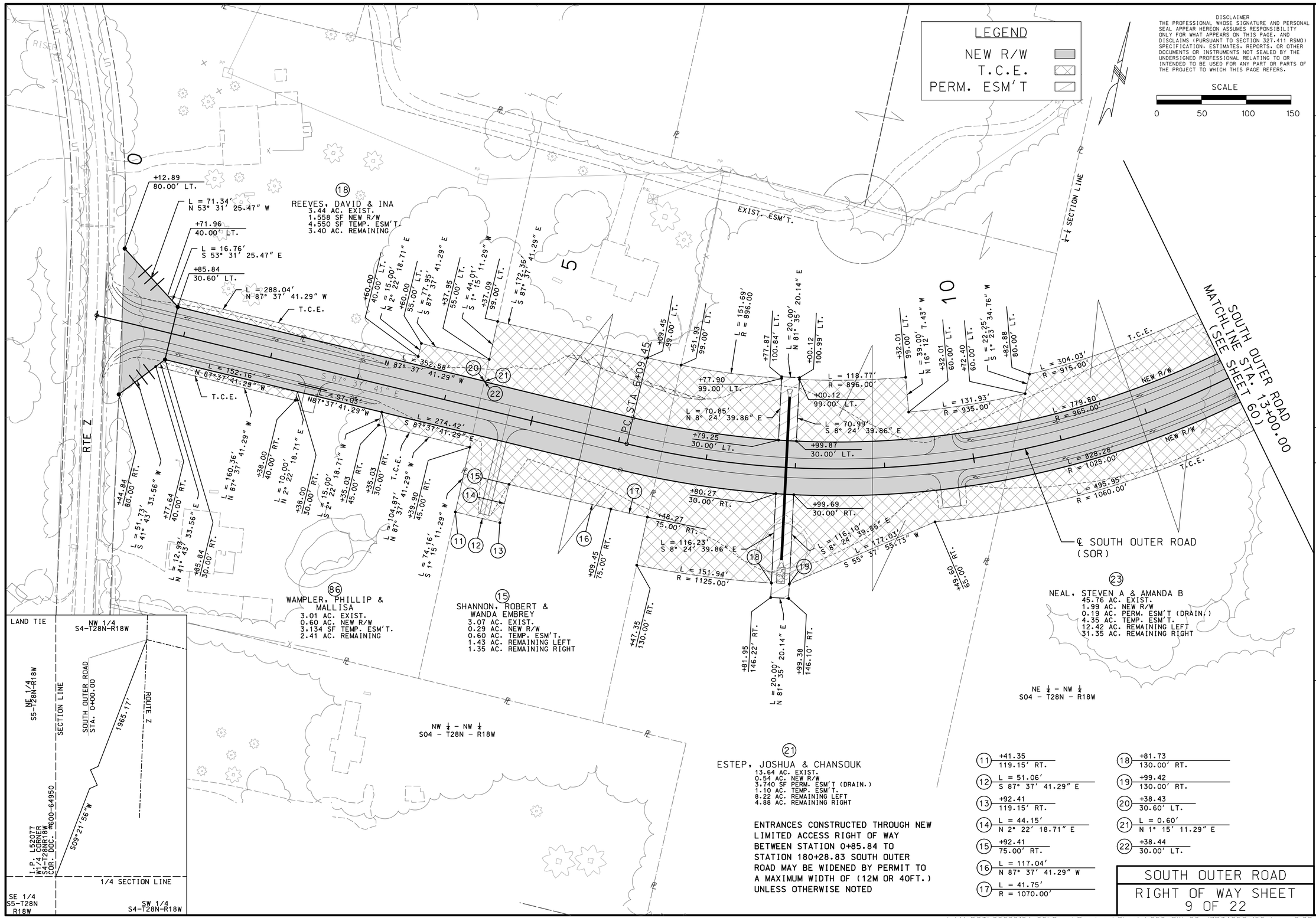

STATE OF MISSOURI
DALLAS P. JOPLIN
NUMBER PE-2011015760
PROFESSIONAL ENGINEER

THIS SHEET HAS BEEN SIGNED, SEALED AND DATED ELECTRONICALLY.

DATE PREPARED	
8/5/2024	
ROUTE	STATE
60	MO
DISTRICT	SHEET NO.
SW	59
COUNTY	
WEBSTER	
JOB NO.	
J7P3425C	
CONTRACT ID.	
PROJECT NO.	
BRIDGE NO.	

DATE	DESCRIPTION	REV.

IF A SEAL IS PRESENT ON THIS SHEET IT HAS BEEN ELECTRONICALLY SEALED AND DATED.

MISSOURI HIGHWAYS AND TRANSPORTATION COMMISSION
105 WEST CAPITOL
JEFFERSON CITY, MO 65102
1-888-ASK-MODOT (1-888-275-6636)

© Copyright CMT, Inc.
CMT
CRAWFORD, MURPHY & TILLY, INC.
1631 WEST ELFINDALE STREET
SPRINGFIELD, MO 65807 (417) 869-6009
ENGINEERING CORPORATION - 000631

SCALE
0 50 100 150

DISCLAIMER
THE PROFESSIONAL WHOSE SIGNATURE AND PERSONAL SEAL APPEAR HEREON ASSUMES RESPONSIBILITY ONLY FOR WHAT APPEARS ON THIS PAGE AND DISCLAIMS (PURSUANT TO SECTION 327.411 RSMO) SPECIFICATIONS, ESTIMATES, REPORTS, OR OTHER DOCUMENTS OR INSTRUMENTS NOT SEALED BY THE UNDERSIGNED PROFESSIONAL RELATING TO OR INTENDED TO BE USED FOR ANY PART OR PARTS OF THE PROJECT TO WHICH THIS PAGE REFERS.

LAND TIE
SW 1/4 S33-T29N-R18W
SE 1/4 S33-T29N-R18W
SECTION LINE
1/4 SECTION LINE
+16+00
+17+00
+18+00
806.27'
N67° 37' 32"W
SOUTH OUTER ROAD
PC STA. 17+62.01
SOUTH OUTER ROAD
STA. 25+72.53
FND ALUM. MON. LC-238
1/4 CORNER
S4-T28N-R18W
1/4 SECTION LINE
S14° 26' 35"W
30.64'
CORR. DOC. #600-107433
NW 1/4 S4-T28N-R18W
NE 1/4 S4-T28N-R18W

SE ¼ – SW ¼
S33 – T29N – R18W

NEAL, STEVEN A & AMANDA B
SEE ROW SHEET 9 OF 22

BNSF RR

SOUTH OUTER ROAD
MATCHLINE STA. 13+00.00
(SEE SHEET 59)

PERM. DRAINAGE ESMT.
T.C.E.
NEW R/W
PC STA 17+62.01
PT STA 14+13.49
℄ SOUTH OUTER ROAD (SOR)
P.O.E.
P.O.B.
N 46° 04' 20" E
N 46° 4' 19.73" E
S 46° 4' 19.73" W
L = 446.88'
R = 1120.00'
L = 591.56'
R = 1025.00'
L = 727.92'
R = 965.00'
L = 348.52'
L = 304.03'
R = 915.00'
L = 779.80'
R = 965.00'
L = 828.28'
R = 1025.00'
L = 495.95'
R = 1060.00'
L = 200.70'
L = 71.78'
L = 72.76'
L = 100.00'
S 43° 55' 40.27" E
L = 254.01'
L = 430.07'
N 47° 59' 23.37" E
L = 109.75'
R = 945.00'
L = 20.00'
S 7° 21' 47.08" E
L = 121.23'
N 19° 8' 21.27" E
N 78° 20' 26.99" W
L = 201.95'
L = 91.75'
S 03° 14' 44.27" W
L = 81.77'
S 03° 14' 44.27" W
L = 20.00'
S 86° 45' 15.73" E
L = 93.55'
S 3° 14' 44.27" W
L = 104.42'
S 3° 14' 44.27" W
L = 23.58'
N 43° 55' 40.27" W
L = 23.58'
N 43° 55' 40.27" W
L = 20.00'
S 46° 50' 26.09" W
L = 20.00'
S 46° 50' 26.09" W
L = 4.69'
S 43° 9' 57" E
L = 4.43'
S 43° 9' 57" E
L = 56.04'
S 46° 4' 33" W
L = 95.01'
S 43° 9' 57" E
L = 129.60'
S 43° 9' 33.91" E
L = 129.87'
N 43° 9' 33.91" W
L = 50.06'
R = 830.00'
L = 20.00'
S 46° 50' 26.09" W
+13.49 80.00' LT.
+85.27 80.00' LT.
+85.27 125.00' LT.
+85.97 125.00' LT.
+86.04 129.69' LT.
+06.03 129.43' LT.
+04.70 30.00' LT.
+62.01 125.00' LT.
+62.01 30.00' LT.
+84.70 30.00' LT.
+09.81 30.00' LT.
+31.51 30.00' LT.
+47.43 112.44' LT.
+59.02 125.00' LT.
+63.84 104.14' LT.
+24.71 30.00' LT.
+36.26 30.00' LT.
+53.40 37.14' LT.
+05.14 32.10' LT.
+77.82 30.00' RT.
+83.89 30.00' RT.
+03.90 30.00' RT.
+62.01 30.00' RT.
+01.25 30.00' RT.
+91.97 30.00' RT.
+07.53 50.00' RT.
+07.31 30.00' RT.
+08.00 65.00' RT.
+15.24 65.00' RT.
+15.24 88.57' RT.
+35.24 88.57' RT.
+35.24 65.00' RT.
+08.00 165.00' RT.
+82.16 159.59' RT.
+02.15 159.86' RT.
+62.01 165.00' RT.
+22.03 165.00' RT.
+12.57 30.00' RT.
+78.74 98.42' RT.
+83.74 98.42' RT.
+98.74 98.42' RT.
L = 5.00'
S 87° 15' 12.69" E
L = 15.00'
N 87° 15' 12.69" W
POT STA 1+57.23
STA. 25+66.40 SOR =
STA. 0+00.00 BLUEBIRD
PT STA. 25+72.53
SOUTH OUTER ROAD
MATCHLINE STA. 26+00.00
(SEE SHEET 61)

WOODS, ISAIAH & SAMANTHA
SEE ROW SHEET 11 OF 22

KENSINGER, LUCAS C
SEE ROW SHEET 11 OF 22

BLUEBIRD LN
EXIST. ROW
℄ SECTION LINE

NEAL, STEVEN A & AMANDA B
SEE ROW SHEET 9 OF 22

NE ¼ – NW ¼
S04 – T28N – R18W

1	L = 68.90' N 87° 25' 50.05" W	8	+82.49 130.42' LT.	15	L = 58.92' S 2°44' 47.31" W
2	+78.74 30.00' LT.	9	L = 76.13' S 89° 59' 59.85" E	16	+83.74 39.50' RT.
3	L = 763.27' S 87° 15' 18.35" E	10	+13.98 128.72' LT.	17	+98.74 40.00' RT.
4	+10.62 158.77' LT.	11	L = 86.84' S 1° 27' 8.08" W		
5	L = 80.35' S 89° 59' 59.85" E	12	+10.96 41.95' LT.		
6	+81.05 160.39' LT.	13	L = 258.79' N 87° 25' 50.05" W		
7	L = 30.00' S 0° 0' 0.15" W	14	L = 58.42' S 2°44' 47.31" W		

ENTRANCES CONSTRUCTED THROUGH NEW LIMITED ACCESS RIGHT OF WAY BETWEEN STATION 0+85.84 TO STATION 180+28.83 SOUTH OUTER ROAD MAY BE WIDENED BY PERMIT TO A MAXIMUM WIDTH OF (12M OR 40FT.) UNLESS OTHERWISE NOTED

LEGEND
NEW R/W
T.C.E.
PERM. ESM'T

SOUTH OUTER ROAD
RIGHT OF WAY SHEET
10 OF 22

STATE OF MISSOURI
DALLAS P. JOPLIN
NUMBER PE-2011015760
PROFESSIONAL ENGINEER
THIS SHEET HAS BEEN SIGNED, SEALED AND DATED ELECTRONICALLY.

DATE PREPARED 8/2/2024
ROUTE 60 | STATE MO
DISTRICT SW | SHEET NO. 60
COUNTY WEBSTER
JOB NO. J7P3425C
CONTRACT ID.
PROJECT NO.
BRIDGE NO.

DESCRIPTION | DATE | REV.

IF A SEAL IS PRESENT ON THIS SHEET IT HAS BEEN ELECTRONICALLY SEALED AND DATED.

MISSOURI HIGHWAYS AND TRANSPORTATION COMMISSION
105 WEST CAPITOL
JEFFERSON CITY, MO 65102
1-888-ASK-MODOT (1-888-275-6636)

CMT
© Copyright CMT, Inc.
CRAWFORD, MURPHY & TILLY, INC.
1631 WEST ELFINDALE STREET
SPRINGFIELD, MO 65807 (417) 869-6009
ENGINEERING CORPORATION - 000631

L:\MoDOT\20092124-00\Draw\Roadway\Sheets\060_RW_10_J7P3425C_150.dgn 8:22:50 AM 8/2/2024

DISCLAIMER
THE PROFESSIONAL WHOSE SIGNATURE AND PERSONAL SEAL APPEAR HEREON ASSUMES RESPONSIBILITY ONLY FOR WHAT APPEARS ON THIS PAGE, AND DISCLAIMS (PURSUANT TO SECTION 327.411 RSMO) SPECIFICATION, ESTIMATES, REPORTS, OR OTHER DOCUMENTS OR INSTRUMENTS NOT SEALED BY THE UNDERSIGNED PROFESSIONAL RELATING TO OR INTENDED TO BE USED FOR ANY PART OR PARTS OF THE PROJECT TO WHICH THIS PAGE REFERS.

SCALE
0 50 100 150

STATE OF MISSOURI
DALLAS P. JOPLIN
NUMBER PE-2011015760
PROFESSIONAL ENGINEER
THIS SHEET HAS BEEN SIGNED, SEALED AND DATED ELECTRONICALLY.

DATE PREPARED	
9/3/2024	
ROUTE	STATE
60	MO
DISTRICT	SHEET NO.
SW	61
COUNTY	
WEBSTER	
JOB NO.	
J7P3425C	
CONTRACT ID.	
PROJECT NO.	
BRIDGE NO.	

DESCRIPTION	DATE

IF A SEAL IS PRESENT ON THIS SHEET IT HAS BEEN ELECTRONICALLY SEALED AND DATED.

MISSOURI HIGHWAYS AND TRANSPORTATION COMMISSION
105 WEST CAPITOL
JEFFERSON CITY, MO 65102
1-888-ASK-MODOT (1-888-275-6636)

CMT
©Copyright CMT, Inc.
CRAWFORD, MURPHY & TILLY, INC.
1631 WEST ELFINDALE STREET
SPRINGFIELD, MO 65807 (417) 869-6009
ENGINEERING CORPORATION - 000631

REV.

SOUTH OUTER ROAD
MATCHLINE STA. 26+00.00
(SEE SHEET 60)

SOUTH OUTER ROAD
MATCHLINE STA. 39+00.00
(SEE SHEET 62)

BNSF RR

EXIST. R/W

24
WOODS, ISAIAH & SAMANTHA
3.00 AC. EXIST.
504 SF PERM. ESM'T (DRAIN.)
0.26 AC. TEMP. ESM'T.
3.00 AC. REMAINING

24A
CARLOCK, STEVEN DEAN
5.46 AC. EXIST.
0.40 AC. NEW R/W
0.70 AC. TEMP. ESM'T.
4.95 AC. REMAINING LEFT
0.11 AC. REMAINING RIGHT

25
KENSINGER, LUCAS C
92.87 AC. EXIST.
3.00 AC. NEW R/W
3,808 SF PERM. ESM'T (DRAIN.)
1.85 AC. TEMP. ESM'T.
1.23 AC. REMAINING LEFT
88.64 AC. REMAINING RIGHT

SW ¼ - SE ¼
S33 - T29N - R18W

NW ¼ - NE ¼
S04 - T28N - R18W

¼ - ¼ SECTION LINE

30

35

℄ SOUTH OUTER ROAD (SOR)

P.C. STA 33+35.80

SECTION LINE

NEW R/W

T.C.E.

P.D.E.

P RISER

FLAG

ENTRANCES CONSTRUCTED THROUGH NEW LIMITED ACCESS RIGHT OF WAY BETWEEN STATION 0+85.84 TO STATION 180+28.83 SOUTH OUTER ROAD MAY BE WIDENED BY PERMIT TO A MAXIMUM WIDTH OF (12M OR 40FT.) UNLESS OTHERWISE NOTED

LEGEND
NEW R/W
T.C.E.
PERM. ESM'T

SOUTH OUTER ROAD
RIGHT OF WAY SHEET
11 OF 22

L:\MoDOT\20092124-00\Draw\Roadway\Sheets\061_RW_11_J7P3425C_150.dgn 1:57:26 PM 9/3/2024

SCALE
0 50 100 150

DISCLAIMER
THE PROFESSIONAL WHOSE SIGNATURE AND PERSONAL SEAL APPEAR HEREON ASSUMES RESPONSIBILITY ONLY FOR WHAT APPEARS ON THIS PAGE, AND DISCLAIMS (PURSUANT TO SECTION 327.411 RSMO) SPECIFICATION, ESTIMATES, REPORTS, OR OTHER DOCUMENTS OR INSTRUMENTS NOT SEALED BY THE UNDERSIGNED PROFESSIONAL RELATING TO OR INTENDED TO BE USED FOR ANY PART OR PARTS OF THE PROJECT TO WHICH THIS PAGE REFERS.

WESTBOUND US60

℄ US60 (EX_US60)

EASTBOUND US60

24A
CARLOCK, STEVEN DEAN
SEE ROW SHEET 11 OF 22

BNSF RR

EXIST. R/W

NEW R/W

T.C.E.

℄ SOUTH OUTER ROAD (SOR)

EXIST. ROW

PT. STA. 45+48.02

SOUTH OUTER ROAD
MATCHLINE STA. 39+00.00
(SEE SHEET 61)

SOUTH OUTER ROAD
MATCHLINE STA. 52+00.00
(SEE SHEET 63)

L = 224.73′
S 61° 5′ 50.57″ W

L = 191.17′
N 87° 30′ 17.57″ W

L = 424.69′
R = 965.00′

L = 337.34′
N 62° 52′ 2.76″ E

L = 30.00′
S 68° 0′ 0.48″ W

L = 286.71′
R = 1050.00′

L = 451.10′
R = 1025.00′

L = 14.72′
S 3° 38′ 26.48″ E

L = 628.21′
S 86° 18′ 46.53″ W

L = 24.44′
N 68° 55′ 10.41″ W

N 86° 18′ 47″ E

L = 375.33′
N 86° 18′ 46.53″ E

L = 82.71′
N 22° 34′ 4.96″ E

L = 30.00′
N 67° 25′ 55.04″ W

L = 97.51′
N 22° 34′ 4.96″ E

L = 32.36′
N 86° 18′ 46.53″ E

L = 91.04′
N 38° 13′ 14.16″ W

L = 15.01′
N 86° 18′ 46.53″ E

L = 78.77′
S 67° 35′ 30.51″ W

L = 32.47′
N 4° 51′ 50.04″ W

L = 20.00′
N 85° 8′ 9.96″ E

L = 32.06′
S 4° 51′ 50.04″ E

+83.20
55.00′ LT.

+81.82
55.00′ LT.

+09.48
55.00′ LT.

+48.03
44.72′ LT.

+48.02
30.00′ LT.

+98.42
40.24′ RT.

+76.33
30.00′ RT.

+75.33
35.00′ RT.

+48.02
30.00′ RT.

+00.00
35.00′ RT.

+33.98
35.00′ RT.

+38.75
109.18′ RT.

+65.65
122.45′ RT.

+08.79
35.00′ RT.

+41.14
35.00′ RT.

+92.75
110.00′ RT.

+07.76
110.00′ RT.

+82.36
84.72′ RT.

+11.02
30.00′ RT.

+11.69
62.46′ RT.

+31.68
62.05′ RT.

+31.02
30.00′ RT.

+36.00 RT.

+47.26 RT.

+130.00 RT.

+150.00 RT.

SECTION LINE

SE ¼ - SE ¼
S33 - T29N - R18W

NE ¼ - NE ¼
S4 - T28N - R18W

25
KENSINGER, LUCAS C
SEE ROW SHEET 11 OF 22

26
KENSINGER, LUCAS C & LESLIE E
12.80 AC. EXIST.
0.53 AC. NEW R/W
645 SF PERM. ESM'T (DRAIN.)
0.31 AC. TEMP. ESM'T.
12.27 AC. REMAINING

1	+10.13 30.00′ RT.	9	+90.55 45.00′ LT.	17	L = 27.31′ S 7° 4′ 2.05″ E
2	+72.31 30.00′ RT.	10	L = 10.00′ N 28° 54′ 9.43″ W	18	+81.83 55.16′ LT.
3	L = 58.24′ S 7° 4′ 2.05″ E	11	+90.55 55.00′ LT.	19	L = 20.00′ S 82° 55′ 57.95″ W
4	+64.81 87.81′ RT.	12	L = 19.58′ N 61° 5′ 50.57″ E	20	+00.71 53.19′ LT.
5	L = 20.00′ S 82° 55′ 57.95″ W	13	+10.13 55.00′ LT.	21	L = 23.28′ S 7° 4′ 2.05″ E
6	+86.83 90.09′ RT.	14	+10.13 30.00′ LT.	22	+98.70 30.00′ LT.
7	L = 60.39′ S 7° 4′ 2.05″ E	15	L = 27.73′ R = 1050.00′		
8	+93.05 30.00′ RT.	16	+79.18 30.00′ LT.		

ENTRANCES CONSTRUCTED THROUGH NEW LIMITED ACCESS RIGHT OF WAY BETWEEN STATION 0+85.84 TO STATION 180+28.83 SOUTH OUTER ROAD MAY BE WIDENED BY PERMIT TO A MAXIMUM WIDTH OF (12M OR 40FT.) UNLESS OTHERWISE NOTED

LEGEND
NEW R/W
T.C.E.
PERM. ESM'T

SOUTH OUTER ROAD
RIGHT OF WAY SHEET
12 OF 22

STATE OF MISSOURI
DALLAS P. JOPLIN
NUMBER PE-2010015760
PROFESSIONAL ENGINEER

THIS SHEET HAS BEEN SIGNED, SEALED AND DATED ELECTRONICALLY.

DATE PREPARED
8/2/2024

ROUTE	STATE
60	MO
DISTRICT	SHEET NO.
SW	62

COUNTY
WEBSTER

JOB NO.
J7P3425C

CONTRACT ID.

PROJECT NO.

BRIDGE NO.

DATE	DESCRIPTION

IF A SEAL IS PRESENT ON THIS SHEET IT HAS BEEN ELECTRONICALLY SEALED AND DATED.

MISSOURI HIGHWAYS AND TRANSPORTATION COMMISSION

105 WEST CAPITOL
JEFFERSON CITY, MO 65102
1-888-ASK-MODOT (1-888-275-6636)

CMT
©Copyright CMT, Inc.
CRAWFORD, MURPHY & TILLY, INC.
1631 WEST ELFINDALE STREET
SPRINGFIELD, MO 65807 (417) 869-6009
ENGINEERING CORPORATION - 000631

REV.

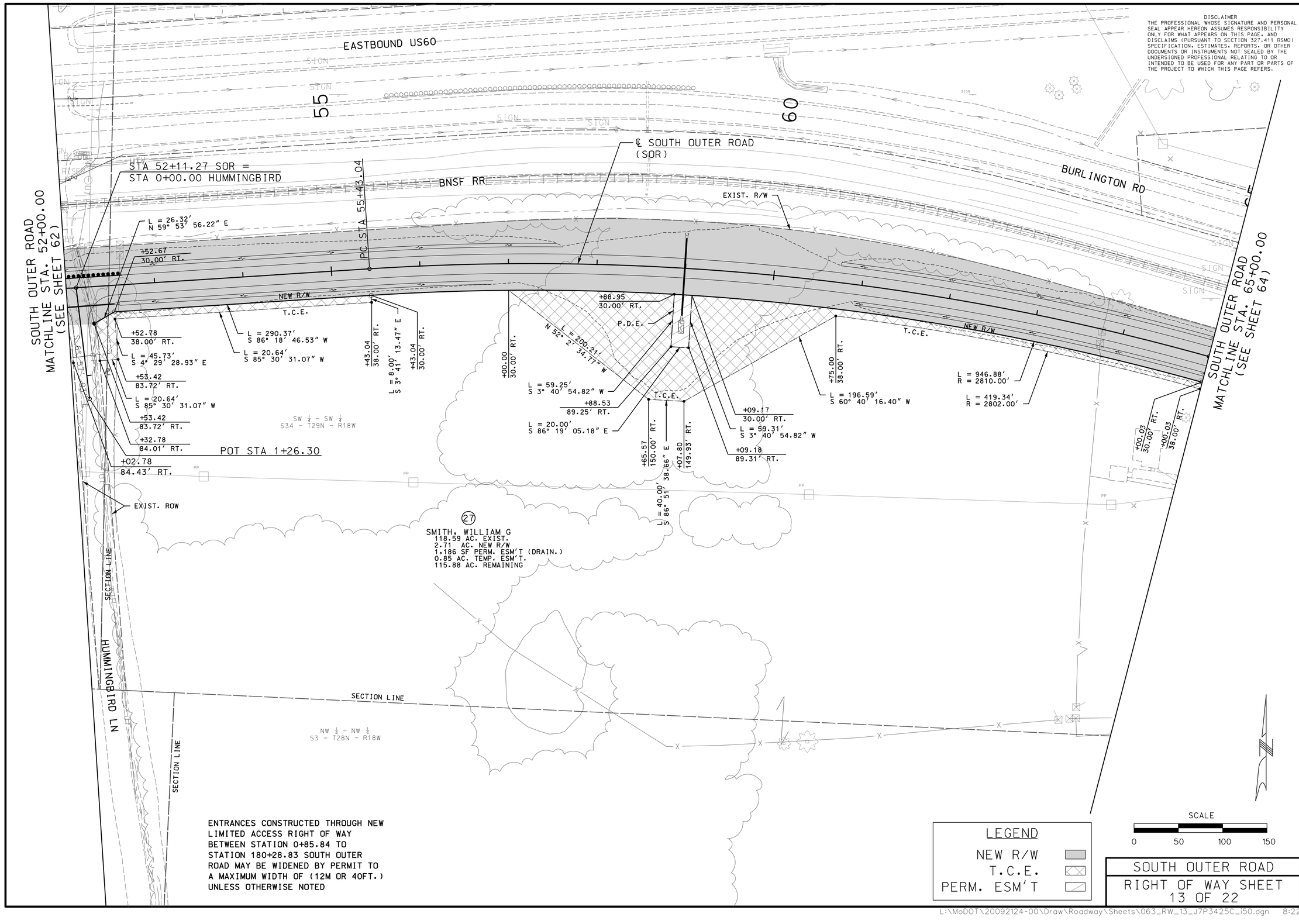

DISCLAIMER
THE PROFESSIONAL WHOSE SIGNATURE AND PERSONAL SEAL APPEAR HEREON ASSUMES RESPONSIBILITY ONLY FOR WHAT APPEARS ON THIS PAGE, AND DISCLAIMS (PURSUANT TO SECTION 327.411 RSMO) SPECIFICATION, ESTIMATES, REPORTS, OR OTHER DOCUMENTS OR INSTRUMENTS NOT SEALED BY THE UNDERSIGNED PROFESSIONAL RELATING TO OR INTENDED TO BE USED FOR ANY PART OR PARTS OF THE PROJECT TO WHICH THIS PAGE REFERS.

STATE OF MISSOURI
DALLAS P. JOPLIN
NUMBER PE-2011015760
PROFESSIONAL ENGINEER

THIS SHEET HAS BEEN SIGNED, SEALED AND DATED ELECTRONICALLY.

DATE PREPARED
8/2/2024

ROUTE	STATE
60	MO
DISTRICT	SHEET NO.
SW	63

COUNTY
WEBSTER

JOB NO.
J7P3425C

CONTRACT ID.

PROJECT NO.

BRIDGE NO.

DATE	DESCRIPTION

IF A SEAL IS PRESENT ON THIS SHEET IT HAS BEEN ELECTRONICALLY SEALED AND DATED.

MISSOURI HIGHWAYS AND TRANSPORTATION COMMISSION

105 WEST CAPITOL
JEFFERSON CITY, MO 65102
1-888-ASK-MODOT (1-888-275-6636)

CMT
© Copyright CMT, Inc.
CRAWFORD, MURPHY & TILLY, INC.
1631 WEST ELFINDALE STREET
SPRINGFIELD, MO 65807 (417) 869-6009
ENGINEERING CORPORATION - 000631

SOUTH OUTER ROAD
RIGHT OF WAY SHEET
13 OF 22

REV.

L:\MoDOT\20092124-00\Draw\Roadway\Sheets\063_RW_13_J7P3425C_i50.dgn 8:22:56 AM 8/2/2024

(22)
WILKERSON, SCOTT A & LATRICIA
9.14 AC. EXIST. (SOUTH OF RTE 60)
9.14 AC. NEW R/W
0.00 AC. REMAINING

SE ¼ - SW ¼
S34 - T29N - R18W

SCALE
0 50 100 150

DISCLAIMER
THE PROFESSIONAL WHOSE SIGNATURE AND PERSONAL SEAL APPEAR HEREON ASSUMES RESPONSIBILITY ONLY FOR WHAT APPEARS ON THIS PAGE, AND DISCLAIMS (PURSUANT TO SECTION 327.411 RSMO) SPECIFICATION, ESTIMATES, REPORTS, OR OTHER DOCUMENTS OR INSTRUMENTS NOT SEALED BY THE UNDERSIGNED PROFESSIONAL RELATING TO OR INTENDED TO BE USED FOR ANY PART OR PARTS OF THE PROJECT TO WHICH THIS PAGE REFERS.

SOUTH OUTER ROAD
MATCHLINE STA. 65+00.00
(SEE SHEET 63)

PT STA 65+00.03

SECTION LINE

65

70

75

BURLINGTON RD

SIGN

BNSF RR.

℄ SOUTH OUTER ROAD
(SOR)

EXIST. R/W

PC STA 68+80.16

SOUTH OUTER ROAD
MATCHLINE STA. 78+00.00
(SEE SHEET 65)

+73.24
47.18' RT.

S 74° 22' 49" E

L = 380.13'

S 74° 22' 48.55" E

T.C.E.

NEW R/W

L = 275.61'
S 74° 22' 48.55" E

L = 180.55'
R = 2245.00'

NEW R/W

T.C.E.

L = 272.54'
R = 2238.00'

L = 1053.06'
R = 2230.00'

NEW R/W

T.C.E.

L = 434.80'
R = 2235.00'

+28.28
38.00' RT.

L = 46.01'
S 62° 6' 12.62" E

+04.55
45.00' RT.

L = 41.37'
S 27° 53' 47.38" W

+95.75
85.42' RT.

L = 30.00'
N 62° 6' 12.62" W

L = 31.99'
S 27° 53' 47.38" W

+66.44
79.04' RT.

L = 28.25'
S 74° 22' 48.55" E

+80.16
30.00' RT.

+80.16
45.00' RT.

+57.09
45.00' RT.

L = 7.00'
N 11° 0' 43.10" E

+57.09
38.00' RT.

+25.00
38.00' RT.

L = 8.00'
N 4° 2' 4.58" E

+25.00
30.00' RT.

+90.00
30.00' RT.

L = 5.00'
S 0° 15' 34.95" E

+90.00
35.00' RT.

+77.12
30.00' RT.

L = 89.53'
S 2° 25' 25.34" W

+77.50
119.53' RT.

L = 20.00'
S 87° 34' 34.66" E

PERM. DRAINAGE ESMT.

+96.46
119.53' RT.

L = 89.53'
S 2° 25' 25.34" W

+96.85
30.00' RT.

(28)
BROOKS, KIMBERLY DAWN
17.48 AC. EXIST.
1.63 AC. NEW R/W
1,790 SF PERM. ESM'T. (DRAIN.)
563 SF PERM. ESM'T. (UTIL.)
0.16 AC. TEMP. ESM'T.
15.85 AC. REMAINING

ENTRANCES CONSTRUCTED THROUGH NEW LIMITED ACCESS RIGHT OF WAY BETWEEN STATION 0+85.84 TO STATION 180+28.83 SOUTH OUTER ROAD MAY BE WIDENED BY PERMIT TO A MAXIMUM WIDTH OF (12M OR 40FT.) UNLESS OTHERWISE NOTED

SW ¼ - SW ¼
S34 - T29N - R18W

(27)
SMITH, WILLIAM G
SEE ROW SHEET 13 OF 22

SECTION LINE

NW ¼ - NW ¼
S03 - T28N - R18W

NE ¼ - NW ¼
S03 - T28N - R18W

LAND TIE

SW 1/4
S34-T28N-R18W

SE 1/4
S34-T28N-R18W

SOUTH OUTER ROAD
PC STA. 68+80.16

68+00

1128.41'
N69°12'36"W

1/4 SECTION LINE

SECTION LINE

ALUM. MON. LC-238
S 1/4 CORNER
S34-T29N-R18W
COR. DOC. # 600-107434

NE 1/4
S3-T28N
R18W

NW 1/4
S3-T28N-R18W

LEGEND
NEW R/W
T.C.E.
PERM. ESM'T

SOUTH OUTER ROAD
RIGHT OF WAY SHEET
14 OF 22

STATE OF MISSOURI
DALLAS P. JOPLIN
NUMBER PE-2011015760
PROFESSIONAL ENGINEER

THIS SHEET HAS BEEN SIGNED, SEALED AND DATED ELECTRONICALLY.

DATE PREPARED
11/22/2024

ROUTE	STATE
60	MO
DISTRICT	SHEET NO.
SW	64

COUNTY
WEBSTER

JOB NO.
J7P3425C

CONTRACT ID.

PROJECT NO.

BRIDGE NO.

REV.	DESCRIPTION	DATE

IF A SEAL IS PRESENT ON THIS SHEET IT HAS BEEN ELECTRONICALLY SEALED AND DATED.

MISSOURI HIGHWAYS AND TRANSPORTATION COMMISSION
105 WEST CAPITOL
JEFFERSON CITY, MO 65102
1-888-ASK-MODOT (1-888-275-6636)

CMT
CRAWFORD, MURPHY & TILLY, INC.
1631 WEST ELFINDALE STREET
SPRINGFIELD, MO 65807 (417) 869-6009
ENGINEERING CORPORATION - 000631
©Copyright CMT, Inc.

L:\MoDOT\20092124-00\Draw\Roadway\Sheets\064_RW_14_J7P3425C_i50.dgn 11:52:50 AM 11/22/2024

(22) WILKERSON, SCOTT A & LATRICIA
SEE ROW SHEET 14 OF 22

(39) LAKES, LLC
4.46 AC. EXIST.
4.46 AC. NEW R/W
0.00 AC. REMAINING

(40) FRANTZ, MICHAEL G & JUDY M
6.78 AC. EXIST. (SOUTH OF RTE 60)
6.78 AC. NEW R/W
0.00 AC. REMAINING

DISCLAIMER
THE PROFESSIONAL WHOSE SIGNATURE AND PERSONAL SEAL APPEAR HEREON ASSUMES RESPONSIBILITY ONLY FOR WHAT APPEARS ON THIS PAGE, AND DISCLAIMS (PURSUANT TO SECTION 327.411 RSMO) SPECIFICATION, ESTIMATES, REPORTS, OR OTHER DOCUMENTS OR INSTRUMENTS NOT SEALED BY THE UNDERSIGNED PROFESSIONAL RELATING TO OR INTENDED TO BE USED FOR ANY PART OR PARTS OF THE PROJECT TO WHICH THIS PAGE REFERS.

STATE OF MISSOURI
DALLAS P. JOPLIN
NUMBER PE-2011015760
PROFESSIONAL ENGINEER

THIS SHEET HAS BEEN SIGNED, SEALED AND DATED ELECTRONICALLY.

DATE PREPARED
8/2/2024

ROUTE	STATE
60	MO
DISTRICT	SHEET NO.
SW	65

COUNTY
WEBSTER

JOB NO.
J7P3425C

CONTRACT ID.

PROJECT NO.

BRIDGE NO.

IF A SEAL IS PRESENT ON THIS SHEET IT HAS BEEN ELECTRONICALLY SEALED AND DATED.

DATE	DESCRIPTION

MISSOURI HIGHWAYS AND TRANSPORTATION COMMISSION
105 WEST CAPITOL
JEFFERSON CITY, MO 65102
1-888-ASK-MODOT (1-888-275-6636)

CMT
© Copyright CMT, Inc.
CRAWFORD, MURPHY & TILLY, INC.
1631 WEST ELFINDALE STREET
SPRINGFIELD, MO 65807 (417) 869-6009
ENGINEERING CORPORATION - 000631

SOUTH OUTER ROAD
MATCHLINE STA. 78+00.00
(SEE SHEET 64)

SOUTH OUTER ROAD
MATCHLINE STA. 91+00.00
(SEE SHEET 66)

BURLINGTON RD

BNSF RR

℄ SOUTH OUTER ROAD (SOR)

EXIST. R/W

NEW R/W

PERM. UTIL. ESM'T.

TEMP. UTIL. ESM'T.

L = 1053.07′
R = 2230.00′

L = 434.80′
R = 2235.00′

T.C.E.
+44.33
30.00′ RT.

L = 25.61′
R = 2230.00′
+19.06
30.00′ RT.

L = 5.12′
N 0° 47′ 25.32″ E

L = 17.39′
S 0° 47′ 25.32″ W

P.U.E.
+14.40
52.00′ RT.

L = 25.60′
R = 2252.00′
+39.29
52.00′ RT.

L = 22.56′
S 0° 47′ 25.32″ W
+17.99
35.00′ RT.

L = 791.65′
R = 2230.00′
L = 723.29′
R = 2252.00′

STA 79+85.59 SOR =
STA 0+00.00 TANDY

+32.64
52.00′ RT.

L = 41.33′
R = 2252.00′

+97.56
30.00′ RT.

L = 22.68′
N 0° 40′ 45.18″ E

+92.27
52.00′ RT.

+72.30
30.00′ RT.

L = 70.00′
N 23° 14′ 27.23″ W

+72.30
100.00′ RT.

L = 106.98′
R = 2300.00′

+74.64
30.00′ RT.

L = 70.00′
N 25° 54′ 21.51″ W

+74.64
100.00′ RT.

PT STA 87+39.22

N 57° 12′ 12″ E

L = 310.84′
S 57° 12′ 11.65″ W

L = 310.84′
S 57° 12′ 11.65″ W

+39.22
30.00′ RT.

+39.22
52.00′ RT.

PC STA 90+50.06

+93.56
30.00′ LT.

+50.06
30.00′ RT.

+50.06
52.00′ RT.

L = 351.62′
R = 965.00′

L = 284.26′
R = 943.00′

(28) BROOKS, KIMBERLY DAWN
SEE ROW SHEET 14 OF 22

TANDY RD

L = 271.54′
S 0° 40′ 45.18″ W

T.C.E.

+83.37
256.87′ RT.

L = 40.00′
N 89° 40′ 58.10″ W

+48.40
247.89′ RT.

POT STA 2+78.13

EXIST. R/W

SECTION LINE

(29) PEREZNEGRON, ELIAS & OLIVIA
20.70 AC. EXIST.
1.46 AC. NEW R/W
0.69 AC. PERM. ESM'T. (UTIL.)
0.38 AC. TEMP. ESM'T.
19.24 AC. REMAINING

SW ¼ - SE ¼
S34 - T29N - R18W

ENTRANCES CONSTRUCTED THROUGH NEW LIMITED ACCESS RIGHT OF WAY BETWEEN STATION 0+85.84 TO STATION 180+28.83 SOUTH OUTER ROAD MAY BE WIDENED BY PERMIT TO A MAXIMUM WIDTH OF (12M OR 40FT.) UNLESS OTHERWISE NOTED

SW 1/4
S34-T28N-R18W

SOUTH OUTER ROAD
PT STA. 87+39.22

88+00

1/4 SECTION LINE

990.15′
N47° 25′ 09″E

ALUM. MON. LC-238
S 1/4 CORNER
S34-T29N-R18W
COR. DOC. #600-107434

SE 1/4
S34-T28N-R18W

SECTION LINE

NW 1/4
S3-T28N-R18W

NE 1/4
S3-T28N-R18W

LAND TIE

LEGEND
NEW R/W
T.C.E.
PERM. ESM'T

SCALE
0 50 100 150

SOUTH OUTER ROAD
RIGHT OF WAY SHEET
15 OF 22

REV.

L:\MoDOT\20092124-00\Draw\Roadway\Sheets\065_RW_15_J7P3425C_i50.dgn 8:23:00 AM 8/2/2024

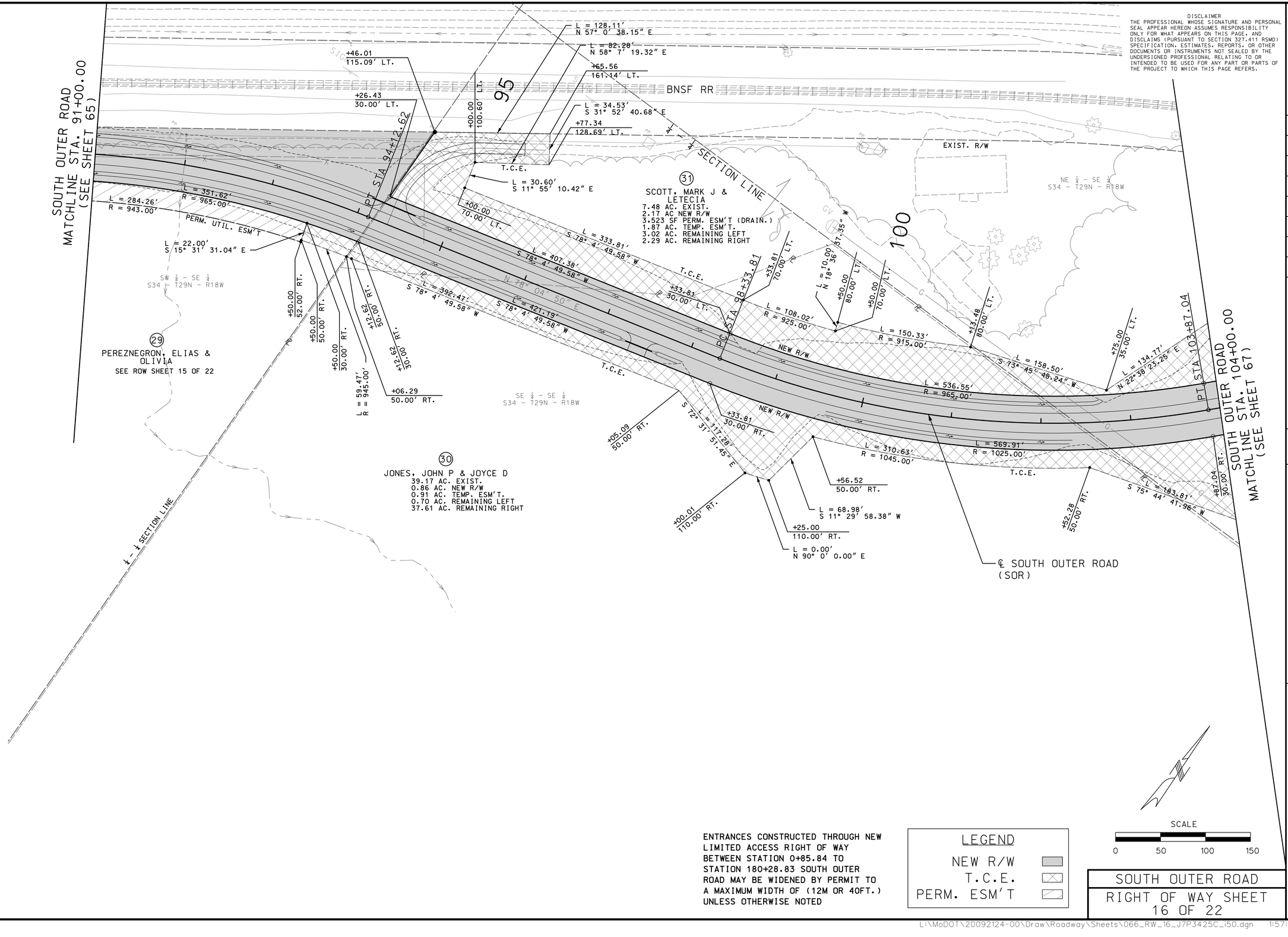

DISCLAIMER
THE PROFESSIONAL WHOSE SIGNATURE AND PERSONAL SEAL APPEAR HEREON ASSUMES RESPONSIBILITY ONLY FOR WHAT APPEARS ON THIS PAGE, AND DISCLAIMS (PURSUANT TO SECTION 327.411 RSMO) SPECIFICATION, ESTIMATES, REPORTS, OR OTHER DOCUMENTS OR INSTRUMENTS NOT SEALED BY THE UNDERSIGNED PROFESSIONAL RELATING TO OR INTENDED TO BE USED FOR ANY PART OR PARTS OF THE PROJECT TO WHICH THIS PAGE REFERS.

ENTRANCES CONSTRUCTED THROUGH NEW LIMITED ACCESS RIGHT OF WAY BETWEEN STATION 0+85.84 TO STATION 180+28.83 SOUTH OUTER ROAD MAY BE WIDENED BY PERMIT TO A MAXIMUM WIDTH OF (12M OR 40FT.) UNLESS OTHERWISE NOTED

LEGEND
NEW R/W
T.C.E.
PERM. ESM'T

SCALE
0 50 100 150

SOUTH OUTER ROAD
RIGHT OF WAY SHEET 16 OF 22

STATE OF MISSOURI
DALLAS P. JOPLIN
NUMBER PE-2011015760
PROFESSIONAL ENGINEER
THIS SHEET HAS BEEN SIGNED, SEALED AND DATED ELECTRONICALLY.

DATE PREPARED	
9/3/2024	
ROUTE	STATE
60	MO
DISTRICT	SHEET NO.
SW	66
COUNTY	
WEBSTER	
JOB NO.	
J7P3425C	
CONTRACT ID.	
PROJECT NO.	
BRIDGE NO.	

DATE	DESCRIPTION	REV.

IF A SEAL IS PRESENT ON THIS SHEET IT HAS BEEN ELECTRONICALLY SEALED AND DATED.

MISSOURI HIGHWAYS AND TRANSPORTATION COMMISSION
105 WEST CAPITOL
JEFFERSON CITY, MO 65102
1-888-ASK-MODOT (1-888-275-6636)

CMT
© Copyright CMT, Inc.
CRAWFORD, MURPHY & TILLY, INC.
1631 WEST ELFINDALE STREET
SPRINGFIELD, MO 65807 (417) 869-6009
ENGINEERING CORPORATION - 000631

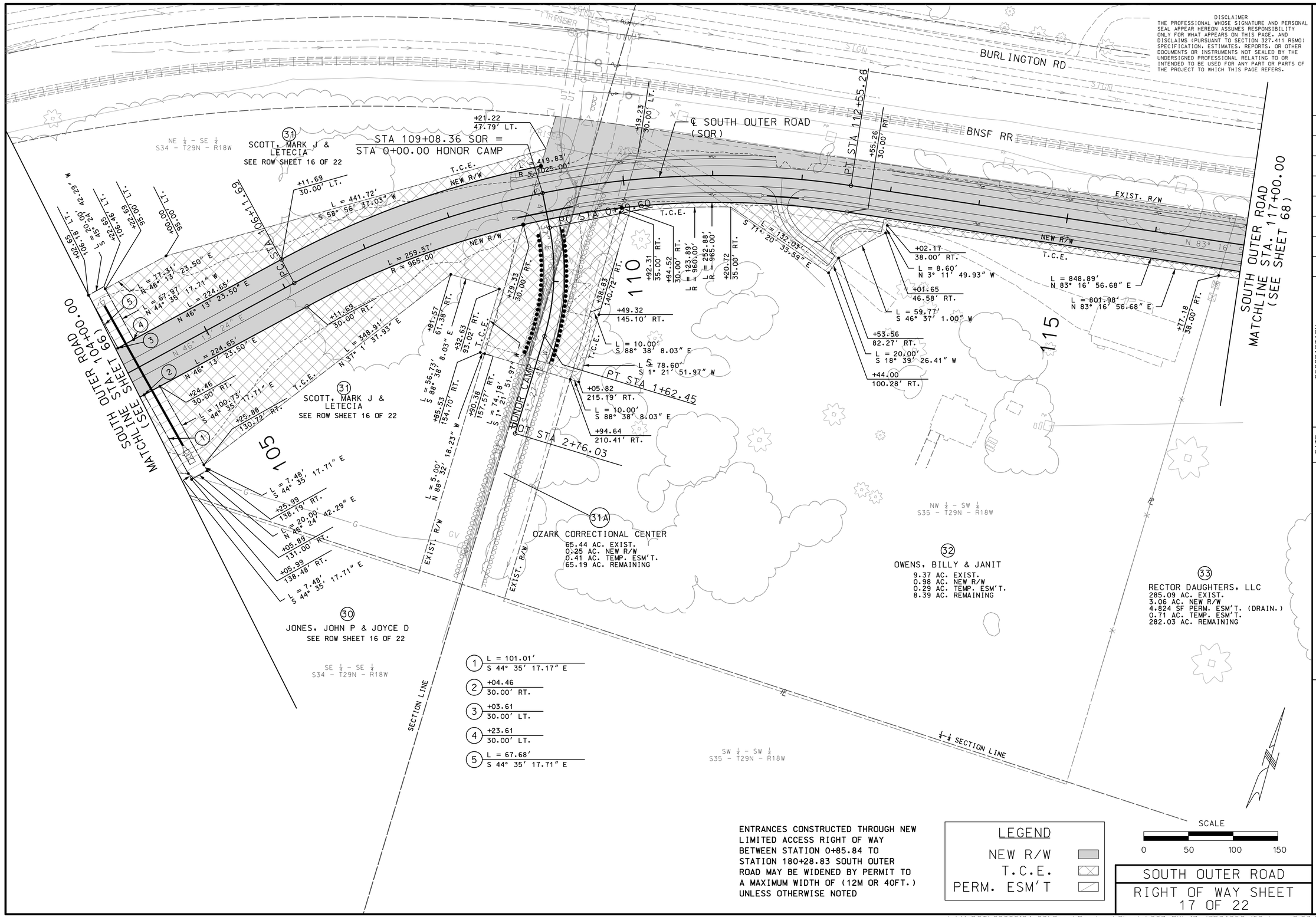

DISCLAIMER
THE PROFESSIONAL WHOSE SIGNATURE AND PERSONAL SEAL APPEAR HEREON ASSUMES RESPONSIBILITY ONLY FOR WHAT APPEARS ON THIS PAGE, AND DISCLAIMS (PURSUANT TO SECTION 327.411 RSMO) SPECIFICATION, ESTIMATES, REPORTS, OR OTHER DOCUMENTS OR INSTRUMENTS NOT SEALED BY THE UNDERSIGNED PROFESSIONAL RELATING TO OR INTENDED TO BE USED FOR ANY PART OR PARTS OF THE PROJECT TO WHICH THIS PAGE REFERS.

STATE OF MISSOURI
DALLAS P. JOPLIN
NUMBER PE-2011015760
PROFESSIONAL ENGINEER

THIS SHEET HAS BEEN SIGNED, SEALED AND DATED ELECTRONICALLY.

DATE PREPARED	
8/2/2024	
ROUTE	STATE
60	MO
DISTRICT	SHEET NO.
SW	67
COUNTY	
WEBSTER	
JOB NO.	
J7P3425C	
CONTRACT ID.	
PROJECT NO.	
BRIDGE NO.	

DATE	DESCRIPTION

IF A SEAL IS PRESENT ON THIS SHEET IT HAS BEEN ELECTRONICALLY SEALED AND DATED.

MISSOURI HIGHWAYS AND TRANSPORTATION COMMISSION
105 WEST CAPITOL
JEFFERSON CITY, MO 65102
1-888-ASK-MODOT (1-888-275-6636)

CMT
© Copyright CMT, Inc.
CRAWFORD, MURPHY & TILLY, INC.
1631 WEST ELFINDALE STREET
SPRINGFIELD, MO 65807 (417) 869-6009
ENGINEERING CORPORATION - 000631

SOUTH OUTER ROAD
RIGHT OF WAY SHEET 17 OF 22

REV.

L:\MoDOT\20092124-00\Draw\Roadway\Sheets\067_RW_17_J7P3425C_i50.dgn 8:23:04 AM 8/2/2024

DISCLAIMER
THE PROFESSIONAL WHOSE SIGNATURE AND PERSONAL SEAL APPEAR HEREON ASSUMES RESPONSIBILITY ONLY FOR WHAT APPEARS ON THIS PAGE, AND DISCLAIMS (PURSUANT TO SECTION 327.411 RSMO) SPECIFICATION, ESTIMATES, REPORTS, OR OTHER DOCUMENTS OR INSTRUMENTS NOT SEALED BY THE UNDERSIGNED PROFESSIONAL RELATING TO OR INTENDED TO BE USED FOR ANY PART OR PARTS OF THE PROJECT TO WHICH THIS PAGE REFERS.

(41)
HAMILTON, GERALD W & LINDA L
4.02 AC. EXIST.
4.02 AC. NEW R/W
0.00 AC. REMAINING

(49)
STEVEN DAVID
3.37 AC. EXIST.
3.37 AC. NEW R/W
0.00 AC. REMAINING

SOUTH OUTER ROAD
MATCHLINE STA. 117+00.00
(SEE SHEET 67)

120
125

BURLINGTON RD

BNSF RR

℄ STA 121+04.15

NEW R/W
T.C.E.
EXIST. R/W

N 83° 16' 56.68" E

L = 694.74'
N 83° 16' 56.68" E

L = 848.89'
N 83° 16' 56.68" E

+50.00
38.00' RT.

L = 8.07'
S 0° 55' 21.21" W

+50.00
38.00' RT.

L = 231.80'
S 0° 55' 21.21" W

L = 234.49'
S 0° 55' 21.21" W

+50.00
38.00' RT.

L = 8.07'
S 0° 55' 21.21" W

+50.00
38.00' RT.

+04.15
38.00' RT.

+04.15
30.00' RT.

L = 87.06'
N 83° 16' 56.68" E

L = 659.19'
R 1878.00'

℄ SOUTH OUTER ROAD
(SOR)

L = 951.65'
R 1870.00'

L = 298.43'
R 1890.00'

T.C.E.

L = 12.00'
S 26° 49' 43.32" E

+50.00
50.00' RT.

+50.00
38.00' RT.

+50.00
38.00' RT.

L = 20.00'
S 89° 04' 38.79" E

NW ¼ - SW ¼
S35 - T29N - R18W

NE ¼ - SW ¼
S35 - T29N - R18W

¼ - ¼ SECTION LINE

(33)
RECTOR DAUGHTERS, LLC
SEE ROW SHEET 17 OF 22

SOUTH OUTER ROAD
MATCHLINE STA. 130+00.00
(SEE SHEET 69)

ENTRANCES CONSTRUCTED THROUGH NEW LIMITED ACCESS RIGHT OF WAY BETWEEN STATION 0+85.84 TO STATION 180+28.83 SOUTH OUTER ROAD MAY BE WIDENED BY PERMIT TO A MAXIMUM WIDTH OF (12M OR 40FT.) UNLESS OTHERWISE NOTED

LEGEND
NEW R/W
T.C.E.
PERM. ESM'T

SCALE
0 50 100 150

SOUTH OUTER ROAD
RIGHT OF WAY SHEET
18 OF 22

STATE OF MISSOURI
DALLAS P. JOPLIN
NUMBER PE-2011015760
PROFESSIONAL ENGINEER

THIS SHEET HAS BEEN SIGNED, SEALED AND DATED ELECTRONICALLY.

DATE PREPARED
8/2/2024

ROUTE	STATE
60	MO
DISTRICT	SHEET NO.
SW	68

COUNTY
WEBSTER

JOB NO.
J7P3425C

CONTRACT ID.

PROJECT NO.

BRIDGE NO.

DESCRIPTION	DATE

IF A SEAL IS PRESENT ON THIS SHEET IT HAS BEEN ELECTRONICALLY SEALED AND DATED.

MISSOURI HIGHWAYS AND TRANSPORTATION COMMISSION
105 WEST CAPITOL
JEFFERSON CITY, MO 65102
1-888-ASK-MODOT (1-888-275-6636)

CMT
©Copyright CMT, Inc.
CRAWFORD, MURPHY & TILLY, INC.
1631 WEST ELFINDALE STREET
SPRINGFIELD, MO 65807 (417) 869-6009
ENGINEERING CORPORATION - 000631

REV.

L:\MoDOT\20092124-00\Draw\Roadway\Sheets\068_RW_18_J7P3425C_150.dgn 8:23:06 AM 8/2/2024

DISCLAIMER
THE PROFESSIONAL WHOSE SIGNATURE AND PERSONAL SEAL APPEAR HEREON ASSUMES RESPONSIBILITY ONLY FOR WHAT APPEARS ON THIS PAGE, AND DISCLAIMS (PURSUANT TO SECTION 327.411 RSMO) SPECIFICATION, ESTIMATES, REPORTS, OR OTHER DOCUMENTS OR INSTRUMENTS NOT SEALED BY THE UNDERSIGNED PROFESSIONAL RELATING TO OR INTENDED TO BE USED FOR ANY PART OR PARTS OF THE PROJECT TO WHICH THIS PAGE REFERS.

STATE OF MISSOURI
DALLAS P. JOPLIN
NUMBER PE-2010015760
PROFESSIONAL ENGINEER

THIS SHEET HAS BEEN SIGNED, SEALED AND DATED ELECTRONICALLY.

DATE PREPARED
8/2/2024

ROUTE	STATE
60	MO
DISTRICT	SHEET NO.
SW	69

COUNTY
WEBSTER

JOB NO.
J7P3425C

CONTRACT ID.

PROJECT NO.

BRIDGE NO.

DATE	DESCRIPTION

IF A SEAL IS PRESENT ON THIS SHEET IT HAS BEEN ELECTRONICALLY SEALED AND DATED.

MISSOURI HIGHWAYS AND TRANSPORTATION COMMISSION
105 WEST CAPITOL
JEFFERSON CITY, MO 65102
1-888-ASK-MODOT (1-888-275-6636)

CMT
©Copyright CMT, Inc.
CRAWFORD, MURPHY & TILLY, INC.
1631 WEST ELFINDALE STREET
SPRINGFIELD, MO 65807 (417) 869-6009
ENGINEERING CORPORATION - 000631

REV.

SOUTH OUTER ROAD
MATCHLINE STA. 130+00.00
(SEE SHEET 68)

SOUTH OUTER ROAD
MATCHLINE STA. 143+00.00
(SEE SHEET 70)

(49) STEVEN DAVID
SEE ROW SHEET 18 OF 22

(33) RECTOR DAUGHTERS, LLC
SEE ROW SHEET 17 OF 22

(35) KENNEDY, EDWARD & LINDA
5.90 AC. EXIST.
0.98 AC. NEW R/W
0.24 AC. PERM. ESM'T
4,746 SF TEMP. ESM'T.
4.92 AC. REMAINING

(34) TROSTEL, REX & TAMMI
5.42 AC. EXIST.
0.17 AC. NEW R/W
1,964 SF TEMP. ESM'T.
5.25 AC. REMAINING

BURLINGTON RD
BNSF RR
EASTBOUND US60
GREEN BRIAR DR.
EXIST. R/W
NEW R/W
T.C.E.
℄ SOUTH OUTER ROAD (SOR)
PT STA 130+40.53
¼ SECTION LINE
SE ¼ – NW ¼ S35 – T29N – R18W
NE ¼ – SW ¼ S35 – T29N – R18W
NW ¼ – SE ¼ S35 – T29N – R18W
SW ¼ – NE ¼ S35 – T29N – R18W
EXIST. ESM'T
PERM. UTIL. ESM'T
PERM. ESM'T
TEMP. ESM'T
PL
FP
UT
UTV
SIGN
STORM

L = 3287.67'
N 54° 7' 27.76" E

L = 780.42'
N 54° 7' 27.76" E

L = 37.37'
S 08° 14' 52.33" E

L = 134.21'
N 54° 7' 27.76" E

L = 43.96'
N 1° 45' 7.67" E

L = 28.85'
N 46° 54' 5.70" W

L = 30.00'
S 43° 5' 54.30" W

L = 15.88'
N 46° 54' 5.70" W

L = 604.59'
N 54° 7' 27.76" E

L = 15.00'
N 35° 52' 32.24" W

L = 7.00'
N 35° 52' 32.24" W

L = 196.50'
N 54° 7' 27.76" E

+40.53 50.00' RT.
+40.53 30.00' RT.
+20.95 50.00' RT.
+77.39 38.00' RT.
+50.55 72.82' RT.
+11.60 38.00' RT.
+17.12 66.32' RT.
+43.53 45.00' RT.
+46.56 60.58' RT.
+40.03 52.00' RT.
+40.03 45.00' RT.
+40.03 30.00' RT.

LEGEND
NEW R/W
T.C.E.
PERM. ESM'T

SCALE
0 50 100 150

ENTRANCES CONSTRUCTED THROUGH NEW LIMITED ACCESS RIGHT OF WAY BETWEEN STATION 0+85.84 TO STATION 180+28.83 SOUTH OUTER ROAD MAY BE WIDENED BY PERMIT TO A MAXIMUM WIDTH OF (12M OR 40FT.) UNLESS OTHERWISE NOTED

SOUTH OUTER ROAD
RIGHT OF WAY SHEET
19 OF 22

L:\MoDOT\20092124-00\Draw\Roadway\Sheets\069_RW_19_J7P3425C_150.dgn 8:23:08 AM 8/2/2024

SOUTH OUTER ROAD
MATCHLINE STA. 143+00.00
(SEE SHEET 69)

SOUTH OUTER ROAD
MATCHLINE STA. 156+00.00
(SEE SHEET 71)

SW ¼ - NE ¼
S35 - T29N - R18W

NW ¼ - NE ¼
S35 - T29N - R18W

SE ¼ - NE ¼
S35 - T29N - R18W

¼ - ¼ SECTION LINE

145 150 155

EASTBOUND US60

BNSF RR

EXIST. R/W

℄ SOUTH OUTER ROAD
(SOR)

N 54° 07' 28" E

L = 604.59'
N 54° 7' 27.76" E

NEW R/W

PERM. UTIL. ESM'T.

+90.27
52.00' RT.

+30.94
52.00' RT.

T.C.E.

L = 3287.67'
N 54° 7' 27.76" E

L = 1463.57'
N 54° 7' 27.76" E

GRAVESITE
(APPROX.)

L = 74.56'
S 23° 28' 41.96" E

+74.57
123.43' RT.

L = 84.45'
N 16° 49' 15.42" W

T.C.E.

L = 30.00'
S 70° 21' 59.72" W

+03.37
131.82' RT.

EXIST. ESM'T

EXIST. ESM'T

(35)
KENNEDY, EDWARD &
LINDA
SEE ROW SHEET 19 OF 22

(36)
BOOTH, KEN & MEAGAN
30.18 AC. EXIST.
1.15 AC. NEW R/W
718 SF PERM. ESM'T (DRAIN.)
0.41 AC. PERM. ESM'T (UTIL.)
2,112 SF TEMP. ESM'T.
29.03 AC. REMAINING

(37)
SMITH, BOBBY & JULIA
63.56 AC. EXIST.
1.21 AC. NEW R/W
0.42 AC. PERM. ESM'T (UTIL.)
0.24 AC. TEMP. ESM'T.
0.50 AC. REMAINING LEFT
61.85 AC. REMAINING RIGHT

+44.63
52.00' RT.

+64.63
52.00' RT.

+45.24
30.00' RT.

L = 22.01'
S 34° 16' 23.45" E

+65.25
30.00' RT.

L = 22.01'
S 34° 16' 23.45" E

+44.63
52.00' RT.

+64.63
52.00' RT.

+36.00
52.00' RT.

+75.00
52.00' RT.

L = 16.00'
S 35° 52' 32.24" E

L = 16.00'
S 35° 52' 32.24" E

L = 13.61'
S 34° 16' 23.45" E

L = 14.17'
S 34° 16' 23.45" E

+36.00
68.00' RT.

+75.00
68.00' RT.

+44.24
65.60' RT.

+64.24
66.16' RT.

L = 39.00'
N 54° 7' 27.76" E

L = 20.00'
N 55° 43' 36.55" E

T.C.E.

PERM.
DRAINAGE ESMT.

ENTRANCES CONSTRUCTED THROUGH NEW LIMITED ACCESS RIGHT OF WAY BETWEEN STATION 0+85.84 TO STATION 180+28.83 SOUTH OUTER ROAD MAY BE WIDENED BY PERMIT TO A MAXIMUM WIDTH OF (12M OR 40FT.) UNLESS OTHERWISE NOTED

LEGEND
NEW R/W
T.C.E.
PERM. ESM'T

SCALE
0 50 100 150

SOUTH OUTER ROAD
RIGHT OF WAY SHEET
20 OF 22

DISCLAIMER
THE PROFESSIONAL WHOSE SIGNATURE AND PERSONAL SEAL APPEAR HEREON ASSUMES RESPONSIBILITY ONLY FOR WHAT APPEARS ON THIS PAGE, AND DISCLAIMS (PURSUANT TO SECTION 327.411 RSMO) SPECIFICATION, ESTIMATES, REPORTS, OR OTHER DOCUMENTS OR INSTRUMENTS NOT SEALED BY THE UNDERSIGNED PROFESSIONAL RELATING TO OR INTENDED TO BE USED FOR ANY PART OR PARTS OF THE PROJECT TO WHICH THIS PAGE REFERS.

STATE OF MISSOURI
DALLAS P. JOPLIN
NUMBER PE-2011015760
PROFESSIONAL ENGINEER

THIS SHEET HAS BEEN SIGNED, SEALED AND DATED ELECTRONICALLY.

DATE PREPARED
9/3/2024

ROUTE	STATE
60	MO
DISTRICT	SHEET NO.
SW	70

COUNTY
WEBSTER

JOB NO.
J7P3425C

CONTRACT ID.

PROJECT NO.

BRIDGE NO.

IF A SEAL IS PRESENT ON THIS SHEET IT HAS BEEN ELECTRONICALLY SEALED AND DATED.

REV.	DESCRIPTION	DATE

MISSOURI HIGHWAYS AND TRANSPORTATION COMMISSION
105 WEST CAPITOL
JEFFERSON CITY, MO 65102
1-888-ASK-MODOT (1-888-275-6636)

CMT
© Copyright CMT, Inc.
CRAWFORD, MURPHY & TILLY, INC.
1631 WEST ELFINDALE STREET
SPRINGFIELD, MO 65807 (417) 869-6009
ENGINEERING CORPORATION - 000631

L:\MoDOT\20092124-00\Draw\Roadway\Sheets\070_RW_20_J7P3425C_i50.dgn 1:57:31 PM 9/3/2024

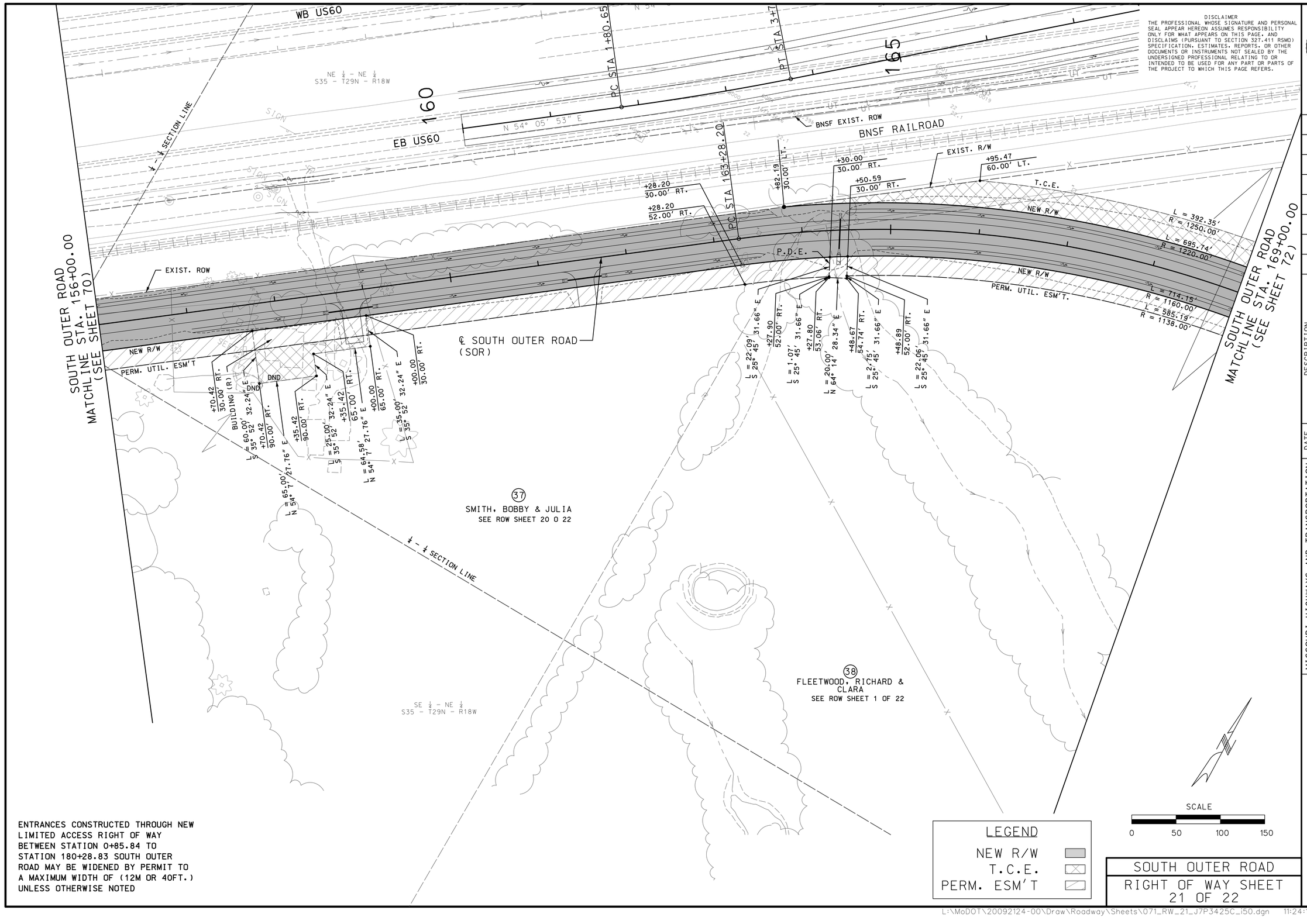

ENTRANCES CONSTRUCTED THROUGH NEW LIMITED ACCESS RIGHT OF WAY BETWEEN STATION 0+85.84 TO STATION 180+28.83 SOUTH OUTER ROAD MAY BE WIDENED BY PERMIT TO A MAXIMUM WIDTH OF (12M OR 40FT.) UNLESS OTHERWISE NOTED

LEGEND

NEW R/W

T.C.E.

PERM. ESM'T

SCALE

0 50 100 150

SOUTH OUTER ROAD

RIGHT OF WAY SHEET
21 OF 22

DISCLAIMER
THE PROFESSIONAL WHOSE SIGNATURE AND PERSONAL SEAL APPEAR HEREON ASSUMES RESPONSIBILITY ONLY FOR WHAT APPEARS ON THIS PAGE, AND DISCLAIMS (PURSUANT TO SECTION 327.411 RSMO) SPECIFICATION, ESTIMATES, REPORTS, OR OTHER DOCUMENTS OR INSTRUMENTS NOT SEALED BY THE UNDERSIGNED PROFESSIONAL RELATING TO OR INTENDED TO BE USED FOR ANY PART OR PARTS OF THE PROJECT TO WHICH THIS PAGE REFERS.

STATE OF MISSOURI
DALLAS P. JOPLIN
NUMBER PE-2011015760
PROFESSIONAL ENGINEER

THIS SHEET HAS BEEN SIGNED, SEALED AND DATED ELECTRONICALLY.

DATE PREPARED	
11/4/2024	
ROUTE	STATE
60	MO
DISTRICT	SHEET NO.
SW	71
COUNTY	
WEBSTER	
JOB NO.	
J7P3425C	
CONTRACT ID.	
PROJECT NO.	
BRIDGE NO.	

DATE	DESCRIPTION

IF A SEAL IS PRESENT ON THIS SHEET IT HAS BEEN ELECTRONICALLY SEALED AND DATED.

MISSOURI HIGHWAYS AND TRANSPORTATION COMMISSION

105 WEST CAPITOL
JEFFERSON CITY, MO 65102
1-888-ASK-MODOT (1-888-275-6636)

CMT

© Copyright CMT, Inc.

CRAWFORD, MURPHY & TILLY, INC.
1631 WEST ELFINDALE STREET
SPRINGFIELD, MO 65807 (417) 869-6009
ENGINEERING CORPORATION - 000631

REV.

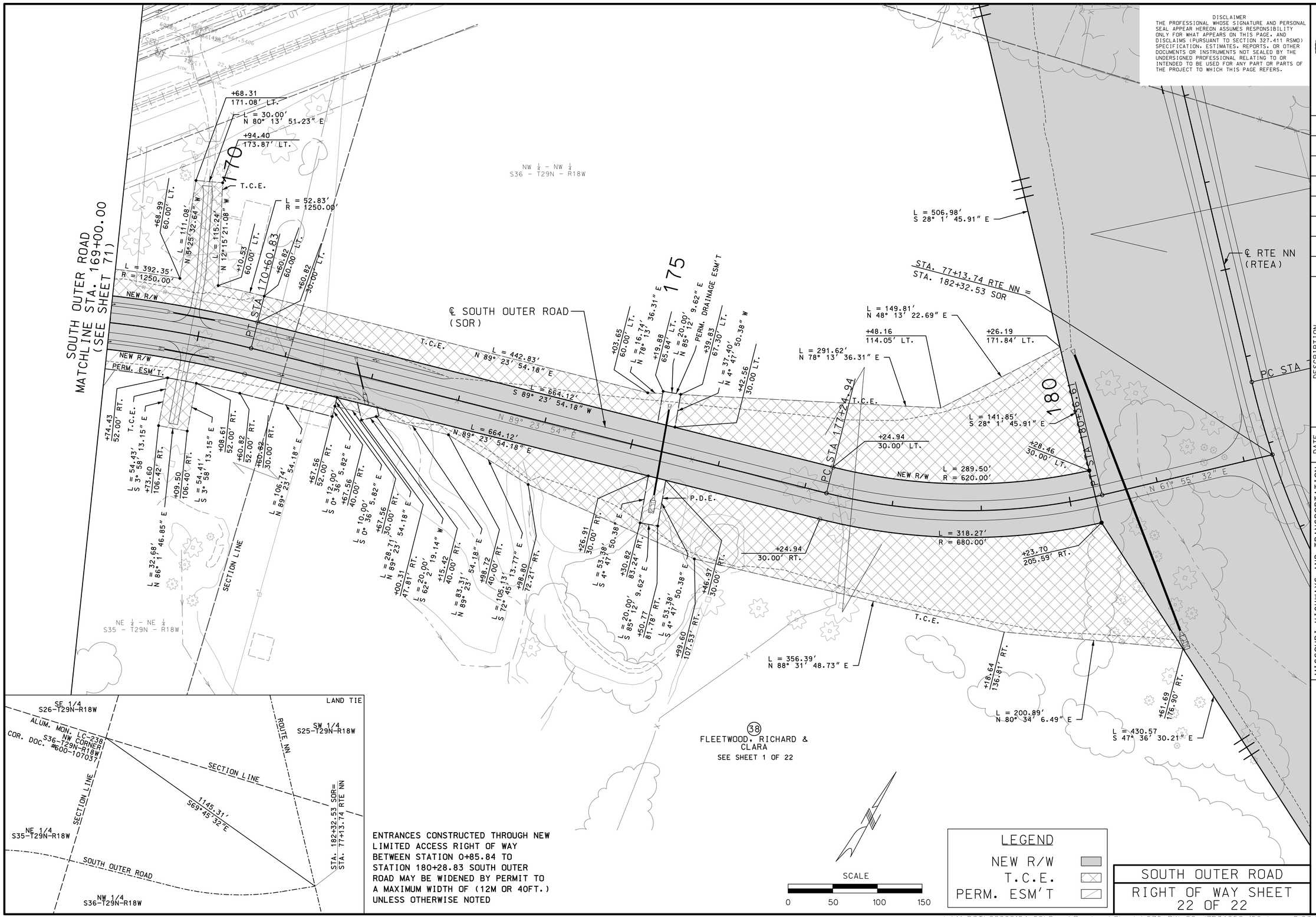

ENTRANCES CONSTRUCTED THROUGH NEW LIMITED ACCESS RIGHT OF WAY BETWEEN STATION 0+85.84 TO STATION 180+28.83 SOUTH OUTER ROAD MAY BE WIDENED BY PERMIT TO A MAXIMUM WIDTH OF (12M OR 40FT.) UNLESS OTHERWISE NOTED

DISCLAIMER
THE PROFESSIONAL WHOSE SIGNATURE AND PERSONAL SEAL APPEAR HEREON ASSUMES RESPONSIBILITY ONLY FOR WHAT APPEARS ON THIS PAGE, AND DISCLAIMS (PURSUANT TO SECTION 327.411 RSMO) SPECIFICATION, ESTIMATES, REPORTS, OR OTHER DOCUMENTS OR INSTRUMENTS NOT SEALED BY THE UNDERSIGNED PROFESSIONAL RELATING TO OR INTENDED TO BE USED FOR ANY PART OR PARTS OF THE PROJECT TO WHICH THIS PAGE REFERS.

STATE OF MISSOURI
DALLAS P. JOPLIN
NUMBER PE-2011015760
PROFESSIONAL ENGINEER

THIS SHEET HAS BEEN SIGNED, SEALED AND DATED ELECTRONICALLY.

DATE PREPARED: 8/2/2024

ROUTE	STATE
60	MO
DISTRICT	SHEET NO.
SW	72

COUNTY: WEBSTER
JOB NO.: J7P3425C
CONTRACT ID.:
PROJECT NO.:
BRIDGE NO.:

DATE	DESCRIPTION

IF A SEAL IS PRESENT ON THIS SHEET IT HAS BEEN ELECTRONICALLY SEALED AND DATED.

MISSOURI HIGHWAYS AND TRANSPORTATION COMMISSION
105 WEST CAPITOL
JEFFERSON CITY, MO 65102
1-888-ASK-MODOT (1-888-275-6636)

CMT
© Copyright CMT, Inc.
CRAWFORD, MURPHY & TILLY, INC.
1631 WEST ELFINDALE STREET
SPRINGFIELD, MO 65807 (417) 869-6009
ENGINEERING CORPORATION - 000631

SOUTH OUTER ROAD
RIGHT OF WAY SHEET
22 OF 22

L:\MoDOT\20092124-00\Draw\Roadway\Sheets\072_RW_22_J7P3425C_i50.dgn 8:23:14 AM 8/2/2024

REV.

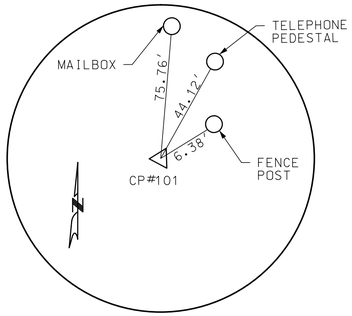

CONTROL POINT #101
N: 489590.7792
E: 1538380.6472
EL. 1650.9450
5/8" I.B. W/ 2" ALUMINUM CAP

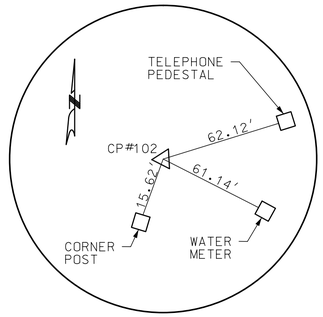

CONTROL POINT #102
N: 484744.6169
E: 1537076.7754
EL. 1627.8200
5/8" I.B. W/ 2" ALUMINUM CAP

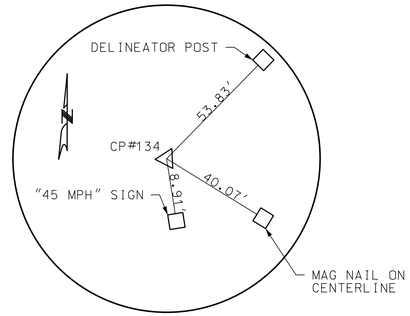

CONTROL POINT #134
N: 484346.9762
E: 1528568.9872
EL. 1658.7820
5/8" I.B. W/ 2" ALUMINUM CAP

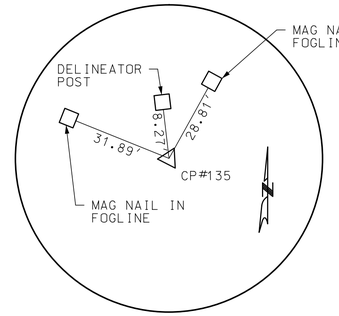

CONTROL POINT #135
N: 484850.0956
E: 1530138.4487
EL. 1636.7980
5/8" I.B. W/ 2" ALUMINUM CAP

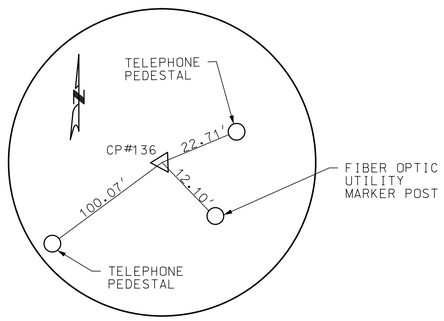

CONTROL POINT #136
N: 486467.8908
E: 1533253.6916
EL. 1676.1460
5/8" I.B. W/ 2" ALUMINUM CAP

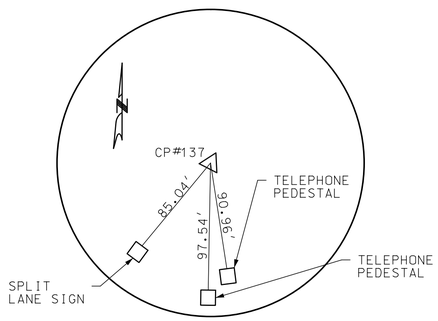

CONTROL POINT #137
N: 487442.6194
E: 1534480.6120
EL. 1664.2490
5/8" I.B. W/ 2" ALUMINUM CAP

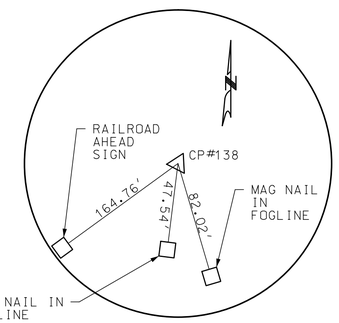

CONTROL POINT #138
N: 487996.5545
E: 1536552.1348
EL. 1657.0310
5/8" I.B. W/ 2" ALUMINUM CAP

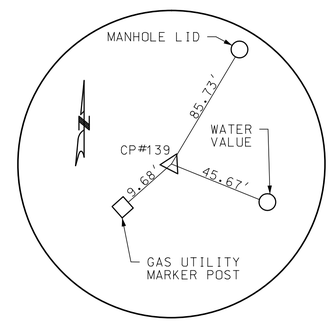

CONTROL POINT #139
N: 487956.9195
E: 1538081.2849
EL. 1649.1560
5/8" I.B. W/ 2" ALUMINUM CAP

US 60

REFERENCE POINTS
1 OF 1

CMT
© Copyright CMT, Inc.
CRAWFORD, MURPHY & TILLY, INC.
1631 WEST ELFINDALE STREET
SPRINGFIELD, MO 65807 (417) 869-6009
ENGINEERING CORPORATION - 000631

MISSOURI HIGHWAYS AND TRANSPORTATION COMMISSION
105 WEST CAPITOL
JEFFERSON CITY, MO 65102
1-888-ASK-MODOT (1-888-275-6636)

STATE OF MISSOURI
DALLAS P. JOPLIN
NUMBER PE-2011015760
PROFESSIONAL ENGINEER

THIS SHEET HAS BEEN SIGNED, SEALED AND DATED ELECTRONICALLY.

DATE PREPARED	8/2/2024
ROUTE	STATE
60	MO
DISTRICT	SHEET NO.
SW	73
COUNTY	WEBSTER
JOB NO.	J7P3425C
CONTRACT ID.	
PROJECT NO.	
BRIDGE NO.	

REV.	DESCRIPTION	DATE

IF A SEAL IS PRESENT ON THIS SHEET IT HAS BEEN ELECTRONICALLY SEALED AND DATED.

L:\MoDOT\20092124-00\Draw\Roadway\Sheets\073_RP_01_J7P3425C_i1.dgn 8:23:16 AM 8/2/2024

DISCLAIMER
THE PROFESSIONAL WHOSE SIGNATURE AND PERSONAL SEAL APPEAR HEREON ASSUMES RESPONSIBILITY ONLY FOR WHAT APPEARS ON THIS PAGE, AND DISCLAIMS (PURSUANT TO SECTION 327.411 RSMO) SPECIFICATION, ESTIMATES, REPORTS, OR OTHER DOCUMENTS OR INSTRUMENTS NOT SEALED BY THE UNDERSIGNED PROFESSIONAL RELATING TO OR INTENDED TO BE USED FOR ANY PART OR PARTS OF THE PROJECT TO WHICH THIS PAGE REFERS.

SCALE
0 200 400 600 800

CURVE RTEA_3	
PI	55+36.07
PC	52+86.18
PT	57+75.11
Δ	29° 10′ 49.7″ (LT)
D	5° 58′ 05.9″
L	488.92′
T	249.89′
R	960.00′
DS	55 MPH
emax	8%
e	8%

CURVE RTEA_6	
PI	81+80.81
PC	76+29.21
PT	86+30.54
Δ	59° 45′ 44.2″ (LT)
D	5° 58′ 05.9″
L	1,001.33′
T	551.60′
R	960.00′
DS	55 MPH
emax	8%
e	8%

CURVE NORW_3	
PI	12+90.95
PC	11+45.79
PT	14+08.82
Δ	60° 16′ 53.8″ (RT)
D	22° 55′ 05.9″
L	263.03′
T	145.16′
R	250.00′
DS	40 MPH
e	NC (LSU)

CURVE NORE_3	
PI	18+31.69
PC	16+62.82
PT	19+82.40
Δ	45° 46′ 34.3″ (RT)
D	14° 19′ 26.2″
L	319.58′
T	168.87′
R	400.00′
DS	40 MPH
e	NC (LSU)

CURVE RAMP1_1	
PI	0+95.97
PC	0+00.00
PT	1+91.70
Δ	7° 02′ 26.8″ (LT)
D	3° 40′ 22.1″
L	191.70′
T	95.97′
R	1,560.00′
DS	50 MPH
emax	8%
e	6%

CURVE RAMP2_4	
PI	7+70.27
PC	5+04.13
PT	10+34.52
Δ	11° 52′ 14.7″ (RT)
D	2° 14′ 17.2″
L	530.39′
T	266.15′
R	2,560.00′
DS	50 MPH
emax	8%
e	4.2%

CURVE RAMP3_6	
PI	15+28.89
PC	14+16.95
PT	16+40.45
Δ	8° 12′ 30.5″ (LT)
D	3° 40′ 22.1″
L	223.49′
T	111.94′
R	1,560.00′
DS	50 MPH
emax	8%
e	6%

CURVE EB60_9	
PI	25+20.62
PC	17+61.67
PT	31+99.36
Δ	45° 23′ 05.3″ (RT)
D	3° 09′ 24.5″
L	1,437.69′
T	758.95′
R	1,815.00′
DS	70 MPH
emax	8%
e	8%

CURVE NORE_6	
PI	38+87.46
PC	38+17.68
PT	39+57.02
Δ	7° 59′ 01.9″ (LT)
D	5° 43′ 46.5″
L	139.34′
T	69.79′
R	1,000.00′
DS	40 MPH
emax	8%
e	5.9%

CURVE RAMP2_1	
PI	0+80.54
PC	0+00.00
PT	1+60.99
Δ	4° 31′ 17.6″ (RT)
D	2° 48′ 31.0″
L	160.99′
T	80.54′
R	2,040.00′
DS	50 MPH
emax	8%
e	5.0%

CURVE RAMP3_3	
PI	7+06.28
PC	2+11.97
PT	11+58.51
Δ	40° 46′ 34.3″ (RT)
D	4° 18′ 28.6″
L	946.53′
T	494.31′
R	1,330.00′
DS	50 MPH
emax	8%
e	6.6%

CURVE RAMP4_3	
PI	10+02.15
PC	6+07.58
PT	13+87.11
Δ	21° 53′ 38.4″ (RT)
D	2° 48′ 31.0″
L	779.53′
T	394.58′
R	2,040.00′
DS	50 MPH
emax	8%
e	5%

CURVE EX_US60_13	
PI	620+04.47
PC	615+34.30
PT	624+66.30
Δ	18° 39′ 55.5″ (LT)
D	2° 00′ 09.8″
L	932.00′
T	470.16′
R	2,860.89′
DS	65 MPH
emax	8%

CURVE EB60_3	
PI	2+77.43
PC	1+80.65
PT	3+74.16
Δ	3° 31′ 11.1″ (LT)
D	1° 49′ 08.1″
L	193.51′
T	96.78′
R	3,150.00′
DS	70 MPH
emax	8%
e	6%

SPIRAL EX_US60_16	
PI	662+50.21
Ls	250.00′
Ys	5.46′
Xs	249.89′
LT	166.70′
ST	83.37′
DS	65 MPH
e	NC (OR)

CURVE EB60_6	
PI	15+98.70
PC	15+00.66
PT	16+96.67
Δ	3° 33′ 54.8″ (RT)
D	1° 49′ 08.1″
L	196.01′
T	98.04′
R	3,150.00′
DS	70 MPH
emax	8%
e	6%

CURVE EX_US60_17	
PI	669+89.61
SC	663+33.51
CS	675+97.41
Δ	37° 56′ 20.5″ (RT)
D	3° 00′ 06.3″
L	1,263.90′
T	656.10′
R	1,908.75′
DS	65 MPH
emax	8%

SPIRAL EX_US60_18	
PI	676+80.78
Ls	250.00′
Ys	5.46′
Xs	249.89′
LT	166.70′
ST	83.37′
DS	65 MPH
e	NC (OR)

CURVE NNRDBT_1	
PI	UNDEFINED
PC	0+00.00
PT	0+87.96
Δ	180° 00′ 00.0″ (LT)
D	204° 37′ 40.02″
L	87.96′
T	UNDEFINED
R	28.00′
DS	15 MPH
emax	8%
e	2%

CURVE NNRDBT_2	
PI	UNDEFINED
PC	0+87.96
PT	1+75.92
Δ	179° 58′ 46.3″ (RT)
D	204° 37′ 40.02″
L	87.95′
T	UNDEFINED
R	28.00′
DS	15 MPH
emax	8%
e	2%

POT STA 50+00.00
℄ ROUTE A (RTEA)
PC STA 52+86.18
PT STA 57+75.11
PC STA 16+62.82
PT STA 19+82.40
NORTH OUTER ROAD (NORW)
NORTH OUTER ROAD (NORE)
POT STA 0+00.00 = POT STA 10+75.35
RAMP 3 (RAMP3)
PC STA 2+11.97
PT STA 11+58.51
PC STA 14+16.95
PT STA 16+40.45
PC STA 38+17.68
PT STA 39+57.02
POT STA 41+11.02
MATCHLINE STA. 41+11.02 NORTH OUTER ROAD SEE CP SHEET 2 OF 6
PC STA 11+45.79
POT STA 9+00.00
CS STA 675+97.41
ST STA 678+47.41
POT STA 0+00.00 = POT STA 11+56.88
RAMP 1 (RAMP1)
PC STA 1+00.66
PT STA 1+94.70
PC STA 0+00.00
PT STA 6+07.58
PC STA 6+07.58
PT STA 31+99.36
PT STA 13+87.11
POT STA 42+71.66
RAMP 4 (RAMP4)
PT STA 10+34.52
PC STA 17+61.67
PT STA 16+96.67
RAMP 2 (RAMP2)
PC STA 5+04.13
EQUATION:
Sta 655+00.00 BK = Sta 654+98.60 AH
EQUATION:
Sta 695+00.00 BK = Sta 694+98.98 AH
EX. US60 (EX US60)
EB US60 (EB60)
PT STA 1+60.99
PC STA 0+00.00
PT STA 1+89.65
PC STA 0+00.00
PT STA 3+74.16
POT STA 0+00.00
PC STA 76+29.21
POT STA 182+32.53
PT STA 180+36.61
SOUTH OUTER ROAD (PR SOR)
MATCHLINE STA. 180+00.00 SOUTH OUTER ROAD SEE CP SHEET 3 OF 6
PT STA 86+30.54
POT STA 94+26.54
PT STA 13+33.03
POT STA 10+00.00
PC STA 0+00.00
PT STA 1+75.92
PCC STA 0+87.96
℄ ROUTE NN (RTEA)
EX. RTE NN (RTENN)
SEE COORDINATE POINT SHEET 5 OF 6 FOR POINT DATA

US 60/ROUTE A INTERCHANGE
COORDINATE POINTS 1 OF 6

STATE OF MISSOURI
DALLAS P. JOPLIN
NUMBER PE-2011015760
PROFESSIONAL ENGINEER
THIS SHEET HAS BEEN SIGNED, SEALED AND DATED ELECTRONICALLY.

DATE PREPARED: 8/2/2024
ROUTE: 60 | STATE: MO
DISTRICT: SW | SHEET NO.: 74
COUNTY: WEBSTER
JOB NO.: J7P3425C
CONTRACT ID.:
PROJECT NO.:
BRIDGE NO.:

IF A SEAL IS PRESENT ON THIS SHEET IT HAS BEEN ELECTRONICALLY SEALED AND DATED.

REV.	DATE	DESCRIPTION

MISSOURI HIGHWAYS AND TRANSPORTATION COMMISSION
105 WEST CAPITOL
JEFFERSON CITY, MO 65102
1-888-ASK-MODOT (1-888-275-6636)

CMT
© Copyright CMT, Inc.
CRAWFORD, MURPHY & TILLY, INC.
1631 WEST ELFINDALE STREET
SPRINGFIELD, MO 65807 (417) 869-6009
ENGINEERING CORPORATION - 000631

L:\MoDOT\20092124-00\Draw\Roadway\Sheets\074_CP_01_J7P3425C_i200.dgn 8:23:17 AM 8/2/2024

DISCLAIMER
THE PROFESSIONAL WHOSE SIGNATURE AND PERSONAL SEAL APPEAR HEREON ASSUMES RESPONSIBILITY ONLY FOR WHAT APPEARS ON THIS PAGE, AND DISCLAIMS (PURSUANT TO SECTION 327.411 RSMO) SPECIFICATION, ESTIMATES, REPORTS, OR OTHER DOCUMENTS OR INSTRUMENTS NOT SEALED BY THE UNDERSIGNED PROFESSIONAL RELATING TO OR INTENDED TO BE USED FOR ANY PART OR PARTS OF THE PROJECT TO WHICH THIS PAGE REFERS.

SCALE
0 100 200 300 400 500

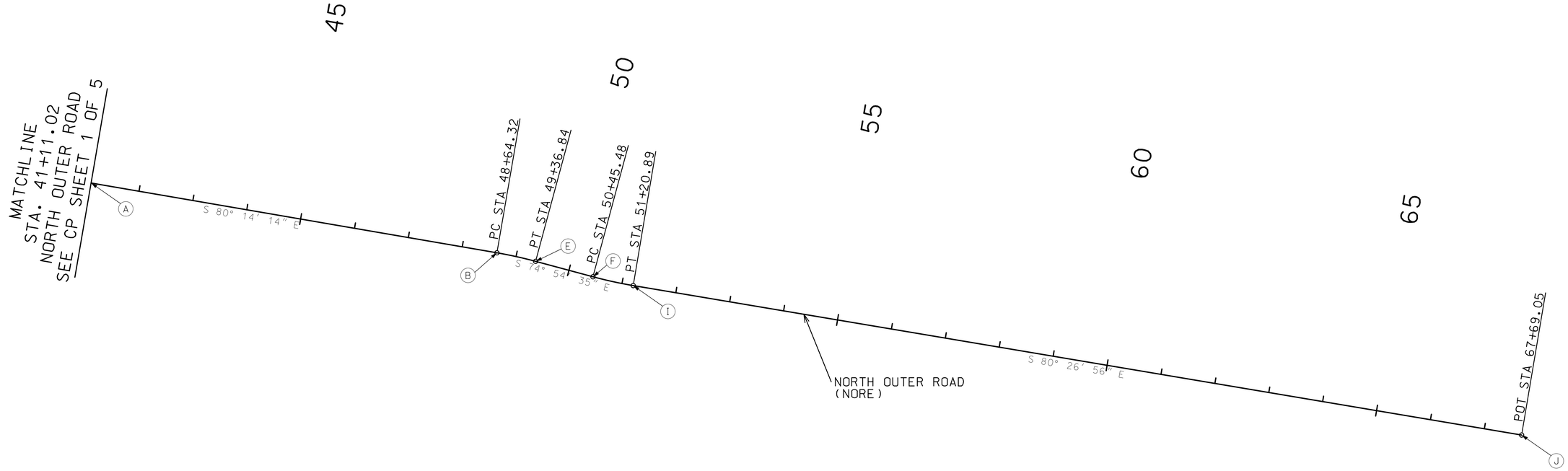

CURVE NORE_9	
PI	49+00.60
PC	48+64.32
PT	49+36.84
Δ	5° 19' 38.8" (RT)
D	7° 20' 44.2"
L	72.53'
T	36.29'
R	780'
DS	40 MPH
emax	8%
e	NC (LSU)

CURVE NORE_12	
PI	50+83.21
PC	50+45.48
PT	51+20.89
Δ	5° 32' 21.3" (LT)
D	7° 20' 44.2"
L	75.41'
T	37.73'
R	780'
DS	40 MPH
emax	8%
e	NC (LSU)

COORDINATE POINT LISTING

SHEET NO	STATION	LOCATION	OFFSET	MOD. STATE PLANE NORTHING (US SURVEY FEET)	MOD. STATE PLANE EASTING (US SURVEY (FEET)	ELEVATION (US SURVEY (FEET)	DESCRIPTION	POINT ID
ALIGNMENTS								
75	41+11.02	NOR EAST	0.00	488122.11	1537234.55	1653.62	PI NOR	A
75	48+64.32	NOR EAST	0.00	487994.38	1537976.93	1650.55	PC NOR	B
75	48+64.32	NOR EAST	780.00' LT	487225.67	1537844.67	-	CC CURVE NOR	C
75	49+00.60	NOR EAST	0.84' LT	487988.22	1538012.7	-	PI NOR	D
75	49+36.84	NOR EAST	0.00	487978.78	1538047.73	1650.23	PT NOR	E
75	50+45.48	NOR EAST	0.00	487950.49	1538152.63	1649.36	PC NOR	F
75	50+45.48	NOR EAST	780.00' RT	488703.6	1538355.69	-	CC CURVE NOR	G
75	50+83.21	NOR EAST	0.91' RT	487940.67	1538189.06	-	PI NOR	H
75	51+20.89	NOR EAST	0.00	487934.41	1538226.27	1648.39	PT NOR	I
75	67+69.05	NOR EAST	0.00	487660.93	1539851.58	1640.00	PI NOR	J

NORTH OUTER ROAD
COORDINATE POINTS
2 OF 6

STATE OF MISSOURI
DALLAS P. JOPLIN
NUMBER PE-2011015760
PROFESSIONAL ENGINEER
THIS SHEET HAS BEEN SIGNED, SEALED AND DATED ELECTRONICALLY.

DATE PREPARED 8/2/2024
ROUTE 60 | STATE MO
DISTRICT SW | SHEET NO. 75
COUNTY WEBSTER
JOB NO. J7P3425C
CONTRACT ID.
PROJECT NO.
BRIDGE NO.

DESCRIPTION | DATE

MISSOURI HIGHWAYS AND TRANSPORTATION COMMISSION
105 WEST CAPITOL
JEFFERSON CITY, MO 65102
1-888-ASK-MODOT (1-888-275-6636)

CMT
© Copyright CMT, Inc.
CRAWFORD, MURPHY & TILLY, INC.
1631 WEST ELFINDALE STREET
SPRINGFIELD, MO 65807 (417) 869-6009
ENGINEERING CORPORATION - 000631

IF A SEAL IS PRESENT ON THIS SHEET IT HAS BEEN ELECTRONICALLY SEALED AND DATED.

L:\MoDOT\20092124-00\Draw\Roadway\Sheets\075_CP_02_J7P3425C_i100.dgn 8:23:19 AM 8/2/2024

REV.

DISCLAIMER
THE PROFESSIONAL WHOSE SIGNATURE AND PERSONAL SEAL APPEAR HEREON ASSUMES RESPONSIBILITY ONLY FOR WHAT APPEARS ON THIS PAGE, AND DISCLAIMS (PURSUANT TO SECTION 327.411 RSMO) SPECIFICATION, ESTIMATES, REPORTS, OR OTHER DOCUMENTS OR INSTRUMENTS NOT SEALED BY THE UNDERSIGNED PROFESSIONAL RELATING TO OR INTENDED TO BE USED FOR ANY PART OR PARTS OF THE PROJECT TO WHICH THIS PAGE REFERS.

SCALE

0 600 1200 1800 2400

CURVE SOR_3	
PI	10+34.88
PC	6+09.45
PT	14+13.49
Δ	46° 17′ 59.0″ (LT)
D	5° 45′ 30.1″
L	804.04′
T	425.43′
R	995.00′
DS	45 MPH
emax	6%
e	5.4%

CURVE SOR_12	
PI	43+32.68
PC	41+10.13
PT	45+48.02
Δ	25° 12′ 56.0″ (RT)
D	5° 45′ 30.1″
L	437.89′
T	222.55′
R	995.00′
DS	45 MPH
emax	6%
e	5.4%

CURVE SOR_21	
PI	92+33.37
PC	90+50.06
PT	94+12.62
Δ	20° 52′ 37.9″ (RT)
D	5° 45′ 30.1″
L	362.55′
T	183.31′
R	995.00′
DS	45 MPH
emax	6%
e	5.4%

CURVE SOR_30	
PI	125+82.72
PC	121+04.15
PT	130+40.53
Δ	29° 09′ 28.9″ (LT)
D	3° 06′ 50.0″
L	936.38′
T	478.56′
R	1,840.00′
DS	45 MPH
emax	6%
e	4%

CURVE EX_US60_10	
PI	560+97.78
PC	555+84.67
PT	566+06.08
Δ	13° 35′ 05.9″ (LT)
D	1° 19′ 48.1″
L	1,021.40′
T	513.11′
R	4,307.85′
DS	65 MPH
emax	8%

CURVE SOR_6	
PI	21+91.28
PC	17+62.01
PT	25+72.53
Δ	46° 40′ 21.9″ (RT)
D	5° 45′ 30.1″
L	810.52′
T	429.26′
R	995.00′
DS	45 MPH
emax	6%
e	5.4%

CURVE SOR_15	
PI	60+26.12
PC	55+43.04
PT	65+00.03
Δ	19° 18′ 24.9″ (RT)
D	2° 01′ 02.8″
L	956.99′
T	483.08′
R	2,840.00′
DS	45 MPH
emax	6%
e	3%

CURVE SOR_24	
PI	101+17.78
PC	98+33.81
PT	103+87.04
Δ	31° 51′ 26.1″ (LT)
D	5° 45′ 30.1″
L	553.23′
T	283.97′
R	995.00′
DS	45 MPH
emax	6%
e	5.4%

CURVE SOR_33	
PI	167+06.54
PC	163+28.20
PT	170+60.83
Δ	35° 16′ 26.4″ (RT)
D	4° 48′ 53.2″
L	732.62′
T	378.34′
R	1,190.00′
DS	45 MPH
emax	6%
e	5%

CURVE EX_US60_13	
PI	620+04.47
PC	615+34.30
PT	624+66.30
Δ	18° 39′ 55.5″ (LT)
D	2° 00′ 09.8″
L	932.00′
T	470.16′
R	2,860.89′
DS	65 MPH
emax	8%

CURVE SOR_9	
PI	36+17.81
PC	33+35.80
PT	38+85.39
Δ	31° 38′ 51.1″ (LT)
D	5° 45′ 30.1″
L	549.59′
T	282.00′
R	995.00′
DS	45 MPH
emax	6%
e	5.4%

CURVE SOR_18	
PI	78+69.26
PC	68+80.16
PT	87+39.22
Δ	48° 24′ 59.8″ (LT)
D	2° 36′ 15.7″
L	1,859.06′
T	989.10′
R	2,200.00′
DS	45 MPH
emax	6%
e	3.6%

CURVE SOR_27	
PI	109+45.18
PC	106+11.69
PT	112+55.26
Δ	37° 03′ 33.2″ (RT)
D	5° 45′ 30.1″
L	643.57′
T	333.49′
R	995.00′
DS	45 MPH
emax	6%
e	5.4%

CURVE SOR_36	
PI	178+83.83
PC	177+24.94
PT	180+36,61
Δ	27° 28′ 22.1″ (LT)
D	8° 48′ 53.0″
L	311.67′
T	158.89′
R	650.00′
DS	45 MPH
emax	6%
e	6%

SEE COORDINATE POINT SHEET 6 OF 6 FOR POINT DATA

SOUTH OUTER ROAD
COORDINATE POINTS 3 OF 6

STATE OF MISSOURI
DALLAS P. JOPLIN
NUMBER PE-2011015760
PROFESSIONAL ENGINEER

THIS SHEET HAS BEEN SIGNED, SEALED AND DATED ELECTRONICALLY.

DATE PREPARED	
9/3/2024	
ROUTE	STATE
60	MO
DISTRICT	SHEET NO.
SW	76
COUNTY	
WEBSTER	
JOB NO.	
J7P3425C	
CONTRACT ID.	
PROJECT NO.	
BRIDGE NO.	

IF A SEAL IS PRESENT ON THIS SHEET IT HAS BEEN ELECTRONICALLY SEALED AND DATED.

DATE	DESCRIPTION	REV.

MISSOURI HIGHWAYS AND TRANSPORTATION COMMISSION

105 WEST CAPITOL
JEFFERSON CITY, MO 65102
1-888-ASK-MODOT (1-888-275-6636)

CMT
© Copyright CMT, Inc.
CRAWFORD, MURPHY & TILLY, INC.
1631 WEST ELFINDALE STREET
SPRINGFIELD, MO 65807 (417) 869-6009
ENGINEERING CORPORATION - 000631

L:\MoDOT\20092124-00\Draw\Roadway\Sheets\076_CP_03_J7P3425C_i600.dgn 1:57:35 PM 9/3/2024

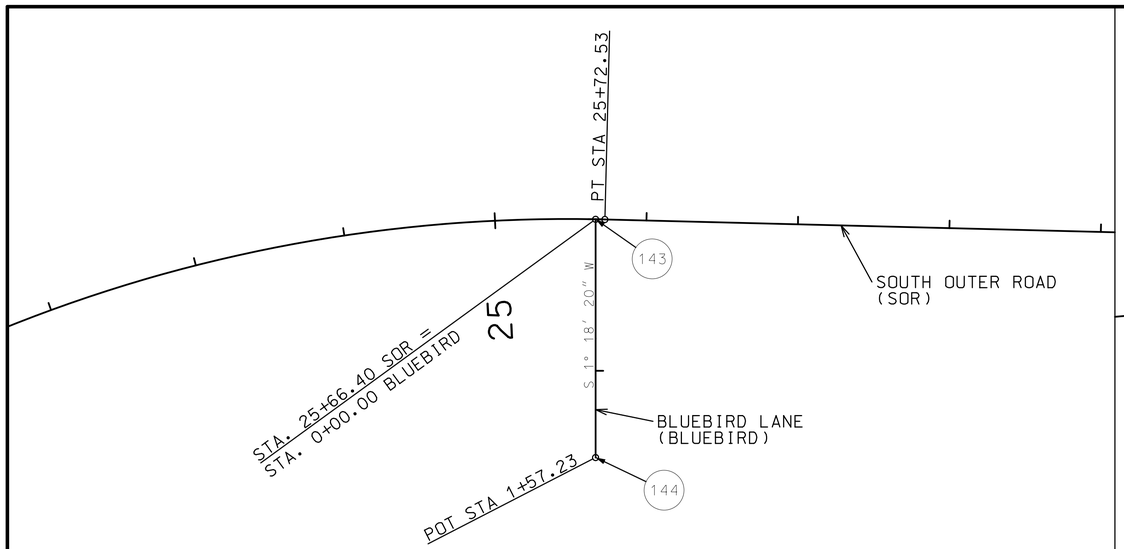

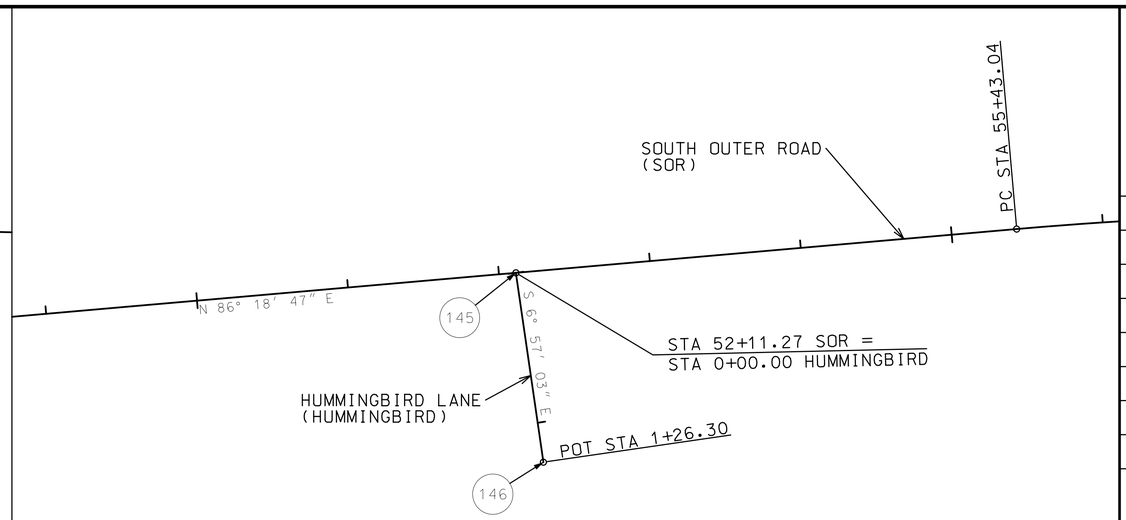

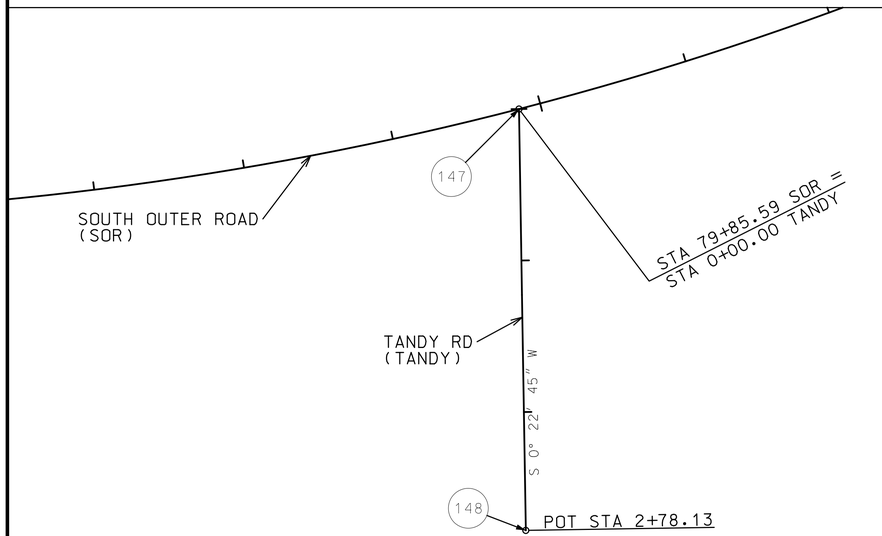

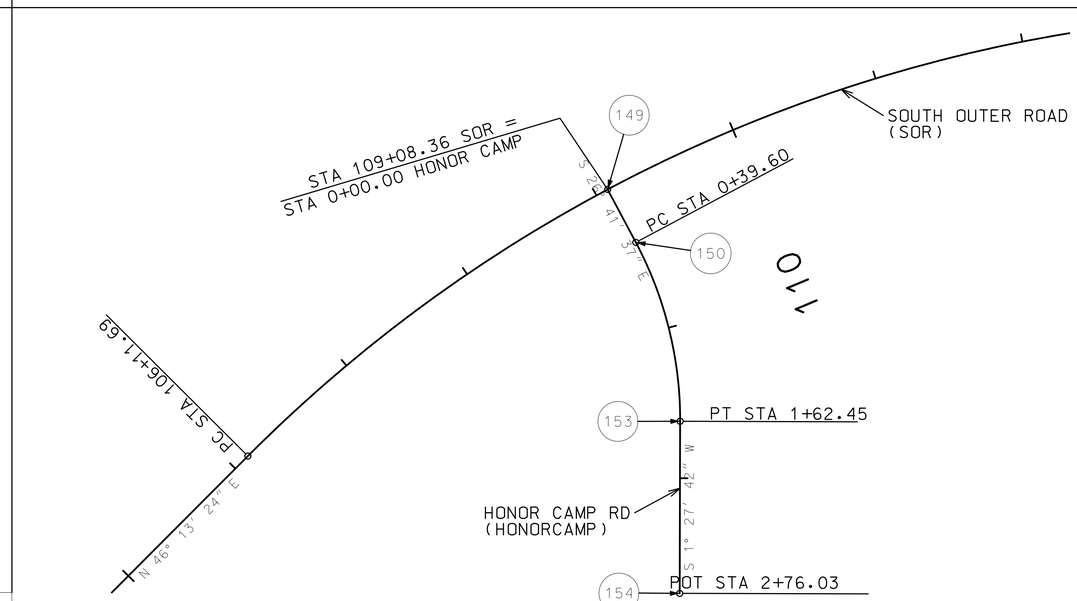

COORDINATE POINT LISTING

SHEET NO	STATION	LOCATION	OFFSET	MOD. STATE PLANE NORTHING (US SURVEY FEET)	MOD. STATE PLANE EASTING (US SURVEY FEET)	MOD. STATE PLANE ELEVATION (US SURVEY FEET)	DESCRIPTION	POINT ID
ALIGNMENTS								
77	0+00.00 25+66.40	BLUEBIRD LN SOR	0.00	482789.50	1521165.63	1648.22	PI BLUEBIRD	143
77	1+57.23	BLUEBIRD LN	0.00	482632.32	1521162.05	1643.49	POT BLUEBIRD	144
77	0+00.00 52+11.27	HUMMINGBIRD LN SOR	0.00	483148.62	1523738.23	1667.02	PI HUMMINGBIRD	145
77	1+26.30	HUMMINGBIRD LN	0.00	483023.24	1523753.52	1663.87	POT HUMMINGBIRD	146
77	0+00.00 79+85.59	TANDY RD SOR	0.00	482945.21	1526476.31	1677.71	PI TANDY	147
77	2+78.13	TANDY RD	0.00	482667.08	1526474.47	1666.01	POT TANDY	148
77	0+00.00 109+08.36	HONOR CAMP SOR	0.00	484211.61	1529060.09	1655.67	PI HONOR CAMP	149
77	0+39.60	HONOR CAMP	0.00	484176.23	1529077.87	1652.99	PC HONOR CAMP	150
77	0+36.60	HONOR CAMP	250.00' RT	484063.93	1528854.52	-	CC HONOR CAMP	151
77	1+02.29	HONOR CAMP	7.74' RT	484120.22	1529106.04	1648.16	PI HONOR CAMP	152
77	1+62.45	HONOR CAMP	0.00	484057.55	1529104.44	1644.05	PT HONOR CAMP	153
77	2+76.03	HONOR CAMP	0.00	483944.00	1529101.54	1642.01	POT HONOR CAMP	154

CURVE HONORCAMP_3	
PI	1+02.29
PC	0+39.60
PT	1+62.45
Δ	28° 09' 18.9" (RT)
D	22° 55' 05.9"
L	122.85'
T	62.69'
R	250.00'
DS	25 MPH
emax	6%
e	NONE

SCALE
0 50 100 150

DISCLAIMER
THE PROFESSIONAL WHOSE SIGNATURE AND PERSONAL SEAL APPEAR HEREON ASSUMES RESPONSIBILITY ONLY FOR WHAT APPEARS ON THIS PAGE, AND DISCLAIMS (PURSUANT TO SECTION 327.411 RSMO) SPECIFICATION, ESTIMATES, REPORTS, OR OTHER DOCUMENTS OR INSTRUMENTS NOT SEALED BY THE UNDERSIGNED PROFESSIONAL RELATING TO OR INTENDED TO BE USED FOR ANY PART OR PARTS OF THE PROJECT TO WHICH THIS PAGE REFERS.

STATE OF MISSOURI
DALLAS P. JOPLIN
NUMBER PE-2011015760
PROFESSIONAL ENGINEER

THIS SHEET HAS BEEN SIGNED, SEALED AND DATED ELECTRONICALLY.

DATE PREPARED: 8/2/2024
ROUTE: 60 | STATE: MO
DISTRICT: SW | SHEET NO.: 77
COUNTY: WEBSTER
JOB NO.: J7P3425C
CONTRACT ID.:
PROJECT NO.:
BRIDGE NO.:

DESCRIPTION | DATE | REV.

IF A SEAL IS PRESENT ON THIS SHEET IT HAS BEEN ELECTRONICALLY SEALED AND DATED.

MISSOURI HIGHWAYS AND TRANSPORTATION COMMISSION
105 WEST CAPITOL
JEFFERSON CITY, MO 65102
1-888-ASK-MODOT (1-888-275-6636)

CMT
CRAWFORD, MURPHY & TILLY, INC.
16311 WEST ELFINDALE STREET
SPRINGFIELD, MO 65807 (417) 869-6009
ENGINEERING CORPORATION - 000631
© Copyright CMT, Inc.

SOUTH OUTER ROAD
COORDINATE POINTS 4 OF 6

COORDINATE POINT LISTING

SHEET NO	STATION	LOCATION	OFFSET	MOD. STATE PLANE NORTHING (US SURVEY FEET)	MOD. STATE PLANE EASTING (US SURVEY (FEET)	MOD. STATE PLANE ELEVATION (US SURVEY (FEET)	DESCRIPTION	POINT ID
PROJECT CONTROL POINTS								
73	695+62.26	EX. US 60	1793.02' LT	489590.78	1538380.65	1650.95	5/8" I.B. W/2" ALUMINUM CAP	101
73	690+82.84	EX. US 60	3202.43' RT	484744.62	1537076.78	1627.82	5/8" I.B. W/2" ALUMINUM CAP	102
73	589+95.78	EX. US 60	89.93' RT	484346.98	1528568.99	1658.78	5/8" I.B. W/2" ALUMINUM CAP	134
73	606+43.83	EX. US 60	73.78' RT	484850.10	1530138.45	1636.80	5/8" I.B. W/2" ALUMINUM CAP	135
73	641+55.76	EX. US 60	149.31' RT	486467.89	1533253.69	1676.15	5/8" I.B. W/2" ALUMINUM CAP	136
73	657+19.74	EX. US 60	78.57' RT	487442.62	1534480.61	1664.25	5/8" I.B. W/2" ALUMINUM CAP	137
73	680+25.11	EX. US 60	82.88' RT	487996.55	1536552.13	1657.03	5/8" I.B. W/2" ALUMINUM CAP	138
73	695+38.57	EX. US 60	132.14' LT	487956.92	1538081.29	1649.16	5/8" I.B. W/2" ALUMINUM CAP	139
ALIGNMENTS								
74	50+00.00	ROUTE A	0.00	489540.47	1534560.76	1625.74	POT ROUTE A	1
74	52+86.18	ROUTE A	0.00	489254.34	1534555.01	1625.57	PC ROUTE A	2
74	55+75.11	ROUTE A	960.00' LT	489235.06	1535514.81	-	CC OF CURVE ROUTE A	3
74	55+36.07	ROUTE A	31.99' RT	489004.51	1534549.99	-	PI ROUTE A	4
74	57+75.11	ROUTE A	0.00	488783.93	1534557.41	1641.86	PT ROUTE A	5
74	76+29.21	ROUTE NN	0.00	487147.30	1535538.70	1684.65	PC ROUTE NN	6
74	76+29.21	ROUTE NN	960' LT	487598.43	1536386.10	-	CC OF CURVE ROUTE NN	7
74	81+80.81	ROUTE NN	147.19' RT	486660.40	1535797.92	-	PI OF ROUTE NN	8
74	86+30.54	ROUTE NN	0.00	486639.14	1536349.11	1639.66	PT OF ROUTE NN	9
74 74	94+26.54 13+33.03	ROUTE NN EX ROUTE NN	0.00 0.00	486608.47	1537144.52	1646.79	POT ROUTE NN POT EX. ROUTE NN	10
74	9+00.00	NOR WEST	0.00	488134.51	1534525.84	1648.26	POT NOR WEST	11
74	11+45.79	NOR WEST	0.00	488380.19	1534533.09	1639.99	PC NOR WEST	12
74	11+45.79	NOR WEST	250.00' RT	488372.83	1534782.98	-	CC OF CURVE NOR WEST	13
74	12+90.95	NOR WEST	39.09' LT	488525.29	1534537.36	-	PI NOR WEST	14
74	14+08.82	NOR WEST	0.00	488593.50	1534665.50	1649.53	PT NOR WEST	15
74	15+00.00 15+00.00	NOR WEST NOR EAST	0.00 0.00	488636.35	1534745.98	1651.71	POT NOR WEST POT NOR EAST	16
74	16+62.82	NOR EAST	0.00	488712.86	1534889.70	1646.59	PC NOR EAST	17
74	16+62.82	NOR EAST	400.00' RT	488359.78	1535077.67	-	CC OF CURVE NOR EAST	18
74	18+31.69	NOR EAST	34.19' LT	488792.22	1535038.76	-	PI NOR EAST	19
74	19+82.40	NOR EAST	0.00	488740.75	1535199.60	1632.26	PT NOR EAST	20
74	38+17.68	NOR EAST	0.00	488181.33	1536947.54	1652.15	PC NOR EAST	21
74	38+17.68	NOR EAST	1000.00' LT	489133.75	1537252.35	-	CC OF CURVE NOR EAST	22
74	38+87.46	NOR EAST	2.43' RT	488160.06	1537014.01	-	PI NOR EAST	23
74	39+57.02	NOR EAST	0.00	488148.23	1537082.78	1652.85	PT NOR EAST	24
74	41+11.02	NOR EAST	0.00	488122.11	1537234.55	1653.59	POT NOR EAST	25
74	0+00.00	RAMP 1	0.00	487425.76	1534209.93	1664.62	PC RAMP 1 WB ON	26
74	0+95.97	RAMP 1	2.95' RT	487481.93	1534287.75	-	PI RAMP 1 WB ON	27
74	1+91.70	RAMP 1	1560.00' LT	488690.67	1533296.91	-	CC OF CURVE RAMP 1 WB ON	28
74	1+91.70	RAMP 1	0.00	487547.21	1534358.10	1663.21	PT RAMP 1 WB ON	29
74	10+75.35 0+00.00 64+95.19	RAMP 1 RAMP 3 ROUTE A	0.00 0.00 0.00	488148.31	1535005.80	1682.06	POT RAMP 1 WB ON POT RAMP 3 WB OFF PI ROUTE A	30
74	2+11.97	RAMP 3	0.00	488231.23	1535200.88	1676.81	PC RAMP 3 WB OFF	31
74	7+06.28	RAMP 3	88.89' LT	488424.61	1535655.79	-	PI RAMP 3 WB OFF	32
74	11+58.51	RAMP 3	1300.00' RT	487007.23	1535721.18	-	CC OF CURVE RAMP 3 WB OFF	33
74	11+58.51	RAMP 3	0.00	488273.94	1536126.58	1658.46	PT RAMP 3 WB OFF	34
74	14+16.95	RAMP 3	0.00	488195.16	1536372.72	1656.31	PC RAMP 3 WB OFF	35
74	14+16.95	RAMP 3	1560.00' LT	489680.93	1536848.23	-	CC OF CURVE RAMP 3 WB OFF	36
74	15+28.89	RAMP 3	4.01' RT	488161.04	1536479.34	-	PI RAMP 3 WB OFF	37
74	16+40.45	RAMP 3	0.00	488142.49	1536589.73	1654.46	PT RAMP 3 WB OFF	38
74	0+00.00	RAMP 2	0.00	487216.07	1534198.32	1665.90	PC RAMP 2 EB OFF	39
74	0+80.54	RAMP 2	1.59' LT	487267.21	1534260.53	-	PI RAMP 2 EB OFF	40
74	1+60.99	RAMP 2	2040.00' RT	485640.18	1535493.76	-	CC OF CURVE RAMP 2 EB OFF	41
74	1+60.99	RAMP 2	0.00	487313.29	1534326.58	1664.52	PT RAMP 2 EB OFF	42
74	5+04.13	RAMP 2	0.00	487509.61	1534608.01	1665.55	PC RAMP 2 EB OFF	43
74	7+70.27	RAMP 2	13.80' LT	487661.89	1534826.29	-	PI RAMP 2 EB OFF	44
74	10+34.52	RAMP 2	2560.00' RT	485410.03	1536072.71	-	CC OF CURVE RAMP 2 EB OFF	45
74	10+34.52	RAMP 2	0.00	487766.01	1535071.22	1688.87	PT RAMP 2 EB OFF	46
74	11+56.88 0+00.00 68+74.06 68+74.06	RAMP 2 RAMP 4 ROUTE A ROUTE NN	0.00 0.00 0.00 0.00	487813.88	1535183.84	1692.22	POT RAMP 2 EB OFF POT RAMP 4 EB ON PI ROUTE A PI ROUTE NN	47
74	6+07.58	RAMP 4	0.00	487943.99	1535777.32	1669.94	PC RAMP 4 EB ON	48
74	6+07.58	RAMP 4	2040.00' RT	485951.32	1536214.19	-	CC OF CURVE RAMP 4 EB ON	49
74	10+02.15	RAMP 4	37.81' LT	488028.49	1536162.74	-	PI RAMP 4 EB ON	50
74	13+87.11	RAMP 4	0.00	487963.17	1536551.88	1650.48	PT RAMP 4 EB ON	51
74	0+00.00	EB US 60	0.00	486635.63	1533427.61	1677.90	POT EB US 60	52
74	1+80.65	EB US 60	0.00	486741.56	1533573.94	1676.56	PC EB US 60	53
74	3+74.16	EB US 60	3150.00' LT	489293.13	1531726.78	-	CC OF CURVE EB US 60	54
74	2+77.43	EB US 60	1.48' RT	486798.31	1533652.33	-	PI EB US 60	55
74	3+74.16	EB US 60	0.00	486859.77	1533727.10	1673.67	PT EB US 60	56
74	15+00.66	EB US 60	0.00	487575.13	1534597.32	1663.33	PC EB US 60	57
74	15+98.70	EB US 60	1.53' LT	487637.38	1534673.05	-	PI EB US 60	58
74	15+00.66	EB US 60	3150.00' RT	485141.78	1536597.64	-	CC OF CURVE EB US 60	59
74	16+96.67	EB US 60	0.00	487694.81	1534752.50	1662.22	PT EB US 60	60
74	17+61.67	EB US 60	0.00	487732.88	1534805.19	1661.85	PC EB US 60	61

DISCLAIMER
THE PROFESSIONAL WHOSE SIGNATURE AND PERSONAL SEAL APPEAR HEREON ASSUMES RESPONSIBILITY ONLY FOR WHAT APPEARS ON THIS PAGE. AND DISCLAIMS (PURSUANT TO SECTION 327.411 RSMO) SPECIFICATION, ESTIMATES, REPORTS, OR OTHER DOCUMENTS OR INSTRUMENTS NOT SEALED BY THE UNDERSIGNED PROFESSIONAL RELATING TO OR INTENDED TO BE USED FOR ANY PART OR PARTS OF THE PROJECT TO WHICH THIS PAGE REFERS.

ALL PROJECT COORDINATES HAVE BEEN PROJECTED FROM THE MISSOURI STATE PLANE COORDINATE (SPC) SYSTEM OF 1983 USING AN AVERAGE PROJECT PROJECTION (GRID TO GROUND) FACTOR. TO GET BAC KTO STATE PLANE COORDINATES, MULTIPLY THE PROJECT COORDINATES BY THE AVERAGE GRID FACTOR AS SHOWN IN THE "REFERENCE CONTROL INFORMATION" PORTION OF THIS TABLE.

PROJECT COORDINATE INFORMATION	
COORDINATE SYSTEM	MISSOURI STATE PLANE
HORIZONTAL DATUM	NAD83(2011)
VERTICAL DATUM	NAVD88
GEOID MODEL	GEOID 18
ELEVATIONS DETERMINED BY	DIFFERENTIAL LEVELING ORIGINATING FROM PRIMARY CONTROL 104
PROJECT PROJECTION FACTOR	1.0001332

REFERENCE CONTROL INFORMATION	
COORDINATE SYSTEM	MISSOURI STATE PLANE
CONTROL STATION	N/A
DESIGNATION	MODOT SEYMOUR COORS ARP
CORS_ID	MOSE
PID	DM4690
LATITUDE	37° 09' 20.77943"(N)
LONGITUDE	92° 45' 14.32526"(W)
NORTHING (M)	146769.074 (M)
EASTING (M)	477440.568 (M)
ZONE	CENTRAL
PROJECT AVERAGE GRID FACTOR	0.9998668177

EXAMPLE OF PROJECT COORDINATE TO S.P.C.

PROJECT NORTHING X AVERAGE GRID FACTOR
= STATE PLANE NORTHING
PROJECT EASTING X AVERAGE GRID FACTOR
= STATE PLANE EASTING

EXAMPLE: CONTROL POINT #[1]
N [489540.47] X [0.9998668177] = N [489475.27]
E [1534560.76] X [0.9998668177] = E [1534356.38]

LINEAR UNIT CONVERSION

1 METER = 3.280833333 US SURVEY FEET (USFT)

US 60/ROUTE A
INTERCHANGE

COORDINATE POINTS
5 OF 6

STATE OF MISSOURI
DALLAS P. JOPLIN
NUMBER PE-2011015760
PROFESSIONAL ENGINEER

THIS SHEET HAS BEEN SIGNED, SEALED AND DATED ELECTRONICALLY.

DATE PREPARED 9/3/2024
ROUTE 60 | STATE MO
DISTRICT SW | SHEET NO. 78
COUNTY WEBSTER
JOB NO. J7P3425C
CONTRACT ID.
PROJECT NO.
BRIDGE NO.

DATE | DESCRIPTION | REV.

IF A SEAL IS PRESENT ON THIS SHEET IT HAS BEEN ELECTRONICALLY SEALED AND DATED.

MISSOURI HIGHWAYS AND TRANSPORTATION COMMISSION
105 WEST CAPITOL
JEFFERSON CITY, MO 65102
1-888-ASK-MODOT (1-888-275-6636)

CMT
© Copyright CMT, Inc.
CRAWFORD, MURPHY & TILLY, INC.
1631 WEST ELFINDALE STREET
SPRINGFIELD, MO 65807 (417) 869-6009
ENGINEERING CORPORATION - 000631

L:\MoDOT\20092124-00\Draw\Roadway\Sheets\078_CP_05_J7P3425C_i1.dgn 1:57:37 PM 9/3/2024

COORDINATE POINT LISTING

SHEET NO	STATION	LOCATION	OFFSET	MOD. STATE PLANE NORTHING (US SURVEY FEET)	MOD. STATE PLANE EASTING (US SURVEY (FEET)	MOD. STATE PLANE ELEVATION (US SURVEY (FEET)	DESCRIPTION	GPK POINT ID
74	25+20.62	EB US 60	152.29' LT	488177.44	1535420.30	-	PI EB US 60	62
74	17+61.67	EB US 60	1815.00' RT	486261.85	1535868.34	-	CC OF CURVE EB US 60	63
74	31+99.36	EB US 60	0.00	488051.81	1536168.78	1653.67	PT EB US 60	64
74	42+71.66	EB US 60	0.00	487874.31	1537226.29	1651.43	POT EB US 60	65
74	655+00.00 BK 654+98.60 AH	EX. US 60	0.00	487376.68	1534255.38	1663.40	STATION EQUATION EX. US 60	66
74	660+83.51	EX. US 60	0.00	487719.47	1534729.32	1659.14	TS EX. US 60	67
74	662+50.21	EX. US 60	1.62' LT	487817.17	1534864.39	-	PI EX. US 60	68
74	663+33.51	EX. US 60	0.00	487861.51	1534934.99	1656.07	SC EX. US 60	69
74	663+33.51	EX. US 60	1908.74' RT	486245.03	1535950.03	-	CC OF CURVE EX. US 60	70
74	669+89.61	EX. US 60	109.61' LT	488210.41	1535490.63	-	PI EX. US 60	71
74	675+97.41	EX. US 60	0.00	488143.96	1536143.35	1654.32	CS EX. US 60	72
74	676+80.78	EX. US 60	1.62' LT	488135.52	1536226.29	-	PI EX. US 60	73
74	678+47.41	EX. US 60	0.00	488107.81	1536390.68	1653.31	ST EX. US 60	74
74	695+00.00 BK 694+98.98 AH	EX. US 60	0.00	487833.20	1538020.29	1647.40	STATION EQUATION EX. US 60	75
74	10+00.00	EX. ROUTE NN	0.00	486941.41	1537152.50	1647.97	POT EX ROUTE NN	76
74	0+87.96	NN RDBT	0.00	486588.17	1537120.54	1646.49	PCC ROUTE NN RDBT	77
74	0+00.00 1+75.92	NN RDBT NN RDBT	0.00 0.00	486586.83	1537176.52	1646.49	PC ROUTE NN RDBT PT ROUTE NN RDBT	78
74	20+73.49	EX. ROUTE NN	0.00	485868.23	1537126.77	1633.62	POT EX ROUTE NN	80
76	0+00.00	SOR	0.00	482017.89	1518842.42	1635.76	POT SOR	84
76	6+09.45	SOR	0.00	481992.66	1519451.34	1622.18	PC SOR	85
76	10+34.88	SOR	87.13' RT	481975.06	1519876.41	-	PI SOR	86
76	14+13.49	SOR	995.00' LT	482986.81	1519492.52	-	CC OF CURVE SOR	87
76	14+13.49	SOR	0.00	482270.20	1520182.81	1623.34	PT SOR	88
76	17+62.01	SOR	0.00	482511.98	1520433.82	1636.71	PC SOR	89
76	21+91.28	SOR	88.65' LT	482809.79	1520742.98	-	PI SOR	90
76	17+62.01	SOR	995.00' RT	481795.37	1521124.10	-	CC OF CURVE SOR	91
76	25+72.53	SOR	0.00	482789.23	1521171.75	1648.20	PT SOR	92
76	33+35.80	SOR	0.00	482752.68	1521934.14	1644.49	PC SOR	93
76	36+17.81	SOR	39.19' RT	482739.17	1522215.82	-	PI SOR	94
76	33+83.47	SOR	995.00' LT	483746.54	1521981.79	-	CC OF CURVE SOR	95
76	38+85.39	SOR	0.00	482875.47	1522462.70	1651.80	PT SOR	96
76	41+10.13	SOR	0.00	482984.09	1522659.44	1655.62	PC SOR	97
76	43+32.68	SOR	24.58' LT	483091.65	1522854.27	-	PI SOR	98
76	41+10.13	SOR	995.00' RT	482113.02	1523140.35	-	CC OF CURVE SOR	99
76	45+48.02	SOR	0.00	483105.96	1523076.36	1663.06	PT SOR	100
76	55+43.04	SOR	0.00	483169.95	1524069.32	1669.89	PC SOR	101
76	60+26.12	SOR	40.80' LT	483201.02	1524551.39	-	PI SOR	102
76	55+43.04	SOR	2840.00' RT	480335.83	1524251.95	-	CC OF CURVE SOR	103
76	65+00.03	SOR	0.00	483070.95	1525016.63	1680.71	PT SOR	104
76	68+80.16	SOR	0.00	482968.60	1525382.72	1675.10	PC SOR	105
76	78+69.26	SOR	212.12' RT	482702.28	1526335.29	-	PI SOR	106
76	68+80.16	SOR	2200.00' LT	485087.35	1525975.08	-	CC OF CURVE SOR	107
76	87+39.22	SOR	0.00	483238.03	1527166.73	1666.41	PT SOR	108
76	90+50.06	SOR	0.00	483406.40	1527428.02	1661.68	PC SOR	109
76	92+33.37	SOR	16.75' LT	483505.70	1527582.11	-	PI SOR	110
76	90+50.06	SOR	995.00' RT	482570.01	1527966.97	-	CC OF CURVE SOR	111
76	94+12.62	SOR	0.00	483543.56	1527761.47	1654.66	PT SOR	112
76	98+33.81	SOR	0.00	483630.55	1528173.58	1644.99	PC SOR	113
76	101+17.78	SOR	39.73' RT	483689.20	1528451.42	-	PI SOR	114
76	98+33.81	SOR	995.00' LT	484604.09	1527968.07	-	CC OF CURVE SOR	115
76	103+87.04	SOR	0.00	483885.66	1528656.46	1637.74	PT SOR	116
76	106+11.69	SOR	0.00	484041.09	1528818.67	1643.35	PC SOR	117
76	109+45.18	SOR	54.41' LT	484271.82	1529059.46	-	PI SOR	118
76	106+11.69	SOR	995.00' RT	483322.66	1529507.06	-	CC OF CURVE SOR	119
76	112+55.26	SOR	0.00	484310.83	1529390.67	1658.96	PT SOR	120
76	121+04.15	SOR	0.00	484410.13	1530233.73	1652.18	PC SOR	121
76	125+82.72	SOR	61.22' RT	484466.11	1530709.01	-	PI SOR	122
76	130+40.53	SOR	1840.00' LT	486237.49	1530018.50	-	CC OF CURVE SOR	123
76	130+40.53	SOR	0.00	484746.56	1531096.79	1661.00	PT SOR	124
76	163+28.20	SOR	0.00	486673.22	1533760.76	1666.90	PC SOR	125
76	167+06.54	SOR	58.70' LT	486894.94	1534067.32	-	PI SOR	126
76	163+28.20	SOR	1190.00' RT	485708.98	1534458.13	-	CC OF CURVE SOR	127
76	170+60.83	SOR	0.00	486898.91	1534445.63	1650.67	PT SOR	128
76	177+24.94	SOR	0.00	486905.88	1535109.72	1668.30	PC SOR	129
76	178+83.83	SOR	19.14' RT	486907.55	1535268.60	-	PI SOR	130
76	177+24.94	SOR	650.00' LT	487555.85	1535102.89	-	CC OF CURVE SOR	131
74	180+36.61	SOR	0.00	486982.33	1535408.79	1684.75	PT SOR	132
74	182+32.53 77+13.74	SOR ROUTE NN	0.00 0.00	487074.53	1535581.66	1682.82	POT SOR PI ROUTE NN	133
76	488+91.75 BK 488+08.50 AH	EX. US 60	0.00	483111.50	1518491.58	1644.51	PC EX. US 60	134
76	555+84.67	EX. US 60	0.00	483540.40	1525254.17	1643.55	PC EX. US 60	135
76	560+97.78	EX. US 60	30.45' RT	483572.86	1525766.25	-	PI EX. US 60	136
76	555+84.67	EX. US 60	4307.85' LT	487839.62	1524981.61	-	CC OF CURVE EX. US 60	137
76	566+06.08 BK 566+02.60 AH	EX. US 60	0.00	483724.70	1526256.38	1624.98	STATION EQUATION EX. US 60 PC EX. US 60	138
76	615+34.30	EX. US 60	0.00	485184.08	1530967.21	1647.52	PC EX. US 60	139
76	620+04.47	EX. US 60	38.38' RT	485323.21	1531416.32	-	PI EX. US 60	140
76	615+34.30	EX. US 60	2860.89' LT	487916.83	1530120.63	-	CC OF CURVE EX. US 60	141
76	624+66.30	EX. US 60	0.00	485598.75	1531797.28	1665.60	PT EX. US 60	142

DISCLAIMER
THE PROFESSIONAL WHOSE SIGNATURE AND PERSONAL SEAL APPEAR HEREON ASSUMES RESPONSIBILITY ONLY FOR WHAT APPEARS ON THIS PAGE, AND DISCLAIMS (PURSUANT TO SECTION 327.411 RSMO) SPECIFICATION, ESTIMATES, REPORTS, OR OTHER DOCUMENTS OR INSTRUMENTS NOT SEALED BY THE UNDERSIGNED PROFESSIONAL RELATING TO OR INTENDED TO BE USED FOR ANY PART OR PARTS OF THE PROJECT TO WHICH THIS PAGE REFERS.

ALL PROJECT COORDINATES HAVE BEEN PROJECTED FROM THE MISSOURI STATE PLANE COORDINATE (SPC) SYSTEM OF 1983 USING AN AVERAGE PROJECT PROJECTION (GRID TO GROUND) FACTOR. TO GET BAC KTO STATE PLANE COORDINATES, MULTIPLY THE PROJECT COORDINATES BY THE AVERAGE GRID FACTOR AS SHOWN IN THE "REFERENCE CONTROL INFORMATION" PORTION OF THIS TABLE.

PROJECT COORDINATE INFORMATION	
COORDINATE SYSTEM	MISSOURI STATE PLANE
HORIZONTAL DATUM	NAD83(2011)
VERTICAL DATUM	NAVD88
GEOID MODEL	GEOID 18
ELEVATIONS DETERMINED BY	DIFFERENTIAL LEVELING ORIGINATING FROM PRIMARY CONTROL 104
PROJECT PROJECTION FACTOR	1.0001332

REFERENCE CONTROL INFORMATION	
COORDINATE SYSTEM	MISSOURI STATE PLANE
CONTROL STATION	N/A
DESIGNATION	MODOT SEYMOUR COORS ARP
CORS_ID	MOSE
PID	DM4690
LATITUDE	37° 09' 20.77943"(N)
LONGITUDE	92° 45' 14.32526"(W)
NORTHING (M)	146769.074 (M)
EASTING (M)	477440.568 (M)
ZONE	CENTRAL
PROJECT AVERAGE GRID FACTOR	0.9998668177

EXAMPLE OF PROJECT COORDINATE TO S.P.C.

PROJECT NORTHING X AVERAGE GRID FACTOR
= STATE PLANE NORTHING
PROJECT EASTING X AVERAGE GRID FACTOR
= STATE PLANE EASTING

EXAMPLE: CONTROL POINT #[1]
N [489540.47] X [0.9998668177] = N [489475.27]
E [1534560.76] X [0.9998668177] = E [1534356.38]

LINEAR UNIT CONVERSION

1 METER = 3.280833333 US SURVEY FEET (USFT)

STATE OF MISSOURI
DALLAS P. JOPLIN
NUMBER PE-2011015760
PROFESSIONAL ENGINEER

THIS SHEET HAS BEEN SIGNED, SEALED AND DATED ELECTRONICALLY.

DATE PREPARED 9/3/2024
ROUTE 60 | STATE MO
DISTRICT SW | SHEET NO. 79
COUNTY WEBSTER
JOB NO. J7P3425C
CONTRACT ID.
PROJECT NO.
BRIDGE NO.

IF A SEAL IS PRESENT ON THIS SHEET IT HAS BEEN ELECTRONICALLY SEALED AND DATED.

REV.	DATE	DESCRIPTION

MISSOURI HIGHWAYS AND TRANSPORTATION COMMISSION
105 WEST CAPITOL
JEFFERSON CITY, MO 65102
1-888-ASK-MODOT (1-888-275-6636)

CMT
© Copyright CMT, Inc.
CRAWFORD, MURPHY & TILLY, INC.
1631 WEST ELFINDALE STREET
SPRINGFIELD, MO 65807 (417) 869-6009
ENGINEERING CORPORATION - 000631

ROUTE 60
COORDINATE POINTS
6 OF 6

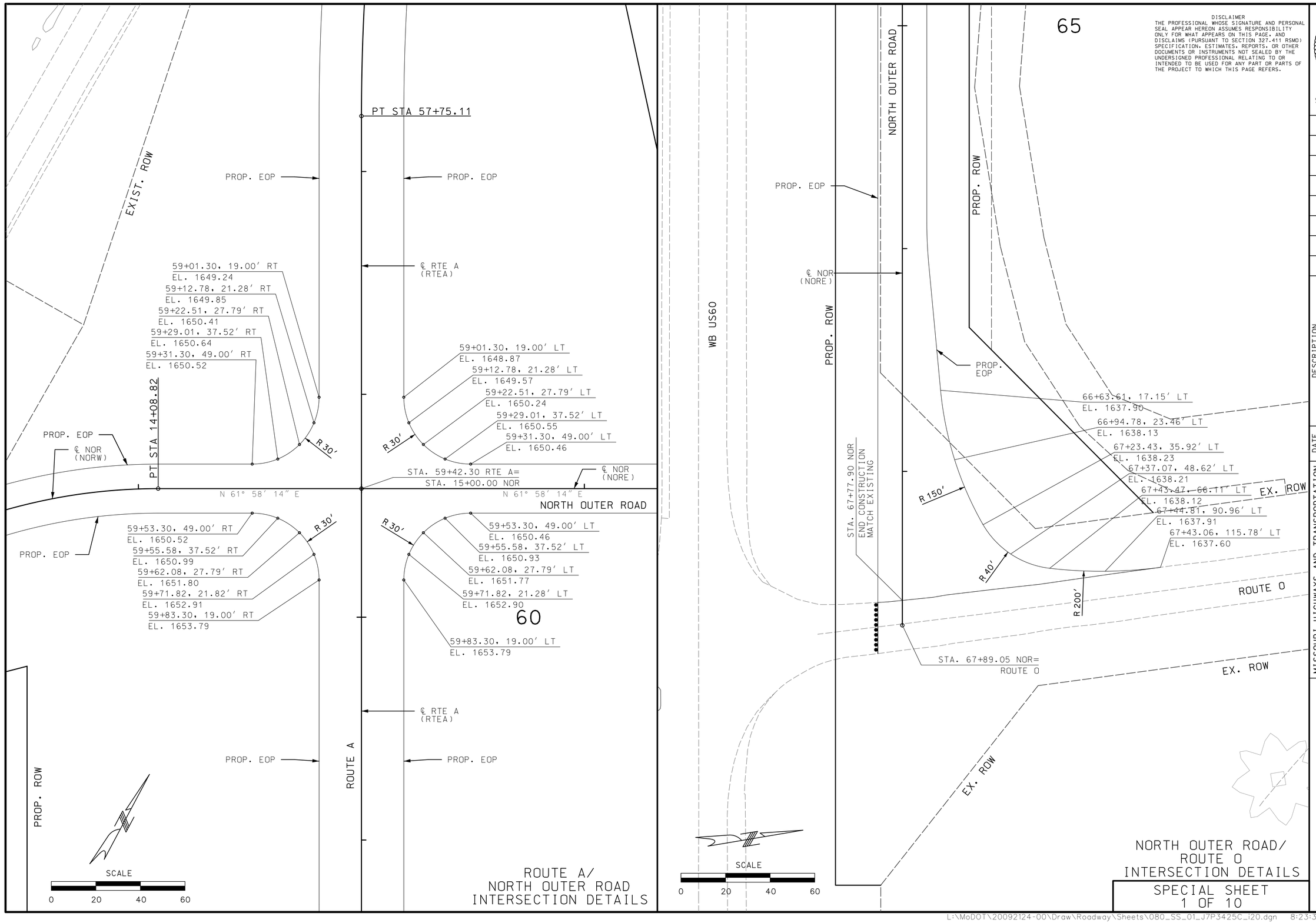

65

DISCLAIMER
THE PROFESSIONAL WHOSE SIGNATURE AND PERSONAL SEAL APPEAR HEREON ASSUMES RESPONSIBILITY ONLY FOR WHAT APPEARS ON THIS PAGE, AND DISCLAIMS (PURSUANT TO SECTION 327.411 RSMO) SPECIFICATION, ESTIMATES, REPORTS, OR OTHER DOCUMENTS OR INSTRUMENTS NOT SEALED BY THE UNDERSIGNED PROFESSIONAL RELATING TO OR INTENDED TO BE USED FOR ANY PART OR PARTS OF THE PROJECT TO WHICH THIS PAGE REFERS.

STATE OF MISSOURI
DALLAS P. JOPLIN
NUMBER PE-2011015760
PROFESSIONAL ENGINEER

THIS SHEET HAS BEEN SIGNED, SEALED AND DATED ELECTRONICALLY.

DATE PREPARED	
8/2/2024	
ROUTE	STATE
60	MO
DISTRICT	SHEET NO.
SW	80

COUNTY
WEBSTER

JOB NO.
J7P3425C

CONTRACT ID.

PROJECT NO.

BRIDGE NO.

DATE	DESCRIPTION

IF A SEAL IS PRESENT ON THIS SHEET IT HAS BEEN ELECTRONICALLY SEALED AND DATED.

MISSOURI HIGHWAYS AND TRANSPORTATION COMMISSION

105 WEST CAPITOL
JEFFERSON CITY, MO 65102
1-888-ASK-MODOT (1-888-275-6636)

CMT
© Copyright CMT, Inc.
CRAWFORD, MURPHY & TILLY, INC.
1631 WEST ELFINDALE STREET
SPRINGFIELD, MO 65807 (417) 869-6009
ENGINEERING CORPORATION - 000631

REV.

DISCLAIMER
THE PROFESSIONAL WHOSE SIGNATURE AND PERSONAL SEAL APPEAR HEREON ASSUMES RESPONSIBILITY ONLY FOR WHAT APPEARS ON THIS PAGE, AND DISCLAIMS (PURSUANT TO SECTION 327.411 RSMO) SPECIFICATION, ESTIMATES, REPORTS, OR OTHER DOCUMENTS OR INSTRUMENTS NOT SEALED BY THE UNDERSIGNED PROFESSIONAL RELATING TO OR INTENDED TO BE USED FOR ANY PART OR PARTS OF THE PROJECT TO WHICH THIS PAGE REFERS.

SCALE
0 20 40 60

PROP. EOP
PROP. EOS
℄ RAMP 3 (RAMP3)
PROP. EOP
PROP. EOS
EXIST. ROW
RAMP 3
N 66° 58' 14" E
0+10.21, 101.28' LT
EL. 1677.43
0+20.14, 65.77' LT
EL. 1679.06
0+42.27, 36.27' LT
EL. 1680.03
0+73.59, 16.80' LT
EL. 1680.24
1+09.83, 10.00' LT
EL. 1679.68
R 100'
R 80'
STA. 64+95.19 RTE A=
STA. 10+75.35 RAMP 1=
STA. 0+00.00 RAMP 3
0+88.62, 18.00' RT
EL. 1680.83
0+71.41, 19.95' RT
EL. 1681.39
0+55.07, 26.59' RT
EL. 1682.03
0+40.43, 34.94' RT
EL. 1682.73
0+28.22, 47.23' RT
EL. 1683.37
R 77'
R 90'
WB US60
EB US60
℄ RTE A (RTEA)
ROUTE A
S 28° 01' 46" E
BRIDGE A9137
665
℄ US 60 (EX_US60)
℄ SC STA 663+33.51
R 75'
R 72'
10+72.59, 63.80' LT
EL. 1679.19
10+62.54, 41.47' LT
EL. 1680.11
10+45.84, 23.56' LT
EL. 1680.74
10+24.25, 12.00' LT
EL. 1681.08
10+00.09, 8.00' LT
EL. 1681.13
9+73.93, 18.00' RT
EL. 1681.38
9+92.55, 20.45' RT
EL. 1681.74
10+09.90, 27.63' RT
EL. 1682.30
10+24.80, 39.04' RT
EL. 1683.06
10+36.24, 53.93' RT
EL. 1683.82
RAMP 1
PROP. EOP
PROP. EOS
PROP. EOP
PROP. EOS
℄ RAMP 1 (RAMP1)
10
0+16.16, 31.26' LT
EL. 1691.34
0+27.12, 25.54' LT
EL. 1691.36
0+38.76, 21.38' LT
EL. 1691.42
0+50.86, 18.85' LT
EL. 1691.41
0+63.19, 18.00' LT
EL. 1691.33
R 90'
STA. 68+74.06 RTE A/NN=
STA. 11+56.88 RAMP 2=
STA. 0+00.00 RAMP 4
R 93'
PROP. EOP
PROP. EOS
RAMP 4
℄ RAMP 4 (RAMP4)
PROP. EOP
PROP. EOS
0+89.86, 10.00' RT
EL. 1690.32
0+70.72, 13.81' RT
EL. 1690.95
0+54.50, 24.65' RT
EL. 1691.72
0+43.66, 40.88' RT
EL. 1692.29
0+39.86, 60.03' RT
EL. 1692.63
R 50'
R 60'
11+37.16, 50.55' RT
EL. 1692.39
11+33.56, 41.51' RT
EL. 1692.23
R 60'
R 100'
R 40'
R 80'
R 77'
11+28.66, 47.23' LT
EL. 1690.94
11+16.46, 34.94' LT
EL. 1691.14
11+01.81, 25.69' LT
EL. 1691.11
10+85.48, 19.95' LT
EL. 1690.85
10+68.27, 18.00' LT
EL. 1690.37
10+91.32, 8.00' RT
EL. 1690.60
N 66° 58' 14" E
PT STA 10+34.52
11+00.71, 9.12' RT
EL. 1690.90
11+09.58, 12.42' RT
EL. 1691.21
11+17.43, 17.70' RT
EL. 1691.51
11+23.82, 24.69' RT
EL. 1691.78
11+29.10, 32.86' RT
EL. 1692.02
11+39.86, 59.90' RT
EL. 1692.52
10
PROP. EOP
PROP. EOS
℄ RAMP 2 (RAMP2)
RAMP 2
PROP. EOP
PROP. EOS

EB/WB RAMPS
INTERSECTION DETIALS

SPECIAL SHEET
2 OF 10

STATE OF MISSOURI
DALLAS P. JOPLIN
NUMBER PE-2011015760
PROFESSIONAL ENGINEER

THIS SHEET HAS BEEN SIGNED, SEALED AND DATED ELECTRONICALLY.

DATE PREPARED	
8/2/2024	
ROUTE	STATE
60	MO
DISTRICT	SHEET NO.
SW	81

COUNTY
WEBSTER
JOB NO.
J7P3425C
CONTRACT ID.
PROJECT NO.
BRIDGE NO.

DATE	DESCRIPTION

MISSOURI HIGHWAYS AND TRANSPORTATION COMMISSION
105 WEST CAPITOL
JEFFERSON CITY, MO 65102
1-888-ASK-MODOT (1-888-275-6636)

© Copyright CMT, Inc.
CMT
CRAWFORD, MURPHY & TILLY, INC.
1631 WEST ELFINDALE STREET
SPRINGFIELD, MO 65807 (417) 869-6009
ENGINEERING CORPORATION - 000631

IF A SEAL IS PRESENT ON THIS SHEET IT HAS BEEN ELECTRONICALLY SEALED AND DATED.

REV.

L:\MoDOT\20092124-00\Draw\Roadway\Sheets\081_SS_02_J7P3425C_i20.dgn 8:23:32 AM 8/2/2024

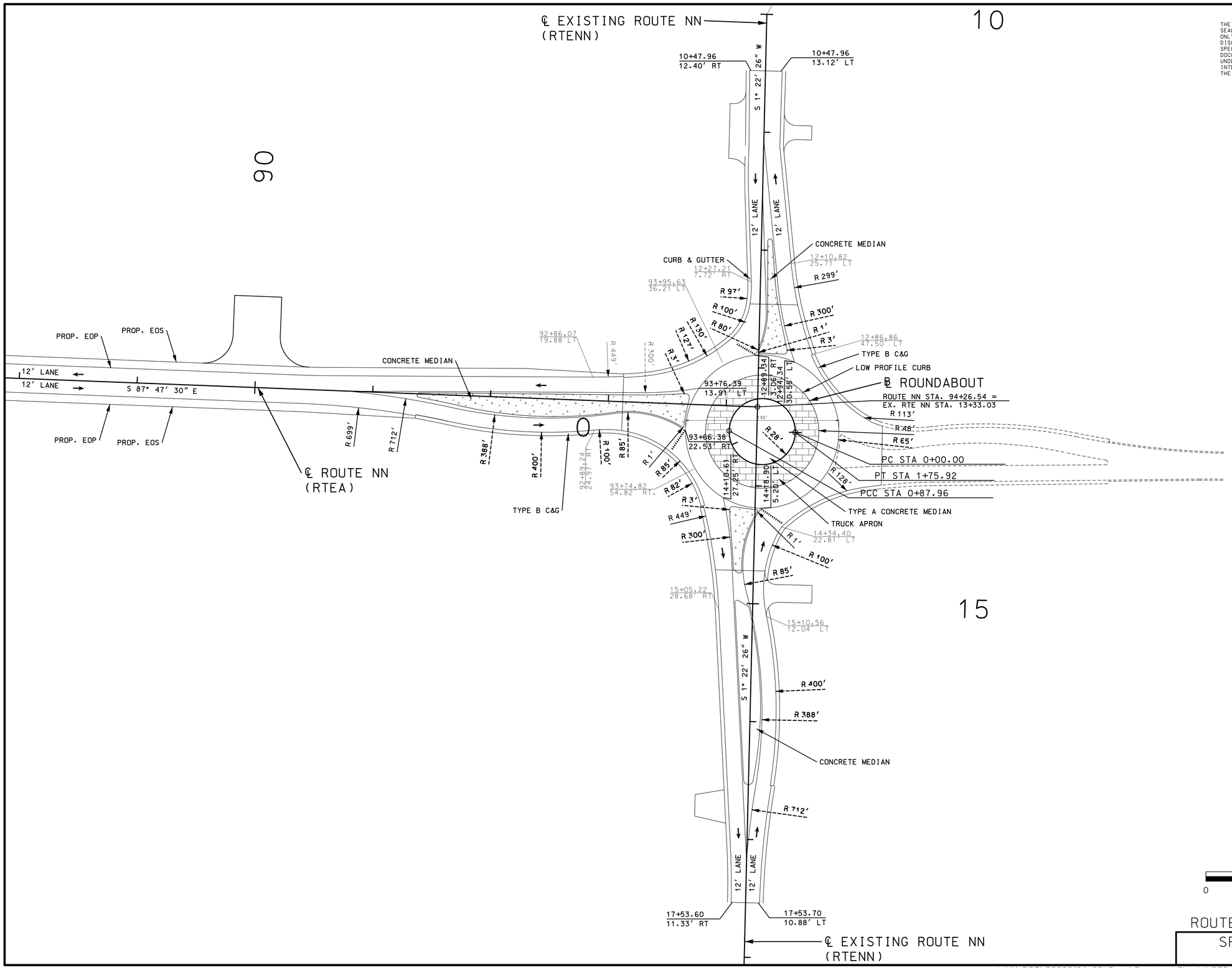

DISCLAIMER
THE PROFESSIONAL WHOSE SIGNATURE AND PERSONAL SEAL APPEAR HEREON ASSUMES RESPONSIBILITY ONLY FOR WHAT APPEARS ON THIS PAGE, AND DISCLAIMS (PURSUANT TO SECTION 327.411 RSMO) SPECIFICATION, ESTIMATES, REPORTS, OR OTHER DOCUMENTS OR INSTRUMENTS NOT SEALED BY THE UNDERSIGNED PROFESSIONAL RELATING TO OR INTENDED TO BE USED FOR ANY PART OR PARTS OF THE PROJECT TO WHICH THIS PAGE REFERS.

STATE OF MISSOURI
DALLAS P. JOPLIN
NUMBER PE-2011015760
PROFESSIONAL ENGINEER

THIS SHEET HAS BEEN SIGNED, SEALED AND DATED ELECTRONICALLY.

DATE PREPARED
8/2/2024

ROUTE	STATE
60	MO
DISTRICT	SHEET NO.
SW	82

COUNTY
WEBSTER

JOB NO.
J7P3425C

CONTRACT ID.

PROJECT NO.

BRIDGE NO.

DESCRIPTION	DATE

IF A SEAL IS PRESENT ON THIS SHEET IT HAS BEEN ELECTRONICALLY SEALED AND DATED.

MISSOURI HIGHWAYS AND TRANSPORTATION COMMISSION
105 WEST CAPITOL
JEFFERSON CITY, MO 65102
1-888-ASK-MODOT (1-888-275-6636)

CMT
© Copyright CMT, Inc.
CRAWFORD, MURPHY & TILLY, INC.
1631 WEST ELFINDALE STREET
SPRINGFIELD, MO 65807 (417) 869-6009
ENGINEERING CORPORATION - 000631

ROUTE NN ROUNDABOUT

SPECIAL SHEET
3 OF 10

REV.

LEGEND

- CONTRACTION JOINT (C2)
- TRANSVERSE JOINT (C1)
- LONGITUDINAL JOINT (L1)
- ISOLATION JOINT (I)
- EXPANSION JOINT (E)
- WIRE MESH REINFORCED PAVEMENT

Point ID	Roadway	Station	Offset	Location	Elevation
A-100	RTENN	93+12.20	20.52	LT	1644.80
A-101	RTENN	93+20.83	21.39	LT	1644.99
A-102	RTENN	93+29.43	22.43	LT	1645.17
A-103	RTENN	93+39.38	24.13	LT	1645.38
A-104	RTENN	93+49.17	26.59	LT	1645.57
A-105	RTENN	93+58.74	29.80	LT	1645.72
A-106	RTENN	93+68.03	33.75	LT	1645.83
A-107	RTENN	93+76.98	38.41	LT	1645.90
A-108	RTENN	93+85.55	47.74	LT	1645.95
	EXIST. RTENN	12+88.70	40.34	RT	
A-109	EXIST. RTENN	12+82.83	32.13	RT	1645.95
A-110	EXIST. RTENN	12+76.35	24.40	RT	1645.91
A-111	EXIST. RTENN	12+69.90	18.44	RT	1645.84
A-112	EXIST. RTENN	12+62.50	13.69	RT	1645.78
A-113	EXIST. RTENN	12+54.39	10.32	RT	1645.74
A-114	EXIST. RTENN	12+45.82	8.42	RT	1645.73

Point ID	Roadway	Station	Offset	Location	Elevation
B-100	EXIST. RTENN	12+45.82	32.09	LT	1645.71
B-101	EXIST. RTENN	12+56.44	34.90	LT	1645.72
B-102	EXIST. RTENN	12+66.96	38.10	LT	1645.77
B-103	EXIST. RTENN	12+77.36	41.68	LT	1645.87
B-104	EXIST. RTENN	12+87.61	45.64	LT	1646.00
B-105	EXIST. RTENN	12+88.05	44.74	LT	1646.00
B-106	EXIST. RTENN	12+96.90	49.07	LT	1646.08
B-107	EXIST. RTENN	13+05.33	54.15	LT	1646.12
B-108	EXIST. RTENN	13+13.29	59.94	LT	1646.12
B-109	EXIST. RTENN	13+20.72	66.41	LT	1645.98
B-110	EXIST. RTENN	13+27.56	73.50	LT	1645.70
B-111	EXIST. RTENN	13+33.75	81.15	LT	1645.28
B-112	EXIST. RTENN	13+39.25	89.32	LT	1644.84
B-113	EXIST. RTENN	13+44.02	97.93	LT	1644.55
B-114	EXIST. RTENN	13+46.77	106.42	LT	1644.41

DISCLAIMER
THE PROFESSIONAL WHOSE SIGNATURE AND PERSONAL SEAL APPEAR HEREON ASSUMES RESPONSIBILITY ONLY FOR WHAT APPEARS ON THIS PAGE. AND DISCLAIMS (PURSUANT TO SECTION 327.411 RSMO) SPECIFICATION, ESTIMATES, REPORTS, OR OTHER DOCUMENTS OR INSTRUMENTS NOT SEALED BY THE UNDERSIGNED PROFESSIONAL RELATING TO OR INTENDED TO BE USED FOR ANY PART OR PARTS OF THE PROJECT TO WHICH THIS PAGE REFERS.

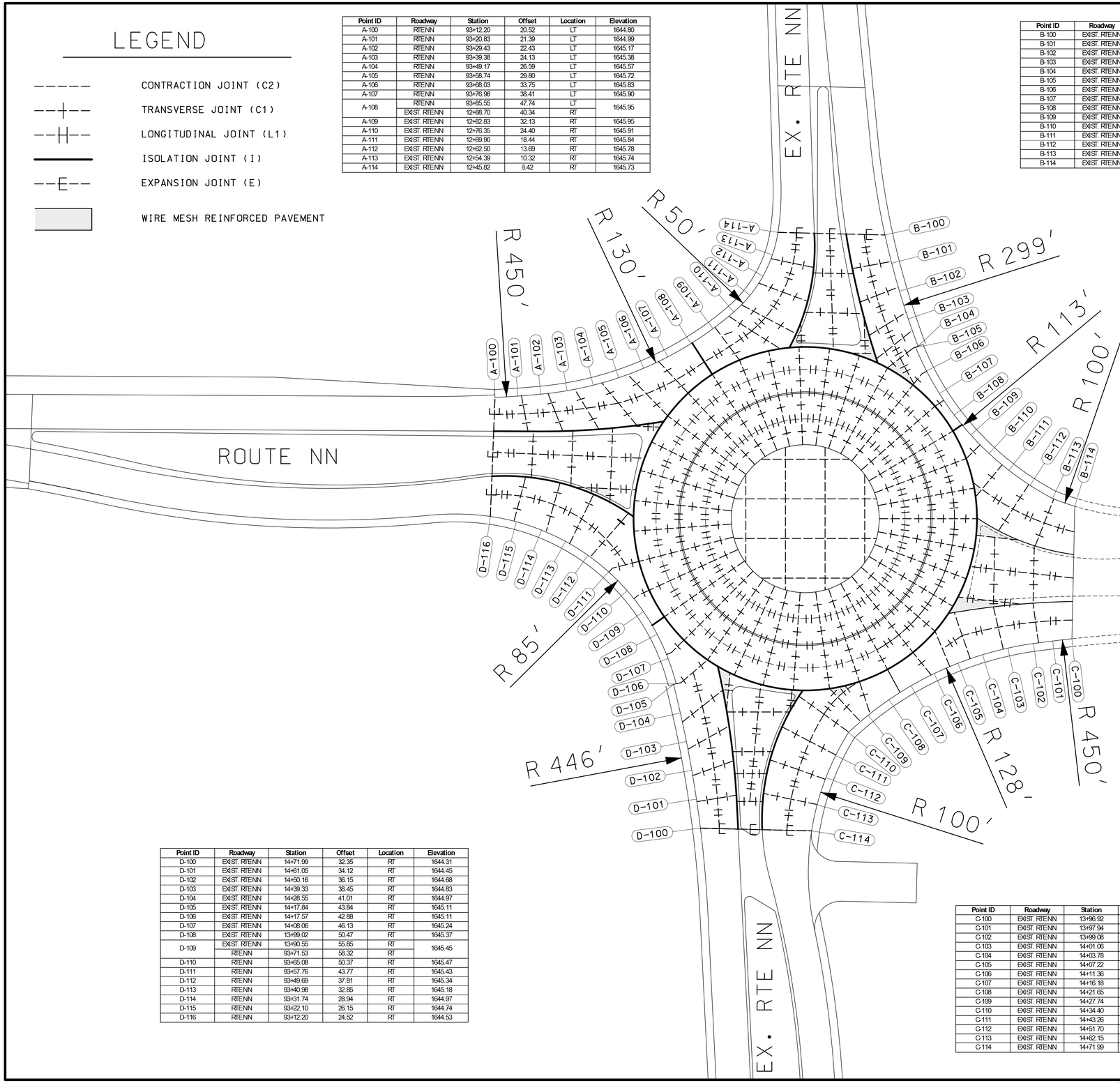

ISOLATION JOINT DETAIL (I)

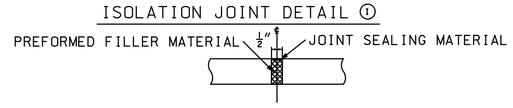

NOTES:

JOINTS "L1", "C1", "C2", "M", AND ALL CURB JOINTS SHALL FOLLOW MoDOT STANDARD PLAN 502.05S AND 609.00Q. ISOLATION JOINTS SHALL FOLLOW THE MODIFIED DESIGN DETAILED ABOVE.

ALL ISLANDS SHALL BE SURROUNDED BY ISOLATION JOINTS, EXCEPT WHERE THE ISLAND ABUTS THE ROUNDABOUT PAVEMENT. ALL ISLAND NOSES SHALL STUBBED A REASONABLE DISTANCE BEYOND THE MEDIAN NOSE SO AS TO MAINTAIN A 1:1.25 RATIO OF LENGTH-TO-WIDTH OF THE ADJACENT PAVEMENT PANELS AND TO BE COORDINATED WITH THE PLACEMENT OF PROPOSED DRAINAGE STRUCTURES.

EXPANSION JOINTS SHALL BE INCLUDED ON ALL APPROACHES PER STANDARD 502.05.

Point ID	Roadway	Station	Offset	Location	Elevation
D-100	EXIST. RTENN	14+71.99	32.35	RT	1644.31
D-101	EXIST. RTENN	14+61.05	34.12	RT	1644.45
D-102	EXIST. RTENN	14+50.16	36.15	RT	1644.68
D-103	EXIST. RTENN	14+39.33	38.45	RT	1644.83
D-104	EXIST. RTENN	14+28.55	41.01	RT	1644.97
D-105	EXIST. RTENN	14+17.84	43.84	RT	1645.11
D-106	EXIST. RTENN	14+17.57	42.88	RT	1645.11
D-107	EXIST. RTENN	14+08.06	46.13	RT	1645.24
D-108	EXIST. RTENN	13+99.02	50.47	RT	1645.37
D-109	EXIST. RTENN	13+90.55	55.85	RT	1645.45
	RTENN	93+71.53	58.32	RT	
D-110	RTENN	93+65.08	50.37	RT	1645.47
D-111	RTENN	93+57.76	43.77	RT	1645.43
D-112	RTENN	93+49.69	37.81	RT	1645.34
D-113	RTENN	93+40.98	32.85	RT	1645.18
D-114	RTENN	93+31.74	28.94	RT	1644.97
D-115	RTENN	93+22.10	26.15	RT	1644.74
D-116	RTENN	93+12.20	24.52	RT	1644.53

Point ID	Roadway	Station	Offset	Location	Elevation
C-100	EXIST. RTENN	13+96.92	106.52	LT	1644.52
C-101	EXIST. RTENN	13+97.94	99.27	LT	1644.62
C-102	EXIST. RTENN	13+99.08	92.04	LT	1644.76
C-103	EXIST. RTENN	14+01.06	82.37	LT	1644.98
C-104	EXIST. RTENN	14+03.78	72.88	LT	1645.17
C-105	EXIST. RTENN	14+07.22	63.63	LT	1645.30
C-106	EXIST. RTENN	14+11.36	54.68	LT	1645.38
C-107	EXIST. RTENN	14+16.18	46.07	LT	1645.41
C-108	EXIST. RTENN	14+21.65	37.85	LT	1645.34
C-109	EXIST. RTENN	14+27.74	30.09	LT	1645.17
C-110	EXIST. RTENN	14+34.40	22.81	LT	1644.91
C-111	EXIST. RTENN	14+43.26	18.15	LT	1644.61
C-112	EXIST. RTENN	14+51.70	14.69	LT	1644.42
C-113	EXIST. RTENN	14+62.15	11.59	LT	1644.30
C-114	EXIST. RTENN	14+71.99	9.75	LT	1644.20

SCALE
0 20 40 60

ROUTE NN ROUNDABOUT JOINTING PLAN

SPECIAL SHEET
4 OF 10

STATE OF MISSOURI
DALLAS P. JOPLIN
NUMBER PE-2011015760
PROFESSIONAL ENGINEER

THIS SHEET HAS BEEN SIGNED, SEALED AND DATED ELECTRONICALLY.

DATE PREPARED 9/3/2024

ROUTE	STATE
60	MO
DISTRICT	SHEET NO.
SW	83

COUNTY: WEBSTER
JOB NO.: J7P3425C
CONTRACT ID.:
PROJECT NO.:
BRIDGE NO.:

DATE	DESCRIPTION	REV.

IF A SEAL IS PRESENT ON THIS SHEET IT HAS BEEN ELECTRONICALLY SEALED AND DATED.

MISSOURI HIGHWAYS AND TRANSPORTATION COMMISSION
105 WEST CAPITOL
JEFFERSON CITY, MO 65102
1-888-ASK-MODOT (1-888-275-6636)

CMT
© Copyright CMT, Inc.
CRAWFORD, MURPHY & TILLY, INC.
1631 WEST ELFINDALE STREET
SPRINGFIELD, MO 65807 (417) 869-6009
ENGINEERING CORPORATION - 000631

L:\MoDOT\20092124-00\Draw\Roadway\Sheets\083_SS_04_J7P3425C_i20.dgn 1:57:43 PM 9/3/2024

IF A SEAL IS PRESENT ON THIS SHEET IT HAS BEEN ELECTRONICALLY SEALED AND DATED.

STATE OF MISSOURI
DALLAS P. JOPLIN
NUMBER PE-2010015760
PROFESSIONAL ENGINEER

THIS SHEET HAS BEEN SIGNED, SEALED AND DATED ELECTRONICALLY.

DATE PREPARED	ROUTE	STATE	DISTRICT	SHEET NO.	COUNTY	JOB NO.	CONTRACT ID.	PROJECT NO.	BRIDGE NO.
8/2/2024	60	MO	SW	84	WEBSTER	J7P3425C			

DESCRIPTION	DATE

MISSOURI HIGHWAYS AND TRANSPORTATION COMMISSION
105 WEST CAPITOL
JEFFERSON CITY, MO 65102
1-888-ASK-MODOT (1-888-275-6636)

CMT
© Copyright CMT, Inc.
CRAWFORD, MURPHY & TILLY, INC.
1631 WEST ELFINDALE STREET
SPRINGFIELD, MO 65807 (417) 869-6009
ENGINEERING CORPORATION - 000631

DISCLAIMER
THE PROFESSIONAL WHOSE SIGNATURE AND PERSONAL SEAL APPEAR HEREON ASSUMES RESPONSIBILITY ONLY FOR WHAT APPEARS ON THIS PAGE, AND DISCLAIMS (PURSUANT TO SECTION 327.411 RSMO) SPECIFICATION, ESTIMATES, REPORTS, OR OTHER DOCUMENTS OR INSTRUMENTS NOT SEALED BY THE UNDERSIGNED PROFESSIONAL RELATING TO OR INTENDED TO BE USED FOR ANY PART OR PARTS OF THE PROJECT TO WHICH THIS PAGE REFERS.

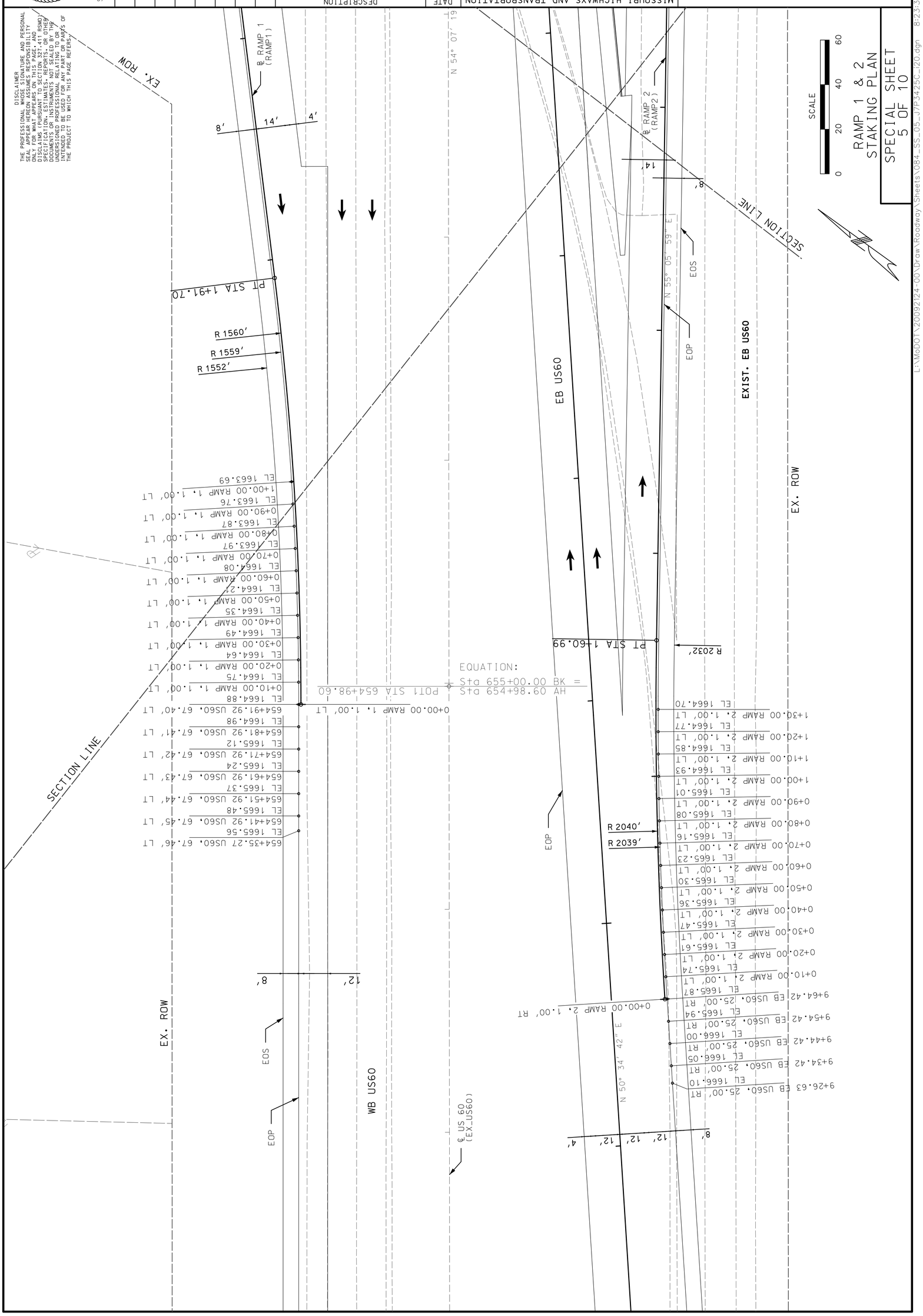

SCALE
0 20 40 60

RAMP 1 & 2
STAKING PLAN
SPECIAL SHEET
5 OF 10

L:\MoDOT\20092124-00\Draw\Roadway\Sheets\084_SS_05_J7P3425C_i20.dgn 8:23:37 AM 8/2/2024
REV.

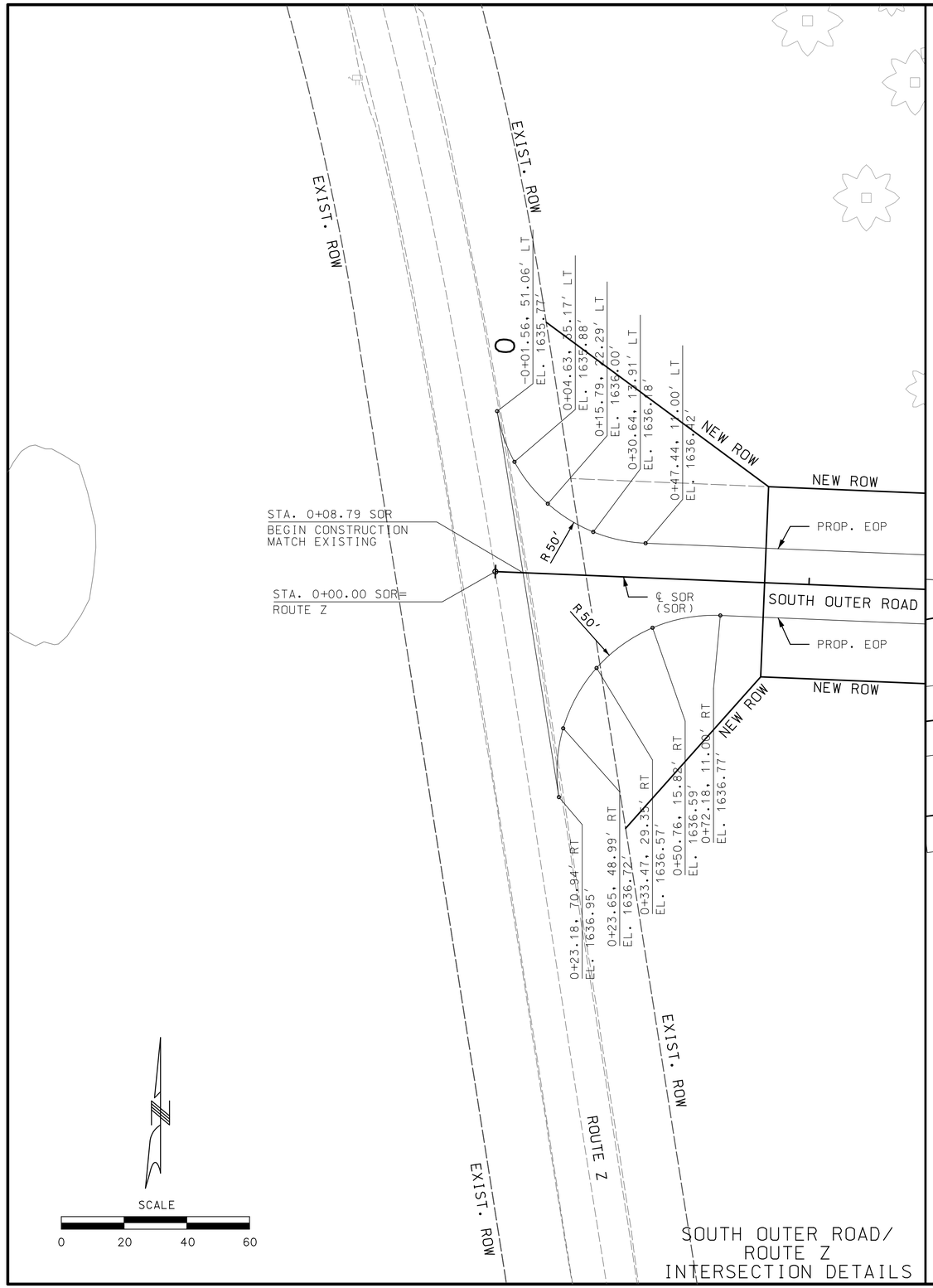

SOUTH OUTER ROAD/
ROUTE Z
INTERSECTION DETAILS

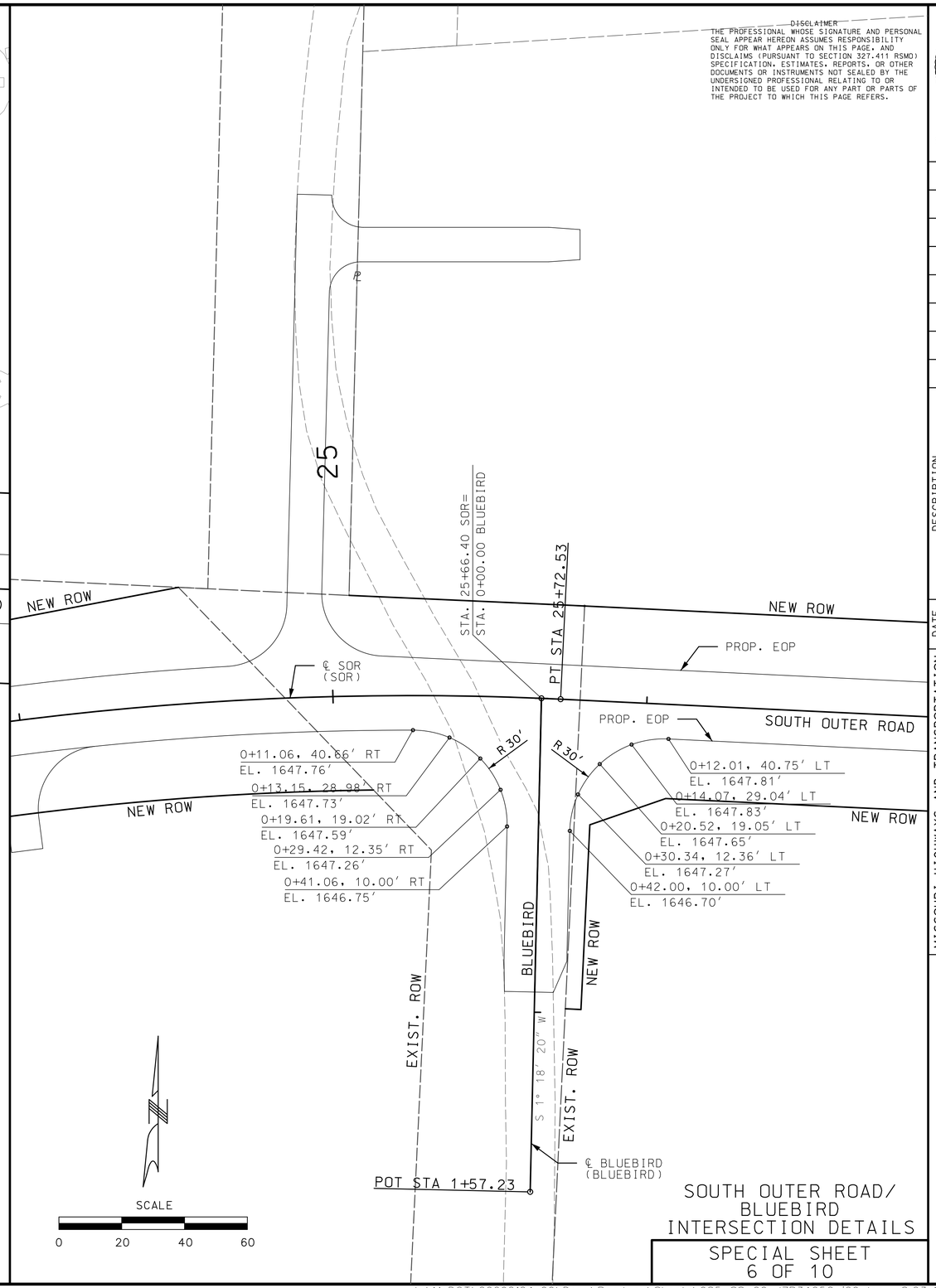

SOUTH OUTER ROAD/
BLUEBIRD
INTERSECTION DETAILS

SPECIAL SHEET
6 OF 10

DISCLAIMER
THE PROFESSIONAL WHOSE SIGNATURE AND PERSONAL SEAL APPEAR HEREON ASSUMES RESPONSIBILITY ONLY FOR WHAT APPEARS ON THIS PAGE, AND DISCLAIMS (PURSUANT TO SECTION 327.411 RSMO) SPECIFICATION, ESTIMATES, REPORTS, OR OTHER DOCUMENTS OR INSTRUMENTS NOT SEALED BY THE UNDERSIGNED PROFESSIONAL RELATING TO OR INTENDED TO BE USED FOR ANY PART OR PARTS OF THE PROJECT TO WHICH THIS PAGE REFERS.

STATE OF MISSOURI
DALLAS P. JOPLIN
NUMBER PE-2011015760
PROFESSIONAL ENGINEER

THIS SHEET HAS BEEN SIGNED, SEALED AND DATED ELECTRONICALLY.

DATE PREPARED
8/2/2024

ROUTE	STATE
60	MO
DISTRICT	SHEET NO.
SW	85

COUNTY
WEBSTER

JOB NO.
J7P3425C

CONTRACT ID.

PROJECT NO.

BRIDGE NO.

DESCRIPTION	DATE

IF A SEAL IS PRESENT ON THIS SHEET IT HAS BEEN ELECTRONICALLY SEALED AND DATED.

MISSOURI HIGHWAYS AND TRANSPORTATION COMMISSION

105 WEST CAPITOL
JEFFERSON CITY, MO 65102
1-888-ASK-MODOT (1-888-275-6636)

CMT
© Copyright CMT, Inc.
CRAWFORD, MURPHY & TILLY, INC.
1631 WEST ELFINDALE STREET
SPRINGFIELD, MO 65807 (417) 869-6009
ENGINEERING CORPORATION - 000631

REV.

L:\MoDOT\20092124-00\Draw\Roadway\Sheets\085_SS_06_J7P3425C_i20.dgn 8:23:40 AM 8/2/2024

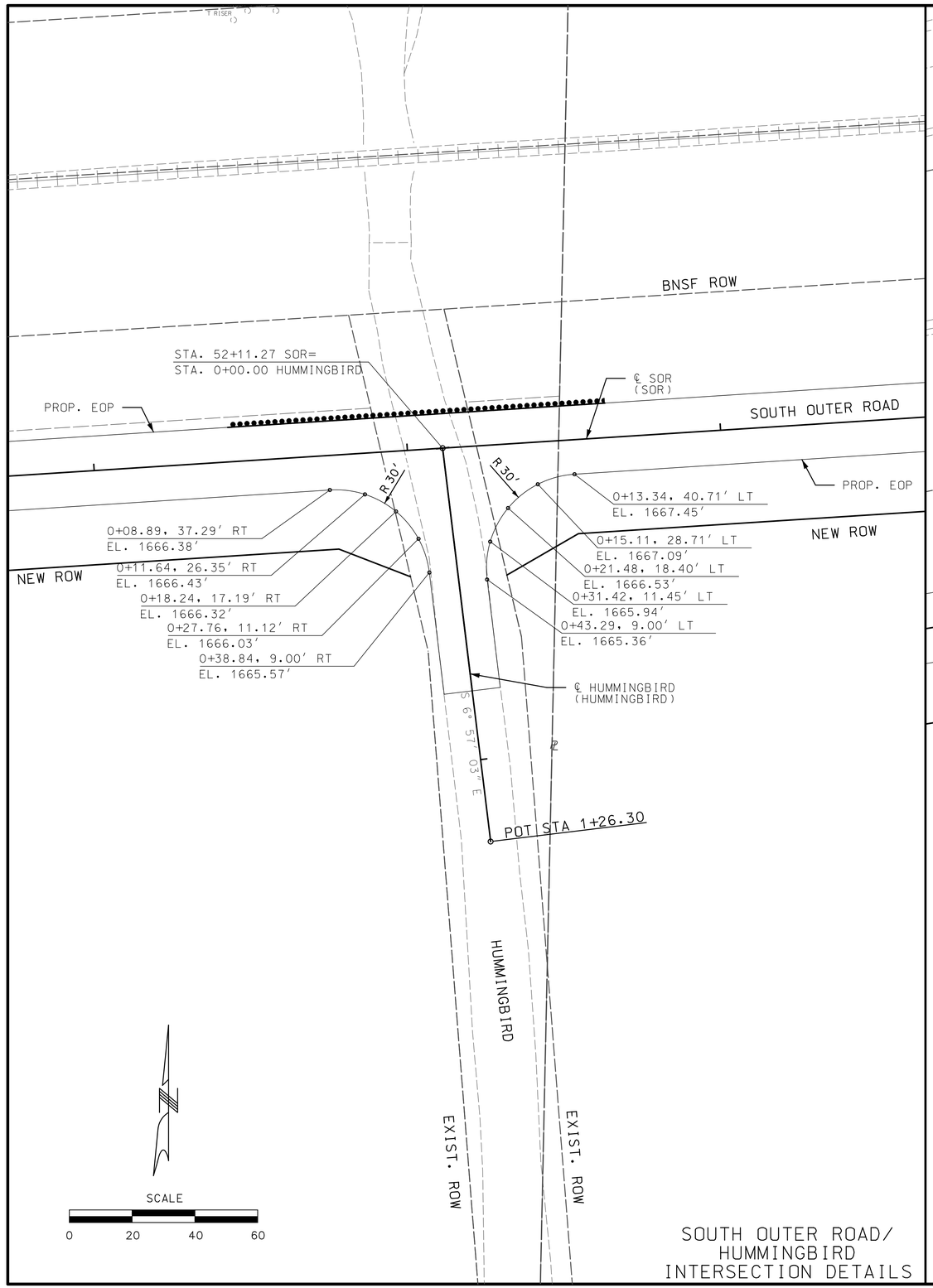

SOUTH OUTER ROAD/
HUMMINGBIRD
INTERSECTION DETAILS

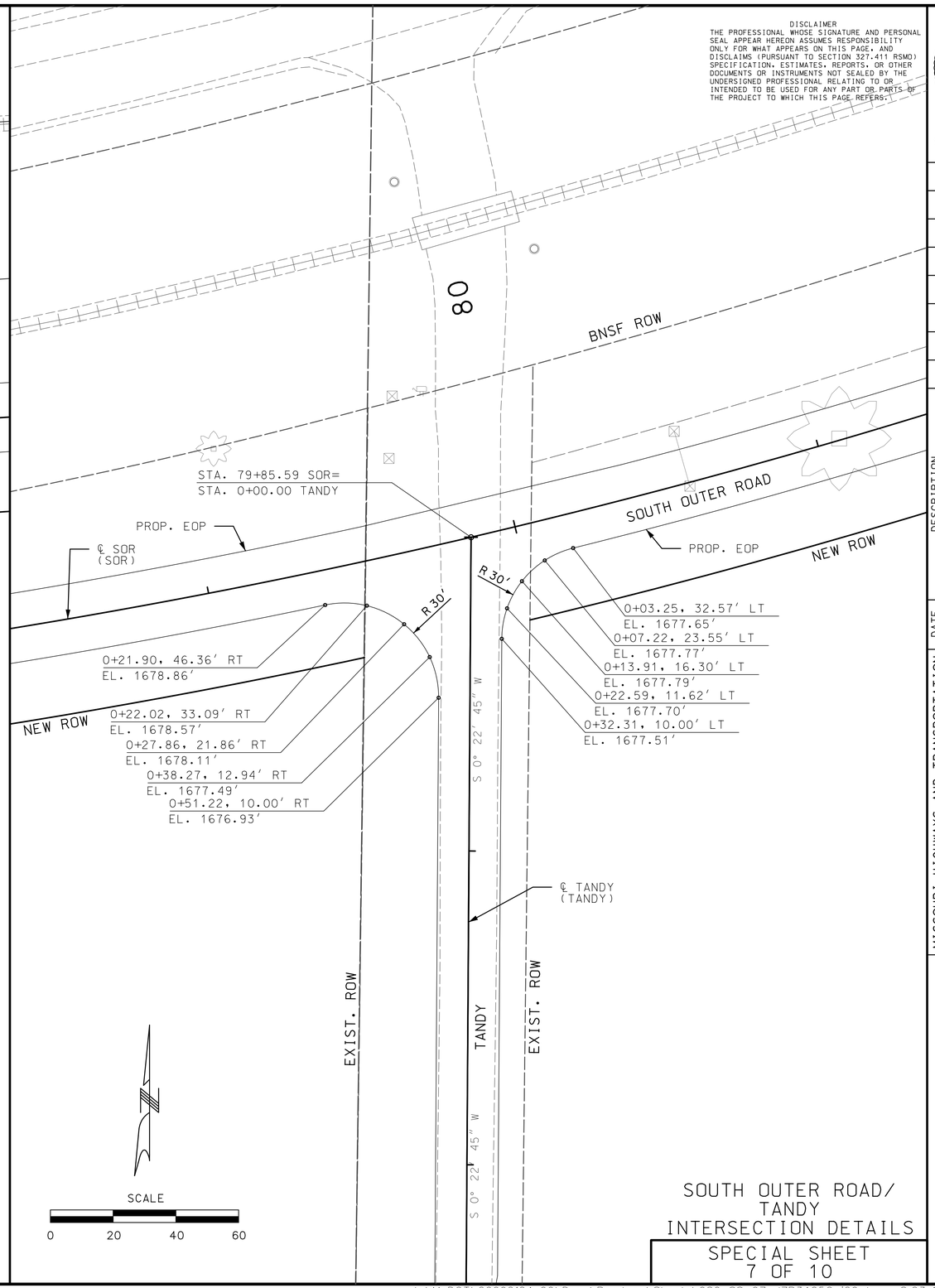

SOUTH OUTER ROAD/
TANDY
INTERSECTION DETAILS

SPECIAL SHEET
7 OF 10

DISCLAIMER
THE PROFESSIONAL WHOSE SIGNATURE AND PERSONAL SEAL APPEAR HEREON ASSUMES RESPONSIBILITY ONLY FOR WHAT APPEARS ON THIS PAGE, AND DISCLAIMS (PURSUANT TO SECTION 327.411 RSMO) SPECIFICATION, ESTIMATES, REPORTS, OR OTHER DOCUMENTS OR INSTRUMENTS NOT SEALED BY THE UNDERSIGNED PROFESSIONAL RELATING TO OR INTENDED TO BE USED FOR ANY PART OR PARTS OF THE PROJECT TO WHICH THIS PAGE REFERS.

STATE OF MISSOURI
DALLAS P. JOPLIN
NUMBER PE-2011015760
PROFESSIONAL ENGINEER

THIS SHEET HAS BEEN SIGNED, SEALED AND DATED ELECTRONICALLY.

DATE PREPARED
8/2/2024

ROUTE	STATE
60	MO
DISTRICT	SHEET NO.
SW	86

COUNTY
WEBSTER

JOB NO.
J7P3425C

CONTRACT ID.

PROJECT NO.

BRIDGE NO.

DESCRIPTION	DATE

IF A SEAL IS PRESENT ON THIS SHEET IT HAS BEEN ELECTRONICALLY SEALED AND DATED.

MISSOURI HIGHWAYS AND TRANSPORTATION COMMISSION
105 WEST CAPITOL
JEFFERSON CITY, MO 65102
1-888-ASK-MODOT (1-888-275-6636)

CMT
©Copyright CMT, Inc.
CRAWFORD, MURPHY & TILLY, INC.
1631 WEST ELFINDALE STREET
SPRINGFIELD, MO 65807 (417) 869-6009
ENGINEERING CORPORATION - 000631

REV.

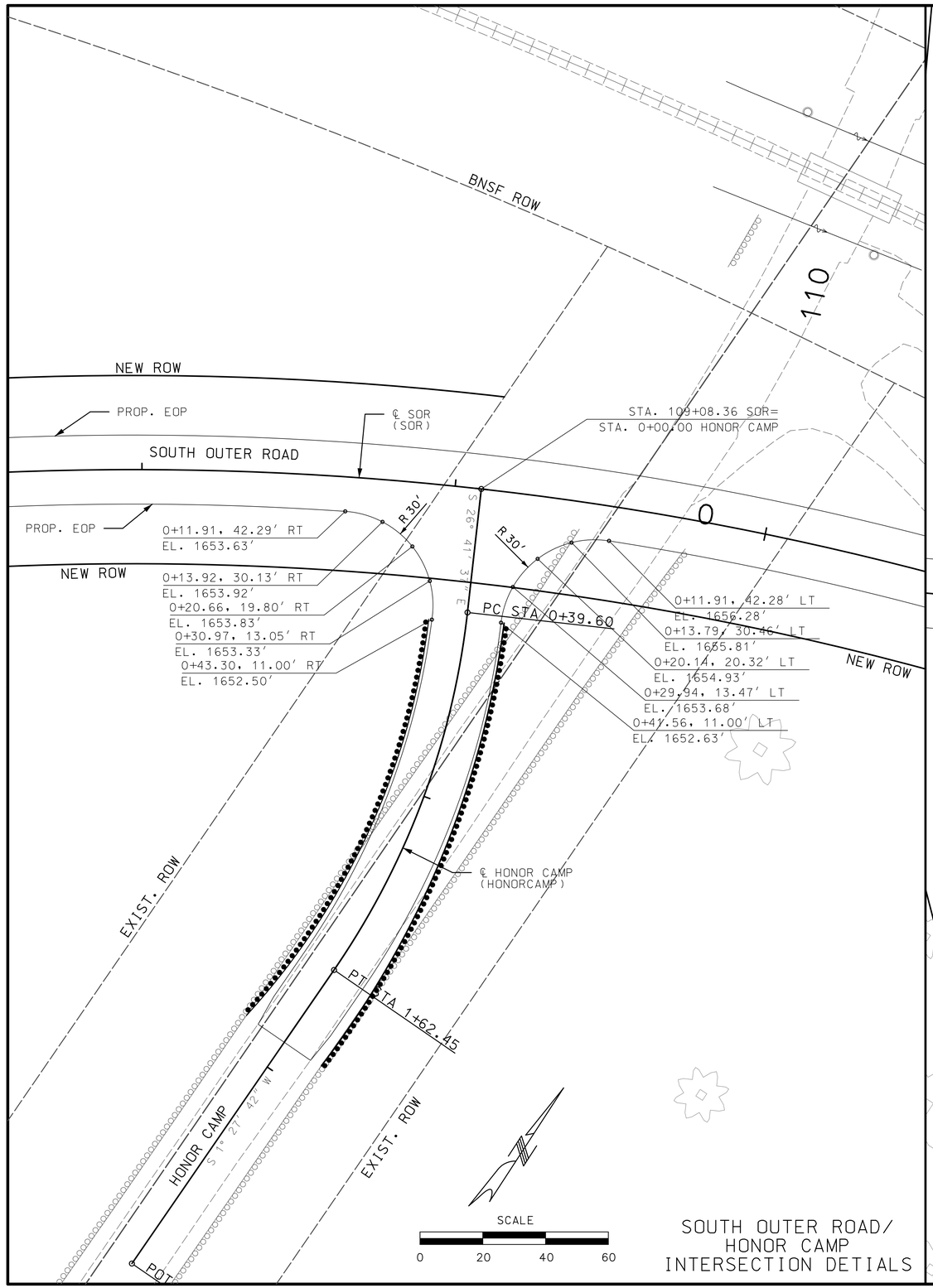

SOUTH OUTER ROAD/ HONOR CAMP INTERSECTION DETIALS

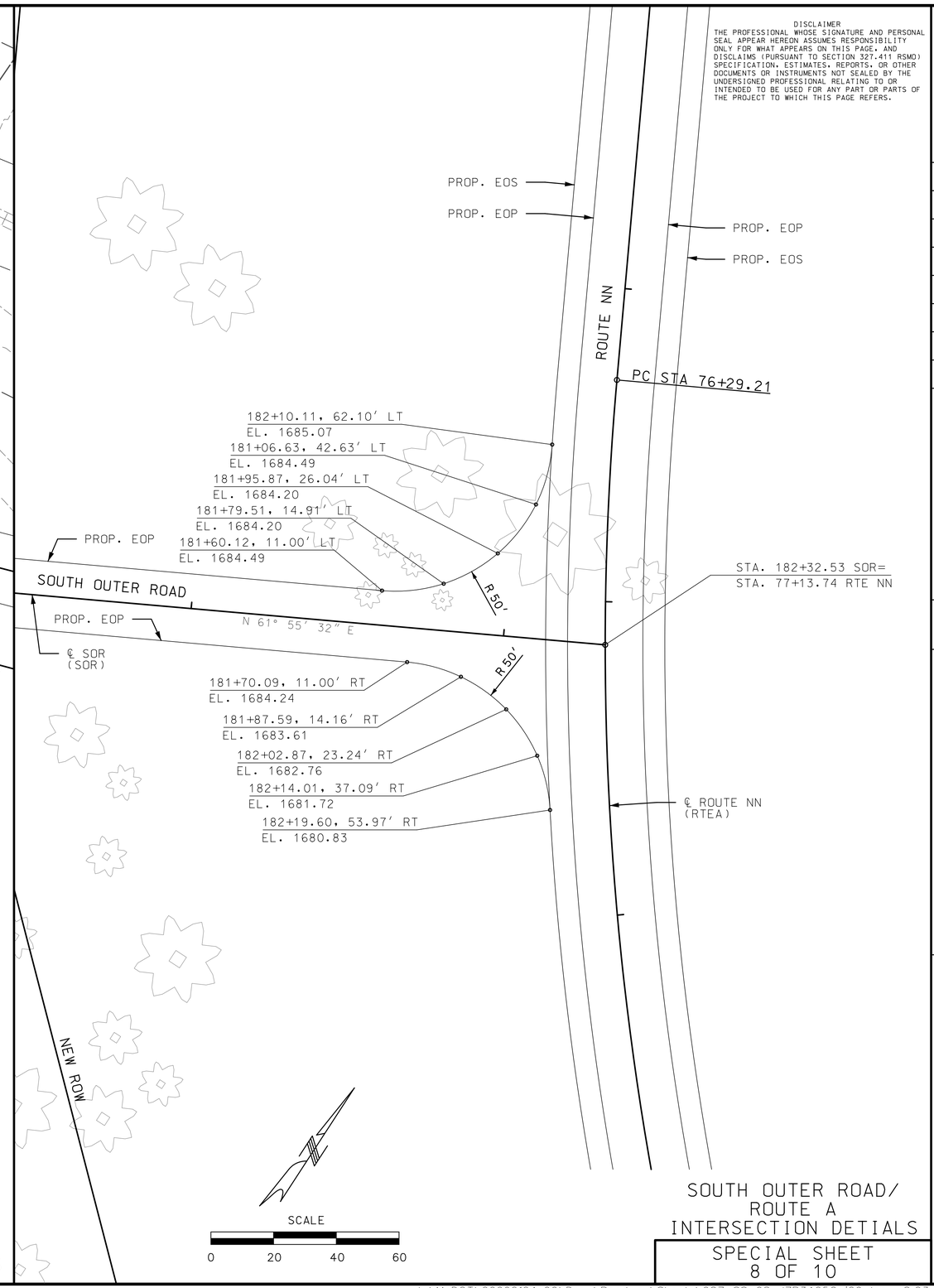

SOUTH OUTER ROAD/ ROUTE A INTERSECTION DETIALS

SPECIAL SHEET
8 OF 10

DISCLAIMER
THE PROFESSIONAL WHOSE SIGNATURE AND PERSONAL SEAL APPEAR HEREON ASSUMES RESPONSIBILITY ONLY FOR WHAT APPEARS ON THIS PAGE, AND DISCLAIMS (PURSUANT TO SECTION 327.411 RSMO) SPECIFICATION, ESTIMATES, REPORTS, OR OTHER DOCUMENTS OR INSTRUMENTS NOT SEALED BY THE UNDERSIGNED PROFESSIONAL RELATING TO OR INTENDED TO BE USED FOR ANY PART OR PARTS OF THE PROJECT TO WHICH THIS PAGE REFERS.

STATE OF MISSOURI
DALLAS P. JOPLIN
NUMBER PE-2011015760
PROFESSIONAL ENGINEER

THIS SHEET HAS BEEN SIGNED, SEALED AND DATED ELECTRONICALLY.

DATE PREPARED	
8/2/2024	
ROUTE	STATE
60	MO
DISTRICT	SHEET NO.
SW	87

COUNTY: WEBSTER
JOB NO.: J7P3425C
CONTRACT ID.:
PROJECT NO.:
BRIDGE NO.:

DATE	DESCRIPTION

IF A SEAL IS PRESENT ON THIS SHEET IT HAS BEEN ELECTRONICALLY SEALED AND DATED.

MISSOURI HIGHWAYS AND TRANSPORTATION COMMISSION
105 WEST CAPITOL
JEFFERSON CITY, MO 65102
1-888-ASK-MODOT (1-888-275-6636)

CMT
© Copyright CMT, Inc.
CRAWFORD, MURPHY & TILLY, INC.
1631 WEST ELFINDALE STREET
SPRINGFIELD, MO 65807 (417) 869-6009
ENGINEERING CORPORATION - 000631

REV.

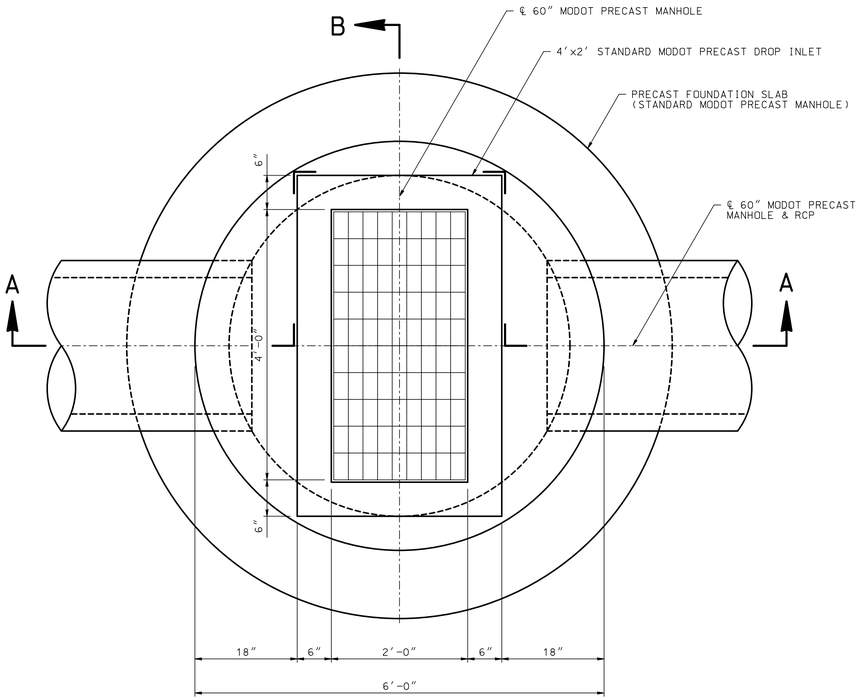

PLAN

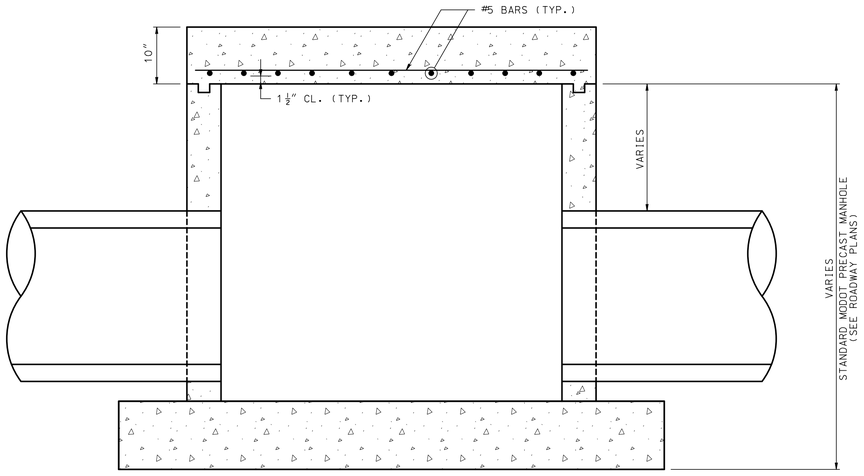

SECTION A-A

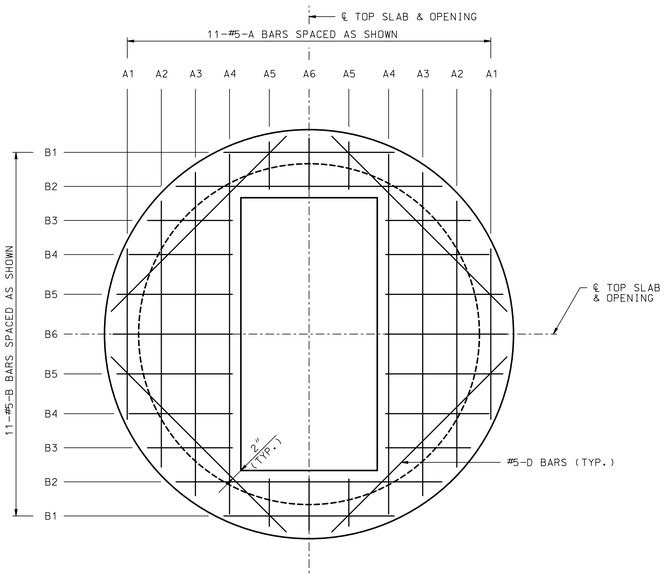

TOP SLAB PLAN OF REINFORCEMENT

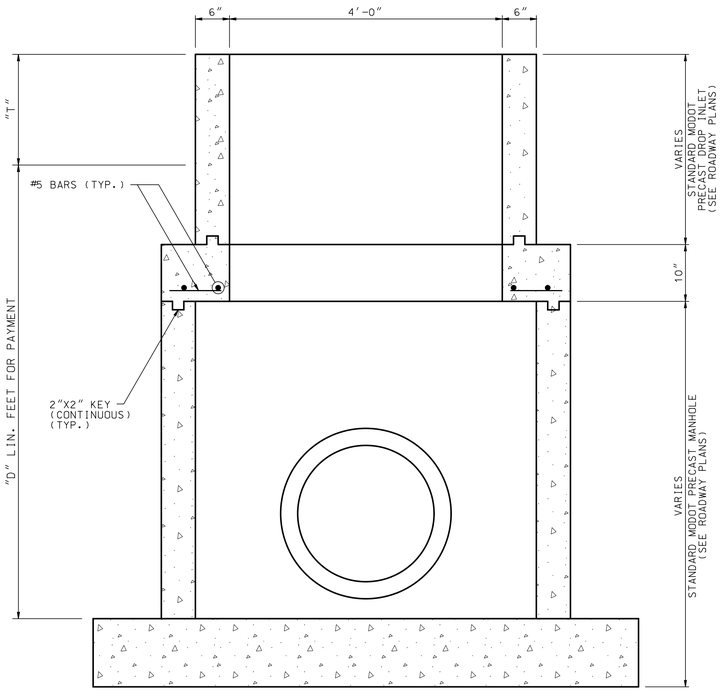

SECTION B-B

DISCLAIMER
THE PROFESSIONAL WHOSE SIGNATURE AND PERSONAL SEAL APPEAR HEREON ASSUMES RESPONSIBILITY ONLY FOR WHAT APPEARS ON THIS PAGE, AND DISCLAIMS (PURSUANT TO SECTION 327.411 RSMO) SPECIFICATION, ESTIMATES, REPORTS, OR OTHER DOCUMENTS OR INSTRUMENTS NOT SEALED BY THE UNDERSIGNED PROFESSIONAL RELATING TO OR INTENDED TO BE USED FOR ANY PART OR PARTS OF THE PROJECT TO WHICH THIS PAGE REFERS.

PAVEMENT THICKNESS	"T" DIMENSION
LESS THAN OR EQUAL TO 11"	11"
12"	12"
13"	13"
GREATER THAN OR EQUAL TO 14"	14"

BARBILL FOR TOP SLAB

BAR	NO. OF BARS	LENGTH	WEIGHT (LBS.)
#5 A1	2	2'-6"	6
#5 A2	2	3'-10"	8
#5 A3	2	4'-9"	10
#5 A4	2	5'-3"	11
#5 A5	4	0'-8"	3
#5 A6	2	0'-9"	2
#5 B1	2	2'-6"	6
#5 B2	2	3'-10"	8
#5 B3	4	1'-3"	6
#5 B4	4	1'-6"	7
#5 B5	4	1'-8"	7
#5 B6	2	1'-9"	4
#5 D	4	3'-7"	15

QUANTITY TOTALS (PER TOP SLAB):

REINFORCING STEEL = 93 LBS.

CLASS B CONCRETE = 0.63 CU. YDS.

NOTES:

ALL WORK INCLUDING STEEL, CONCRETE, REINFORCING BARS AND BACKFILL NECESSARY TO COMPLETE THE CONSTRUCTION SHALL BE CONSIDERED INCIDENTAL TO THE COST OF SPECIAL INLET NO. 1.

ALL CAST-IN-PLACE CONCRETE SHALL MEET THE SPECIFICATIONS OF MODOT CLASS B-1 CONCRETE.

FIELD VERIFY ALL SIZES AND LOCATIONS PRIOR TO CONSTRUCTION/INSTALLATION OF DRAINAGE STRUCTURES AND PIPES.

ALL REINFORCING TO BE GRADE 60 EPOXY COATED STEEL AND SHALL BE IN ACCORDANCE WITH SEC 706.

MINIMUM CLEARANCE TO REINFORCING STEEL SHALL BE 1-1/2" UNLESS OTHERWISE SHOWN.

DETAILS OF SPECIAL INLET (4 FT. X 2 FT. DROP INLET ON 60 IN. MANHOLE BASE)

NOTE: THIS DRAWING IS NOT TO SCALE. FOLLOW DIMENSIONS.

SPECIAL INLET DETAIL

SPECIAL SHEET
9 OF 10

STATE OF MISSOURI
DALLAS P. JOPLIN
NUMBER PE-2011015760
PROFESSIONAL ENGINEER

THIS SHEET HAS BEEN SIGNED, SEALED AND DATED ELECTRONICALLY.

DATE PREPARED
8/2/2024

ROUTE	STATE
60	MO
DISTRICT	SHEET NO.
SW	88

COUNTY
WEBSTER

JOB NO.
J7P3425C

CONTRACT ID.

PROJECT NO.

BRIDGE NO.

DATE	DESCRIPTION	REV.

IF A SEAL IS PRESENT ON THIS SHEET IT HAS BEEN ELECTRONICALLY SEALED AND DATED.

MISSOURI HIGHWAYS AND TRANSPORTATION COMMISSION
105 WEST CAPITOL
JEFFERSON CITY, MO 65102
1-888-ASK-MODOT (1-888-275-6636)

CMT
©Copyright CMT, Inc.
CRAWFORD, MURPHY & TILLY, INC.
1631 WEST ELFINDALE STREET
SPRINGFIELD, MO 65807 (417) 869-6009
ENGINEERING CORPORATION - 000631

L:\MoDOT\20092124-00\Draw\Roadway\Sheets\088_SS_09_J7P3425C_i1.dgn 8:23:45 AM 8/2/2024

DISCLAIMER
THE PROFESSIONAL WHOSE SIGNATURE AND PERSONAL SEAL APPEAR HEREON ASSUMES RESPONSIBILITY ONLY FOR WHAT APPEARS ON THIS PAGE, AND DISCLAIMS (PURSUANT TO SECTION 327.411 RSMO) SPECIFICATION, ESTIMATES, REPORTS, OR OTHER DOCUMENTS OR INSTRUMENTS NOT SEALED BY THE UNDERSIGNED PROFESSIONAL RELATING TO OR INTENDED TO BE USED FOR ANY PART OR PARTS OF THE PROJECT TO WHICH THIS PAGE REFERS.

STATE OF MISSOURI
DALLAS P. JOPLIN
NUMBER PE-2011015760
PROFESSIONAL ENGINEER

THIS SHEET HAS BEEN SIGNED, SEALED AND DATED ELECTRONICALLY.

DATE PREPARED: 9/3/2024

ROUTE	STATE
60	MO
DISTRICT	SHEET NO.
SW	89

COUNTY: WEBSTER
JOB NO.: J7P3425C
CONTRACT ID.:
PROJECT NO.:
BRIDGE NO.:

DESCRIPTION	DATE

IF A SEAL IS PRESENT ON THIS SHEET IT HAS BEEN ELECTRONICALLY SEALED AND DATED.

MISSOURI HIGHWAYS AND TRANSPORTATION COMMISSION
105 WEST CAPITOL
JEFFERSON CITY, MO 65102
1-888-ASK-MODOT (1-888-275-6636)

CMT
© Copyright CMT, Inc.
CRAWFORD, MURPHY & TILLY, INC.
1631 WEST ELFINDALE STREET
SPRINGFIELD, MO 65807 (417) 869-6009
ENGINEERING CORPORATION - 000631

RTE A
RTE NN
PROP. ROW
EXIST. ROW
RAMP 1
RAMP 2
RAMP 3
RAMP 4
EX. US60
EB US60
BNSF ROW
TCE
MSE WALL A9351
MSE WALL A9352
MSE WALL A9354
MSE WALL A9355
50′
46′
48′
58′
68′
84′
AREA OF AGGREGATE PIERING
AREA OF COMPACTION GROUTING
SCALE
0 50 100 150

GROUND IMPROVEMENT
SPECIAL SHEET
10 OF 10

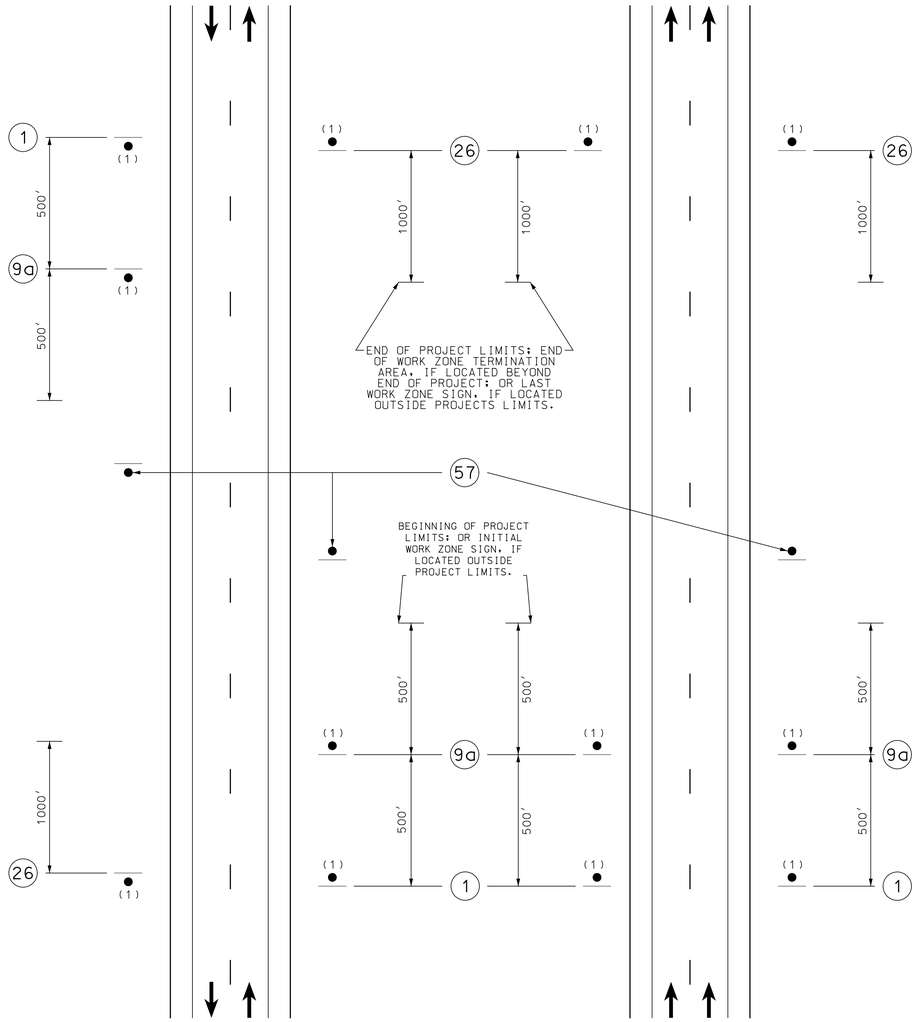

BEGINNING AND END OF PROJECT
TO REMAIN IN PLACE THROUGH DURATION OF PROJECT

NOTES:

SIGN G020-1 IS REQUIRED PER EPG 616.6.56.

SIGN G020-2 IS USED ON ALL PROJECTS WHERE SIGN G020-1 IS USED.

OTHER SIGNS SUCH AS DETOUR OR ALTERNATE ROUTE SIGNING MAY BE USED OUTSIDE THE PROJECT LIMITS.

ANY EXISTING SIGNING THAT CONFLICTS WITH THE TRAFFIC CONTROL SIGNING SHALL BE COMPLETELY COVERED OR REMOVED.

(1) DISTANCE MAY BE ADJUSTED ACCORDING TO FIELD CONDITIONS. WHERE TRAFFIC BACKUPS ARE EXPECTED BEYOND THE ADVANCE WARNING AREA, ADDITIONAL SIGNING MAY BE NEEDED.

(2) SIGN CONST-7-72 OR CONST-7-48 IS PLACED 500 FEET BEFORE THE BEGINNING OF PROJECT LIMITS OR THE ROAD WORK AHEAD SIGN OR ROAD WORK NEXT XX MILES SIGN. IF USED, WHEN THESE SIGNS ARE LOCATED OUTSIDE THE PROJECT LIMITS.

(3) CONST-5-96 OR CONST-5-48 SIGN IS PLACED IN A VISIBLE AREA WITHIN THE PROJECT LIMITS PROVIDED ITS PLACEMENT DOES NOT DISRUPT A SEQUENCE OF SIGNS. IF A VISIBLE LOCATION WITHIN THE PROJECT IS NOT AVAILABLE, THE SIGN MAY BE PLACED 500 FEET BEFORE SIGN CONST-7-72 OR CONST-7-48.

(4) THE "RATE OUR WORK ZONE" SIGN IS AVAILABLE IN TWO SIZES DEPENDING ON ROADWAY CONDITIONS. THE 48 IN. X 24 IN. SIGN IS USED ON LOW VOLUME ROUTES THAT CARRY 400 AADT OR LESS, ON PROJECTS THAT HAVE A DURATION OF 4 WEEKS OR LESS OR IN URBAN AREAS WHERE THERE IS INSUFFICIENT RIGHT OF WAY FOR A SIX FOOT WIDE SIGN. THE 72 IN. X 36 IN. VERSION OF THE SIGN IS USED IN ALL OTHER APPLICATIONS, BUT CAN ALSO BE USED IN PLACE OF THE 48 IN. x 24 IN. SIGN IF ADDED EMPHASIS IS DEEMED NECESSARY.

(5) THE "POINT OF PRESENCE" SIGN IS AVAILABLE IN TWO SIZES DEPENDING ON ROADWAY CONDITIONS. THE 48 IN. X 36 IN. SIGN IS USED ON LOW VOLUME ROUTES THAT CARRY 400 AADT OR LESS, ON PROJECTS THAT HAVE A DURATION OF 4 WEEKS OR LESS OR IN URBAN AREAS WHERE THERE IS INSUFFICIENT RIGHTS OF WAY FOR AN EIGHT FOOT WIDE SIGN. THE 96 IN. X 48 IN. VERSION OF THE SIGN IS USED IN ALL OTHER APPLICATIONS, BUT CAN ALSO BE USED IN PLACE OF THE 48 IN. x 36 IN. SIGN IF ADDED EMPHASIS IS DEEMED NECESSARY.

(6) THE "WORK ZONE NO PHONE ZONE" SIGN IS PLACED A MINIMUM OF 500 FEET BEFORE THE ROAD WORK AHEAD SIGN.

G020-1
48" X 24"
1

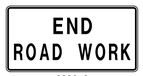

G020-2
48" X 24"
26

CONST-5-96
96" X 48"
57

CONST-8
48" X 36"
9a

STATE OF MISSOURI
DALLAS P. JOPLIN
NUMBER PE-2011015760
PROFESSIONAL ENGINEER

THIS SHEET HAS BEEN SIGNED, SEALED AND DATED ELECTRONICALLY.

DATE PREPARED: 8/2/2024

ROUTE	STATE
60	MO
DISTRICT	SHEET NO.
SW	90

COUNTY: WEBSTER
JOB NO.: J7P3425C
CONTRACT ID.:
PROJECT NO.:
BRIDGE NO.:

DATE	DESCRIPTION

IF A SEAL IS PRESENT ON THIS SHEET IT HAS BEEN ELECTRONICALLY SEALED AND DATED.

MISSOURI HIGHWAYS AND TRANSPORTATION COMMISSION
105 WEST CAPITOL
JEFFERSON CITY, MO 65102
1-888-ASK-MODOT (1-888-275-6636)

CMT
© Copyright CMT, Inc.
CRAWFORD, MURPHY & TILLY, INC.
1631 WEST ELFINDALE STREET
SPRINGFIELD, MO 65807 (417) 869-6009
ENGINEERING CORPORATION - 000631

TYPICAL APPLICATIONS
TRAFFIC CONTROL
1 OF 30

REV.

L:\MoDOT\20092124-00\Draw\Roadway\Sheets\090-094_TC_01-05_J7P3425C_i100.dgn 8:36:34 AM 8/2/2024

STATIONARY LANE CLOSURE ON A MULTI-LANE HIGHWAY

SPEED	SIGN SPACING (ft.)	TAPER LENGTH (ft.)		OPTIONAL	CHANNELIZER SPACING (ft.)	
PERMANENT POSTED (MPH)	DIVIDED (S)	SHOULDER (1) (T1)	LANE (2) (T2)	BUFFER LENGTH (ft.) (B)	TAPERS	BUFFER/ WORK AREAS
50-55	1000	185	660	495	50	80
60-70	1000	235	840	730	60	120

1 SHOULDER TAPER LENGTH BASED ON 10 ft. (STANDARD SHOULDER WIDTH) OFFSET.
2 LANE TAPER LENGTH BASED ON 12 ft. (STANDARD LANE WIDTH) OFFSET.

ALWAYS USE ADVANCE WARNING SIGNS AND CHANNELIZERS:

1. USE EPG 616.33SD (TA-33SD) SHORT DURATION LANE CLOSURE ON A MULTI-LANE HIGHWAY FOR SETTING ADVANCED WARNING SIGNS.

ALWAYS USE A PROTECTIVE VEHICLE WITH A FLASHING ARROW PANEL (FAP) AND A TRUCK/TRAILER MOUNTED ATTENUATOR (TMA).

1. ACTIVATE HIGH INTENSITY ROTATING, FLASHING, OSCILLATING, OR STROBE LIGHTS.
2. POSITION THE PROTECTIVE VEHICLE/TMA A MINIMUM OF 150 FEET IN ADVANCE OF THE WORK SPACE, IF POSSIBLE.
3. OPERATE THE FAP IN THE FOUR-CORNER OR ALTERNATING DIAMOND CAUTION MODE.

FOR ROADWAYS POSTED AT 45 MPH OR LESS, A WORK VEHICLE MAY BE USED AS THE PROTECTIVE VEHICLE.

1. ACTIVATE THE HIGH INTESITY, ROTATING, FLASHING, OSCILLATING, OR STROBE LIGHTS.
2. POSITION THE WORK VEHICLE/PROTECTIVE VEHICLE A MINIMUM OF 150 FEET IN ADVANCE OF THE WORK SPACE, IF POSSIBLE.
3. IF USED, OPERATE THE FLASHING ARROW PANEL IN THE FOUR-CORNER OR ALTERNATING DIAMOND CAUTION MODE.
4. ONCE YOU EXIT THE WORK VEHICLE, RETURN ONLY WHEN ADJUSTING POSITION OR READY TO LEAVE THE WORK LOCATION.

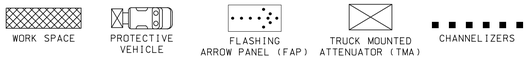

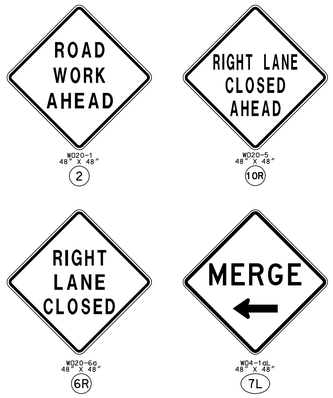

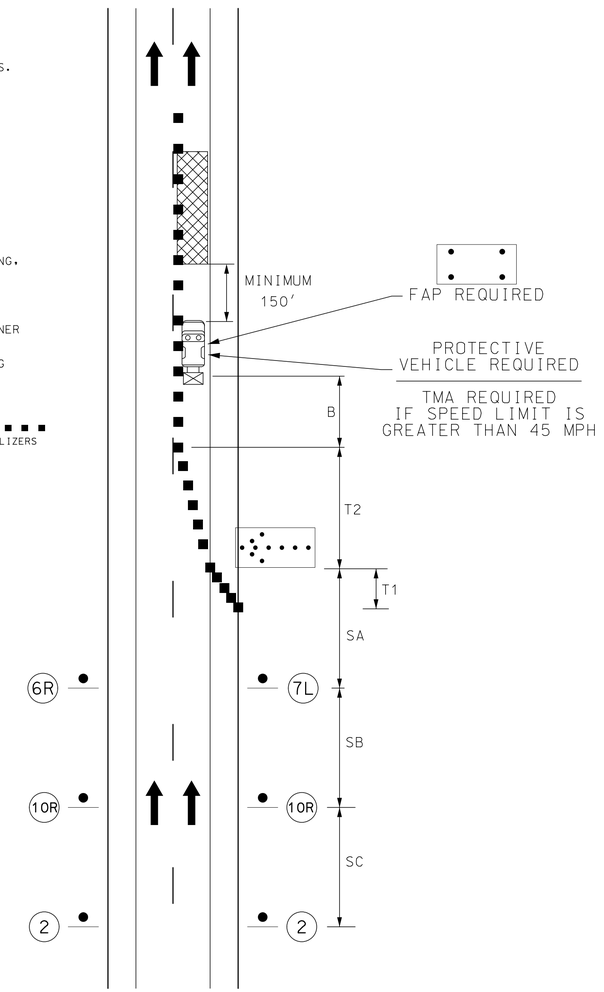

STATIONARY WORK BEYOND THE SHOULDER

SPEED	SIGN SPACING (ft.)		TAPER LENGTH (ft.)		OPTIONAL	CHANNELIZER SPACING (ft.)	
PERMANENT POSTED (MPH)	UNDIVIDED (S)	DIVIDED (S)	SHOULDER (1) (T1)	LANE (2) (T2)	BUFFER LENGTH (ft.) (B)	TAPERS	BUFFER/ WORK AREAS
0-35	200	200	-	-	-	-	-
40-45	350	500	-	-	-	-	-
50-55	500	1000	-	-	-	-	-
60-70	1000	1000	-	-	-	-	-

1 SHOULDER TAPER LENGTH BASED ON 10 ft. (STANDARD SHOULDER WIDTH) OFFSET.
2 LANE TAPER LENGTH BASED ON 12 ft. (STANDARD LANE WIDTH) OFFSET.

ADVANCE WARNING SIGNS MAY BE ELIMINATED IF AT LEAST ONE OF THE FOLLOWING CONDITIONS ARE MET:

1. WORK SPACE IS 15 FEET OR MORE FROM THE EDGE OF ROADWAY.
2. WORK SPACE IS BEHIND THE CURB.
3. WORK SPACE IS BEHIND BARRIER OR GUARDRAIL.
4. HIGH-INTENSITY ROTATING, FLASHING, OSCILLATING, OR STROBE LIGHTS ARE ACTIVATED.

WHEN VEHICLES OR EQUIPMENT ARE PARKED ON THE SHOULDER:

1. ACTIVATE HIGH-INTENSITY ROTATING, FLASHING, OSCILLATING, OR STROBE LIGHTS.
2. POSITION THE PROTECTIVE VEHICLE/TMA A MINIMUM OF 150 FEET IN ADVANCE OF THE WORK SPACE, IF POSSIBLE.
3. ONCE YOU EXIT THE WORK VEHICLE, RETURN ONLY WHEN ADJUSTING POSITION OR READY TO LEAVE THE WORK LOCATION.

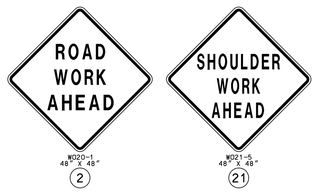

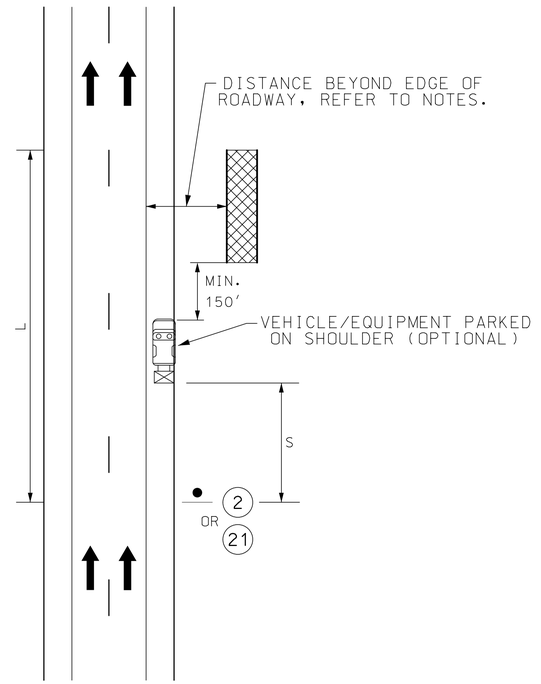

TYPICAL APPLICATIONS
TRAFFIC CONTROL
2 OF 30

CMT
CRAWFORD, MURPHY & TILLY, INC.
1631 WEST ELFINDALE STREET
SPRINGFIELD, MO 65807 (417) 869-6009
ENGINEERING CORPORATION - 000631

© Copyright CMT, Inc.

MISSOURI HIGHWAYS AND TRANSPORTATION COMMISSION
105 WEST CAPITOL
JEFFERSON CITY, MO 65102
1-888-ASK-MODOT (1-888-275-6636)

STATE OF MISSOURI
DALLAS P. JOPLIN
NUMBER PE-2011015760
PROFESSIONAL ENGINEER

THIS SHEET HAS BEEN SIGNED, SEALED AND DATED ELECTRONICALLY.

DATE PREPARED	8/2/2024
ROUTE	60
STATE	MO
DISTRICT	SW
SHEET NO.	91
COUNTY	WEBSTER
JOB NO.	J7P3425C
CONTRACT ID.	
PROJECT NO.	
BRIDGE NO.	

DESCRIPTION | DATE | REV.

IF A SEAL IS PRESENT ON THIS SHEET IT HAS BEEN ELECTRONICALLY SEALED AND DATED.

ROAD CLOSURE

SPEED	SIGN SPACING (ft.)		TAPER LENGTH (ft.)		OPTIONAL	CHANNELIZER SPACING (ft.)	
PERMANENT POSTED (MPH)	UNDIVIDED (S)	DIVIDED (S)	SHOULDER (1) (T1)	LANE (2) (T2)	BUFFER LENGTH (ft.) (B)	TAPERS	BUFFER/ WORK AREAS
0-35	200	200	-	-	250	-	-
40-45	350	500	-	-	360	-	-
50-55	500	1000	-	-	495	-	-

1 SHOULDER TAPER LENGTH BASED ON 10 ft. (STANDARD SHOULDER WIDTH) OFFSET.
2 LANE TAPER LENGTH BASED ON 12 ft. (STANDARD LANE WIDTH) OFFSET.

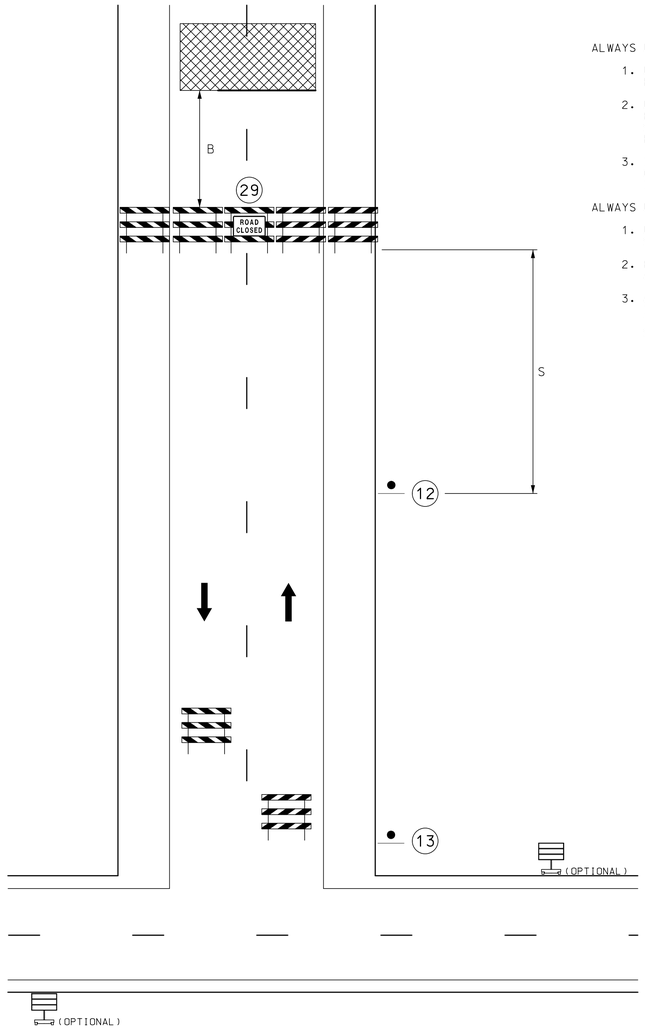

ALWAYS USE ADVANCE WARNING SIGNS:

1. USE EPG 616.17M (TA-17M) MOBILE OPERATIONS ON TWO-LANE HIGHWAYS FOR PLACEMENT OF ADVANCE WARNING SIGNS.
2. USE LIGHTWEIGHT ROAD CLOSED SIGN PLACED ON THE CENTER BARRICADE LOCATED AT THE FULL CLOSURE OR PLACE A RIGID SIGN 7 TO 10 FEET BEHIND THE BARRICADES AT THE SIGN HEIGHT APPROPRIATE FOR THE ROADWAY TYPE.
3. IF THE "ROAD CLOSED XX MILES AHEAD LOCAL TRAFFIC ONLY" OR "ROAD CLOSED TO THRU TRAFFIC" SIGN IS USED, PLACE IT AT THE FIRST STATE ROUTE.

ALWAYS USE BARRICADE AT THE FULL CLOSURE:

1. USE CRASHWORTHY BARRICADES TO CLOSE ENTIRE DRIVING SURFACE INCLUDING THE SHOULDER.
2. BARRICADES AND "ROAD CLOSED" SIGNS MAY BE LOCATED AT THE NEAREST STATE ROUTE INTERSECTION.
3. ADDITIONAL BARRICADES CAN BE STAGGERED AT OTHER INTERSECTIONS IN ADVANCE OF THE FULL CLOSURE AT THE DISCRETION OF THE SUPERVISOR, WORK ZONE SPECIALIST, OR ENGINEER.

WORK SPACE | BARRICADE | CHANGABLE MESSAGE SIGN

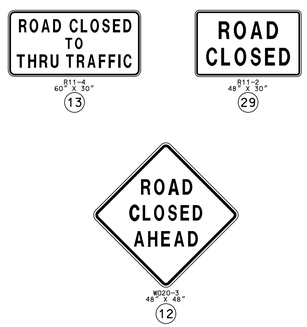

STATIONARY SHOULDER WORK

SPEED	SIGN SPACING (ft.)	TAPER LENGTH (ft.)		OPTIONAL	CHANNELIZER SPACING (ft.)	
PERMANENT POSTED (MPH)	DIVIDED (S)	SHOULDER (1) (T1)	LANE (2) (T2)	BUFFER LENGTH (ft.) (B)	TAPERS	BUFFER/ WORK AREAS
0-35	200	70	-	250	35	40
40-45	500	150	-	360	40	80
50-55	1000	185	-	495	50	80
60-70	SA - 1000 SB - 1500	235	-	730	60	120

1 SHOULDER TAPER LENGTH BASED ON 10 ft. (STANDARD SHOULDER WIDTH) OFFSET.
2 LANE TAPER LENGTH BASED ON 12 ft. (STANDARD LANE WIDTH) OFFSET.

ALWAYS USE ADVANCE WARNING SIGNS:

1. SET ADDITIONAL WARNING SIGNS AT EACH INTERSECTION WITH ANOTHER STATE HIGHWAY WITHIN THE WORK ZONE.
2. CHANNELIZERS MAY BE REDUCED OR ELIMINATED.

ALWAYS USE A PROTECTIVE VEHICLE. IF AVAILABLE, USE A TRUCK/TRAILER MOUNTED ATTENUATOR (TMA).

1. ACTIVATE HIGH-INTENSITY ROTATING, FLASHING, OSCILLATING OR STROBE LIGHTS.
2. POSITION THE PROTECTIVE VEHICLE/TMA A MINIMUM OF 150 FEET IN ADVANCE OF THE WORK SPACE, IF POSSIBLE.
3. IF THE PROTECTIVE VEHICLE IS EQUIPPED WITH A TRUCK/TRAILER MOUNTED ATTENUATOR (TMA), PLACE A STATIC SIGN UNDER THE FLASHING ARROW PANEL AND USE FOUR-CORNER OR ALTERNATING DIAMOND CAUTION MODE.
4. A WORK VEHICLE MAY BE USED AS A PROTECTIVE VEHICLE.
5. ONCE YOU EXIT THE WORK VEHICLE, RETURN ONLY WHEN ADJUSTING POSITION OR READY TO LEAVE THE WORK LOCATION.

WORK SPACE | PROTECTIVE VEHICLE | CHANNELIZERS

TRUCK MOUNTED ATTENUATOR (TMA) | FLASHING ARROW PANEL

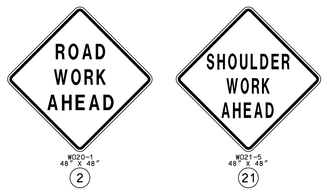

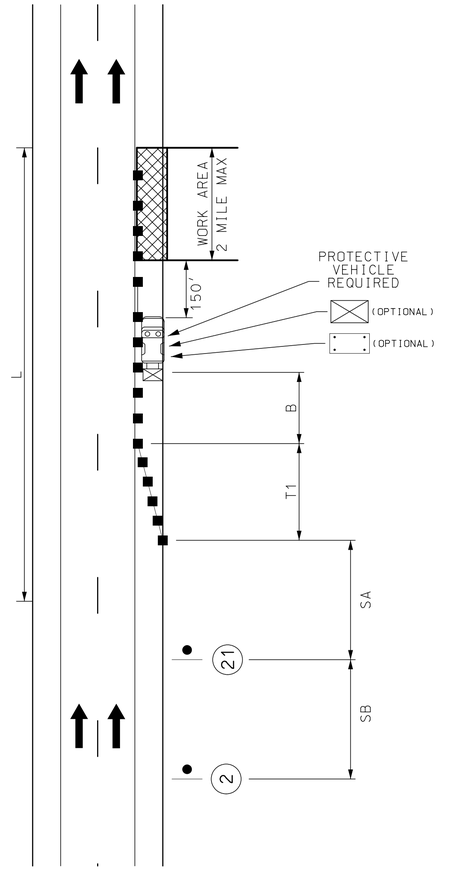

TYPICAL APPLICATIONS
TRAFFIC CONTROL
3 OF 30

STATE OF MISSOURI
DALLAS P. JOPLIN
NUMBER PE-2011015760
PROFESSIONAL ENGINEER
THIS SHEET HAS BEEN SIGNED, SEALED AND DATED ELECTRONICALLY.

DATE PREPARED: 8/2/2024
ROUTE: 60 | STATE: MO
DISTRICT: SW | SHEET NO.: 92
COUNTY: WEBSTER
JOB NO.: J7P3425C
CONTRACT ID.:
PROJECT NO.:
BRIDGE NO.:

IF A SEAL IS PRESENT ON THIS SHEET IT HAS BEEN ELECTRONICALLY SEALED AND DATED.

DESCRIPTION | DATE | REV.

MISSOURI HIGHWAYS AND TRANSPORTATION COMMISSION
105 WEST CAPITOL
JEFFERSON CITY, MO 65102
1-888-ASK-MODOT (1-888-275-6636)

CMT
© Copyright CMT, Inc.
CRAWFORD, MURPHY & TILLY, INC.
1631 WEST ELFINDALE STREET
SPRINGFIELD, MO 65807 (417) 869-6009
ENGINEERING CORPORATION - 000631

LANE CLOSURE WITH TEMPORARY TRAFFIC BARRIER

SPEED	SIGN SPACING (ft.)	TAPER LENGTH (ft.)		OPTIONAL	CHANNELIZER SPACING (ft.)	
PERMANENT POSTED (MPH)	DIVIDED (S)	SHOULDER (1) (T1)	LANE (2) (T2)	BUFFER LENGTH (ft.) (B)	TAPERS	BUFFER/ WORK AREAS
50-55	1000	185	660	495	50	80
60-70	1000	235	840	730	60	120
1 SHOULDER TAPER LENGTH BASED ON 10 ft. (STANDARD SHOULDER WIDTH) OFFSET. 2 LANE TAPER LENGTH BASED ON 12 ft. (STANDARD LANE WIDTH) OFFSET.						

ALWAYS USE ADVANCE WARNING SIGNS:

1. FOR LONG-TERM OPERATIONS, REFER TO EPG 616.6.2.2 FLAGS AND ADVANCE WARNING RAIL SYSTEM.
2. FOR SPEED LIMIT GUIDELINES, REFER TO EPG 616.12 WORK ZONE SPEED LIMITS.

ALWAYS USE CHANNELIZERS TO CREATE A BUFFER AREA WHEN USING TEMPORARY TRAFFIC BARRIER.

TEMPORARY TRAFFIC BARRIER: TEMPORARY TRAFFIC BARRIERS MAY BE NEEDED ON PROJECTS BASED ON PAVEMENT EDGE TREATMENTS, BRIDGE REHABILITATIONS/REPLACEMENTS, ETC.

1. A FLARE RATE OF 8:1 FOR THE FLARED CONCRETE BARRIER IS USED FROM THE EDGE OF TRAVELWAY TO THE LIMIT OF THE CLEAR ZONE WHERE THE SIDE SLOPE IS 6:1 OR FLATTER.
2. CONCRETE BARRIER WITHIN THE CLEAR ZONE WILL USE AN APPROVED CRASH CUSHION WHEN THE NORMAL POSED SPEED LIMIT IS GREATER THAN 35 MPH.
3. CONCRETE BARRIER WITHIN THE CLEAR ZONE CAN USE EITHER A BARRIER HEIGHT TRANSITION OR AN APPROVED CRASH CUSHION WHEN THE NORMAL POSTED SPEED LIMIT IS LESS THAN 35 MPH.
4. REMOVE AND/OR MODIFY ANY EXISTING PAVEMENT MARKING AS NEEDED. TEMPORARY PAVEMENT MARKING REQUIRED WITH LONG TERM CLOSURES.
5. FOR TEMPORARY TRAFFIC BARRIER, REFER TO EPG 616.6.85 TEMPORARY TRAFFIC BARRIERS.

REVIEW SUPPORTING FIGURE: LANE RESTRICTION ON DIVIDED HIGHWAYS WIDTH CLEARANCE AT BRIDGE FOR LANE CLOSURE WITH WIDTH RESTRICTION.

WORK SPACE | IMPACT ATTENUATOR | FLASHING ARROW PANEL (FAP) | TEMPORARY BARRIER | CHANNELIZERS

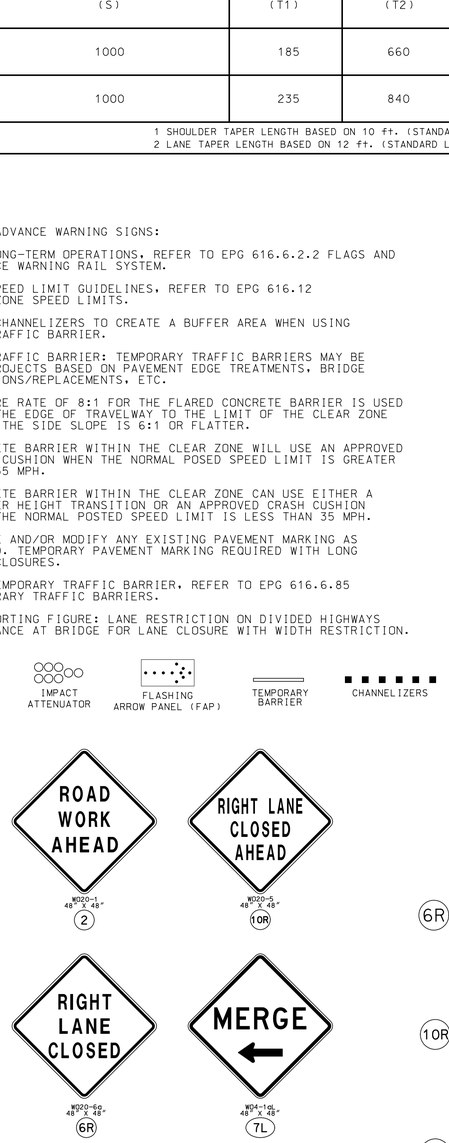

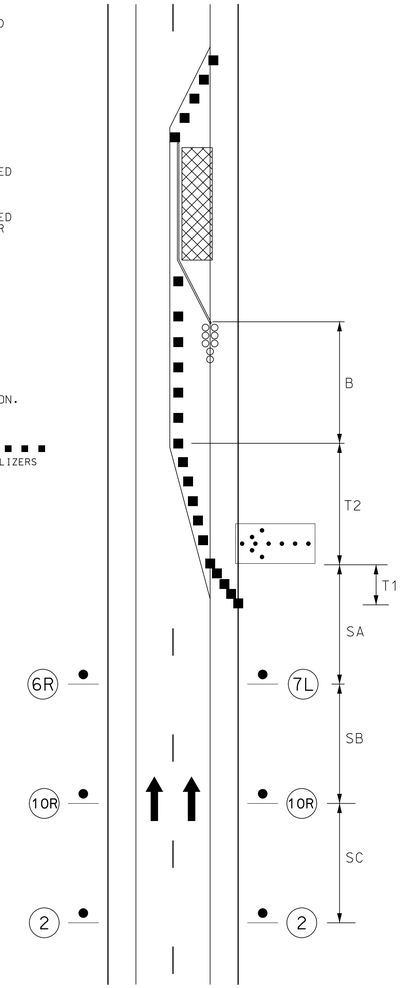

SHOULDER WORK WITH MINOR ENCROACHMENT

SPEED	SIGN SPACING (ft.)	TAPER LENGTH (ft.)		OPTIONAL	CHANNELIZER SPACING (ft.)	
PERMANENT POSTED (MPH)	UNDIVIDED (S)	SHOULDER (1) (T1)	LANE (2) (T2)	BUFFER LENGTH (ft.) (B)	TAPERS	BUFFER/ WORK AREAS
0-35	200	70	-	250	35	40
40-45	350	150	-	360	40	80
50-55	500	185	-	495	50	80
60-70	1000	235	-	730	60	120
1 SHOULDER TAPER LENGTH BASED ON 10 ft. (STANDARD SHOULDER WIDTH) OFFSET. 2 LANE TAPER LENGTH BASED ON 12 ft. (STANDARD LANE WIDTH) OFFSET.						

ALWAYS USE ADVANCE WARNING SIGNS AND CHANNELIZERS:

1. SET ADDITIONAL WARNING SIGNS AT EACH INTERSECTION WITH ANOTHER STATE HIGHWAY WITHIN THE WORK ZONE.

ALWAYS USE A PROTECTIVE VEHICLE WHEN WORKERS ARE PRESENT. IF AVAILABLE, USE ATRUCK/TRAILER MOUNTED ATTENUATOR (TMA).

1. ACTIVATE HIGH-INTENSITY ROTATING, FLASHING, OSCILLATING OR STROBE LIGHTS.
2. POSITION THE PROTECTIVE VEHICLE/TMA A MINIMUM OF 150 FEET IN ADVANCE OF THE WORK SPACE, IF POSSIBLE.
3. IF THE PROTECTIVE VEHICLE IS EQUIPPED WITH A TRUCK/TRAILER MOUNTED ATTENUATOR (TMA), PLACE A STATIC SIGN UNDER THE FLASHING ARROW PANEL AND USE FOUR-CORNER OR ALTERNATING DIAMOND CAUTION MODE.
4. A WORK VEHICLE MAY BE USED AS A PROTECTIVE VEHICLE.
5. ONCE YOU EXIT THE WORK VEHICLE, RETURN ONLY WHEN ADJUSTING POSITION OR READY TO LEAVE THE WORK LOCATION.

LANES ENCROACHMENT: IF 10 FEET OF DRIVING SURFACE IS NOT PROVIDED, REFER TO APPROPRIATE ENCROACHMENT OR LANE CLOSURE TYPICAL APPLICATION.

WORK SPACE | PROTECTIVE VEHICLE | CHANNELIZERS | TRUCK MOUNTED ATTENUATOR (TMA) | FLASHING ARROW PANEL

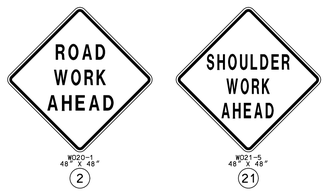

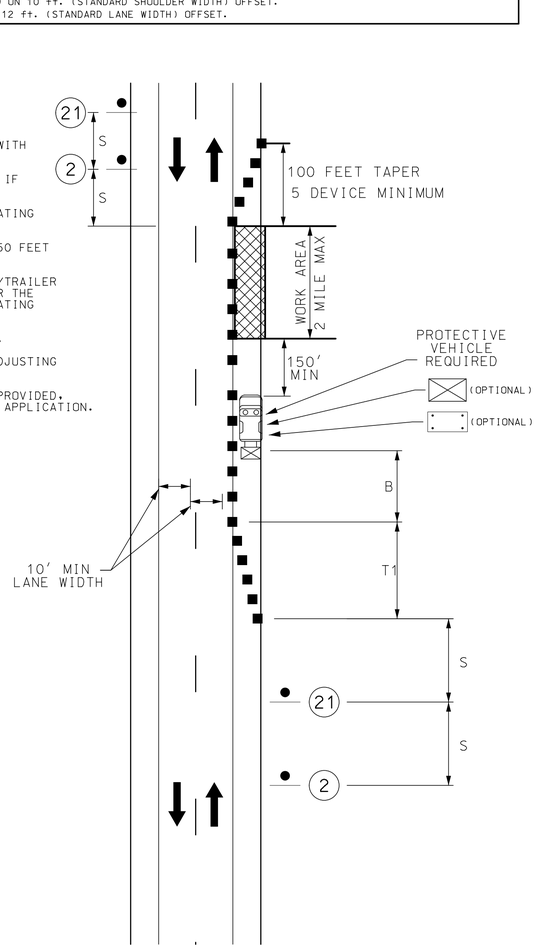

TYPICAL APPLICATIONS
TRAFFIC CONTROL
4 OF 30

STATE OF MISSOURI
DALLAS P. JOPLIN
NUMBER PE-2011015760
PROFESSIONAL ENGINEER
THIS SHEET HAS BEEN SIGNED, SEALED AND DATED ELECTRONICALLY.

DATE PREPARED: 8/2/2024
ROUTE: 60 | STATE: MO
DISTRICT: SW | SHEET NO.: 93
COUNTY: WEBSTER
JOB NO.: J7P3425C
CONTRACT ID.:
PROJECT NO.:
BRIDGE NO.:

DATE	DESCRIPTION

IF A SEAL IS PRESENT ON THIS SHEET IT HAS BEEN ELECTRONICALLY SEALED AND DATED.

MISSOURI HIGHWAYS AND TRANSPORTATION COMMISSION
105 WEST CAPITOL
JEFFERSON CITY, MO 65102
1-888-ASK-MODOT (1-888-275-6636)

CMT

©Copyright CMT, Inc.

CRAWFORD, MURPHY & TILLY, INC.
1631 WEST ELFINDALE STREET
SPRINGFIELD, MO 65807 (417) 869-6009
ENGINEERING CORPORATION - 000631

REV.

STRIPING OPERATIONS ON A TWO-LANE HIGHWAY

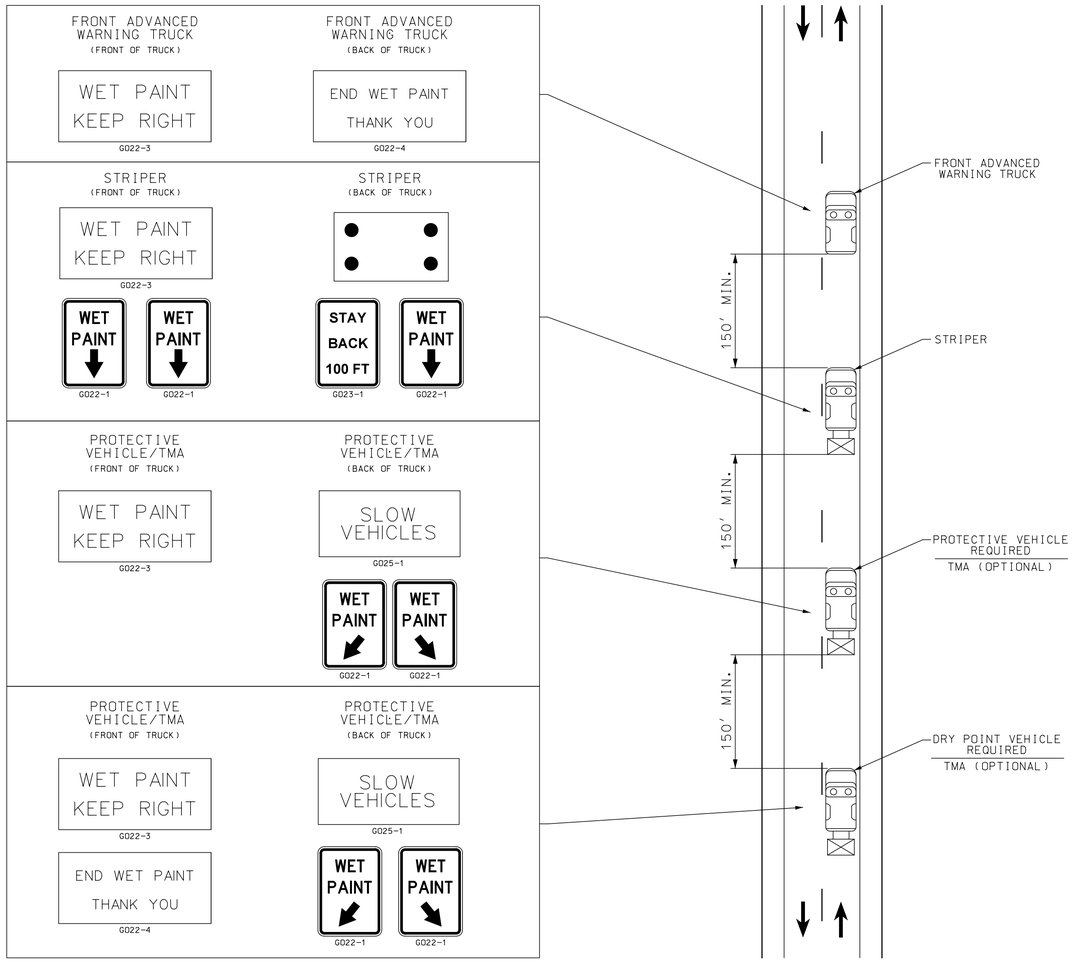

ALWAYS USE VEHICLE MOUNTED ADVANCE WARNING SIGN ON THE PROTECTIVE VEHICLE

ALWAYS USE A PROTECTIVE VEHICLE. IF AVAILABLE, USE A TRUCK/TRAILER MOUNTED ATTENUATOR (TMA)

1. ACTIVATE HIGH INTESITY ROTATING, FLASHING, OSCILLATING, OR STROBE LIGHTS.
2. POSITION THE PROTECTIVE VEHICLE/TMA A MINIMUM OF 150 FEET IN ADVANCE OF THE WORK SPACE, IF POSSIBLE.
3. IF THE PROTECTIVE VEHICLE IS EQUIPPED WITH A TMA, PLACE A STATIC SIGN UNDER THE FLASHING ARROW PANEL.
4. IF USED, OPERATE THE FLASHING ARROW PANEL IN THE FOUR-CORNER OR ALTERNATING DIAMOND CAUTION MODE.
5. SET VEHICLE MOUNTED SIGN AT A RECIMMENDED HEIGHT OF 48 INCHES ABOCE THE ROAD.

USE THIS TYPICAL APPLICATION FOR THE PLACEMENT/REMOVAL OF ADVANCE WARNING SIGNS, AND DEBRIS/ANIMAL REMOVAL ON TWO-LANE HIGHWAYS:

1. EPG 616.17M (TA-17M) MOBILE OPERATIONS ON A TWO-LANE HIGHWAY.
2. ALL OTHER OPERATIONS THAT REQUIRE WORKERS ON FOOT, REFER TO THE PROPER LANE CLOSURE TYPICAL APPLICATION.

LANE SHIFT ON TWO-LANE ROADWAY

SPEED	SIGN SPACING (ft.)		TAPER LENGTH (ft.)		OPTIONAL	CHANNELIZER SPACING (ft.)	
PERMANENT POSTED (MPH)	UNDIVIDED (S)	DIVIDED (S)	SHOULDER (1) (T1)	LANE (2) (T2)	BUFFER LENGTH (ft.) (B)	TAPERS	BUFFER/ WORK AREAS
0-35	200	-	70	245	280	35	40
40-45	350	-	150	540	400	40	80
50-55	500	-	185	660	560	50	80
60-70	1000	-	235	840	840	60	120

1 SHOULDER TAPER LENGTH BASED ON 10 ft. (STANDARD SHOULDER WIDTH) OFFSET.
2 LANE TAPER LENGTH BASED ON 12 ft. (STANDARD LANE WIDTH) OFFSET.

NOTES:

1. SEE EPG 616.12 WORK ZONE SPEED LIMITS FOR SPEED LIMIT GUIDELINES.
2. FOR LONG-TERM STATIONARY WORK, EXISTING CONFLICTING PVMNT. MARKINGS SHALL BE REMOVED AND TEMPORARY MARKINGS SHALL BE INSTALLED BEFORE TRAFFIC PATTERNS ARE CHANGED.
3. TEMPORARY PAVEMENT MARKING REQUIRED WITH LONG TERM CLOSURES.
4. FOR SHORT TERM OPERATIONS WHERE IT IS NOT FEASIBLE TO MODIFY PAVEMENT MARKING, DEVICE SPACING ARE ONE-HALF OF THE REQUIRED DEVICE SPACING SHOWN ABOVE.

   (3) WHERE FULL LENGTH SHIFTING TAPERS CANNOT BE PROVIDED, SIGN W01-3 OR W01-4 IS INSTALLED IN ADVANCE OF THE LANE SHIFTS.
5. IF RUMBLE STRIPS ARE USED, REVIEW EPG 616.6.87 RUMBLE STRIPS.
6. FOR LONG-TERM OPERATIONS, REFER TO EPG 616.6.22 FLAGS AND ADVANCE WARNING RAIL SYSTEM.

CHANNELIZERS

TEMPORARY RAISED PAVEMENT MARKER

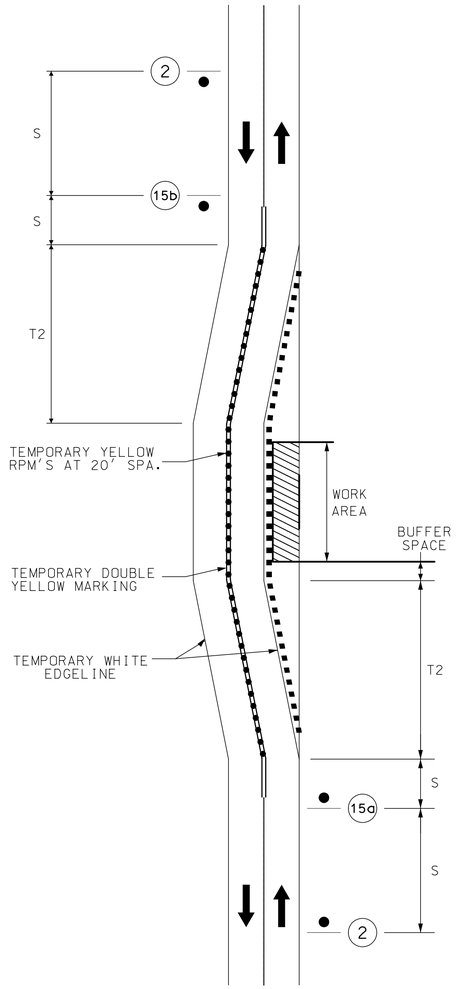

TYPICAL APPLICATIONS

TRAFFIC CONTROL
5 OF 30

STATE OF MISSOURI
DALLAS P. JOPLIN
NUMBER PE-2011015760
PROFESSIONAL ENGINEER

THIS SHEET HAS BEEN SIGNED, SEALED AND DATED ELECTRONICALLY.

DATE PREPARED: 8/2/2024
ROUTE: 60 | STATE: MO
DISTRICT: SW | SHEET NO.: 94
COUNTY: WEBSTER
JOB NO.: J7P3425C
CONTRACT ID.:
PROJECT NO.:
BRIDGE NO.:

DATE	DESCRIPTION

IF A SEAL IS PRESENT ON THIS SHEET IT HAS BEEN ELECTRONICALLY SEALED AND DATED.

MISSOURI HIGHWAYS AND TRANSPORTATION COMMISSION
105 WEST CAPITOL
JEFFERSON CITY, MO 65102
1-888-ASK-MODOT (1-888-275-6636)

CMT
©Copyright CMT, Inc.
CRAWFORD, MURPHY & TILLY, INC.
1631 WEST ELFINDALE STREET
SPRINGFIELD, MO 65807 (417) 869-6009
ENGINEERING CORPORATION - 000631

REV.

L:\MoDOT\20092124-00\Draw\Roadway\Sheets\090-094_TC_01-05_J7P3425C_i100.dgn 8:36:36 AM 8/2/2024

TRAFFIC CONTROL LEGEND

- SIGN (SINGLE SIDED)
- SIGN (DOUBLE SIDED)
- FLAGGER
- CONE
- CHANNELIZER
- BARRICADE
- CHANGEABLE MESSAGE BOARD
- WORK AREA
- COMPLETED WORK
- PAVEMENT REMOVALS
- TEMPORARY PAVEMENT

PHASE 1A

1. CONSTRUCT PROP. ROUTE A AND NORTH OUTER ROAD OUTSIDE EXISTING ROADWAY. NO IMPACTS TO EXISTING TRAFFIC OPERATIONS ON ROUTE A SHALL OCCUR DURING THIS PHASE.
2. WORK ZONE SIGNING ALONG ROUTE A AND US60 EASTBOUND AND WESTBOUND.
3. REMOVE PAVEMENT AT ROUTE O CROSSOVER ONCE INTERCHANGE IS COMPLETE AND OPEN TO TRAFFIC.
4. MAINTAIN BUSINESS AND RESIDENTIAL ACCESS AT ALL TIMES.

WD21-5
48" X 48"
(21)

R2-1
36" X 48"
(44B)

SCALE

0 100 200 300 400 500

DISCLAIMER
THE PROFESSIONAL WHOSE SIGNATURE AND PERSONAL SEAL APPEAR HEREON ASSUMES RESPONSIBILITY ONLY FOR WHAT APPEARS ON THIS PAGE, AND DISCLAIMS (PURSUANT TO SECTION 327.411 RSMO) SPECIFICATION, ESTIMATES, REPORTS, OR OTHER DOCUMENTS OR INSTRUMENTS NOT SEALED BY THE UNDERSIGNED PROFESSIONAL RELATING TO OR INTENDED TO BE USED FOR ANY PART OR PARTS OF THE PROJECT TO WHICH THIS PAGE REFERS.

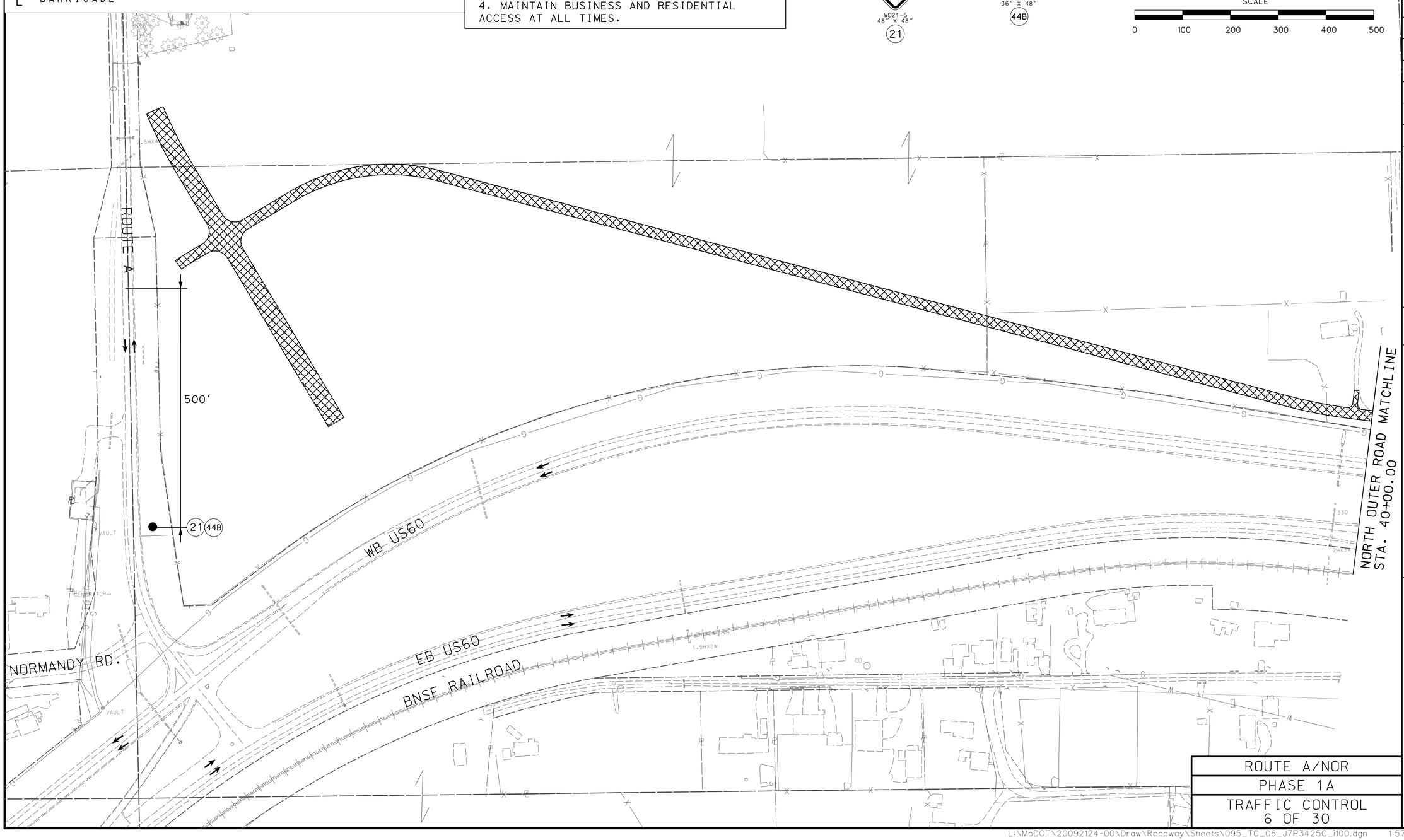

ROUTE A/NOR
PHASE 1A
TRAFFIC CONTROL
6 OF 30

STATE OF MISSOURI
DALLAS P. JOPLIN
NUMBER PE-2011015760
PROFESSIONAL ENGINEER

THIS SHEET HAS BEEN SIGNED, SEALED AND DATED ELECTRONICALLY.

DATE PREPARED	
9/3/2024	
ROUTE	STATE
60	MO
DISTRICT	SHEET NO.
SW	95
COUNTY	
WEBSTER	
JOB NO.	
J7P3425C	
CONTRACT ID.	
PROJECT NO.	
BRIDGE NO.	

DATE	DESCRIPTION	REV.

IF A SEAL IS PRESENT ON THIS SHEET IT HAS BEEN ELECTRONICALLY SEALED AND DATED.

MISSOURI HIGHWAYS AND TRANSPORTATION COMMISSION

105 WEST CAPITOL
JEFFERSON CITY, MO 65102
1-888-ASK-MODOT (1-888-275-6636)

CMT
©Copyright CMT, Inc.
CRAWFORD, MURPHY & TILLY, INC.
1631 WEST ELFINDALE STREET
SPRINGFIELD, MO 65807 (417) 869-6009
ENGINEERING CORPORATION - 000631

L:\MoDOT\20092124-00\Draw\Roadway\Sheets\095_TC_06_J7P3425C_i100.dgn 1:57:51 PM 9/3/2024

TRAFFIC CONTROL LEGEND

- SIGN (SINGLE SIDED)
- SIGN (DOUBLE SIDED)
- FLAGGER
- CONE
- CHANNELIZER
- BARRICADE
- CHANGEABLE MESSAGE BOARD
- WORK AREA
- COMPLETED WORK
- PAVEMENT REMOVALS
- TEMPORARY PAVEMENT

PHASE 1A

1. CONSTRUCT PROP. ROUTE A AND NORTH OUTER ROAD OUTSIDE EXISTING ROADWAY.
2. WORK ZONE SIGNING ALONG ROUTE A AND US60 EASTBOUND AND WESTBOUND.
3. REMOVE PAVEMENT AT ROUTE O CROSSOVER ONCE INTERCHANGE IS COMPLETE AND OPEN TO TRAFFIC.
4. MAINTAIN BUSINESS AND RESIDENTIAL ACCESS AT ALL TIMES.

SCALE
0 100 200 300 400 500

DISCLAIMER
THE PROFESSIONAL WHOSE SIGNATURE AND PERSONAL SEAL APPEAR HEREON ASSUMES RESPONSIBILITY ONLY FOR WHAT APPEARS ON THIS PAGE, AND DISCLAIMS (PURSUANT TO SECTION 327.411 RSMO) SPECIFICATION, ESTIMATES, REPORTS, OR OTHER DOCUMENTS OR INSTRUMENTS NOT SEALED BY THE UNDERSIGNED PROFESSIONAL RELATING TO OR INTENDED TO BE USED FOR ANY PART OR PARTS OF THE PROJECT TO WHICH THIS PAGE REFERS.

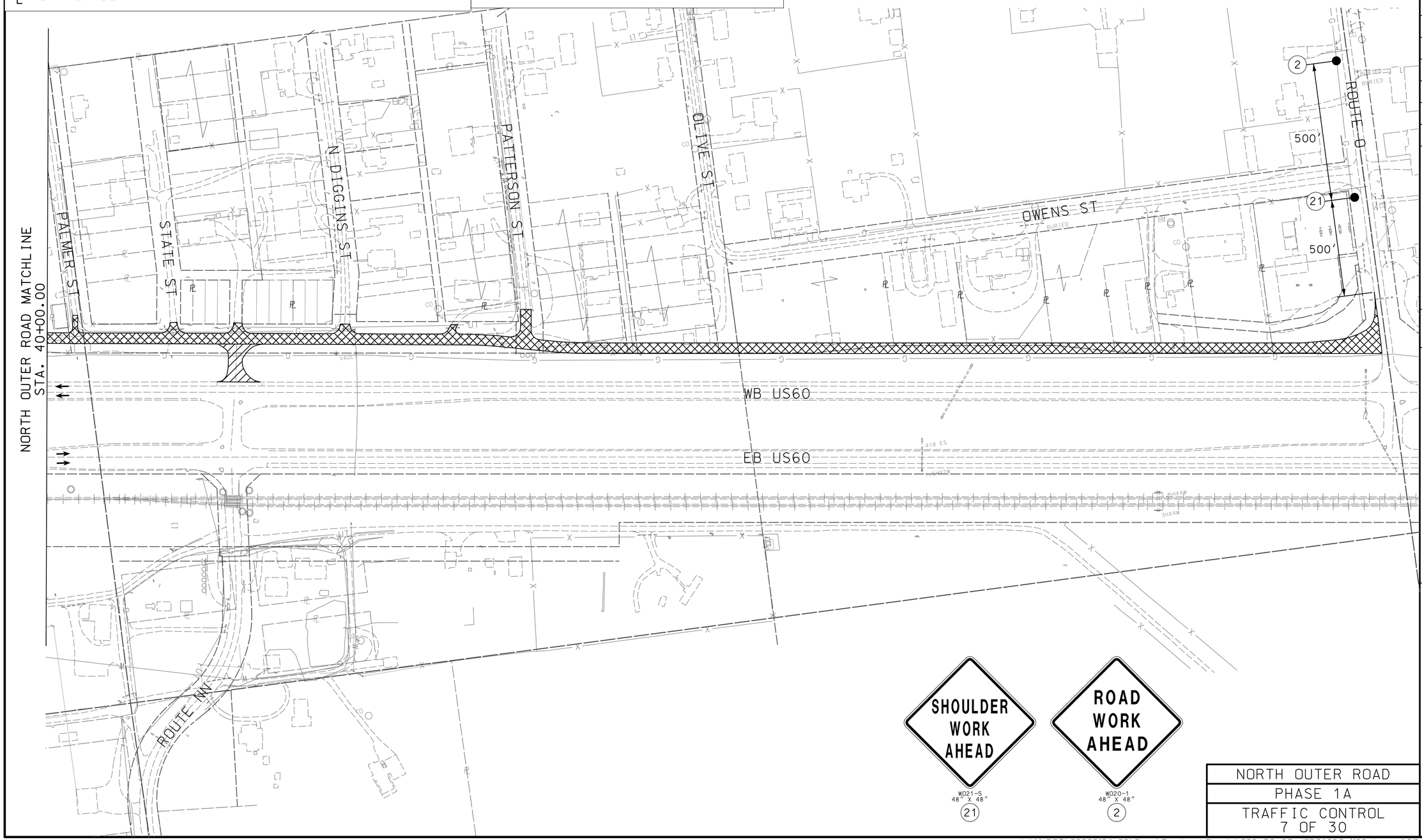

STATE OF MISSOURI
DALLAS P. JOPLIN
NUMBER PE-2011015760
PROFESSIONAL ENGINEER

THIS SHEET HAS been SIGNED, SEALED AND DATED ELECTRONICALLY.

DATE PREPARED	
9/3/2024	
ROUTE	STATE
60	MO
DISTRICT	SHEET NO.
SW	96
COUNTY	
WEBSTER	
JOB NO.	
J7P3425C	
CONTRACT ID.	
PROJECT NO.	
BRIDGE NO.	

DATE	DESCRIPTION	REV.

IF A SEAL IS PRESENT ON THIS SHEET IT HAS BEEN ELECTRONICALLY SEALED AND DATED.

MISSOURI HIGHWAYS AND TRANSPORTATION COMMISSION

MoDOT
105 WEST CAPITOL
JEFFERSON CITY, MO 65102
1-888-ASK-MODOT (1-888-275-6636)

CMT
© Copyright CMT, Inc.
CRAWFORD, MURPHY & TILLY, INC.
1631 WEST ELFINDALE STREET
SPRINGFIELD, MO 65807 (417) 869-6009
ENGINEERING CORPORATION - 000631

NORTH OUTER ROAD
PHASE 1A
TRAFFIC CONTROL
7 OF 30

L:\MoDOT\20092124-00\Draw\Roadway\Sheets\096_TC_07_J7P3425C_i100.dgn 1:57:54 PM 9/3/2024

TRAFFIC CONTROL LEGEND

- SIGN (SINGLE SIDED)
- SIGN (DOUBLE SIDED)
- FLAGGER
- CONE
- CHANNELIZER
- BARRICADE
- CHANGEABLE MESSAGE BOARD
- WORK AREA
- COMPLETED WORK
- PAVEMENT REMOVALS
- TEMPORARY PAVEMENT

PHASE 1B

1. CONSTRUCT ROUTE A TIE-INS.
2. CONSTRUCT TEMPORARY PAVEMENT TO WEST OF EXISTING ROUTE A.
3. TEMPORARY PAVEMENT TO BE MAINTAINED UNTIL TIE-INS ARE CONSTRUCTED.
4. EXISTING ROUTE A ACCESS TO WB US60 TO BE MAINTAINDED THROUGH PHASE 1, AND REMOVED AT THE COMPLETION OF PHASE 1.
5. MAINTAIN BUSINESS AND RESIDENTIAL ACCESS AT ALL TIMES.

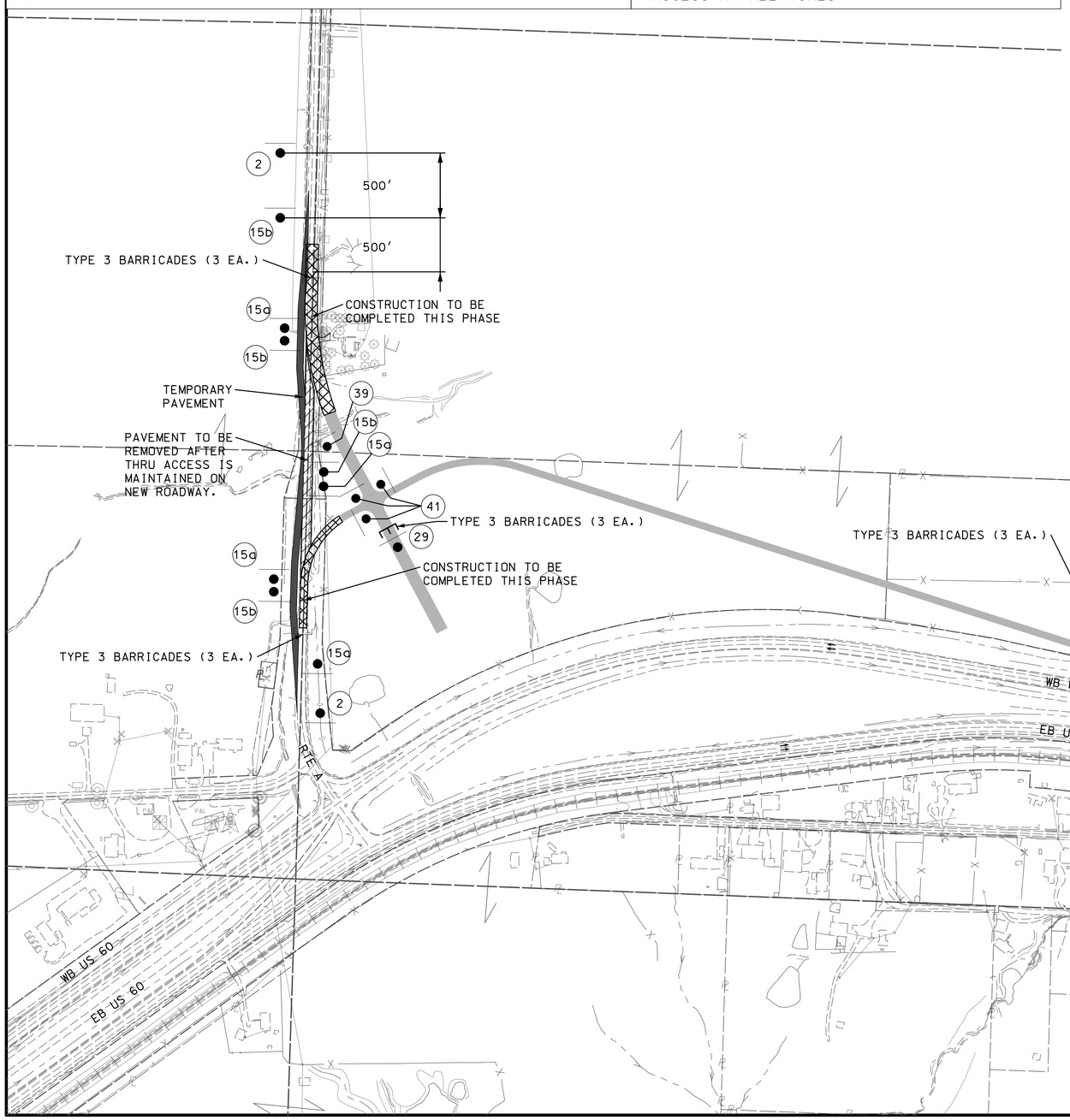

WD20-1
48" X 48"
(2)

R1-1
(41)

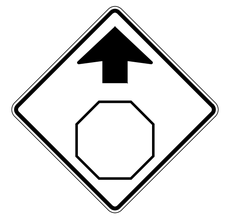

WD3-1
(39)

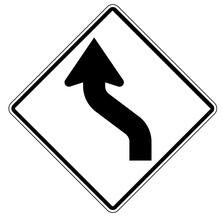

WD1-4L
48" X 48"
(15a)

R11-2
48" X 30"
(29)

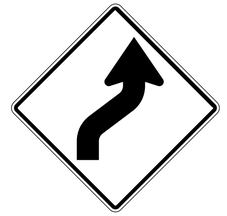

WD1-4R
48" X 48"
(15b)

DISCLAIMER
THE PROFESSIONAL WHOSE SIGNATURE AND PERSONAL SEAL APPEAR HEREON ASSUMES RESPONSIBILITY ONLY FOR WHAT APPEARS ON THIS PAGE, AND DISCLAIMS (PURSUANT TO SECTION 327.411 RSMO) SPECIFICATION, ESTIMATES, REPORTS, OR OTHER DOCUMENTS OR INSTRUMENTS NOT SEALED BY THE UNDERSIGNED PROFESSIONAL RELATING TO OR INTENDED TO BE USED FOR ANY PART OR PARTS OF THE PROJECT TO WHICH THIS PAGE REFERS.

SCALE
0 200 400 600 800 1000

ROUTE A/NOR
PHASE 1B
TRAFFIC CONTROL
8 OF 30

STATE OF MISSOURI
DALLAS P. JOPLIN
NUMBER PE-2011015760
PROFESSIONAL ENGINEER

THIS SHEET HAS BEEN SIGNED, SEALED AND DATED ELECTRONICALLY.

DATE PREPARED
9/3/2024

ROUTE	STATE
60	MO
DISTRICT	SHEET NO.
SW	97

COUNTY
WEBSTER

JOB NO.
J7P3425C

CONTRACT ID.

PROJECT NO.

BRIDGE NO.

DESCRIPTION	DATE

IF A SEAL IS PRESENT ON THIS SHEET IT HAS BEEN ELECTRONICALLY SEALED AND DATED.

MISSOURI HIGHWAYS AND TRANSPORTATION COMMISSION

105 WEST CAPITOL
JEFFERSON CITY, MO 65102
1-888-ASK-MODOT (1-888-275-6636)

CMT
© Copyright CMT, Inc.
CRAWFORD, MURPHY & TILLY, INC.
1631 WEST ELFINDALE STREET
SPRINGFIELD, MO 65807 (417) 869-6009
ENGINEERING CORPORATION - 000631

REV.

L:\MoDOT\20092124-00\Draw\Roadway\Sheets\097_TC_08_J7P3425C_I200.dgn 1:57:57 PM 9/3/2024

TRAFFIC CONTROL LEGEND

- SIGN (SINGLE SIDED)
- SIGN (DOUBLE SIDED)
- FLAGGER
- CONE
- CHANNELIZER
- BARRICADE
- CHANGEABLE MESSAGE BOARD
- WORK AREA
- COMPLETED WORK
- PAVEMENT REMOVALS
- TEMPORARY PAVEMENT

PHASE 2A

1. CONSTRUCT TEMPORARY J-TURNS BETWEEN ROUTE NN AND ROUTE O.
2. WORK ZONE SIGNING ALONG ROUTE A AND US60 EASTBOUND AND WESTBOUND.
3. USE TYPICAL APPLICATION 33-S. SEE SHEET 92.
4. MAINTAIN BUSINESS AND RESIDENTIAL ACCESS AT ALL TIMES.
5. J-TURN TO REMAIN IN PLACE THROUGH THE COMPLETION OF PHASE 3, AND REMOVE ONCE PHASE 3 IS COMPLETE.

SCALE
0 100 200 300 400 500

DISCLAIMER
THE PROFESSIONAL WHOSE SIGNATURE AND PERSONAL SEAL APPEAR HEREON ASSUMES RESPONSIBILITY ONLY FOR WHAT APPEARS ON THIS PAGE, AND DISCLAIMS (PURSUANT TO SECTION 327.411 RSMO) SPECIFICATION, ESTIMATES, REPORTS, OR OTHER DOCUMENTS OR INSTRUMENTS NOT SEALED BY THE UNDERSIGNED PROFESSIONAL RELATING TO OR INTENDED TO BE USED FOR ANY PART OR PARTS OF THE PROJECT TO WHICH THIS PAGE REFERS.

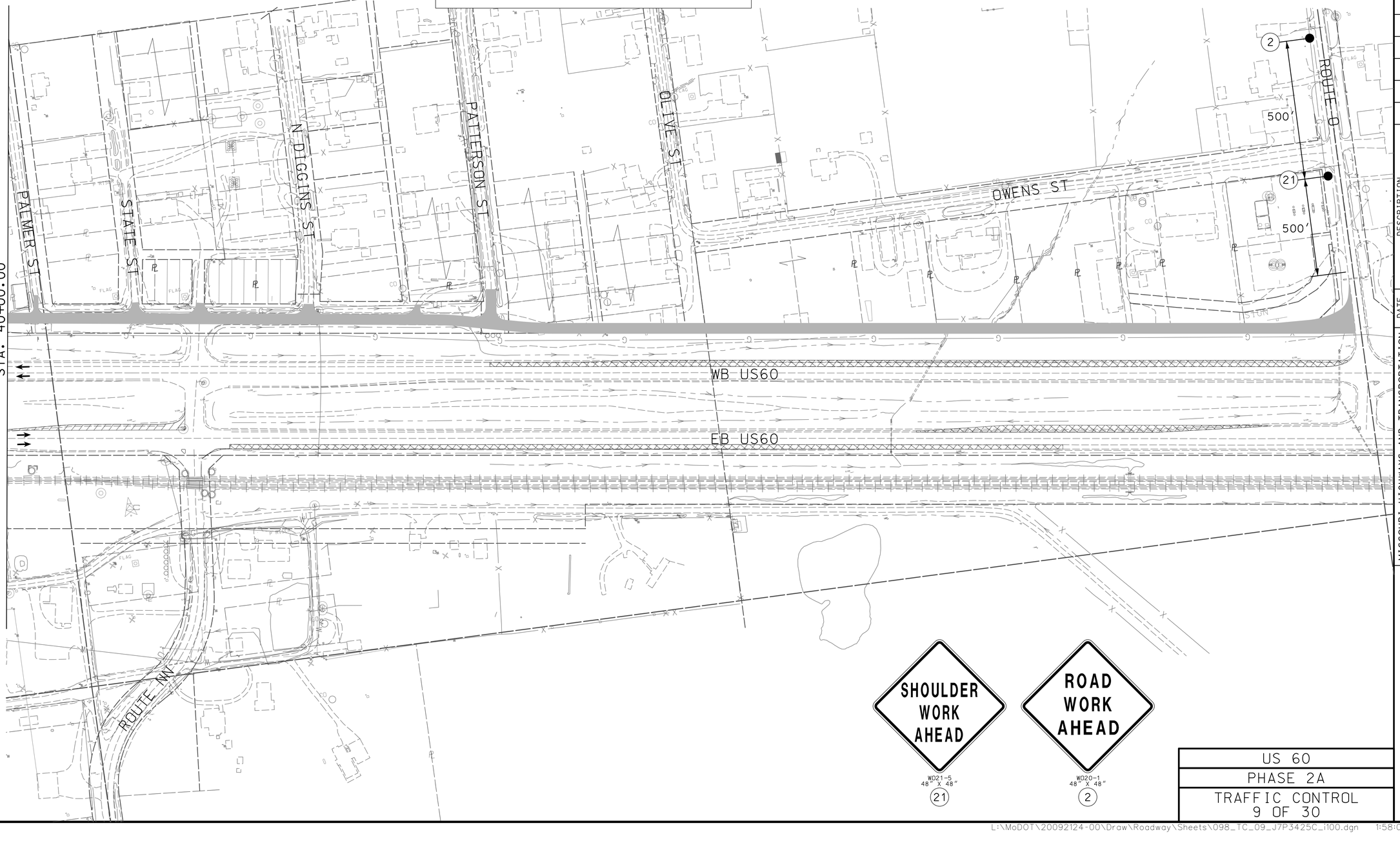

STATE OF MISSOURI
DALLAS P. JOPLIN
NUMBER PE-2011015760
PROFESSIONAL ENGINEER
THIS SHEET HAS BEEN SIGNED, SEALED AND DATED ELECTRONICALLY.

DATE PREPARED: 9/3/2024

ROUTE	STATE
60	MO
DISTRICT	SHEET NO.
SW	98

COUNTY: WEBSTER
JOB NO.: J7P3425C
CONTRACT ID.:
PROJECT NO.:
BRIDGE NO.:

DATE	DESCRIPTION

IF A SEAL IS PRESENT ON THIS SHEET IT HAS BEEN ELECTRONICALLY SEALED AND DATED.

MISSOURI HIGHWAYS AND TRANSPORTATION COMMISSION

105 WEST CAPITOL
JEFFERSON CITY, MO 65102
1-888-ASK-MODOT (1-888-275-6636)

CMT
CRAWFORD, MURPHY & TILLY, INC.
1631 WEST ELFINDALE STREET
SPRINGFIELD, MO 65807 (417) 869-6009
ENGINEERING CORPORATION - 000631
©Copyright CMT, Inc.

US 60
PHASE 2A
TRAFFIC CONTROL
9 OF 30

REV.

L:\MoDOT\20092124-00\Draw\Roadway\Sheets\098_TC_09_J7P3425C_i100.dgn 1:58:00 PM 9/3/2024

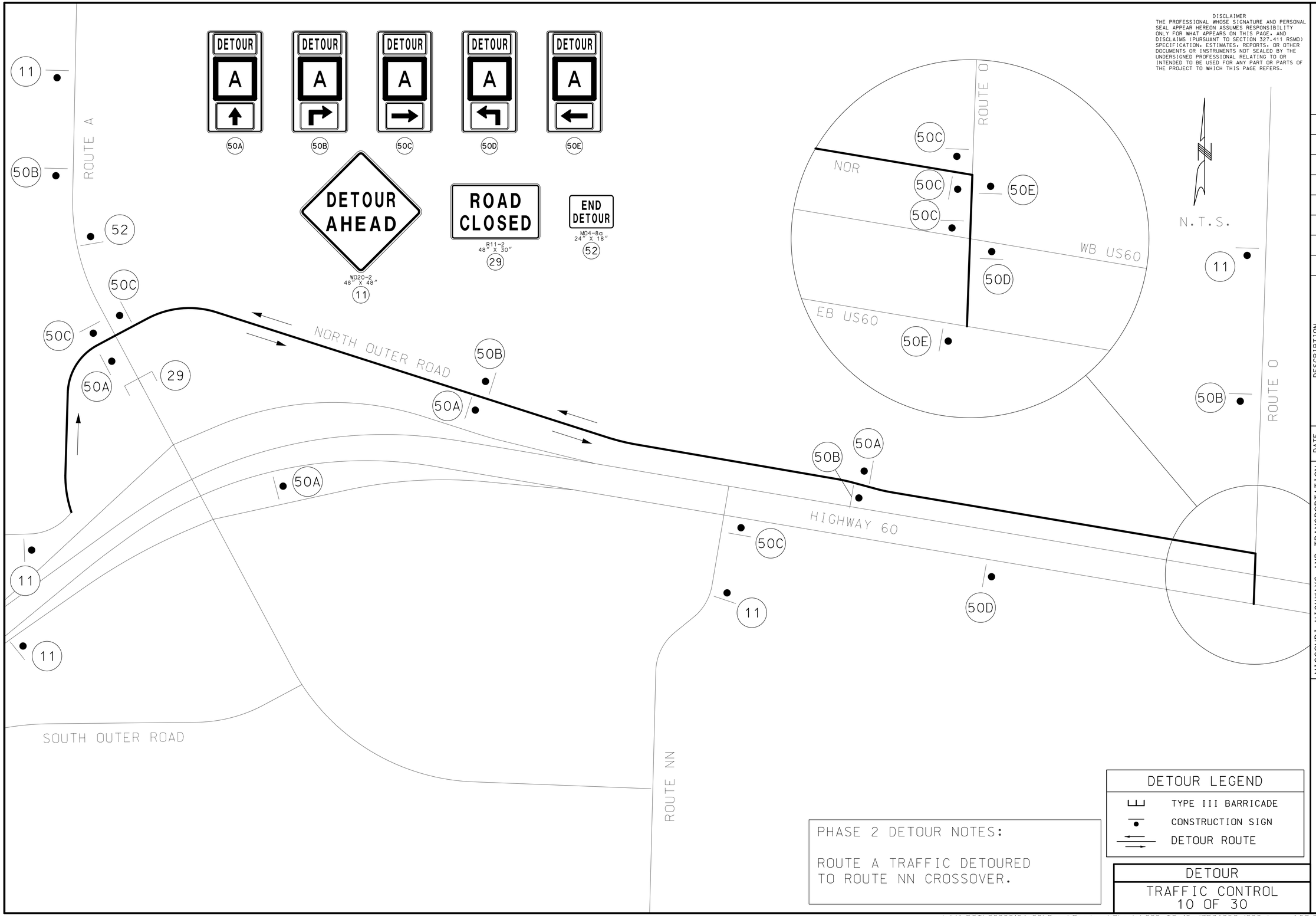

DISCLAIMER
THE PROFESSIONAL WHOSE SIGNATURE AND PERSONAL SEAL APPEAR HEREON ASSUMES RESPONSIBILITY ONLY FOR WHAT APPEARS ON THIS PAGE, AND DISCLAIMS (PURSUANT TO SECTION 327.411 RSMO) SPECIFICATION, ESTIMATES, REPORTS, OR OTHER DOCUMENTS OR INSTRUMENTS NOT SEALED BY THE UNDERSIGNED PROFESSIONAL RELATING TO OR INTENDED TO BE USED FOR ANY PART OR PARTS OF THE PROJECT TO WHICH THIS PAGE REFERS.

PHASE 2 DETOUR NOTES:

ROUTE A TRAFFIC DETOURED TO ROUTE NN CROSSOVER.

DETOUR LEGEND

- TYPE III BARRICADE
- CONSTRUCTION SIGN
- DETOUR ROUTE

DETOUR
TRAFFIC CONTROL
10 OF 30

STATE OF MISSOURI
DALLAS P. JOPLIN
NUMBER PE-2011015760
PROFESSIONAL ENGINEER

THIS SHEET HAS BEEN SIGNED, SEALED AND DATED ELECTRONICALLY.

DATE PREPARED	
9/3/2024	
ROUTE	STATE
60	MO
DISTRICT	SHEET NO.
SW	99
COUNTY	
WEBSTER	
JOB NO.	
J7P3425C	
CONTRACT ID.	
PROJECT NO.	
BRIDGE NO.	

IF A SEAL IS PRESENT ON THIS SHEET IT HAS BEEN ELECTRONICALLY SEALED AND DATED.

DESCRIPTION	DATE

REV.

MISSOURI HIGHWAYS AND TRANSPORTATION COMMISSION
105 WEST CAPITOL
JEFFERSON CITY, MO 65102
1-888-ASK-MODOT (1-888-275-6636)

CMT
© Copyright CMT, Inc.
CRAWFORD, MURPHY & TILLY, INC.
1631 WEST ELFINDALE STREET
SPRINGFIELD, MO 65807 (417) 869-6009
ENGINEERING CORPORATION - 000631

TRAFFIC CONTROL LEGEND

- SIGN (SINGLE SIDED)
- SIGN (DOUBLE SIDED)
- FLAGGER
- CONE
- CHANNELIZER
- BARRICADE
- CHANGEABLE MESSAGE BOARD
- WORK AREA
- COMPLETED WORK
- PAVEMENT REMOVALS
- TEMPORARY PAVEMENT

PHASE 2B

1. CONSTRUCT PORTION OF NEW EB US60, MSE WALL AND SOUTH BENT OF ROUTE A BRIDGE OVER US60.
2. NARROW EXISTING EB60 TO 1 LANE FOR CONSTRUCTION ACTIVITIES.
3. ROUTE A EB TRAFFIC DETOURED TO ROUTE O CROSSOVER. ROUTE A WB TRAFFIC WILL CONTINUE TO USE EXISTING ACCESS. SEE SHEET 99 FOR DETOUR.
4. REMOVE EXISTING ROUTE A/US 60 CENTER MEDIAN CROSSOVER.
5. MAINTAIN BUSINESS AND RESIDENTIAL ACCESS AT ALL TIMES.

SCALE
0 100 200 300 400 500

DISCLAIMER
THE PROFESSIONAL WHOSE SIGNATURE AND PERSONAL SEAL APPEAR HEREON ASSUMES RESPONSIBILITY ONLY FOR WHAT APPEARS ON THIS PAGE, AND DISCLAIMS (PURSUANT TO SECTION 327.411 RSMO) SPECIFICATION, ESTIMATES, REPORTS, OR OTHER DOCUMENTS OR INSTRUMENTS NOT SEALED BY THE UNDERSIGNED PROFESSIONAL RELATING TO OR INTENDED TO BE USED FOR ANY PART OR PARTS OF THE PROJECT TO WHICH THIS PAGE REFERS.

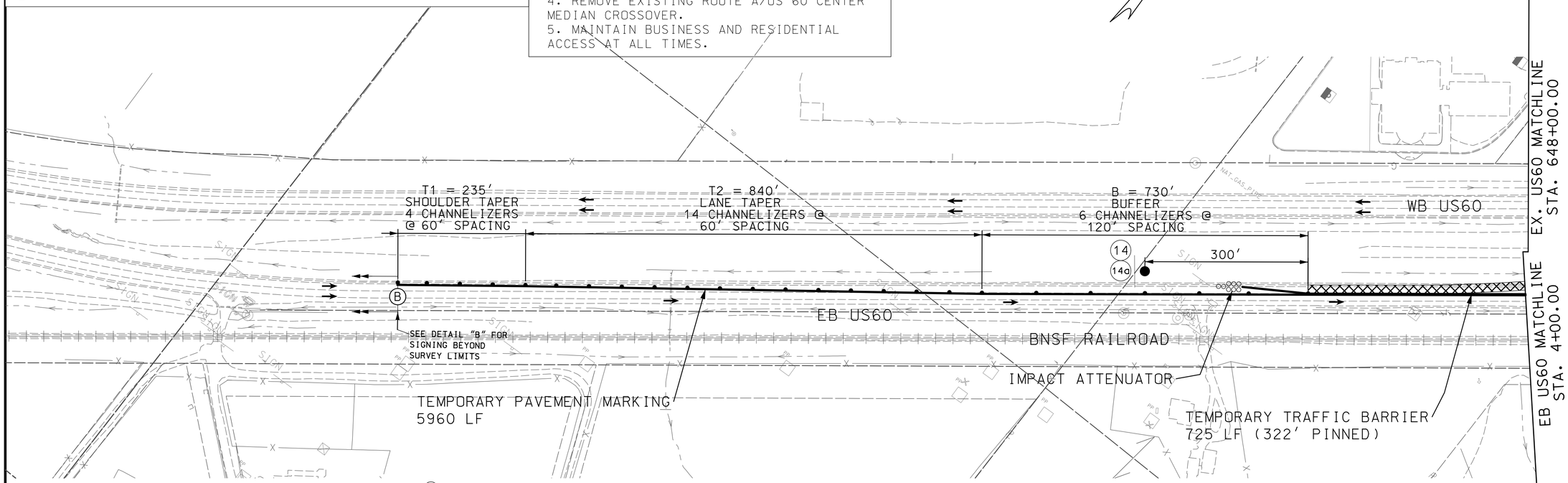

WD8-17
48″ x 48″
14

WD8-17P
30″ x 24″
14a

GD20-1
48″ X 24″
1

WD20-1
48″ X 48″
2

WD20-6a
48″ X 48″
6L

WD4-1qR
48″ X 48″
7R

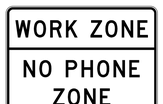

SPECIAL
48″ X 36″
9a

WD20-5
48″ X 48″
10L

DETAIL B
NOT TO SCALE

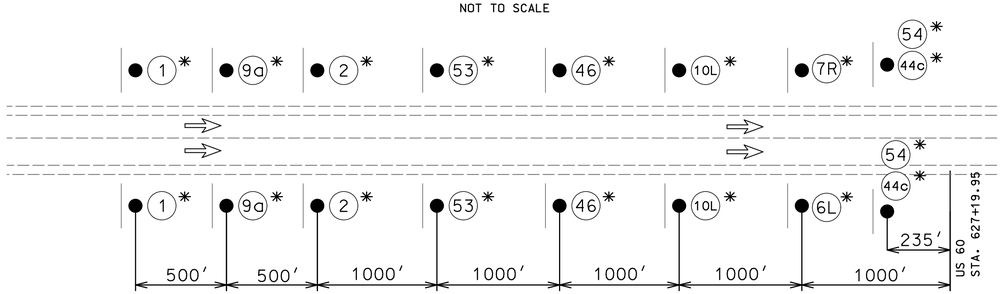

R2-1
36″ X 48″
44C

CONST-3A
60″ X 48″
53

R4-1
36″ X 48″
46

G020-5aP
36″ X 24″
54

TEMPORARY TRAFFIC BARRIER REQUIRED WHERE CONSTRUCTION IS WITHIN 10′ OF TRAVELED WAY.
725 LF TEMPORARY BARRIER

US 60
PHASE 2B
TRAFFIC CONTROL
11 OF 30

STATE OF MISSOURI
DALLAS P. JOPLIN
NUMBER PE-2011015760
PROFESSIONAL ENGINEER

THIS SHEET HAS BEEN SIGNED, SEALED AND DATED ELECTRONICALLY.

DATE PREPARED	
9/3/2024	
ROUTE	STATE
60	MO
DISTRICT	SHEET NO.
SW	100
COUNTY	
WEBSTER	
JOB NO.	
J7P3425C	
CONTRACT ID.	
PROJECT NO.	
BRIDGE NO.	

DATE	DESCRIPTION	REV.

IF A SEAL IS PRESENT ON THIS SHEET IT HAS BEEN ELECTRONICALLY SEALED AND DATED.

MISSOURI HIGHWAYS AND TRANSPORTATION COMMISSION
105 WEST CAPITOL
JEFFERSON CITY, MO 65102
1-888-ASK-MODOT (1-888-275-6636)

©Copyright CMT, Inc.
CMT
CRAWFORD, MURPHY & TILLY, INC.
1631 WEST ELFINDALE STREET
SPRINGFIELD, MO 65807 (417) 869-6009
ENGINEERING CORPORATION - 000631

L:\MoDOT\20092124-00\Draw\Roadway\Sheets\100_TC_11_J7P3425C_i100.dgn 1:58:07 PM 9/3/2024

TRAFFIC CONTROL LEGEND

- SIGN (SINGLE SIDED)
- SIGN (DOUBLE SIDED)
- FLAGGER
- CONE
- CHANNELIZER
- BARRICADE
- CHANGEABLE MESSAGE BOARD
- WORK AREA
- COMPLETED WORK
- PAVEMENT REMOVALS
- TEMPORARY PAVEMENT

PHASE 2B

1. CONSTRUCT PORTION OF NEW EB US60, MSE WALL AND SOUTH BENT OF ROUTE A BRIDGE OVER US60.
2. NARROW EXISTING EB60 TO 1 LANE FOR CONSTRUCTION ACTIVITIES.
3. ROUTE A EB TRAFFIC DETOURED TO ROUTE O CROSSOVER. ROUTE A WB TRAFFIC WILL CONTINUE TO USE EXISTING ACCESS. SEE SHEET 99 FOR DETOUR.
4. REMOVE EXISTING ROUTE A/US 60 CENTER MEDIAN CROSSOVER.
5. MAINTAIN BUSINESS AND RESIDENTIAL ACCESS AT ALL TIMES.

DETOUR AHEAD
WD20-2
48" X 48"
11

ROAD CLOSED
R11-2
48" X 30"
29

WD3-1
48" X 48"
39

STOP
R1-1
48" X 48"
41

DISCLAIMER
THE PROFESSIONAL WHOSE SIGNATURE AND PERSONAL SEAL APPEAR HEREON ASSUMES RESPONSIBILITY ONLY FOR WHAT APPEARS ON THIS PAGE, AND DISCLAIMS (PURSUANT TO SECTION 327.411 RSMO) SPECIFICATION, ESTIMATES, REPORTS, OR OTHER DOCUMENTS OR INSTRUMENTS NOT SEALED BY THE UNDERSIGNED PROFESSIONAL RELATING TO OR INTENDED TO BE USED FOR ANY PART OR PARTS OF THE PROJECT TO WHICH THIS PAGE REFERS.

SCALE
0 100 200 300 400 500

325'

TYPE 3 BARRICADES
(3 EA.)

NOR MATCHLINE
STA. 29+00.00

17 CHANNELIZERS
@ 120' SPACING

WB US60

PROPOSED EB US60

EX. US60
MATCHLINE
STA. 676+00.00

EB US60
MATCHLINE
STA. 31+00.00

EXISTING EB US60

20 CHANNELIZERS
@ 120' SPACING

BNSF RAILROAD

EX. US60
MATCHLINE
STA. 648+00.00

EB US60
MATCHLINE
STA. 4+00.00

TEMPORARY PAVEMENT MARKING
5960 LF

TEMPORARY TRAFFIC BARRIER
725 LF (322' PINNED)

TEMPORARY TRAFFIC BARRIER REQUIRED WHERE CONSTRUCTION IS WITHIN 10' OF TRAVELED WAY.
725 LF TEMPORARY BARRIER

US 60/RTE A
PHASE 2B
TRAFFIC CONTROL
12 OF 30

STATE OF MISSOURI
DALLAS P. JOPLIN
NUMBER PE-2011015760
PROFESSIONAL ENGINEER

THIS SHEET HAS BEEN SIGNED, SEALED AND DATED ELECTRONICALLY.

DATE PREPARED	
9/3/2024	
ROUTE	STATE
60	MO
DISTRICT	SHEET NO.
SW	101
COUNTY	
WEBSTER	
JOB NO.	
J7P3425C	
CONTRACT ID.	
PROJECT NO.	
BRIDGE NO.	

DESCRIPTION	DATE

IF A SEAL IS PRESENT ON THIS SHEET IT HAS BEEN ELECTRONICALLY SEALED AND DATED.

MISSOURI HIGHWAYS AND TRANSPORTATION COMMISSION

105 WEST CAPITOL
JEFFERSON CITY, MO 65102
1-888-ASK-MODOT (1-888-275-6636)

CMT
© Copyright CMT, Inc.
CRAWFORD, MURPHY & TILLY, INC.
1631 WEST ELFINDALE STREET
SPRINGFIELD, MO 65807 (417) 869-6009
ENGINEERING CORPORATION - 000631

REV.

L:\MoDOT\20092124-00\Draw\Roadway\Sheets\101_TC_12_J7P3425C_1100.dgn 1:58:10 PM 9/3/2024

TRAFFIC CONTROL LEGEND

- SIGN (SINGLE SIDED)
- SIGN (DOUBLE SIDED)
- FLAGGER
- CONE
- CHANNELIZER
- BARRICADE
- CHANGEABLE MESSAGE BOARD
- WORK AREA
- COMPLETED WORK
- PAVEMENT REMOVALS
- TEMPORARY PAVEMENT

PHASE 2B

1. CONSTRUCT PORTION OF NEW EB US60, MSE WALL AND SOUTH BENT OF ROUTE A BRIDGE OVER US60.
2. NARROW EXISTING EB60 TO 1 LANE FOR CONSTRUCTION ACTIVITIES.
3. ROUTE A EB TRAFFIC DETOURED TO ROUTE O CROSSOVER. ROUTE A WB TRAFFIC WILL CONTINUE TO USE EXISTING ACCESS. SEE SHEET 99 FOR DETOUR.
4. REMOVE EXISTING ROUTE A/US60 CENTER MEDIAN CROSSOVER.
5. MAINTAIN BUSINESS AND RESIDENTIAL ACCESS AT ALL TIMES.

DISCLAIMER
THE PROFESSIONAL WHOSE SIGNATURE AND PERSONAL SEAL APPEAR HEREON ASSUMES RESPONSIBILITY ONLY FOR WHAT APPEARS ON THIS PAGE, AND DISCLAIMS (PURSUANT TO SECTION 327.411 RSMO) SPECIFICATION, ESTIMATES, REPORTS, OR OTHER DOCUMENTS OR INSTRUMENTS NOT SEALED BY THE UNDERSIGNED PROFESSIONAL RELATING TO OR INTENDED TO BE USED FOR ANY PART OR PARTS OF THE PROJECT TO WHICH THIS PAGE REFERS.

SCALE
0 100 200 300 400 500

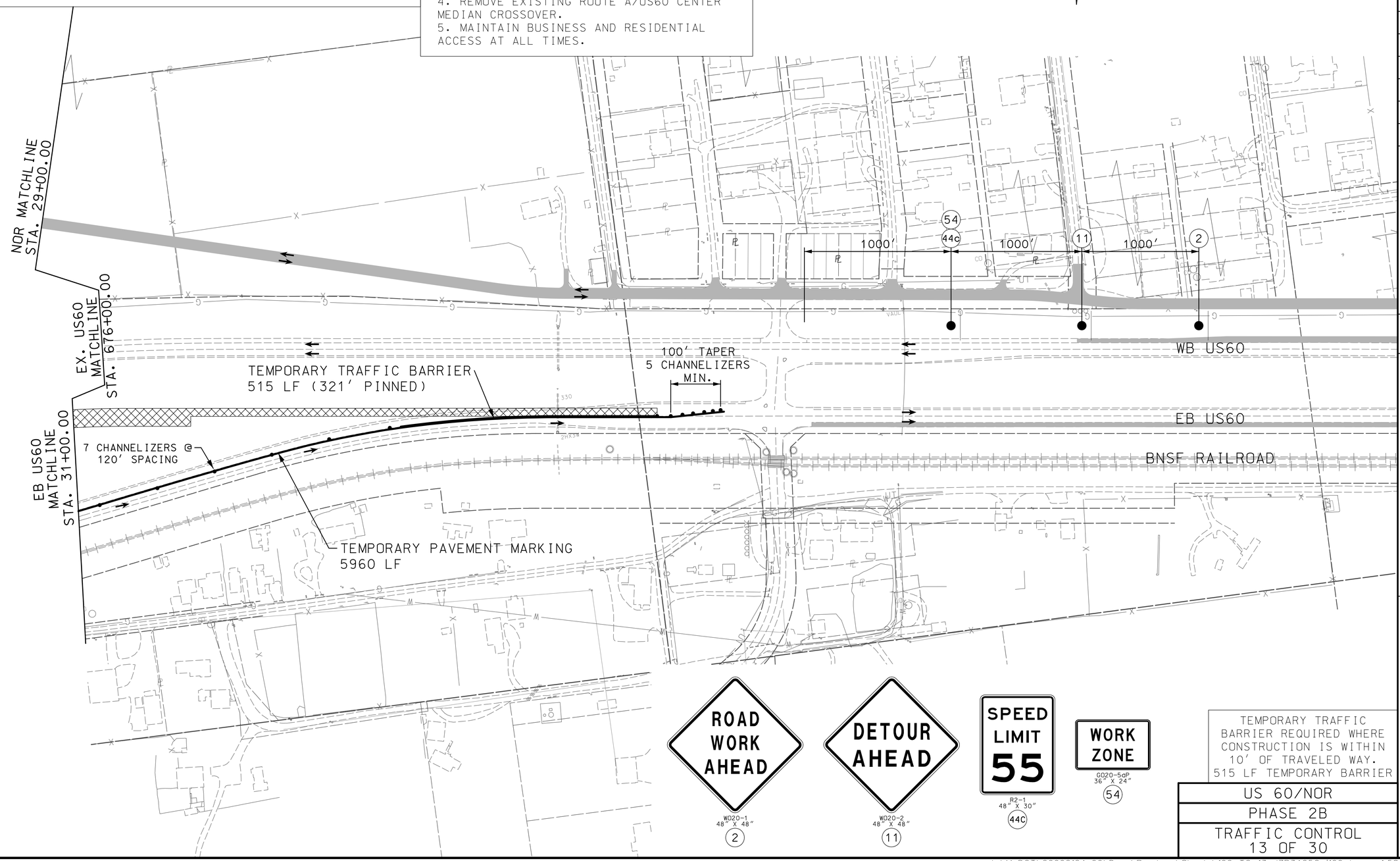

WD20-1
48" X 48"
2

WD20-2
48" X 48"
11

R2-1
48" X 30"
44C

G020-5aP
36" X 24"
54

TEMPORARY TRAFFIC BARRIER REQUIRED WHERE CONSTRUCTION IS WITHIN 10' OF TRAVELED WAY.
515 LF TEMPORARY BARRIER

US 60/NOR
PHASE 2B
TRAFFIC CONTROL
13 OF 30

STATE OF MISSOURI
DALLAS P. JOPLIN
NUMBER PE-2011015760
PROFESSIONAL ENGINEER
THIS SHEET HAS BEEN SIGNED, SEALED AND DATED ELECTRONICALLY.

DATE PREPARED: 9/3/2024
ROUTE: 60 | STATE: MO
DISTRICT: SW | SHEET NO.: 102
COUNTY: WEBSTER
JOB NO.: J7P3425C
CONTRACT ID.:
PROJECT NO.:
BRIDGE NO.:

DATE	DESCRIPTION	REV.

MISSOURI HIGHWAYS AND TRANSPORTATION COMMISSION
105 WEST CAPITOL
JEFFERSON CITY, MO 65102
1-888-ASK-MODOT (1-888-275-6636)

CMT
CRAWFORD, MURPHY & TILLY, INC.
1631 WEST ELFINDALE STREET
SPRINGFIELD, MO 65807 (417) 869-6009
ENGINEERING CORPORATION - 000631
©Copyright CMT, Inc.

IF A SEAL IS PRESENT ON THIS SHEET IT HAS BEEN ELECTRONICALLY SEALED AND DATED.

L:\MoDOT\20092124-00\Draw\Roadway\Sheets\102_TC_13_J7P3425C_i100.dgn 1:58:14 PM 9/3/2024

TRAFFIC CONTROL LEGEND

- SIGN (SINGLE SIDED)
- SIGN (DOUBLE SIDED)
- FLAGGER
- CONE
- CHANNELIZER
- BARRICADE
- CHANGEABLE MESSAGE BOARD
- WORK AREA
- COMPLETED WORK
- PAVEMENT REMOVALS
- TEMPORARY PAVEMENT

PHASE 2C

1. SHIFT EB US60 TRAFFIC TO NEW PAVEMENT (10' LANE)
2. CONSTRUCT REMAINDER OF EB US60 LANES.
3. CONSTRUCT EB RAMPS AND MSE WALL.
4. CONSTRUCT NORTH BENT OF ROUTE NN BRIDGE OVER BNSF AND MSE WALL.
5. ROUTE A TRAFFIC DETOURED TO ROUTE O. SEE SHEET 99 FOR DETOUR
6. MAINTAIN BUSINESS AND RESIDENTIAL ACCESS AT ALL TIMES.

SCALE
0 100 200 300 400 500

DISCLAIMER
THE PROFESSIONAL WHOSE SIGNATURE AND PERSONAL SEAL APPEAR HEREON ASSUMES RESPONSIBILITY ONLY FOR WHAT APPEARS ON THIS PAGE, AND DISCLAIMS (PURSUANT TO SECTION 327.411 RSMO) SPECIFICATION, ESTIMATES, REPORTS, OR OTHER DOCUMENTS OR INSTRUMENTS NOT SEALED BY THE UNDERSIGNED PROFESSIONAL RELATING TO OR INTENDED TO BE USED FOR ANY PART OR PARTS OF THE PROJECT TO WHICH THIS PAGE REFERS.

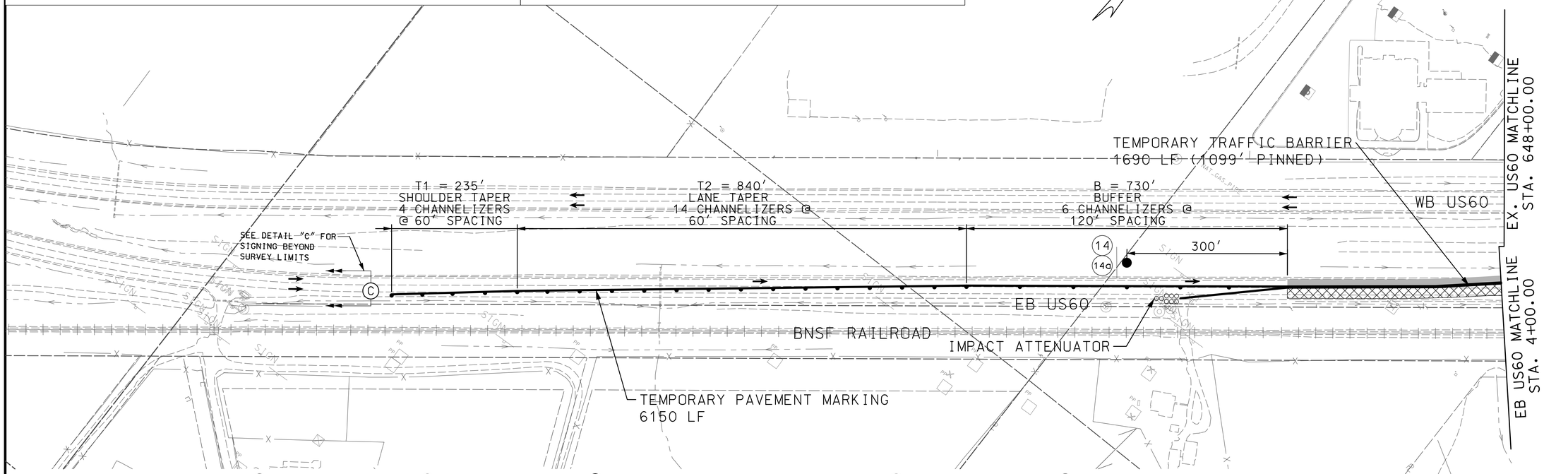

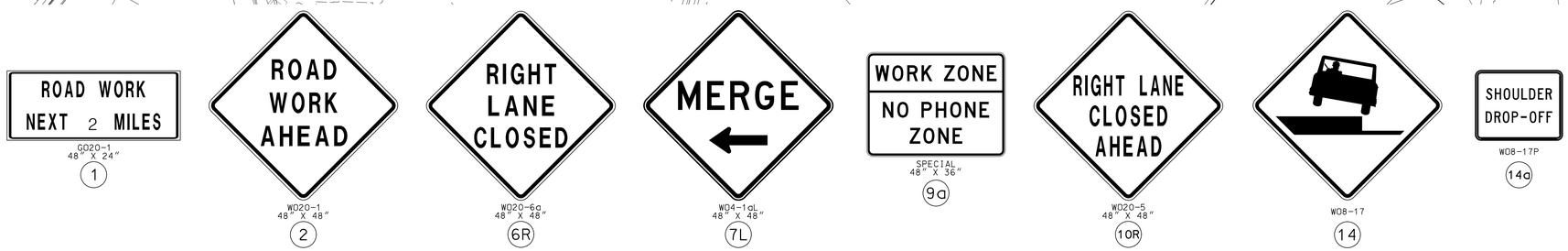

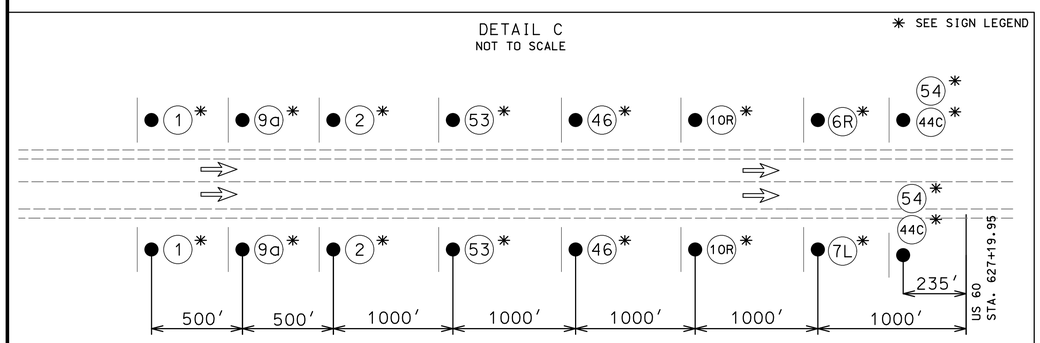

TEMPORARY TRAFFIC BARRIER REQUIRED WHERE CONSTRUCTION IS WITHIN 10' OF TRAVELED WAY.
1,690 LF TEMPORARY BARRIER

US 60
PHASE 2C
TRAFFIC CONTROL
14 OF 30

STATE OF MISSOURI
DALLAS P. JOPLIN
NUMBER PE-2011015760
PROFESSIONAL ENGINEER

THIS SHEET HAS BEEN SIGNED, SEALED AND DATED ELECTRONICALLY.

DATE PREPARED	
9/3/2024	
ROUTE	STATE
60	MO
DISTRICT	SHEET NO.
SW	103
COUNTY	
WEBSTER	
JOB NO.	
J7P3425C	
CONTRACT ID.	
PROJECT NO.	
BRIDGE NO.	

IF A SEAL IS PRESENT ON THIS SHEET IT HAS BEEN ELECTRONICALLY SEALED AND DATED.

REV.	DESCRIPTION	DATE

MISSOURI HIGHWAYS AND TRANSPORTATION COMMISSION
105 WEST CAPITOL
JEFFERSON CITY, MO 65102
1-888-ASK-MODOT (1-888-275-6636)

CMT
CRAWFORD, MURPHY & TILLY, INC.
1631 WEST ELFINDALE STREET
SPRINGFIELD, MO 65807 (417) 869-6009
ENGINEERING CORPORATION - 000631
©Copyright CMT, Inc.

L:\MoDOT\20092124-00\Draw\Roadway\Sheets\103_TC_14_J7P3425C_i100.dgn 1:58:17 PM 9/3/2024

TRAFFIC CONTROL LEGEND

- SIGN (SINGLE SIDED)
- SIGN (DOUBLE SIDED)
- FLAGGER
- CONE
- CHANNELIZER
- BARRICADE
- CHANGEABLE MESSAGE BOARD
- WORK AREA
- COMPLETED WORK
- PAVEMENT REMOVALS
- TEMPORARY PAVEMENT

PHASE 2C

1. SHIFT EB US60 TRAFFIC TO NEW PAVEMENT (10' LANE)
2. CONSTRUCT REMAINDER OF EB US60 LANES.
3. CONSTRUCT EB RAMPS AND MSE WALL.
4. CONSTRUCT NORTH BENT OF ROUTE NN BRIDGE OVER BNSF AND MSE WALL.
5. ROUTE A TRAFFIC DETOURED TO ROUTE O. SEE SHEET 99 FOR DETOUR
6. MAINTAIN BUSINESS AND RESIDENTIAL ACCESS AT ALL TIMES.

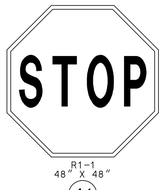

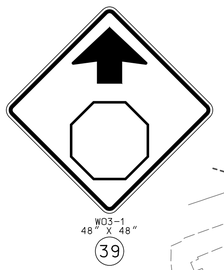

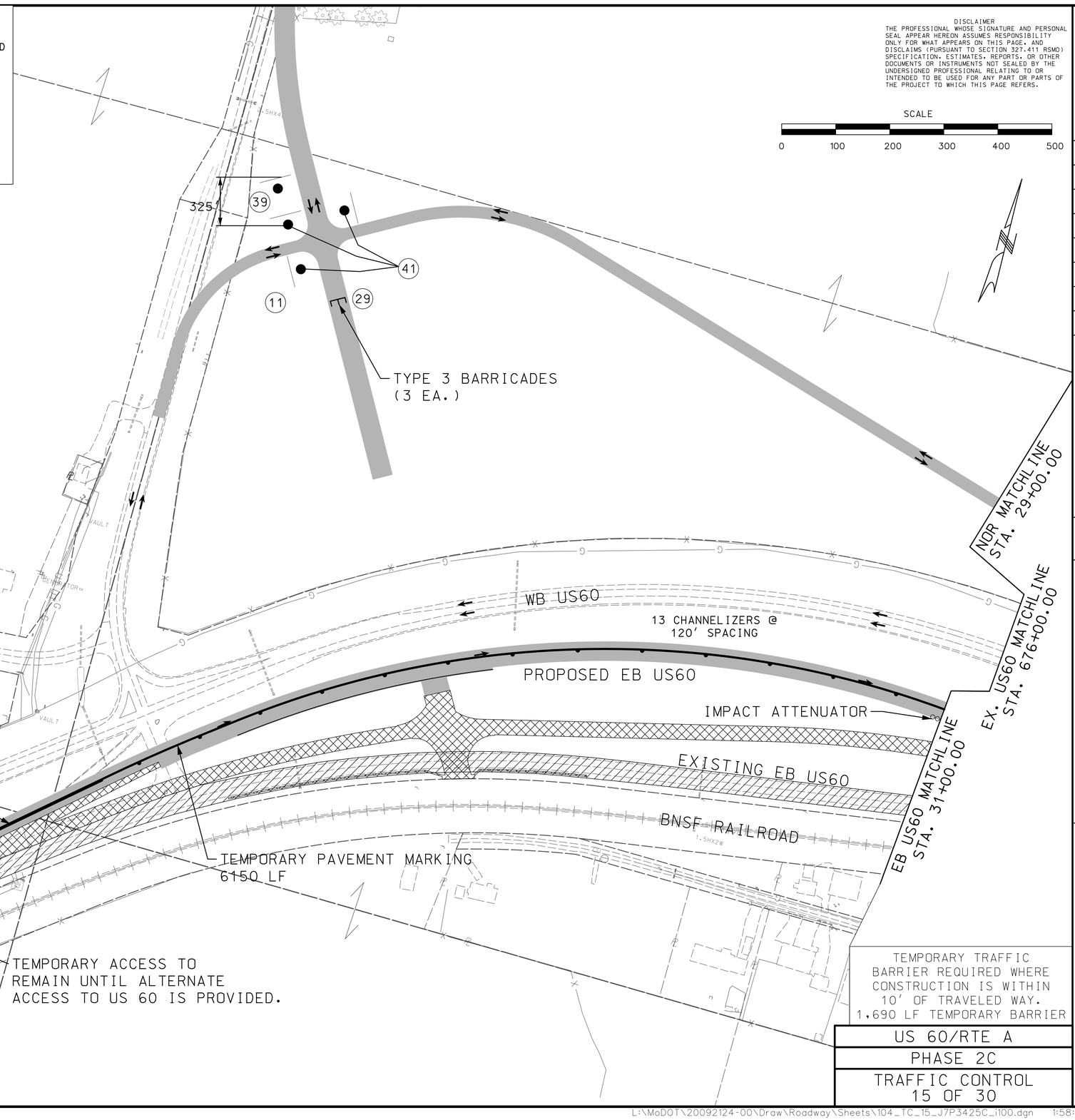

TEMPORARY TRAFFIC BARRIER REQUIRED WHERE CONSTRUCTION IS WITHIN 10' OF TRAVELED WAY.
1,690 LF TEMPORARY BARRIER

US 60/RTE A

PHASE 2C

TRAFFIC CONTROL
15 OF 30

DISCLAIMER
THE PROFESSIONAL WHOSE SIGNATURE AND PERSONAL SEAL APPEAR HEREON ASSUMES RESPONSIBILITY ONLY FOR WHAT APPEARS ON THIS PAGE, AND DISCLAIMS (PURSUANT TO SECTION 327.411 RSMO) SPECIFICATION, ESTIMATES, REPORTS, OR OTHER DOCUMENTS OR INSTRUMENTS NOT SEALED BY THE UNDERSIGNED PROFESSIONAL RELATING TO OR INTENDED TO BE USED FOR ANY PART OR PARTS OF THE PROJECT TO WHICH THIS PAGE REFERS.

STATE OF MISSOURI
DALLAS P. JOPLIN
NUMBER PE-2011015760
PROFESSIONAL ENGINEER

THIS SHEET HAS BEEN SIGNED, SEALED AND DATED ELECTRONICALLY.

DATE PREPARED
9/3/2024

ROUTE	STATE
60	MO
DISTRICT	SHEET NO.
SW	104

COUNTY
WEBSTER

JOB NO.
J7P3425C

CONTRACT ID.

PROJECT NO.

BRIDGE NO.

DESCRIPTION	DATE

IF A SEAL IS PRESENT ON THIS SHEET IT HAS BEEN ELECTRONICALLY SEALED AND DATED.

MISSOURI HIGHWAYS AND TRANSPORTATION COMMISSION
105 WEST CAPITOL
JEFFERSON CITY, MO 65102
1-888-ASK-MODOT (1-888-275-6636)

CMT
CRAWFORD, MURPHY & TILLY, INC.
1631 WEST ELFINDALE STREET
SPRINGFIELD, MO 65807 (417) 869-6009
ENGINEERING CORPORATION - 000631
©Copyright CMT, Inc.

REV.

TRAFFIC CONTROL LEGEND

- SIGN (SINGLE SIDED)
- SIGN (DOUBLE SIDED)
- FLAGGER
- CONE
- CHANNELIZER
- BARRICADE
- CHANGEABLE MESSAGE BOARD
- WORK AREA
- COMPLETED WORK
- PAVEMENT REMOVALS
- TEMPORARY PAVEMENT

PHASE 2C

1. SHIFT EB US60 TRAFFIC TO NEW PAVEMENT (10' LANE)
2. CONSTRUCT REMAINDER OF EB US60 LANES.
3. CONSTRUCT EB RAMPS AND MSE WALL.
4. CONSTRUCT NORTH BENT OF ROUTE NN BRIDGE OVER BNSF AND MSE WALL.
5. ROUTE A TRAFFIC DETOURED TO ROUTE O. SEE SHEET 99 FOR DETOUR
6. MAINTAIN BUSINESS AND RESIDENTIAL ACCESS AT ALL TIMES.

SCALE
0 100 200 300 400 500

DISCLAIMER
THE PROFESSIONAL WHOSE SIGNATURE AND PERSONAL SEAL APPEAR HEREON ASSUMES RESPONSIBILITY ONLY FOR WHAT APPEARS ON THIS PAGE, AND DISCLAIMS (PURSUANT TO SECTION 327.411 RSMO) SPECIFICATION, ESTIMATES, REPORTS, OR OTHER DOCUMENTS OR INSTRUMENTS NOT SEALED BY THE UNDERSIGNED PROFESSIONAL RELATING TO OR INTENDED TO BE USED FOR ANY PART OR PARTS OF THE PROJECT TO WHICH THIS PAGE REFERS.

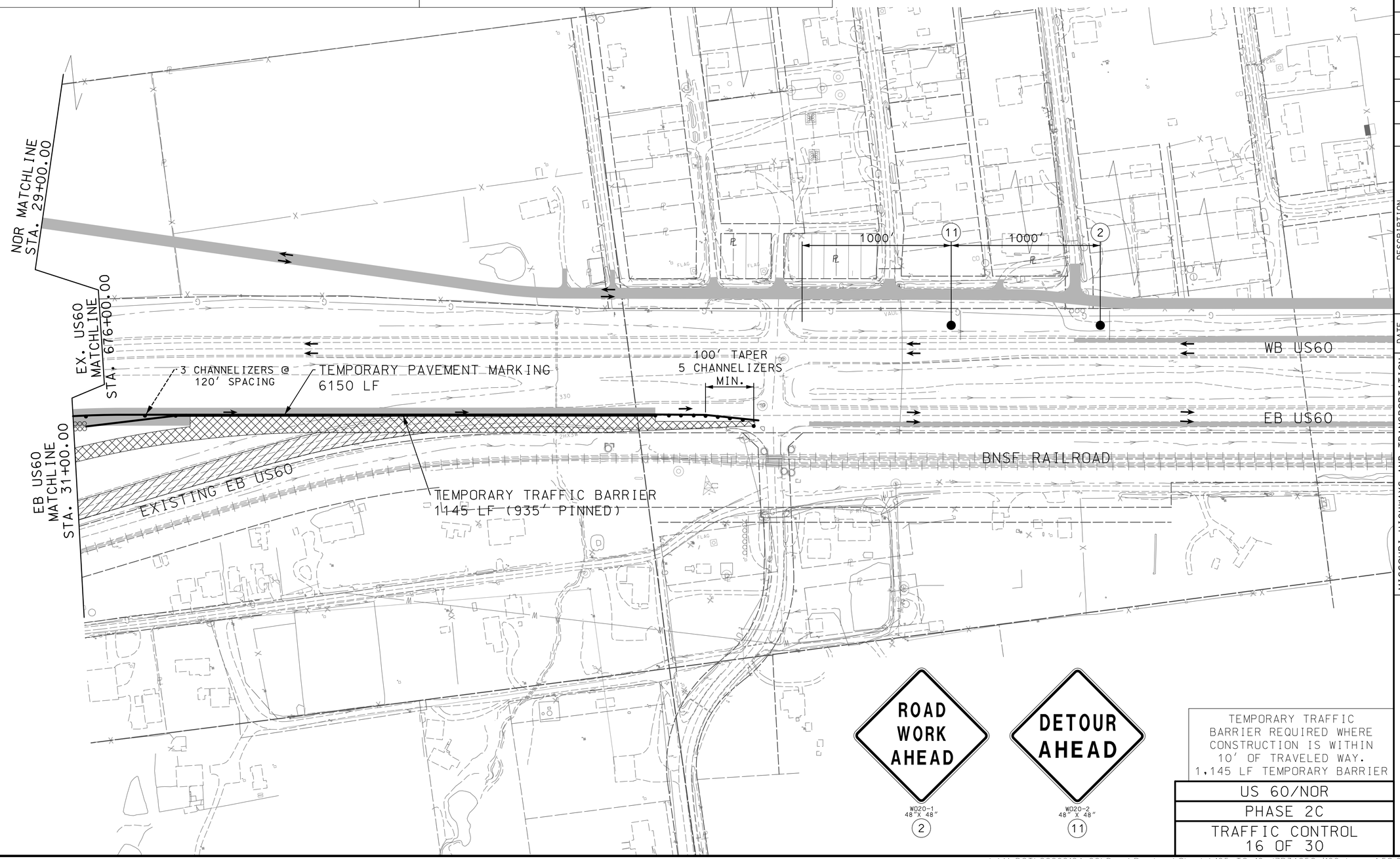

TEMPORARY TRAFFIC BARRIER REQUIRED WHERE CONSTRUCTION IS WITHIN 10' OF TRAVELED WAY.
1,145 LF TEMPORARY BARRIER

US 60/NOR
PHASE 2C
TRAFFIC CONTROL
16 OF 30

STATE OF MISSOURI
DALLAS P. JOPLIN
NUMBER PE-2011015760
PROFESSIONAL ENGINEER
THIS SHEET HAS BEEN SIGNED, SEALED AND DATED ELECTRONICALLY.

DATE PREPARED
9/3/2024

ROUTE	STATE
60	MO
DISTRICT	SHEET NO.
SW	105

COUNTY
WEBSTER
JOB NO.
J7P3425C
CONTRACT ID.
PROJECT NO.
BRIDGE NO.

DESCRIPTION	DATE

IF A SEAL IS PRESENT ON THIS SHEET IT HAS BEEN ELECTRONICALLY SEALED AND DATED.

MISSOURI HIGHWAYS AND TRANSPORTATION COMMISSION
105 WEST CAPITOL
JEFFERSON CITY, MO 65102
1-888-ASK-MODOT (1-888-275-6636)

CMT
© Copyright CMT, Inc.
CRAWFORD, MURPHY & TILLY, INC.
1631 WEST ELFINDALE STREET
SPRINGFIELD, MO 65807 (417) 869-6009
ENGINEERING CORPORATION - 000631

REV.

L:\MoDOT\20092124-00\Draw\Roadway\Sheets\105_TC_16_J7P3425C_i100.dgn 1:58:23 PM 9/3/2024

TRAFFIC CONTROL LEGEND

- SIGN (SINGLE SIDED)
- SIGN (DOUBLE SIDED)
- FLAGGER
- CONE
- CHANNELIZER
- BARRICADE
- CHANGEABLE MESSAGE BOARD
- WORK AREA
- COMPLETED WORK
- PAVEMENT REMOVALS
- TEMPORARY PAVEMENT

PHASE 2D

1. CLOSE RIGHT LANE OF WB US60 TRAFFIC.
2. CONSTRUCT RAMPS 1 & 3.
3. CONSTRUCT NORTH BENT OF ROUTE A BRIDGE OVER US60. CONSTRUCT MSE WALL
4. ROUTE A TRAFFIC DETOURED TO ROUTE O. SEE SHEET 99 FOR DETOUR
5. REMOVE EXISTING ROUTE A ACCESS TO US 60.
6. MAINTAIN BUSINESS AND RESIDENTIAL ACCESS AT ALL TIMES.

SCALE

0 100 200 300 400 500

DISCLAIMER
THE PROFESSIONAL WHOSE SIGNATURE AND PERSONAL SEAL APPEAR HEREON ASSUMES RESPONSIBILITY ONLY FOR WHAT APPEARS ON THIS PAGE. AND DISCLAIMS (PURSUANT TO SECTION 327.411 RSMO) SPECIFICATION, ESTIMATES, REPORTS, OR OTHER DOCUMENTS OR INSTRUMENTS NOT SEALED BY THE UNDERSIGNED PROFESSIONAL RELATING TO OR INTENDED TO BE USED FOR ANY PART OR PARTS OF THE PROJECT TO WHICH THIS PAGE REFERS.

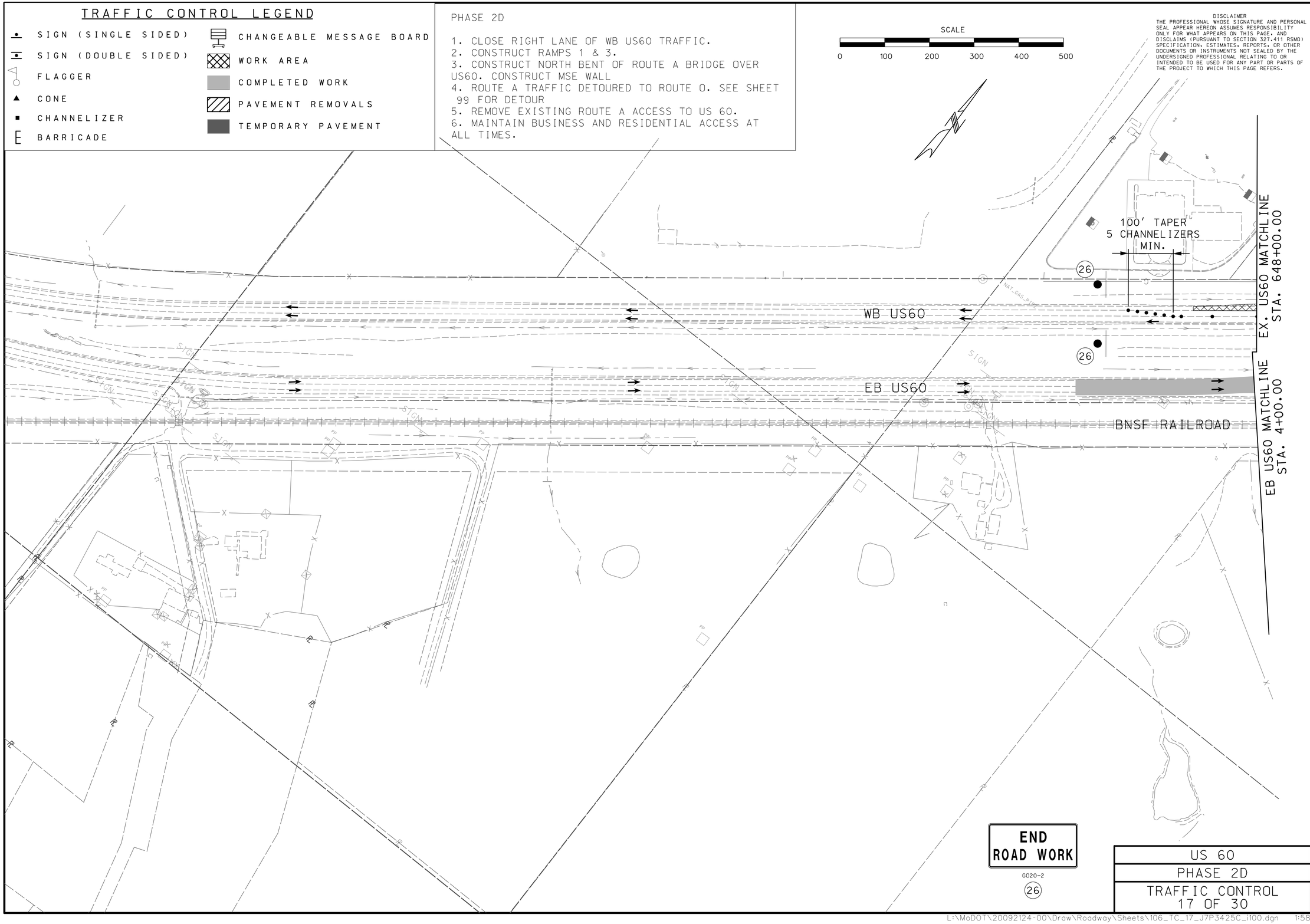

US 60
PHASE 2D
TRAFFIC CONTROL
17 OF 30

STATE OF MISSOURI
DALLAS P. JOPLIN
NUMBER PE-2011015760
PROFESSIONAL ENGINEER
THIS SHEET HAS BEEN SIGNED, SEALED AND DATED ELECTRONICALLY.

DATE PREPARED 9/3/2024

ROUTE	STATE
60	MO
DISTRICT	SHEET NO.
SW	106

COUNTY: WEBSTER
JOB NO.: J7P3425C
CONTRACT ID.:
PROJECT NO.:
BRIDGE NO.:

DESCRIPTION	DATE

IF A SEAL IS PRESENT ON THIS SHEET IT HAS BEEN ELECTRONICALLY SEALED AND DATED.

MISSOURI HIGHWAYS AND TRANSPORTATION COMMISSION
105 WEST CAPITOL
JEFFERSON CITY, MO 65102
1-888-ASK-MODOT (1-888-275-6636)

CMT
CRAWFORD, MURPHY & TILLY, INC.
1631 WEST ELFINDALE STREET
SPRINGFIELD, MO 65807 (417) 869-6009
ENGINEERING CORPORATION - 000631
©Copyright CMT, Inc.

REV.

L:\MoDOT\20092124-00\Draw\Roadway\Sheets\106_TC_17_J7P3425C_i100.dgn 1:58:26 PM 9/3/2024

TRAFFIC CONTROL LEGEND

- SIGN (SINGLE SIDED)
- SIGN (DOUBLE SIDED)
- FLAGGER
- CONE
- CHANNELIZER
- BARRICADE
- CHANGEABLE MESSAGE BOARD
- WORK AREA
- COMPLETED WORK
- PAVEMENT REMOVALS
- TEMPORARY PAVEMENT

PHASE 2D

1. CLOSE RIGHT LANE OF WB US60 TRAFFIC.
2. CONSTRUCT RAMPS 1 & 3.
3. CONSTRUCT NORTH BENT OF ROUTE A BRIDGE OVER US60. CONSTRUCT MSE WALL
4. ROUTE A TRAFFIC DETOURED TO ROUTE O. SEE SHEET 99 FOR DETOUR
5. REMOVE EXISTING ROUTE A ACCESS TO US 60.
6. MAINTAIN BUSINESS AND RESIDENTIAL ACCESS AT ALL TIMES.

W020-2
48" X 48"
11

R11-2
48" X 30"
29

R1-1
48" X 48"
41

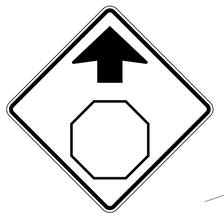
W03-1
48" X 48"
39

DISCLAIMER
THE PROFESSIONAL WHOSE SIGNATURE AND PERSONAL SEAL APPEAR HEREON ASSUMES RESPONSIBILITY ONLY FOR WHAT APPEARS ON THIS PAGE, AND DISCLAIMS (PURSUANT TO SECTION 327.411 RSMO) SPECIFICATION, ESTIMATES, REPORTS, OR OTHER DOCUMENTS OR INSTRUMENTS NOT SEALED BY THE UNDERSIGNED PROFESSIONAL RELATING TO OR INTENDED TO BE USED FOR ANY PART OR PARTS OF THE PROJECT TO WHICH THIS PAGE REFERS.

SCALE
0 100 200 300 400 500

325'

39 41 11 29

TYPE 3 BARRICADES
(3 EA.)

29 CHANNELIZERS @
120' SPACING

WB US60

PROPOSED EB US60

EXISTING EB US60

BNSF RAILROAD

NOR MATCHLINE
STA. 29+00.00

EX. US60
MATCHLINE
STA. 676+00.00

EB US60
MATCHLINE
STA. 31+00.00

EX. US60
MATCHLINE
STA. 648+00.00

EB US60
MATCHLINE
STA. 4+00.00

6 CHANNELIZERS @
120' SPACING

STATE OF MISSOURI
DALLAS P. JOPLIN
NUMBER PE-2011015760
PROFESSIONAL ENGINEER

THIS SHEET HAS BEEN SIGNED, SEALED AND DATED ELECTRONICALLY.

DATE PREPARED	
9/3/2024	
ROUTE	STATE
60	MO
DISTRICT	SHEET NO.
SW	107
COUNTY	
WEBSTER	
JOB NO.	
J7P3425C	
CONTRACT ID.	
PROJECT NO.	
BRIDGE NO.	

DESCRIPTION	DATE

IF A SEAL IS PRESENT ON THIS SHEET IT HAS BEEN ELECTRONICALLY SEALED AND DATED.

MISSOURI HIGHWAYS AND TRANSPORTATION COMMISSION
105 WEST CAPITOL
JEFFERSON CITY, MO 65102
1-888-ASK-MODOT (1-888-275-6636)

CMT
©Copyright CMT, Inc.
CRAWFORD, MURPHY & TILLY, INC.
1631 WEST ELFINDALE STREET
SPRINGFIELD, MO 65807 (417) 869-6009
ENGINEERING CORPORATION - 000631

US 60/RTE A
PHASE 2D
TRAFFIC CONTROL
18 OF 30

REV.

L:\MoDOT\20092124-00\Draw\Roadway\Sheets\107_TC_18_J7P3425C_i100.dgn 1:58:30 PM 9/3/2024

TRAFFIC CONTROL LEGEND

- SIGN (SINGLE SIDED)
- SIGN (DOUBLE SIDED)
- FLAGGER
- CONE
- CHANNELIZER
- BARRICADE
- CHANGEABLE MESSAGE BOARD
- WORK AREA
- COMPLETED WORK
- PAVEMENT REMOVALS
- TEMPORARY PAVEMENT

PHASE 2D

1. CLOSE RIGHT LANE OF WB US60 TRAFFIC.
2. CONSTRUCT RAMPS 1 & 3.
3. CONSTRUCT NORTH BENT OF ROUTE A BRIDGE OVER US60. CONSTRUCT MSE WALL
4. ROUTE A TRAFFIC DETOURED TO ROUTE O. SEE SHEET 99 FOR DETOUR
5. REMOVE EXISTING ROUTE A ACCESS TO US 60.
6. MAINTAIN BUSINESS AND RESIDENTIAL ACCESS AT ALL TIMES.

ROAD WORK NEXT 2 MILES
GD20-1 48" X 24"
(1)

ROAD WORK AHEAD
WD20-1 48" X 48"
(2)

DISCLAIMER
THE PROFESSIONAL WHOSE SIGNATURE AND PERSONAL SEAL APPEAR HEREON ASSUMES RESPONSIBILITY ONLY FOR WHAT APPEARS ON THIS PAGE, AND DISCLAIMS (PURSUANT TO SECTION 327.411 RSMO) SPECIFICATION, ESTIMATES, REPORTS, OR OTHER DOCUMENTS OR INSTRUMENTS NOT SEALED BY THE UNDERSIGNED PROFESSIONAL RELATING TO OR INTENDED TO BE USED FOR ANY PART OR PARTS OF THE PROJECT TO WHICH THIS PAGE REFERS.

SCALE
0 100 200 300 400 500

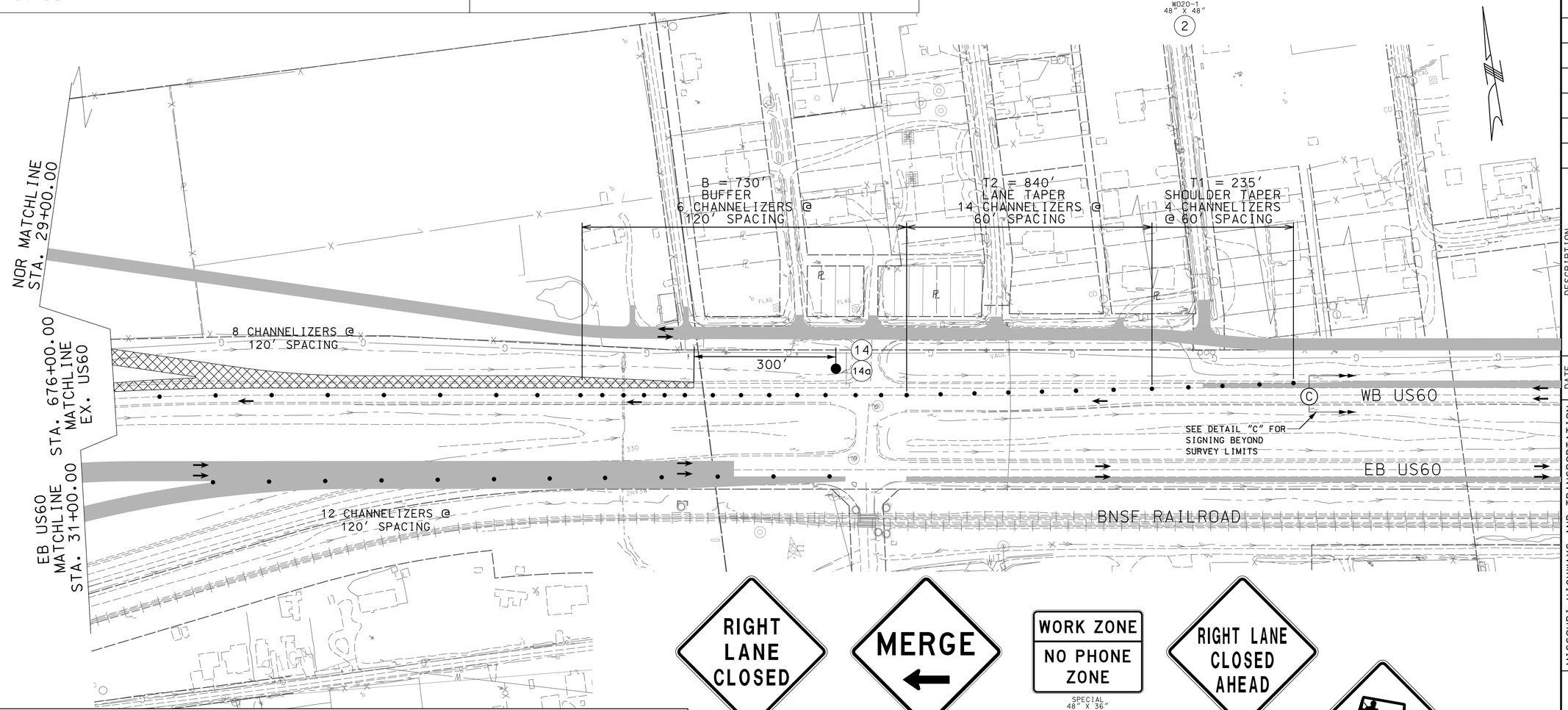

DETAIL C
NOT TO SCALE

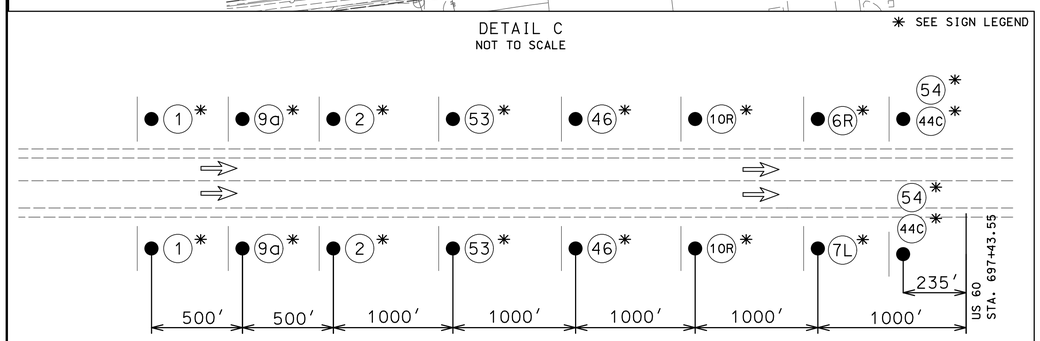

RIGHT LANE CLOSED
WD20-6a 48" X 48"
(6R)

MERGE
WD4-1aL 48" X 48"
(7L)

WORK ZONE
NO PHONE ZONE
SPECIAL 48" X 36"
(9a)

RIGHT LANE CLOSED AHEAD
WD20-5 48" X 48"
(10R)

WD8-17 48" X 48"
(14)

SHOULDER DROP-OFF
WD8-17P 30" X 24"
(14a)

SPEED LIMIT 55
R2-1 36" X 48"
(44C)

MIN. $250 FINE
SPEEDING WHEN WORKERS PRESENT
CONST-3A 60" X 48"
(53)

DO NOT PASS
R4-1 36" X 48"
(46)

WORK ZONE
GD20-5aP 36" X 24"
(54)

US 60/NOR
PHASE 2D
TRAFFIC CONTROL
19 OF 30

STATE OF MISSOURI
DALLAS P. JOPLIN
NUMBER PE-2011015760
PROFESSIONAL ENGINEER
THIS SHEET HAS BEEN SIGNED, SEALED AND DATED ELECTRONICALLY.

DATE PREPARED 9/3/2024

ROUTE	STATE
60	MO
DISTRICT	SHEET NO.
SW	108

COUNTY: WEBSTER
JOB NO.: J7P3425C
CONTRACT ID.:
PROJECT NO.:
BRIDGE NO.:

DESCRIPTION	DATE

IF A SEAL IS PRESENT ON THIS SHEET IT HAS BEEN ELECTRONICALLY SEALED AND DATED.

MISSOURI HIGHWAYS AND TRANSPORTATION COMMISSION
105 WEST CAPITOL
JEFFERSON CITY, MO 65102
1-888-ASK-MODOT (1-888-275-6636)

CMT
CRAWFORD, MURPHY & TILLY, INC.
1631 WEST ELFINDALE STREET
SPRINGFIELD, MO 65807 (417) 869-6009
ENGINEERING CORPORATION - 000631
© Copyright CMT, Inc.

REV.

L:\MoDOT\20092124-00\Draw\Roadway\Sheets\108_TC_19_J7P3425C_i100.dgn 1:58:33 PM 9/3/2024

TRAFFIC CONTROL LEGEND

- SIGN (SINGLE SIDED)
- SIGN (DOUBLE SIDED)
- FLAGGER
- CONE
- CHANNELIZER
- BARRICADE
- CHANGEABLE MESSAGE BOARD
- WORK AREA
- COMPLETED WORK
- PAVEMENT REMOVALS
- TEMPORARY PAVEMENT

PHASE 2E

1. CLOSE LEFT LANE OF EB & WB US60 TRAFFIC.
2. CONSTRUCT INTERMEDIATE BENT FOR ROUTE A BRIGE OVER US60.
3. CONSTRUCT ROUTE A BRIDGE OVER US60.
4. ROUTE A TRAFFIC DETOURED TO ROUTE O. SEE SHEET 99 FOR DETOUR.
5. MAINTAIN BUSINESS AND RESIDENTIAL ACCESS AT ALL TIMES.

SCALE
0 100 200 300 400 500

DISCLAIMER
THE PROFESSIONAL WHOSE SIGNATURE AND PERSONAL SEAL APPEAR HEREON ASSUMES RESPONSIBILITY ONLY FOR WHAT APPEARS ON THIS PAGE. AND DISCLAIMS (PURSUANT TO SECTION 327.411 RSMO) SPECIFICATION, ESTIMATES, REPORTS, OR OTHER DOCUMENTS OR INSTRUMENTS NOT SEALED BY THE UNDERSIGNED PROFESSIONAL RELATING TO OR INTENDED TO BE USED FOR ANY PART OR PARTS OF THE PROJECT TO WHICH THIS PAGE REFERS.

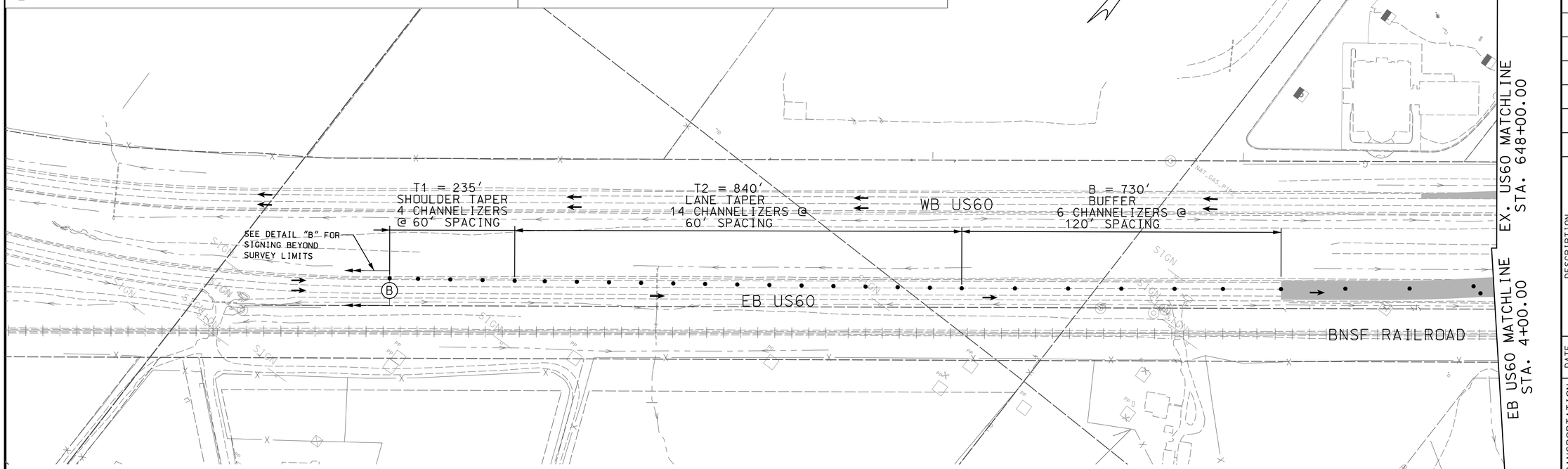

G020-1
48″ X 24″
1

W020-1
48″ X 48″
2

W020-6a
48″ X 48″
6L

W04-1aR
48″ X 48″
7R

SPECIAL
48″ X 36″
9a

W020-5
48″ X 48″
10L

DETAIL B
NOT TO SCALE
✱ SEE SIGN LEGEND

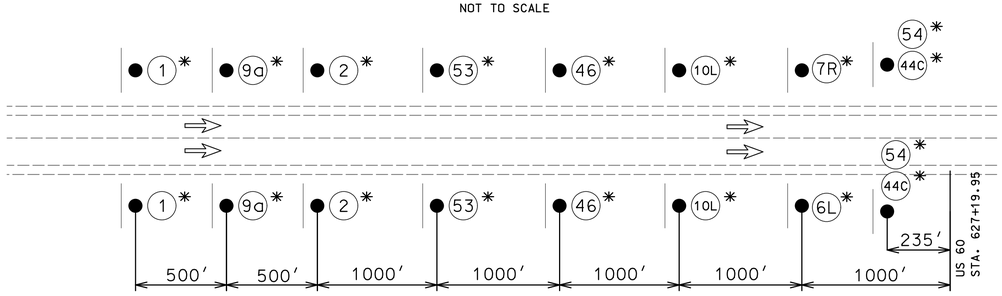

R2-1
36″ X 48″
44C

CONST-3A
60″ X 48″
53

R4-1
36″ X 48″
46

G020-5aP
36″ X 24″
54

THIS SHEET HAS BEEN SIGNED, SEALED AND DATED ELECTRONICALLY.

DALLAS P. JOPLIN
NUMBER PE-2011015760
STATE OF MISSOURI
PROFESSIONAL ENGINEER

DATE PREPARED	
9/3/2024	
ROUTE	STATE
60	MO
DISTRICT	SHEET NO.
SW	109
COUNTY	
WEBSTER	
JOB NO.	
J7P3425C	
CONTRACT ID.	
PROJECT NO.	
BRIDGE NO.	

IF A SEAL IS PRESENT ON THIS SHEET IT HAS BEEN ELECTRONICALLY SEALED AND DATED.

REV.	DESCRIPTION	DATE

MISSOURI HIGHWAYS AND TRANSPORTATION COMMISSION
105 WEST CAPITOL
JEFFERSON CITY, MO 65102
1-888-ASK-MODOT (1-888-275-6636)

CMT
CRAWFORD, MURPHY & TILLY, INC.
1631 WEST ELFINDALE STREET
SPRINGFIELD, MO 65807 (417) 869-6009
ENGINEERING CORPORATION - 000631
©Copyright CMT, Inc.

US 60
PHASE 2E
TRAFFIC CONTROL
20 OF 30

L:\MoDOT\20092124-00\Draw\Roadway\Sheets\109_TC_20_J7P3425C_i100.dgn 1:58:36 PM 9/3/2024

TRAFFIC CONTROL LEGEND

- SIGN (SINGLE SIDED)
- SIGN (DOUBLE SIDED)
- FLAGGER
- CONE
- CHANNELIZER
- BARRICADE
- CHANGEABLE MESSAGE BOARD
- WORK AREA
- COMPLETED WORK
- PAVEMENT REMOVALS
- TEMPORARY PAVEMENT

PHASE 2E

1. CLOSE LEFT LANE OF EB & WB US60 TRAFFIC.
2. CONSTRUCT INTERMEDIATE BENT FOR ROUTE A BRIGE OVER US60.
3. CONSTRUCT ROUTE A BRIDGE OVER US60.
4. ROUTE A TRAFFIC DETOURED TO ROUTE O. SEE SHEET 99 FOR DETOUR
5. MAINTAIN BUSINESS AND RESIDENTIAL ACCESS AT ALL TIMES.

DETOUR AHEAD
W20-2
48" X 48"
(11)

ROAD CLOSED
R11-2
48" X 30"
(29)

STOP
R1-1
48" X 48"
(41)

W03-1
48" X 48"
(39)

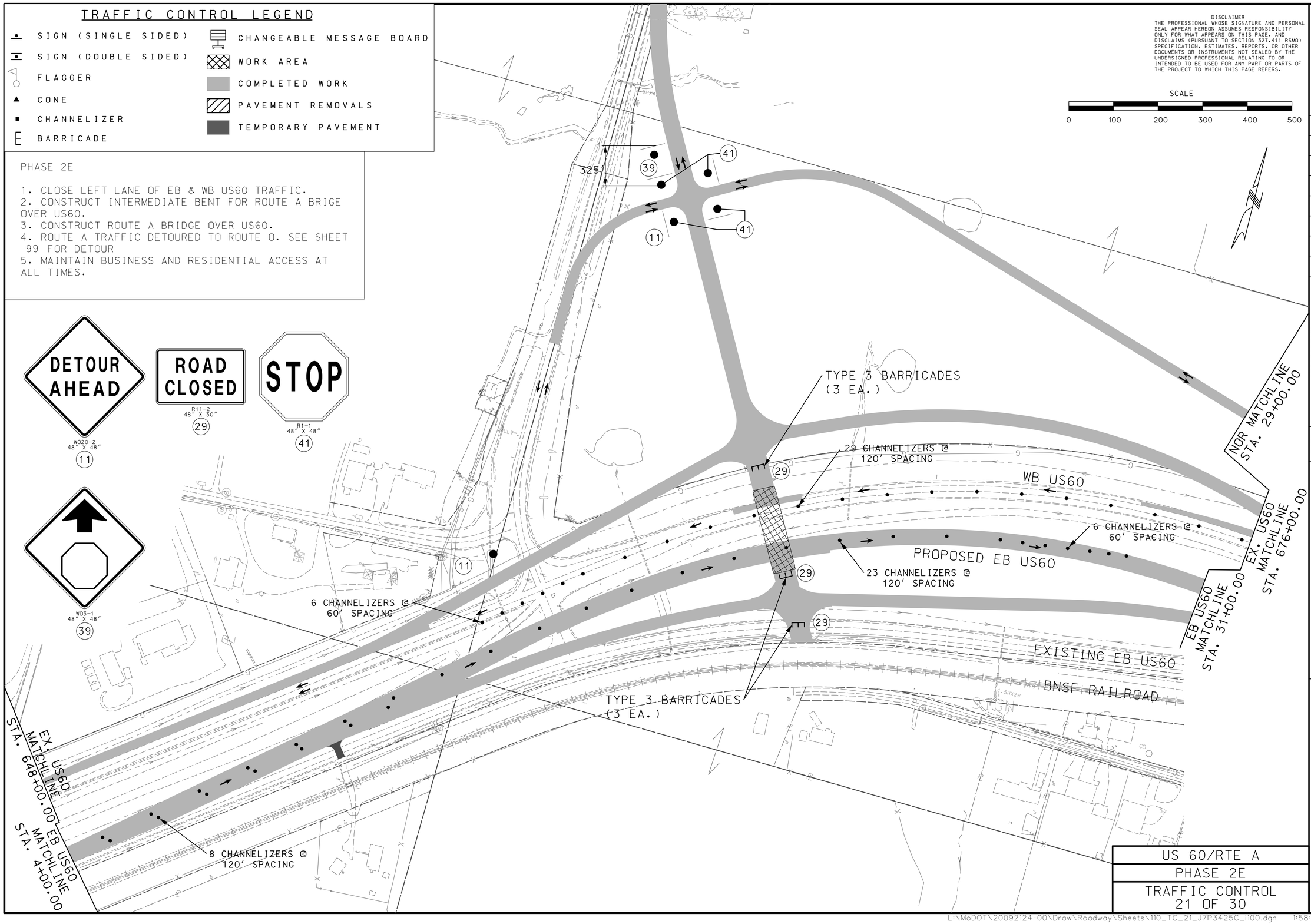

DISCLAIMER
THE PROFESSIONAL WHOSE SIGNATURE AND PERSONAL SEAL APPEAR HEREON ASSUMES RESPONSIBILITY ONLY FOR WHAT APPEARS ON THIS PAGE, AND DISCLAIMS (PURSUANT TO SECTION 327.411 RSMO) SPECIFICATION, ESTIMATES, REPORTS, OR OTHER DOCUMENTS OR INSTRUMENTS NOT SEALED BY THE UNDERSIGNED PROFESSIONAL RELATING TO OR INTENDED TO BE USED FOR ANY PART OR PARTS OF THE PROJECT TO WHICH THIS PAGE REFERS.

SCALE
0 100 200 300 400 500

STATE OF MISSOURI
DALLAS P. JOPLIN
NUMBER PE-2011015760
PROFESSIONAL ENGINEER

THIS SHEET HAS BEEN SIGNED, SEALED AND DATED ELECTRONICALLY.

DATE PREPARED: 9/3/2024

ROUTE	STATE
60	MO
DISTRICT	SHEET NO.
SW	110

COUNTY: WEBSTER
JOB NO.: J7P3425C
CONTRACT ID.:
PROJECT NO.:
BRIDGE NO.:

DATE	DESCRIPTION

IF A SEAL IS PRESENT ON THIS SHEET IT HAS BEEN ELECTRONICALLY SEALED AND DATED.

MISSOURI HIGHWAYS AND TRANSPORTATION COMMISSION
105 WEST CAPITOL
JEFFERSON CITY, MO 65102
1-888-ASK-MODOT (1-888-275-6636)

CMT
©Copyright CMT, Inc.
CRAWFORD, MURPHY & TILLY, INC.
1631 WEST ELFINDALE STREET
SPRINGFIELD, MO 65807 (417) 869-6009
ENGINEERING CORPORATION - 000631

US 60/RTE A
PHASE 2E
TRAFFIC CONTROL
21 OF 30

REV.

L:\MoDOT\20092124-00\Draw\Roadway\Sheets\110_TC_21_J7P3425C_I100.dgn 1:58:39 PM 9/3/2024

TRAFFIC CONTROL LEGEND

- SIGN (SINGLE SIDED)
- SIGN (DOUBLE SIDED)
- FLAGGER
- CONE
- CHANNELIZER
- BARRICADE
- CHANGEABLE MESSAGE BOARD
- WORK AREA
- COMPLETED WORK
- PAVEMENT REMOVALS
- TEMPORARY PAVEMENT

PHASE 2E

1. CLOSE LEFT LANE OF EB & WB US60 TRAFFIC.
2. CONSTRUCT INTERMEDIATE BENT FOR ROUTE A BRIGE OVER US60.
3. CONSTRUCT ROUTE A BRIDGE OVER US60.
4. ROUTE A TRAFFIC DETOURED TO ROUTE O. SEE SHEET 99 FOR DETOUR
5. MAINTAIN BUSINESS AND RESIDENTIAL ACCESS AT ALL TIMES.

ROAD WORK NEXT 2 MILES
G020-1 48" X 24"
(1)

ROAD WORK AHEAD
W020-1 48" X 48"
(2)

DISCLAIMER
THE PROFESSIONAL WHOSE SIGNATURE AND PERSONAL SEAL APPEAR HEREON ASSUMES RESPONSIBILITY ONLY FOR WHAT APPEARS ON THIS PAGE, AND DISCLAIMS (PURSUANT TO SECTION 327.411 RSMO) SPECIFICATION, ESTIMATES, REPORTS, OR OTHER DOCUMENTS OR INSTRUMENTS NOT SEALED BY THE UNDERSIGNED PROFESSIONAL RELATING TO OR INTENDED TO BE USED FOR ANY PART OR PARTS OF THE PROJECT TO WHICH THIS PAGE REFERS.

SCALE
0 100 200 300 400 500

LEFT LANE CLOSED
W020-6a 48" X 48"
(6L)

MERGE
W04-1aR 48" X 48"
(7R)

B = 730'
BUFFER
6 CHANNELIZERS @
120' SPACING

T2 = 840'
LANE TAPER
14 CHANNELIZERS @
60' SPACING

T1 = 235'
SHOULDER TAPER
4 CHANNELIZERS
@ 60' SPACING

EX. US60 MATCHLINE
STA. 676+00.00

EB US60 MATCHLINE
STA. 31+00.00

NOR MATCHLINE
STA. 29+00.00

8 CHANNELIZERS @
120' SPACING

12 CHANNELIZERS @
120' SPACING

WB US60

SEE DETAIL "B" FOR
SIGNING BEYOND
SURVEY LIMITS

EB US60

BNSF RAILROAD

DETAIL B
NOT TO SCALE

✱ SEE SIGN LEGEND

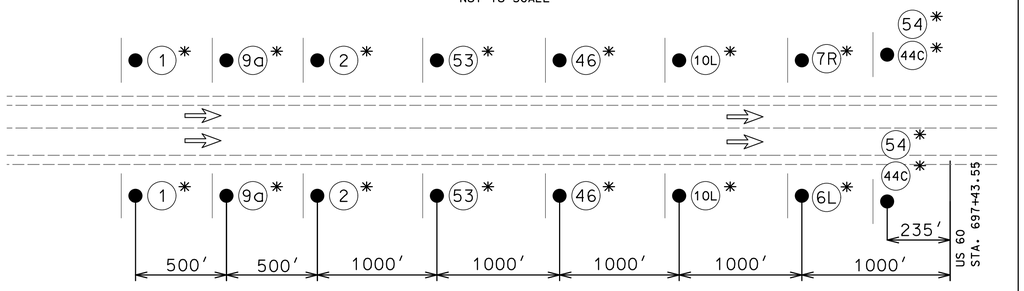

SPEED LIMIT 55
R2-1 36" X 48"
(44C)

MIN. $250 FINE
SPEEDING WHEN WORKERS PRESENT
CONST-3A 60" X 48"
(53)

DO NOT PASS
R4-1 36" X 48"
(46)

WORK ZONE
G020-5gP 36" X 24"
(54)

WORK ZONE
NO PHONE ZONE
SPECIAL 48" X 36"
(9a)

LEFT LANE CLOSED AHEAD
W020-5 48" X 48"
(10L)

STATE OF MISSOURI
DALLAS P. JOPLIN
NUMBER PE-2011015760
PROFESSIONAL ENGINEER

THIS SHEET HAS BEEN SIGNED, SEALED AND DATED ELECTRONICALLY.

DATE PREPARED	
9/3/2024	
ROUTE	STATE
60	MO
DISTRICT	SHEET NO.
SW	111
COUNTY	
WEBSTER	
JOB NO.	
J7P3425C	
CONTRACT ID.	
PROJECT NO.	
BRIDGE NO.	

IF A SEAL IS PRESENT ON THIS SHEET IT HAS BEEN ELECTRONICALLY SEALED AND DATED.

NO.	DESCRIPTION	DATE

MISSOURI HIGHWAYS AND TRANSPORTATION COMMISSION

105 WEST CAPITOL
JEFFERSON CITY, MO 65102
1-888-ASK-MODOT (1-888-275-6636)

©Copyright CMT, Inc.

CMT
CRAWFORD, MURPHY & TILLY, INC.
1631 WEST ELFINDALE STREET
SPRINGFIELD, MO 65807 (417) 869-6009
ENGINEERING CORPORATION - 000631

US 60
PHASE 2E
TRAFFIC CONTROL
22 OF 30

REV.

L:\MoDOT\20092124-00\Draw\Roadway\Sheets\111_TC_22_J7P3425C_100.dgn 1:58:42 PM 9/3/2024

TRAFFIC CONTROL LEGEND

- SIGN (SINGLE SIDED)
- SIGN (DOUBLE SIDED)
- FLAGGER
- CONE
- CHANNELIZER
- BARRICADE
- CHANGEABLE MESSAGE BOARD
- WORK AREA
- COMPLETED WORK
- PAVEMENT REMOVALS
- TEMPORARY PAVEMENT

PHASE 3A

1. CONSTRUCT PROPOSED ROUTE NN FROM BNSF TO EXISTING ROUTE NN.
2. CONSTRUCT SOUTH BENT OF ROUTE NN BRIDGE OVER BNSF.
3. CONSTRUCT MSE WALL ON SOUTH SIDE OF BNSF
4. CONSTRUCT SOUTH OUTER ROAD TO FIRST DRIVEWAY.
5. MAINTAIN BUSINESS AND RESIDENTIAL ACCESS AT ALL TIMES.

WB US60

WB US60

EXISTING EB US60

BNSF RAILROAD

29

EXISTING EB US60

BNSF RAILROAD

REMOVE TEMPORARY PAVEMENT WHEN ALTERNATE ACCESS TO US 60 IS PROVIDED.

RTE NN

SOUTH OUTER ROAD

RTE A MATCHLINE STA. 90+00.00

ROAD CLOSED
R11-2
48" X 30"
29

SCALE
0 100 200 300 400 500

DISCLAIMER
THE PROFESSIONAL WHOSE SIGNATURE AND PERSONAL SEAL APPEAR HEREON ASSUMES RESPONSIBILITY ONLY FOR WHAT APPEARS ON THIS PAGE, AND DISCLAIMS (PURSUANT TO SECTION 327.411 RSMO) SPECIFICATION, ESTIMATES, REPORTS, OR OTHER DOCUMENTS OR INSTRUMENTS NOT SEALED BY THE UNDERSIGNED PROFESSIONAL RELATING TO OR INTENDED TO BE USED FOR ANY PART OR PARTS OF THE PROJECT TO WHICH THIS PAGE REFERS.

STATE OF MISSOURI
DALLAS P. JOPLIN
NUMBER PE-2011015760
PROFESSIONAL ENGINEER

THIS SHEET HAS BEEN SIGNED, SEALED AND DATED ELECTRONICALLY.

DATE PREPARED	
9/3/2024	
ROUTE	STATE
60	MO
DISTRICT	SHEET NO.
SW	112

COUNTY: WEBSTER
JOB NO.: J7P3425C
CONTRACT ID.:
PROJECT NO.:
BRIDGE NO.:

DATE	DESCRIPTION

IF A SEAL IS PRESENT ON THIS SHEET IT HAS BEEN ELECTRONICALLY SEALED AND DATED.

MISSOURI HIGHWAYS AND TRANSPORTATION COMMISSION
105 WEST CAPITOL
JEFFERSON CITY, MO 65102
1-888-ASK-MODOT (1-888-275-6636)

CMT
CRAWFORD, MURPHY & TILLY, INC.
1631 WEST ELFINDALE STREET
SPRINGFIELD, MO 65807 (417) 869-6009
ENGINEERING CORPORATION - 000631
© Copyright CMT, Inc.

US 60/RTE NN
PHASE 3A
TRAFFIC CONTROL
23 OF 30

REV.

L:\MoDOT\20092124-00\Draw\Roadway\Sheets\112_TC_23_J7P3425C_100.dgn 1:58:46 PM 9/3/2024

TRAFFIC CONTROL LEGEND

- SIGN (SINGLE SIDED)
- SIGN (DOUBLE SIDED)
- FLAGGER
- CONE
- CHANNELIZER
- BARRICADE
- CHANGEABLE MESSAGE BOARD
- WORK AREA
- COMPLETED WORK
- PAVEMENT REMOVALS
- TEMPORARY PAVEMENT

PHASE 3B

1. CONSTRUCT PROPOSED ROUTE NN FROM BNSF TO EXISTING ROUTE NN.
2. MAINTAIN BUSINESS AND RESIDENTIAL ACCESS AT ALL TIMES.

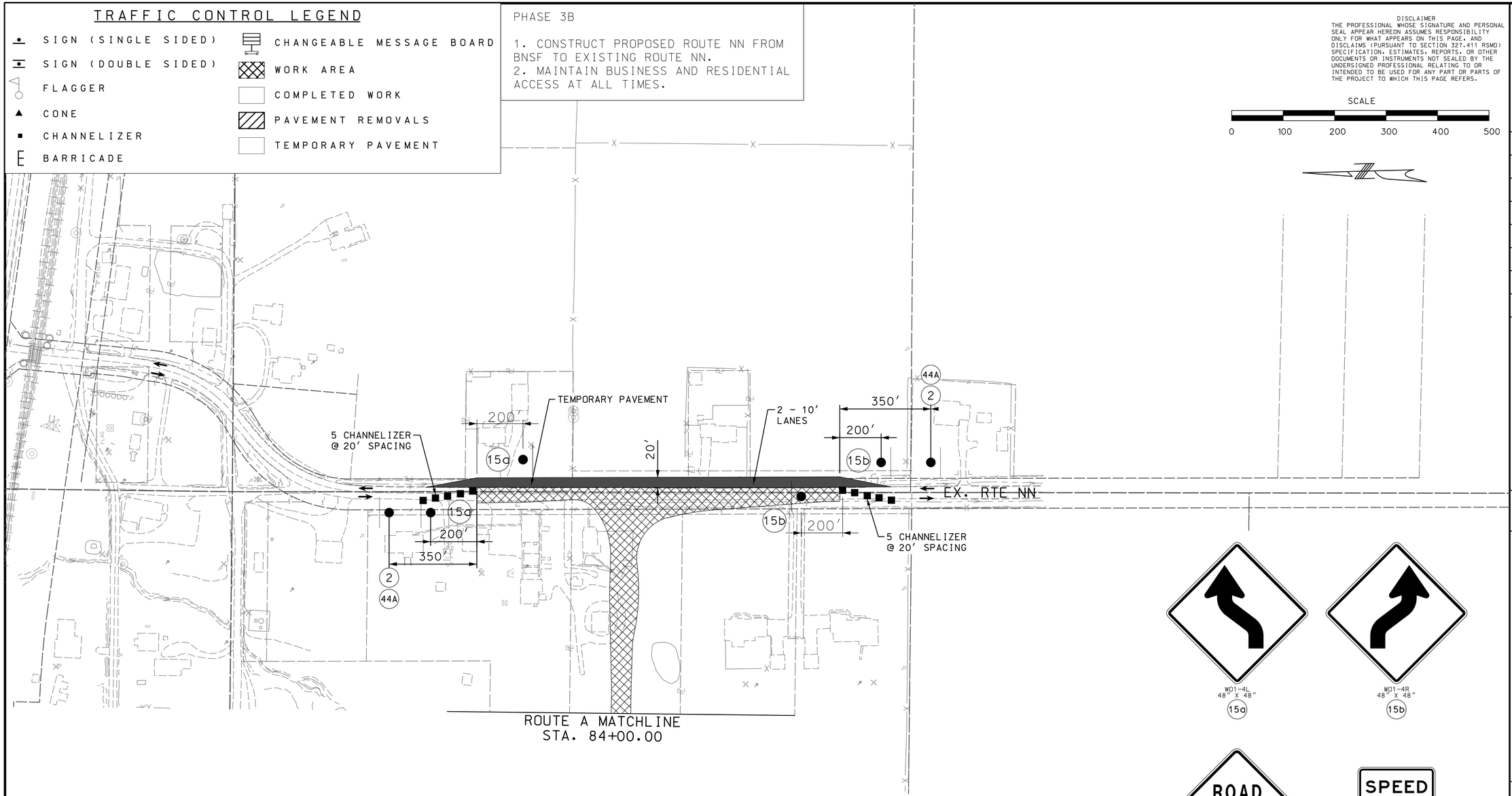

SCALE

0 100 200 300 400 500

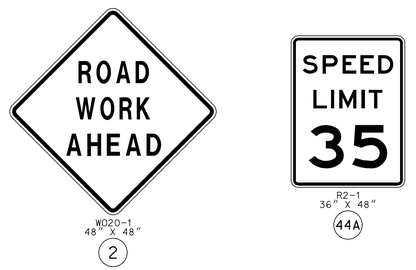

DISCLAIMER
THE PROFESSIONAL WHOSE SIGNATURE AND PERSONAL SEAL APPEAR HEREON ASSUMES RESPONSIBILITY ONLY FOR WHAT APPEARS ON THIS PAGE, AND DISCLAIMS (PURSUANT TO SECTION 327.411 RSMO) SPECIFICATION, ESTIMATES, REPORTS, OR OTHER DOCUMENTS OR INSTRUMENTS NOT SEALED BY THE UNDERSIGNED PROFESSIONAL RELATING TO OR INTENDED TO BE USED FOR ANY PART OR PARTS OF THE PROJECT TO WHICH THIS PAGE REFERS.

STATE OF MISSOURI
DALLAS P. JOPLIN
NUMBER PE-2011015760
PROFESSIONAL ENGINEER

THIS SHEET HAS BEEN SIGNED, SEALED AND DATED ELECTRONICALLY.

DATE PREPARED	
9/3/2024	
ROUTE	STATE
60	MO
DISTRICT	SHEET NO.
SW	113
COUNTY	
WEBSTER	
JOB NO.	
J7P3425C	
CONTRACT ID.	
PROJECT NO.	
BRIDGE NO.	

IF A SEAL IS PRESENT ON THIS SHEET IT HAS BEEN ELECTRONICALLY SEALED AND DATED.

REV.	DATE	DESCRIPTION

MISSOURI HIGHWAYS AND TRANSPORTATION COMMISSION
105 WEST CAPITOL
JEFFERSON CITY, MO 65102
1-888-ASK-MODOT (1-888-275-6636)

CMT
© Copyright CMT, Inc.
CRAWFORD, MURPHY & TILLY, INC.
1631 WEST ELFINDALE STREET
SPRINGFIELD, MO 65807 (417) 869-6009
ENGINEERING CORPORATION - 000631

ROUTE NN
PHASE 3B
TRAFFIC CONTROL
24 OF 30

TRAFFIC CONTROL LEGEND

- SIGN (SINGLE SIDED)
- SIGN (DOUBLE SIDED)
- FLAGGER
- CONE
- CHANNELIZER
- BARRICADE
- CHANGEABLE MESSAGE BOARD
- WORK AREA
- COMPLETED WORK
- PAVEMENT REMOVALS
- TEMPORARY PAVEMENT

PHASE 3C

1. CONSTRUCT REMAINDER OF ROUNDABOUT
2. TEMPORARY PAVEMENT TO BE MAINTAINED UNTIL ROUNDABOUT IS COMPLETE
3. MAINTAIN BUSINESS AND RESIDENTIAL ACCESS AT ALL TIMES.

DISCLAIMER
THE PROFESSIONAL WHOSE SIGNATURE AND PERSONAL SEAL APPEAR HEREON ASSUMES RESPONSIBILITY ONLY FOR WHAT APPEARS ON THIS PAGE, AND DISCLAIMS (PURSUANT TO SECTION 327.411 RSMO) SPECIFICATION, ESTIMATES, REPORTS, OR OTHER DOCUMENTS OR INSTRUMENTS NOT SEALED BY THE UNDERSIGNED PROFESSIONAL RELATING TO OR INTENDED TO BE USED FOR ANY PART OR PARTS OF THE PROJECT TO WHICH THIS PAGE REFERS.

SCALE
0 100 200 300 400 500

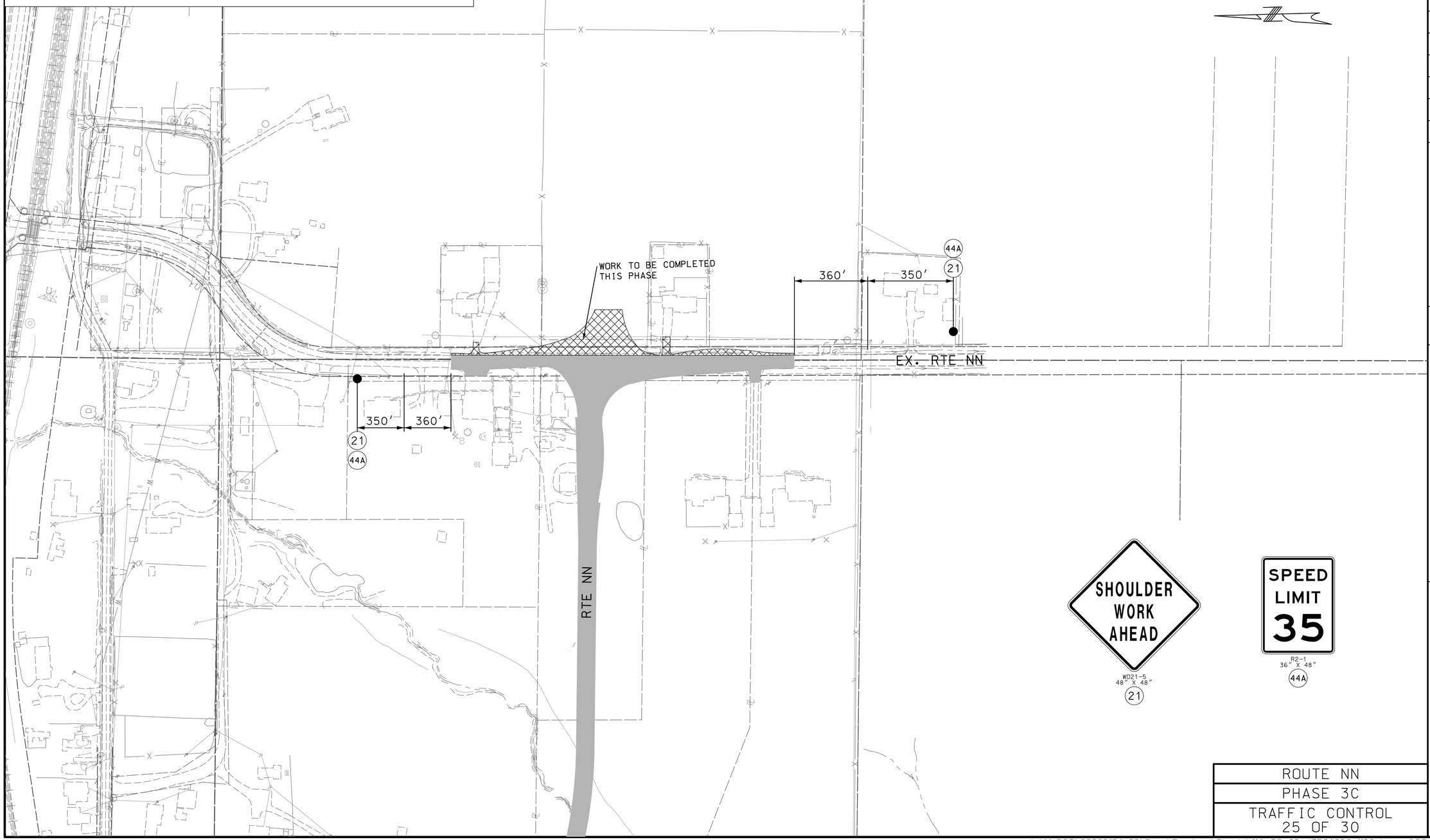

DALLAS P. JOPLIN
NUMBER PE-2011015760
PROFESSIONAL ENGINEER
STATE OF MISSOURI

THIS SHEET HAS BEEN SIGNED, SEALED AND DATED ELECTRONICALLY.

DATE PREPARED	
9/3/2024	
ROUTE	STATE
60	MO
DISTRICT	SHEET NO.
SW	114

COUNTY: WEBSTER
JOB NO.: J7P3425C
CONTRACT ID.:
PROJECT NO.:
BRIDGE NO.:

DESCRIPTION	DATE

IF A SEAL IS PRESENT ON THIS SHEET IT HAS BEEN ELECTRONICALLY SEALED AND DATED.

MISSOURI HIGHWAYS AND TRANSPORTATION COMMISSION
105 WEST CAPITOL
JEFFERSON CITY, MO 65102
1-888-ASK-MODOT (1-888-275-6636)

CMT
CRAWFORD, MURPHY & TILLY, INC.
1631 WEST ELFINDALE STREET
SPRINGFIELD, MO 65807 (417) 869-6009
ENGINEERING CORPORATION - 000631
©Copyright CMT, Inc.

ROUTE NN
PHASE 3C
TRAFFIC CONTROL
25 OF 30

REV.

L:\MoDOT\20092124-00\Draw\Roadway\Sheets\114_TC_25_J7P3425C_i100.dgn 1:58:52 PM 9/3/2024

TRAFFIC CONTROL LEGEND

- SIGN (SINGLE SIDED)
- SIGN (DOUBLE SIDED)
- FLAGGER
- CONE
- CHANNELIZER
- BARRICADE
- CHANGEABLE MESSAGE BOARD
- WORK AREA
- COMPLETED WORK
- PAVEMENT REMOVALS
- TEMPORARY PAVEMENT

PHASE 3D

1. CONSTRUCT MEDIAN ISLANDS AND ROUNDABOUT CENTER ISLAND.
2. ALL TRAFFIC MOVEMENTS TO BE MAINTAINED DURING CONSTRUCTION
3. MAINTAIN BUSINESS AND RESIDENTIAL ACCESS AT ALL TIMES.

SCALE

0 100 200 300 400 500

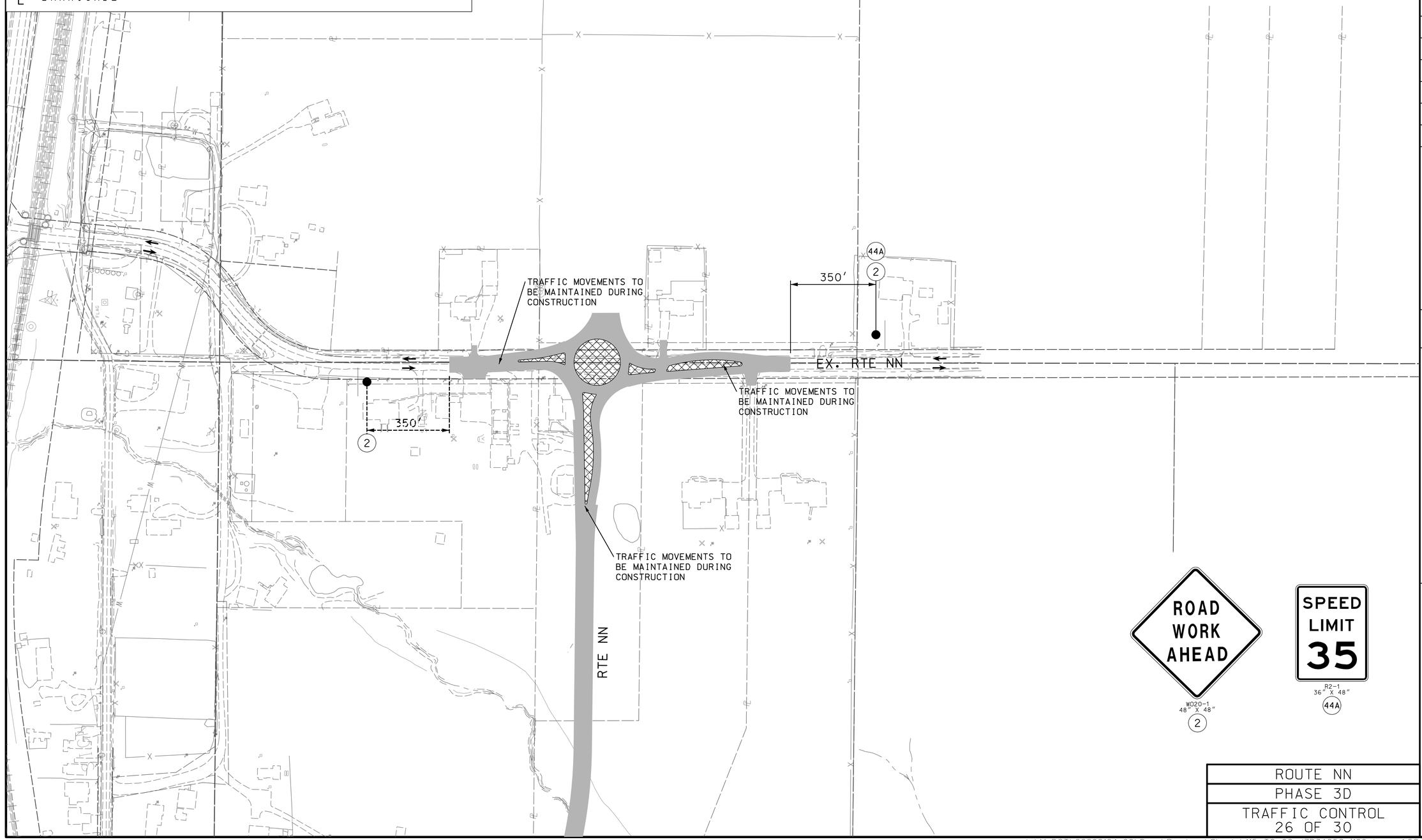

ROAD WORK AHEAD
W020-1
48" X 48"
2

SPEED LIMIT 35
R2-1
36" X 48"
44A

DISCLAIMER
THE PROFESSIONAL WHOSE SIGNATURE AND PERSONAL SEAL APPEAR HEREON ASSUMES RESPONSIBILITY ONLY FOR WHAT APPEARS ON THIS PAGE, AND DISCLAIMS (PURSUANT TO SECTION 327.411 RSMO) SPECIFICATION, ESTIMATES, REPORTS, OR OTHER DOCUMENTS OR INSTRUMENTS NOT SEALED BY THE UNDERSIGNED PROFESSIONAL RELATING TO OR INTENDED TO BE USED FOR ANY PART OR PARTS OF THE PROJECT TO WHICH THIS PAGE REFERS.

STATE OF MISSOURI
DALLAS P. JOPLIN
NUMBER PE-2011015760
PROFESSIONAL ENGINEER

THIS SHEET HAS BEEN SIGNED, SEALED AND DATED ELECTRONICALLY.

DATE PREPARED: 9/3/2024

ROUTE	STATE
60	MO
DISTRICT	SHEET NO.
SW	115

COUNTY: WEBSTER
JOB NO.: J7P3425C
CONTRACT ID.:
PROJECT NO.:
BRIDGE NO.:

DESCRIPTION	DATE

IF A SEAL IS PRESENT ON THIS SHEET IT HAS BEEN ELECTRONICALLY SEALED AND DATED.

MISSOURI HIGHWAYS AND TRANSPORTATION COMMISSION
105 WEST CAPITOL
JEFFERSON CITY, MO 65102
1-888-ASK-MODOT (1-888-275-6636)

CMT
© Copyright CMT, Inc.
CRAWFORD, MURPHY & TILLY, INC.
1631 WEST ELFINDALE STREET
SPRINGFIELD, MO 65807 (417) 869-6009
ENGINEERING CORPORATION - 000631

ROUTE NN
PHASE 3D
TRAFFIC CONTROL
26 OF 30

REV.

L:\MoDOT\20092124-00\Draw\Roadway\Sheets\115_TC_26_J7P3425C_i100.dgn 1:58:55 PM 9/3/2024

TRAFFIC CONTROL LEGEND

- SIGN (SINGLE SIDED)
- SIGN (DOUBLE SIDED)
- FLAGGER
- CONE
- CHANNELIZER
- BARRICADE
- CHANGEABLE MESSAGE BOARD
- WORK AREA
- COMPLETED WORK
- PAVEMENT REMOVALS
- TEMPORARY PAVEMENT

PHASE 3E

1. REMOVE TEMPORARY J-TURNS BETWEEN ROUTE NN AND ROUTE O.
2. REMOVE PAVEMENT AT ROUTE O CROSSOVER.
3. WORK ZONE SIGNING ALONG US60 EASTBOUND AND WESTBOUND.
4. REFERENCE TYPICAL APPLICATION 33S. SEE SHEET 90.
5. MAINTAIN BUSINESS AND RESIDENTIAL ACCESS AT ALL TIMES.

SCALE
0 100 200 300 400 500

DISCLAIMER
THE PROFESSIONAL WHOSE SIGNATURE AND PERSONAL SEAL APPEAR HEREON ASSUMES RESPONSIBILITY ONLY FOR WHAT APPEARS ON THIS PAGE, AND DISCLAIMS (PURSUANT TO SECTION 327.411 RSMO) SPECIFICATION, ESTIMATES, REPORTS, OR OTHER DOCUMENTS OR INSTRUMENTS NOT SEALED BY THE UNDERSIGNED PROFESSIONAL RELATING TO OR INTENDED TO BE USED FOR ANY PART OR PARTS OF THE PROJECT TO WHICH THIS PAGE REFERS.

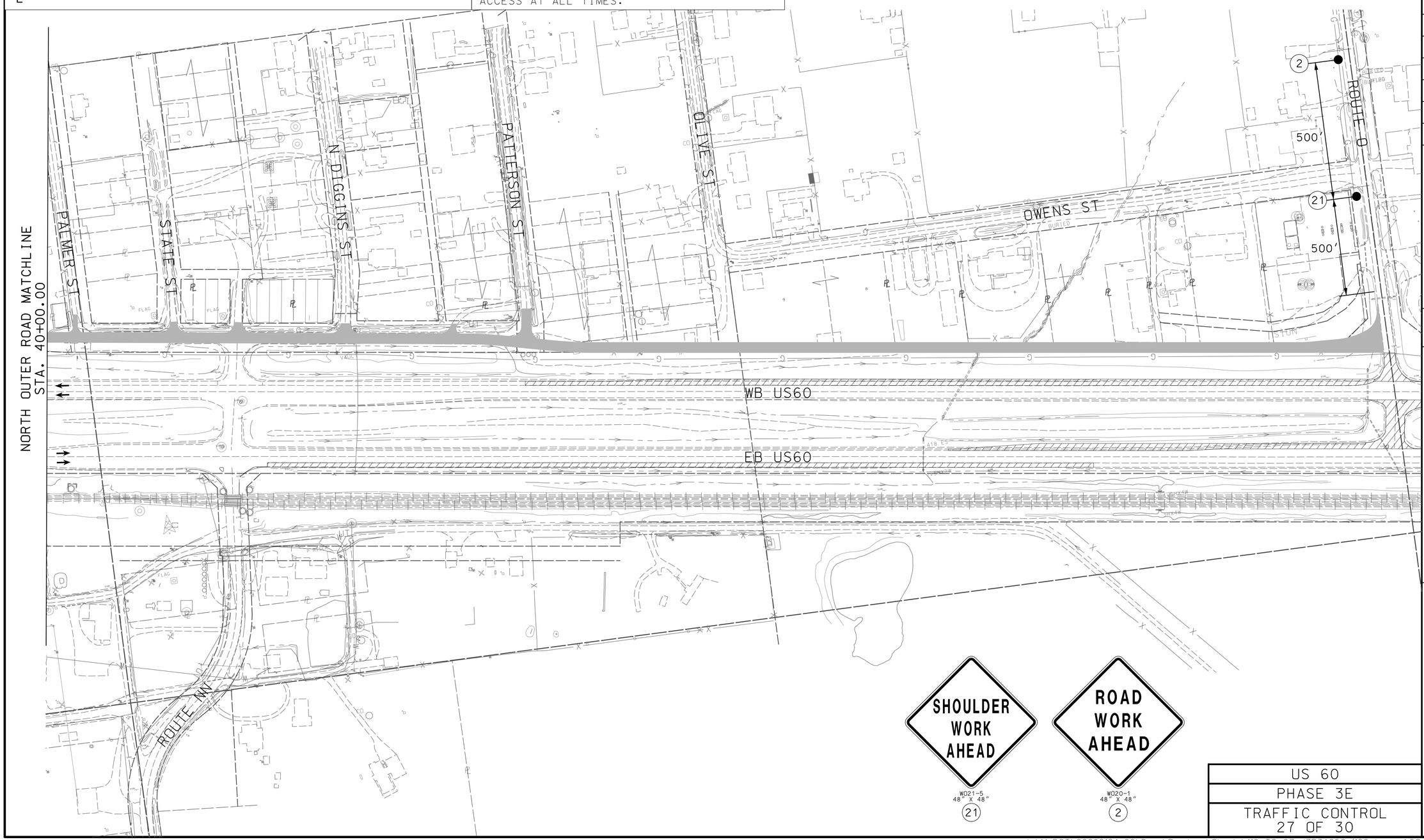

WD21-5
48" X 48"
(21)

WD20-1
48" X 48"
(2)

US 60
PHASE 3E
TRAFFIC CONTROL
27 OF 30

STATE OF MISSOURI
DALLAS P. JOPLIN
NUMBER PE-2011015760
PROFESSIONAL ENGINEER
THIS SHEET HAS BEEN SIGNED, SEALED AND DATED ELECTRONICALLY.

DATE PREPARED: 9/3/2024

ROUTE	STATE
60	MO
DISTRICT	SHEET NO.
SW	116

COUNTY: WEBSTER
JOB NO.: J7P3425C
CONTRACT ID.:
PROJECT NO.:
BRIDGE NO.:

DATE	DESCRIPTION	REV.

IF A SEAL IS PRESENT ON THIS SHEET IT HAS BEEN ELECTRONICALLY SEALED AND DATED.

MISSOURI HIGHWAYS AND TRANSPORTATION COMMISSION
105 WEST CAPITOL
JEFFERSON CITY, MO 65102
1-888-ASK-MODOT (1-888-275-6636)

CMT
CRAWFORD, MURPHY & TILLY, INC.
1631 WEST ELFINDALE STREET
SPRINGFIELD, MO 65807 (417) 869-6009
ENGINEERING CORPORATION - 000631
© Copyright CMT, Inc.

L:\MoDOT\20092124-00\Draw\Roadway\Sheets\116_TC_27_J7P3425C_i100.dgn 1:58:58 PM 9/3/2024

TRAFFIC CONTROL LEGEND

- SIGN (SINGLE SIDED)
- SIGN (DOUBLE SIDED)
- FLAGGER
- CONE
- CHANNELIZER
- BARRICADE
- CHANGEABLE MESSAGE BOARD
- WORK AREA
- COMPLETED WORK
- PAVEMENT REMOVALS
- TEMPORARY PAVEMENT

PHASE 4

1. CONSTRUCT SOUTH OUTER ROAD.
2. CONSTRUCT ENTRANCES AT BLUEBIRD LN, HUMMINGBIRD LN, TANDY RD, HONOR CAMP LN, AND GREEN BRIAR DR HALF AT A TIME TO MAINTAIN ACCESS.
3. MAINTAIN ACCESS TO US 60 ON ALL SIDEROADS UNTIL ALTERNATE ACCESS IS AVAILABLE.
4. MAINTAIN RESIDENTIAL ACCESS AT ALL TIMES.

DISCLAIMER
THE PROFESSIONAL WHOSE SIGNATURE AND PERSONAL SEAL APPEAR HEREON ASSUMES RESPONSIBILITY ONLY FOR WHAT APPEARS ON THIS PAGE, AND DISCLAIMS (PURSUANT TO SECTION 327.411 RSMO) SPECIFICATION, ESTIMATES, REPORTS, OR OTHER DOCUMENTS OR INSTRUMENTS NOT SEALED BY THE UNDERSIGNED PROFESSIONAL RELATING TO OR INTENDED TO BE USED FOR ANY PART OR PARTS OF THE PROJECT TO WHICH THIS PAGE REFERS.

SCALE
0 200 400 600 800 1000

REMOVE BLUEBIRD LN ACCESS AFTER ALTERNATE ACCESS TO US 60 IS PROVIDED

REMOVE HUMMINGBIRD LN ACCESS AFTER ALTERNATE ACCESS TO US 60 IS PROVIDED

1000′

1000′

SOUTH OUTER ROAD MATCHLINE
STA. 55+00.00

200′

BLUEBIRD LN.

200′

HUMMINGBIRD LN.

500′

ROUTE Z

500′

ROAD WORK AHEAD
W020-1

SOUTH OUTER ROAD
PHASE 4
TRAFFIC CONTROL
28 OF 30

STATE OF MISSOURI
DALLAS P. JOPLIN
NUMBER PE-2011015760
PROFESSIONAL ENGINEER
THIS SHEET HAS BEEN SIGNED, SEALED AND DATED ELECTRONICALLY.

DATE PREPARED: 9/3/2024

ROUTE	STATE
60	MO
DISTRICT	SHEET NO.
SW	117

COUNTY: WEBSTER
JOB NO.: J7P3425C
CONTRACT ID.:
PROJECT NO.:
BRIDGE NO.:

DESCRIPTION	DATE

IF A SEAL IS PRESENT ON THIS SHEET IT HAS BEEN ELECTRONICALLY SEALED AND DATED.

MISSOURI HIGHWAYS AND TRANSPORTATION COMMISSION
105 WEST CAPITOL
JEFFERSON CITY, MO 65102
1-888-ASK-MODOT (1-888-275-6636)

CMT
© Copyright CMT, Inc.
CRAWFORD, MURPHY & TILLY, INC.
1631 WEST ELFINDALE STREET
SPRINGFIELD, MO 65807 (417) 869-6009
ENGINEERING CORPORATION - 000631

REV.

L:\MoDOT\20092124-00\Draw\Roadway\Sheets\117_TC_28_J7P3425C_i200.dgn 1:59:01 PM 9/3/2024

TRAFFIC CONTROL LEGEND

- SIGN (SINGLE SIDED)
- SIGN (DOUBLE SIDED)
- FLAGGER
- CONE
- CHANNELIZER
- BARRICADE
- CHANGEABLE MESSAGE BOARD
- WORK AREA
- COMPLETED WORK
- PAVEMENT REMOVALS
- TEMPORARY PAVEMENT

PHASE 4

1. CONSTRUCT SOUTH OUTER ROAD.
2. CONSTRUCT ENTRANCES AT BLUEBIRD LN, HUMMINGBIRD LN, TANDY RD, HONOR CAMP LN, AND GREEN BRIAR DR HALF AT A TIME TO MAINTAIN ACCESS.
3. MAINTAIN ACCESS TO US 60 ON ALL SIDEROADS UNTIL ALTERNATE ACCESS IS AVAILABLE.
4. MAINTAIN RESIDENTIAL ACCESS AT ALL TIMES.

DISCLAIMER
THE PROFESSIONAL WHOSE SIGNATURE AND PERSONAL SEAL APPEAR HEREON ASSUMES RESPONSIBILITY ONLY FOR WHAT APPEARS ON THIS PAGE, AND DISCLAIMS (PURSUANT TO SECTION 327.411 RSMO) SPECIFICATION, ESTIMATES, REPORTS, OR OTHER DOCUMENTS OR INSTRUMENTS NOT SEALED BY THE UNDERSIGNED PROFESSIONAL RELATING TO OR INTENDED TO BE USED FOR ANY PART OR PARTS OF THE PROJECT TO WHICH THIS PAGE REFERS.

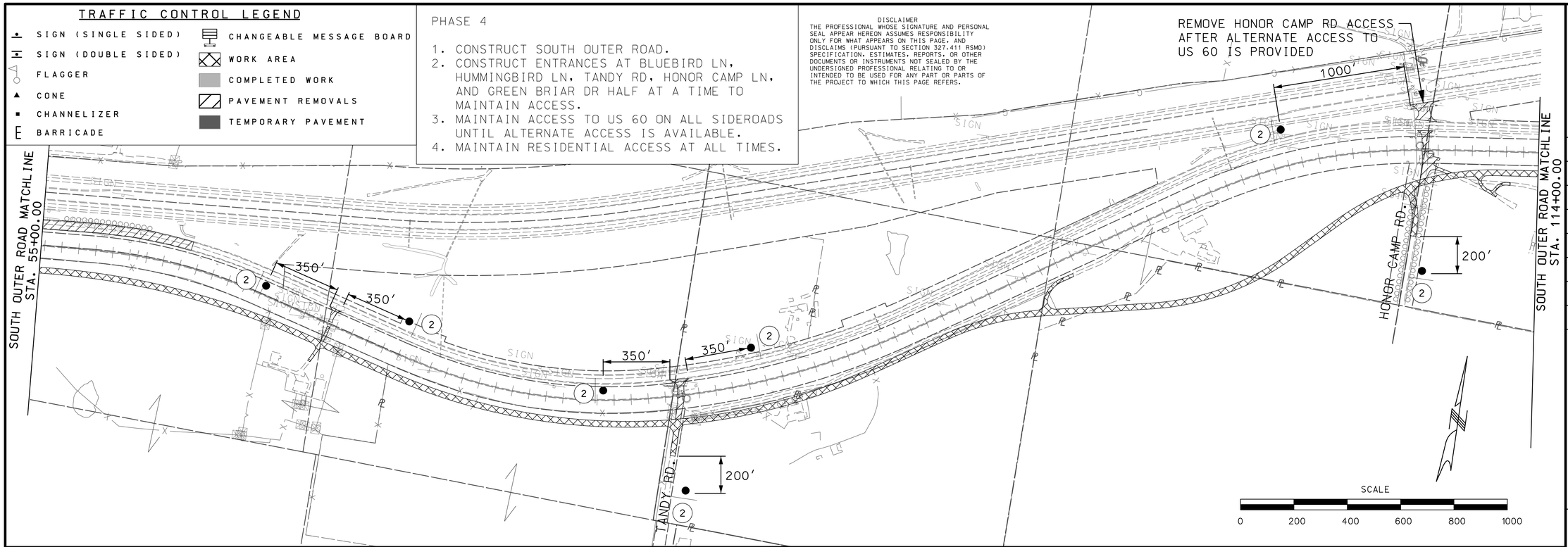

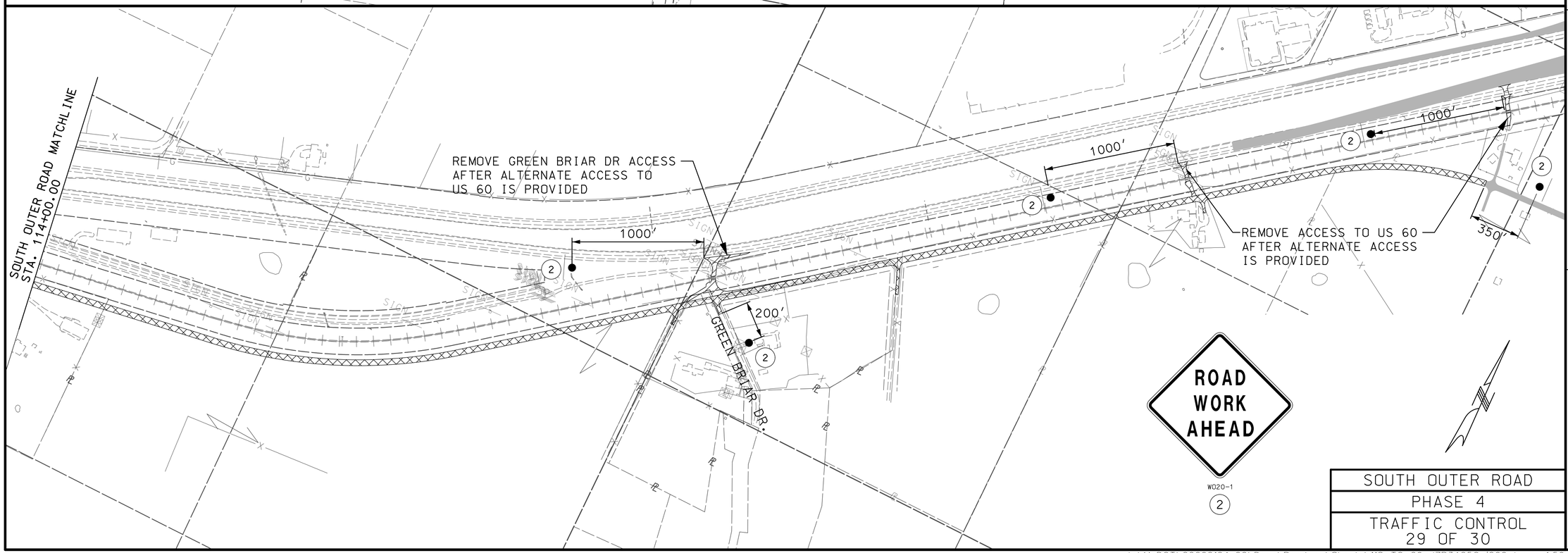

SOUTH OUTER ROAD
PHASE 4
TRAFFIC CONTROL
29 OF 30

DALLAS P. JOPLIN
NUMBER PE-2011015760
PROFESSIONAL ENGINEER
STATE OF MISSOURI

THIS SHEET HAS BEEN SIGNED, SEALED AND DATED ELECTRONICALLY.

DATE PREPARED	
9/3/2024	
ROUTE	STATE
60	MO
DISTRICT	SHEET NO.
SW	118
COUNTY	
WEBSTER	
JOB NO.	
J7P3425C	
CONTRACT ID.	
PROJECT NO.	
BRIDGE NO.	

DESCRIPTION | DATE

IF A SEAL IS PRESENT ON THIS SHEET IT HAS BEEN ELECTRONICALLY SEALED AND DATED.

MISSOURI HIGHWAYS AND TRANSPORTATION COMMISSION
105 WEST CAPITOL
JEFFERSON CITY, MO 65102
1-888-ASK-MODOT (1-888-275-6636)

CMT
CRAWFORD, MURPHY & TILLY, INC.
1631 WEST ELFINDALE STREET
SPRINGFIELD, MO 65807 (417) 869-6009
ENGINEERING CORPORATION - 000631
©Copyright CMT, Inc.

REV.

L:\MoDOT\20092124-00\Draw\Roadway\Sheets\118_TC_29_J7P3425C_i200.dgn 1:59:05 PM 9/3/2024

CONST-5P-60 SHF-FLAT SHEET FLUORESCENT;
1.500" Radius, No border, Yellow;
"Completed as Promised" Black, D 65% spacing;
Table of letter and object lefts

C	o	m	p	l	e	t	e	d	a	s
1.500	4.875	7.875	12.375	15.375	16.625	19.375	21.500	24.250	29.000	31.875

P	r	o	m	i	s	e	d
36.625	39.875	41.875	44.875	49.500	50.750	53.500	56.250

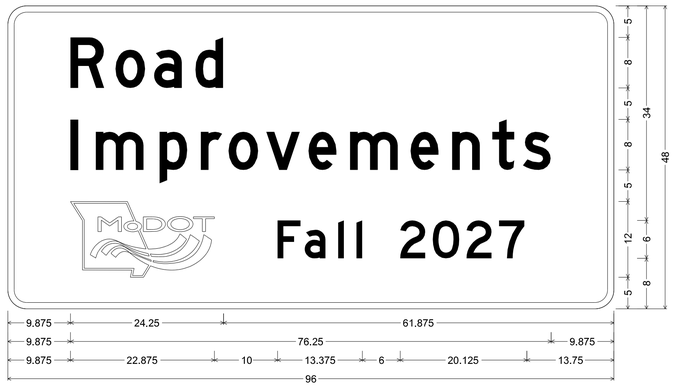

CONST-5-96 SH-FLAT SHEET;
3.000" Radius, 1.000" Border, White on, Blue;
"Road", D; "Improvements", D; "Fall 2024", D;
Table of letter and object lefts

R	o	a	d
9.875	17.125	23.125	29.750

I	m	p	r	o	v	e	m	e	n	t	s
9.875	14.000	24.000	30.625	35.000	41.000	47.625	54.250	63.750	70.375	76.750	81.625

F	a	l	l	2	0	2	4
42.750	47.000	52.375	55.250	62.125	67.375	72.625	77.875

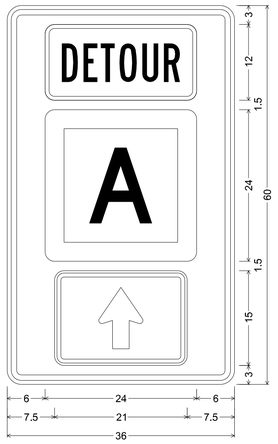

MO4-12 SHF-FLAT SHEET FLUORESCENT;
2.250" Radius, 0.875" Border, 0.625" Indent, Black on, Orange;
Table of letter and object lefts

	6.000
A	6.000
	7.500

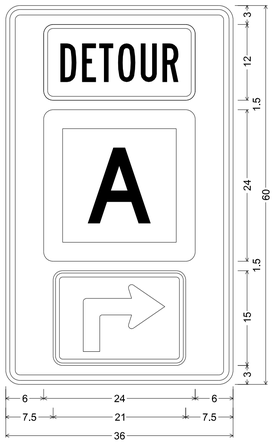

MO4-12 SHF-FLAT SHEET FLUORESCENT;
2.250" Radius, 0.875" Border, 0.625" Indent, Black on, Orange;
Table of letter and object lefts

	6.000
A	6.000
	7.500

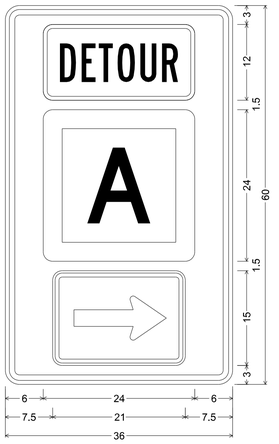

MO4-12 SHF-FLAT SHEET FLUORESCENT;
2.250" Radius, 0.875" Border, 0.625" Indent, Black on, Orange;
Table of letter and object lefts

	6.000
A	6.000
	7.500

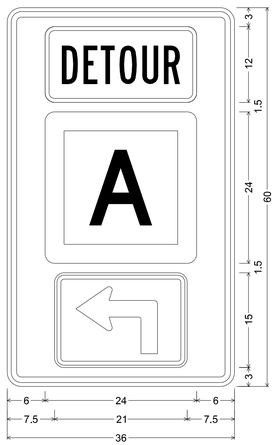

MO4-12 SHF-FLAT SHEET FLUORESCENT;
2.250" Radius, 0.875" Border, 0.625" Indent, Black on, Orange;
Table of letter and object lefts

	6.000
A	6.000
	7.500

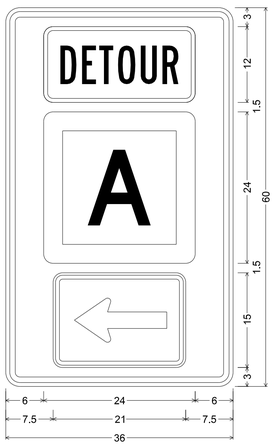

MO4-12 SHF-FLAT SHEET FLUORESCENT;
2.250" Radius, 0.875" Border, 0.625" Indent, Black on, Orange;
Table of letter and object lefts

	6.000
A	6.000
	7.500

STATE OF MISSOURI
DALLAS P. JOPLIN
NUMBER PE-2011015760
PROFESSIONAL ENGINEER
THIS SHEET HAS BEEN SIGNED, SEALED AND DATED ELECTRONICALLY.

DATE PREPARED
8/5/2024

ROUTE	STATE
60	MO
DISTRICT	SHEET NO.
SW	119

COUNTY
WEBSTER

JOB NO.
J7P3425C

CONTRACT ID.

PROJECT NO.

BRIDGE NO.

DESCRIPTION	DATE

IF A SEAL IS PRESENT ON THIS SHEET IT HAS BEEN ELECTRONICALLY SEALED AND DATED.

MISSOURI HIGHWAYS AND TRANSPORTATION COMMISSION
105 WEST CAPITOL
JEFFERSON CITY, MO 65102
1-888-ASK-MODOT (1-888-275-6636)

CMT
©Copyright CMT, Inc.
CRAWFORD, MURPHY & TILLY, INC.
1631 WEST ELFINDALE STREET
SPRINGFIELD, MO 65807 (417) 869-6009
ENGINEERING CORPORATION - 000631

SIGN DETAILS

TRAFFIC CONTROL
30 OF 30

REV.

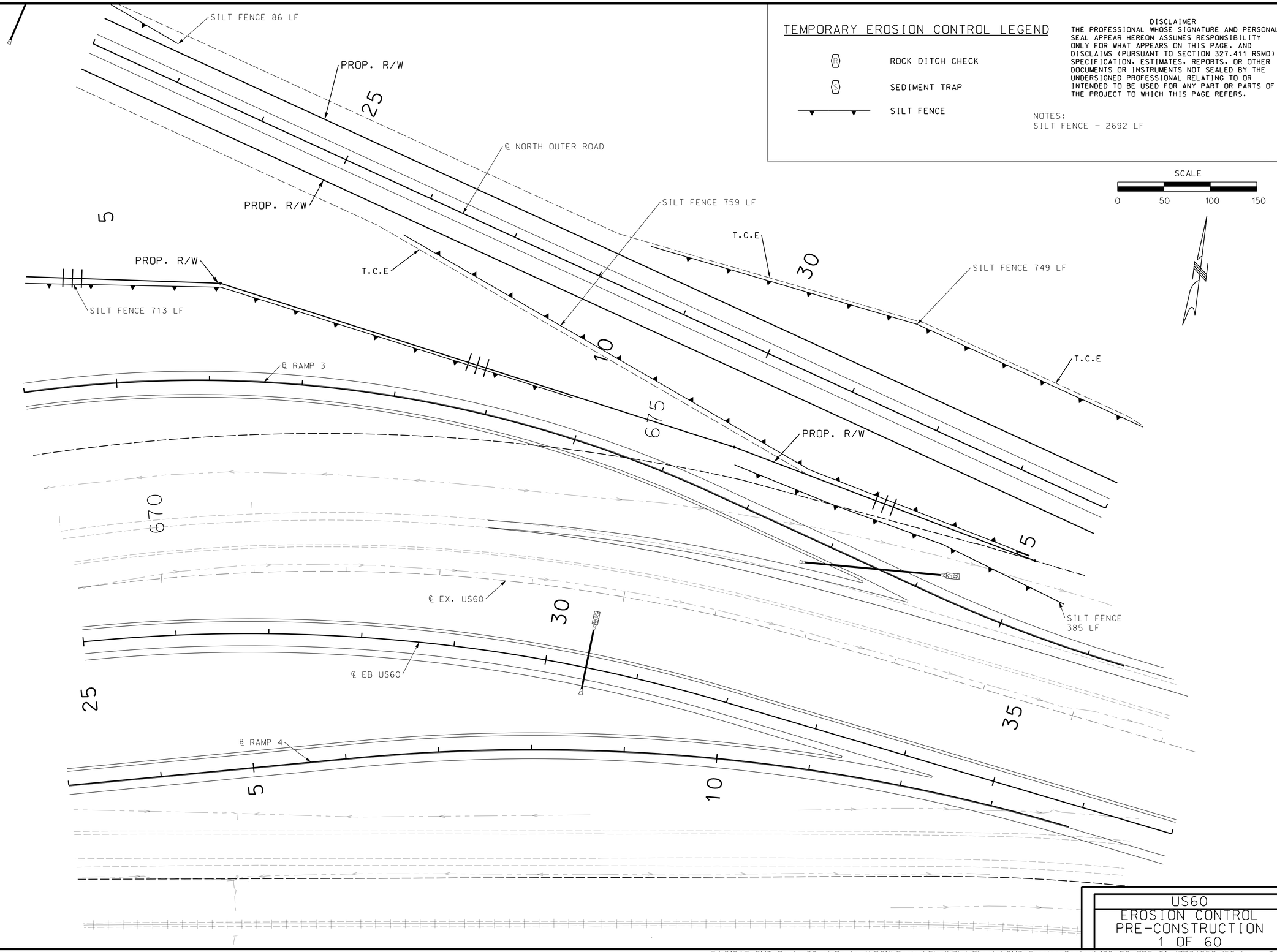

TEMPORARY EROSION CONTROL LEGEND

- ROCK DITCH CHECK
- SEDIMENT TRAP
- SILT FENCE

DISCLAIMER
THE PROFESSIONAL WHOSE SIGNATURE AND PERSONAL SEAL APPEAR HEREON ASSUMES RESPONSIBILITY ONLY FOR WHAT APPEARS ON THIS PAGE, AND DISCLAIMS (PURSUANT TO SECTION 327.411 RSMO) SPECIFICATION, ESTIMATES, REPORTS, OR OTHER DOCUMENTS OR INSTRUMENTS NOT SEALED BY THE UNDERSIGNED PROFESSIONAL RELATING TO OR INTENDED TO BE USED FOR ANY PART OR PARTS OF THE PROJECT TO WHICH THIS PAGE REFERS.

NOTES:
SILT FENCE - 2692 LF

SCALE
0 50 100 150

STATE OF MISSOURI
PAUL JOSEPH KRONLAGE
NUMBER EN 023328
REGISTERED PROFESSIONAL ENGINEER

07/31/2024 10:05:45 AM
Paul J. Kronlage - Civil
MO PE - 023328

DATE PREPARED
7/31/2024

ROUTE	STATE
60	MO
DISTRICT	SHEET NO.
SW	120

COUNTY
WEBSTER

JOB NO.
J7P3425C

CONTRACT ID.

PROJECT NO.

BRIDGE NO.

DESCRIPTION	DATE

IF A SEAL IS PRESENT ON THIS SHEET IT HAS BEEN ELECTRONICALLY SEALED AND DATED.

MISSOURI HIGHWAYS AND TRANSPORTATION COMMISSION

MoDOT

105 WEST CAPITOL
JEFFERSON CITY, MO 65102
1-888-ASK-MODOT (1-888-275-6636)

EFK•Moen
Civil Engineering Design
13523 Barrett Parkway Dr
Suite 250
St. Louis, MO 63021
Phone 314-394-3100
Fax 314-394-3199
Missouri Certificate of Authority: 001578

US60
EROSION CONTROL
PRE-CONSTRUCTION
1 OF 60

REV.

TEMPORARY EROSION CONTROL LEGEND

- (R) ROCK DITCH CHECK
- (S) SEDIMENT TRAP
- SILT FENCE

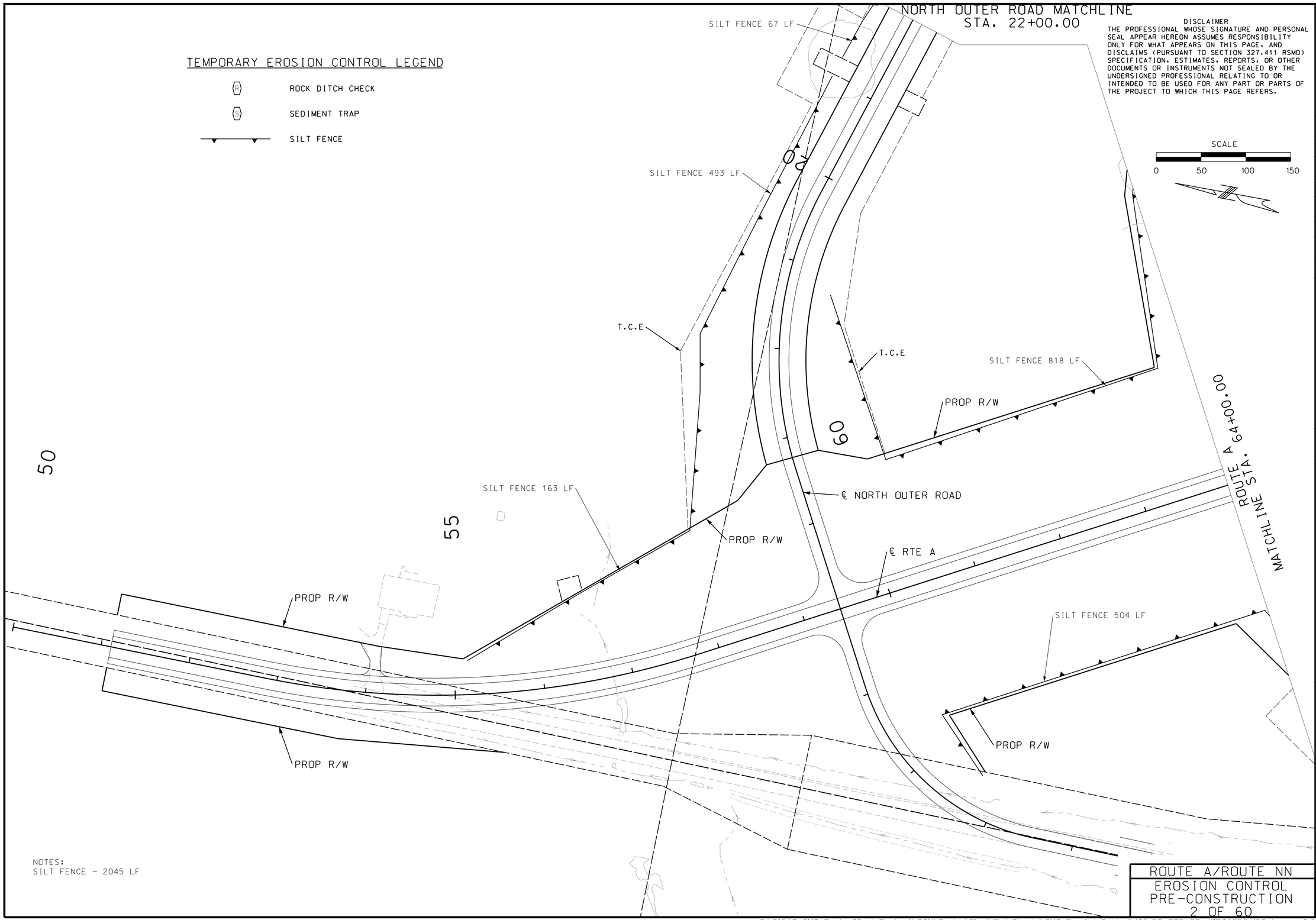

NOTES:
SILT FENCE - 2045 LF

DISCLAIMER
THE PROFESSIONAL WHOSE SIGNATURE AND PERSONAL SEAL APPEAR HEREON ASSUMES RESPONSIBILITY ONLY FOR WHAT APPEARS ON THIS PAGE, AND DISCLAIMS (PURSUANT TO SECTION 327.411 RSMO) SPECIFICATION, ESTIMATES, REPORTS, OR OTHER DOCUMENTS OR INSTRUMENTS NOT SEALED BY THE UNDERSIGNED PROFESSIONAL RELATING TO OR INTENDED TO BE USED FOR ANY PART OR PARTS OF THE PROJECT TO WHICH THIS PAGE REFERS.

STATE OF MISSOURI
PAUL JOSEPH KRONLAGE NUMBER EN 023328
REGISTERED PROFESSIONAL ENGINEER

07/31/2024 12:06:12 PM
Paul J. Kronlage - Civil
MO PE - 023328

DATE PREPARED: 7/31/2024
ROUTE: 60 | STATE: MO
DISTRICT: SW | SHEET NO.: 121
COUNTY: WEBSTER
JOB NO.: J7P3425C
CONTRACT ID.:
PROJECT NO.:
BRIDGE NO.:

DESCRIPTION	DATE

IF A SEAL IS PRESENT ON THIS SHEET IT HAS BEEN ELECTRONICALLY SEALED AND DATED.

MISSOURI HIGHWAYS AND TRANSPORTATION COMMISSION
105 WEST CAPITOL
JEFFERSON CITY, MO 65102
1-888-ASK-MODOT (1-888-275-6636)

EFK•Moen
Civil Engineering Design
13523 Barrett Parkway Dr
Suite 250
St. Louis, MO 63021
Phone 314-394-3100
Fax 314-394-3199
Missouri Certificate of Authority: 001578

ROUTE A/ROUTE NN
EROSION CONTROL
PRE-CONSTRUCTION
2 OF 60

REV.

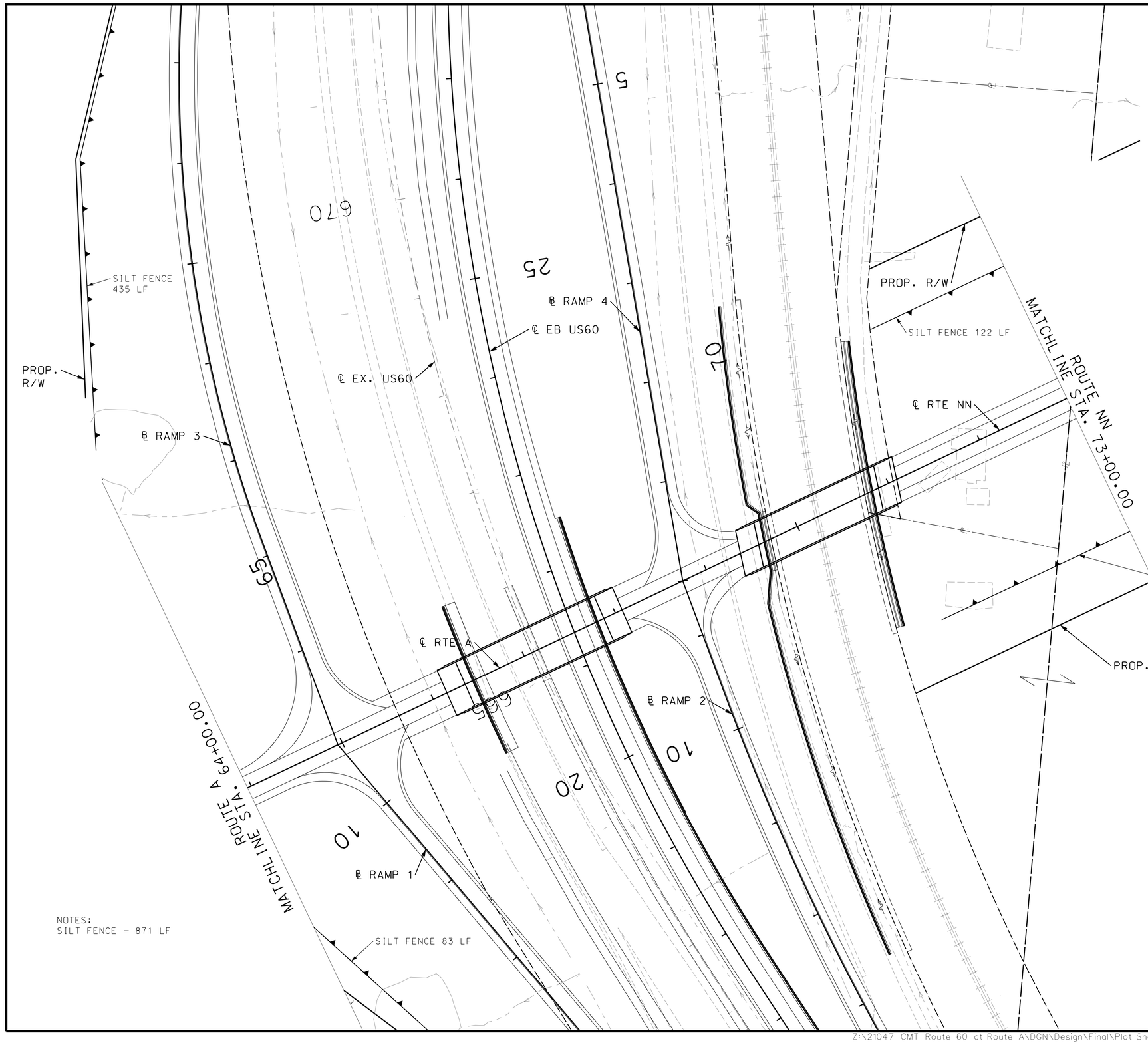

NOTES:
SILT FENCE - 871 LF

DISCLAIMER
THE PROFESSIONAL WHOSE SIGNATURE AND PERSONAL SEAL APPEAR HEREON ASSUMES RESPONSIBILITY ONLY FOR WHAT APPEARS ON THIS PAGE, AND DISCLAIMS (PURSUANT TO SECTION 327.411 RSMO) SPECIFICATION, ESTIMATES, REPORTS, OR OTHER DOCUMENTS OR INSTRUMENTS NOT SEALED BY THE UNDERSIGNED PROFESSIONAL RELATING TO OR INTENDED TO BE USED FOR ANY PART OR PARTS OF THE PROJECT TO WHICH THIS PAGE REFERS.

TEMPORARY EROSION CONTROL LEGEND

- (R) ROCK DITCH CHECK
- (S) SEDIMENT TRAP
- SILT FENCE

SCALE
0 50 100 150

ROUTE A/ROUTE NN
EROSION CONTROL
PRE-CONSTRUCTION
3 OF 60

STATE OF MISSOURI
PAUL JOSEPH KRONLAGE
NUMBER EN 023328
REGISTERED PROFESSIONAL ENGINEER
07/31/2024 12:06:50 PM
Paul J. Kronlage - Civil
MO PE - 023328

DATE PREPARED	
7/31/2024	
ROUTE	STATE
60	MO
DISTRICT	SHEET NO.
SW	122
COUNTY	
WEBSTER	
JOB NO.	
J7P3425C	
CONTRACT ID.	
PROJECT NO.	
BRIDGE NO.	

DATE	DESCRIPTION	REV.

IF A SEAL IS PRESENT ON THIS SHEET IT HAS BEEN ELECTRONICALLY SEALED AND DATED.

MISSOURI HIGHWAYS AND TRANSPORTATION COMMISSION
105 WEST CAPITOL
JEFFERSON CITY, MO 65102
1-888-ASK-MODOT (1-888-275-6636)

EFK•Moen
Civil Engineering Design
13523 Barrett Parkway Dr
Suite 250
St. Louis, MO 63021
Phone 314-394-3100
Fax 314-394-3199
Missouri Certificate of Authority: 001578

DISCLAIMER
THE PROFESSIONAL WHOSE SIGNATURE AND PERSONAL SEAL APPEAR HEREON ASSUMES RESPONSIBILITY ONLY FOR WHAT APPEARS ON THIS PAGE, AND DISCLAIMS (PURSUANT TO SECTION 327.411 RSMO) SPECIFICATION, ESTIMATES, REPORTS, OR OTHER DOCUMENTS OR INSTRUMENTS NOT SEALED BY THE UNDERSIGNED PROFESSIONAL RELATING TO OR INTENDED TO BE USED FOR ANY PART OR PARTS OF THE PROJECT TO WHICH THIS PAGE REFERS.

ROUTE NN
MATCHLINE STA. 73+00.00

PROP. R/W

℄ RTE NN

SILT FENCE 548 LF

T.C.E

PROP. R/W

℄ SOUTH OUTER ROAD

T.C.E

PROP. R/W

SILT FENCE 1310 LF

PROP. R/W

SILT FENCE 1245 LF

SCALE
0 50 100 150

ROUTE NN MATCHLINE STA. 87+00.00

TEMPORARY EROSION CONTROL LEGEND

- ROCK DITCH CHECK
- SEDIMENT TRAP
- SILT FENCE

NOTES:
SILT FENCE - 3103 LF

ROUTE A/ROUTE NN
EROSION CONTROL
PRE-CONSTRUCTION
4 OF 60

STATE OF MISSOURI
PAUL JOSEPH KRONLAGE
NUMBER EN 023328
REGISTERED PROFESSIONAL ENGINEER

07/31/2024 12:07:22 PM
Paul J. Kronlage - Civil
MO PE - 023328

DATE PREPARED	7/31/2024
ROUTE	STATE
60	MO
DISTRICT	SHEET NO.
SW	123
COUNTY	WEBSTER
JOB NO.	J7P3425C
CONTRACT ID.	
PROJECT NO.	
BRIDGE NO.	

IF A SEAL IS PRESENT ON THIS SHEET IT HAS BEEN ELECTRONICALLY SEALED AND DATED.

REV.	DESCRIPTION	DATE

MISSOURI HIGHWAYS AND TRANSPORTATION COMMISSION
105 WEST CAPITOL
JEFFERSON CITY, MO 65102
1-888-ASK-MODOT (1-888-275-6636)

EFK•Moen
Civil Engineering Design
13523 Barrett Parkway Dr
Suite 250
St. Louis, MO 63021
Phone 314-394-3100
Fax 314-394-3199
Missouri Certificate of Authority: 001578

Z:\21047 CMT Route 60 at Route A\DGN\Design\Final\Plot Sheets\CMT Erosion Control\123_EC_PRE_04_J7P3425C_150.dgn 9:54:13 AM 7/31/2024

DISCLAIMER
THE PROFESSIONAL WHOSE SIGNATURE AND PERSONAL SEAL APPEAR HEREON ASSUMES RESPONSIBILITY ONLY FOR WHAT APPEARS ON THIS PAGE, AND DISCLAIMS (PURSUANT TO SECTION 327.411 RSMO) SPECIFICATION, ESTIMATES, REPORTS, OR OTHER DOCUMENTS OR INSTRUMENTS NOT SEALED BY THE UNDERSIGNED PROFESSIONAL RELATING TO OR INTENDED TO BE USED FOR ANY PART OR PARTS OF THE PROJECT TO WHICH THIS PAGE REFERS.

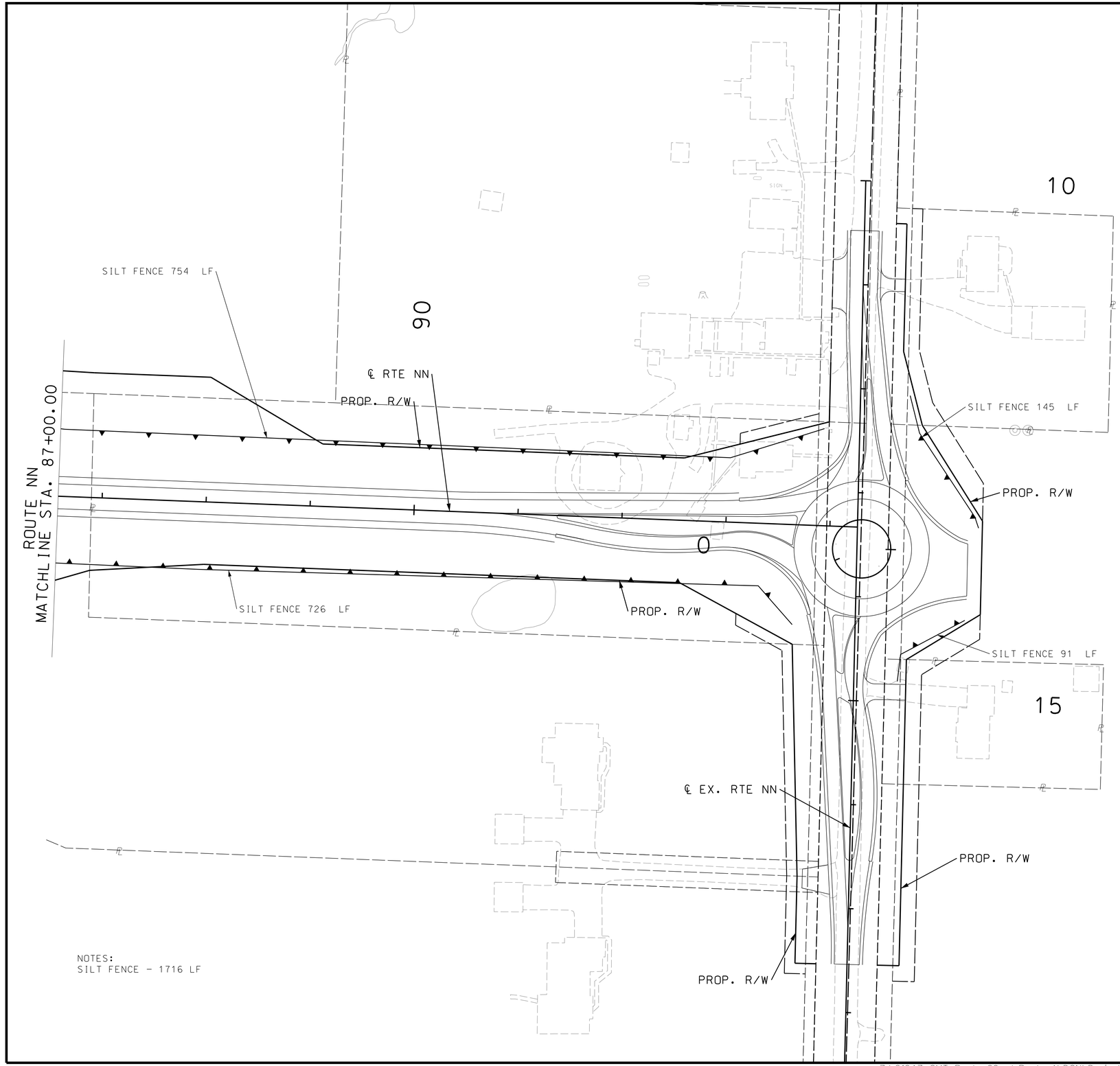

SCALE
0 50 100 150

TEMPORARY EROSION CONTROL LEGEND

- ROCK DITCH CHECK
- SEDIMENT TRAP
- SILT FENCE

PAUL JOSEPH KRONLAGE NUMBER EN 023328
REGISTERED PROFESSIONAL ENGINEER
STATE OF MISSOURI
07/31/2024 12:07:59 PM
Paul J. Kronlage - Civil
MO PE - 023328

DATE PREPARED: 7/31/2024
ROUTE: 60 | STATE: MO
DISTRICT: SW | SHEET NO.: 124
COUNTY: WEBSTER
JOB NO.: J7P3425C
CONTRACT ID.:
PROJECT NO.:
BRIDGE NO.:

IF A SEAL IS PRESENT ON THIS SHEET IT HAS BEEN ELECTRONICALLY SEALED AND DATED.

REV.	DESCRIPTION	DATE

MISSOURI HIGHWAYS AND TRANSPORTATION COMMISSION
105 WEST CAPITOL
JEFFERSON CITY, MO 65102
1-888-ASK-MODOT (1-888-275-6636)

EFK•Moen
Civil Engineering Design
13523 Barrett Parkway Dr
Suite 250
St. Louis, MO 63021
Phone 314-394-3100
Fax 314-394-3199
Missouri Certificate of Authority: 001578

ROUTE A/ROUTE NN
EROSION CONTROL
PRE-CONSTRUCTION
5 OF 60

Z:\21047 CMT Route 60 at Route A\DGN\Design\Final\Plot Sheets\CMT Erosion Control\124_EC_PRE_05_J7P3425C_150.dgn 9:54:14 AM 7/31/2024

DISCLAIMER
THE PROFESSIONAL WHOSE SIGNATURE AND PERSONAL SEAL APPEAR HEREON ASSUMES RESPONSIBILITY ONLY FOR WHAT APPEARS ON THIS PAGE, AND DISCLAIMS (PURSUANT TO SECTION 327.411 RSMO) SPECIFICATION, ESTIMATES, REPORTS, OR OTHER DOCUMENTS OR INSTRUMENTS NOT SEALED BY THE UNDERSIGNED PROFESSIONAL RELATING TO OR INTENDED TO BE USED FOR ANY PART OR PARTS OF THE PROJECT TO WHICH THIS PAGE REFERS.

SCALE
0 50 100 150

EXIST. R/W
PROP. R/W
SILT FENCE 331 LF
T.C.E
PROP. R/W
SILT FENCE 370 LF
T.C.E
SILT FENCE 149 LF
PERM. ESM'T
PROP. R/W
T.C.E
SOUTH OUTER ROAD MATCHLINE STA. 13+00.00
PROP. R/W
T.C.E
SILT FENCE 127 LF
SILT FENCE 536 LF
℄ SOUTH OUTER ROAD
PERM. ESM'T

TEMPORARY EROSION CONTROL LEGEND
(R) ROCK DITCH CHECK
(S) SEDIMENT TRAP
SILT FENCE

NOTES:
SILT FENCE - 1513 LF

SOUTH OUTER ROAD
EROSION CONTROL
PRE-CONSTRUCTION
6 OF 60

STATE OF MISSOURI
PAUL JOSEPH KRONLAGE
NUMBER EN 023328
REGISTERED PROFESSIONAL ENGINEER

07/31/2024 12:08:25 PM
Paul J. Kronlage - Civil
MO PE - 023328

DATE PREPARED
7/31/2024

ROUTE	STATE
60	MO
DISTRICT	SHEET NO.
SW	125

COUNTY
WEBSTER
JOB NO.
J7P3425C
CONTRACT ID.
PROJECT NO.
BRIDGE NO.

IF A SEAL IS PRESENT ON THIS SHEET IT HAS BEEN ELECTRONICALLY SEALED AND DATED.

DESCRIPTION	DATE

MISSOURI HIGHWAYS AND TRANSPORTATION COMMISSION
105 WEST CAPITOL
JEFFERSON CITY, MO 65102
1-888-ASK-MODOT (1-888-275-6636)

EFK•Moen
Civil Engineering Design
13523 Barrett Parkway Dr
Suite 250
St. Louis, MO 63021
Phone 314-394-3100
Fax 314-394-3199
Missouri Certificate of Authority: 001578

REV.

Z:\21047 CMT Route 60 at Route A\DGN\Design\Final\Plot Sheets\CMT Erosion Control\125_EC_PRE_06_J7P3425C_i50.dgn 9:54:14 AM 7/31/2024

TEMPORARY EROSION CONTROL LEGEND

- ROCK DITCH CHECK
- SEDIMENT TRAP
- SILT FENCE

DISCLAIMER
THE PROFESSIONAL WHOSE SIGNATURE AND PERSONAL SEAL APPEAR HEREON ASSUMES RESPONSIBILITY ONLY FOR WHAT APPEARS ON THIS PAGE, AND DISCLAIMS (PURSUANT TO SECTION 327.411 RSMO) SPECIFICATION, ESTIMATES, REPORTS, OR OTHER DOCUMENTS OR INSTRUMENTS NOT SEALED BY THE UNDERSIGNED PROFESSIONAL RELATING TO OR INTENDED TO BE USED FOR ANY PART OR PARTS OF THE PROJECT TO WHICH THIS PAGE REFERS.

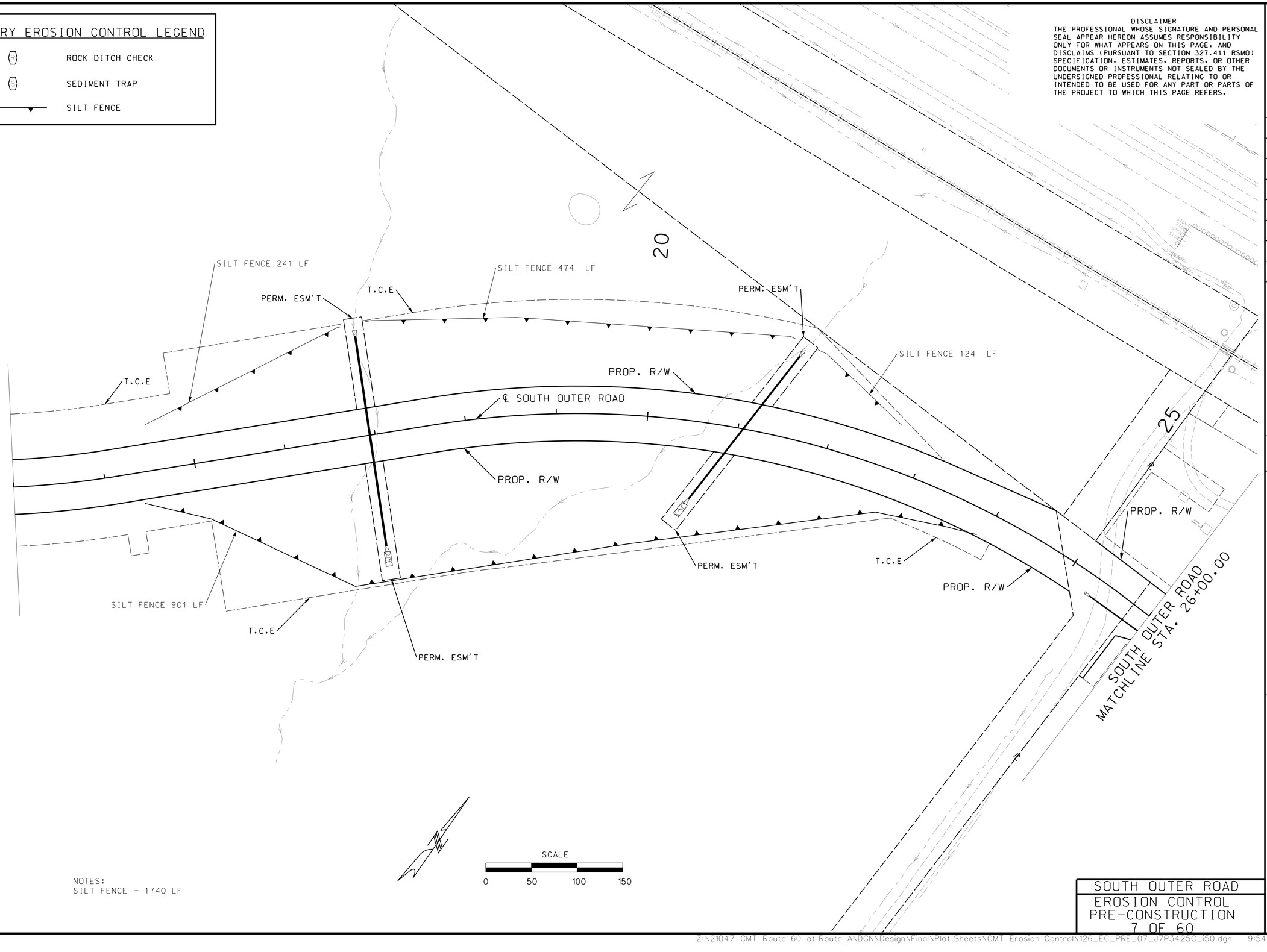

NOTES:
SILT FENCE - 1740 LF

SOUTH OUTER ROAD
EROSION CONTROL
PRE-CONSTRUCTION
7 OF 60

STATE OF MISSOURI
PAUL JOSEPH KRONLAGE
NUMBER EN 023328
REGISTERED PROFESSIONAL ENGINEER

07/31/2024 12:08:59 PM
Paul J. Kronlage - Civil
MO PE - 023328

DATE PREPARED	
7/31/2024	
ROUTE	STATE
60	MO
DISTRICT	SHEET NO.
SW	126
COUNTY	
WEBSTER	
JOB NO.	
J7P3425C	
CONTRACT ID.	
PROJECT NO.	
BRIDGE NO.	

DATE	DESCRIPTION

IF A SEAL IS PRESENT ON THIS SHEET IT HAS BEEN ELECTRONICALLY SEALED AND DATED.

MISSOURI HIGHWAYS AND TRANSPORTATION COMMISSION

MoDOT
105 WEST CAPITOL
JEFFERSON CITY, MO 65102
1-888-ASK-MODOT (1-888-275-6636)

EFK•Moen
Civil Engineering Design
13523 Barrett Parkway Dr
Suite 250
St. Louis, MO 63021
Phone 314-394-3100
Fax 314-394-3199
Missouri Certificate of Authority: 001578

REV.

Z:\21047 CMT Route 60 at Route A\DGN\Design\Final\Plot Sheets\CMT Erosion Control\126_EC_PRE_07_J7P3425C_i50.dgn 9:54:15 AM 7/31/2024

DISCLAIMER
THE PROFESSIONAL WHOSE SIGNATURE AND PERSONAL SEAL APPEAR HEREON ASSUMES RESPONSIBILITY ONLY FOR WHAT APPEARS ON THIS PAGE, AND DISCLAIMS (PURSUANT TO SECTION 327.411 RSMO) SPECIFICATION, ESTIMATES, REPORTS, OR OTHER DOCUMENTS OR INSTRUMENTS NOT SEALED BY THE UNDERSIGNED PROFESSIONAL RELATING TO OR INTENDED TO BE USED FOR ANY PART OR PARTS OF THE PROJECT TO WHICH THIS PAGE REFERS.

SCALE
0 50 100 150

SOUTH OUTER ROAD
MATCHLINE STA. 26+00.00

SOUTH OUTER ROAD
MATCHLINE STA. 39+00.00

30

35

PERM ESM'T
T.C.E
PROP. R/W
SILT FENCE 338 LF
℄ SOUTH OUTER ROAD
P RISER
FLAG
SIGN

NOTES:
SILT FENCE - 338 LF

TEMPORARY EROSION CONTROL LEGEND

RD	ROCK DITCH CHECK
SD	SEDIMENT TRAP
	SILT FENCE

SOUTH OUTER ROAD
EROSION CONTROL
PRE-CONSTRUCTION
8 OF 60

STATE OF MISSOURI
PAUL JOSEPH KRONLAGE
NUMBER EN 023328
REGISTERED PROFESSIONAL ENGINEER
07/31/2024 12:09:26 PM
Paul J. Kronlage - Civil
MO PE - 023328

DATE PREPARED 7/31/2024
ROUTE 60 | STATE MO
DISTRICT SW | SHEET NO. 127
COUNTY WEBSTER
JOB NO. J7P3425C
CONTRACT ID.
PROJECT NO.
BRIDGE NO.

IF A SEAL IS PRESENT ON THIS SHEET IT HAS BEEN ELECTRONICALLY SEALED AND DATED.

DESCRIPTION	DATE

MISSOURI HIGHWAYS AND TRANSPORTATION COMMISSION
105 WEST CAPITOL
JEFFERSON CITY, MO 65102
1-888-ASK-MODOT (1-888-275-6636)

EFK•Moen
Civil Engineering Design
13523 Barrett Parkway Dr
Suite 250
St. Louis, MO 63021
Phone 314-394-3100
Fax 314-394-3199
Missouri Certificate of Authority: 001578

REV.

TEMPORARY EROSION CONTROL LEGEND

- (R) ROCK DITCH CHECK
- (S) SEDIMENT TRAP
- SILT FENCE

DISCLAIMER
THE PROFESSIONAL WHOSE SIGNATURE AND PERSONAL SEAL APPEAR HEREON ASSUMES RESPONSIBILITY ONLY FOR WHAT APPEARS ON THIS PAGE, AND DISCLAIMS (PURSUANT TO SECTION 327.411 RSMO) SPECIFICATION, ESTIMATES, REPORTS, OR OTHER DOCUMENTS OR INSTRUMENTS NOT SEALED BY THE UNDERSIGNED PROFESSIONAL RELATING TO OR INTENDED TO BE USED FOR ANY PART OR PARTS OF THE PROJECT TO WHICH THIS PAGE REFERS.

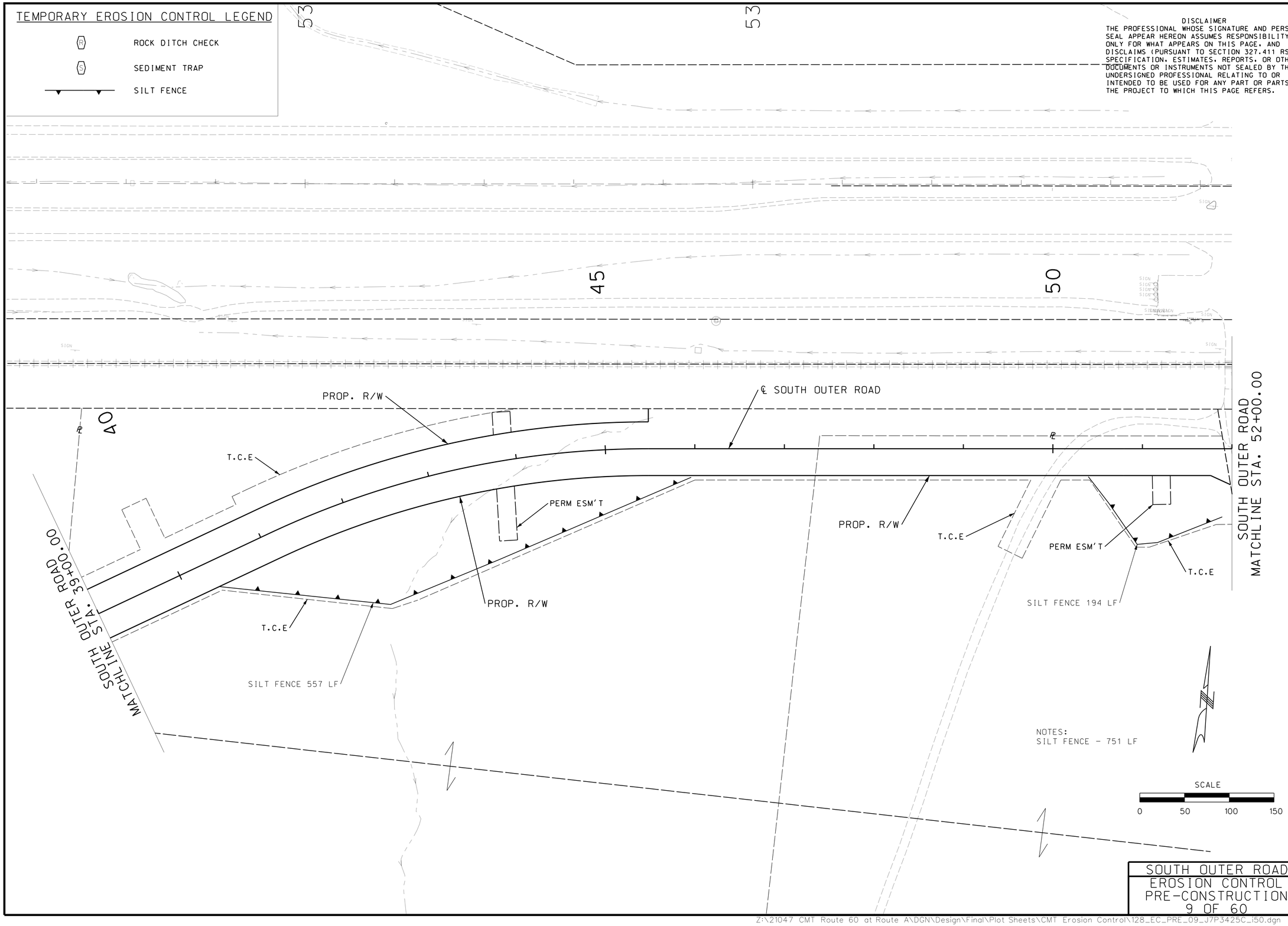

NOTES:
SILT FENCE - 751 LF

SCALE
0 50 100 150

SOUTH OUTER ROAD
EROSION CONTROL
PRE-CONSTRUCTION
9 OF 60

STATE OF MISSOURI
PAUL JOSEPH KRONLAGE
NUMBER EN 023328
REGISTERED PROFESSIONAL ENGINEER

07/31/2024 12:09:51 PM
Paul J. Kronlage - Civil
MO PE - 023328

DATE PREPARED	7/31/2024
ROUTE	STATE
60	MO
DISTRICT	SHEET NO.
SW	128
COUNTY	WEBSTER
JOB NO.	J7P3425C
CONTRACT ID.	
PROJECT NO.	
BRIDGE NO.	

IF A SEAL IS PRESENT ON THIS SHEET IT HAS BEEN ELECTRONICALLY SEALED AND DATED.

REV.	DESCRIPTION	DATE

MISSOURI HIGHWAYS AND TRANSPORTATION COMMISSION
105 WEST CAPITOL
JEFFERSON CITY, MO 65102
1-888-ASK-MODOT (1-888-275-6636)

EFK•Moen
Civil Engineering Design
13523 Barrett Parkway Dr
Suite 250
St. Louis, MO 63021
Phone 314-394-3100
Fax 314-394-3199
Missouri Certificate of Authority: 001578

TEMPORARY EROSION CONTROL LEGEND

- ROCK DITCH CHECK
- SEDIMENT TRAP
- SILT FENCE

DISCLAIMER
THE PROFESSIONAL WHOSE SIGNATURE AND PERSONAL SEAL APPEAR HEREON ASSUMES RESPONSIBILITY ONLY FOR WHAT APPEARS ON THIS PAGE, AND DISCLAIMS (PURSUANT TO SECTION 327.411 RSMO) SPECIFICATION, ESTIMATES, REPORTS, OR OTHER DOCUMENTS OR INSTRUMENTS NOT SEALED BY THE UNDERSIGNED PROFESSIONAL RELATING TO OR INTENDED TO BE USED FOR ANY PART OR PARTS OF THE PROJECT TO WHICH THIS PAGE REFERS.

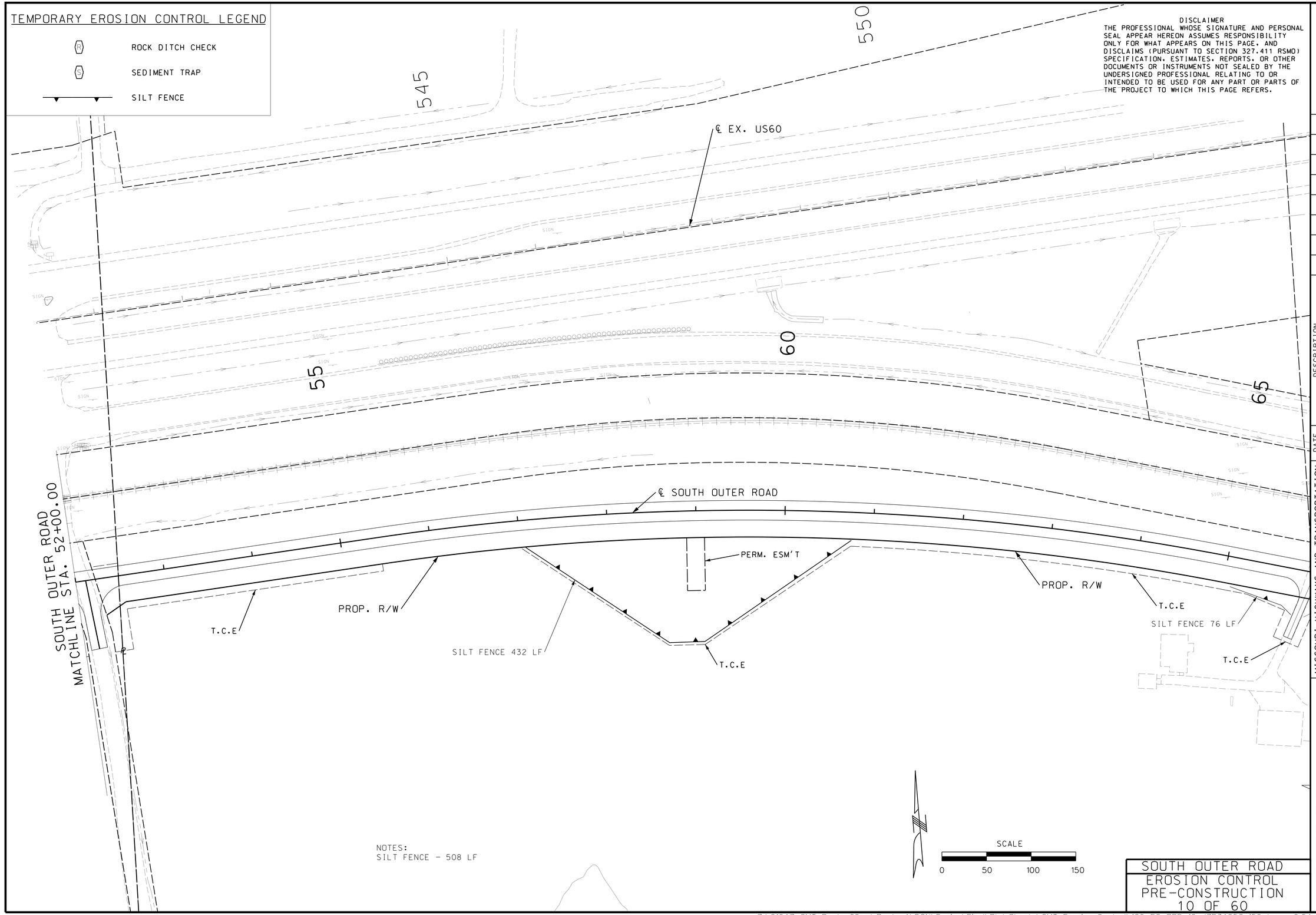

NOTES:
SILT FENCE - 508 LF

SCALE
0 50 100 150

SOUTH OUTER ROAD
EROSION CONTROL
PRE-CONSTRUCTION
10 OF 60

STATE OF MISSOURI
PAUL JOSEPH KRONLAGE NUMBER EN 023328
REGISTERED PROFESSIONAL ENGINEER

07/31/2024 12:10:18 PM
Paul J. Kronlage - Civil
MO PE - 023328

DATE PREPARED	
7/31/2024	
ROUTE	STATE
60	MO
DISTRICT	SHEET NO.
SW	129
COUNTY	
WEBSTER	
JOB NO.	
J7P3425C	
CONTRACT ID.	
PROJECT NO.	
BRIDGE NO.	

DESCRIPTION	DATE

IF A SEAL IS PRESENT ON THIS SHEET IT HAS BEEN ELECTRONICALLY SEALED AND DATED.

MISSOURI HIGHWAYS AND TRANSPORTATION COMMISSION
105 WEST CAPITOL
JEFFERSON CITY, MO 65102
1-888-ASK-MODOT (1-888-275-6636)

EFK•Moen
Civil Engineering Design
13523 Barrett Parkway Dr
Suite 250
St. Louis, MO 63021
Phone 314-394-3100
Fax 314-394-3199
Missouri Certificate of Authority: 001578

REV.

Z:\21047 CMT Route 60 at Route A\DGN\Design\Final\Plot Sheets\CMT Erosion Control\129_EC_PRE_10_J7P3425C_i50.dgn 9:54:18 AM 7/31/2024

DISCLAIMER
THE PROFESSIONAL WHOSE SIGNATURE AND PERSONAL SEAL APPEAR HEREON ASSUMES RESPONSIBILITY ONLY FOR WHAT APPEARS ON THIS PAGE, AND DISCLAIMS (PURSUANT TO SECTION 327.411 RSMO) SPECIFICATION, ESTIMATES, REPORTS, OR OTHER DOCUMENTS OR INSTRUMENTS NOT SEALED BY THE UNDERSIGNED PROFESSIONAL RELATING TO OR INTENDED TO BE USED FOR ANY PART OR PARTS OF THE PROJECT TO WHICH THIS PAGE REFERS.

SCALE
0 50 100 150

95

PROP. R/W

PROP. R/W

PERM. ESM'T

T.C.E

℄ SOUTH OUTER ROAD

T.C.E

SILT FENCE 498 LF

T.C.E

PROP. R/W

PROP. R/W

100

SOUTH OUTER ROAD STA. 104+00.00
MATCHLINE

T.C.E

SILT FENCE 202 LF

T.C.E

NOTES:
SILT FENCE - 700 LF

TEMPORARY EROSION CONTROL LEGEND

R	ROCK DITCH CHECK
S	SEDIMENT TRAP
	SILT FENCE

SOUTH OUTER ROAD
EROSION CONTROL
PRE-CONSTRUCTION
11 OF 60

STATE OF MISSOURI
PAUL JOSEPH KRONLAGE
NUMBER EN 023328
REGISTERED PROFESSIONAL ENGINEER

07/31/2024 12:12:51 PM
Paul J. Kronlage - Civil
MO PE - 023328

DATE PREPARED
7/31/2024

ROUTE	STATE
60	MO
DISTRICT	SHEET NO.
SW	130

COUNTY
WEBSTER

JOB NO.
J7P3425C

CONTRACT ID.

PROJECT NO.

BRIDGE NO.

IF A SEAL IS PRESENT ON THIS SHEET IT HAS BEEN ELECTRONICALLY SEALED AND DATED.

REV.	DESCRIPTION	DATE

MISSOURI HIGHWAYS AND TRANSPORTATION COMMISSION
105 WEST CAPITOL
JEFFERSON CITY, MO 65102
1-888-ASK-MODOT (1-888-275-6636)

EFK•Moen
Civil Engineering Design
13523 Barrett Parkway Dr
Suite 250
St. Louis, MO 63021
Phone 314-394-3100
Fax 314-394-3199
Missouri Certificate of Authority: 001578

DISCLAIMER
THE PROFESSIONAL WHOSE SIGNATURE AND PERSONAL SEAL APPEAR HEREON ASSUMES RESPONSIBILITY ONLY FOR WHAT APPEARS ON THIS PAGE, AND DISCLAIMS (PURSUANT TO SECTION 327.411 RSMO) SPECIFICATION, ESTIMATES, REPORTS, OR OTHER DOCUMENTS OR INSTRUMENTS NOT SEALED BY THE UNDERSIGNED PROFESSIONAL RELATING TO OR INTENDED TO BE USED FOR ANY PART OR PARTS OF THE PROJECT TO WHICH THIS PAGE REFERS.

STATE OF MISSOURI
PAUL JOSEPH KRONLAGE NUMBER EN 023328
REGISTERED PROFESSIONAL ENGINEER

07/31/2024 12:13:18 PM
Paul J. Kronlage - Civil
MO PE - 023328

DATE PREPARED
7/31/2024

ROUTE	STATE
60	MO
DISTRICT	SHEET NO.
SW	131

COUNTY
WEBSTER

JOB NO.
J7P3425C

CONTRACT ID.

PROJECT NO.

BRIDGE NO.

IF A SEAL IS PRESENT ON THIS SHEET IT HAS BEEN ELECTRONICALLY SEALED AND DATED.

DESCRIPTION

DATE

REV.

MISSOURI HIGHWAYS AND TRANSPORTATION COMMISSION

105 WEST CAPITOL
JEFFERSON CITY, MO 65102
1-888-ASK-MODOT (1-888-275-6636)

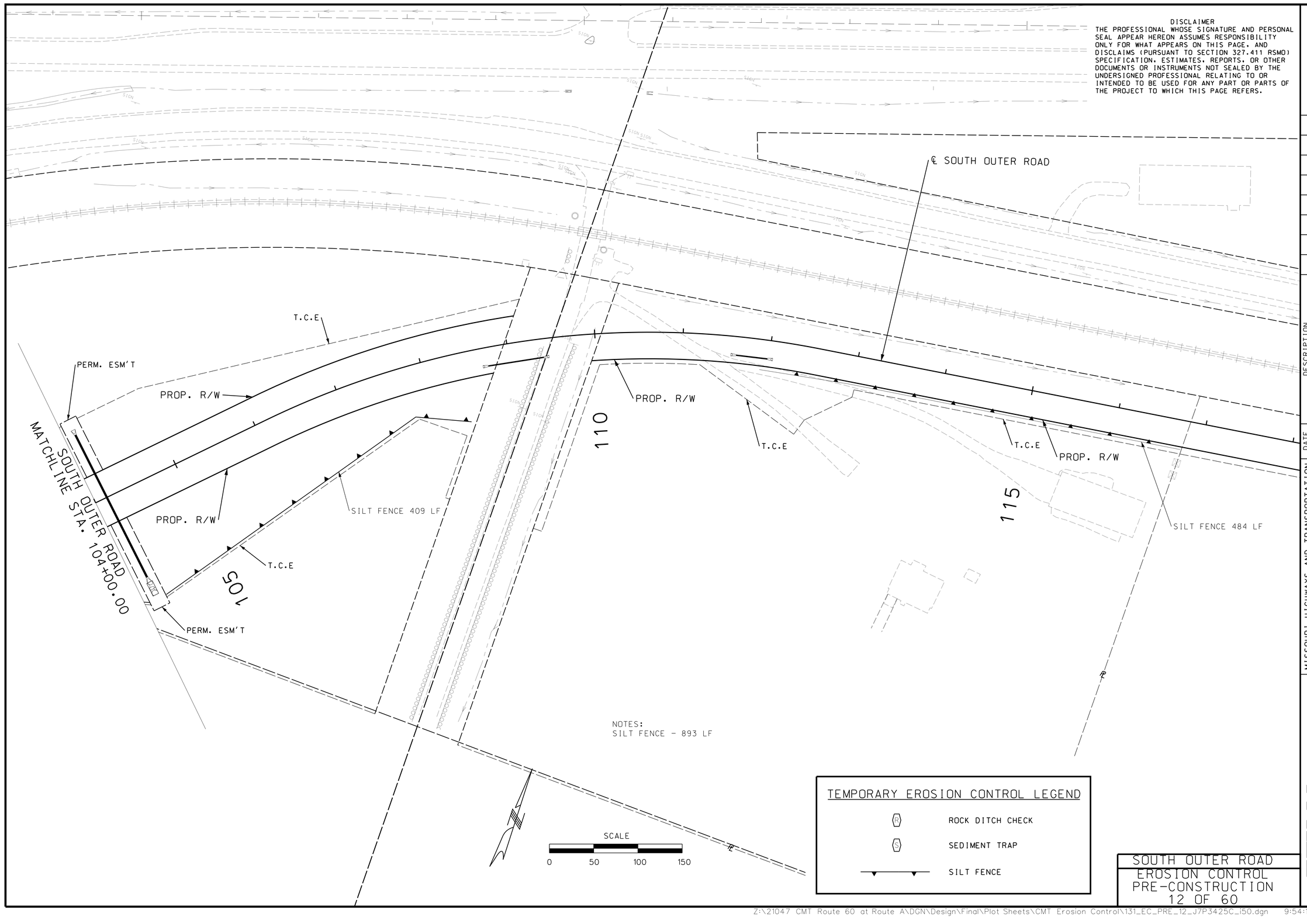

TEMPORARY EROSION CONTROL LEGEND

- (R) ROCK DITCH CHECK
- (S) SEDIMENT TRAP
- SILT FENCE

SOUTH OUTER ROAD
EROSION CONTROL
PRE-CONSTRUCTION
12 OF 60

EFK•Moen
Civil Engineering Design
13523 Barrett Parkway Dr
Suite 250
St. Louis, MO 63021
Phone 314-394-3100
Fax 314-394-3199
Missouri Certificate of Authority: 001578

Z:\21047 CMT Route 60 at Route A\DGN\Design\Final\Plot Sheets\CMT Erosion Control\131_EC_PRE_12_J7P3425C_i50.dgn 9:54:19 AM 7/31/2024

DISCLAIMER
THE PROFESSIONAL WHOSE SIGNATURE AND PERSONAL SEAL APPEAR HEREON ASSUMES RESPONSIBILITY ONLY FOR WHAT APPEARS ON THIS PAGE, AND DISCLAIMS (PURSUANT TO SECTION 327.411 RSMO) SPECIFICATION, ESTIMATES, REPORTS, OR OTHER DOCUMENTS OR INSTRUMENTS NOT SEALED BY THE UNDERSIGNED PROFESSIONAL RELATING TO OR INTENDED TO BE USED FOR ANY PART OR PARTS OF THE PROJECT TO WHICH THIS PAGE REFERS.

STATE OF MISSOURI
PAUL JOSEPH KRONLAGE
NUMBER EN 023328
REGISTERED PROFESSIONAL ENGINEER

07/31/2024 12:13:38 PM
Paul J. Kronlage - Civil
MO PE - 023328

DATE PREPARED
7/31/2024

ROUTE	STATE
60	MO
DISTRICT	SHEET NO.
SW	132

COUNTY
WEBSTER

JOB NO.
J7P3425C

CONTRACT ID.

PROJECT NO.

BRIDGE NO.

IF A SEAL IS PRESENT ON THIS SHEET IT HAS BEEN ELECTRONICALLY SEALED AND DATED.

DESCRIPTION	DATE

MISSOURI HIGHWAYS AND TRANSPORTATION COMMISSION
105 WEST CAPITOL
JEFFERSON CITY, MO 65102
1-888-ASK-MODOT (1-888-275-6636)

EFK•Moen
Civil Engineering Design
13523 Barrett Parkway Dr
Suite 250
St. Louis, MO 63021
Phone 314-394-3100
Fax 314-394-3199
Missouri Certificate of Authority: 001578

640
645
650
EXIST. R/W
℄ EX. US60
℄ EB US60
160
165
170
105
SILT FENCE 320 LF
PROP. R/W
T.C.E
SOUTH OUTER ROAD
MATCHLINE STA. 169+00.00
PERM. ESM'T
PROP. R/W
℄ SOUTH OUTER ROAD
T.C.E
PERM. ESM'T
PROP. R/W
PERM. ESM'T
PERM. ESM'T
SIGN
SIGN
SIGN

NOTES:
SILT FENCE - 320 LF

TEMPORARY EROSION CONTROL LEGEND

R	ROCK DITCH CHECK
S	SEDIMENT TRAP
	SILT FENCE

SCALE
0 50 100 150

SOUTH OUTER ROAD
EROSION CONTROL
PRE-CONSTRUCTION
13 OF 60

REV.

Z:\21047 CMT Route 60 at Route A\DGN\Design\Final\Plot Sheets\CMT Erosion Control\132_EC_PRE_13_J7P3425C_150.dgn 9:54:20 AM 7/31/2024

NOTES:
SILT FENCE - 1482 LF

SCALE
0 50 100 150

SILT FENCE
75 LF

170

T.C.E

SILT FENCE 127 LF

PROP. R/W

SOUTH OUTER ROAD
MATCHLINE STA. 169+00.00

175

T.C.E

PERM ESM'T

℄ SOR

PROP. R/W

T.C.E

T.C.E

PERM ESM'T

PROP. R/W

SILT FENCE 220 LF

PERM ESM'T

T.C.E

PROP. R/W

SILT FENCE 715 LF

℄ RTE NN

180

PROP. R/W

SILT FENCE 565 LF

TEMPORARY EROSION CONTROL LEGEND

- (R) ROCK DITCH CHECK
- (S) SEDIMENT TRAP
- SILT FENCE

DISCLAIMER
THE PROFESSIONAL WHOSE SIGNATURE AND PERSONAL SEAL APPEAR HEREON ASSUMES RESPONSIBILITY ONLY FOR WHAT APPEARS ON THIS PAGE, AND DISCLAIMS (PURSUANT TO SECTION 327.411 RSMO) SPECIFICATION, ESTIMATES, REPORTS, OR OTHER DOCUMENTS OR INSTRUMENTS NOT SEALED BY THE UNDERSIGNED PROFESSIONAL RELATING TO OR INTENDED TO BE USED FOR ANY PART OR PARTS OF THE PROJECT TO WHICH THIS PAGE REFERS.

STATE OF MISSOURI
PAUL JOSEPH KRONLAGE
NUMBER EN 023328
REGISTERED PROFESSIONAL ENGINEER

07/31/2024 12:13:58 PM
Paul J. Kronlage - Civil
MO PE - 023328

DATE PREPARED: 7/31/2024
ROUTE: 60 | STATE: MO
DISTRICT: SW | SHEET NO.: 133
COUNTY: WEBSTER
JOB NO.: J7P3425C
CONTRACT ID.:
PROJECT NO.:
BRIDGE NO.:

IF A SEAL IS PRESENT ON THIS SHEET IT HAS BEEN ELECTRONICALLY SEALED AND DATED.

DATE	DESCRIPTION	REV.

MISSOURI HIGHWAYS AND TRANSPORTATION COMMISSION
105 WEST CAPITOL
JEFFERSON CITY, MO 65102
1-888-ASK-MODOT (1-888-275-6636)

EFK•Moen
Civil Engineering Design
13523 Barrett Parkway Dr
Suite 250
St. Louis, MO 63021
Phone 314-394-3100
Fax 314-394-3199
Missouri Certificate of Authority: 001578

SOUTH OUTER ROAD
EROSION CONTROL
PRE-CONSTRUCTION
14 OF 60

Z:\21047 CMT Route 60 at Route A\DGN\Design\Final\Plot Sheets\CMT Erosion Control\133_EC_PRE_14_J7P3425C_i50.dgn 9:54:21 AM 7/31/2024

DISCLAIMER
THE PROFESSIONAL WHOSE SIGNATURE AND PERSONAL SEAL APPEAR HEREON ASSUMES RESPONSIBILITY ONLY FOR WHAT APPEARS ON THIS PAGE, AND DISCLAIMS (PURSUANT TO SECTION 327.411 RSMO) SPECIFICATION, ESTIMATES, REPORTS, OR OTHER DOCUMENTS OR INSTRUMENTS NOT SEALED BY THE UNDERSIGNED PROFESSIONAL RELATING TO OR INTENDED TO BE USED FOR ANY PART OR PARTS OF THE PROJECT TO WHICH THIS PAGE REFERS.

645
650
655
2 DITCH CHECKS @ 100'
+30
+30
℄ WB US60
8 DITCH CHECKS @ 75'
+80
+05
+05
160
165
170
℄ EB US60
EB US60 MATCHLINE STA. 25+00.00
WB ON RAMP MATCHLINE STA. 1+00.00
4 DITCH CHECKS @ 65'
4 DITCH CHECKS @ 65'
PROP. R/W
℄ RAMP 2
T.C.E
PROP. R/W
SILT FENCE 394 LF
℄ ROUTE NN
8 DITCH CHECKS @ 65'
PERM. ESM'T
PERM. ESM'T
7 DITCH CHECKS @ 65'
EB ON RAMP MATCHLINE STA. 3+00.00
SILT FENCE 114 LF
EB US60 MATCHLINE STA. 12+00.00
EB OFF RAMP MATCHLINE STA. 2+00.00
ROUTE NN MATCHLINE STATION 73+00.00

TEMPORARY EROSION CONTROL LEGEND
- ROCK DITCH CHECK
- SEDIMENT TRAP
- SILT FENCE
- SLOPE LIMITS

SCALE
0 50 100 150

NOTES:
36 ROCK DITCH CHECK
1 SEDIMENT TRAP-18" FES

US60
EROSION CONTROL DURING CONSTRUCTION
15 OF 60

STATE OF MISSOURI
PAUL JOSEPH KRONLAGE
NUMBER EN 023328
REGISTERED PROFESSIONAL ENGINEER
07/31/2024 12:14:27 PM
Paul J. Kronlage - Civil
MO PE - 023328

DATE PREPARED 7/31/2024
ROUTE 60 | STATE MO
DISTRICT SW | SHEET NO. 134
COUNTY WEBSTER
JOB NO. J7P3425C
CONTRACT ID.
PROJECT NO.
BRIDGE NO.

DESCRIPTION | DATE

IF A SEAL IS PRESENT ON THIS SHEET IT HAS BEEN ELECTRONICALLY SEALED AND DATED.

MISSOURI HIGHWAYS AND TRANSPORTATION COMMISSION
105 WEST CAPITOL
JEFFERSON CITY, MO 65102
1-888-ASK-MODOT (1-888-275-6636)

EFK•Moen
Civil Engineering Design
13523 Barrett Parkway Dr
Suite 250
St. Louis, MO 63021
Phone 314-394-3100
Fax 314-394-3199
Missouri Certificate of Authority: 001578

REV.

Z:\21047 CMT Route 60 at Route A\DGN\Design\Final\Plot Sheets\CMT Erosion Control\134_EC_15_J7P3425C_i50.dgn 9:54:22 AM 7/31/2024

NOTES:
45 ROCK DITCH CHECK

TEMPORARY EROSION CONTROL LEGEND

- ROCK DITCH CHECK
- SEDIMENT TRAP
- SILT FENCE
- SLOPE LIMITS

DISCLAIMER
THE PROFESSIONAL WHOSE SIGNATURE AND PERSONAL SEAL APPEAR HEREON ASSUMES RESPONSIBILITY ONLY FOR WHAT APPEARS ON THIS PAGE, AND DISCLAIMS (PURSUANT TO SECTION 327.411 RSMO) SPECIFICATION, ESTIMATES, REPORTS, OR OTHER DOCUMENTS OR INSTRUMENTS NOT SEALED BY THE UNDERSIGNED PROFESSIONAL RELATING TO OR INTENDED TO BE USED FOR ANY PART OR PARTS OF THE PROJECT TO WHICH THIS PAGE REFERS.

SCALE
0 50 100 150

SILT FENCE 84 LF
T.C.E
PROP. R/W
℄ NORTH OUTER ROAD
13 DITCH CHECKS @ 35'
12 DITCH CHECKS @ 35'
NORTH OUTER ROAD MATCHLINE STA. 22+00.00
SILT FENCE 759 LF
SILT FENCE 626 LF
SILT FENCE 566 LF
℄ RAMP 3
WB OFF RAMP MATCHLINE STA. 4+00.00
℄ EX. US 60
3 DITCH CHECKS @ 200'
NORTH OUTER ROAD MATCHLINE STA. 34+00.00
SILT FENCE 385 LF
℄ EB US 60
EB US60 MATCHLINE STA. 25+00.00
℄ RAMP 4
7 DITCH CHECKS @ 35'
EB RAMP MATCHLINE STA. 3+00.00
EB US60 MATCHLINE STA. 37+00.00

US60
EROSION CONTROL
DURING CONSTRUCTION
16 OF 60

PAUL JOSEPH KRONLAGE NUMBER EN 023328
REGISTERED PROFESSIONAL ENGINEER
STATE OF MISSOURI
07/31/2024 12:14:50 PM
Paul J. Kronlage - Civil
MO PE - 023328

DATE PREPARED 7/31/2024
ROUTE 60 | STATE MO
DISTRICT SW | SHEET NO. 135
COUNTY WEBSTER
JOB NO. J7P3425C
CONTRACT ID.
PROJECT NO.
BRIDGE NO.

DESCRIPTION | DATE

IF A SEAL IS PRESENT ON THIS SHEET IT HAS BEEN ELECTRONICALLY SEALED AND DATED.

MISSOURI HIGHWAYS AND TRANSPORTATION COMMISSION
MoDOT
105 WEST CAPITOL
JEFFERSON CITY, MO 65102
1-888-ASK-MODOT (1-888-275-6636)

EFK•Moen
Civil Engineering Design
13523 Barrett Parkway Dr
Suite 250
St. Louis, MO 63021
Phone 314-394-3100
Fax 314-394-3199
Missouri Certificate of Authority: 001578

REV.

Z:\21047 CMT Route 60 at Route A\DGN\Design\Final\Plot Sheets\CMT Erosion Control\135_EC_16_J7P3425C_i50.dgn 9:54:23 AM 7/31/2024

NOTES:
12 ROCK DITCH CHECK
2 SEDIMENT TRAP

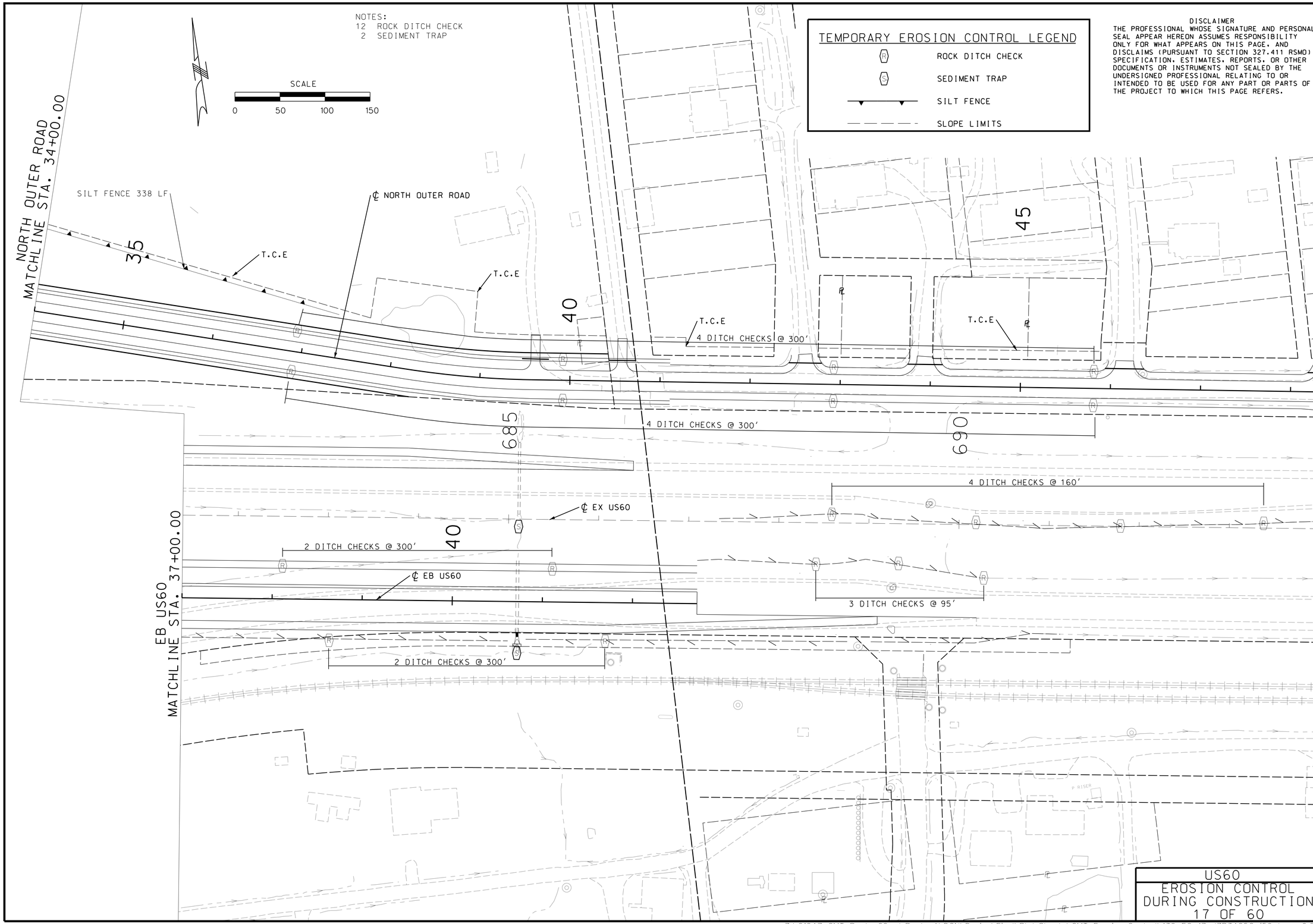

TEMPORARY EROSION CONTROL LEGEND

- ROCK DITCH CHECK
- SEDIMENT TRAP
- SILT FENCE
- SLOPE LIMITS

DISCLAIMER
THE PROFESSIONAL WHOSE SIGNATURE AND PERSONAL SEAL APPEAR HEREON ASSUMES RESPONSIBILITY ONLY FOR WHAT APPEARS ON THIS PAGE, AND DISCLAIMS (PURSUANT TO SECTION 327.411 RSMO) SPECIFICATION, ESTIMATES, REPORTS, OR OTHER DOCUMENTS OR INSTRUMENTS NOT SEALED BY THE UNDERSIGNED PROFESSIONAL RELATING TO OR INTENDED TO BE USED FOR ANY PART OR PARTS OF THE PROJECT TO WHICH THIS PAGE REFERS.

STATE OF MISSOURI
PAUL JOSEPH KRONLAGE
NUMBER
EN 023328
REGISTERED PROFESSIONAL ENGINEER

07/31/2024 12:15:14 PM
Paul J. Kronlage - Civil
MO PE - 023328

DATE PREPARED	
7/31/2024	
ROUTE 60	STATE MO
DISTRICT SW	SHEET NO. 136
COUNTY WEBSTER	
JOB NO. J7P3425C	
CONTRACT ID.	
PROJECT NO.	
BRIDGE NO.	

DATE	DESCRIPTION

MISSOURI HIGHWAYS AND TRANSPORTATION COMMISSION
MoDOT
105 WEST CAPITOL
JEFFERSON CITY, MO 65102
1-888-ASK-MODOT (1-888-275-6636)

EFK•Moen
Civil Engineering Design
13523 Barrett Parkway Dr
Suite 250
St. Louis, MO 63021
Phone 314-394-3100
Fax 314-394-3199
Missouri Certificate of Authority: 001578

US60
EROSION CONTROL
DURING CONSTRUCTION
17 OF 60

IF A SEAL IS PRESENT ON THIS SHEET IT HAS BEEN ELECTRONICALLY SEALED AND DATED.

REV.

Z:\21047 CMT Route 60 at Route A\DGN\Design\Final\Plot Sheets\CMT Erosion Control\136_EC_17_J7P3425C_i50.dgn 9:54:24 AM 7/31/2024

DISCLAIMER
THE PROFESSIONAL WHOSE SIGNATURE AND PERSONAL SEAL APPEAR HEREON ASSUMES RESPONSIBILITY ONLY FOR WHAT APPEARS ON THIS PAGE, AND DISCLAIMS (PURSUANT TO SECTION 327.411 RSMO) SPECIFICATION, ESTIMATES, REPORTS, OR OTHER DOCUMENTS OR INSTRUMENTS NOT SEALED BY THE UNDERSIGNED PROFESSIONAL RELATING TO OR INTENDED TO BE USED FOR ANY PART OR PARTS OF THE PROJECT TO WHICH THIS PAGE REFERS.

STATE OF MISSOURI
PAUL JOSEPH KRONLAGE
NUMBER
EN 023328
REGISTERED PROFESSIONAL ENGINEER

07/31/2024 12:15:37 PM
Paul J. Kronlage - Civil
MO PE - 023328

DATE PREPARED	
7/31/2024	
ROUTE 60	STATE MO
DISTRICT SW	SHEET NO. 137
COUNTY WEBSTER	
JOB NO. J7P3425C	
CONTRACT ID.	
PROJECT NO.	
BRIDGE NO.	

DATE	DESCRIPTION

MISSOURI HIGHWAYS AND TRANSPORTATION COMMISSION
MoDOT
105 WEST CAPITOL
JEFFERSON CITY, MO 65102
1-888-ASK-MODOT (1-888-275-6636)

EFK•Moen
Civil Engineering Design
13523 Barrett Parkway Dr
Suite 250
St. Louis, MO 63021
Phone 314-394-3100
Fax 314-394-3199
Missouri Certificate of Authority: 001578

DIGGINS NORTH O.R.
EROSION CONTROL
DURING CONSTRUCTION
18 OF 60

IF A SEAL IS PRESENT ON THIS SHEET IT HAS BEEN ELECTRONICALLY SEALED AND DATED.

REV.

Z:\21047 CMT Route 60 at Route A\DGN\Design\Final\Plot Sheets\CMT Erosion Control\137_EC_18_J7P3425C_i50.dgn 9:54:25 AM

NOTES:
8 ROCK DITCH CHECK
1 SEDIMENT TRAP
149 LF SILT FENCE

SCALE
0 50 100 150

DISCLAIMER
THE PROFESSIONAL WHOSE SIGNATURE AND PERSONAL SEAL APPEAR HEREON ASSUMES RESPONSIBILITY ONLY FOR WHAT APPEARS ON THIS PAGE, AND DISCLAIMS (PURSUANT TO SECTION 327.411 RSMO) SPECIFICATION, ESTIMATES, REPORTS, OR OTHER DOCUMENTS OR INSTRUMENTS NOT SEALED BY THE UNDERSIGNED PROFESSIONAL RELATING TO OR INTENDED TO BE USED FOR ANY PART OR PARTS OF THE PROJECT TO WHICH THIS PAGE REFERS.

NORTH OUTER ROAD
MATCHLINE STA. 54+50.00

55 60 65

℄

T.C.E

PROP. R/W

PERM. ESM'T

T.C.E

T.C.E

+85 NOR

PROP. R/W

2 DITCH CHECKS @ 75'

2 DITCH CHECKS @ 75'

℄ NORTH OUTER ROAD

PROP. R/W

705

SILT FENCE 149 LF

710

+85 NOR

PROP. R/W

3 DITCH CHECKS @ 300'

TEMPORARY EROSION CONTROL LEGEND

- ROCK DITCH CHECK
- SEDIMENT TRAP
- SILT FENCE
- SLOPE LIMITS

DIGGINS NORTH O.R.
EROSION CONTROL DURING CONSTRUCTION
19 OF 60

Z:\21047 CMT Route 60 at Route A\DGN\Design\Final\Plot Sheets\CMT Erosion Control\138_EC_19_J7P3425C_150.dgn 9:54:33 AM 7/31/2024

STATE OF MISSOURI
PAUL JOSEPH KRONLAGE
NUMBER EN 023328
REGISTERED PROFESSIONAL ENGINEER

07/31/2024 12:16:03 PM
Paul J. Kronlage - Civil
MO PE - 023328

DATE PREPARED
7/31/2024

ROUTE	STATE
60	MO
DISTRICT	SHEET NO.
SW	138

COUNTY
WEBSTER

JOB NO.
J7P3425C

CONTRACT ID.

PROJECT NO.

BRIDGE NO.

DATE	DESCRIPTION

IF A SEAL IS PRESENT ON THIS SHEET IT HAS BEEN ELECTRONICALLY SEALED AND DATED.

MISSOURI HIGHWAYS AND TRANSPORTATION COMMISSION

105 WEST CAPITOL
JEFFERSON CITY, MO 65102
1-888-ASK-MODOT (1-888-275-6636)

EFK•Moen
Civil Engineering Design
13523 Barrett Parkway Dr Phone 314-394-3100
Suite 250 Fax 314-394-3199
St. Louis, MO 63021
Missouri Certificate of Authority: 001578

REV.

TEMPORARY EROSION CONTROL LEGEND

- ROCK DITCH CHECK
- SEDIMENT TRAP
- SILT FENCE
- SLOPE LIMITS

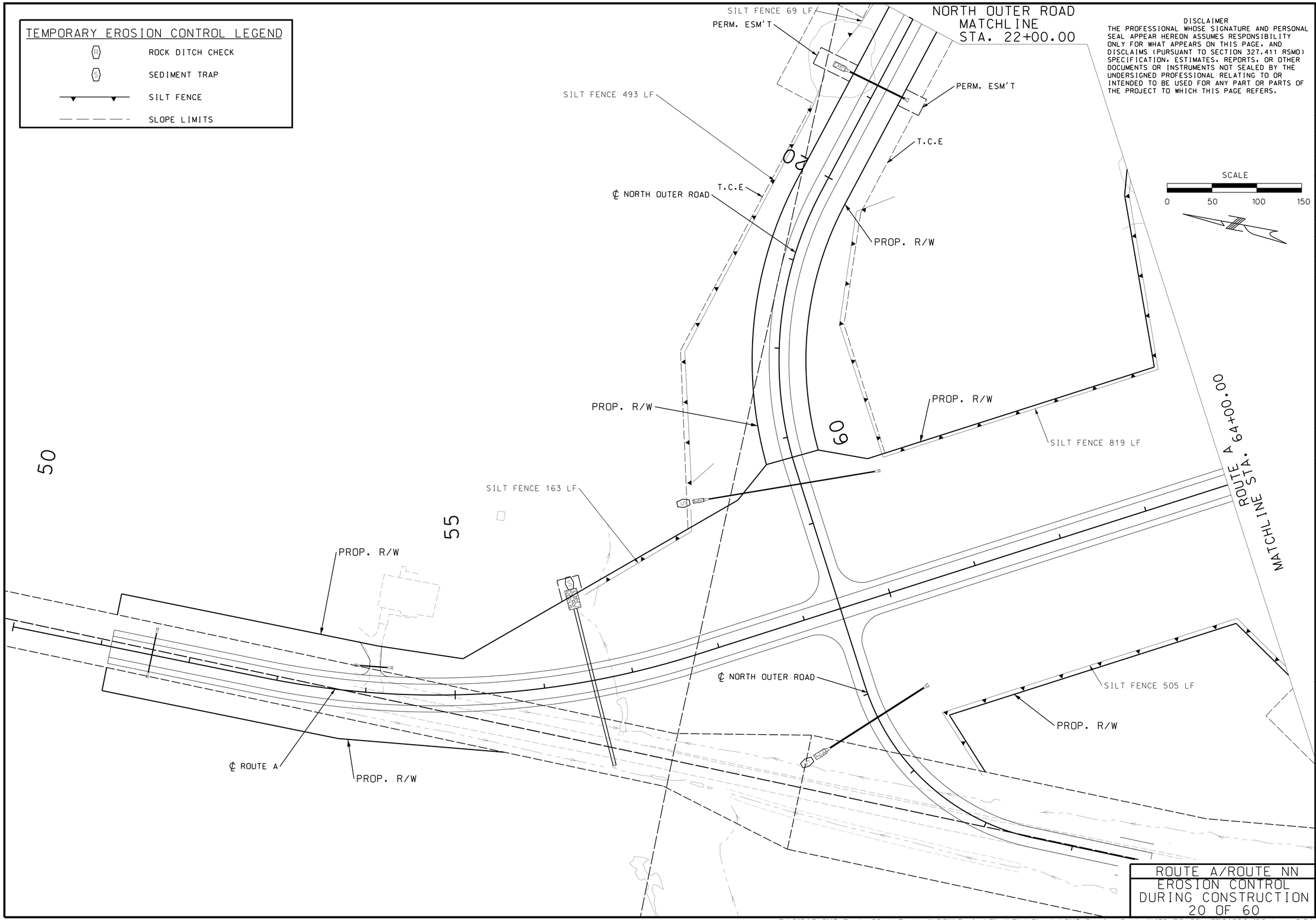

DISCLAIMER
THE PROFESSIONAL WHOSE SIGNATURE AND PERSONAL SEAL APPEAR HEREON ASSUMES RESPONSIBILITY ONLY FOR WHAT APPEARS ON THIS PAGE, AND DISCLAIMS (PURSUANT TO SECTION 327.411 RSMO) SPECIFICATION, ESTIMATES, REPORTS, OR OTHER DOCUMENTS OR INSTRUMENTS NOT SEALED BY THE UNDERSIGNED PROFESSIONAL RELATING TO OR INTENDED TO BE USED FOR ANY PART OR PARTS OF THE PROJECT TO WHICH THIS PAGE REFERS.

STATE OF MISSOURI
PAUL JOSEPH KRONLAGE
NUMBER EN 023328
REGISTERED PROFESSIONAL ENGINEER

07/31/2024 12:16:28 PM
Paul J. Kronlage - Civil
MO PE - 023328

DATE PREPARED: 7/31/2024
ROUTE: 60
STATE: MO
DISTRICT: SW
SHEET NO.: 139
COUNTY: WEBSTER
JOB NO.: J7P3425C
CONTRACT ID.:
PROJECT NO.:
BRIDGE NO.:

IF A SEAL IS PRESENT ON THIS SHEET IT HAS BEEN ELECTRONICALLY SEALED AND DATED.

DESCRIPTION	DATE

MISSOURI HIGHWAYS AND TRANSPORTATION COMMISSION
105 WEST CAPITOL
JEFFERSON CITY, MO 65102
1-888-ASK-MODOT (1-888-275-6636)

EFK•Moen
Civil Engineering Design
13523 Barrett Parkway Dr
Suite 250
St. Louis, MO 63021
Phone 314-394-3100
Fax 314-394-3199
Missouri Certificate of Authority: 001578

ROUTE A/ROUTE NN
EROSION CONTROL DURING CONSTRUCTION
20 OF 60

REV.

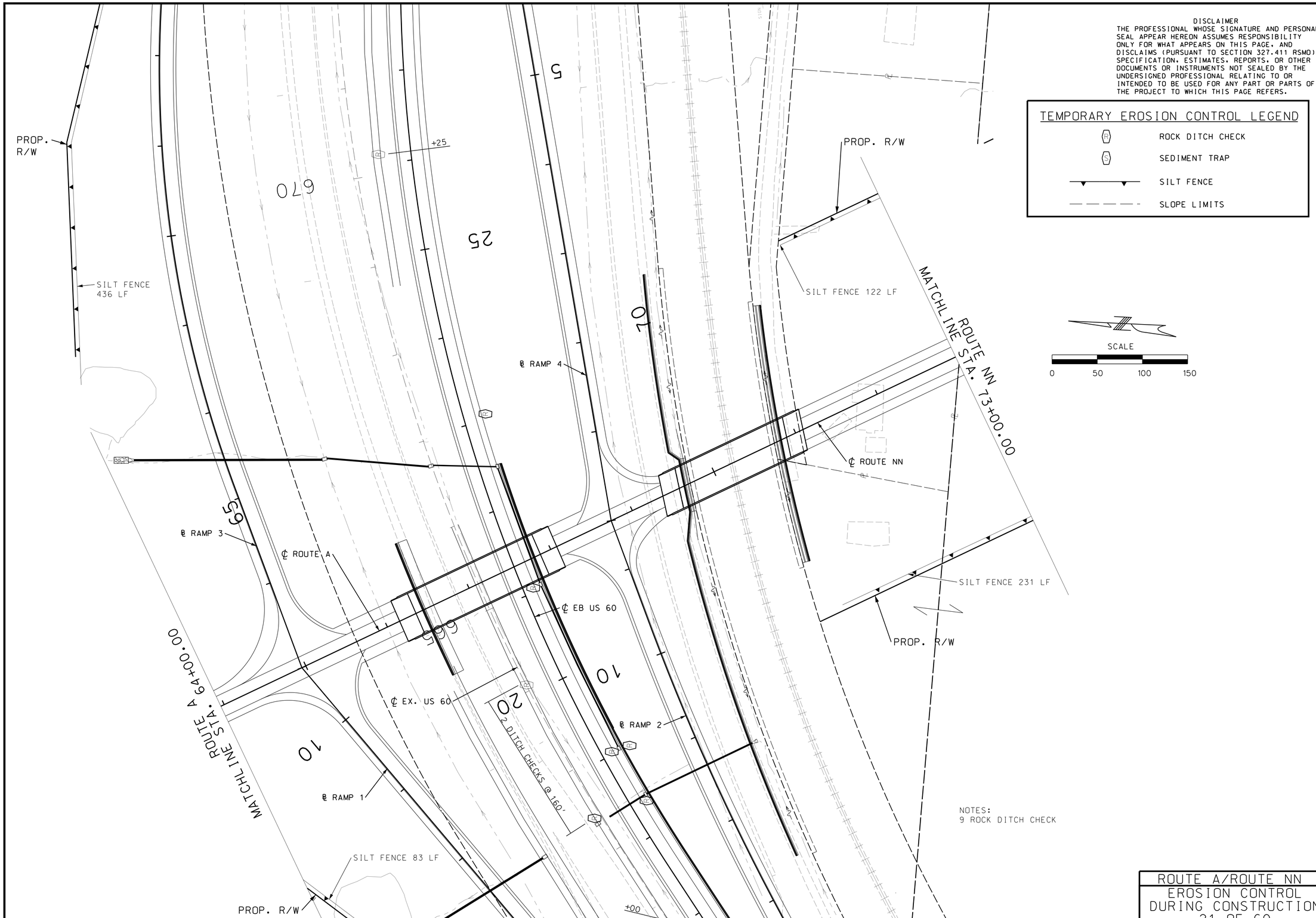

NOTES:
9 ROCK DITCH CHECK

DISCLAIMER
THE PROFESSIONAL WHOSE SIGNATURE AND PERSONAL SEAL APPEAR HEREON ASSUMES RESPONSIBILITY ONLY FOR WHAT APPEARS ON THIS PAGE, AND DISCLAIMS (PURSUANT TO SECTION 327.411 RSMO) SPECIFICATION, ESTIMATES, REPORTS, OR OTHER DOCUMENTS OR INSTRUMENTS NOT SEALED BY THE UNDERSIGNED PROFESSIONAL RELATING TO OR INTENDED TO BE USED FOR ANY PART OR PARTS OF THE PROJECT TO WHICH THIS PAGE REFERS.

TEMPORARY EROSION CONTROL LEGEND

- ROCK DITCH CHECK
- SEDIMENT TRAP
- SILT FENCE
- SLOPE LIMITS

STATE OF MISSOURI
PAUL JOSEPH KRONLAGE
NUMBER
EN 023328
REGISTERED PROFESSIONAL ENGINEER

07/31/2024 12:16:50 PM
Paul J. Kronlage - Civil
MO PE - 023328

DATE PREPARED	
7/31/2024	
ROUTE 60	STATE MO
DISTRICT SW	SHEET NO. 140
COUNTY WEBSTER	
JOB NO. J7P3425C	
CONTRACT ID.	
PROJECT NO.	
BRIDGE NO.	

DATE	DESCRIPTION

MISSOURI HIGHWAYS AND TRANSPORTATION COMMISSION
MoDOT
105 WEST CAPITOL
JEFFERSON CITY, MO 65102
1-888-ASK-MODOT (1-888-275-6636)

EFK•Moen
Civil Engineering Design
13523 Barrett Parkway Dr
Suite 250
St. Louis, MO 63021
Phone 314-394-3100
Fax 314-394-3199
Missouri Certificate of Authority: 001578

IF A SEAL IS PRESENT ON THIS SHEET IT HAS BEEN ELECTRONICALLY SEALED AND DATED.

ROUTE A/ROUTE NN
EROSION CONTROL
DURING CONSTRUCTION
21 OF 60

REV.

Z:\21047 CMT Route 60 at Route A\DGN\Design\Final\Plot Sheets\CMT Erosion Control\140_EC_21_J7P3425C_i50.dgn 9:54:35 AM 7/31/2024

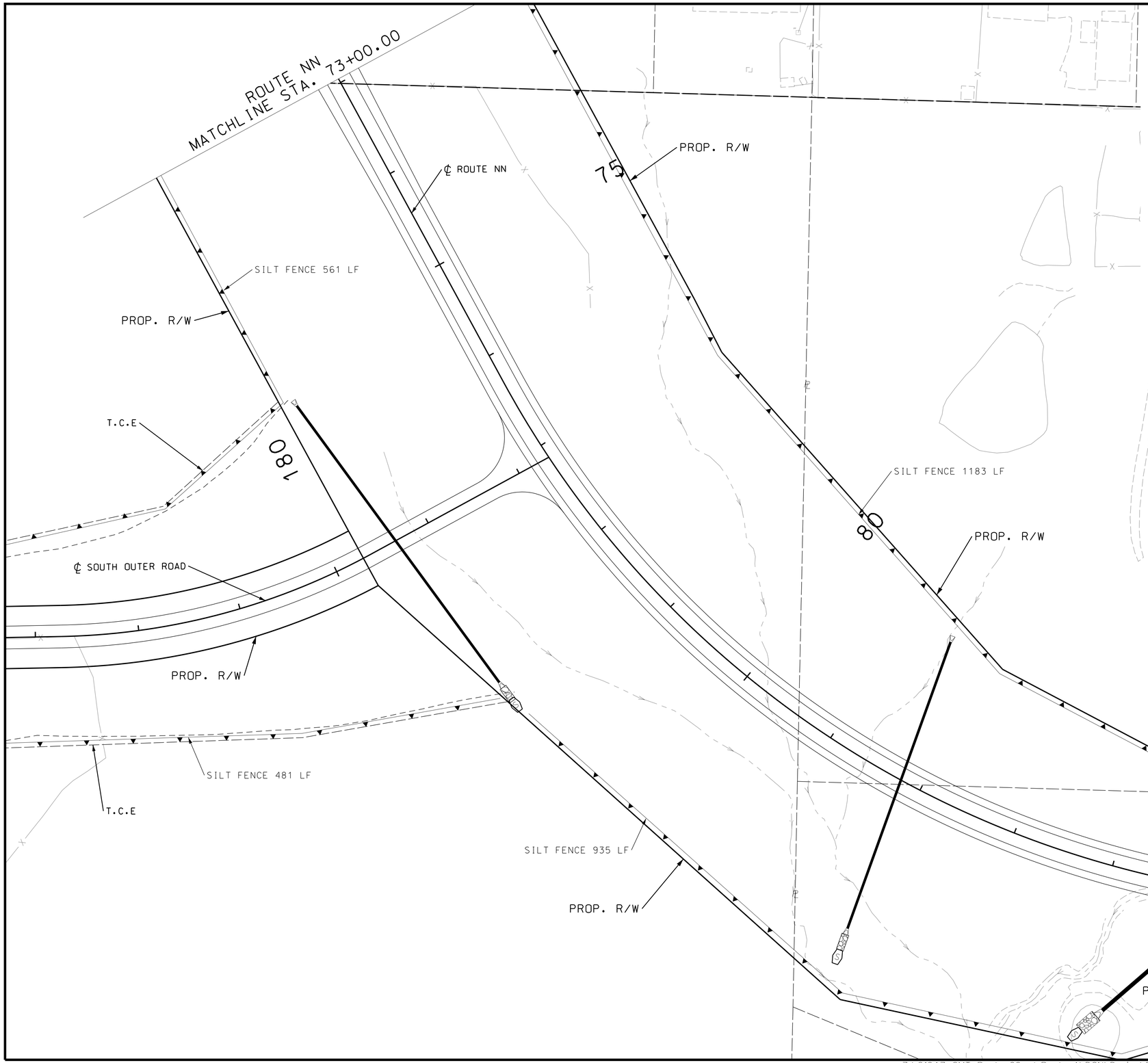

DISCLAIMER
THE PROFESSIONAL WHOSE SIGNATURE AND PERSONAL SEAL APPEAR HEREON ASSUMES RESPONSIBILITY ONLY FOR WHAT APPEARS ON THIS PAGE, AND DISCLAIMS (PURSUANT TO SECTION 327.411 RSMO) SPECIFICATION, ESTIMATES, REPORTS, OR OTHER DOCUMENTS OR INSTRUMENTS NOT SEALED BY THE UNDERSIGNED PROFESSIONAL RELATING TO OR INTENDED TO BE USED FOR ANY PART OR PARTS OF THE PROJECT TO WHICH THIS PAGE REFERS.

TEMPORARY EROSION CONTROL LEGEND

- (R) ROCK DITCH CHECK
- (S) SEDIMENT TRAP
- SILT FENCE
- SLOPE LIMITS

SCALE
0 50 100 150

STATE OF MISSOURI
PAUL JOSEPH KRONLAGE
NUMBER EN 023328
REGISTERED PROFESSIONAL ENGINEER

07/31/2024 12:17:15 PM
Paul J. Kronlage - Civil
MO PE - 023328

DATE PREPARED: 7/31/2024

ROUTE	STATE
60	MO
DISTRICT	SHEET NO.
SW	141

COUNTY: WEBSTER
JOB NO.: J7P3425C
CONTRACT ID.:
PROJECT NO.:
BRIDGE NO.:

IF A SEAL IS PRESENT ON THIS SHEET IT HAS BEEN ELECTRONICALLY SEALED AND DATED.

DATE	DESCRIPTION

MISSOURI HIGHWAYS AND TRANSPORTATION COMMISSION
105 WEST CAPITOL
JEFFERSON CITY, MO 65102
1-888-ASK-MODOT (1-888-275-6636)

EFK•Moen
Civil Engineering Design
13523 Barrett Parkway Dr
Suite 250
St. Louis, MO 63021
Phone 314-394-3100
Fax 314-394-3199
Missouri Certificate of Authority: 001578

ROUTE A/ROUTE NN
EROSION CONTROL
DURING CONSTRUCTION
22 OF 60

NOTES:
39 ROCK DITCH CHECK

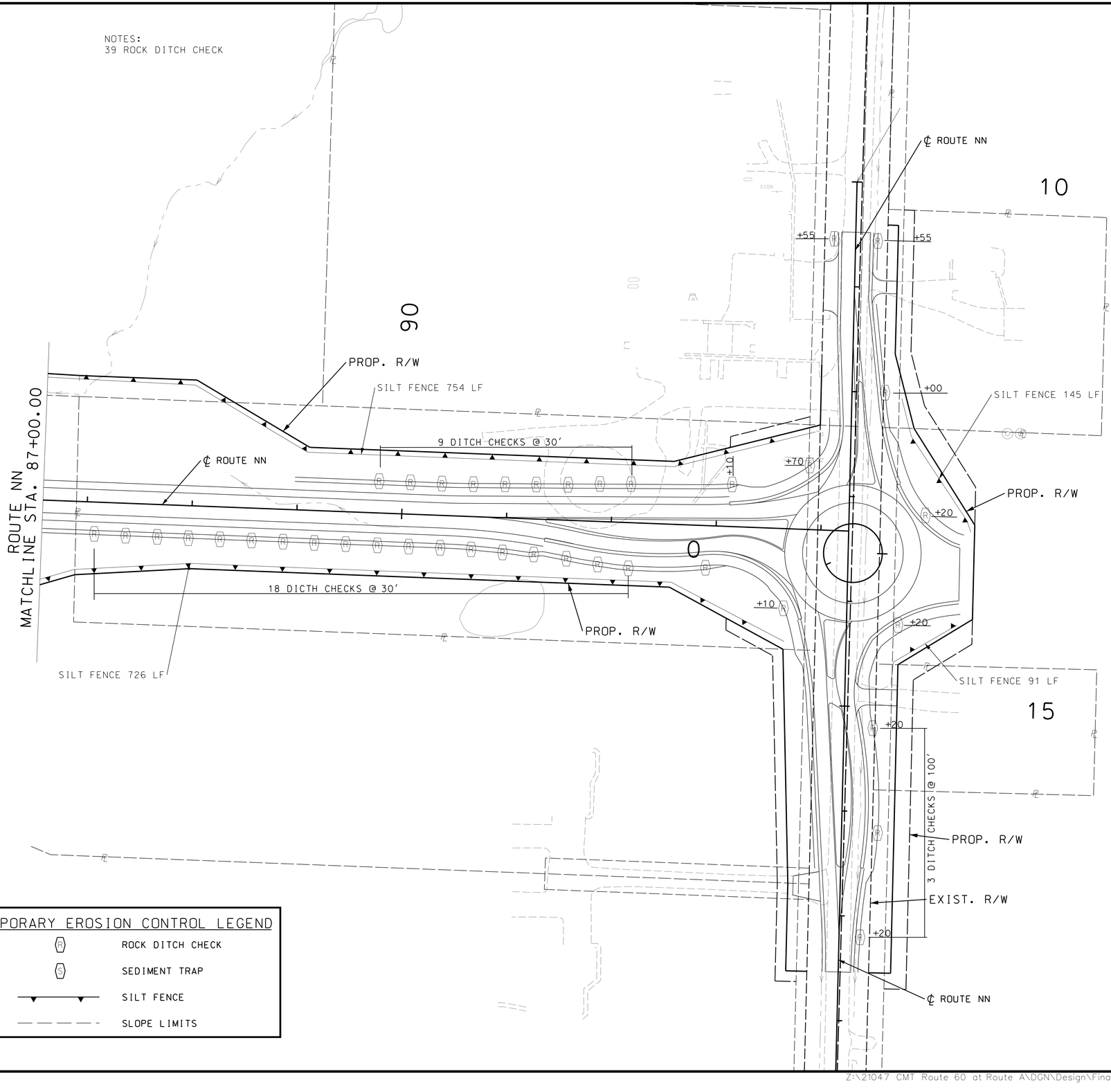

SCALE
0 50 100 150

TEMPORARY EROSION CONTROL LEGEND

R	ROCK DITCH CHECK
S	SEDIMENT TRAP
	SILT FENCE
	SLOPE LIMITS

DISCLAIMER
THE PROFESSIONAL WHOSE SIGNATURE AND PERSONAL SEAL APPEAR HEREON ASSUMES RESPONSIBILITY ONLY FOR WHAT APPEARS ON THIS PAGE, AND DISCLAIMS (PURSUANT TO SECTION 327.411 RSMO) SPECIFICATION, ESTIMATES, REPORTS, OR OTHER DOCUMENTS OR INSTRUMENTS NOT SEALED BY THE UNDERSIGNED PROFESSIONAL RELATING TO OR INTENDED TO BE USED FOR ANY PART OR PARTS OF THE PROJECT TO WHICH THIS PAGE REFERS.

STATE OF MISSOURI
PAUL JOSEPH KRONLAGE
NUMBER EN 023328
REGISTERED PROFESSIONAL ENGINEER

07/31/2024 12:17:35 PM
Paul J. Kronlage - Civil
MO PE - 023328

DATE PREPARED
7/31/2024

ROUTE	STATE
60	MO
DISTRICT	SHEET NO.
SW	142

COUNTY
WEBSTER
JOB NO.
J7P3425C
CONTRACT ID.
PROJECT NO.
BRIDGE NO.

IF A SEAL IS PRESENT ON THIS SHEET IT HAS BEEN ELECTRONICALLY SEALED AND DATED.

DESCRIPTION	DATE

MISSOURI HIGHWAYS AND TRANSPORTATION COMMISSION
105 WEST CAPITOL
JEFFERSON CITY, MO 65102
1-888-ASK-MODOT (1-888-275-6636)

EFK•Moen
Civil Engineering Design
13523 Barrett Parkway Dr
Suite 250
St. Louis, MO 63021
Phone 314-394-3100
Fax 314-394-3199
Missouri Certificate of Authority: 001578

ROUTE A/ROUTE NN
EROSION CONTROL
DURING CONSTRUCTION
23 OF 60

REV.

TEMPORARY EROSION CONTROL LEGEND

- ROCK DITCH CHECK
- SEDIMENT TRAP
- SILT FENCE
- SLOPE LIMITS

DISCLAIMER
THE PROFESSIONAL WHOSE SIGNATURE AND PERSONAL SEAL APPEAR HEREON ASSUMES RESPONSIBILITY ONLY FOR WHAT APPEARS ON THIS PAGE, AND DISCLAIMS (PURSUANT TO SECTION 327.411 RSMO) SPECIFICATION, ESTIMATES, REPORTS, OR OTHER DOCUMENTS OR INSTRUMENTS NOT SEALED BY THE UNDERSIGNED PROFESSIONAL RELATING TO OR INTENDED TO BE USED FOR ANY PART OR PARTS OF THE PROJECT TO WHICH THIS PAGE REFERS.

SCALE
0 50 100 150

PROP. R/W
3 DITCH CHECKS @ 75'
℄ SOUTH OUTER ROAD
T.C.E
EXIST. ESM'T
PROP. R/W
T.C.E
SILT FENCE 328 LF
SILT FENCE 143 LF
PERM. ESM'T
T.C.E
T.C.E
SOUTH OUTER ROAD
MATCHLINE STA. 13+00.00
9 DITCH CHECKS @ 38'
9 DITCH CHECKS @ 38'
T.C.E
PROP. R/W
3 DITCH CHECKS @ 75'
T.C.E
4 DITCH CHECKS @ 40'
SILT FENCE 370 LF
PROP. R/W
T.C.E
SILT FENCE 295 LF
PERM. ESM'T
T.C.E
SILT FENCE 185 LF

NOTES:
32 ROCK DITCH CHECK
1 SEDIMENT TRAP-36" FES

SOUTH OUTER ROAD
EROSION CONTROL
DURING CONSTRUCTION
24 OF 60

STATE OF MISSOURI
PAUL JOSEPH KRONLAGE NUMBER EN 023328
REGISTERED PROFESSIONAL ENGINEER
07/31/2024 12:18:07 PM
Paul J. Kronlage - Civil
MO PE - 023328

DATE PREPARED	
7/31/2024	
ROUTE	STATE
60	MO
DISTRICT	SHEET NO.
SW	143
COUNTY	
WEBSTER	
JOB NO.	
J7P3425C	
CONTRACT ID.	
PROJECT NO.	
BRIDGE NO.	

IF A SEAL IS PRESENT ON THIS SHEET IT HAS BEEN ELECTRONICALLY SEALED AND DATED.

REV.	DESCRIPTION	DATE

MISSOURI HIGHWAYS AND TRANSPORTATION COMMISSION
105 WEST CAPITOL
JEFFERSON CITY, MO 65102
1-888-ASK-MODOT (1-888-275-6636)

EFK•Moen
Civil Engineering Design
13523 Barrett Parkway Dr
Suite 250
St. Louis, MO 63021
Phone 314-394-3100
Fax 314-394-3199
Missouri Certificate of Authority: 001578

TEMPORARY EROSION CONTROL LEGEND

- ROCK DITCH CHECK
- SEDIMENT TRAP
- SILT FENCE
- SLOPE LIMITS

DISCLAIMER
THE PROFESSIONAL WHOSE SIGNATURE AND PERSONAL SEAL APPEAR HEREON ASSUMES RESPONSIBILITY ONLY FOR WHAT APPEARS ON THIS PAGE, AND DISCLAIMS (PURSUANT TO SECTION 327.411 RSMO) SPECIFICATION, ESTIMATES, REPORTS, OR OTHER DOCUMENTS OR INSTRUMENTS NOT SEALED BY THE UNDERSIGNED PROFESSIONAL RELATING TO OR INTENDED TO BE USED FOR ANY PART OR PARTS OF THE PROJECT TO WHICH THIS PAGE REFERS.

SILT FENCE 241 LF
SILT FENCE 474 LF
PERM. ESM'T
PROP. R/W
T.C.E
20
PERM. ESM'T
SILT FENCE 124 LF
T.C.E
4 DITCH CHECKS @ 38'
℄ SOUTH OUTER ROAD
PROP. R/W
SOUTH OUTER ROAD MATCHLINE STA. 13+00.00
+34
+72
PROP. R/W
PERM. ESM'T
+20
25
PERM. ESM'T
T.C.E
T.C.E
T.C.E
PROP. R/W
+08
SILT FENCE 901 LF
SOUTH OUTER ROAD MATCHLINE STA. 26+00.00
T.C.E

NOTES:
8 ROCK DITCH CHECK

SCALE
0 50 100 150

SOUTH OUTER ROAD
EROSION CONTROL
DURING CONSTRUCTION
25 OF 60

PAUL JOSEPH KRONLAGE NUMBER EN 023328
STATE OF MISSOURI
REGISTERED PROFESSIONAL ENGINEER
07/31/2024 12:18:29 PM
Paul J. Kronlage - Civil
MO PE - 023328

DATE PREPARED 7/31/2024
ROUTE 60 | STATE MO
DISTRICT SW | SHEET NO. 144
COUNTY WEBSTER
JOB NO. J7P3425C
CONTRACT ID.
PROJECT NO.
BRIDGE NO.

DESCRIPTION | DATE

IF A SEAL IS PRESENT ON THIS SHEET IT HAS BEEN ELECTRONICALLY SEALED AND DATED.

MISSOURI HIGHWAYS AND TRANSPORTATION COMMISSION
105 WEST CAPITOL
JEFFERSON CITY, MO 65102
1-888-ASK-MODOT (1-888-275-6636)

EFK•Moen
Civil Engineering Design
13523 Barrett Parkway Dr
Suite 250
St. Louis, MO 63021
Phone 314-394-3100
Fax 314-394-3199
Missouri Certificate of Authority: 001578

REV.

Z:\21047 CMT Route 60 at Route A\DGN\Design\Final\Plot Sheets\CMT Erosion Control\144_EC_25_J7P3425C_150.dgn 9:54:39 AM 7/31/2024

DISCLAIMER
THE PROFESSIONAL WHOSE SIGNATURE AND PERSONAL SEAL APPEAR HEREON ASSUMES RESPONSIBILITY ONLY FOR WHAT APPEARS ON THIS PAGE, AND DISCLAIMS (PURSUANT TO SECTION 327.411 RSMO) SPECIFICATION, ESTIMATES, REPORTS, OR OTHER DOCUMENTS OR INSTRUMENTS NOT SEALED BY THE UNDERSIGNED PROFESSIONAL RELATING TO OR INTENDED TO BE USED FOR ANY PART OR PARTS OF THE PROJECT TO WHICH THIS PAGE REFERS.

SCALE
0 50 100 150

SOUTH OUTER ROAD
MATCHLINE STA. 26+00.00

SOUTH OUTER ROAD
MATCHLINE STA. 39+00.00

30

35

FLAG

℄ SOUTH OUTER ROAD

PERM. ESM'T

T.C.E

PROP. R/W

+33

7 DITCH CHECKS @ 90'

SILT FENCE 338 LF

NOTES:
13 ROCK DITCH CHECK

TEMPORARY EROSION CONTROL LEGEND

(R)	ROCK DITCH CHECK
(S)	SEDIMENT TRAP
	SILT FENCE
— — — —	SLOPE LIMITS

SOUTH OUTER ROAD
EROSION CONTROL
DURING CONSTRUCTION
26 OF 60

STATE OF MISSOURI
PAUL JOSEPH KRONLAGE
NUMBER EN 023328
REGISTERED PROFESSIONAL ENGINEER

07/31/2024 12:18:53 PM
Paul J. Kronlage - Civil
MO PE - 023328

DATE PREPARED	
7/31/2024	
ROUTE	STATE
60	MO
DISTRICT	SHEET NO.
SW	145
COUNTY	
WEBSTER	
JOB NO.	
J7P3425C	
CONTRACT ID.	
PROJECT NO.	
BRIDGE NO.	

IF A SEAL IS PRESENT ON THIS SHEET IT HAS BEEN ELECTRONICALLY SEALED AND DATED.

DATE	DESCRIPTION	REV.

MISSOURI HIGHWAYS AND TRANSPORTATION COMMISSION
105 WEST CAPITOL
JEFFERSON CITY, MO 65102
1-888-ASK-MODOT (1-888-275-6636)

EFK•Moen
Civil Engineering Design
13523 Barrett Parkway Dr
Suite 250
St. Louis, MO 63021
Phone 314-394-3100
Fax 314-394-3199
Missouri Certificate of Authority: 001578

TEMPORARY EROSION CONTROL LEGEND

- ROCK DITCH CHECK
- SEDIMENT TRAP
- SILT FENCE
- SLOPE LIMITS

DISCLAIMER
THE PROFESSIONAL WHOSE SIGNATURE AND PERSONAL SEAL APPEAR HEREON ASSUMES RESPONSIBILITY ONLY FOR WHAT APPEARS ON THIS PAGE, AND DISCLAIMS (PURSUANT TO SECTION 327.411 RSMO) SPECIFICATION, ESTIMATES, REPORTS, OR OTHER DOCUMENTS OR INSTRUMENTS NOT SEALED BY THE UNDERSIGNED PROFESSIONAL RELATING TO OR INTENDED TO BE USED FOR ANY PART OR PARTS OF THE PROJECT TO WHICH THIS PAGE REFERS.

℄ SOUTH OUTER ROAD

PERM. ESM'T

EX. R/W

T.C.E

PROP. R/W

2 DITCH CHECKS @ 90'

3 DITCH CKECKS @ 150'

N 86° 18' 47" E

N 61° 03' 51" E

±65'

SILT FENCE 557 LF

SILT FENCE 194 LF

SOUTH OUTER ROAD
MATCHLINE STA. 39+00.00

SOUTH OUTER ROAD
MATCHLINE STA. 52+00.00

NOTES:
10 ROCK DITCH CHECK

SCALE
0 50 100 150

SOUTH OUTER ROAD
EROSION CONTROL
DURING CONSTRUCTION
27 OF 60

STATE OF MISSOURI
PAUL JOSEPH KRONLAGE
NUMBER EN 023328
REGISTERED PROFESSIONAL ENGINEER

07/31/2024 12:19:20 PM
Paul J. Kronlage - Civil
MO PE - 023328

DATE PREPARED
7/31/2024

ROUTE	STATE
60	MO
DISTRICT	SHEET NO.
SW	146

COUNTY
WEBSTER

JOB NO.
J7P3425C

CONTRACT ID.

PROJECT NO.

BRIDGE NO.

DESCRIPTION	DATE

IF A SEAL IS PRESENT ON THIS SHEET IT HAS BEEN ELECTRONICALLY SEALED AND DATED.

MISSOURI HIGHWAYS AND TRANSPORTATION COMMISSION
105 WEST CAPITOL
JEFFERSON CITY, MO 65102
1-888-ASK-MODOT (1-888-275-6636)

EFK•Moen
Civil Engineering Design
13523 Barrett Parkway Dr
Suite 250
St. Louis, MO 63021
Phone 314-394-3100
Fax 314-394-3199
Missouri Certificate of Authority: 001578

REV.

Z:\21047 CMT Route 60 at Route A\DGN\Design\Final\Plot Sheets\CMT Erosion Control\146_EC_27_J7P3425C_150.dgn 9:54:41 AM 7/31/2024

TEMPORARY EROSION CONTROL LEGEND

- ROCK DITCH CHECK
- SEDIMENT TRAP
- SILT FENCE
- SLOPE LIMITS

DISCLAIMER
THE PROFESSIONAL WHOSE SIGNATURE AND PERSONAL SEAL APPEAR HEREON ASSUMES RESPONSIBILITY ONLY FOR WHAT APPEARS ON THIS PAGE, AND DISCLAIMS (PURSUANT TO SECTION 327.411 RSMO) SPECIFICATION, ESTIMATES, REPORTS, OR OTHER DOCUMENTS OR INSTRUMENTS NOT SEALED BY THE UNDERSIGNED PROFESSIONAL RELATING TO OR INTENDED TO BE USED FOR ANY PART OR PARTS OF THE PROJECT TO WHICH THIS PAGE REFERS.

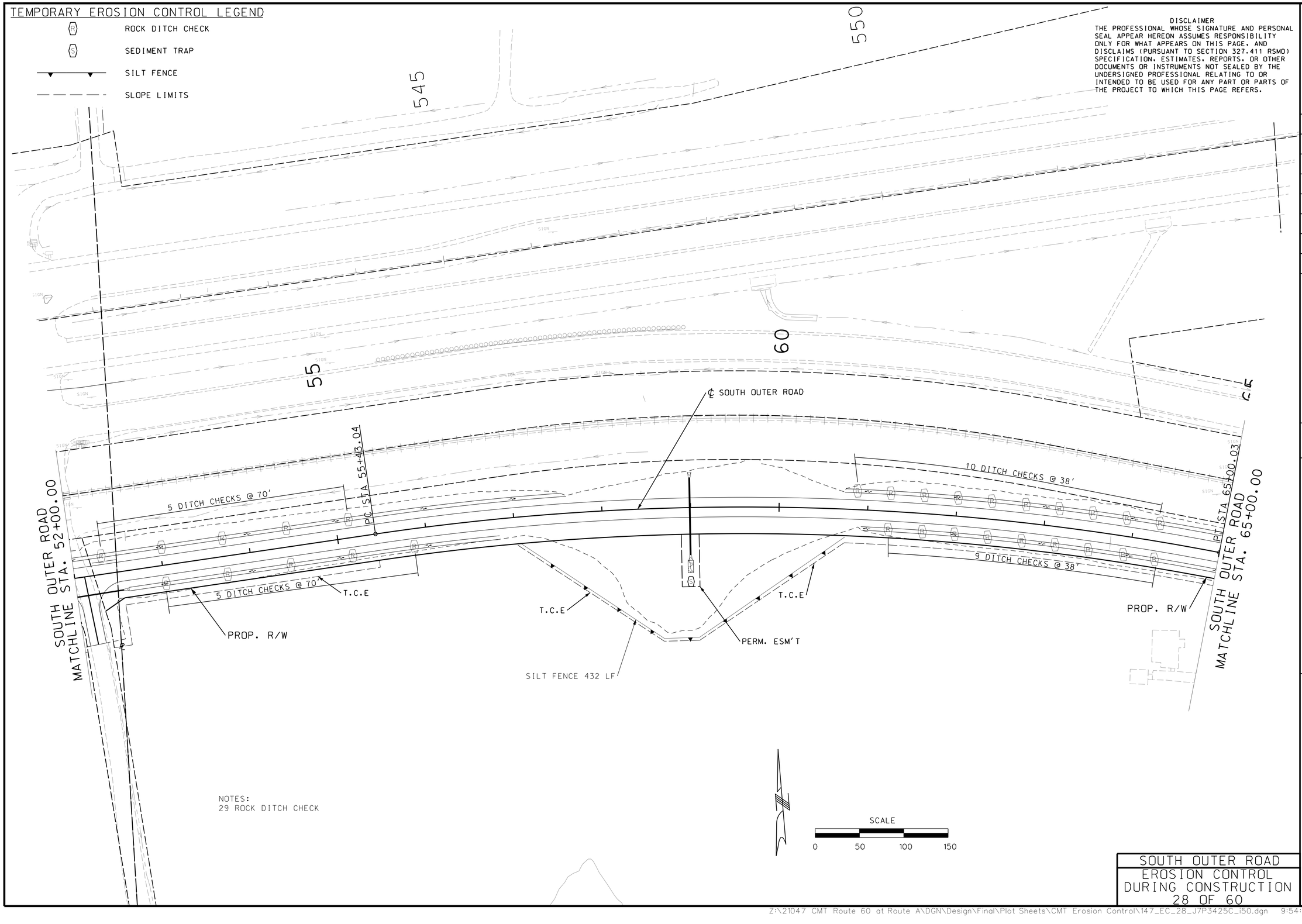

NOTES:
29 ROCK DITCH CHECK

SCALE
0 50 100 150

SOUTH OUTER ROAD
EROSION CONTROL
DURING CONSTRUCTION
28 OF 60

STATE OF MISSOURI
PAUL JOSEPH KRONLAGE NUMBER EN 023328
REGISTERED PROFESSIONAL ENGINEER

07/31/2024 12:19:54 PM
Paul J. Kronlage - Civil
MO PE - 023328

DATE PREPARED 7/31/2024

ROUTE	STATE
60	MO
DISTRICT	SHEET NO.
SW	147

COUNTY: WEBSTER
JOB NO.: J7P3425C
CONTRACT ID.:
PROJECT NO.:
BRIDGE NO.:

DATE	DESCRIPTION	REV.

IF A SEAL IS PRESENT ON THIS SHEET IT HAS BEEN ELECTRONICALLY SEALED AND DATED.

MISSOURI HIGHWAYS AND TRANSPORTATION COMMISSION
105 WEST CAPITOL
JEFFERSON CITY, MO 65102
1-888-ASK-MODOT (1-888-275-6636)

EFK·Moen
Civil Engineering Design
13523 Barrett Parkway Dr
Suite 250
St. Louis, MO 63021
Phone 314-394-3100
Fax 314-394-3199
Missouri Certificate of Authority: 001578

Z:\21047 CMT Route 60 at Route A\DGN\Design\Final\Plot Sheets\CMT Erosion Control\147_EC_28_J7P3425C_i50.dgn 9:54:42 AM 7/31/2024

TEMPORARY EROSION CONTROL LEGEND

- (R) ROCK DITCH CHECK
- (S) SEDIMENT TRAP
- SILT FENCE
- SLOPE LIMITS

DISCLAIMER
THE PROFESSIONAL WHOSE SIGNATURE AND PERSONAL SEAL APPEAR HEREON ASSUMES RESPONSIBILITY ONLY FOR WHAT APPEARS ON THIS PAGE, AND DISCLAIMS (PURSUANT TO SECTION 327.411 RSMO) SPECIFICATION, ESTIMATES, REPORTS, OR OTHER DOCUMENTS OR INSTRUMENTS NOT SEALED BY THE UNDERSIGNED PROFESSIONAL RELATING TO OR INTENDED TO BE USED FOR ANY PART OR PARTS OF THE PROJECT TO WHICH THIS PAGE REFERS.

SCALE
0 50 100 150

SOUTH OUTER ROAD MATCHLINE STA. 65+00.00

℄ SOUTH OUTER ROAD

SOUTH OUTER ROAD MATCHLINE STA. 78+00.00

±20'

T.C.E

SILT FENCE 119 LF

4 DITCH CHECKS @ 90'

14 DITCH CHECKS @ 100'

3 DITCH CHECKS @ 115'

3 DITCH CHECKS @ 100'

EX. R/W

PROP. R/W

T.C.E

PROP. R/W

T.C.E

PERM. ESM'T

NOTES:
26 ROCK DITCH CHECK
1 SEDIMENT TRAP

SOUTH OUTER ROAD
EROSION CONTROL
DURING CONSTRUCTION
29 OF 60

STATE OF MISSOURI
PAUL JOSEPH KRONLAGE
NUMBER EN 023328
REGISTERED PROFESSIONAL ENGINEER

07/31/2024 12:20:25 PM
Paul J. Kronlage - Civil
MO PE - 023328

DATE PREPARED: 7/31/2024
ROUTE: 60 | STATE: MO
DISTRICT: SW | SHEET NO.: 148
COUNTY: WEBSTER
JOB NO.: J7P3425C
CONTRACT ID.:
PROJECT NO.:
BRIDGE NO.:

IF A SEAL IS PRESENT ON THIS SHEET IT HAS BEEN ELECTRONICALLY SEALED AND DATED.

DESCRIPTION	DATE

MISSOURI HIGHWAYS AND TRANSPORTATION COMMISSION
105 WEST CAPITOL
JEFFERSON CITY, MO 65102
1-888-ASK-MODOT (1-888-275-6636)

EFK•Moen
Civil Engineering Design
13523 Barrett Parkway Dr
Suite 250
St. Louis, MO 63021
Phone 314-394-3100
Fax 314-394-3199
Missouri Certificate of Authority: 001578

REV.

Z:\21047 CMT Route 60 at Route A\DGN\Design\Final\Plot Sheets\CMT Erosion Control\148_EC_29_J7P3425C_150.dgn 9:54:43 AM 7/31/2024

TEMPORARY EROSION CONTROL LEGEND

- (R) ROCK DITCH CHECK
- (S) SEDIMENT TRAP
- SILT FENCE
- SLOPE LIMITS

DISCLAIMER
THE PROFESSIONAL WHOSE SIGNATURE AND PERSONAL SEAL APPEAR HEREON ASSUMES RESPONSIBILITY ONLY FOR WHAT APPEARS ON THIS PAGE, AND DISCLAIMS (PURSUANT TO SECTION 327.411 RSMO) SPECIFICATION, ESTIMATES, REPORTS, OR OTHER DOCUMENTS OR INSTRUMENTS NOT SEALED BY THE UNDERSIGNED PROFESSIONAL RELATING TO OR INTENDED TO BE USED FOR ANY PART OR PARTS OF THE PROJECT TO WHICH THIS PAGE REFERS.

SCALE
0 50 100 150

℄ SOUTH OUTER ROAD

80

85

90

SOUTH OUTER ROAD
MATCHLINE STA. 78+00.00

SOUTH OUTER ROAD
MATCHLINE STA. 91+00.00

13 DITCH CHECKS @ 100'

11 DITCH CHECKS @ 100'

N 51° 12' 12" E

T.C.E

PERM. ESM'T

PERM. ESM'T

PROP. R/W

T.C.E

PROP. R/W

PERM. ESM'T

T.C.E

NOTES:
24 ROCK DITCH CHECK

STATE OF MISSOURI
PAUL JOSEPH KRONLAGE
NUMBER EN 023328
REGISTERED PROFESSIONAL ENGINEER

07/31/2024 12:21:03 PM
Paul J. Kronlage - Civil
MO PE - 023328

DATE PREPARED	7/31/2024
ROUTE	60
STATE	MO
DISTRICT	SW
SHEET NO.	149
COUNTY	WEBSTER
JOB NO.	J7P3425C
CONTRACT ID.	
PROJECT NO.	
BRIDGE NO.	

DESCRIPTION | DATE

IF A SEAL IS PRESENT ON THIS SHEET IT HAS BEEN ELECTRONICALLY SEALED AND DATED.

MISSOURI HIGHWAYS AND TRANSPORTATION COMMISSION

105 WEST CAPITOL
JEFFERSON CITY, MO 65102
1-888-ASK-MODOT (1-888-275-6636)

EFK•Moen
Civil Engineering Design
13523 Barrett Parkway Dr
Suite 250
St. Louis, MO 63021
Phone 314-394-3100
Fax 314-394-3199
Missouri Certificate of Authority: 001578

SOUTH OUTER ROAD
EROSION CONTROL
DURING CONSTRUCTION
30 OF 60

REV.

Z:\21047 CMT Route 60 at Route A\DGN\Design\Final\Plot Sheets\CMT Erosion Control\149_EC_30_J7P3425C_150.dgn 9:54:45 AM 7/31/2024

DISCLAIMER
THE PROFESSIONAL WHOSE SIGNATURE AND PERSONAL SEAL APPEAR HEREON ASSUMES RESPONSIBILITY ONLY FOR WHAT APPEARS ON THIS PAGE, AND DISCLAIMS (PURSUANT TO SECTION 327.411 RSMO) SPECIFICATION, ESTIMATES, REPORTS, OR OTHER DOCUMENTS OR INSTRUMENTS NOT SEALED BY THE UNDERSIGNED PROFESSIONAL RELATING TO OR INTENDED TO BE USED FOR ANY PART OR PARTS OF THE PROJECT TO WHICH THIS PAGE REFERS.

SCALE
0 50 100 150

95

100

SOUTH OUTER ROAD STA. 91+00.00
MATCHLINE

SOUTH OUTER ROAD STA. 104+00.00
MATCHLINE

PROP. R/W

T.C.E

SILT FENCE 498 LF

4 DITCH CHECKS @ 65'

4 DITCH CHECKS @ 65'

PERM. ESM'T

PROP. R/W

T.C.E

4 DITCH CHECKS @ 65'

12 DITCH CHECKS @ 65'

PROP. R/W

T.C.E

4 DITCH CHECKS @ 65'

T.C.E

SILT FENCE 202 LF

℄ SOUTH OUTER ROAD

PROP. R/W

NOTES:
28 ROCK DITCH CHECK

NOTES:
24 ROCK DITCH CHECK

TEMPORARY EROSION CONTROL LEGEND

- (R) ROCK DITCH CHECK
- (S) SEDIMENT TRAP
- SILT FENCE
- SLOPE LIMITS

SOUTH OUTER ROAD
EROSION CONTROL
DURING CONSTRUCTION
31 OF 60

STATE OF MISSOURI
PAUL JOSEPH KRONLAGE
NUMBER EN 023328
REGISTERED PROFESSIONAL ENGINEER

07/31/2024 12:24:11 PM
Paul J. Kronlage - Civil
MO PE - 023328

DATE PREPARED
7/31/2024

ROUTE	STATE
60	MO
DISTRICT	SHEET NO.
SW	150

COUNTY
WEBSTER

JOB NO.
J7P3425C

CONTRACT ID.

PROJECT NO.

BRIDGE NO.

REV.	DESCRIPTION	DATE

IF A SEAL IS PRESENT ON THIS SHEET IT HAS BEEN ELECTRONICALLY SEALED AND DATED.

MISSOURI HIGHWAYS AND TRANSPORTATION COMMISSION
105 WEST CAPITOL
JEFFERSON CITY, MO 65102
1-888-ASK-MODOT (1-888-275-6636)

EFK•Moen
Civil Engineering Design
13523 Barrett Parkway Dr
Suite 250
St. Louis, MO 63021
Phone 314-394-3100
Fax 314-394-3199
Missouri Certificate of Authority: 001578

DISCLAIMER
THE PROFESSIONAL WHOSE SIGNATURE AND PERSONAL SEAL APPEAR HEREON ASSUMES RESPONSIBILITY ONLY FOR WHAT APPEARS ON THIS PAGE, AND DISCLAIMS (PURSUANT TO SECTION 327.411 RSMO) SPECIFICATION, ESTIMATES, REPORTS, OR OTHER DOCUMENTS OR INSTRUMENTS NOT SEALED BY THE UNDERSIGNED PROFESSIONAL RELATING TO OR INTENDED TO BE USED FOR ANY PART OR PARTS OF THE PROJECT TO WHICH THIS PAGE REFERS.

PROP. R/W
T.C.E
PERM. ESM'T
SOUTH OUTER ROAD MATCHLINE STA. 104+00.00
PROP. R/W
T.C.E
SILT FENCE 409 LF
PERM. ESM'T
105
110
115
+25
+25
+50
T.C.E
PROP. R/W
℄ SOUTH OUTER ROAD
EX. R/W
3 DITCH CHECKS @ 130'
4 DITCH CHECKS @ 130'
T.C.E
T.C.E
SILT FENCE 484 LF
PROP. R/W
SOUTH OUTER ROAD MATCHLINE STA. 117+00.00

SCALE
0 50 100 150

NOTES:
10 ROCK DITCH CHECK
1 SEDIMENT TRAP -30" FES

TEMPORARY EROSION CONTROL LEGEND
ROCK DITCH CHECK
SEDIMENT TRAP
SILT FENCE
SLOPE LIMITS

SOUTH OUTER ROAD
EROSION CONTROL DURING CONSTRUCTION
32 OF 60

STATE OF MISSOURI
PAUL JOSEPH KRONLAGE
NUMBER EN 023328
REGISTERED PROFESSIONAL ENGINEER
07/31/2024 12:24:32 PM
Paul J. Kronlage - Civil
MO PE - 023328

DATE PREPARED 7/31/2024
ROUTE 60 | STATE MO
DISTRICT SW | SHEET NO. 151
COUNTY WEBSTER
JOB NO. J7P3425C
CONTRACT ID.
PROJECT NO.
BRIDGE NO.

DATE | DESCRIPTION | REV.

IF A SEAL IS PRESENT ON THIS SHEET IT HAS BEEN ELECTRONICALLY SEALED AND DATED.

MISSOURI HIGHWAYS AND TRANSPORTATION COMMISSION
105 WEST CAPITOL
JEFFERSON CITY, MO 65102
1-888-ASK-MODOT (1-888-275-6636)

EFK•Moen
Civil Engineering Design
13523 Barrett Parkway Dr
Suite 250
St. Louis, MO 63021
Phone 314-394-3100
Fax 314-394-3199
Missouri Certificate of Authority: 001578

Z:\21047 CMT Route 60 at Route A\DGN\Design\Final\Plot Sheets\CMT Erosion Control\151_EC_32_J7P3425C_150.dgn 9:54:47 AM 7/31/2024

DISCLAIMER
THE PROFESSIONAL WHOSE SIGNATURE AND PERSONAL SEAL APPEAR HEREON ASSUMES RESPONSIBILITY ONLY FOR WHAT APPEARS ON THIS PAGE, AND DISCLAIMS (PURSUANT TO SECTION 327.411 RSMO) SPECIFICATION, ESTIMATES, REPORTS, OR OTHER DOCUMENTS OR INSTRUMENTS NOT SEALED BY THE UNDERSIGNED PROFESSIONAL RELATING TO OR INTENDED TO BE USED FOR ANY PART OR PARTS OF THE PROJECT TO WHICH THIS PAGE REFERS.

SCALE
0 50 100 150

120

125

EX. R/W

SOUTH OUTER ROAD
MATCHLINE STA. 117+00.00

SOUTH OUTER ROAD
MATCHLINE STA. 130+00.00

±0.5

±0.5

6 DITCH CHECK @ 75'

6 DITCH CHECKS @ 75'

T.C.E

PROP. R/W

T.C.E

℄ SOUTH OUTER ROAD

PROP. R/W

T.C.E

PERM. ESM'T

TEMPORARY EROSION CONTROL LEGEND

- ROCK DITCH CHECK
- SEDIMENT TRAP
- SILT FENCE
- SLOPE LIMITS

NOTES:
15 ROCK DITCH CHECK

SOUTH OUTER ROAD
EROSION CONTROL
DURING CONSTRUCTION
33 OF 60

STATE OF MISSOURI
PAUL JOSEPH KRONLAGE
NUMBER EN 023328
REGISTERED PROFESSIONAL ENGINEER

07/31/2024 12:24:58 PM
Paul J. Kronlage - Civil
MO PE - 023328

DATE PREPARED
7/31/2024

ROUTE	STATE
60	MO
DISTRICT	SHEET NO.
SW	152

COUNTY
WEBSTER

JOB NO.
J7P3425C

CONTRACT ID.

PROJECT NO.

BRIDGE NO.

DESCRIPTION	DATE

IF A SEAL IS PRESENT ON THIS SHEET IT HAS BEEN ELECTRONICALLY SEALED AND DATED.

MISSOURI HIGHWAYS AND TRANSPORTATION COMMISSION

105 WEST CAPITOL
JEFFERSON CITY, MO 65102
1-888-ASK-MODOT (1-888-275-6636)

EFK•Moen
Civil Engineering Design
13523 Barrett Parkway Dr
Suite 250
St. Louis, MO 63021
Phone 314-394-3100
Fax 314-394-3199
Missouri Certificate of Authority: 001578

REV.

Z:\21047 CMT Route 60 at Route A\DGN\Design\Final\Plot Sheets\CMT Erosion Control\152_EC_33_J7P3425C_150.dgn 9:54:48 AM 7/31/2024

DISCLAIMER
THE PROFESSIONAL WHOSE SIGNATURE AND PERSONAL SEAL APPEAR HEREON ASSUMES RESPONSIBILITY ONLY FOR WHAT APPEARS ON THIS PAGE, AND DISCLAIMS (PURSUANT TO SECTION 327.411 RSMO) SPECIFICATION, ESTIMATES, REPORTS, OR OTHER DOCUMENTS OR INSTRUMENTS NOT SEALED BY THE UNDERSIGNED PROFESSIONAL RELATING TO OR INTENDED TO BE USED FOR ANY PART OR PARTS OF THE PROJECT TO WHICH THIS PAGE REFERS.

SCALE
0 50 100 150

135

140

SOUTH OUTER ROAD
MATCHLINE STA. 130+00.00

SOUTH OUTER ROAD
MATCHLINE STA. 143+00.00

EX. R/W

17 DITCH CHECKS @ 75'

PROP. R/W

T.C.E

℄ SOUTH OUTER ROAD

T.C.E

17 DITCH CHECKS @ 75'

PROP. R/W

PROP. R/W

T.C.E

PERM. ESM'T

NOTES:
34 ROCK DITCH CHECK

TEMPORARY EROSION CONTROL LEGEND

- ROCK DITCH CHECK
- SEDIMENT TRAP
- SILT FENCE
- SLOPE LIMITS

SOUTH OUTER ROAD
EROSION CONTROL
DURING CONSTRUCTION
34 OF 60

STATE OF MISSOURI
PAUL JOSEPH KRONLAGE
NUMBER EN 023328
REGISTERED PROFESSIONAL ENGINEER

07/31/2024 12:25:22 PM
Paul J. Kronlage - Civil
MO PE - 023328

DATE PREPARED
7/31/2024

ROUTE	STATE
60	MO
DISTRICT	SHEET NO.
SW	153

COUNTY
WEBSTER

JOB NO.
J7P3425C

CONTRACT ID.

PROJECT NO.

BRIDGE NO.

DESCRIPTION	DATE

IF A SEAL IS PRESENT ON THIS SHEET IT HAS BEEN ELECTRONICALLY SEALED AND DATED.

MISSOURI HIGHWAYS AND TRANSPORTATION COMMISSION

105 WEST CAPITOL
JEFFERSON CITY, MO 65102
1-888-ASK-MODOT (1-888-275-6636)

EFK•Moen
Civil Engineering Design
13523 Barrett Parkway Dr
Suite 250
St. Louis, MO 63021
Phone 314-394-3100
Fax 314-394-3199
Missouri Certificate of Authority: 001578

REV.

Z:\21047 CMT Route 60 at Route A\DGN\Design\Final\Plot Sheets\CMT Erosion Control\153_EC_34_J7P3425C_150.dgn 9:54:49 AM 7/31/2024

DISCLAIMER
THE PROFESSIONAL WHOSE SIGNATURE AND PERSONAL SEAL APPEAR HEREON ASSUMES RESPONSIBILITY ONLY FOR WHAT APPEARS ON THIS PAGE, AND DISCLAIMS (PURSUANT TO SECTION 327.411 RSMO) SPECIFICATION, ESTIMATES, REPORTS, OR OTHER DOCUMENTS OR INSTRUMENTS NOT SEALED BY THE UNDERSIGNED PROFESSIONAL RELATING TO OR INTENDED TO BE USED FOR ANY PART OR PARTS OF THE PROJECT TO WHICH THIS PAGE REFERS.

630
635
145
150
155

SOUTH OUTER ROAD
MATCHLINE STA. 143+00.00

SOUTH OUTER ROAD
MATCHLINE STA. 156+00.00

7 DITCH CHECKS @ 75'
5 DITCH CHECKS @ 130'
7 DITCH CHECKS @ 75'
5 DITCH CHECKS @ 130'

PROP. R/W
PERM. ESM'T
T.C.E
PERM. ESM'T
PROP. R/W
PERM. ESM'T
℄ SOUTH OUTER ROAD
T.C.E

NOTES:
24 ROCK DITCH CHECK

TEMPORARY EROSION CONTROL LEGEND

- ROCK DITCH CHECK
- SEDIMENT TRAP
- SILT FENCE
- SLOPE LIMITS

SCALE
0 50 100 150

SOUTH OUTER ROAD
EROSION CONTROL
DURING CONSTRUCTION
35 OF 60

STATE OF MISSOURI
PAUL JOSEPH KRONLAGE
NUMBER EN 023328
REGISTERED PROFESSIONAL ENGINEER

08/05/2024 9:46:38 AM
Paul J. Kronlage - Civil
MO PE - 023328

DATE PREPARED
7/31/2024

ROUTE	STATE
60	MO
DISTRICT	SHEET NO.
SW	154

COUNTY
WEBSTER
JOB NO.
J7P3425C
CONTRACT ID.
PROJECT NO.
BRIDGE NO.

DESCRIPTION	DATE

IF A SEAL IS PRESENT ON THIS SHEET IT HAS BEEN ELECTRONICALLY SEALED AND DATED.

MISSOURI HIGHWAYS AND TRANSPORTATION COMMISSION

105 WEST CAPITOL
JEFFERSON CITY, MO 65102
1-888-ASK-MODOT (1-888-275-6636)

EFK•Moen
Civil Engineering Design
13523 Barrett Parkway Dr
Suite 250
St. Louis, MO 63021
Phone 314-394-3100
Fax 314-394-3199
Missouri Certificate of Authority: 001578

REV.

Z:\21047 CMT Route 60 at Route A\DGN\Design\Final\Plot Sheets\CMT Erosion Control\154_EC_35_J7P3425C_150.dgn 9:54:50 AM 7/31/2024

TEMPORARY EROSION CONTROL LEGEND

- ROCK DITCH CHECK
- SEDIMENT TRAP
- SILT FENCE
- SLOPE LIMITS

DISCLAIMER
THE PROFESSIONAL WHOSE SIGNATURE AND PERSONAL SEAL APPEAR HEREON ASSUMES RESPONSIBILITY ONLY FOR WHAT APPEARS ON THIS PAGE, AND DISCLAIMS (PURSUANT TO SECTION 327.411 RSMO) SPECIFICATION, ESTIMATES, REPORTS, OR OTHER DOCUMENTS OR INSTRUMENTS NOT SEALED BY THE UNDERSIGNED PROFESSIONAL RELATING TO OR INTENDED TO BE USED FOR ANY PART OR PARTS OF THE PROJECT TO WHICH THIS PAGE REFERS.

640
645
650
160
165
170
+10
8 DITCH CHECKS @ 75'
6 DITCH CHECKS @ 65'
7 DITCH CHECKS @ 65'
6 DITCH CHECKS @ 65'
6 DITCH CHECKS @ 65'
SOUTH OUTER ROAD
MATCHLINE STA. 156+00.00
SOUTH OUTER ROAD
MATCHLINE STA. 169+00.00
℄ SOUTH OUTER ROAD
T.C.E
PROP. R/W
T.C.E
PROP. R/W
PROP. R/W
PERM. ESM'T
PERM. ESM'T
PERM. ESM'T
SIGN
SIGN

SCALE
0 50 100 150

NOTES:
35 ROCK DITCH CHECK

SOUTH OUTER ROAD
EROSION CONTROL
DURING CONSTRUCTION
36 OF 60

STATE OF MISSOURI
PAUL JOSEPH KRONLAGE
NUMBER EN 023328
REGISTERED PROFESSIONAL ENGINEER

08/05/2024 9:46:11 AM
Paul J. Kronlage - Civil
MO PE - 023328

DATE PREPARED
7/31/2024

ROUTE	STATE
60	MO
DISTRICT	SHEET NO.
SW	155

COUNTY
WEBSTER

JOB NO.
J7P3425C

CONTRACT ID.

PROJECT NO.

BRIDGE NO.

DESCRIPTION	DATE

IF A SEAL IS PRESENT ON THIS SHEET IT HAS BEEN ELECTRONICALLY SEALED AND DATED.

MISSOURI HIGHWAYS AND TRANSPORTATION COMMISSION
105 WEST CAPITOL
JEFFERSON CITY, MO 65102
1-888-ASK-MODOT (1-888-275-6636)

EFK•Moen
Civil Engineering Design
13523 Barrett Parkway Dr
Suite 250
St. Louis, MO 63021
Phone 314-394-3100
Fax 314-394-3199
Missouri Certificate of Authority: 001578

REV.

Z:\21047 CMT Route 60 at Route A\DGN\Design\Final\Plot Sheets\CMT Erosion Control\155_EC_36_J7P3425C_150.dgn 9:54:51 AM 7/31/2024

DISCLAIMER
THE PROFESSIONAL WHOSE SIGNATURE AND PERSONAL SEAL APPEAR HEREON ASSUMES RESPONSIBILITY ONLY FOR WHAT APPEARS ON THIS PAGE, AND DISCLAIMS (PURSUANT TO SECTION 327.411 RSMO) SPECIFICATION, ESTIMATES, REPORTS, OR OTHER DOCUMENTS OR INSTRUMENTS NOT SEALED BY THE UNDERSIGNED PROFESSIONAL RELATING TO OR INTENDED TO BE USED FOR ANY PART OR PARTS OF THE PROJECT TO WHICH THIS PAGE REFERS.

SCALE
0 50 100 150

EXIST. R/W
PROP. R/W
℄ ROUTE NN
170
175
180
T.C.E
PROP. R/W
SOUTH OUTER ROAD
MATCHLINE STA. 169+00.00
+35
+35
4 DITCH CHECKS @ 65'
2 DITCH CHECKS @ 65'
SILT FENCE 195 LF
℄ SOUTH OUTER ROAD
SILT FENCE 877 LF
T.C.E
T.C.E
PROP. R/W
T.C.E
T.C.E
PROP. R/W
PROP. R/W
T.C.E
PERM. ESM'T
SILT FENCE 490 LF
T.C.E
SILT FENCE 243 LF
PROP. R/W
SILT FENCE 220 LF

TEMPORARY EROSION CONTROL LEGEND
R ROCK DITCH CHECK
S SEDIMENT TRAP
SILT FENCE
SLOPE LIMITS

NOTES:
8 ROCK DITCH CHECK

SOUTH OUTER ROAD
EROSION CONTROL
DURING CONSTRUCTION
37 OF 60

STATE OF MISSOURI
PAUL JOSEPH KRONLAGE
NUMBER EN 023328
REGISTERED PROFESSIONAL ENGINEER
08/05/2024 9:46:55 AM
Paul J. Kronlage - Civil
MO PE - 023328

DATE PREPARED
7/31/2024

ROUTE	STATE
60	MO
DISTRICT	SHEET NO.
SW	156

COUNTY
WEBSTER
JOB NO.
J7P3425C
CONTRACT ID.
PROJECT NO.
BRIDGE NO.

DESCRIPTION	DATE

MISSOURI HIGHWAYS AND TRANSPORTATION COMMISSION
105 WEST CAPITOL
JEFFERSON CITY, MO 65102
1-888-ASK-MODOT (1-888-275-6636)

EFK•Moen
Civil Engineering Design
13523 Barrett Parkway Dr
Suite 250
St. Louis, MO 63021
Phone 314-394-3100
Fax 314-394-3199
Missouri Certificate of Authority: 001578

IF A SEAL IS PRESENT ON THIS SHEET IT HAS BEEN ELECTRONICALLY SEALED AND DATED.

REV.

DISCLAIMER
THE PROFESSIONAL WHOSE SIGNATURE AND PERSONAL SEAL APPEAR HEREON ASSUMES RESPONSIBILITY ONLY FOR WHAT APPEARS ON THIS PAGE, AND DISCLAIMS (PURSUANT TO SECTION 327.411 RSMO) SPECIFICATION, ESTIMATES, REPORTS, OR OTHER DOCUMENTS OR INSTRUMENTS NOT SEALED BY THE UNDERSIGNED PROFESSIONAL RELATING TO OR INTENDED TO BE USED FOR ANY PART OR PARTS OF THE PROJECT TO WHICH THIS PAGE REFERS.

STATE OF MISSOURI
PAUL JOSEPH KRONLAGE
NUMBER EN 023328
REGISTERED PROFESSIONAL ENGINEER

07/31/2024 12:25:55 PM
Paul J. Kronlage - Civil
MO PE - 023328

DATE PREPARED
7/31/2024

ROUTE	STATE
60	MO
DISTRICT	SHEET NO.
SW	157

COUNTY
WEBSTER

JOB NO.
J7P3425C

CONTRACT ID.

PROJECT NO.

BRIDGE NO.

DATE	DESCRIPTION

IF A SEAL IS PRESENT ON THIS SHEET IT HAS BEEN ELECTRONICALLY SEALED AND DATED.

MISSOURI HIGHWAYS AND TRANSPORTATION COMMISSION

MoDOT

105 WEST CAPITOL
JEFFERSON CITY, MO 65102
1-888-ASK-MODOT (1-888-275-6636)

EFK•Moen
Civil Engineering Design
13523 Barrett Parkway Dr
Suite 250
St. Louis, MO 63021
Phone 314-394-3100
Fax 314-394-3199
Missouri Certificate of Authority: 001578

645 650 655 655 650 645 640 635 630 625 620 615 610 605 600 595 590 585 580 575 570 565 560 555 550 545 540 535 530 525 520 515 510 505 500 495 490 485 480 475 470 465 460 455 450 445 440 435 430 425 420 415 410 405 400 395 390 385 380 375 370 365 360 355 350 345 340 335 330 325 320 315 310 305 300 295 290 285 280 275 270 265 260 255 250 245 240 235 230 225 220 215 210 205 200 195 190 185 180 175 170 165 160

WB ON RAMP
MATCHLINE STA. 1+00.00

EB US60
MATCHLINE
STA. 12+00.00

EB OFF RAMP
MATCHLINE STA. 2+00.00

N 54° 07' 19" E

PC STA 163+28.20

PT STA 170+60.82

SCALE
0 50 100 150

TEMPORARY EROSION CONTROL LEGEND

- S — SEDIMENT TRAP
- R — ROCK DITCH CHECK
- SEEDING
- SILT FENCE
- SLOPE LIMITS

US 60
EROSION CONTROL
POST-CONSTRUCTION
38 OF 60

Z:\21047 CMT Route 60 at Route A\DGN\Design\Final\Plot Sheets\CMT Erosion Control\157_EC_POST_38_J7P3425C_i50.dgn 9:54:54 AM 7/31/2024

REV.

TEMPORARY EROSION CONTROL LEGEND

- SEDIMENT TRAP
- ROCK DITCH CHECK
- SEEDING
- SILT FENCE
- SLOPE LIMITS

DISCLAIMER
THE PROFESSIONAL WHOSE SIGNATURE AND PERSONAL SEAL APPEAR HEREON ASSUMES RESPONSIBILITY ONLY FOR WHAT APPEARS ON THIS PAGE, AND DISCLAIMS (PURSUANT TO SECTION 327.411 RSMO) SPECIFICATION, ESTIMATES, REPORTS, OR OTHER DOCUMENTS OR INSTRUMENTS NOT SEALED BY THE UNDERSIGNED PROFESSIONAL RELATING TO OR INTENDED TO BE USED FOR ANY PART OR PARTS OF THE PROJECT TO WHICH THIS PAGE REFERS.

SCALE
0 50 100 150

NORTH OUTER ROAD MATCHLINE STA. 22+00.00
WB OFF RAMP MATCHLINE STA. 4+00.00
EB US60 MATCHLINE STA. 25+00.00
EB RAMP MATCHLINE STA. 3+00.00
NORTH OUTER ROAD MATCHLINE STA. 34+00.00
EB US60 MATCHLINE STA. 37+00.00

T.C.E
PROP. R/W
℄ NORTH OUTER ROAD
℄ EB US 60
S 80° 26' 05" E

PAUL JOSEPH KRONLAGE NUMBER EN 023328
REGISTERED PROFESSIONAL ENGINEER
STATE OF MISSOURI
07/31/2024 12:26:31 PM
Paul J. Kronlage - Civil
MO PE - 023328

DATE PREPARED	7/31/2024
ROUTE	STATE
60	MO
DISTRICT	SHEET NO.
SW	158
COUNTY	WEBSTER
JOB NO.	J7P3425C
CONTRACT ID.	
PROJECT NO.	
BRIDGE NO.	

IF A SEAL IS PRESENT ON THIS SHEET IT HAS BEEN ELECTRONICALLY SEALED AND DATED.

DESCRIPTION | DATE | REV.

MISSOURI HIGHWAYS AND TRANSPORTATION COMMISSION
105 WEST CAPITOL
JEFFERSON CITY, MO 65102
1-888-ASK-MODOT (1-888-275-6636)

EFK•Moen
Civil Engineering Design
13523 Barrett Parkway Dr Phone 314-394-3100
Suite 250 Fax 314-394-3199
St. Louis, MO 63021
Missouri Certificate of Authority: 001578

US60
EROSION CONTROL
POST-CONSTRUCTION
39 OF 60

Z:\21047 CMT Route 60 at Route A\DGN\Design\Final\Plot Sheets\CMT Erosion Control\158_EC_POST_39_J7P3425C_150.dgn 9:54:56 AM 7/31/2024

TEMPORARY EROSION CONTROL LEGEND

- SEDIMENT TRAP
- ROCK DITCH CHECK
- SEEDING
- SILT FENCE
- SLOPE LIMITS

NOTES:
12 ROCK DITCH CHECK

SCALE
0 50 100 150

DISCLAIMER
THE PROFESSIONAL WHOSE SIGNATURE AND PERSONAL SEAL APPEAR HEREON ASSUMES RESPONSIBILITY ONLY FOR WHAT APPEARS ON THIS PAGE, AND DISCLAIMS (PURSUANT TO SECTION 327.411 RSMO) SPECIFICATION, ESTIMATES, REPORTS, OR OTHER DOCUMENTS OR INSTRUMENTS NOT SEALED BY THE UNDERSIGNED PROFESSIONAL RELATING TO OR INTENDED TO BE USED FOR ANY PART OR PARTS OF THE PROJECT TO WHICH THIS PAGE REFERS.

NORTH OUTER ROAD
MATCHLINE STA. 34+00.00

EB US60
MATCHLINE STA. 37+00.00

NORTH OUTER ROAD
MATCHLINE STA. 47+50.00

EB US60
MATCHLINE STA. 693+00.00

T.C.E

℄ NORTH OUTER ROAD

S 72° 15' 12" E

685

690

35

40

45

STATE OF MISSOURI
PAUL JOSEPH KRONLAGE NUMBER EN 023328
REGISTERED PROFESSIONAL ENGINEER

07/31/2024 12:27:08 PM
Paul J. Kronlage - Civil
MO PE - 023328

DATE PREPARED
7/31/2024

ROUTE	STATE
60	MO
DISTRICT	SHEET NO.
SW	159

COUNTY
WEBSTER

JOB NO.
J7P3425C

CONTRACT ID.

PROJECT NO.

BRIDGE NO.

REV.	DESCRIPTION	DATE

IF A SEAL IS PRESENT ON THIS SHEET IT HAS BEEN ELECTRONICALLY SEALED AND DATED.

MISSOURI HIGHWAYS AND TRANSPORTATION COMMISSION

105 WEST CAPITOL
JEFFERSON CITY, MO 65102
1-888-ASK-MODOT (1-888-275-6636)

EFK•Moen
Civil Engineering Design
13523 Barrett Parkway Dr
Suite 250
St. Louis, MO 63021
Phone 314-394-3100
Fax 314-394-3199
Missouri Certificate of Authority: 001578

US60

EROSION CONTROL
POST-CONSTRUCTION
40 OF 60

Z:\21047 CMT Route 60 at Route A\DGN\Design\Final\Plot Sheets\CMT Erosion Control\159_EC_POST_40_J7P3425C_i50.dgn 9:54:57 AM 7/31/2024

TEMPORARY EROSION CONTROL LEGEND

- SEDIMENT TRAP
- ROCK DITCH CHECK
- SEEDING
- SILT FENCE
- SLOPE LIMITS

DISCLAIMER
THE PROFESSIONAL WHOSE SIGNATURE AND PERSONAL SEAL APPEAR HEREON ASSUMES RESPONSIBILITY ONLY FOR WHAT APPEARS ON THIS PAGE, AND DISCLAIMS (PURSUANT TO SECTION 327.411 RSMO) SPECIFICATION, ESTIMATES, REPORTS, OR OTHER DOCUMENTS OR INSTRUMENTS NOT SEALED BY THE UNDERSIGNED PROFESSIONAL RELATING TO OR INTENDED TO BE USED FOR ANY PART OR PARTS OF THE PROJECT TO WHICH THIS PAGE REFERS.

STATE OF MISSOURI
PAUL JOSEPH KRONLAGE NUMBER EN 023328
REGISTERED PROFESSIONAL ENGINEER

Paul J. Kronlage

07/31/2024 12:27:47 PM
Paul J. Kronlage - Civil
MO PE - 023328

DATE PREPARED	
7/31/2024	
ROUTE	STATE
60	MO
DISTRICT	SHEET NO.
SW	160

COUNTY
WEBSTER

JOB NO.
J7P3425C

CONTRACT ID.

PROJECT NO.

BRIDGE NO.

DESCRIPTION	DATE

IF A SEAL IS PRESENT ON THIS SHEET IT HAS BEEN ELECTRONICALLY SEALED AND DATED.

MISSOURI HIGHWAYS AND TRANSPORTATION COMMISSION

MoDOT

105 WEST CAPITOL
JEFFERSON CITY, MO 65102
1-888-ASK-MODOT (1-888-275-6636)

EFK·Moen
Civil Engineering Design
13523 Barrett Parkway Dr
Suite 250
St. Louis, MO 63021
Phone 314-394-3100
Fax 314-394-3199
Missouri Certificate of Authority: 001578

DIGGINS NORTH O.R.

EROSION CONTROL
POST-CONSTRUCTION
41 OF 60

REV.

Z:\21047 CMT Route 60 at Route A\DGN\Design\Final\Plot Sheets\CMT Erosion Control\160_EC_POST_41_J7P3425C_150.dgn 9:55:29 AM 7/31/2024

TEMPORARY EROSION CONTROL LEGEND

- SEDIMENT TRAP
- ROCK DITCH CHECK
- SEEDING
- SILT FENCE
- SLOPE LIMITS

SCALE
0 50 100 150

NORTH OUTER ROAD
MATCHLINE STA. 54+50.00

55 60 65 70 71

T.C.E
PROP. R/W
PERM. ESM'T
℄ NORTH OUTER ROAD
PROP. R/W
T.C.E
T.C.E
PROP. R/W

DISCLAIMER
THE PROFESSIONAL WHOSE SIGNATURE AND PERSONAL SEAL APPEAR HEREON ASSUMES RESPONSIBILITY ONLY FOR WHAT APPEARS ON THIS PAGE, AND DISCLAIMS (PURSUANT TO SECTION 327.411 RSMO) SPECIFICATION, ESTIMATES, REPORTS, OR OTHER DOCUMENTS OR INSTRUMENTS NOT SEALED BY THE UNDERSIGNED PROFESSIONAL RELATING TO OR INTENDED TO BE USED FOR ANY PART OR PARTS OF THE PROJECT TO WHICH THIS PAGE REFERS.

STATE OF MISSOURI
PAUL JOSEPH KRONLAGE
NUMBER EN 023328
REGISTERED PROFESSIONAL ENGINEER

Paul J. Kronlage
07/31/2024 12:28:11 PM
Paul J. Kronlage - Civil
MO PE - 023328

DATE PREPARED
7/31/2024

ROUTE	STATE
60	MO
DISTRICT	SHEET NO.
SW	161

COUNTY
WEBSTER
JOB NO.
J7P3425C
CONTRACT ID.
PROJECT NO.
BRIDGE NO.

IF A SEAL IS PRESENT ON THIS SHEET IT HAS BEEN ELECTRONICALLY SEALED AND DATED.

DATE	DESCRIPTION	REV.

MISSOURI HIGHWAYS AND TRANSPORTATION COMMISSION
105 WEST CAPITOL
JEFFERSON CITY, MO 65102
1-888-ASK-MODOT (1-888-275-6636)

EFK•Moen
Civil Engineering Design
13523 Barrett Parkway Dr
Suite 250
St. Louis, MO 63021
Phone 314-394-3100
Fax 314-394-3199
Missouri Certificate of Authority: 001578

DIGGINS NORTH O.R.
EROSION CONTROL
POST-CONSTRUCTION
42 OF 60

TEMPORARY EROSION CONTROL LEGEND

- SEDIMENT TRAP
- ROCK DITCH CHECK
- SEEDING
- SILT FENCE
- SLOPE LIMITS

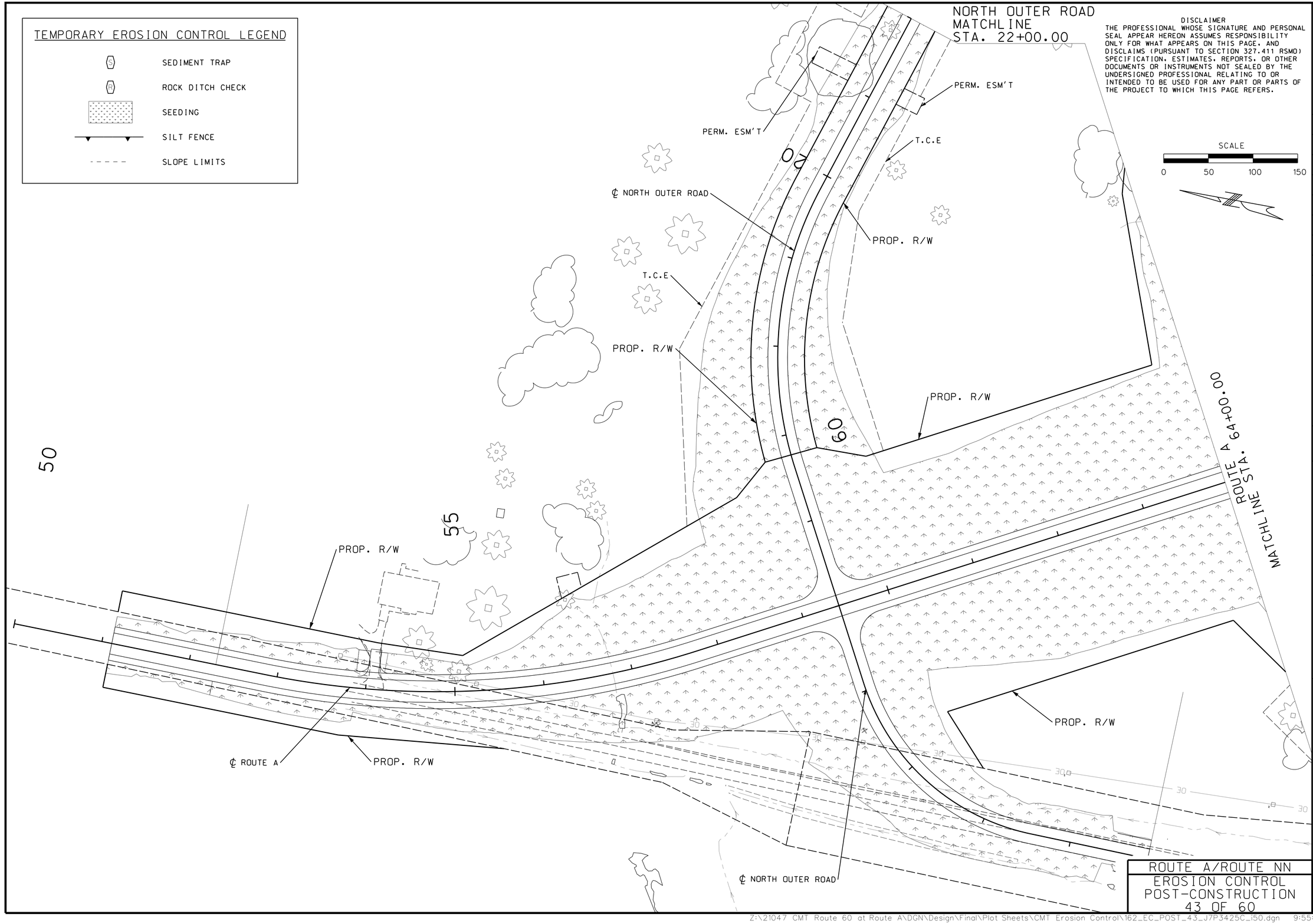

DISCLAIMER
THE PROFESSIONAL WHOSE SIGNATURE AND PERSONAL SEAL APPEAR HEREON ASSUMES RESPONSIBILITY ONLY FOR WHAT APPEARS ON THIS PAGE, AND DISCLAIMS (PURSUANT TO SECTION 327.411 RSMO) SPECIFICATION, ESTIMATES, REPORTS, OR OTHER DOCUMENTS OR INSTRUMENTS NOT SEALED BY THE UNDERSIGNED PROFESSIONAL RELATING TO OR INTENDED TO BE USED FOR ANY PART OR PARTS OF THE PROJECT TO WHICH THIS PAGE REFERS.

STATE OF MISSOURI
PAUL JOSEPH KRONLAGE
NUMBER EN 023328
REGISTERED PROFESSIONAL ENGINEER

07/31/2024 12:28:35 PM
Paul J. Kronlage - Civil
MO PE - 023328

DATE PREPARED: 7/31/2024
ROUTE: 60
STATE: MO
DISTRICT: SW
SHEET NO.: 162
COUNTY: WEBSTER
JOB NO.: J7P3425C
CONTRACT ID.:
PROJECT NO.:
BRIDGE NO.:

REV.	DESCRIPTION	DATE

IF A SEAL IS PRESENT ON THIS SHEET IT HAS BEEN ELECTRONICALLY SEALED AND DATED.

MISSOURI HIGHWAYS AND TRANSPORTATION COMMISSION
105 WEST CAPITOL
JEFFERSON CITY, MO 65102
1-888-ASK-MODOT (1-888-275-6636)

EFK•Moen
Civil Engineering Design
13523 Barrett Parkway Dr
Suite 250
St. Louis, MO 63021
Phone 314-394-3100
Fax 314-394-3199
Missouri Certificate of Authority: 001578

ROUTE A/ROUTE NN
EROSION CONTROL
POST-CONSTRUCTION
43 OF 60

DISCLAIMER
THE PROFESSIONAL WHOSE SIGNATURE AND PERSONAL SEAL APPEAR HEREON ASSUMES RESPONSIBILITY ONLY FOR WHAT APPEARS ON THIS PAGE, AND DISCLAIMS (PURSUANT TO SECTION 327.411 RSMO) SPECIFICATION, ESTIMATES, REPORTS, OR OTHER DOCUMENTS OR INSTRUMENTS NOT SEALED BY THE UNDERSIGNED PROFESSIONAL RELATING TO OR INTENDED TO BE USED FOR ANY PART OR PARTS OF THE PROJECT TO WHICH THIS PAGE REFERS.

SCALE
0 50 100 150

TEMPORARY EROSION CONTROL LEGEND

- (S) SEDIMENT TRAP
- (R) ROCK DITCH CHECK
- SEEDING
- SILT FENCE
- SLOPE LIMITS

PAUL JOSEPH KRONLAGE NUMBER EN 023328 — STATE OF MISSOURI — REGISTERED PROFESSIONAL ENGINEER

07/31/2024 12:28:56 PM
Paul J. Kronlage - Civil
MO PE - 023328

DATE PREPARED	
7/31/2024	
ROUTE	STATE
60	MO
DISTRICT	SHEET NO.
SW	163

COUNTY: WEBSTER
JOB NO.: J7P3425C
CONTRACT ID.:
PROJECT NO.:
BRIDGE NO.:

IF A SEAL IS PRESENT ON THIS SHEET IT HAS BEEN ELECTRONICALLY SEALED AND DATED.

DATE	DESCRIPTION

MISSOURI HIGHWAYS AND TRANSPORTATION COMMISSION
105 WEST CAPITOL
JEFFERSON CITY, MO 65102
1-888-ASK-MODOT (1-888-275-6636)

EFK•Moen
Civil Engineering Design
13523 Barrett Parkway Dr
Suite 250
St. Louis, MO 63021
Phone 314-394-3100
Fax 314-394-3199
Missouri Certificate of Authority: 001578

ROUTE A/ROUTE NN
EROSION CONTROL
POST-CONSTRUCTION
44 OF 60

REV.

DISCLAIMER
THE PROFESSIONAL WHOSE SIGNATURE AND PERSONAL SEAL APPEAR HEREON ASSUMES RESPONSIBILITY ONLY FOR WHAT APPEARS ON THIS PAGE, AND DISCLAIMS (PURSUANT TO SECTION 327.411 RSMO) SPECIFICATION, ESTIMATES, REPORTS, OR OTHER DOCUMENTS OR INSTRUMENTS NOT SEALED BY THE UNDERSIGNED PROFESSIONAL RELATING TO OR INTENDED TO BE USED FOR ANY PART OR PARTS OF THE PROJECT TO WHICH THIS PAGE REFERS.

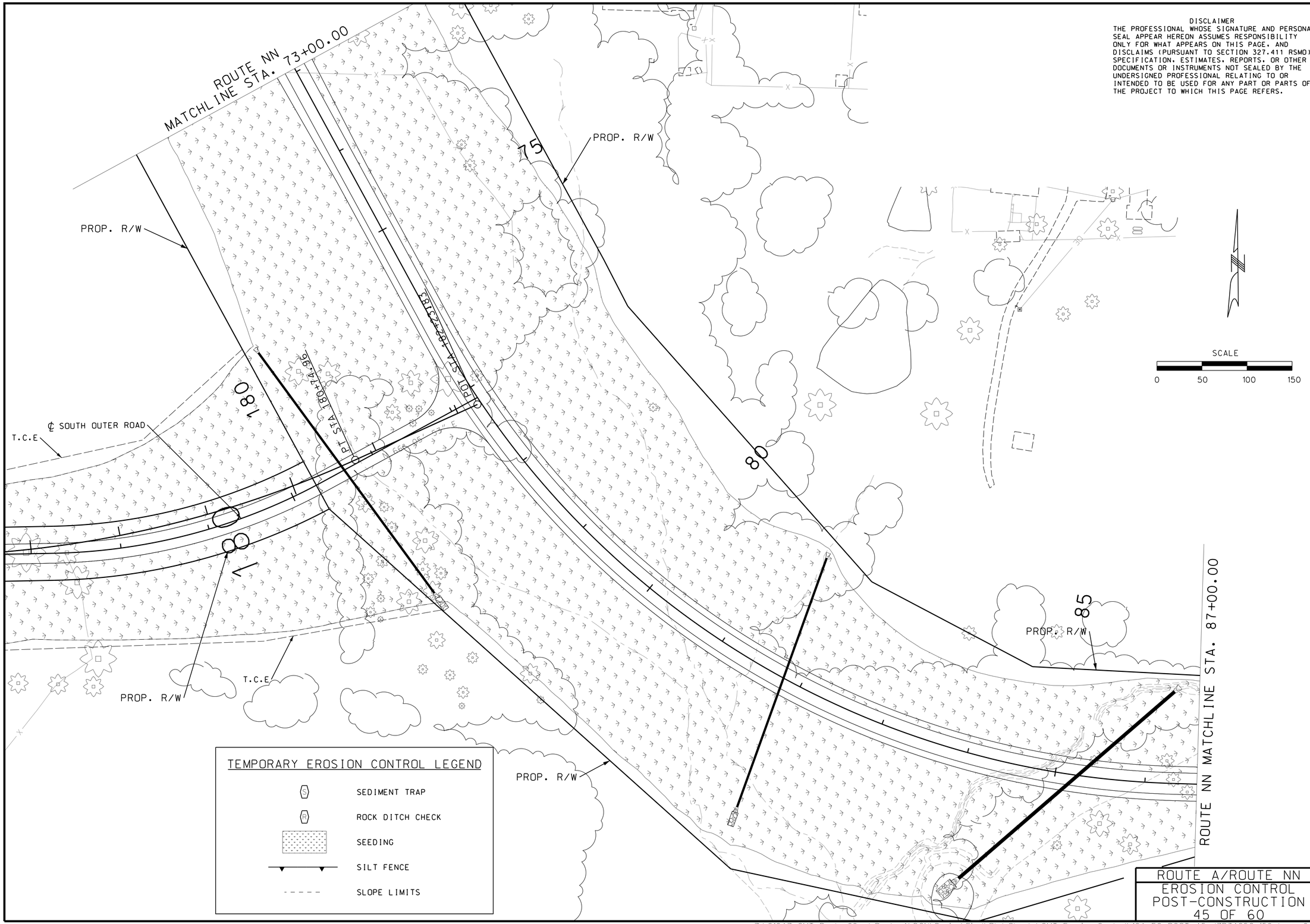

STATE OF MISSOURI
PAUL JOSEPH KRONLAGE NUMBER EN 023328
REGISTERED PROFESSIONAL ENGINEER

07/31/2024 12:29:21 PM
Paul J. Kronlage - Civil
MO PE - 023328

DATE PREPARED	7/31/2024
ROUTE	STATE
60	MO
DISTRICT	SHEET NO.
SW	164
COUNTY	WEBSTER
JOB NO.	J7P3425C
CONTRACT ID.	
PROJECT NO.	
BRIDGE NO.	

IF A SEAL IS PRESENT ON THIS SHEET IT HAS BEEN ELECTRONICALLY SEALED AND DATED.

DATE	DESCRIPTION

MISSOURI HIGHWAYS AND TRANSPORTATION COMMISSION
105 WEST CAPITOL
JEFFERSON CITY, MO 65102
1-888-ASK-MODOT (1-888-275-6636)

EFK•Moen
Civil Engineering Design
13523 Barrett Parkway Dr
Suite 250
St. Louis, MO 63021
Phone 314-394-3100
Fax 314-394-3199
Missouri Certificate of Authority: 001578

ROUTE A/ROUTE NN
EROSION CONTROL
POST-CONSTRUCTION
45 OF 60

DISCLAIMER
THE PROFESSIONAL WHOSE SIGNATURE AND PERSONAL SEAL APPEAR HEREON ASSUMES RESPONSIBILITY ONLY FOR WHAT APPEARS ON THIS PAGE, AND DISCLAIMS (PURSUANT TO SECTION 327.411 RSMO) SPECIFICATION, ESTIMATES, REPORTS, OR OTHER DOCUMENTS OR INSTRUMENTS NOT SEALED BY THE UNDERSIGNED PROFESSIONAL RELATING TO OR INTENDED TO BE USED FOR ANY PART OR PARTS OF THE PROJECT TO WHICH THIS PAGE REFERS.

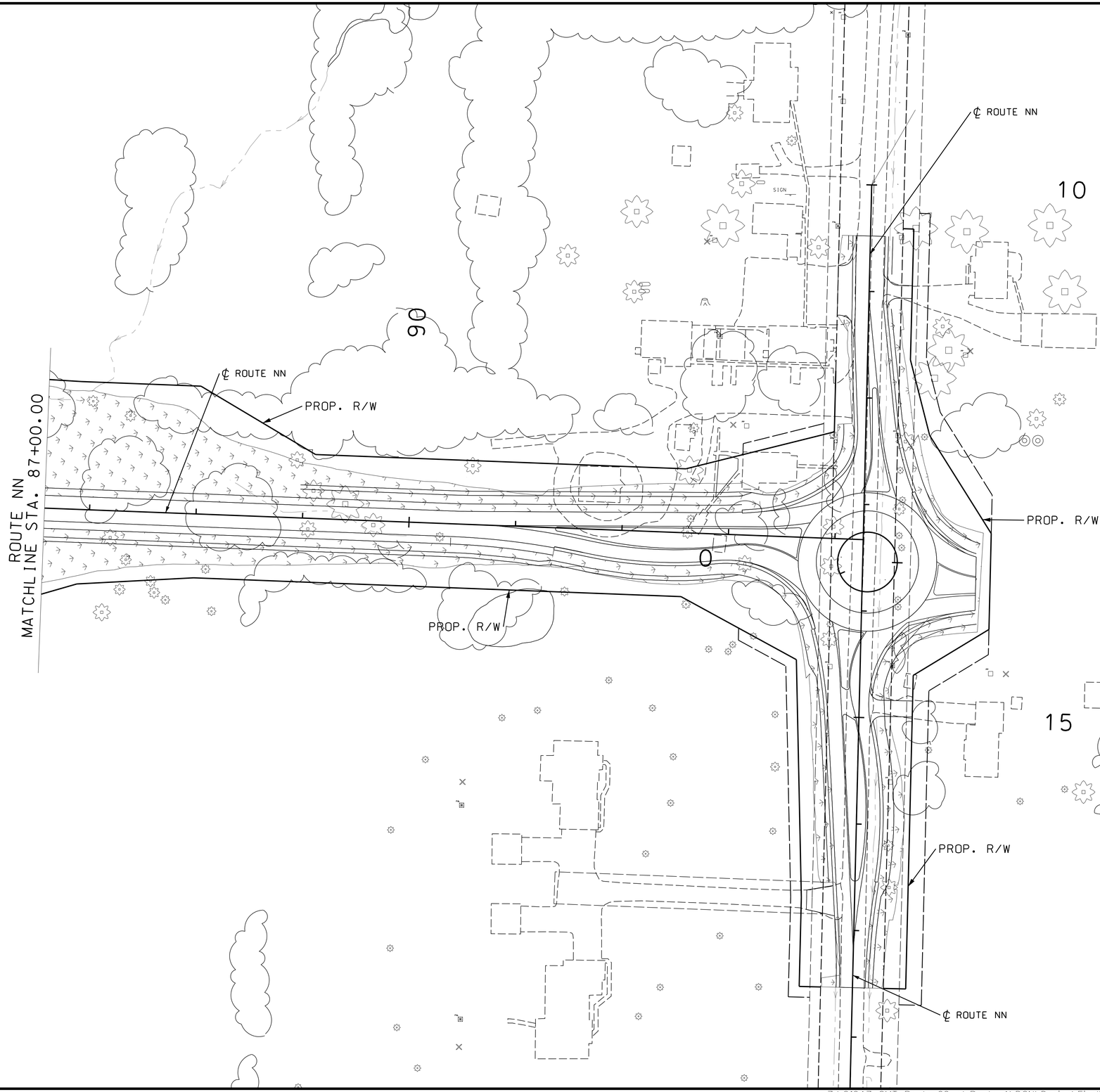

SCALE
0 50 100 150

TEMPORARY EROSION CONTROL LEGEND

- SEDIMENT TRAP
- ROCK DITCH CHECK
- SEEDING/SODDING
- SILT FENCE
- SLOPE LIMITS

ROUTE A/ROUTE NN
EROSION CONTROL
POST-CONSTRUCTION
46 OF 60

STATE OF MISSOURI
PAUL JOSEPH KRONLAGE
NUMBER EN 023328
REGISTERED PROFESSIONAL ENGINEER
07/31/2024 12:29:45 PM
Paul J. Kronlage - Civil
MO PE - 023328

DATE PREPARED 7/31/2024
ROUTE 60 | STATE MO
DISTRICT SW | SHEET NO. 165
COUNTY WEBSTER
JOB NO. J7P3425C
CONTRACT ID.
PROJECT NO.
BRIDGE NO.

DESCRIPTION | DATE | REV.

IF A SEAL IS PRESENT ON THIS SHEET IT HAS BEEN ELECTRONICALLY SEALED AND DATED.

MISSOURI HIGHWAYS AND TRANSPORTATION COMMISSION
105 WEST CAPITOL
JEFFERSON CITY, MO 65102
1-888-ASK-MODOT (1-888-275-6636)

EFK•Moen
Civil Engineering Design
13523 Barrett Parkway Dr
Suite 250
St. Louis, MO 63021
Phone 314-394-3100
Fax 314-394-3199
Missouri Certificate of Authority: 001578

Z:\21047 CMT Route 60 at Route A\DGN\Design\Final\Plot Sheets\CMT Erosion Control\165_EC_POST_46_J7P3425C_150.dgn 9:55:38 AM 7/31/2024

DISCLAIMER
THE PROFESSIONAL WHOSE SIGNATURE AND PERSONAL SEAL APPEAR HEREON ASSUMES RESPONSIBILITY ONLY FOR WHAT APPEARS ON THIS PAGE, AND DISCLAIMS (PURSUANT TO SECTION 327.411 RSMO) SPECIFICATION, ESTIMATES, REPORTS, OR OTHER DOCUMENTS OR INSTRUMENTS NOT SEALED BY THE UNDERSIGNED PROFESSIONAL RELATING TO OR INTENDED TO BE USED FOR ANY PART OR PARTS OF THE PROJECT TO WHICH THIS PAGE REFERS.

SCALE
0 50 100 150

PROP. R/W
T.C.E
℄ SOUTH OUTER ROAD
POT STA 0+00.00
PROP. R/W
T.C.E
PROP. R/W
T.C.E
PC STA 6+09.45
PERM. ESM'T
T.C.E
T.C.E
SOUTH OUTER ROAD
MATCHLINE STA. 13+00.00
T.C.E
T.C.E
PROP. R/W
T.C.E
PERM. ESM'T

TEMPORARY EROSION CONTROL LEGEND

S	SEDIMENT TRAP
R	ROCK DITCH CHECK
	SEEDING
	SILT FENCE
	SLOPE LIMITS

SOUTH OUTER ROAD
EROSION CONTROL
POST-CONSTRUCTION
47 OF 60

STATE OF MISSOURI
PAUL JOSEPH KRONLAGE
NUMBER EN 023328
REGISTERED PROFESSIONAL ENGINEER

07/31/2024 12:30:26 PM
Paul J. Kronlage - Civil
MO PE - 023328

DATE PREPARED
7/31/2024

ROUTE	STATE
60	MO
DISTRICT	SHEET NO.
SW	166

COUNTY
WEBSTER
JOB NO.
J7P3425C
CONTRACT ID.
PROJECT NO.
BRIDGE NO.

DESCRIPTION	DATE

MISSOURI HIGHWAYS AND TRANSPORTATION COMMISSION
105 WEST CAPITOL
JEFFERSON CITY, MO 65102
1-888-ASK-MODOT (1-888-275-6636)

EFK•Moen
Civil Engineering Design
13523 Barrett Parkway Dr
Suite 250
St. Louis, MO 63021
Phone 314-394-3100
Fax 314-394-3199
Missouri Certificate of Authority: 001578

IF A SEAL IS PRESENT ON THIS SHEET IT HAS BEEN ELECTRONICALLY SEALED AND DATED.

REV.

TEMPORARY EROSION CONTROL LEGEND

- SEDIMENT TRAP
- ROCK DITCH CHECK
- SEEDING
- SILT FENCE
- SLOPE LIMITS

DISCLAIMER
THE PROFESSIONAL WHOSE SIGNATURE AND PERSONAL SEAL APPEAR HEREON ASSUMES RESPONSIBILITY ONLY FOR WHAT APPEARS ON THIS PAGE, AND DISCLAIMS (PURSUANT TO SECTION 327.411 RSMO) SPECIFICATION, ESTIMATES, REPORTS, OR OTHER DOCUMENTS OR INSTRUMENTS NOT SEALED BY THE UNDERSIGNED PROFESSIONAL RELATING TO OR INTENDED TO BE USED FOR ANY PART OR PARTS OF THE PROJECT TO WHICH THIS PAGE REFERS.

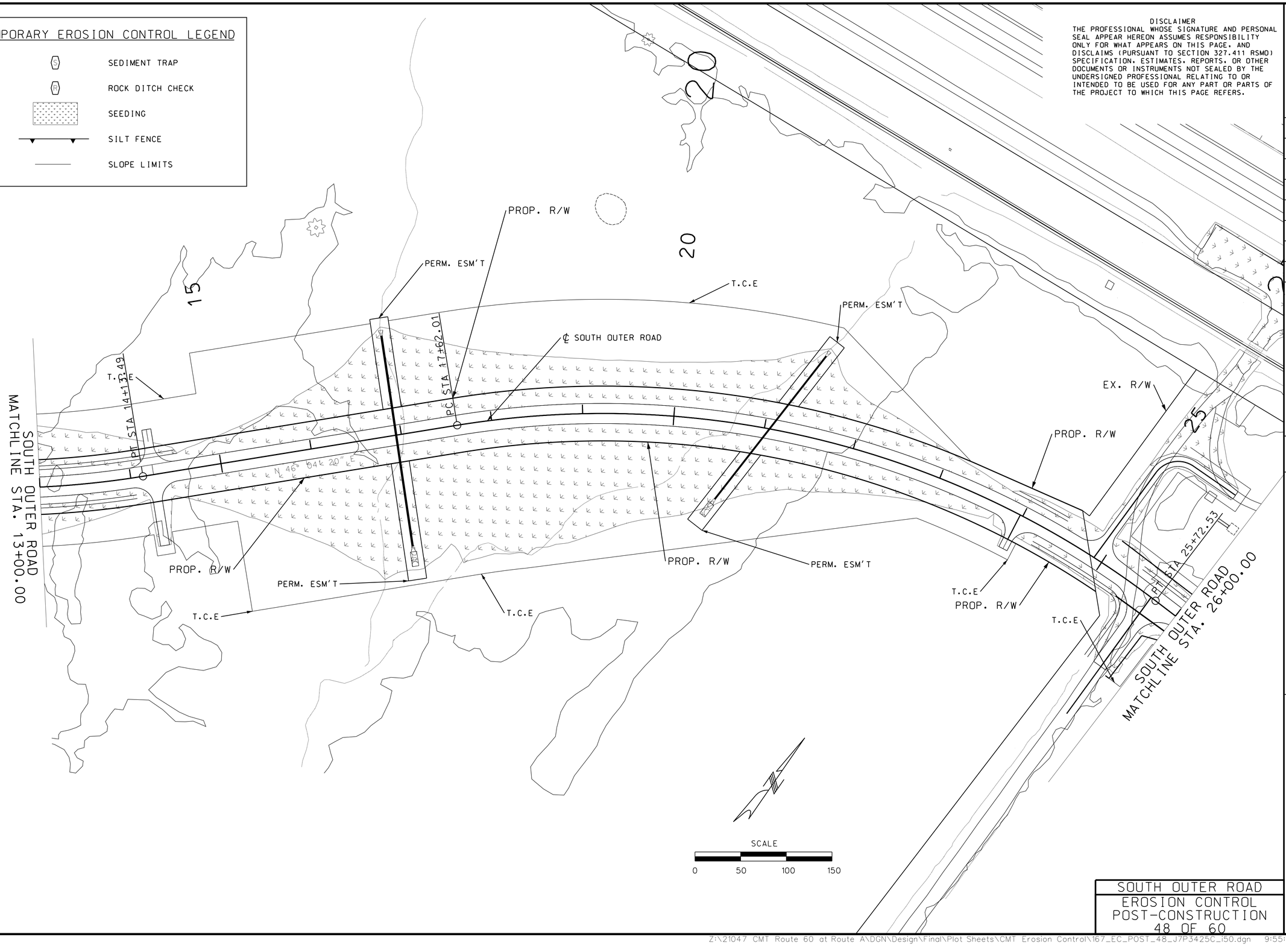

SOUTH OUTER ROAD
EROSION CONTROL
POST-CONSTRUCTION
48 OF 60

STATE OF MISSOURI
PAUL JOSEPH KRONLAGE NUMBER EN 023328
REGISTERED PROFESSIONAL ENGINEER

07/31/2024 12:30:51 PM
Paul J. Kronlage - Civil
MO PE - 023328

DATE PREPARED	
7/31/2024	
ROUTE	STATE
60	MO
DISTRICT	SHEET NO.
SW	167

COUNTY
WEBSTER

JOB NO.
J7P3425C

CONTRACT ID.

PROJECT NO.

BRIDGE NO.

IF A SEAL IS PRESENT ON THIS SHEET IT HAS BEEN ELECTRONICALLY SEALED AND DATED.

REV.	DESCRIPTION	DATE

MISSOURI HIGHWAYS AND TRANSPORTATION COMMISSION
105 WEST CAPITOL
JEFFERSON CITY, MO 65102
1-888-ASK-MODOT (1-888-275-6636)

EFK•Moen
Civil Engineering Design
13523 Barrett Parkway Dr
Suite 250
St. Louis, MO 63021
Phone 314-394-3100
Fax 314-394-3199
Missouri Certificate of Authority: 001578

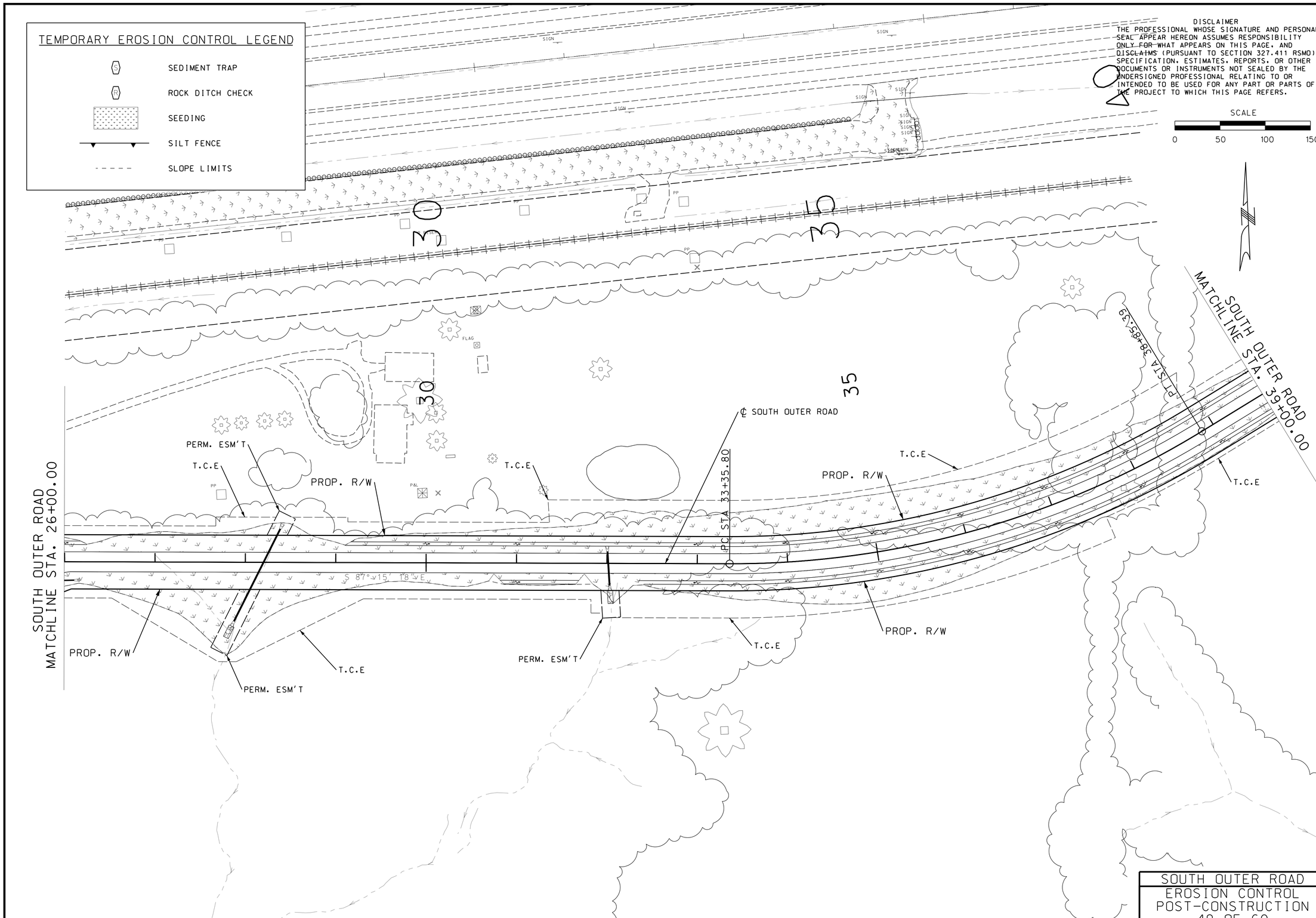

DISCLAIMER
THE PROFESSIONAL WHOSE SIGNATURE AND PERSONAL SEAL APPEAR HEREON ASSUMES RESPONSIBILITY ONLY FOR WHAT APPEARS ON THIS PAGE, AND DISCLAIMS (PURSUANT TO SECTION 327.411 RSMO) SPECIFICATION, ESTIMATES, REPORTS, OR OTHER DOCUMENTS OR INSTRUMENTS NOT SEALED BY THE UNDERSIGNED PROFESSIONAL RELATING TO OR INTENDED TO BE USED FOR ANY PART OR PARTS OF THE PROJECT TO WHICH THIS PAGE REFERS.

STATE OF MISSOURI
PAUL JOSEPH KRONLAGE
NUMBER EN 023328
REGISTERED PROFESSIONAL ENGINEER

07/31/2024 12:31:26 PM
Paul J. Kronlage - Civil
MO PE - 023328

DATE PREPARED	
7/31/2024	
ROUTE 60	STATE MO
DISTRICT SW	SHEET NO. 168
COUNTY WEBSTER	
JOB NO. J7P3425C	
CONTRACT ID.	
PROJECT NO.	
BRIDGE NO.	

DATE	DESCRIPTION

MISSOURI HIGHWAYS AND TRANSPORTATION COMMISSION
MoDOT
105 WEST CAPITOL
JEFFERSON CITY, MO 65102
1-888-ASK-MODOT (1-888-275-6636)

EFK•Moen
Civil Engineering Design
13523 Barrett Parkway Dr
Suite 250
St. Louis, MO 63021
Phone 314-394-3100
Fax 314-394-3199
Missouri Certificate of Authority: 001578

IF A SEAL IS PRESENT ON THIS SHEET IT HAS BEEN ELECTRONICALLY SEALED AND DATED.

SOUTH OUTER ROAD
EROSION CONTROL
POST-CONSTRUCTION
49 OF 60

REV.

Z:\21047 CMT Route 60 at Route A\DGN\Design\Final\Plot Sheets\CMT Erosion Control\168_EC_POST_49_J7P3425C_i50.dgn 9:56:03 AM 7/31/2024

TEMPORARY EROSION CONTROL LEGEND

- (S) SEDIMENT TRAP
- (R) ROCK DITCH CHECK
- SEEDING
- SILT FENCE
- SLOPE LIMITS

DISCLAIMER
THE PROFESSIONAL WHOSE SIGNATURE AND PERSONAL SEAL APPEAR HEREON ASSUMES RESPONSIBILITY ONLY FOR WHAT APPEARS ON THIS PAGE, AND DISCLAIMS (PURSUANT TO SECTION 327.411 RSMO) SPECIFICATION, ESTIMATES, REPORTS, OR OTHER DOCUMENTS OR INSTRUMENTS NOT SEALED BY THE UNDERSIGNED PROFESSIONAL RELATING TO OR INTENDED TO BE USED FOR ANY PART OR PARTS OF THE PROJECT TO WHICH THIS PAGE REFERS.

℄ SOUTH OUTER ROAD

PT STA 45+48.02

PERM. ESM'T

T.C.E

PROP. R/W

PC STA 41+10.12

SOUTH OUTER ROAD STA. 36+00.00
MATCHLINE

SOUTH OUTER ROAD STA. 52+00.00
MATCHLINE

N 88° 18' 47" E

SCALE
0 50 100 150

SOUTH OUTER ROAD
EROSION CONTROL
POST-CONSTRUCTION
50 OF 60

STATE OF MISSOURI
PAUL JOSEPH KRONLAGE
NUMBER EN 023328
REGISTERED PROFESSIONAL ENGINEER

07/31/2024 12:32:03 PM
Paul J. Kronlage - Civil
MO PE - 023328

DATE PREPARED
7/31/2024

ROUTE	STATE
60	MO
DISTRICT	SHEET NO.
SW	169

COUNTY
WEBSTER

JOB NO.
J7P3425C

CONTRACT ID.

PROJECT NO.

BRIDGE NO.

IF A SEAL IS PRESENT ON THIS SHEET IT HAS BEEN ELECTRONICALLY SEALED AND DATED.

REV.	DESCRIPTION	DATE

MISSOURI HIGHWAYS AND TRANSPORTATION COMMISSION
105 WEST CAPITOL
JEFFERSON CITY, MO 65102
1-888-ASK-MODOT (1-888-275-6636)

EFK•Moen
Civil Engineering Design
13523 Barrett Parkway Dr
Suite 250
St. Louis, MO 63021
Phone 314-394-3100
Fax 314-394-3199
Missouri Certificate of Authority: 001578

TEMPORARY EROSION CONTROL LEGEND

- SEDIMENT TRAP
- ROCK DITCH CHECK
- SEEDING
- SILT FENCE
- SLOPE LIMITS

DISCLAIMER
THE PROFESSIONAL WHOSE SIGNATURE AND PERSONAL SEAL APPEAR HEREON ASSUMES RESPONSIBILITY ONLY FOR WHAT APPEARS ON THIS PAGE, AND DISCLAIMS (PURSUANT TO SECTION 327.411 RSMO) SPECIFICATION, ESTIMATES, REPORTS, OR OTHER DOCUMENTS OR INSTRUMENTS NOT SEALED BY THE UNDERSIGNED PROFESSIONAL RELATING TO OR INTENDED TO BE USED FOR ANY PART OR PARTS OF THE PROJECT TO WHICH THIS PAGE REFERS.

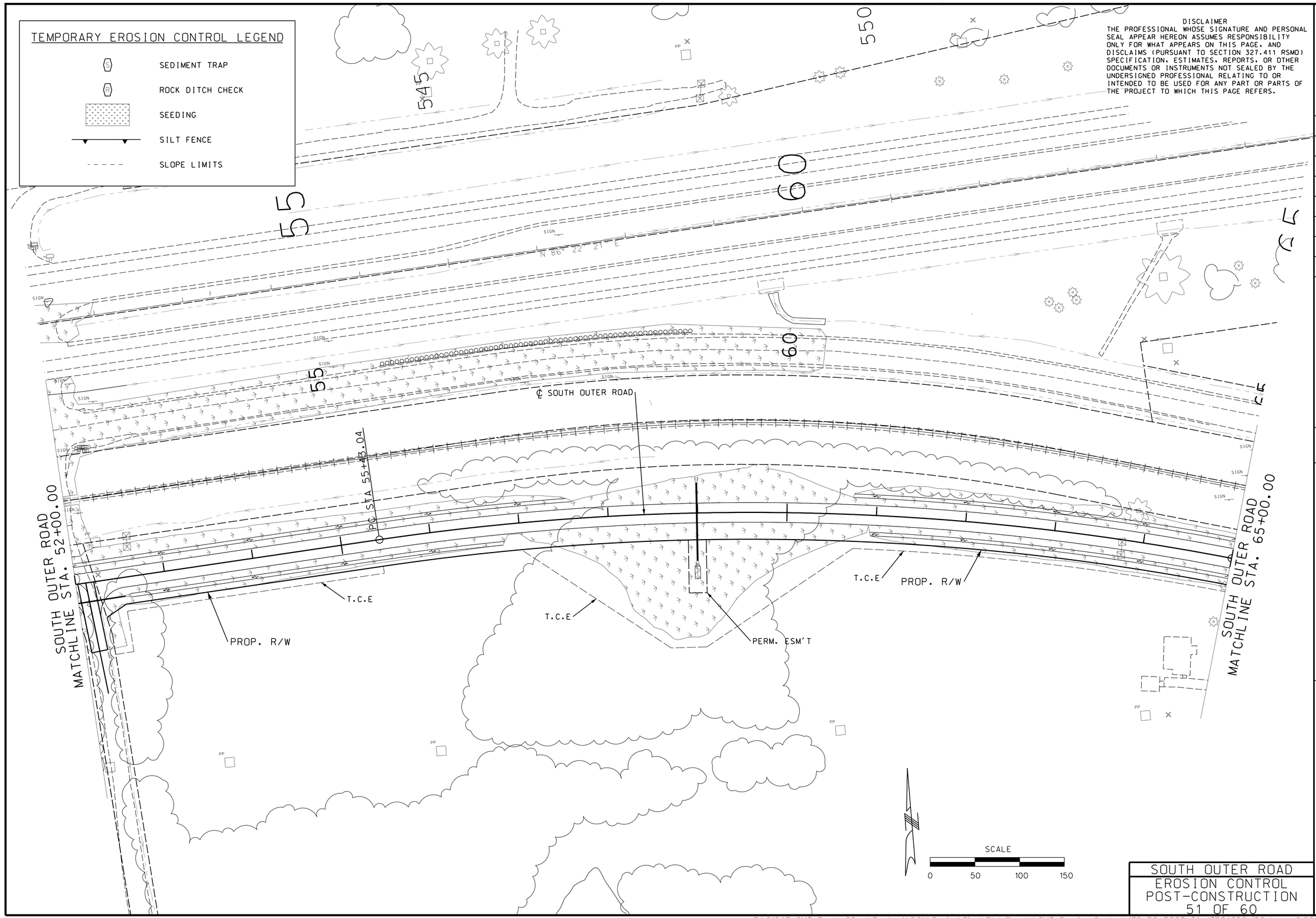

SOUTH OUTER ROAD
EROSION CONTROL
POST-CONSTRUCTION
51 OF 60

PAUL JOSEPH KRONLAGE NUMBER EN 023328 — STATE OF MISSOURI — REGISTERED PROFESSIONAL ENGINEER

07/31/2024 12:32:26 PM
Paul J. Kronlage - Civil
MO PE - 023328

DATE PREPARED	
7/31/2024	
ROUTE	STATE
60	MO
DISTRICT	SHEET NO.
SW	170

COUNTY: WEBSTER
JOB NO.: J7P3425C
CONTRACT ID.:
PROJECT NO.:
BRIDGE NO.:

DESCRIPTION	DATE

IF A SEAL IS PRESENT ON THIS SHEET IT HAS BEEN ELECTRONICALLY SEALED AND DATED.

MISSOURI HIGHWAYS AND TRANSPORTATION COMMISSION
105 WEST CAPITOL
JEFFERSON CITY, MO 65102
1-888-ASK-MODOT (1-888-275-6636)

EFK•Moen
Civil Engineering Design
13523 Barrett Parkway Dr
Suite 250
St. Louis, MO 63021
Phone 314-394-3100
Fax 314-394-3199
Missouri Certificate of Authority: 001578

REV.

Z:\21047 CMT Route 60 at Route A\DGN\Design\Final\Plot Sheets\CMT Erosion Control\170_EC_POST_51_J7P3425C_i50.dgn 9:56:06 AM 7/31/2024

DISCLAIMER
THE PROFESSIONAL WHOSE SIGNATURE AND PERSONAL SEAL APPEAR HEREON ASSUMES RESPONSIBILITY ONLY FOR WHAT APPEARS ON THIS PAGE, AND DISCLAIMS (PURSUANT TO SECTION 327.411 RSMO) SPECIFICATION, ESTIMATES, REPORTS, OR OTHER DOCUMENTS OR INSTRUMENTS NOT SEALED BY THE UNDERSIGNED PROFESSIONAL RELATING TO OR INTENDED TO BE USED FOR ANY PART OR PARTS OF THE PROJECT TO WHICH THIS PAGE REFERS.

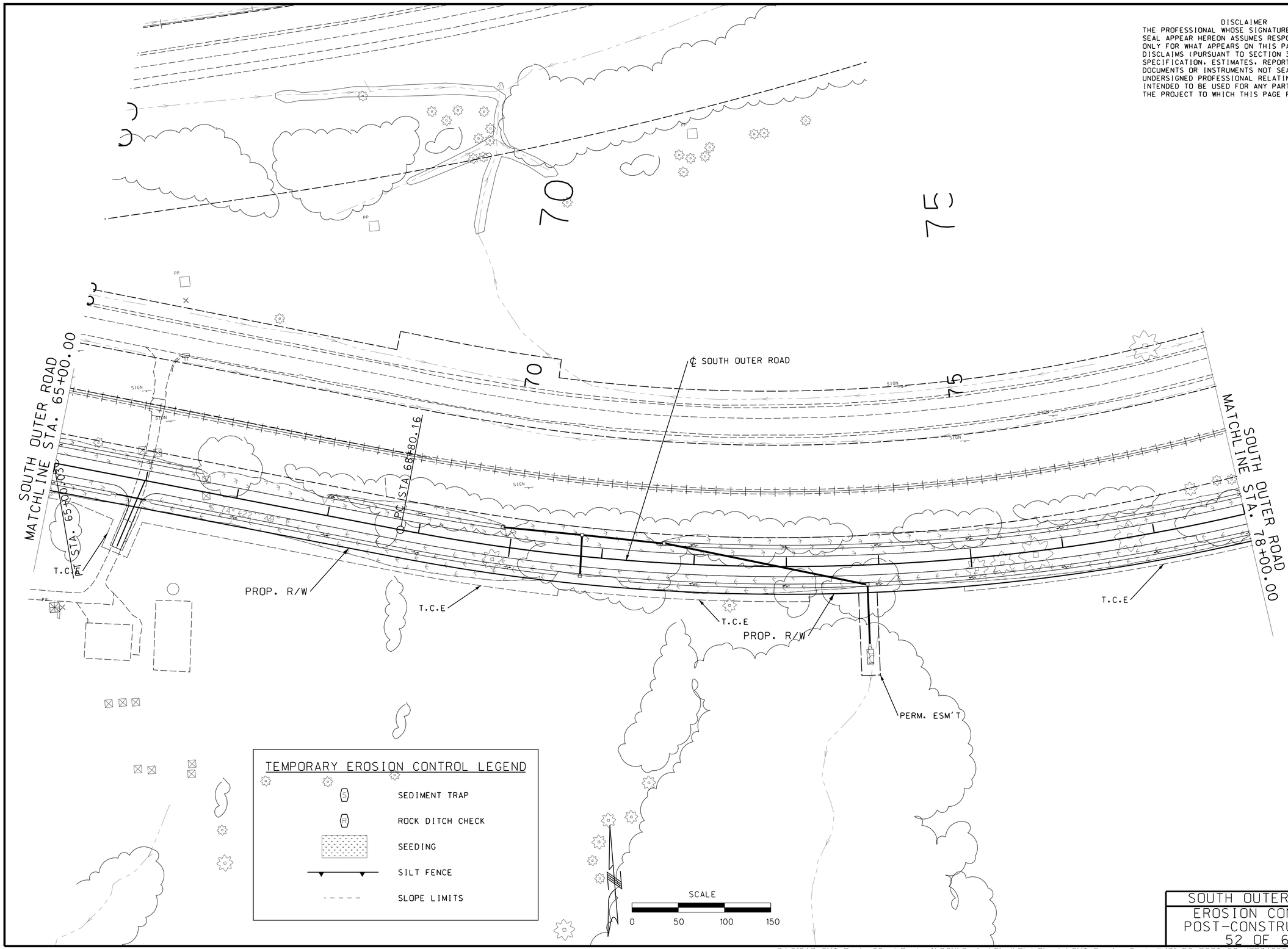

SOUTH OUTER ROAD
EROSION CONTROL
POST-CONSTRUCTION
52 OF 60

EFK·Moen
Civil Engineering Design
13523 Barrett Parkway Dr
Suite 250
St. Louis, MO 63021
Phone 314-394-3100
Fax 314-394-3199
Missouri Certificate of Authority: 001578

MISSOURI HIGHWAYS AND TRANSPORTATION COMMISSION
105 WEST CAPITOL
JEFFERSON CITY, MO 65102
1-888-ASK-MODOT (1-888-275-6636)

STATE OF MISSOURI
PAUL JOSEPH KRONLAGE
NUMBER EN 023328
REGISTERED PROFESSIONAL ENGINEER

07/31/2024 12:39:25 PM
Paul J. Kronlage - Civil
MO PE - 023328

DATE PREPARED	
7/31/2024	
ROUTE	STATE
60	MO
DISTRICT	SHEET NO.
SW	171
COUNTY	
WEBSTER	
JOB NO.	
J7P3425C	
CONTRACT ID.	
PROJECT NO.	
BRIDGE NO.	

DESCRIPTION	DATE

IF A SEAL IS PRESENT ON THIS SHEET IT HAS BEEN ELECTRONICALLY SEALED AND DATED.

REV.

Z:\21047 CMT Route 60 at Route A\DGN\Design\Final\Plot Sheets\CMT Erosion Control\171_EC_POST_52_J7P3425C_150.dgn 9:56:07 AM 7/31/2024

TEMPORARY EROSION CONTROL LEGEND

- SEDIMENT TRAP
- ROCK DITCH CHECK
- SEEDING
- SILT FENCE
- SLOPE LIMITS

DISCLAIMER
THE PROFESSIONAL WHOSE SIGNATURE AND PERSONAL SEAL APPEAR HEREON ASSUMES RESPONSIBILITY ONLY FOR WHAT APPEARS ON THIS PAGE, AND DISCLAIMS (PURSUANT TO SECTION 327.411 RSMO) SPECIFICATION, ESTIMATES, REPORTS, OR OTHER DOCUMENTS OR INSTRUMENTS NOT SEALED BY THE UNDERSIGNED PROFESSIONAL RELATING TO OR INTENDED TO BE USED FOR ANY PART OR PARTS OF THE PROJECT TO WHICH THIS PAGE REFERS.

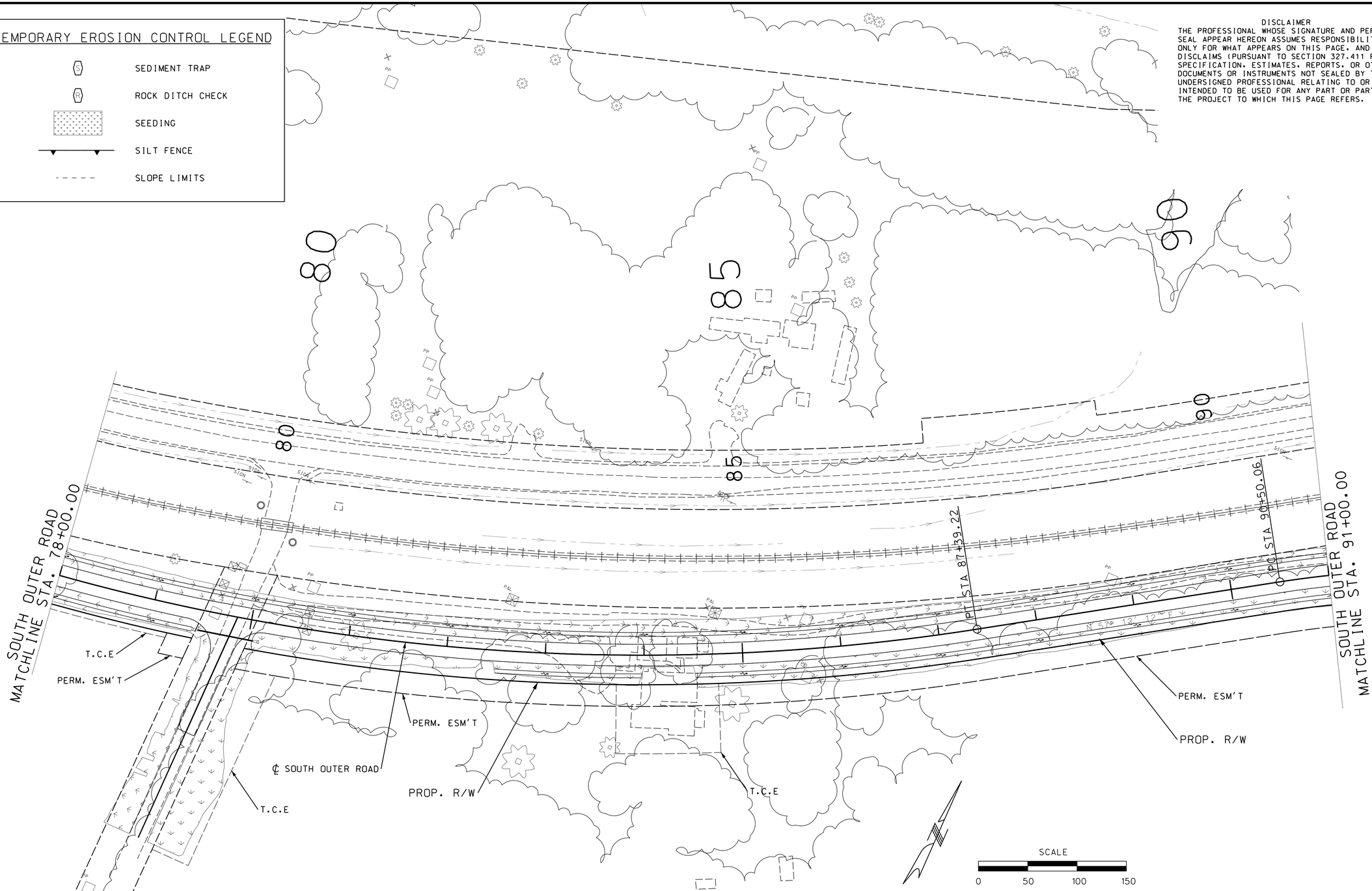

SOUTH OUTER ROAD
EROSION CONTROL
POST-CONSTRUCTION
53 OF 60

Paul J. Kronlage
07/31/2024 12:39:46 PM
Paul J. Kronlage - Civil
MO PE - 023328

DATE PREPARED: 7/31/2024
ROUTE: 60 | STATE: MO
DISTRICT: SW | SHEET NO.: 172
COUNTY: WEBSTER
JOB NO.: J7P3425C
CONTRACT ID.:
PROJECT NO.:
BRIDGE NO.:

DESCRIPTION | DATE

MISSOURI HIGHWAYS AND TRANSPORTATION COMMISSION
105 WEST CAPITOL
JEFFERSON CITY, MO 65102
1-888-ASK-MODOT (1-888-275-6636)

EFK•Moen
Civil Engineering Design
13523 Barrett Parkway Dr
Suite 250
St. Louis, MO 63021
Phone 314-394-3100
Fax 314-394-3199
Missouri Certificate of Authority: 001578

IF A SEAL IS PRESENT ON THIS SHEET IT HAS BEEN ELECTRONICALLY SEALED AND DATED.

REV.

Z:\21047 CMT Route 60 at Route A\DGN\Design\Final\Plot Sheets\CMT Erosion Control\172_EC_POST_53_J7P3425C_i50.dgn 9:56:09 AM 7/31/2024

TEMPORARY EROSION CONTROL LEGEND

- SEDIMENT TRAP
- ROCK DITCH CHECK
- SEEDING
- SILT FENCE
- SLOPE LIMITS

DISCLAIMER
THE PROFESSIONAL WHOSE SIGNATURE AND PERSONAL SEAL APPEAR HEREON ASSUMES RESPONSIBILITY ONLY FOR WHAT APPEARS ON THIS PAGE, AND DISCLAIMS (PURSUANT TO SECTION 327.411 RSMO) SPECIFICATION, ESTIMATES, REPORTS, OR OTHER DOCUMENTS OR INSTRUMENTS NOT SEALED BY THE UNDERSIGNED PROFESSIONAL RELATING TO OR INTENDED TO BE USED FOR ANY PART OR PARTS OF THE PROJECT TO WHICH THIS PAGE REFERS.

SCALE
0 50 100 150

95
100
95
100

SOUTH OUTER ROAD 91+00.00
MATCHLINE STA.

PT STA 94+12.62

T.C.E

PERM. ESM'T

PROP. R/W

PROP. R/W

T.C.E

℄ SOUTH OUTER ROAD

N 78° 04' 50" E

PC STA 98+33.81

PROP. R/W

T.C.E

PROP. R/W

PT STA 103+87.04

SOUTH OUTER ROAD 104+00.00
MATCHLINE STA.

SOUTH OUTER ROAD
EROSION CONTROL
POST-CONSTRUCTION
54 OF 60

STATE OF MISSOURI
PAUL JOSEPH KRONLAGE NUMBER EN 023328
REGISTERED PROFESSIONAL ENGINEER

07/31/2024 12:40:14 PM
Paul J. Kronlage - Civil
MO PE - 023328

DATE PREPARED	
7/31/2024	
ROUTE	STATE
60	MO
DISTRICT	SHEET NO.
SW	173
COUNTY	
WEBSTER	
JOB NO.	
J7P3425C	
CONTRACT ID.	
PROJECT NO.	
BRIDGE NO.	

IF A SEAL IS PRESENT ON THIS SHEET IT HAS BEEN ELECTRONICALLY SEALED AND DATED.

DESCRIPTION	DATE

MISSOURI HIGHWAYS AND TRANSPORTATION COMMISSION
105 WEST CAPITOL
JEFFERSON CITY, MO 65102
1-888-ASK-MODOT (1-888-275-6636)

EFK•Moen
Civil Engineering Design
13523 Barrett Parkway Dr
Suite 250
St. Louis, MO 63021
Phone 314-394-3100
Fax 314-394-3199
Missouri Certificate of Authority: 001578

REV.

DISCLAIMER
THE PROFESSIONAL WHOSE SIGNATURE AND PERSONAL SEAL APPEAR HEREON ASSUMES RESPONSIBILITY ONLY FOR WHAT APPEARS ON THIS PAGE, AND DISCLAIMS (PURSUANT TO SECTION 327.411 RSMO) SPECIFICATION, ESTIMATES, REPORTS, OR OTHER DOCUMENTS OR INSTRUMENTS NOT SEALED BY THE UNDERSIGNED PROFESSIONAL RELATING TO OR INTENDED TO BE USED FOR ANY PART OR PARTS OF THE PROJECT TO WHICH THIS PAGE REFERS.

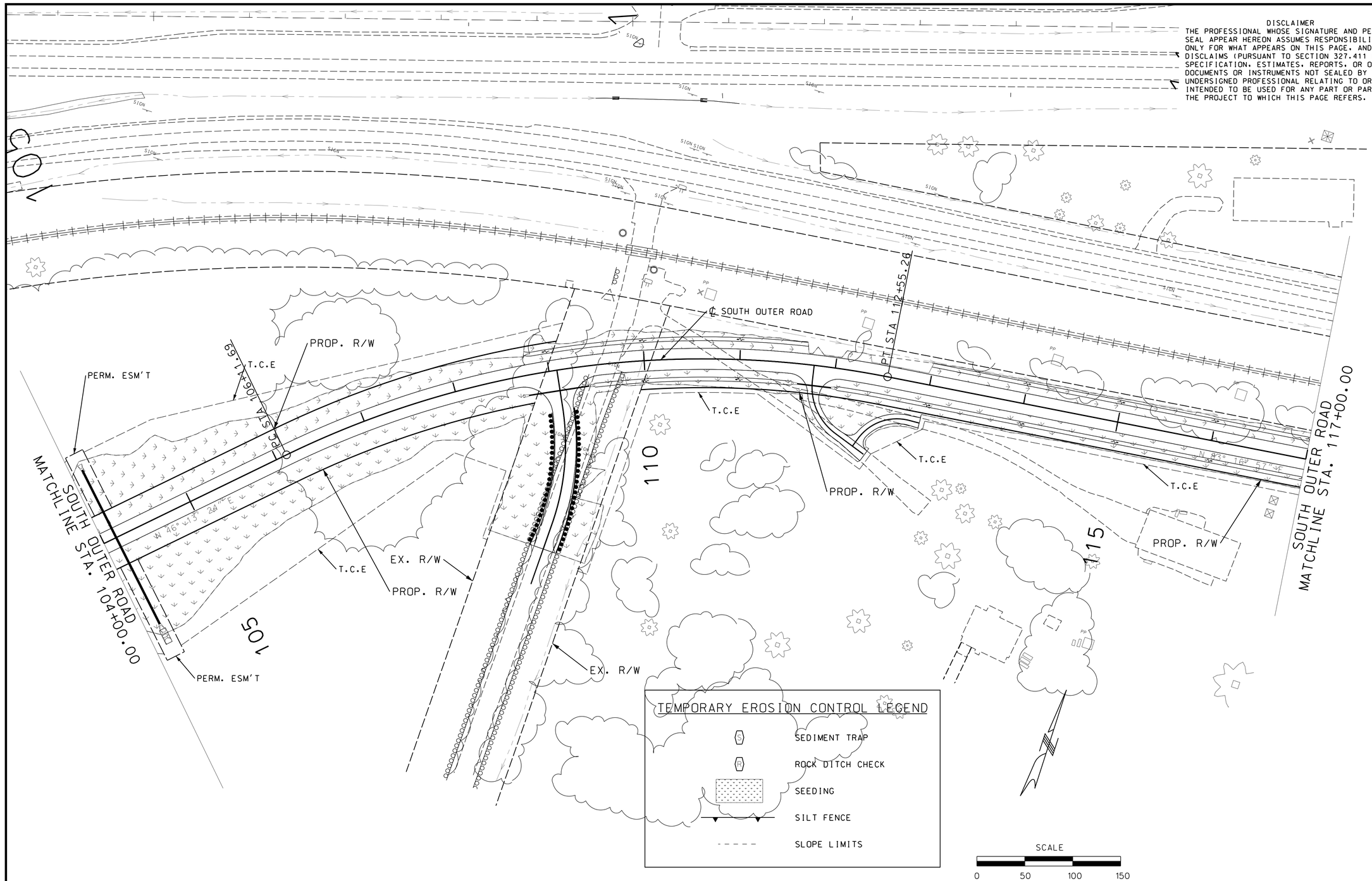

SOUTH OUTER ROAD
EROSION CONTROL
POST-CONSTRUCTION
55 OF 60

STATE OF MISSOURI
PAUL JOSEPH KRONLAGE NUMBER EN 023328
REGISTERED PROFESSIONAL ENGINEER

07/31/2024 12:40:39 PM
Paul J. Kronlage - Civil
MO PE - 023328

DATE PREPARED	
7/31/2024	
ROUTE	STATE
60	MO
DISTRICT	SHEET NO.
SW	174
COUNTY	
WEBSTER	
JOB NO.	
J7P3425C	
CONTRACT ID.	
PROJECT NO.	
BRIDGE NO.	

IF A SEAL IS PRESENT ON THIS SHEET IT HAS BEEN ELECTRONICALLY SEALED AND DATED.

DATE	DESCRIPTION

MISSOURI HIGHWAYS AND TRANSPORTATION COMMISSION

105 WEST CAPITOL
JEFFERSON CITY, MO 65102
1-888-ASK-MODOT (1-888-275-6636)

EFK•Moen
Civil Engineering Design
13523 Barrett Parkway Dr
Suite 250
St. Louis, MO 63021
Phone 314-394-3100
Fax 314-394-3199
Missouri Certificate of Authority: 001578

REV.

DISCLAIMER
THE PROFESSIONAL WHOSE SIGNATURE AND PERSONAL SEAL APPEAR HEREON ASSUMES RESPONSIBILITY ONLY FOR WHAT APPEARS ON THIS PAGE, AND DISCLAIMS (PURSUANT TO SECTION 327.411 RSMO) SPECIFICATION, ESTIMATES, REPORTS, OR OTHER DOCUMENTS OR INSTRUMENTS NOT SEALED BY THE UNDERSIGNED PROFESSIONAL RELATING TO OR INTENDED TO BE USED FOR ANY PART OR PARTS OF THE PROJECT TO WHICH THIS PAGE REFERS.

N 72° 47' 15" E

120

125

SCALE
0 50 100 150

SOUTH OUTER ROAD
MATCHLINE STA. 117+00.00

PC STA 121+04.15

SOUTH OUTER ROAD
MATCHLINE STA. 130+00.00

T.C.E

PROP. R/W

T.C.E

℄ SOUTH OUTER ROAD

PROP. R/W

T.C.E

PERM. ESM'T

TEMPORARY EROSION CONTROL LEGEND

- SEDIMENT TRAP
- ROCK DITCH CHECK
- SEEDING
- SILT FENCE
- SLOPE LIMITS

SOUTH OUTER ROAD
EROSION CONTROL
POST-CONSTRUCTION
56 OF 60

STATE OF MISSOURI
PAUL JOSEPH KRONLAGE
NUMBER EN 023328
REGISTERED PROFESSIONAL ENGINEER

07/31/2024 12:41:01 PM
Paul J. Kronlage - Civil
MO PE - 023328

DATE PREPARED
7/31/2024

ROUTE	STATE
60	MO
DISTRICT	SHEET NO.
SW	175

COUNTY
WEBSTER

JOB NO.
J7P3425C

CONTRACT ID.

PROJECT NO.

BRIDGE NO.

IF A SEAL IS PRESENT ON THIS SHEET IT HAS BEEN ELECTRONICALLY SEALED AND DATED.

DESCRIPTION	DATE

MISSOURI HIGHWAYS AND TRANSPORTATION COMMISSION
105 WEST CAPITOL
JEFFERSON CITY, MO 65102
1-888-ASK-MODOT (1-888-275-6636)

EFK•Moen
Civil Engineering Design
13523 Barrett Parkway Dr
Suite 250
St. Louis, MO 63021
Phone 314-394-3100
Fax 314-394-3199
Missouri Certificate of Authority: 001578

REV.

Z:\21047 CMT Route 60 at Route A\DGN\Design\Final\Plot Sheets\CMT Erosion Control\175_EC_POST_56_J7P3425C_i50.dgn 9:56:13 AM 7/31/2024

DISCLAIMER
THE PROFESSIONAL WHOSE SIGNATURE AND PERSONAL SEAL APPEAR HEREON ASSUMES RESPONSIBILITY ONLY FOR WHAT APPEARS ON THIS PAGE, AND DISCLAIMS (PURSUANT TO SECTION 327.411 RSMO) SPECIFICATION, ESTIMATES, REPORTS, OR OTHER DOCUMENTS OR INSTRUMENTS NOT SEALED BY THE UNDERSIGNED PROFESSIONAL RELATING TO OR INTENDED TO BE USED FOR ANY PART OR PARTS OF THE PROJECT TO WHICH THIS PAGE REFERS.

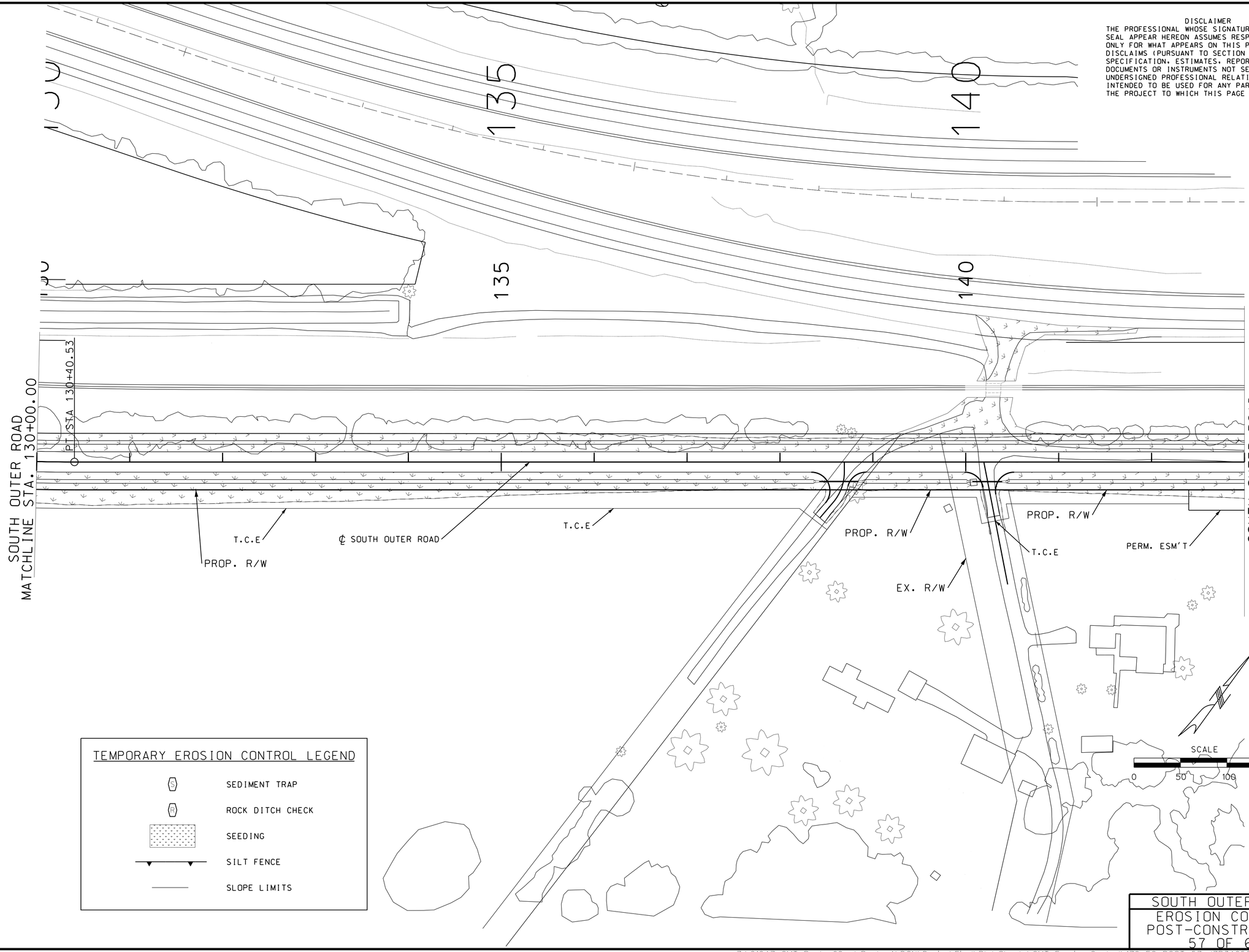

TEMPORARY EROSION CONTROL LEGEND

- SEDIMENT TRAP
- ROCK DITCH CHECK
- SEEDING
- SILT FENCE
- SLOPE LIMITS

SOUTH OUTER ROAD
EROSION CONTROL
POST-CONSTRUCTION
57 OF 60

PAUL JOSEPH KRONLAGE NUMBER EN 023328
STATE OF MISSOURI
REGISTERED PROFESSIONAL ENGINEER

07/31/2024 12:41:24 PM
Paul J. Kronlage - Civil
MO PE - 023328

DATE PREPARED
7/31/2024

ROUTE	STATE
60	MO
DISTRICT	SHEET NO.
SW	176

COUNTY
WEBSTER

JOB NO.
J7P3425C

CONTRACT ID.
.

PROJECT NO.
.

BRIDGE NO.
.

DESCRIPTION	DATE

IF A SEAL IS PRESENT ON THIS SHEET IT HAS BEEN ELECTRONICALLY SEALED AND DATED.

MISSOURI HIGHWAYS AND TRANSPORTATION COMMISSION
105 WEST CAPITOL
JEFFERSON CITY, MO 65102
1-888-ASK-MODOT (1-888-275-6636)

EFK•Moen
Civil Engineering Design
13523 Barrett Parkway Dr
Suite 250
St. Louis, MO 63021
Phone 314-394-3100
Fax 314-394-3199
Missouri Certificate of Authority: 001578

REV.

Z:\21047 CMT Route 60 at Route A\DGN\Design\Final\Plot Sheets\CMT Erosion Control\176_EC_POST_57_J7P3425C_i50.dgn 9:56:15 AM 7/31/2024

DISCLAIMER
THE PROFESSIONAL WHOSE SIGNATURE AND PERSONAL SEAL APPEAR HEREON ASSUMES RESPONSIBILITY ONLY FOR WHAT APPEARS ON THIS PAGE, AND DISCLAIMS (PURSUANT TO SECTION 327.411 RSMO) SPECIFICATION, ESTIMATES, REPORTS, OR OTHER DOCUMENTS OR INSTRUMENTS NOT SEALED BY THE UNDERSIGNED PROFESSIONAL RELATING TO OR INTENDED TO BE USED FOR ANY PART OR PARTS OF THE PROJECT TO WHICH THIS PAGE REFERS.

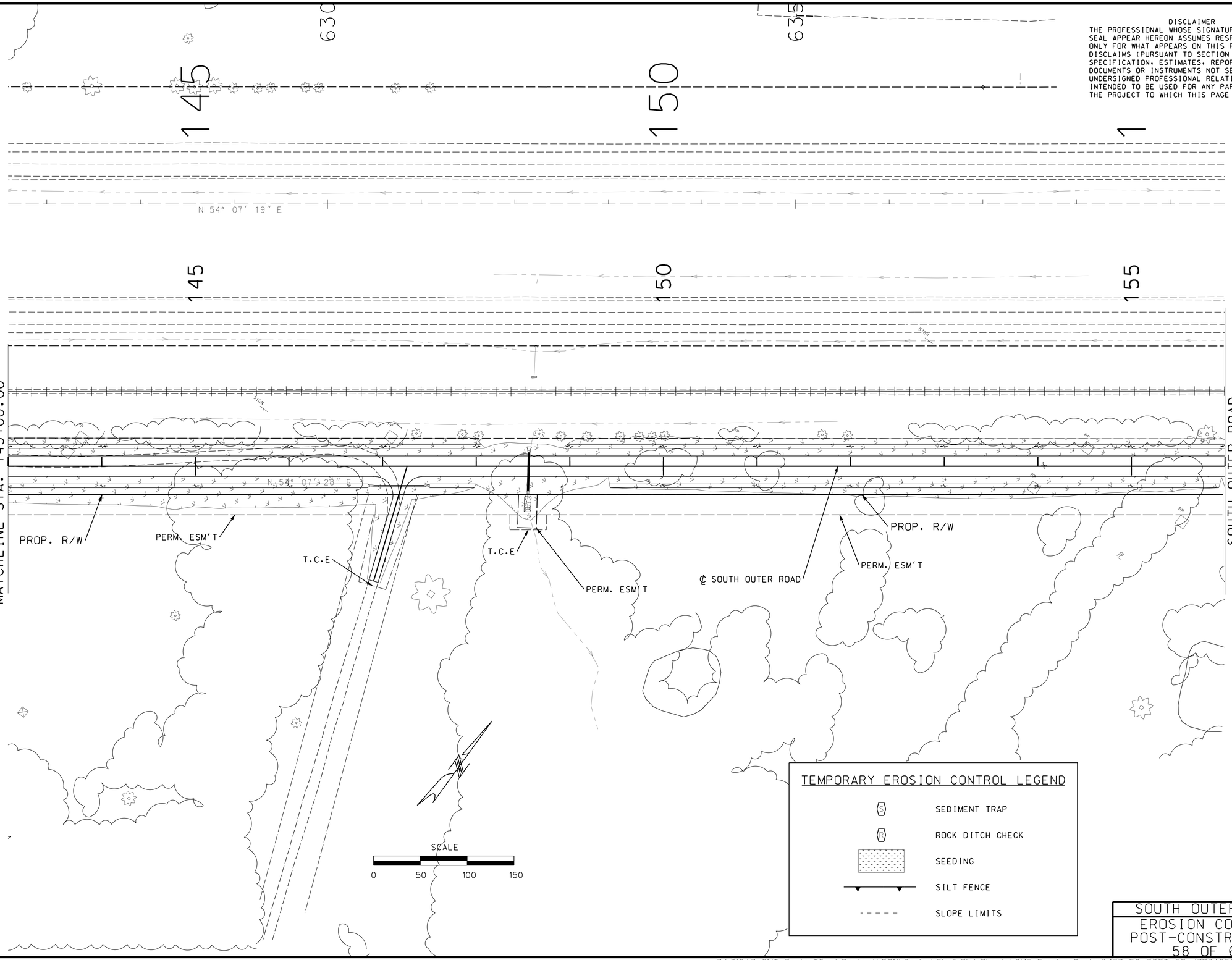

TEMPORARY EROSION CONTROL LEGEND

- SEDIMENT TRAP
- ROCK DITCH CHECK
- SEEDING
- SILT FENCE
- SLOPE LIMITS

SOUTH OUTER ROAD
EROSION CONTROL
POST-CONSTRUCTION
58 OF 60

STATE OF MISSOURI
PAUL JOSEPH KRONLAGE NUMBER EN 023328
REGISTERED PROFESSIONAL ENGINEER

07/31/2024 12:41:54 PM
Paul J. Kronlage - Civil
MO PE - 023328

DATE PREPARED
7/31/2024

ROUTE	STATE
60	MO
DISTRICT	SHEET NO.
SW	177

COUNTY
WEBSTER

JOB NO.
J7P3425C

CONTRACT ID.

PROJECT NO.

BRIDGE NO.

REV.	DESCRIPTION	DATE

IF A SEAL IS PRESENT ON THIS SHEET IT HAS BEEN ELECTRONICALLY SEALED AND DATED.

MISSOURI HIGHWAYS AND TRANSPORTATION COMMISSION
105 WEST CAPITOL
JEFFERSON CITY, MO 65102
1-888-ASK-MODOT (1-888-275-6636)

EFK•Moen
Civil Engineering Design
13523 Barrett Parkway Dr
Suite 250
St. Louis, MO 63021
Phone 314-394-3100
Fax 314-394-3199
Missouri Certificate of Authority: 001578

Z:\21047 CMT Route 60 at Route A\DGN\Design\Final\Plot Sheets\CMT Erosion Control\177_EC_POST_58_J7P3425C_i50.dgn 9:56:32 AM 7/31/2024

TEMPORARY EROSION CONTROL LEGEND

- SEDIMENT TRAP
- ROCK DITCH CHECK
- SEEDING/SODDING
- SILT FENCE
- SLOPE LIMITS

DISCLAIMER
THE PROFESSIONAL WHOSE SIGNATURE AND PERSONAL SEAL APPEAR HEREON ASSUMES RESPONSIBILITY ONLY FOR WHAT APPEARS ON THIS PAGE, AND DISCLAIMS (PURSUANT TO SECTION 327.411 RSMO) SPECIFICATION, ESTIMATES, REPORTS, OR OTHER DOCUMENTS OR INSTRUMENTS NOT SEALED BY THE UNDERSIGNED PROFESSIONAL RELATING TO OR INTENDED TO BE USED FOR ANY PART OR PARTS OF THE PROJECT TO WHICH THIS PAGE REFERS.

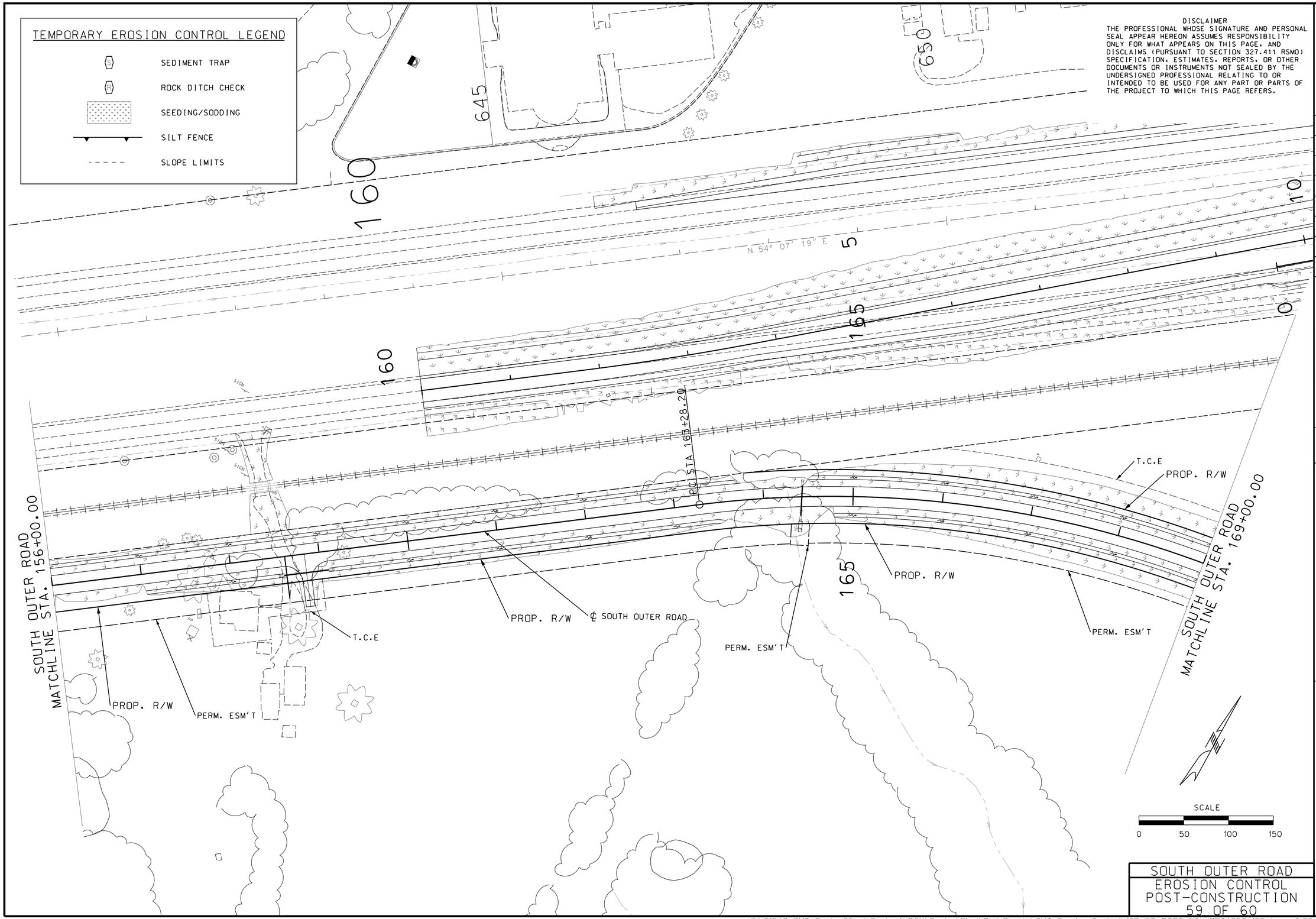

SOUTH OUTER ROAD
EROSION CONTROL
POST-CONSTRUCTION
59 OF 60

STATE OF MISSOURI
PAUL JOSEPH KRONLAGE NUMBER EN 023328
REGISTERED PROFESSIONAL ENGINEER

07/31/2024 12:42:17 PM
Paul J. Kronlage - Civil
MO PE - 023328

DATE PREPARED	
7/31/2024	
ROUTE	STATE
60	MO
DISTRICT	SHEET NO.
SW	178
COUNTY	
WEBSTER	
JOB NO.	
J7P3425C	
CONTRACT ID.	
PROJECT NO.	
BRIDGE NO.	

IF A SEAL IS PRESENT ON THIS SHEET IT HAS BEEN ELECTRONICALLY SEALED AND DATED.

DESCRIPTION	DATE

MISSOURI HIGHWAYS AND TRANSPORTATION COMMISSION
105 WEST CAPITOL
JEFFERSON CITY, MO 65102
1-888-ASK-MODOT (1-888-275-6636)

EFK•Moen
Civil Engineering Design
13523 Barrett Parkway Dr
Suite 250
St. Louis, MO 63021
Phone 314-394-3100
Fax 314-394-3199
Missouri Certificate of Authority: 001578

REV.

DISCLAIMER
THE PROFESSIONAL WHOSE SIGNATURE AND PERSONAL SEAL APPEAR HEREON ASSUMES RESPONSIBILITY ONLY FOR WHAT APPEARS ON THIS PAGE, AND DISCLAIMS (PURSUANT TO SECTION 327.411 RSMO) SPECIFICATION, ESTIMATES, REPORTS, OR OTHER DOCUMENTS OR INSTRUMENTS NOT SEALED BY THE UNDERSIGNED PROFESSIONAL RELATING TO OR INTENDED TO BE USED FOR ANY PART OR PARTS OF THE PROJECT TO WHICH THIS PAGE REFERS.

STATE OF MISSOURI
PAUL JOSEPH KRONLAGE NUMBER EN 023328
REGISTERED PROFESSIONAL ENGINEER

07/31/2024 12:42:40 PM
Paul J. Kronlage - Civil
MO PE - 023328

IF A SEAL IS PRESENT ON THIS SHEET IT HAS BEEN ELECTRONICALLY SEALED AND DATED.

DATE PREPARED: 7/31/2024
ROUTE: 60 | STATE: MO
DISTRICT: SW | SHEET NO.: 179
COUNTY: WEBSTER
JOB NO.: J7P3425C
CONTRACT ID.:
PROJECT NO.:
BRIDGE NO.:

DESCRIPTION	DATE

MISSOURI HIGHWAYS AND TRANSPORTATION COMMISSION
105 WEST CAPITOL
JEFFERSON CITY, MO 65102
1-888-ASK-MODOT (1-888-275-6636)

EFK•Moen
Civil Engineering Design
13523 Barrett Parkway Dr
Suite 250
St. Louis, MO 63021
Phone 314-394-3100
Fax 314-394-3199
Missouri Certificate of Authority: 001578

REV.

SOUTH OUTER ROAD
MATCHLINE STA. 169+00.00

PROP. R/W
T.C.E
PI STA 170+60.82
℄ ROUTE NN
℄ SOUTH OUTER ROAD
PC STA 175+91.02
PT STA 180+74.96
PI STA 182+23.83
N 89° 23' 54" E
PERM. ESM'T

TEMPORARY EROSION CONTROL LEGEND

- SEDIMENT TRAP
- ROCK DITCH CHECK
- SEEDING
- SILT FENCE
- SLOPE LIMITS

SCALE
0 50 100 150

SOUTH OUTER ROAD
EROSION CONTROL
POST-CONSTRUCTION
60 OF 60

Z:\21047 CMT Route 60 at Route A\DGN\Design\Final\Plot Sheets\CMT Erosion Control\179_EC_POST_60_J7P3425C_150.dgn 9:56:35 AM 7/31/2024

DISCLAIMER
THE PROFESSIONAL WHOSE SIGNATURE AND PERSONAL SEAL APPEAR HEREON ASSUMES RESPONSIBILITY ONLY FOR WHAT APPEARS ON THIS PAGE, AND DISCLAIMS (PURSUANT TO SECTION 327.411 RSMO) SPECIFICATION, ESTIMATES, REPORTS, OR OTHER DOCUMENTS OR INSTRUMENTS NOT SEALED BY THE UNDERSIGNED PROFESSIONAL RELATING TO OR INTENDED TO BE USED FOR ANY PART OR PARTS OF THE PROJECT TO WHICH THIS PAGE REFERS.

SECTION LINE

EXIST. R/W

EXIST. R/W

EXIST. R/W

2 INCH RIGID CONDUIT WITH 3, #2 AWG WIRES

EX. POWER SERVICE BY WEBSTER ELECTRIC COOP. (UIP)

TYPE 2 POWER SUPPLY

℄ EX US 60

℄ WB ON-RAMP

4 INCH PUSHED RIGID CONDUIT WITH 2, 1 INCH 8 AWG CABLE-CONDUIT, CIRCUT 1

℄ PR US 60

℄ EB OFF-RAMP

MATCHLINE STA. 6+00 LIGHTING PLAN SHEET 2 OF 5

MATCHLINE STA. 17+00 LIGHTING PLAN SHEET 2 OF 5

MATCHLINE STA. 7+00 LIGHTING PLAN SHEET 2 OF 5

A1-1

A1-2

2A

3A

4A

UT

LIGHTING LEGEND

	CONTROLLER, LIGHTING		LED-A LUMINAIRE
	CONTROLLER, LIGHTING (EXISTING)		LED-B LUMINAIRE
	WOOD POST		LED-C LUMINAIRE
	POWER SUPPLY	P.S.	POWER SOURCE
JCT	JUNCTION BOX		PULL BOX (EXISTING)
	PULL BOX CONCRETE TYPE 1		PULL BOX CONCRETE TYPE 2
	PULL BOX PREFORMED TYPE 1		PULL BOX PREFORMED TYPE 2
	CONDUIT, RIGID (TRENCH)		CONDUIT, RIGID (PUSHED)
M	CONDUIT, RIGID (MEDIAN)	B	CONDUIT, RIGID (BRIDGE)
	CONDUIT, RIGID (EXISTING)		CABLE-CONDUIT (EXISTING)
			CABLE-CONDUIT

SCALE
0 50 100 150

LIGHTING PLAN
SHEET 1 OF 5

PAUL JOSEPH KRONLAGE NUMBER EN 023328 REGISTERED PROFESSIONAL ENGINEER STATE OF MISSOURI

09/04/2024 12:38:54 PM
Paul J. Kronlage - Civil
MO PE - 023328

DATE PREPARED
9/4/2024

ROUTE	STATE
60	MO
DISTRICT	SHEET NO.
SW	180

COUNTY
WEBSTER

JOB NO.
J7P3425C

CONTRACT ID.

PROJECT NO.

BRIDGE NO.

DESCRIPTION	DATE

IF A SEAL IS PRESENT ON THIS SHEET IT HAS BEEN ELECTRONICALLY SEALED AND DATED.

MISSOURI HIGHWAYS AND TRANSPORTATION COMMISSION

105 WEST CAPITOL
JEFFERSON CITY, MO 65102
1-888-ASK-MODOT (1-888-275-6636)

EFK•Moen
Civil Engineering Design
13523 Barrett Parkway Dr
Suite 250
St. Louis, MO 63021
Phone 314-394-3100
Fax 314-394-3199
Missouri Certificate of Authority: 001578

REV.

Z:\21047 CMT Route 60 at Route A\DGN\Design\Final\Plot Sheets\180_LT_001_J7P3425_150.dgn 10:55:30 AM 9/4/2024

DISCLAIMER
THE PROFESSIONAL WHOSE SIGNATURE AND PERSONAL SEAL APPEAR HEREON ASSUMES RESPONSIBILITY ONLY FOR WHAT APPEARS ON THIS PAGE, AND DISCLAIMS (PURSUANT TO SECTION 327.411 RSMO) SPECIFICATION, ESTIMATES, REPORTS, OR OTHER DOCUMENTS OR INSTRUMENTS NOT SEALED BY THE UNDERSIGNED PROFESSIONAL RELATING TO OR INTENDED TO BE USED FOR ANY PART OR PARTS OF THE PROJECT TO WHICH THIS PAGE REFERS.

3 INCH RIGID CONDUIT WITH 3, 1 INCH 8 AWG CABLE-CONDUIT, CIRCUIT 1, 2, & 3

3 INCH RIGID CONDUIT WITH 1, 1 INCH 8 AWG CABLE-CONDUIT, CIRCUT 2

CONTROLLER A

EXIST. R/W

TEMP. ESM'T

PROP. R/W

℄ WB OFF-RAMP

℄ WB ON-RAMP

2 INCH RIGID CONDUIT WITH 3, #2 AWG WIRES

3 INCH RIGID CONDUIT WITH 1, 1 INCH 8 AWG CABLE-CONDUIT, CIRCUT 3

LIGHTING CABLES IN BRIDGE BARRIER CONDUIT

℄ EX US 60

℄ PR US 60

3 INCH RIGID CONDUIT WITH 1, 1 INCH 8 AWG CABLE-CONDUIT, CIRCUT 3

℄ EB ON-RAMP

℄ EB OFF-RAMP

℄ RTE A

SECTION LINE

MATCHLINE STA. 6+00 LIGHTING PLAN SHEET 1 OF 5

MATCHLINE STA. 7+00 LIGHTING PLAN SHEET 1 OF 5

MATCHLINE STA. 9+50 LIGHTING PLAN SHEET 3 OF 5

MATCHLINE STA. 30+00 LIGHTING PLAN SHEET 3 OF 5

MATCHLINE STA. 8+00 LIGHTING PLAN SHEET 3 OF 5

SCALE
0 50 100 150

LIGHTING LEGEND

	CONTROLLER, LIGHTING		LED-A LUMINAIRE
	CONTROLLER, LIGHTING (EXISTING)		LED-B LUMINAIRE
	WOOD POST		LED-C LUMINAIRE
	POWER SUPPLY	P.S.	POWER SOURCE
JCT	JUNCTION BOX		PULL BOX (EXISTING)
	PULL BOX CONCRETE TYPE 1		PULL BOX CONCRETE TYPE 2
	PULL BOX PREFORMED TYPE 1		PULL BOX PREFORMED TYPE 2
	CONDUIT, RIGID (TRENCH)		CONDUIT, RIGID (PUSHED)
M	CONDUIT, RIGID (MEDIAN)	B	CONDUIT, RIGID (BRIDGE)
	CONDUIT, RIGID (EXISTING)		CABLE-CONDUIT (EXISTING)
			CABLE-CONDUIT

LIGHTING PLAN
SHEET 2 OF 5

PAUL JOSEPH KRONLAGE NUMBER EN 023328 — STATE OF MISSOURI — REGISTERED PROFESSIONAL ENGINEER

09/04/2024 12:39:19 PM
Paul J. Kronlage - Civil
MO PE - 023328

DATE PREPARED 9/4/2024

ROUTE	STATE
60	MO
DISTRICT	SHEET NO.
SW	181

COUNTY: WEBSTER
JOB NO.: J7P3425C
CONTRACT ID.:
PROJECT NO.:
BRIDGE NO.:

DESCRIPTION	DATE

IF A SEAL IS PRESENT ON THIS SHEET IT HAS BEEN ELECTRONICALLY SEALED AND DATED.

MISSOURI HIGHWAYS AND TRANSPORTATION COMMISSION

105 WEST CAPITOL
JEFFERSON CITY, MO 65102
1-888-ASK-MODOT (1-888-275-6636)

EFK•Moen
Civil Engineering Design
13523 Barrett Parkway Dr
Suite 250
St. Louis, MO 63021
Phone 314-394-3100
Fax 314-394-3199
Missouri Certificate of Authority: 001578

REV.

Z:\21047 CMT Route 60 at Route A\DGN\Design\Final\Plot Sheets\181_LT_002_J7P3425_i50.dgn 10:56:58 AM 9/4/2024

DISCLAIMER
THE PROFESSIONAL WHOSE SIGNATURE AND PERSONAL SEAL APPEAR HEREON ASSUMES RESPONSIBILITY ONLY FOR WHAT APPEARS ON THIS PAGE, AND DISCLAIMS (PURSUANT TO SECTION 327.411 RSMO) SPECIFICATION, ESTIMATES, REPORTS, OR OTHER DOCUMENTS OR INSTRUMENTS NOT SEALED BY THE UNDERSIGNED PROFESSIONAL RELATING TO OR INTENDED TO BE USED FOR ANY PART OR PARTS OF THE PROJECT TO WHICH THIS PAGE REFERS.

MATCHLINE STA. 9+50
LIGHTING PLAN SHEET 2 OF 5

MATCHLINE STA. 30+00
LIGHTING PLAN SHEET 2 OF 5

MATCHLINE STA. 8+00
LIGHTING PLAN SHEET 2 OF 5

TEMP. ESM'T
PROP. R/W
℄ NORTH OUTER RD
EXIST. R/W
A2-1
℄ WB OFF-RAMP
12A
4 INCH PUSHED RIGID CONDUIT WITH 1, 1 INCH 8 AWG CABLE-CONDUIT, CIRCUT 2
A2-2
℄ EX US 60
℄ PR US 60
℄ EB ON-RAMP
SECTION LINE

SCALE
0 50 100 150

LIGHTING LEGEND

	CONTROLLER, LIGHTING		LED-A LUMINAIRE
	CONTROLLER, LIGHTING (EXISTING)		LED-B LUMINAIRE
	WOOD POST		LED-C LUMINAIRE
	POWER SUPPLY	P.S.	POWER SOURCE
JCT	JUNCTION BOX		PULL BOX (EXISTING)
	PULL BOX CONCRETE TYPE 1		PULL BOX CONCRETE TYPE 2
	PULL BOX PREFORMED TYPE 1		PULL BOX PREFORMED TYPE 2
	CONDUIT, RIGID (TRENCH)		CONDUIT, RIGID (PUSHED)
M	CONDUIT, RIGID (MEDIAN)	B	CONDUIT, RIGID (BRIDGE)
	CONDUIT, RIGID (EXISTING)		CABLE-CONDUIT (EXISTING)
			CABLE-CONDUIT

LIGHTING PLAN
SHEET 3 OF 5

STATE OF MISSOURI
PAUL JOSEPH KRONLAGE NUMBER EN 023328
REGISTERED PROFESSIONAL ENGINEER
07/31/2024 12:47:41 PM
Paul J. Kronlage - Civil
MO PE - 023328

DATE PREPARED	
7/31/2024	
ROUTE	STATE
60	MO
DISTRICT	SHEET NO.
SW	182
COUNTY	
WEBSTER	
JOB NO.	
J7P3425C	
CONTRACT ID.	
PROJECT NO.	
BRIDGE NO.	

DATE	DESCRIPTION

IF A SEAL IS PRESENT ON THIS SHEET IT HAS BEEN ELECTRONICALLY SEALED AND DATED.

MISSOURI HIGHWAYS AND TRANSPORTATION COMMISSION

105 WEST CAPITOL
JEFFERSON CITY, MO 65102
1-888-ASK-MODOT (1-888-275-6636)

EFK•Moen
Civil Engineering Design
13523 Barrett Parkway Dr
Suite 250
St. Louis, MO 63021
Phone 314-394-3100
Fax 314-394-3199
Missouri Certificate of Authority: 001578

Z:\21047 CMT Route 60 at Route A\DGN\Design\Final\Plot Sheets\182_LT_003_J7P3425_i50.dgn 9:56:54 AM 7/31/2024

REV.

DISCLAIMER
THE PROFESSIONAL WHOSE SIGNATURE AND PERSONAL SEAL APPEAR HEREON ASSUMES RESPONSIBILITY ONLY FOR WHAT APPEARS ON THIS PAGE, AND DISCLAIMS (PURSUANT TO SECTION 327.411 RSMO) SPECIFICATION, ESTIMATES, REPORTS, OR OTHER DOCUMENTS OR INSTRUMENTS NOT SEALED BY THE UNDERSIGNED PROFESSIONAL RELATING TO OR INTENDED TO BE USED FOR ANY PART OR PARTS OF THE PROJECT TO WHICH THIS PAGE REFERS.

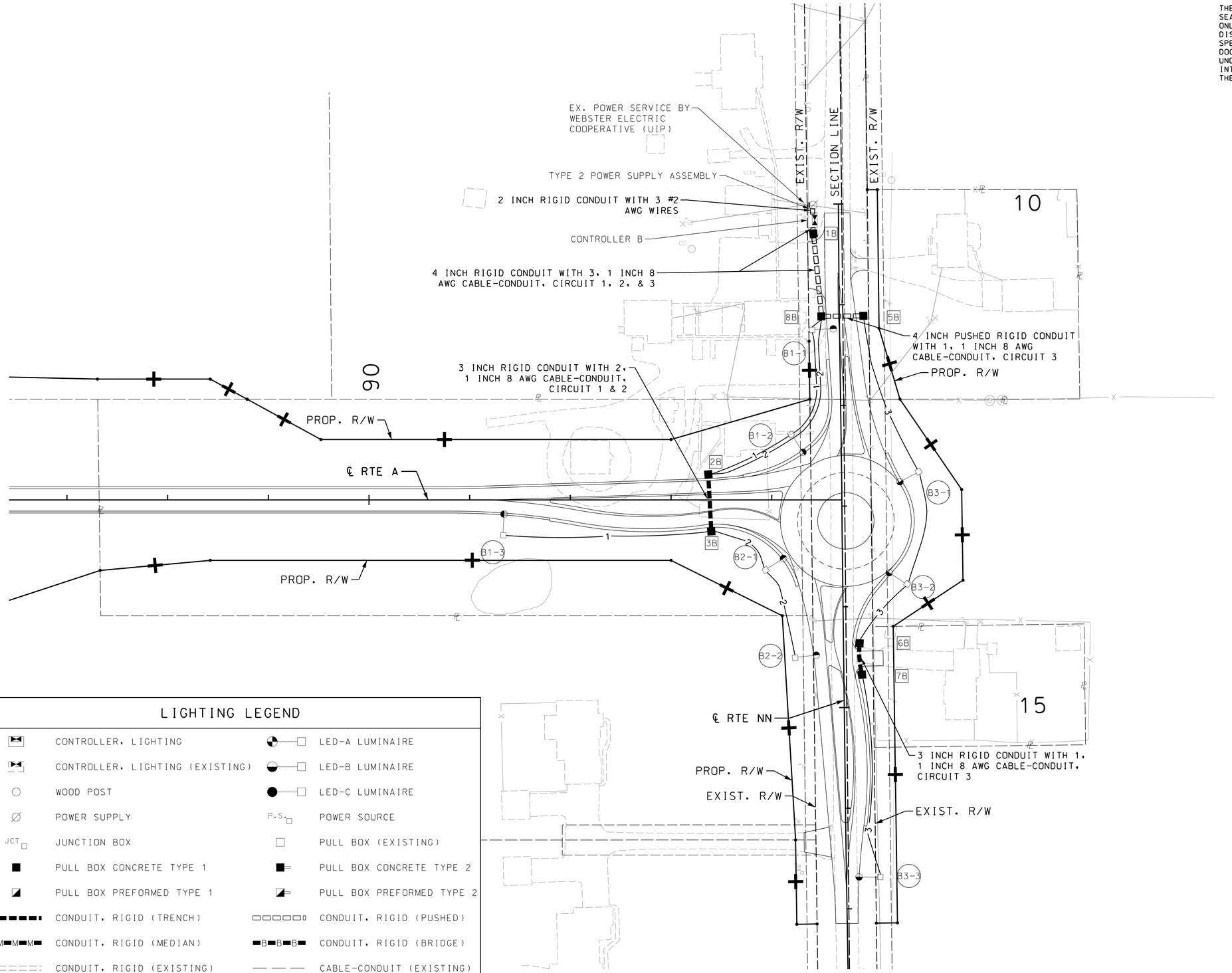

LIGHTING LEGEND

	CONTROLLER, LIGHTING		LED-A LUMINAIRE
	CONTROLLER, LIGHTING (EXISTING)		LED-B LUMINAIRE
	WOOD POST		LED-C LUMINAIRE
	POWER SUPPLY	P.S.	POWER SOURCE
JCT	JUNCTION BOX		PULL BOX (EXISTING)
	PULL BOX CONCRETE TYPE 1		PULL BOX CONCRETE TYPE 2
	PULL BOX PREFORMED TYPE 1		PULL BOX PREFORMED TYPE 2
	CONDUIT, RIGID (TRENCH)		CONDUIT, RIGID (PUSHED)
M	CONDUIT, RIGID (MEDIAN)	B	CONDUIT, RIGID (BRIDGE)
	CONDUIT, RIGID (EXISTING)		CABLE-CONDUIT (EXISTING)
			CABLE-CONDUIT

SCALE
0 50 100 150

LIGHTING PLAN
SHEET 4 OF 5

STATE OF MISSOURI
PAUL JOSEPH KRONLAGE NUMBER EN 023328
REGISTERED PROFESSIONAL ENGINEER

09/03/2024 8:04:40 AM
Paul J. Kronlage - Civil
MO PE - 023328

DATE PREPARED 9/3/2024
ROUTE 60 | STATE MO
DISTRICT SW | SHEET NO. 183
COUNTY WEBSTER
JOB NO. J7P3425C
CONTRACT ID.
PROJECT NO.
BRIDGE NO.

DESCRIPTION | DATE | REV.

IF A SEAL IS PRESENT ON THIS SHEET IT HAS BEEN ELECTRONICALLY SEALED AND DATED.

MISSOURI HIGHWAYS AND TRANSPORTATION COMMISSION
105 WEST CAPITOL
JEFFERSON CITY, MO 65102
1-888-ASK-MODOT (1-888-275-6636)

EFK•Moen
Civil Engineering Design
13523 Barrett Parkway Dr
Suite 250
St. Louis, MO 63021
Phone 314-394-3100
Fax 314-394-3199
Missouri Certificate of Authority: 001578

Z:\21047 CMT Route 60 at Route A\DGN\Design\Final\Plot Sheets\183_LT_004_J7P3425_i50.dgn 7:59:22 AM 9/3/2024

POLES, ARMS AND LUMINAIRES

LIGHTING SHEET NO.	LUMIN. POLE NO.	STATION	OFFSET	LOCATION	30′ POLE AT	30′ POLE B	45′ POLE TYPE AT D1	45′ POLE TYPE AT D2	45′ POLE TYPE AT D3	45′ POLE TYPE AT D4	45′ POLE TYPE AT D5	45′ POLE TYPE B D3	45′ POLE TYPE MB D3	RELOC. POLE	LUMINAIRE LED-A	LUMINAIRE LED-B	LUMINAIRE LED-C	LUMINAIRE 150W HP SODIUM (UNDERPASS)	BRACKET ARM 4′	BRACKET ARM 6′	BRACKET ARM 8′	BRACKET ARM 10′	BRACKET ARM 12′	BRACKET ARM 15′	CABLE, 10 AWG 1 CONDUCTOR POLE AND BRACKET	POLE FOUNDATION 30′ POLE	POLE FOUNDATION 45′ POLE
1	A1-1	649+12	79.2′ LT	EX US 60				1								1								1	120		1
1	A1-2	654+88	105.7′ RT	EX US 60				1								1								1	120		1
2	A3-1	65+60	35.0′ RT	RTE A				1								1								1	120		1
2	A3-2	68+54	35.8′ LT	RTE A				1								1								1	120		1
3	A2-1	678+05	97.1′ LT	EX US 60				1								1								1	120		1
3	A2-2	686+11	127.8′ RT	EX US 60				1								1								1	120		1
4	B1-1	11+24	27.3′ RT	RTE NN				1								1								1	120		1
4	B1-2	12+28	49.5′ RT	RTE NN				1								1								1	120		1
4	B1-3	91+33	35.1′ RT	RTE A				1								1								1	120		1
4	B2-1	13+63	76.4′ RT	RTE NN				1								1								1	120		1
4	B2-2	14+50	47.9′ RT	RTE NN				1								1								1	120		1
4	B3-1	12+67	76.4′ LT	RTE NN				1								1								1	120		1
4	B3-2	13+78	64.0′ LT	RTE NN				1								1								1	120		1
4	B3-3	16+69	33.6′ LT	RTE NN				1								1								1	120		1
TOTALS:								14								14								14	1680		14

RIGID CONDUIT

SHEET NO.	FROM	TO	LOCATION	CENTER TO CENTER	CIR	TRENCHED (″Ø) 2″	TRENCHED (″Ø) 3″	TRENCHED (″Ø) 4″	TRENCHED (″Ø) 5″	PUSHED (″Ø) 3″	PUSHED (″Ø) 4″	PUSHED (″Ø) 5″	MEDIAN 2″	MEDIAN 3″	2″	3″	EXTERNAL ON STRUC. 4″
1	PSA	CONT A	EX US 60			27											
1	CONT A	1A	EX US 60				20										
1	2A	3A	EX US 60								185						
2	4A	5A	WB ON-RAMP				53										
2	4A	7A	RTE A				124										
2	6A	A3-2	RTE A				68										
3	8A	A2-2	EX US 60								200						
4	PSA	EX. PS	RTE NN								2						
4	PSA	CONT B	RTE NN								5						
4	CONT B	1B	RTE NN								2						
4	1B	8B	RTE NN								82						
4	8B	5B	RTE NN								42						
4	2B	3B	RTE A				57										
4	6B	7B	RTE NN				31										
SUBTOTALS:						27	353				518						
PAY TOTALS:						27	353				518						

CONTROL STATIONS AND POWER SUPPLY

LIGHTING SHEET	STATION	OFFSET	LOCATION	TYPE 2 (PED) LT ONLY 240 V	TYPE 2 (PED) LT+ SIG 240/120V	TYPE 2 (PED) LT ONLY 480V	TYPE 2 (PED) LT+ SIG 480/120V	LIGHTING SHEET	STATION	OFFSET	LOCATION	BREAKERS (AMPS) CONTROL LETTER	MAIN	CIRCUIT 1	CIRCUIT 2	CIRCUIT 3	CIRCUIT 4	BASE MOUNT 4 CIR. 240V	BASE MOUNT 4 CIR. 480 V
1	2+75	34.3′ LT	WB ON RAMP	1				2	64+40	28.0′ RT	RTE A	A		15	15	15		1	
4	10+01	25.2′ RT	RTE NN	1				4	10+16	23.1′ RT	RTE NN	B		15	15	15		1	
TOTALS, EACH:				2				TOTALS, EACH:										2	

DISCLAIMER
THE PROFESSIONAL WHOSE SIGNATURE AND PERSONAL SEAL APPEAR HEREON ASSUMES RESPONSIBILITY ONLY FOR WHAT APPEARS ON THIS PAGE, AND DISCLAIMS (PURSUANT TO SECTION 327.411 RSMO) SPECIFICATION, ESTIMATES, REPORTS, OR OTHER DOCUMENTS OR INSTRUMENTS NOT SEALED BY THE UNDERSIGNED PROFESSIONAL RELATING TO OR INTENDED TO BE USED FOR ANY PART OR PARTS OF THE PROJECT TO WHICH THIS PAGE REFERS.

1″ CABLE CONDUIT 2 CONDUCTORS & 1 BARE NEUTRAL

LIGHTING SHEET	CONT.	CIRCUIT	FROM	TO	#8 AWG FEET	CABLE #2 AWG 1 COND. FEET
1	A	1	CONT A	A1-2	1450	
1	A	1	A1-2	A1-1	760	
1,2,3	A	2	CONT A	A2-1	1530	
3	A	2	A2-1	A2-2	995	
1,2	A	3	CONT A	A3-1	145	
2	A	3	A3-1	A3-2	355	
1,2	A		CONT A	PSA		2370
1	A		PSA	EX PS		120
4	B	1	CONT B	B1-1	163	
4	B	1	B1-1	B1-2	243	
4	B	1	B1-2	B1-3	497	
4	B	2	CONT B	B2-1	510	
4	B	2	B2-1	B2-2	224	
4	B	3	CONT B	B3-1	359	
4	B	3	B3-1	B3-2	246	
4	B	3	B3-2	B3-3	454	
4	B		CONT B	PSA		30
4	B		PSA	EX PS		120
SUBTOTALS:					7931	2640
5% FOR SNAKING					397	132
PAY TOTALS:					8330	2770

TRENCHING	TYPE I	TYPE II	TYPE III
	1200		59
	510		76
	1350		228
	815		101
	26		90
	115		37
	22		2
	102		11
	319		36
	323		36
	85		9
	193		21
	104		12
	281		31
TRENCHING SUBTOTALS:	5445		749
TRENCHING PAY TOTALS:	5445		749

PULL BOXES

LIGHTING SHEET	STATION	OFFSET	LOCATION	P.B. NO.	CONCRETE DOUBLE TYPE A	CONCRETE DOUBLE TYPE B	CONCRETE STANDARD	PREFORM CL 1	PREFORM CL 2	PREFORM CL 3	DRAIN TYPE I
1	2+34	12.3′ LT	EX US 60	1A			1				I
1	654+16	78.7′ LT	EX US 60	2A			1				I
1	654+15	106.0′ RT	EX US 60	3A			1				I
1	5+17	11.4′ LT	WB ON-RAMP	4A			1				I
2	10+27	15.2′ LT.	WB ON-RAMP	13A			1				I
2	65+48	61.6′ RT	RTE A	5A			1				I
2	66+33	33.0′ RT	RTE A	6A			1				I
2	68+00	33.2′ RT	RTE A	7A			1				I
2	68+20	32.9′ RT	RTE A	8A			1				I
2	68+20	35.0′ LT	RTE A	9A			1				I
2	64+88	73.4′ LT	RTE A	10A			1				I
2	7+18	12.5′ LT	WB OFF-RAMP	11A			1				I
3	686+10	72.2′ LT	EX US 54	12A			1				I
4	10+29	25.0′ RT	RTE NN	1B			1				I
4	93+37	25.4′ LT	RTE A	2B			1				I
4	93+40	31.1′ RT	RTE A	3B			1				I
4	11+11	23.9′ LT	RTE NN	5B			1				I
4	14+36	16.0′ LT	RTE NN	6B			1				I
4	14+67	18.0′ LT	RTE NN	7B			1				I
4	11+11	17.8′ RT	RTE NN	1B			1				I
SUBTOTALS:							20				
PAY TOTALS:							20				

LIGHTING PLAN
SHEET 5 OF 5

EFK•Moen
Civil Engineering Design
13523 Barrett Parkway Dr
Suite 250
St. Louis, MO 63021
Phone 314-394-3100
Fax 314-394-3199
Missouri Certificate of Authority: 001578

MISSOURI HIGHWAYS AND TRANSPORTATION COMMISSION
105 WEST CAPITOL
JEFFERSON CITY, MO 65102
1-888-ASK-MODOT (1-888-275-6636)

STATE OF MISSOURI
PAUL JOSEPH KRONLAGE NUMBER EN 023328
REGISTERED PROFESSIONAL ENGINEER
09/04/2024 12:38:37 PM
Paul J. Kronlage - Civil
MO PE - 023328

DATE PREPARED 9/4/2024
ROUTE 60 | STATE MO
DISTRICT SW | SHEET NO. 184
COUNTY WEBSTER
JOB NO. J7P3425C
CONTRACT ID. .
PROJECT NO. .
BRIDGE NO. .

NO	DESCRIPTION	DATE

IF A SEAL IS PRESENT ON THIS SHEET IT HAS BEEN ELECTRONICALLY SEALED AND DATED.

REV.

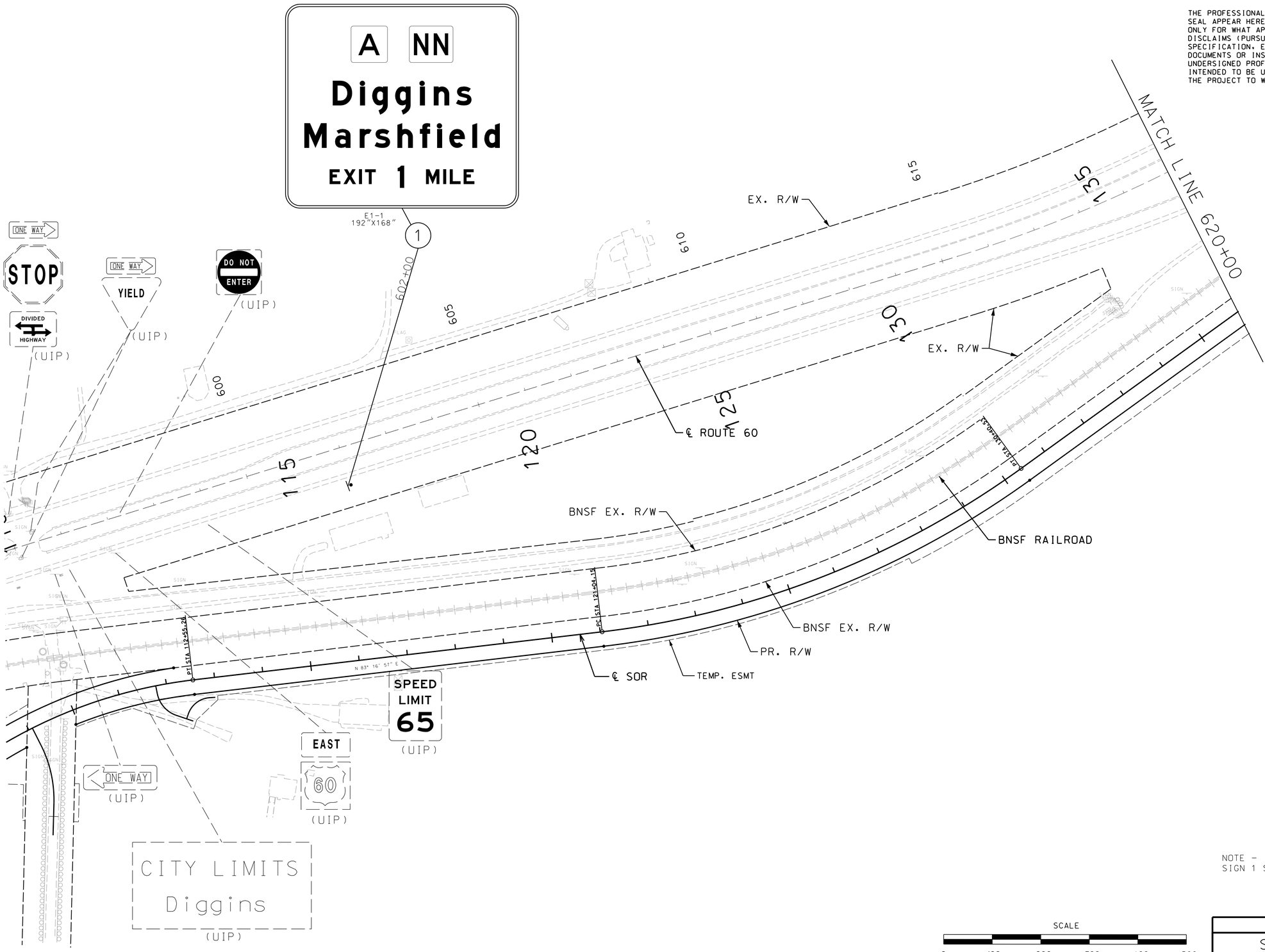

DISCLAIMER
THE PROFESSIONAL WHOSE SIGNATURE AND PERSONAL SEAL APPEAR HEREON ASSUMES RESPONSIBILITY ONLY FOR WHAT APPEARS ON THIS PAGE, AND DISCLAIMS (PURSUANT TO SECTION 327.411 RSMO) SPECIFICATION, ESTIMATES, REPORTS, OR OTHER DOCUMENTS OR INSTRUMENTS NOT SEALED BY THE UNDERSIGNED PROFESSIONAL RELATING TO OR INTENDED TO BE USED FOR ANY PART OR PARTS OF THE PROJECT TO WHICH THIS PAGE REFERS.

NOTE –
SIGN 1 SHOWN ON THIS SHEET

SCALE
0 100 200 300 400 500

SIGNING PLAN
SHEET 1 OF 22

STATE OF MISSOURI
PAUL JOSEPH KRONLAGE
NUMBER EN 023328
REGISTERED PROFESSIONAL ENGINEER

07/31/2024 12:49:31 PM
Paul J. Kronlage - Civil
MO PE - 023328

DATE PREPARED	
7/31/2024	
ROUTE	STATE
60	MO
DISTRICT	SHEET NO.
SW	185

COUNTY
WEBSTER
JOB NO.
J7P3425C
CONTRACT ID.
PROJECT NO.
BRIDGE NO.

DATE	DESCRIPTION

IF A SEAL IS PRESENT ON THIS SHEET IT HAS BEEN ELECTRONICALLY SEALED AND DATED.

MISSOURI HIGHWAYS AND TRANSPORTATION COMMISSION

105 WEST CAPITOL
JEFFERSON CITY, MO 65102
1-888-ASK-MODOT (1-888-275-6636)

EFK•Moen
Civil Engineering Design
13523 Barrett Parkway Dr
Suite 250
St. Louis, MO 63021
Phone 314-394-3100
Fax 314-394-3199
Missouri Certificate of Authority: 001578

REV.

Z:\21047 CMT Route 60 at Route A\DGN\Design\Final\Plot Sheets\185_SN_001_J7P3425_i100.dgn 9:56:59 AM 7/31/2024

DISCLAIMER
THE PROFESSIONAL WHOSE SIGNATURE AND PERSONAL SEAL APPEAR HEREON ASSUMES RESPONSIBILITY ONLY FOR WHAT APPEARS ON THIS PAGE, AND DISCLAIMS (PURSUANT TO SECTION 327.411 RSMO) SPECIFICATION, ESTIMATES, REPORTS, OR OTHER DOCUMENTS OR INSTRUMENTS NOT SEALED BY THE UNDERSIGNED PROFESSIONAL RELATING TO OR INTENDED TO BE USED FOR ANY PART OR PARTS OF THE PROJECT TO WHICH THIS PAGE REFERS.

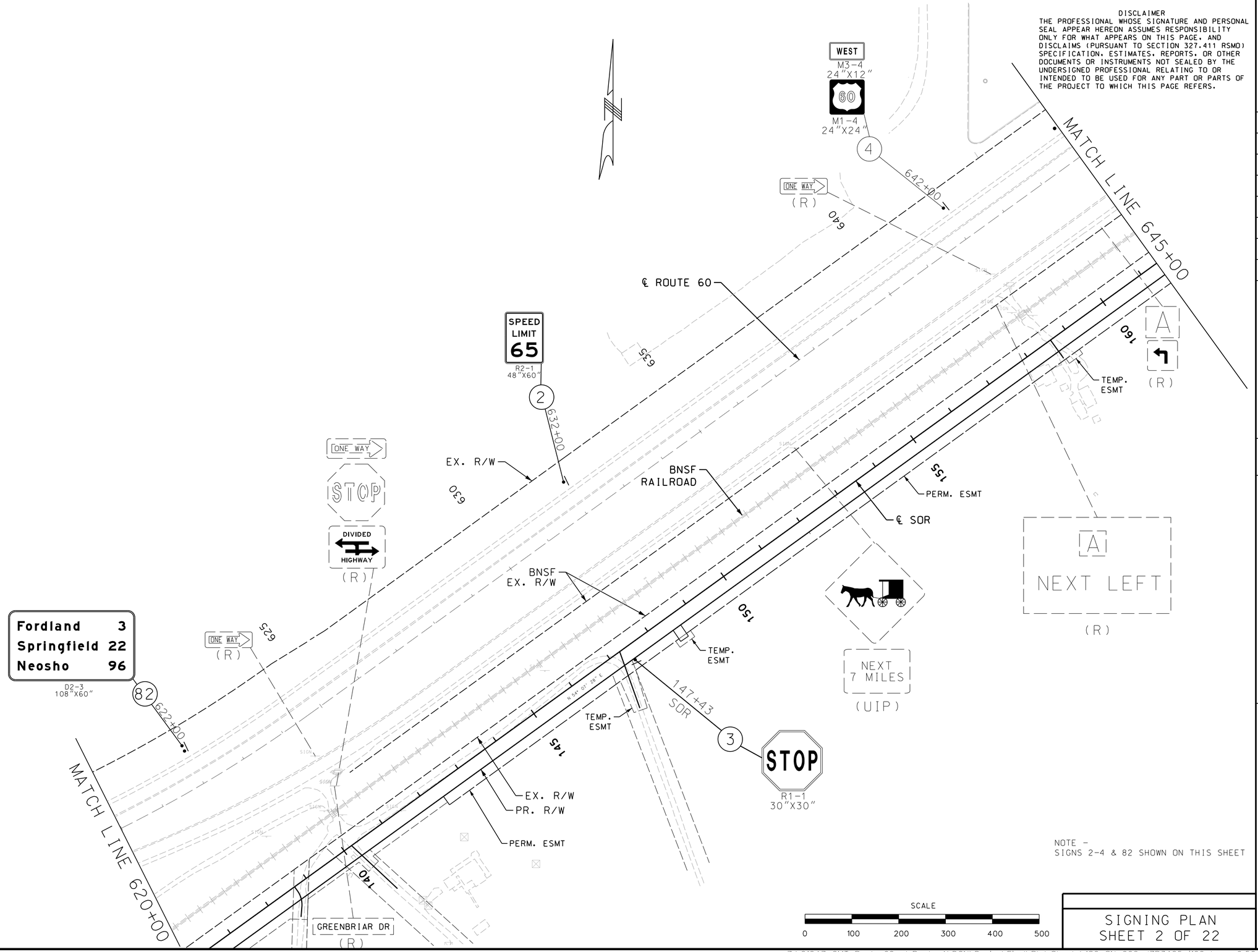

NOTE –
SIGNS 2-4 & 82 SHOWN ON THIS SHEET

SCALE
0 100 200 300 400 500

SIGNING PLAN
SHEET 2 OF 22

STATE OF MISSOURI
PAUL JOSEPH KRONLAGE
NUMBER EN 023328
REGISTERED PROFESSIONAL ENGINEER

07/31/2024 12:50:26 PM
Paul J. Kronlage - Civil
MO PE - 023328

DATE PREPARED	
7/31/2024	
ROUTE	STATE
60	MO
DISTRICT	SHEET NO.
SW	186

COUNTY
WEBSTER
JOB NO.
J7P3425C
CONTRACT ID.
PROJECT NO.
BRIDGE NO.

DESCRIPTION	DATE

IF A SEAL IS PRESENT ON THIS SHEET IT HAS BEEN ELECTRONICALLY SEALED AND DATED.

MISSOURI HIGHWAYS AND TRANSPORTATION COMMISSION
105 WEST CAPITOL
JEFFERSON CITY, MO 65102
1-888-ASK-MODOT (1-888-275-6636)

EFK•Moen
Civil Engineering Design
13523 Barrett Parkway Dr
Suite 250
St. Louis, MO 63021
Phone 314-394-3100
Fax 314-394-3199
Missouri Certificate of Authority: 001578

REV.

Z:\21047 CMT Route 60 at Route A\DGN\Design\Final\Plot Sheets\186_SN_002_J7P3425_i100.dgn 9:56:59 AM 7/31/2024

DISCLAIMER
THE PROFESSIONAL WHOSE SIGNATURE AND PERSONAL SEAL APPEAR HEREON ASSUMES RESPONSIBILITY ONLY FOR WHAT APPEARS ON THIS PAGE, AND DISCLAIMS (PURSUANT TO SECTION 327.411 RSMO) SPECIFICATION, ESTIMATES, REPORTS, OR OTHER DOCUMENTS OR INSTRUMENTS NOT SEALED BY THE UNDERSIGNED PROFESSIONAL RELATING TO OR INTENDED TO BE USED FOR ANY PART OR PARTS OF THE PROJECT TO WHICH THIS PAGE REFERS.

LEGEND
- DELINEATOR, DOUBLE STACKED WHITE
- DELINEATOR, WHITE
- DELINEATOR, YELLOW
- DELINEATOR, YELLOW/RED
- DELINEATOR, WHITE/RED

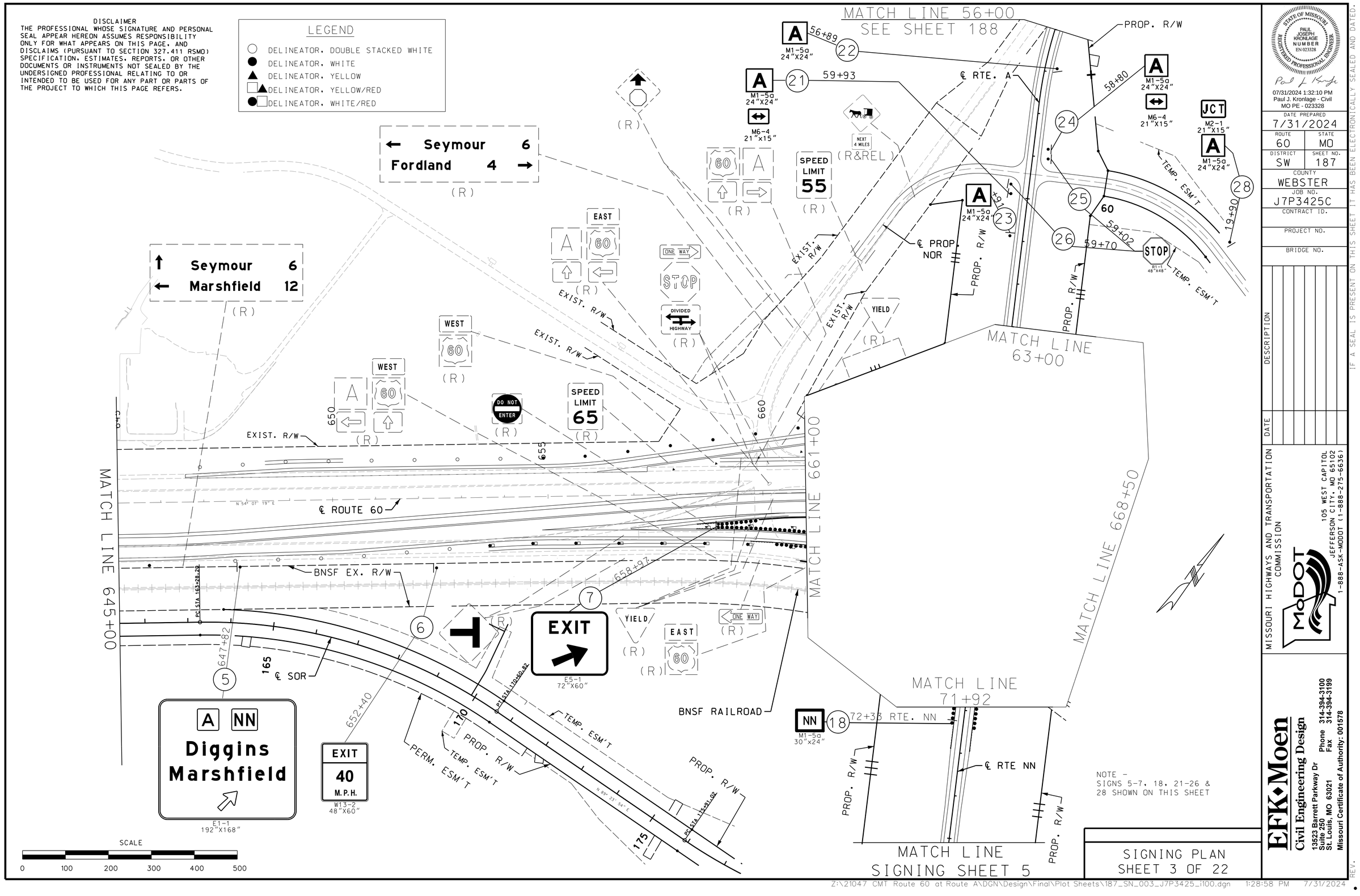

STATE OF MISSOURI
PAUL JOSEPH KRONLAGE NUMBER EN 023328
REGISTERED PROFESSIONAL ENGINEER
07/31/2024 1:32:10 PM
Paul J. Kronlage - Civil
MO PE - 023328

DATE PREPARED	
7/31/2024	
ROUTE 60	STATE MO
DISTRICT SW	SHEET NO. 187
COUNTY WEBSTER	
JOB NO. J7P3425C	
CONTRACT ID.	
PROJECT NO.	
BRIDGE NO.	

IF A SEAL IS PRESENT ON THIS SHEET IT HAS BEEN ELECTRONICALLY SEALED AND DATED.

DATE	DESCRIPTION	REV.

MISSOURI HIGHWAYS AND TRANSPORTATION COMMISSION
105 WEST CAPITOL
JEFFERSON CITY, MO 65102
1-888-ASK-MODOT (1-888-275-6636)

EFK•Moen
Civil Engineering Design
13523 Barrett Parkway Dr
Suite 250
St. Louis, MO 63021
Phone 314-394-3100
Fax 314-394-3199
Missouri Certificate of Authority: 001578

SIGNING PLAN
SHEET 3 OF 22

Z:\21047 CMT Route 60 at Route A\DGN\Design\Final\Plot Sheets\187_SN_003_J7P3425_i100.dgn 1:28:58 PM 7/31/2024

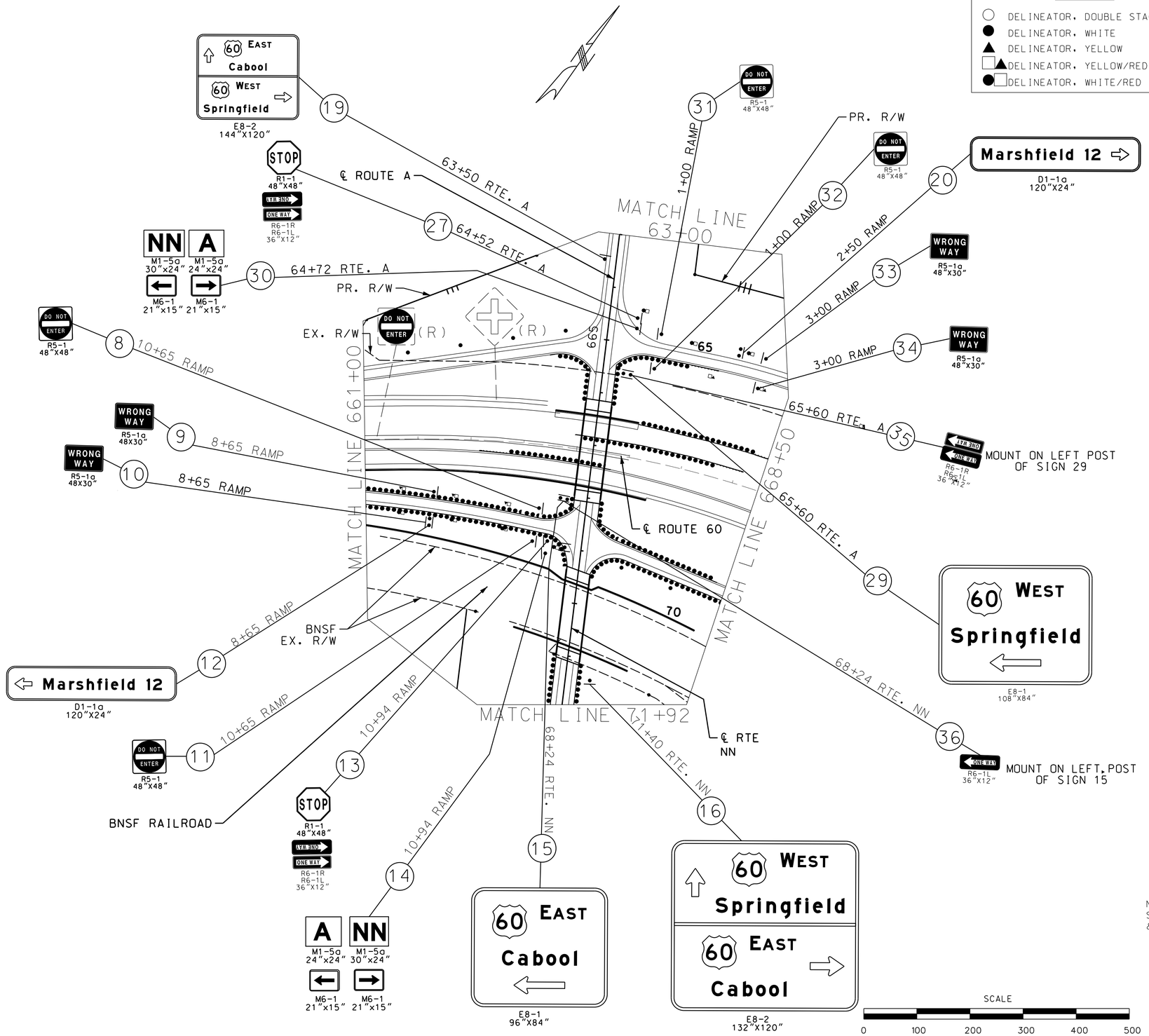

DISCLAIMER

THE PROFESSIONAL WHOSE SIGNATURE AND PERSONAL SEAL APPEAR HEREON ASSUMES RESPONSIBILITY ONLY FOR WHAT APPEARS ON THIS PAGE. AND DISCLAIMS (PURSUANT TO SECTION 327.411 RSMO) SPECIFICATION. ESTIMATES. REPORTS. OR OTHER DOCUMENTS OR INSTRUMENTS NOT SEALED BY THE UNDERSIGNED PROFESSIONAL RELATING TO OR INTENDED TO BE USED FOR ANY PART OR PARTS OF THE PROJECT TO WHICH THIS PAGE REFERS.

NOTE –
SIGNS 8-17, 19-20, 27
& 29-36 SHOWN ON THIS SHEET

SIGNING PLAN
SHEET 4 OF 22

STATE OF MISSOURI
PAUL JOSEPH KRONLAGE NUMBER EN 023328
REGISTERED PROFESSIONAL ENGINEER

07/31/2024 1:32:37 PM
Paul J. Kronlage - Civil
MO PE - 023328

DATE PREPARED 7/31/2024
ROUTE 60 | STATE MO
DISTRICT SW | SHEET NO. 188
COUNTY WEBSTER
JOB NO. J7P3425C
CONTRACT ID.
PROJECT NO.
BRIDGE NO.

DESCRIPTION | DATE | REV.

IF A SEAL IS PRESENT ON THIS SHEET IT HAS BEEN ELECTRONICALLY SEALED AND DATED.

MISSOURI HIGHWAYS AND TRANSPORTATION COMMISSION
105 WEST CAPITOL
JEFFERSON CITY, MO 65102
1-888-ASK-MODOT (1-888-275-6636)

EFK•Moen
Civil Engineering Design
13523 Barrett Parkway Dr
Suite 250
St. Louis, MO 63021
Phone 314-394-3100
Fax 314-394-3199
Missouri Certificate of Authority: 001578

Z:\21047 CMT Route 60 at Route A\DGN\Design\Final\Plot Sheets\188_SN_004_J7P3425_i100.dgn 1:28:59 PM 7/31/2024

LEGEND

- DELINEATOR, DOUBLE STACKED WHITE
- DELINEATOR, WHITE
- DELINEATOR, YELLOW
- DELINEATOR, YELLOW/RED
- DELINEATOR, WHITE/RED

DISCLAIMER
THE PROFESSIONAL WHOSE SIGNATURE AND PERSONAL SEAL APPEAR HEREON ASSUMES RESPONSIBILITY ONLY FOR WHAT APPEARS ON THIS PAGE, AND DISCLAIMS (PURSUANT TO SECTION 327.411 RSMO) SPECIFICATION, ESTIMATES, REPORTS, OR OTHER DOCUMENTS OR INSTRUMENTS NOT SEALED BY THE UNDERSIGNED PROFESSIONAL RELATING TO OR INTENDED TO BE USED FOR ANY PART OR PARTS OF THE PROJECT TO WHICH THIS PAGE REFERS.

STATE OF MISSOURI
PAUL JOSEPH KRONLAGE NUMBER EN 023328
REGISTERED PROFESSIONAL ENGINEER

07/31/2024 12:52:45 PM
Paul J. Kronlage - Civil
MO PE - 023328

DATE PREPARED 7/31/2024

ROUTE	STATE
60	MO
DISTRICT	SHEET NO.
SW	189

COUNTY: WEBSTER
JOB NO.: J7P3425C
CONTRACT ID.:
PROJECT NO.:
BRIDGE NO.:

IF A SEAL IS PRESENT ON THIS SHEET IT HAS BEEN ELECTRONICALLY SEALED AND DATED.

REV.	DESCRIPTION	DATE

MISSOURI HIGHWAYS AND TRANSPORTATION COMMISSION
105 WEST CAPITOL
JEFFERSON CITY, MO 65102
1-888-ASK-MODOT (1-888-275-6636)

EFK•Moen
Civil Engineering Design
13523 Barrett Parkway Dr
Suite 250
St. Louis, MO 63021
Phone 314-394-3100
Fax 314-394-3199
Missouri Certificate of Authority: 001578

SCALE
0 100 200 300 400 500

NOTE -
SIGNS 37-39 & 41 SHOWN ON THIS SHEET

SIGNING PLAN
SHEET 5 OF 22

Z:\21047 CMT Route 60 at Route A\DGN\Design\Final\Plot Sheets\189_SN_005_J7P3425_I100.dgn 9:57:01 AM 7/31/2024

DISCLAIMER
THE PROFESSIONAL WHOSE SIGNATURE AND PERSONAL SEAL APPEAR HEREON ASSUMES RESPONSIBILITY ONLY FOR WHAT APPEARS ON THIS PAGE, AND DISCLAIMS (PURSUANT TO SECTION 327.411 RSMO) SPECIFICATION, ESTIMATES, REPORTS, OR OTHER DOCUMENTS OR INSTRUMENTS NOT SEALED BY THE UNDERSIGNED PROFESSIONAL RELATING TO OR INTENDED TO BE USED FOR ANY PART OR PARTS OF THE PROJECT TO WHICH THIS PAGE REFERS.

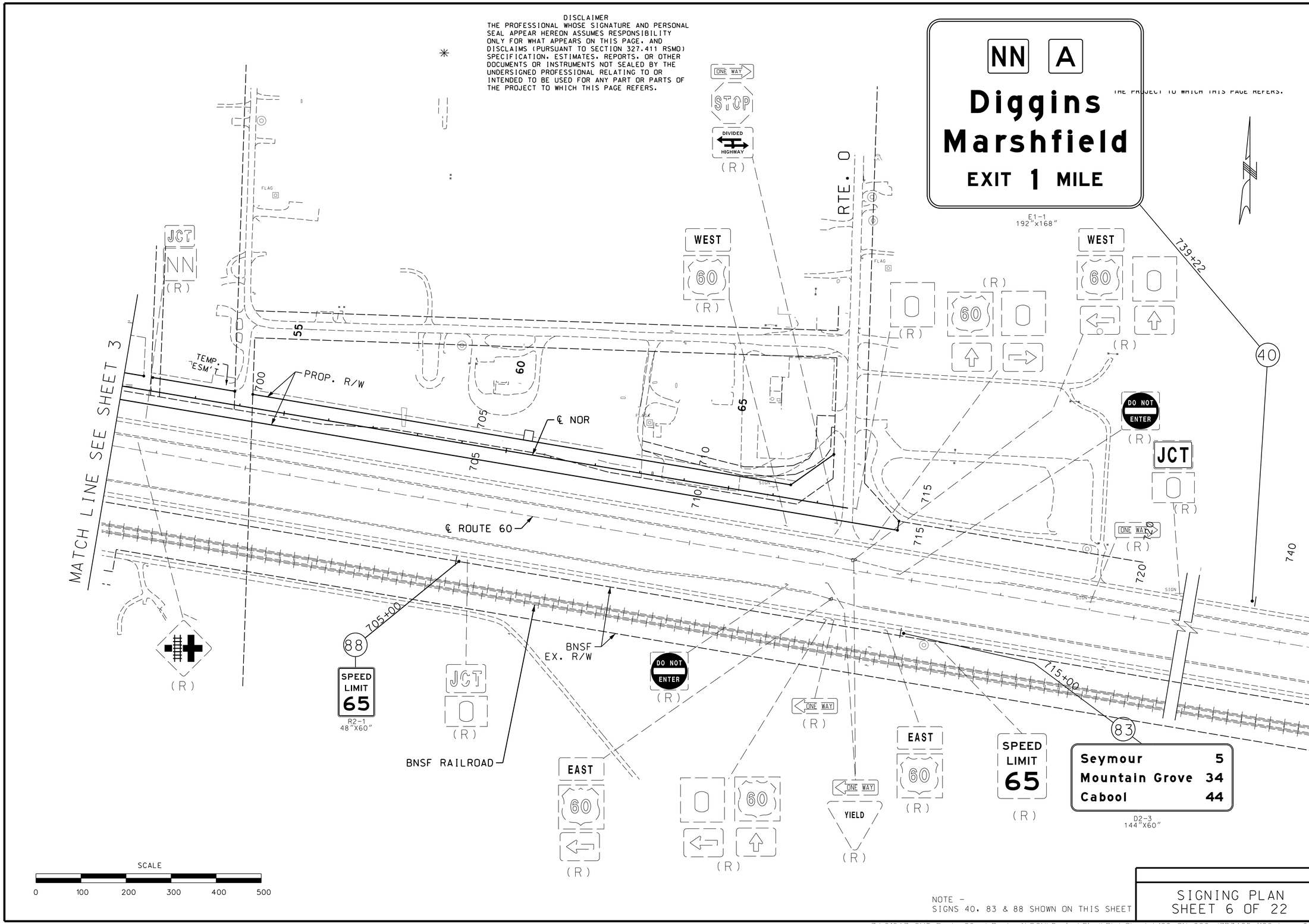

NOTE -
SIGNS 40, 83 & 88 SHOWN ON THIS SHEET

SIGNING PLAN
SHEET 6 OF 22

STATE OF MISSOURI
PAUL JOSEPH KRONLAGE
NUMBER EN 023328
REGISTERED PROFESSIONAL ENGINEER

07/31/2024 12:53:34 PM
Paul J. Kronlage - Civil
MO PE - 023328

DATE PREPARED	
7/31/2024	
ROUTE 60	STATE MO
DISTRICT SW	SHEET NO. 190
COUNTY WEBSTER	
JOB NO. J7P3425C	
CONTRACT ID.	
PROJECT NO.	
BRIDGE NO.	

DATE	DESCRIPTION

MISSOURI HIGHWAYS AND TRANSPORTATION COMMISSION
MoDOT
105 WEST CAPITOL
JEFFERSON CITY, MO 65102
1-888-ASK-MODOT (1-888-275-6636)

EFK•Moen
Civil Engineering Design
13523 Barrett Parkway Dr
Suite 250
St. Louis, MO 63021
Phone 314-394-3100
Fax 314-394-3199
Missouri Certificate of Authority: 001578

IF A SEAL IS PRESENT ON THIS SHEET IT HAS BEEN ELECTRONICALLY SEALED AND DATED.

REV.

Z:\21047 CMT Route 60 at Route A\DGN\Design\Final\Plot Sheets\190_SN_006_J7P3425_i100.dgn 9:57:02 AM 7/31/2024

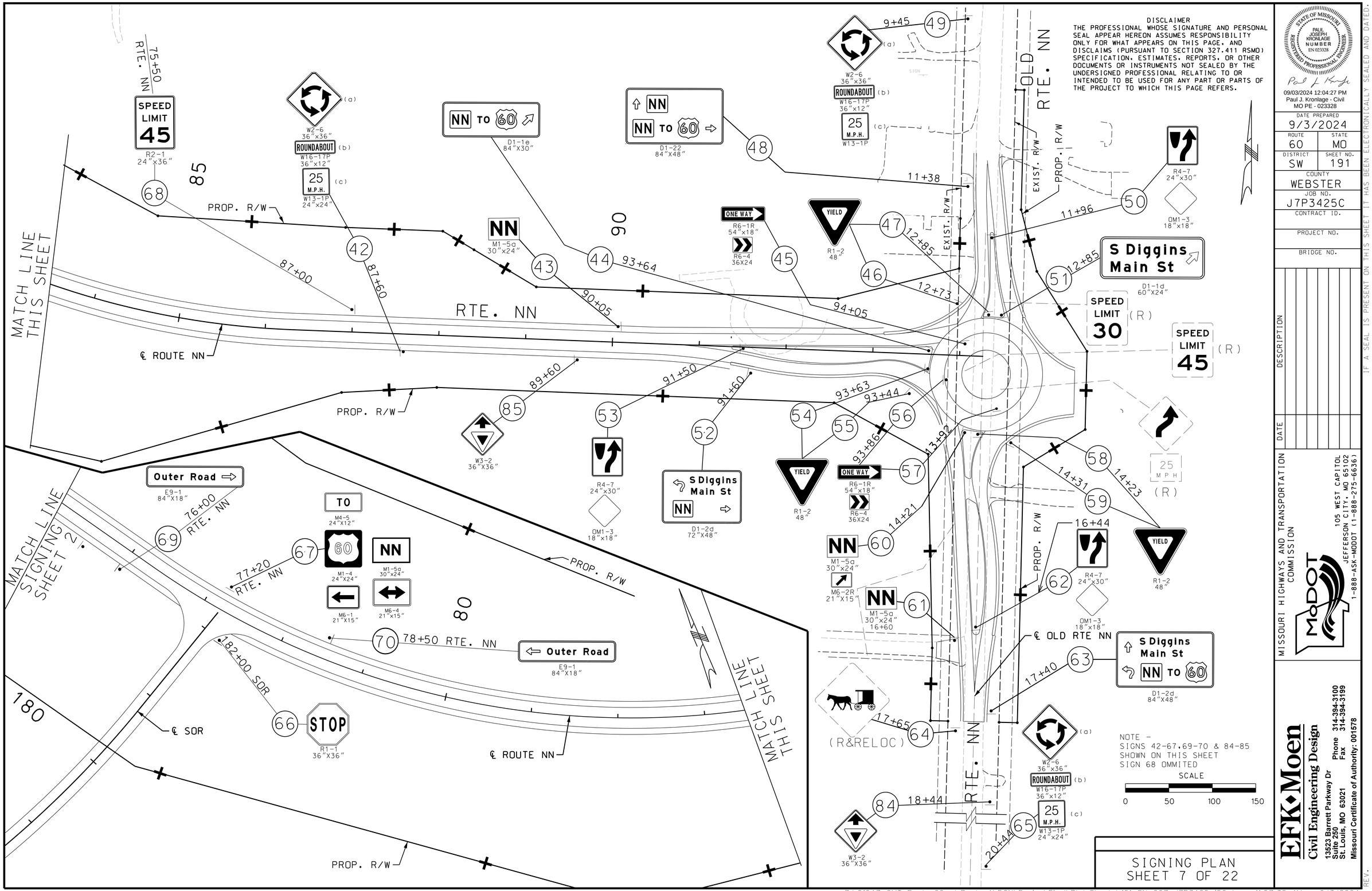

DISCLAIMER
THE PROFESSIONAL WHOSE SIGNATURE AND PERSONAL SEAL APPEAR HEREON ASSUMES RESPONSIBILITY ONLY FOR WHAT APPEARS ON THIS PAGE, AND DISCLAIMS (PURSUANT TO SECTION 327.411 RSMO) SPECIFICATION, ESTIMATES, REPORTS, OR OTHER DOCUMENTS OR INSTRUMENTS NOT SEALED BY THE UNDERSIGNED PROFESSIONAL RELATING TO OR INTENDED TO BE USED FOR ANY PART OR PARTS OF THE PROJECT TO WHICH THIS PAGE REFERS.

SIGNING PLAN
SHEET 7 OF 22

STATE OF MISSOURI
PAUL JOSEPH KRONLAGE NUMBER EN 023328
REGISTERED PROFESSIONAL ENGINEER
09/03/2024 12:04:27 PM
Paul J. Kronlage - Civil
MO PE - 023328

DATE PREPARED 9/3/2024
ROUTE 60 | STATE MO
DISTRICT SW | SHEET NO. 191
COUNTY WEBSTER
JOB NO. J7P3425C
CONTRACT ID.
PROJECT NO.
BRIDGE NO.

DESCRIPTION | DATE

MISSOURI HIGHWAYS AND TRANSPORTATION COMMISSION
105 WEST CAPITOL
JEFFERSON CITY, MO 65102
1-888-ASK-MODOT (1-888-275-6636)

EFK•Moen
Civil Engineering Design
13523 Barrett Parkway Dr
Suite 250
St. Louis, MO 63021
Phone 314-394-3100
Fax 314-394-3199
Missouri Certificate of Authority: 001578

IF A SEAL IS PRESENT ON THIS SHEET IT HAS BEEN ELECTRONICALLY SEALED AND DATED.

REV.

Z:\21047 CMT Route 60 at Route A\DGN\Design\Final\Plot Sheets\191_SN_007_J7P3425_i50.dgn 11:57:30 AM 9/3/2024

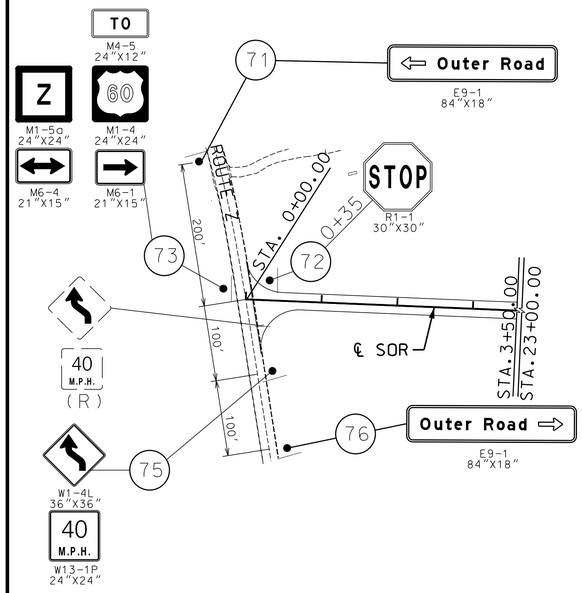

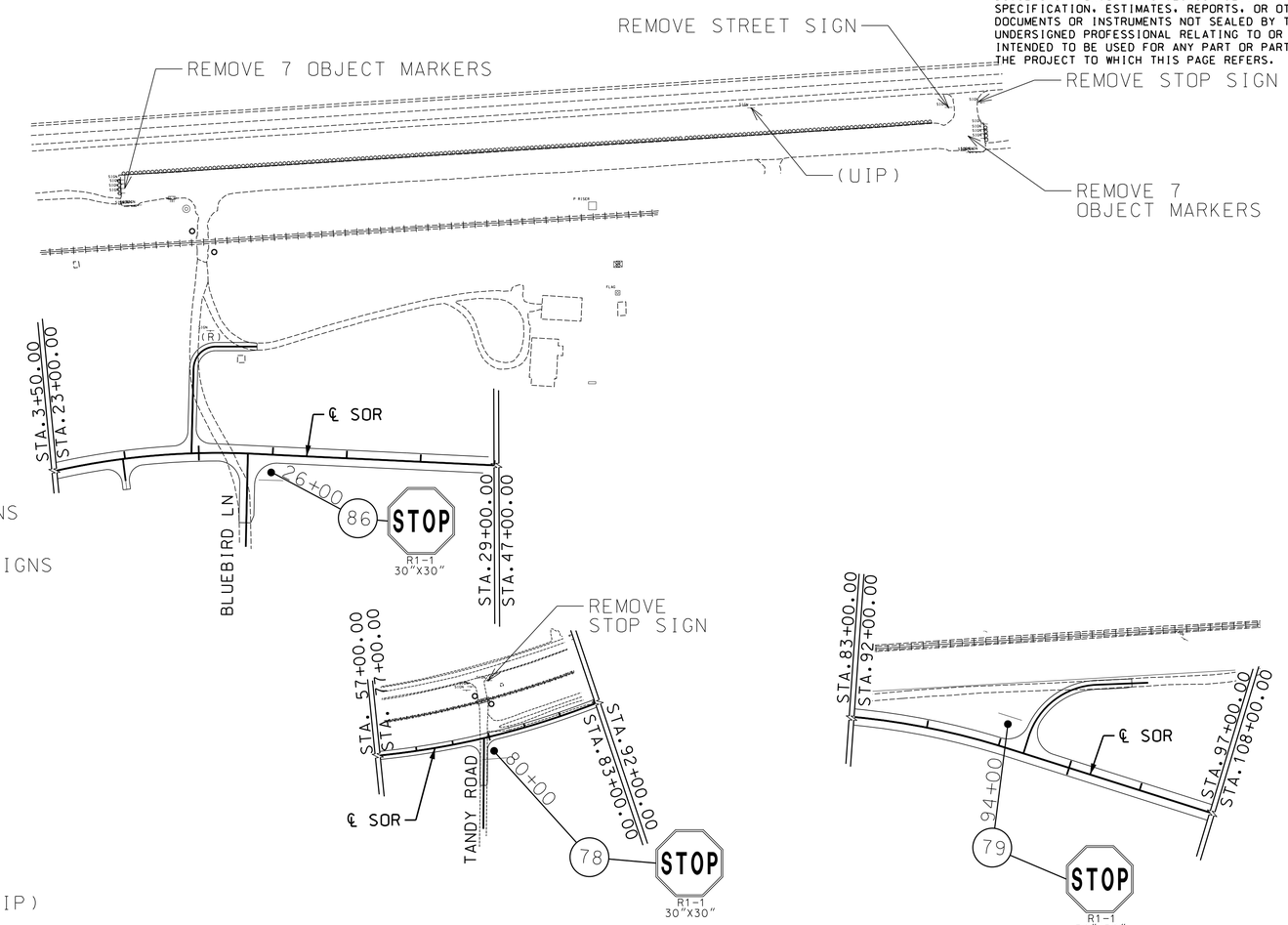

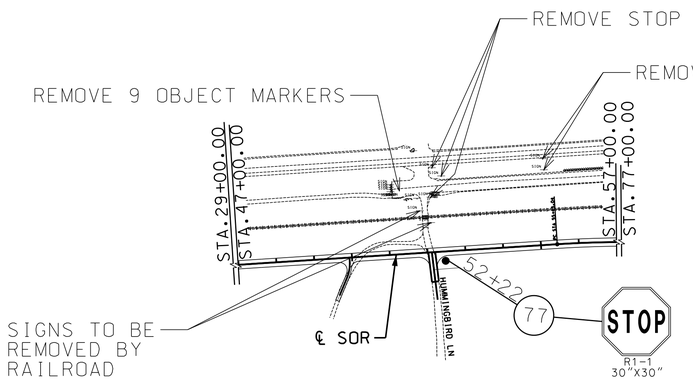

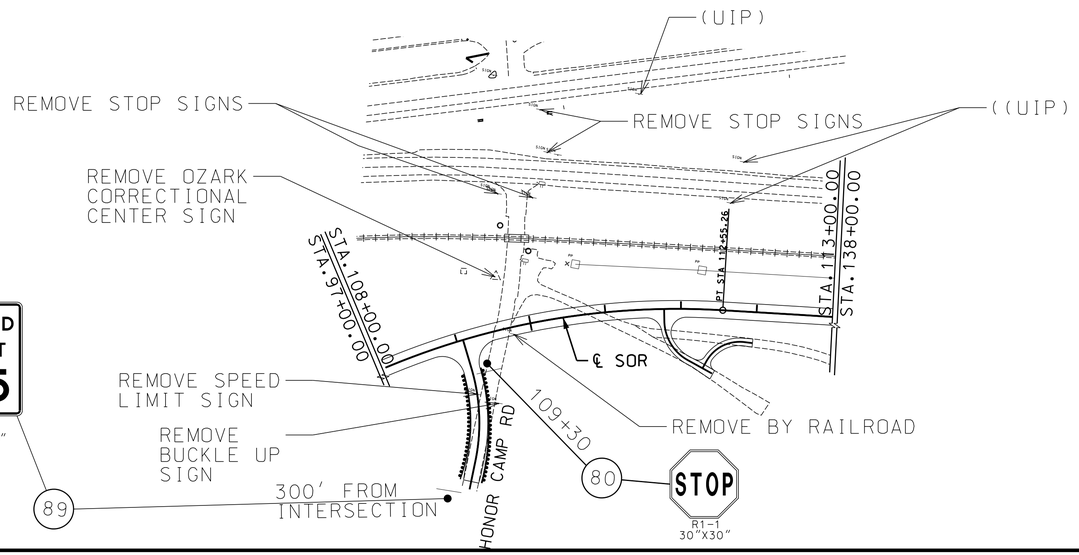

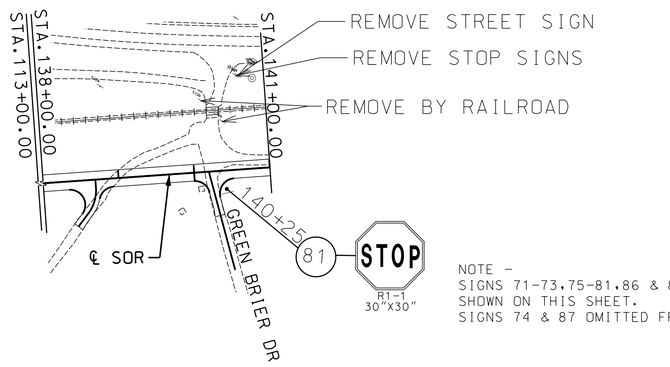

NOTE -
SIGNS 71-73,75-81,86 & 89
SHOWN ON THIS SHEET.
SIGNS 74 & 87 OMITTED FROM PLANS

SIGNING PLAN
SHEET 8 OF 22

DISCLAIMER
THE PROFESSIONAL WHOSE SIGNATURE AND PERSONAL SEAL APPEAR HEREON ASSUMES RESPONSIBILITY ONLY FOR WHAT APPEARS ON THIS PAGE, AND DISCLAIMS (PURSUANT TO SECTION 327.411 RSMO) SPECIFICATION, ESTIMATES, REPORTS, OR OTHER DOCUMENTS OR INSTRUMENTS NOT SEALED BY THE UNDERSIGNED PROFESSIONAL RELATING TO OR INTENDED TO BE USED FOR ANY PART OR PARTS OF THE PROJECT TO WHICH THIS PAGE REFERS.

STATE OF MISSOURI
PAUL JOSEPH KRONLAGE
NUMBER EN 023328
REGISTERED PROFESSIONAL ENGINEER

Paul J. Kronlage
07/31/2024 12:54:47 PM
Paul J. Kronlage - Civil
MO PE - 023328

DATE PREPARED	
7/31/2024	
ROUTE	STATE
60	MO
DISTRICT	SHEET NO.
SW	192
COUNTY	
WEBSTER	
JOB NO.	
J7P3425C	
CONTRACT ID.	
PROJECT NO.	
BRIDGE NO.	

DATE	DESCRIPTION

IF A SEAL IS PRESENT ON THIS SHEET IT HAS BEEN ELECTRONICALLY SEALED AND DATED.

MISSOURI HIGHWAYS AND TRANSPORTATION COMMISSION
105 WEST CAPITOL
JEFFERSON CITY, MO 65102
1-888-ASK-MODOT (1-888-275-6636)

EFK•Moen
Civil Engineering Design
13523 Barrett Parkway Dr
Suite 250
St. Louis, MO 63021
Phone 314-394-3100
Fax 314-394-3199
Missouri Certificate of Authority: 001578

REV.

EFFECTIVE: 07-01-2024

SIGNS (902 SIGNAL SIGNS TABULATED ON D-37A SHEET)						CONCRETE FOOTINGS EMBEDDED	STRUCTURAL STEEL POSTS *						PIPE POSTS *					BACKING BARS **				U-CHANNEL POST	PERFORATED SQUARE STEEL TUBE													REMARKS AND OTHER REQUIRED ITEMS
																							2 IN. POST						2.5 IN. POST						BREAK-AWAY ASSEMBLY	
																									ANCHORS					ANCHORS						
SIGN NO.	SIGN SIZE	STATION	HORZ CLEAR IF NOT STD	LOCATION	SIGN DTL. SHT. NO.	ITEM NO. 9031010	POST DES NO.	POST NO.1	POST NO.2	POST NO.3	LBS PER FT	TOTAL ITEM NO. 9031210	PIPE SIZE	POST NO.1	POST NO.2	LBS PER FT	TOTAL ITEM NO. 9031220	2" X 3/8" BARS @ 2.55 LBS PER FT NO. EACH	LGTH	TOTAL	TOTAL	ITEM NO. 9031250A	POST NO.1	POST NO.2	TOTAL ITEM NO. 9031270A	DRIVEN 12-GA. ITEM NO. 9031271A	DRIVEN 7-GA. ITEM NO. 9031273A	CONCRETE 7-GA. ITEM NO. 9031274	POST NO.1	POST NO.2	TOTAL ITEM NO. 9031280	2.25" INSERT (6 FT) ITEM NO. 9031272A	DRIVEN 7-GA. ITEM NO. 9031281A	CONCRETE 7-GA. ITEM NO. 9031285	ITEM NO. 9031241	
						CY		LF	LF	LF		LBS	IN.	LF	LF		LBS	EACH	IN.	LF	LBS	LF	LF	LF	LF	EA	EA	EA	LF	LF	LF	EA	EA	EA	EA	
1	192"x168"	602+00		ROUTE 60	13	2.74	5	27.25	28.25		26	1443.00																									DELINEATOR, DOUBLE STACKED
2	48"X60"	632+00		ROUTE 60		0.36							4	18.50		10.79	199.62																				WHITE
3	30"X30"	147+43		SOR																									16		16			1		29 EACH
4	ASSBLY	642+00		ROUTE 60		0.13							2.5	15.25		5.79	88.30																			
5	192"X168"	647+82		ROUTE 60	14	2.86	5	27.25	28.75		26	1456.00																									DELINEATOR, WHITE
6	48"X60"	652+40	8'	ROUTE 60		0.36							4	17.25		10.79	186.13																			29 EACH
7	72"X60"	658+97	5.8'	ROUTE 60	17	0.72	1	18.75	16.75		9	319.50																									
8	48"X48"	10+65		RAMP		0.13							4	17.50		10.79	188.83																			DELINEATOR, YELLOW
9	48"X30"	8+65		RAMP		0.13							2.5	14.75																						9 EACH
10	48"X30"	8+65		RAMP		0.13							2.5	15.25		5.79	88.30																			
11	48"X48"	10+65		RAMP		0.13							4	17.50		10.79	188.83																			DELINEATOR, YELLOW/RED
12	120"x24"	8+65		RAMP	17	0.72	1	13.75	16.00		9	267.75																									17 EACH
13	48"X48"	10+94		RAMP		0.36							4	18.75		10.79	202.31																			
14	ASSBLY	10+94		RAMP		0.36							4	18.50		10.79	199.62	2	86	14.3	36.6															DELINEATOR, WHITE/RED
15/36	ASSBLY	68+97		ROUTE A	17	1.08	2	20.25	21.75		15	630.00																									28 EACH
16	132"x120"	71+40		ROUTE A	20	1.08	2	22.50	24.75		15	708.75																									
17	24"X36"	51+00		ROUTE A																									16		16			1		
18	30"X24"	72+33		ROUTE A																									16		16			1		
19	144"x120"	63+50		ROUTE A	20	1.48	3	23.50	25.25		18	877.50																									
20	120"x24"	2+50		RAMP	17	0.72							4	16.25	18.00	10.79	369.56																			
21	ASSBLY	59+93		ROUTE A																									16		16			1		
22	24"X24"	56+89		ROUTE A																									16		16			1		
23	24"X24"	60+91		ROUTE A																									16		16			1		
24	ASSBLY	58+80		ROUTE A																									16		16			1		
25	48"X48"	59+02		ROUTE A																									16		16			1		
26	48"X48"	59+70		ROUTE A																									16		16			1		
27	48"X48"	64+52		ROUTE A		0.36							4	19.00		10.79	205.01																			
28	ASSBLY	19+90		SIDEROAD																									16		16			1		
29/35	ASSBLY	65+60		ROUTE A	17	1.02	2	20.50	22.00		15	637.50																									
30	ASSBLY	64+72		ROUTE A		0.36							4	18.25		10.79	196.92	2	86	14.3	36.6															
31	48"X48"	1+00		RAMP		0.13							4	18.25		10.79	196.92																			
32	48"X48"	1+00		RAMP		0.13							4	17.00		10.79	183.43																			
33	48"X30"	3+00		RAMP		0.13							2.5	15.50		5.79	89.75																			
34	48"X30"	3+00		RAMP		0.13							2.5	16.25		5.79	94.09																			
37	72"X60"	676+45	7.5'	ROUTE 60	19	0.72							4	19.00	19.00	10.79	410.02																			
38	48"X60"	682+00		ROUTE 60		0.36							4	18.50		10.79	199.62																			
39	192"X168"	686+42		ROUTE 60	15	2.86	5	28.50	29.50		26	1508.00																									
40	192"X168"	739+22		ROUTE 60	16	2.86	5	28.00	29.25		26	1488.50																									
41	ASSBLY	695+00		ROUTE 60		0.13							2.5	15.75		5.79	91.19																			
42	ASSBLY	87+60		ROUTE A																									16		16	1		1	1	
43	30"X24"	90+05		ROUTE A																									16		16			1		
44	84"X30"	93+64		ROUTE A	19																								16	16	32			2	2	
45	ASSBLY	94+05		ROUTE A														2	50	8.3	21.3															
46	48"	12+73		ROUTE NN																									16		16			1		
47	48"	12+85		ROUTE NN																									16		16			1		
48	84"X48"	11+38		ROUTE NN	18																								16	16	32	2		2	2	
49	ASSBLY	9+45		ROUTE NN																									16		16	1		1	1	
50	24"X30"	11+96		ROUTE NN																									16		16			1		
51	72"X24"	12+85		ROUTE NN	18																								16	16	32			2	2	
52	72"X48"	91+60		ROUTE A	19															0.0									16	16	32			2	2	
53	24"X30"	91+45		ROUTE A																									16		16			1		
54	48"	93+63		ROUTE A																									16		16			1		
55	48"	93+44		ROUTE A																									16		16			1		
56	ASSBLY	93+86		ROUTE A														2	50	8.3	21.3															
57	ASSBLY	13+92		ROUTE NN														2	50	8.3	21.3															
58	48"	14+23		ROUTE NN																									16		16			1		
59	48"	14+31		ROUTE NN																									16		16			1		
60	ASSBLY	14+21		ROUTE NN																									16		16			1		
SUBTOTAL						22.68						9337					3378				136.9									528	4		33	10	
***																					**														

* BREAKAWAY ASSEMBLY IS INCIDENTAL FOR STRUCTURAL STEEL AND PIPE POSTS.
** BACKING BARS ARE TOTALED WITH STRUCTURAL STEEL.
*** SEE SIGNING SHEET 10 OF 23 FOR TOTALS.

ROUND PIPE POST AND FOOTING DATA TABLE

NOM.SIZE	WEIGHT		STUB LENGTH	FOOTING		CONCRETE
(IN.)	LBS/FT	LBS/IN		DIA.	DEPTH	C.Y.
2½	5.79	0.48	4'- 3½"	12"	4'-6"	0.13
4	10.79	0.90	5'- 3½"	18"	5'-6"	0.36

STRUCTURAL STEEL POST AND FOOTING DATA TABLE

POST DES. NO.	NOM. SIZE	POST WEIGHT LBS/FT	POST WEIGHT LBS/IN	STUB LENGTH	FOOTING DIA.	FOOTING LEVEL GROUND DEPTH	FOOTING LEVEL GROUND C.Y.	FOOTING 6:1 GRADE DEPTH	FOOTING 6:1 GRADE C.Y.	FOOTING 4:1 GRADE DEPTH	FOOTING 4:1 GRADE C.Y.	FOOTING 3:1 OR 2:1 GRADE DEPTH	FOOTING 3:1 OR 2:1 GRADE C.Y.
1	W6	9.0	0.75	3'-0"	15"	3'-0"	0.14	3'-2"	0.15	3'-3"	0.16	3'-6"	0.17
2	W6	15.0	1.25	4'-0"	24"	4'-0"	0.47	4'-2"	0.50	4'-3"	0.51	4'-6"	0.54
3	W8	18.0	1.50	4'-6"	28"	4'-6"	0.71	4'-8"	0.73	4'-9"	0.74	5'-0"	0.78
4	W10	22.0	1.83	5'-0"	36"	5'-0"	1.31	5'-2"	1.36	5'-3"	1.39	5'-6"	1.45
5	W10	26.0	2.17	5'-0"	36"	5'-0"	1.31	5'-3"	1.37	5'-5"	1.43	5'-9"	1.52
6	W12	35.0	2.92	5'-6"	36"	5'-6"	1.44	5'-9"	1.52	5'-11"	1.56	6'-3"	1.65

SIGNING PLAN
SHEET 9 OF 22
D-29

STATE OF MISSOURI
PAUL JOSEPH KRONLAGE
NUMBER EN 023328
REGISTERED PROFESSIONAL ENGINEER
07/31/2024 1:02:26 PM
Paul J. Kronlage - Civil
MO PE - 023328

DATE PREPARED 7/31/2024
ROUTE 60 | STATE MO
DISTRICT SW | SHEET NO. 193
COUNTY WEBSTER
JOB NO. J7P3425C
CONTRACT ID.
PROJECT NO.
BRIDGE NO.

DESCRIPTION | DATE | REV.

IF A SEAL IS PRESENT ON THIS SHEET IT HAS BEEN ELECTRONICALLY SEALED AND DATED.

MISSOURI HIGHWAYS AND TRANSPORTATION COMMISSION
105 WEST CAPITOL
JEFFERSON CITY, MO 65102
1-888-ASK-MODOT (1-888-275-6636)

EFK•Moen
Civil Engineering Design
13523 Barrett Parkway Dr
Suite 250
St. Louis, MO 63021
Phone 314-394-3100
Fax 314-394-3199
Missouri Certificate of Authority: 001578

EFFECTIVE: 07-01-2024

SIGNS (902 SIGNAL SIGNS TABULATED ON D-37A SHEET)						CONCRETE FOOTINGS EMBEDDED	STRUCTURAL STEEL POSTS *						PIPE POSTS *					BACKING BARS **				U-CHANNEL POST	PERFORATED SQUARE STEEL TUBE												REMARKS AND OTHER REQUIRED ITEMS
																							2 IN. POST						2.5 IN. POST							
																										ANCHORS						ANCHORS		BREAK-AWAY ASSEMBLY	
SIGN NO.	SIGN SIZE	STATION	HORZ CLEAR IF NOT STD	LOCATION	SIGN DTL. SHT. NO.	ITEM NO. 9031010	POST DES NO.	POST NO.1	POST NO.2	POST NO.3	LBS PER FT	TOTAL ITEM NO. 9031210	PIPE SIZE	POST NO.1	POST NO.2	LBS PER FT	TOTAL ITEM NO. 9031220	2" X 3/8" BARS @ 2.55 LBS PER FT NO. EACH	LGTH	TOTAL	TOTAL	ITEM NO. 9031250A	POST NO.1	POST NO.2	TOTAL ITEM NO. 9031270A	DRIVEN 12-GA. ITEM NO. 9031271A	DRIVEN 7-GA. ITEM NO. 9031273A	CONCRETE 7-GA. ITEM NO. 9031274	POST NO.1	POST NO.2	TOTAL ITEM NO. 9031280	2.25" INSERT (6 FT) ITEM NO. 9031272A	DRIVEN 7-GA. ITEM NO. 9031281A	CONCRETE 7-GA. ITEM NO. 9031285	ITEM NO. 9031241	
						CY		LF	LF	LF		LBS	IN.	LF	LF		LBS	EACH	IN.	LF	LBS	LF	LF	LF	LF	EA	EA	EA	LF	LF	LF	EA	EA	EA	EA	
61	24"x24"	16+60		ROUTE NN																									16		16			1		
62	24"X30"	16+44		ROUTE NN																									16		16			1		
63	84"X48"	17+40		ROUTE NN	18																								16		16	2		2	2	
64	48"	17+65		ROUTE NN																									16		16			1		
65	ASSBLY	20+44		ROUTE NN																									16		16	1		1	1	
66	30"X30"	182+00		SOR																									16		16			1		
67	ASSBLY	77+20		ROUTE NN														4	78	26.0	66.3								16		16			1		
68	24"x36"	87+00		ROUTE A																									16		16			1		
69	84"X18"	76+00		ROUTE A	19																								16	16	32			2		
70	84"X18"	78+50		ROUTE A	19																								16	16	32			2		
71	84"X18"			ROUTE Z	19																								16	16	32			2		
72	30'X30"	0+35		SOR																									16		16			1		
73	ASSBLY			ROUTE Z																									16		16			1		
74	ASSBLY	3+00		SOR																									16		16			1		
75	ASSBLY			ROUTE Z																									16		16			1		
76	84"X18"			ROUTE Z	19																								16	16	32			2		
77	30'X30"	52+22		SOR																									16		16			1		
78	30'X30"	80+00		SOR																									16		16			1		
79	30'X30"	94+00		SOR																									16		16			1		
80	30'X30"	109+30		SOR																									16		16			1		
81	30'X30"	140+25		SOR																									16		16			1		
82	108"X60"	622+00		ROUTE 60	18	0.30	1	16.50	17.50		9	306.00																								
83	144"X60"	715+00	0.64'	ROUTE 60	18	0.34	1	15.75	16.75		9	292.50																								
84	36"X36"	18+44		ROUTE NN																									16		16			1		
85	36"X36"	89+60		ROUTE A																									16		16			1		
86	30"X30"	26+00		SOR																									16		16			1		
88	48"X60"	705+00		ROUTE 60		0.36							4	19.00		10.79	205.01																			
89	24"X30"	300' FROM SOR		ROUTE Z																									16		16			1		
90	RELOCATE	49+00		ROUTE A																									16		16			1		
A				J-TURN																									16		16		1			
B				J-TURN																									16		16		1			
C				J-TURN																									16		16		1			
D				J-TURN																									16		16		1			
E				J-TURN																									16		16		1			
F				J-TURN																									16		16		1			
G				J-TURN																									16		16		1			
H				J-TURN																									16		16		1			
I				J-TURN																									16		16		1			
J				J-TURN																									16		16		1			
K				J-TURN																									16		16		1			
L				J-TURN																									16		16		1			
M				J-TURN																									32		32		2			
N				J-TURN																									32		32		2			
O				J-TURN																									16		16		1			
SUBTOTAL (THIS SHEET)						1.00						599					205				66										752	3	17	31	3	
SUBTOTAL (PREVIOUS SHEET)						22.68						9337					3378				203										528	4	0	33	10	
TOTAL						23.7						10140					3580				**										1280	7	17	64	13	

* BREAKAWAY ASSEMBLY IS INCIDENTAL FOR STRUCTURAL STEEL AND PIPE POSTS.
** BACKING BARS ARE TOTALED WITH STRUCTURAL STEEL.

ROUND PIPE POST AND FOOTING DATA TABLE

NOM.SIZE	WEIGHT		STUB LENGTH	FOOTING		CONCRETE
(IN.)	LBS/FT	LBS/IN		DIA.	DEPTH	C.Y.
2½	5.79	0.48	4'- 3½"	12"	4~6"	0.13
4	10.79	0.90	5'- 3½"	18"	5~6"	0.36

STRUCTURAL STEEL POST AND FOOTING DATA TABLE

POST DES. NO.	NOM. SIZE	POST WEIGHT LBS/FT	POST WEIGHT LBS/IN	POST STUB LENGTH	FOOTING DIA.	LEVEL GROUND DEPTH	LEVEL GROUND C.Y.	6:1 GRADE DEPTH	6:1 GRADE C.Y.	4:1 GRADE DEPTH	4:1 GRADE C.Y.	3:1 OR 2:1 GRADE DEPTH	3:1 OR 2:1 GRADE C.Y.
1	W6	9.0	0.75	3'-0"	15"	3'-0"	0.14	3'-2"	0.15	3'-3"	0.16	3'-6"	0.17
2	W6	15.0	1.25	4'-0"	24"	4'-0"	0.47	4'-2"	0.50	4'-3"	0.51	4'-6"	0.54
3	W8	18.0	1.50	4'-6"	28"	4'-6"	0.71	4'-8"	0.73	4'-9"	0.74	5'-0"	0.78
4	W10	22.0	1.83	5'-0"	36"	5'-0"	1.31	5'-2"	1.36	5'-3"	1.39	5'-6"	1.45
5	W10	26.0	2.17	5'-0"	36"	5'-0"	1.31	5'-3"	1.37	5'-5"	1.43	5'-9"	1.52
6	W12	35.0	2.92	5'-6"	36"	5'-6"	1.44	5'-9"	1.52	5'-11"	1.56	6'-3"	1.65

STATE OF MISSOURI
CHRIS LINNEMAN
NUMBER PE-2002016690
PROFESSIONAL ENGINEER
08/05/2024 2:33:02 PM
Chris Linneman - Civil
MO PE-2002016690

DATE PREPARED 8/5/2024
ROUTE 60 | STATE MO
DISTRICT SW | SHEET NO. 194
COUNTY WEBSTER
JOB NO. J7P3425C
CONTRACT ID.
PROJECT NO.
BRIDGE NO.

DESCRIPTION | DATE

IF A SEAL IS PRESENT ON THIS SHEET IT HAS BEEN ELECTRONICALLY SEALED AND DATED.

MISSOURI HIGHWAYS AND TRANSPORTATION COMMISSION
105 WEST CAPITOL
JEFFERSON CITY, MO 65102
1-888-ASK-MODOT (1-888-275-6636)

EFK•Moen
Civil Engineering Design
13523 Barrett Parkway Dr
Suite 250
St. Louis, MO 63021
Phone 314-394-3100
Fax 314-394-3199
Missouri Certificate of Authority: 001578

SIGNING PLAN
SHEET 10 OF 22
D-29

REV.

STANDARD SIGN ASSEMBLIES

SIGN NUMBER	STATION	LOCATION	TYPE	SIGN DESCRIPTION, SIZES & NUMBER OF EACH
2	632+00	ROUTE 60	SH	SPEED LIMIT 65 R2-1 48"X60" : 1
3	147+43	SOR	SH	(SEE NEXT SHEET)
4	642+00	ROUTE 60	SH	1
6	652+40	ROUTE 60	SHF	EXIT 40 W13-2 48"X60" : 1
8	10+65	RAMP	SH	(SEE NEXT SHEET)
9	8+65	RAMP	SH	
10	8+65	RAMP	SH	
11	10+65	RAMP	SH	(SEE NEXT SHEET)
13	10+94	RAMP	SH	1
14	10+94	RAMP	SH	
17	51+00	ROUTE A	SH	(SEE NEXT SHEET)
18	72+33	ROUTE NN	SH	
21	59+93	ROUTE A	SH	
22	56+89	ROUTE A	SH	
23	60+91	ROUTE A	SH	
24	58+80	ROUTE A	SH	
25	59+02	ROUTE A	SH	1
26	59+70	ROUTE A	SH	1
27	64+52	ROUTE A	SH	1
28	19+90	SIDEROAD	SH	
30	64+72	ROUTE A	SH	
31	1+00	RAMP	SH	(SEE NEXT SHEET)
32	1+00	RAMP	SH	(SEE NEXT SHEET)
33	3+00	RAMP	SH	
34	3+00	RAMP	SH	
35	65+60	ROUTE A	SH	
36	68+24	ROUTE NN	SH	
38	682+00	ROUTE 60	SH	1
41	695+00	ROUTE 60	SH	(SEE NEXT SHEET)
42	87+60	ROUTE NN	SH	(SEE NEXT SHEET)
43	90+05	ROUTE NN	SH	
45	94+05	ROUTE NN	SH	(SEE NEXT SHEET)
46	12+73	ROUTE NN	SH	
47	12+85	ROUTE NN	SH	
49	9+45	ROUTE NN	SH	(SEE NEXT SHEET)
50	11+96	ROUTE NN	SH	(SEE NEXT SHEET)
53	91+45	ROUTE NN	SH	(SEE NEXT SHEET)
54	93+63	ROUTE NN	SH	
55	93+44	ROUTE NN	SH	
56	93+86	ROUTE NN	SH	(SEE NEXT SHEET)
57	13+92	ROUTE NN	SH	(SEE NEXT SHEET)
58	14+23	ROUTE NN	SH	
59	14+31	ROUTE NN	SH	
60	14+21	ROUTE NN	SH	(SEE NEXT SHEET)
61	16+60	ROUTE NN	SH	
62	16+44	ROUTE NN	SH	(SEE NEXT SHEET)
64	17+65	ROUTE NN	SHF	(RELOCATE)
65	20+44	ROUTE NN	SH	(SEE NEXT SHEET)
66	182+00	ROUTE NN	SH	(SEE NEXT SHEET)
67	77+20	ROUTE NN	SH	(SEE NEXT SHEET)
68	87+00	ROUTE NN	SH	(SEE NEXT SHEET)
72	0+35	SOR	SH	(SEE NEXT SHEET)
73		ROUTE Z	SH	
74	OMMITED			
75		ROUTE Z	SH	(SEE NEXT SHEET)
88	705+00	ROUTE 60	SH	1

SIGN DESCRIPTION, SIZES & NUMBER OF EACH (continued)

SIGN NUMBER	SH	SH	SH	SH	SH	SH	SH	SH	SH	SH	SH	SH	SH	SH	SH	SH	SH
	R2-1 48"X60"	W13-2 48"X60"	M1-4 24"X24"	R1-1 48"X48"	M3-2 24"X12"	M3-4 24X12"	R6-1L 36"X12"	R6-1R 36"X12"	M6-1 21"X15"	M6-4 21"X15"	M1-5a 24"X24"	R5-1a 48"X30"	M2-1 21"X15"	M1-5a 30"X24"	R4-7 24"X30"	R1-2 48"
2	1																
3		(SEE NEXT SHEET)															
4			1			1											
6		1															
8		(SEE NEXT SHEET)															
9												1					
10												1					
11		(SEE NEXT SHEET)															
13				1			1	1									
14									2		1			1			
17		(SEE NEXT SHEET)															
18														1			
21										1	1						
22											1						
23											1						
24										1	1						
25				1													
26				1													
27				1			1	1									
28											1		1				
30									2		1			1			
31		(SEE NEXT SHEET)															
32		(SEE NEXT SHEET)															
33												1					
34												1					
35							1	1									
36							1										
38		1															
41		(SEE NEXT SHEET)															
42		(SEE NEXT SHEET)															
43														1			
45		(SEE NEXT SHEET)															
46																1	
47																1	
49		(SEE NEXT SHEET)															
50		(SEE NEXT SHEET)													1		
53		(SEE NEXT SHEET)													1		
54																1	
55																1	
56		(SEE NEXT SHEET)															
57		(SEE NEXT SHEET)															
58																1	
59																1	
60		(SEE NEXT SHEET)												1			
61														1			
62		(SEE NEXT SHEET)													1		
64	(RELOCATE)																
65		(SEE NEXT SHEET)															
66		(SEE NEXT SHEET)															
67		(SEE NEXT SHEET)							1	1				1			
68		(SEE NEXT SHEET)															
72		(SEE NEXT SHEET)															
73										1	1						
74																	
75		(SEE NEXT SHEET)															
88	1																

SIGN SUMMARY

STANDARD SIGN OR SPECIAL SIGN NUMBER	SIGN DETAIL SHEET NO.	NO. EACH	SIZE	SIZE, TYPE & SQUARE FEET: FLAT SHEET SH ITEM NO. 9035004A	FLAT SHEET FLUORESCENT SHF * ITEM NO. 9035069A	STRUCTURAL ST ITEM NO. 9035011A	STRUCTURAL FLUORESCENT STF * ITEM NO. 9035071A
R2-1		2	48X60	40.0			
W13-2		2	36X48		12.0		
M1-4		1	36X36	9.0			
R1-1		4	48X48	64.0			
M3-2		1	30X15	3.1			
M3-4		1	30X15	6.9			
R6-1L		4	36X12	12.0			
R6-1R		3	36X12	9.0			
M6-1		5	21X15	10.9			
M6-4		4	21X15	8.8			
M1-5a		8	24X24	32.0			
R5-1a		4	48X30	24.0			
M2-1		1	21X15	2.2			
M1-5a		7	30X24	35.0			
R4-7		3	24X30	15.0			
R1-2		6	48	41.6			
E1-1 SIGN 1	13	1	192"X168"			224.0	
E1-1 SIGN 5	14	1	192"X168"			224.0	
E5-1 SIGN 7	17	1	72"X60"			30.0	
D1-1a SIGN 12	17	1	120"X24"			20.0	
E8-1 SIGN 15	17	1	96"X84"			56.0	
E8-2 SIGN 16	20	1	132"X120"			110.0	
E8-2 SIGN 19	20	1	144"X120"			120.0	
D1-1a SIGN 20	17	1	120"X24"			20.0	
E8-1 SIGN 29	17	1	108"X84"			63.0	
E5-1 SIGN 37	19	1	72"X60"			30.0	
E1-1 SIGN 39	15	1	192"X168"			224.0	
E1-1 SIGN 40	16	1	192"X168"			224.0	
D1-1e SIGN 44	19	1	84"X30"			17.5	
D1-22 SIGN 48	18	1	84"X48"			28.0	
D1-1d SIGN 51	18	1	72"X24"			12.0	
D1-2d SIGN 52	19	1	72"X48"			24.0	
D1-2d SIGN 63	18	1	84"X48"			28.0	
E9-1 SIGN 69	19	1	84"X18"			10.5	
E9-1 SIGN 70	19	1	84"X18"			10.5	
E9-1 SIGN 71	19	1	84"X18"			10.5	
E9-1 SIGN 76	19	1	84"X18"			10.5	
D2-3 SIGN 82	18	1	108"X60"			45.0	
D2-3 SIGN 83	18	1	144"X60"			60.0	
SHEET 1 SUBTOTAL				314	12	1602	

* ORANGE, YELLOW & YELLOW/GREEN

STATE OF MISSOURI
PAUL JOSEPH KRONLAGE NUMBER EN 023328
REGISTERED PROFESSIONAL ENGINEER
07/31/2024 1:03:37 PM
Paul J. Kronlage - Civil
MO PE - 023328

DATE PREPARED: 7/31/2024

ROUTE	STATE
60	MO
DISTRICT	SHEET NO.
SW	195

COUNTY: WEBSTER

JOB NO.: J7P3425C

CONTRACT ID.:

PROJECT NO.:

BRIDGE NO.:

DATE	DESCRIPTION	REV.

IF A SEAL IS PRESENT ON THIS SHEET IT HAS BEEN ELECTRONICALLY SEALED AND DATED.

MISSOURI HIGHWAYS AND TRANSPORTATION COMMISSION
105 WEST CAPITOL
JEFFERSON CITY, MO 65102
1-888-ASK-MODOT (1-888-275-6636)

EFK•Moen
Civil Engineering Design
13523 Barrett Parkway Dr
Suite 250
St. Louis, MO 63021
Phone 314-394-3100
Fax 314-394-3199
Missouri Certificate of Authority: 001578

SIGNING PLAN
SHEET 11 OF 22
D-30

STANDARD SIGN ASSEMBLIES

SIGN NUMBER	STATION	LOCATION	TYPE: SIGN DESCRIPTION, SIZES & NUMBER OF EACH															
			25 MPH / 40 MPH W13-1P 24"x24"	END ROAD W16-17P 36"x12"	W2-6 36"x36"	R5-1 36"x36"	R6-1R 54"x18"	R1-1 30"x30"	W1-4L 36X36"	W3-2 36"x36"	M6-2R 21"x15"	M4-5 24"x15"	M1-4 24"x24"	R2-1 24"x30"	R6-4 36"x24"	OM1-3 18"x18"	R1-1 30"x30"	E9-1 84"x18"
8	10+65	RAMP				1												
11	10+65	RAMP				1												
31	1+40	RAMP				1												
32	1+40	RAMP				1												
42	87+60	ROUTE NN	1	1	1													
45	94+05	ROUTE NN					1								1			
49	9+45	ROUTE NN	1	1	1													
56	93+86	ROUTE NN					1								1			
57	13+92	ROUTE NN					1								1			
60	14+21	ROUTE NN									1							
65	20+44	ROUTE NN	1	1	1													
66	182+00	SOR															1	
72	0+35	SOR															1	
75		ROUTE Z	1						1									
77	52+22	SOR						1										
78	80+00	SOR						1										
79	94+00	SOR						1										
80	109+30	SOR						1										
81	140+25	SOR						1										
84	18+44	ROUTE NN								1								
85	89+60	ROUTE NN								1								
67	77+20	ASSBLY										1	1					
89	300' FROM SOR													1				
3	147+43	SOR						1										
41	695+00	ROUTE 60											1					
86	26+00	SOR						1										
50	11+96	OLD RT. NN														1		
53	91+50	ROUTE NN														1		
62	16+44	OLD RT. NN														1		
90	RELOCATE																	
17	51+00	ROUTE A												1				
68	87+00	ROUTE NN												1				
69	76+00	ROUTE NN															1	
70	78+50	ROUTE NN															1	
			4	3	3	4	3	7	1	2	1	1	2	3	3	3	2	2

SIGN SUMMARY

STANDARD SIGN OR SPECIAL SIGN NUMBER	SIGN DETAIL SHEET NO.	NO. EACH	SIZE, TYPE & SQUARE FEET: SIZE	FLAT SHEET SH ITEM NO. 9035004A	FLAT SHEET FLUORESCENT SHF * ITEM NO. 9035069A	STRUCTURAL ST ITEM NO. 9035011A	STRUCTURAL FLUORESCENT STF * ITEM NO. 9035071A
W13-1P		4	24X24		16.0		
W16-17P8		3	36X12		9.0		
W2-6		3	36X36		27.0		
R5-1		4	48X48	12.0			
R6-1R		3	54X18	18.8			
R1-1		7	30X30	28.0			
W1-4L		1	36X36		9.0		
W3-2		2	36X36		18.0		
M6-2R		1	21X15	2.2			
M4-5		1	24X12	2.5			
M1-4		2	24X24	8.0			
R2-1		1	24X30	5.0			
R6-4		3	36X24	18.0			
OM1-3		3	18X18		6.8		
E9-1		1	84X18	7.0			
SUBTOTAL J TURN				227			
SUBTOTAL				329	86		
SHEET 1 SUBTOTAL				314	12	1602	
TOTAL				870	98	1602	

* ORANGE, YELLOW & YELLOW/GREEN

STATE OF MISSOURI
PAUL JOSEPH KRONLAGE NUMBER EN 023328
REGISTERED PROFESSIONAL ENGINEER

07/31/2024 1:04:00 PM
Paul J. Kronlage - Civil
MO PE - 023328

DATE PREPARED: 7/31/2024
ROUTE: 60 | STATE: MO
DISTRICT: SW | SHEET NO.: 196
COUNTY: WEBSTER
JOB NO.: J7P3425C
CONTRACT ID.:
PROJECT NO.:
BRIDGE NO.:

IF A SEAL IS PRESENT ON THIS SHEET IT HAS BEEN ELECTRONICALLY SEALED AND DATED.

DESCRIPTION | DATE

MISSOURI HIGHWAYS AND TRANSPORTATION COMMISSION
105 WEST CAPITOL
JEFFERSON CITY, MO 65102
1-888-ASK-MODOT (1-888-275-6636)

EFK•Moen
Civil Engineering Design
13523 Barrett Parkway Dr
Suite 250
St. Louis, MO 63021
Phone 314-394-3100
Fax 314-394-3199
Missouri Certificate of Authority: 001578

SIGNING PLAN
SHEET 12 OF 22
D-30

REV.

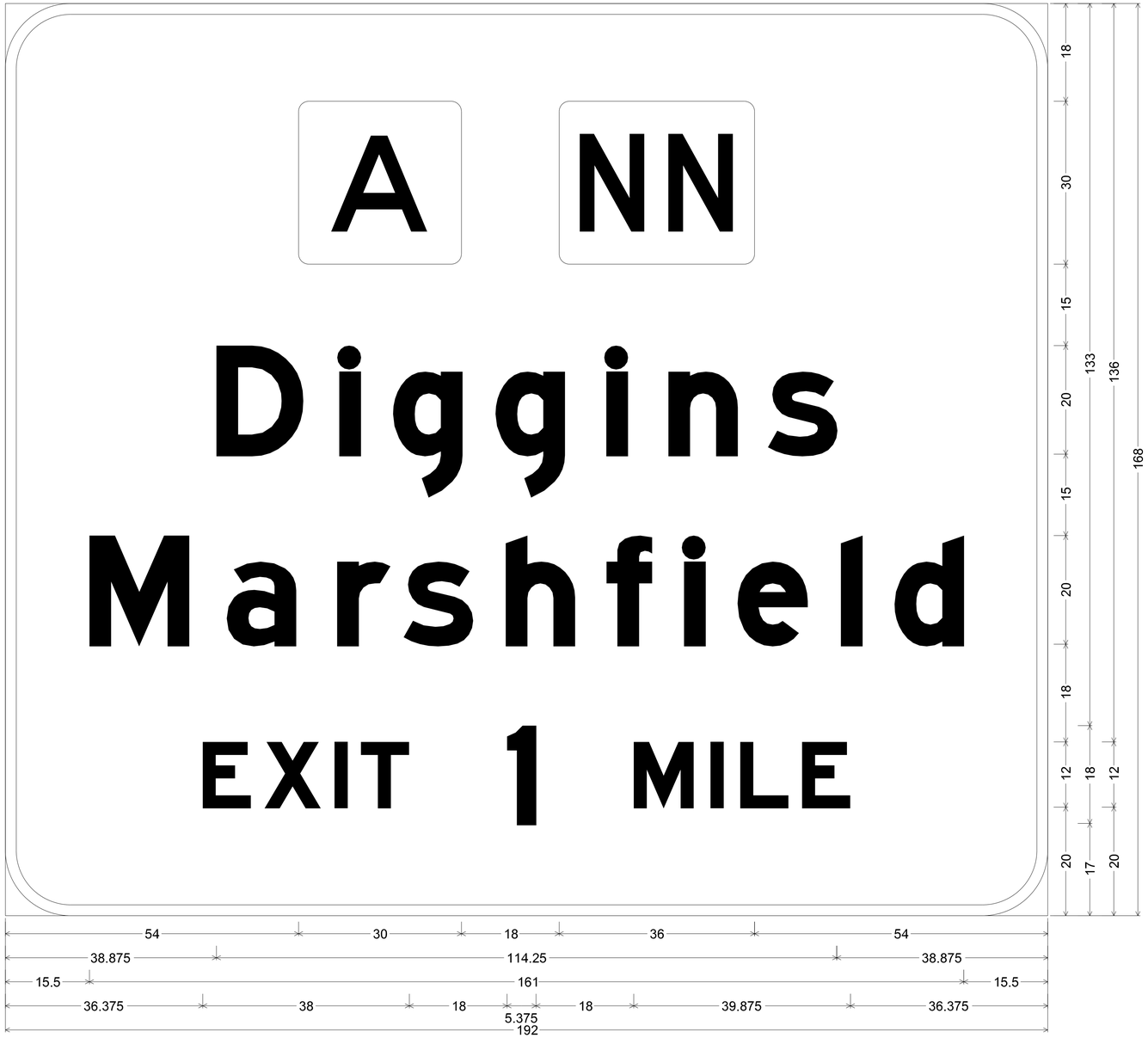

SIGN 1

E1-1 ST-STRUCTURAL;
12.000" Radius, 2.000" Border, White on, Green;
Rounded Rectangle 1.875" Radius;
Rounded Rectangle 1.875" Radius;
"Diggins", E Mod; "Marshfield", E Mod; "EXIT", E Mod; "1", E Mod; "MILE", E Mod;
Table of letter and object lefts

54.000	102.000

D 38.875	i 61.500	g 71.375	g 90.250	i 110.750	n 122.125	s 140.500

M 15.500	a 40.750	r 61.125	s 73.375	h 92.125	f 110.750	i 125.000	e 134.875	l 153.875	d 163.750

E 36.375	X 47.750	l 60.625	T 65.500	1 92.375	M 115.750	l 129.875	L 135.375	E 146.750

DISCLAIMER
THE PROFESSIONAL WHOSE SIGNATURE AND PERSONAL SEAL APPEAR HEREON ASSUMES RESPONSIBILITY ONLY FOR WHAT APPEARS ON THIS PAGE, AND DISCLAIMS (PURSUANT TO SECTION 327.411 RSMO) SPECIFICATION, ESTIMATES, REPORTS, OR OTHER DOCUMENTS OR INSTRUMENTS NOT SEALED BY THE UNDERSIGNED PROFESSIONAL RELATING TO OR INTENDED TO BE USED FOR ANY PART OR PARTS OF THE PROJECT TO WHICH THIS PAGE REFERS.

STATE OF MISSOURI
PAUL JOSEPH KRONLAGE NUMBER EN 023328
REGISTERED PROFESSIONAL ENGINEER

07/31/2024 1:04:18 PM
Paul J. Kronlage - Civil
MO PE - 023328

DATE PREPARED 7/31/2024
ROUTE 60 | STATE MO
DISTRICT SW | SHEET NO. 197
COUNTY WEBSTER
JOB NO. J7P3425C
CONTRACT ID.
PROJECT NO.
BRIDGE NO.

IF A SEAL IS PRESENT ON THIS SHEET IT HAS BEEN ELECTRONICALLY SEALED AND DATED.

REV.	DESCRIPTION	DATE

MISSOURI HIGHWAYS AND TRANSPORTATION COMMISSION
105 WEST CAPITOL
JEFFERSON CITY, MO 65102
1-888-ASK-MODOT (1-888-275-6636)

EFK•Moen
Civil Engineering Design
13523 Barrett Parkway Dr
Suite 250
St. Louis, MO 63021
Phone 314-394-3100
Fax 314-394-3199
Missouri Certificate of Authority: 001578

SIGNING PLAN
SHEET 13 OF 22

Z:\21047 CMT Route 60 at Route A\DGN\Design\Final\Plot Sheets\197_SN_013_J7P3425_D31_01_i1.dgn 9:57:07 AM 7/31/2024

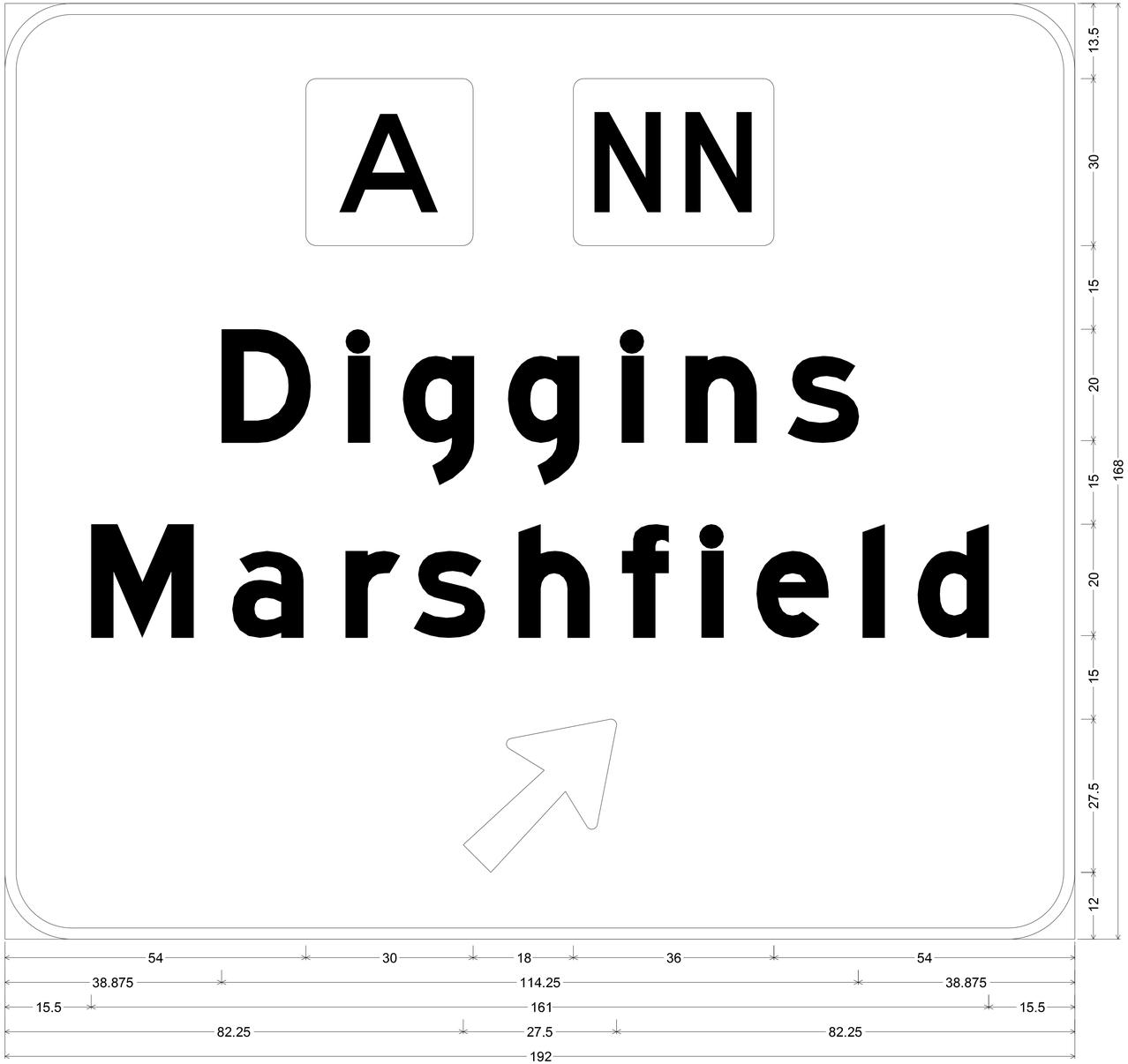

E1-1 ST-STRUCTURAL;
12.000" Radius, 2.000" Border, White on, Green;
Rounded Rectangle 1.875" Radius;
Rounded Rectangle 1.875" Radius;
"Diggins", E Mod; "Marshfield", E Mod; Arrow 160 - 35.000" 45';
Table of letter and object lefts

54.000	102.000

D	i	g	g	i	n	s
38.875	61.500	71.375	90.250	110.750	122.125	140.500

M	a	r	s	h	f	i	e	l	d
15.500	40.750	61.125	73.375	92.125	110.750	125.000	134.875	153.875	163.750

82.250

SIGN 5

DISCLAIMER
THE PROFESSIONAL WHOSE SIGNATURE AND PERSONAL SEAL APPEAR HEREON ASSUMES RESPONSIBILITY ONLY FOR WHAT APPEARS ON THIS PAGE, AND DISCLAIMS (PURSUANT TO SECTION 327.411 RSMO) SPECIFICATION, ESTIMATES, REPORTS, OR OTHER DOCUMENTS OR INSTRUMENTS NOT SEALED BY THE UNDERSIGNED PROFESSIONAL RELATING TO OR INTENDED TO BE USED FOR ANY PART OR PARTS OF THE PROJECT TO WHICH THIS PAGE REFERS.

STATE OF MISSOURI
PAUL JOSEPH KRONLAGE
NUMBER EN 023328
REGISTERED PROFESSIONAL ENGINEER

07/31/2024 1:04:36 PM
Paul J. Kronlage - Civil
MO PE - 023328

DATE PREPARED: 7/31/2024
ROUTE: 60 | STATE: MO
DISTRICT: SW | SHEET NO.: 198
COUNTY: WEBSTER
JOB NO.: J7P3425C
CONTRACT ID.:
PROJECT NO.:
BRIDGE NO.:

REV.	DESCRIPTION	DATE

IF A SEAL IS PRESENT ON THIS SHEET IT HAS BEEN ELECTRONICALLY SEALED AND DATED.

MISSOURI HIGHWAYS AND TRANSPORTATION COMMISSION
105 WEST CAPITOL
JEFFERSON CITY, MO 65102
1-888-ASK-MODOT (1-888-275-6636)

EFK•Moen
Civil Engineering Design
13523 Barrett Parkway Dr
Suite 250
St. Louis, MO 63021
Phone 314-394-3100
Fax 314-394-3199
Missouri Certificate of Authority: 001578

SIGNING PLAN
SHEET 14 OF 22

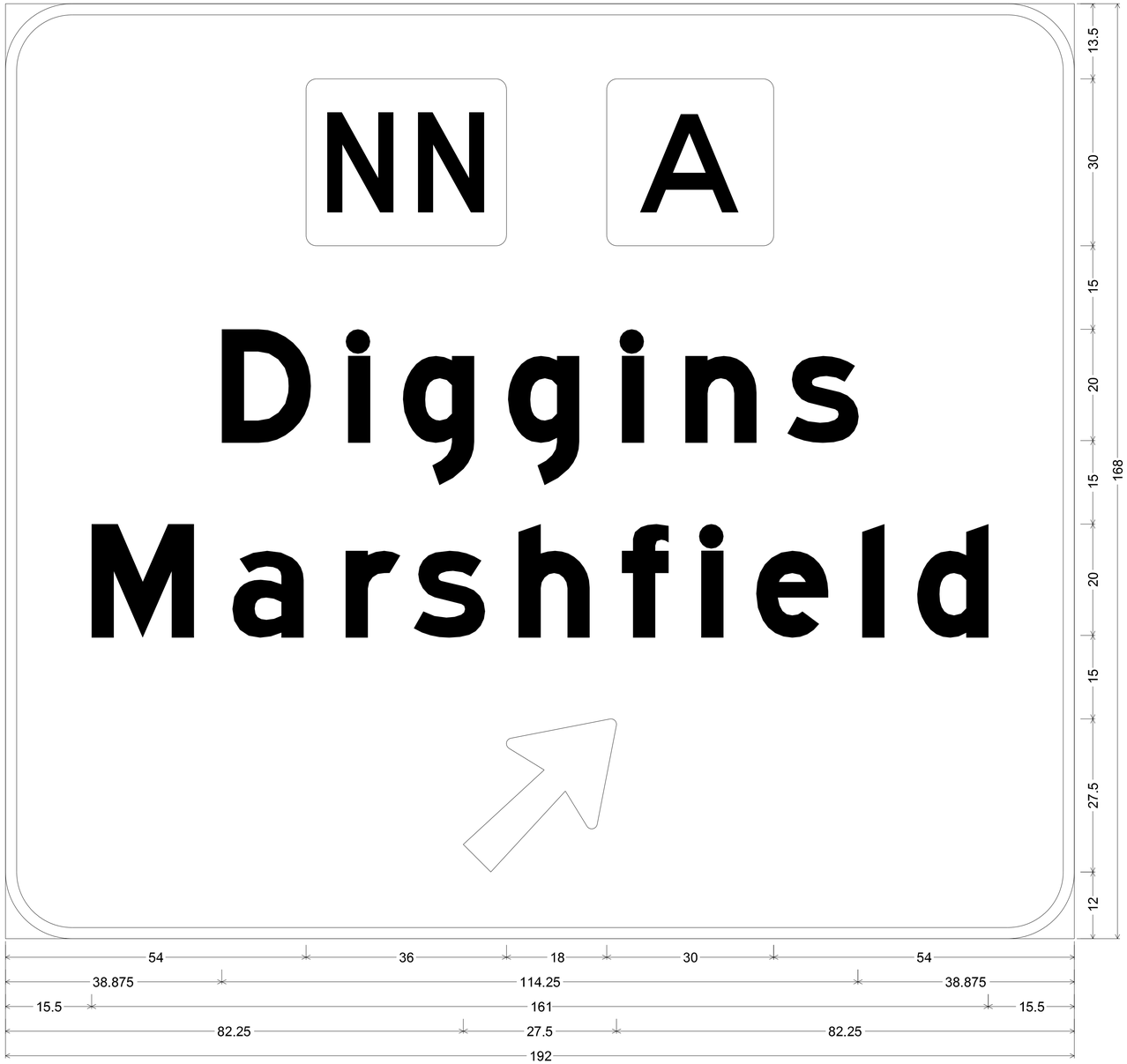

SIGN 39

E1-1 ST-STRUCTURAL;
12.000" Radius, 2.000" Border, White on, Green;
Rounded Rectangle 1.875" Radius;
Rounded Rectangle 1.875" Radius;
"Diggins", E Mod; "Marshfield", E Mod; Arrow 160 - 35.000" 45';
Table of letter and object lefts

54.000	108.000

D	**i**	**g**	**g**	**i**	**n**	**s**
38.875	61.500	71.375	90.250	110.750	122.125	140.500

M	**a**	**r**	**s**	**h**	**f**	**i**	**e**	**l**	**d**
15.500	40.750	61.125	73.375	92.125	110.750	125.000	134.875	153.875	163.750

82.250

DISCLAIMER
THE PROFESSIONAL WHOSE SIGNATURE AND PERSONAL SEAL APPEAR HEREON ASSUMES RESPONSIBILITY ONLY FOR WHAT APPEARS ON THIS PAGE, AND DISCLAIMS (PURSUANT TO SECTION 327.411 RSMO) SPECIFICATION, ESTIMATES, REPORTS, OR OTHER DOCUMENTS OR INSTRUMENTS NOT SEALED BY THE UNDERSIGNED PROFESSIONAL RELATING TO OR INTENDED TO BE USED FOR ANY PART OR PARTS OF THE PROJECT TO WHICH THIS PAGE REFERS.

STATE OF MISSOURI
PAUL JOSEPH KRONLAGE
NUMBER EN 023328
REGISTERED PROFESSIONAL ENGINEER

07/31/2024 1:04:58 PM
Paul J. Kronlage - Civil
MO PE - 023328

DATE PREPARED
7/31/2024

ROUTE	STATE
60	MO
DISTRICT	SHEET NO.
SW	199

COUNTY
WEBSTER

JOB NO.
J7P3425C

CONTRACT ID.

PROJECT NO.

BRIDGE NO.

DESCRIPTION	DATE

IF A SEAL IS PRESENT ON THIS SHEET IT HAS BEEN ELECTRONICALLY SEALED AND DATED.

MISSOURI HIGHWAYS AND TRANSPORTATION COMMISSION
105 WEST CAPITOL
JEFFERSON CITY, MO 65102
1-888-ASK-MODOT (1-888-275-6636)

EFK•Moen
Civil Engineering Design
13523 Barrett Parkway Dr
Suite 250
St. Louis, MO 63021
Phone 314-394-3100
Fax 314-394-3199
Missouri Certificate of Authority: 001578

SIGNING PLAN
SHEET 15 OF 22

REV.

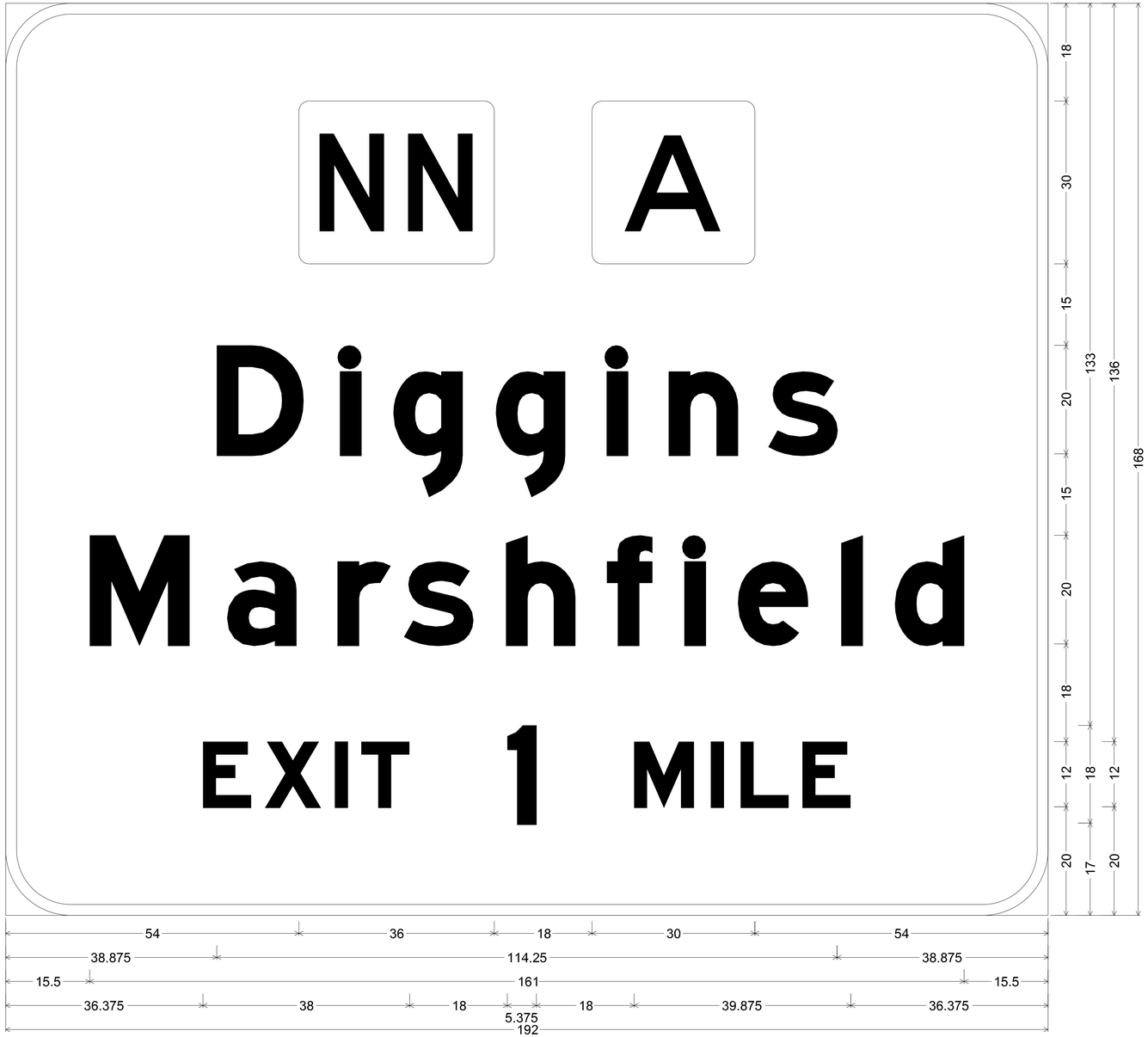

E1-1 ST-STRUCTURAL;
12.000" Radius, 2.000" Border, White on, Green;
Rounded Rectangle 1.875" Radius;
Rounded Rectangle 1.875" Radius;
"Diggins", E Mod; "Marshfield", E Mod; "EXIT", E Mod; "1", E Mod; "MILE", E Mod;
Table of letter and object lefts

54.000	108.000

D 38.875	**I** 61.500	**g** 71.375	**g** 90.250	**l** 110.750	**n** 122.125	**s** 140.500

M 15.500	**a** 40.750	**r** 61.125	**s** 73.375	**h** 92.125	**f** 110.750	**i** 125.000	**e** 134.875	**l** 153.875	**d** 163.750

E 36.375	**X** 47.750	**I** 60.625	**T** 65.500	**1** 92.375	**M** 115.750	**I** 129.875	**L** 135.375	**E** 146.750

SIGN 40

DISCLAIMER
THE PROFESSIONAL WHOSE SIGNATURE AND PERSONAL SEAL APPEAR HEREON ASSUMES RESPONSIBILITY ONLY FOR WHAT APPEARS ON THIS PAGE, AND DISCLAIMS (PURSUANT TO SECTION 327.411 RSMO) SPECIFICATION, ESTIMATES, REPORTS, OR OTHER DOCUMENTS OR INSTRUMENTS NOT SEALED BY THE UNDERSIGNED PROFESSIONAL RELATING TO OR INTENDED TO BE USED FOR ANY PART OR PARTS OF THE PROJECT TO WHICH THIS PAGE REFERS.

STATE OF MISSOURI
PAUL JOSEPH KRONLAGE
NUMBER EN 023328
REGISTERED PROFESSIONAL ENGINEER

07/31/2024 1:05:13 PM
Paul J. Kronlage - Civil
MO PE - 023328

DATE PREPARED 7/31/2024

ROUTE	STATE
60	MO
DISTRICT	SHEET NO.
SW	200

COUNTY: WEBSTER
JOB NO.: J7P3425C
CONTRACT ID.:
PROJECT NO.:
BRIDGE NO.:

IF A SEAL IS PRESENT ON THIS SHEET IT HAS BEEN ELECTRONICALLY SEALED AND DATED.

REV.	DESCRIPTION	DATE

MISSOURI HIGHWAYS AND TRANSPORTATION COMMISSION
105 WEST CAPITOL
JEFFERSON CITY, MO 65102
1-888-ASK-MODOT (1-888-275-6636)

EFK•Moen
Civil Engineering Design
13523 Barrett Parkway Dr
Suite 250
St. Louis, MO 63021
Phone 314-394-3100
Fax 314-394-3199
Missouri Certificate of Authority: 001578

SIGNING PLAN
SHEET 16 OF 22

Z:\21047 CMT Route 60 at Route A\DGN\Design\Final\Plot Sheets\200_SN_016_J7P3425_D31_04_i1.dgn 9:57:09 AM 7/31/2024

DISCLAIMER
THE PROFESSIONAL WHOSE SIGNATURE AND PERSONAL SEAL APPEAR HEREON ASSUMES RESPONSIBILITY ONLY FOR WHAT APPEARS ON THIS PAGE, AND DISCLAIMS (PURSUANT TO SECTION 327.411 RSMO) SPECIFICATION, ESTIMATES, REPORTS, OR OTHER DOCUMENTS OR INSTRUMENTS NOT SEALED BY THE UNDERSIGNED PROFESSIONAL RELATING TO OR INTENDED TO BE USED FOR ANY PART OR PARTS OF THE PROJECT TO WHICH THIS PAGE REFERS.

SIGNS 7 & 37

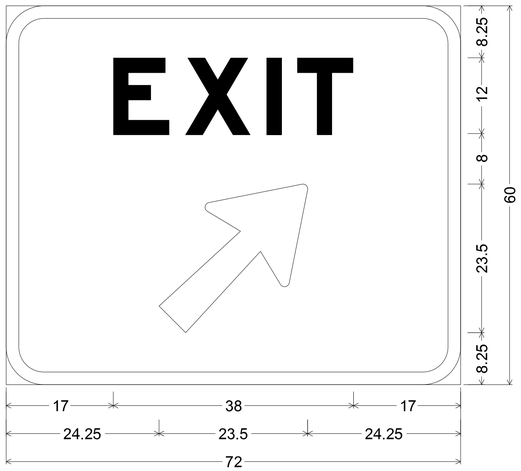

E5-1 ST-STRUCTURAL;
6.000" Radius, 2.000" Border, White on, Green;
"EXIT", E Mod; Arrow 133 - 30.000" 45';
Table of letter and object lefts

E	X	I	T
17.000	28.375	41.250	46.125

⇗
24.250

SIGN 15

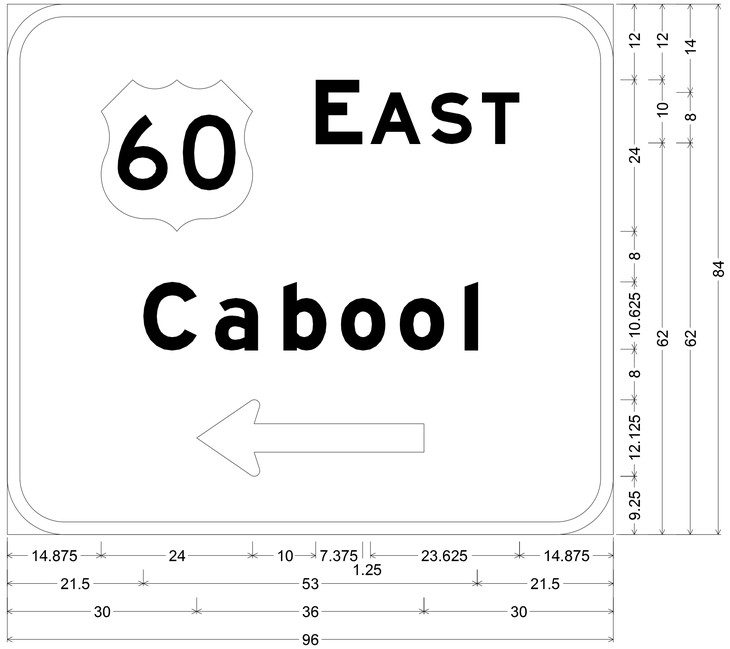

E8-1 ST-STRUCTURAL;
9.000" Radius, 2.000" Border, White on, Green;
"EAST", E Mod; "Cabool", E Mod;
Standard Arrow Custom 36.000" X 12.125" 180';
Table of letter and object lefts

60	E	A	S	T
14.875	48.875	57.500	67.125	75.250

C	a	b	o	o	l
21.500	32.875	43.750	52.875	62.125	72.500

⇦
30.000

SIGN 29

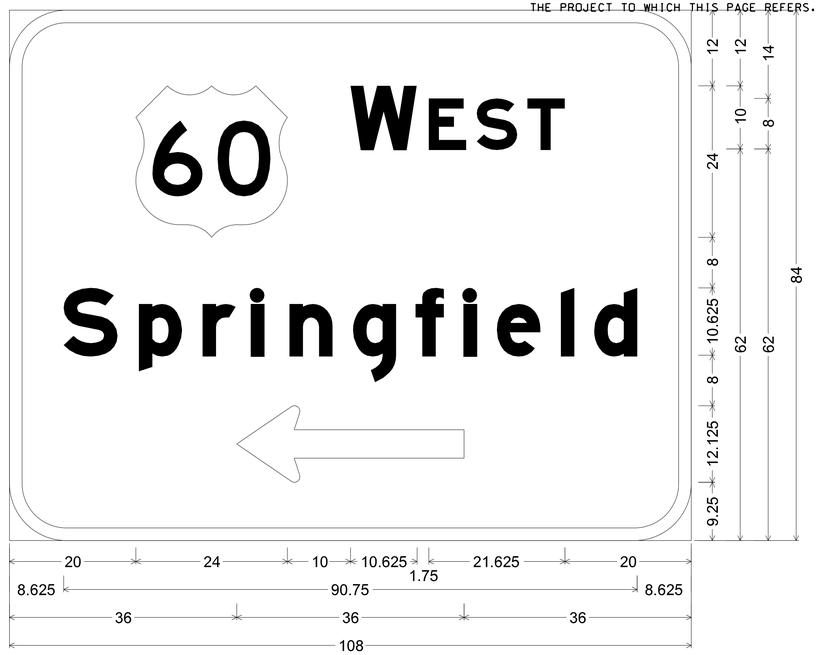

E8-1 ST-STRUCTURAL;
9.000" Radius, 2.000" Border, White on, Green;
"WEST", E Mod; "Springfield", E Mod; Standard Arrow Custom 36.000" X 12.125" 180';
Table of letter and object lefts

60	W	E	S	T
20.000	54.000	66.375	74.000	82.000

S	p	r	l	n	g	f	l	e	l	d
8.625	20.500	30.625	38.250	44.375	54.375	64.375	71.875	77.250	87.375	92.625

⇦
36.000

SIGN 12

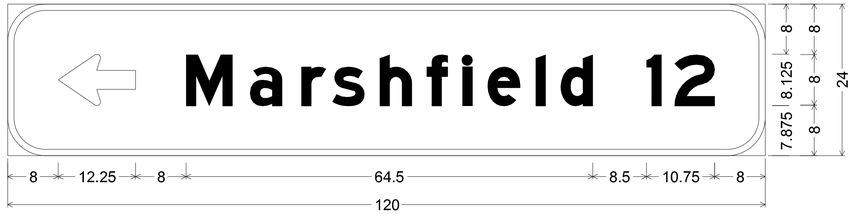

D1-1a ST-STRUCTURAL;
6.000" Radius, 1.000" Border, White on, Green;
Standard Arrow Custom 12.250" X 8.125" 180"; "Marshfield", E Mod; "12", E Mod;
Table of letter and object lefts

⇦	M	a	r	s	h	f	i	e	l	d
8.000	28.250	38.375	46.500	51.375	58.875	66.375	72.125	76.000	83.625	87.625

1	2
101.250	105.625

SIGN 20

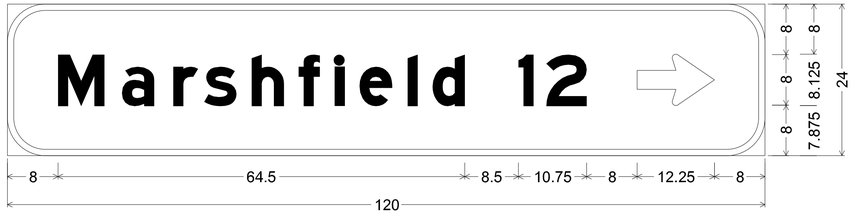

D1-1a ST-STRUCTURAL;
6.000" Radius, 1.000" Border, White on, Green;
"Marshfield", E Mod; "12", E Mod; Standard Arrow Custom 12.250" X 8.125" 0';
Table of letter and object lefts

M	a	r	s	h	f	i	e	l	d	1	2	⇨
8.000	18.125	26.250	31.125	38.625	46.125	51.875	55.750	63.375	67.375	81.000	85.375	99.750

SIGNING PLAN
SHEET 17 OF 22

STATE OF MISSOURI
PAUL JOSEPH KRONLAGE NUMBER EN 023328
REGISTERED PROFESSIONAL ENGINEER
07/31/2024 1:05:51 PM
Paul J. Kronlage - Civil
MO PE - 023328

DATE PREPARED 7/31/2024
ROUTE 60 | STATE MO
DISTRICT SW | SHEET NO. 201
COUNTY WEBSTER
JOB NO. J7P3425C
CONTRACT ID.
PROJECT NO.
BRIDGE NO.

DESCRIPTION | DATE

IF A SEAL IS PRESENT ON THIS SHEET IT HAS BEEN ELECTRONICALLY SEALED AND DATED.

MISSOURI HIGHWAYS AND TRANSPORTATION COMMISSION
105 WEST CAPITOL
JEFFERSON CITY, MO 65102
1-888-ASK-MODOT (1-888-275-6636)

EFK•Moen
Civil Engineering Design
13523 Barrett Parkway Dr
Suite 250
St. Louis, MO 63021
Phone 314-394-3100
Fax 314-394-3199
Missouri Certificate of Authority: 001578

REV.

SIGN 82

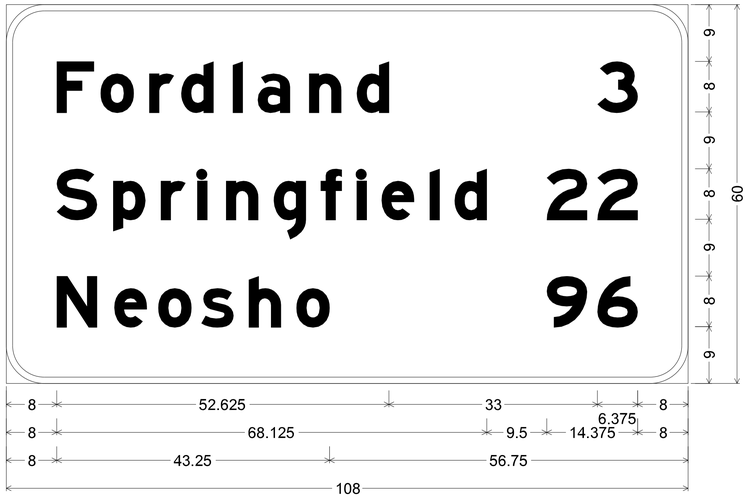

D2-3 ST-STRUCTURAL;
6.000" Radius, 1.000" Border, White on, Green;
"Fordland", E Mod; "3", E Mod; "Springfield", E Mod; "22", E Mod;
"Neosho", E Mod; "96", E Mod;
Table of letter and object lefts

F 8.000	o 14.875	r 22.625	d 27.750	l 35.875	a 39.875	n 48.000	d 55.500	3 93.625	
S 8.000	p 16.875	r 24.500	l 30.250	n 34.750	g 42.375	f 49.750	l 55.500	e 59.500	l 67.000	d 71.000
2 85.625	2 93.625								
N 8.000	e 17.125	o 24.125	s 30.875	h 38.375	o 46.000	9 85.625	6 93.625		

SIGN 83

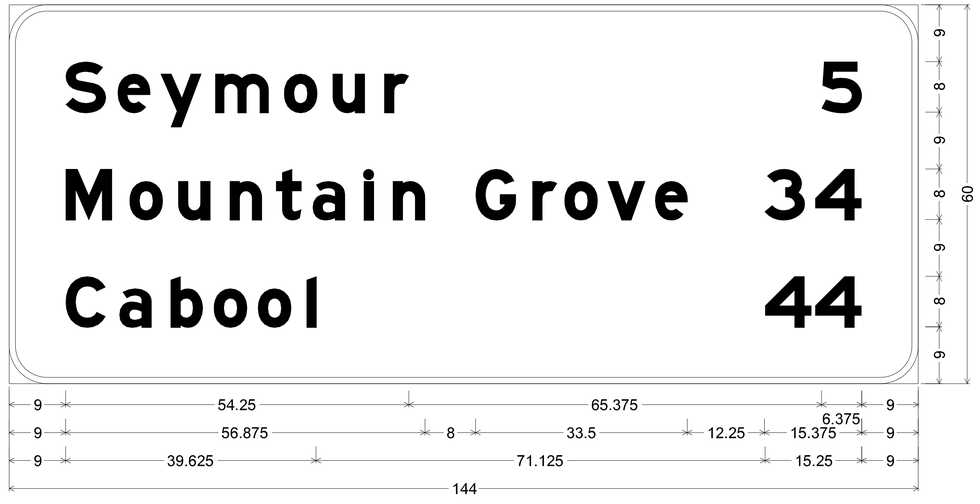

D2-3 ST-STRUCTURAL;
6.000" Radius, 1.000" Border, White on, Green;
"Seymour", E Mod; "5", E Mod; "Mountain Grove", E Mod; "34", E Mod; "Cabool", E Mod; "44", E Mod;
Table of letter and object lefts

S 9.000	e 17.125	y 24.000	m 32.625	o 43.500	u 51.250	r 59.375	5 128.625	
M 9.000	o 19.125	u 26.750	n 34.875	t 42.250	a 48.125	i 56.250	n 60.750	G 73.875	r 82.875	o 88.000	v 94.750	e 102.250	3 119.625	4 127.625
C 9.000	a 17.500	b 25.625	o 32.375	o 39.375	l 47.125	4 119.750	4 127.625	

DISCLAIMER
THE PROFESSIONAL WHOSE SIGNATURE AND PERSONAL SEAL APPEAR HEREON ASSUMES RESPONSIBILITY ONLY FOR WHAT APPEARS ON THIS PAGE, AND DISCLAIMS (PURSUANT TO SECTION 327.411 RSMO) SPECIFICATION, ESTIMATES, REPORTS, OR OTHER DOCUMENTS OR INSTRUMENTS NOT SEALED BY THE UNDERSIGNED PROFESSIONAL RELATING TO OR INTENDED TO BE USED FOR ANY PART OR PARTS OF THE PROJECT TO WHICH THIS PAGE REFERS.

SIGN 63

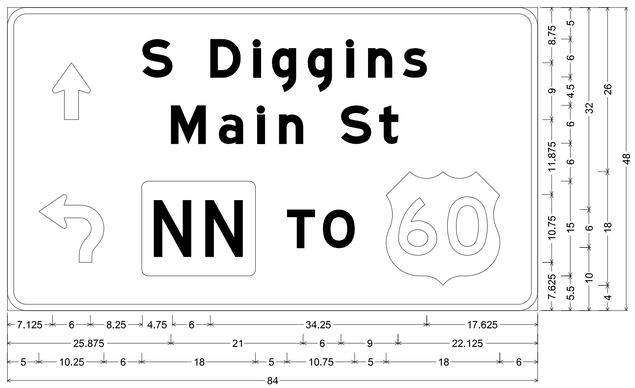

D1-2d ST-STRUCTURAL;
3.000" Radius, 1.000" Border, White on, Green;
Standard Arrow Custom 9.000" X 6.000" 90'; "S Diggins", E Mod; "Main St", E Mod; " ", E Mod;
Rounded Rectangle 1.000" Radius;
"TO", E Mod;
Table of letter and object lefts

7.125	S 21.375	D 32.125	l 39.000	g 41.875	g 47.625	l 53.750	n 57.125	s 62.625	
M 25.875	a 33.500	l 39.625	n 43.000	S 52.875	t 58.875				
5.000	21.250	T 44.250	O 50.000	60.000					

SIGN 48

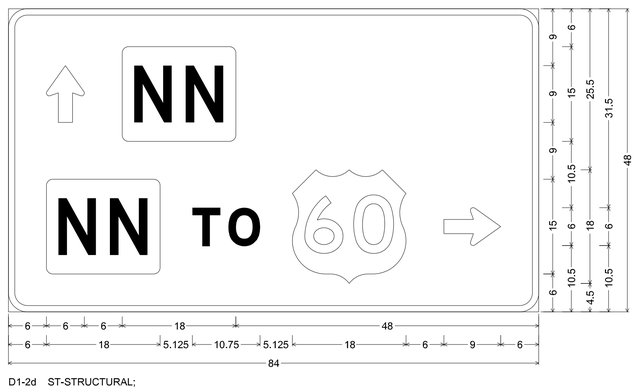

D1-2d ST-STRUCTURAL;
3.000" Radius, 1.000" Border, White on, Green;
Standard Arrow Custom 9.000" X 6.000" 90'; Rounded Rectangle 1.000" Radius;
Rounded Rectangle 1.000" Radius;
"TO", E Mod; Standard Arrow Custom 9.000" X 6.000" 0';
Table of letter and object lefts

6.000	18.000				
6.000	T 29.125	O 34.875	45.000	69.000	

SIGN 51

D1-1d ST-STRUCTURAL;
3.000" Radius, 1.000" Border, White on, Green;
"S Diggins", E Mod; "Main St", E Mod; Standard Arrow Custom 9.000" X 6.000" 45';
Table of letter and object lefts

S 7.000	D 17.750	l 24.625	g 27.500	g 33.250	l 39.375	n 42.750	s 48.250	57.875
M 11.500	a 19.125	l 25.250	n 28.625	S 38.500	t 44.500			

IF A SEAL IS PRESENT ON THIS SHEET IT HAS BEEN ELECTRONICALLY SEALED AND DATED.

STATE OF MISSOURI
PAUL JOSEPH KRONLAGE NUMBER EN 023328
REGISTERED PROFESSIONAL ENGINEER

07/31/2024 1:06:10 PM
Paul J. Kronlage - Civil
MO PE - 023328

DATE PREPARED 7/31/2024
ROUTE 60 | STATE MO
DISTRICT SW | SHEET NO. 202
COUNTY WEBSTER
JOB NO. J7P3425C
CONTRACT ID.
PROJECT NO.
BRIDGE NO.

DESCRIPTION	DATE

MISSOURI HIGHWAYS AND TRANSPORTATION COMMISSION
105 WEST CAPITOL
JEFFERSON CITY, MO 65102
1-888-ASK-MODOT (1-888-275-6636)

EFK•Moen
Civil Engineering Design
13523 Barrett Parkway Dr
Suite 250
St. Louis, MO 63021
Phone 314-394-3100
Fax 314-394-3199
Missouri Certificate of Authority: 001578

SIGNING PLAN
SHEET 18 OF 22

REV.

DISCLAIMER
THE PROFESSIONAL WHOSE SIGNATURE AND PERSONAL SEAL APPEAR HEREON ASSUMES RESPONSIBILITY ONLY FOR WHAT APPEARS ON THIS PAGE, AND DISCLAIMS (PURSUANT TO SECTION 327.411 RSMO) SPECIFICATION, ESTIMATES, REPORTS, OR OTHER DOCUMENTS OR INSTRUMENTS NOT SEALED BY THE UNDERSIGNED PROFESSIONAL RELATING TO OR INTENDED TO BE USED FOR ANY PART OR PARTS OF THE PROJECT TO WHICH THIS PAGE REFERS.

SIGNS 69 & 76

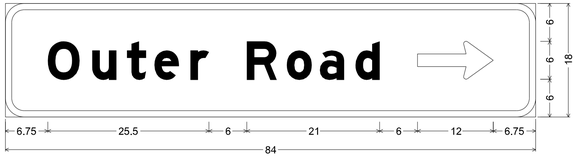

E9-1 ST-STRUCTURAL;
3.000" Radius, 1.000" Border, White on, Green;
"Outer Road", E Mod; Standard Arrow Custom 12.000" X 6.000" 0';
Table of letter and object lefts

O	u	t	e	r	R	o	a	d	⇨
6.750	13.750	19.250	23.625	29.375	38.250	44.625	49.875	55.500	65.250

SIGNS 70 & 71

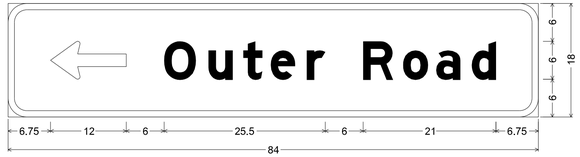

E9-1 ST-STRUCTURAL;
3.000" Radius, 1.000" Border, White on, Green;
Standard Arrow Custom 12.000" X 6.000" 180'; "Outer Road", E Mod;
Table of letter and object lefts

⇦	O	u	t	e	r	R	o	a	d
6.750	24.750	31.750	37.250	41.625	47.375	56.250	62.625	67.875	73.500

SIGN 52

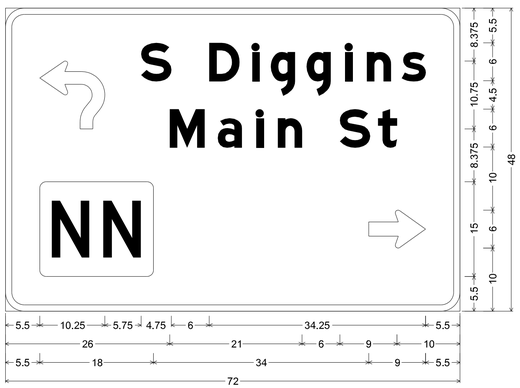

D1-2d ST-STRUCTURAL;
3.000" Radius, 1.000" Border, White on, Green;
"S Diggins", E Mod; "Main St", E Mod; Rounded Rectangle 1.000" Radius;
Standard Arrow Custom 9.000" X 6.000" 0';
Table of letter and object lefts

	S	D	i	g	g	i	n	s
5.500	21.500	32.250	39.125	42.000	47.750	53.875	57.250	62.750

M	a	i	n	S	t
26.000	33.625	39.750	43.125	53.000	59.000

	⇨
5.500	57.500

SIGN 44

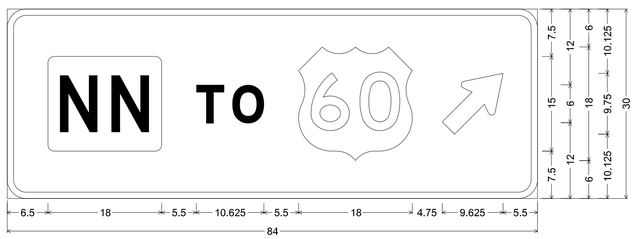

D1-1e ST-STRUCTURAL;
3.000" Radius, 1.000" Border, White on, Green;
Rounded Rectangle 1.000" Radius;
"TO", E Mod; Standard Arrow Custom 12.250" X 7.125" 45';
Table of letter and object lefts

	T	O	60	
6.500	30.000	35.625	46.125	68.875

SIGNING PLAN
SHEET 19 OF 22

STATE OF MISSOURI
PAUL JOSEPH KRONLAGE
NUMBER EN 023328
REGISTERED PROFESSIONAL ENGINEER
07/31/2024 1:06:34 PM
Paul J. Kronlage - Civil
MO PE - 023328

DATE PREPARED
7/31/2024

ROUTE	STATE
60	MO
DISTRICT	SHEET NO.
SW	203

COUNTY
WEBSTER
JOB NO.
J7P3425C
CONTRACT ID.
PROJECT NO.
BRIDGE NO.

DESCRIPTION	DATE

IF A SEAL IS PRESENT ON THIS SHEET IT HAS BEEN ELECTRONICALLY SEALED AND DATED.

MISSOURI HIGHWAYS AND TRANSPORTATION COMMISSION
105 WEST CAPITOL
JEFFERSON CITY, MO 65102
1-888-ASK-MODOT (1-888-275-6636)

EFK•Moen
Civil Engineering Design
13523 Barrett Parkway Dr
Suite 250
St. Louis, MO 63021
Phone 314-394-3100
Fax 314-394-3199
Missouri Certificate of Authority: 001578

REV.

DISCLAIMER
THE PROFESSIONAL WHOSE SIGNATURE AND PERSONAL SEAL APPEAR HEREON ASSUMES RESPONSIBILITY ONLY FOR WHAT APPEARS ON THIS PAGE, AND DISCLAIMS (PURSUANT TO SECTION 327.411 RSMO) SPECIFICATION, ESTIMATES, REPORTS, OR OTHER DOCUMENTS OR INSTRUMENTS NOT SEALED BY THE UNDERSIGNED PROFESSIONAL RELATING TO OR INTENDED TO BE USED FOR ANY PART OR PARTS OF THE PROJECT TO WHICH THIS PAGE REFERS.

SIGN 16

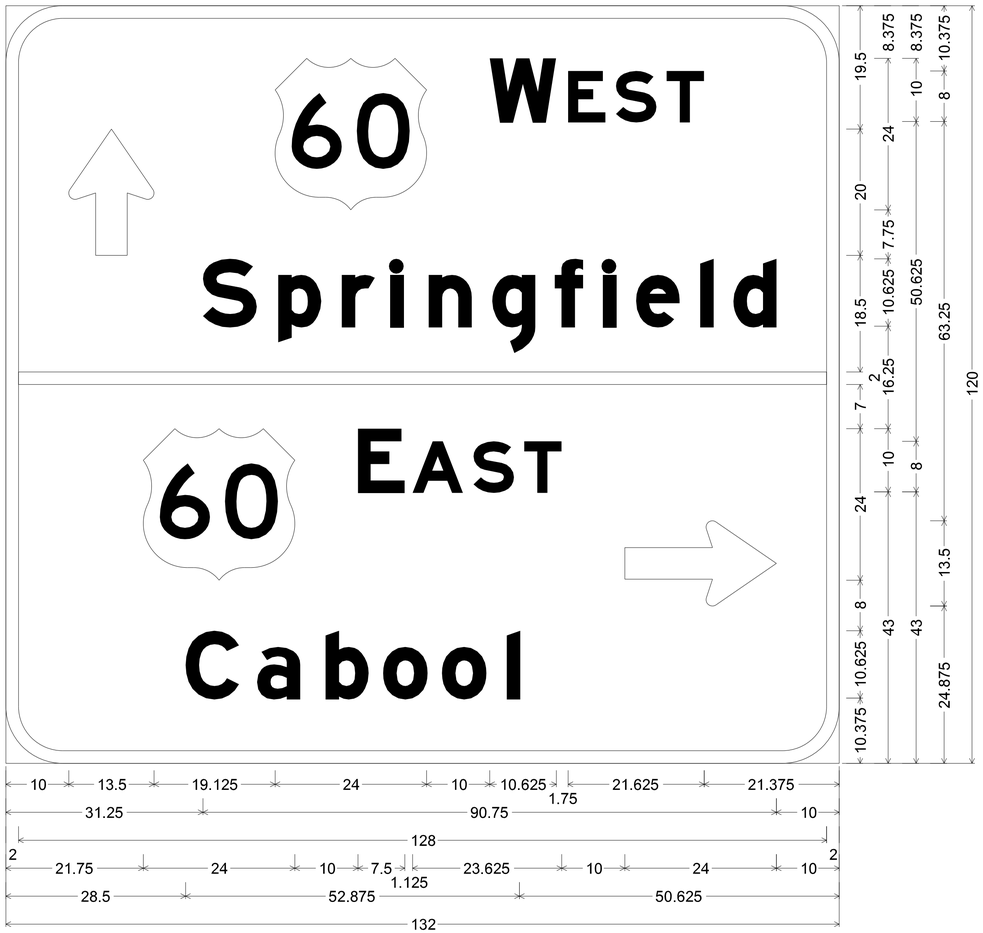

E8-2 ST-STRUCTURAL;
9.000" Radius, 2.000" Border, White on, Green;
Standard Arrow Custom 20.000" X 13.500" 90'; "WEST", E Mod; "Springfield", E Mod; "EAST", E Mod; "Cabool", E Mod; Standard Arrow Custom 24.000" X 13.500" 0';
Table of letter and object lefts

⇧ 10.000	60 42.625	**W** 76.625	**E** 89.000	**S** 96.625	**T** 104.625

S 31.250	**p** 43.125	**r** 53.250	**l** 60.875	**n** 67.000	**g** 77.000	**f** 87.000	**l** 94.500	**e** 99.875	**l** 110.000	**d** 115.250

— 2.000

60 21.750	**E** 55.750	**A** 64.375	**S** 74.125	**T** 82.125	⇨ 98.000

C 28.500	**a** 39.750	**b** 50.625	**o** 59.750	**o** 69.125	**l** 79.375

SIGN 19

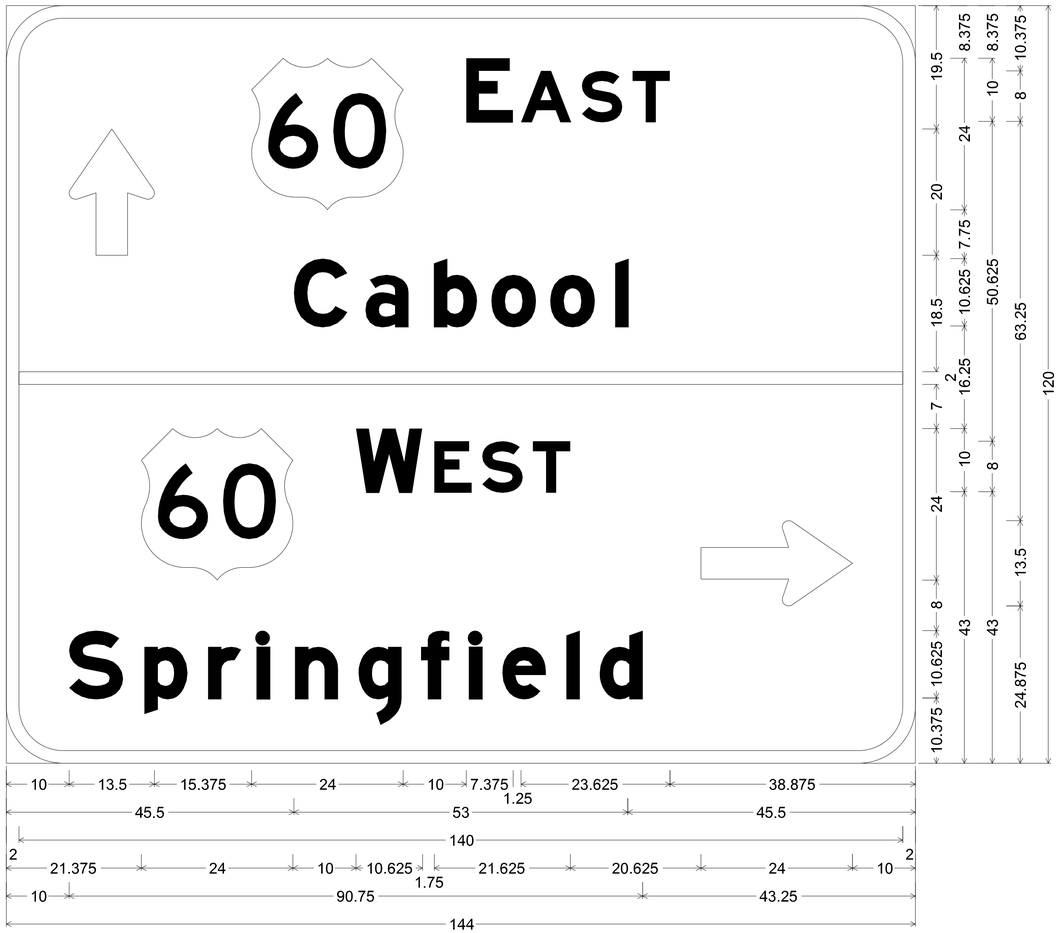

E8-2 ST-STRUCTURAL;
9.000" Radius, 2.000" Border, White on, Green;
Standard Arrow Custom 20.000" X 13.500" 90'; "EAST", E Mod; "Cabool", E Mod; "WEST", E Mod; "Springfield", E Mod; Standard Arrow Custom 24.000" X 13.500" 0';
Table of letter and object lefts

⇧ 10.000	60 38.875	**E** 72.875	**A** 81.500	**S** 91.125	**T** 99.250

C 45.500	**a** 56.875	**b** 67.750	**o** 76.875	**o** 86.125	**l** 96.500

— 2.000

60 21.375	**W** 55.375	**E** 67.750	**S** 75.375	**T** 83.375	⇨ 110.000

S 10.000	**p** 21.875	**r** 32.000	**i** 39.625	**n** 45.750	**g** 55.750	**f** 65.750	**i** 73.250	**e** 78.625	**l** 88.750	**d** 94.000

SIGNING PLAN
SHEET 20 OF 22

STATE OF MISSOURI
PAUL JOSEPH KRONLAGE NUMBER EN 023328
REGISTERED PROFESSIONAL ENGINEER
Paul J. Kronlage
07/31/2024 1:06:53 PM
Paul J. Kronlage - Civil
MO PE - 023328

DATE PREPARED 7/31/2024
ROUTE 60 | STATE MO
DISTRICT SW | SHEET NO. 204
COUNTY WEBSTER
JOB NO. J7P3425C
CONTRACT ID.
PROJECT NO.
BRIDGE NO.

REV.	DESCRIPTION	DATE

IF A SEAL IS PRESENT ON THIS SHEET IT HAS BEEN ELECTRONICALLY SEALED AND DATED.

MISSOURI HIGHWAYS AND TRANSPORTATION COMMISSION
105 WEST CAPITOL
JEFFERSON CITY, MO 65102
1-888-ASK-MODOT (1-888-275-6636)

EFK•Moen
Civil Engineering Design
13523 Barrett Parkway Dr
Suite 250
St. Louis, MO 63021
Phone 314-394-3100
Fax 314-394-3199
Missouri Certificate of Authority: 001578

DISCLAIMER
THE PROFESSIONAL WHOSE SIGNATURE AND PERSONAL SEAL APPEAR HEREON ASSUMES RESPONSIBILITY ONLY FOR WHAT APPEARS ON THIS PAGE, AND DISCLAIMS (PURSUANT TO SECTION 327.411 RSMO) SPECIFICATION, ESTIMATES, REPORTS, OR OTHER DOCUMENTS OR INSTRUMENTS NOT SEALED BY THE UNDERSIGNED PROFESSIONAL RELATING TO OR INTENDED TO BE USED FOR ANY PART OR PARTS OF THE PROJECT TO WHICH THIS PAGE REFERS.

1 STA. 602+00
ROUTE 60 - RT

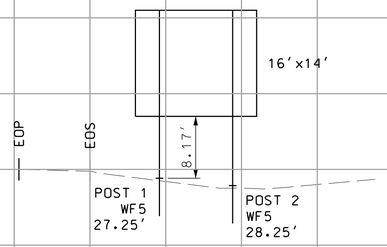

82 STA. 622+00
ROUTE 60 - LT

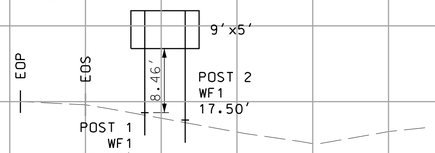

2 STA. 632+00
ROUTE 60 - LT

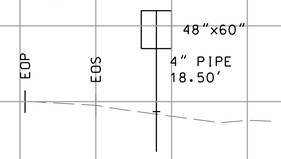

4 STA. 642+00
ROUTE 60 - LT

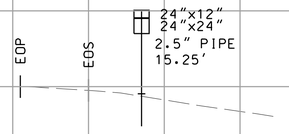

5 STA. 647+82
ROUTE 60 - RT

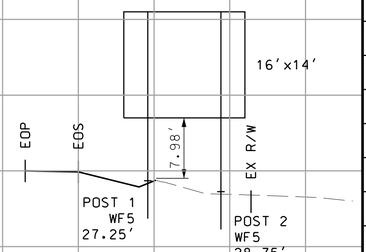

6 STA. 652+40
ROUTE 60 - RT

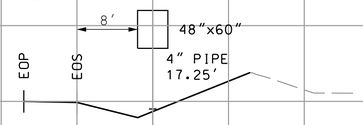

7 STA. 658+97
ROUTE 60 - RT

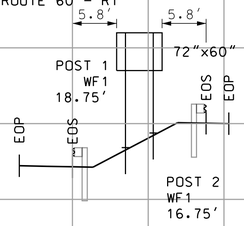

8 STA. 10+65
RAMP- LT

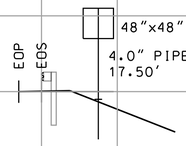

9 STA. 8+65
RAMP- LT

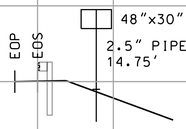

10 STA. 8+65
RAMP- RT

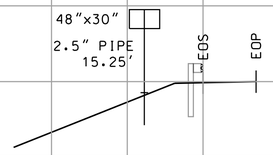

16 STA. 71+40
ROUTE A- LT

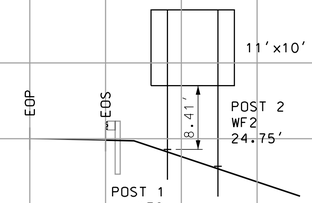

11 STA. 10+65
RAMP- RT

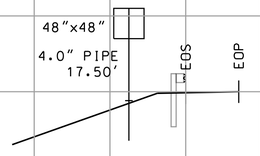

12 STA. 8+65
RAMP- RT

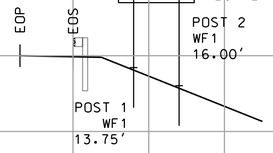

13 14 STA. 10+94
RAMP- RT

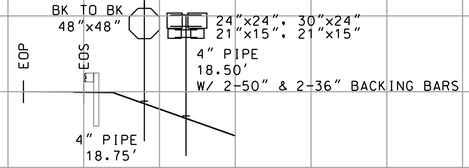

15 36 STA. 68+97
ROUTE A- RT

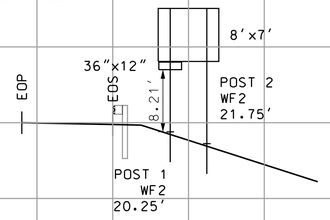

17 OMMITED

19 STA. 63+50
ROUTE A- RT

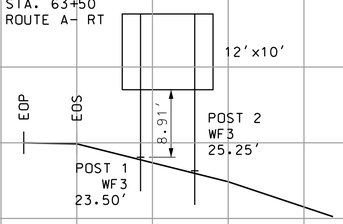

20 STA. 2+50
RAMP- LT

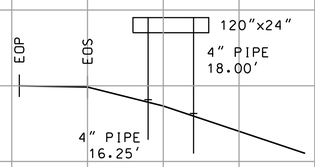

27 30 STA. 64+52, 64+72
ROUTE A- LT

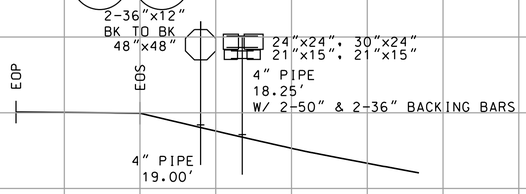

29 35 STA. 65+60
ROUTE A- LT

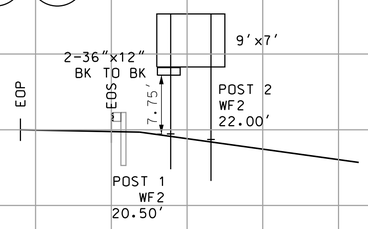

31 STA. 1+00
RAMP- LT

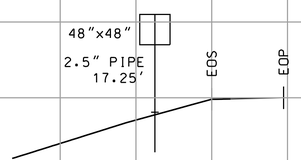

32 STA. 1+00
RAMP- RT

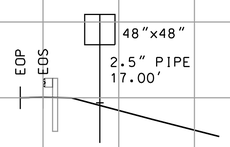

33 STA. 3+00
RAMP- LT

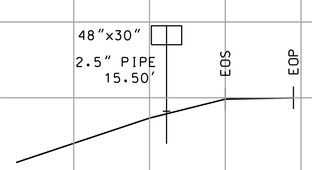

34 STA. 3+00
RAMP- RT

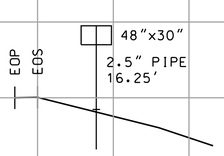

10'

GROUND MOUNT
SIGN SECTIONS
SHEET 21 OF 22

IF A SEAL IS PRESENT ON THIS SHEET IT HAS BEEN ELECTRONICALLY SEALED AND DATED.

STATE OF MISSOURI
PAUL JOSEPH KRONLAGE
NUMBER EN 023328
REGISTERED PROFESSIONAL ENGINEER

07/31/2024 1:07:13 PM
Paul J. Kronlage - Civil
MO PE - 023328

DATE PREPARED
7/31/2024

ROUTE	STATE
60	MO
DISTRICT	SHEET NO.
SW	205

COUNTY
WEBSTER

JOB NO.
J7P3425C

CONTRACT ID.

PROJECT NO.

BRIDGE NO.

REV.	DESCRIPTION	DATE

MISSOURI HIGHWAYS AND TRANSPORTATION COMMISSION
105 WEST CAPITOL
JEFFERSON CITY, MO 65102
1-888-ASK-MODOT (1-888-275-6636)

EFK•Moen
Civil Engineering Design
13523 Barrett Parkway Dr
Suite 250
St. Louis, MO 63021
Phone 314-394-3100
Fax 314-394-3199
Missouri Certificate of Authority: 001578

Z:\21047 CMT Route 60 at Route A\DGN\Design\Final\Plot Sheets\205_SN_021_J7P3425_XS_10.dgn 9:57:12 AM 7/31/2024

37 STA. 676+45
ROUTE 60 - LT

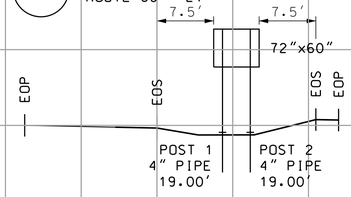

38 STA. 682+00
ROUTE 60 - LT

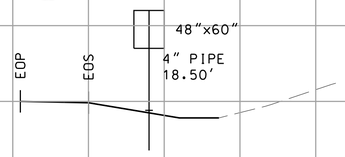

39 STA. 686+42
ROUTE 60 - LT

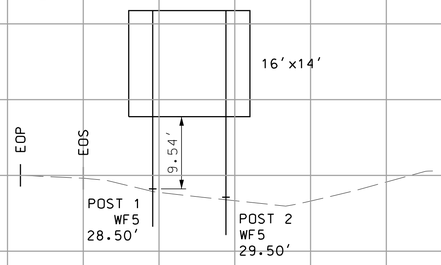

41 STA. 695+00
ROUTE 60 - RT

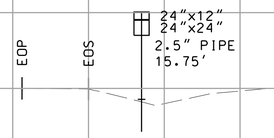

88 STA. 705+00
ROUTE 60 - RT

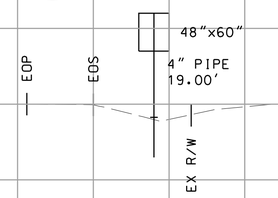

83 STA. 715+00
ROUTE 60 - RT

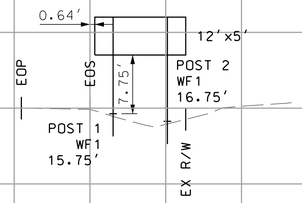

40 STA. 722+52
ROUTE 60 - LT

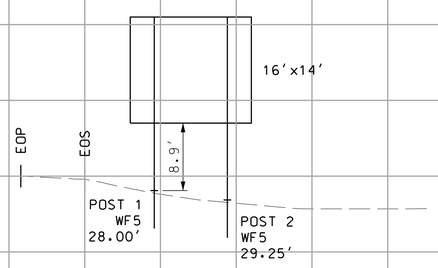

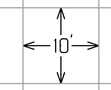

GROUND MOUNT
SIGN SECTIONS
SHEET 22 OF 22

DISCLAIMER
THE PROFESSIONAL WHOSE SIGNATURE AND PERSONAL SEAL APPEAR HEREON ASSUMES RESPONSIBILITY ONLY FOR WHAT APPEARS ON THIS PAGE, AND DISCLAIMS (PURSUANT TO SECTION 327.411 RSMO) SPECIFICATION, ESTIMATES, REPORTS, OR OTHER DOCUMENTS OR INSTRUMENTS NOT SEALED BY THE UNDERSIGNED PROFESSIONAL RELATING TO OR INTENDED TO BE USED FOR ANY PART OR PARTS OF THE PROJECT TO WHICH THIS PAGE REFERS.

STATE OF MISSOURI
PAUL JOSEPH KRONLAGE
NUMBER EN 023328
REGISTERED PROFESSIONAL ENGINEER

07/31/2024 1:07:28 PM
Paul J. Kronlage - Civil
MO PE - 023328

DATE PREPARED
7/31/2024

ROUTE	STATE
60	MO
DISTRICT	SHEET NO.
SW	206

COUNTY
WEBSTER

JOB NO.
J7P3425C

CONTRACT ID.

PROJECT NO.

BRIDGE NO.

DESCRIPTION	DATE

MISSOURI HIGHWAYS AND TRANSPORTATION COMMISSION

MoDOT

105 WEST CAPITOL
JEFFERSON CITY, MO 65102
1-888-ASK-MODOT (1-888-275-6636)

EFK•Moen
Civil Engineering Design
13523 Barrett Parkway Dr
Suite 250
St. Louis, MO 63021
Phone 314-394-3100
Fax 314-394-3199
Missouri Certificate of Authority: 001578

IF A SEAL IS PRESENT ON THIS SHEET IT HAS BEEN ELECTRONICALLY SEALED AND DATED.

REV.

Z:\21047 CMT Route 60 at Route A\DGN\Design\Final\Plot Sheets\206_SN_022_J7P3425_XS_10.dgn 9:57:12 AM 7/31/2024

DISCLAIMER
THE PROFESSIONAL WHOSE SIGNATURE AND PERSONAL SEAL APPEAR HEREON ASSUMES RESPONSIBILITY ONLY FOR WHAT APPEARS ON THIS PAGE, AND DISCLAIMS (PURSUANT TO SECTION 327.411 RSMO) SPECIFICATION, ESTIMATES, REPORTS, OR OTHER DOCUMENTS OR INSTRUMENTS NOT SEALED BY THE UNDERSIGNED PROFESSIONAL RELATING TO OR INTENDED TO BE USED FOR ANY PART OR PARTS OF THE PROJECT TO WHICH THIS PAGE REFERS.

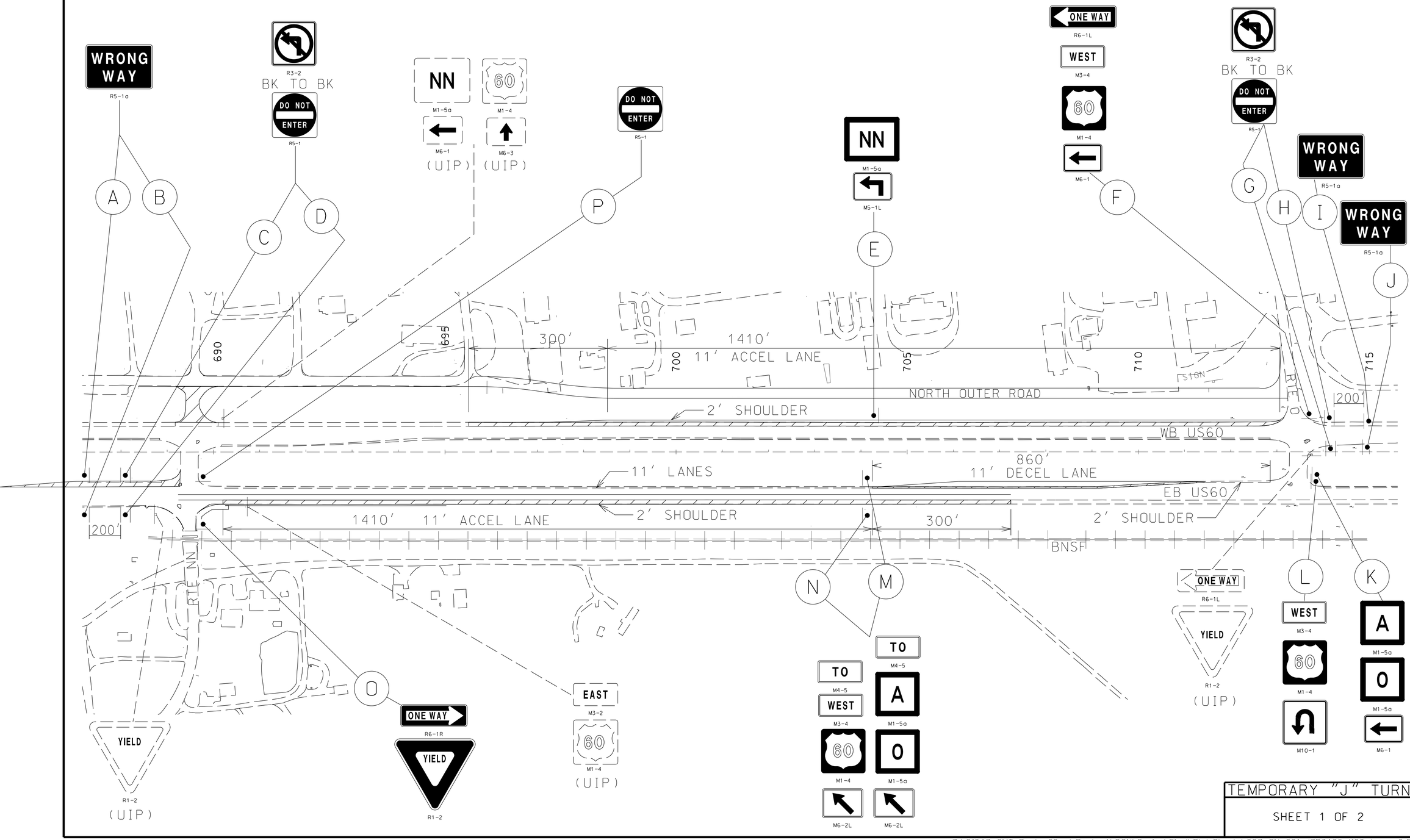

TEMPORARY "J" TURN

SHEET 1 OF 2

STATE OF MISSOURI
PAUL JOSEPH KRONLAGE NUMBER EN 023328
REGISTERED PROFESSIONAL ENGINEER

07/31/2024 1:07:50 PM
Paul J. Kronlage - Civil
MO PE - 023328

DATE PREPARED	
7/31/2024	
ROUTE	STATE
60	MO
DISTRICT	SHEET NO.
SW	207
COUNTY	
WEBSTER	
JOB NO.	
J7P3425C	
CONTRACT ID.	
.	
PROJECT NO.	
.	
BRIDGE NO.	
.	

DATE	DESCRIPTION

IF A SEAL IS PRESENT ON THIS SHEET IT HAS BEEN ELECTRONICALLY SEALED AND DATED.

MISSOURI HIGHWAYS AND TRANSPORTATION COMMISSION
105 WEST CAPITOL
JEFFERSON CITY, MO 65102
1-888-ASK-MODOT (1-888-275-6636)

EFK•Moen
Civil Engineering Design
13523 Barrett Parkway Dr
Suite 250
St. Louis, MO 63021
Phone 314-394-3100
Fax 314-394-3199
Missouri Certificate of Authority: 001578

REV.

Z:\21047 CMT Route 60 at Route A\DGN\Design\Final\Plot Sheets\207_SN_001_J7P3425_i100.dgn 9:57:13 AM 7/31/2024

STANDARD SIGN ASSEMBLIES

SIGN NUMBER	STATION	LOCATION	TYPE: SIGN DESCRIPTION, SIZES & NUMBER OF EACH																
			WRONG WAY R5-1a 48"X30"	DO NOT ENTER R5-1 36"X36"	R3-2 36"X36"	NN M1-5a 30"X24"	R6-1L 36"X12"	R6-1L 36"X12"	60 M1-4 24"X24"	WEST M3-4 24X12"	M6-1 21X15"	A O M1-5a 24"X24"	M10-1 36"X36"	TO M4-5 24"X15"	R1-2 48"	R6-1R 36"X12"	M6-2L 21X15"	
A			1															
B			1															
C				1	1													
D				1	1													
E						1	1											
F								1	1	1	1							
G				1	1													
H				1	1													
I			1															
J			1															
K											1	2						
L									1	1			1					
M									1	1		2		2			2	
N									1	1		2		2			2	
O															1	1		
P				1														
			4	5	4	1	1	1	4	4	2	6	1	4	1	1	4	

SIGN SUMMARY

STANDARD SIGN OR SPECIAL SIGN NUMBER	SIGN DETAIL SHEET NO.	NO. EACH	SIZE, TYPE & SQUARE FEET: SIZE	FLAT SHEET SH ITEM NO. 9035004A	FLAT SHEET FLUORESCENT SHF * ITEM NO. 9035069A	STRUCTURAL ST ITEM NO. 9035011A	STRUCTURAL FLUORESCENT STF * ITEM NO. 9035071A
R5-1a		4	48"X30"	40.0			
R5-1 A		5	36"X36"	45.0			
R3-2		4	36"X36"	36.0			
M1-5a		1	30"X24"	5.0			
M5-1L		1	21"X15"	2.2			
R6-1L		1	36"X12"	3.0			
M1-4		4	24"X24"	16.0			
M3-4		4	24"X12"	8.0			
M6-1		2	21"X15"	4.4			
M1-5a		6	24"X24"	24.0			
M10-1		1	36"X36"	9.0			
M4-5		4	24"X15"	10.0			
R1-2		1	48"	16.0			
R6-1R		1	36"	9.0			
M6-2L		4	21"X15"	8.8			
SUBTOTAL J TURN			236**				

* ORANGE, YELLOW & YELLOW/GREEN

** SEE SIGNING PLAN SHEET 12 OF 22 FOR PAY TOTALS

TEMPORARY "J" TURN

SHEET 2 OF 2 D-30

STATE OF MISSOURI
PAUL JOSEPH KRONLAGE NUMBER EN 023328
REGISTERED PROFESSIONAL ENGINEER

Paul J. Kronlage

07/31/2024 1:08:18 PM
Paul J. Kronlage - Civil
MO PE - 023328

DATE PREPARED: 7/31/2024
ROUTE: 60 | STATE: MO
DISTRICT: SW | SHEET NO.: 208
COUNTY: WEBSTER
JOB NO.: J7P3425C
CONTRACT ID.: .
PROJECT NO.: .
BRIDGE NO.: .

DATE	DESCRIPTION
.	.

IF A SEAL IS PRESENT ON THIS SHEET IT HAS BEEN ELECTRONICALLY SEALED AND DATED.

MISSOURI HIGHWAYS AND TRANSPORTATION COMMISSION
105 WEST CAPITOL
JEFFERSON CITY, MO 65102
1-888-ASK-MODOT (1-888-275-6636)

EFK•Moen
Civil Engineering Design
13523 Barrett Parkway Dr
Suite 250
St. Louis, MO 63021
Phone 314-394-3100
Fax 314-394-3199
Missouri Certificate of Authority: 001578

REV.

SCALE

0 50 100 150

STRIPING KEY

S – SOLID

I – INTERMITTENT (10′ STRIPE, 30′ GAP UNLESS NOTED OTHERWISE)

D – DOUBLE

W – WHITE

Y – YELLOW

T – PREFORMED THERMOPLASTIC PAVEMENT MARKING

H – HIGH BUILD WATERBORNE PAVEMENT MARKING PAINT, TYPE L BEADS

P – WATERBORNE PAINT WITH TYPE P BEADS

NOTE: BLACK CONTRAST MARKINGS SHALL BE USED ON LANE LINES (INTERMITTENT, DOTTED/DASHED OR SOLID) ON ALL CONCRETE PAVEMENT.

DISCLAIMER
THE PROFESSIONAL WHOSE SIGNATURE AND PERSONAL SEAL APPEAR HEREON ASSUMES RESPONSIBILITY ONLY FOR WHAT APPEARS ON THIS PAGE, AND DISCLAIMS (PURSUANT TO SECTION 327.411 RSMO) SPECIFICATION, ESTIMATES, REPORTS, OR OTHER DOCUMENTS OR INSTRUMENTS NOT SEALED BY THE UNDERSIGNED PROFESSIONAL RELATING TO OR INTENDED TO BE USED FOR ANY PART OR PARTS OF THE PROJECT TO WHICH THIS PAGE REFERS.

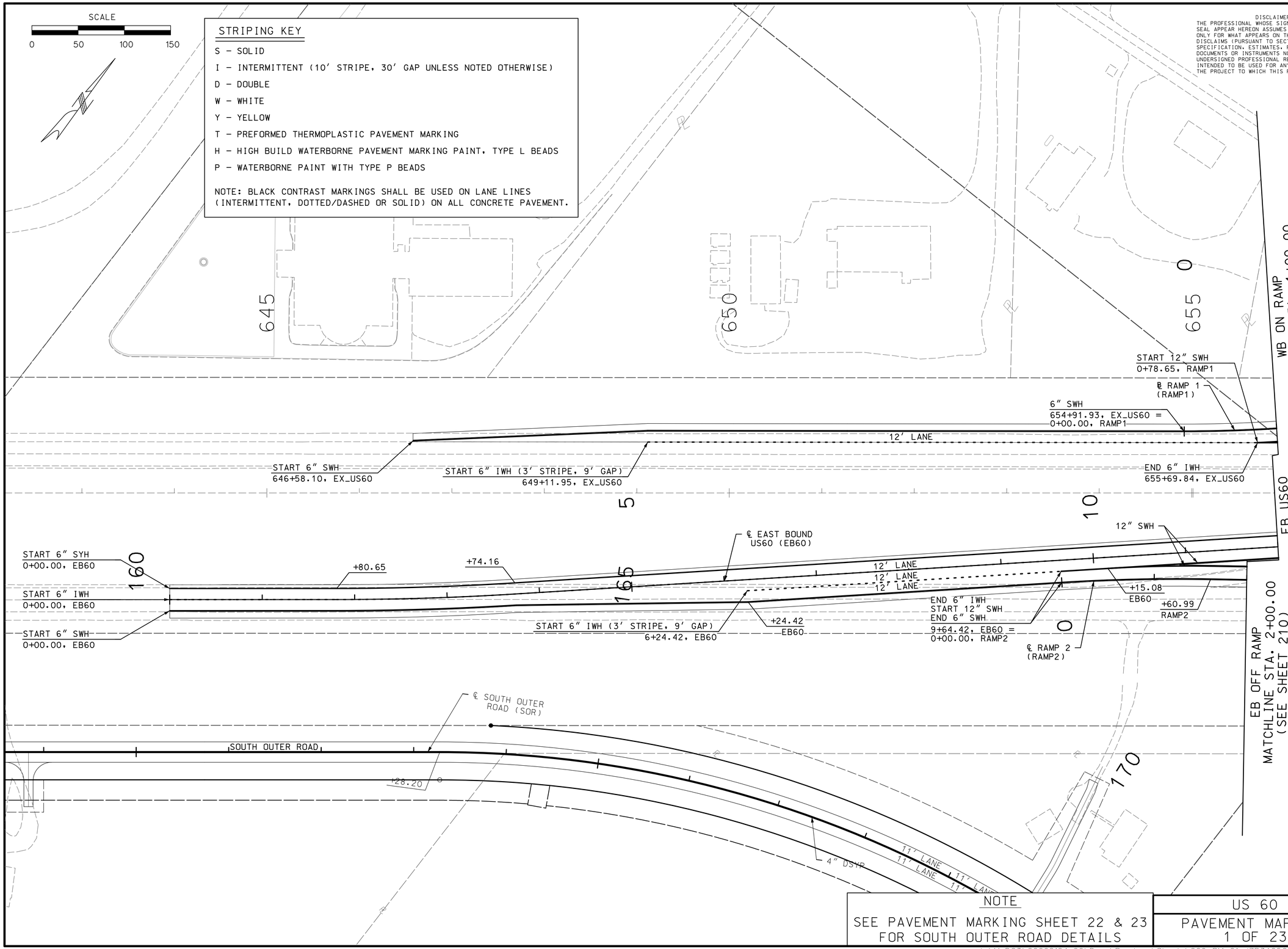

NOTE

SEE PAVEMENT MARKING SHEET 22 & 23 FOR SOUTH OUTER ROAD DETAILS

US 60

PAVEMENT MARKING
1 OF 23

STATE OF MISSOURI
DALLAS P. JOPLIN
NUMBER PE-2011015760
PROFESSIONAL ENGINEER

THIS SHEET HAS BEEN SIGNED, SEALED AND DATED ELECTRONICALLY.

DATE PREPARED
8/2/2024

ROUTE	STATE
60	MO
DISTRICT	SHEET NO.
SW	209

COUNTY
WEBSTER

JOB NO.
J7P3425C

CONTRACT ID.

PROJECT NO.

BRIDGE NO.

DESCRIPTION | DATE

MISSOURI HIGHWAYS AND TRANSPORTATION COMMISSION

105 WEST CAPITOL
JEFFERSON CITY, MO 65102
1-888-ASK-MODOT (1-888-275-6636)

CMT
CRAWFORD, MURPHY & TILLY, INC.
1631 WEST ELFINDALE STREET
SPRINGFIELD, MO 65807 (417) 869-6009
ENGINEERING CORPORATION - 000631

© Copyright CMT, Inc.

IF A SEAL IS PRESENT ON THIS SHEET IT HAS BEEN ELECTRONICALLY SEALED AND DATED.

REV.

L:\MoDOT\20092124-00\Draw\Roadway\Sheets\209_PM_01_J7P3425C_i50.dgn 8:29:01 AM 8/2/2024

SCALE

0 50 100 150

DISCLAIMER
THE PROFESSIONAL WHOSE SIGNATURE AND PERSONAL SEAL APPEAR HEREON ASSUMES RESPONSIBILITY ONLY FOR WHAT APPEARS ON THIS PAGE, AND DISCLAIMS (PURSUANT TO SECTION 327.411 RSMO) SPECIFICATION, ESTIMATES, REPORTS, OR OTHER DOCUMENTS OR INSTRUMENTS NOT SEALED BY THE UNDERSIGNED PROFESSIONAL RELATING TO OR INTENDED TO BE USED FOR ANY PART OR PARTS OF THE PROJECT TO WHICH THIS PAGE REFERS.

ROUTE A
MATCHLINE STA. 64+00.00
(SEE SHEET 215)

START 4" SWP
64+21.93, RTEA
START 6" SWH
0+04.57, RAMP3
4" SWP
4" DSYP
24" SWT
0+61.05, RAMP3
+58.56
RAMP3
+85.26
+11.97
6" SWH
START 4" SWP
64+39.61, RTEA
END 6" SWH
10+75.35, RAMP1
℄ RAMP 3
(RAMP3)
14' LANE
6" SYH
+57.54
RAMP3
+88.62
WB OFF RAMP
MATCHLINE
STA. 4+00.00
(SEE SHEET 211)
+05.48
RAMP1
℄ ROUTE A (RTEA)
+73.93
RAMP1
START 6" SYH
0+16.18, RAMP3
START 4" SWP
65+55.12, RTEA
END 6" SWH
MATCH EXIST.
666+05.49, EX_US60
END 6" SYH
10+46.29, RAMP1
START 4" SWP
65+67.17, RTEA
17' LANE
START 6" SWH
MATCH EXIST.
664+52.32, EX_US60
℄ EXISTING US60
(EX_US60)
4" DSYP
6" IWH
6" SYH
4" SWP
4" SWP
6" SWH
6" SYH
6" SYH
END 4" SWP
68+14.12, RTEA
END 6" SYH
11+40.70, RAMP2
END 4" SWP
68+38.07, RTEA
START 6" SYH
0+00.88, RAMP4
+63.19
RAMP4
℄ RAMP 4
(RAMP4)
6" SYH
+61.67
EB60
+13.01
RAMP2
+14.78
+68.27
+13.89
14' LANE
+96.67
EB60
+34.52
+91.88
RAMP4
6" SWH
℄ RAMP 1
(RAMP1)
6" SWH
6" SYH
START 6" SWH
0+33.15, RAMP4
START 4" SWP
69+57.60, RTENN
END 12" SWH
START 6" SYH
2+42.22, RAMP1
℄ EAST BOUND
US60 (EB60)
+89.95
24" SWT
+12.08, RAMP2
END 6" SWH
11+50.71, RAMP2
START 4" SWP
69+28.99, RTENN
+91.70
12" SWH
6" SYH
12' LANE
12' LANE
6" IWH
4" SWP
4" DSYP
END 12" SWH
START 6" SWH
13+78.46, EB60
℄ RAMP 2
(RAMP2)
4" SWP
12" SWH
14' LANE
+04.13
℄ ROUTE NN (RTEA)
END 12" SWH
START 6" SYH
4+08.20, RAMP2
4" DSYP
4" SWP
4" SWP
17' LANE
WB ON RAMP
MATCHLINE
STA. 1+00.00
(SEE SHEET 209)
EB US60
MATCHLINE
STA. 12+00.00
(SEE SHEET 209)
EB OFF RAMP
MATCHLINE STA. 2+00.00
(SEE SHEET 209)
EB ON RAMP
MATCHLINE
STA. 3+00.00
(SEE SHEET 211)
ROUTE NN
MATCHLINE STA. 73+00.00
(SEE SHEET 216)

STRIPING KEY

S – SOLID
I – INTERMITTENT (10' STRIPE, 30' GAP UNLESS NOTED OTHERWISE)
D – DOUBLE
W – WHITE
Y – YELLOW
T – PREFORMED THERMOPLASTIC PAVEMENT MARKING
H – HIGH BUILD WATERBORNE PAVEMENT MARKING PAINT, TYPE L BEADS
P – WATERBORNE PAINT WITH TYPE P BEADS

NOTE: BLACK CONTRAST MARKINGS SHALL BE USED ON LANE LINES (INTERMITTENT, DOTTED/DASHED OR SOLID) ON ALL CONCRETE PAVEMENT.

STATE OF MISSOURI
DALLAS P. JOPLIN
NUMBER PE-2011015760
PROFESSIONAL ENGINEER

THIS SHEET HAS BEEN SIGNED, SEALED AND DATED ELECTRONICALLY.

DATE PREPARED	
8/2/2024	
ROUTE	STATE
60	MO
DISTRICT	SHEET NO.
SW	210
COUNTY	
WEBSTER	
JOB NO.	
J7P3425C	
CONTRACT ID.	
PROJECT NO.	
BRIDGE NO.	

DATE	DESCRIPTION

IF A SEAL IS PRESENT ON THIS SHEET IT HAS BEEN ELECTRONICALLY SEALED AND DATED.

MISSOURI HIGHWAYS AND TRANSPORTATION COMMISSION
105 WEST CAPITOL
JEFFERSON CITY, MO 65102
1-888-ASK-MODOT (1-888-275-6636)

CMT
©Copyright CMT, Inc.
CRAWFORD, MURPHY & TILLY, INC.
1631 WEST ELFINDALE STREET
SPRINGFIELD, MO 65807 (417) 869-6009
ENGINEERING CORPORATION - 000631

US 60
PAVEMENT MARKING
2 OF 23

REV.

L:\MoDOT\20092124-00\Draw\Roadway\Sheets\210_PM_02_J7P3425C_150.dgn 8:29:02 AM 8/2/2024

STRIPING KEY

S - SOLID
I - INTERMITTENT (10' STRIPE, 30' GAP UNLESS NOTED OTHERWISE)
D - DOUBLE
W - WHITE
Y - YELLOW
T - PREFORMED THERMOPLASTIC PAVEMENT MARKING
H - HIGH BUILD WATERBORNE PAVEMENT MARKING PAINT, TYPE L BEADS
P - WATERBORNE PAINT WITH TYPE P BEADS

NOTE: BLACK CONTRAST MARKINGS SHALL BE USED ON LANE LINES (INTERMITTENT, DOTTED/DASHED OR SOLID) ON ALL CONCRETE PAVEMENT.

SCALE
0 50 100 150

DISCLAIMER
THE PROFESSIONAL WHOSE SIGNATURE AND PERSONAL SEAL APPEAR HEREON ASSUMES RESPONSIBILITY ONLY FOR WHAT APPEARS ON THIS PAGE, AND DISCLAIMS (PURSUANT TO SECTION 327.411 RSMO) SPECIFICATION, ESTIMATES, REPORTS, OR OTHER DOCUMENTS OR INSTRUMENTS NOT SEALED BY THE UNDERSIGNED PROFESSIONAL RELATING TO OR INTENDED TO BE USED FOR ANY PART OR PARTS OF THE PROJECT TO WHICH THIS PAGE REFERS.

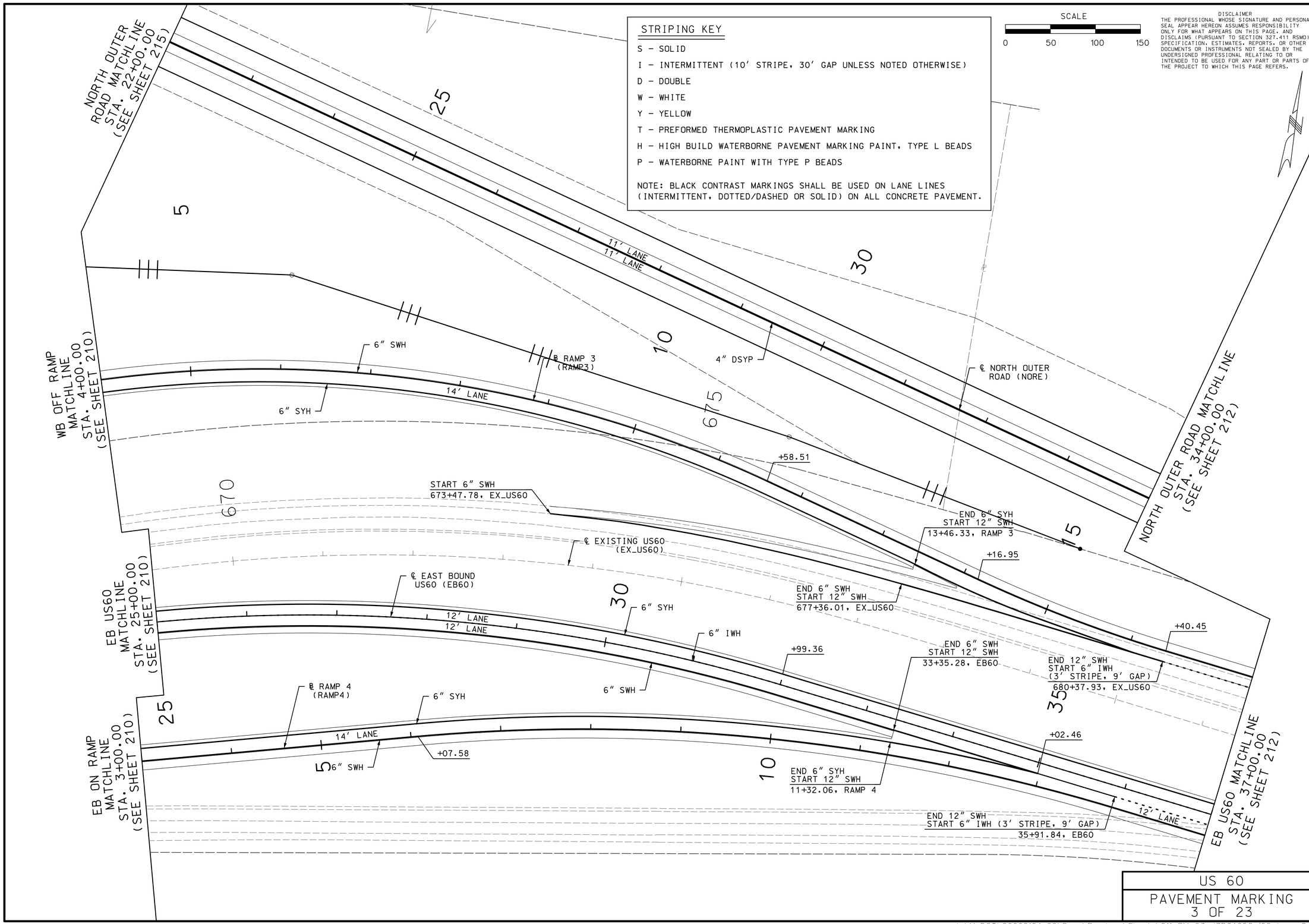

US 60
PAVEMENT MARKING
3 OF 23

STATE OF MISSOURI
DALLAS P. JOPLIN
NUMBER PE-2011015760
PROFESSIONAL ENGINEER

THIS SHEET HAS BEEN SIGNED, SEALED AND DATED ELECTRONICALLY.

DATE PREPARED	
8/2/2024	
ROUTE 60	STATE MO
DISTRICT SW	SHEET NO. 211
COUNTY WEBSTER	
JOB NO. J7P3425C	
CONTRACT ID.	
PROJECT NO.	
BRIDGE NO.	

DATE	DESCRIPTION

IF A SEAL IS PRESENT ON THIS SHEET IT HAS BEEN ELECTRONICALLY SEALED AND DATED.

MISSOURI HIGHWAYS AND TRANSPORTATION COMMISSION
MoDOT
105 WEST CAPITOL
JEFFERSON CITY, MO 65102
1-888-ASK-MODOT (1-888-275-6636)

CMT
©Copyright CMT, Inc.
CRAWFORD, MURPHY & TILLY, INC.
1631 WEST ELFINDALE STREET
SPRINGFIELD, MO 65807 (417) 869-6009
ENGINEERING CORPORATION - 000631

REV.

L:\MoDOT\20092124-00\Draw\Roadway\Sheets\211_PM_03_J7P3425C_i50.dgn 8:29:04 AM 8/2/2024

STRIPING KEY

S – SOLID

I – INTERMITTENT (10′ STRIPE, 30′ GAP UNLESS NOTED OTHERWISE)

D – DOUBLE

W – WHITE

Y – YELLOW

T – PREFORMED THERMOPLASTIC PAVEMENT MARKING

H – HIGH BUILD WATERBORNE PAVEMENT MARKING PAINT, TYPE L BEADS

P – WATERBORNE PAINT WITH TYPE P BEADS

NOTE: BLACK CONTRAST MARKINGS SHALL BE USED ON LANE LINES (INTERMITTENT, DOTTED/DASHED OR SOLID) ON ALL CONCRETE PAVEMENT.

SCALE 0 50 100 150

NORTH OUTER ROAD MATCHLINE STA. 34+00.00 (SEE SHEET 211)

EB US60 MATCHLINE STA. 37+00.00 (SEE SHEET 211)

EXIST. US60 MATCHLINE STA. 693+00.00 (SEE SHEET 213)

(SEE SHEET 13)

PALMER ST

STATE ST

BOWSER DR

N DIGGINS MAIN ST

35 40 45 685 690 213

11′ LANE
11′ LANE

4″ DSYP

℄ NORTH OUTER ROAD (NORE)

+17.68

+57.02

END 4″ DSYP
42+33.39, NORE

END 4″ DSYP
43+64.95, NORE

START 4″ DSYP
44+23.04, NORE

END 4″ DSYP
45+85.47, NORE

START 4″ DSYP
42+88.60, NORE

START 4″ DSYP
46+45.47, NORE

6″ SWH

+87.88

12′ LANE
12′ LANE
12′ LANE

6″ IWH

END 6″ IWH
683+87.94, EX_US60

END 6″ SWH
MATCH EXIST.
686+18.68, EX_US60

BEGIN 6″ SWH
MATCH EXIST.
689+17.59, EX_US60

END 6″ SWH
MATCH EXIST.
690+92.59, EX_US60

WB US60

℄ EXISTING US60
(EX_US60)

℄ EAST BOUND
US60 (EB60)

6″ IWH

END 6″ IWH
MATCH EXIST.
42+71.66, EB60

6″ SWH

+71.80
EB60

END 6″ IWH
41+71.80, EB60

BEGIN 6″ SYH
MATCH EXIST.
689+10.36, EX_US60

6″ SYH

END 6″ SYH
END 6″ SWH
MATCH EXIST.
690+24.58, EX_US60

+10.38
EX_US60

EB US60

DISCLAIMER
THE PROFESSIONAL WHOSE SIGNATURE AND PERSONAL SEAL APPEAR HEREON ASSUMES RESPONSIBILITY ONLY FOR WHAT APPEARS ON THIS PAGE, AND DISCLAIMS (PURSUANT TO SECTION 327.411 RSMO) SPECIFICATION, ESTIMATES, REPORTS, OR OTHER DOCUMENTS OR INSTRUMENTS NOT SEALED BY THE UNDERSIGNED PROFESSIONAL RELATING TO OR INTENDED TO BE USED FOR ANY PART OR PARTS OF THE PROJECT TO WHICH THIS PAGE REFERS.

US 60
PAVEMENT MARKING
4 OF 23

STATE OF MISSOURI
DALLAS P. JOPLIN
NUMBER PE-2011015760
PROFESSIONAL ENGINEER

THIS SHEET HAS BEEN SIGNED, SEALED AND DATED ELECTRONICALLY.

DATE PREPARED	
8/2/2024	
ROUTE	STATE
60	MO
DISTRICT	SHEET NO.
SW	212
COUNTY	
WEBSTER	
JOB NO.	
J7P3425C	
CONTRACT ID.	
PROJECT NO.	
BRIDGE NO.	

IF A SEAL IS PRESENT ON THIS SHEET IT HAS BEEN ELECTRONICALLY SEALED AND DATED.

REV.	DESCRIPTION	DATE

MISSOURI HIGHWAYS AND TRANSPORTATION COMMISSION

105 WEST CAPITOL
JEFFERSON CITY, MO 65102
1-888-ASK-MODOT (1-888-275-6636)

CMT
©Copyright CMT, Inc.
CRAWFORD, MURPHY & TILLY, INC.
1631 WEST ELFINDALE STREET
SPRINGFIELD, MO 65807 (417) 869-6009
ENGINEERING CORPORATION - 000631

L:\MoDOT\20092124-00\Draw\Roadway\Sheets\212_PM_04_J7P3425C_i50.dgn 8:29:06 AM 8/2/2024

SCALE
0 50 100 150

NORTH OUTER ROAD
MATCHLINE STA. 47+50.00
(SEE SHEET 212)

PATTERSON ST

OLIVE ST

OWENS ST

50 55 60

24" SWT
49+72.69, NORE

+86.45
NORE

START 4" DSYP
50+17.50, NORE

4" DSYP

11' LANE
11' LANE

+64.32

+36.84

+45.48

+20.89

11' LANE
11' LANE

695 700 705

END 6" SYH
MATCH EXIST.
694+56.84, EX_US60

END 4" DSYP
49+55.23, NORE

℄ NORTH OUTER
ROAD (NORE)

NORTH OUTER ROAD
MATCHLINE STA. 60+50.00
(SEE SHEET 214)

WB US60

℄ EXISTING US60
(EX_US60)

EB US60

EXIST. US60
MATCHLINE STA. 693+00.00
(SEE SHEET 212)

EXIST. US60
MATCHLINE STA. 706+00.00
(SEE SHEET 214)

DISCLAIMER
THE PROFESSIONAL WHOSE SIGNATURE AND PERSONAL SEAL APPEAR HEREON ASSUMES RESPONSIBILITY ONLY FOR WHAT APPEARS ON THIS PAGE, AND DISCLAIMS (PURSUANT TO SECTION 327.411 RSMO) SPECIFICATION, ESTIMATES, REPORTS, OR OTHER DOCUMENTS OR INSTRUMENTS NOT SEALED BY THE UNDERSIGNED PROFESSIONAL RELATING TO OR INTENDED TO BE USED FOR ANY PART OR PARTS OF THE PROJECT TO WHICH THIS PAGE REFERS.

STRIPING KEY

S – SOLID
I – INTERMITTENT (10' STRIPE, 30' GAP UNLESS NOTED OTHERWISE)
D – DOUBLE
W – WHITE
Y – YELLOW
T – PREFORMED THERMOPLASTIC PAVEMENT MARKING
H – HIGH BUILD WATERBORNE PAVEMENT MARKING PAINT, TYPE L BEADS
P – WATERBORNE PAINT WITH TYPE P BEADS

NOTE: BLACK CONTRAST MARKINGS SHALL BE USED ON LANE LINES (INTERMITTENT, DOTTED/DASHED OR SOLID) ON ALL CONCRETE PAVEMENT.

US 60

PAVEMENT MARKING
5 OF 23

STATE OF MISSOURI
DALLAS P. JOPLIN
NUMBER PE-2011015760
PROFESSIONAL ENGINEER

THIS SHEET HAS BEEN SIGNED, SEALED AND DATED ELECTRONICALLY.

DATE PREPARED
8/2/2024

ROUTE	STATE
60	MO
DISTRICT	SHEET NO.
SW	213

COUNTY
WEBSTER

JOB NO.
J7P3425C

CONTRACT ID.

PROJECT NO.

BRIDGE NO.

DESCRIPTION	DATE

IF A SEAL IS PRESENT ON THIS SHEET IT HAS BEEN ELECTRONICALLY SEALED AND DATED.

MISSOURI HIGHWAYS AND TRANSPORTATION COMMISSION

105 WEST CAPITOL
JEFFERSON CITY, MO 65102
1-888-ASK-MODOT (1-888-275-6636)

CMT
©Copyright CMT, Inc.
CRAWFORD, MURPHY & TILLY, INC.
1631 WEST ELFINDALE STREET
SPRINGFIELD, MO 65807 (417) 869-6009
ENGINEERING CORPORATION - 000631

REV.

L:\MoDOT\20092124-00\Draw\Roadway\Sheets\213_PM_05_J7P3425C_150.dgn 8:29:08 AM 8/2/2024

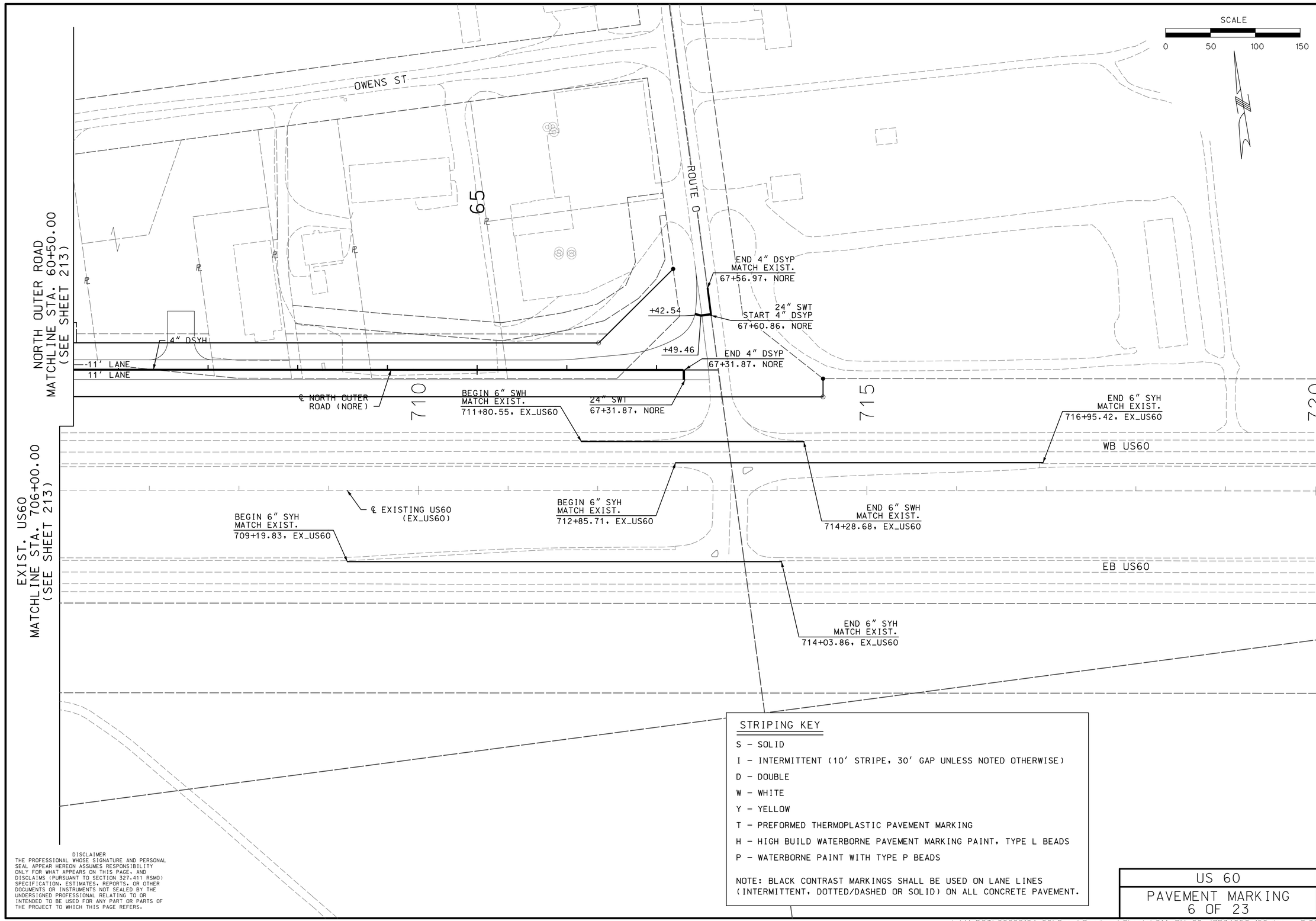

STRIPING KEY

S – SOLID

I – INTERMITTENT (10' STRIPE, 30' GAP UNLESS NOTED OTHERWISE)

D – DOUBLE

W – WHITE

Y – YELLOW

T – PREFORMED THERMOPLASTIC PAVEMENT MARKING

H – HIGH BUILD WATERBORNE PAVEMENT MARKING PAINT, TYPE L BEADS

P – WATERBORNE PAINT WITH TYPE P BEADS

NOTE: BLACK CONTRAST MARKINGS SHALL BE USED ON LANE LINES (INTERMITTENT, DOTTED/DASHED OR SOLID) ON ALL CONCRETE PAVEMENT.

DISCLAIMER
THE PROFESSIONAL WHOSE SIGNATURE AND PERSONAL SEAL APPEAR HEREON ASSUMES RESPONSIBILITY ONLY FOR WHAT APPEARS ON THIS PAGE, AND DISCLAIMS (PURSUANT TO SECTION 327.411 RSMO) SPECIFICATION, ESTIMATES, REPORTS, OR OTHER DOCUMENTS OR INSTRUMENTS NOT SEALED BY THE UNDERSIGNED PROFESSIONAL RELATING TO OR INTENDED TO BE USED FOR ANY PART OR PARTS OF THE PROJECT TO WHICH THIS PAGE REFERS.

STATE OF MISSOURI
DALLAS P. JOPLIN
NUMBER PE-2011015760
PROFESSIONAL ENGINEER

THIS SHEET HAS BEEN SIGNED, SEALED AND DATED ELECTRONICALLY.

DATE PREPARED	
8/2/2024	
ROUTE	STATE
60	MO
DISTRICT	SHEET NO.
SW	214

COUNTY: WEBSTER
JOB NO.: J7P3425C
CONTRACT ID.:
PROJECT NO.:
BRIDGE NO.:

REV.	DESCRIPTION	DATE

IF A SEAL IS PRESENT ON THIS SHEET IT HAS BEEN ELECTRONICALLY SEALED AND DATED.

MISSOURI HIGHWAYS AND TRANSPORTATION COMMISSION
105 WEST CAPITOL
JEFFERSON CITY, MO 65102
1-888-ASK-MODOT (1-888-275-6636)

CMT
CRAWFORD, MURPHY & TILLY, INC.
1631 WEST ELFINDALE STREET
SPRINGFIELD, MO 65807 (417) 869-6009
ENGINEERING CORPORATION - 000631
© Copyright CMT, Inc.

US 60
PAVEMENT MARKING
6 OF 23

L:\MoDOT\20092124-00\Draw\Roadway\Sheets\214_PM_06_J7P3425C_i50.dgn 8:29:10 AM 8/2/2024

STRIPING KEY

S – SOLID

I – INTERMITTENT (10′ STRIPE, 30′ GAP UNLESS NOTED OTHERWISE)

D – DOUBLE

W – WHITE

Y – YELLOW

T – PREFORMED THERMOPLASTIC PAVEMENT MARKING

H – HIGH BUILD WATERBORNE PAVEMENT MARKING PAINT, TYPE L BEADS

P – WATERBORNE PAINT WITH TYPE P BEADS

NOTE: BLACK CONTRAST MARKINGS SHALL BE USED ON LANE LINES (INTERMITTENT, DOTTED/DASHED OR SOLID) ON ALL CONCRETE PAVEMENT.

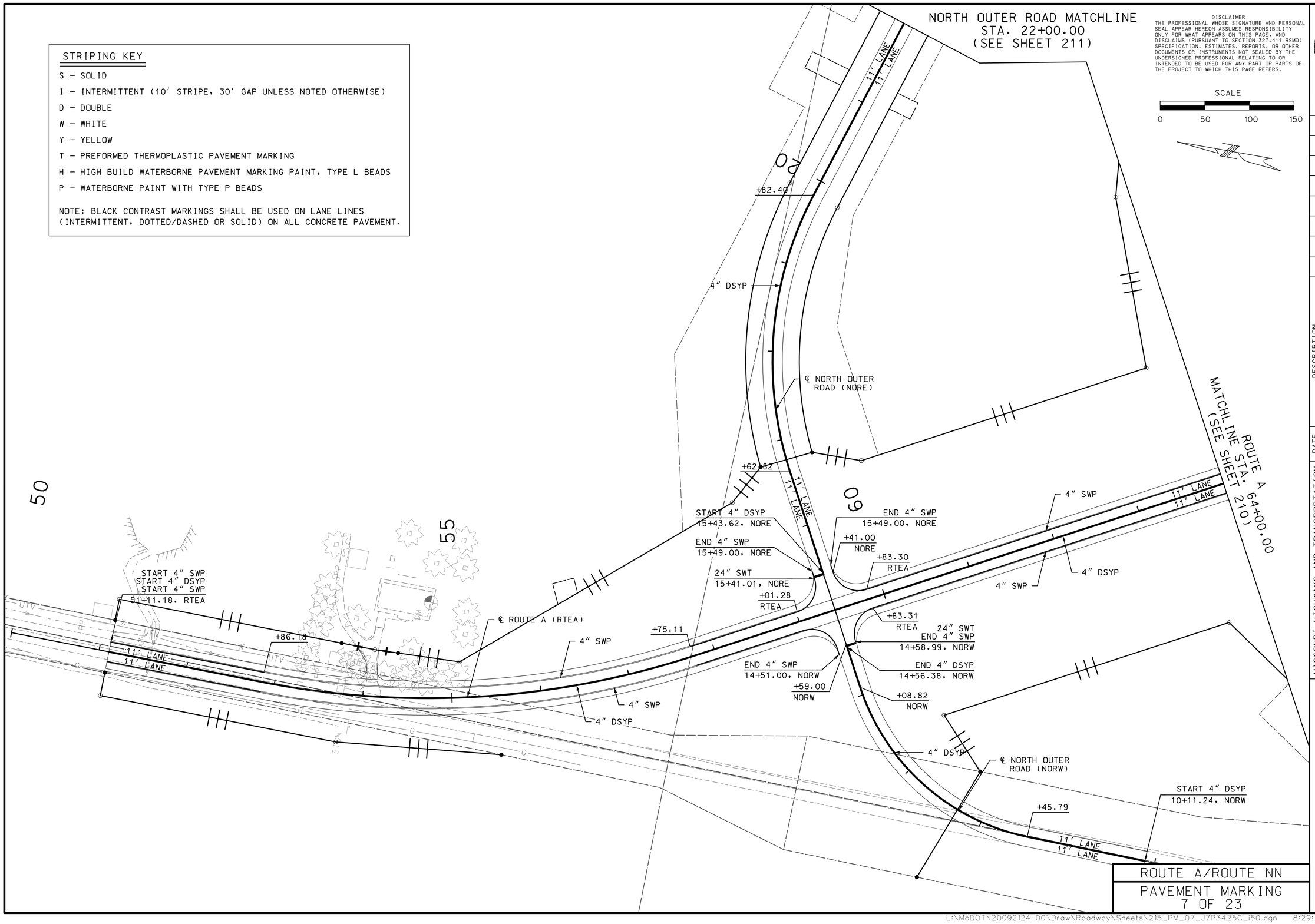

DISCLAIMER
THE PROFESSIONAL WHOSE SIGNATURE AND PERSONAL SEAL APPEAR HEREON ASSUMES RESPONSIBILITY ONLY FOR WHAT APPEARS ON THIS PAGE, AND DISCLAIMS (PURSUANT TO SECTION 327.411 RSMO) SPECIFICATION, ESTIMATES, REPORTS, OR OTHER DOCUMENTS OR INSTRUMENTS NOT SEALED BY THE UNDERSIGNED PROFESSIONAL RELATING TO OR INTENDED TO BE USED FOR ANY PART OR PARTS OF THE PROJECT TO WHICH THIS PAGE REFERS.

SCALE
0 50 100 150

STATE OF MISSOURI
DALLAS P. JOPLIN
NUMBER PE-2011015760
PROFESSIONAL ENGINEER

THIS SHEET HAS BEEN SIGNED, SEALED AND DATED ELECTRONICALLY.

DATE PREPARED	
8/2/2024	
ROUTE	STATE
60	MO
DISTRICT	SHEET NO.
SW	215

COUNTY: WEBSTER
JOB NO.: J7P3425C
CONTRACT ID.:
PROJECT NO.:
BRIDGE NO.:

DESCRIPTION	DATE

IF A SEAL IS PRESENT ON THIS SHEET IT HAS BEEN ELECTRONICALLY SEALED AND DATED.

MISSOURI HIGHWAYS AND TRANSPORTATION COMMISSION
105 WEST CAPITOL
JEFFERSON CITY, MO 65102
1-888-ASK-MODOT (1-888-275-6636)

CMT
©Copyright CMT, Inc.
CRAWFORD, MURPHY & TILLY, INC.
1631 WEST ELFINDALE STREET
SPRINGFIELD, MO 65807 (417) 869-6009
ENGINEERING CORPORATION - 000631

ROUTE A/ROUTE NN
PAVEMENT MARKING
7 OF 23

REV.

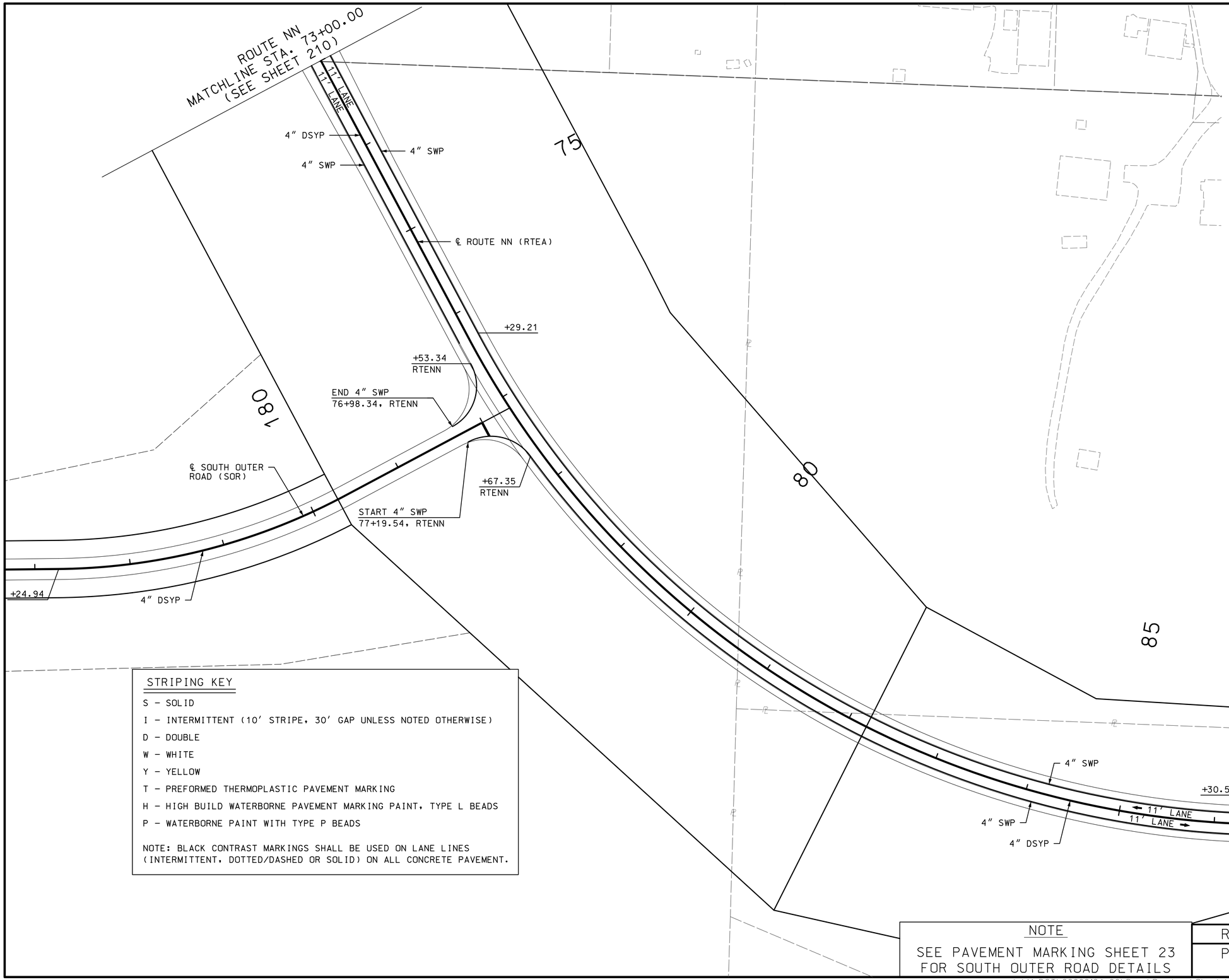

DISCLAIMER
THE PROFESSIONAL WHOSE SIGNATURE AND PERSONAL SEAL APPEAR HEREON ASSUMES RESPONSIBILITY ONLY FOR WHAT APPEARS ON THIS PAGE, AND DISCLAIMS (PURSUANT TO SECTION 327.411 RSMO) SPECIFICATION, ESTIMATES, REPORTS, OR OTHER DOCUMENTS OR INSTRUMENTS NOT SEALED BY THE UNDERSIGNED PROFESSIONAL RELATING TO OR INTENDED TO BE USED FOR ANY PART OR PARTS OF THE PROJECT TO WHICH THIS PAGE REFERS.

SCALE
0 50 100 150

STRIPING KEY

S – SOLID
I – INTERMITTENT (10' STRIPE, 30' GAP UNLESS NOTED OTHERWISE)
D – DOUBLE
W – WHITE
Y – YELLOW
T – PREFORMED THERMOPLASTIC PAVEMENT MARKING
H – HIGH BUILD WATERBORNE PAVEMENT MARKING PAINT, TYPE L BEADS
P – WATERBORNE PAINT WITH TYPE P BEADS

NOTE: BLACK CONTRAST MARKINGS SHALL BE USED ON LANE LINES (INTERMITTENT, DOTTED/DASHED OR SOLID) ON ALL CONCRETE PAVEMENT.

NOTE
SEE PAVEMENT MARKING SHEET 23 FOR SOUTH OUTER ROAD DETAILS

ROUTE A/ROUTE NN
PAVEMENT MARKING
8 OF 23

STATE OF MISSOURI
DALLAS P. JOPLIN
NUMBER PE-2011015760
PROFESSIONAL ENGINEER

THIS SHEET HAS BEEN SIGNED, SEALED AND DATED ELECTRONICALLY.

DATE PREPARED	
8/2/2024	
ROUTE	STATE
60	MO
DISTRICT	SHEET NO.
SW	216

COUNTY: WEBSTER
JOB NO.: J7P3425C
CONTRACT ID.:
PROJECT NO.:
BRIDGE NO.:

DESCRIPTION	DATE

IF A SEAL IS PRESENT ON THIS SHEET IT HAS BEEN ELECTRONICALLY SEALED AND DATED.

MISSOURI HIGHWAYS AND TRANSPORTATION COMMISSION
105 WEST CAPITOL
JEFFERSON CITY, MO 65102
1-888-ASK-MODOT (1-888-275-6636)

CMT
© Copyright CMT, Inc.
CRAWFORD, MURPHY & TILLY, INC.
1631 WEST ELFINDALE STREET
SPRINGFIELD, MO 65807 (417) 869-6009
ENGINEERING CORPORATION - 000631

REV.

L:\MoDOT\20092124-00\Draw\Roadway\Sheets\216_PM_08_J7P3425C_i50.dgn 8:29:13 AM 8/2/2024

STRIPING KEY

S – SOLID

I – INTERMITTENT (10′ STRIPE, 30′ GAP UNLESS NOTED OTHERWISE)

D – DOUBLE

W – WHITE

Y – YELLOW

T – PREFORMED THERMOPLASTIC PAVEMENT MARKING

H – HIGH BUILD WATERBORNE PAVEMENT MARKING PAINT, TYPE L BEADS

P – WATERBORNE PAINT WITH TYPE P BEADS

NOTE: BLACK CONTRAST MARKINGS SHALL BE USED ON LANE LINES (INTERMITTENT, DOTTED/DASHED OR SOLID) ON ALL CONCRETE PAVEMENT.

LABEL KEY

① — START 4″ SYP 13+52.73, EX. NN

② — END 4″ SYP 13+52.73, EX. NN

③ — START 4″ SWP, START 4″ SYP 12+94.34, EX. NN

④ — END 4″ SWP, START 4″ SYP, START 4″ IWP (2′ STRIPE, 4′ GAP) 12+89.34, EX. NN

⑤ — END 4″ IWP (2′ STRIPE, 4′ GAP) 12+98.32, EX. NN

⑥ — START 4″ SWP, START 4″ SYP 13+18.40, EX. NN

⑦ — END 4″ SWP, START 4″ SYP, START 4″ IWP (2′ STRIPE, 4′ GAP) 13+54.68, EX. NN

⑧ — END 4″ IWP (2′ STRIPE, 4′ GAP) 13+86.60, EX. NN

⑨ — START 4″ SWP, START 4″ SYP 14+10.61, EX. NN

⑩ — END 4″ SWP, START 4″ SYP, START 4″ IWP (2′ STRIPE, 4′ GAP) 14+18.90, EX. NN

⑪ — END 4″ IWP (2′ STRIPE, 4′ GAP) 14+03.10, EX. NN

ROUTE NN
MATCHLINE STA. 86+50.00
(SEE SHEET 216)

4″ SWP
4″ DSYP
℄ ROUTE NN (RTEA)
11′ LANE
11′ LANE
4″ SWP
+39.63
+59.63
+94.82
4″ SYP
+86.10 RTENN
+95.63 RTENN
+00.00
END 4″ DSYP
START 4″ SYP
START 4″ SYP
90+85.82 RTENN
24″ SYT (MIN. 3 LINES)
+64.30
+89.24 RTENN
4″ SYP
+05.04 RTENN
12″ YIELD TRIANGLE
93+54.49 (9 EA)
+74.82 RTENN
℄ ROUTE NN ROUNDABOUT (NNRDBT)
4″ SWP
+62.93 EX. NN
+05.14 EX. NN
4″ SYP

90

10

END 4″ SWP
END 4″ DSYP
END 4″ SWP
10+47.96, EX. NN
11′ LANE
11′ LANE
℄ EX. ROUTE NN (RTENN)
+11.34
START 4″ DSYP
11+11.27, EX. NN
+11.51
+57.21
24″ SYT (MIN. 3 LINES)
4″ SWP
4″ SYP
+10.94
+27.21 EX. NN
12″ YIELD TRIANGLE
12+84.16 (9 EA)
+28.12
24″ SWT (MIN. 3 LINES)
4″ SYP
+27.63 RTENN
4″ SWP
+22.00
4″ SWP
4″ SWP
4″ SYP
+03.10
12″ YIELD TRIANGLE
14+27.54 (9 EA)
+90.17 EX. NN
+08.25 EX. NN
4″ SYP
4″ SWP
℄ ROUTE EX. RTE NN (RTENN)
11′ LANE
11′ LANE
+56.86
END 4″ SYP
END 4″ SYP
START 4″ DSYP
17+10.19, EX. NN
24″ SYT (MIN. 3 LINES)
END 4″ SWP
END 4″ DSYP
MATCH EXIST.
17+53.60, EX. NN
START 4″ SWP
MATCH EXIST.
17+53.70, EX. NN

15

DETAIL A

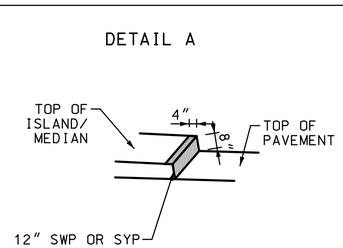

SPLITTER ISLAND DETAIL

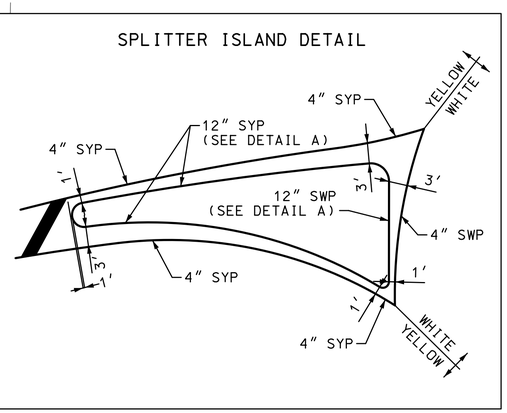

DISCLAIMER
THE PROFESSIONAL WHOSE SIGNATURE AND PERSONAL SEAL APPEAR HEREON ASSUMES RESPONSIBILITY ONLY FOR WHAT APPEARS ON THIS PAGE, AND DISCLAIMS (PURSUANT TO SECTION 327.411 RSMO) SPECIFICATION, ESTIMATES, REPORTS, OR OTHER DOCUMENTS OR INSTRUMENTS NOT SEALED BY THE UNDERSIGNED PROFESSIONAL RELATING TO OR INTENDED TO BE USED FOR ANY PART OR PARTS OF THE PROJECT TO WHICH THIS PAGE REFERS.

SCALE
0 50 100 150

STATE OF MISSOURI
DALLAS P. JOPLIN
NUMBER PE-2011015760
PROFESSIONAL ENGINEER

THIS SHEET HAS BEEN SIGNED, SEALED AND DATED ELECTRONICALLY.

DATE PREPARED 8/2/2024

ROUTE	STATE
60	MO
DISTRICT	SHEET NO.
SW	217

COUNTY: WEBSTER
JOB NO.: J7P3425C
CONTRACT ID.:
PROJECT NO.:
BRIDGE NO.:

IF A SEAL IS PRESENT ON THIS SHEET IT HAS BEEN ELECTRONICALLY SEALED AND DATED.

DESCRIPTION	DATE

MISSOURI HIGHWAYS AND TRANSPORTATION COMMISSION
105 WEST CAPITOL
JEFFERSON CITY, MO 65102
1-888-ASK-MODOT (1-888-275-6636)

CMT
© Copyright CMT, Inc.
CRAWFORD, MURPHY & TILLY, INC.
1631 WEST ELFINDALE STREET
SPRINGFIELD, MO 65807 (417) 869-6009
ENGINEERING CORPORATION - 000631

ROUTE NN/EXIST. RTE NN
PAVEMENT MARKING
9 OF 23

REV.

L:\MoDOT\20092124-00\Draw\Roadway\Sheets\217_PM_09_J7P3425C_150.dgn 8:29:15 AM 8/2/2024

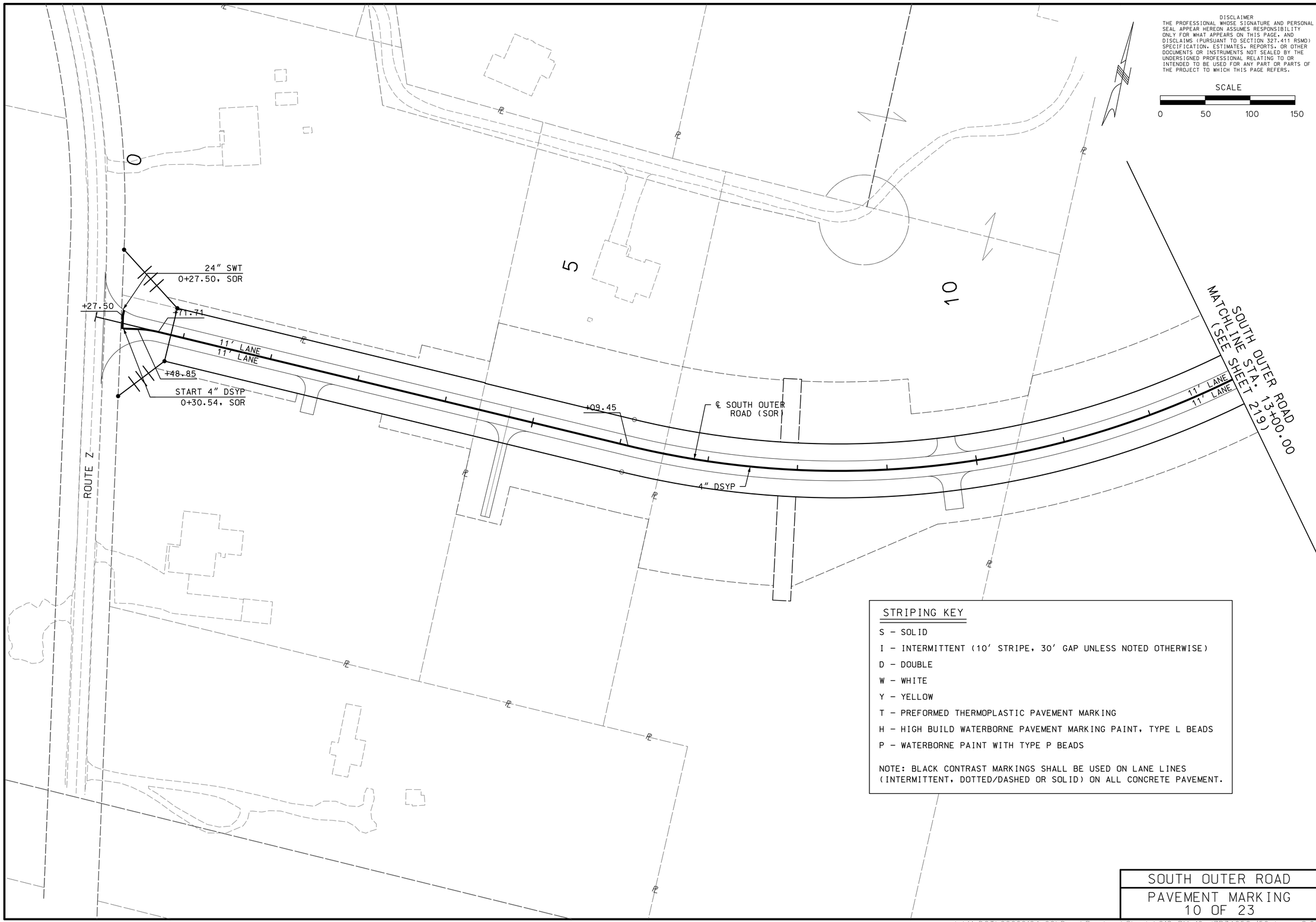

DISCLAIMER
THE PROFESSIONAL WHOSE SIGNATURE AND PERSONAL SEAL APPEAR HEREON ASSUMES RESPONSIBILITY ONLY FOR WHAT APPEARS ON THIS PAGE, AND DISCLAIMS (PURSUANT TO SECTION 327.411 RSMO) SPECIFICATION, ESTIMATES, REPORTS, OR OTHER DOCUMENTS OR INSTRUMENTS NOT SEALED BY THE UNDERSIGNED PROFESSIONAL RELATING TO OR INTENDED TO BE USED FOR ANY PART OR PARTS OF THE PROJECT TO WHICH THIS PAGE REFERS.

SCALE
0 50 100 150

STRIPING KEY

S – SOLID
I – INTERMITTENT (10' STRIPE, 30' GAP UNLESS NOTED OTHERWISE)
D – DOUBLE
W – WHITE
Y – YELLOW
T – PREFORMED THERMOPLASTIC PAVEMENT MARKING
H – HIGH BUILD WATERBORNE PAVEMENT MARKING PAINT, TYPE L BEADS
P – WATERBORNE PAINT WITH TYPE P BEADS

NOTE: BLACK CONTRAST MARKINGS SHALL BE USED ON LANE LINES (INTERMITTENT, DOTTED/DASHED OR SOLID) ON ALL CONCRETE PAVEMENT.

SOUTH OUTER ROAD
PAVEMENT MARKING
10 OF 23

STATE OF MISSOURI
DALLAS P. JOPLIN
NUMBER PE-2011015760
PROFESSIONAL ENGINEER
THIS SHEET HAS BEEN SIGNED, SEALED AND DATED ELECTRONICALLY.

DATE PREPARED: 8/2/2024
ROUTE: 60 | STATE: MO
DISTRICT: SW | SHEET NO.: 218
COUNTY: WEBSTER
JOB NO.: J7P3425C
CONTRACT ID.:
PROJECT NO.:
BRIDGE NO.:

IF A SEAL IS PRESENT ON THIS SHEET IT HAS BEEN ELECTRONICALLY SEALED AND DATED.

REV.	DESCRIPTION	DATE

MISSOURI HIGHWAYS AND TRANSPORTATION COMMISSION
105 WEST CAPITOL
JEFFERSON CITY, MO 65102
1-888-ASK-MODOT (1-888-275-6636)

CMT
© Copyright CMT, Inc.
CRAWFORD, MURPHY & TILLY, INC.
1631 WEST ELFINDALE STREET
SPRINGFIELD, MO 65807 (417) 869-6009
ENGINEERING CORPORATION - 000631

STRIPING KEY

S – SOLID

I – INTERMITTENT (10' STRIPE, 30' GAP UNLESS NOTED OTHERWISE)

D – DOUBLE

W – WHITE

Y – YELLOW

T – PREFORMED THERMOPLASTIC PAVEMENT MARKING

H – HIGH BUILD WATERBORNE PAVEMENT MARKING PAINT, TYPE L BEADS

P – WATERBORNE PAINT WITH TYPE P BEADS

NOTE: BLACK CONTRAST MARKINGS SHALL BE USED ON LANE LINES (INTERMITTENT, DOTTED/DASHED OR SOLID) ON ALL CONCRETE PAVEMENT.

DISCLAIMER
THE PROFESSIONAL WHOSE SIGNATURE AND PERSONAL SEAL APPEAR HEREON ASSUMES RESPONSIBILITY ONLY FOR WHAT APPEARS ON THIS PAGE. AND DISCLAIMS (PURSUANT TO SECTION 327.411 RSMO) SPECIFICATION, ESTIMATES, REPORTS, OR OTHER DOCUMENTS OR INSTRUMENTS NOT SEALED BY THE UNDERSIGNED PROFESSIONAL RELATING TO OR INTENDED TO BE USED FOR ANY PART OR PARTS OF THE PROJECT TO WHICH THIS PAGE REFERS.

SCALE
0 50 100 150

STATE OF MISSOURI
DALLAS P. JOPLIN
NUMBER PE-2011015760
PROFESSIONAL ENGINEER
THIS SHEET HAS BEEN SIGNED, SEALED AND DATED ELECTRONICALLY.

DATE PREPARED 8/2/2024
ROUTE 60 | STATE MO
DISTRICT SW | SHEET NO. 219
COUNTY WEBSTER
JOB NO. J7P3425C
CONTRACT ID.
PROJECT NO.
BRIDGE NO.

IF A SEAL IS PRESENT ON THIS SHEET IT HAS BEEN ELECTRONICALLY SEALED AND DATED.

DESCRIPTION | DATE | REV.

MISSOURI HIGHWAYS AND TRANSPORTATION COMMISSION
105 WEST CAPITOL
JEFFERSON CITY, MO 65102
1-888-ASK-MODOT (1-888-275-6636)

CMT
© Copyright CMT, Inc.
CRAWFORD, MURPHY & TILLY, INC.
1631 WEST ELFINDALE STREET
SPRINGFIELD, MO 65807 (417) 869-6009
ENGINEERING CORPORATION - 000631

SOUTH OUTER ROAD
PAVEMENT MARKING
11 OF 23

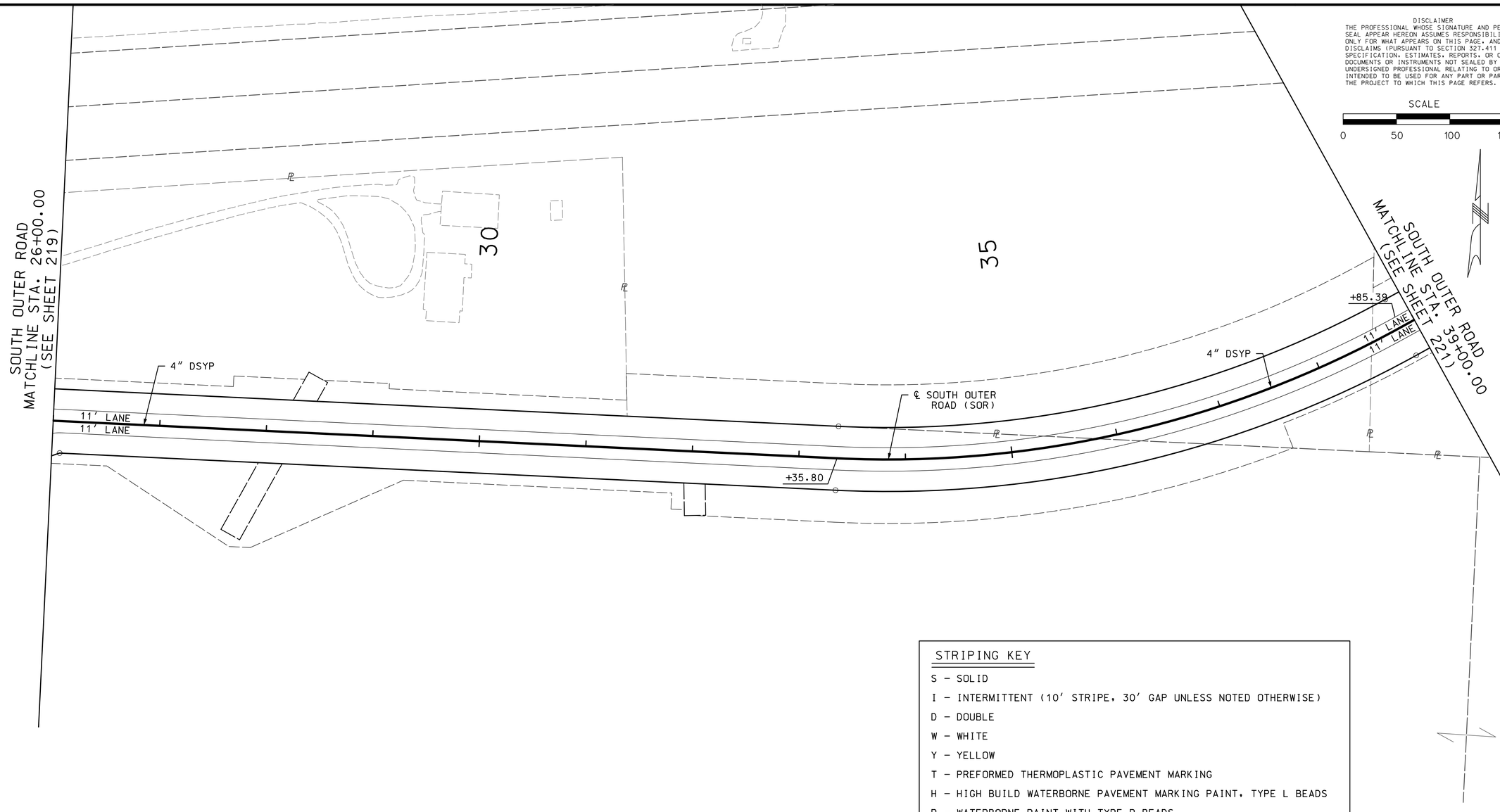

DISCLAIMER
THE PROFESSIONAL WHOSE SIGNATURE AND PERSONAL SEAL APPEAR HEREON ASSUMES RESPONSIBILITY ONLY FOR WHAT APPEARS ON THIS PAGE, AND DISCLAIMS (PURSUANT TO SECTION 327.411 RSMO) SPECIFICATION, ESTIMATES, REPORTS, OR OTHER DOCUMENTS OR INSTRUMENTS NOT SEALED BY THE UNDERSIGNED PROFESSIONAL RELATING TO OR INTENDED TO BE USED FOR ANY PART OR PARTS OF THE PROJECT TO WHICH THIS PAGE REFERS.

STRIPING KEY

S – SOLID

I – INTERMITTENT (10′ STRIPE, 30′ GAP UNLESS NOTED OTHERWISE)

D – DOUBLE

W – WHITE

Y – YELLOW

T – PREFORMED THERMOPLASTIC PAVEMENT MARKING

H – HIGH BUILD WATERBORNE PAVEMENT MARKING PAINT, TYPE L BEADS

P – WATERBORNE PAINT WITH TYPE P BEADS

NOTE: BLACK CONTRAST MARKINGS SHALL BE USED ON LANE LINES (INTERMITTENT, DOTTED/DASHED OR SOLID) ON ALL CONCRETE PAVEMENT.

STATE OF MISSOURI
DALLAS P. JOPLIN
NUMBER PE-2011015760
PROFESSIONAL ENGINEER

THIS SHEET HAS BEEN SIGNED, SEALED AND DATED ELECTRONICALLY.

DATE PREPARED	
8/2/2024	
ROUTE	STATE
60	MO
DISTRICT	SHEET NO.
SW	220
COUNTY	
WEBSTER	
JOB NO.	
J7P3425C	
CONTRACT ID.	
PROJECT NO.	
BRIDGE NO.	

IF A SEAL IS PRESENT ON THIS SHEET IT HAS BEEN ELECTRONICALLY SEALED AND DATED.

DESCRIPTION	DATE

MISSOURI HIGHWAYS AND TRANSPORTATION COMMISSION
105 WEST CAPITOL
JEFFERSON CITY, MO 65102
1-888-ASK-MODOT (1-888-275-6636)

CMT
©Copyright CMT, Inc.
CRAWFORD, MURPHY & TILLY, INC.
1631 WEST ELFINDALE STREET
SPRINGFIELD, MO 65807 (417) 869-6009
ENGINEERING CORPORATION - 000631

SOUTH OUTER ROAD
PAVEMENT MARKING
12 OF 23

REV.

L:\MoDOT\20092124-00\Draw\Roadway\Sheets\220_PM_12_J7P3425C_150.dgn 8:29:21 AM 8/2/2024

SCALE
0 50 100 150

DISCLAIMER
THE PROFESSIONAL WHOSE SIGNATURE AND PERSONAL SEAL APPEAR HEREON ASSUMES RESPONSIBILITY ONLY FOR WHAT APPEARS ON THIS PAGE, AND DISCLAIMS (PURSUANT TO SECTION 327.411 RSMO) SPECIFICATION, ESTIMATES, REPORTS, OR OTHER DOCUMENTS OR INSTRUMENTS NOT SEALED BY THE UNDERSIGNED PROFESSIONAL RELATING TO OR INTENDED TO BE USED FOR ANY PART OR PARTS OF THE PROJECT TO WHICH THIS PAGE REFERS.

WB US60

EB US60

45

50

40

+48.02

4" DSYP

P

11' LANE
11' LANE

END 4" DSYP
51+74.54, SOR

℄ SOUTH OUTER ROAD (SOR)

110.13

4" DSYP

11' LANE
11' LANE

SOUTH OUTER ROAD
MATCHLINE STA. 52+00.00
(SEE SHEET 222)

SOUTH OUTER ROAD
MATCHLINE STA. 39+00.00
(SEE SHEET 220)

STRIPING KEY

S – SOLID

I – INTERMITTENT (10' STRIPE, 30' GAP UNLESS NOTED OTHERWISE)

D – DOUBLE

W – WHITE

Y – YELLOW

T – PREFORMED THERMOPLASTIC PAVEMENT MARKING

H – HIGH BUILD WATERBORNE PAVEMENT MARKING PAINT, TYPE L BEADS

P – WATERBORNE PAINT WITH TYPE P BEADS

NOTE: BLACK CONTRAST MARKINGS SHALL BE USED ON LANE LINES (INTERMITTENT, DOTTED/DASHED OR SOLID) ON ALL CONCRETE PAVEMENT.

SOUTH OUTER ROAD
PAVEMENT MARKING
13 OF 23

STATE OF MISSOURI
DALLAS P. JOPLIN
NUMBER PE-2011015760
PROFESSIONAL ENGINEER

THIS SHEET HAS BEEN SIGNED, SEALED AND DATED ELECTRONICALLY.

DATE PREPARED: 8/2/2024

ROUTE	STATE
60	MO
DISTRICT	SHEET NO.
SW	221

COUNTY: WEBSTER

JOB NO.: J7P3425C

CONTRACT ID.:

PROJECT NO.:

BRIDGE NO.:

DESCRIPTION	DATE

IF A SEAL IS PRESENT ON THIS SHEET IT HAS BEEN ELECTRONICALLY SEALED AND DATED.

MISSOURI HIGHWAYS AND TRANSPORTATION COMMISSION

MoDOT

105 WEST CAPITOL
JEFFERSON CITY, MO 65102
1-888-ASK-MODOT (1-888-275-6636)

CMT

©Copyright CMT, Inc.

CRAWFORD, MURPHY & TILLY, INC.
1631 WEST ELFINDALE STREET
SPRINGFIELD, MO 65807 (417) 869-6009
ENGINEERING CORPORATION - 000631

REV.

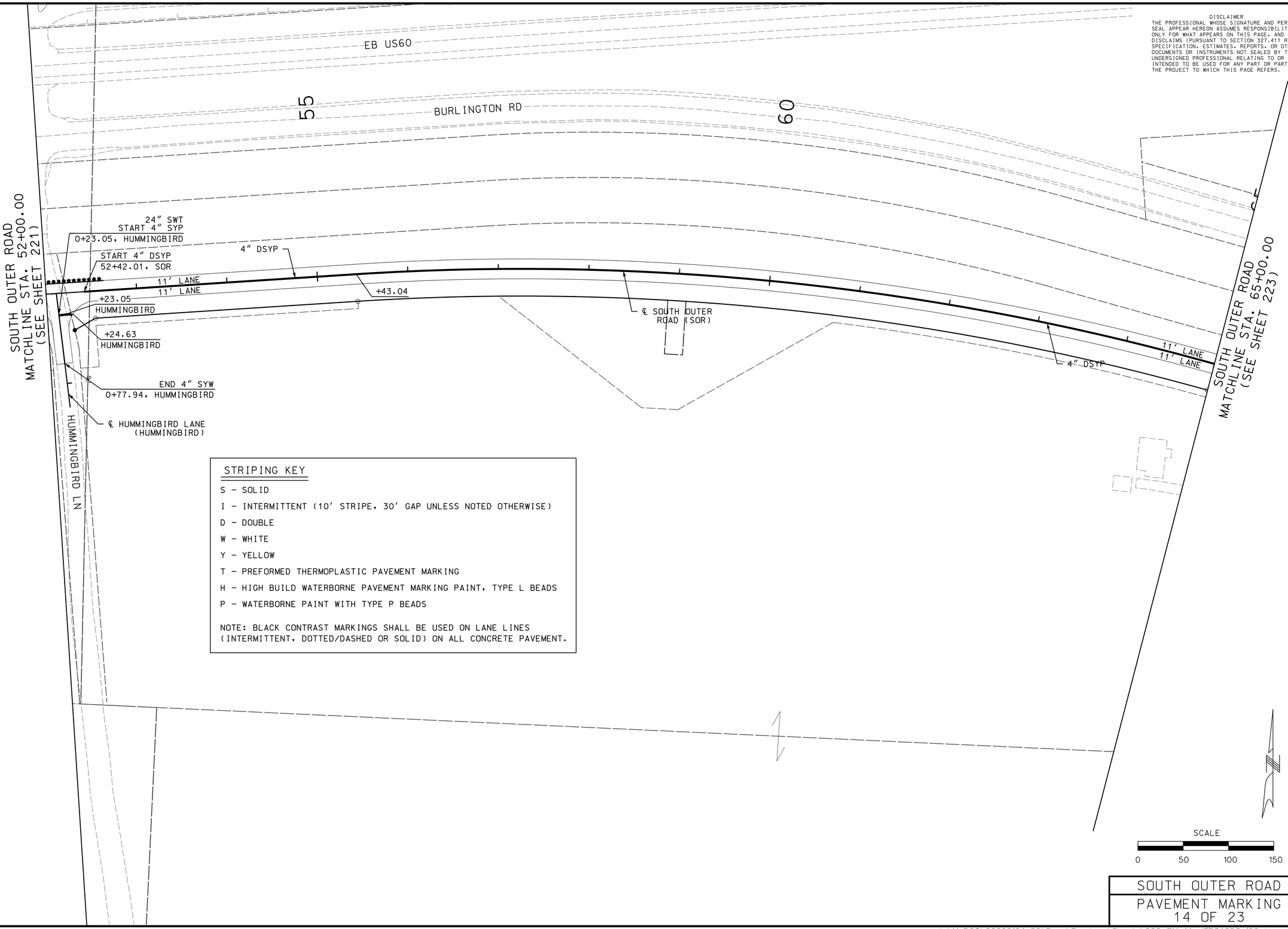

STRIPING KEY

S – SOLID

I – INTERMITTENT (10' STRIPE, 30' GAP UNLESS NOTED OTHERWISE)

D – DOUBLE

W – WHITE

Y – YELLOW

T – PREFORMED THERMOPLASTIC PAVEMENT MARKING

H – HIGH BUILD WATERBORNE PAVEMENT MARKING PAINT, TYPE L BEADS

P – WATERBORNE PAINT WITH TYPE P BEADS

NOTE: BLACK CONTRAST MARKINGS SHALL BE USED ON LANE LINES (INTERMITTENT, DOTTED/DASHED OR SOLID) ON ALL CONCRETE PAVEMENT.

DISCLAIMER
THE PROFESSIONAL WHOSE SIGNATURE AND PERSONAL SEAL APPEAR HEREON ASSUMES RESPONSIBILITY ONLY FOR WHAT APPEARS ON THIS PAGE, AND DISCLAIMS (PURSUANT TO SECTION 327.411 RSMO) SPECIFICATION, ESTIMATES, REPORTS, OR OTHER DOCUMENTS OR INSTRUMENTS NOT SEALED BY THE UNDERSIGNED PROFESSIONAL RELATING TO OR INTENDED TO BE USED FOR ANY PART OR PARTS OF THE PROJECT TO WHICH THIS PAGE REFERS.

STATE OF MISSOURI
DALLAS P. JOPLIN
NUMBER PE-2011015760
PROFESSIONAL ENGINEER

THIS SHEET HAS BEEN SIGNED, SEALED AND DATED ELECTRONICALLY.

DATE PREPARED: 8/2/2024

ROUTE	STATE
60	MO
DISTRICT	SHEET NO.
SW	222

COUNTY: WEBSTER

JOB NO.: J7P3425C

CONTRACT ID.:

PROJECT NO.:

BRIDGE NO.:

DATE	DESCRIPTION	REV.

IF A SEAL IS PRESENT ON THIS SHEET IT HAS BEEN ELECTRONICALLY SEALED AND DATED.

MISSOURI HIGHWAYS AND TRANSPORTATION COMMISSION

105 WEST CAPITOL
JEFFERSON CITY, MO 65102
1-888-ASK-MODOT (1-888-275-6636)

CMT
© Copyright CMT, Inc.
CRAWFORD, MURPHY & TILLY, INC.
1631 WEST ELFINDALE STREET
SPRINGFIELD, MO 65807 (417) 869-6009
ENGINEERING CORPORATION - 000631

SOUTH OUTER ROAD

PAVEMENT MARKING
14 OF 23

L:\MoDOT\20092124-00\Draw\Roadway\Sheets\222_PM_14_J7P3425C_150.dgn 8:29:25 AM 8/2/2024

SCALE

0 50 100 150

DISCLAIMER
THE PROFESSIONAL WHOSE SIGNATURE AND PERSONAL SEAL APPEAR HEREON ASSUMES RESPONSIBILITY ONLY FOR WHAT APPEARS ON THIS PAGE, AND DISCLAIMS (PURSUANT TO SECTION 327.411 RSMO) SPECIFICATION, ESTIMATES, REPORTS, OR OTHER DOCUMENTS OR INSTRUMENTS NOT SEALED BY THE UNDERSIGNED PROFESSIONAL RELATING TO OR INTENDED TO BE USED FOR ANY PART OR PARTS OF THE PROJECT TO WHICH THIS PAGE REFERS.

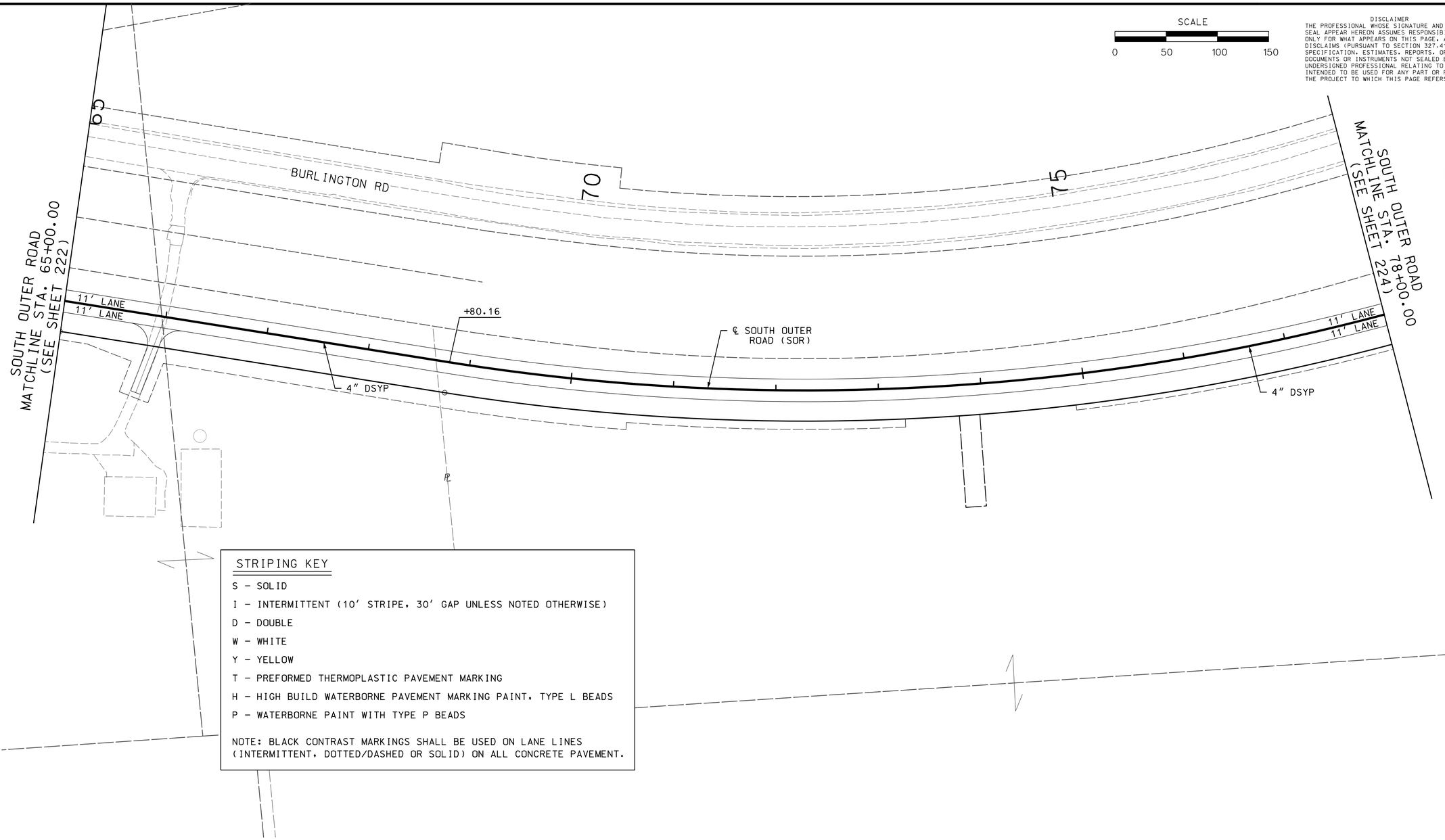

STRIPING KEY

S – SOLID

I – INTERMITTENT (10' STRIPE, 30' GAP UNLESS NOTED OTHERWISE)

D – DOUBLE

W – WHITE

Y – YELLOW

T – PREFORMED THERMOPLASTIC PAVEMENT MARKING

H – HIGH BUILD WATERBORNE PAVEMENT MARKING PAINT, TYPE L BEADS

P – WATERBORNE PAINT WITH TYPE P BEADS

NOTE: BLACK CONTRAST MARKINGS SHALL BE USED ON LANE LINES (INTERMITTENT, DOTTED/DASHED OR SOLID) ON ALL CONCRETE PAVEMENT.

STATE OF MISSOURI
DALLAS P. JOPLIN
NUMBER PE-2011015760
PROFESSIONAL ENGINEER

THIS SHEET HAS BEEN SIGNED, SEALED AND DATED ELECTRONICALLY.

DATE PREPARED
8/2/2024

ROUTE	STATE
60	MO
DISTRICT	SHEET NO.
SW	223

COUNTY
WEBSTER

JOB NO.
J7P3425C

CONTRACT ID.

PROJECT NO.

BRIDGE NO.

DESCRIPTION	DATE

IF A SEAL IS PRESENT ON THIS SHEET IT HAS BEEN ELECTRONICALLY SEALED AND DATED.

MISSOURI HIGHWAYS AND TRANSPORTATION COMMISSION

105 WEST CAPITOL
JEFFERSON CITY, MO 65102
1-888-ASK-MODOT (1-888-275-6636)

CMT
© Copyright CMT, Inc.
CRAWFORD, MURPHY & TILLY, INC.
1631 WEST ELFINDALE STREET
SPRINGFIELD, MO 65807 (417) 869-6009
ENGINEERING CORPORATION - 000631

SOUTH OUTER ROAD

PAVEMENT MARKING
15 OF 23

REV.

L:\MoDOT\20092124-00\Draw\Roadway\Sheets\223_PM_15_J7P3425C_150.dgn 8:29:27 AM 8/2/2024

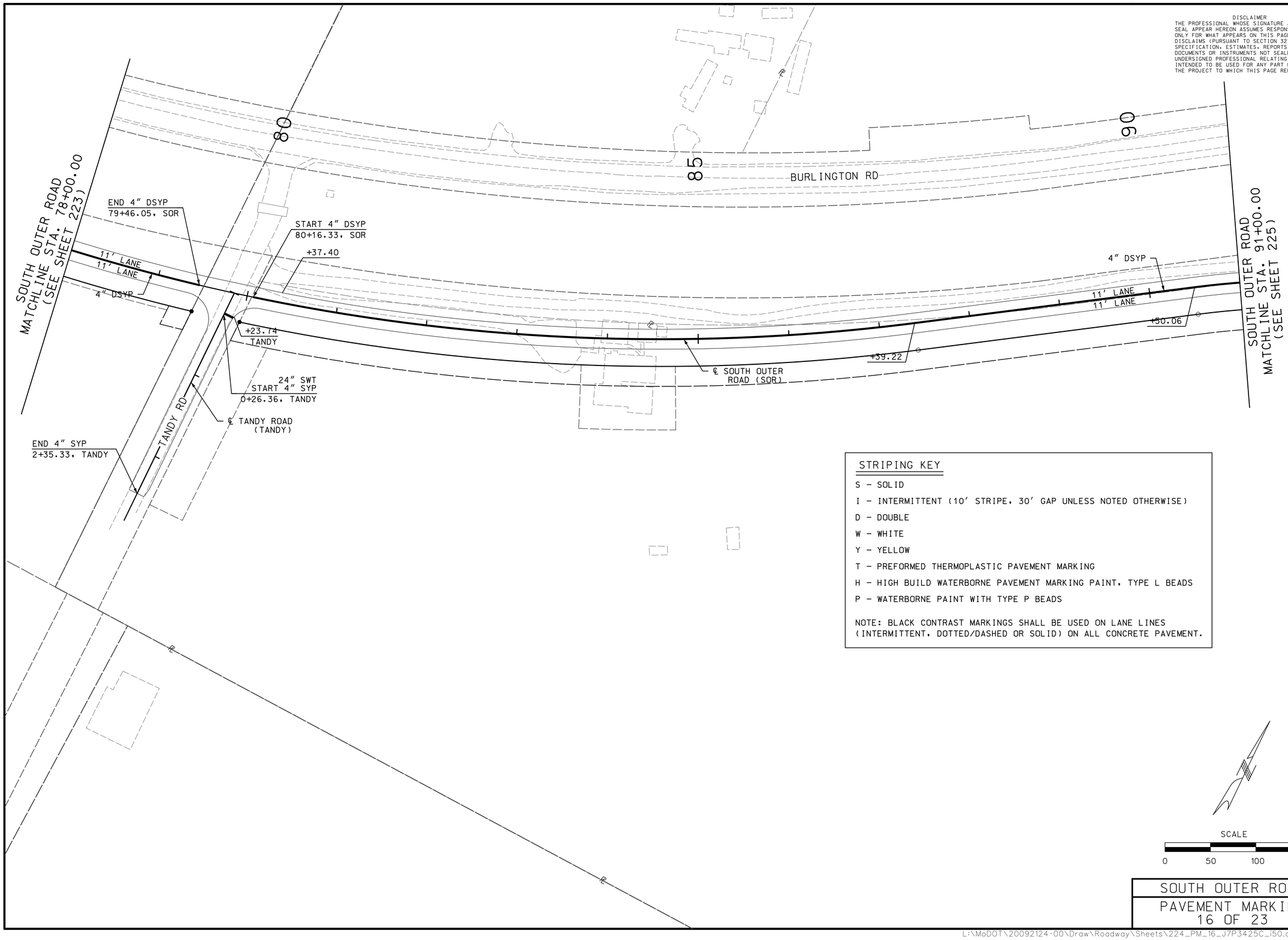

DISCLAIMER
THE PROFESSIONAL WHOSE SIGNATURE AND PERSONAL SEAL APPEAR HEREON ASSUMES RESPONSIBILITY ONLY FOR WHAT APPEARS ON THIS PAGE, AND DISCLAIMS (PURSUANT TO SECTION 327.411 RSMO) SPECIFICATION, ESTIMATES, REPORTS, OR OTHER DOCUMENTS OR INSTRUMENTS NOT SEALED BY THE UNDERSIGNED PROFESSIONAL RELATING TO OR INTENDED TO BE USED FOR ANY PART OR PARTS OF THE PROJECT TO WHICH THIS PAGE REFERS.

STRIPING KEY

S – SOLID

I – INTERMITTENT (10' STRIPE, 30' GAP UNLESS NOTED OTHERWISE)

D – DOUBLE

W – WHITE

Y – YELLOW

T – PREFORMED THERMOPLASTIC PAVEMENT MARKING

H – HIGH BUILD WATERBORNE PAVEMENT MARKING PAINT, TYPE L BEADS

P – WATERBORNE PAINT WITH TYPE P BEADS

NOTE: BLACK CONTRAST MARKINGS SHALL BE USED ON LANE LINES (INTERMITTENT, DOTTED/DASHED OR SOLID) ON ALL CONCRETE PAVEMENT.

SCALE
0 50 100 150

SOUTH OUTER ROAD
PAVEMENT MARKING
16 OF 23

STATE OF MISSOURI
DALLAS P. JOPLIN
NUMBER PE-2011015760
PROFESSIONAL ENGINEER

THIS SHEET HAS BEEN SIGNED, SEALED AND DATED ELECTRONICALLY.

DATE PREPARED	8/2/2024
ROUTE	60
STATE	MO
DISTRICT	SW
SHEET NO.	224
COUNTY	WEBSTER
JOB NO.	J7P3425C
CONTRACT ID.	
PROJECT NO.	
BRIDGE NO.	

DESCRIPTION	DATE

IF A SEAL IS PRESENT ON THIS SHEET IT HAS BEEN ELECTRONICALLY SEALED AND DATED.

MISSOURI HIGHWAYS AND TRANSPORTATION COMMISSION
105 WEST CAPITOL
JEFFERSON CITY, MO 65102
1-888-ASK-MODOT (1-888-275-6636)

CRAWFORD, MURPHY & TILLY, INC.
1631 WEST ELFINDALE STREET
SPRINGFIELD, MO 65807 (417) 869-6009
ENGINEERING CORPORATION - 000631
© Copyright CMT, Inc.

REV.

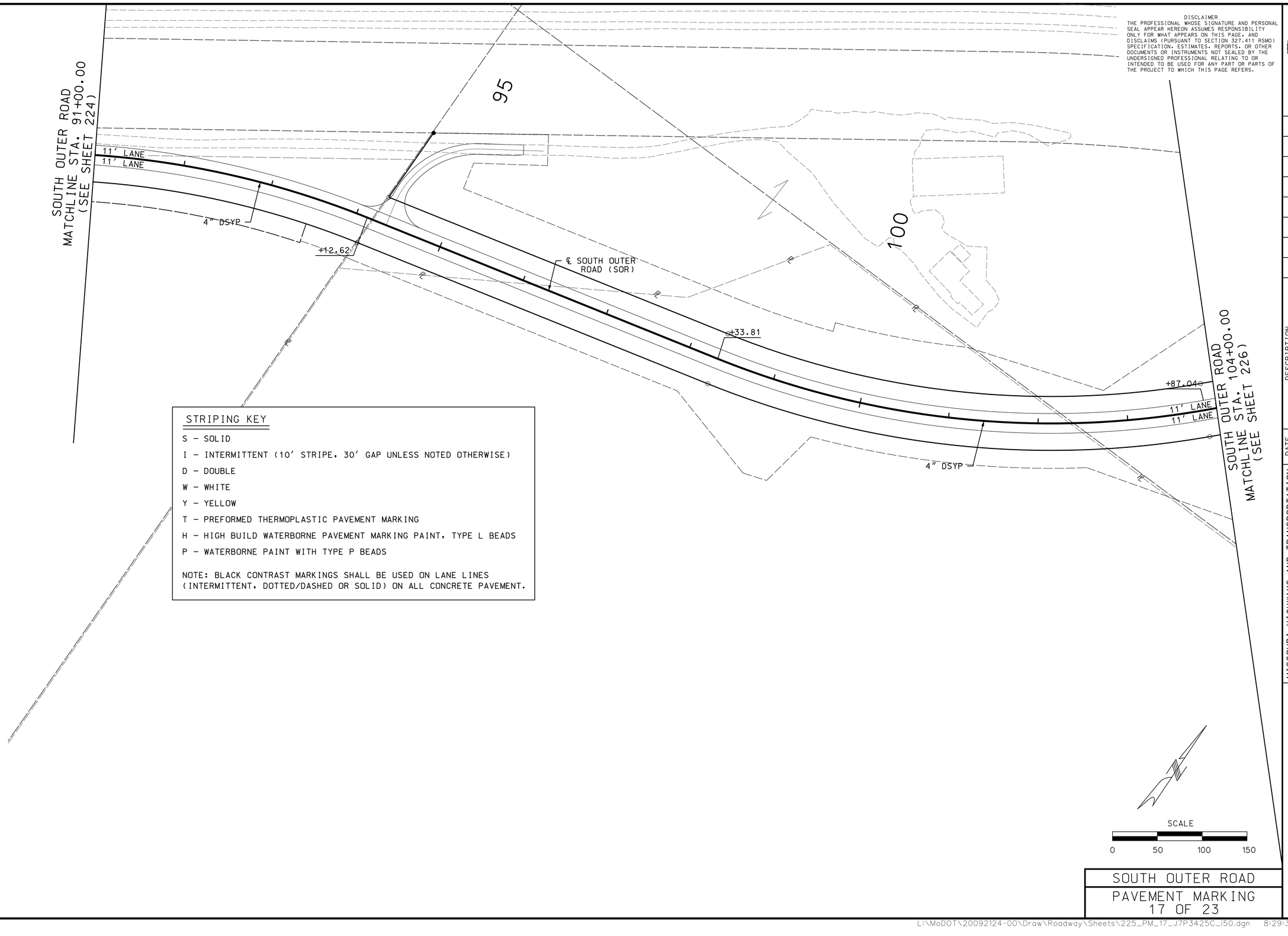

DISCLAIMER
THE PROFESSIONAL WHOSE SIGNATURE AND PERSONAL SEAL APPEAR HEREON ASSUMES RESPONSIBILITY ONLY FOR WHAT APPEARS ON THIS PAGE, AND DISCLAIMS (PURSUANT TO SECTION 327.411 RSMO) SPECIFICATION, ESTIMATES, REPORTS, OR OTHER DOCUMENTS OR INSTRUMENTS NOT SEALED BY THE UNDERSIGNED PROFESSIONAL RELATING TO OR INTENDED TO BE USED FOR ANY PART OR PARTS OF THE PROJECT TO WHICH THIS PAGE REFERS.

STATE OF MISSOURI
DALLAS P. JOPLIN
NUMBER PE-2011015760
PROFESSIONAL ENGINEER

THIS SHEET HAS BEEN SIGNED, SEALED AND DATED ELECTRONICALLY.

DATE PREPARED	
8/2/2024	
ROUTE	STATE
60	MO
DISTRICT	SHEET NO.
SW	225
COUNTY	
WEBSTER	
JOB NO.	
J7P3425C	
CONTRACT ID.	
PROJECT NO.	
BRIDGE NO.	

IF A SEAL IS PRESENT ON THIS SHEET IT HAS BEEN ELECTRONICALLY SEALED AND DATED.

DESCRIPTION	DATE

MISSOURI HIGHWAYS AND TRANSPORTATION COMMISSION
105 WEST CAPITOL
JEFFERSON CITY, MO 65102
1-888-ASK-MODOT (1-888-275-6636)

CRAWFORD, MURPHY & TILLY, INC.
1631 WEST ELFINDALE STREET
SPRINGFIELD, MO 65807 (417) 869-6009
ENGINEERING CORPORATION - 000631
©Copyright CMT, Inc.

SOUTH OUTER ROAD
PAVEMENT MARKING
17 OF 23

REV.

L:\MoDOT\20092124-00\Draw\Roadway\Sheets\225_PM_17_J7P3425C_i50.dgn 8:29:30 AM 8/2/2024

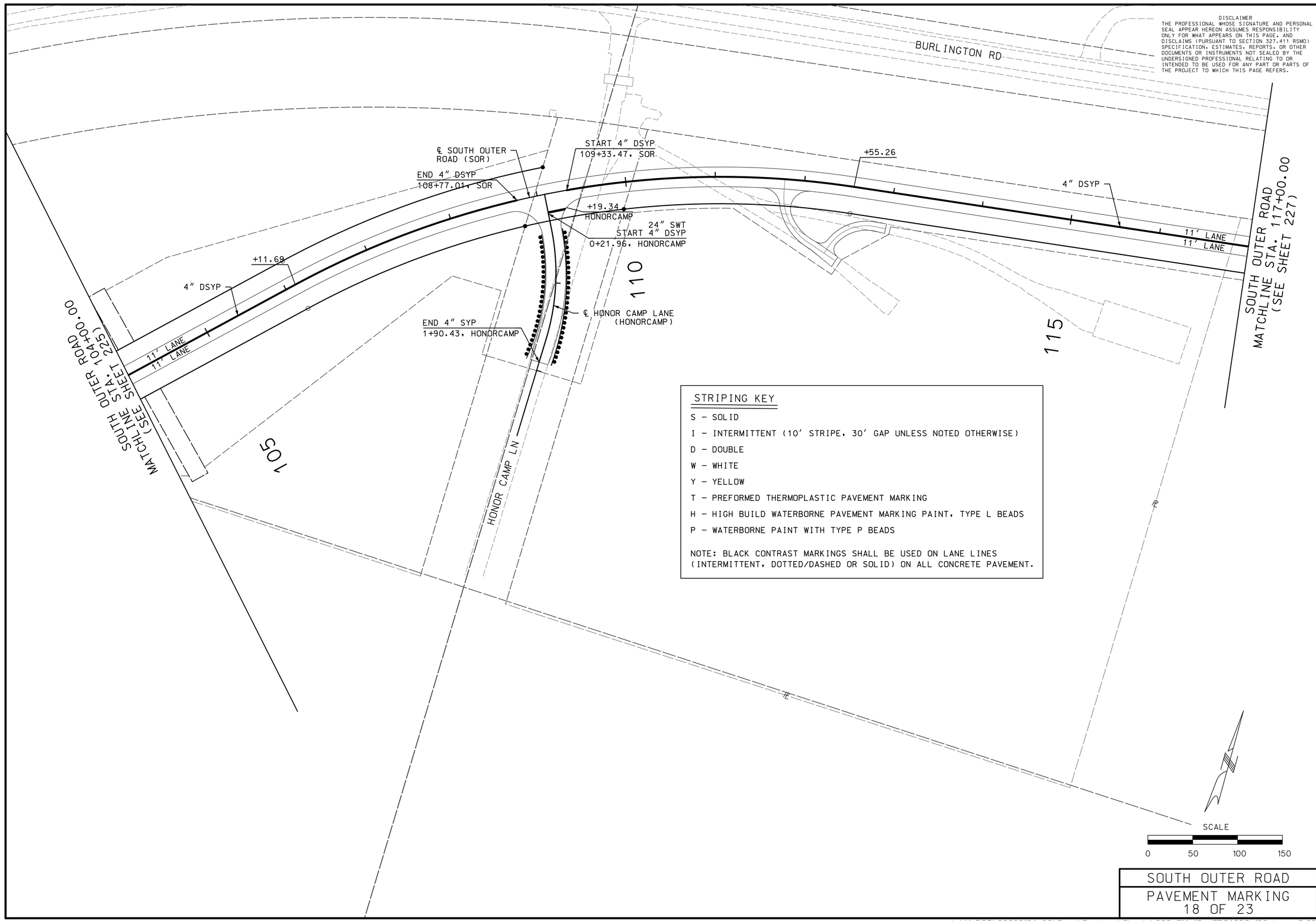

STRIPING KEY

S – SOLID

I – INTERMITTENT (10' STRIPE, 30' GAP UNLESS NOTED OTHERWISE)

D – DOUBLE

W – WHITE

Y – YELLOW

T – PREFORMED THERMOPLASTIC PAVEMENT MARKING

H – HIGH BUILD WATERBORNE PAVEMENT MARKING PAINT, TYPE L BEADS

P – WATERBORNE PAINT WITH TYPE P BEADS

NOTE: BLACK CONTRAST MARKINGS SHALL BE USED ON LANE LINES (INTERMITTENT, DOTTED/DASHED OR SOLID) ON ALL CONCRETE PAVEMENT.

SOUTH OUTER ROAD

PAVEMENT MARKING

18 OF 23

DISCLAIMER

THE PROFESSIONAL WHOSE SIGNATURE AND PERSONAL SEAL APPEAR HEREON ASSUMES RESPONSIBILITY ONLY FOR WHAT APPEARS ON THIS PAGE, AND DISCLAIMS (PURSUANT TO SECTION 327.411 RSMO) SPECIFICATION, ESTIMATES, REPORTS, OR OTHER DOCUMENTS OR INSTRUMENTS NOT SEALED BY THE UNDERSIGNED PROFESSIONAL RELATING TO OR INTENDED TO BE USED FOR ANY PART OR PARTS OF THE PROJECT TO WHICH THIS PAGE REFERS.

STATE OF MISSOURI
DALLAS P. JOPLIN
NUMBER PE-2011015760
PROFESSIONAL ENGINEER

THIS SHEET HAS BEEN SIGNED, SEALED AND DATED ELECTRONICALLY.

DATE PREPARED: 8/2/2024

ROUTE	STATE
60	MO
DISTRICT	SHEET NO.
SW	226

COUNTY: WEBSTER

JOB NO.: J7P3425C

CONTRACT ID.:

PROJECT NO.:

BRIDGE NO.:

DESCRIPTION	DATE

IF A SEAL IS PRESENT ON THIS SHEET IT HAS BEEN ELECTRONICALLY SEALED AND DATED.

MISSOURI HIGHWAYS AND TRANSPORTATION COMMISSION

105 WEST CAPITOL
JEFFERSON CITY, MO 65102
1-888-ASK-MODOT (1-888-275-6636)

CMT
© Copyright CMT, Inc.
CRAWFORD, MURPHY & TILLY, INC.
1631 WEST ELFINDALE STREET
SPRINGFIELD, MO 65807 (417) 869-6009
ENGINEERING CORPORATION - 000631

L:\MoDOT\20092124-00\Draw\Roadway\Sheets\226_PM_18_J7P3425C_i50.dgn 8:29:33 AM 8/2/2024

REV.

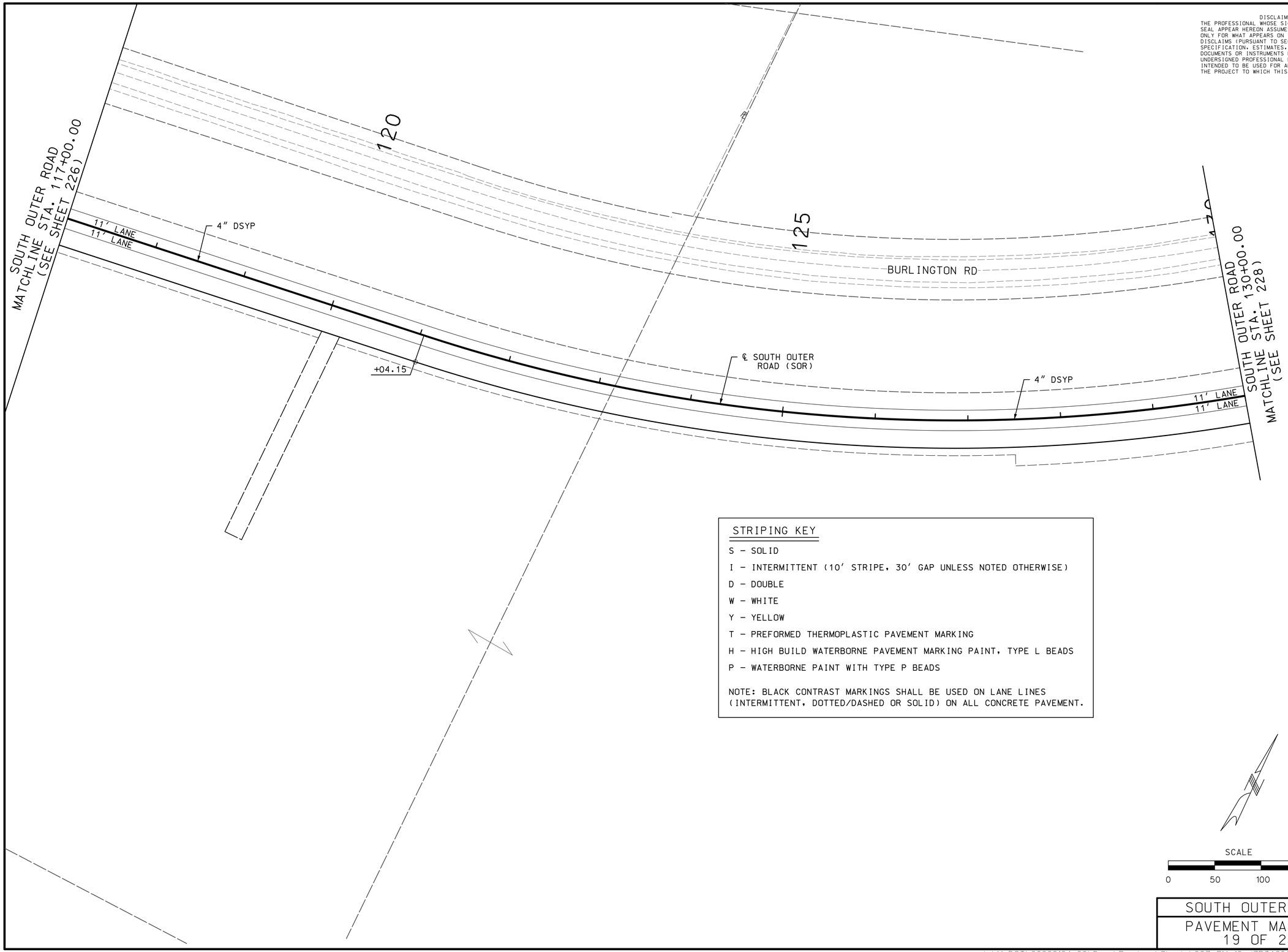

DISCLAIMER
THE PROFESSIONAL WHOSE SIGNATURE AND PERSONAL SEAL APPEAR HEREON ASSUMES RESPONSIBILITY ONLY FOR WHAT APPEARS ON THIS PAGE. AND DISCLAIMS (PURSUANT TO SECTION 327.411 RSMO) SPECIFICATION, ESTIMATES, REPORTS, OR OTHER DOCUMENTS OR INSTRUMENTS NOT SEALED BY THE UNDERSIGNED PROFESSIONAL RELATING TO OR INTENDED TO BE USED FOR ANY PART OR PARTS OF THE PROJECT TO WHICH THIS PAGE REFERS.

STRIPING KEY

S – SOLID

I – INTERMITTENT (10' STRIPE, 30' GAP UNLESS NOTED OTHERWISE)

D – DOUBLE

W – WHITE

Y – YELLOW

T – PREFORMED THERMOPLASTIC PAVEMENT MARKING

H – HIGH BUILD WATERBORNE PAVEMENT MARKING PAINT, TYPE L BEADS

P – WATERBORNE PAINT WITH TYPE P BEADS

NOTE: BLACK CONTRAST MARKINGS SHALL BE USED ON LANE LINES (INTERMITTENT, DOTTED/DASHED OR SOLID) ON ALL CONCRETE PAVEMENT.

SCALE
0 50 100 150

SOUTH OUTER ROAD
PAVEMENT MARKING
19 OF 23

STATE OF MISSOURI
DALLAS P. JOPLIN
NUMBER PE-2010015760
PROFESSIONAL ENGINEER

THIS SHEET HAS BEEN SIGNED, SEALED AND DATED ELECTRONICALLY.

DATE PREPARED	
8/2/2024	
ROUTE	STATE
60	MO
DISTRICT	SHEET NO.
SW	227
COUNTY	
WEBSTER	
JOB NO.	
J7P3425C	
CONTRACT ID.	
PROJECT NO.	
BRIDGE NO.	

IF A SEAL IS PRESENT ON THIS SHEET IT HAS BEEN ELECTRONICALLY SEALED AND DATED.

DESCRIPTION	DATE

MISSOURI HIGHWAYS AND TRANSPORTATION COMMISSION
105 WEST CAPITOL
JEFFERSON CITY, MO 65102
1-888-ASK-MODOT (1-888-275-6636)

CMT
©Copyright CMT, Inc.
CRAWFORD, MURPHY & TILLY, INC.
1631 WEST ELFINDALE STREET
SPRINGFIELD, MO 65807 (417) 869-6009
ENGINEERING CORPORATION - 000631

REV.

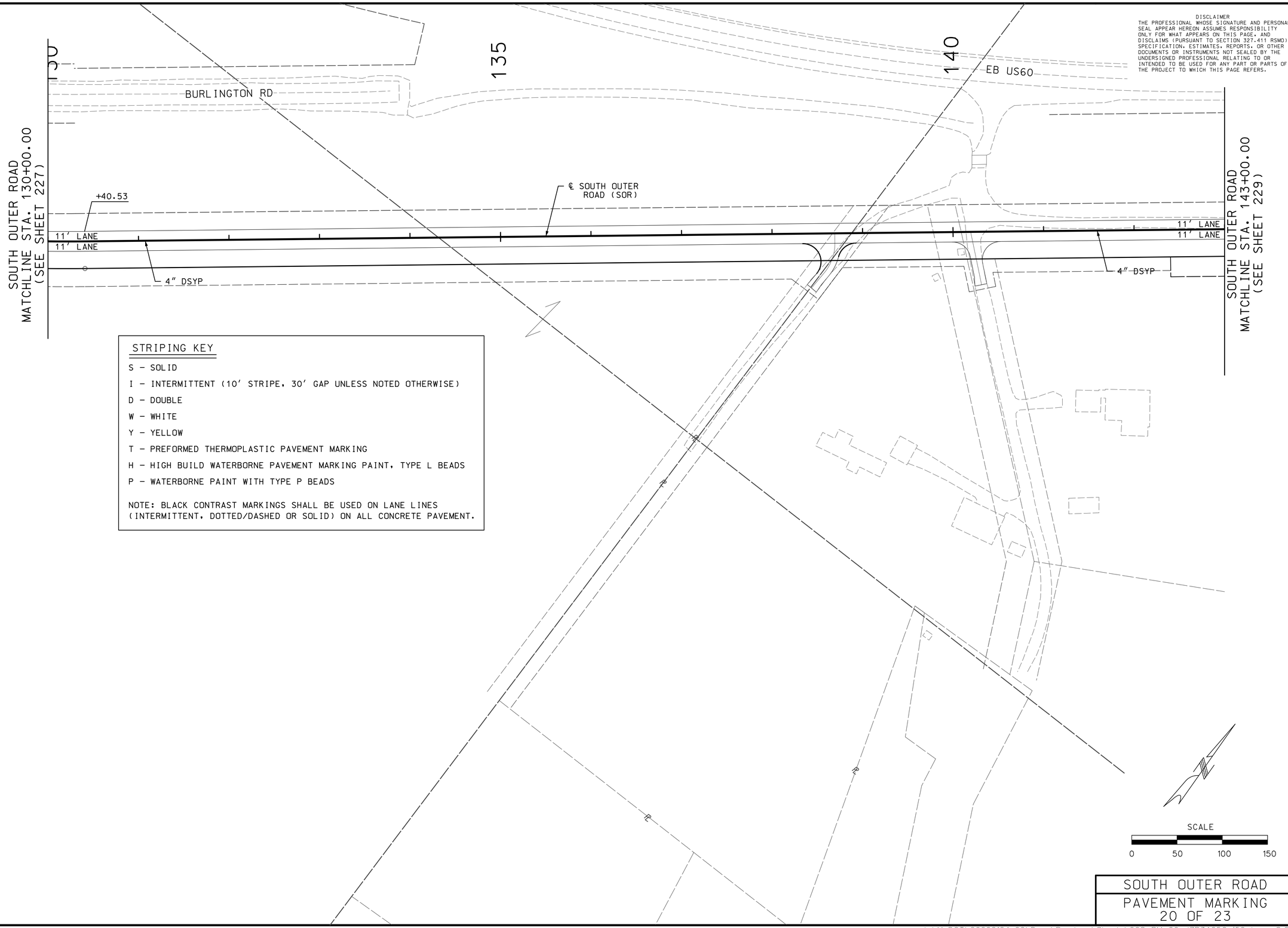

STRIPING KEY

S – SOLID

I – INTERMITTENT (10' STRIPE, 30' GAP UNLESS NOTED OTHERWISE)

D – DOUBLE

W – WHITE

Y – YELLOW

T – PREFORMED THERMOPLASTIC PAVEMENT MARKING

H – HIGH BUILD WATERBORNE PAVEMENT MARKING PAINT, TYPE L BEADS

P – WATERBORNE PAINT WITH TYPE P BEADS

NOTE: BLACK CONTRAST MARKINGS SHALL BE USED ON LANE LINES (INTERMITTENT, DOTTED/DASHED OR SOLID) ON ALL CONCRETE PAVEMENT.

DISCLAIMER
THE PROFESSIONAL WHOSE SIGNATURE AND PERSONAL SEAL APPEAR HEREON ASSUMES RESPONSIBILITY ONLY FOR WHAT APPEARS ON THIS PAGE, AND DISCLAIMS (PURSUANT TO SECTION 327.411 RSMO) SPECIFICATION, ESTIMATES, REPORTS, OR OTHER DOCUMENTS OR INSTRUMENTS NOT SEALED BY THE UNDERSIGNED PROFESSIONAL RELATING TO OR INTENDED TO BE USED FOR ANY PART OR PARTS OF THE PROJECT TO WHICH THIS PAGE REFERS.

STATE OF MISSOURI
DALLAS P. JOPLIN
NUMBER PE-2011015760
PROFESSIONAL ENGINEER

THIS SHEET HAS BEEN SIGNED, SEALED AND DATED ELECTRONICALLY.

DATE PREPARED
8/2/2024

ROUTE	STATE
60	MO
DISTRICT	SHEET NO.
SW	228

COUNTY
WEBSTER

JOB NO.
J7P3425C

CONTRACT ID.

PROJECT NO.

BRIDGE NO.

IF A SEAL IS PRESENT ON THIS SHEET IT HAS BEEN ELECTRONICALLY SEALED AND DATED.

REV.	DATE	DESCRIPTION

MISSOURI HIGHWAYS AND TRANSPORTATION COMMISSION
105 WEST CAPITOL
JEFFERSON CITY, MO 65102
1-888-ASK-MODOT (1-888-275-6636)

CMT
© Copyright CMT, Inc.
CRAWFORD, MURPHY & TILLY, INC.
1631 WEST ELFINDALE STREET
SPRINGFIELD, MO 65807 (417) 869-6009
ENGINEERING CORPORATION - 000631

SOUTH OUTER ROAD
PAVEMENT MARKING
20 OF 23

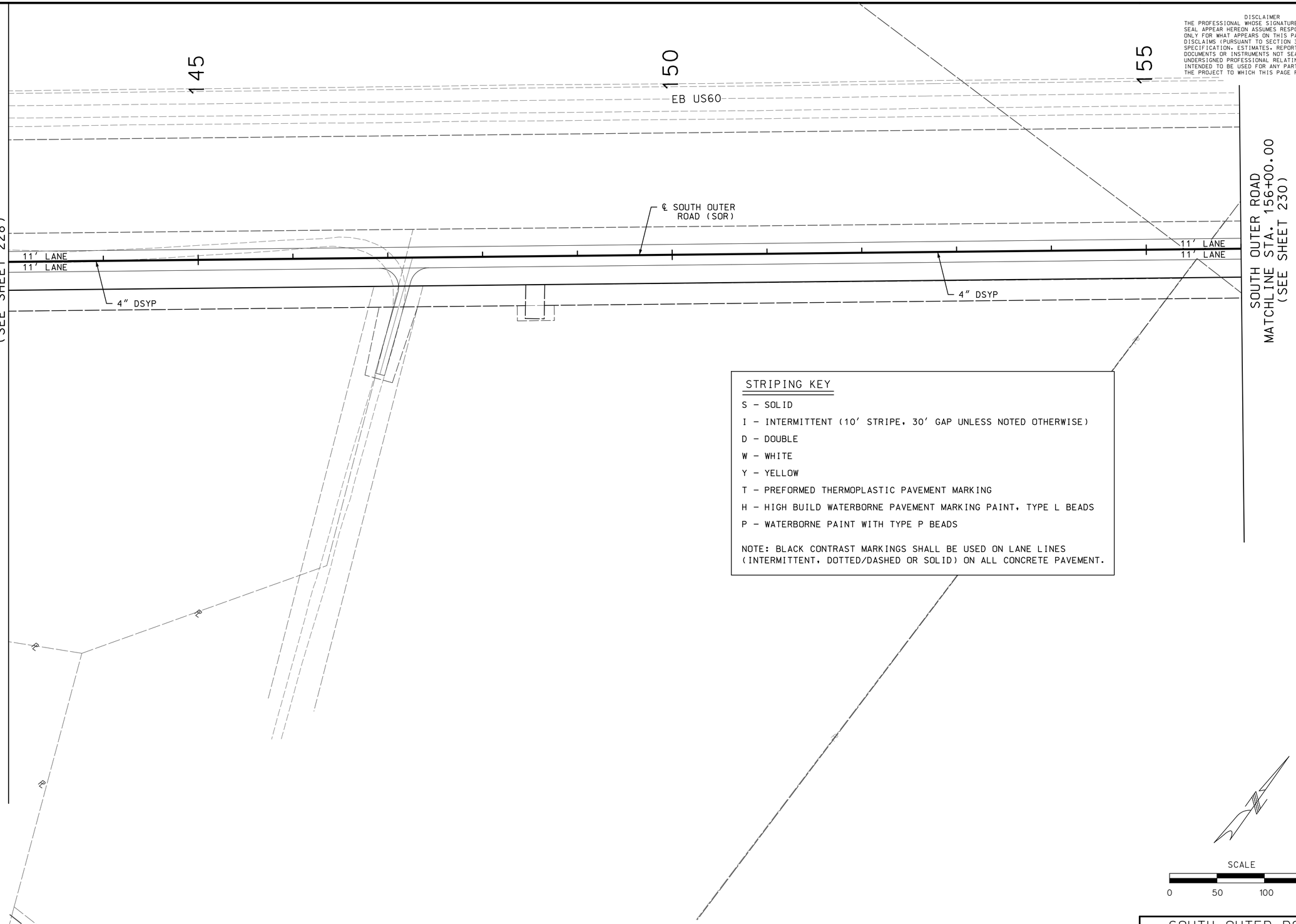

DISCLAIMER
THE PROFESSIONAL WHOSE SIGNATURE AND PERSONAL SEAL APPEAR HEREON ASSUMES RESPONSIBILITY ONLY FOR WHAT APPEARS ON THIS PAGE, AND DISCLAIMS (PURSUANT TO SECTION 327.411 RSMO) SPECIFICATION, ESTIMATES, REPORTS, OR OTHER DOCUMENTS OR INSTRUMENTS NOT SEALED BY THE UNDERSIGNED PROFESSIONAL RELATING TO OR INTENDED TO BE USED FOR ANY PART OR PARTS OF THE PROJECT TO WHICH THIS PAGE REFERS.

STRIPING KEY

S – SOLID

I – INTERMITTENT (10' STRIPE, 30' GAP UNLESS NOTED OTHERWISE)

D – DOUBLE

W – WHITE

Y – YELLOW

T – PREFORMED THERMOPLASTIC PAVEMENT MARKING

H – HIGH BUILD WATERBORNE PAVEMENT MARKING PAINT, TYPE L BEADS

P – WATERBORNE PAINT WITH TYPE P BEADS

NOTE: BLACK CONTRAST MARKINGS SHALL BE USED ON LANE LINES (INTERMITTENT, DOTTED/DASHED OR SOLID) ON ALL CONCRETE PAVEMENT.

SCALE
0 50 100 150

SOUTH OUTER ROAD
PAVEMENT MARKING
21 OF 23

STATE OF MISSOURI
DALLAS P. JOPLIN
NUMBER PE-2011015760
PROFESSIONAL ENGINEER

THIS SHEET HAS BEEN SIGNED, SEALED AND DATED ELECTRONICALLY.

DATE PREPARED	
8/2/2024	
ROUTE	STATE
60	MO
DISTRICT	SHEET NO.
SW	229
COUNTY	
WEBSTER	
JOB NO.	
J7P3425C	
CONTRACT ID.	
PROJECT NO.	
BRIDGE NO.	

DESCRIPTION	DATE

IF A SEAL IS PRESENT ON THIS SHEET IT HAS BEEN ELECTRONICALLY SEALED AND DATED.

MISSOURI HIGHWAYS AND TRANSPORTATION COMMISSION
105 WEST CAPITOL
JEFFERSON CITY, MO 65102
1-888-ASK-MODOT (1-888-275-6636)

© Copyright CMT, Inc.
CMT
CRAWFORD, MURPHY & TILLY, INC.
1631 WEST ELFINDALE STREET
SPRINGFIELD, MO 65807 (417) 869-6009
ENGINEERING CORPORATION - 000631

L:\MoDOT\20092124-00\Draw\Roadway\Sheets\229_PM_21_J7P3425C_i50.dgn 8:29:39 AM 8/2/2024

REV.

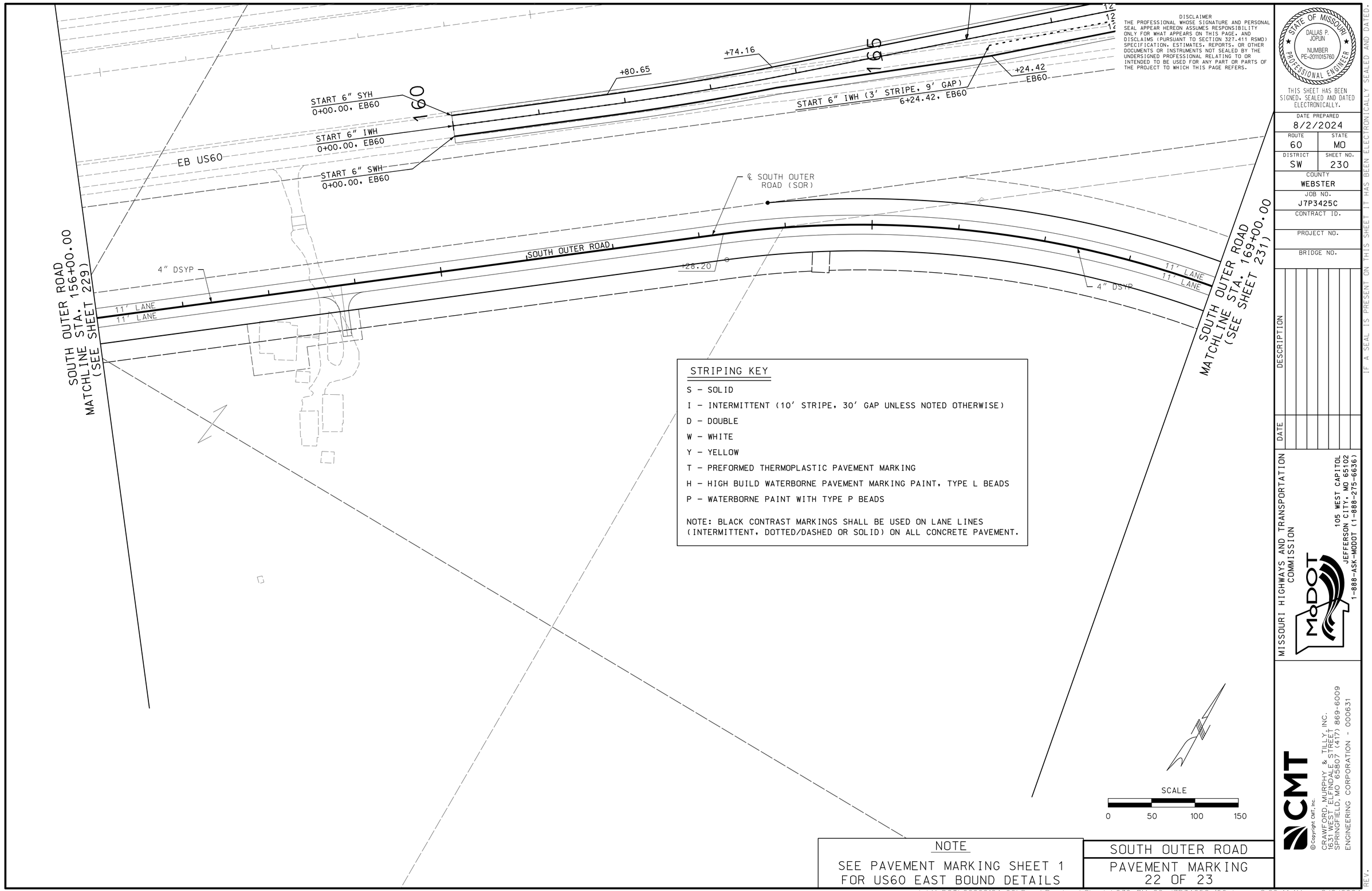

STRIPING KEY

S – SOLID

I – INTERMITTENT (10' STRIPE, 30' GAP UNLESS NOTED OTHERWISE)

D – DOUBLE

W – WHITE

Y – YELLOW

T – PREFORMED THERMOPLASTIC PAVEMENT MARKING

H – HIGH BUILD WATERBORNE PAVEMENT MARKING PAINT, TYPE L BEADS

P – WATERBORNE PAINT WITH TYPE P BEADS

NOTE: BLACK CONTRAST MARKINGS SHALL BE USED ON LANE LINES (INTERMITTENT, DOTTED/DASHED OR SOLID) ON ALL CONCRETE PAVEMENT.

SCALE

0 50 100 150

NOTE

SEE PAVEMENT MARKING SHEET 1 FOR US60 EAST BOUND DETAILS

SOUTH OUTER ROAD

PAVEMENT MARKING
22 OF 23

DISCLAIMER

THE PROFESSIONAL WHOSE SIGNATURE AND PERSONAL SEAL APPEAR HEREON ASSUMES RESPONSIBILITY ONLY FOR WHAT APPEARS ON THIS PAGE, AND DISCLAIMS (PURSUANT TO SECTION 327.411 RSMO) SPECIFICATION, ESTIMATES, REPORTS, OR OTHER DOCUMENTS OR INSTRUMENTS NOT SEALED BY THE UNDERSIGNED PROFESSIONAL RELATING TO OR INTENDED TO BE USED FOR ANY PART OR PARTS OF THE PROJECT TO WHICH THIS PAGE REFERS.

STATE OF MISSOURI
DALLAS P. JOPLIN
NUMBER PE-2011015760
PROFESSIONAL ENGINEER

THIS SHEET HAS BEEN SIGNED, SEALED AND DATED ELECTRONICALLY.

DATE PREPARED	
8/2/2024	
ROUTE	STATE
60	MO
DISTRICT	SHEET NO.
SW	230
COUNTY	
WEBSTER	
JOB NO.	
J7P3425C	
CONTRACT ID.	
PROJECT NO.	
BRIDGE NO.	

IF A SEAL IS PRESENT ON THIS SHEET IT HAS BEEN ELECTRONICALLY SEALED AND DATED.

DATE	DESCRIPTION	REV.

MISSOURI HIGHWAYS AND TRANSPORTATION COMMISSION

105 WEST CAPITOL
JEFFERSON CITY, MO 65102
1-888-ASK-MODOT (1-888-275-6636)

CMT

©Copyright CMT, Inc.

CRAWFORD, MURPHY & TILLY, INC.
1631 WEST ELFINDALE STREET
SPRINGFIELD, MO 65807 (417) 869-6009
ENGINEERING CORPORATION - 000631

STRIPING KEY

S – SOLID

I – INTERMITTENT (10' STRIPE, 30' GAP UNLESS NOTED OTHERWISE)

D – DOUBLE

W – WHITE

Y – YELLOW

T – PREFORMED THERMOPLASTIC PAVEMENT MARKING

H – HIGH BUILD WATERBORNE PAVEMENT MARKING PAINT, TYPE L BEADS

P – WATERBORNE PAINT WITH TYPE P BEADS

NOTE: BLACK CONTRAST MARKINGS SHALL BE USED ON LANE LINES (INTERMITTENT, DOTTED/DASHED OR SOLID) ON ALL CONCRETE PAVEMENT.

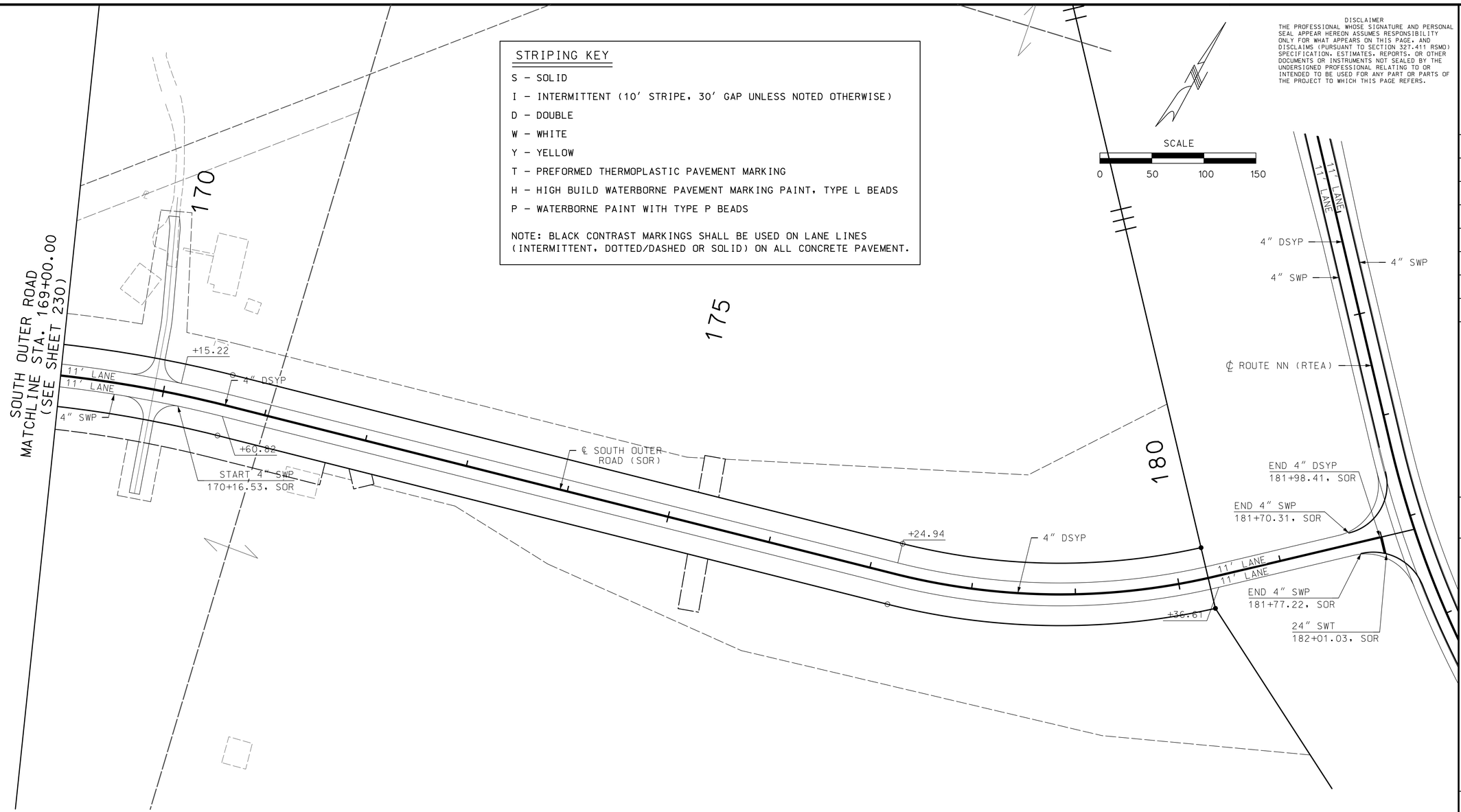

DISCLAIMER
THE PROFESSIONAL WHOSE SIGNATURE AND PERSONAL SEAL APPEAR HEREON ASSUMES RESPONSIBILITY ONLY FOR WHAT APPEARS ON THIS PAGE, AND DISCLAIMS (PURSUANT TO SECTION 327.411 RSMO) SPECIFICATION, ESTIMATES, REPORTS, OR OTHER DOCUMENTS OR INSTRUMENTS NOT SEALED BY THE UNDERSIGNED PROFESSIONAL RELATING TO OR INTENDED TO BE USED FOR ANY PART OR PARTS OF THE PROJECT TO WHICH THIS PAGE REFERS.

NOTE

SEE PAVEMENT MARKING SHEET 8 FOR ROUTE NN DETAILS

SOUTH OUTER ROAD

PAVEMENT MARKING
23 OF 23

STATE OF MISSOURI
DALLAS P. JOPLIN
NUMBER PE-2011015760
PROFESSIONAL ENGINEER

THIS SHEET HAS BEEN SIGNED, SEALED AND DATED ELECTRONICALLY.

DATE PREPARED	
8/2/2024	
ROUTE	STATE
60	MO
DISTRICT	SHEET NO.
SW	231

COUNTY: WEBSTER
JOB NO.: J7P3425C
CONTRACT ID.:
PROJECT NO.:
BRIDGE NO.:

DESCRIPTION	DATE

MISSOURI HIGHWAYS AND TRANSPORTATION COMMISSION

105 WEST CAPITOL
JEFFERSON CITY, MO 65102
1-888-ASK-MODOT (1-888-275-6636)

CMT
©Copyright CMT, Inc.
CRAWFORD, MURPHY & TILLY, INC.
1631 WEST ELFINDALE STREET
SPRINGFIELD, MO 65807 (417) 869-6009
ENGINEERING CORPORATION - 000631

IF A SEAL IS PRESENT ON THIS SHEET IT HAS BEEN ELECTRONICALLY SEALED AND DATED.

REV.

L:\MoDOT\20092124-00\Draw\Roadway\Sheets\231_PM_23_J7P3425C_i50.dgn 8:29:43 AM 8/2/2024

LEGEND:

EGL = EXISTING GROUND LINE

PGL = PROPOSED GROUND LINE

LIMITS OF CLASS 3 CULVERT EXCAVATION

LIMITS OF CLASS 3 INLET EXCAVATION

DISCLAIMER
THE PROFESSIONAL WHOSE SIGNATURE AND PERSONAL SEAL APPEAR HEREON ASSUMES RESPONSIBILITY ONLY FOR WHAT APPEARS ON THIS PAGE, AND DISCLAIMS (PURSUANT TO SECTION 327.411 RSMO) SPECIFICATION, ESTIMATES, REPORTS, OR OTHER DOCUMENTS OR INSTRUMENTS NOT SEALED BY THE UNDERSIGNED PROFESSIONAL RELATING TO OR INTENDED TO BE USED FOR ANY PART OR PARTS OF THE PROJECT TO WHICH THIS PAGE REFERS.

NOTES:

1. PROPOSED STATION, OFFSET AND RIM ELEVATION IS CALLED OUT AT THE CENTER OF STRUCTURES AND AT THE FLOW LINE OF FLARED END SECTIONS.
2. THE SEWER CONTRACTOR IS TO VERIFY ALL EXISTING PIPE SIZES AND INVERTS PRIOR TO CONSTRUCTION. DISCREPANCIES ARE TO BE REPORTED TO THE ENGINEER IN THE FIELD.
3. GRANULAR BACKFILL WILL BE PROVIDED PER MODOT STANDARD SPECIFICATIONS. THE COST OF GRANULAR BACKFILL WILL BE CONSIDERED INCIDENTAL TO THE UNIT BID PRICE FOR PIPES.
4. THE EXISTENCE AND APPROXIMATE LOCATION OF UTILITY FACILITIES KNOWN TO EXIST, AS SHOWN ON THE PLANS, ARE BASED ON THE BEST INFORMATION AVAILABLE TO THE COMMISSION AT THIS TIME. THIS INFORMATION IS PROVIDED BY THE COMMISSION "AS-IS" AND THE COMMISSION EXPRESSLY DISCLAIMS ANY REPRESENTATION OR WARRANTY AS TO THE COMPLETENESS, ACCURACY, OR SUITABILITY OF THE INFORMATION FOR ANY USE. RELIANCE UPON THIS INFORMATION IS DONE AT THE RISK AND PERIL OF THE USER, AND THE COMMISSION SHALL NOT BE LIABLE FOR ANY DAMAGES THAT MAY ARISE FROM ANY ERROR IN THE INFORMATION.
5. THE SEWER CONTRACTOR SHALL BE RESPONSIBLE FOR ANY COSTS ASSOCIATED WITH THE FIELD VERIFICATION OF THE SEWER GRADE, OR REMOVAL AND REPLACEMENT OF THE SEWER PIPE OR ASSOCIATED APPURTENANCES.
6. CONTRACTOR SHALL EXPOSE ALL UTILITIES PRIOR TO STORM SEWER PIPE INSTALLATION AND VERIFY TOP ELEVATION OF UTILITIES.
7. CONNECTOR TO EXISTING BOX CULVERT WILL BE CONSIDERED INCIDENTAL TO PIPE. NO SEPARATE PAYMENT WILL BE MADE.
8. SEE SHEET 87 FOR SPECIAL INLET DETAILS.

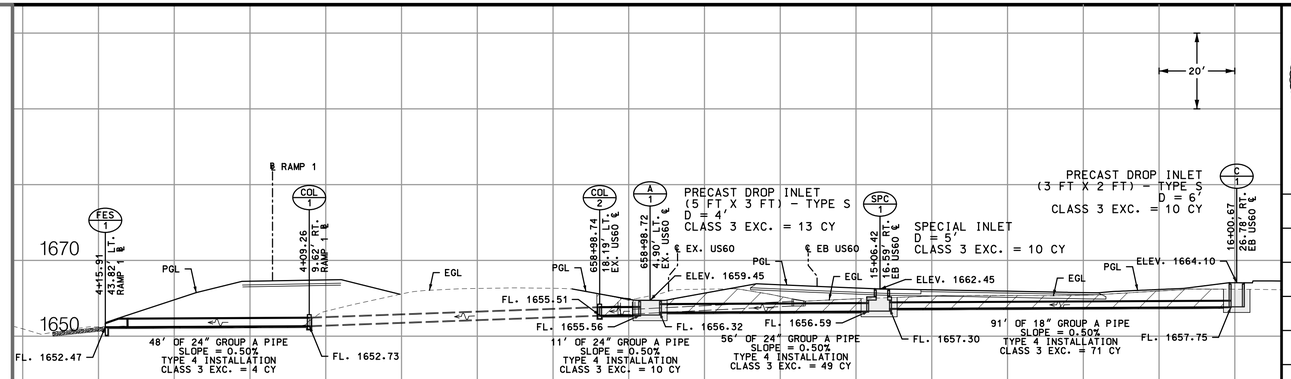

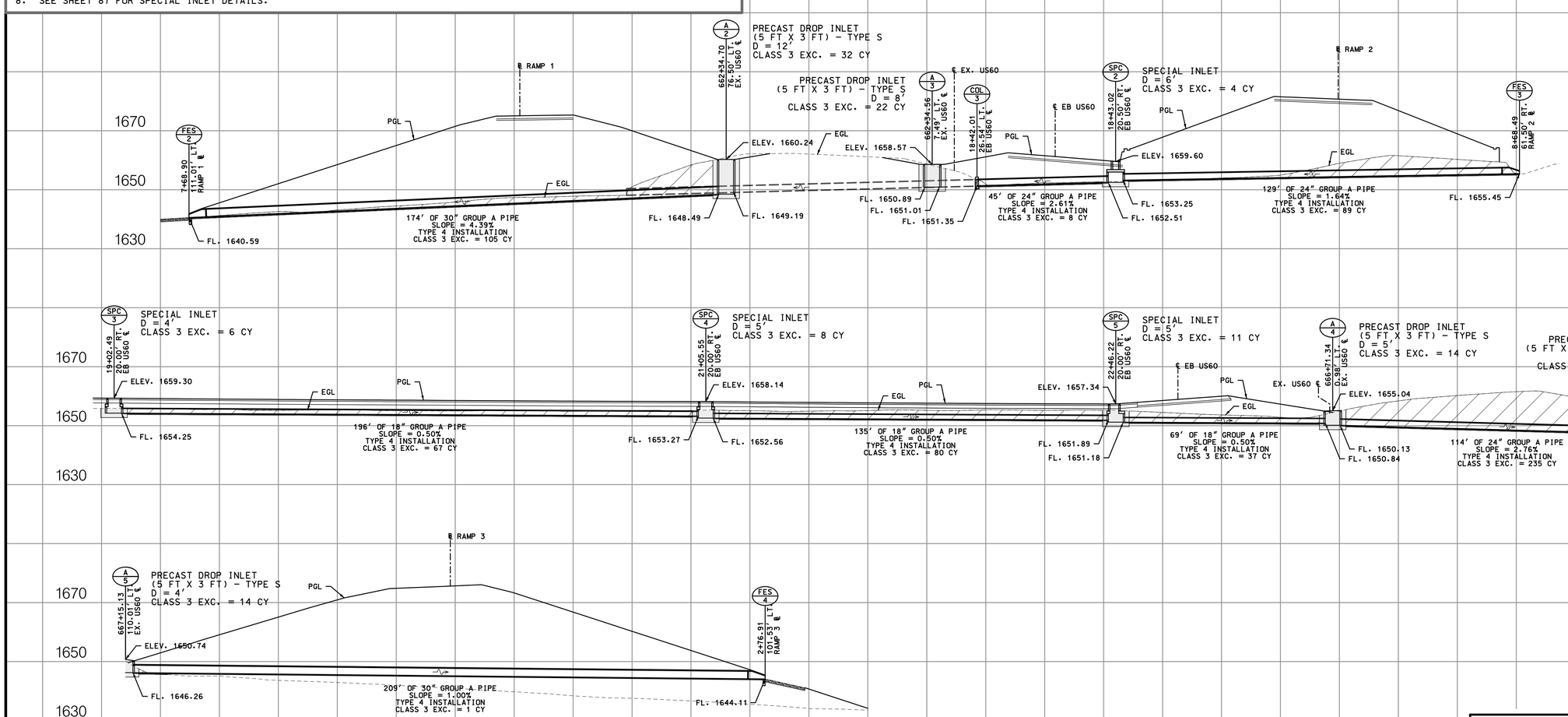

STATE OF MISSOURI
DALLAS P. JOPLIN
NUMBER PE-2011015760
PROFESSIONAL ENGINEER

THIS SHEET HAS BEEN SIGNED, SEALED AND DATED ELECTRONICALLY.

DATE PREPARED	
8/2/2024	
ROUTE	STATE
60	MO
DISTRICT	SHEET NO.
SW	232

COUNTY: WEBSTER

JOB NO.: J7P3425C

CONTRACT ID.:

PROJECT NO.:

BRIDGE NO.:

DATE	DESCRIPTION

MISSOURI HIGHWAYS AND TRANSPORTATION COMMISSION
105 WEST CAPITOL
JEFFERSON CITY, MO 65102
1-888-ASK-MODOT (1-888-275-6636)

CMT
CRAWFORD, MURPHY & TILLY, INC.
1631 WEST ELFINDALE STREET
SPRINGFIELD, MO 65807 (417) 869-6009
ENGINEERING CORPORATION - 000631

©Copyright CMT, Inc.

IF A SEAL IS PRESENT ON THIS SHEET IT HAS BEEN ELECTRONICALLY SEALED AND DATED.

US60

CULVERT SECTIONS
1 OF 7

REV.

LEGEND:

EGL = EXISTING GROUND LINE

PGL = PROPOSED GROUND LINE

LIMITS OF CLASS 3 CULVERT EXCAVATION

LIMITS OF CLASS 3 INLET EXCAVATION

DISCLAIMER

THE PROFESSIONAL WHOSE SIGNATURE AND PERSONAL SEAL APPEAR HEREON ASSUMES RESPONSIBILITY ONLY FOR WHAT APPEARS ON THIS PAGE, AND DISCLAIMS (PURSUANT TO SECTION 327.411 RSMO) SPECIFICATION, ESTIMATES, REPORTS, OR OTHER DOCUMENTS OR INSTRUMENTS NOT SEALED BY THE UNDERSIGNED PROFESSIONAL RELATING TO OR INTENDED TO BE USED FOR ANY PART OR PARTS OF THE PROJECT TO WHICH THIS PAGE REFERS.

NOTES:

1. PROPOSED STATION, OFFSET AND RIM ELEVATION IS CALLED OUT AT THE CENTER OF STRUCTURES AND AT THE FLOW LINE OF FLARED END SECTIONS.
2. THE SEWER CONTRACTOR IS TO VERIFY ALL EXISTING PIPE SIZES AND INVERTS PRIOR TO CONSTRUCTION. DISCREPANCIES ARE TO BE REPORTED TO THE ENGINEER IN THE FIELD.
3. GRANULAR BACKFILL WILL BE PROVIDED PER MODOT STANDARD SPECIFICATIONS. THE COST OF GRANULAR BACKFILL WILL BE CONSIDERED INCIDENTAL TO THE UNIT BID PRICE FOR PIPES.
4. THE EXISTENCE AND APPROXIMATE LOCATION OF UTILITY FACILITIES KNOWN TO EXIST, AS SHOWN ON THE PLANS, ARE BASED ON THE BEST INFORMATION AVAILABLE TO THE COMMISSION AT THIS TIME. THIS INFORMATION IS PROVIDED BY THE COMMISSION "AS-IS" AND THE COMMISSION EXPRESSLY DISCLAIMS ANY REPRESENTATION OR WARRANTY AS TO THE COMPLETENESS, ACCURACY, OR SUITABILITY OF THE INFORMATION FOR ANY USE. RELIANCE UPON THIS INFORMATION IS DONE AT THE RISK AND PERIL OF THE USER, AND THE COMMISSION SHALL NOT BE LIABLE FOR ANY DAMAGES THAT MAY ARISE FROM ANY ERROR IN THE INFORMATION.
5. THE SEWER CONTRACTOR SHALL BE RESPONSIBLE FOR ANY COSTS ASSOCIATED WITH THE FIELD VERIFICATION OF THE SEWER GRADE, OR REMOVAL AND REPLACEMENT OF THE SEWER PIPE OR ASSOCIATED APPURTENANCES.
6. CONTRACTOR SHALL EXPOSE ALL UTILITIES PRIOR TO STORM SEWER PIPE INSTALLATION AND VERIFY TOP ELEVATION OF UTILITIES.
7. CONNECTOR TO EXISTING BOX CULVERT WILL BE CONSIDERED INCIDENTAL TO PIPE. NO SEPARATE PAYMENT WILL BE MADE.

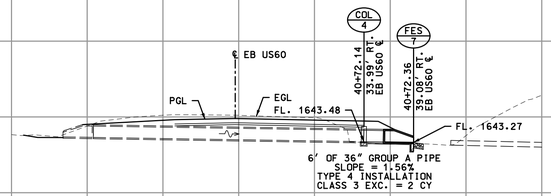

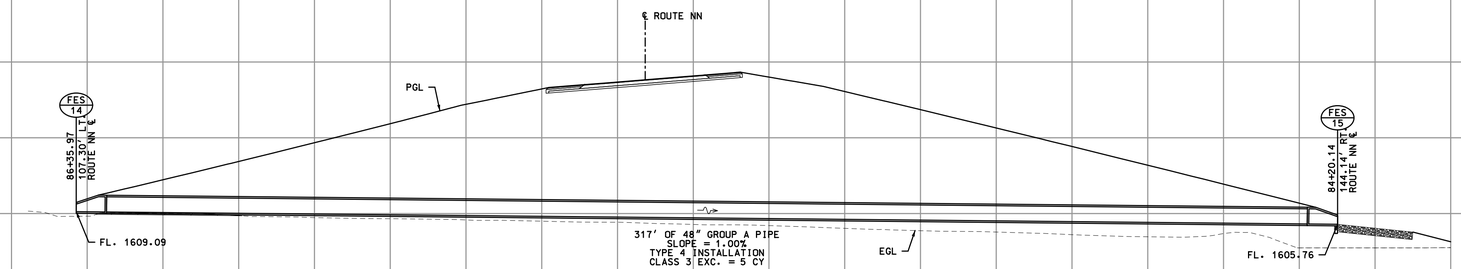

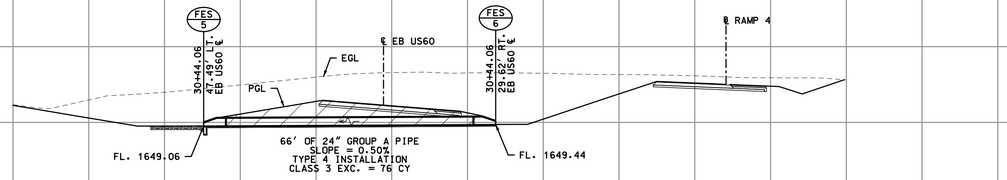

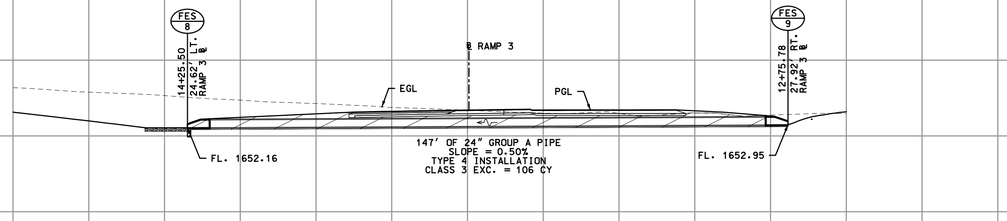

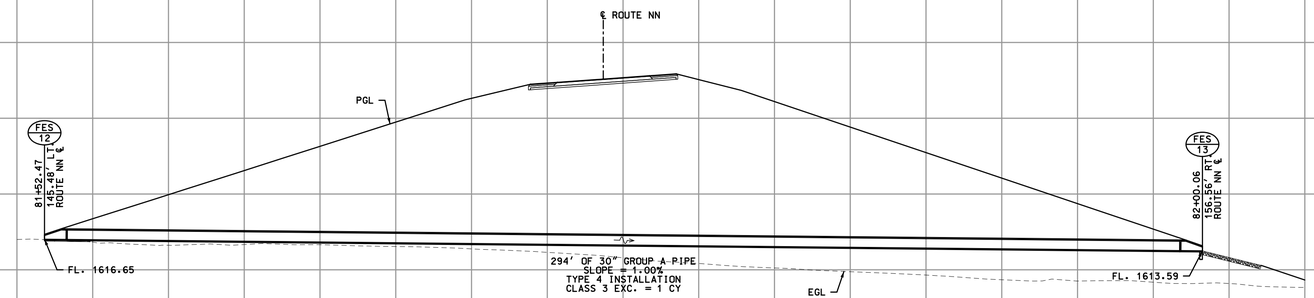

20'

US60 / ROUTE A/NN

CULVERT SECTIONS
2 OF 7

STATE OF MISSOURI
DALLAS P. JOPLIN
NUMBER PE-2011015760
PROFESSIONAL ENGINEER

THIS SHEET HAS BEEN SIGNED, SEALED AND DATED ELECTRONICALLY.

DATE PREPARED: 8/2/2024

ROUTE	STATE
60	MO
DISTRICT	SHEET NO.
SW	233

COUNTY: WEBSTER

JOB NO.: J7P3425C

CONTRACT ID.:

PROJECT NO.:

BRIDGE NO.:

DESCRIPTION	DATE

IF A SEAL IS PRESENT ON THIS SHEET IT HAS BEEN ELECTRONICALLY SEALED AND DATED.

MISSOURI HIGHWAYS AND TRANSPORTATION COMMISSION

105 WEST CAPITOL
JEFFERSON CITY, MO 65102
1-888-ASK-MODOT (1-888-275-6636)

CMT
© Copyright CMT, Inc.
CRAWFORD, MURPHY & TILLY, INC.
1631 WEST ELFINDALE STREET
SPRINGFIELD, MO 65807 (417) 869-6009
ENGINEERING CORPORATION - 000631

REV.

L:\MoDOT\20092124-00\Draw\Roadway\Sheets\232-238_CS_01-07_J7P3425C_i20.dgn 8:38:28 AM 8/2/2024

LEGEND:

EGL = EXISTING GROUND LINE

PGL = PROPOSED GROUND LINE

LIMITS OF CLASS 3 CULVERT EXCAVATION

LIMITS OF CLASS 3 INLET EXCAVATION

DISCLAIMER

THE PROFESSIONAL WHOSE SIGNATURE AND PERSONAL SEAL APPEAR HEREON ASSUMES RESPONSIBILITY ONLY FOR WHAT APPEARS ON THIS PAGE, AND DISCLAIMS (PURSUANT TO SECTION 327.411 RSMO) SPECIFICATION, ESTIMATES, REPORTS, OR OTHER DOCUMENTS OR INSTRUMENTS NOT SEALED BY THE UNDERSIGNED PROFESSIONAL RELATING TO OR INTENDED TO BE USED FOR ANY PART OR PARTS OF THE PROJECT TO WHICH THIS PAGE REFERS.

NOTES:

1. PROPOSED STATION, OFFSET AND RIM ELEVATION IS CALLED OUT AT THE CENTER OF STRUCTURES AND AT THE FLOW LINE OF FLARED END SECTIONS.
2. THE SEWER CONTRACTOR IS TO VERIFY ALL EXISTING PIPE SIZES AND INVERTS PRIOR TO CONSTRUCTION. DISCREPANCIES ARE TO BE REPORTED TO THE ENGINEER IN THE FIELD.
3. GRANULAR BACKFILL WILL BE PROVIDED PER MODOT STANDARD SPECIFICATIONS. THE COST OF GRANULAR BACKFILL WILL BE CONSIDERED INCIDENTAL TO THE UNIT BID PRICE FOR PIPES.
4. THE EXISTENCE AND APPROXIMATE LOCATION OF UTILITY FACILITIES KNOWN TO EXIST, AS SHOWN ON THE PLANS, ARE BASED ON THE BEST INFORMATION AVAILABLE TO THE COMMISSION AT THIS TIME. THIS INFORMATION IS PROVIDED BY THE COMMISSION "AS-IS" AND THE COMMISSION EXPRESSLY DISCLAIMS ANY REPRESENTATION OR WARRANTY AS TO THE COMPLETENESS, ACCURACY, OR SUITABILITY OF THE INFORMATION FOR ANY USE. RELIANCE UPON THIS INFORMATION IS DONE AT THE RISK AND PERIL OF THE USER, AND THE COMMISSION SHALL NOT BE LIABLE FOR ANY DAMAGES THAT MAY ARISE FROM ANY ERROR IN THE INFORMATION.
5. THE SEWER CONTRACTOR SHALL BE RESPONSIBLE FOR ANY COSTS ASSOCIATED WITH THE FIELD VERIFICATION OF THE SEWER GRADE, OR REMOVAL AND REPLACEMENT OF THE SEWER PIPE OR ASSOCIATED APPURTENANCES.
6. CONTRACTOR SHALL EXPOSE ALL UTILITIES PRIOR TO STORM SEWER PIPE INSTALLATION AND VERIFY TOP ELEVATION OF UTILITIES.
7. CONNECTOR TO EXISTING BOX CULVERT WILL BE CONSIDERED INCIDENTAL TO PIPE. NO SEPARATE PAYMENT WILL BE MADE.

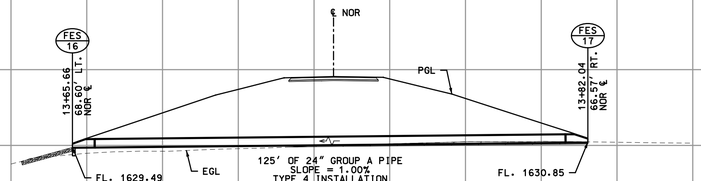

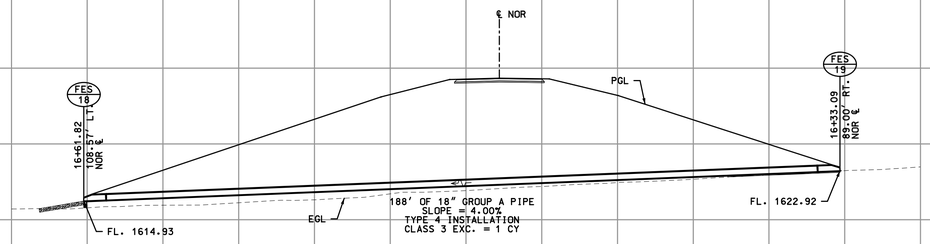

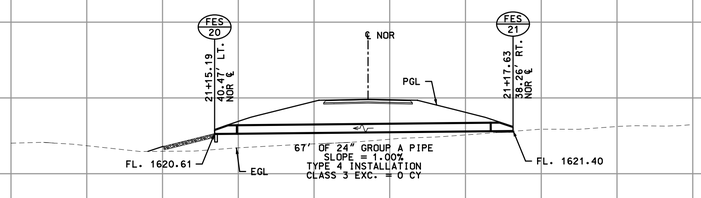

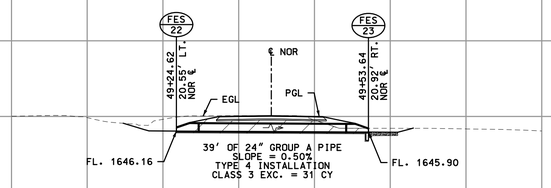

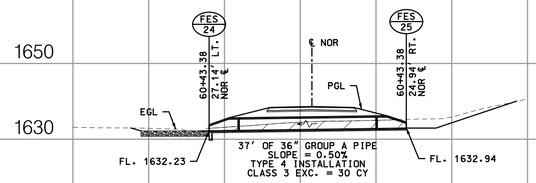

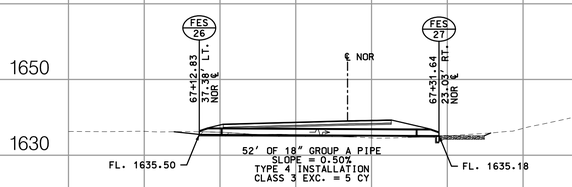

NORTH OUTER ROAD

CULVERT SECTIONS
3 OF 7

STATE OF MISSOURI
DALLAS P. JOPLIN
NUMBER PE-2011015760
PROFESSIONAL ENGINEER

THIS SHEET HAS BEEN SIGNED, SEALED AND DATED ELECTRONICALLY.

DATE PREPARED: 8/2/2024

ROUTE	STATE
60	MO
DISTRICT	SHEET NO.
SW	234

COUNTY: WEBSTER

JOB NO.: J7P3425C

CONTRACT ID.:

PROJECT NO.:

BRIDGE NO.:

IF A SEAL IS PRESENT ON THIS SHEET IT HAS BEEN ELECTRONICALLY SEALED AND DATED.

REV.	DESCRIPTION	DATE

MISSOURI HIGHWAYS AND TRANSPORTATION COMMISSION

105 WEST CAPITOL
JEFFERSON CITY, MO 65102
1-888-ASK-MODOT (1-888-275-6636)

CMT

© Copyright CMT, Inc.

CRAWFORD, MURPHY & TILLY, INC.
1631 WEST ELFINDALE STREET
SPRINGFIELD, MO 65807 (417) 869-6009
ENGINEERING CORPORATION - 000631

L:\MoDOT\20092124-00\Draw\Roadway\Sheets\232-238_CS_01-07_J7P3425C_i20.dgn 8:38:28 AM 8/2/2024

LEGEND:

EGL = EXISTING GROUND LINE

PGL = PROPOSED GROUND LINE

LIMITS OF CLASS 3 CULVERT EXCAVATION

LIMITS OF CLASS 3 INLET EXCAVATION

DISCLAIMER
THE PROFESSIONAL WHOSE SIGNATURE AND PERSONAL SEAL APPEAR HEREON ASSUMES RESPONSIBILITY ONLY FOR WHAT APPEARS ON THIS PAGE, AND DISCLAIMS (PURSUANT TO SECTION 327.411 RSMO) SPECIFICATION, ESTIMATES, REPORTS, OR OTHER DOCUMENTS OR INSTRUMENTS NOT SEALED BY THE UNDERSIGNED PROFESSIONAL RELATING TO OR INTENDED TO BE USED FOR ANY PART OR PARTS OF THE PROJECT TO WHICH THIS PAGE REFERS.

NOTES:

1. PROPOSED STATION, OFFSET AND RIM ELEVATION IS CALLED OUT AT THE CENTER OF STRUCTURES AND AT THE FLOW LINE OF FLARED END SECTIONS.
2. THE SEWER CONTRACTOR IS TO VERIFY ALL EXISTING PIPE SIZES AND INVERTS PRIOR TO CONSTRUCTION. DISCREPANCIES ARE TO BE REPORTED TO THE ENGINEER IN THE FIELD.
3. GRANULAR BACKFILL WILL BE PROVIDED PER MODOT STANDARD SPECIFICATIONS. THE COST OF GRANULAR BACKFILL WILL BE CONSIDERED INCIDENTAL TO THE UNIT BID PRICE FOR PIPES.
4. THE EXISTENCE AND APPROXIMATE LOCATION OF UTILITY FACILITIES KNOWN TO EXIST, AS SHOWN ON THE PLANS, ARE BASED ON THE BEST INFORMATION AVAILABLE TO THE COMMISSION AT THIS TIME. THIS INFORMATION IS PROVIDED BY THE COMMISSION "AS-IS" AND THE COMMISSION EXPRESSLY DISCLAIMS ANY REPRESENTATION OR WARRANTY AS TO THE COMPLETENESS, ACCURACY, OR SUITABILITY OF THE INFORMATION FOR ANY USE. RELIANCE UPON THIS INFORMATION IS DONE AT THE RISK AND PERIL OF THE USER, AND THE COMMISSION SHALL NOT BE LIABLE FOR ANY DAMAGES THAT MAY ARISE FROM ANY ERROR IN THE INFORMATION.
5. THE SEWER CONTRACTOR SHALL BE RESPONSIBLE FOR ANY COSTS ASSOCIATED WITH THE FIELD VERIFICATION OF THE SEWER GRADE, OR REMOVAL AND REPLACEMENT OF THE SEWER PIPE OR ASSOCIATED APPURTENANCES.
6. CONTRACTOR SHALL EXPOSE ALL UTILITIES PRIOR TO STORM SEWER PIPE INSTALLATION AND VERIFY TOP ELEVATION OF UTILITIES.
7. CONNECTOR TO EXISTING BOX CULVERT WILL BE CONSIDERED INCIDENTAL TO PIPE. NO SEPARATE PAYMENT WILL BE MADE.

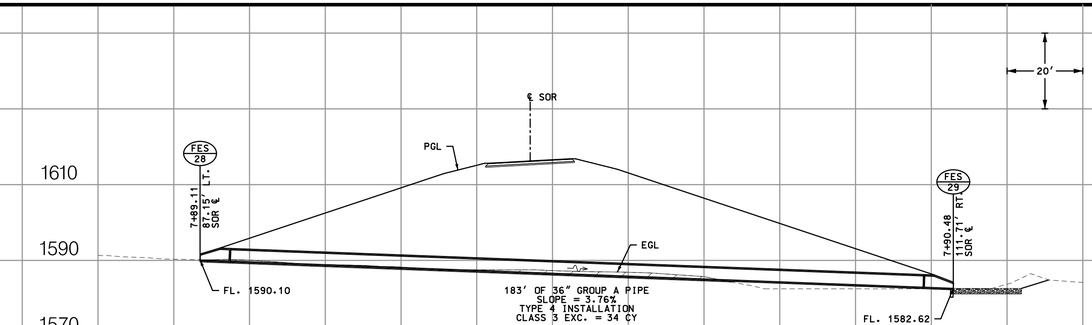

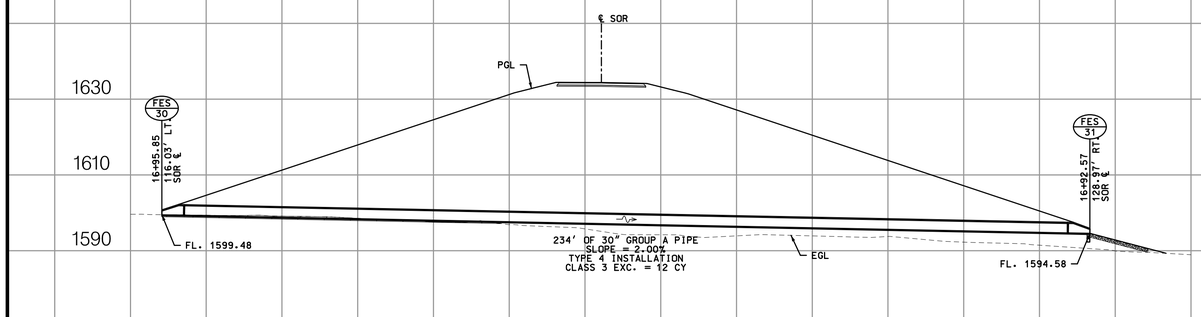

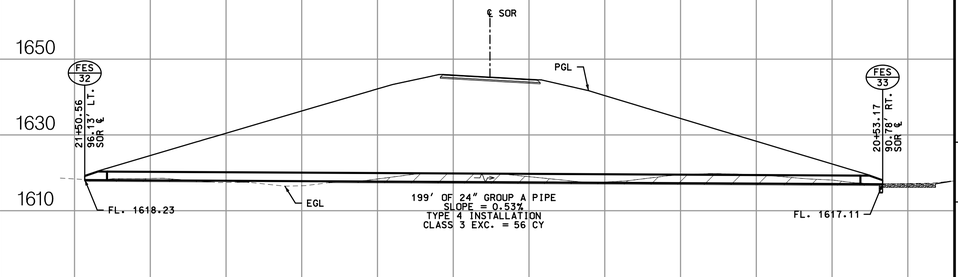

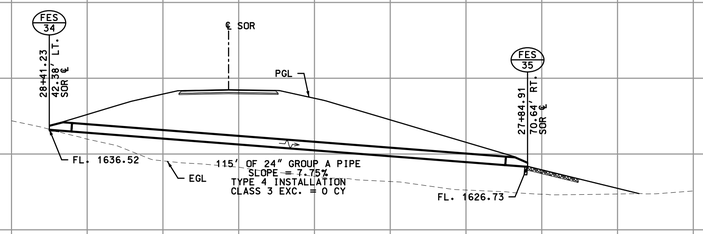

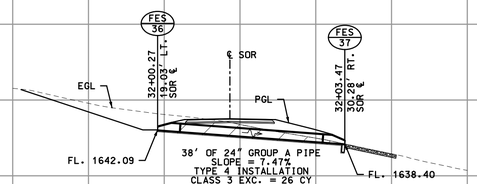

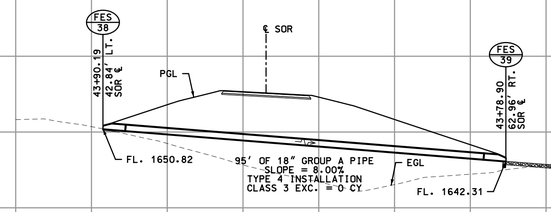

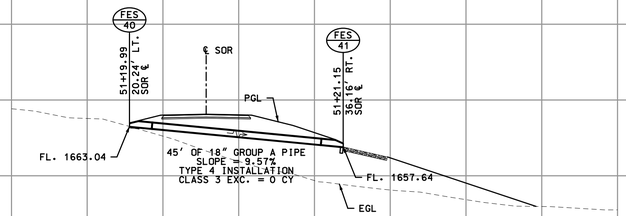

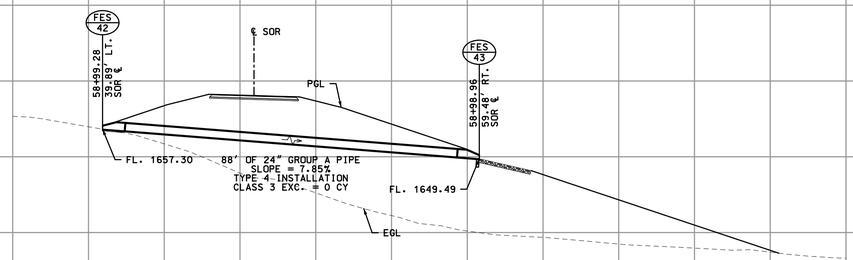

SOUTH OUTER ROAD

CULVERT SECTIONS
4 OF 7

STATE OF MISSOURI
DALLAS P. JOPLIN
NUMBER PE-2011015760
PROFESSIONAL ENGINEER

THIS SHEET HAS BEEN SIGNED, SEALED AND DATED ELECTRONICALLY.

DATE PREPARED	
8/2/2024	
ROUTE	STATE
60	MO
DISTRICT	SHEET NO.
SW	235

COUNTY: WEBSTER
JOB NO.: J7P3425C
CONTRACT ID.:
PROJECT NO.:
BRIDGE NO.:

NO.	DESCRIPTION	DATE

IF A SEAL IS PRESENT ON THIS SHEET IT HAS BEEN ELECTRONICALLY SEALED AND DATED.

MISSOURI HIGHWAYS AND TRANSPORTATION COMMISSION
105 WEST CAPITOL
JEFFERSON CITY, MO 65102
1-888-ASK-MODOT (1-888-275-6636)

CMT
© Copyright CMT, Inc.
CRAWFORD, MURPHY & TILLY, INC.
1631 WEST ELFINDALE STREET
SPRINGFIELD, MO 65807 (417) 869-6009
ENGINEERING CORPORATION - 000631

REV.

LEGEND:

EGL = EXISTING GROUND LINE

PGL = PROPOSED GROUND LINE

LIMITS OF CLASS 3 CULVERT EXCAVATION

LIMITS OF CLASS 3 INLET EXCAVATION

DISCLAIMER
THE PROFESSIONAL WHOSE SIGNATURE AND PERSONAL SEAL APPEAR HEREON ASSUMES RESPONSIBILITY ONLY FOR WHAT APPEARS ON THIS PAGE, AND DISCLAIMS (PURSUANT TO SECTION 327.411 RSMO) SPECIFICATION, ESTIMATES, REPORTS, OR OTHER DOCUMENTS OR INSTRUMENTS NOT SEALED BY THE UNDERSIGNED PROFESSIONAL RELATING TO OR INTENDED TO BE USED FOR ANY PART OR PARTS OF THE PROJECT TO WHICH THIS PAGE REFERS.

NOTES:

1. PROPOSED STATION, OFFSET AND RIM ELEVATION IS CALLED OUT AT THE CENTER OF STRUCTURES AND AT THE FLOW LINE OF FLARED END SECTIONS.
2. THE SEWER CONTRACTOR IS TO VERIFY ALL EXISTING PIPE SIZES AND INVERTS PRIOR TO CONSTRUCTION. DISCREPANCIES ARE TO BE REPORTED TO THE ENGINEER IN THE FIELD.
3. GRANULAR BACKFILL WILL BE PROVIDED PER MODOT STANDARD SPECIFICATIONS. THE COST OF GRANULAR BACKFILL WILL BE CONSIDERED INCIDENTAL TO THE UNIT BID PRICE FOR PIPES.
4. THE EXISTENCE AND APPROXIMATE LOCATION OF UTILITY FACILITIES KNOWN TO EXIST, AS SHOWN ON THE PLANS, ARE BASED ON THE BEST INFORMATION AVAILABLE TO THE COMMISSION AT THIS TIME. THIS INFORMATION IS PROVIDED BY THE COMMISSION "AS-IS" AND THE COMMISSION EXPRESSLY DISCLAIMS ANY REPRESENTATION OR WARRANTY AS TO THE COMPLETENESS, ACCURACY, OR SUITABILITY OF THE INFORMATION FOR ANY USE. RELIANCE UPON THIS INFORMATION IS DONE AT THE RISK AND PERIL OF THE USER, AND THE COMMISSION SHALL NOT BE LIABLE FOR ANY DAMAGES THAT MAY ARISE FROM ANY ERROR IN THE INFORMATION.
5. THE SEWER CONTRACTOR SHALL BE RESPONSIBLE FOR ANY COSTS ASSOCIATED WITH THE FIELD VERIFICATION OF THE SEWER GRADE, OR REMOVAL AND REPLACEMENT OF THE SEWER PIPE OR ASSOCIATED APPURTENANCES.
6. CONTRACTOR SHALL EXPOSE ALL UTILITIES PRIOR TO STORM SEWER PIPE INSTALLATION AND VERIFY TOP ELEVATION OF UTILITIES.
7. CONNECTOR TO EXISTING BOX CULVERT WILL BE CONSIDERED INCIDENTAL TO PIPE. NO SEPARATE PAYMENT WILL BE MADE.

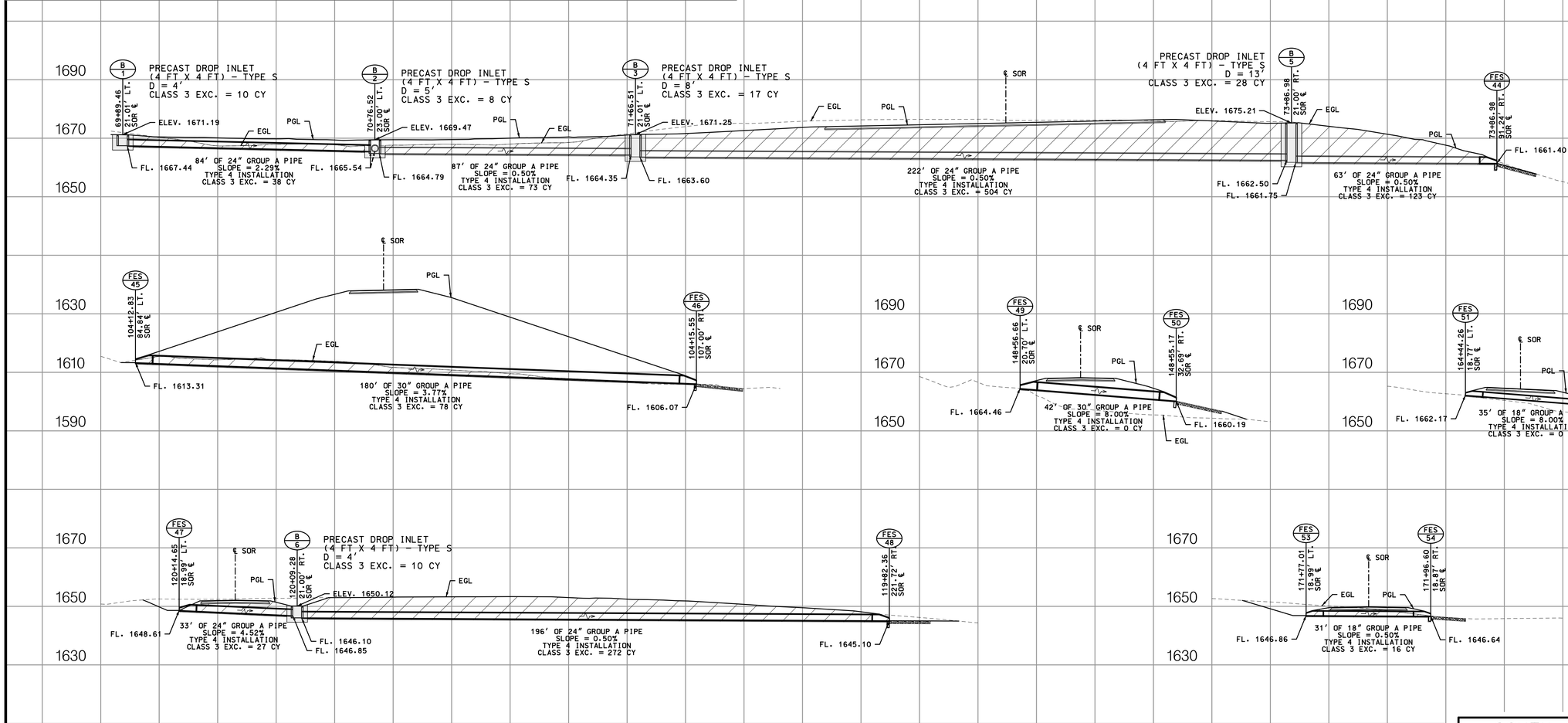

STATE OF MISSOURI
DALLAS P. JOPLIN
NUMBER PE-2011015760
PROFESSIONAL ENGINEER

THIS SHEET HAS BEEN SIGNED, SEALED AND DATED ELECTRONICALLY.

DATE PREPARED: 8/2/2024

ROUTE	STATE
60	MO
DISTRICT	SHEET NO.
SW	236

COUNTY: WEBSTER

JOB NO.: J7P3425C

CONTRACT ID.:

PROJECT NO.:

BRIDGE NO.:

DESCRIPTION	DATE

IF A SEAL IS PRESENT ON THIS SHEET IT HAS BEEN ELECTRONICALLY SEALED AND DATED.

MISSOURI HIGHWAYS AND TRANSPORTATION COMMISSION
105 WEST CAPITOL
JEFFERSON CITY, MO 65102
1-888-ASK-MODOT (1-888-275-6636)

CMT
©Copyright CMT, Inc.
CRAWFORD, MURPHY & TILLY, INC.
1631 WEST ELFINDALE STREET
SPRINGFIELD, MO 65807 (417) 869-6009
ENGINEERING CORPORATION - 000631

SOUTH OUTER ROAD
CULVERT SECTIONS
5 OF 7

REV.

LEGEND:

EGL = EXISTING GROUND LINE

PGL = PROPOSED GROUND LINE

LIMITS OF CLASS 3 CULVERT EXCAVATION

LIMITS OF CLASS 3 INLET EXCAVATION

DISCLAIMER
THE PROFESSIONAL WHOSE SIGNATURE AND PERSONAL SEAL APPEAR HEREON ASSUMES RESPONSIBILITY ONLY FOR WHAT APPEARS ON THIS PAGE, AND DISCLAIMS (PURSUANT TO SECTION 327.411 RSMO) SPECIFICATION, ESTIMATES, REPORTS, OR OTHER DOCUMENTS OR INSTRUMENTS NOT SEALED BY THE UNDERSIGNED PROFESSIONAL RELATING TO OR INTENDED TO BE USED FOR ANY PART OR PARTS OF THE PROJECT TO WHICH THIS PAGE REFERS.

NOTES:

1. PROPOSED STATION, OFFSET AND RIM ELEVATION IS CALLED OUT AT THE CENTER OF STRUCTURES AND AT THE FLOW LINE OF FLARED END SECTIONS.
2. THE SEWER CONTRACTOR IS TO VERIFY ALL EXISTING PIPE SIZES AND INVERTS PRIOR TO CONSTRUCTION. DISCREPANCIES ARE TO BE REPORTED TO THE ENGINEER IN THE FIELD.
3. GRANULAR BACKFILL WILL BE PROVIDED PER MODOT STANDARD SPECIFICATIONS. THE COST OF GRANULAR BACKFILL WILL BE CONSIDERED INCIDENTAL TO THE UNIT BID PRICE FOR PIPES.
4. THE EXISTENCE AND APPROXIMATE LOCATION OF UTILITY FACILITIES KNOWN TO EXIST, AS SHOWN ON THE PLANS, ARE BASED ON THE BEST INFORMATION AVAILABLE TO THE COMMISSION AT THIS TIME. THIS INFORMATION IS PROVIDED BY THE COMMISSION "AS-IS" AND THE COMMISSION EXPRESSLY DISCLAIMS ANY REPRESENTATION OR WARRANTY AS TO THE COMPLETENESS, ACCURACY, OR SUITABILITY OF THE INFORMATION FOR ANY USE. RELIANCE UPON THIS INFORMATION IS DONE AT THE RISK AND PERIL OF THE USER, AND THE COMMISSION SHALL NOT BE LIABLE FOR ANY DAMAGES THAT MAY ARISE FROM ANY ERROR IN THE INFORMATION.
5. THE SEWER CONTRACTOR SHALL BE RESPONSIBLE FOR ANY COSTS ASSOCIATED WITH THE FIELD VERIFICATION OF THE SEWER GRADE, OR REMOVAL AND REPLACEMENT OF THE SEWER PIPE OR ASSOCIATED APPURTENANCES.
6. CONTRACTOR SHALL EXPOSE ALL UTILITIES PRIOR TO STORM SEWER PIPE INSTALLATION AND VERIFY TOP ELEVATION OF UTILITIES.
7. CONNECTOR TO EXISTING BOX CULVERT WILL BE CONSIDERED INCIDENTAL TO PIPE. NO SEPARATE PAYMENT WILL BE MADE.

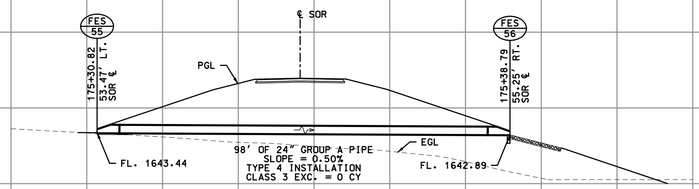

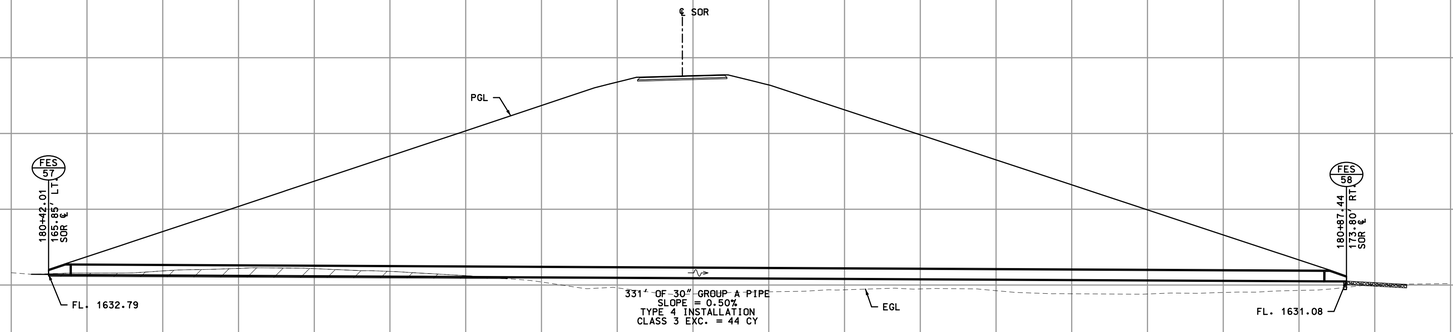

20'

SOUTH OUTER ROAD
CULVERT SECTIONS
6 OF 7

THIS SHEET HAS BEEN SIGNED, SEALED AND DATED ELECTRONICALLY.

DATE PREPARED: 8/2/2024

ROUTE	STATE
60	MO
DISTRICT	SHEET NO.
SW	237

COUNTY: WEBSTER
JOB NO.: J7P3425C
CONTRACT ID.:
PROJECT NO.:
BRIDGE NO.:

DESCRIPTION	DATE

IF A SEAL IS PRESENT ON THIS SHEET IT HAS BEEN ELECTRONICALLY SEALED AND DATED.

MISSOURI HIGHWAYS AND TRANSPORTATION COMMISSION
105 WEST CAPITOL
JEFFERSON CITY, MO 65102
1-888-ASK-MODOT (1-888-275-6636)

CMT
© Copyright CMT, Inc.
CRAWFORD, MURPHY & TILLY, INC.
1631 WEST ELFINDALE STREET
SPRINGFIELD, MO 65807 (417) 869-6009
ENGINEERING CORPORATION - 000631

REV.

SINGLE (4′ x 4′) CONCRETE BOX CULVERT

CONSTRUCTION JOINT KEY NOT SHOWN FOR CLARITY. SEE SHEET 3 OF 3 FOR DETAILS.

IF UNSUITABLE MATERIAL IS ENCOUNTERED, EXCAVATION OF UNSUITABLE MATERIAL AND FURNISHING AND PLACING OF GRANULAR BACKFILL SHALL BE IN ACCORDANCE WITH SEC 206.

IF ANY PART OF THE BARREL IS EXPOSED, THE ROADWAY FILL SHALL BE WARPED TO PROVIDE 12 INCHES MINIMUM COVER.

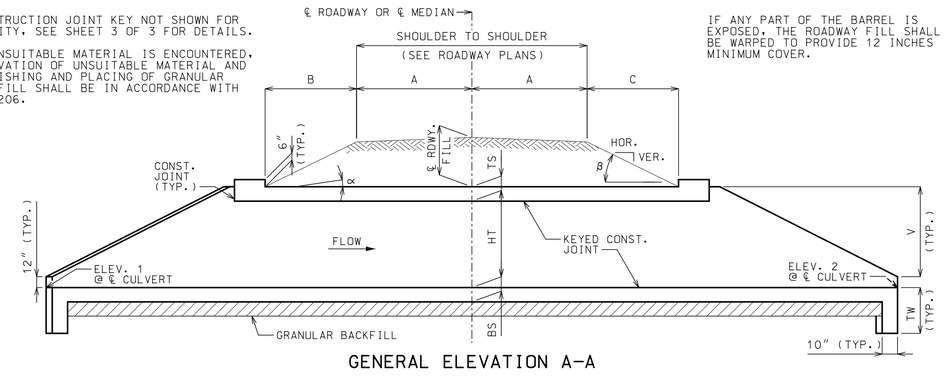

GENERAL ELEVATION A-A

CHANNEL BOTTOM SHALL BE GRADED WITHIN RIGHT OF WAY FOR TRANSITION OF CHANNEL BED TO CULVERT OPENINGS. CHANNEL BANKS SHALL BE TAPERED TO MATCH CULVERT OPENINGS.

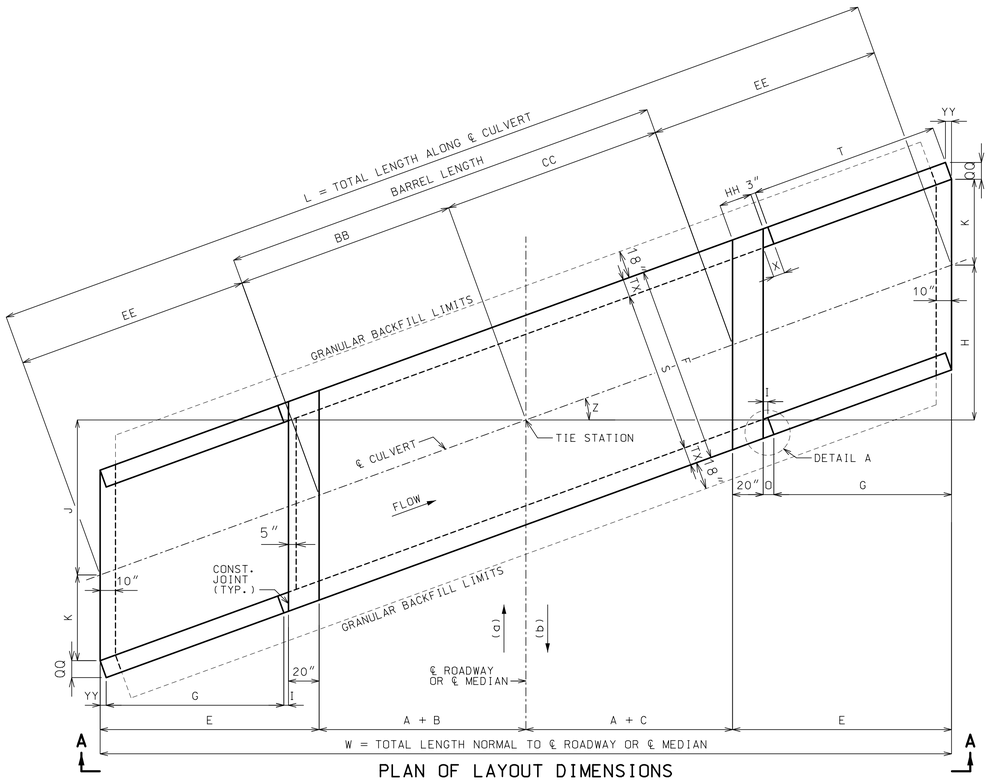

PLAN OF LAYOUT DIMENSIONS

(a) AHEAD STATION WHERE STREAM FLOWS LEFT TO RIGHT. (b) AHEAD STATION WHERE STREAM FLOWS RIGHT TO LEFT.

SEE STANDARD PLANS FOR SPACING OF REINFORCEMENT & ADDITIONAL DETAILS.

Layout Dimensions

Var.	Equation	Dim.	Var.	Equation	Dim.	Var.	Equation	Dim.
∝	- - -	1.1223°	S	- - -	4′-0″	EE	E(SEC Z)	9′-4″
β	- - -	18.2675°	K	S(SEC Z)/2	2′-0″	HH	20″(SEC Z)	1′-8″
A	- - -	19′-0″	L	2EE + BB + CC	174′-11″	QQ	TX(COS Z)	8″
B	- - -	58′-4″	O	I + YY	0′-3½″	YY	TX(SIN Z)	0½″
C	- - -	59′-8″	T	G(SEC Z)	7′-4″	TW	MAX{3′-4″ OR (BS + 12″)}	3′-4″
E	G + O + 20″	9′-3½″	V	HT + TS - 12″	3′-8″	HT	- - -	4′-0″
F	S + 2TX	5′-4″	W	2A + B + C + 2E	174′-7″	TS	SEE MEMBER THICKNESS TABLE	0′-8″
G	2V	7′-4″	X	3″ + TX(TAN Z)	0′-3½″	BS	SEE MEMBER THICKNESS TABLE	0′-8″
H	(A + C + E)(TAN Z)	5′-6″	Z	SKEW ANGLE	3.5544°	TX	SEE MEMBER THICKNESS TABLE	0′-8″
I	3″(COS Z)	0′-3″	BB	(A + B)(SEC Z)	77′-6″			
J	(A + B + E)(TAN Z)	5′-5″	CC	(A + C)(SEC Z)	78′-10″			

Hydrologic Data

Drainage Area = 108.8 Acres
Design Flood Frequency =505 years
Design Flood Discharge = 352 cfs
Design Flood (D.F.) Elevation = 1626.17
Base Flood (100-year)
Base Flood Elevation = 1630.22
Base Flood Discharge = 419.00 cfs
Estimated Backwater = 14.4 ft
Outlet Velocity = 19.02 ft/s
Roadway Overtopping
Overtopping Flood Discharge = N/A
Overtopping Flood Frequency = >500 years
>100 Flood Elevation = 1634.72

Elevations

Upstream (Elev. 1) = 1614.67
Downstream (Elev. 2) = 1611.25
Pr. Gr. at Tie Sta. = 1630.96

Fill Heights

℄ Rdwy at ℄ Culvert = 18.35 ft
Design (All units) = 20 ft

Dimensions are based on end units.
Fill heights are measured from the top of top slab to the top of earth fill or roadway.

Estimated Quantities

		TOTAL
Class 4 Excavation	cu. yard	190
Class B-1 Concrete (Culverts)	cu. yard	79
Reinforcing Steel (Culverts)	pound	10,842

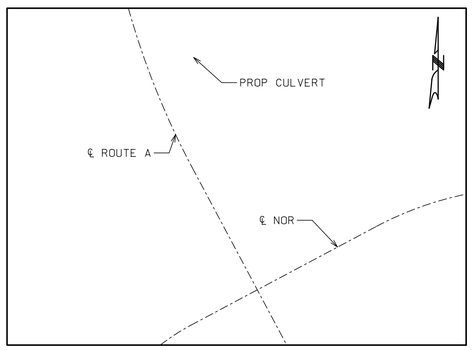

LOCATION SKETCH

GENERAL NOTES:

DESIGN SPECIFICATIONS:
2010 AASHTO LRFD BRIDGE DESIGN SPECFICATIONS AND 2010 INTERIM REVISIONS

DESIGN LOADING:
VEHICULAR = HL-93 MINUS LANE LOAD, EARTH = 120 LB/CF
EQUIVALENT FLUID PRESSURE = 30 LB/CF (MIN.), 60 LB/CF (MAX.)

DESIGN UNIT STRESSES:
CLASS B-1 CONCRETE (BOX CULVERT) f′c = 4,000 PSI
REINFORCING STEEL (GRADE 60) fy = 60,000 PSI

MISCELLANEOUS:
FOR REINFORCEMENT DETAILS, SEE SHEET 2 OF 3. FOR SECTION DETAILS, SEE SHEET 3 OF 3. FOR MEMBER THICKNESS, SEE 703.17.

DRAWING NOT TO SCALE. FOLLOW DIMENSIONS.

DIMENSIONS ARE IN INCHES UNLESS OTHERWISE NOTED.

WHEN ALTERNATE PRECAST CONCRETE BOX CULVERT SECTIONS ARE USED, THE MINIMUM DISTANCE FROM INSIDE FACE OF HEADWALLS TO PRECAST SECTIONS MEASURED ALONG THE SHORTEST WALL SHALL BE 3 FEET. REINFORCEMENT AND DIMENSIONS FOR WINGS AND HEADWALLS SHALL BE IN ACCORDANCE WITH MISSOURI STANDARD PLANS.

CULVERT-BRIDGE: ROUTE A
TIE STA. 56+55.07

STD. 703.14J

CULVERT SECTIONS
7 OF 7

STATE OF MISSOURI
DALLAS P. JOPLIN
NUMBER PE-2011015760
PROFESSIONAL ENGINEER

THIS SHEET HAS BEEN SIGNED, SEALED AND DATED ELECTRONICALLY.

DATE PREPARED 8/2/2024

ROUTE	STATE
60	MO
DISTRICT	SHEET NO.
SW	238

COUNTY: WEBSTER
JOB NO.: J7P3425C
CONTRACT ID.:
PROJECT NO.:
BRIDGE NO.:

IF A SEAL IS PRESENT ON THIS SHEET IT HAS BEEN ELECTRONICALLY SEALED AND DATED.

DESCRIPTION	DATE

MISSOURI HIGHWAYS AND TRANSPORTATION COMMISSION

105 WEST CAPITOL
JEFFERSON CITY, MO 65102
1-888-ASK-MODOT (1-888-275-6636)

CMT
©Copyright CMT, Inc.
CRAWFORD, MURPHY & TILLY, INC.
1631 WEST ELFINDALE STREET
SPRINGFIELD, MO 65807 (417) 869-6009
ENGINEERING CORPORATION - 000631

REV.

SEC./SUR. 25 TWP. 29N RGE. 18W

(76.7′-76.7′) PRESTRESSED CONCRETE NU-GIRDER SPANS

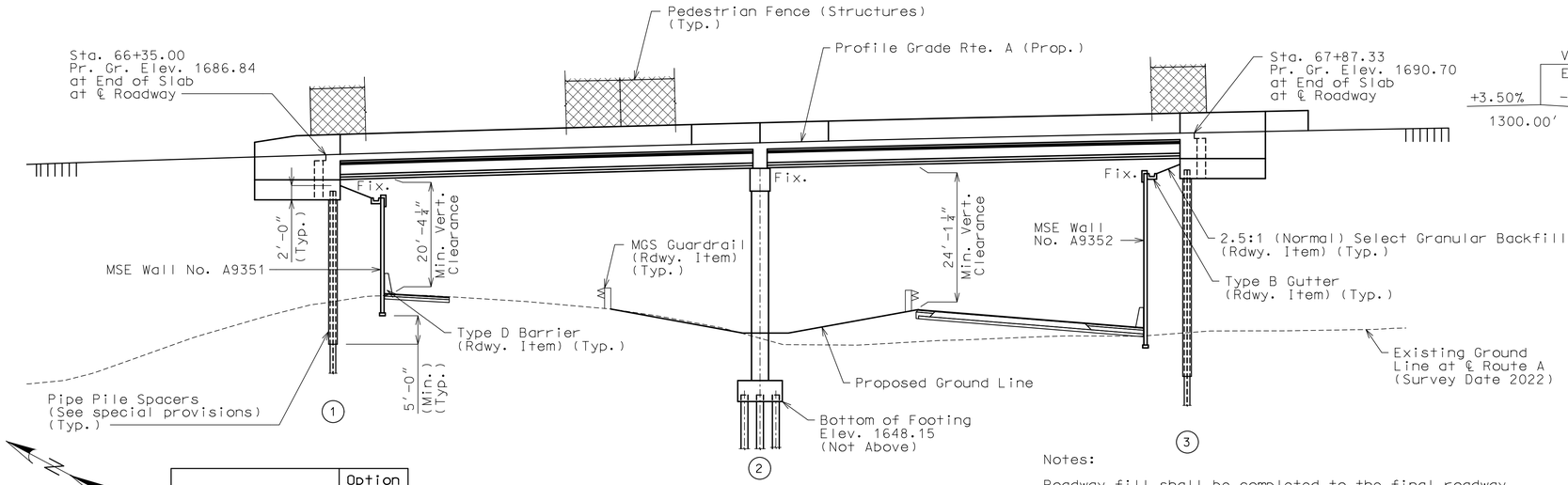

GENERAL ELEVATION

Pile Encasement	Option Used (√)
Pipe Pile Spacer	
Pile Jacket	

Notes:

Roadway fill shall be completed to the final roadway section and up to the elevation of the bottom of the concrete beam within the limits of the structure and for not less than 25 feet in back of the fill face of the end bents before any piles are driven for any bents falling within the embankment section.

Wall foundation improvements not shown. See wall and roadway plans.

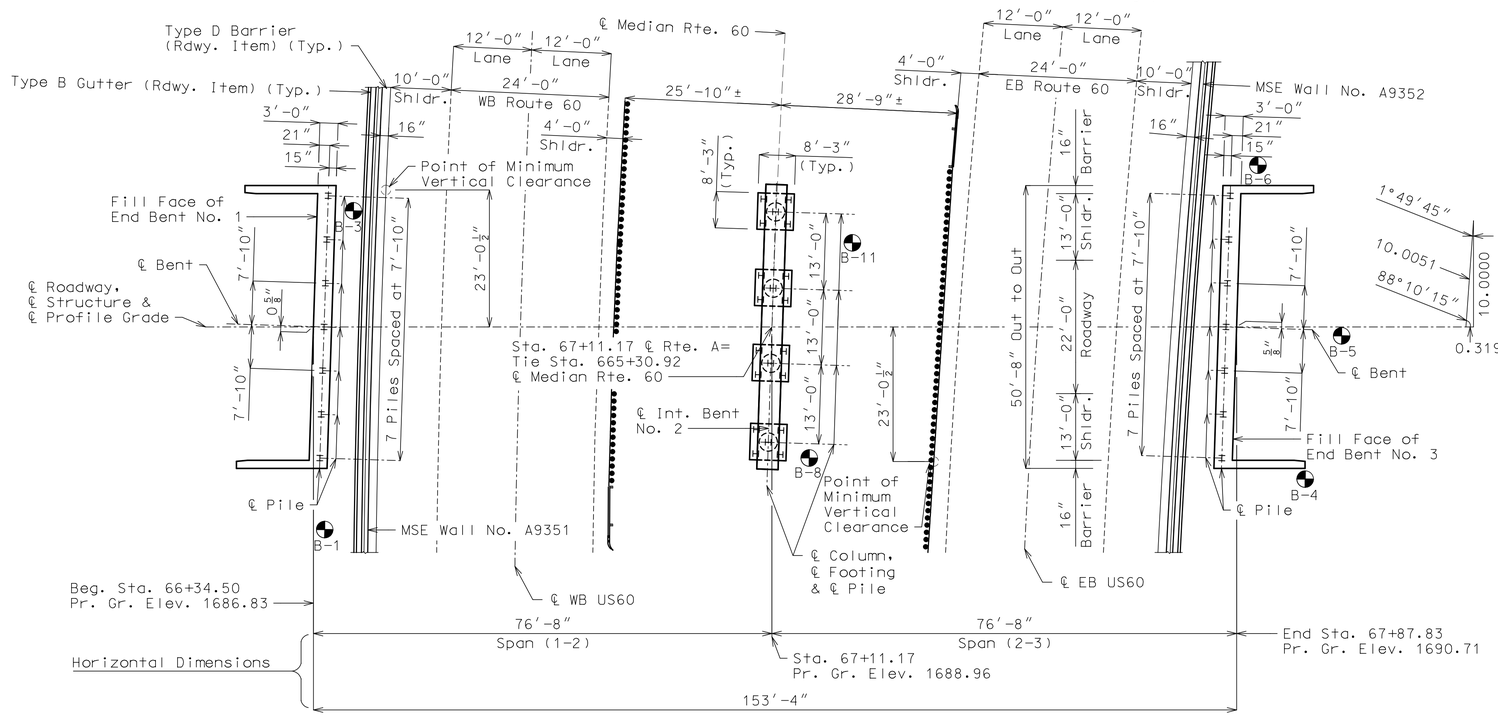

PLAN

General Notes:

Longitudinal dimensions are measured horizonal.

For General Notes, Estimated Quantities and Foundation Data, see Sheet No. 2.

All Bents are parallel.

◔ Indicates location of borings.

Notice and Disclaimer Regarding Boring Log Data

The locations of all subsurface borings for this structure are shown on the plan sheet(s) for this structure. The boring data for all locations indicated, as well as any other boring logs or other factual records of subsurface data and investigations performed by the department for the design of the project, are shown on Sheets No. 30 thru 38 and may be included in the Electronic Bridge Deliverables. They will also be available from the Project Contact upon written request. No greater significance or weight should be given to the boring data depicted on the plan sheets than is given to the subsurface data available from the district or elsewhere.

The Commission does not represent or warrant that any such boring data accurately depicts the conditions to be encountered in constructing this project. A contractor assumes all risks it may encounter in basing its bid prices, time or schedule of performance on the boring data depicted here or those available from the district, or on any other documentation not expressly warranted, which the contractor may obtain from the Commision.

CONTROL POINT #137
N: 487442.62
E: 1534480.61
EXIST. ROUTE 60
STA. 657+19.74,
78.57′ RT.
ELEV. 1664.25
5/8″ I.B. W/2″ ALUMINUM CAP

CONTROL POINT #138
N: 487996.55
E: 1536552.13
EXIST. ROUTE 60
STA. 680+25.11,
82.88′ RT.
ELEV. 1657.03
5/8″ I.B. W/2″ ALUMINUM CAP

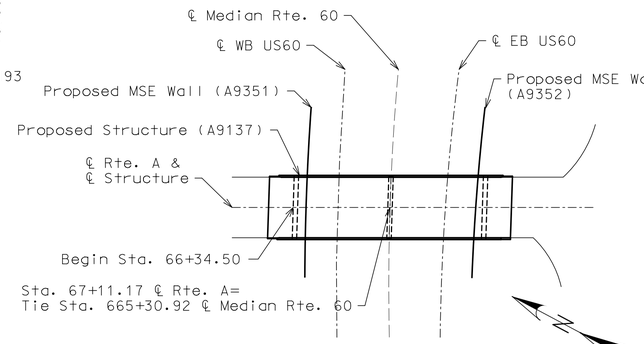

LOCATION SKETCH

BRIDGE: ROUTE A OVER ROUTE 60

ROUTE A OVER ROUTE 60
ABOUT 1.0 MILES WEST OF ROUTE O
TIE STATION 665+30.92

GENERAL PLAN AND ELEVATION

Designed May 2024
Detailed May 2024
Checked June 2024

Note: This drawing is not to scale. Follow dimensions.

STATE OF MISSOURI
JOSHUA D. JOLLIFF
NUMBER PE-2006002824
PROFESSIONAL ENGINEER
09/10/2024 1:17:23 PM
Joshua D. Jolliff
MO PE-2006002824

DATE PREPARED 9/10/2024

ROUTE	STATE
60	MO
DISTRICT	SHEET NO.
BR	1

COUNTY WEBSTER
JOB NO. J7P3425C
CONTRACT ID.
PROJECT NO.
BRIDGE NO. A9137

DESCRIPTION	DATE	REV.

IF A SEAL IS PRESENT ON THIS SHEET IT HAS BEEN ELECTRONICALLY SEALED AND DATED.

MISSOURI HIGHWAYS AND TRANSPORTATION COMMISSION
105 WEST CAPITOL
JEFFERSON CITY, MO 65102
1-888-ASK-MODOT (1-888-275-6636)

CMT
© Copyright CMT, Inc.
CRAWFORD, MURPHY & TILLY, INC.
1631 WEST ELFINDALE STREET
SPRINGFIELD, MO 65807 (417) 869-6009
ENGINEERING CORPORATION - 000631

L:\MoDOT\20092124-00\Draw\Structures\Sheets\Route A over 60\B_A9137_001_J7P3425C_General_Plan_and_Elevation.dgn 1:00:02 PM 9/10/2024

General Notes:

Design Specifications:
2020 AASHTO LRFD Bridge Design Specifications (9th Ed.)
Seismic Design Category = A

Design Loading:
Vehicular = HL-93
Future Wearing Surface = 35 lb/sf
Earth = 120 lb/cf
Equivalent Fluid Pressure = 45 lb/cf (Min.)
Superstructure: Simply-Supported, Non-composite for dead load.
Continuous Composite for live load.

Design Unit Stresses:

Class B Concrete (Substructure)	f'c = 3,000 psi
Class B-2 Concrete (Superstructure, except Prestressed NU-Girders and Barrier)	f'c = 4,000 psi
Class B-1 Concrete (Barrier)	f'c = 4,000 psi
Reinforcing Steel (Grade 60)	fy = 60,000 psi
Structural Steel HP Pile (ASTM A709 Grade 50S)	fy = 50,000 psi

For prestressed NU-Girder stresses, see Sheets No. 12 & 13.

Neoprene Pads:

Neoprene bearing pads shall be 60 durometer and shall be in accordance with Sec 716.

Joint Filler:

All joint filler shall be in accordance with Sec 1057 for preformed sponge rubber expansion and partition joint filler, except as noted.

Reinforcing Steel:

Minimum clearance to reinforcing steel shall be 1 1/2", unless otherwise shown.

Minimum clearance between galvanized piles and uncoated (plain) reinforcing steel including bar supports shall be 1 1/2". Nylon, PVC, or polyethylene spacers shall be used to maintain clearance. Nylon cable ties shall be used to bind the spacers to the reinforcement.

Traffic Handling:

Structure to be closed during construction. Traffic to be maintained on other routes during construction. See roadway plans for traffic control.

Vertical clearance for Route 60 traffic during construction shall be 15'-6" minimum over a 24'-0" wide horizontal opening of the roadway in each direction.

Miscellaneous:

MoDOT Construction personnel will indicate the type of joint filler option used under the precast panels for this structure:

☐ Constant Joint Filler
☐ Variable Joint Filler

Estimated Quantities for Slab on Concrete NU-Girder (with Transparent Forms)

Item		Total
Class B-2 Concrete	cu. yard	275.8
Reinforcing Steel (Epoxy Coated)	pound	82,680

Notes:

The table of Estimated Quantities for Slab on Concrete NU-Girder (with Transparent Forms) represents the quantities used by the State in preparing the cost estimate for concrete slabs. The area of the concrete slab will be measured to the nearest square yard longitudinally from end of slab to end of slab and transversely from out to out of bridge slab (or with the horizontal dimensions as shown on the plan of slab). Payment for transparent forms, conventional forms, all concrete and epoxy coated reinforcing steel will be considered completely covered by the contract unit price for the slab. Variations may be encountered in the estimated quantities but the variations cannot be used for an adjustment in the contract unit price.

Method of forming the slab shall be as shown on the plans and in accordance with Sec 703. All hardware for forming the slab to be left in place as a permanent part of the structure shall be coated in accordance with the Transparent Form manufacturer requirements.

Slab shall be cast-in-place with transparent forms between girders. Precast Prestressed panels will not be permitted.

See Special Provisions for transparent form requirements.

For Transparent Form Details, see Sheet No. 18.

Maximum actual weight of transparent forms allowed shall be 5 psf assumed for girder loading.

Estimated Quantities

Item		Substr.	Superstr.	Total
Class 1 Excavation	cu. yard	130		130
Bridge Approach Slab (Minor)	sq. yard		217	217
Pedestrian Fence (Structures)	linear foot		324	324
Galvanized Structural Steel Piles (12 in.)	linear foot	1,850		1,850
Pre-Bore For Piling	linear foot	1,417		1,417
Pile Point Reinforcement	each	34		34
Class B Concrete (Substructure)	cu. yard	154.1		154.1
Type D Barrier	linear foot		363	363
Slab on Concrete NU-Girder (with Transparent Forms)	sq. yard		858	858
NU 35, Prestressed Concrete NU-Girder	linear foot		751	751
Reinforcing Steel (Bridges)	pound	17,300		17,300
Conduit System on Structure	lump sum		1	1
Vertical Drain at End Bents	each	2		2
Laminated Neoprene Bearing Pad (Tapered)	each		20	20
Pipe Pile Spacers	each	14		14

All concrete above the construction joint in the end bents is included in the Estimated Quantities for Slab on Concrete NU-Girder (with Transparent Forms).

All reinforcement in the end bents is included in the Estimated Quantities for Slab on Concrete NU-Girder (with Transparent Forms).

All reinforcement in the intermediate bent concrete diaphragms except reinforcement embedded in the beam cap is included in the Estimated Quantities for Slab on Concrete NU-Girder (with Transparent Forms).

All concrete above the intermediate beam cap is included in the Estimated Quantities for Slab on Concrete NU-Girder (with Transparent Forms).

Foundation Data

Type	Design Data		Bent Number 1	2	3
Load Bearing Pile	Pile Type and Size		HP 12x53	HP 12x53	HP 12x53
	Number	ea	7	20	7
	Approximate Length Per Each	ft	78	40	72
	Pile Point Reinforcement	ea	All	All	All
	Min. Galvanized Penetration (Elev.)	ft	1645	Full Length	1640
	Pile Driving Verification Method		✳	✳	✳
	Resistance Factor		✳	✳	✳
	Minimum Nominal Axial Compressive Resistance	kip	574	681	574

Load Bearing Pile:
Minimum Nominal Axial Compressive Resistance = $\frac{\text{Maximum Factored Loads}}{\text{Structural Resistance Factor (0.35)}}$

All piles shall be galvanized down to the minimum galvanized penetration (elevation).

Pile point reinforcement need not be galvanized. Shop drawings will not be required for pile point reinforcement.

The contractor shall make every effort to achieve the minimum galvanized penetration (elevation) shown on the plans for all piles. Deviations in penetration less than 5 feet of the minimum will be considered acceptable provided the contractor makes the necessary corrections to ensure the minimum penetration is achieved on subsequent piles.

✳ Prebore piles at all Bents to bear on competent rock.

The prebore hole shall be cleared to meet the requirements of Sec 701.4.10.2.The piles shall be inserted into the prebore holes and are to be seated on bedrock and not rubble in the bottom of the hole. Once the piles are seated, the minimum nominal compressive resistance shall be considered verified. Verification of the pile driving is not required. Backfill the prebore hole with sand or other approved material.

ESTIMATED QUANTITIES AND GENERAL NOTES

Detailed May 2024
Checked June 2024

Note: This drawing is not to scale. Follow dimensions.

STATE OF MISSOURI
JOSHUA D. JOLLIFF
NUMBER PE-2006002824
PROFESSIONAL ENGINEER
09/10/2024 1:17:56 PM
Joshua D. Jolliff
MO PE-2006002824

DATE PREPARED: 9/10/2024
ROUTE: 60 | STATE: MO
DISTRICT: BR | SHEET NO.: 2
COUNTY: WEBSTER
JOB NO.: J7P3425C
CONTRACT ID.:
PROJECT NO.:
BRIDGE NO.: A9137

DESCRIPTION | DATE | REV.

MISSOURI HIGHWAYS AND TRANSPORTATION COMMISSION
105 WEST CAPITOL
JEFFERSON CITY, MO 65102
1-888-ASK-MODOT (1-888-275-6636)

CMT
© Copyright CMT, Inc.
CRAWFORD, MURPHY & TILLY, INC.
1631 WEST ELFINDALE STREET
SPRINGFIELD, MO 65807 (417) 869-6009
ENGINEERING CORPORATION - 000631

IF A SEAL IS PRESENT ON THIS SHEET IT HAS BEEN ELECTRONICALLY SEALED AND DATED.

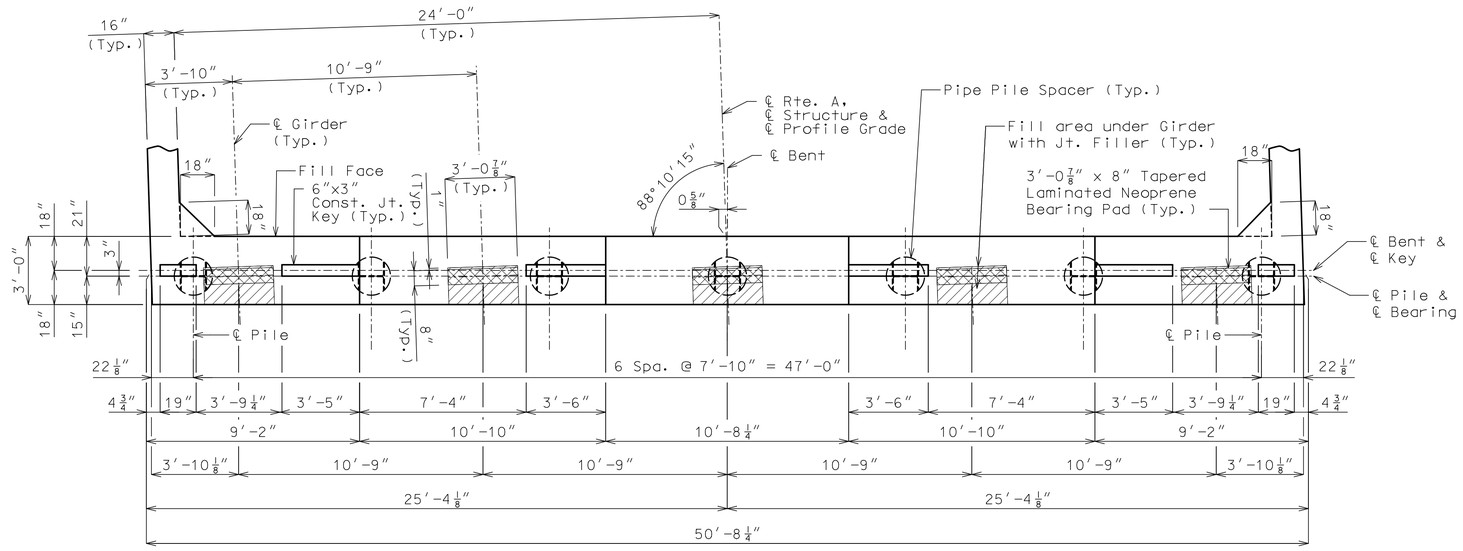

PLAN OF BEAM SHOWING DIMENSIONS

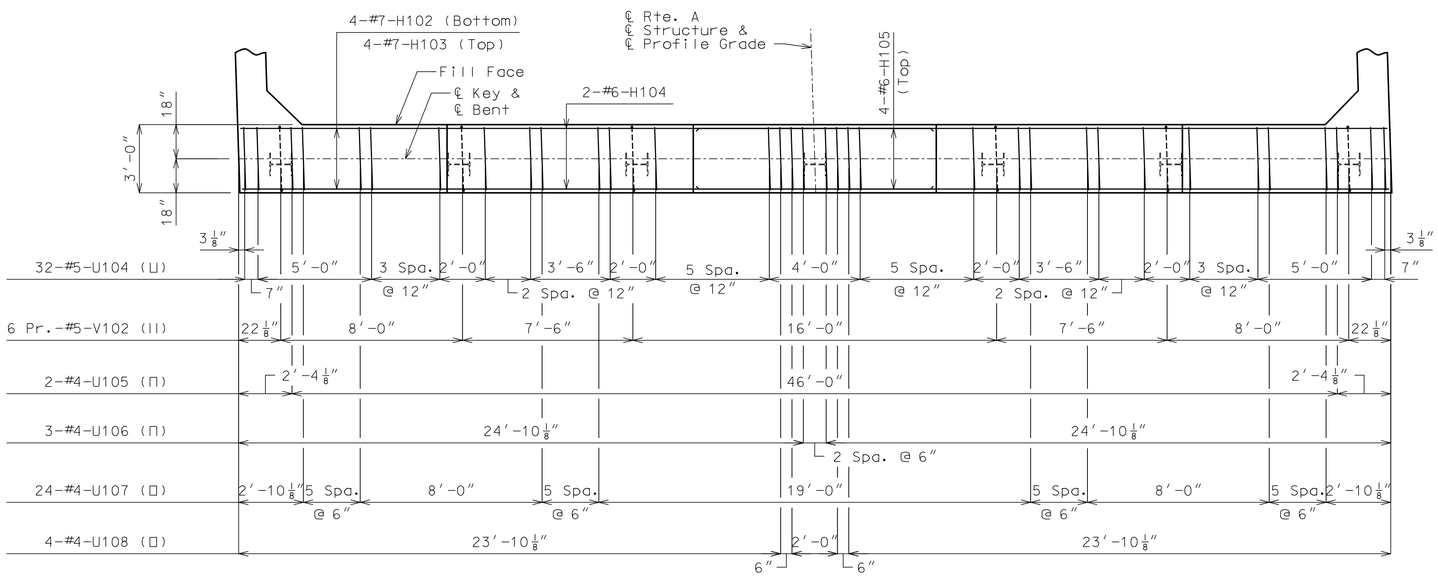

PLAN OF BEAM SHOWING REINFORCEMENT
(Keys not shown for clarity)

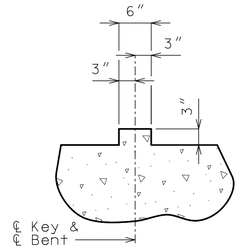

TYPICAL SECTION THRU KEY

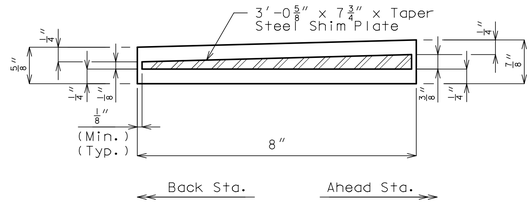

DETAIL OF LAMINATED NEOPRENE BEARING PADS (TAPERED) AT END BENT NO. 1

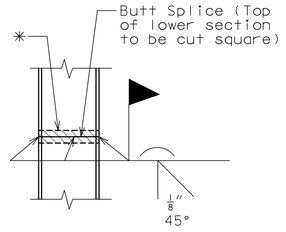

STEEL PILE SPLICE
(If required)

✳ Galvanizing material shall be omitted or removed one inch clear of weld locations in accordance with Sec 702.

General Notes:

For details of End Bent No. 1 not shown, see Sheets No. 4 & 5.

The U bars and pairs of V bars shall be placed parallel to centerline of roadway.

Reinforcing steel shall be shifted to clear piles, U bars shall clear piles by at least 1 1/2".

DETAILS OF END BENT NO. 1

Detailed May 2024
Checked June 2024

Note: This drawing is not to scale. Follow dimensions.

STATE OF MISSOURI
JOSHUA D. JOLLIFF
NUMBER PE-2006002824
PROFESSIONAL ENGINEER
09/10/2024 1:18:06 PM
Joshua D. Jolliff
MO PE-2006002824

DATE PREPARED: 9/10/2024
ROUTE: 60 | STATE: MO
DISTRICT: BR | SHEET NO.: 3
COUNTY: WEBSTER
JOB NO.: J7P3425C
CONTRACT ID.:
PROJECT NO.:
BRIDGE NO.: A9137

IF A SEAL IS PRESENT ON THIS SHEET IT HAS BEEN ELECTRONICALLY SEALED AND DATED.

DESCRIPTION	DATE	REV.

MISSOURI HIGHWAYS AND TRANSPORTATION COMMISSION
105 WEST CAPITOL
JEFFERSON CITY, MO 65102
1-888-ASK-MODOT (1-888-275-6636)

CMT
©Copyright CMT, Inc.
CRAWFORD, MURPHY & TILLY, INC.
1631 WEST ELFINDALE STREET
SPRINGFIELD, MO 65807 (417) 869-6009
ENGINEERING CORPORATION - 000631

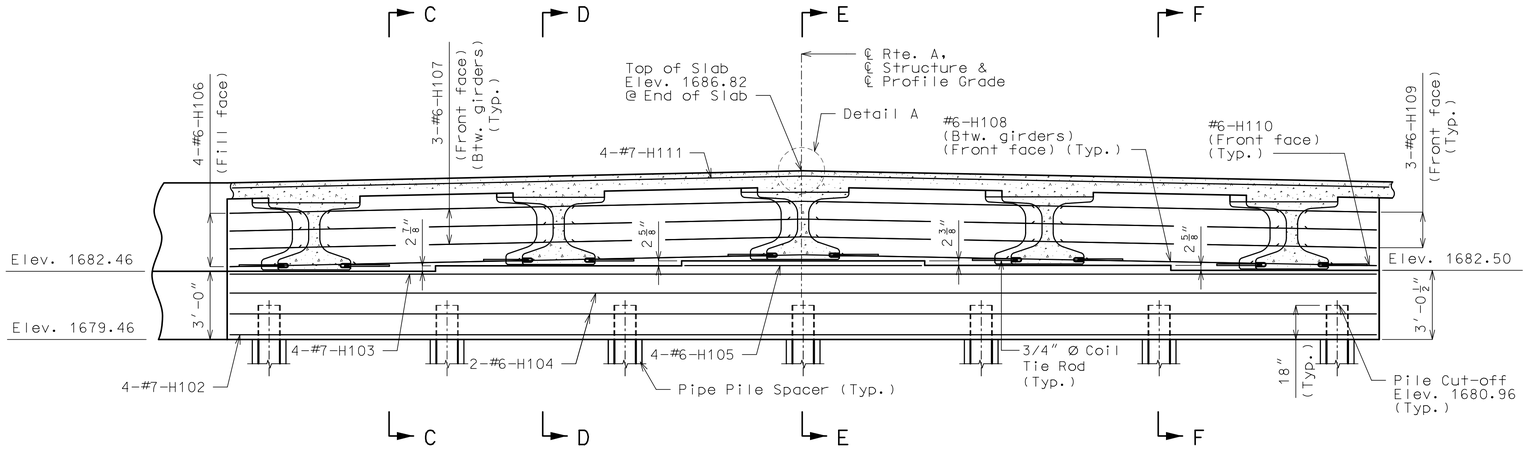

SECTION NEAR END BENT

Keys not shown for clarity.

✳ Centered behind girders

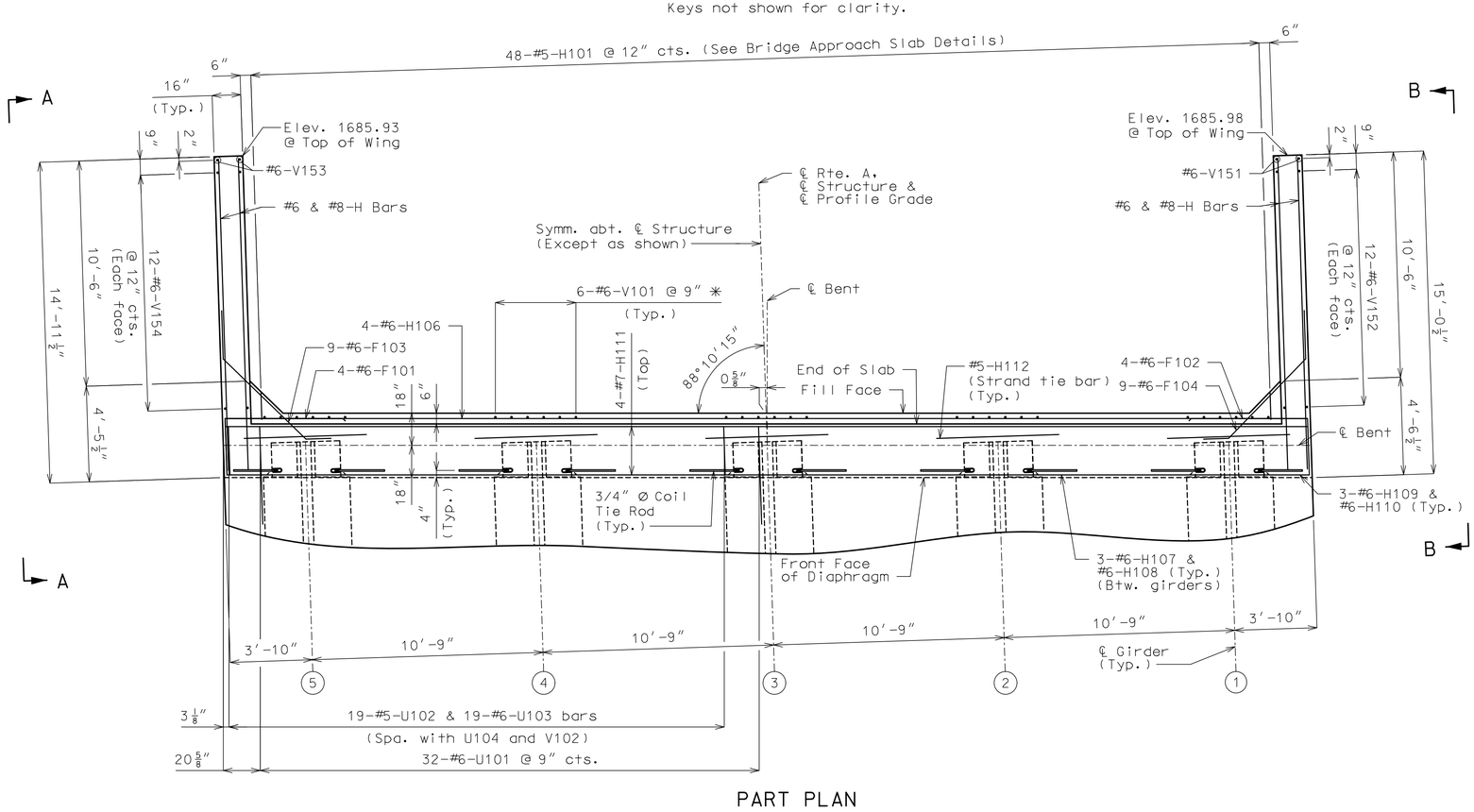

PART PLAN

General Notes:

For details of End Bent No. 1 not shown, see Sheets No. 3 & 5.

For Sections C-C, D-D, E-E, & F-F, see Sheet No. 5.

For Elevations A-A & B-B, see Sheet No. 5.

All concrete in the end bent above top of beam and below top of slab shall be Class B-2.

For location of Coil Tie Rods and #5-H112 (Strand Tie Bar), see Sheets No. 12 & 13.

For details of Vertical Drain at End Bents, see Sheet No. 6.

The #6-F103 and #6-F104 bars shall be bent in the field to clear girders.

The U bars and pairs of V bars shall be placed parallel to centerline of roadway.

Strands at end of girders shall be field bent or, if necessary, cut in field to maintain 1 1/2-inch minimum clearance to fill face of end bent.

For details of Bridge Approach Slab, see Sheet No. 25.

Substructure Quantity Table for Bent No. 1

Item		Quantity
Galvanized Structural Steel Piles (12 in.)	linear foot	546
Pre-Bore For Piling	linear foot	371
Pile Point Reinforcement	each	7
Class B Concrete (Substructure)	cu. yard	22.0
Pipe Pile Spacers	each	7

Note: These quantities are included in the estimated quantities table on Sheet No. 2.

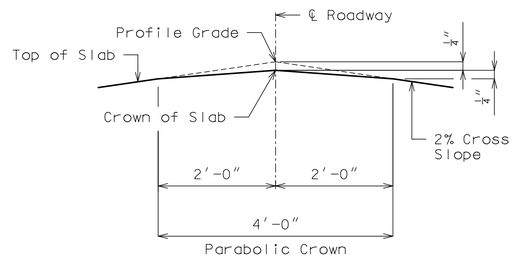

DETAIL A

STATE OF MISSOURI
JOSHUA D. JOLLIFF
NUMBER PE-2006002824
PROFESSIONAL ENGINEER
09/10/2024 1:18:10 PM
Joshua D. Jolliff
MO PE-2006002824

DATE PREPARED
9/10/2024

ROUTE	STATE
60	MO
DISTRICT	SHEET NO.
BR	4

COUNTY
WEBSTER

JOB NO.
J7P3425C

CONTRACT ID.

PROJECT NO.

BRIDGE NO.
A9137

DESCRIPTION	DATE

IF A SEAL IS PRESENT ON THIS SHEET IT HAS BEEN ELECTRONICALLY SEALED AND DATED.

MISSOURI HIGHWAYS AND TRANSPORTATION COMMISSION
105 WEST CAPITOL
JEFFERSON CITY, MO 65102
1-888-ASK-MODOT (1-888-275-6636)

CMT
©Copyright CMT, Inc.
CRAWFORD, MURPHY & TILLY, INC.
1631 WEST ELFINDALE STREET
SPRINGFIELD, MO 65807 (417) 869-6009
ENGINEERING CORPORATION - 000631

REV.

DETAILS OF END BENT NO. 1

Detailed May 2024
Checked June 2024

Note: This drawing is not to scale. Follow dimensions.

L:\MoDOT\20092124-00\Draw\Structures\Sheets\Route A over 60\B_A9137_004_J7P3425C_End_Bent_1_Details.dgn 1:00:04 PM 9/10/2024

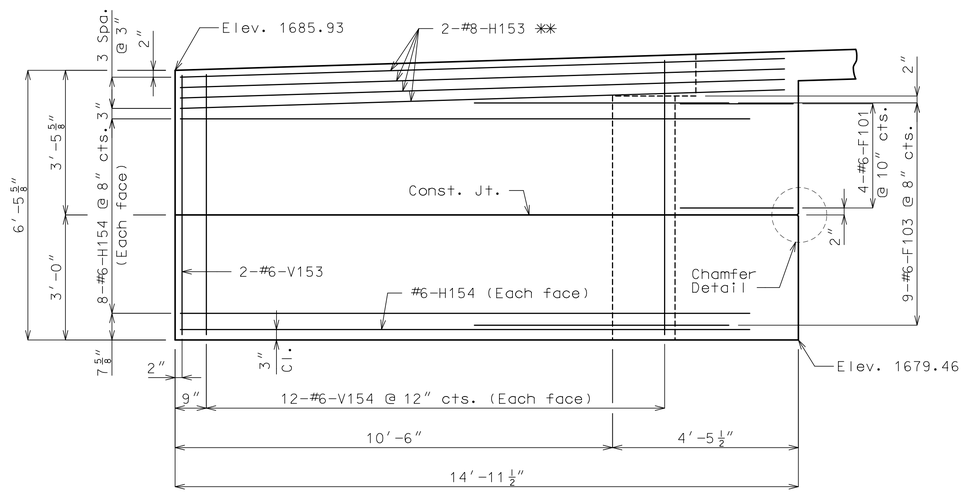

** (Place with grade)

ELEVATION A-A

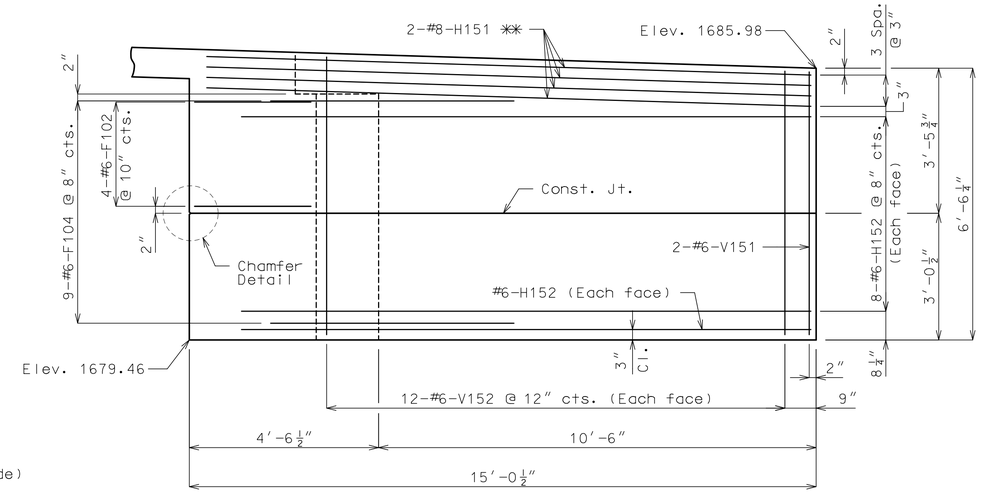

ELEVATION B-B

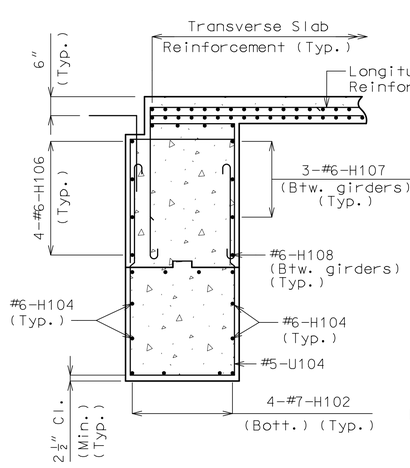

SECTION C-C

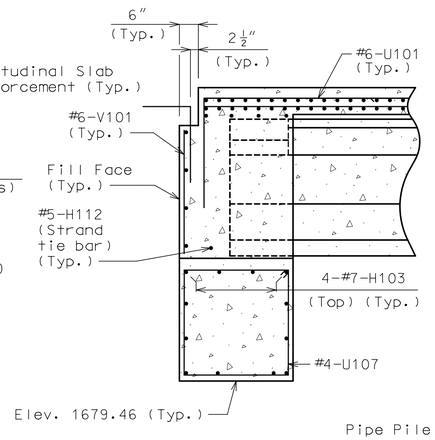

SECTION D-D

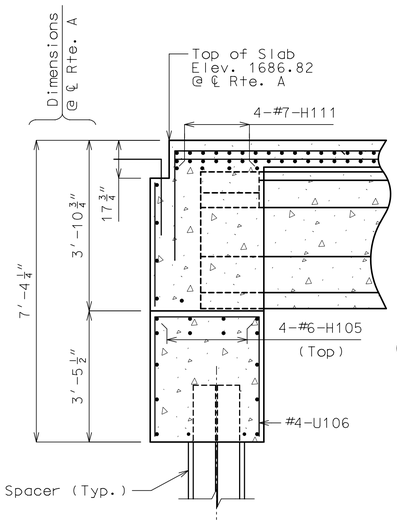

SECTION E-E

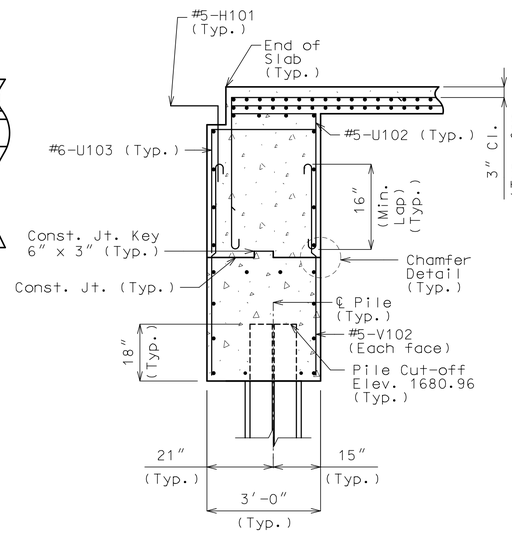

SECTION F-F

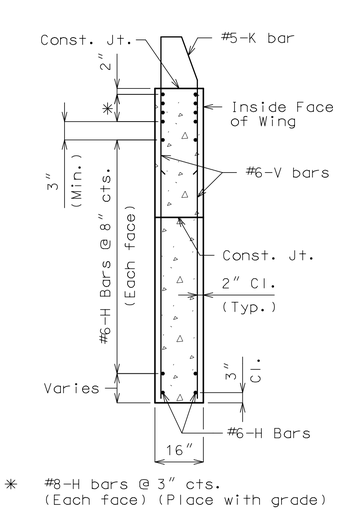

* #8-H bars @ 3″ cts. (Each face) (Place with grade)

TYPICAL SECTION THRU WING

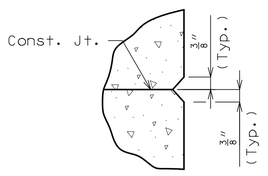

CHAMFER DETAIL

General Notes:

For details of End Bent No. 1 not shown, see Sheets No. 3 & 4.

For details and reinforcement of the Type D Barrier, see Sheets No. 21 and 22.

For location of Sections C-C, D-D, E-E, & F-F, see Sheet No. 4.

For location of Elevations A-A & B-B, see Sheet No. 4.

For Conduit Details, see Sheet No. 23.

DETAILS OF END BENT NO. 1

Detailed May 2024
Checked June 2024

Note: This drawing is not to scale. Follow dimensions.

STATE OF MISSOURI
JOSHUA D. JOLLIFF
NUMBER PE-2006002824
PROFESSIONAL ENGINEER
09/10/2024 1:18:15 PM
Joshua D. Jolliff
MO PE-2006002824

DATE PREPARED 9/10/2024

ROUTE	STATE
60	MO
DISTRICT	SHEET NO.
BR	5

COUNTY WEBSTER

JOB NO. J7P3425C

CONTRACT ID.

PROJECT NO.

BRIDGE NO. A9137

DESCRIPTION	DATE

MISSOURI HIGHWAYS AND TRANSPORTATION COMMISSION
105 WEST CAPITOL
JEFFERSON CITY, MO 65102
1-888-ASK-MODOT (1-888-275-6636)

CMT
CRAWFORD, MURPHY & TILLY, INC.
1631 WEST ELFINDALE STREET
SPRINGFIELD, MO 65807 (417) 869-6009
ENGINEERING CORPORATION - 000631

©Copyright CMT, Inc.

REV.

IF A SEAL IS PRESENT ON THIS SHEET IT HAS BEEN ELECTRONICALLY SEALED AND DATED.

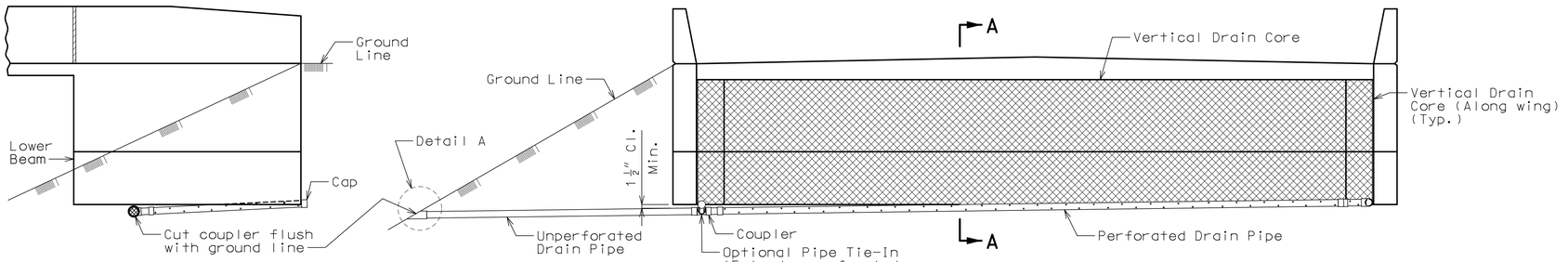

ELEVATION OF WING

ELEVATION OF END BENT

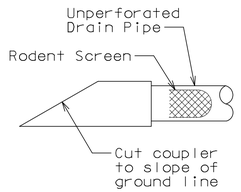

DETAIL A

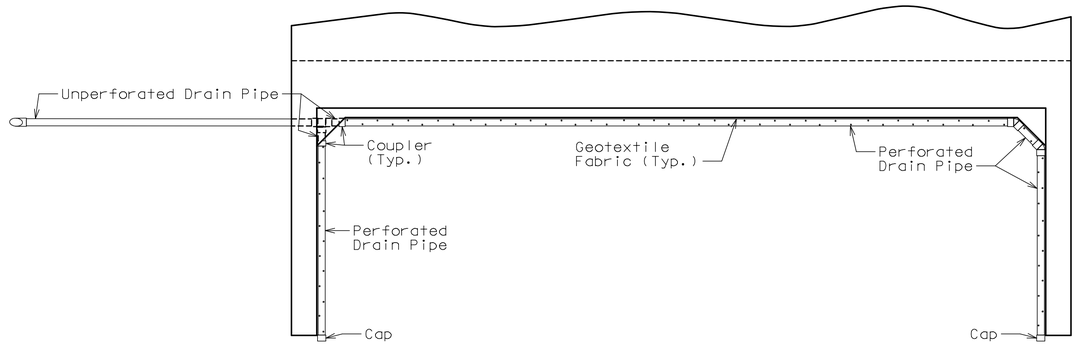

PLAN OF END BENT

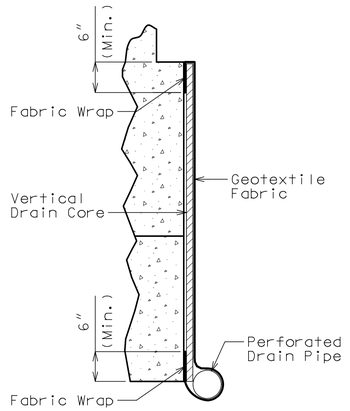

PART SECTION A-A
(Section thru wing similar)

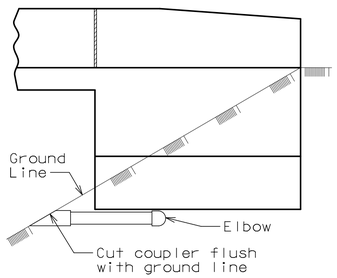

ELEVATION OF WING

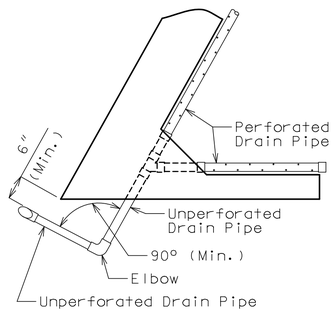

PART PLAN

OPTIONAL TURNED DRAIN

(Use only when straight drain is not practical.)

Note: Tie Unperforated Drain Pipe into Type B Gutter located behind the MSE walls A9351 and A9352.

General Notes:

All drain pipe shall be sloped 1 to 2 percent.

Drain pipe may be either 6-inch diameter corrugated metallic-coated steel pipe underdrain, 4-inch diameter corrugated polyvinyl chloride (PVC) drain pipe, or 4-inch diameter corrugated polyethylene (PE) drain pipe.

Drain pipe shall be placed at fill face of end bent and inside face of wings. The pipe shall slope to lowest grade of ground line, also missing the lower beam of end bent by a minimum of 1 1/2 inches.

Perforated pipe shall be placed at fill face side and inside face of wings at the bottom of end bent and plain pipe shall be used where the vertical drain ends to the exit at ground line.

VERTICAL DRAIN AT END BENTS

(Squared end bent shown, skewed end bent similar)

Detailed May 2024
Checked June 2024

Note: This drawing is not to scale. Follow dimensions.

STATE OF MISSOURI
JOSHUA D. JOLLIFF
NUMBER PE-2006002824
PROFESSIONAL ENGINEER

09/10/2024 1:18:19 PM
Joshua D. Jolliff
MO PE-2006002824

DATE PREPARED
9/10/2024

ROUTE	STATE
60	MO
DISTRICT	SHEET NO.
BR	6

COUNTY
WEBSTER

JOB NO.
J7P3425C

CONTRACT ID.

PROJECT NO.

BRIDGE NO.
A9137

DESCRIPTION	DATE

IF A SEAL IS PRESENT ON THIS SHEET IT HAS BEEN ELECTRONICALLY SEALED AND DATED.

MISSOURI HIGHWAYS AND TRANSPORTATION COMMISSION
105 WEST CAPITOL
JEFFERSON CITY, MO 65102
1-888-ASK-MODOT (1-888-275-6636)

© Copyright CMT, Inc.

CMT
CRAWFORD, MURPHY & TILLY, INC.
1631 WEST ELFINDALE STREET
SPRINGFIELD, MO 65807 (417) 869-6009
ENGINEERING CORPORATION - 000631

REV.

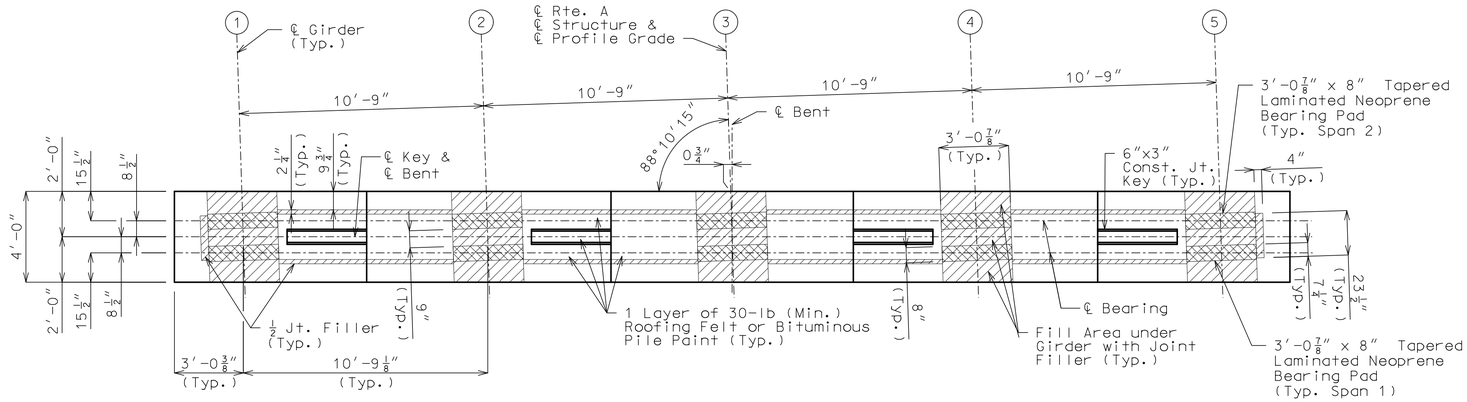

PLAN OF BEAM SHOWING BEARINGS

Note: Footings not shown for clarity.

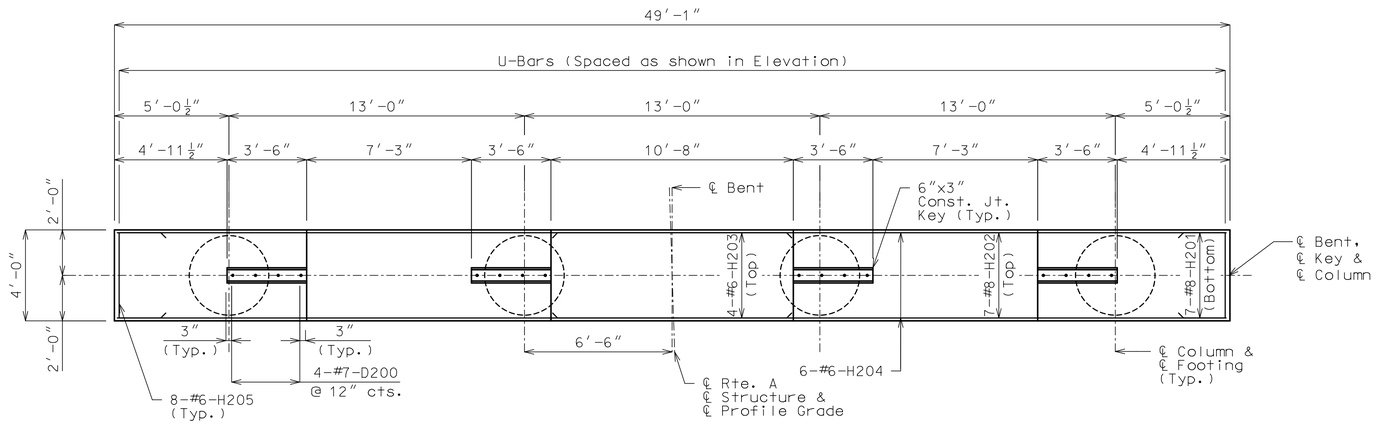

PLAN OF BEAM SHOWING REINFORCEMENT

Note: Footings not shown for clarity.

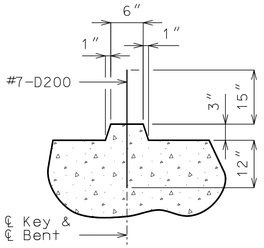

SECTION THRU KEY

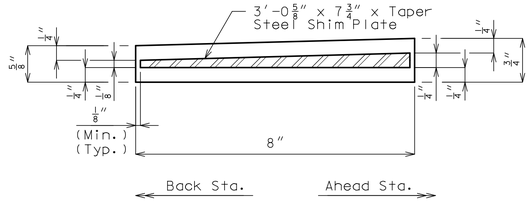

DETAIL OF LAMINATED NEOPRENE BEARING PADS (TAPERED) AT INT. BENT NO. 2 (SPAN 1)

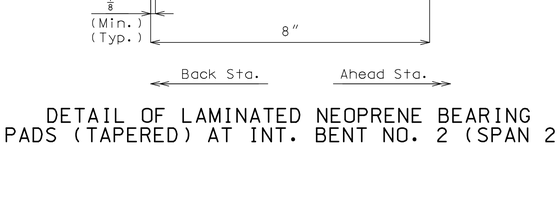

DETAIL OF LAMINATED NEOPRENE BEARING PADS (TAPERED) AT INT. BENT NO. 2 (SPAN 2)

Substructure Quantity Table for Bent No. 2		
Item		Quantity
Class 1 Excavation	cu. yard	130
Galvanized Structural Steel Piles (12 in.)	linear foot	800
Pre-Bore For Piling	linear foot	780
Pile Point Reinforcement	each	20
Class B Concrete (Substructure)	cu. yard	110.2
Reinforcing Steel (Bridges)	pounds	17,300

Note:

These quantities are included in the estimated quantities table on Sheet No. 2.

General Notes:

For Details of Intermediate Bent No. 2 not shown, see Sheet No. 8.

For details of Intermediate Bent Diaphragm, see Sheet No. 14.

For steps 2″ or more use 2 1/4″ x 1/2″ joint filler up vertical face.

DETAILS OF INTERMEDIATE BENT NO. 2

Detailed May 2024
Checked June 2024

Note: This drawing is not to scale. Follow dimensions.

STATE OF MISSOURI
JOSHUA D. JOLLIFF
NUMBER PE-2006002824
PROFESSIONAL ENGINEER

09/10/2024 1:18:23 PM
Joshua D. Jolliff
MO PE-2006002824

DATE PREPARED: 9/10/2024
ROUTE: 60 | STATE: MO
DISTRICT: BR | SHEET NO.: 7
COUNTY: WEBSTER
JOB NO.: J7P3425C
CONTRACT ID.:
PROJECT NO.:
BRIDGE NO.: A9137

DESCRIPTION | DATE | REV.

IF A SEAL IS PRESENT ON THIS SHEET IT HAS BEEN ELECTRONICALLY SEALED AND DATED.

MISSOURI HIGHWAYS AND TRANSPORTATION COMMISSION
105 WEST CAPITOL
JEFFERSON CITY, MO 65102
1-888-ASK-MODOT (1-888-275-6636)

CMT
©Copyright CMT, Inc.
CRAWFORD, MURPHY & TILLY, INC.
1631 WEST ELFINDALE STREET
SPRINGFIELD, MO 65807 (417) 869-6009
ENGINEERING CORPORATION - 000631

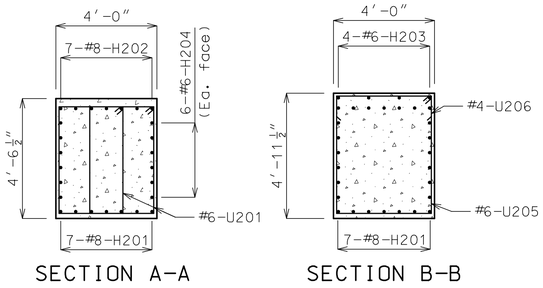

SECTION A-A

SECTION B-B

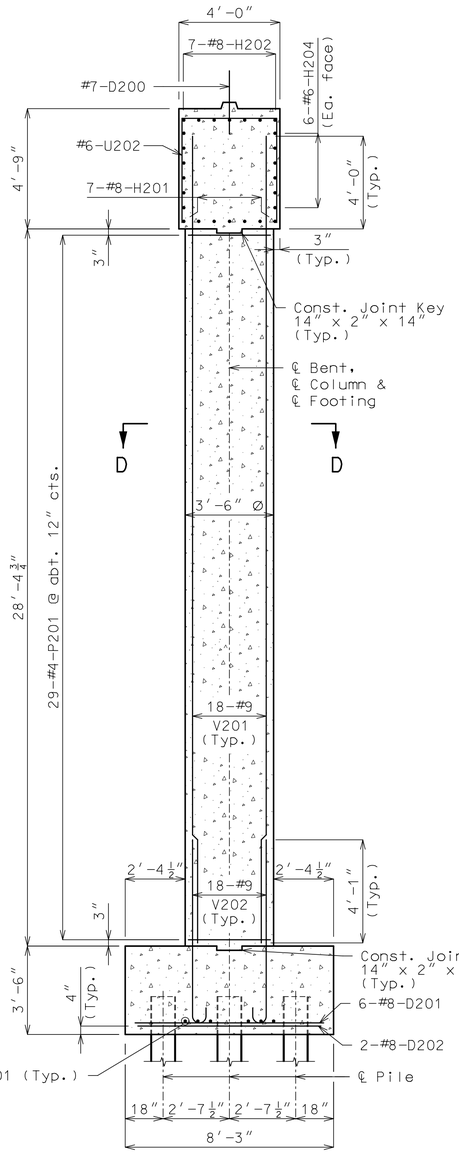

SECTION C-C

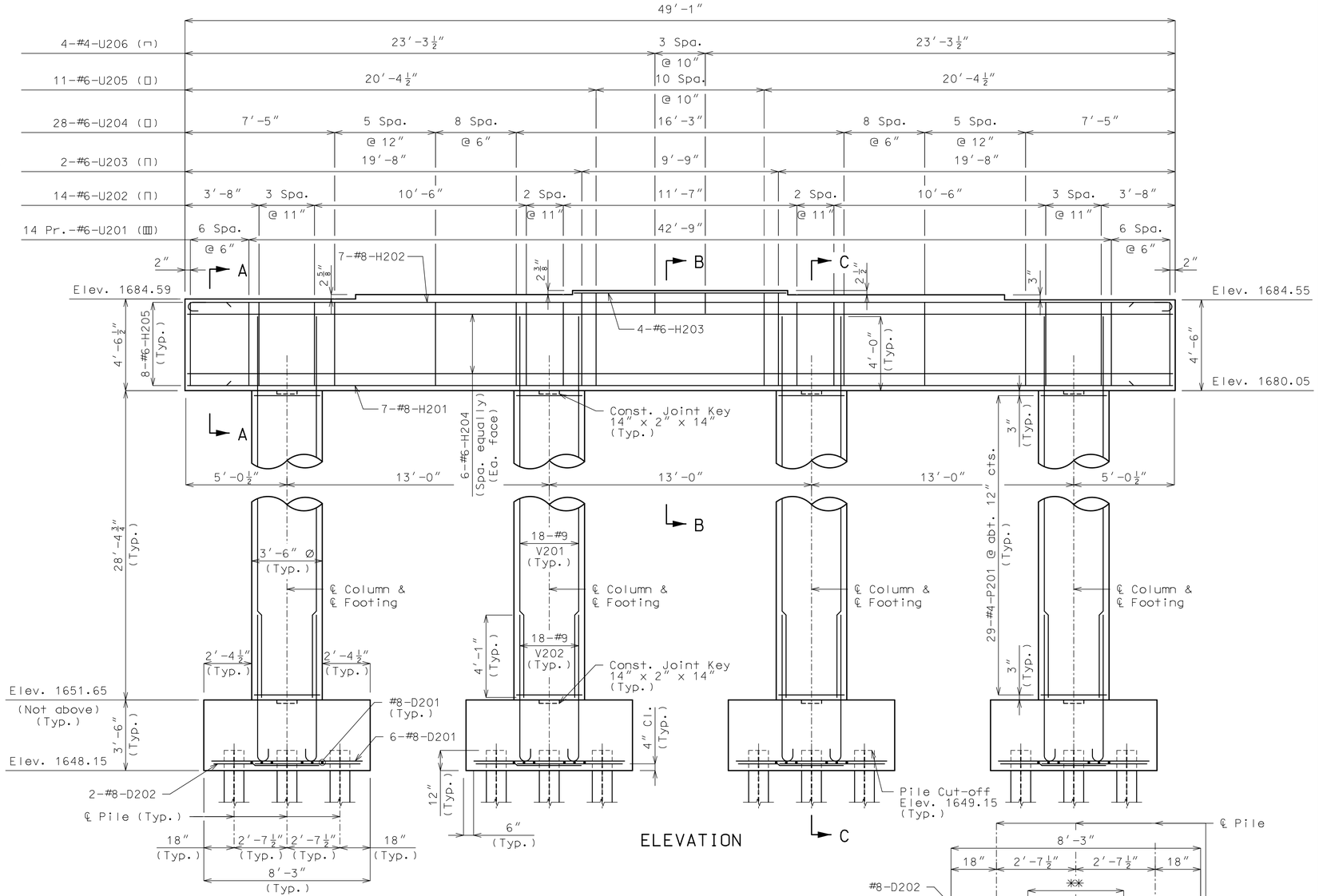

ELEVATION

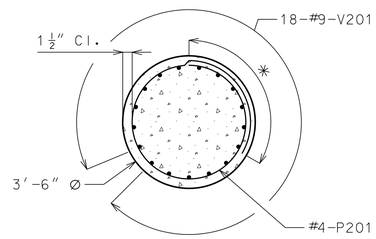

SECTION D-D

✳ Minimum Lap 2′-5″ (Stagger adjacent bar splices)
✳✳ Minimum Lap 3′-8″ (Typ.)

General Notes:

For details of Intermediate Bent No. 2 not shown, see Sheet No. 7.

For details of Intermediate Bent Diaphragm, see Sheet No. 14.

All reinforcement bars in the footings shall be field adjusted to clear piles by at least 1 1/2″.

Keys not shown in elevation for clarity.

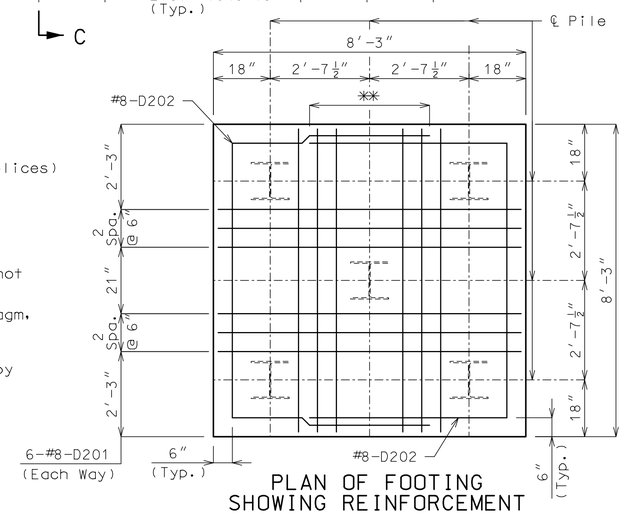

PLAN OF FOOTING SHOWING REINFORCEMENT

DETAILS OF INTERMEDIATE BENT NO. 2

Detailed May 2024
Checked June 2024

Note: This drawing is not to scale. Follow dimensions.

Sheet No. 8 of 38

STATE OF MISSOURI
JOSHUA D. JOLLIFF
NUMBER PE-2006002824
PROFESSIONAL ENGINEER
09/10/2024 1:18:26 PM
Joshua D. Jolliff
MO PE-2006002824

DATE PREPARED: 9/10/2024
ROUTE: 60 | STATE: MO
DISTRICT: BR | SHEET NO.: 8
COUNTY: WEBSTER
JOB NO.: J7P3425C
CONTRACT ID.:
PROJECT NO.:
BRIDGE NO.: A9137

DESCRIPTION | DATE | REV.

IF A SEAL IS PRESENT ON THIS SHEET IT HAS BEEN ELECTRONICALLY SEALED AND DATED.

MISSOURI HIGHWAYS AND TRANSPORTATION COMMISSION
105 WEST CAPITOL
JEFFERSON CITY, MO 65102
1-888-ASK-MODOT (1-888-275-6636)

CMT
©Copyright CMT, Inc.
CRAWFORD, MURPHY & TILLY, INC.
1631 WEST ELFINDALE STREET
SPRINGFIELD, MO 65807 (417) 869-6009
ENGINEERING CORPORATION - 000631

L:\MoDOT\20092124-00\Draw\Structures\Sheets\Route A over 60\B_A9137_008_J7P3425C_Intermediate_Bent_2_Details.dgn 1:00:07 PM 9/10/2024

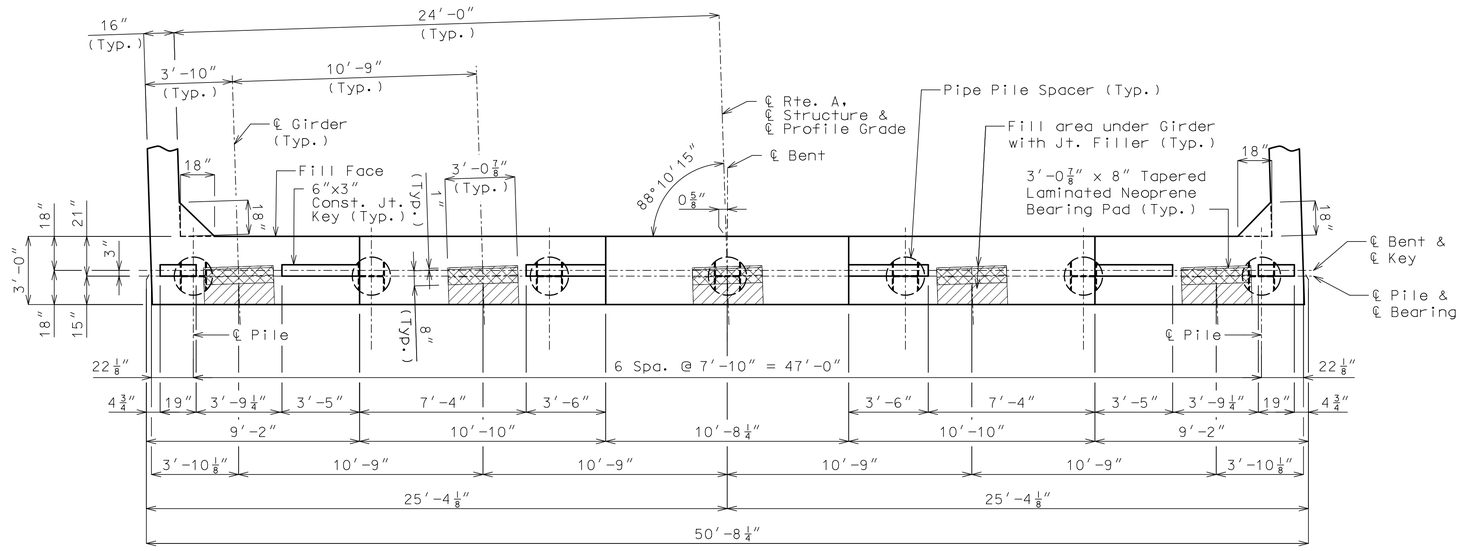

PLAN OF BEAM SHOWING DIMENSIONS

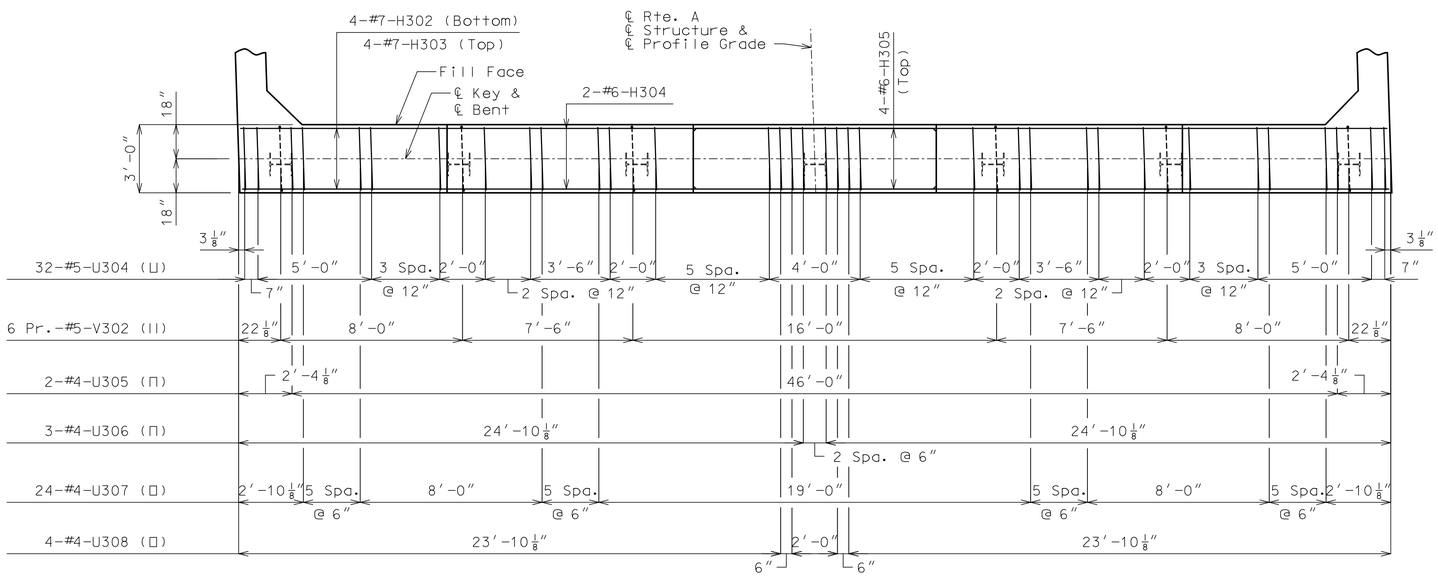

PLAN OF BEAM SHOWING REINFORCEMENT
(Keys not shown for clarity)

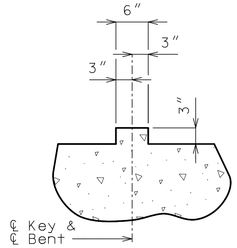

TYPICAL SECTION THRU KEY

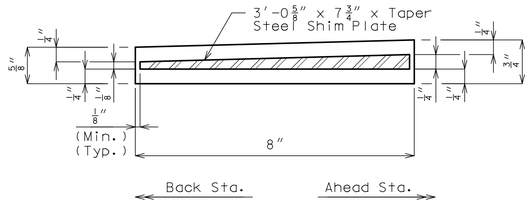

DETAIL OF LAMINATED NEOPRENE BEARING PADS (TAPERED) AT END BENT NO. 3

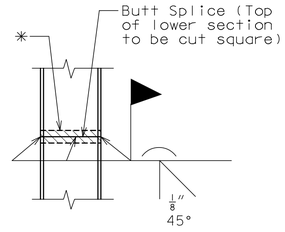

STEEL PILE SPLICE
(If required)

* Galvanizing material shall be omitted or removed one inch clear of weld locations in accordance with Sec 702.

General Notes:

For details of End Bent No. 3 not shown, see Sheets No. 10 & 11.

The U bars and pairs of V bars shall be placed parallel to centerline of roadway.

Reinforcing steel shall be shifted to clear piles, U bars shall clear piles by at least 1 1/2".

DETAILS OF END BENT NO. 3

Detailed May 2024
Checked June 2024

Note: This drawing is not to scale. Follow dimensions.

STATE OF MISSOURI
JOSHUA D. JOLLIFF
NUMBER PE-2006002824
PROFESSIONAL ENGINEER
09/10/2024 1:18:29 PM
Joshua D. Jolliff
MO PE-2006002824

DATE PREPARED: 9/10/2024
ROUTE: 60 | STATE: MO
DISTRICT: BR | SHEET NO.: 9
COUNTY: WEBSTER
JOB NO.: J7P3425C
CONTRACT ID.:
PROJECT NO.:
BRIDGE NO.: A9137

DESCRIPTION | DATE | REV.

MISSOURI HIGHWAYS AND TRANSPORTATION COMMISSION
105 WEST CAPITOL
JEFFERSON CITY, MO 65102
1-888-ASK-MODOT (1-888-275-6636)

CMT
©Copyright CMT, Inc.
CRAWFORD, MURPHY & TILLY, INC.
1631 WEST ELFINDALE STREET
SPRINGFIELD, MO 65807 (417) 869-6009
ENGINEERING CORPORATION - 000631

IF A SEAL IS PRESENT ON THIS SHEET IT HAS BEEN ELECTRONICALLY SEALED AND DATED.

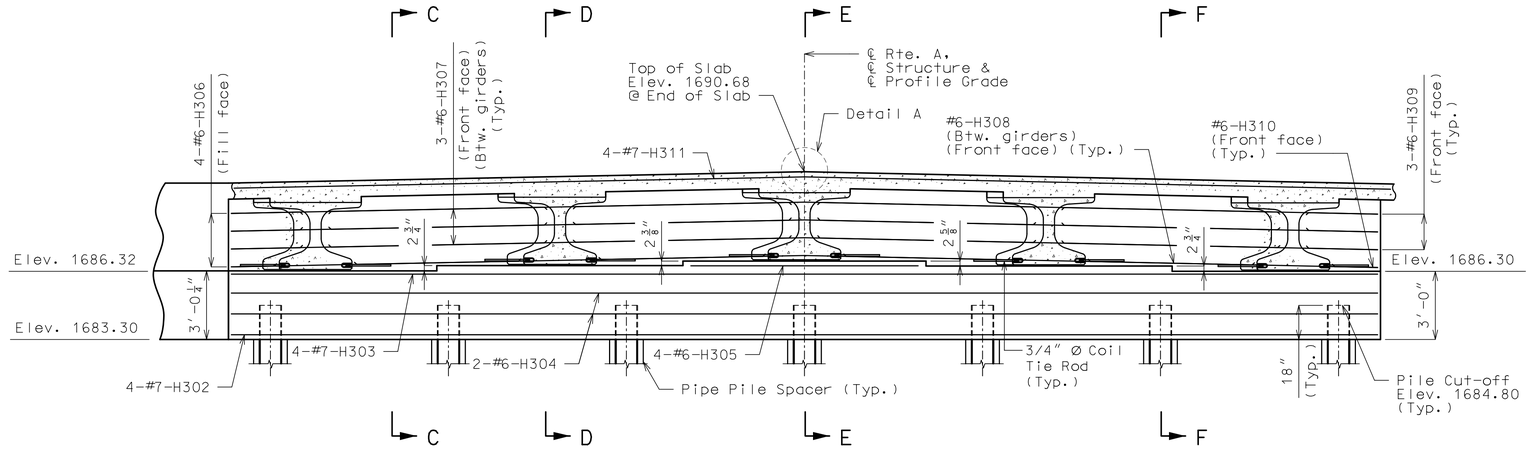

SECTION NEAR END BENT

Keys not shown for clarity.

✳ Centered behind girders

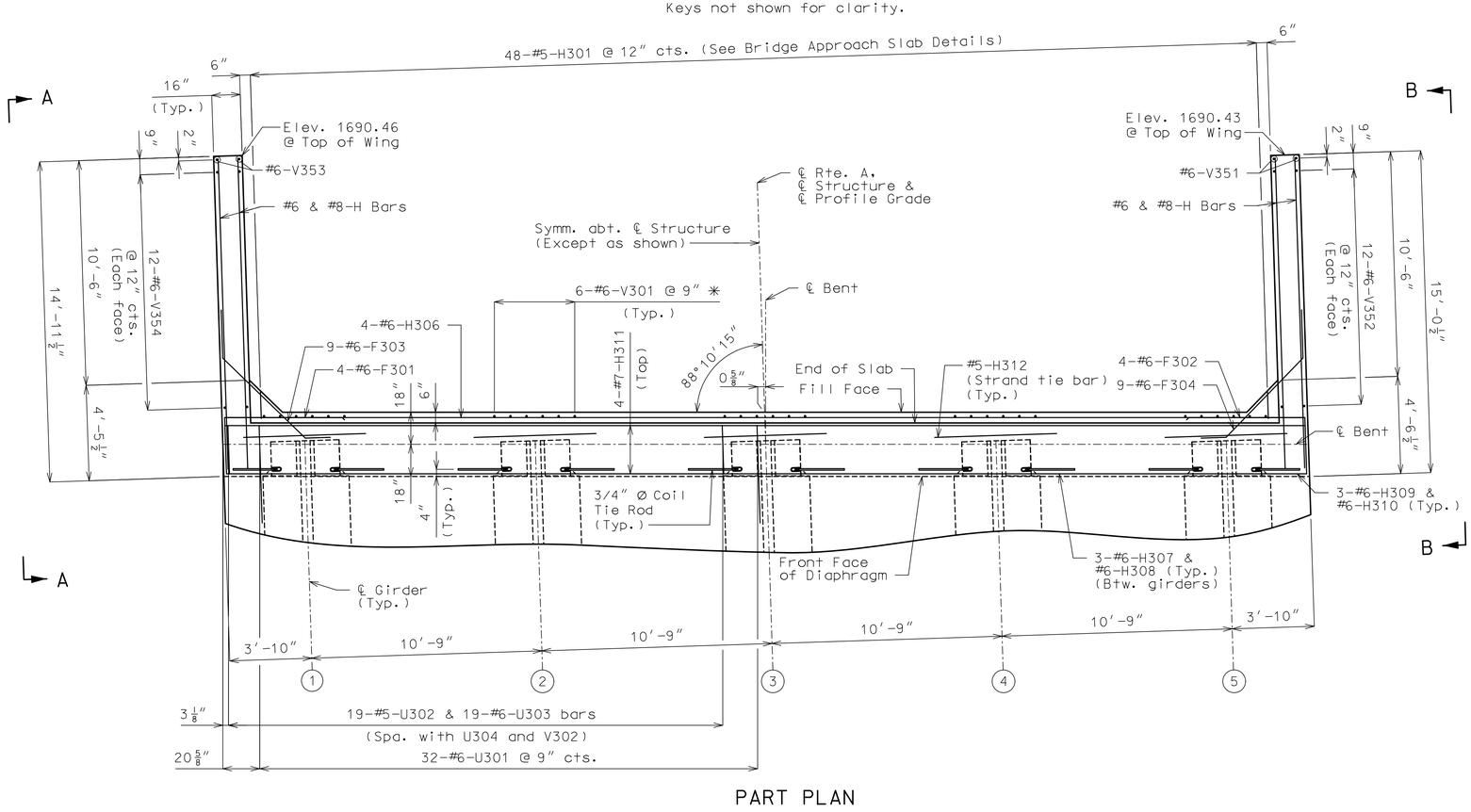

PART PLAN

General Notes:

For details of End Bent No. 3 not shown, see Sheets No. 9 & 11.

For Sections C-C, D-D, E-E, & F-F, see Sheet No. 11.

For Elevations A-A & B-B, see Sheet No. 11.

All concrete in the end bent above top of beam and below top of slab shall be Class B-2.

For location of Coil Tie Rods and #5-H312 (Strand Tie Bar), see Sheets No. 12 & 13.

For details of Vertical Drain at End Bents, see Sheet No. 6.

The #6-F303 and #6-F304 bars shall be bent in the field to clear girders.

The U bars and pairs of V bars shall be placed parallel to centerline of roadway.

Strands at end of girders shall be field bent or, if necessary, cut in field to maintain 1 1/2-inch minimum clearance to fill face of end bent.

For details of Bridge Approach Slab, see Sheet No. 25.

Substructure Quantity Table for Bent No. 3

Item		Quantity
Galvanized Structural Steel Piles (12 in.)	linear foot	504
Pre-Bore For Piling	linear foot	266
Pile Point Reinforcement	each	7
Class B Concrete (Substructure)	cu. yard	21.9
Pipe Pile Spacers	each	7

Note: These quantities are included in the estimated quantities table on Sheet No. 2.

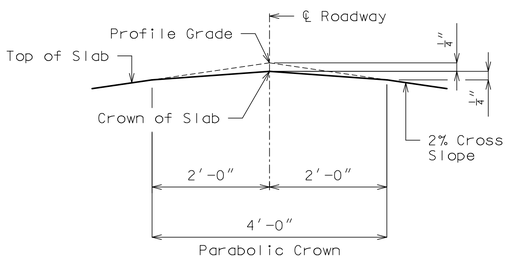

DETAIL A

STATE OF MISSOURI
JOSHUA D. JOLLIFF
NUMBER PE-2006002824
PROFESSIONAL ENGINEER
09/10/2024 1:18:32 PM
Joshua D. Jolliff
MO PE-2006002824

DATE PREPARED
9/10/2024

ROUTE	STATE
60	MO
DISTRICT	SHEET NO.
BR	10

COUNTY
WEBSTER

JOB NO.
J7P3425C

CONTRACT ID.

PROJECT NO.

BRIDGE NO.
A9137

DESCRIPTION	DATE

IF A SEAL IS PRESENT ON THIS SHEET IT HAS BEEN ELECTRONICALLY SEALED AND DATED.

MISSOURI HIGHWAYS AND TRANSPORTATION COMMISSION
105 WEST CAPITOL
JEFFERSON CITY, MO 65102
1-888-ASK-MODOT (1-888-275-6636)

CMT
©Copyright CMT, Inc.
CRAWFORD, MURPHY & TILLY, INC.
1631 WEST ELFINDALE STREET
SPRINGFIELD, MO 65807 (417) 869-6009
ENGINEERING CORPORATION - 000631

REV.

DETAILS OF END BENT NO. 3

Detailed May 2024
Checked June 2024

Note: This drawing is not to scale. Follow dimensions.

L:\MoDOT\20092124-00\Draw\Structures\Sheets\Route A over 60\B_A9137_010_J7P3425C_End_Bent_3_Details.dgn 1:00:08 PM 9/10/2024

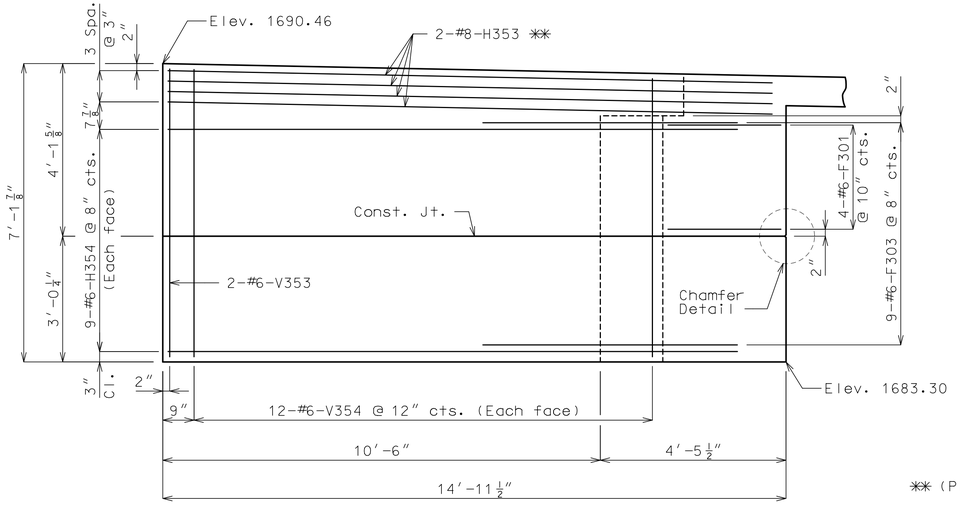

** (Place with grade)

ELEVATION A-A

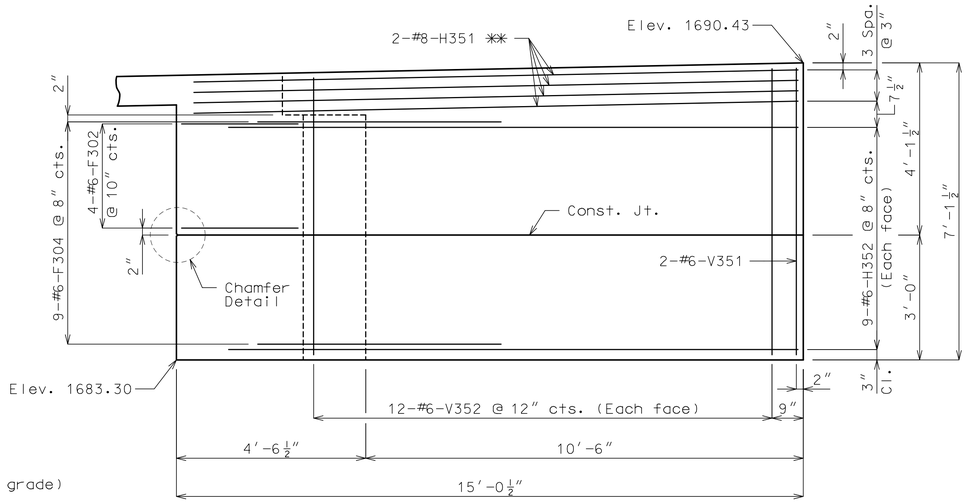

ELEVATION B-B

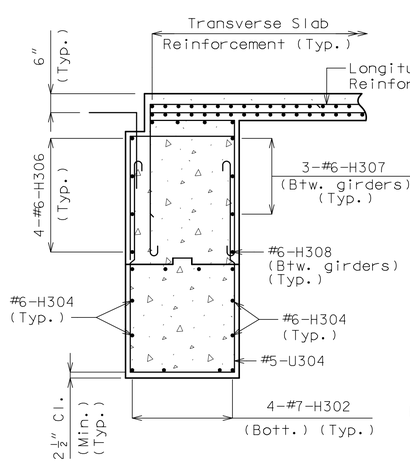

SECTION C-C

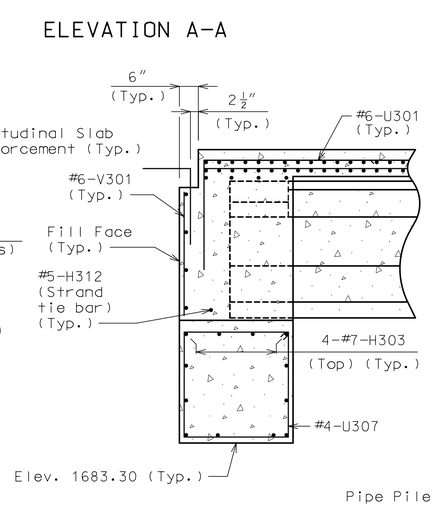

SECTION D-D

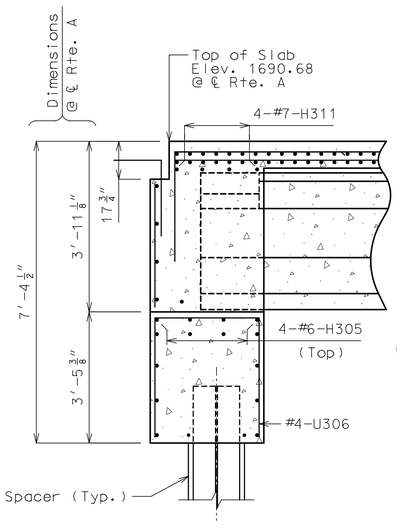

SECTION E-E

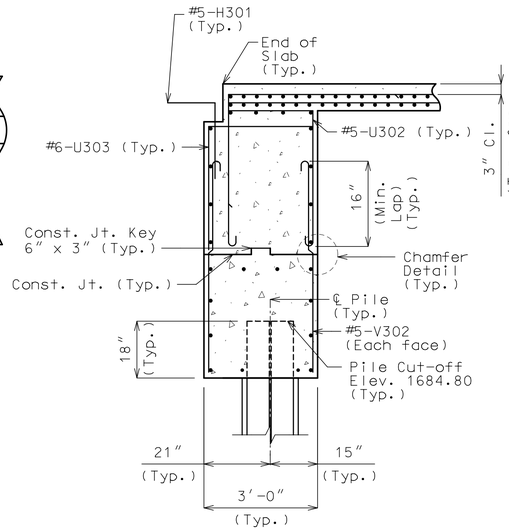

SECTION F-F

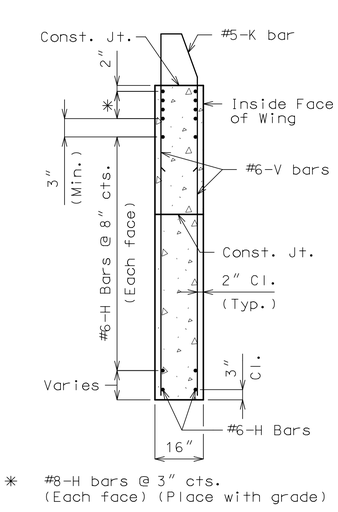

* #8-H bars @ 3" cts. (Each face) (Place with grade)

TYPICAL SECTION THRU WING

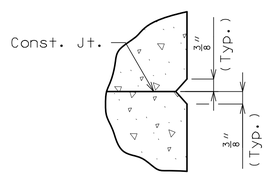

CHAMFER DETAIL

General Notes:

For details of End Bent No. 3 not shown, see Sheets No. 9 & 10.

For details and reinforcement of the Type D Barrier, see Sheets No. 21 and 22.

For location of Sections C-C, D-D, E-E, & F-F, see Sheet No. 10.

For location of Elevations A-A & B-B, see Sheet No. 10.

For Conduit Details, see Sheet No. 23.

DETAILS OF END BENT NO. 3

Detailed May 2024
Checked June 2024

Note: This drawing is not to scale. Follow dimensions.

STATE OF MISSOURI
JOSHUA D. JOLLIFF
NUMBER PE-2006002824
PROFESSIONAL ENGINEER

09/10/2024 1:18:36 PM
Joshua D. Jolliff
MO PE-2006002824

DATE PREPARED
9/10/2024

ROUTE	STATE
60	MO
DISTRICT	SHEET NO.
BR	11

COUNTY
WEBSTER

JOB NO.
J7P3425C

CONTRACT ID.

PROJECT NO.

BRIDGE NO.
A9137

DESCRIPTION	DATE

IF A SEAL IS PRESENT ON THIS SHEET IT HAS BEEN ELECTRONICALLY SEALED AND DATED.

MISSOURI HIGHWAYS AND TRANSPORTATION COMMISSION
105 WEST CAPITOL
JEFFERSON CITY, MO 65102
1-888-ASK-MODOT (1-888-275-6636)

CMT
CRAWFORD, MURPHY & TILLY, INC.
1631 WEST ELFINDALE STREET
SPRINGFIELD, MO 65807 (417) 869-6009
ENGINEERING CORPORATION - 000631

©Copyright CMT, Inc.

REV.

(1) Fabricator shall apply a bond breaker to this region.

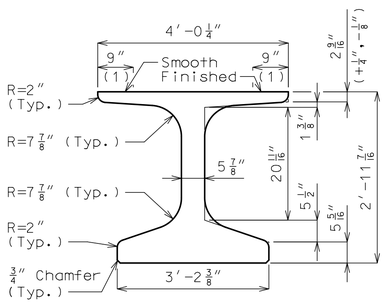

DIMENSIONS

(2) Outer strands tensioned to 2.02 kips/strand and inner strands to 8 kips/strand. Placed symmetrical about ℄ Girder. May be moved laterally in pairs.

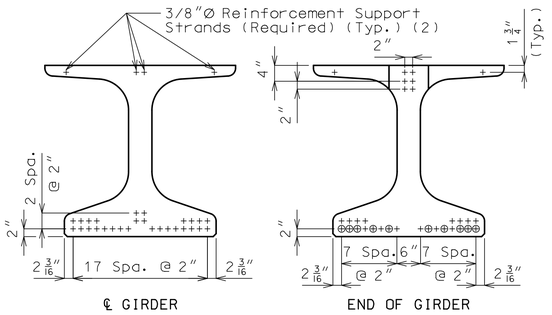

STRAND ARRANGEMENT

+ Indicates prestressing strand.

o Indicates cut & shop bend with 3′-0″ projection.

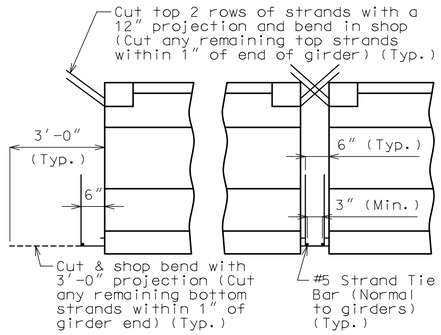

STRANDS AT GIRDER ENDS

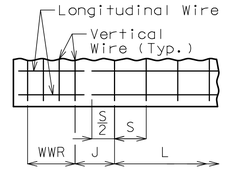

WELDED WIRE PLACEMENT

S = Vertical wire spacing

L = Length of WWR mats

J = Distance between WWR mats

Bill of Reinforcing Steel

Bars Each Girder

No.	Size/Mark	Length	Shape
96	3 G1	2′-10″	8
2	4 G3	3′-10″	20
2	4 G4	2′-3″	20
2	4 G5	2′-8″	20

Welded Wire Each Girder

Mark	Size	S	W	L	J
WWR1	D31	4″	W12	4′-4″	8″
WWR2	D31	8″	W12	5′-4″	12″
WWR3	D31	12″	W12	49′-0″	–
WWR6	D31	2″	W12	16″	2½″

Bending Diagrams

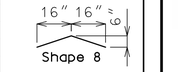

Shape 20

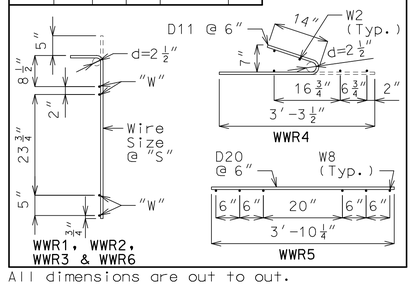

All dimensions are out to out.

Hooks and bends shall be in accordance with the CRSI Manual of Standard Practice for Detailing Reinforced Concrete Structures, Stirrup and Tie Dimensions.

Actual bar lengths are measured along centerline of bar to the nearest inch.

Minimum clearance to reinforcing shall be 1″, unless otherwise shown.

All bar reinforcement shall be Grade 60.

WWR shall not be epoxy coated.

G4 and G5 not required for interior girders. Half no. of G3, G4 and G5 not required for ext. girders of end spans.

General Notes:

Concrete for prestressed beams shall be Class A-1 with f′c = 8000 psi and f′ci = 6500 psi.

Use 28 strands, 0.6″Ø Grade 270, with an initial prestress force of 1230 kips.

Pretensioned members shall be in accordance with Sec 1029.

Fabricator shall be responsible for location and design of lifting devices.

Exterior and interior girders are the same except: coil ties, top flange blockout and application of bond breaker.

The contractor shall provide bracing necessary for lateral and torsional stability of the girders during construction of the concrete slab and remove the bracing after the slab has attained 75% design strength. Contractor shall not drill holes in the girders.

For Girder Camber Diagram, see Sheet No. 15.

For location of coil ties at concrete diaphragms and integral bents, see Sheets No. 4, 10 and 14.

Alternate bar reinforcing steel details are provided and may be used. The same type of reinforcing steel shall be used for all girders in all spans.

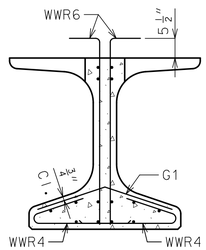

SECTION A-A

Strands not shown for clarity.

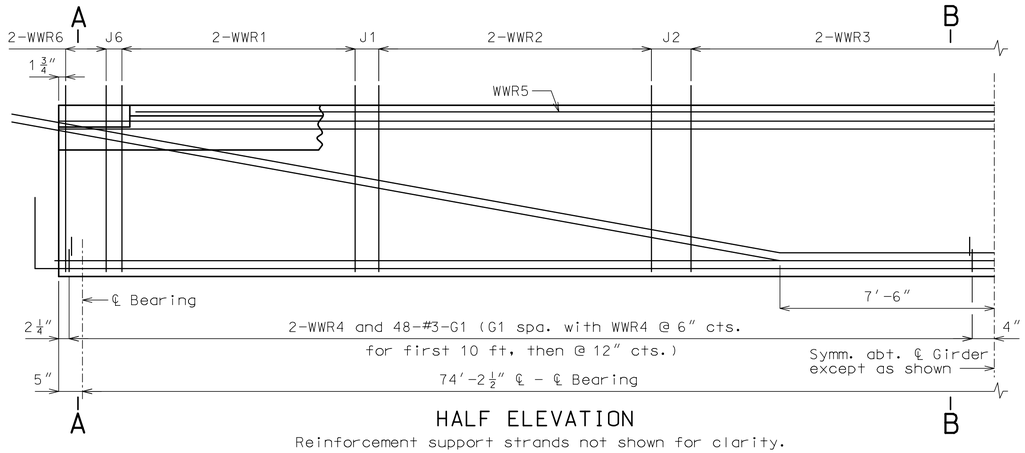

HALF ELEVATION

Reinforcement support strands not shown for clarity.

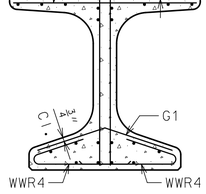

SECTION B-B

Strands not shown for clarity.

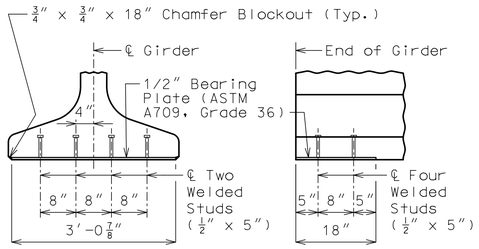

BEARING PLATE

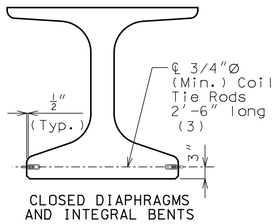

CLOSED DIAPHRAGMS AND INTEGRAL BENTS

COIL TIES

Exclude coil tie at exterior face of exterior girders except at integral end bents.

(3) 2′-3″ at exterior face of exterior girders at end bents

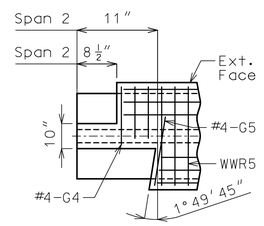

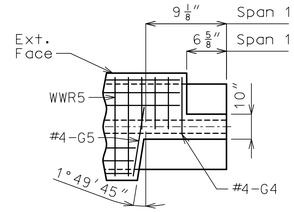

LEFT EXTERIOR GIRDER AT INTERMEDIATE BENT

Rotate 180° for right ext.

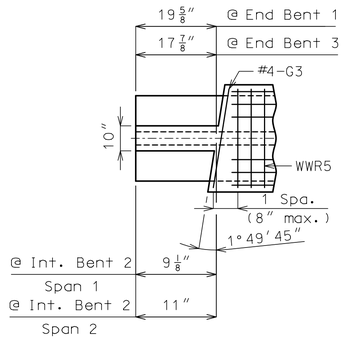

INTERIOR GIRDER AT ALL BENTS & EXTERIOR GIRDER AT END BENT

TOP FLANGE BLOCKOUT

NU-GIRDERS - SPANS (1-2) AND (2-3)

Detailed May 2024
Checked June 2024

Note: This drawing is not to scale. Follow dimensions.

STATE OF MISSOURI
JOSHUA D. JOLLIFF
NUMBER PE-2006002824
PROFESSIONAL ENGINEER
09/10/2024 1:18:39 PM
Joshua D. Jolliff
MO PE-2006002824

DATE PREPARED 9/10/2024

ROUTE 60 | STATE MO

DISTRICT BR | SHEET NO. 12

COUNTY WEBSTER

JOB NO. J7P3425C

CONTRACT ID.

PROJECT NO.

BRIDGE NO. A9137

DESCRIPTION | DATE

MISSOURI HIGHWAYS AND TRANSPORTATION COMMISSION
105 WEST CAPITOL
JEFFERSON CITY, MO 65102
1-888-ASK-MODOT (1-888-275-6636)

CMT
CRAWFORD, MURPHY & TILLY, INC.
1631 WEST ELFINDALE STREET
SPRINGFIELD, MO 65807 (417) 869-6009
ENGINEERING CORPORATION - 000631

© Copyright CMT, Inc.

IF A SEAL IS PRESENT ON THIS SHEET IT HAS BEEN ELECTRONICALLY SEALED AND DATED.

REV.

(1) Fabricator shall apply a bond breaker to this region.

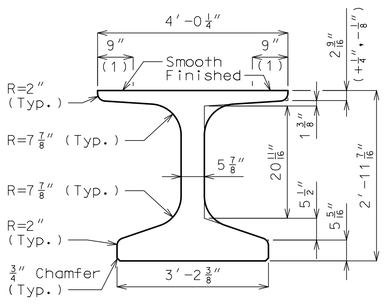

DIMENSIONS

(2) Outer strands tensioned to 2.02 kips/strand and inner strands to 8 kips/strand. Placed symmetrical about ℄ Girder. May be moved laterally in pairs.

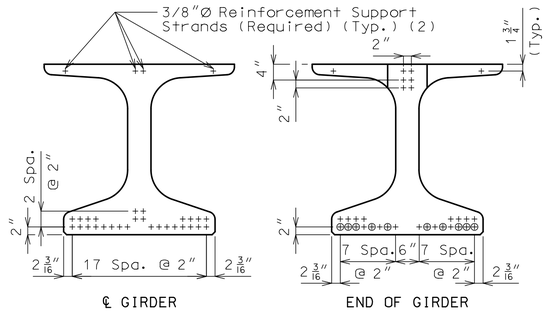

STRAND ARRANGEMENT

\+ Indicates prestressing strand.

o Indicates cut & shop bend with 3′-0″ projection.

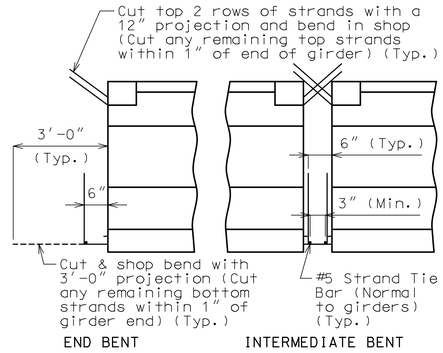

STRANDS AT GIRDER ENDS

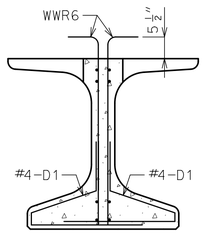

SECTION A-A

Strands not shown for clarity.

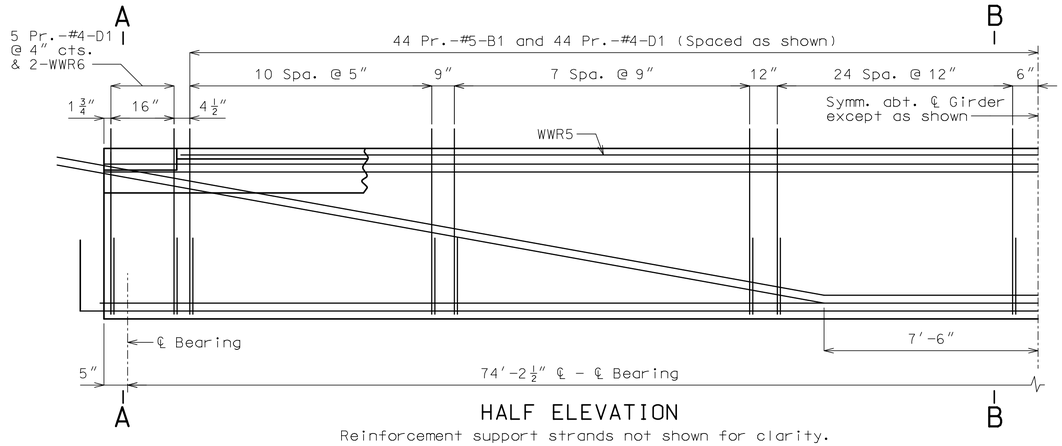

HALF ELEVATION

Reinforcement support strands not shown for clarity.

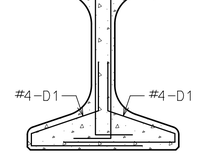

SECTION B-B

Strands not shown for clarity.

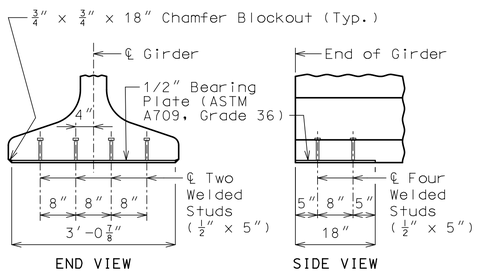

BEARING PLATE

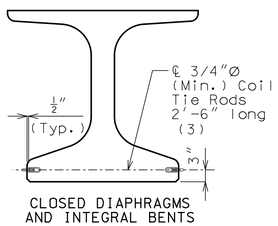

CLOSED DIAPHRAGMS AND INTEGRAL BENTS

COIL TIES

Exclude coil tie at exterior face of exterior girders except at integral end bents.

(3) 2′-3″ at exterior face of exterior girders at end bents

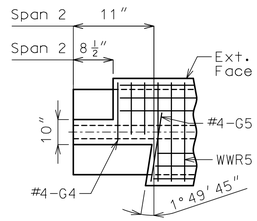

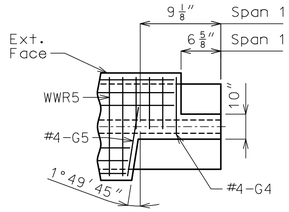

LEFT EXTERIOR GIRDER AT INTERMEDIATE BENT

Rotate 180° for right ext.

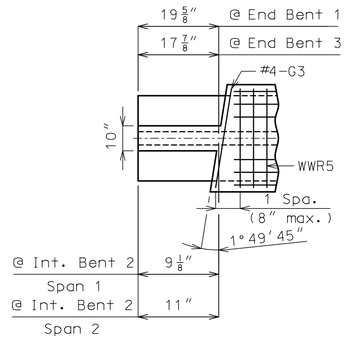

INTERIOR GIRDER AT ALL BENTS & EXTERIOR GIRDER AT END BENT

TOP FLANGE BLOCKOUT

Bill of Reinforcing Steel - Each Girder

No.	Size/ Mark	Length	Shape
176	5 B1	4′-4″	11S
196	4 D1	4′-0″	9S
2	4 G3	3′-10″	20
2	4 G4	2′-3″	20
2	4 G5	2′-8″	20

Bending Diagrams

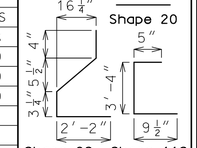

Welded Wire Reinforcement - Each Girder

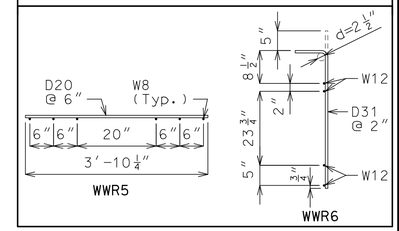

All dimensions are out to out.

Hooks and bends shall be in accordance with the CRSI Manual of Standard Practice for Detailing Reinforced Concrete Structures, Stirrup and Tie Dimensions.

Actual bar lengths are measured along centerline of bar to the nearest inch.

Minimum clearance to reinforcing shall be one inch.

All bar reinforcement shall be Grade 60.

The two D1 bars may be furnished as one bar at the fabricator's option.

All B1 bars shall be epoxy coated.

G4 and G5 not required for interior girders. Half no. of G3, G4 and G5 not required for ext. girders of end spans.

General Notes:

Concrete for prestressed girders shall be Class A-1 with f′c = 8000 psi and f′ci = 6500 psi.

Use 28 strands, 0.6″Ø Grade 270, with an initial prestress force of 1230 kips.

Pretensioned members shall be in accordance with Sec 1029.

Fabricator shall be responsible for location and design of lifting devices.

Exterior and interior girders are the same except: coil ties, top flange blockout and application of bond breaker.

The contractor shall provide bracing necessary for lateral and torsional stability of the girders during construction of the concrete slab and remove the bracing after the slab has attained 75% design strength. Contractor shall not drill holes in the girders.

For Girder Camber Diagram, see Sheet No. 15.

For location of coil ties at concrete diaphragms and integral bents, see Sheets No. 4, 10 and 14.

Alternate bar reinforcing steel details are provided and may be used. The same type of reinforcing steel shall be used for all girders in all spans.

STATE OF MISSOURI
JOSHUA D. JOLLIFF
NUMBER PE-2006002824
PROFESSIONAL ENGINEER
09/10/2024 1:18:42 PM
Joshua D. Jolliff
MO PE-2006002824

DATE PREPARED
9/10/2024

ROUTE	STATE
60	MO
DISTRICT	SHEET NO.
BR	13

COUNTY
WEBSTER

JOB NO.
J7P3425C

CONTRACT ID.

PROJECT NO.

BRIDGE NO.
A9137

DESCRIPTION	DATE

IF A SEAL IS PRESENT ON THIS SHEET IT HAS BEEN ELECTRONICALLY SEALED AND DATED.

MISSOURI HIGHWAYS AND TRANSPORTATION COMMISSION
105 WEST CAPITOL
JEFFERSON CITY, MO 65102
1-888-ASK-MODOT (1-888-275-6636)

CMT
© Copyright CMT, Inc.
CRAWFORD, MURPHY & TILLY, INC.
1631 WEST ELFINDALE STREET
SPRINGFIELD, MO 65807 (417) 869-6009
ENGINEERING CORPORATION - 000631

REV.

NU-GIRDERS (ALTERNATE REINFORCEMENT) - SPANS (1-2) AND (2-3)

Detailed May 2024
Checked June 2024

Note: This drawing is not to scale. Follow dimensions.

L:\MoDOT\20092124-00\Draw\Structures\Sheets\Route A over 60\B_A9137_013_J7P3425C_NU_Girder_Bar.dgn 1:00:10 PM 9/10/2024

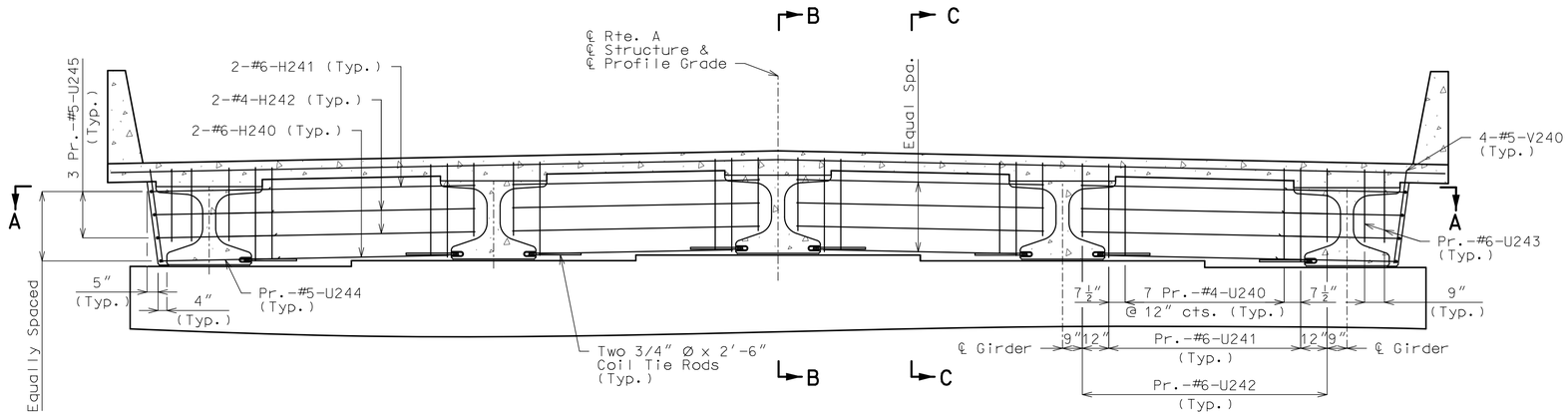

SECTION NEAR INTERMEDIATE BENT

Note: Keys not shown for clarity.

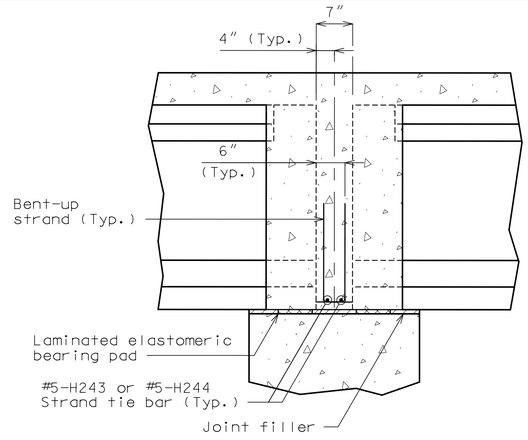

SECTION B-B

(Dimensions parallel to ℄ Roadway)

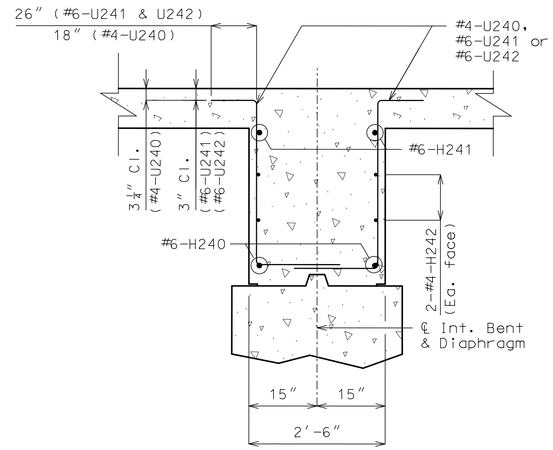

SECTION C-C

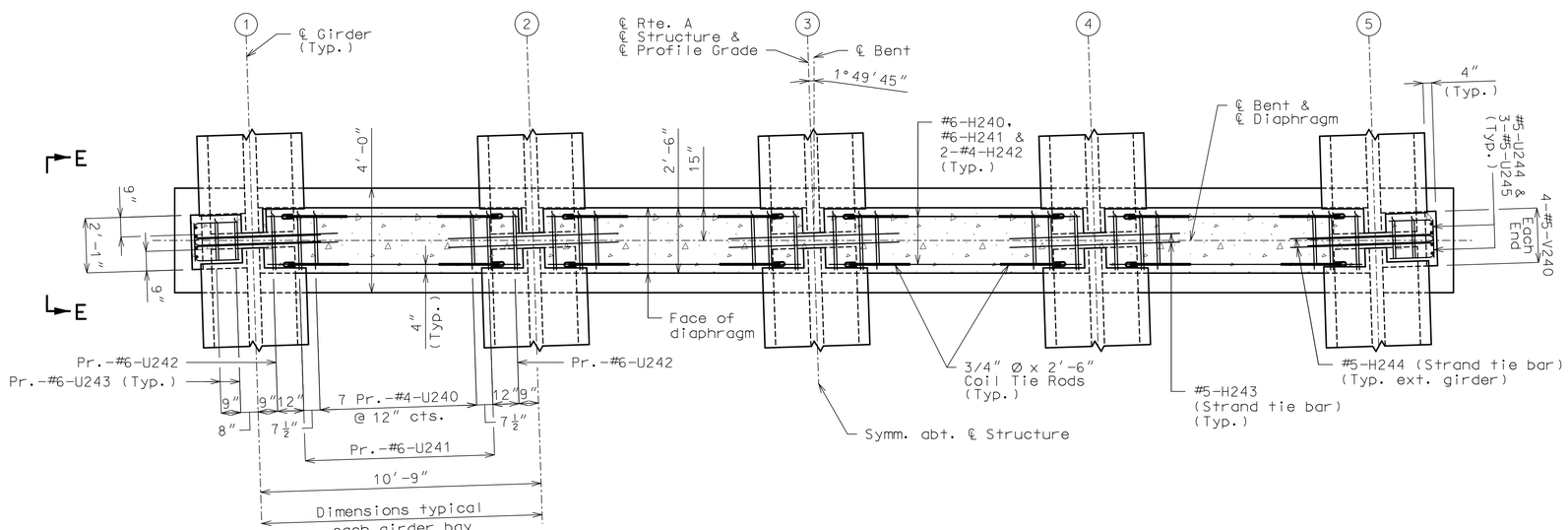

SECTION A-A

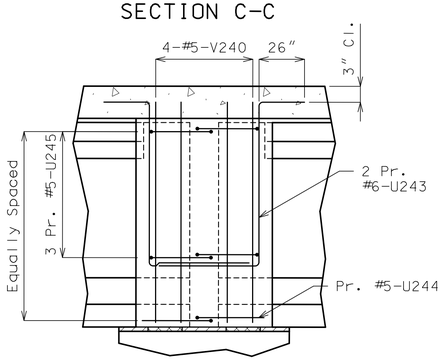

SECTION E-E

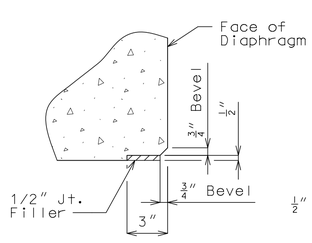

EDGE DETAIL

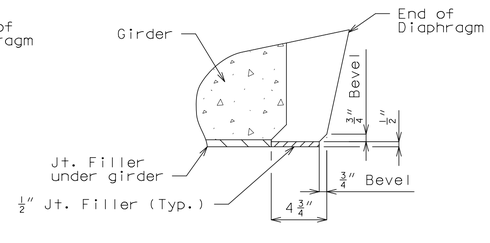

END DETAIL

General Notes:

For location of Strand Tie Bars and Coil Tie Rods, see Sheets No. 12 and 13.

Diaphragm at intermediate bent shall be built vertical.

All U-bars in diaphragm are to be placed parallel to ℄ Roadway.

DETAILS OF CONCRETE DIAPHRAGM AT INTERMEDIATE BENT NO. 2

Detailed May 2024
Checked June 2024

Note: This drawing is not to scale. Follow dimensions.

STATE OF MISSOURI
JOSHUA D. JOLLIFF
NUMBER PE-2006002824
PROFESSIONAL ENGINEER
09/10/2024 1:18:45 PM
Joshua D. Jolliff
MO PE-2006002824

DATE PREPARED: 9/10/2024

ROUTE	STATE
60	MO
DISTRICT	SHEET NO.
BR	14

COUNTY: WEBSTER
JOB NO.: J7P3425C
CONTRACT ID.:
PROJECT NO.:
BRIDGE NO.: A9137

DESCRIPTION | DATE | REV.

MISSOURI HIGHWAYS AND TRANSPORTATION COMMISSION
105 WEST CAPITOL
JEFFERSON CITY, MO 65102
1-888-ASK-MODOT (1-888-275-6636)

CMT
© Copyright CMT, Inc.
CRAWFORD, MURPHY & TILLY, INC.
1631 WEST ELFINDALE STREET
SPRINGFIELD, MO 65807 (417) 869-6009
ENGINEERING CORPORATION - 000631

IF A SEAL IS PRESENT ON THIS SHEET IT HAS BEEN ELECTRONICALLY SEALED AND DATED.

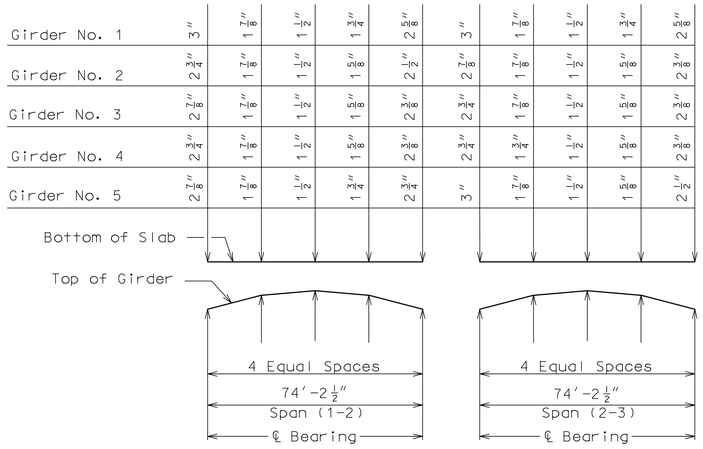

THEORETICAL SLAB HAUNCHING DIAGRAM

If girder camber is different from that shown in the camber diagram, in order to maintain minimum slab thickness, an adjustment of the slab haunches, an increase in slab thickness or a raise in grade uniformly throughout the structure shall be necessary. No payment will be made for additional labor or materials required for variation in haunching, slab thickness or grade adjustment.

Concrete in the slab haunches is included in the Estimated Quantities for Slab on Concrete NU-Girder (with Transparent Forms).

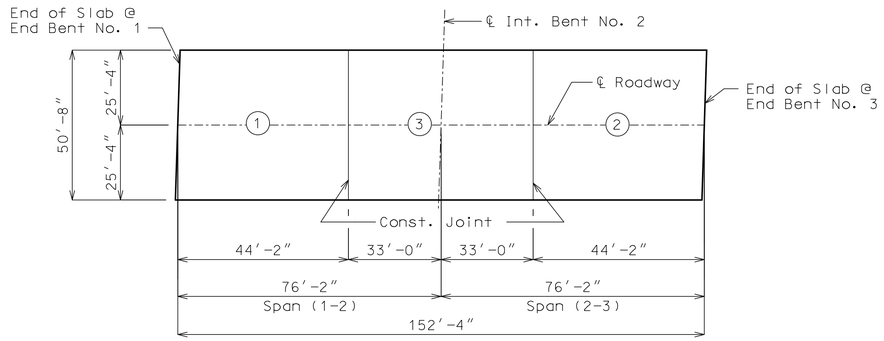

	Sequence of Pours			Min. Rate of Pour Cu. Yds./Hr.
	Direction			With Retarder
Basic Sequence	1	2	3	30
	Either Direction			
Alternate pours to the basic skip sequence are subject to the approval of the engineer in accordance with Sec 703.				
Alternate A Pours	1	3 + 2		43
	End to 3	1 to End		
Alternate B Pours	1 + 3 + 2			50
	End to End			

SLAB POURING SEQUENCE

Notes:

Longitudinal slab dimensions are measured horizontally.

The contractor shall furnish an approved retarder to retard the set of the concrete to 2.5 hours, and shall pour and satisfactorily finish the slab pours at the rate given.

The concrete diaphragm at the intermediate bents and integral end bents shall be poured a minimum of 30 minutes and a maximum of 2 hours before the slab is poured.

Theoretical Bottom of Slab Elevations at ℄ of Girder (Prior to forming of slab)(Estimated at 90 days)										
Girder Number	Span (1-2) 74′-2½″ ℄ Brg. to ℄ Brg.					Span (2-3) 74′-2½″ ℄ Brg. to ℄ Brg.				
	℄ Brg.	0.25	0.50	0.75	℄ Brg.	℄ Brg.	0.25	0.50	0.75	℄ Brg.
1	1685.76	1686.39	1686.95	1687.42	1687.82	1687.86	1688.39	1688.86	1689.24	1689.55
2	1685.97	1686.61	1687.17	1687.64	1688.03	1688.06	1688.61	1689.08	1689.46	1689.75
3	1686.17	1686.81	1687.38	1687.84	1688.23	1688.27	1688.82	1689.29	1689.66	1689.96
4	1685.94	1686.59	1687.15	1687.62	1688.01	1688.04	1688.59	1689.07	1689.44	1689.74
5	1685.72	1686.35	1686.91	1687.38	1687.78	1687.82	1688.36	1688.83	1689.21	1689.52

Elevations are based on a constant slab thickness of 8 1/2″ and include allowance for theoretical dead load deflections due to weight of slab, barrier and pedestrian fence.

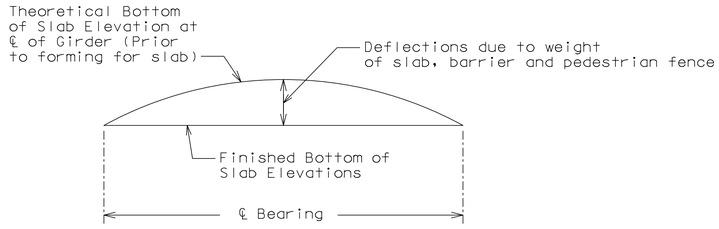

TYPICAL SLAB ELEVATIONS DIAGRAM

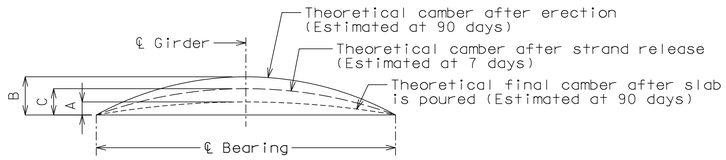

Girder	Span (1-2)			Span (2-3)		
	"A"	"B"	"C"	"A"	"B"	"C"
Ext. Girder	1 3/4″	3 1/8″	1 3/4″	1 3/4″	3 1/8″	1 3/4″
Int. Girder	1 5/8″			1 5/8″		

GIRDER CAMBER DIAGRAM

Conversion factors for girder camber (Estimated at 90 days)
0.25 pt. = 0.7125 X 0.5 pt.

TBOS, HAUNCHING AND CAMBER

Detailed May 2024
Checked June 2024

Note: This drawing is not to scale. Follow dimensions.

STATE OF MISSOURI
JOSHUA D. JOLLIFF
NUMBER PE-2006002824
PROFESSIONAL ENGINEER
09/10/2024 1:18:48 PM
Joshua D. Jolliff
MO PE-2006002824

DATE PREPARED: 9/10/2024
ROUTE: 60 | STATE: MO
DISTRICT: BR | SHEET NO.: 15
COUNTY: WEBSTER
JOB NO.: J7P3425C
CONTRACT ID.:
PROJECT NO.:
BRIDGE NO.: A9137

DESCRIPTION | DATE

MISSOURI HIGHWAYS AND TRANSPORTATION COMMISSION
105 WEST CAPITOL
JEFFERSON CITY, MO 65102
1-888-ASK-MODOT (1-888-275-6636)

CMT
©Copyright CMT, Inc.
CRAWFORD, MURPHY & TILLY, INC.
1631 WEST ELFINDALE STREET
SPRINGFIELD, MO 65807 (417) 869-6009
ENGINEERING CORPORATION - 000631

IF A SEAL IS PRESENT ON THIS SHEET IT HAS BEEN ELECTRONICALLY SEALED AND DATED.

REV.

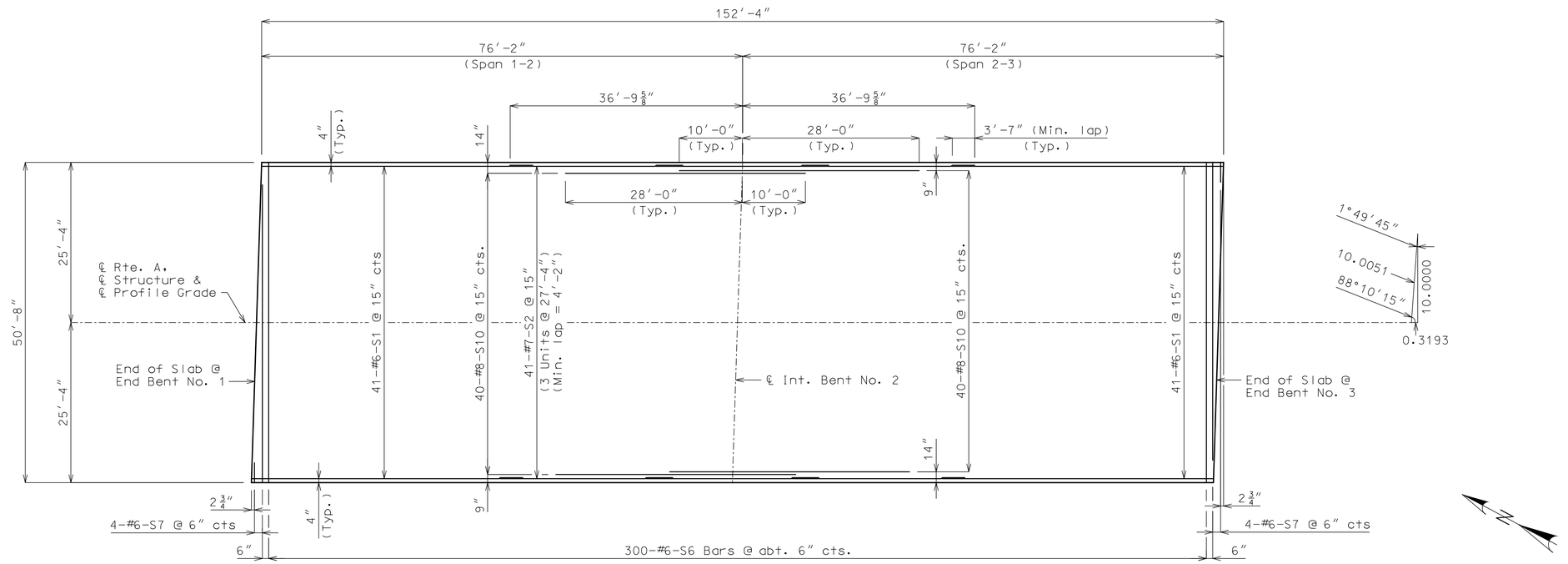

PLAN OF SLAB SHOWING TOP REINFORCEMENT

General Notes:

Longitudinal slab dimensions are measured horizonally.

For Theoretical Bottom of Slab Elevations, Girder Camber Diagram, Theoretical Slab Haunching Diagram and Slab Pouring Sequence, see Sheet No. 15.

For details of Slab Reinforcement - Bottom, see Sheet No. 17.

For Section Thru Slab, see Sheet No. 18.

For details and reinforcement of Type D Barrier, see Sheets No. 19 & 20.

SLAB REINFORCEMENT DETAILS - TOP

Detailed May 2024
Checked June 2024

Note: This drawing is not to scale. Follow dimensions.

STATE OF MISSOURI
JOSHUA D. JOLLIFF
NUMBER PE-2006002824
PROFESSIONAL ENGINEER

09/10/2024 1:18:52 PM
Joshua D. Jolliff
MO PE-2006002824

DATE PREPARED
9/10/2024

ROUTE	STATE
60	MO
DISTRICT	SHEET NO.
BR	16

COUNTY
WEBSTER

JOB NO.
J7P3425C

CONTRACT ID.

PROJECT NO.

BRIDGE NO.
A9137

DESCRIPTION	DATE

IF A SEAL IS PRESENT ON THIS SHEET IT HAS BEEN ELECTRONICALLY SEALED AND DATED.

MISSOURI HIGHWAYS AND TRANSPORTATION COMMISSION
105 WEST CAPITOL
JEFFERSON CITY, MO 65102
1-888-ASK-MODOT (1-888-275-6636)

CMT
© Copyright CMT, Inc.
CRAWFORD, MURPHY & TILLY, INC.
1631 WEST ELFINDALE STREET
SPRINGFIELD, MO 65807 (417) 869-6009
ENGINEERING CORPORATION - 000631

REV.

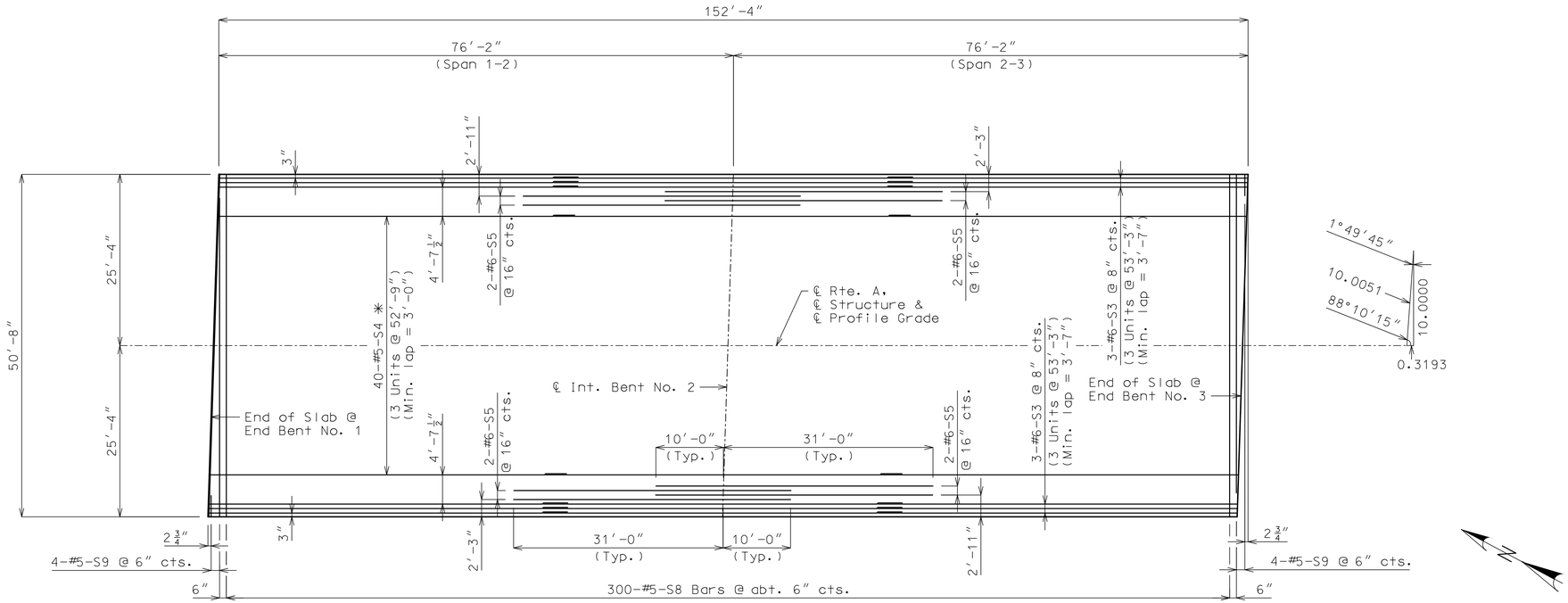

PLAN OF SLAB SHOWING BOTTOM REINFORCEMENT

✳ Spa. as shown in Section Thru Slab (see Sheet No. 18).

General Notes:

Longitudinal slab dimensions are measured horizonally.

For Theoretical Bottom of Slab Elevations, Girder Camber Diagram, Theoretical Slab Haunching Diagram and Slab Pouring Sequence, see Sheet No. 15.

For details of Slab Reinforcement - Top, see Sheet No. 16.

For Section Thru Slab, see Sheet No. 18.

For details and reinforcement of Type D Barrier, see Sheets No. 19 & 20.

SLAB REINFORCEMENT DETAILS - BOTTOM

Detailed May 2024
Checked June 2024

Note: This drawing is not to scale. Follow dimensions.

STATE OF MISSOURI
JOSHUA D. JOLLIFF
NUMBER PE-2006002824
PROFESSIONAL ENGINEER

09/10/2024 1:18:56 PM
Joshua D. Jolliff
MO PE-2006002824

DATE PREPARED
9/10/2024

ROUTE	STATE
60	MO
DISTRICT	SHEET NO.
BR	17

COUNTY
WEBSTER

JOB NO.
J7P3425C

CONTRACT ID.

PROJECT NO.

BRIDGE NO.
A9137

DATE	DESCRIPTION

IF A SEAL IS PRESENT ON THIS SHEET IT HAS BEEN ELECTRONICALLY SEALED AND DATED.

MISSOURI HIGHWAYS AND TRANSPORTATION COMMISSION

105 WEST CAPITOL
JEFFERSON CITY, MO 65102
1-888-ASK-MODOT (1-888-275-6636)

©Copyright CMT, Inc.

CMT
CRAWFORD, MURPHY & TILLY, INC.
1631 WEST ELFINDALE STREET
SPRINGFIELD, MO 65807 (417) 869-6009
ENGINEERING CORPORATION - 000631

REV.

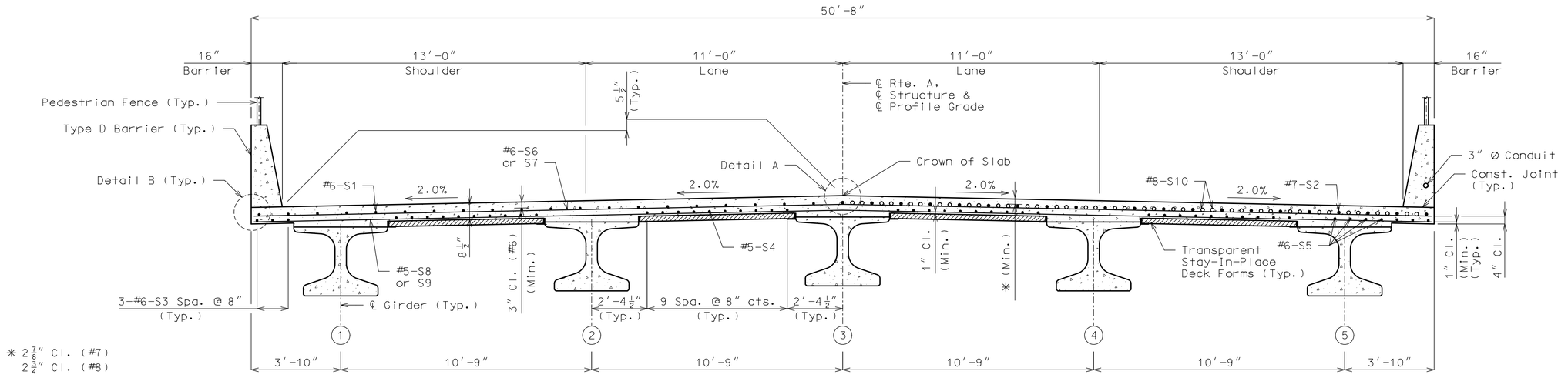

HALF SECTION NEAR ℄ SPAN

HALF SECTION NEAR INTERMEDIATE BENT

SECTION THRU SLAB

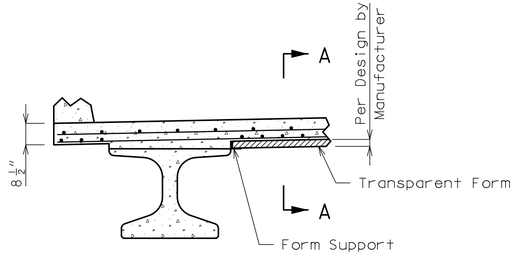

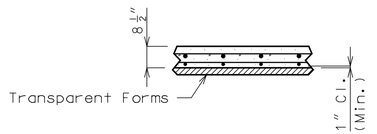

SECTION A–A

TRANSPARENT FORM DETAILS

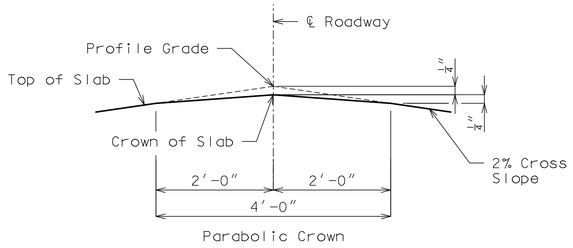

DETAIL A

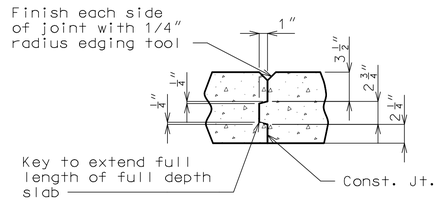

FULL DEPTH SLAB

SLAB CONSTRUCTION JOINT

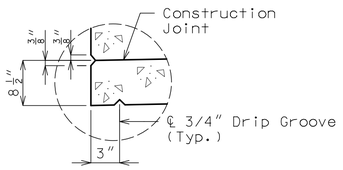

DETAIL B

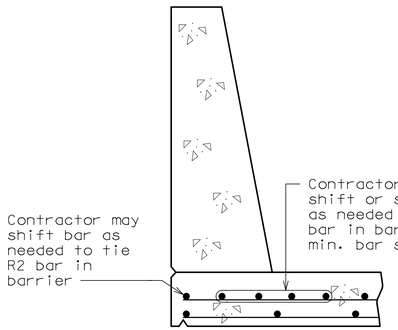

OPTIONAL SHIFTING TOP BARS AT BARRIER

General Notes:

For Theoretical Bottom of Slab Elevations, Girder Camber Diagram, Theoretical Slab Haunching Diagram and Slab Pouring Sequence, see Sheet No. 15.

For Plan of Slab Reinforcement - Top, see Sheet No. 16.

For Plan of Slab Reinforcement - Bottom, see Sheet No. 17.

For details and reinforcement of Type D Barrier not shown, see Sheets No. 19 & 20.

For Conduit details, see Sheet No. 23.

For Pedestrian Fence details, see Sheet No. 24.

TYPICAL SLAB SECTION AND DETAILS

Detailed May 2024
Checked June 2024

Note: This drawing is not to scale. Follow dimensions.

STATE OF MISSOURI
JOSHUA D. JOLLIFF
NUMBER PE-2006002824
PROFESSIONAL ENGINEER
09/10/2024 1:18:59 PM
Joshua D. Jolliff
MO PE-2006002824

DATE PREPARED 9/10/2024

ROUTE	STATE
60	MO
DISTRICT	SHEET NO.
BR	18

COUNTY: WEBSTER
JOB NO.: J7P3425C
CONTRACT ID.:
PROJECT NO.:
BRIDGE NO.: A9137

DESCRIPTION	DATE

MISSOURI HIGHWAYS AND TRANSPORTATION COMMISSION
105 WEST CAPITOL
JEFFERSON CITY, MO 65102
1-888-ASK-MODOT (1-888-275-6636)

CMT
© Copyright CMT, Inc.
CRAWFORD, MURPHY & TILLY, INC.
1631 WEST ELFINDALE STREET
SPRINGFIELD, MO 65807 (417) 869-6009
ENGINEERING CORPORATION - 000631

IF A SEAL IS PRESENT ON THIS SHEET IT HAS BEEN ELECTRONICALLY SEALED AND DATED.

REV.

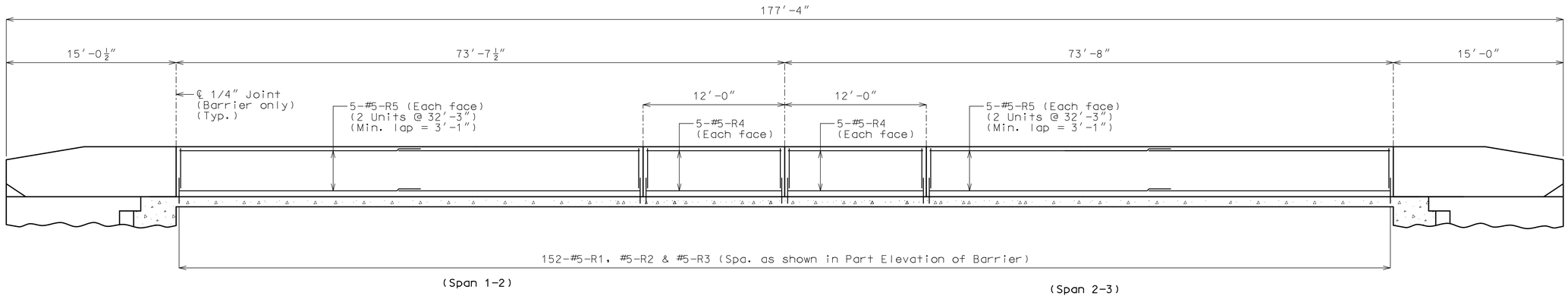

ELEVATION OF LEFT BARRIER

Longitudinal dimensions are horizontal.

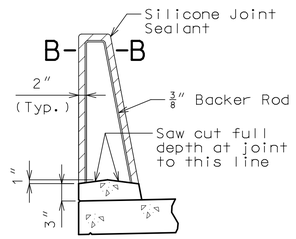

SECTION THRU
SAW CUT JOINT

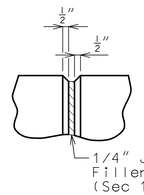

PART ELEVATION
AT FORMED JOINT

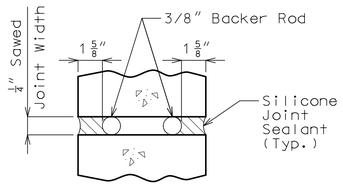

SECTION B-B

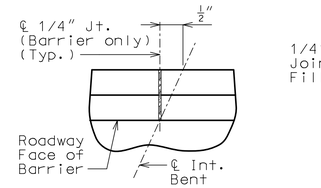

PART PLAN SHOWING
JOINT LOCATION

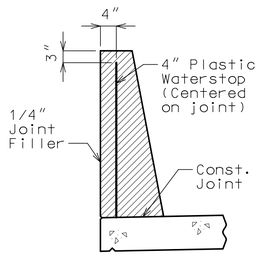

WATERSTOP DETAIL

Plastic waterstop shall be placed in all formed joints, except structures with superelevation, use on lower joints only.

Cost of plastic waterstop, complete in place, will be considered completely covered by the contract unit price for Type D Barrier.

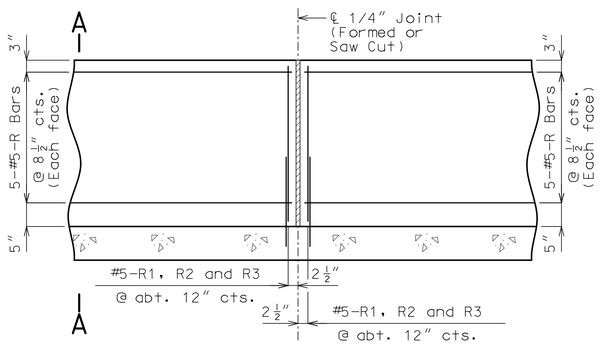

PART ELEVATION OF BARRIER

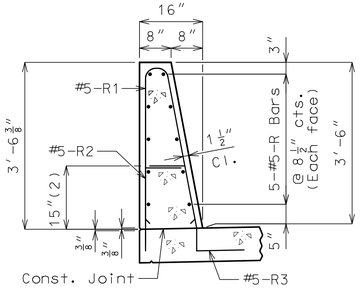

SECTION A-A

Use a minimum lap of 3′-1″ for #5 horizontal barrier bars.

The cross-sectional area above the slab is 3.52 square feet.

(2) To top of bar

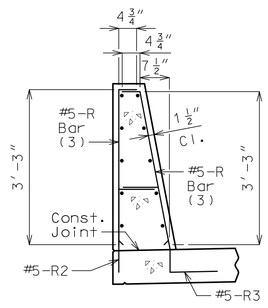

R-BAR PERMISSIBLE ALTERNATE SHAPE

(3) The R1 bar may be separated into two bars as shown, at the contractor's option, only when slip forming is not used. (All dimensions are out to out.)

General Notes:

Conventional forming shall be used. Saw cut joints may be used with conventional forming.

Top of barrier shall be built parallel to grade and barrier joints (except at end bents) normal to grade.

All exposed edges of barrier shall have either a 1/2-inch radius or a 3/8-inch bevel, unless otherwise noted.

Payment for all concrete and reinforcement, complete in place, will be considered completely covered by the contract unit price for Type D Barrier per linear foot.

Concrete in barrier shall be Class B-1.

Measurement of left barrier is to the nearest linear foot for each structure, measured along the outside top of slab from end of wing to end of wing.

Concrete traffic barrier delineators shall be placed on top of the barrier as shown on Missouri Standard Plan 617.10 and in accordance with Sec 617. Delineators on bridges with two-lane, two-way traffic shall have retroreflective sheeting on both sides. Concrete traffic barrier delineators will be considered completely covered by the contract unit price for Type D Barrier.

Joint sealant and backer rods shall be in accordance with Sec 717 for silicone joint sealant for saw cut and formed joints.

Plastic waterstop shall not be used with saw cut joints.

LEFT TYPE D BARRIER

Detailed May 2024
Checked June 2024

Note: This drawing is not to scale. Follow dimensions.

STATE OF MISSOURI
JOSHUA D. JOLLIFF
NUMBER PE-2006002824
PROFESSIONAL ENGINEER
09/10/2024 1:19:02 PM
Joshua D. Jolliff
MO PE-2006002824

DATE PREPARED: 9/10/2024
ROUTE: 60 | STATE: MO
DISTRICT: BR | SHEET NO.: 19
COUNTY: WEBSTER
JOB NO.: J7P3425C
CONTRACT ID.:
PROJECT NO.:
BRIDGE NO.: A9137

DATE	DESCRIPTION	REV.

IF A SEAL IS PRESENT ON THIS SHEET IT HAS BEEN ELECTRONICALLY SEALED AND DATED.

MISSOURI HIGHWAYS AND TRANSPORTATION COMMISSION
105 WEST CAPITOL
JEFFERSON CITY, MO 65102
1-888-ASK-MODOT (1-888-275-6636)

CMT
© Copyright CMT, Inc.
CRAWFORD, MURPHY & TILLY, INC.
1631 WEST ELFINDALE STREET
SPRINGFIELD, MO 65807 (417) 869-6009
ENGINEERING CORPORATION - 000631

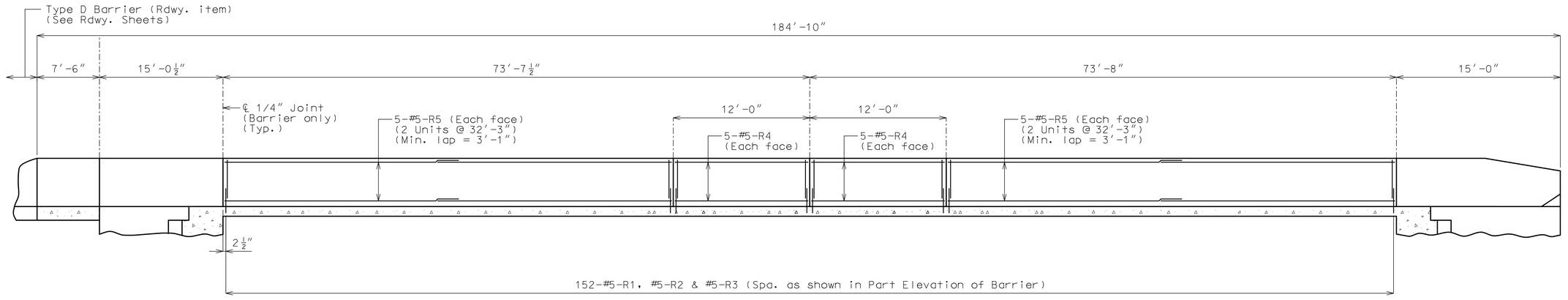

ELEVATION OF RIGHT BARRIER

Longitudinal dimensions are horizontal.

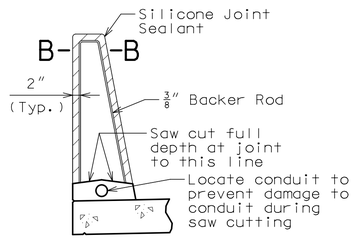

SECTION THRU
SAW CUT JOINT

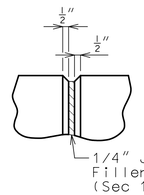

PART ELEVATION
AT FORMED JOINT

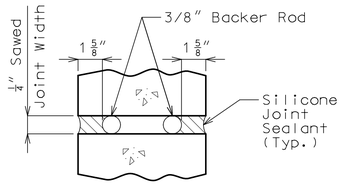

SECTION B-B

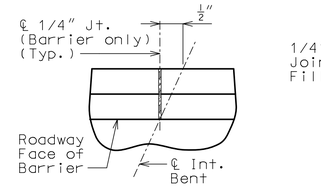

PART PLAN SHOWING
JOINT LOCATION

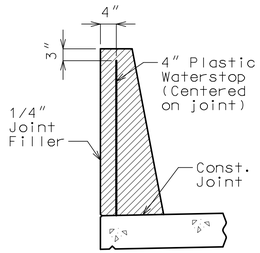

WATERSTOP DETAIL

Plastic waterstop shall be placed in all formed joints, except structures with superelevation, use on lower joints only.

Cost of plastic waterstop, complete in place, will be considered completely covered by the contract unit price for Type D Barrier.

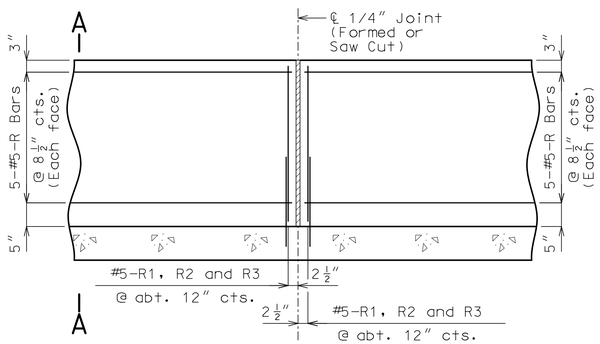

PART ELEVATION OF BARRIER

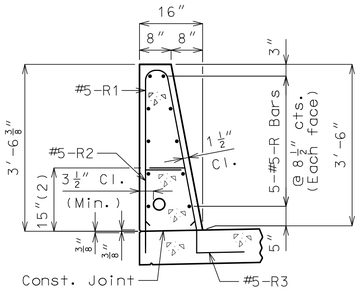

SECTION A-A

Use a minimum lap of 3′-1″ for #5 horizontal barrier bars.

The cross-sectional area above the slab is 3.52 square feet.

(2) To top of bar

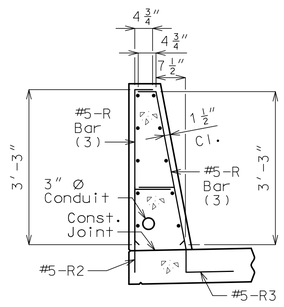

R-BAR PERMISSIBLE ALTERNATE SHAPE

(3) The R1 bar may be separated into two bars as shown, at the contractor's option, only when slip forming is not used. (All dimensions are out to out.)

General Notes:

Conventional forming shall be used. Saw cut joints may be used with conventional forming.

Top of barrier shall be built parallel to grade and barrier joints (except at end bents) normal to grade.

All exposed edges of barrier shall have either a 1/2-inch radius or a 3/8-inch bevel, unless otherwise noted.

Payment for all concrete and reinforcement, complete in place, will be considered completely covered by the contract unit price for Type D Barrier per linear foot.

Concrete in barrier shall be Class B-1.

Measurement of right barrier is to the nearest linear foot for each structure, measured along the outside top of slab from end of approach slab to end of wing.

Concrete traffic barrier delineators shall be placed on top of the barrier as shown on Missouri Standard Plan 617.10 and in accordance with Sec 617. Delineators on bridges with two-lane, two-way traffic shall have retroreflective sheeting on both sides. Concrete traffic barrier delineators will be considered completely covered by the contract unit price for Type D Barrier.

Joint sealant and backer rods shall be in accordance with Sec 717 for silicone joint sealant for saw cut and formed joints.

Plastic waterstop shall not be used with saw cut joints.

For Conduit details, see Sheet No. 23.

RIGHT TYPE D BARRIER

Detailed May 2024
Checked June 2024

Note: This drawing is not to scale. Follow dimensions.

STATE OF MISSOURI
JOSHUA D. JOLLIFF
NUMBER PE-2006002824
PROFESSIONAL ENGINEER
09/10/2024 1:19:05 PM
Joshua D. Jolliff
MO PE-2006002824

DATE PREPARED: 9/10/2024
ROUTE: 60 | STATE: MO
DISTRICT: BR | SHEET NO.: 20
COUNTY: WEBSTER
JOB NO.: J7P3425C
CONTRACT ID.:
PROJECT NO.:
BRIDGE NO.: A9137

DESCRIPTION	DATE

MISSOURI HIGHWAYS AND TRANSPORTATION COMMISSION
105 WEST CAPITOL
JEFFERSON CITY, MO 65102
1-888-ASK-MODOT (1-888-275-6636)

CMT
© Copyright CMT, Inc.
CRAWFORD, MURPHY & TILLY, INC.
1631 WEST ELFINDALE STREET
SPRINGFIELD, MO 65807 (417) 869-6009
ENGINEERING CORPORATION - 000631

IF A SEAL IS PRESENT ON THIS SHEET IT HAS BEEN ELECTRONICALLY SEALED AND DATED.

REV.

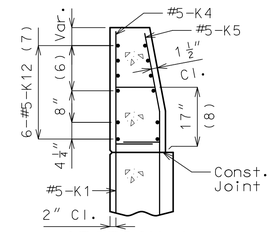

SECTION A-A

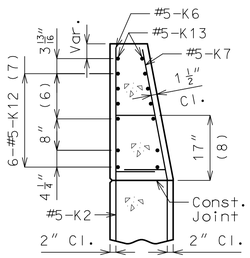

SECTION B-B

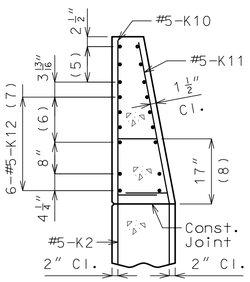

SECTION C-C

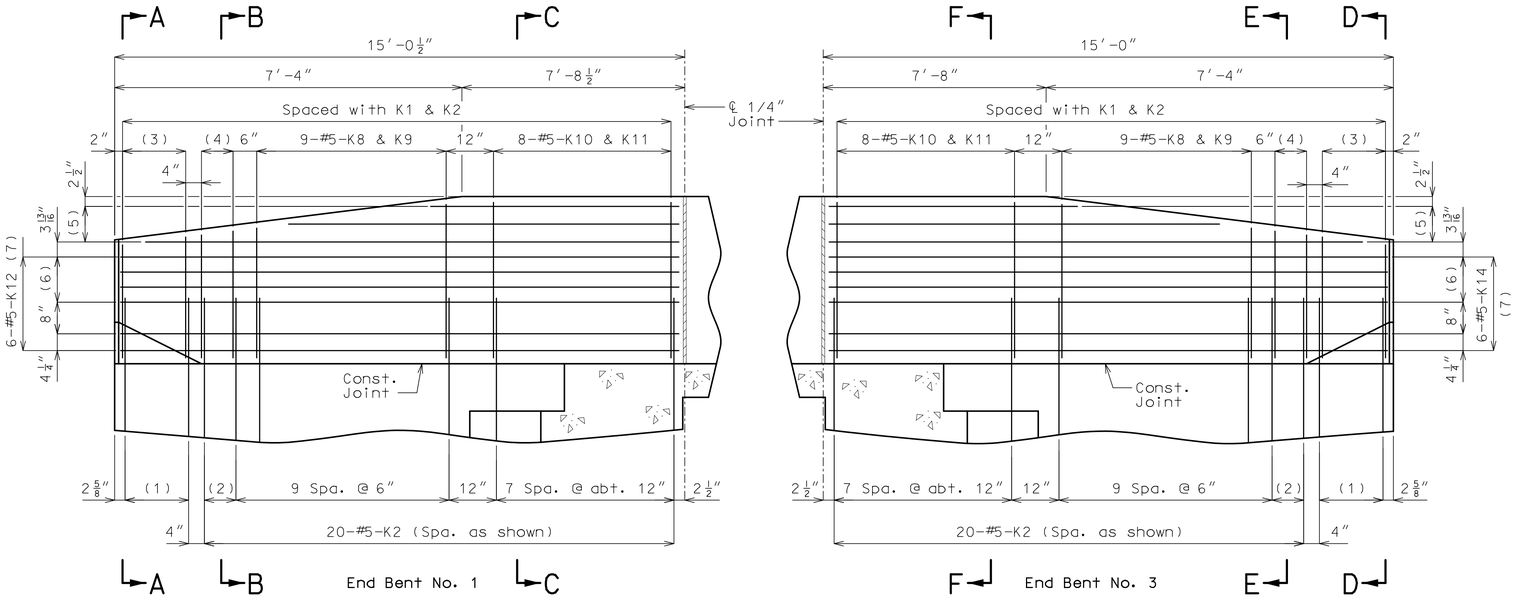

End Bent No. 1 PART ELEVATION End Bent No. 3

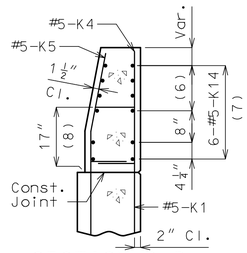

SECTION D-D

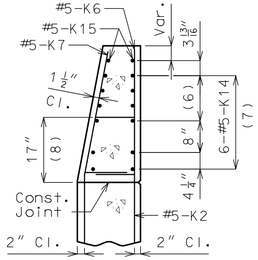

SECTION E-E

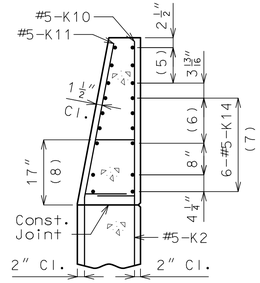

SECTION F-F

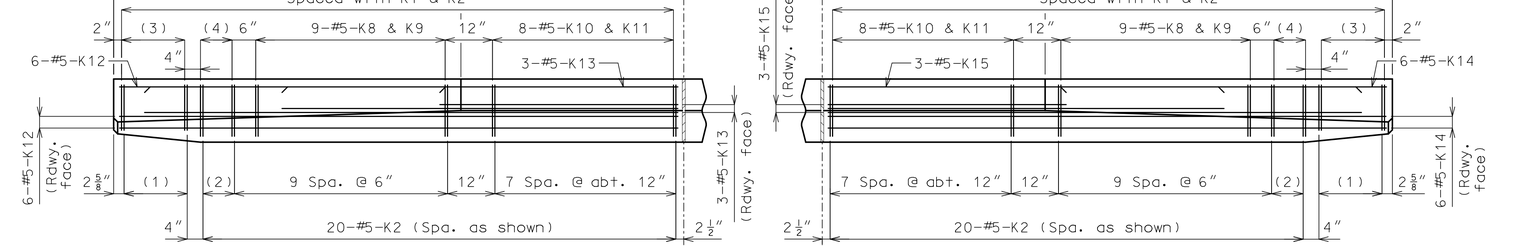

End Bent No. 1 PART PLAN End Bent No. 3

(1) 5-#5-K1 @ 4" cts.

(2) 2 spaces @ 4"

(3) 5-#5-K4 & K5

(4) 3-#5-K6 & K7

(5) 3-#5-K13 or K15 @ 4½" cts., each face

(6) 3 spaces @ 3 13/16"

(7) Spaced as shown, each face

(8) To top of bar

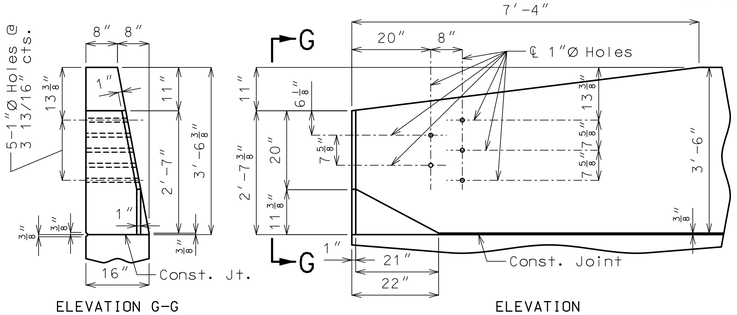

ELEVATION G-G ELEVATION

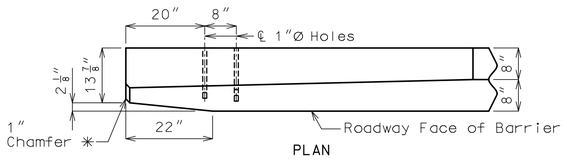

PLAN

* Transition to zero at Type A curb for gutter lines to match.

DETAILS OF BARRIER TRANSITION AND GUARD RAIL ATTACHMENT

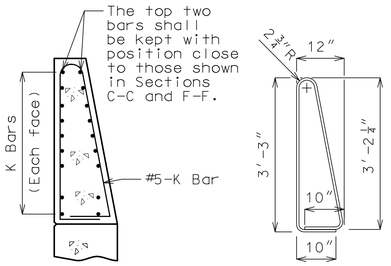

K10-K11 BAR PERMISSIBLE ALTERNATE SHAPE

(Other K bars not shown for clarity)

The K10-K11 bar combination may be furnished as one bar as shown, at the contractor's option.

All dimensions are out to out.

General Notes:

Concrete traffic barrier delineators shall be placed on top of the barrier as shown on Missouri Standard Plan 617.10 and in accordance with Sec 617. Delineators on bridges with two-lane, two-way traffic shall have retroreflective sheeting on both sides. Concrete traffic barrier delineators will be considered completely covered by the contract unit price for Type D Barrier.

Pedestrian Fence not shown for clarity. See Sheet No. 24 for Pedestrian Fence details.

Reinforcing Steel:

Minimum clearance to reinforcing steel shall be 1 1/2" except as shown for bars embedded into end bent.

LEFT TYPE D BARRIER AT END BENTS

Detailed May 2024
Checked June 2024

Note: This drawing is not to scale. Follow dimensions.

STATE OF MISSOURI
JOSHUA D. JOLLIFF
NUMBER PE-2006002824
PROFESSIONAL ENGINEER
09/10/2024 1:19:08 PM
Joshua D. Jolliff
MO PE-2006002824

DATE PREPARED 9/10/2024

ROUTE	STATE
60	MO
DISTRICT	SHEET NO.
BR	21

COUNTY WEBSTER

JOB NO. J7P3425C

CONTRACT ID.

PROJECT NO.

BRIDGE NO. A9137

DESCRIPTION	DATE

MISSOURI HIGHWAYS AND TRANSPORTATION COMMISSION
105 WEST CAPITOL
JEFFERSON CITY, MO 65102
1-888-ASK-MODOT (1-888-275-6636)

CMT
CRAWFORD, MURPHY & TILLY, INC.
1631 WEST ELFINDALE STREET
SPRINGFIELD, MO 65807 (417) 869-6009
ENGINEERING CORPORATION - 000631

©Copyright CMT, Inc.

IF A SEAL IS PRESENT ON THIS SHEET IT HAS BEEN ELECTRONICALLY SEALED AND DATED.

REV.

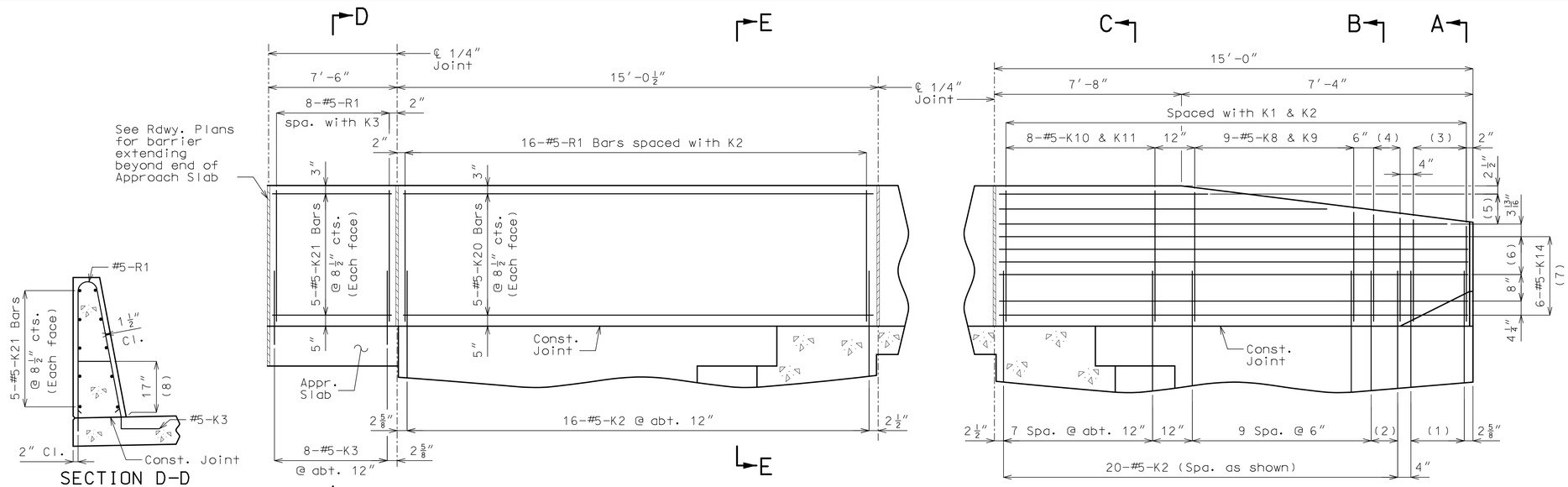

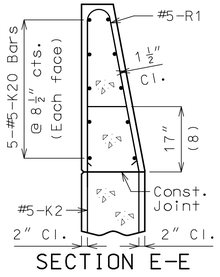

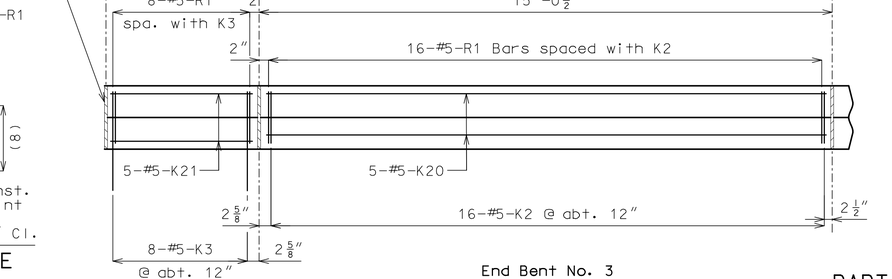

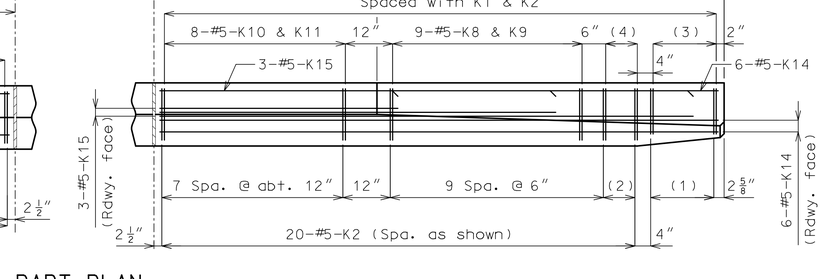

(1) 5-#5-K1 @ 4″ cts.

(2) 2 spaces @ 4″

(3) 5-#5-K4 & K5

(4) 3-#5-K6 & K7

(5) 3-#5-K15 @ 4½″ cts., each face

(6) 3 spaces @ 3 13/16″

(7) Spaced as shown, each face

(8) To top of bar

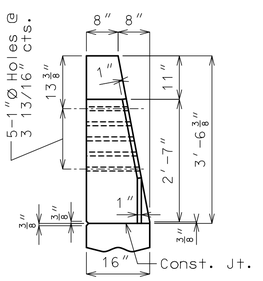

ELEVATION G-G

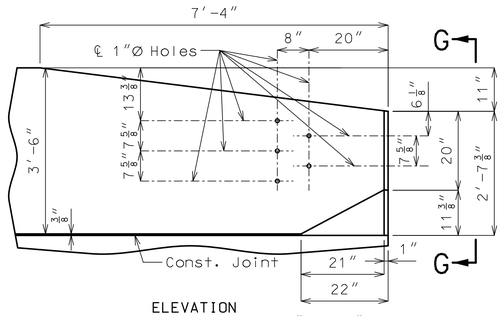

ELEVATION

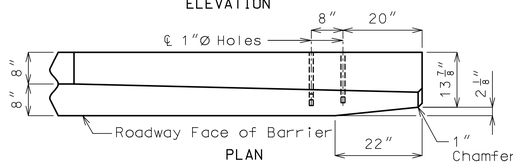

PLAN

✳ Transition to zero at Type A curb for gutter lines to match.

DETAILS OF BARRIER TRANSITION AND GUARD RAIL ATTACHMENT

(North side only)

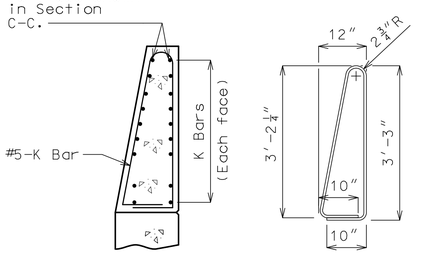

K10-K11 BAR PERMISSIBLE ALTERNATE SHAPE

(Other K bars not shown for clarity)

The K10-K11 bar combination may be furnished as one bar as shown, at the contractor's option.

All dimensions are out to out.

General Notes:

Concrete traffic barrier delineators shall be placed on top of the barrier as shown on Missouri Standard Plan 617.10 and in accordance with Sec 617. Delineators on bridges with two-lane, two-way traffic shall have retroreflective sheeting on both sides. Concrete traffic barrier delineators will be considered completely covered by the contract unit price for Type D Barrier.

Conduit not shown for clarity. See Sheet No. 23 for Conduit details.

Pedestrian Fence not shown for clarity. See Sheet No. 24 for Pedestrian Fence details.

Reinforcing Steel:

Minimum clearance to reinforcing steel shall be 1 1/2″ except as shown for bars embedded into end bent.

RIGHT TYPE D BARRIER AT END BENTS

Detailed May 2024
Checked June 2024

Note: This drawing is not to scale. Follow dimensions.

STATE OF MISSOURI
JOSHUA D. JOLLIFF
NUMBER PE-2006002824
PROFESSIONAL ENGINEER
09/10/2024 1:19:11 PM
Joshua D. Jolliff
MO PE-2006002824

DATE PREPARED: 9/10/2024
ROUTE: 60 | STATE: MO
DISTRICT: BR | SHEET NO.: 22
COUNTY: WEBSTER
JOB NO.: J7P3425C
CONTRACT ID.:
PROJECT NO.:
BRIDGE NO.: A9137

DESCRIPTION | DATE

MISSOURI HIGHWAYS AND TRANSPORTATION COMMISSION
105 WEST CAPITOL
JEFFERSON CITY, MO 65102
1-888-ASK-MODOT (1-888-275-6636)

CMT
CRAWFORD, MURPHY & TILLY, INC.
1631 WEST ELFINDALE STREET
SPRINGFIELD, MO 65807 (417) 869-6009
ENGINEERING CORPORATION - 000631

©Copyright CMT, Inc.

IF A SEAL IS PRESENT ON THIS SHEET IT HAS BEEN ELECTRONICALLY SEALED AND DATED.

REV.

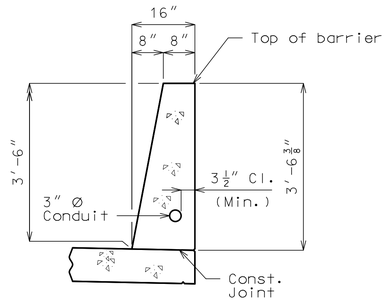

TYPE D BARRIER

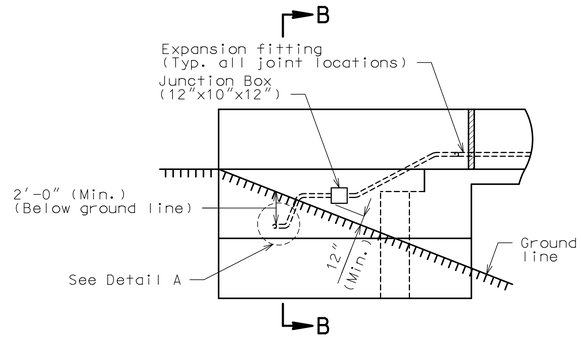

PART ELEVATION SHOWING
JUNCTION BOX IN WING

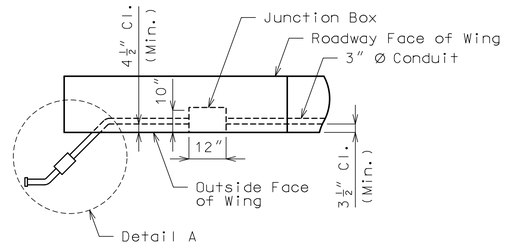

PART PLAN OF TYPE D BARRIER CONDUIT
SYSTEM PLACEMENT

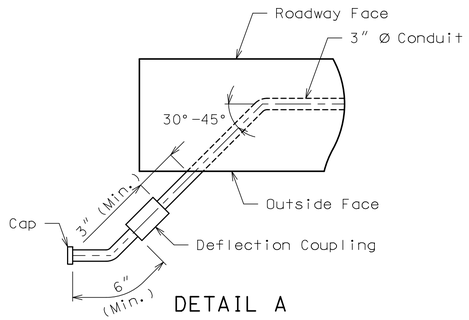

DETAIL A

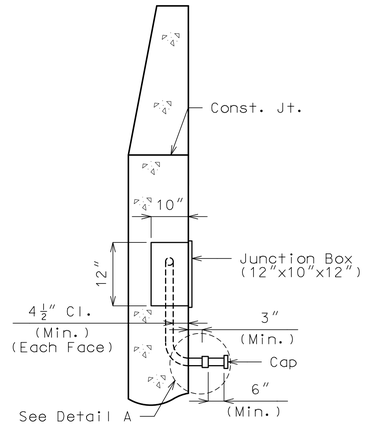

PART SECTION B-B

General Notes:

All conduits shall be rigid nonmetallic schedule 40 heavy wall polyvinyl chloride (PVC) with 3 1/2 inch minimum cover in barrier and 4 1/2 inch minimum cover in abutment wing. Each section of conduit shall bear the Underwriters Laboratories (UL) label.

Shift reinforcing steel in field where necessary to clear conduit and junction boxes.

Expansion fittings shall be placed as shown and set in accordance with the manufacturer's requirements and based on the air temperature at the time of setting given an estimated total expansion movement of 1 inch at filled joints using a maximum temperature range of 120°F and a maximum temperature of 110°F.

Drainage shall be provided at low points or other critical locations of all conduits and all junction boxes in accordance with Sec 707. All conduits shall be sloped to drain where possible.

All end bent junction boxes shall be PVC molded in accordance with Sec 1062 and designed for flush mounting. The conduit terminations shall be permanent or separable. The terminations and covers shall be of watertight construction and shall meet requirements for NEMA 4 or NEMA 4X enclosure.

Junction box size shown on plan may require special order. Smaller junction box may be substituted if junction box meets conduit installation, clearance and project requirements.

Payment for furnishing and installing Conduit System, complete in place, will be considered completely covered by the contract lump sum price for Conduit System on Structure.

For details and reinforcement of Type D Barrier not shown, see Sheets No. 20 & 22.

Pedestrian Fence not shown for clarity. See Sheet No. 24 for Pedestrian Fence details.

MoDOT Construction Personnel: Indicate in field and on bridge plans for future work the exact loaction of buried conduit at ends of bridge that are capped and not immediately used.

CONDUIT DETAILS

Detailed May 2024
Checked June 2024

Note: This drawing is not to scale. Follow dimensions.

STATE OF MISSOURI
JOSHUA D. JOLLIFF
NUMBER PE-2006002824
PROFESSIONAL ENGINEER
09/10/2024 1:19:13 PM
Joshua D. Jolliff
MO PE-2006002824

DATE PREPARED 9/10/2024

ROUTE	STATE
60	MO
DISTRICT	SHEET NO.
BR	23

COUNTY WEBSTER
JOB NO. J7P3425C
CONTRACT ID.
PROJECT NO.
BRIDGE NO. A9137

DESCRIPTION	DATE

MISSOURI HIGHWAYS AND TRANSPORTATION COMMISSION
105 WEST CAPITOL
JEFFERSON CITY, MO 65102
1-888-ASK-MODOT (1-888-275-6636)

CMT
CRAWFORD, MURPHY & TILLY, INC.
1631 WEST ELFINDALE STREET
SPRINGFIELD, MO 65807 (417) 869-6009
ENGINEERING CORPORATION - 000631

© Copyright CMT, Inc.

IF A SEAL IS PRESENT ON THIS SHEET IT HAS BEEN ELECTRONICALLY SEALED AND DATED.

REV.

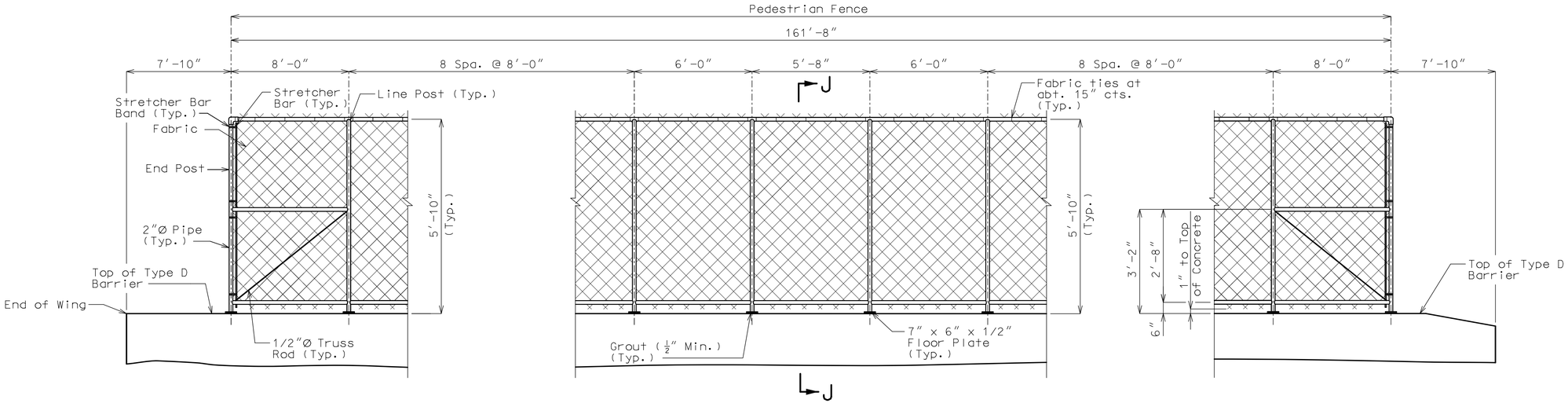

ELEVATION OF FENCE

(Right barrier shown, left barrier similar by 180°rotation)
(Looking west)

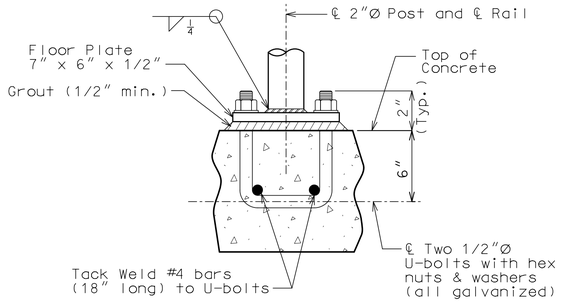

POST CONNECTION (TYPICAL)

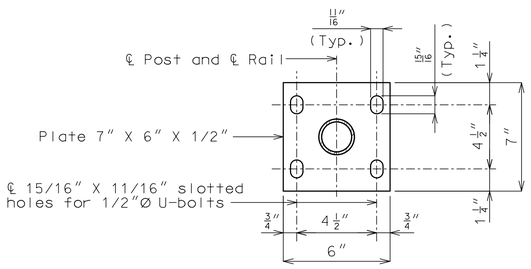

PLAN OF FLOOR PLATE

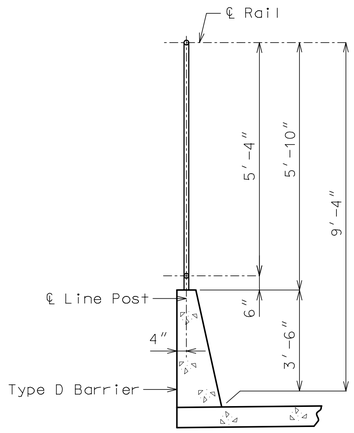

SECTION J-J

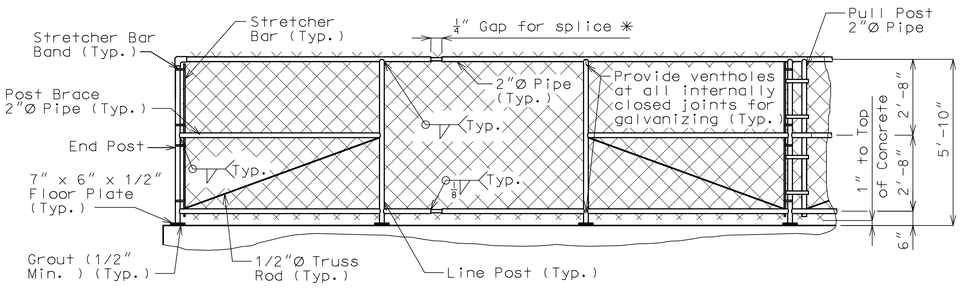

ELEVATION AT SPLICE

✳ At about 30′-0″ centers with at least one splice gap between pull or end posts.

GENERAL NOTES:

Pedestrian Fence (Structures) shall be in accordance with Sec 1043 except all fabric shall have the top and bottom edges knuckled.

All posts shall be vertical. Grout of 1/2″ minimum thickness shall be placed under floor plates to provide for vertical alignment of posts.

Payment for furnishing, galvanizing and erecting the fence and frame complete with anchor bolts and washers will be considered completely covered by the contract unit price for Pedestrian Fence (Structures) per linear foot.

Dimensions of pedestrian guard fence are measured horizontally.

The maximum spacing allowed between pull posts and end posts is 100 ft. Post brace and 1/2″Ø truss rod are required for panels adjacent to pull posts and end posts only.

Connect the lower end of the 1/2″Ø truss rod to the bottom of the pull posts and end posts to which the stretcher bar is attached.

Core wire size for wire fabric shall be 6 gage minimum.

PEDESTRIAN CHAIN LINK FENCE DETAILS

Detailed May 2024
Checked June 2024

Note: This drawing is not to scale. Follow dimensions.

STATE OF MISSOURI
JOSHUA D. JOLLIFF
NUMBER PE-2006002824
PROFESSIONAL ENGINEER
09/10/2024 1:19:17 PM
Joshua D. Jolliff
MO PE-2006002824

DATE PREPARED: 9/10/2024
ROUTE: 60 | STATE: MO
DISTRICT: BR | SHEET NO.: 24
COUNTY: WEBSTER
JOB NO.: J7P3425C
CONTRACT ID.:
PROJECT NO.:
BRIDGE NO.: A9137

IF A SEAL IS PRESENT ON THIS SHEET IT HAS BEEN ELECTRONICALLY SEALED AND DATED.

REV.	DESCRIPTION	DATE

MISSOURI HIGHWAYS AND TRANSPORTATION COMMISSION
105 WEST CAPITOL
JEFFERSON CITY, MO 65102
1-888-ASK-MODOT (1-888-275-6636)

CMT
© Copyright CMT, Inc.
CRAWFORD, MURPHY & TILLY, INC.
1631 WEST ELFINDALE STREET
SPRINGFIELD, MO 65807 (417) 869-6009
ENGINEERING CORPORATION - 000631

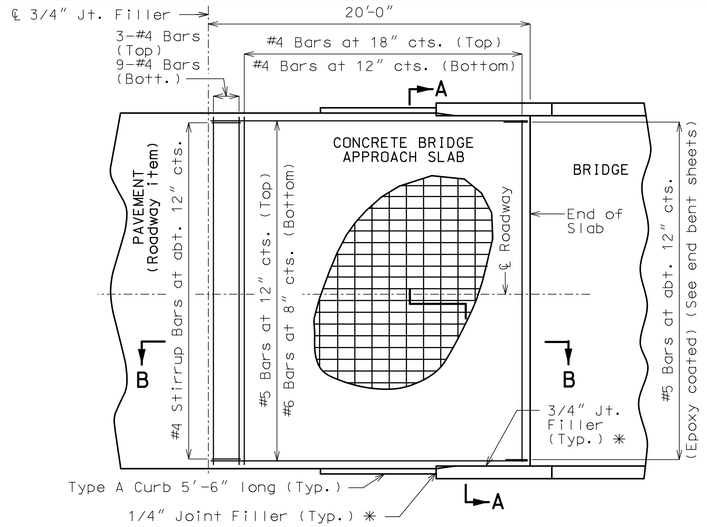

PART PLAN AT END BENT NO. 1
(Squared structure shown, skewed structure similar)

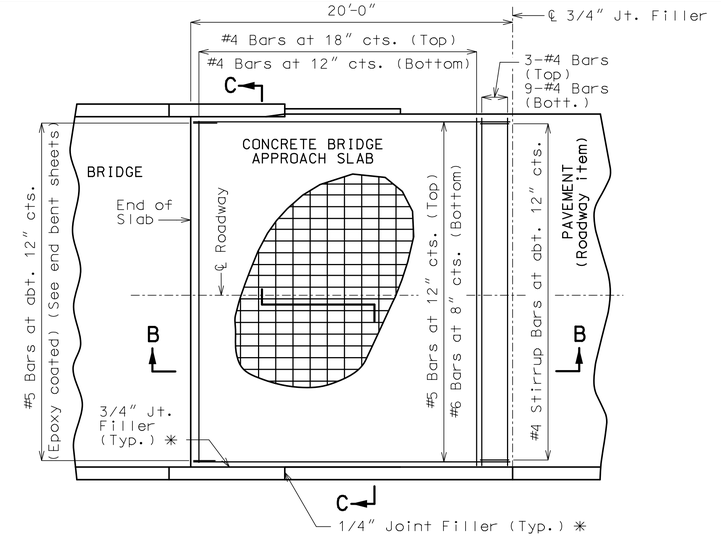

PART PLAN AT END BENT NO. 3
(Squared structure shown, skewed structure similar)

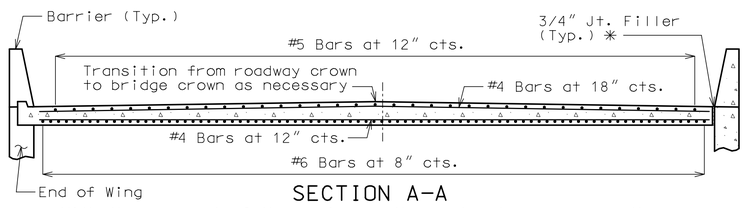

SECTION A-A

With the approval of the engineer, the contractor may crown the bottom of the approach slab to match the crown of the roadway surface.

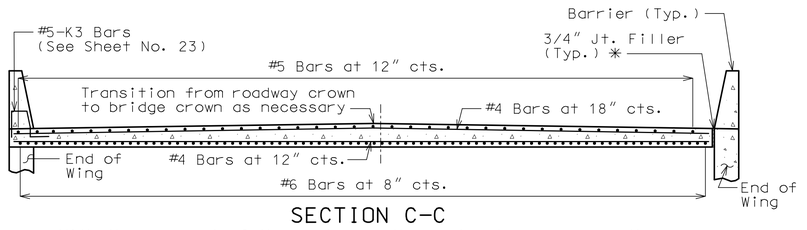

SECTION C-C

With the approval of the engineer, the contractor may crown the bottom of the approach slab to match the crown of the roadway surface.

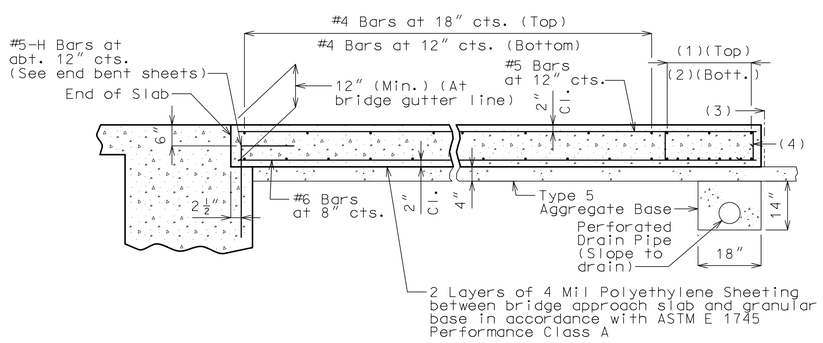

SECTION B-B
(Integral end bent)

(1) 3-#4 Bars

(2) 9-#4 Bars

(3) ℄ 3/4" Jt. Filler

(4) #4 Stirrup Bars at abt. 12" cts.; 2'-0"x 8" (Min.) out to out; Actual length = 5'-10" (Min.); 90° stirrup hook at bottom; Stirrup height (8") and actual length vary due to crown.

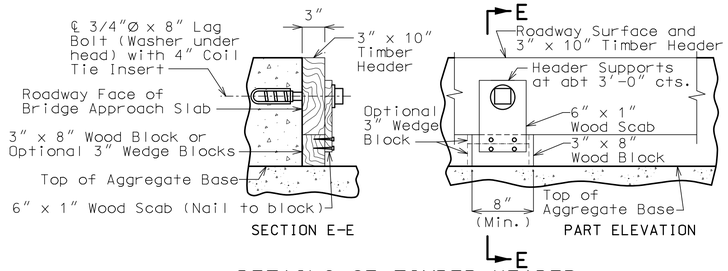

DETAILS OF TIMBER HEADER
Remove timber header when concrete pavement is placed.

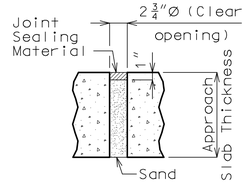

UNDERSEAL ACCESS HOLE DETAIL
(If required)

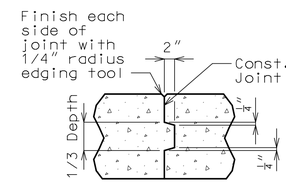

CONSTRUCTION JOINT DETAIL

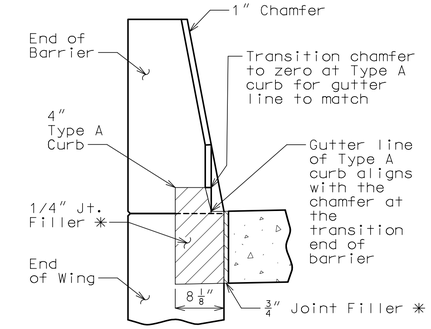

SECTION BETWEEN CURB AND BARRIER

General Notes:

The contractor shall pour and satisfactorily finish the bridge slab before placing the bridge approach slab.

All concrete for the bridge approach slab shall be in accordance with Sec 503 (f'c = 4,000 psi).

The reinforcing steel in the bridge approach slab shall be epoxy coated Grade 60 with fy = 60,000 psi.

Longitudinal construction joints in bridge approach slab shall be aligned with longitudinal construction joints in bridge slab.

Minimum clearance to reinforcing steel shall be 1 1/2", unless otherwise shown.

The reinforcing steel in the bridge approach slab shall be continuous. The transverse reinforcing steel may be made continuous by providing a minimum lap splice of 23 inches for #4 bars, or by mechanical bar splice.

Mechanical bar splices shall be in accordance with Sec 710.

All joint filler shall be in accordance with Sec 1057 for preformed fiber expansion joint filler except as noted.

Payment for furnishing all materials, labor and excavation necessary to construct the concrete bridge approach slab, including the timber header, underdrain, Type 5 aggregate base, joint filler, and all other appurtenances and incidental work as shown on this sheet, complete in place, will be considered completely covered by the contract unit price for Bridge Approach Slab (Minor) per square yard.

See Missouri Standard Plan 609.00 for details of Type A curb.

Drain pipe may be either 6" diameter corrugated metallic-coated pipe underdrain, 4" diameter corrugated polyvinyl chloride (PVC) drain pipe, or 4" diameter corrugated polyethylene (PE) drain pipe.

✳ Seal joint between vertical face of approach slab and wing with sealant in accordance with Sec 717 for silicone joint sealant for saw cut and formed joints.

BRIDGE APPROACH SLAB (MINOR)

Detailed May 2024
Checked June 2024

Note: This drawing is not to scale. Follow dimensions.

STATE OF MISSOURI
JOSHUA D. JOLLIFF
NUMBER PE-2006002824
PROFESSIONAL ENGINEER
09/10/2024 1:19:20 PM
Joshua D. Jolliff
MO PE-2006002824

DATE PREPARED 9/10/2024

ROUTE	STATE
60	MO
DISTRICT	SHEET NO.
BR	25

COUNTY: WEBSTER
JOB NO.: J7P3425C
CONTRACT ID.:
PROJECT NO.:
BRIDGE NO.: A9137

DATE	DESCRIPTION	REV.

IF A SEAL IS PRESENT ON THIS SHEET IT HAS BEEN ELECTRONICALLY SEALED AND DATED.

MISSOURI HIGHWAYS AND TRANSPORTATION COMMISSION
105 WEST CAPITOL
JEFFERSON CITY, MO 65102
1-888-ASK-MODOT (1-888-275-6636)

CMT
CRAWFORD, MURPHY & TILLY, INC.
1631 WEST ELFINDALE STREET
SPRINGFIELD, MO 65807 (417) 869-6009
ENGINEERING CORPORATION - 000631
©Copyright CMT, Inc.

BILL OF REINFORCING STEEL

NO. REQ'D.	MARK NO. SIZE	MARK	LOCATION	EPOXY (E)	SHAPE NO.	STIRRUP (S)	SUBSTR. (X)	VARIES (V)	NO. EACH	DIMENSIONS B FT.	B IN.	C FT.	C IN.	D FT.	D IN.	E FT.	E IN.	F FT.	F IN.	H FT.	H IN.	K FT.	K IN.	NOMINAL LENGTH FT.	NOMINAL LENGTH IN.	ACTUAL LENGTH FT.	ACTUAL LENGTH IN.	WEIGHT LBS.
			SUBSTRUCTURE																									
			INT. BENT 2																									
16	7	D200	BEAM		20		X			2	6.000													2	6	2	6	82
7	8	H201	BEAM		20		X			48	10.000													48	10	48	10	913
7	8	H202	BEAM		18		X			48	10.000													50	8	50	8	947
4	6	H203	BEAM		20		X			10	5.000													10	5	10	5	63
12	6	H204	BEAM		20		X			48	10.000													48	10	48	10	881
16	6	H205	BEAM		10	S	X					12.000		3	7.500									5	8	5	4	129
28	6	U201	BEAM		13	S	X			2	6.250	4	3.000	2	6.250	4	3.000							14	11	14	5	607
14	6	U202	BEAM		10	S	X					4	3.000	3	9.000									12	3	12	0	253
2	6	U203	BEAM		10	S	X					4	8.500	3	9.000									13	2	12	11	39
28	6	U204	BEAM		13	S	X			3	9.000	4	3.000	3	9.000	4	3.000							17	4	16	11	712
11	6	U205	BEAM		13	S	X			3	9.000	4	8.500	3	9.000	4	8.500							18	3	17	10	295
4	4	U206	BEAM		10	S	X					12.000		3	9.000									5	9	5	7	15
72	9	V201	COLUMN		20		X			32	3.000													32	3	32	3	6200
72	9	V202	COLUMN		17		X			7	5.000													8	8	8	8	1522
116	4	P201	COLUMN		16		X			3	3.000	2	5.000											12	8	12	8	982
48	8	D201	FOOTING		20		X			7	9.000													7	9	7	9	761
8	8	D202	FOOTING		10		X					5	2.500	7	3.000									17	8	17	3	284
			SUPERSTRUCTURE																									
			END BENT 1																									
4	6	F101	DIAPHRAGM	E	21					2	7.500	5	6.000							2	7.500	1.000		8	2	8	0	49
4	6	F102	DIAPHRAGM	E	14							5	5.000	2	7.500					2	7.500	1.000		8	1	8	0	49
9	6	F103	WING BRACE	E	15					2	3.000	5	4.500		14.000	10.000		9.750		18.750		19.500		8	10	8	9	119
9	6	F104	WING BRACE	E	15						14.000	5	2.000	2	3.000	19.500		18.750		9.750		10.000		8	7	8	6	115
48	5	H101	DIAPHRAGM	E	19					2	0.000		15.000											3	3	3	2	159
4	7	H102	BEAM	E	20					50	5.000													50	5	50	5	413
4	7	H103	BEAM	E	20					50	5.000													50	5	50	5	413
4	6	H104	BEAM	E	20					50	5.000													50	5	50	5	303
4	6	H105	BEAM	E	20					10	5.000													10	5	10	5	63
4	6	H106	DIAPHRAGM	E	20					50	5.000													50	5	50	5	303
12	6	H107	DIAPHRAGM	E	20					9	6.000													9	6	9	6	172
4	6	H108	DIAPHRAGM	E	20					7	0.000													7	0	7	0	43
6	6	H109	DIAPHRAGM	E	20					3	0.000													3	0	3	0	28
2	6	H110	DIAPHRAGM	E	20						22.000													1	10	1	10	6
4	7	H111	DIAPHRAGM	E	20					50	5.000													50	5	50	5	413
5	5	H112	DIAPHRAGM	E	20					5	9.000													5	9	5	9	30
8	8	H151	WING WALL	E	20					14	6.000													14	6	14	6	310
18	6	H152	WING WALL	E	20					13	8.000													13	8	13	8	370
8	8	H153	WING WALL	E	20					14	6.000													14	6	14	6	310
18	6	H154	WING WALL	E	20					13	8.000													13	8	13	8	370
64	6	U101	DIAPHRAGM	E	19	S				3	5.000	4	7.000											8	0	7	11	762
38	5	U102	DIAPHRAGM	E	50	S				2	10.000	2	3.000											9	1	8	10	351
38	6	U103	DIAPHRAGM	E	19	S				2	2.000	2	3.000											4	5	4	4	248
32	5	U104	BEAM	E	50	S				5	5.000	2	9.000											14	9	14	6	484
2	4	U105	BEAM	E	10	S						2	8.000	2	9.000									8	1	7	11	11

BILL OF REINFORCING STEEL

NO. REQ'D.	MARK NO. SIZE	MARK	LOCATION	EPOXY (E)	SHAPE NO.	STIRRUP (S)	SUBSTR. (X)	VARIES (V)	NO. EACH	DIMENSIONS B FT.	B IN.	C FT.	C IN.	D FT.	D IN.	E FT.	E IN.	F FT.	F IN.	H FT.	H IN.	K FT.	K IN.	NOMINAL LENGTH FT.	NOMINAL LENGTH IN.	ACTUAL LENGTH FT.	ACTUAL LENGTH IN.	WEIGHT LBS.
3	4	U106	BEAM	E	10	S						3	1.500	2	9.000									9	0	8	10	18
24	4	U107	BEAM	E	13	S				2	9.000	2	8.000	2	9.000	2	8.000							11	7	11	4	182
4	4	U108	BEAM	E	13	S				2	9.000	3	1.500	2	9.000	3	1.500							12	6	12	3	33
30	6	V101	DIAPHRAGM	E	20					2	2.000													2	2	2	2	98
12	5	V102	BEAM	E	17					5	5.000													6	0	6	0	76
2	6	V151	WING WALL	E	20					6	3.000													6	3	6	3	19
24	6	V152	WING WALL	E	20			V	2	6	7.500													6	8	6	8	
			INCR. = 0.364"							6	3.500													6	4	6	4	235
2	6	V153	WING WALL	E	20					6	2.000													6	2	6	2	19
24	6	V154	WING WALL	E	20			V	2	6	6.750													6	7	6	7	
			INCR. = 0.364"							6	2.750													6	3	6	3	232
			END BENT 3																									
4	6	F301	DIAPHRAGM	E	21					2	7.500	5	6.000							2	7.500	1.000		8	2	8	0	49
4	6	F302	DIAPHRAGM	E	14							5	5.000	2	7.500					2	7.500	1.000		8	1	8	0	49
9	6	F303	WING BRACE	E	15					2	3.000	5	4.500		14.000	10.000		9.750		18.750		19.500		8	10	8	9	119
9	6	F304	WING BRACE	E	15						14.000	5	2.000	2	3.000	19.500		18.750		9.750		10.000		8	7	8	6	115
48	5	H301	DIAPHRAGM	E	19					2	0.000		15.000											3	3	3	2	159
4	7	H302	BEAM	E	20					50	5.000													50	5	50	5	413
4	7	H303	BEAM	E	20					50	5.000													50	5	50	5	413
4	6	H304	BEAM	E	20					50	5.000													50	5	50	5	303
4	6	H305	BEAM	E	20					10	5.000													10	5	10	5	63
4	6	H306	DIAPHRAGM	E	20					50	5.000													50	5	50	5	303
12	6	H307	DIAPHRAGM	E	20					9	6.000													9	6	9	6	172
4	6	H308	DIAPHRAGM	E	20					7	0.000													7	0	7	0	43
6	6	H309	DIAPHRAGM	E	20					3	0.000													3	0	3	0	28
2	6	H310	DIAPHRAGM	E	20						22.000													1	10	1	10	6
4	7	H311	BEAM	E	20					50	5.000													50	5	50	5	413
5	5	H312	BEAM	E	20					5	9.000													5	9	5	9	30
8	8	H351	WING WALL	E	20					14	6.000													14	6	14	6	310
18	6	H352	WING WALL	E	20					13	8.000													13	8	13	8	370
8	8	H353	WING WALL	E	20					14	6.000													14	6	14	6	310
18	6	H354	WING WALL	E	20					13	8.000													13	8	13	8	370
64	6	U301	DIAPHRAGM	E	19	S				3	5.000	4	7.000											8	0	7	11	762
38	5	U302	DIAPHRAGM	E	50	S				2	10.000	2	3.000											9	1	8	10	351
38	6	U303	DIAPHRAGM	E	19	S				2	2.000	2	3.000											4	5	4	4	248
32	5	U304	BEAM	E	50	S				5	5.000	2	9.000											14	9	14	6	484
2	4	U305	BEAM	E	10	S														2	8.000	2	9.000	8	1	7	11	11
3	4	U306	BEAM	E	10	S														3	1.500	2	9.000	9	0	8	10	18
24	4	U307	BEAM	E	13	S				2	9.000	2	8.000	2	9.000	2	8.000							11	7	11	4	182
4	4	U308	BEAM	E	13	S				2	9.000	3	1.500	2	9.000	3	1.500							12	6	12	3	33
30	6	V301	DIAPHRAGM	E	20					2	2.000													2	2	2	2	98
12	5	V302	BEAM	E	17					5	5.000													6	0	6	0	76
2	6	V351	WING WALL	E	20					6	10.000													6	10	6	10	21
24	6	V352	WING WALL	E	20			V	2	6	10.250													6	11	6	11	
			INCR. = 0.25"							6	7.500													6	8	6	8	245
2	6	V353	WING WALL	E	20					6	10.000													6	10	6	10	21
24	6	V354	WING WALL	E	20			V	2	6	10.750													6	11	6	11	
			INCR. = 0.25"							6	8.000													6	8	6	8	245

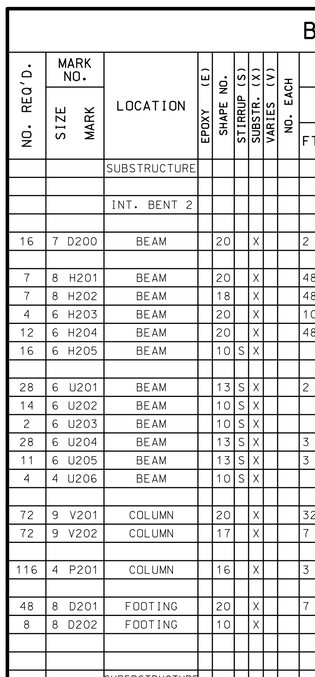

STIRRUP HOOK DIMENSIONS			
GRADES 40 – 50 – 60 KSI			
BAR SIZE	D (IN.)	90° HOOK HOOK A OR G	135° HOOK HOOK A OR G	135° HOOK APPROX. H
#4	2"	4 1/2"	4 1/2"	3"
#5	2 1/2"	6"	5 1/2"	3 3/4"
#6	4 1/2"	12"	8"	4 1/2"

NOTE: UNLESS OTHERWISE NOTED, DIAMETER "D" IS THE SAME FOR ALL BENDS AND HOOKS ON A BAR.

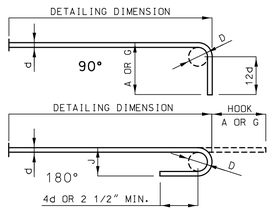

END HOOK DIMENSIONS				
		ALL GRADES		
BAR SIZE	D (IN.)	180° HOOKS A OR G	180° HOOKS J	90° HOOKS A OR G
#3	2 1/4"	5"	3"	6"
#4	3"	6"	4"	8"
#5	3 3/4"	7"	5"	10"
#6	4 1/2"	8"	6"	12"
#7	5 1/4"	10"	7"	14"
#8	6"	11"	8"	16"
#9	9 1/2"	15"	11 3/4"	19"
#10	10 3/4"	17"	13 1/4"	22"
#11	12"	19"	14 3/4"	2'-0"
#14	18 1/4"	2'-3"	21 3/4"	2'-7"

NOTE:
ALL STANDARD HOOKS AND BENDS OTHER THAN 180 DEGREE ARE TO BE BENT WITH SAME PROCEDURE AS FOR 90 DEGREE STANDARD HOOKS.

HOOKS AND BENDS SHALL BE IN ACCORDANCE WITH THE PROCEDURES AS SHOWN ON THIS SHEET.

E = EPOXY COATED REINFORCEMENT.
S = STIRRUP.
X = BAR IS INCLUDED IN SUBSTRUCTURE QUANTITIES.
V = BAR DIMENSIONS VARY IN EQUAL INCREMENTS BETWEEN DIMENSIONS SHOWN ON THIS LINE AND THE FOLLOWING LINE.
NO. EA. = NUMBER OF BARS OF EACH LENGTH.

NOMINAL LENGTHS ARE BASED ON OUT TO OUT DIMENSIONS SHOWN IN BENDING DIAGRAMS AND ARE LISTED FOR FABRICATORS USE. (NEAREST INCH)

ACTUAL LENGTHS ARE MEASURED ALONG CENTERLINE BAR TO THE NEAREST INCH.

PAYWEIGHTS ARE BASED ON ACTUAL LENGTHS.

FOUR ANGLE OR CHANNEL SPACERS ARE REQUIRED FOR EACH COLUMN SPIRAL. SPACERS ARE TO BE PLACED ON INSIDE OF SPIRALS. LENGTH AND WEIGHT OF COLUMN SPIRALS DO NOT INCLUDE SPLICES OR SPACERS.

REINFORCING STEEL (GRADE 60) FY = 60,000 PSI.

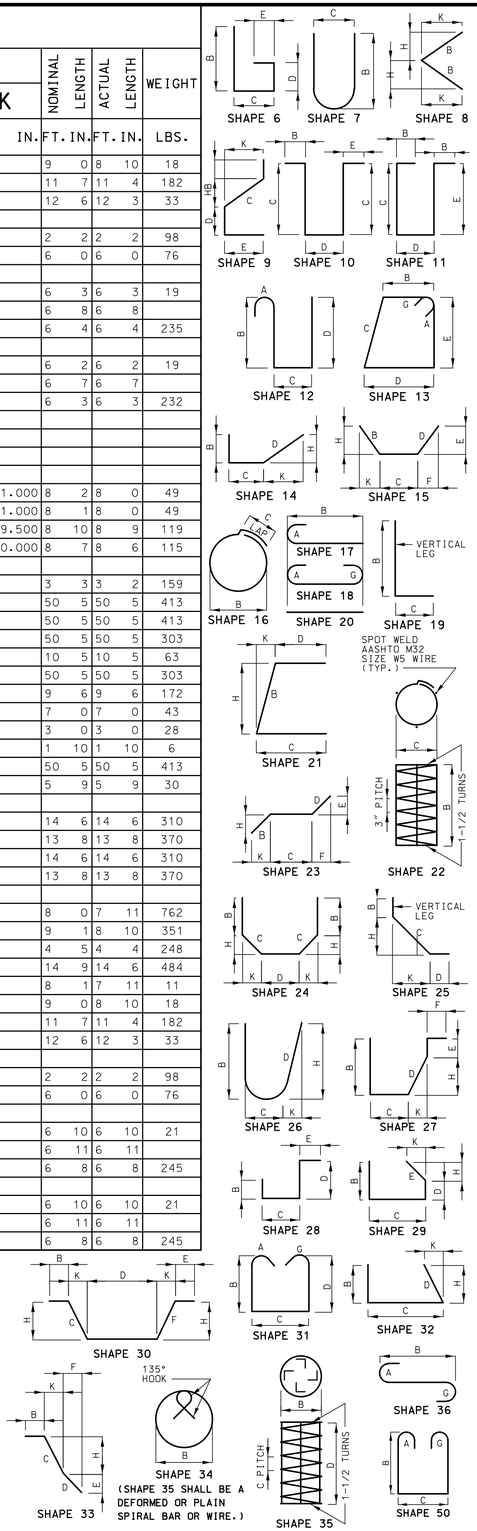

BENDING DIAGRAMS

STATE OF MISSOURI
JOSHUA D. JOLLIFF
NUMBER PE-2006002824
PROFESSIONAL ENGINEER
09/10/2024 1:19:23 PM
Joshua D. Jolliff
MO PE-2006002824

DATE PREPARED: 9/10/2024
ROUTE: 60 | STATE: MO
DISTRICT: BR | SHEET NO.: 26
COUNTY: WEBSTER
JOB NO.: J7P3425C
CONTRACT ID.:
PROJECT NO.:
BRIDGE NO.: A9137

DATE	DESCRIPTION

IF A SEAL IS PRESENT ON THIS SHEET IT HAS BEEN ELECTRONICALLY SEALED AND DATED.

MISSOURI HIGHWAYS AND TRANSPORTATION COMMISSION
105 WEST CAPITOL
JEFFERSON CITY, MO 65102
1-888-ASK-MODOT (1-888-275-6636)

CMT
CRAWFORD, MURPHY & TILLY, INC.
1631 WEST ELFINDALE STREET
SPRINGFIELD, MO 65807 (417) 869-6009
ENGINEERING CORPORATION - 000631

© Copyright CMT, Inc.

REV.

Detailed May 2024
Checked June 2024

Note: This drawing is not to scale. Follow dimensions.

BILL OF REINFORCING STEEL

NO. REQ'D.	MARK NO. SIZE	MARK	LOCATION	EPOXY (E)	SHAPE NO.	STIRRUP (S)	SUBSTR. (X)	VARIES (V)	NO. EACH	DIMENSIONS B FT.	B IN.	C FT.	C IN.	D FT.	D IN.	E FT.	E IN.	F FT.	F IN.	H FT.	H IN.	K FT.	K IN.	NOMINAL LENGTH FT.	NOMINAL LENGTH IN.	ACTUAL LENGTH FT.	ACTUAL LENGTH IN.	WEIGHT LBS.
			INT. DIAPHRAGM																									
8	6	H240	DIAPHRAGM	E	20					7	3.000													7	3	7	3	88
8	6	H241	DIAPHRAGM	E	20					9	7.000													9	7	9	7	116
16	4	H242	DIAPHRAGM	E	20					9	7.000													9	7	9	7	103
6	5	H243	DIAPHRAGM	E	20					6	6.000													6	6	6	6	41
4	5	H244	DIAPHRAGM	E	20					5	6.000													5	6	5	6	23
56	4	U240	DIAPHRAGM	E	28	S						23.000	3	5.000		18.000								6	10	6	8	250
16	6	U241	DIAPHRAGM	E	28	S						2 3.000	3	6.250	2	2.000								8	0	7	9	187
16	6	U242	DIAPHRAGM	E	28	S						2 3.000	2	9.000	2	2.000								7	2	6	11	167
8	6	U243	DIAPHRAGM	E	28	S						23.000	2	8.750	2	2.000								6	10	6	7	80
4	5	U244	DIAPHRAGM	E	6	S				4	10.000	10.000												5	8	5	7	24
12	5	U245	DIAPHRAGM	E	6	S				4	10.000	10.000		20.000										7	4	7	2	90
8	5	V240	DIAPHRAGM	E	20					3	6.000													3	6	3	6	30
			SLAB																									
82	6	S1	SLAB	E	20					42	10.000													42	10	42	10	5276
123	7	S2	SLAB	E	20					27	4.000													27	4	27	4	6872
18	6	S3	SLAB	E	20					53	3.000													53	3	53	3	1440
120	5	S4	SLAB	E	20					52	9.000													52	9	52	9	6603
8	6	S5	SLAB	E	20					41	0.000													41	0	41	0	493
300	6	S6	SLAB	E	20					50	5.000													50	5	50	5	22718
8	6	S7	SLAB	E	20			V	2	50	0.000													50	0	50	0	
			INCR. = 15.67'							3	0.000													3	0	3	0	319
300	5	S8	SLAB	E	20					50	5.000													50	5	50	5	15776
8	5	S9	SLAB	E	20			V	2	50	0.000													50	0	50	0	
			INCR. = 15.67'							3	0.000													3	0	3	0	222
80	8	S10	SLAB	E	20					38	0.000													38	0	38	0	8117
			TYPE D BARRIER																									
328	5	R1	BARRIER	E	26					3	3.000	5.500	3	0.750				3	3.000	6.750	6	11	6	8	2281
304	5	R2	BARRIER	E	19	S					20.500	9.500									2	6	2	5	767
304	5	R3	BARRIER	E	27	S						9.500	15.250		5.000	12.000	15.000		3.000		3	6	3	4	1057
40	5	R4	BARRIER	E	20					11	9.000													11	9	11	9	491
80	5	R5	BARRIER	E	20					32	3.000													32	3	32	3	2691
15	5	K1	BARRIER	E	27	S				3	8.000	9.250		5.250	3	2.750		5.250	1.000	8	2	8	0	126
76	5	K2	BARRIER	E	27	S				3	8.000	9.250		14.500	2	5.750		14.250	2.750	8	2	8	0	635
8	5	K3	BARRIER	E	27	S					22.500	9.250		14.500		7.750	12.000	14.250	2.750	5	6	5	2	44
15	5	K4	BARRIER	E	19	S		V	3	2	4.250	10.000									3	3	3	1	
			INCR. = 0.5"							2	6.250	10.000									3	5	3	3	50
15	5	K5	BARRIER	E	29	S		V	3			8.250		9.500		18.500		18.000	4.000	3	1	2	10	
			INCR. = 0.5"									8.250		9.500		20.500		20.000	4.500	3	3	3	0	46
9	5	K6	BARRIER	E	19	S				2	6.750	10.000									3	5	3	4	32
9	5	K7	BARRIER	E	21	S				2	6.625	10.000						2	6.000	6.250	3	5	3	4	32
27	5	K8	BARRIER	E	19	S		V	3	2	8.500	10.000									3	7	3	6	
			INCR. = 0.75"							3	2.500	10.000									4	1	4	0	106
27	5	K9	BARRIER	E	21	S		V	3	2	8.500	10.000						2	7.750	6.750	3	7	3	6	
			INCR. = 0.75"							3	2.500	10.000						3	1.750	7.750	4	1	4	0	106
24	5	K10	BARRIER	E	19	S				3	3.000	10.000									4	1	4	0	101
24	5	K11	BARRIER	E	21	S				3	3.000	10.000						3	2.250	7.750	4	1	4	0	101
12	5	K12	BARRIER	E	20					14	9.000										14	9	14	9	185
6	5	K13	BARRIER	E	20			V	4	14	0.000										14	0	14	0	
			INCR. = 3'							8	0.000										8	0	8	0	69

BILL OF REINFORCING STEEL

NO. REQ'D.	MARK NO. SIZE	MARK	LOCATION	EPOXY (E)	SHAPE NO.	STIRRUP (S)	SUBSTR. (X)	VARIES (V)	NO. EACH	DIMENSIONS B FT.	B IN.	C FT.	C IN.	D FT.	D IN.	E FT.	E IN.	F FT.	F IN.	H FT.	H IN.	K FT.	K IN.	NOMINAL LENGTH FT.	NOMINAL LENGTH IN.	ACTUAL LENGTH FT.	ACTUAL LENGTH IN.	WEIGHT LBS.
24	5	K14	BARRIER	E	20					14	9.000													14	9	14	9	370
12	5	K15	BARRIER	E	20			V	4	14	0.000													14	0	14	0	
			INCR. = 3'							8	0.000													8	0	8	0	138
10	5	K20	BARRIER	E	20					14	9.000													14	9	14	9	154
10	5	K21	BARRIER	E	20					7	3.000													7	3	7	3	76
			TOTALS																									
	4																											997
	4			E																								841
	5			E																								34667
	6																											2979
	6			E																								38117
	7																											82
	7			E																								9350
	8																											3223
	8			E																								9357
	9																											10017
			TOTAL																									17298
			TOTAL	E																								92332
			SLAB ON																									
			CONCRETE																									
			NU-GIRDER																									
	4			E																								841
	5			E																								25009
	6			E																								38117
	7			E																								9350
	8			E																								9357
			TOTAL	E																								82674
			REINFORCING STEEL (BRIDGES)																									
	4																											997
	5																											0
	6																											2979
	7																											82
	8																											3223
	9																											10017
			TOTAL																									17298
			TYPE D BARRIER																									
	5			E																								9658
			TOTAL	E																								9658

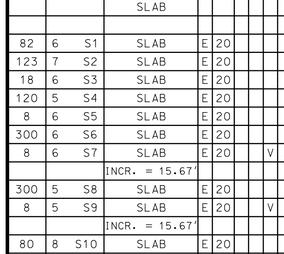

STIRRUP HOOK DIMENSIONS			
GRADES 40 – 50 – 60 KSI			
BAR SIZE	D (IN.)	90° HOOK HOOK A OR G	135° HOOK HOOK A OR G	135° HOOK APPROX. H
#4	2"	4 1/2"	4 1/2"	3"
#5	2 1/2"	6"	5 1/2"	3 3/4"
#6	4 1/2"	12"	8"	4 1/2"

NOTE: UNLESS OTHERWISE NOTED, DIAMETER "D" IS THE SAME FOR ALL BENDS AND HOOKS ON A BAR.

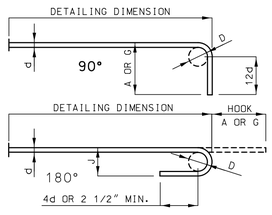

END HOOK DIMENSIONS				
		ALL GRADES		
BAR SIZE	D (IN.)	180° HOOKS A OR G	180° HOOKS J	90° HOOKS A OR G
#3	2 1/4"	5"	3"	6"
#4	3"	6"	4"	8"
#5	3 3/4"	7"	5"	10"
#6	4 1/2"	8"	6"	12"
#7	5 1/4"	10"	7"	14"
#8	6"	11"	8"	16"
#9	9 1/2"	15"	11 3/4"	19"
#10	10 3/4"	17"	13 1/4"	22"
#11	12"	19"	14 3/4"	2'-0"
#14	18 1/4"	2'-3"	21 3/4"	2'-7"

NOTE:
ALL STANDARD HOOKS AND BENDS OTHER THAN 180 DEGREE ARE TO BE BENT WITH SAME PROCEDURE AS FOR 90 DEGREE STANDARD HOOKS.

HOOKS AND BENDS SHALL BE IN ACCORDANCE WITH THE PROCEDURES AS SHOWN ON THIS SHEET.

E = EPOXY COATED REINFORCEMENT.
S = STIRRUP.
X = BAR IS INCLUDED IN SUBSTRUCTURE QUANTITIES.
V = BAR DIMENSIONS VARY IN EQUAL INCREMENTS BETWEEN DIMENSIONS SHOWN ON THIS LINE AND THE FOLLOWING LINE.
NO. EA. = NUMBER OF BARS OF EACH LENGTH.

NOMINAL LENGTHS ARE BASED ON OUT TO OUT DIMENSIONS SHOWN IN BENDING DIAGRAMS AND ARE LISTED FOR FABRICATORS USE. (NEAREST INCH)

ACTUAL LENGTHS ARE MEASURED ALONG CENTERLINE BAR TO THE NEAREST INCH.

PAYWEIGHTS ARE BASED ON ACTUAL LENGTHS.

FOUR ANGLE OR CHANNEL SPACERS ARE REQUIRED FOR EACH COLUMN SPIRAL. SPACERS ARE TO BE PLACED ON INSIDE OF SPIRALS. LENGTH AND WEIGHT OF COLUMN SPIRALS DO NOT INCLUDE SPLICES OR SPACERS.

REINFORCING STEEL (GRADE 60) FY = 60,000 PSI.

BENDING DIAGRAMS

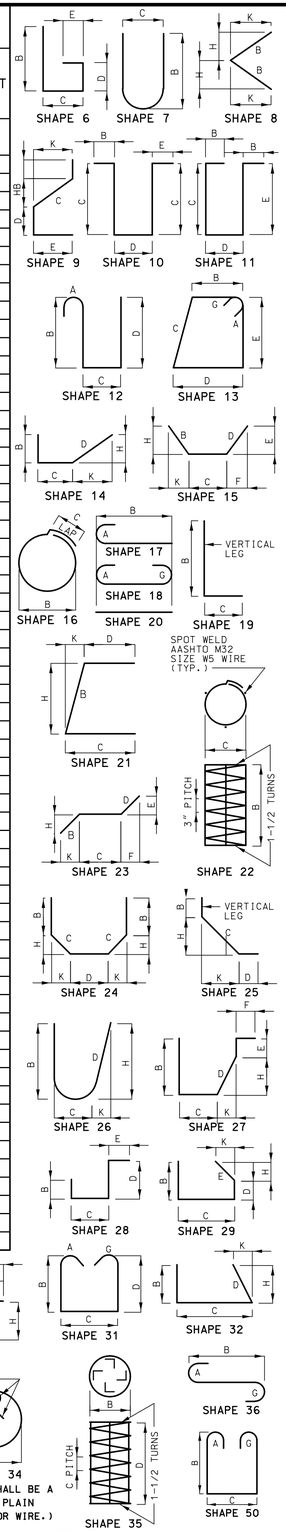

STATE OF MISSOURI
JOSHUA D. JOLLIFF
NUMBER PE-2006002824
PROFESSIONAL ENGINEER
09/10/2024 1:19:26 PM
Joshua D. Jolliff
MO PE-2006002824

DATE PREPARED: 9/10/2024
ROUTE: 60 | STATE: MO
DISTRICT: BR | SHEET NO.: 27
COUNTY: WEBSTER
JOB NO.: J7P3425C
CONTRACT ID.:
PROJECT NO.:
BRIDGE NO.: A9137

DESCRIPTION	DATE

IF A SEAL IS PRESENT ON THIS SHEET IT HAS BEEN ELECTRONICALLY SEALED AND DATED.

MISSOURI HIGHWAYS AND TRANSPORTATION COMMISSION
105 WEST CAPITOL
JEFFERSON CITY, MO 65102
1-888-ASK-MODOT (1-888-275-6636)

CMT
© Copyright CMT, Inc.
CRAWFORD, MURPHY & TILLY, INC.
1631 WEST ELFINDALE STREET
SPRINGFIELD, MO 65807 (417) 869-6009
ENGINEERING CORPORATION - 000631

REV.

Detailed May 2024
Checked June 2024

Note: This drawing is not to scale. Follow dimensions.

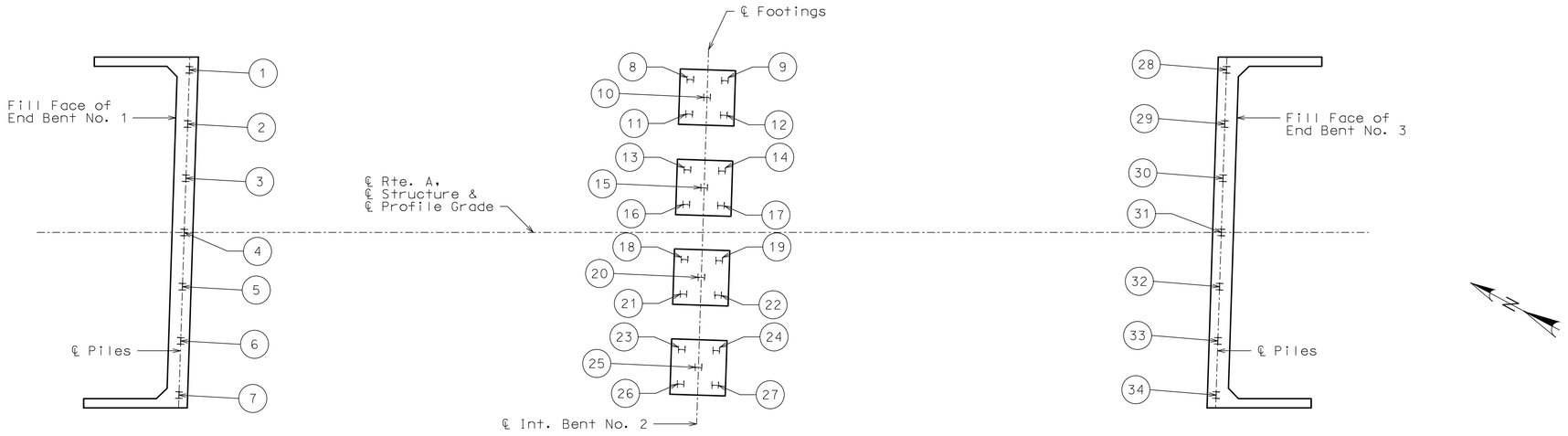

PART PLAN SHOWING NUMBERING FOR RECORDING AS-BUILT PILE DATA

As-Built Pile Data			
Pile No.	Length in Place (ft)	Computed Nominal Axial Compressive Resistance (kips)	Remarks
			End Bent No. 1
1			
2			
3			
4			
5			
6			
7			

As-Built Pile Data			
Pile No.	Length in Place (ft)	Computed Nominal Axial Compressive Resistance (kips)	Remarks
			Intermediate Bent No. 2
8			
9			
10			
11			
12			
13			
14			
15			
16			
17			
18			
19			
20			
21			
22			
23			
24			
25			
26			
27			

As-Built Pile Data			
Pile No.	Length in Place (ft)	Computed Nominal Axial Compressive Resistance (kips)	Remarks
			End Bent No. 3
28			
29			
30			
31			
32			
33			
34			

Note:
Indicate in remarks column:
A. Pile type and grade
B. Batter
C. Driven to practical refusal

This sheet to be completed by MoDOT construction personnel.

AS-BUILT PILE DATA

Detailed May 2024
Checked June 2024

Note: This drawing is not to scale. Follow dimensions.

STATE OF MISSOURI
JOSHUA D. JOLLIFF
NUMBER PE-2006002824
PROFESSIONAL ENGINEER

09/10/2024 1:19:29 PM
Joshua D. Jolliff
MO PE-2006002824

DATE PREPARED
9/10/2024

ROUTE	STATE
60	MO
DISTRICT	SHEET NO.
BR	28

COUNTY
WEBSTER

JOB NO.
J7P3425C

CONTRACT ID.

PROJECT NO.

BRIDGE NO.
A9137

REV.	DATE	DESCRIPTION

IF A SEAL IS PRESENT ON THIS SHEET IT HAS BEEN ELECTRONICALLY SEALED AND DATED.

MISSOURI HIGHWAYS AND TRANSPORTATION COMMISSION
105 WEST CAPITOL
JEFFERSON CITY, MO 65102
1-888-ASK-MODOT (1-888-275-6636)

CMT
CRAWFORD, MURPHY & TILLY, INC.
1631 WEST ELFINDALE STREET
SPRINGFIELD, MO 65807 (417) 869-6009
ENGINEERING CORPORATION - 000631
©Copyright CMT, Inc.

Missouri Department of Transportation
Construction and Materials

BORING NO. B-1
Page 1 of 3

Job No.: 20231154.00 **County:** Webster **Route:** Route 60
Design: **Skew:** **Location:** Diggins, Missouri
Bent: **Logged By:** TB **Operator:** LRK
Station: **Northing:** 488006.3571 **Date of Work:** 10/10/23-10/11/23
Offset: **Easting:** 1535040.251 **Depth to Water:** 53.5
Elevation: 1661.8 **Requested Northing:** **Depth Hole Open:**
Requested Station: **Requested Easting:** **Time Change:** At Time of Drilling
Requested Offset: **Equipment:** CME 550X,Split-Spoon Sampler, Shelby Tube
Requested Elevation: **Location Note:**
Drill No.: **Hammer Efficiency:** 90% **Drilling Method:** HSA

Depth (ft)	Graphic	Description	Elevation (ft)	Sample Type	REC % (RQD %)	Blow Counts (N_{60})	Shear Data	Field Tests	Index Tests
0		0.0-1.6' (CH) Brown, gravelly fat CLAY							
			1660		50	6-15-17 (48)		PP = 4.50 tsf	MC = 18.9%
		1.6-3.0' (GP) Gray, poorly graded GRAVEL							
5		3.0-5.5' (GC) Brown and gray, clayey GRAVEL with sand, trace organics			50	5-7-8 (23)			MC = 14.7% Sieve Analysis Sieve # % Passing #4 42.6 #200 29.9
		5.5-17.0' (CH) Brown and red, fat CLAY 6.0' - trace organics from 6.0 ft. to 10.0 ft.							
			1655		39	3-5-15 (30)		PP = 2.50 tsf	MC = 19.2%
		8.5' - with gravel from 8.5 ft. to 10.0 ft.							
10					61	3-6-6 (18)		PP = 3.00 tsf	LL = 63 PL = 18 MC = 23.7%
			1650						
		13.0' (sample disturbed)			83		Qu Test Results MC = 22.2% γ_{moist} = 99.0 pcf	PP = 2.00 tsf	
15									
		17.0-31.8' (CH) Red and gray, gravelly fat CLAY, trace sand 18.0' (possible cobbles)	1645						
20					100	24-21-45 (99)		PP = 4.50 tsf	MC = 28.5% Sieve Analysis Sieve # % Passing #200 57.3
			1640						
25					94	14-30-37			MC = 21.5%

N_{60} = (Em/60)Nm N_{60} - Corrected N value for standard 60% SPT efficiency; Em - Measured hammer efficiency in percent; Nm - Observed N-value
(1) = Assumed, (2) = Actual

Coordinate System: U.S. State Plane 1983 **Coordinate Zone:** Missouri Central **Coordinate Proj. Factor:** TBD
Coordinate Datum: NAD 83 (CONUS) **Coordinate Units:** U.S. Survey Feet

* Persons using this information are cautioned that the materials shown are determined by the equipment noted and accuracy of the "log of materials" is limited thereby and by judgement of the operator. THIS INFORMATION IS FOR DESIGN PURPOSES ONLY.

LETTER BOREHOLE - MODOT 20150728.GDT - 5/10/24 16:26 - \\TSI\PROJECTS\STL\GEOTECH\2023 PROJECTS\20231154.00 ROUTE 60 @ A - FINAL DESIGN\WORKING FILES\MODOT WEBSTER COUNTY 20231154.GPJ

B-1

Missouri Department of Transportation
Construction and Materials

BORING NO. B-1
Page 2 of 3

Job No.: 20231154.00 **County:** Webster **Route:** Route 60
Design: **Skew:** **Location:** Diggins, Missouri
Bent: **Logged By:** TB **Operator:** LRK
Station: **Northing:** 488006.3571 **Date of Work:** 10/10/23-10/11/23
Offset: **Easting:** 1535040.251 **Depth to Water:** 53.5
Elevation: 1661.8 **Requested Northing:** **Depth Hole Open:**
Requested Station: **Requested Easting:** **Time Change:** At Time of Drilling
Requested Offset: **Equipment:** CME 550X,Split-Spoon Sampler, Shelby Tube
Requested Elevation: **Location Note:**
Drill No.: **Hammer Efficiency:** 90% **Drilling Method:** HSA

Depth (ft)	Graphic	Description	Elevation (ft)	Sample Type	REC % (RQD %)	Blow Counts (N_{60})	Shear Data	Field Tests	Index Tests
25		17.0-31.8' (CH) Red and gray, gravelly fat CLAY, trace sand *(continued)*							
			1635						
					100	12-12-24 (54)			MC = 20.4% Sieve Analysis Sieve # % Passing #200 51.7
30									
		31.8-54.2' (CH) Red and gray, fat CLAY	1630						
		33.5' - gravelly from 33.5 ft. to 35 ft.							
					78	4-19-16 (53)		PP = 4.50 tsf	MC = 28.3%
35			1625						
		38.5' - red and brown, with gravel from 38.5 ft. to 40.0 ft. (possible cobbles)			100	50/0.4'		PP = 3.00 tsf	MC = 30.2%
40			1620						
		43.5' - gravelly from 43.5 ft. to 45.0 ft.			100	11-24-22 (69)		PP = 4.00 tsf	MC = 26.5%
45			1615						
		48.5' - with gravel from 48.5 ft. to 50.0 ft.			100	7-6-5 (17)		PP = 3.00 tsf	MC = 45.0%
50									

N_{60} = (Em/60)Nm N_{60} - Corrected N value for standard 60% SPT efficiency; Em - Measured hammer efficiency in percent; Nm - Observed N-value
(1) = Assumed, (2) = Actual

Coordinate System: U.S. State Plane 1983 **Coordinate Zone:** Missouri Central **Coordinate Proj. Factor:** TBD
Coordinate Datum: NAD 83 (CONUS) **Coordinate Units:** U.S. Survey Feet

* Persons using this information are cautioned that the materials shown are determined by the equipment noted and accuracy of the "log of materials" is limited thereby and by judgement of the operator. THIS INFORMATION IS FOR DESIGN PURPOSES ONLY.

LETTER BOREHOLE - MODOT 20150728.GDT - 5/10/24 16:26 - \\TSI\PROJECTS\STL\GEOTECH\2023 PROJECTS\20231154.00 ROUTE 60 @ A - FINAL DESIGN\WORKING FILES\MODOT WEBSTER COUNTY 20231154.GPJ

B-1

BORING DATA

Note: For locations of borings, see Sheet No. 1.

Note: This drawing is not to scale. Follow dimensions.

Sheet No. 29 of 38

Detailed May 2024
Checked June 2024

STATE OF MISSOURI
JOSHUA D. JOLLIFF
NUMBER PE-2006002824
PROFESSIONAL ENGINEER

09/10/2024 1:19:32 PM
Joshua D. Jolliff
MO PE-2006002824

DATE PREPARED 9/10/2024
ROUTE 60 | STATE MO
DISTRICT BR | SHEET NO. 29
COUNTY WEBSTER
JOB NO. J7P3425C
CONTRACT ID.
PROJECT NO.
BRIDGE NO. A9137

DESCRIPTION | DATE | REV.

IF A SEAL IS PRESENT ON THIS SHEET IT HAS BEEN ELECTRONICALLY SEALED AND DATED.

MISSOURI HIGHWAYS AND TRANSPORTATION COMMISSION
105 WEST CAPITOL
JEFFERSON CITY, MO 65102
1-888-ASK-MODOT (1-888-275-6636)

CMT
© Copyright CMT, Inc.
CRAWFORD, MURPHY & TILLY, INC.
1631 WEST ELFINDALE STREET
SPRINGFIELD, MO 65807 (417) 869-6009
ENGINEERING CORPORATION - 000631

L:\MoDOT\20092124-00\Draw\Structures\Sheets\Route A over 60\B_A9137_029_J7P3425C_Boring_Log1.dgn 1:00:23 PM 9/10/2024

Missouri Department of Transportation
Construction and Materials

BORING NO. B-1
Page 3 of 3

Job No.: 20231154.00 **County:** Webster **Route:** Route 60
Design: **Skew:** **Location:** Diggins, Missouri
Bent: **Logged By:** TB **Operator:** LRK
Station: **Northing:** 488006.3571 **Date of Work:** 10/10/23-10/11/23
Offset: **Easting:** 1535040.251 **Depth to Water:** 53.5
Elevation: 1661.8 **Requested Northing:** **Depth Hole Open:**
Requested Station: **Requested Easting:** **Time Change:** At Time of Drilling
Requested Offset: **Equipment:** CME 550X,Split-Spoon Sampler, Shelby Tube
Requested Elevation: **Location Note:**
Drill No.: **Hammer Efficiency:** 90% **Drilling Method:** HSA

Depth (ft)	Graphic	Description	Elevation (ft)	Sample Type	REC % (RQD %)	Blow Counts (N_{60})	Shear Data	Field Tests	Index Tests
50		31.8-54.2' (CH) Red and gray, fat CLAY *(continued)*	1610						
		53.5' - red below 53.5 ft.							
55		54.2-58.5' (GP) Gray, poorly graded GRAVEL			56	6-16-2 (27)		PP = 2.00 tsf	LL = 135 PL = 30 MC = 60.7%
		58.2-59.3' DOLOMITE, gray, very hard, slightly weathered, finely crystalline, thin bedded, dense	1605		100 (83)				
60		59.3-68.5' DOLOMITIC SHALE, dark gray, very-hard, slightly weathered, finely crystalline, thin bedded, dense	1600		100 (100)		Qu Test Results UCS = 800 ksf		
65			1595		100 (100)		Qu Test Results UCS = 1950 ksf		
		Refusal at 58.5 feet. Bottom of borehole at 68.5 feet.							

N_{60} = (Em/60)Nm N_{60} - Corrected N value for standard 60% SPT efficiency; Em - Measured hammer efficiency in percent; Nm - Observed N-value
(1) = Assumed, (2) = Actual

Coordinate System: U.S. State Plane 1983 **Coordinate Zone:** Missouri Central **Coordinate Proj. Factor:** TBD
Coordinate Datum: NAD 83 (CONUS) **Coordinate Units:** U.S. Survey Feet

* Persons using this information are cautioned that the materials shown are determined by the equipment noted and accuracy of the "log of materials" is limited thereby and by judgement of the operator. THIS INFORMATION IS FOR DESIGN PURPOSES ONLY.

LETTER BOREHOLE - MODOT 20150728.GDT - 5/10/24 16:26 - \\TSI\PROJECTS\STL\GEOTECH\2023 PROJECTS\20231154.00 ROUTE 60 @ A - FINAL DESIGN\WORKING FILES\MODOT WEBSTER COUNTY 20231154.GPJ

B-1

Missouri Department of Transportation
Construction and Materials

BORING NO. B-3
Page 1 of 3

Job No.: 20231154.00 **County:** Webster **Route:** Route 60
Design: **Skew:** **Location:** Diggins, Missouri
Bent: **Logged By:** TB **Operator:** LRK
Station: **Northing:** 488026.8281 **Date of Work:** 10/09/23-10/09/23
Offset: **Easting:** 1535094.044 **Depth to Water:**
Elevation: 1662.3 **Requested Northing:** **Depth Hole Open:**
Requested Station: **Requested Easting:** **Time Change:**
Requested Offset: **Equipment:** CME 550X,Split-Spoon Sampler, Shelby Tube
Requested Elevation: **Location Note:**
Drill No.: **Hammer Efficiency:** 90% **Drilling Method:** HSA

Depth (ft)	Graphic	Description	Elevation (ft)	Sample Type	REC % (RQD %)	Blow Counts (N_{60})	Shear Data	Field Tests	Index Tests
0		0.0-3.0' (GC) Gray and brown, clayey GRAVEL, trace organics	1660		39	9-9-6 (23)			MC = 25.1%
		3.0-3.8' (CH) Brown and red, fat CLAY							
5		3.8-5.5' (GP) Gray, poorly graded GRAVEL			33	3-8-12 (30)		PP = 2.00 tsf	MC = 25.8%
		5.5-7.7' (CH) Red and brown, gravelly shaley fat CLAY, with sand	1655		56	25-17-7 (36)		PP = 2.00 tsf	MC = 25.3% Sieve Analysis Sieve # % Passing #200 55.4
10		7.7-19.0' (CH) Red, fat CLAY 8.0' - with gravel from 8.0 ft. to 9.0 ft. (sample disturbed)			75		Qu Test Results MC = 20.1% γ_{moist} = 117.9 pcf	PP = 3.00 tsf	
			1650						
15		13.5' - brown and red from 13.5 ft. to 15.0 ft.			94	3-4-5 (14)		PP = 3.00 tsf	MC = 20.3%
			1645						
		18.5' - gravelly from 18.5 ft. to 19.0 ft.			100	30-38-24 (93)		PP = 3.00 tsf	MC = 26.8%
20		19.0-26.8' (CH) Red and gray, gravelly fat CLAY, trace sand (possible cobbles)	1640						
25					83	11-11-25 (54)			MC = 24.1% Sieve Analysis Sieve # % Passing

N_{60} = (Em/60)Nm N_{60} - Corrected N value for standard 60% SPT efficiency; Em - Measured hammer efficiency in percent; Nm - Observed N-value
(1) = Assumed, (2) = Actual

Coordinate System: U.S. State Plane 1983 **Coordinate Zone:** Missouri Central **Coordinate Proj. Factor:** TBD
Coordinate Datum: NAD 83 (CONUS) **Coordinate Units:** U.S. Survey Feet

* Persons using this information are cautioned that the materials shown are determined by the equipment noted and accuracy of the "log of materials" is limited thereby and by judgement of the operator. THIS INFORMATION IS FOR DESIGN PURPOSES ONLY.

LETTER BOREHOLE - MODOT 20150728.GDT - 5/10/24 16:27 - \\TSI\PROJECTS\STL\GEOTECH\2023 PROJECTS\20231154.00 ROUTE 60 @ A - FINAL DESIGN\WORKING FILES\MODOT WEBSTER COUNTY 20231154.GPJ

B-3

BORING DATA

Note: For locations of borings, see Sheet No. 1.

Note: This drawing is not to scale. Follow dimensions.

Sheet No. 30 of 38

Detailed May 2024
Checked June 2024

STATE OF MISSOURI
JOSHUA D. JOLLIFF
NUMBER PE-2006002824
PROFESSIONAL ENGINEER

09/10/2024 1:19:35 PM
Joshua D. Jolliff
MO PE-2006002824

DATE PREPARED 9/10/2024
ROUTE 60 | STATE MO
DISTRICT BR | SHEET NO. 30
COUNTY WEBSTER
JOB NO. J7P3425C
CONTRACT ID.
PROJECT NO.
BRIDGE NO. A9137

REV.	DESCRIPTION	DATE

MISSOURI HIGHWAYS AND TRANSPORTATION COMMISSION
105 WEST CAPITOL
JEFFERSON CITY, MO 65102
1-888-ASK-MODOT (1-888-275-6636)

CMT
© Copyright CMT, Inc.
CRAWFORD, MURPHY & TILLY, INC.
1631 WEST ELFINDALE STREET
SPRINGFIELD, MO 65807 (417) 869-6009
ENGINEERING CORPORATION - 000631

IF A SEAL IS PRESENT ON THIS SHEET IT HAS BEEN ELECTRONICALLY SEALED AND DATED.

L:\MoDOT\20092124-00\Draw\Structures\Sheets\Route A over 60\B_A9137_030_J7P3425C_Boring_Log2.dgn 1:00:59 PM 9/10/2024

Missouri Department of Transportation
Construction and Materials

BORING NO. B-3
Page 2 of 3

Job No.: 20231154.00 **County:** Webster **Route:** Route 60
Design: **Skew:** **Location:** Diggins, Missouri
Bent: **Logged By:** TB **Operator:** LRK
Station: **Northing:** 488026.8281 **Date of Work:** 10/09/23-10/09/23
Offset: **Easting:** 1535094.044 **Depth to Water:**
Elevation: 1662.3 **Requested Northing:** **Depth Hole Open:**
Requested Station: **Requested Easting:** **Time Change:**
Requested Offset: **Equipment:** CME 550X,Split-Spoon Sampler, Shelby Tube
Requested Elevation: **Location Note:**
Drill No.: **Hammer Efficiency:** 90% **Drilling Method:** HSA

Depth (ft)	Graphic	Description	Elevation (ft)	Sample Type	REC % (RQD %)	Blow Counts (N_{60})	Shear Data	Field Tests	Index Tests
25		19.0-26.8' (CH) Red and gray, gravelly fat CLAY, trace sand (possible cobbles) *(continued)*							#200 50.9
		26.8-28.8' (CH) Red, fat CLAY, with gravel	1635						
30		28.8-32.0' (GC) Red and gray, clayey GRAVEL		X	100	5-9-21 (45)		PP = 4.50 tsf	MC = 25.5%
		32.0-36.8' (CH) Brown and gray, shaley fat CLAY with gravel, trace sand	1630						
35				X	100	8-12-12 (36)			MC = 26.0% Sieve Analysis Sieve # % Passing #200 73.2
		36.8-44.5' (CH) Brown, fat CLAY with gravel	1625						
40				X	100	4-12-14 (39)		PP = 3.00 tsf	MC = 38.4%
			1620						
45		43.5' - trace gravel below 43.5 ft.		X	100	4-30-21 (77)		PP = 3.00 tsf	MC = 38.5% Sieve Analysis Sieve # % Passing #200 65.0
		44.5-46.8' (CH) Brown and gray, fat CLAY, with gravel, trace sand							
		46.8-54.1' (CH) Red and brown, fat CLAY 46.9' - trace gravel 48.5 ft. to 50.0 ft.	1615						
50				X	61	7-5-5 (15)		PP = 2.00 tsf	LL = 117 PL = 25 MC = 47.7%

N_{60} = (Em/60)Nm N_{60} - Corrected N value for standard 60% SPT efficiency; Em - Measured hammer efficiency in percent; Nm - Observed N-value
(1) = Assumed, (2) = Actual

Coordinate System: U.S. State Plane 1983 **Coordinate Zone:** Missouri Central **Coordinate Proj. Factor:** TBD
Coordinate Datum: NAD 83 (CONUS) **Coordinate Units:** U.S. Survey Feet

* Persons using this information are cautioned that the materials shown are determined by the equipment noted and accuracy of the "log of materials" is limited thereby and by judgement of the operator. THIS INFORMATION IS FOR DESIGN PURPOSES ONLY.

LETTER BOREHOLE - MODOT 20150728.GDT - 5/10/24 16:27 - \\TSI\PROJECTS\ST L\GEOTECH\2023 PROJECTS\20231154.00 ROUTE 60 @ A - FINAL DESIGN\WORKING FILES\MODOT WEBSTER COUNTY 20231154.GPJ

B-3

Missouri Department of Transportation
Construction and Materials

BORING NO. B-3
Page 3 of 3

Job No.: 20231154.00 **County:** Webster **Route:** Route 60
Design: **Skew:** **Location:** Diggins, Missouri
Bent: **Logged By:** TB **Operator:** LRK
Station: **Northing:** 488026.8281 **Date of Work:** 10/09/23-10/09/23
Offset: **Easting:** 1535094.044 **Depth to Water:**
Elevation: 1662.3 **Requested Northing:** **Depth Hole Open:**
Requested Station: **Requested Easting:** **Time Change:**
Requested Offset: **Equipment:** CME 550X,Split-Spoon Sampler, Shelby Tube
Requested Elevation: **Location Note:**
Drill No.: **Hammer Efficiency:** 90% **Drilling Method:** HSA

Depth (ft)	Graphic	Description	Elevation (ft)	Sample Type	REC % (RQD %)	Blow Counts (N_{60})	Shear Data	Field Tests	Index Tests
50		46.8-54.1' (CH) Red and brown, fat CLAY *(continued)*	1610						MC = 69.3%
55		54.1-55.5' (GP) Gray, poorly graded GRAVEL (broken rock)		X	86	14-12-50/0.2'			
		55.5-58.7' DOLOMITE, gray, very hard, slightly weathered, finely crystalline, thin bedded, dense	1605		100 (81)		Qu Test Results UCS = 1910 ksf		
60		58.7-65.0' DOLOMITIC SHALE, dark gray, very hard, slightly weathered, finely crystalline, thin bedded, dense	1600		100 (100)		Qu Test Results UCS = 994 ksf		
65		Refusal at 55.5 feet. Bottom of borehole at 65.0 feet.							

N_{60} = (Em/60)Nm N_{60} - Corrected N value for standard 60% SPT efficiency; Em - Measured hammer efficiency in percent; Nm - Observed N-value
(1) = Assumed, (2) = Actual

Coordinate System: U.S. State Plane 1983 **Coordinate Zone:** Missouri Central **Coordinate Proj. Factor:** TBD
Coordinate Datum: NAD 83 (CONUS) **Coordinate Units:** U.S. Survey Feet

* Persons using this information are cautioned that the materials shown are determined by the equipment noted and accuracy of the "log of materials" is limited thereby and by judgement of the operator. THIS INFORMATION IS FOR DESIGN PURPOSES ONLY.

LETTER BOREHOLE - MODOT 20150728.GDT - 5/10/24 16:27 - \\TSI\PROJECTS\ST L\GEOTECH\2023 PROJECTS\20231154.00 ROUTE 60 @ A - FINAL DESIGN\WORKING FILES\MODOT WEBSTER COUNTY 20231154.GPJ

B-3

BORING DATA

Note: For locations of borings, see Sheet No. 1.

Note: This drawing is not to scale. Follow dimensions.

Sheet No. 31 of 38

Detailed May 2024
Checked June 2024

STATE OF MISSOURI
JOSHUA D. JOLLIFF
NUMBER PE-2006002824
PROFESSIONAL ENGINEER

09/10/2024 1:19:44 PM
Joshua D. Jolliff
MO PE-2006002824

DATE PREPARED 9/10/2024
ROUTE 60 | STATE MO
DISTRICT BR | SHEET NO. 31
COUNTY WEBSTER
JOB NO. J7P3425C
CONTRACT ID.
PROJECT NO.
BRIDGE NO. A9137

DESCRIPTION | DATE | REV.

IF A SEAL IS PRESENT ON THIS SHEET IT HAS BEEN ELECTRONICALLY SEALED AND DATED.

MISSOURI HIGHWAYS AND TRANSPORTATION COMMISSION
105 WEST CAPITOL
JEFFERSON CITY, MO 65102
1-888-ASK-MODOT (1-888-275-6636)

CMT
CRAWFORD, MURPHY & TILLY, INC.
1631 WEST ELFINDALE STREET
SPRINGFIELD, MO 65807 (417) 869-6009
ENGINEERING CORPORATION - 000631
© Copyright CMT, Inc.

L:\MoDOT\20092124-00\Draw\Structures\Sheets\Route A over 60\B_A9137_031_J7P3425C_Boring_Log3.dgn 1:01:34 PM 9/10/2024

Missouri Department of Transportation
Construction and Materials

BORING NO. B-4
Page 1 of 2

Job No.: 20231154.00
Design:
Bent:
Station:
Offset:
Elevation: 1656.2
Requested Station:
Requested Offset:
Requested Elevation:
Drill No.:

County: Webster
Skew:
Logged By: TB
Northing: 487867.8996
Easting: 1535125.129
Requested Northing:
Requested Easting:
Equipment: CME 550X,Split-Spoon Sampler, Shelby Tube
Location Note:
Hammer Efficiency: 90%

Route: Route 60
Location: Diggins, Missouri
Operator: LRK
Date of Work: 10/05/23-10/05/23
Depth to Water:
Depth Hole Open:
Time Change:
Drilling Method: HSA

Depth (ft)	Graphic	Description	Elevation (ft)	Sample Type	REC % (RQD %)	Blow Counts (N_{60})	Shear Data	Field Tests	Index Tests
0		0.0-5.5' (CH) Brown, fat CLAY	1655						
		2.0' - gravelly from 2.0 ft. to 2.3 ft.		X	89	3-4-20 (36)		PP = 4.00 tsf	MC = 20.4%
		3.6' - red and gray, gravelly from 3.6 ft. to 4.8 ft.		X	89	15-21-25 (69)		PP = 4.50 tsf	LL = 61 PL = 21 MC = 19.5%
5		5.5-7.8' (GC) Red and gray, clayey GRAVEL, with sand	1650	X	83	20-26-26 (78)			MC = 20.7% Sieve Analysis Sieve # % Passing #200 18.0
		7.8-13.8' (CH) Red and gray, gravelly fat CLAY (sample disturbed)		■	100			PP = 4.50 tsf	MC = 25.0%
10			1645						
		13.5' - red from 13.5 ft. to 13.8 ft.		X	89	11-20-25 (68)		PP = 3.00 tsf	MC = 26.4%
15		13.8-14.2' (GC) Gray, clayey GRAVEL 14.2-16.8' (GP) Gray, poorly graded GRAVEL	1640						
		16.8-19.3' (CH) Red and gray, gravelly fat CLAY		X	100	3-4-7 (17)		PP = 3.00 tsf	MC = 49.2%
20		19.3-21.8' (GP) Red and gray, poorly graded GRAVEL	1635						
		21.8-24.0' (CH) Red and gray, gravelly fat CLAY		X	83	9-10-10 (30)		PP < 0.50 tsf	MC = 32.2%
25		24.0-26.8' (GP) Red and gray, poorly graded GRAVEL, with clay							

N_{60} = (Em/60)Nm N_{60} - Corrected N value for standard 60% SPT efficiency; Em - Measured hammer efficiency in percent; Nm - Observed N-value
(1) = Assumed, (2) = Actual

Coordinate System: U.S. State Plane 1983 **Coordinate Zone:** Missouri Central **Coordinate Proj. Factor:** TBD
Coordinate Datum: NAD 83 (CONUS) **Coordinate Units:** U.S. Survey Feet

* Persons using this information are cautioned that the materials shown are determined by the equipment noted and accuracy of the "log of materials" is limited thereby and by judgement of the operator. THIS INFORMATION IS FOR DESIGN PURPOSES ONLY.

LETTER BOREHOLE - MODOT 20150728.GDT - 5/10/24 16:27 - \\TSI\PROJECTS\STL\GEOTECH\2023 PROJECTS\20231154.00 ROUTE 60 @ A - FINAL DESIGN\WORKING FILES\MODOT WEBSTER COUNTY 20231154.GPJ

B-4

Missouri Department of Transportation
Construction and Materials

BORING NO. B-4
Page 2 of 2

Job No.: 20231154.00
Design:
Bent:
Station:
Offset:
Elevation: 1656.2
Requested Station:
Requested Offset:
Requested Elevation:
Drill No.:

County: Webster
Skew:
Logged By: TB
Northing: 487867.8996
Easting: 1535125.129
Requested Northing:
Requested Easting:
Equipment: CME 550X,Split-Spoon Sampler, Shelby Tube
Location Note:
Hammer Efficiency: 90%

Route: Route 60
Location: Diggins, Missouri
Operator: LRK
Date of Work: 10/05/23-10/05/23
Depth to Water:
Depth Hole Open:
Time Change:
Drilling Method: HSA

Depth (ft)	Graphic	Description	Elevation (ft)	Sample Type	REC % (RQD %)	Blow Counts (N_{60})	Shear Data	Field Tests	Index Tests
25		24.0-26.8' (GP) Red and gray, poorly graded GRAVEL, with clay *(continued)*	1630						
		26.8-32.7' (CH) Brown and Red, fat CLAY, with gravel		X	56	6-4-4 (12)		PP <.0.50 tsf	MC = 37.2%
30			1625						
		32.7-33.2' LIMESTONE, gray, very hard		■	100	50/0.2'			MC = 4.6%
		33.2-35.0' Core Loss			25 (0)				
35		35.0-35.5' LIMESTONE 35.5-43.3' Core Loss	1620						
					10 (0)				
40			1615						
					35 (32)		Qu Test Results UCS = 1190 ksf		
45		43.3-46.8' LIMESTONE, gray, very hard, slightly weathered, finely crystalline, thin bedded, dense	1610						
		46.8-50.0' DOLOMITIC SHALE, dark gray, very hard, slightly weathered, finely crystalline, thin bedded, dense			100 (92)		Qu Test Results UCS = 858 ksf		
50		Refusal at 32.7 feet Bottom of borehole at 50.0 feet.							

N_{60} = (Em/60)Nm N_{60} - Corrected N value for standard 60% SPT efficiency; Em - Measured hammer efficiency in percent; Nm - Observed N-value
(1) = Assumed, (2) = Actual

Coordinate System: U.S. State Plane 1983 **Coordinate Zone:** Missouri Central **Coordinate Proj. Factor:** TBD
Coordinate Datum: NAD 83 (CONUS) **Coordinate Units:** U.S. Survey Feet

* Persons using this information are cautioned that the materials shown are determined by the equipment noted and accuracy of the "log of materials" is limited thereby and by judgement of the operator. THIS INFORMATION IS FOR DESIGN PURPOSES ONLY.

LETTER BOREHOLE - MODOT 20150728.GDT - 5/10/24 16:27 - \\TSI\PROJECTS\STL\GEOTECH\2023 PROJECTS\20231154.00 ROUTE 60 @ A - FINAL DESIGN\WORKING FILES\MODOT WEBSTER COUNTY 20231154.GPJ

B-4

BORING DATA

Note: For locations of borings, see Sheet No. 1.

Note: This drawing is not to scale. Follow dimensions.

Sheet No. 32 of 38

Detailed May 2024
Checked June 2024

STATE OF MISSOURI
JOSHUA D. JOLLIFF
NUMBER PE-2006002824
PROFESSIONAL ENGINEER
09/10/2024 1:20:55 PM
Joshua D. Jolliff
MO PE-2006002824

DATE PREPARED 9/10/2024
ROUTE 60 | STATE MO
DISTRICT BR | SHEET NO. 32
COUNTY WEBSTER
JOB NO. J7P3425C
CONTRACT ID.
PROJECT NO.
BRIDGE NO. A9137

DESCRIPTION | DATE

IF A SEAL IS PRESENT ON THIS SHEET IT HAS BEEN ELECTRONICALLY SEALED AND DATED.

MISSOURI HIGHWAYS AND TRANSPORTATION COMMISSION
105 WEST CAPITOL
JEFFERSON CITY, MO 65102
1-888-ASK-MODOT (1-888-275-6636)

CMT
CRAWFORD, MURPHY & TILLY, INC.
1631 WEST ELFINDALE STREET
SPRINGFIELD, MO 65807 (417) 869-6009
ENGINEERING CORPORATION - 000631

©Copyright CMT, Inc.

REV.

L:\MoDOT\20092124-00\Draw\Structures\Sheets\Route A over 60\B_A9137_032_J7P3425C_Boring_Log4.dgn 1:02:08 PM 9/10/2024

Missouri Department of Transportation
Construction and Materials

BORING NO. B-5
Page 1 of 2

Job No.: 20231154.00 **County:** Webster **Route:** Route 60
Design: **Skew:** **Location:** Diggins, Missouri
Bent: **Logged By:** TB **Operator:** LRK
Station: **Northing:** 487878.315 **Date of Work:** 10/05/23-10/05/23
Offset: **Easting:** 1535146.608 **Depth to Water:** 38.5
Elevation: 1655.9 **Requested Northing:** **Depth Hole Open:**
Requested Station: **Requested Easting:** **Time Change:** 0 hours
Requested Offset: **Equipment:** CME 550X,Split-Spoon Sampler, Shelby Tube
Requested Elevation: **Location Note:**
Drill No.: **Hammer Efficiency:** 90% **Drilling Method:** HSA

Depth (ft)	Graphic	Description	Elevation (ft)	Sample Type	REC % (RQD %)	Blow Counts (N_{60})	Shear Data	Field Tests	Index Tests
0		0.0-1.8' (CH) Brown, fat CLAY, trace gravel	1655						
				X	100	10-38-50/0.3'		PP = 3.00 tsf	MC = 20.2%
		1.8-8.0' (GC) Brown, clayey GRAVEL (possible cobbles)							
				X	94	19-33-40 (110)			MC = 9.5%
5			1650						
				X	67	10-38-35 (110)			MC = 25.7%
		8.0-8.8' (CH) Red and brown, fat CLAY, trace gravel							
				X	100	11-18-14 (48)		PP = 1.00 tsf	MC = 32.8%
10		8.8-11.5' (GC) Red and gray, clayey GRAVEL	1645						
		11.5-19.3' (CH) Red and gray, fat CLAY, trace gravel							
				■	100		Qu Test Results UCS = 2.26 ksf MC = 42.2% γ_{moist} = 111.0 pcf	PP = 3.50 tsf	LL = 139 PL = 23
15			1640						
				X	100	2-21-22 (65)		PP = 2.50 tsf	MC = 24.7%
20		19.3-22.0' (CH) Gray and red, gravelly fat CLAY, with sand	1635						
		22.0-27.0' (GC) Gray and red, clayey GRAVEL, with sand							
				X	100	11-17-17 (51)			MC = 20.3% Sieve Analysis Sieve # % Passing
25									

N_{60} = (Em/60)Nm N_{60} - Corrected N value for standard 60% SPT efficiency; Em - Measured hammer efficiency in percent; Nm - Observed N-value
(1) = Assumed, (2) = Actual

Coordinate System: U.S. State Plane 1983 **Coordinate Zone:** Missouri Central **Coordinate Proj. Factor:** TBD
Coordinate Datum: NAD 83 (CONUS) **Coordinate Units:** U.S. Survey Feet

* Persons using this information are cautioned that the materials shown are determined by the equipment noted and accuracy of the "log of materials" is limited thereby and by judgement of the operator. THIS INFORMATION IS FOR DESIGN PURPOSES ONLY.

B-5

Missouri Department of Transportation
Construction and Materials

BORING NO. B-5
Page 2 of 2

Job No.: 20231154.00 **County:** Webster **Route:** Route 60
Design: **Skew:** **Location:** Diggins, Missouri
Bent: **Logged By:** TB **Operator:** LRK
Station: **Northing:** 487878.315 **Date of Work:** 10/05/23-10/05/23
Offset: **Easting:** 1535146.608 **Depth to Water:** 38.5
Elevation: 1655.9 **Requested Northing:** **Depth Hole Open:**
Requested Station: **Requested Easting:** **Time Change:** 0 hours
Requested Offset: **Equipment:** CME 550X,Split-Spoon Sampler, Shelby Tube
Requested Elevation: **Location Note:**
Drill No.: **Hammer Efficiency:** 90% **Drilling Method:** HSA

Depth (ft)	Graphic	Description	Elevation (ft)	Sample Type	REC % (RQD %)	Blow Counts (N_{60})	Shear Data	Field Tests	Index Tests
25		22.0-27.0' (GC) Gray and red, clayey GRAVEL, with sand *(continued)*	1630						#200 41.6
		27.0-31.8' (CH) Gray and red, gravelly fat CLAY, with sand		X	44	24-14-9 (35)			MC = 20.8%
30			1625						
		31.8-40.7' (CH) Red, fat CLAY, with gravel							
		33.5' -trace sand from 33.5 to 35.0 ft.		X	100	9-8-9 (26)		PP = 2.50 tsf	MC = 26.3% Sieve Analysis Sieve # % Passing #200 72.1
35			1620						
		38.5' - brown, trace gravel from 38.5 ft. to 40.0 ft.		X	56	0-0-0 (0)		PP < 0.50 tsf	LL = 130 PL = 32 MC = 88.3%
40		40.7-46.3' LIMESTONE, gray, very hard, slightly weathered, finely crystalline, thin bedded, dense	1615						
		43.0' -core loss from 43.0 to 43.7 ft.			85 (79)		Qu Test Results UCS = 594 ksf		
45			1610						
		46.3-50.0' DOLOMITIC SHALE, gray, very hard, slightly weathered, finely crystalline, thin bedded, dense			100 (97)		Qu Test Results UCS = 892 ksf		
50		Refusal at 40.7 feet Bottom of borehole at 50.0 feet.							

N_{60} = (Em/60)Nm N_{60} - Corrected N value for standard 60% SPT efficiency; Em - Measured hammer efficiency in percent; Nm - Observed N-value
(1) = Assumed, (2) = Actual

Coordinate System: U.S. State Plane 1983 **Coordinate Zone:** Missouri Central **Coordinate Proj. Factor:** TBD
Coordinate Datum: NAD 83 (CONUS) **Coordinate Units:** U.S. Survey Feet

* Persons using this information are cautioned that the materials shown are determined by the equipment noted and accuracy of the "log of materials" is limited thereby and by judgement of the operator. THIS INFORMATION IS FOR DESIGN PURPOSES ONLY.

B-5

BORING DATA

Note: For locations of borings, see Sheet No. 1.

Note: This drawing is not to scale. Follow dimensions.

Sheet No. 33 of 38

Detailed May 2024
Checked June 2024

LETTER BOREHOLE - MODOT 20150728.GDT - 5/10/24 16:27 - \\TSI\PROJECTS\STL\GEOTECH\2023 PROJECTS\20231154.00 ROUTE 60 @ A - FINAL DESIGN\WORKING FILES\MODOT WEBSTER COUNTY 20231154.GPJ

JOSHUA D. JOLLIFF NUMBER PE-2006002824 PROFESSIONAL ENGINEER
09/10/2024 1:20:58 PM
Joshua D. Jolliff
MO PE-2006002824

DATE PREPARED 9/10/2024
ROUTE 60 | STATE MO
DISTRICT BR | SHEET NO. 33
COUNTY WEBSTER
JOB NO. J7P3425C
CONTRACT ID.
PROJECT NO.
BRIDGE NO. A9137

DESCRIPTION | DATE

MISSOURI HIGHWAYS AND TRANSPORTATION COMMISSION
105 WEST CAPITOL
JEFFERSON CITY, MO 65102
1-888-ASK-MODOT (1-888-275-6636)

CMT
©Copyright CMT, Inc.
CRAWFORD, MURPHY & TILLY, INC.
1631 WEST ELFINDALE STREET
SPRINGFIELD, MO 65807 (417) 869-6009
ENGINEERING CORPORATION - 000631

REV.

IF A SEAL IS PRESENT ON THIS SHEET IT HAS BEEN ELECTRONICALLY SEALED AND DATED.

TSI geotechnical inc.

Missouri Department of Transportation
Construction and Materials

BORING NO. B-6
Page 1 of 3

Job No.: 20231154.00 **County:** Webster **Route:** Route 60
Design: **Skew:** **Location:** Diggins, Missouri
Bent: **Logged By:** TB **Operator:** LRK
Station: **Northing:** 487902.8237 **Date of Work:** 10/06/23-10/06/23
Offset: **Easting:** 1535171.986 **Depth to Water:**
Elevation: 1656.1 **Requested Northing:** **Depth Hole Open:**
Requested Station: **Requested Easting:** **Time Change:**
Requested Offset: **Equipment:** CME 550X,Split-Spoon Sampler, Shelby Tube
Requested Elevation: **Location Note:**
Drill No.: **Hammer Efficiency:** 90% **Drilling Method:** HSA

Depth (ft)	Graphic	Description	Elevation (ft)	Sample Type	REC % (RQD %)	Blow Counts (N_{60})	Shear Data	Field Tests	Index Tests
0		0.0-2.0' (CH) Brown, fat CLAY, with gravel trace organics	1655						
				X	89	6-8-16 (36)		PP = 4.00 tsf	MC = 16.8%
		2.0-4.3' (GP) Brown, poorly graded GRAVEL, trace clay 3.0' - red and brown, with sand from 3.5 ft. to 4.3 ft.							
				X	89	25-22-24 (69)		PP = 4.50 tsf	MC = 23.0%
5		4.3-6.5' (CH) Red, gravelly fat CLAY							
		6.0' - with gravel below 6.0 ft.	1650						
				X	94	7-14-36 (75)		PP = 4.50 tsf	MC = 20.1%
		6.5-8.0' (GP) Red and gray, poorly graded GRAVEL with clay							
		8.0-11.8' (GC) Red and gray, clayey GRAVEL, trace sand							
				X	56	14-9-19 (42)			MC = 28.6% Sieve Analysis Sieve # % Passing #200 36.5
10			1645						
		11.8-13.8' (CH) Red, fat CLAY, with gravel							
		13.8-14.1' (GC) Red, clayey GRAVEL							
				X	94	4-38-19 (86)		PP = 3.00 tsf	MC = 19.5%
15		14.1-16.5' (GP) Gray, poorly graded GRAVEL							
			1640						
		16.5-24.5' (CH) Red, fat CLAY, trace gravel							
							Qu Test Results UCS = 2.32 ksf MC = 33.9% γ_{moist} = 114.5 pcf		
					100			PP = 4.00 tsf	
20			1635						
				X	94	1-8-17 (38)		PP = 3.00 tsf	MC = 31.2%
25									

N_{60} = (Em/60)Nm N_{60} - Corrected N value for standard 60% SPT efficiency; Em - Measured hammer efficiency in percent; Nm - Observed N-value
(1) = Assumed, (2) = Actual

Coordinate System: U.S. State Plane 1983 **Coordinate Zone:** Missouri Central **Coordinate Proj. Factor:** TBD
Coordinate Datum: NAD 83 (CONUS) **Coordinate Units:** U.S. Survey Feet

* Persons using this information are cautioned that the materials shown are determined by the equipment noted and accuracy of the "log of materials" is limited thereby and by judgement of the operator. THIS INFORMATION IS FOR DESIGN PURPOSES ONLY.

LETTER BOREHOLE - MODOT 20150728.GDT - 5/10/24 16:27 - \\TSI\PROJECTS\STL\GEOTECH\2023 PROJECTS\20231154.00 ROUTE 60 @ A - FINAL DESIGN\WORKING FILES\MODOT WEBSTER COUNTY 20231154.GPJ

B-6

TSI geotechnical inc.

Missouri Department of Transportation
Construction and Materials

BORING NO. B-6
Page 2 of 3

Job No.: 20231154.00 **County:** Webster **Route:** Route 60
Design: **Skew:** **Location:** Diggins, Missouri
Bent: **Logged By:** TB **Operator:** LRK
Station: **Northing:** 487902.8237 **Date of Work:** 10/06/23-10/06/23
Offset: **Easting:** 1535171.986 **Depth to Water:**
Elevation: 1656.1 **Requested Northing:** **Depth Hole Open:**
Requested Station: **Requested Easting:** **Time Change:**
Requested Offset: **Equipment:** CME 550X,Split-Spoon Sampler, Shelby Tube
Requested Elevation: **Location Note:**
Drill No.: **Hammer Efficiency:** 90% **Drilling Method:** HSA

Depth (ft)	Graphic	Description	Elevation (ft)	Sample Type	REC % (RQD %)	Blow Counts (N_{60})	Shear Data	Field Tests	Index Tests
25		24.5-28.0' (GP) Gray, poorly graded GRAVEL, with clay *(continued)*	1630						
		28.0-30.0' LIMESTONE, gray, very hard, slightly weathered, finely crystalline, thin bedded, dense			83 (63)		Qu Test Results UCS = 2290 ksf		
30		30.0-31.0' Core Loss							
		31.0-32.0' LIMESTONE	1625						
		32.0-35.0' Core Loss			28 (0)				
35		35.0-35.5' LIMESTONE							
		35.5-38.5' Core Loss	1620						
					40 (32)		Qu Test Results UCS = 1600 ksf		
40		38.5-48.7' LIMESTONE, gray, very hard, slightly weathered, finely crystalline, thin bedded, dense							
		41.0' -core loss from 41.0 to 41.4 ft.	1615						
					97 (75)		Qu Test Results UCS = 666 ksf		
45			1610						
					100 (100)		Qu Test Results UCS = 692 ksf		
50									

N_{60} = (Em/60)Nm N_{60} - Corrected N value for standard 60% SPT efficiency; Em - Measured hammer efficiency in percent; Nm - Observed N-value
(1) = Assumed, (2) = Actual

Coordinate System: U.S. State Plane 1983 **Coordinate Zone:** Missouri Central **Coordinate Proj. Factor:** TBD
Coordinate Datum: NAD 83 (CONUS) **Coordinate Units:** U.S. Survey Feet

* Persons using this information are cautioned that the materials shown are determined by the equipment noted and accuracy of the "log of materials" is limited thereby and by judgement of the operator. THIS INFORMATION IS FOR DESIGN PURPOSES ONLY.

LETTER BOREHOLE - MODOT 20150728.GDT - 5/10/24 16:27 - \\TSI\PROJECTS\STL\GEOTECH\2023 PROJECTS\20231154.00 ROUTE 60 @ A - FINAL DESIGN\WORKING FILES\MODOT WEBSTER COUNTY 20231154.GPJ

B-6

BORING DATA

Note: For locations of borings, see Sheet No. 1.

Note: This drawing is not to scale. Follow dimensions.

Sheet No. 34 of 38

Detailed May 2024
Checked June 2024

STATE OF MISSOURI
JOSHUA D. JOLLIFF
NUMBER PE-2006002824
PROFESSIONAL ENGINEER

09/10/2024 1:21:01 PM
Joshua D. Jolliff
MO PE-2006002824

DATE PREPARED: 9/10/2024
ROUTE: 60 STATE: MO
DISTRICT: BR SHEET NO.: 34
COUNTY: WEBSTER
JOB NO.: J7P3425C
CONTRACT ID.:
PROJECT NO.:
BRIDGE NO.: A9137

REV.	DESCRIPTION	DATE

MISSOURI HIGHWAYS AND TRANSPORTATION COMMISSION

105 WEST CAPITOL
JEFFERSON CITY, MO 65102
1-888-ASK-MODOT (1-888-275-6636)

CMT
© Copyright CMT, Inc.
CRAWFORD, MURPHY & TILLY, INC.
1631 WEST ELFINDALE STREET
SPRINGFIELD, MO 65807 (417) 869-6009
ENGINEERING CORPORATION - 000631

IF A SEAL IS PRESENT ON THIS SHEET IT HAS BEEN ELECTRONICALLY SEALED AND DATED.

L:\MoDOT\20092124-00\Draw\Structures\Sheets\Route A over 60\B_A9137_034_J7P3425C_Boring_Log6.dgn 1:03:17 PM 9/10/2024

Missouri Department of Transportation
Construction and Materials

BORING NO. B-6
Page 3 of 3

Job No.: 20231154.00 **County:** Webster **Route:** Route 60
Design: **Skew:** **Location:** Diggins, Missouri
Bent: **Logged By:** TB **Operator:** LRK
Station: **Northing:** 487902.8237 **Date of Work:** 10/06/23-10/06/23
Offset: **Easting:** 1535171.986 **Depth to Water:**
Elevation: 1656.1 **Requested Northing:** **Depth Hole Open:**
Requested Station: **Requested Easting:** **Time Change:**
Requested Offset: **Equipment:** CME 550X,Split-Spoon Sampler, Shelby Tube
Requested Elevation: **Location Note:**
Drill No.: **Hammer Efficiency:** 90% **Drilling Method:** HSA

Depth (ft)	Graphic	Description	Elevation (ft)	Sample Type	REC % (RQD %)	Blow Counts (N_{60})	Shear Data	Field Tests	Index Tests
50		48.7-70.5' DOLOMITIC SHALE, dark gray, very hard, slightly weathered, finely crystalline, thin bedded, dense *(continued)*	1605						
					100 (100)		Qu Test Results UCS = 808 ksf		
55			1600						
					98 (98)		Qu Test Results UCS = 1150 ksf		
60			1595						
					100 (98)		Qu Test Results UCS = 774 ksf		
65			1590						
					98 (80)				
70		Refusal at 28.0 feet. Bottom of borehole at 70.5 feet.							

N_{60} = (Em/60)Nm N_{60} - Corrected N value for standard 60% SPT efficiency; Em - Measured hammer efficiency in percent; Nm - Observed N-value
(1) = Assumed, (2) = Actual

Coordinate System: U.S. State Plane 1983 **Coordinate Zone:** Missouri Central **Coordinate Proj. Factor:** TBD
Coordinate Datum: NAD 83 (CONUS) **Coordinate Units:** U.S. Survey Feet

* Persons using this information are cautioned that the materials shown are determined by the equipment noted and accuracy of the "log of materials" is limited thereby and by judgement of the operator. THIS INFORMATION IS FOR DESIGN PURPOSES ONLY.

LETTER BOREHOLE - MODOT 20150728.GDT - 5/10/24 16:27 - \\TSI\PROJECTS\STL\GEOTECH\2023 PROJECTS\20231154.00 ROUTE 60 @ A - FINAL DESIGN\WORKING FILES\MODOT WEBSTER COUNTY 20231154.GPJ

B-6

Missouri Department of Transportation
Construction and Materials

BORING NO. B-8
Page 1 of 3

Job No.: 20231154.00 **County:** Webster **Route:** Route 60
Design: **Skew:** **Location:** Diggins, Missouri
Bent: **Logged By:** TB **Operator:** LRK
Station: **Northing:** 487938.0245 **Date of Work:** 10/11/23-10/17/23
Offset: **Easting:** 1535091.157 **Depth to Water:** 34.0
Elevation: 1653.0 **Requested Northing:** **Depth Hole Open:**
Requested Station: **Requested Easting:** **Time Change:** At Time of Drilling
Requested Offset: **Equipment:** CME 550X,Split-Spoon Sampler
Requested Elevation: **Location Note:**
Drill No.: **Hammer Efficiency:** 90% **Drilling Method:** HSA

Depth (ft)	Graphic	Description	Elevation (ft)	Sample Type	REC % (RQD %)	Blow Counts (N_{60})	Shear Data	Field Tests	Index Tests
0		0.0-3.0' (CH) Brown, fat CLAY, trace gravel, trace organics							
					100	2-2-10 (18)		PP = 3.00 tsf	MC = 26.0%
		3.0-5.5' (GP) Gray, poorly graded GRAVEL, with clay	1650						
5					100	45-50/0.3'			MC = 31.4%
		5.5-6.5' (CH) Red and brown, fat CLAY, trace gravel							
		6.5-8.0' (GC) Red and gray, clayey GRAVEL	1645		100	7-24-17 (62)		PP = 4.50 tsf	MC = 21.1%
		8.0-11.8' (CH) Red and gray, gravelly fat CLAY							
10					100	9-20-19 (59)		PP = 4.50 tsf	MC = 12.8%
		11.8-16.8' (GC) Gray and red, clayey GRAVEL (possible cobbles)	1640						
					78	8-17-35 (78)			MC = 10.3%
15		16.8-19.0' (CH) Red, fat CLAY, trace gravel	1635						
		19.0-21.8' (GC) Gray and red, clayey GRAVEL			100	5-7-10 (26)		PP = 4.00 tsf	MC = 22.2%
20		21.8-24.0' (CH) Red, fat CLAY, trace gravel	1630						
25		24.0-26.8' (GP) Gray, poorly graded GRAVEL			56	3-8-9 (26)		PP = 3.00 tsf	MC = 21.8%

N_{60} = (Em/60)Nm N_{60} - Corrected N value for standard 60% SPT efficiency; Em - Measured hammer efficiency in percent; Nm - Observed N-value
(1) = Assumed, (2) = Actual

Coordinate System: U.S. State Plane 1983 **Coordinate Zone:** Missouri Central **Coordinate Proj. Factor:** TBD
Coordinate Datum: NAD 83 (CONUS) **Coordinate Units:** U.S. Survey Feet

* Persons using this information are cautioned that the materials shown are determined by the equipment noted and accuracy of the "log of materials" is limited thereby and by judgement of the operator. THIS INFORMATION IS FOR DESIGN PURPOSES ONLY.

LETTER BOREHOLE - MODOT 20150728.GDT - 5/10/24 16:27 - \\TSI\PROJECTS\STL\GEOTECH\2023 PROJECTS\20231154.00 ROUTE 60 @ A - FINAL DESIGN\WORKING FILES\MODOT WEBSTER COUNTY 20231154.GPJ

B-8

BORING DATA

Note: For locations of borings, see Sheet No. 1.

Note: This drawing is not to scale. Follow dimensions.

Sheet No. 35 of 38

Detailed May 2024
Checked June 2024

STATE OF MISSOURI
JOSHUA D. JOLLIFF
NUMBER PE-2006002824
PROFESSIONAL ENGINEER
09/10/2024 1:21:06 PM
Joshua D. Jolliff
MO PE-2006002824

DATE PREPARED 9/10/2024
ROUTE 60 | STATE MO
DISTRICT BR | SHEET NO. 35
COUNTY WEBSTER
JOB NO. J7P3425C
CONTRACT ID.
PROJECT NO.
BRIDGE NO. A9137

DESCRIPTION | DATE | REV.

IF A SEAL IS PRESENT ON THIS SHEET IT HAS BEEN ELECTRONICALLY SEALED AND DATED.

MISSOURI HIGHWAYS AND TRANSPORTATION COMMISSION
105 WEST CAPITOL
JEFFERSON CITY, MO 65102
1-888-ASK-MODOT (1-888-275-6636)

CMT
© Copyright CMT, Inc.
CRAWFORD, MURPHY & TILLY, INC.
1631 WEST ELFINDALE STREET
SPRINGFIELD, MO 65807 (417) 869-6009
ENGINEERING CORPORATION - 000631

Missouri Department of Transportation
Construction and Materials

BORING NO. B-8
Page 2 of 3

Job No.: 20231154.00 **County:** Webster **Route:** Route 60
Design: **Skew:** **Location:** Diggins, Missouri
Bent: **Logged By:** TB **Operator:** LRK
Station: **Northing:** 487938.0245 **Date of Work:** 10/11/23-10/17/23
Offset: **Easting:** 1535091.157 **Depth to Water:** 34.0
Elevation: 1653.0 **Requested Northing:** **Depth Hole Open:**
Requested Station: **Requested Easting:** **Time Change:** At Time of Drilling
Requested Offset: **Equipment:** CME 550X,Split-Spoon Sampler
Requested Elevation: **Location Note:**
Drill No.: **Hammer Efficiency:** 90% **Drilling Method:** HSA

Depth (ft)	Graphic	Description	Elevation (ft)	Sample Type	REC % (RQD %)	Blow Counts (N_{60})	Shear Data	Field Tests	Index Tests
25		24.0-26.8' (GP) Gray, poorly graded GRAVEL *(continued)*							
		26.8-31.0' (GC) Red and brown, clayey GRAVEL with sand	1625						
30				X	100	7-6-11 (26)		PP = 4.50 tsf	MC = 29.2% Sieve Analysis Sieve # % Passing #200 41.9
		31.0-36.8' (CH) Red and brown, gravelly fat CLAY, with sand	1620						
35		▽		X	67	6-5-3 (12)		PP = 1.00 tsf	MC = 54.6%
		36.8-40.7' (GP) Gray, poorly graded GRAVEL, with clay (broken rock)	1615						
40				X	100	50/0.3'			MC = 29.5%
		40.7-47.2' DOLOMITE, gray, moderately hard to very hard, slightly weathered, finely crystalline, thin bedded, dense 41.6' -core loss from 41.6 to 42.0 ft.	1610			83 (0)			
45		43.5' -core loss from 43.5 to 43.7 ft.				72 (64)	Qu Test Results UCS = 856 ksf		
		47.2-70.2' DOLOMITIC SHALE, dark gray, very hard, slightly weathered, finely crystalline, thin bedded, dense	1605			100 (77)	Qu Test Results UCS = 794 ksf		
50									

N_{60} = (Em/60)Nm N_{60} - Corrected N value for standard 60% SPT efficiency; Em - Measured hammer efficiency in percent; Nm - Observed N-value
(1) = Assumed, (2) = Actual

Coordinate System: U.S. State Plane 1983 **Coordinate Zone:** Missouri Central **Coordinate Proj. Factor:** TBD
Coordinate Datum: NAD 83 (CONUS) **Coordinate Units:** U.S. Survey Feet

* Persons using this information are cautioned that the materials shown are determined by the equipment noted and accuracy of the "log of materials" is limited thereby and by judgement of the operator. THIS INFORMATION IS FOR DESIGN PURPOSES ONLY.

LETTER BOREHOLE - MODOT 20150728.GDT - 5/10/24 16:27 - \\TSI\PROJECTS\STL\GEOTECH\2023 PROJECTS\20231154.00 ROUTE 60 @ A - FINAL DESIGN\WORKING FILES\MODOT WEBSTER COUNTY 20231154.GPJ

B-8

Missouri Department of Transportation
Construction and Materials

BORING NO. B-8
Page 3 of 3

Job No.: 20231154.00 **County:** Webster **Route:** Route 60
Design: **Skew:** **Location:** Diggins, Missouri
Bent: **Logged By:** TB **Operator:** LRK
Station: **Northing:** 487938.0245 **Date of Work:** 10/11/23-10/17/23
Offset: **Easting:** 1535091.157 **Depth to Water:** 34.0
Elevation: 1653.0 **Requested Northing:** **Depth Hole Open:**
Requested Station: **Requested Easting:** **Time Change:** At Time of Drilling
Requested Offset: **Equipment:** CME 550X,Split-Spoon Sampler
Requested Elevation: **Location Note:**
Drill No.: **Hammer Efficiency:** 90% **Drilling Method:** HSA

Depth (ft)	Graphic	Description	Elevation (ft)	Sample Type	REC % (RQD %)	Blow Counts (N_{60})	Shear Data	Field Tests	Index Tests
50		47.2-70.2' DOLOMITIC SHALE, dark gray, very hard, slightly weathered, finely crystalline, thin bedded, dense *(continued)*							
			1600		100 (92)		Qu Test Results UCS = 974 ksf		
55									
			1595		100 (100)		Qu Test Results UCS = 650 ksf		
60									
			1590		100 (85)		Qu Test Results UCS = 918 ksf		
65									
			1585		95 (85)		Qu Test Results UCS = 588 ksf		
70		Refusal at 40.7 feet. Bottom of borehole at 70.2 feet.							

N_{60} = (Em/60)Nm N_{60} - Corrected N value for standard 60% SPT efficiency; Em - Measured hammer efficiency in percent; Nm - Observed N-value
(1) = Assumed, (2) = Actual

Coordinate System: U.S. State Plane 1983 **Coordinate Zone:** Missouri Central **Coordinate Proj. Factor:** TBD
Coordinate Datum: NAD 83 (CONUS) **Coordinate Units:** U.S. Survey Feet

* Persons using this information are cautioned that the materials shown are determined by the equipment noted and accuracy of the "log of materials" is limited thereby and by judgement of the operator. THIS INFORMATION IS FOR DESIGN PURPOSES ONLY.

LETTER BOREHOLE - MODOT 20150728.GDT - 5/10/24 16:27 - \\TSI\PROJECTS\STL\GEOTECH\2023 PROJECTS\20231154.00 ROUTE 60 @ A - FINAL DESIGN\WORKING FILES\MODOT WEBSTER COUNTY 20231154.GPJ

B-8

BORING DATA

Note: For locations of borings, see Sheet No. 1.

Note: This drawing is not to scale. Follow dimensions.

Sheet No. 36 of 38

Detailed May 2024
Checked June 2024

STATE OF MISSOURI
JOSHUA D. JOLLIFF
NUMBER PE-2006002824
PROFESSIONAL ENGINEER

09/10/2024 1:21:09 PM
Joshua D. Jolliff
MO PE-2006002824

DATE PREPARED 9/10/2024
ROUTE 60 | STATE MO
DISTRICT BR | SHEET NO. 36
COUNTY WEBSTER
JOB NO. J7P3425C
CONTRACT ID.
PROJECT NO.
BRIDGE NO. A9137

REV.	DESCRIPTION	DATE

MISSOURI HIGHWAYS AND TRANSPORTATION COMMISSION
105 WEST CAPITOL
JEFFERSON CITY, MO 65102
1-888-ASK-MODOT (1-888-275-6636)

CMT
© Copyright CMT, Inc.
CRAWFORD, MURPHY & TILLY, INC.
1631 WEST ELFINDALE STREET
SPRINGFIELD, MO 65807 (417) 869-6009
ENGINEERING CORPORATION - 000631

IF A SEAL IS PRESENT ON THIS SHEET IT HAS BEEN ELECTRONICALLY SEALED AND DATED.

L:\MoDOT\20092124-00\Draw\Structures\Sheets\Route A over 60\B_A9137_036_J7P3425C_Boring_Log8.dgn 1:04:25 PM 9/10/2024

TSI geotechnical inc.

Missouri Department of Transportation
Construction and Materials

BORING NO. B-11
Page 1 of 4

Job No.: 20231154.00 **County:** Webster **Route:** Route 60
Design: **Skew:** **Location:** Diggins, Missouri
Bent: **Logged By:** TB **Operator:** LRK
Station: **Northing:** 487953.2233 **Date of Work:** 10/17/23-10/18/23
Offset: **Easting:** 1535126.732 **Depth to Water:** 43.5
Elevation: 1653.5 **Requested Northing:** **Depth Hole Open:**
Requested Station: **Requested Easting:** **Time Change:** At Time of Drilling
Requested Offset: **Equipment:** CME 550X,Split-Spoon Sampler, Shelby Tube
Requested Elevation: **Location Note:**
Drill No.: **Hammer Efficiency:** 90% **Drilling Method:** HSA

Depth (ft)	Graphic	Description	Elevation (ft)	Sample Type	REC % (RQD %)	Blow Counts (N_{60})	Shear Data	Field Tests	Index Tests
0		0.0-3.0' (CH) Brown, gravelly fat CLAY, trace organics							
					100	5-9-39 (72)		PP = 4.00 tsf	MC = 17.2%
		3.0-5.5' (GC) Red and gray, clayey GRAVEL (possible cobbles)	1650						
					100	36-40-34 (111)			MC = 22.7%
5		5.5-6.5' (CH) Red and gray, fat CLAY, with sand and gravel (sample disturbed)							
					100			PP = 4.50 tsf	MC = 22.3%
		6.5-8.3' (GC) Gray and red, clayey GRAVEL			100	18-33-32 (98)			MC = 34.3%
			1645						
		8.3-8.6' (CH) Red, fat CLAY, trace gravel							
10		8.6-11.8' (GP) Gray, poorly graded GRAVEL			50	29-21-15 (54)		PP = 4.00 tsf	MC = 23.6%
		11.8-16.8' (CH) Red and gray, gravelly fat CLAY, with sand	1640						
					100	4-8-20 (42)			MC = 33.5% Sieve Analysis Sieve # % Passing #200 50.0
15		16.8-41.8' (CH) Red and gray, gravelly fat CLAY							
			1635						
					100	3-11-8 (29)		PP = 4.00 tsf	MC = 21.8%
20									
			1630						
		23.5' - red below 23.5 ft.			100	3-7-6 (20)		PP = 3.00 tsf	MC = 29.1%
25									

N_{60} = (Em/60)Nm N_{60} - Corrected N value for standard 60% SPT efficiency; Em - Measured hammer efficiency in percent; Nm - Observed N-value
(1) = Assumed, (2) = Actual

Coordinate System: U.S. State Plane 1983 **Coordinate Zone:** Missouri Central **Coordinate Proj. Factor:** TBD
Coordinate Datum: NAD 83 (CONUS) **Coordinate Units:** U.S. Survey Feet

* Persons using this information are cautioned that the materials shown are determined by the equipment noted and accuracy of the "log of materials" is limited thereby and by judgement of the operator. THIS INFORMATION IS FOR DESIGN PURPOSES ONLY.

LETTER BOREHOLE - MODOT 20150728.GDT - 5/10/24 16:26 - \\TSI\PROJECTS\STL\GEOTECH\2023 PROJECTS\20231154.00 ROUTE 60 @ A - FINAL DESIGN\WORKING FILES\MODOT WEBSTER COUNTY 20231154.GPJ

B-11

TSI geotechnical inc.

Missouri Department of Transportation
Construction and Materials

BORING NO. B-11
Page 2 of 4

Job No.: 20231154.00 **County:** Webster **Route:** Route 60
Design: **Skew:** **Location:** Diggins, Missouri
Bent: **Logged By:** TB **Operator:** LRK
Station: **Northing:** 487953.2233 **Date of Work:** 10/17/23-10/18/23
Offset: **Easting:** 1535126.732 **Depth to Water:** 43.5
Elevation: 1653.5 **Requested Northing:** **Depth Hole Open:**
Requested Station: **Requested Easting:** **Time Change:** At Time of Drilling
Requested Offset: **Equipment:** CME 550X,Split-Spoon Sampler, Shelby Tube
Requested Elevation: **Location Note:**
Drill No.: **Hammer Efficiency:** 90% **Drilling Method:** HSA

Depth (ft)	Graphic	Description	Elevation (ft)	Sample Type	REC % (RQD %)	Blow Counts (N_{60})	Shear Data	Field Tests	Index Tests
25		16.8-41.8' (CH) Red and gray, gravelly fat CLAY *(continued)*							
			1625						
		28.5' - trace gravel from 28.5 ft. to 33.0 ft.			100	1-4-4 (12)		PP = 3.00 tsf	MC = 42.5%
30									
								PP = 2.50 tsf	LL = 121 PL = 25 MC = 45.0%
		33.0' - with sand and gravel from 33.0 ft.to 33.5 ft. (sample disturbed)	1620		100				
35					72	16-14-8 (33)		PP = 2.00 tsf	MC = 37.2%
		38.5' - with gravel below 38.5 ft.	1615		39	7-3-2 (8)		PP = 2.00 tsf	MC = 49.6%
40									
		41.8-43.7' (GC) Brown, clayey GRAVEL	1610		100	50/0.2'			MC = 21.4%
45		44.0-46.8' DOLOMITE, gray, very hard, slightly weathered, finely crystalline, thin bedded, dense			100 (0)				
		46.8-62.5' DOLOMITIC SHALE, dark gray, very hard, slightly weathered, finely crystalline, massive bedded, dense	1605		98 (88)		Qu Test Results UCS = 1240 ksf		
50									

N_{60} = (Em/60)Nm N_{60} - Corrected N value for standard 60% SPT efficiency; Em - Measured hammer efficiency in percent; Nm - Observed N-value
(1) = Assumed, (2) = Actual

Coordinate System: U.S. State Plane 1983 **Coordinate Zone:** Missouri Central **Coordinate Proj. Factor:** TBD
Coordinate Datum: NAD 83 (CONUS) **Coordinate Units:** U.S. Survey Feet

* Persons using this information are cautioned that the materials shown are determined by the equipment noted and accuracy of the "log of materials" is limited thereby and by judgement of the operator. THIS INFORMATION IS FOR DESIGN PURPOSES ONLY.

LETTER BOREHOLE - MODOT 20150728.GDT - 5/10/24 16:26 - \\TSI\PROJECTS\STL\GEOTECH\2023 PROJECTS\20231154.00 ROUTE 60 @ A - FINAL DESIGN\WORKING FILES\MODOT WEBSTER COUNTY 20231154.GPJ

B-11

BORING DATA

Note: For locations of borings, see Sheet No. 1.

Note: This drawing is not to scale. Follow dimensions.

Sheet No. 37 of 38

Detailed May 2024
Checked June 2024

STATE OF MISSOURI
JOSHUA D. JOLLIFF
NUMBER PE-2006002824
PROFESSIONAL ENGINEER

09/10/2024 1:21:13 PM
Joshua D. Jolliff
MO PE-2006002824

DATE PREPARED 9/10/2024
ROUTE 60 | STATE MO
DISTRICT BR | SHEET NO. 37
COUNTY WEBSTER
JOB NO. J7P3425C
CONTRACT ID.
PROJECT NO.
BRIDGE NO. A9137

DESCRIPTION | DATE | REV.

MISSOURI HIGHWAYS AND TRANSPORTATION COMMISSION
105 WEST CAPITOL
JEFFERSON CITY, MO 65102
1-888-ASK-MODOT (1-888-275-6636)

CMT
© Copyright CMT, Inc.
CRAWFORD, MURPHY & TILLY, INC.
1631 WEST ELFINDALE STREET
SPRINGFIELD, MO 65807 (417) 869-6009
ENGINEERING CORPORATION - 000631

IF A SEAL IS PRESENT ON THIS SHEET IT HAS BEEN ELECTRONICALLY SEALED AND DATED.

L:\MoDOT\20092124-00\Draw\Structures\Sheets\Route A over 60\B_A9137_037_J7P3425C_Boring_Log9.dgn 1:04:59 PM 9/10/2024

Missouri Department of Transportation
Construction and Materials

BORING NO. B-11
Page 3 of 4

Job No.: 20231154.00 **County:** Webster **Route:** Route 60
Design: **Skew:** **Location:** Diggins, Missouri
Bent: **Logged By:** TB **Operator:** LRK
Station: **Northing:** 487953.2233 **Date of Work:** 10/17/23-10/18/23
Offset: **Easting:** 1535126.732 **Depth to Water:** 43.5
Elevation: 1653.5 **Requested Northing:** **Depth Hole Open:**
Requested Station: **Requested Easting:** **Time Change:** At Time of Drilling
Requested Offset: **Equipment:** CME 550X,Split-Spoon Sampler, Shelby Tube
Requested Elevation: **Location Note:**
Drill No.: **Hammer Efficiency:** 90% **Drilling Method:** HSA

Depth (ft)	Graphic	Description	Elevation (ft)	Sample Type	REC % (RQD %)	Blow Counts (N_{60})	Shear Data	Field Tests	Index Tests
50		46.8-62.5' DOLOMITIC SHALE, dark gray, very hard, slightly weathered, finely crystalline, massive bedded, dense *(continued)*							
			1600		97 (88)		Qu Test Results UCS = 926 ksf		
55									
			1595		96 (96)		Qu Test Results UCS = 902 ksf		
60									LL = 35 PL = 17
		62.5-80.0' SHALE, brown, highly weathered, soft to moderately hard, massive bedded 63.0' -various depths of core loss below 63.0 ft.	1590		60 (60)		Qu Test Results UCS = 696 ksf		
65									
			1585						LL = 33 PL = 18
70					47 (0)				
		73.0' -calcareous below 73.0 ft.	1580						
75									

N_{60} = (Em/60)Nm N_{60} - Corrected N value for standard 60% SPT efficiency; Em - Measured hammer efficiency in percent; Nm - Observed N-value
(1) = Assumed, (2) = Actual

Coordinate System: U.S. State Plane 1983 **Coordinate Zone:** Missouri Central **Coordinate Proj. Factor:** TBD
Coordinate Datum: NAD 83 (CONUS) **Coordinate Units:** U.S. Survey Feet

* Persons using this information are cautioned that the materials shown are determined by the equipment noted and accuracy of the "log of materials" is limited thereby and by judgement of the operator. THIS INFORMATION IS FOR DESIGN PURPOSES ONLY.

LETTER BOREHOLE - MODOT 20150728.GDT - 5/10/24 16:26 - \\TSI\PROJECTS\ST\LGEOTECH\2023 PROJECTS\20231154.00 ROUTE 60 @ A - FINAL DESIGN\WORKING FILES\MODOT WEBSTER COUNTY 20231154.GPJ

B-11

Missouri Department of Transportation
Construction and Materials

BORING NO. B-11
Page 4 of 4

Job No.: 20231154.00 **County:** Webster **Route:** Route 60
Design: **Skew:** **Location:** Diggins, Missouri
Bent: **Logged By:** TB **Operator:** LRK
Station: **Northing:** 487953.2233 **Date of Work:** 10/17/23-10/18/23
Offset: **Easting:** 1535126.732 **Depth to Water:** 43.5
Elevation: 1653.5 **Requested Northing:** **Depth Hole Open:**
Requested Station: **Requested Easting:** **Time Change:** At Time of Drilling
Requested Offset: **Equipment:** CME 550X,Split-Spoon Sampler, Shelby Tube
Requested Elevation: **Location Note:**
Drill No.: **Hammer Efficiency:** 90% **Drilling Method:** HSA

Depth (ft)	Graphic	Description	Elevation (ft)	Sample Type	REC % (RQD %)	Blow Counts (N_{60})	Shear Data	Field Tests	Index Tests
75		62.5-80.0' SHALE, brown, highly weathered, soft to moderately hard, massive bedded *(continued)*	1575		68 (0)				LL = 38 PL = 20
80		Refusal at 44.0 feet. Bottom of borehole at 80.0 feet.							

N_{60} = (Em/60)Nm N_{60} - Corrected N value for standard 60% SPT efficiency; Em - Measured hammer efficiency in percent; Nm - Observed N-value
(1) = Assumed, (2) = Actual

Coordinate System: U.S. State Plane 1983 **Coordinate Zone:** Missouri Central **Coordinate Proj. Factor:** TBD
Coordinate Datum: NAD 83 (CONUS) **Coordinate Units:** U.S. Survey Feet

* Persons using this information are cautioned that the materials shown are determined by the equipment noted and accuracy of the "log of materials" is limited thereby and by judgement of the operator. THIS INFORMATION IS FOR DESIGN PURPOSES ONLY.

LETTER BOREHOLE - MODOT 20150728.GDT - 5/10/24 16:26 - \\TSI\PROJECTS\ST\LGEOTECH\2023 PROJECTS\20231154.00 ROUTE 60 @ A - FINAL DESIGN\WORKING FILES\MODOT WEBSTER COUNTY 20231154.GPJ

B-11

BORING DATA

Note: For locations of borings, see Sheet No. 1.

Note: This drawing is not to scale. Follow dimensions.

Sheet No. 38 of 38

Detailed May 2024
Checked June 2024

STATE OF MISSOURI
JOSHUA D. JOLLIFF
NUMBER PE-2006002824
PROFESSIONAL ENGINEER

09/10/2024 1:21:16 PM
Joshua D. Jolliff
MO PE-2006002824

DATE PREPARED 9/10/2024
ROUTE 60 | STATE MO
DISTRICT BR | SHEET NO. 38
COUNTY WEBSTER
JOB NO. J7P3425C
CONTRACT ID.
PROJECT NO.
BRIDGE NO. A9137

IF A SEAL IS PRESENT ON THIS SHEET IT HAS BEEN ELECTRONICALLY SEALED AND DATED.

REV.	DATE	DESCRIPTION

MISSOURI HIGHWAYS AND TRANSPORTATION COMMISSION
105 WEST CAPITOL
JEFFERSON CITY, MO 65102
1-888-ASK-MODOT (1-888-275-6636)

CMT
©Copyright CMT, Inc.
CRAWFORD, MURPHY & TILLY, INC.
1631 WEST ELFINDALE STREET
SPRINGFIELD, MO 65807 (417) 869-6009
ENGINEERING CORPORATION - 000631

L:\MoDOT\20092124-00\Draw\Structures\Sheets\Route A over 60\B_A9137_038_J7P3425C_Boring_Log10.dgn 1:05:34 PM 9/10/2024

159' MECHANICALLY STABILIZED EARTH (MSE) RETAINING WALL SYSTEM

SEC/SUR 25 TWP 29N RGE 18W

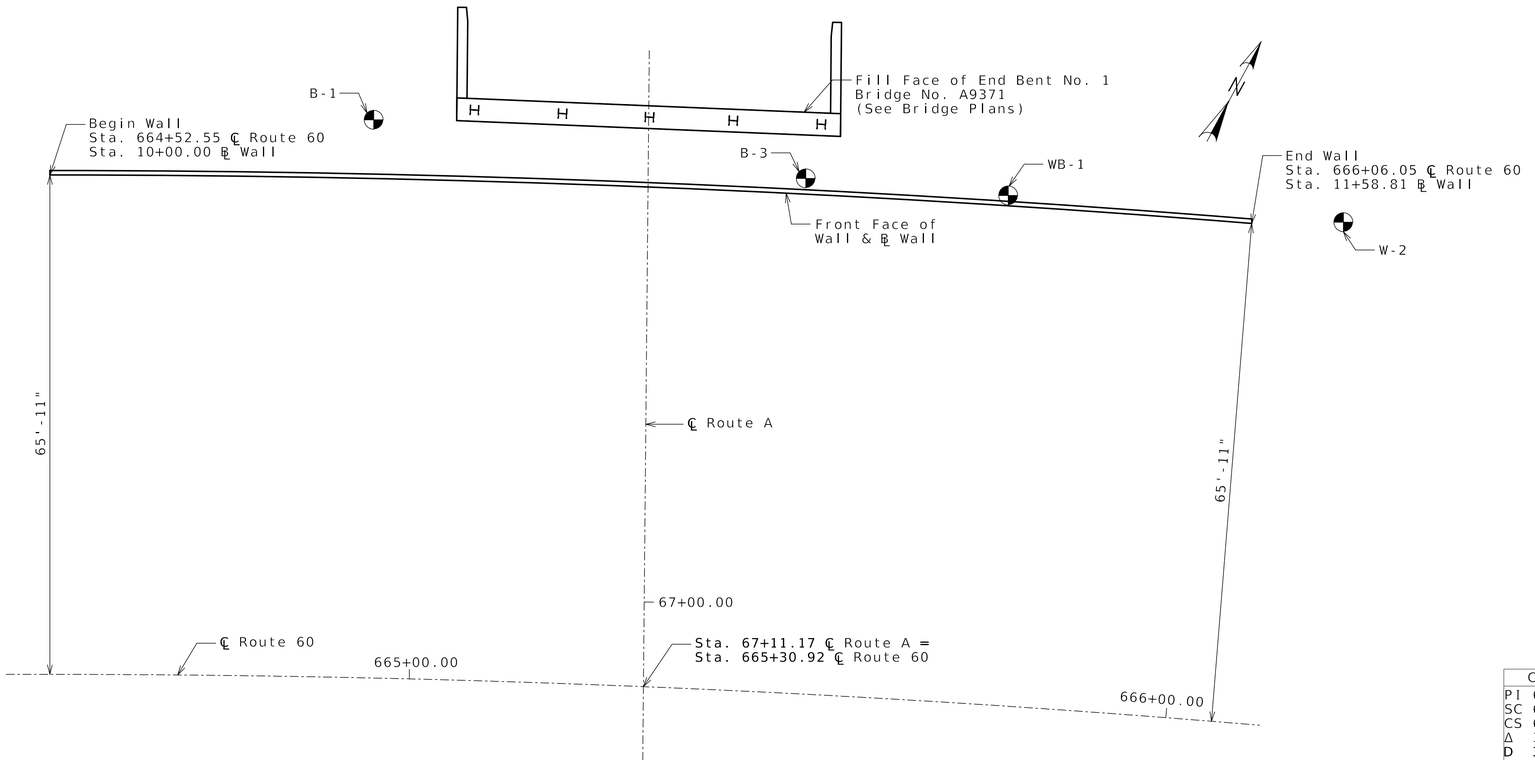

PLAN

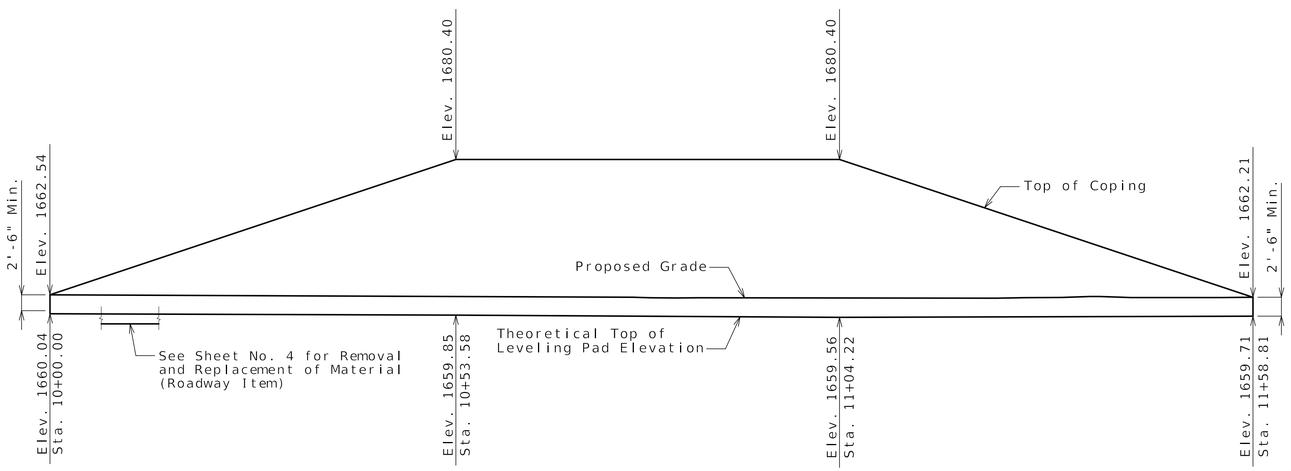

DEVELOPED ELEVATION

Concrete leveling pad not shown for clarity (1)

CURVE EX_US60_17
PI 669+89.61
SC 663+33.51
CS 675+97.41
Δ 37° 56' 20.5" (RT)
D 3° 00' 06.3"
L 1,263.90'
T 656.10'
R 1,908.75'

Indicates location of borings.

Notice and Disclaimer Regarding Boring Log Data

The locations of all subsurface borings for this structure are shown on the plan sheet(s) for this structure. The boring data for all locations indicated, as well as any other boring logs or other factual records of subsurface data and investigations performed by the department for the design of the project, are shown on Sheet(s) No. 5 thru 8 and may be included in the Electronic Bridge Deliverables. They will also be available from the Project Contact upon written request. No greater significance or weight should be given to the boring data depicted on the plan sheets than is given to the subsurface data available from the district or elsewhere.

The Commission does not represent or warrant that any such boring data accurately depicts the conditions to be encountered in constructing this project. A contractor assumes all risks it may encounter in basing its bid prices, time or schedule of performance on the boring data depicted here or those available from the district, or on any other documentation not expressly warranted, which the contractor may obtain from the Comission.

(1) Wall contractor shall show the following items on the design drawings and/or on the fabricator shop drawings.

- Leveling pad horizontal
- Leveling pad length and step elevations shall be based on wall manufacturer's recommendation. Top of leveling pad elevations shall not be higher than theoretical top of leveling pad elevations shown on these plans.

B.M. CONTROL POINT NO. 137
5/8" I.B. W/2" ALUMINUM CAP
N: 487406.2123, E: 1534366.0016, ELEVATION: 1664.2490'

RETAINING WALL ALONG ROUTE 60

ROUTE A FROM ROUTE 417 TO ROUTE NN
ABOUT 1.0 MILE SOUTH OF ROUTE 417
BEGINNING STATION 664+52.55 ℄ ROUTE 60

Designed Apr. 2024
Detailed Apr. 2024
Checked Apr. 2024

Note: This drawing is not to scale. Follow dimensions.

STATE OF MISSOURI
CHRIS LINNEMAN
NUMBER PE-2002016690
PROFESSIONAL ENGINEER
07/30/2024 4:38:12 PM
Chris Linneman - Civil
MO PE-2002016690

DATE PREPARED 7/30/2024
ROUTE 60 | STATE MO
DISTRICT BR | SHEET NO. 1
COUNTY WEBSTER
JOB NO. J7P3425C
CONTRACT ID.
PROJECT NO.
BRIDGE NO. A9351

DESCRIPTION	DATE

MISSOURI HIGHWAYS AND TRANSPORTATION COMMISSION
105 WEST CAPITOL
JEFFERSON CITY, MO 65102
1-888-ASK-MODOT (1-888-275-6636)

EFK•Moen
Civil Engineering Design
13523 Barrett Parkway Dr
Suite 250
St. Louis, MO 63021
Phone 314-394-3100
Fax 314-394-3199
Missouri Certificate of Authority: 001578

REV.

Estimated Quantities		
Item		Total
Mechanically Stabilized Earth Wall Systems	sq. foot	2304

MSE Wall Systems Data Table					
Proprietary Wall Systems		Combination Wall Systems			
Manufacturer	System	Facing Unit Manufacturer	Facing Unit	Geogrid Manufacturer	Geogrid

MSE Wall Systems Data Table is to be completed by MoDOT construction personnel to record the manufacturer of the proprietary wall system or the manufacturers of the combination wall system that was used for constructing the MSE wall.

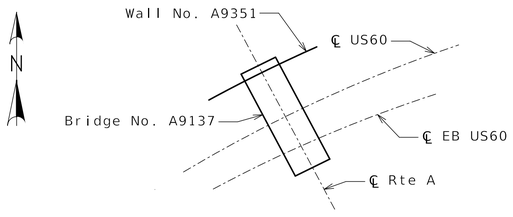

LOCATION SKETCH

General Notes:

Design Specifications:

2002 AASHTO LFD (17th Ed.) Standard Specifications (Section 5 ASD Design)
Seismic Performance Category = A
Acceleration Coefficient = 0.04

Design Loading:

Φ_f = 26° and Unit weight, γ_s = 120 pcf for retained backfill material to be retained by the mechanically stabilized earth wall system.

Φ_f = 22° for unimproved foundation ground where wall is to bear.
Φ_f = 36° for improved foundation ground where wall is to bear.

For unimproved foundation ground, the allowable bearing pressure is 3.4 to 5.1 ksf.
For improved foundation ground, the allowable bearing pressure is 6.0 ksf.

The maximum applied bearing pressure for the controlling design case at the foundation level shall be shown on the shop drawings and shall be less than the allowable bearing pressure for foundation ground provided herein. For seismic design the maximum applied bearing pressure shall be less than two times the allowable bearing pressure.

Allowable bearing pressure and limits of improved foundation ground shall not be adjusted from that as shown on the plans.

Contractor shall include design Φ_f (actual $\Phi_f \geq 34°$) and the total unit weight, γ_s, for the select granular backfill (reinforced backfill and wedge area backfill) for structural systems on shop drawings. Contractor shall identify source of select granular backfill material, submit proctor in accordance with AASHTO T 99 (ASTM D698) and gradation with the shop drawings. When backfill material is too coarse to develop a proctor curve the contractor shall determine the maximum dry density (relative density) in accordance with ASTM D4253 and ASTM D4254 and assume percent passing the 200 sieve for optimum water content.

Total unit weight, γ_s = (95% compaction) x (maximum dry density) x (1 + optimum water content)

Design Φ_f = 34°for the select granular backfill (reinforced backfill) only for structural systems.

Factor of safety shall be 2.0 for overturning and 1.5 for sliding.

For seismic design the factor of safety shall be 1.5 for overturning and 1.1 for sliding.

Use default values for the pullout friction factor, F^*, in accordance with AASHTO figure 5.8.5.2A and default value for scale effect correction factor, α, in accordance with AASHTO table 5.8.5.2A. For approved steel strips not shown in AASHTO figure 5.8.5.2A, use $F^* \leq 2.0$ at zero depth and $F^* \leq \text{Tan } \Phi_f$ at 20 feet depth and Φ_f design = 34°. F^* and α values shall be shown on the shop drawings.

Design Unit Stresses:

All concrete for leveling pad and coping shall be Class B or B-1 with f'c = 4000 psi.

The minimum compressive strength of concrete for precast panel shall be 4,000 psi in accordance with Sec 1052.

Miscellaneous:

The MSE wall system shall be built vertical.

The MSE wall system shall be built in accordance with Sec 720.

The MSE wall system shall be a large block wall system.

The cost of joint filler and joint seal, complete in place, will be considered completely covered by the contract unit price for Concrete Traffic Barrier (Type D). See Roadway Plans.

Panel and coping (or capstone) reinforcement shall be epoxy coated.

A filter cloth meeting the requirements for a Separation Geotextile material shall be placed between the select granular backfill for structural systems and the backfill being retained by the mechanically stabilized earth wall system.

Coping shall be required on this structure. When CIP coping sections extend beyond the limits of a single panel, bond breaker (roofing felt or other approved alternate) between wall panel and coping is required. Coping joints shall use 3/4-inch chamfers and shall be sealed with 3/4-inch joint filler. Coping reinforcement shall terminate 1 1/2-inch minimum from face of coping joint.

The contractor shall be solely responsible to coordinate construction of the wall with bridge and roadway construction and ensure that the bridge and roadway construction, resulting or existing obstructions, shall not impact the construction or performance of the wall. Soil reinforcement shall be designed and placed to avoid damage by pile driving, guardrail post installation, utility and sign foundations. (See Roadway and Bridge plans.)

STATE OF MISSOURI
CHRIS LINNEMAN
NUMBER PE-2002016690
PROFESSIONAL ENGINEER

07/30/2024 4:40:45 PM
Chris Linneman - Civil
MO PE-2002016690

DATE PREPARED
7/30/2024

ROUTE	STATE
60	MO
DISTRICT	SHEET NO.
BR	2

COUNTY
WEBSTER

JOB NO.
J7P3425C

CONTRACT ID.

PROJECT NO.

BRIDGE NO.
A9351

DESCRIPTION	DATE

MISSOURI HIGHWAYS AND TRANSPORTATION COMMISSION
105 WEST CAPITOL
JEFFERSON CITY, MO 65102
1-888-ASK-MODOT (1-888-275-6636)

EFK•Moen
Civil Engineering Design
13523 Barrett Parkway Dr
Suite 250
St. Louis, MO 63021
Phone 314-394-3100
Fax 314-394-3199
Missouri Certificate of Authority: 001578

REV.

GENERAL NOTES AND QUANTITIES

Detailed Apr. 2024
Checked Apr. 2024

Note: This drawing is not to scale. Follow dimensions.

\\server17\ProjectsCONNECT\2021R2\MoDOT_ORD_v10.10.01.03\21047 CMT Route 60 at Route A Walls\DGN\Bridge\Final\Plotsheets\A9351\B_A9351_002_J7P3425C_Retaining Wall System.dgn 8:26:42 AM 7/30/2024

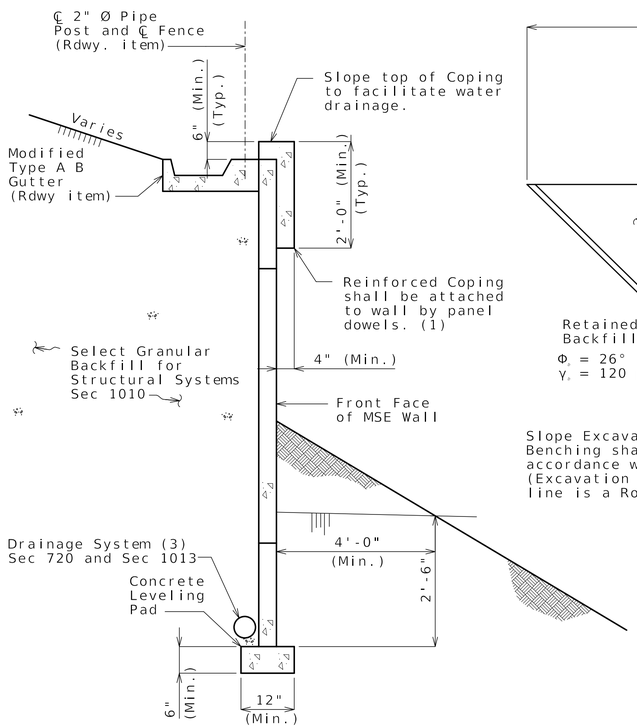

TYPICAL SECTION THRU
LARGE BLOCK WALL

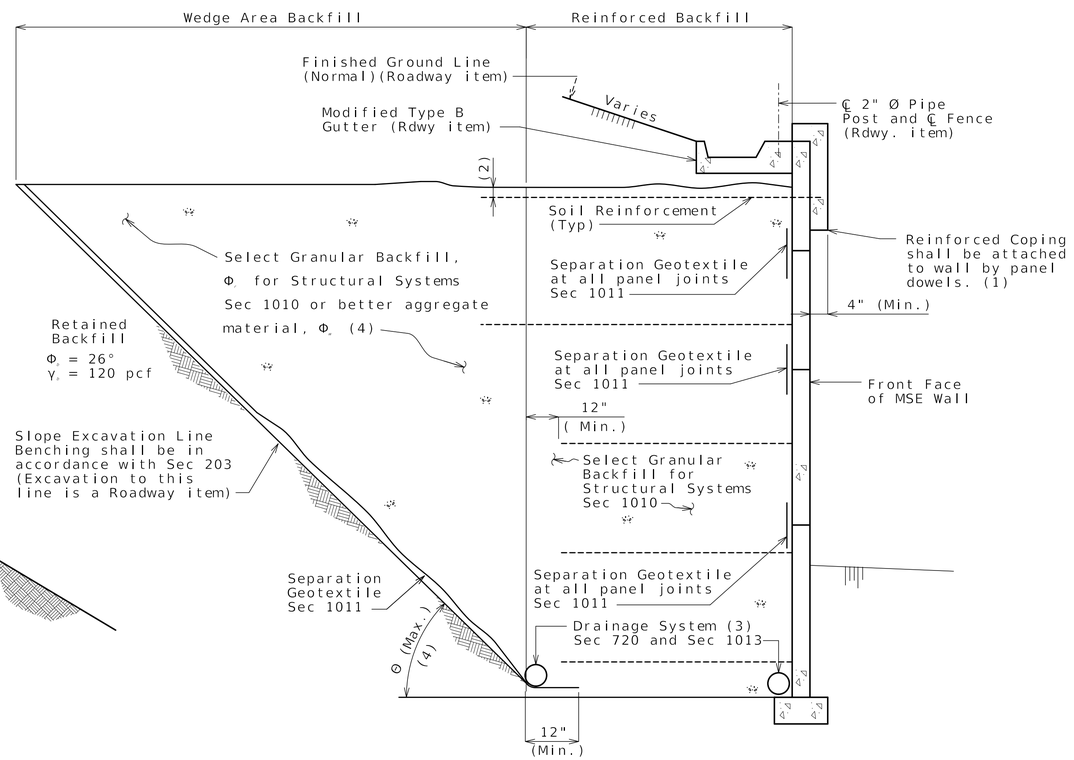

TYPICAL SECTION THRU
LARGE BLOCK WALL SHOWING FILTER CLOTH

General Notes Cont.:

Minimum 18" wide Geotextile strips shall be centered at vertical and horizontal joints of panel. Geotextile material shall be adhered to back face of panel using an adhesive compound supplied by the manufacturer. All edges of each fabric strip shall provide a positive seal. A minimum 18" overlap shall be provided between spliced filter fabric.

Aluminized soil reinforcement shall have edges coated with coating material per manufacturer.

Soil reinforcement shall be spaced to avoid roadway drop inlet behind wall.

All steel soil reinforcements shall be separated from other metallic elements by at least 3 inches.

The splay angle should be less than 15° and tensile capacity of splayed reinforcement shall be reduced by the cosine of the splay angle. Soil reinforcement shall clear the obstruction by at least 3 inches.

No reinforcement shall be left unconnected to the wall face or arbitrarily cut/bent in the field to avoid the obstruction.

Where interference between the vertical obstruction and the soil reinforcement is unavoidable, the design of the wall near the obstruction may be modified using one of the alternatives in FHWA-NHI-10-24, Section 5.4.2. Show detail layout on the drawings. For wall designs with horizontal obstructions in reinforced soil mass, see FHWA-NHI-10-024, Section 5.4.3.

Excavation:
Excavation quantities and pay items are given on the roadway plans. Excavation quantities are based on a soil reinforcement length of 15 ft. The soil reinforcement length may vary based upon the wall design selected by the contractor. Plan excavation quantities will be paid regardless of any actual quantities removed based on the soil reinforcement length and design selected.

(1) Inverted U-shape reinforced capstone may be used in lieu of coping. Panel dowels for level-up concrete shall be required and provided by manufacturer. The dowels shall be field trimmed to clear the capstone by a minimum of 1 1/2 inches and a maximum of 2 1/2 inches.

(2) Topmost layer of reinforcement shall be fully covered with select granular backfill for structural systems, as approved by the wall manufacturer, before placement of the Separation Geotextile.

(3) Minimum 6" diameter perforated PVC or PE pipe.

Manufacturer shall show drain details on design plans to be submitted as shown on MoDOT MSE wall plans and/or roadway plans.

Contractor shall modify the drain details as shown if it will improve flow as may be the case for stepped leveling pad, and for an uneven ground line (approval of the engineer required).

(4) Select granular backfill shall extend a minimum of 12" beyond the end of all soil reinforcement. Where the angle, Θ, between the retained backfill excavation/fill line and the horizontal is less than 90°, the wedge area backfill between Θ and 90° shall be filled with select granular backfill for structural systems meeting the requirements of Section 1010.

- For $(45° + \Phi_s/3) < \Theta \leq 90°$, properties for retained backfill shall be used for active force computations.

- For $\Theta \leq (45° + \Phi_s/3)$, contractor shall have the option to use select granular backfill, Φ_s, or better aggregate material, Φ_s for active force computations in the wedge area backfill. For active force computations, the angle of internal friction for wedge area backfill material, Φ_s or Φ_s, shall be limited to 34° unless determined otherwise in accordance with Section 1010. If Φ_s or Φ_s > 34°is desired for wedge area backfill then test report shall be submitted with shop drawings. Φ_s or Φ_s shall not be greater than 40° for computations. Final configuration of this option shall be sent to Geotechnical Section for a new overall global stability analysis. Design Φ_s shall be shown on the shop drawings if used.

Material Properties Used in Design				
Reinf. Fill/Select Granular Backfill		Active Force Computations		Foundation
Φ°	γ (pcf)	Φ°	γ (pcf)	Φ°

Note: MSE Wall designer shall include table on shop drawings and provide values used in the design computations. Effects of cohesion shall be ignored unless approved by the engineer.

The slope excavation line shall be benched and separation geotextile shall be placed between the retained backfill and either select granular backfill or better aggregate material, and between the select granular backfill and better aggregate material.

Show range of acceptable theta (Θ) angle on shop drawings which must be consistent with design computations and proposed construction of wall. Show active force computation properties on shop drawings and in design computations. Coordination between wall designer (manufacturer) and contractor is required before shop drawing submittal.

DETAILS FOR GENERIC MSE WALL

Detailed Apr. 2024
Checked Apr. 2024

Note: This drawing is not to scale. Follow dimensions.

STATE OF MISSOURI
CHRIS LINNEMAN
NUMBER PE-2002016690
PROFESSIONAL ENGINEER
07/30/2024 4:40:55 PM
Chris Linneman - Civil
MO PE-2002016690

DATE PREPARED: 7/30/2024
ROUTE: 60 | STATE: MO
DISTRICT: BR | SHEET NO.: 3
COUNTY: WEBSTER
JOB NO.: J7P3425C
CONTRACT ID.:
PROJECT NO.:
BRIDGE NO.: A9351

DATE	DESCRIPTION

MISSOURI HIGHWAYS AND TRANSPORTATION COMMISSION
105 WEST CAPITOL
JEFFERSON CITY, MO 65102
1-888-ASK-MODOT (1-888-275-6636)

EFK•Moen
Civil Engineering Design
13523 Barrett Parkway Dr
Suite 250
St. Louis, MO 63021
Phone 314-394-3100
Fax 314-394-3199
Missouri Certificate of Authority: 001578

REV.

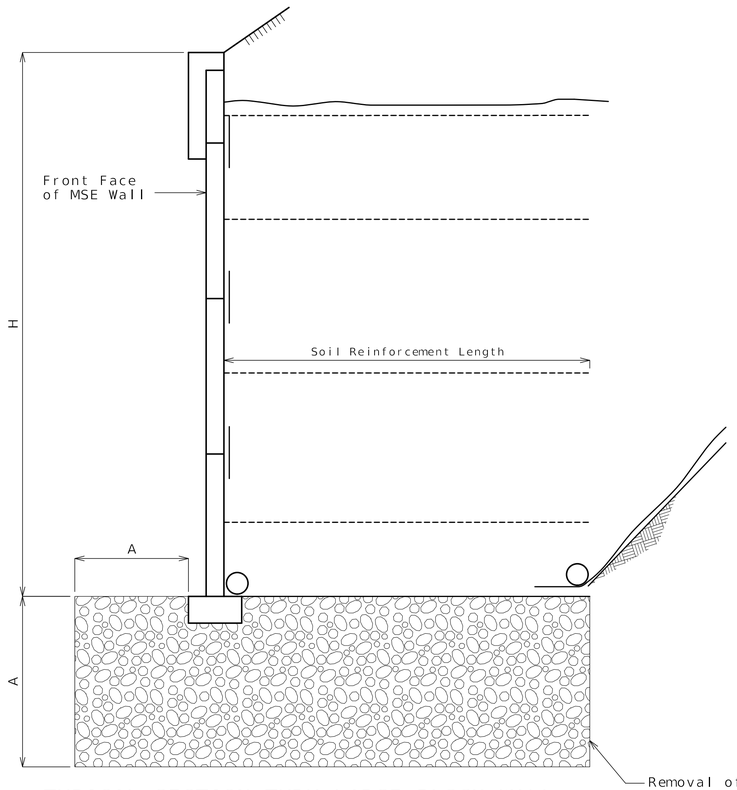

TYPICAL SECTION THRU LARGE BLOCK WALL
SHOWING REMOVAL AND REPLACEMENT OF MATERIAL

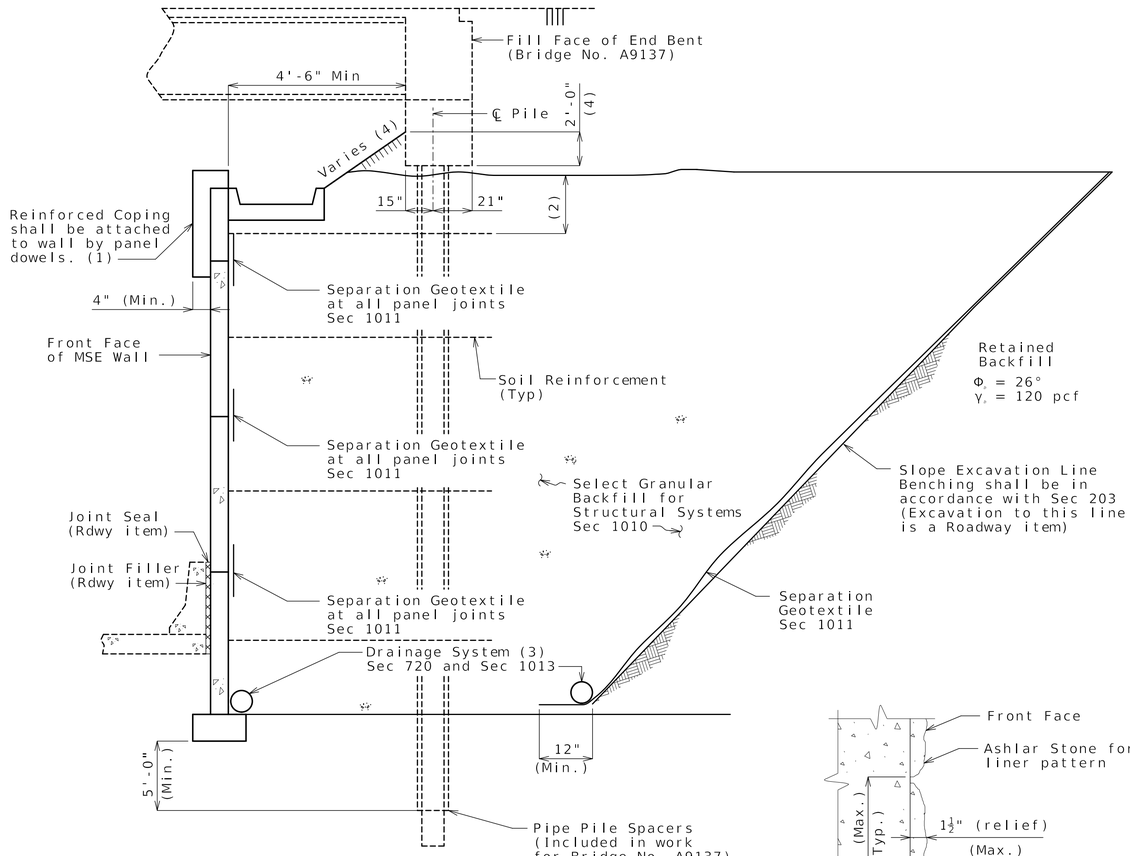

TYPICAL SECTION THRU
LARGE BLOCK WALL UNDER BRIDGE

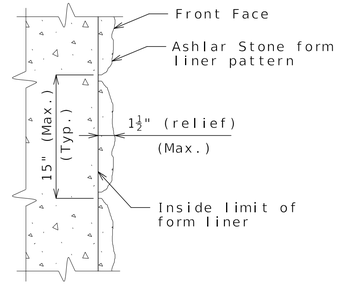

FORM LINER DETAIL
(Large Block Wall)

REMOVAL AND REPLACEMENT OF MATERIAL	
Wall Height	A
0ft<H≤10ft	2'-0"
10ft<H≤15ft	3'-0"
15ft<H≤20ft	4'-0"
20ft<H≤29ft	5'-0"

Note: For additional information, see "TYPICAL SECTION THRU LARGE BLOCK WALL SHOWING FILTER CLOTH".

(1) Inverted U-shape reinforced capstone may be used in lieu of coping. Panel dowels for level-up concrete shall be required and provided by manufacturer. The dowels shall be field trimmed to clear the capstone by a minimum of 1 1/2 inches and a maximum of 2 1/2 inches.

(2) Topmost layer of reinforcement shall be fully covered with select granular backfill for structural systems, as approved by the wall manufacturer, before placement of the Separation Geotextile.

(3) Minimum 6" diameter perforated PVC or PE pipe.

Manufacturer shall show drain details on design plans to be submitted as shown on MoDOT MSE wall plans and/or roadway plans.

Contractor shall modify the drain details as shown if it will improve flow as may be the case for stepped leveling pad, and for an uneven ground line (approval of the engineer required).

(4) See bridge plans.

Notes:

The cost of form liners for MSE wall systems, complete in place, will be considered completely covered by the contract unit price for Mechanically Stabilized Earth Wall System.

Form liner shall be constructed in accordance with Special Provisions.

The following is a list of form liner manufacturers and types which may be used. Depth of relief for all form liner pattern's shall vary up to 1 1/2". The height of any single 'stone' shall be 15" maximum.

- Scott System, Inc.: Form liner pattern #167 "Ashlar Stone"
- Fitzgerald Formliners: Form liner pattern #16986 "Ashlar Stone"
- Greenstreak: Form liner pattern #330 "Ashlar Stone"
- Spec Formliners: Form liner pattern #1515 "Ashlar Stone"
- Customrock: Form liner pattern #12020 "Tollway Ashlar"
- An approved equal

DETAILS FOR GENERIC MSE WALL

Detailed Apr. 2024
Checked Apr. 2024

Note: This drawing is not to scale. Follow dimensions.

STATE OF MISSOURI
ALEX BENZ
NUMBER PE-2018003121
PROFESSIONAL ENGINEER
Alex C. Benz
10/30/2024 8:14:41 AM
Alex Benz - Civil
MO PE-2018003121

DATE PREPARED 10/30/2024
ROUTE 60 | STATE MO
DISTRICT BR | SHEET NO. 4
COUNTY WEBSTER
JOB NO. J7P3425C
CONTRACT ID.
PROJECT NO.
BRIDGE NO. A9351

DESCRIPTION | DATE

MISSOURI HIGHWAYS AND TRANSPORTATION COMMISSION
105 WEST CAPITOL
JEFFERSON CITY, MO 65102
1-888-ASK-MODOT (1-888-275-6636)

EFK•Moen
Civil Engineering Design
13523 Barrett Parkway Dr
Suite 250
St. Louis, MO 63021
Phone 314-394-3100
Fax 314-394-3199
Missouri Certificate of Authority: 001578

REV.

Missouri Department of Transportation
Construction and Materials

BORING NO. B-1
Page 1 of 3

Job No.: 20211233.00 **County:** Webster **Route:** Route 60
Design: **Skew:** **Location:** Webster County
Bent: **Logged By:** TB **Operator:** LRK
Station: **Northing:** 488006.3571 **Date of Work:** 10/10/23-10/11/23
Offset: **Easting:** 1535040.251 **Depth to Water:** 53.5
Elevation: 1661.8 **Requested Northing:** **Depth Hole Open:**
Requested Station: **Requested Easting:** **Time Change:** At Time of Drilling
Requested Offset: **Equipment:** CME 550X,Split-Spoon Sampler, Shelby Tube
Requested Elevation: **Location Note:**
Drill No.: **Hammer Efficiency:** 90% **Drilling Method:** HSA

Depth (ft)	Graphic	Description	Elevation (ft)	Sample Type	REC % (RQD %)	Blow Counts (N_{60})	Shear Data	Field Tests	Index Tests
0		0.0-1.6' (CH) Brown, gravelly fat CLAY							
			1660		50	6-15-17 (48)		PP = 4.50 tsf	MC = 18.9%
		1.6-3.0' (GP) Gray, poorly graded GRAVEL							
		3.0-5.5' (GC) Brown and gray, clayey GRAVEL, with sand, trace organics			50	5-7-8 (23)			MC = 14.7% Sieve Analysis Sieve # % Passing #4 42.6 #200 29.9
5									
		5.5-17.0' (CH) Brown and red, fat CLAY 6.0' - trace organics from 6.0 ft. to 10.0 ft.	1655		39	3-5-15 (30)		PP = 2.50 tsf	MC = 19.2%
		8.5' - with gravel from 8.5 ft. to 10.0 ft.			61	3-6-6 (18)		PP = 3.00 tsf	LL = 63 PL = 18 MC = 23.7%
10									
			1650						
					83		Qu Test Results MC = 22.2% γ_{moist} = 99.0 pcf	PP = 2.00 tsf	
15									
		17.0-31.8' (CH) Red and gray, gravelly fat CLAY, trace sand	1645						
					100	24-21-45 (99)		PP = 4.50 tsf	MC = 28.5% Sieve Analysis Sieve # % Passing #200 57.3
20									
			1640						
					94	14-30-37			MC = 21.5%
25									

N_{60} = (Em/60)Nm N_{60} - Corrected N value for standard 60% SPT efficiency; Em - Measured hammer efficiency in percent; Nm - Observed N-value
(1) = Assumed, (2) = Actual

Coordinate System: U.S. State Plane 1983 **Coordinate Zone:** Missouri Central **Coordinate Proj. Factor:** TBD
Coordinate Datum: NAD 83 (CONUS) **Coordinate Units:** U.S. Survey Feet

* Persons using this information are cautioned that the materials shown are determined by the equipment noted and accuracy of the "log of materials" is limited thereby and by judgement of the operator. THIS INFORMATION IS FOR DESIGN PURPOSES ONLY.

Missouri Department of Transportation
Construction and Materials

BORING NO. B-1
Page 2 of 3

Job No.: 20211233.00 **County:** Webster **Route:** Route 60
Design: **Skew:** **Location:** Webster County
Bent: **Logged By:** TB **Operator:** LRK
Station: **Northing:** 488006.3571 **Date of Work:** 10/10/23-10/11/23
Offset: **Easting:** 1535040.251 **Depth to Water:** 53.5
Elevation: 1661.8 **Requested Northing:** **Depth Hole Open:**
Requested Station: **Requested Easting:** **Time Change:** At Time of Drilling
Requested Offset: **Equipment:** CME 550X,Split-Spoon Sampler, Shelby Tube
Requested Elevation: **Location Note:**
Drill No.: **Hammer Efficiency:** 90% **Drilling Method:** HSA

Depth (ft)	Graphic	Description	Elevation (ft)	Sample Type	REC % (RQD %)	Blow Counts (N_{60})	Shear Data	Field Tests	Index Tests
25		17.0-31.8' (CH) Red and gray, gravelly fat CLAY, trace sand *(continued)*	1635						
					100	12-12-24 (54)			MC = 20.4% Sieve Analysis Sieve # % Passing #200 51.7
30									
		31.8-54.2' (CH) Red and gray, fat CLAY	1630						
		33.5' - gravelly from 33.5 ft. to 35 ft.			78	4-19-16 (53)		PP = 4.50 tsf	MC = 28.3%
35									
			1625						
		38.5' - red and brown, with gravel from 38.5 ft. to 40.0 ft.			100	50/0.4'		PP = 3.00 tsf	MC = 30.2%
40									
			1620						
		43.5' - gravelly from 43.5 ft. to 45.0 ft.			100	11-24-22 (69)		PP = 4.00 tsf	MC = 26.5%
45									
			1615						
		48.5' - with gravel from 48.5 ft. to 50.0 ft.			100	7-6-5 (17)		PP = 3.00 tsf	MC = 45.0%
50									

N_{60} = (Em/60)Nm N_{60} - Corrected N value for standard 60% SPT efficiency; Em - Measured hammer efficiency in percent; Nm - Observed N-value
(1) = Assumed, (2) = Actual

Coordinate System: U.S. State Plane 1983 **Coordinate Zone:** Missouri Central **Coordinate Proj. Factor:** TBD
Coordinate Datum: NAD 83 (CONUS) **Coordinate Units:** U.S. Survey Feet

* Persons using this information are cautioned that the materials shown are determined by the equipment noted and accuracy of the "log of materials" is limited thereby and by judgement of the operator. THIS INFORMATION IS FOR DESIGN PURPOSES ONLY.

STATE OF MISSOURI
CHRIS LINNEMAN
NUMBER PE-2002016690
PROFESSIONAL ENGINEER
07/30/2024 4:41:26 PM
Chris Linneman - Civil
MO PE-2002016690

DATE PREPARED 7/30/2024
ROUTE 60 STATE MO
DISTRICT BR SHEET NO. 5
COUNTY WEBSTER
JOB NO. J7P3425C
CONTRACT ID.
PROJECT NO.
BRIDGE NO. A9351

DESCRIPTION | DATE

MISSOURI HIGHWAYS AND TRANSPORTATION COMMISSION
105 WEST CAPITOL
JEFFERSON CITY, MO 65102
1-888-ASK-MODOT (1-888-275-6636)

EFK•Moen
Civil Engineering Design
13523 Barrett Parkway Dr
Suite 250
St. Louis, MO 63021
Phone 314-394-3100
Fax 314-394-3199
Missouri Certificate of Authority: 001578

REV.

BORING DATA

Note: For locations of borings, see Sheet No. 1.

Detailed Apr. 2024
Checked Apr. 2024

Note: This drawing is not to scale. Follow dimensions.

LETTER BOREHOLE - MODOT 20150728.GDT - 2/20/24 12:43 - \\TSI\PROJECTS\STL\GEOTECH\2021 PROJECTS\20211233.00 WEBSTER COUNTY ROUTE 60 JOB J7P3425C\WORKING FILES\MODOT WEBSTER COUNTY 20211233.GPJ

\\server17\ProjectsCONNECT\2021R2\MoDOT_ORD_v10.10.01.03\21047 CMT Route 60 at Route A Walls\DGN\Bridge\Final\Plotsheets\A9351\B_A9351_005_J7P3425C_Boring-DataB1.dgn 8:26:45 AM 7/30/2024

Missouri Department of Transportation
Construction and Materials

BORING NO. B-1
Page 3 of 3

Job No.: 20211233.00 **County:** Webster **Route:** Route 60
Design: **Skew:** **Location:** Webster County
Bent: **Logged By:** TB **Operator:** LRK
Station: **Northing:** 488006.3571 **Date of Work:** 10/10/23-10/11/23
Offset: **Easting:** 1535040.251 **Depth to Water:** 53.5
Elevation: 1661.8 **Requested Northing:** **Depth Hole Open:**
Requested Station: **Requested Easting:** **Time Change:** At Time of Drilling
Requested Offset: **Equipment:** CME 550X,Split-Spoon Sampler, Shelby Tube
Requested Elevation: **Location Note:**
Drill No.: **Hammer Efficiency:** 90% **Drilling Method:** HSA

Depth (ft)	Graphic	Description	Elevation (ft)	Sample Type	REC % (RQD %)	Blow Counts (N_{60})	Shear Data	Field Tests	Index Tests
50		31.8-54.2' (CH) Red and gray, fat CLAY *(continued)*	1610						
		53.5' - red below 53.5 ft.							
55		54.2-58.5' (GP) Gray, poorly graded GRAVEL			56	6-16-2 (27)		PP = 2.00 tsf	LL = 135 PL = 30 MC = 60.7%
			1605						
		58.2-59.3' DOLOMITE, gray, very hard, slightly weathered, finely crystalline, thin bedded, dense			100 (83)				
60		59.3-68.5' DOLOMITIC SHALE, dark gray, very-hard, slightly weathered, finely crystalline, thin bedded, dense							
			1600		100 (100)		Qu Test Results UCS = 800 ksf		
65									
			1595		100 (100)		Qu Test Results UCS = 1950 ksf		
		Refusal at 58.5 feet. Bottom of borehole at 68.5 feet.							

N_{60} = (Em/60)Nm N_{60} - Corrected N value for standard 60% SPT efficiency; Em - Measured hammer efficiency in percent; Nm - Observed N-value
(1) = Assumed, (2) = Actual

Coordinate System: U.S. State Plane 1983 **Coordinate Zone:** Missouri Central **Coordinate Proj. Factor:** TBD
Coordinate Datum: NAD 83 (CONUS) **Coordinate Units:** U.S. Survey Feet

* Persons using this information are cautioned that the materials shown are determined by the equipment noted and accuracy of the "log of materials" is limited thereby and by judgement of the operator. THIS INFORMATION IS FOR DESIGN PURPOSES ONLY.

Missouri Department of Transportation
Construction and Materials

BORING NO. B-3
Page 1 of 3

Job No.: 20211233.00 **County:** Webster **Route:** Route 60
Design: **Skew:** **Location:** Webster County
Bent: **Logged By:** TB **Operator:** LRK
Station: **Northing:** 488026.8281 **Date of Work:** 10/09/23-10/09/23
Offset: **Easting:** 1535094.044 **Depth to Water:**
Elevation: 1662.3 **Requested Northing:** **Depth Hole Open:**
Requested Station: **Requested Easting:** **Time Change:**
Requested Offset: **Equipment:** CME 550X,Split-Spoon Sampler, Shelby Tube
Requested Elevation: **Location Note:**
Drill No.: **Hammer Efficiency:** 90% **Drilling Method:** HSA

Depth (ft)	Graphic	Description	Elevation (ft)	Sample Type	REC % (RQD %)	Blow Counts (N_{60})	Shear Data	Field Tests	Index Tests
0		0.0-3.0' (GC) Gray and brown, clayey GRAVEL, trace organics	1660		39	9-9-6 (23)			MC = 25.1%
		3.0-3.8' (CH) Brown and red, fat CLAY							
5		3.8-5.5' (GP) Gray, poorly graded GRAVEL			33	3-8-12 (30)		PP = 2.00 tsf	MC = 25.8%
		5.5-7.7' (CH) Red and brown, gravelly shaley fat CLAY, with sand	1655		56	25-17-7 (36)		PP = 2.00 tsf	MC = 25.3% Sieve Analysis Sieve # % Passing #200 55.4
		7.7-19.0' (CH) Red, fat CLAY 8.0' - with gravel from 8.0 ft. to 9.0 ft.			75		Qu Test Results MC = 20.1% γ_{moist} = 117.9 pcf	PP = 3.00 tsf	
10			1650						
		13.5' - brown and red from 13.5 ft. to 15.0 ft.			94	3-4-5 (14)		PP = 3.00 tsf	MC = 20.3%
15			1645						
		18.5' - gravelly from 18.5 ft. to 19.0 ft.			100	30-38-24 (93)		PP = 3.00 tsf	MC = 26.8%
20		19.0-26.8' (CH) Red and gray, gravelly fat CLAY, trace sand	1640						
25					83	11-11-25 (54)			MC = 24.1% Sieve Analysis Sieve # % Passing

N_{60} = (Em/60)Nm N_{60} - Corrected N value for standard 60% SPT efficiency; Em - Measured hammer efficiency in percent; Nm - Observed N-value
(1) = Assumed, (2) = Actual

Coordinate System: U.S. State Plane 1983 **Coordinate Zone:** Missouri Central **Coordinate Proj. Factor:** TBD
Coordinate Datum: NAD 83 (CONUS) **Coordinate Units:** U.S. Survey Feet

* Persons using this information are cautioned that the materials shown are determined by the equipment noted and accuracy of the "log of materials" is limited thereby and by judgement of the operator. THIS INFORMATION IS FOR DESIGN PURPOSES ONLY.

BORING DATA

Note: For locations of borings, see Sheet No. 1.

Detailed Apr. 2024
Checked Apr. 2024

Note: This drawing is not to scale. Follow dimensions.

Sheet No. 6 of 8

STATE OF MISSOURI
CHRIS LINNEMAN
NUMBER PE-2002016690
PROFESSIONAL ENGINEER

07/30/2024 4:55:09 PM
Chris Linneman - Civil
MO PE-2002016690

DATE PREPARED 7/30/2024
ROUTE 60 STATE MO
DISTRICT BR SHEET NO. 6
COUNTY WEBSTER
JOB NO. J7P3425C
CONTRACT ID.
PROJECT NO.
BRIDGE NO. A9351

DESCRIPTION / DATE

MISSOURI HIGHWAYS AND TRANSPORTATION COMMISSION
105 WEST CAPITOL
JEFFERSON CITY, MO 65102
1-888-ASK-MODOT (1-888-275-6636)

EFK•Moen
Civil Engineering Design
13523 Barrett Parkway Dr
Suite 250
St. Louis, MO 63021
Phone 314-394-3100
Fax 314-394-3199
Missouri Certificate of Authority: 001578

REV.

LETTER BOREHOLE - MODOT 20150728.GDT - 2/20/24 12:43 - \\TSI\PROJECTS\STL\GEOTECH\2021 PROJECTS\20211233.00 WEBSTER COUNTY ROUTE 60 JOB J7P3425C\WORKING FILES\MODOT WEBSTER COUNTY 20211233.GPJ

Missouri Department of Transportation
Construction and Materials

BORING NO. B-3
Page 2 of 3

Job No.: 20211233.00 **County:** Webster **Route:** Route 60
Design: **Skew:** **Location:** Webster County
Bent: **Logged By:** TB **Operator:** LRK
Station: **Northing:** 488026.8281 **Date of Work:** 10/09/23-10/09/23
Offset: **Easting:** 1535094.044 **Depth to Water:**
Elevation: 1662.3 **Requested Northing:** **Depth Hole Open:**
Requested Station: **Requested Easting:** **Time Change:**
Requested Offset: **Equipment:** CME 550X,Split-Spoon Sampler, Shelby Tube
Requested Elevation: **Location Note:**
Drill No.: **Hammer Efficiency:** 90% **Drilling Method:** HSA

Depth (ft)	Graphic	Description	Elevation (ft)	Sample Type	REC % (RQD %)	Blow Counts (N_{60})	Shear Data	Field Tests	Index Tests
25		19.0-26.8' (CH) Red and gray, gravelly fat CLAY, trace sand *(continued)*							#200 50.9
		26.8-28.8' (CH) Red, fat CLAY, with gravel	1635						
30		28.8-32.0' (GC) Red and gray, clayey GRAVEL			100	5-9-21 (45)		PP = 4.50 tsf	MC = 25.5%
		32.0-36.8' (CH) Brown and gray, shaley fat CLAY, with gravel, trace sand	1630						
35					100	8-12-12 (36)			MC = 26.0% Sieve Analysis Sieve # % Passing #200 73.2
		36.8-44.5' (CH) Brown, fat CLAY with gravel	1625						
40					100	4-12-14 (39)		PP = 3.00 tsf	MC = 38.4%
		43.5' - trace gravel below 43.5 ft.	1620						
45		44.5-46.8' (CH) Brown and gray, fat CLAY, with gravel, trace sand			100	4-30-21 (77)		PP = 3.00 tsf	MC = 38.5% Sieve Analysis Sieve # % Passing #200 65.0
		46.8-54.1' (CH) Red and brown, fat CLAY 46.9' - trace gravel 48.5 ft. to 50.0 ft.	1615						
50					61	7-5-5 (15)		PP = 2.00 tsf	LL = 117 PL = 25 MC = 47.7%

N_{60} = (Em/60)Nm N_{60} - Corrected N value for standard 60% SPT efficiency; Em - Measured hammer efficiency in percent; Nm - Observed N-value
(1) = Assumed, (2) = Actual

Coordinate System: U.S. State Plane 1983 **Coordinate Zone:** Missouri Central **Coordinate Proj. Factor:** TBD
Coordinate Datum: NAD 83 (CONUS) **Coordinate Units:** U.S. Survey Feet

* Persons using this information are cautioned that the materials shown are determined by the equipment noted and accuracy of the "log of materials" is limited thereby and by judgement of the operator. THIS INFORMATION IS FOR DESIGN PURPOSES ONLY.

Missouri Department of Transportation
Construction and Materials

BORING NO. B-3
Page 3 of 3

Job No.: 20211233.00 **County:** Webster **Route:** Route 60
Design: **Skew:** **Location:** Webster County
Bent: **Logged By:** TB **Operator:** LRK
Station: **Northing:** 488026.8281 **Date of Work:** 10/09/23-10/09/23
Offset: **Easting:** 1535094.044 **Depth to Water:**
Elevation: 1662.3 **Requested Northing:** **Depth Hole Open:**
Requested Station: **Requested Easting:** **Time Change:**
Requested Offset: **Equipment:** CME 550X,Split-Spoon Sampler, Shelby Tube
Requested Elevation: **Location Note:**
Drill No.: **Hammer Efficiency:** 90% **Drilling Method:** HSA

Depth (ft)	Graphic	Description	Elevation (ft)	Sample Type	REC % (RQD %)	Blow Counts (N_{60})	Shear Data	Field Tests	Index Tests
50		46.8-54.1' (CH) Red and brown, fat CLAY *(continued)*	1610						MC = 69.3%
55		54.1-55.5' (GP) Gray, poorly graded GRAVEL			86	14-12-50/0.2'			
		55.5-58.7' DOLOMITE, gray, very hard, slightly weathered, finely crystalline, thin bedded, dense	1605		100 (81)		Qu Test Results UCS = 1910 ksf		
60		58.7-65.0' DOLOMITIC SHALE, dark gray, very hard, slightly weathered, finely crystalline, thin bedded, dense	1600		100 (100)		Qu Test Results UCS = 994 ksf		
65		Refusal at 55.5 feet. Bottom of borehole at 65.0 feet.							

N_{60} = (Em/60)Nm N_{60} - Corrected N value for standard 60% SPT efficiency; Em - Measured hammer efficiency in percent; Nm - Observed N-value
(1) = Assumed, (2) = Actual

Coordinate System: U.S. State Plane 1983 **Coordinate Zone:** Missouri Central **Coordinate Proj. Factor:** TBD
Coordinate Datum: NAD 83 (CONUS) **Coordinate Units:** U.S. Survey Feet

* Persons using this information are cautioned that the materials shown are determined by the equipment noted and accuracy of the "log of materials" is limited thereby and by judgement of the operator. THIS INFORMATION IS FOR DESIGN PURPOSES ONLY.

LETTER BOREHOLE - MODOT 20150728.GDT - 2/20/24 12:43 - \\TSI\PROJECTS\STL\GEOTECH\2021 PROJECTS\20211233.00 WEBSTER COUNTY ROUTE 60 JOB J7P3425C\WORKING FILES\MODOT WEBSTER COUNTY 20211233.GPJ

BORING DATA

Note: For locations of borings, see Sheet No. 1.

Detailed Apr. 2024
Checked Apr. 2024

Note: This drawing is not to scale. Follow dimensions.

Sheet No. 7 of 8

STATE OF MISSOURI
CHRIS LINNEMAN
NUMBER PE-2002016690
PROFESSIONAL ENGINEER
07/30/2024 4:56:01 PM
Chris Linneman - Civil
MO PE-2002016690

DATE PREPARED 7/30/2024
ROUTE 60 | STATE MO
DISTRICT BR | SHEET NO. 7
COUNTY WEBSTER
JOB NO. J7P3425C
CONTRACT ID.
PROJECT NO.
BRIDGE NO. A9351

DESCRIPTION | DATE

MISSOURI HIGHWAYS AND TRANSPORTATION COMMISSION
105 WEST CAPITOL
JEFFERSON CITY, MO 65102
1-888-ASK-MODOT (1-888-275-6636)

EFK•Moen
Civil Engineering Design
13523 Barrett Parkway Dr
Suite 250
St. Louis, MO 63021
Phone 314-394-3100
Fax 314-394-3199
Missouri Certificate of Authority: 001578

REV.

BORING NO. W-2

Page 1 of 1

Missouri Department of Transportation
Construction and Materials

Job No.: 20231154.00 **County:** Webster **Route:** Route 60
Design: **Skew:** **Location:** Webster County
Bent: **Logged By:** TB **Operator:** LRK
Station: **Northing:** 488055.6776 **Date of Work:** 10/09/23-10/09/23
Offset: **Easting:** 1535159.132 **Depth to Water:**
Elevation: 1662.3 **Requested Northing:** **Depth Hole Open:**
Requested Station: **Requested Easting:** **Time Change:**
Requested Offset: **Equipment:** CME 550X,Auger Cuttings
Requested Elevation: **Location Note:** Observation from Auger cuttings.
Drill No.: **Hammer Efficiency:** **Drilling Method:** CFA

Depth (ft)	Graphic	Description	Elevation (ft)	Sample Type	REC % (RQD %)	Blow Counts (N_{60})	Shear Data	Field Tests	Index Tests
0		0.0-15.0' (CH) Brown, gravelly fat CLAY	1660						
5		5.0' - red and brown below 5.0 ft.	1655						
10			1650						
15		Bottom of borehole at 15.0 feet.							

N_{60} = (Em/60)Nm N_{60} - Corrected N value for standard 60% SPT efficiency; Em - Measured hammer efficiency in percent; Nm - Observed N-value
(1) = Assumed, (2) = Actual

Coordinate System: U.S. State Plane 1983 **Coordinate Zone:** Missouri Central **Coordinate Proj. Factor:** TBD
Coordinate Datum: NAD 83 (CONUS) **Coordinate Units:** U.S. Survey Feet

* Persons using this information are cautioned that the materials shown are determined by the equipment noted and accuracy of the "log of materials" is limited thereby and by judgement of the operator. THIS INFORMATION IS FOR DESIGN PURPOSES ONLY.

BORING NO. WB-1

Page 1 of 1

Missouri Department of Transportation
Construction and Materials

Job No.: 20231154.00 **County:** Webster **Route:** Route 60
Design: **Skew:** **Location:** Webster County
Bent: **Logged By:** TB **Operator:** LRK
Station: **Northing:** 488037.6273 **Date of Work:** 10/09/23-10/09/23
Offset: **Easting:** 1535118.591 **Depth to Water:**
Elevation: 1662.1 **Requested Northing:** **Depth Hole Open:**
Requested Station: **Requested Easting:** **Time Change:**
Requested Offset: **Equipment:** CME 550X,Split-Spoon Sampler, Shelby Tube
Requested Elevation: **Location Note:**
Drill No.: **Hammer Efficiency:** **Drilling Method:** HSA

Depth (ft)	Graphic	Description	Elevation (ft)	Sample Type	REC % (RQD %)	Blow Counts (N_{60})	Shear Data	Field Tests	Index Tests
0		0.0-3.0' (CH) Brown, gravelly fat CLAY, trace fine roots	1660		39	5-7-5 (18)		PP = 2.50 tsf	LL = 54 PL = 17 MC = 17.4%
5		3.0-5.5' (GC) Brown and gray, clayey GRAVEL			61	7-7-7 (21)			MC = 15.9%
		5.5-15.0' (CH) Red and gray, fat CLAY 6.0' - with gravel from 6.0 ft. to 7.0 ft.	1655		67		Qu Test Results		
10		8.5' - gravelly from 8.5 ft. to 10.0 ft.	1650		100	4-4-5 (14)		PP = 3.00 tsf	MC = 19.8%
15		13.5' - brown and red from 13.5 ft. to 15 ft.			100	5-5-6 (17)		PP = 2.50 tsf	MC = 17.3%
		Bottom of borehole at 15.0 feet.							

N_{60} = (Em/60)Nm N_{60} - Corrected N value for standard 60% SPT efficiency; Em - Measured hammer efficiency in percent; Nm - Observed N-value
(1) = Assumed, (2) = Actual

Coordinate System: U.S. State Plane 1983 **Coordinate Zone:** Missouri Central **Coordinate Proj. Factor:** TBD
Coordinate Datum: NAD 83 (CONUS) **Coordinate Units:** U.S. Survey Feet

* Persons using this information are cautioned that the materials shown are determined by the equipment noted and accuracy of the "log of materials" is limited thereby and by judgement of the operator. THIS INFORMATION IS FOR DESIGN PURPOSES ONLY.

LETTER BOREHOLE -MODOT 20150728.GDT - 4/26/24 16:36 - \\TSI\PROJECTS\STL\GEOTECH\2023 PROJECTS\20231154.00 ROUTE 60 @ A - FINAL DESIGN\WORKING FILES\MODOT WEBSTER COUNTY 20231154.GPJ

CHRIS LINNEMAN — STATE OF MISSOURI — NUMBER PE-2002016690 — PROFESSIONAL ENGINEER
07/30/2024 4:40:34 PM
Chris Linneman - Civil
MO PE-2002016690

DATE PREPARED 7/30/2024
ROUTE 60 | STATE MO
DISTRICT BR | SHEET NO. 8
COUNTY WEBSTER
JOB NO. J7P3425C
CONTRACT ID.
PROJECT NO.
BRIDGE NO. A9351
DESCRIPTION
DATE

MISSOURI HIGHWAYS AND TRANSPORTATION COMMISSION
105 WEST CAPITOL
JEFFERSON CITY, MO 65102
1-888-ASK-MODOT (1-888-275-6636)

EFK•Moen
Civil Engineering Design
13523 Barrett Parkway Dr Phone 314-394-3100
Suite 250 Fax 314-394-3199
St. Louis, MO 63021
Missouri Certificate of Authority: 001578

BORING DATA

Note: For locations of borings, see Sheet No. 1.

Detailed Apr. 2024
Checked Apr. 2024

Note: This drawing is not to scale. Follow dimensions.

Sheet No. 8 of 8

REV.

\\server17\ProjectsCONNECT\2021R2\MoDOT_ORD_v10.10.01.03\21047 CMT Route 60 at Route A Walls\DGN\Bridge\Final\Plotsheets\A9351\B_A9351_008_J7P3425C_Boring-DataW2WB1.dgn 8:29:33 AM 7/30/2024

489' MECHANICALLY STABILIZED EARTH (MSE) RETAINING WALL SYSTEM

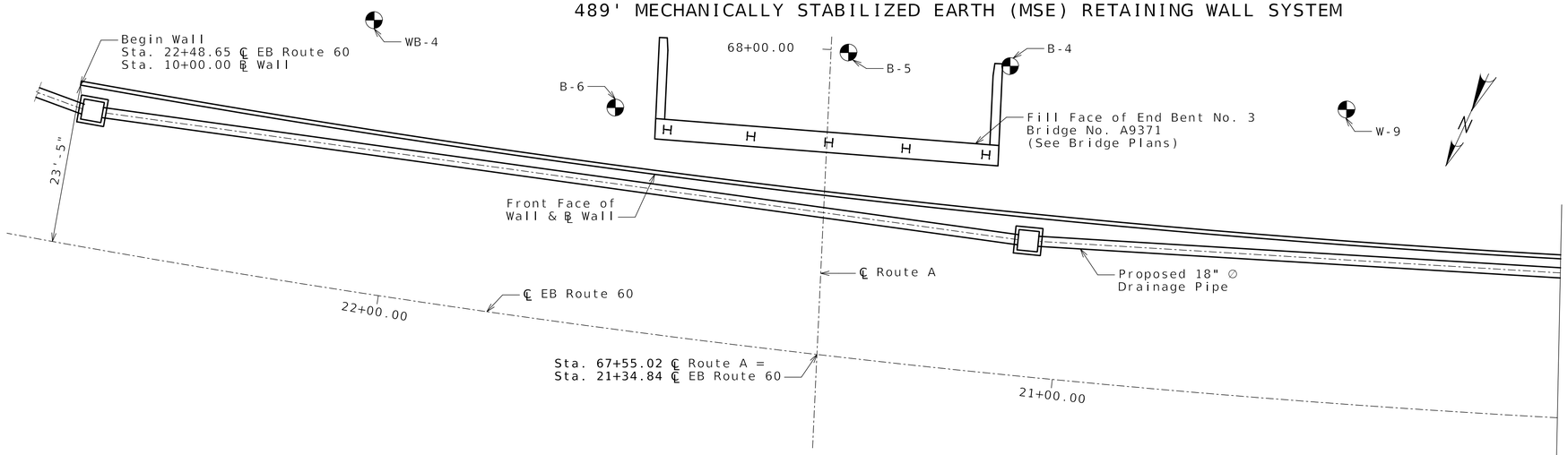

PLAN

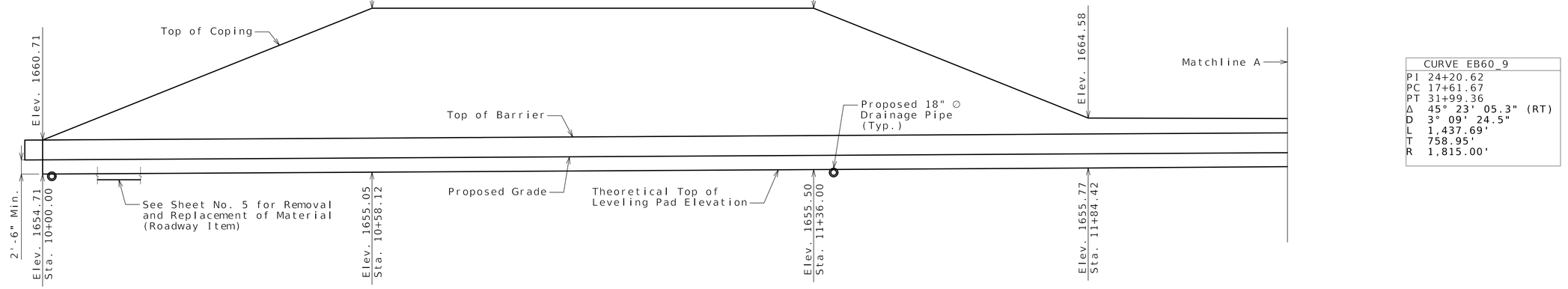

DEVELOPED ELEVATION

Concrete leveling pad not shown for clarity (1)

(1) Wall contractor shall show the following items on the design drawings and/or on the fabricator shop drawings.

- Leveling pad horizontal
- Leveling pad length and step elevations shall be based on wall manufacturer's recommendation. Top of leveling pad elevations shall not be higher than theoretical top of leveling pad elevations shown on these plans.

CURVE EB60_9
PI 24+20.62
PC 17+61.67
PT 31+99.36
Δ 45° 23' 05.3" (RT)
D 3° 09' 24.5"
L 1,437.69'
T 758.95'
R 1,815.00'

B.M. CONTROL POINT NO. 137
5/8" I.B. W/2" ALUMINUM CAP
N: 487406.2123, E: 1534366.0016, ELEVATION: 1664.2490'

RETAINING WALL ALONG EB ROUTE 60

ROUTE A FROM ROUTE 417 TO ROUTE NN
ABOUT 1.0 MILES SOUTH OF ROUTE 417
BEGINNING STATION 22+48.65 ℄ EB ROUTE 60

Designed Apr. 2024
Detailed Apr. 2024
Checked Apr. 2024

Note: This drawing is not to scale. Follow dimensions.

SEC/SUR 25 TWP 29N RGE 18W

Indicates location of borings.

Notice and Disclaimer Regarding Boring Log Data

The locations of all subsurface borings for this structure are shown on the plan sheet(s) for this structure. The boring data for all locations indicated, as well as any other boring logs or other factual records of subsurface data and investigations performed by the department for the design of the project, are shown on Sheet(s) No. 6 thru 10 and may be included in the Electronic Bridge Deliverables. They will also be available from the Project Contact upon written request. No greater significance or weight should be given to the boring data depicted on the plan sheets than is given to the subsurface data available from the district or elsewhere.

The Commission does not represent or warrant that any such boring data accurately depicts the conditions to be encountered in constructing this project. A contractor assumes all risks it may encounter in basing its bid prices, time or schedule of performance on the boring data depicted here or those available from the district, or on any other documentation not expressly warranted, which the contractor may obtain from the Comission.

STATE OF MISSOURI
CHRIS LINNEMAN
NUMBER PE-2002016690
PROFESSIONAL ENGINEER

07/31/2024 8:11:49 AM
Chris Linneman - Civil
MO PE-2002016690

DATE PREPARED
7/30/2024

ROUTE	STATE
60	MO
DISTRICT	SHEET NO.
BR	1

COUNTY
WEBSTER

JOB NO.
J7P3425C

CONTRACT ID.

PROJECT NO.

BRIDGE NO.
A9352

DESCRIPTION	DATE

MISSOURI HIGHWAYS AND TRANSPORTATION COMMISSION
105 WEST CAPITOL
JEFFERSON CITY, MO 65102
1-888-ASK-MODOT (1-888-275-6636)

EFK•Moen
Civil Engineering Design
13523 Barrett Parkway Dr
Suite 250
St. Louis, MO 63021
Phone 314-394-3100
Fax 314-394-3199
Missouri Certificate of Authority: 001578

REV.

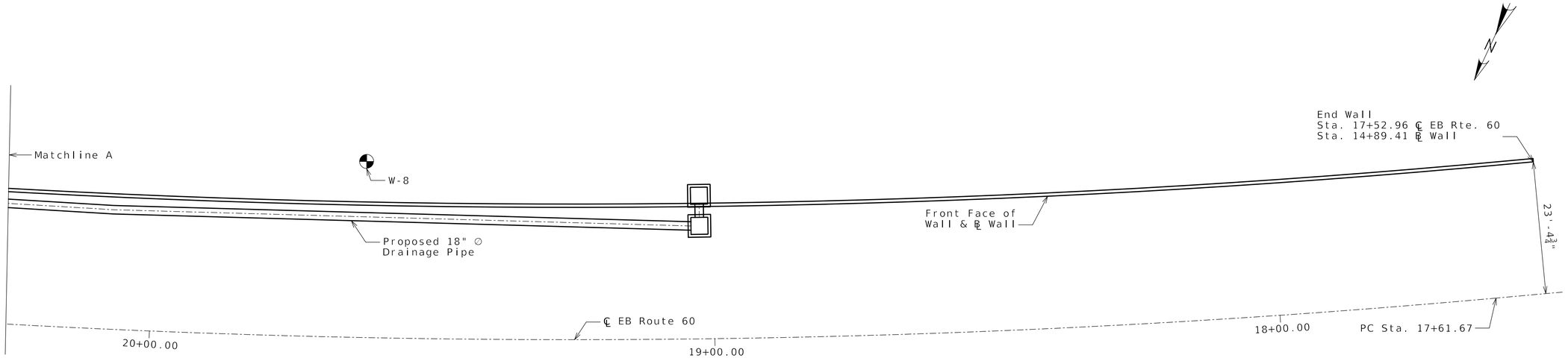

PLAN

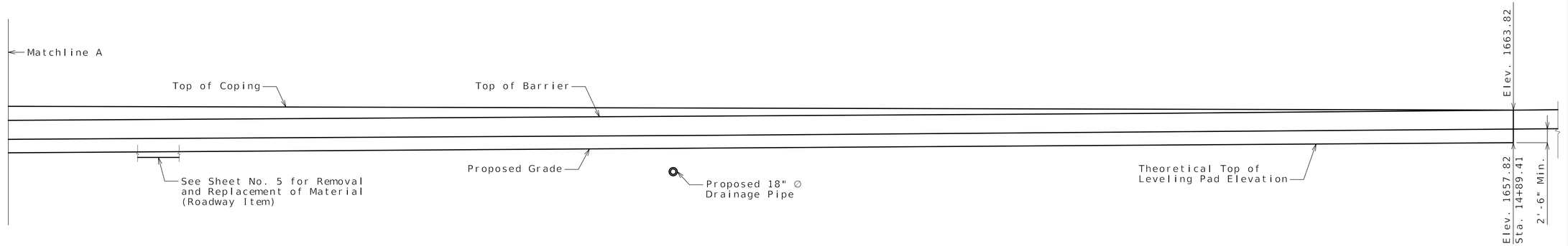

DEVELOPED ELEVATION

Concrete leveling pad not shown for clarity (1)

(1) Wall contractor shall show the following items on the design drawings and/or on the fabricator shop drawings.

- Leveling pad horizontal
- Leveling pad length and step elevations shall be based on wall manufacturer's recommendation. Top of leveling pad elevations shall not be higher than theoretical top of leveling pad elevations shown on these plans.

Detailed Apr. 2024
Checked Apr. 2024

Note: This drawing is not to scale. Follow dimensions.

STATE OF MISSOURI
CHRIS LINNEMAN
NUMBER PE-2002016690
PROFESSIONAL ENGINEER

07/31/2024 8:11:41 AM
Chris Linneman - Civil
MO PE-2002016690

DATE PREPARED
7/30/2024

ROUTE	STATE
60	MO
DISTRICT	SHEET NO.
BR	2

COUNTY
WEBSTER

JOB NO.
J7P3425C

CONTRACT ID.

PROJECT NO.

BRIDGE NO.
A9352

DESCRIPTION	DATE

MISSOURI HIGHWAYS AND TRANSPORTATION COMMISSION

105 WEST CAPITOL
JEFFERSON CITY, MO 65102
1-888-ASK-MODOT (1-888-275-6636)

EFK•Moen
Civil Engineering Design
13523 Barrett Parkway Dr
Suite 250
St. Louis, MO 63021
Phone 314-394-3100
Fax 314-394-3199
Missouri Certificate of Authority: 001578

REV.

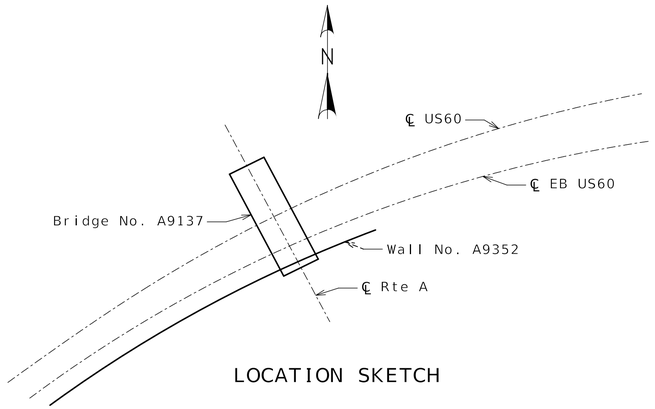

LOCATION SKETCH

General Notes:

Design Specifications:

2002 AASHTO LFD (17th Ed.) Standard Specifications (Section 5 ASD Design)
Seismic Performance Category = A
Acceleration Coefficient = 0.04

Design Loading:

Φ_f = 26° and Unit weight, γ_s = 120 pcf for retained backfill material to be retained by the mechanically stabilized earth wall system.

Φ_f = 22° for unimproved foundation ground where wall is to bear.
Φ_f = 36° for improved foundation ground where wall is to bear.

For unimproved foundation ground, the allowable bearing pressure is 3.4 to 5.1 ksf.
For improved foundation ground, the allowable bearing pressure is 6.0 ksf.

The maximum applied bearing pressure for the controlling design case at the foundation level shall be shown on the shop drawings and shall be less than the allowable bearing pressure for foundation ground provided herein. For seismic design the maximum applied bearing pressure shall be less than two times the allowable bearing pressure.

Allowable bearing pressure and limits of improved foundation ground shall not be adjusted from that as shown on the plans.

Contractor shall include design Φ_f (actual $\Phi_f \geq 34°$) and the total unit weight, γ_s, for the select granular backfill (reinforced backfill and wedge area backfill) for structural systems on shop drawings. Contractor shall identify source of select granular backfill material, submit proctor in accordance with AASHTO T 99 (ASTM D698) and gradation with the shop drawings. When backfill material is too coarse to develop a proctor curve the contractor shall determine the maximum dry density (relative density) in accordance with ASTM D4253 and ASTM D4254 and assume percent passing the 200 sieve for optimum water content.

Total unit weight, γ_s = (95% compaction) x (maximum dry density) x (1 + optimum water content)

Design Φ_f = 34°for the select granular backfill (reinforced backfill) only for structural systems.

Factor of safety shall be 2.0 for overturning and 1.5 for sliding.

For seismic design the factor of safety shall be 1.5 for overturning and 1.1 for sliding.

Use default values for the pullout friction factor, F^*, in accordance with AASHTO figure 5.8.5.2A and default value for scale effect correction factor, α, in accordance with AASHTO table 5.8.5.2A. For approved steel strips not shown in AASHTO figure 5.8.5.2A, use $F^* \leq 2.0$ at zero depth and $F^* \leq \text{Tan } \Phi_f$ at 20 feet depth and Φ_f design = 34°. F^* and α values shall be shown on the shop drawings.

Design Unit Stresses:

All concrete for leveling pad and coping shall be Class B or B-1 with f'c = 4000 psi.

The minimum compressive strength of concrete for precast panel shall be 4,000 psi in accordance with Sec 1052.

Miscellaneous:

The MSE wall system shall be built vertical.

The MSE wall system shall be built in accordance with Sec 720.

The MSE wall system shall be a large block wall system.

The cost of joint filler and joint seal, complete in place, will be considered completely covered by the contract unit price for Concrete Traffic Barrier (Type D). See Roadway Plans.

Panel and coping (or capstone) reinforcement shall be epoxy coated.

A filter cloth meeting the requirements for a Separation Geotextile material shall be placed between the select granular backfill for structural systems and the backfill being retained by the mechanically stabilized earth wall system.

Coping shall be required on this structure. When CIP coping sections extend beyond the limits of a single panel, bond breaker (roofing felt or other approved alternate) between wall panel and coping is required. Coping joints shall use 3/4-inch chamfers and shall be sealed with 3/4-inch joint filler. Coping reinforcement shall terminate 1 1/2-inch minimum from face of coping joint.

The contractor shall be solely responsible to coordinate construction of the wall with bridge and roadway construction and ensure that the bridge and roadway construction, resulting or existing obstructions, shall not impact the construction or performance of the wall. Soil reinforcement shall be designed and placed to avoid damage by pile driving, guardrail post installation, utility and sign foundations. (See Roadway and Bridge plans.)

Estimated Quantities		
Item		Total
Mechanically Stabilized Earth Wall Systems	sq. foot	6408

MSE Wall Systems Data Table					
Proprietary Wall Systems		Combination Wall Systems			
Manufacturer	System	Facing Unit Manufacturer	Facing Unit	Geogrid Manufacturer	Geogrid

MSE Wall Systems Data Table is to be completed by MoDOT construction personnel to record the manufacturer of the proprietary wall system or the manufacturers of the combination wall system that was used for constructing the MSE wall.

GENERAL NOTES AND QUANTITIES

Detailed Apr. 2024
Checked Apr. 2024

Note: This drawing is not to scale. Follow dimensions.

STATE OF MISSOURI
CHRIS LINNEMAN
NUMBER PE-2002016690
PROFESSIONAL ENGINEER

07/31/2024 8:11:35 AM
Chris Linneman - Civil
MO PE-2002016690

DATE PREPARED 7/30/2024

ROUTE	STATE
60	MO
DISTRICT	SHEET NO.
BR	3

COUNTY WEBSTER

JOB NO. J7P3425C

CONTRACT ID.

PROJECT NO.

BRIDGE NO. A9352

DESCRIPTION	DATE

MISSOURI HIGHWAYS AND TRANSPORTATION COMMISSION
105 WEST CAPITOL
JEFFERSON CITY, MO 65102
1-888-ASK-MODOT (1-888-275-6636)

EFK•Moen
Civil Engineering Design
13523 Barrett Parkway Dr
Suite 250
St. Louis, MO 63021
Phone 314-394-3100
Fax 314-394-3199
Missouri Certificate of Authority: 001578

REV.

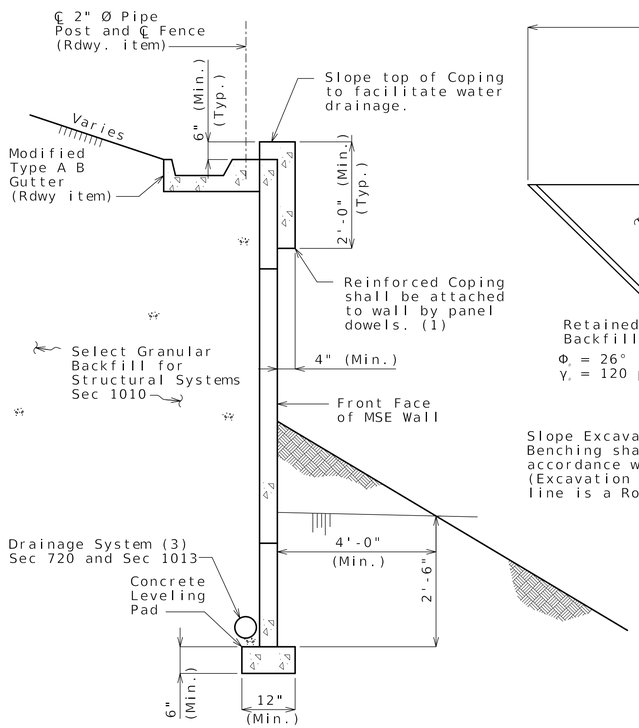

TYPICAL SECTION THRU
LARGE BLOCK WALL

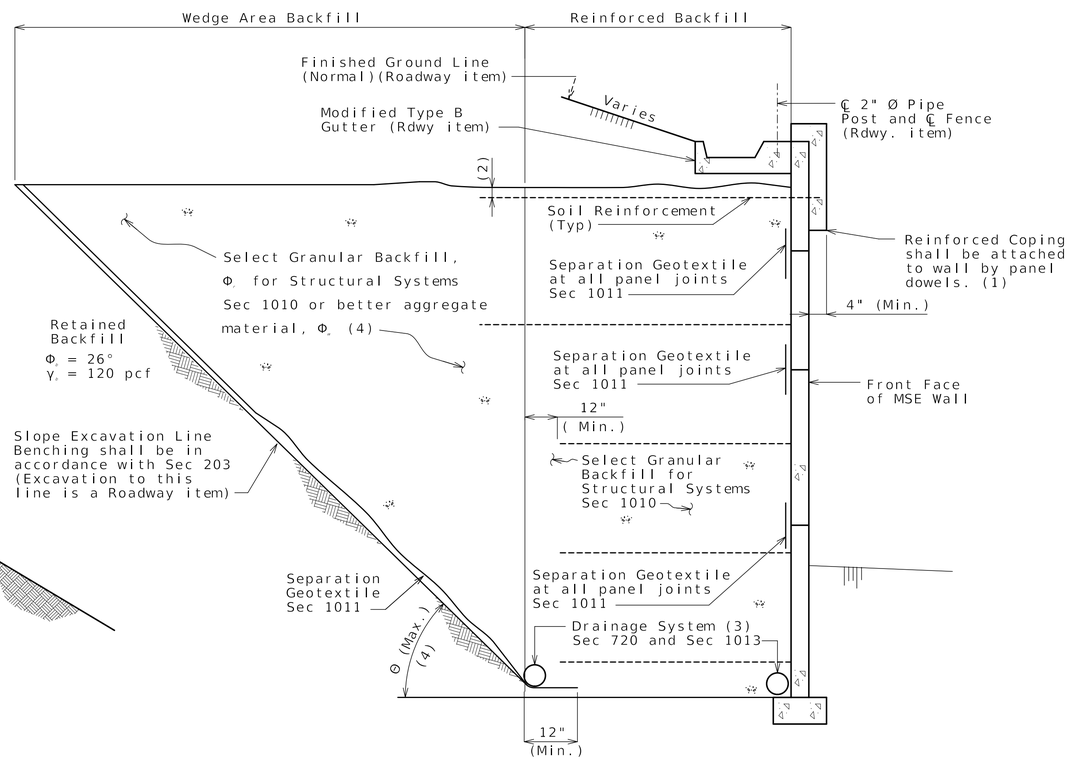

TYPICAL SECTION THRU
LARGE BLOCK WALL SHOWING FILTER CLOTH

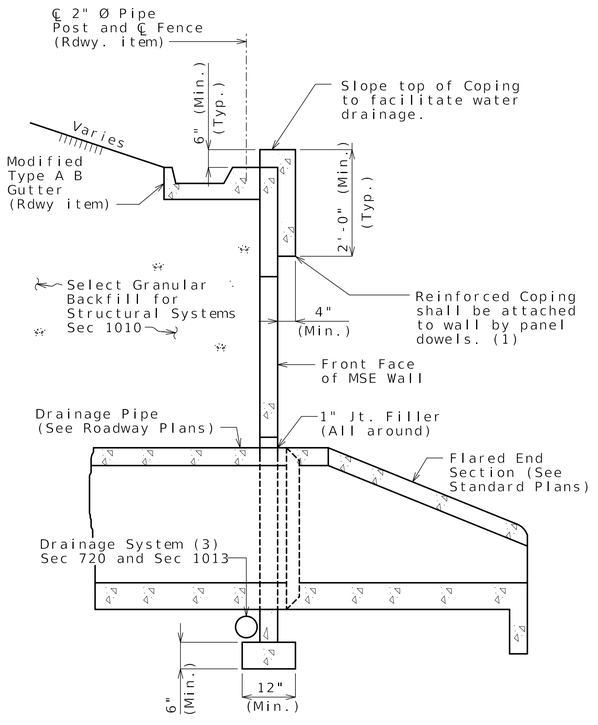

TYPICAL SECTION THRU
LARGE BLOCK WALL AT CULVERT

Vertical joint in MSE wall shall be located at each exterior culvert wall.

General Notes Cont.:

Minimum 18" wide Geotextile strips shall be centered at vertical and horizontal joints of panel. Geotextile material shall be adhered to back face of panel using an adhesive compound supplied by the manufacturer. All edges of each fabric strip shall provide a positive seal. A minimum 18" overlap shall be provided between spliced filter fabric.

Aluminized soil reinforcement shall have edges coated with coating material per manufacturer.

Soil reinforcement shall be spaced to avoid roadway drop inlet behind wall.

All steel soil reinforcements shall be separated from other metallic elements by at least 3 inches.

The splay angle should be less than 15° and tensile capacity of splayed reinforcement shall be reduced by the cosine of the splay angle. Soil reinforcement shall clear the obstruction by at least 3 inches.

No reinforcement shall be left unconnected to the wall face or arbitrarily cut/bent in the field to avoid the obstruction.

Where interference between the vertical obstruction and the soil reinforcement is unavoidable, the design of the wall near the obstruction may be modified using one of the alternatives in FHWA-NHI-10-24, Section 5.4.2. Show detail layout on the drawings. For wall designs with horizontal obstructions in reinforced soil mass, see FHWA-NHI-10-024, Section 5.4.3.

Excavation:
Excavation quantities and pay items are given on the roadway plans. Excavation quantities are based on a soil reinforcement length of 20 ft. The soil reinforcement length may vary based upon the wall design selected by the contractor. Plan excavation quantities will be paid regardless of any actual quantities removed based on the soil reinforcement length and design selected.

(1) Inverted U-shape reinforced capstone may be used in lieu of coping. Panel dowels for level-up concrete shall be required and provided by manufacturer. The dowels shall be field trimmed to clear the capstone by a minimum of 1 1/2 inches and a maximum of 2 1/2 inches.

(2) Topmost layer of reinforcement shall be fully covered with select granular backfill for structural systems, as approved by the wall manufacturer, before placement of the Separation Geotextile.

(3) Minimum 6" diameter perforated PVC or PE pipe.

Manufacturer shall show drain details on design plans to be submitted as shown on MoDOT MSE wall plans and/or roadway plans.

Contractor shall modify the drain details as shown if it will improve flow as may be the case for stepped leveling pad, and for an uneven ground line (approval of the engineer required).

(4) Select granular backfill shall extend a minimum of 12" beyond the end of all soil reinforcement. Where the angle, Θ, between the retained backfill excavation/fill line and the horizontal is less than 90°, the wedge area backfill between Θ and 90° shall be filled with select granular backfill for structural systems meeting the requirements of Section 1010.

- For $(45° + \Phi_r/3) < \Theta \leq 90°$, properties for retained backfill shall be used for active force computations.

- For $\Theta \leq (45° + \Phi_r/3)$, contractor shall have the option to use select granular backfill, Φ_r, or better aggregate material, Φ_s for active force computations in the wedge area backfill. For active force computations, the angle of internal friction for wedge area backfill material, Φ_r or Φ_s, shall be limited to 34° unless determined otherwise in accordance with Section 1010. If Φ_r or Φ_s > 34°is desired for wedge area backfill then test report shall be submitted with shop drawings. Φ_r or Φ_s shall not be greater than 40° for computations. Final configuration of this option shall be sent to Geotechnical Section for a new overall global stability analysis. Design Φ_s shall be shown on the shop drawings if used.

Material Properties Used in Design				
Reinf. Fill/Select Granular Backfill		Active Force Computations		Foundation
Φ°	γ (pcf)	Φ°	γ (pcf)	Φ°

Note: MSE Wall designer shall include table on shop drawings and provide values used in the design computations. Effects of cohesion shall be ignored unless approved by the engineer.

The slope excavation line shall be benched and separation geotextile shall be placed between the retained backfill and either select granular backfill or better aggregate material, and between the select granular backfill and better aggregate material.

Show range of acceptable theta (Θ) angle on shop drawings which must be consistent with design computations and proposed construction of wall. Show active force computation properties on shop drawings and in design computations. Coordination between wall designer (manufacturer) and contractor is required before shop drawing submittal.

DETAILS FOR GENERIC MSE WALL

Detailed Apr. 2024
Checked Apr. 2024

Note: This drawing is not to scale. Follow dimensions.

STATE OF MISSOURI
CHRIS LINNEMAN
NUMBER PE-2002016690
PROFESSIONAL ENGINEER
07/31/2024 8:11:29 AM
Chris Linneman - Civil
MO PE-2002016690

DATE PREPARED 7/30/2024

ROUTE	STATE
60	MO
DISTRICT	SHEET NO.
BR	4

COUNTY WEBSTER
JOB NO. J7P3425C
CONTRACT ID.
PROJECT NO.
BRIDGE NO. A9352

DESCRIPTION | DATE | REV.

MISSOURI HIGHWAYS AND TRANSPORTATION COMMISSION
105 WEST CAPITOL
JEFFERSON CITY, MO 65102
1-888-ASK-MODOT (1-888-275-6636)

EFK•Moen
Civil Engineering Design
13523 Barrett Parkway Dr
Suite 250
St. Louis, MO 63021
Phone 314-394-3100
Fax 314-394-3199
Missouri Certificate of Authority: 001578

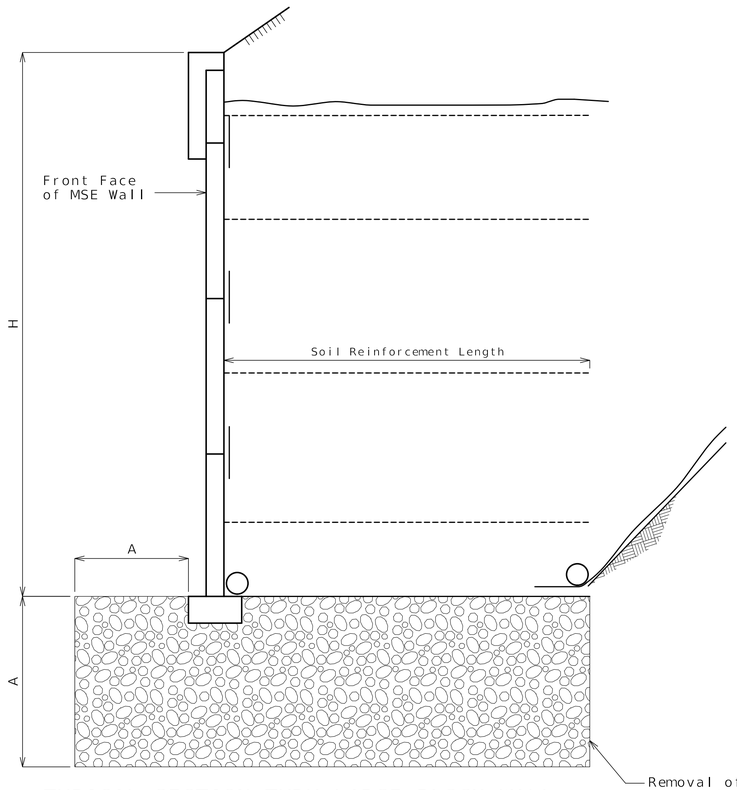

TYPICAL SECTION THRU LARGE BLOCK WALL
SHOWING REMOVAL AND REPLACEMENT OF MATERIAL

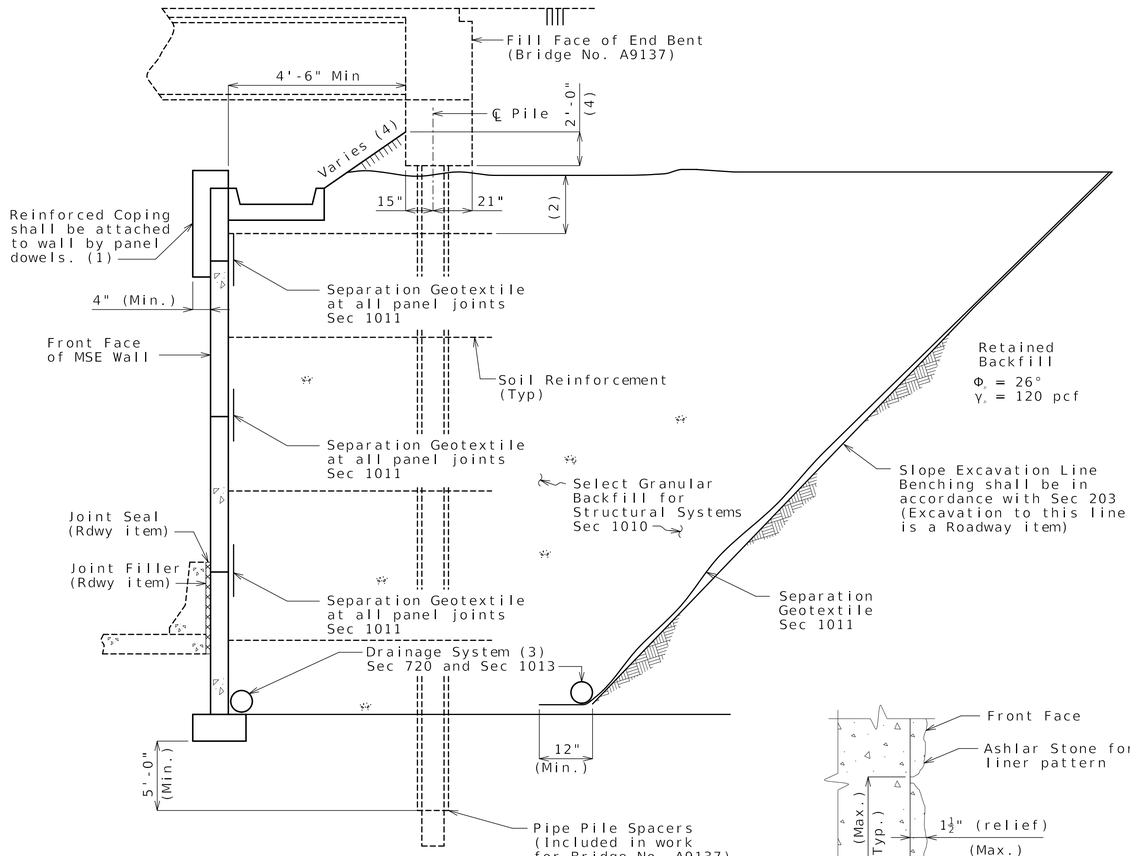

TYPICAL SECTION THRU
LARGE BLOCK WALL UNDER BRIDGE

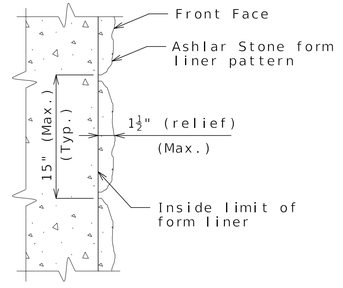

FORM LINER DETAIL
(Large Block Wall)

REMOVAL AND REPLACEMENT OF MATERIAL	
Wall Height	A
0ft<H≤10ft	2'-0"
10ft<H≤15ft	3'-0"
15ft<H≤20ft	4'-0"
20ft<H≤29ft	5'-0"

Note: For additional information, see "TYPICAL SECTION THRU LARGE BLOCK WALL SHOWING FILTER CLOTH".

(1) Inverted U-shape reinforced capstone may be used in lieu of coping. Panel dowels for level-up concrete shall be required and provided by manufacturer. The dowels shall be field trimmed to clear the capstone by a minimum of 1 1/2 inches and a maximum of 2 1/2 inches.

(2) Topmost layer of reinforcement shall be fully covered with select granular backfill for structural systems, as approved by the wall manufacturer, before placement of the Separation Geotextile.

(3) Minimum 6" diameter perforated PVC or PE pipe.

Manufacturer shall show drain details on design plans to be submitted as shown on MoDOT MSE wall plans and/or roadway plans.

Contractor shall modify the drain details as shown if it will improve flow as may be the case for stepped leveling pad, and for an uneven ground line (approval of the engineer required).

(4) See bridge plans.

Notes:

The cost of form liners for MSE wall systems, complete in place, will be considered completely covered by the contract unit price for Mechanically Stabilized Earth Wall System.

Form liner shall be constructed in accordance with Special Provisions.

The following is a list of form liner manufacturers and types which may be used. Depth of relief for all form liner pattern's shall vary up to 1 1/2". The height of any single 'stone' shall be 15" maximum.

- Scott System, Inc.: Form liner pattern #167 "Ashlar Stone"
- Fitzgerald Formliners: Form liner pattern #16986 "Ashlar Stone"
- Greenstreak: Form liner pattern #330 "Ashlar Stone"
- Spec Formliners: Form liner pattern #1515 "Ashlar Stone"
- Customrock: Form liner pattern #12020 "Tollway Ashlar"
- An approved equal

DETAILS FOR GENERIC MSE WALL

Detailed Apr. 2024
Checked Apr. 2024

Note: This drawing is not to scale. Follow dimensions.

STATE OF MISSOURI
ALEX BENZ
NUMBER PE-2018003121
PROFESSIONAL ENGINEER
Alex C. Benz
10/30/2024 8:14:51 AM
Alex Benz - Civil
MO PE-2018003121

DATE PREPARED
10/30/2024

ROUTE	STATE
60	MO
DISTRICT	SHEET NO.
BR	5

COUNTY
WEBSTER

JOB NO.
J7P3425C

CONTRACT ID.

PROJECT NO.

BRIDGE NO.
A9352

DATE	DESCRIPTION

MISSOURI HIGHWAYS AND TRANSPORTATION COMMISSION
105 WEST CAPITOL
JEFFERSON CITY, MO 65102
1-888-ASK-MODOT (1-888-275-6636)

EFK•Moen
Civil Engineering Design
13523 Barrett Parkway Dr
Suite 250
St. Louis, MO 63021
Phone 314-394-3100
Fax 314-394-3199
Missouri Certificate of Authority: 001578

REV.

Missouri Department of Transportation
Construction and Materials

BORING NO. B-4
Page 1 of 2

Job No.: 20211233.00 **County:** Webster **Route:** Route 60
Design: **Skew:** **Location:** Webster County
Bent: **Logged By:** TB **Operator:** LRK
Station: **Northing:** 487867.8996 **Date of Work:** 10/05/23-10/05/23
Offset: **Easting:** 1535125.129 **Depth to Water:**
Elevation: 1656.2 **Requested Northing:** **Depth Hole Open:**
Requested Station: **Requested Easting:** **Time Change:**
Requested Offset: **Equipment:** CME 550X,Split-Spoon Sampler, Shelby Tube
Requested Elevation: **Location Note:**
Drill No.: **Hammer Efficiency:** 90% **Drilling Method:** HSA

Depth (ft)	Graphic	Description	Elevation (ft)	Sample Type	REC % (RQD %)	Blow Counts (N_{60})	Shear Data	Field Tests	Index Tests
0		0.0-5.5' (CH) Brown, fat CLAY	1655						
				X	89	3-4-20 (36)		PP = 4.00 tsf	MC = 20.4%
		2.0' - gravelly from 2.0 ft. to 2.3 ft.							
		3.6' - red and gray, gravelly from 3.6 ft. to 4.8 ft.		X	89	15-21-25 (69)		PP = 4.50 tsf	LL = 61 PL = 21 MC = 19.5%
5		5.5-7.8' (GC) Red and gray, clayey GRAVEL, with sand	1650	X	83	20-26-26 (78)			MC = 20.7% Sieve Analysis Sieve # % Passing #200 18.0
		7.8-13.8' (CH) Red and gray, gravelly fat CLAY		■	100			PP = 4.50 tsf	MC = 25.0%
10			1645						
		13.5' - red from 13.5 ft. to 13.8 ft.		X	89	11-20-25 (68)		PP = 3.00 tsf	MC = 26.4%
15		13.8-14.2' (GC) Gray, clayey GRAVEL							
		14.2-16.8' (GP) Gray, poorly graded GRAVEL	1640						
		16.8-19.3' (CH) Red and gray, gravelly fat CLAY		X	100	3-4-7 (17)		PP = 3.00 tsf	MC = 49.2%
20		19.3-21.8' (GP) Red and gray, poorly graded GRAVEL							
		21.8-24.0' (CH) Red and gray, gravelly fat CLAY	1635						
25		24.0-26.8' (GP) Red and gray, poorly graded GRAVEL, with clay		X	83	9-10-10 (30)		PP <.0.50 tsf	MC = 32.2%

N_{60} = (Em/60)Nm N_{60} - Corrected N value for standard 60% SPT efficiency; Em - Measured hammer efficiency in percent; Nm - Observed N-value
(1) = Assumed, (2) = Actual

Coordinate System: U.S. State Plane 1983 **Coordinate Zone:** Missouri Central **Coordinate Proj. Factor:** TBD
Coordinate Datum: NAD 83 (CONUS) **Coordinate Units:** U.S. Survey Feet

* Persons using this information are cautioned that the materials shown are determined by the equipment noted and accuracy of the "log of materials" is limited thereby and by judgement of the operator. THIS INFORMATION IS FOR DESIGN PURPOSES ONLY.

Missouri Department of Transportation
Construction and Materials

BORING NO. B-4
Page 2 of 2

Job No.: 20211233.00 **County:** Webster **Route:** Route 60
Design: **Skew:** **Location:** Webster County
Bent: **Logged By:** TB **Operator:** LRK
Station: **Northing:** 487867.8996 **Date of Work:** 10/05/23-10/05/23
Offset: **Easting:** 1535125.129 **Depth to Water:**
Elevation: 1656.2 **Requested Northing:** **Depth Hole Open:**
Requested Station: **Requested Easting:** **Time Change:**
Requested Offset: **Equipment:** CME 550X,Split-Spoon Sampler, Shelby Tube
Requested Elevation: **Location Note:**
Drill No.: **Hammer Efficiency:** 90% **Drilling Method:** HSA

Depth (ft)	Graphic	Description	Elevation (ft)	Sample Type	REC % (RQD %)	Blow Counts (N_{60})	Shear Data	Field Tests	Index Tests
25		24.0-26.8' (GP) Red and gray, poorly graded GRAVEL, with clay *(continued)*	1630						
		26.8-32.7' (CH) Brown and Red, fat CLAY, with gravel		X	56	6-4-4 (12)		PP <.0.50 tsf	MC = 37.2%
30			1625						
		32.7-33.2' LIMESTONE, gray, very hard		■	100	50/0.2'			MC = 4.6%
		33.2-35.0' Core Loss			25 (0)				
35		35.0-35.5' LIMESTONE							
		35.5-43.3' Core Loss	1620		10 (0)				
40			1615		35 (32)		Qu Test Results UCS = 1190 ksf		
		43.3-46.8' LIMESTONE, gray, very hard, slightly weathered, finely crystalline, thin bedded, dense							
45			1610		100 (92)		Qu Test Results UCS = 858 ksf		
50		46.8-50.0' DOLOMITIC SHALE, dark gray, very hard, slightly weathered, finely crystalline, thin bedded, dense							

Refusal at 32.7 feet.
Bottom of borehole at 50.0 feet.

N_{60} = (Em/60)Nm N_{60} - Corrected N value for standard 60% SPT efficiency; Em - Measured hammer efficiency in percent; Nm - Observed N-value
(1) = Assumed, (2) = Actual

Coordinate System: U.S. State Plane 1983 **Coordinate Zone:** Missouri Central **Coordinate Proj. Factor:** TBD
Coordinate Datum: NAD 83 (CONUS) **Coordinate Units:** U.S. Survey Feet

* Persons using this information are cautioned that the materials shown are determined by the equipment noted and accuracy of the "log of materials" is limited thereby and by judgement of the operator. THIS INFORMATION IS FOR DESIGN PURPOSES ONLY.

LETTER BOREHOLE - MODOT 20150728.GDT - 2/20/24 12:43 - \\TSI\PROJECTS\STL\GEOTECH\2021 PROJECTS\20211233.00 WEBSTER COUNTY ROUTE 60 JOB J7P3425C\WORKING FILES\MODOT WEBSTER COUNTY 20211233.GPJ

BORING DATA

Note: For locations of borings, see Sheet No. 1.

Detailed Apr. 2024
Checked Apr. 2024

Note: This drawing is not to scale. Follow dimensions.

Sheet No. 6 of 10

STATE OF MISSOURI
CHRIS LINNEMAN
NUMBER PE-2002016690
PROFESSIONAL ENGINEER
07/31/2024 8:11:14 AM
Chris Linneman - Civil
MO PE-2002016690

DATE PREPARED 7/30/2024
ROUTE 60 | STATE MO
DISTRICT BR | SHEET NO. 6
COUNTY WEBSTER
JOB NO. J7P3425C
CONTRACT ID.
PROJECT NO.
BRIDGE NO. A9352

DESCRIPTION | DATE | REV.

MISSOURI HIGHWAYS AND TRANSPORTATION COMMISSION
105 WEST CAPITOL
JEFFERSON CITY, MO 65102
1-888-ASK-MODOT (1-888-275-6636)

EFK•Moen
Civil Engineering Design
13523 Barrett Parkway Dr
Suite 250
St. Louis, MO 63021
Phone 314-394-3100
Fax 314-394-3199
Missouri Certificate of Authority: 001578

Missouri Department of Transportation
Construction and Materials

BORING NO. B-5
Page 1 of 2

Job No.: 20211233.00 **County:** Webster **Route:** Route 60
Design: **Skew:** **Location:** Webster County
Bent: **Logged By:** TB **Operator:** LRK
Station: **Northing:** 487878.315 **Date of Work:** 10/05/23-10/05/23
Offset: **Easting:** 1535146.608 **Depth to Water:** 38.5
Elevation: 1655.9 **Requested Northing:** **Depth Hole Open:**
Requested Station: **Requested Easting:** **Time Change:** 0 hours
Requested Offset: **Equipment:** CME 550X,Split-Spoon Sampler, Shelby Tube
Requested Elevation: **Location Note:**
Drill No.: **Hammer Efficiency:** 90% **Drilling Method:** HSA

Depth (ft)	Graphic	Description	Elevation (ft)	Sample Type	REC % (RQD %)	Blow Counts (N_{60})	Shear Data	Field Tests	Index Tests
0		0.0-1.8' (CH) Brown, fat CLAY, trace gravel	1655						
					100	10-38-50/0.3'		PP = 3.00 tsf	MC = 20.2%
		1.8-8.0' (GC) Brown, clayey GRAVEL							
					94	19-33-40 (110)			MC = 9.5%
5			1650						
					67	10-38-35 (110)			MC = 25.7%
		8.0-8.8' (CH) Red and brown, fat CLAY, trace gravel							
		8.8-11.5' (GC) Red and gray, clayey GRAVEL			100	11-18-14 (48)		PP = 1.00 tsf	MC = 32.8%
10			1645						
		11.5-19.3' (CH) Red and gray, fat CLAY, trace gravel							
					100		Qu Test Results UCS = 2.26 ksf MC = 42.2% γ_{moist} = 111.0 pcf	PP = 3.50 tsf	LL = 139 PL = 23
15			1640						
					100	2-21-22 (65)		PP = 2.50 tsf	MC = 24.7%
20		19.3-22.0' (CH) Gray and red, gravelly fat CLAY, with sand	1635						
		22.0-27.0' (GC) Gray and red, clayey GRAVEL, with sand			100	11-17-17 (51)			MC = 20.3% Sieve Analysis Sieve # % Passing
25									

N_{60} = (Em/60)Nm N_{60} - Corrected N value for standard 60% SPT efficiency; Em - Measured hammer efficiency in percent; Nm - Observed N-value
(1) = Assumed, (2) = Actual

Coordinate System: U.S. State Plane 1983 **Coordinate Zone:** Missouri Central **Coordinate Proj. Factor:** TBD
Coordinate Datum: NAD 83 (CONUS) **Coordinate Units:** U.S. Survey Feet

* Persons using this information are cautioned that the materials shown are determined by the equipment noted and accuracy of the "log of materials" is limited thereby and by judgement of the operator. THIS INFORMATION IS FOR DESIGN PURPOSES ONLY.

Missouri Department of Transportation
Construction and Materials

BORING NO. B-5
Page 2 of 2

Job No.: 20211233.00 **County:** Webster **Route:** Route 60
Design: **Skew:** **Location:** Webster County
Bent: **Logged By:** TB **Operator:** LRK
Station: **Northing:** 487878.315 **Date of Work:** 10/05/23-10/05/23
Offset: **Easting:** 1535146.608 **Depth to Water:** 38.5
Elevation: 1655.9 **Requested Northing:** **Depth Hole Open:**
Requested Station: **Requested Easting:** **Time Change:** 0 hours
Requested Offset: **Equipment:** CME 550X,Split-Spoon Sampler, Shelby Tube
Requested Elevation: **Location Note:**
Drill No.: **Hammer Efficiency:** 90% **Drilling Method:** HSA

Depth (ft)	Graphic	Description	Elevation (ft)	Sample Type	REC % (RQD %)	Blow Counts (N_{60})	Shear Data	Field Tests	Index Tests
25		22.0-27.0' (GC) Gray and red, clayey GRAVEL, with sand *(continued)*	1630						#200 41.6
		27.0-31.8' (CH) Gray and red, gravelly fat CLAY, with sand			44	24-14-9 (35)			MC = 20.8%
30			1625						
		31.8-40.7' (CH) Red, fat CLAY, with gravel							
		33.5' -trace sand from 33.5 to 35.0 ft.			100	9-8-9 (26)		PP = 2.50 tsf	MC = 26.3% Sieve Analysis Sieve # % Passing #200 72.1
35			1620						
		38.5' - brown, trace gravel from 38.5 ft. to 40.0 ft.			56	0-0-0 (0)		PP < 0.50 tsf	LL = 130 PL = 32 MC = 88.3%
40		40.7-46.3' LIMESTONE, gray, very hard, slightly weathered, finely crystalline, thin bedded, dense	1615						
		43.0' -core loss from 43.0 to 43.7 ft.			85 (79)		Qu Test Results UCS = 594 ksf		
45			1610						
		46.3-50.0' DOLOMITIC SHALE, gray, very hard, slightly weathered, finely crystalline, thin bedded, dense			100 (97)		Qu Test Results UCS = 892 ksf		
50		Refusal at 40.7 feet. Bottom of borehole at 50.0 feet.							

N_{60} = (Em/60)Nm N_{60} - Corrected N value for standard 60% SPT efficiency; Em - Measured hammer efficiency in percent; Nm - Observed N-value
(1) = Assumed, (2) = Actual

Coordinate System: U.S. State Plane 1983 **Coordinate Zone:** Missouri Central **Coordinate Proj. Factor:** TBD
Coordinate Datum: NAD 83 (CONUS) **Coordinate Units:** U.S. Survey Feet

* Persons using this information are cautioned that the materials shown are determined by the equipment noted and accuracy of the "log of materials" is limited thereby and by judgement of the operator. THIS INFORMATION IS FOR DESIGN PURPOSES ONLY.

LETTER BOREHOLE - MODOT 20150728.GDT - 2/20/24 12:43 - \\TSI\PROJECTS\STL\GEOTECH\2021 PROJECTS\20211233.00 WEBSTER COUNTY ROUTE 60 JOB J7P3425C\WORKING FILES\MODOT WEBSTER COUNTY 20211233.GPJ

STATE OF MISSOURI
CHRIS LINNEMAN
NUMBER PE-2002016690
PROFESSIONAL ENGINEER
07/31/2024 8:07:32 AM
Chris Linneman - Civil
MO PE-2002016690

DATE PREPARED 7/30/2024
ROUTE 60 | STATE MO
DISTRICT BR | SHEET NO. 7
COUNTY WEBSTER
JOB NO. J7P3425C
CONTRACT ID.
PROJECT NO.
BRIDGE NO. A9352

DESCRIPTION | DATE

MISSOURI HIGHWAYS AND TRANSPORTATION COMMISSION
105 WEST CAPITOL
JEFFERSON CITY, MO 65102
1-888-ASK-MODOT (1-888-275-6636)

EFK•Moen
Civil Engineering Design
13523 Barrett Parkway Dr Phone 314-394-3100
Suite 250 Fax 314-394-3199
St. Louis, MO 63021
Missouri Certificate of Authority: 001578

REV.

BORING DATA

Note: For locations of borings, see Sheet No. 1.

Detailed Apr. 2024
Checked Apr. 2024

Note: This drawing is not to scale. Follow dimensions.

Missouri Department of Transportation
Construction and Materials

BORING NO. B-6
Page 1 of 3

Job No.: 20211233.00 **County:** Webster **Route:** Route 60
Design: **Skew:** **Location:** Webster County
Bent: **Logged By:** TB **Operator:** LRK
Station: **Northing:** 487902.8237 **Date of Work:** 10/06/23-10/06/23
Offset: **Easting:** 1535171.986 **Depth to Water:**
Elevation: 1656.1 **Requested Northing:** **Depth Hole Open:**
Requested Station: **Requested Easting:** **Time Change:**
Requested Offset: **Equipment:** CME 550X,Split-Spoon Sampler, Shelby Tube
Requested Elevation: **Location Note:**
Drill No.: **Hammer Efficiency:** 90% **Drilling Method:** HSA

Depth (ft)	Graphic	Description	Elevation (ft)	Sample Type	REC % (RQD %)	Blow Counts (N_{60})	Shear Data	Field Tests	Index Tests
0		0.0-2.0' (CH) Brown, fat CLAY, with gravel trace organics	1655						
					89	6-8-16 (36)		PP = 4.00 tsf	MC = 16.8%
		2.0-4.3' (GP) Brown, poorly graded GRAVEL, trace clay 3.0' - red and brown, with sand from 3.5 ft. to 4.3 ft.							
					89	25-22-24 (69)		PP = 4.50 tsf	MC = 23.0%
5		4.3-6.5' (CH) Red, gravelly fat CLAY	1650						
		6.0' - with gravel below 6.0 ft.			94	7-14-36 (75)		PP = 4.50 tsf	MC = 20.1%
		6.5-8.0' (GP) Red and gray, poorly graded GRAVEL with clay							
		8.0-11.8' (GC) Red and gray, clayey GRAVEL, trace sand			56	14-9-19 (42)			MC = 28.6% Sieve Analysis Sieve # % Passing #200 36.5
10			1645						
		11.8-13.8' (CH) Red, fat CLAY, with gravel							
		13.8-14.1' (GC) Red, clayey GRAVEL			94	4-38-19 (86)		PP = 3.00 tsf	MC = 19.5%
15		14.1-16.5' (GP) Gray, poorly graded GRAVEL	1640						
		16.5-24.5' (CH) Red, fat CLAY, trace gravel							
					100		Qu Test Results UCS = 2.32 ksf MC = 33.9% γ_{moist} = 114.5 pcf	PP = 4.00 tsf	
20			1635						
					94	1-8-17 (38)		PP = 3.00 tsf	MC = 31.2%
25									

N_{60} = (Em/60)Nm N_{60} - Corrected N value for standard 60% SPT efficiency; Em - Measured hammer efficiency in percent; Nm - Observed N-value
(1) = Assumed, (2) = Actual

Coordinate System: U.S. State Plane 1983 **Coordinate Zone:** Missouri Central **Coordinate Proj. Factor:** TBD
Coordinate Datum: NAD 83 (CONUS) **Coordinate Units:** U.S. Survey Feet

* Persons using this information are cautioned that the materials shown are determined by the equipment noted and accuracy of the "log of materials" is limited thereby and by judgement of the operator. THIS INFORMATION IS FOR DESIGN PURPOSES ONLY.

Missouri Department of Transportation
Construction and Materials

BORING NO. B-6
Page 2 of 3

Job No.: 20211233.00 **County:** Webster **Route:** Route 60
Design: **Skew:** **Location:** Webster County
Bent: **Logged By:** TB **Operator:** LRK
Station: **Northing:** 487902.8237 **Date of Work:** 10/06/23-10/06/23
Offset: **Easting:** 1535171.986 **Depth to Water:**
Elevation: 1656.1 **Requested Northing:** **Depth Hole Open:**
Requested Station: **Requested Easting:** **Time Change:**
Requested Offset: **Equipment:** CME 550X,Split-Spoon Sampler, Shelby Tube
Requested Elevation: **Location Note:**
Drill No.: **Hammer Efficiency:** 90% **Drilling Method:** HSA

Depth (ft)	Graphic	Description	Elevation (ft)	Sample Type	REC % (RQD %)	Blow Counts (N_{60})	Shear Data	Field Tests	Index Tests
25		24.5-28.0' (GP) Gray, poorly graded GRAVEL, with clay *(continued)*	1630						
		28.0-30.0' LIMESTONE, gray, very hard, slightly weathered, finely crystalline, thin bedded, dense			83 (63)		Qu Test Results UCS = 2290 ksf		
30		30.0-31.0' Core Loss	1625						
		31.0-32.0' LIMESTONE							
		32.0-35.0' Core Loss			28 (0)				
35		35.0-35.5' LIMESTONE							
		35.5-38.5' Core Loss	1620						
					40 (32)		Qu Test Results UCS = 1600 ksf		
40		38.5-48.7' LIMESTONE, gray, very hard, slightly weathered, finely crystalline, thin bedded, dense	1615						
		41.0' -core loss from 41.0 to 41.4 ft.			97 (75)		Qu Test Results UCS = 666 ksf		
45			1610						
					100 (100)		Qu Test Results UCS = 692 ksf		
50									

N_{60} = (Em/60)Nm N_{60} - Corrected N value for standard 60% SPT efficiency; Em - Measured hammer efficiency in percent; Nm - Observed N-value
(1) = Assumed, (2) = Actual

Coordinate System: U.S. State Plane 1983 **Coordinate Zone:** Missouri Central **Coordinate Proj. Factor:** TBD
Coordinate Datum: NAD 83 (CONUS) **Coordinate Units:** U.S. Survey Feet

* Persons using this information are cautioned that the materials shown are determined by the equipment noted and accuracy of the "log of materials" is limited thereby and by judgement of the operator. THIS INFORMATION IS FOR DESIGN PURPOSES ONLY.

STATE OF MISSOURI
CHRIS LINNEMAN
NUMBER PE-2002016690
PROFESSIONAL ENGINEER
07/31/2024 8:06:29 AM
Chris Linneman - Civil
MO PE-2002016690

DATE PREPARED 7/30/2024
ROUTE 60 STATE MO
DISTRICT BR SHEET NO. 8
COUNTY WEBSTER
JOB NO. J7P3425C
CONTRACT ID.
PROJECT NO.
BRIDGE NO. A9352

DESCRIPTION
DATE
REV.

MISSOURI HIGHWAYS AND TRANSPORTATION COMMISSION
105 WEST CAPITOL
JEFFERSON CITY, MO 65102
1-888-ASK-MODOT (1-888-275-6636)

EFK·Moen
Civil Engineering Design
13523 Barrett Parkway Dr
Suite 250
St. Louis, MO 63021
Phone 314-394-3100
Fax 314-394-3199
Missouri Certificate of Authority: 001578

BORING DATA

Note: For locations of borings, see Sheet No. 1.

Detailed Apr. 2024
Checked Apr. 2024

Note: This drawing is not to scale. Follow dimensions.

LETTER BOREHOLE - MODOT 20150728.GDT - 2/20/24 12:43 - \\TSI\PROJECTS\STLGEOTECH\2021 PROJECTS\20211233.00 WEBSTER COUNTY ROUTE 60 JOB J7P3425C\WORKING FILES\MODOT WEBSTER COUNTY 20211233.GPJ
O:\2021R2\MoDOT_ORD_v10.10.01.03\21047 CMT Route 60 at Route A Walls\DGN\Bridge\Final\Plotsheets\A9352\B_A9352_008_J7P3425C_Boring-DataB11.dgn 8:37:12 AM 7/30/2024

Missouri Department of Transportation
Construction and Materials

BORING NO. B-6
Page 3 of 3

Job No.: 20211233.00 **County:** Webster **Route:** Route 60
Design: **Skew:** **Location:** Webster County
Bent: **Logged By:** TB **Operator:** LRK
Station: **Northing:** 487902.8237 **Date of Work:** 10/06/23-10/06/23
Offset: **Easting:** 1535171.986 **Depth to Water:**
Elevation: 1656.1 **Requested Northing:** **Depth Hole Open:**
Requested Station: **Requested Easting:** **Time Change:**
Requested Offset: **Equipment:** CME 550X,Split-Spoon Sampler, Shelby Tube
Requested Elevation: **Location Note:**
Drill No.: **Hammer Efficiency:** 90% **Drilling Method:** HSA

Depth (ft)	Graphic	Description	Elevation (ft)	Sample Type	REC % (RQD %)	Blow Counts (N_{60})	Shear Data	Field Tests	Index Tests
50		48.7-70.5' DOLOMITIC SHALE, dark gray, very hard, slightly weathered, finely crystalline, thin bedded, dense *(continued)*	1605						
55					100 (100)		Qu Test Results UCS = 808 ksf		
			1600						
60					98 (98)		Qu Test Results UCS = 1150 ksf		
			1595						
65					100 (98)		Qu Test Results UCS = 774 ksf		
			1590						
70		Refusal at 28.0 feet. Bottom of borehole at 70.5 feet.			98 (80)				

N_{60} = (Em/60)Nm N_{60} - Corrected N value for standard 60% SPT efficiency; Em - Measured hammer efficiency in percent; Nm - Observed N-value
(1) = Assumed, (2) = Actual

Coordinate System: U.S. State Plane 1983 **Coordinate Zone:** Missouri Central **Coordinate Proj. Factor:** TBD
Coordinate Datum: NAD 83 (CONUS) **Coordinate Units:** U.S. Survey Feet

* Persons using this information are cautioned that the materials shown are determined by the equipment noted and accuracy of the "log of materials" is limited thereby and by judgement of the operator. THIS INFORMATION IS FOR DESIGN PURPOSES ONLY.

LETTER BOREHOLE - MODOT 20150728.GDT - 2/20/24 12:43 - \\TSI\PROJECTS\STL\GEOTECH\2021 PROJECTS\20211233.00 WEBSTER COUNTY ROUTE 60 JOB J7P3425C\WORKING FILES\MODOT WEBSTER COUNTY 20211233.GPJ

Missouri Department of Transportation
Construction and Materials

BORING NO. W-8
Page 1 of 1

Job No.: 20231154.00 **County:** Webster **Route:** Route 60
Design: **Skew:** **Location:** Webster County
Bent: **Logged By:** TB **Operator:** LRK
Station: **Northing:** 487814.0167 **Date of Work:** 10/03/23-10/03/23
Offset: **Easting:** 1534989.229 **Depth to Water:**
Elevation: 1655.6 **Requested Northing:** **Depth Hole Open:**
Requested Station: **Requested Easting:** **Time Change:**
Requested Offset: **Equipment:** CME 550X,Auger Cuttings
Requested Elevation: **Location Note:** Observation from Auger cuttings.
Drill No.: **Hammer Efficiency:** **Drilling Method:** CFA

Depth (ft)	Graphic	Description	Elevation (ft)	Sample Type	REC % (RQD %)	Blow Counts (N_{60})	Shear Data	Field Tests	Index Tests
0		0.0-5.0' (CH) Brown, fat CLAY	1655						
		2.0' - gravelly from 2.0 ft. to 5.0 ft.							
5		5.0-7.5' (GC) Red, clayey GRAVEL	1650						
		7.5-15.0' (CH) Red, gravelly fat CLAY							
10			1645						
15		Bottom of borehole at 15.0 feet.							

N_{60} = (Em/60)Nm N_{60} - Corrected N value for standard 60% SPT efficiency; Em - Measured hammer efficiency in percent; Nm - Observed N-value
(1) = Assumed, (2) = Actual

Coordinate System: U.S. State Plane 1983 **Coordinate Zone:** Missouri Central **Coordinate Proj. Factor:** TBD
Coordinate Datum: NAD 83 (CONUS) **Coordinate Units:** U.S. Survey Feet

* Persons using this information are cautioned that the materials shown are determined by the equipment noted and accuracy of the "log of materials" is limited thereby and by judgement of the operator. THIS INFORMATION IS FOR DESIGN PURPOSES ONLY.

LETTER BOREHOLE - MODOT 20150728.GDT - 4/26/24 16:36 - \\TSI\PROJECTS\STL\GEOTECH\2023 PROJECTS\20231154.00 ROUTE 60 @ A - FINAL DESIGN\WORKING FILES\MODOT WEBSTER COUNTY 20231154.GPJ

BORING DATA

Note: For locations of borings, see Sheet No. 1.

Note: This drawing is not to scale. Follow dimensions. Sheet No. 9 of 10

Detailed Apr. 2024
Checked Apr. 2024

CHRIS LINNEMAN — STATE OF MISSOURI — NUMBER PE-2002016690 — PROFESSIONAL ENGINEER
07/31/2024 8:06:16 AM
Chris Linneman - Civil
MO PE-2002016690

DATE PREPARED 7/30/2024
ROUTE 60 | STATE MO
DISTRICT BR | SHEET NO. 9
COUNTY WEBSTER
JOB NO. J7P3425C
CONTRACT ID.
PROJECT NO.
BRIDGE NO. A9352
DESCRIPTION
DATE
REV.

MISSOURI HIGHWAYS AND TRANSPORTATION COMMISSION
105 WEST CAPITOL
JEFFERSON CITY, MO 65102
1-888-ASK-MODOT (1-888-275-6636)

EFK•Moen
Civil Engineering Design
13523 Barrett Parkway Dr
Suite 250
St. Louis, MO 63021
Phone 314-394-3100
Fax 314-394-3199
Missouri Certificate of Authority: 001578

BORING NO. W-9

Page 1 of 1

Missouri Department of Transportation
Construction and Materials

Job No.: 20231154.00 **County:** Webster **Route:** Route 60
Design: **Skew:** **Location:** Webster County
Bent: **Logged By:** TB **Operator:** LRK
Station: **Northing:** 487848.104 **Date of Work:** 10/03/23-10/03/23
Offset: **Easting:** 1535079.272 **Depth to Water:**
Elevation: 1655.8 **Requested Northing:** **Depth Hole Open:**
Requested Station: **Requested Easting:** **Time Change:**
Requested Offset: **Equipment:** CME 550X,Auger Cuttings
Requested Elevation: **Location Note:** Observation from Auger cuttings.
Drill No.: **Hammer Efficiency:** **Drilling Method:** CFA

Depth (ft)	Graphic	Description	Elevation (ft)	Sample Type	REC % (RQD %)	Blow Counts (N_{60})	Shear Data	Field Tests	Index Tests
0		0.0-5.0' (CH) Brown, fat CLAY	1655						
		2.0' - red and brown, gravelly from 2.0 ft. to 5.0 ft.							
5		5.0-10.0' (GP) Red, poorly graded gravel with clay	1650						
10		10.0-15.0' (CH) Red, gravelly fat CLAY	1645						
15		Bottom of borehole at 15.0 feet.							

N_{60} = (Em/60)Nm N_{60} - Corrected N value for standard 60% SPT efficiency; Em - Measured hammer efficiency in percent; Nm - Observed N-value
(1) = Assumed, (2) = Actual

Coordinate System: U.S. State Plane 1983 **Coordinate Zone:** Missouri Central **Coordinate Proj. Factor:** TBD
Coordinate Datum: NAD 83 (CONUS) **Coordinate Units:** U.S. Survey Feet

* Persons using this information are cautioned that the materials shown are determined by the equipment noted and accuracy of the "log of materials" is limited thereby and by judgement of the operator. THIS INFORMATION IS FOR DESIGN PURPOSES ONLY.

BORING NO. WB-4

Page 1 of 1

Missouri Department of Transportation
Construction and Materials

Job No.: 20231154.00 **County:** Webster **Route:** Route 60
Design: **Skew:** **Location:** Webster County
Bent: **Logged By:** TB **Operator:** LRK
Station: **Northing:** 487909.8763 **Date of Work:** 10/18/23-10/18/23
Offset: **Easting:** 1535209.119 **Depth to Water:**
Elevation: 1655.3 **Requested Northing:** **Depth Hole Open:**
Requested Station: **Requested Easting:** **Time Change:**
Requested Offset: **Equipment:** CME 550X,Split-Spoon Sampler
Requested Elevation: **Location Note:**
Drill No.: **Hammer Efficiency:** **Drilling Method:** HSA

Depth (ft)	Graphic	Description	Elevation (ft)	Sample Type	REC % (RQD %)	Blow Counts (N_{60})	Shear Data	Field Tests	Index Tests
0		0.0-1.3' (CL) Brown, lean CLAY, trace gravel	1655						
		1.3-3.0' (GP) Gray and red, poorly graded GRAVEL (GP)			82	12-32-50/0.4', 10/0"		PP = 4.50 tsf	LL = 26 PL = 18 MC = 18.3%
		3.0-3.7' (CL) Brown, lean CLAY, trace fine roots							
5		3.7-5.5' (GC) Gray and red, clayey GRAVEL	1650		89	30-31-30 (92)		PP = 4.00 tsf	MC = 18.3%
		5.5-6.2' (CL) Brown, lean CLAY, trace fine roots							
		6.2-8.0' (GP) Gray and red, poorly graded GRAVEL with clay			78	15-19-28 (71)		PP = 3.50 tsf	MC = 14.5%
		8.0-15.0' (GC) Red and gray, clayey GRAVEL							
10			1645		83	4-13-18 (47)			MC = 21.4%
					83	11-12-22 (51)			MC = 18.7%
15		Bottom of borehole at 15.0 feet.			100	5-24-21 (68)			MC = 33.2%

N_{60} = (Em/60)Nm N_{60} - Corrected N value for standard 60% SPT efficiency; Em - Measured hammer efficiency in percent; Nm - Observed N-value
(1) = Assumed, (2) = Actual

Coordinate System: U.S. State Plane 1983 **Coordinate Zone:** Missouri Central **Coordinate Proj. Factor:** TBD
Coordinate Datum: NAD 83 (CONUS) **Coordinate Units:** U.S. Survey Feet

* Persons using this information are cautioned that the materials shown are determined by the equipment noted and accuracy of the "log of materials" is limited thereby and by judgement of the operator. THIS INFORMATION IS FOR DESIGN PURPOSES ONLY.

BORING DATA

Note: For locations of borings, see Sheet No. 1.

Detailed Apr. 2024
Checked Apr. 2024

Note: This drawing is not to scale. Follow dimensions.

Sheet No. 10 of 10

CHRIS LINNEMAN
STATE OF MISSOURI
NUMBER PE-2002016690
PROFESSIONAL ENGINEER
07/31/2024 8:12:12 AM
Chris Linneman - Civil
MO PE-2002016690

DATE PREPARED 7/30/2024
ROUTE 60 STATE MO
DISTRICT BR SHEET NO. 10
COUNTY WEBSTER
JOB NO. J7P3425C
CONTRACT ID.
PROJECT NO.
BRIDGE NO. A9352

DESCRIPTION | DATE | REV.

MISSOURI HIGHWAYS AND TRANSPORTATION COMMISSION
105 WEST CAPITOL
JEFFERSON CITY, MO 65102
1-888-ASK-MODOT (1-888-275-6636)

EFK•Moen
Civil Engineering Design
13523 Barrett Parkway Dr Phone 314-394-3100
Suite 250 Fax 314-394-3199
St. Louis, MO 63021
Missouri Certificate of Authority: 001578

LETTER BOREHOLE - MODOT 20150728.GDT - 4/26/24 16:36 - \\TSI\PROJECTS\STL\GEOTECH\2023 PROJECTS\20231154.00 ROUTE 60 @ A - FINAL DESIGN\WORKING FILES\MODOT WEBSTER COUNTY 20231154.GPJ

SEC./SUR. 25 TWP. 29N RGE. 18W

(129′) COMPOSITE PLATE GIRDER SPAN

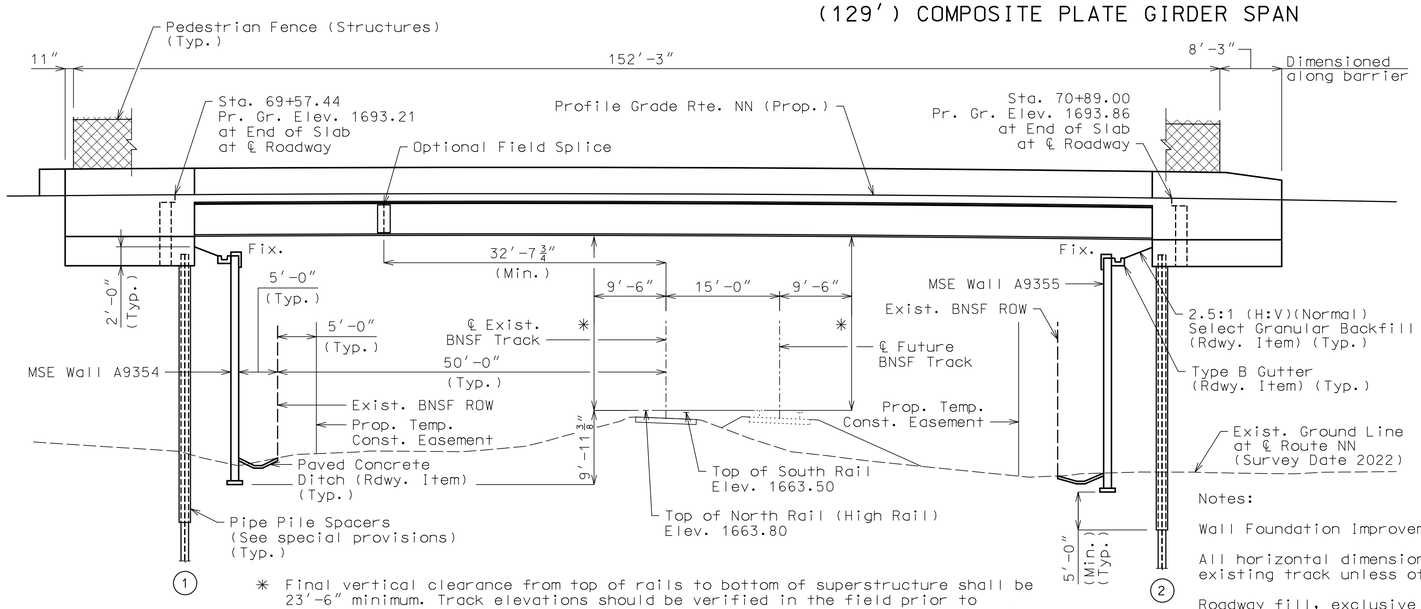

✳ Final vertical clearance from top of rails to bottom of superstructure shall be 23′-6″ minimum. Track elevations should be verified in the field prior to construction to determine if the final vertical clearance shown will be obtained.

GENERAL ELEVATION

Pile Encasement	Option Used (√)
Pipe Pile Spacer	
Pile Jacket	

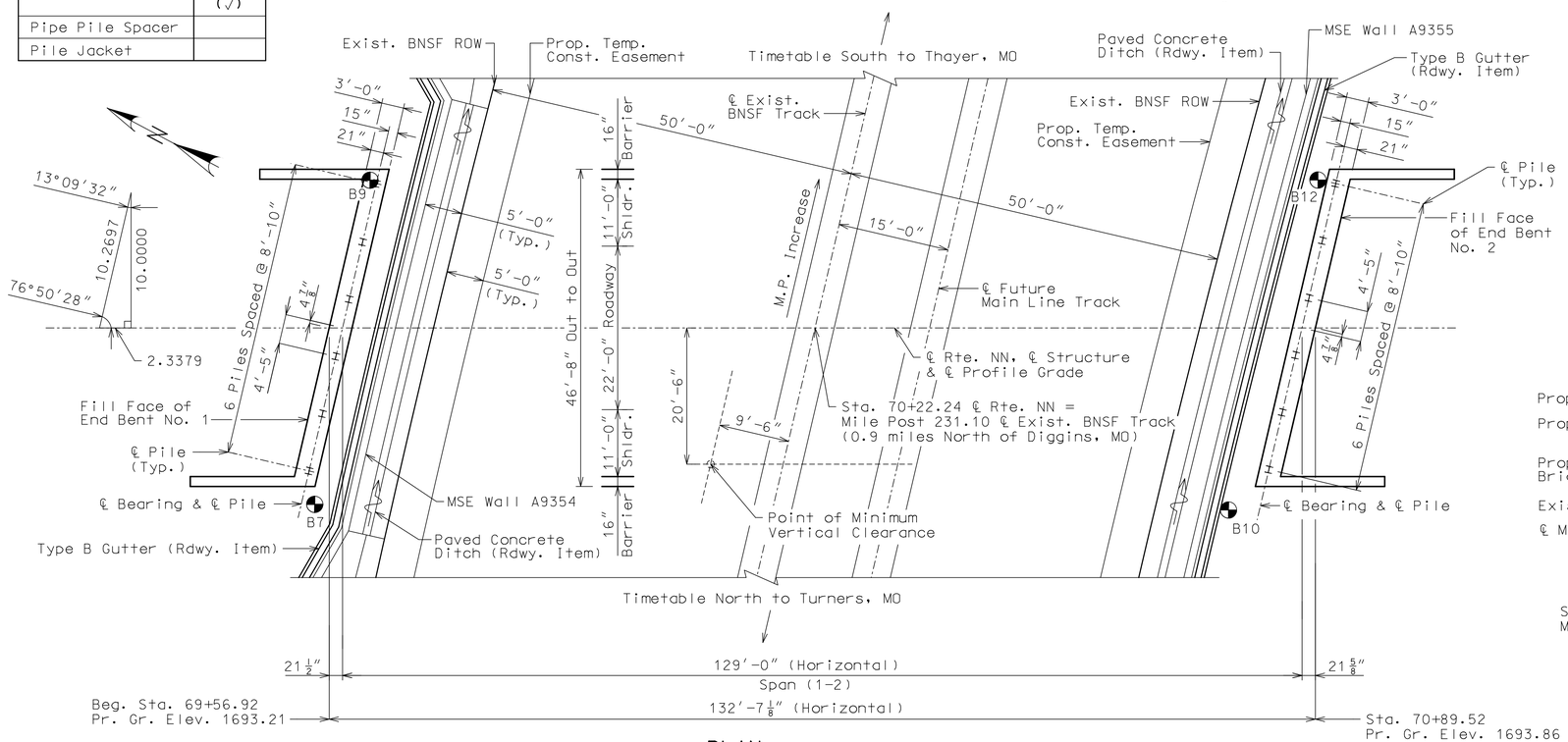

PLAN

GENERAL PLAN AND ELEVATION

Designed May 2024
Detailed May 2024
Checked June 2024

Note: This drawing is not to scale. Follow dimensions.

Sheet No. 1 of 31

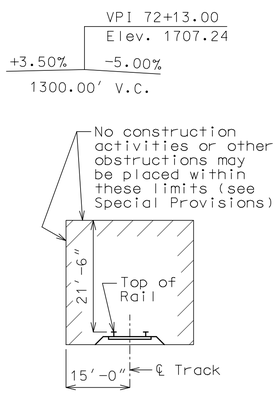

MINIMUM CONSTRUCTION CLEARANCES
(Normal to Railroad)
(Not to scale)

Notes:

Wall Foundation Improvement not shown. See Wall and Roadway Plans.

All horizontal dimensions in General Elevation are perpendicular to existing track unless otherwise specified.

Roadway fill, exclusive of Select Granular Backfill for Structural Systems, shall be completed to the final roadway section and up to the elevation of the bottom of the concrete beam within the limits of the structure and for not less than 25 feet in back of the fill face of the end bents before any piles are driven for any bents falling within the embankment section.

◓ Indicates location of borings.

Notice and Disclaimer Regarding Boring Log Data

The locations of all subsurface borings for this structure are shown on the plan sheet(s) for this structure. The boring data for all locations indicated, as well as any other boring logs or other factual records of subsurface data and investigations performed by the department for the design of the project, are shown on Sheets No. 26 thru 31 and may be included in the Electronic Bridge Deliverables. They will also be available from the Project Contact upon written request. No greater significance or weight should be given to the boring data depicted on the plan sheets than is given to the subsurface data available from the district or elsewhere.

The Commission does not represent or warrant that any such boring data accurately depicts the conditions to be encountered in constructing this project. A contractor assumes all risks it may encounter in basing its bid prices, time or schedule of performance on the boring data depicted here or those available from the district, or on any other documentation not expressly warranted, which the contractor may obtain from the Commision.

General Notes:

Longitudinal dimensions are measured horizonal.

For General Notes, Estimated Quantities, and Foundation Data, see Sheet No. 2.

For Railroad Construction Notes, see Sheet No. 3.

All Bents are parallel.

Nearest Railroad Station:
Diggins FSAC 93232 (Freight)
Last Crossing of Thayer North Subdivision:
Mile Post 226.90 @ US 60
Near Fordland, MO

CONTROL POINT #137	CONTROL POINT #138
N: 487442.62	N: 487996.55
E: 1534480.61	E: 1536552.13
EXIST. ROUTE 60 STA.	EXIST. ROUTE 60 STA.
657+19.74,	680+25.11,
78.57′ RT.	82.88′ RT.
ELEV. 1664.25	ELEV. 1657.03
5/8″ I.B. W/2″ ALUMINUM CAP	5/8″ I.B. W/2″ ALUMINUM CAP

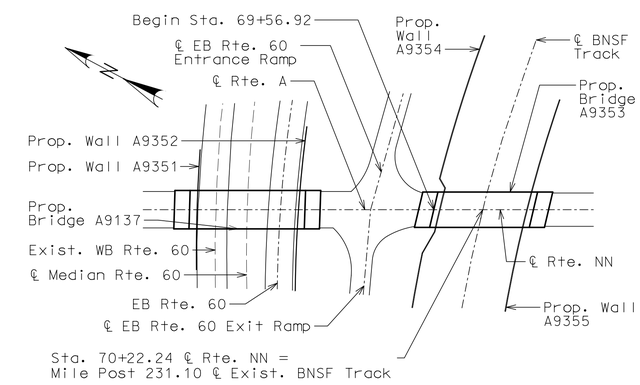

LOCATION SKETCH

BRIDGE: ROUTE NN OVER BNSF RAILROAD

PROPOSED ROUTE NN FROM ROUTE 60 TO EXISTING ROUTE NN
ABOUT 0.1 MILES SOUTHEAST OF ROUTE 60
BEGINNING STATION 69+56.92
LATITUDE: 37.172242°N
LONGITUDE: 92.861661°W

STATE OF MISSOURI — JOSHUA D. JOLLIFF — NUMBER PE-2006002824 — PROFESSIONAL ENGINEER

08/02/2024 1:51:46 PM
Joshua D. Jolliff
MO PE-2006002824

DATE PREPARED: 8/2/2024
ROUTE: NN | STATE: MO
DISTRICT: BR | SHEET NO.: 1
COUNTY: WEBSTER
JOB NO.: J7P3425C
CONTRACT ID.:
PROJECT NO.:
BRIDGE NO.: A9353

DESCRIPTION | DATE | REV.

IF A SEAL IS PRESENT ON THIS SHEET IT HAS BEEN ELECTRONICALLY SEALED AND DATED.

MISSOURI HIGHWAYS AND TRANSPORTATION COMMISSION
105 WEST CAPITOL
JEFFERSON CITY, MO 65102
1-888-ASK-MODOT (1-888-275-6636)

CMT
©Copyright CMT, Inc.
CRAWFORD, MURPHY & TILLY, INC.
1631 WEST ELFINDALE STREET
SPRINGFIELD, MO 65807 (417) 869-6009
ENGINEERING CORPORATION - 000631

General Notes:

Design Specifications:

2020 AASHTO LRFD Bridge Design Specifications (9th Ed.)
Seismic Design Category = A

Design Loading:

Vehicular = HL-93
Future Wearing Surface = 35 lb/sf
Earth = 120 lb/cf
Equivalent Fluid Pressure = 45 lb/cf (Min.)
Superstructure: Non-composite for dead load. Composite for live load.

Design Unit Stresses:

Class B Concrete (Substructure)	f'c = 3,000 psi
Class B-2 Concrete (Superstructure, except Barrier)	f'c = 4,000 psi
Class B-1 Concrete (Barrier)	f'c = 4,000 psi
Reinforcing Steel (Grade 60)	fy = 60,000 psi
Structural Steel (ASTM A709 Grade 50W)	fy = 50,000 psi
Structural Steel HP Pile (ASTM A709 Grade 50S)	fy = 50,000 psi

For precast prestressed panel stresses, see Sheet No. 16.

Neoprene Pads:

Neoprene bearing pads shall be 60 durometer and shall be in accordance with Sec 716.

Fabricated Steel Connections:

Field connections shall be made with 3/4-inch diameter ASTM F3125 Grade A325 Type 3 bolts and 13/16-inch diameter holes, except as noted.

Joint Filler:

All joint filler shall be in accordance with Sec 1057 for preformed sponge rubber expansion and partition joint filler, except as noted.

Reinforcing Steel:

Minimum clearance to reinforcing steel shall be 1 1/2", unless otherwise shown.

Traffic Handling:

Structure to be closed during construction.

Concrete Protective Coatings:

Temporary coating for concrete bents and piers (weathering steel) shall be applied on all concrete surfaces above the ground line or low water elevation on all the abutments in accordance with Sec 711.

Miscellaneous:

High strength bolts, nuts and washers will be sampled for quality assurance as specified in Sec 106.

MoDOT Construction personnel will indicate the type of joint filler option used under the precast panels for this structure:

☐ Constant Joint Filler
☐ Variable Joint Filler

Estimated Quantities

Item		Substr.	Superstr.	Total
Bridge Approach Slab (Minor)	sq. yard		198	198
Pedestrian Fence (Structures)	linear foot		305	305
Galvanized Structural Steel Piles (14 in.)	linear foot	900		900
Pre-Bore for Piling	linear foot	414		414
Pile Point Reinforcement	each	12		12
Class B Concrete (Substructure)	cu. yard	42.6		42.6
Slab on Steel	sq. yard		683	683
Type D Barrier	linear foot		334	334
Temporary Coating - Concrete Bents and Piers (Weathering Steel)	lump sum	1		1
Fabricated Structural Low Alloy Steel (Plate Girder) A709, Grade 50W	pound		226,420	226,420
Vertical Drain at End Bents	each	2		2
Plain Neoprene Bearing Pad	each		10	10
Pipe Pile Spacers	each	12		12

Notes:

All concrete between the upper and lower construction joints in the end bents is included in the Estimated Quantites for Slab on Steel.

All reinforcement in the end bents is included in the Estimated Quantities for Slab on Steel.

Foundation Data

Type	Design Data		Bent Number 1	Bent Number 2
Load Bearing Pile	Pile Type and Size		HP 14x73	HP 14x73
	Number	ea	6	6
	Approximate Length Per Each	ft	75	75
	Pile Point Reinforcement	ea	All	All
	Min. Galvanized Penetration (Elev.)	ft	1639	1638
	Pile Driving Verification Method		✳	✳
	Resistance Factor		-	-
	Minimum Nominal Axial Compressive Resistance	kip	970	970

Notes:

Minimum Nominal Axial Compressive Resistance = Maximum Factored Loads/Structural Resistance Factor (0.35)

✳ Prebore piles at Bent No. 1 and 2 to bear on competent rock.

The prebore hole shall be cleared to meet the requirements of Sec 701.4.10.2.The piles shall be inserted into the prebore holes and are to be seated on bedrock and not rubble in the bottom of the hole. Once the piles are seated, the minimum nominal compressive resistance shall be considered verified. Verification of the pile driving is not required. Backfill the prebore hole with sand or other approved material.

Piling shall be in accordance with Sec 702.

All piles shall be galvanized down to the minimum galvanized penetration (elevation).

Pile point reinforcement need not be galvanized. Shop drawings will not be required for pile point reinforcement.

The contractor shall make every effort to achieve the minimum galvanized penetration (elevation) shown on the plans for all the piles. Deviations in penetration less than 5 feet of the minimum will be considered acceptable provided the contractor makes the necessary corrections to ensure minimum penetration is achieved on subsequent piles.

Estimated Quantities for Slab on Steel

Item		Total
Class B-2 Concrete	cu. yard	186
Reinforcing Steel (Epoxy Coated)	pound	41,533

Notes:

The table of Estimated Quantities for Slab on Steel represents the quantities used by the State in preparing the cost estimate for concrete slabs. The area of the concrete slab will be measured to the nearest square yard longitudinally from end of slab to end of slab and transversely from out to out of bridge slab (or with the horizontal dimensions as shown on the plan of slab). Payment for prestressed panels, conventional forms, all concrete and epoxy coated reinforcing steel will be considered completely covered by the contract unit price for the slab. Variations may be encountered in the estimated quantities but the variations cannot be used for an adjustment in the contract unit price.

Method of forming the slab shall be as shown on the plans and in accordance with Sec 703. All hardware for forming the slab to be left in place as a permanent part of the structure shall be coated in accordance with ASTM A123 or ASTM B633 with a thickness class SC 4 and a finish type I, II or III.

The Estimated Quantities for Slab on Steel are based on skewed precast prestressed end panels.

The prestressed panel quantities are not included in the table of Estimated Quantities for Slab on Steel.

ESTIMATED QUANTITIES AND GENERAL NOTES

Detailed May 2024
Checked June 2024

Note: This drawing is not to scale. Follow dimensions.

STATE OF MISSOURI
JOSHUA D. JOLLIFF
NUMBER PE-2006002824
PROFESSIONAL ENGINEER
08/02/2024 1:52:00 PM
Joshua D. Jolliff
MO PE-2006002824

DATE PREPARED: 8/2/2024

ROUTE	STATE
NN	MO
DISTRICT	SHEET NO.
BR	2

COUNTY: WEBSTER
JOB NO.: J7P3425C
CONTRACT ID.:
PROJECT NO.:
BRIDGE NO.: A9353

DATE	DESCRIPTION

IF A SEAL IS PRESENT ON THIS SHEET IT HAS BEEN ELECTRONICALLY SEALED AND DATED.

MISSOURI HIGHWAYS AND TRANSPORTATION COMMISSION
105 WEST CAPITOL
JEFFERSON CITY, MO 65102
1-888-ASK-MODOT (1-888-275-6636)

CMT
CRAWFORD, MURPHY & TILLY, INC.
1631 WEST ELFINDALE STREET
SPRINGFIELD, MO 65807 (417) 869-6009
ENGINEERING CORPORATION - 000631

© Copyright CMT, Inc.

REV.

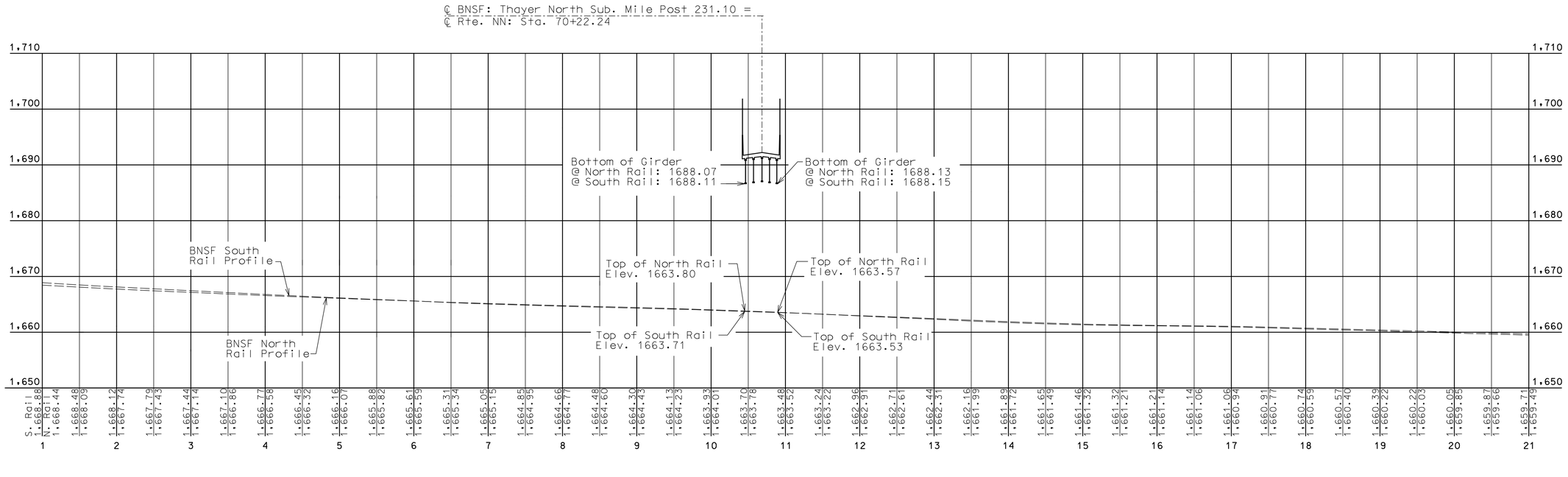

RAILROAD PROFILE GRADE DIAGRAM
SCALE: 1″ = 75′ HORIZONTAL
1″ = 10′ VERTICAL

Railroad Construction:

Any shoring system that impacts the Railroad operations and/or supports Railroad embankment shall be designed and constructed per the Railroad temporary shoring requirements.

All demolition within the Railroad right-of-way and/or demolition that may impact the Railroad tracks or operations shall comply with the Railroad demolition requirements.

Erection over the Railroad right-of-way shall be designed to cause no interruption to all Railroad operations.

The elevation of the existing top-of-rail profile shall be verified before beginning construction. All discrepancies shall be brought to the attention of the Railroad prior to construction.

The proposed grade separation project shall not change the quantity and/or chracteristics of the flow in the Railroad ditches and/or drainage structures.

The contractor must submit a proposed method of erosion and sediment control and have a method approved by the Railroad prior to beginning any grading on the project site.

For Railroad coordination, please refer to the Railroad's Coordination Requirements as part of the Specifications or Special Provisions of the project.

Temporary Construction Clearances, including falsework clearances, shall comply with Minimum Construction Clearances Diagram on Sheet No. 1.

All permanent clearances shall be verified before project closeout.

Contractor to submit all design and construction submittals to BNSF for their review and approval.

Construction Phasing Plan

Phase 1: Set pipe pile spacers and construct MSE walls.

Phase 2: Set and backfill piles and construct concrete abutments.

Phase 3: Splice steel girders and set into place.

Phase 4: Set concrete deck panels, form deck overhang, pour abutment diaphragms and pour concrete deck.

Notes:

Contractor is to splice girders on the ground and then lift into place.

Track closure time will need to be coordinated for the on-site flagman during the setting of steel girders and concrete deck panels, forming of deck overhang, and other super structure erection as directed by BNSF.

RAILROAD GENERAL NOTES

Detailed May 2024
Checked June 2024

Note: This drawing is not to scale. Follow dimensions.

STATE OF MISSOURI
JOSHUA D. JOLLIFF
NUMBER PE-2006002824
PROFESSIONAL ENGINEER
08/02/2024 1:52:04 PM
Joshua D. Jolliff
MO PE-2006002824

DATE PREPARED: 8/2/2024
ROUTE: NN | STATE: MO
DISTRICT: BR | SHEET NO.: 3
COUNTY: WEBSTER
JOB NO.: J7P3425C
CONTRACT ID.:
PROJECT NO.:
BRIDGE NO.: A9353

DATE	DESCRIPTION

MISSOURI HIGHWAYS AND TRANSPORTATION COMMISSION
105 WEST CAPITOL
JEFFERSON CITY, MO 65102
1-888-ASK-MODOT (1-888-275-6636)

CMT
©Copyright CMT, Inc.
CRAWFORD, MURPHY & TILLY, INC.
1631 WEST ELFINDALE STREET
SPRINGFIELD, MO 65807 (417) 869-6009
ENGINEERING CORPORATION - 000631

IF A SEAL IS PRESENT ON THIS SHEET IT HAS BEEN ELECTRONICALLY SEALED AND DATED.

REV.

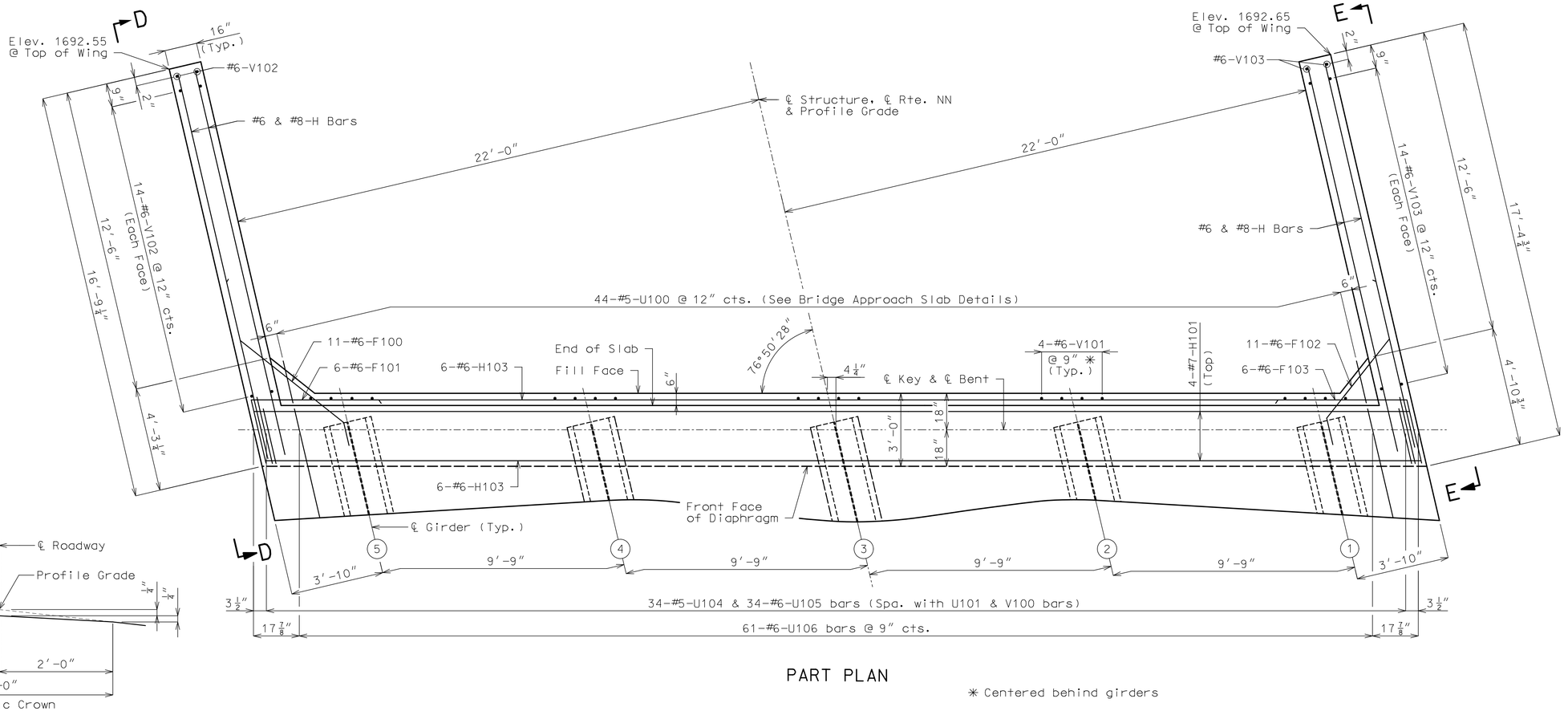

DETAIL A

PART PLAN

✳ Centered behind girders

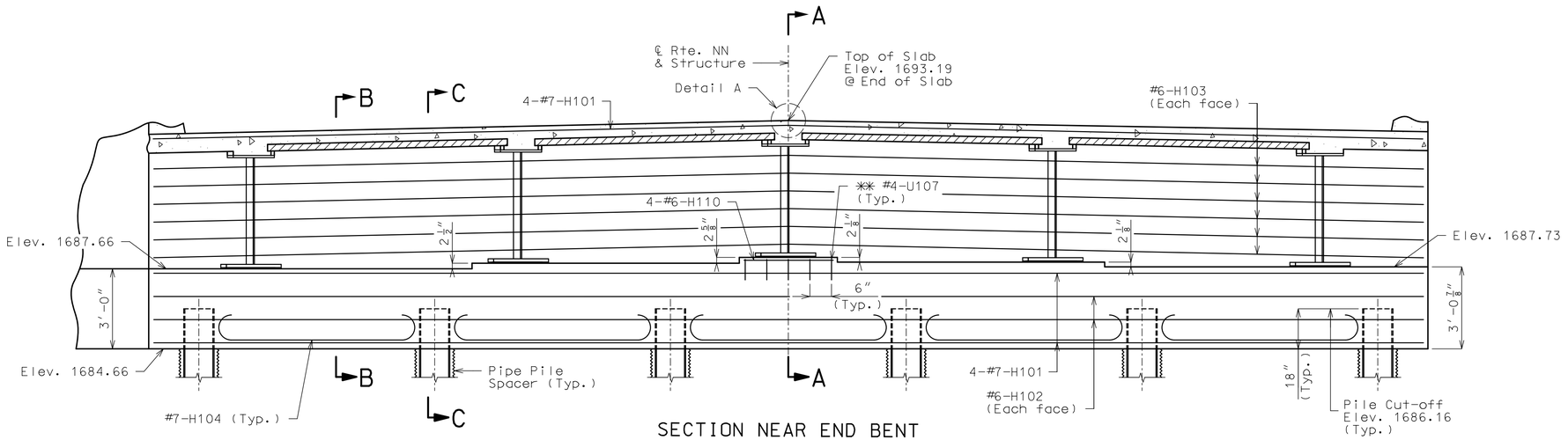

SECTION NEAR END BENT
(Keys not shown for clarity.)

✳✳ Bars placed perpendicular to ℄ Bent

General Notes:

For Details of End Bent No. 1 not shown, see Sheets No. 5 & 6.

For Sections A-A, B-B, & C-C, see Sheet No. 6.

For Elevations D-D & E-E, see Sheet No. 6.

All concrete in the end bent above top of beam and below top of slab shall be Class B-2.

Concrete diaphragms at the integral end bents shall be poured a minimum of 12 hours before the slab is poured.

For details of vertical drain at end bents, see Sheet No. 7.

The #6-F100 and #6-F102 bars shall be bent in field to clear girders.

The U bars and pairs of V bars shall be placed parallel to centerline of roadway.

For details of bridge approach slab, see Sheet No. 22.

DETAILS OF END BENT NO. 1

Detailed May 2024
Checked June 2024

Note: This drawing is not to scale. Follow dimensions.

Sheet No. 4 of 31

STATE OF MISSOURI
JOSHUA D. JOLLIFF
NUMBER PE-2006002824
PROFESSIONAL ENGINEER

08/02/2024 1:52:07 PM
Joshua D. Jolliff
MO PE-2006002824

DATE PREPARED
8/2/2024

ROUTE	STATE
NN	MO
DISTRICT	SHEET NO.
BR	4

COUNTY
WEBSTER

JOB NO.
J7P3425C

CONTRACT ID.

PROJECT NO.

BRIDGE NO.
A9353

IF A SEAL IS PRESENT ON THIS SHEET IT HAS BEEN ELECTRONICALLY SEALED AND DATED.

REV.	DESCRIPTION	DATE

MISSOURI HIGHWAYS AND TRANSPORTATION COMMISSION

105 WEST CAPITOL
JEFFERSON CITY, MO 65102
1-888-ASK-MODOT (1-888-275-6636)

CMT
© Copyright CMT, Inc.
CRAWFORD, MURPHY & TILLY, INC.
1631 WEST ELFINDALE STREET
SPRINGFIELD, MO 65807 (417) 869-6009
ENGINEERING CORPORATION - 000631

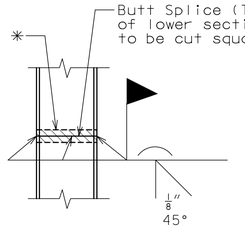

STEEL PILE SPLICE

(If required)

* Galvanizing material shall be omitted or removed one inch clear of weld locations in accordance with Sec 702.

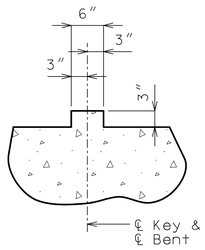

SECTION THRU KEY

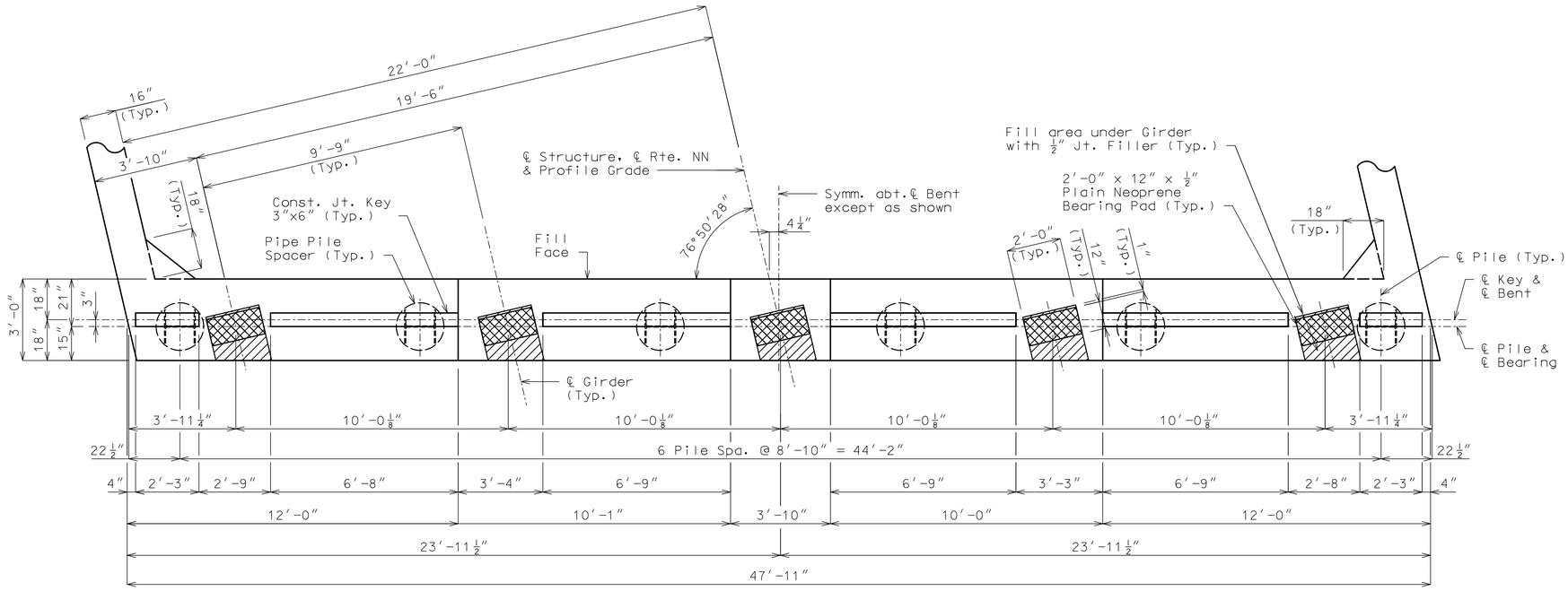

PLAN OF BEAM

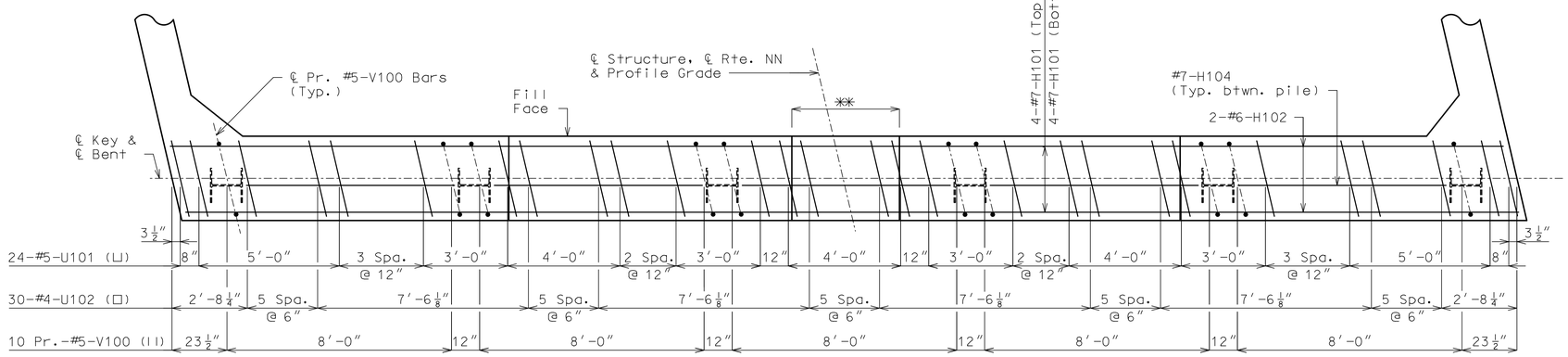

** See Section Near End Bent on Sheet No. 4 for additional bars to be placed in step.

PLAN OF BEAM SHOWING REINFORCEMENT

(Keys not shown for clarity)

Notes:

For details of End Bent No. 1 not shown, see Sheets No. 4 & 6.

For details of vertical drain at end bents, see Sheet No. 7.

All U bars and pairs of V bars shall be placed parallel to centerline of roadway.

Reinforcing steel shall be shifted to clear piles. U bars shall clear piles by at least 1 1/2".

DETAILS OF END BENT NO. 1

Detailed May 2024
Checked June 2024

Note: This drawing is not to scale. Follow dimensions.

STATE OF MISSOURI
JOSHUA D. JOLLIFF
NUMBER PE-2006002824
PROFESSIONAL ENGINEER

08/02/2024 1:52:11 PM
Joshua D. Jolliff
MO PE-2006002824

DATE PREPARED: 8/2/2024

ROUTE	STATE
NN	MO
DISTRICT	SHEET NO.
BR	5

COUNTY: WEBSTER
JOB NO.: J7P3425C
CONTRACT ID.:
PROJECT NO.:
BRIDGE NO.: A9353

DESCRIPTION	DATE

MISSOURI HIGHWAYS AND TRANSPORTATION COMMISSION
105 WEST CAPITOL
JEFFERSON CITY, MO 65102
1-888-ASK-MODOT (1-888-275-6636)

CMT
©Copyright CMT, Inc.
CRAWFORD, MURPHY & TILLY, INC.
1631 WEST ELFINDALE STREET
SPRINGFIELD, MO 65807 (417) 869-6009
ENGINEERING CORPORATION - 000631

IF A SEAL IS PRESENT ON THIS SHEET IT HAS BEEN ELECTRONICALLY SEALED AND DATED.

REV.

L:\MoDOT\20092124-00\Draw\Structures\Sheets\Route NN (A) over BNSF\FinalPlans\Plan Sheet DGNs\B_A9353_005_J7P3425C_END_BENT_1_DETAILS_II.dgn 1:47:22 PM 8/2/2024

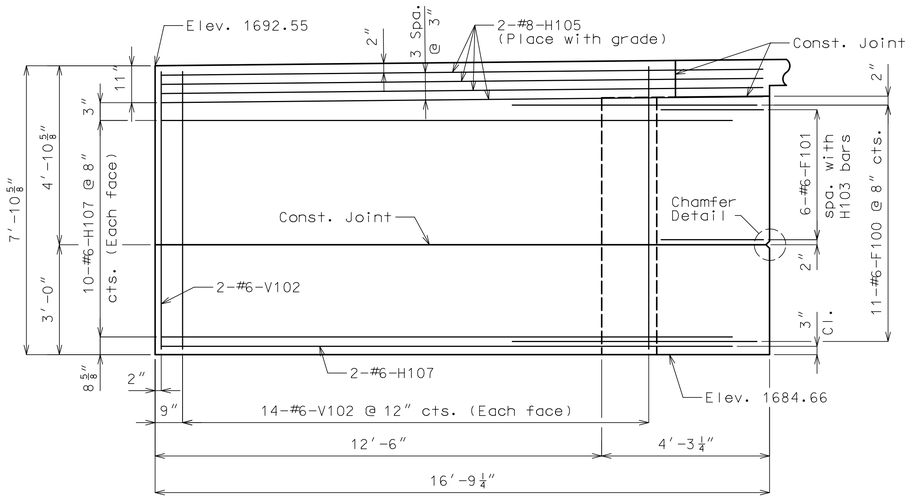

ELEVATION D-D

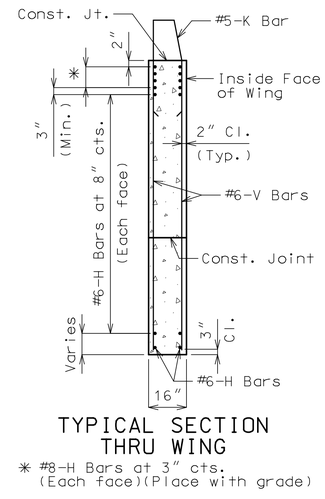

TYPICAL SECTION THRU WING

* #8-H Bars at 3" cts. (Each face)(Place with grade)

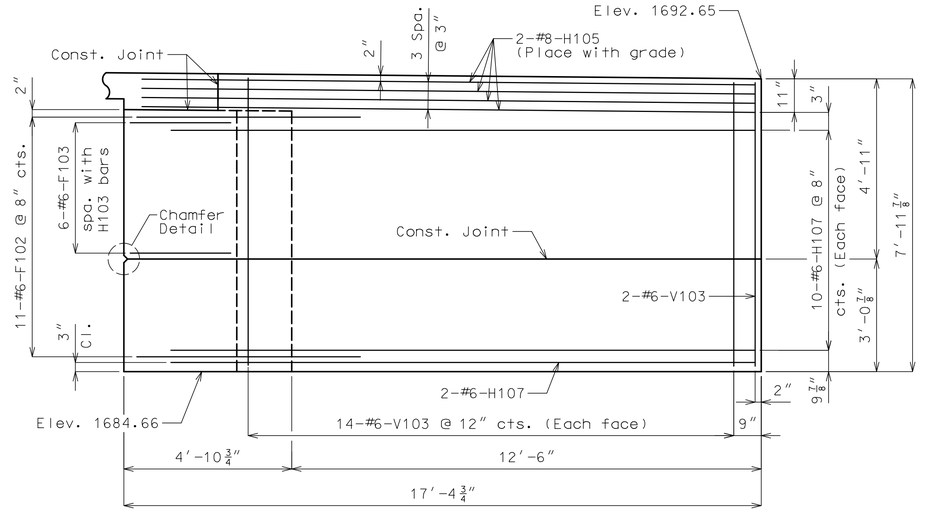

ELEVATION E-E

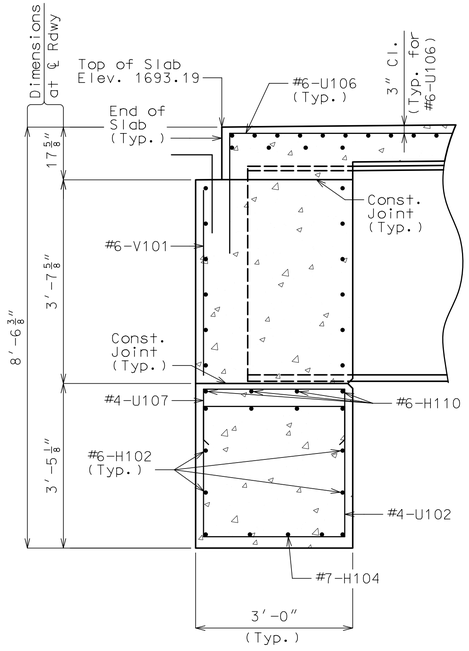

SECTION A-A

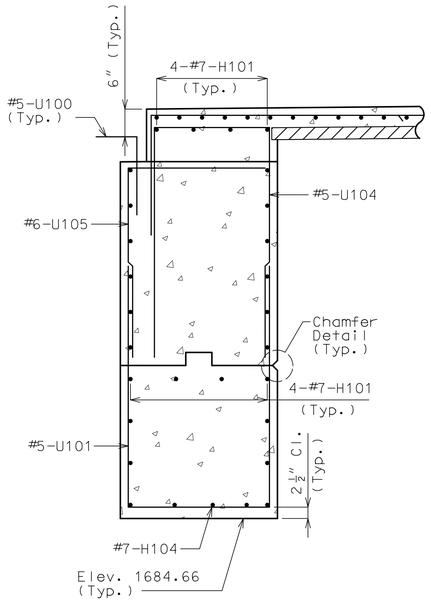

SECTION B-B

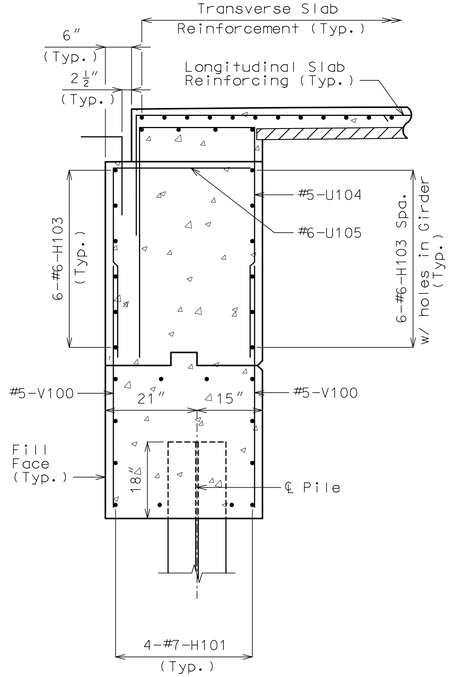

SECTION C-C

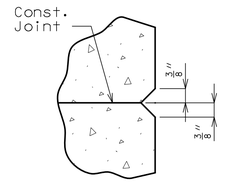

CHAMFER DETAIL

General Notes:

For Details of End Bent No. 1 not shown, see Sheets No. 4 & 5.

For locations of Sections A-A, B-B, & C-C, see Sheet No. 4.

For locations of Elevations D-D & E-E, see Sheet No. 4.

Concrete diaphragms at the integral end bents shall be poured a minimum of 12 hours before the slab is poured.

Substructure Quantity Table for Bent No. 1		
Item		Quantity
Galvanized Structural Steel Piles (14 in.)	linear foot	450
Pre-Bore for Piling	linear foot	210
Pile Point Reinforcement	each	6
Class B Concrete (Substructure)	cu. yard	21.4
Pipe Pile Spacers	each	6

Note:

These quantites are included in the estimated quantities table on Sheet No. 2.

DETAILS OF END BENT NO. 1

Detailed May 2024
Checked June 2024

Note: This drawing is not to scale. Follow dimensions.

STATE OF MISSOURI
JOSHUA D. JOLLIFF
NUMBER PE-2006002824
PROFESSIONAL ENGINEER
08/02/2024 1:52:14 PM
Joshua D. Jolliff
MO PE-2006002824

DATE PREPARED: 8/2/2024
ROUTE: NN | STATE: MO
DISTRICT: BR | SHEET NO.: 6
COUNTY: WEBSTER
JOB NO.: J7P3425C
CONTRACT ID.:
PROJECT NO.:
BRIDGE NO.: A9353

DESCRIPTION | DATE | REV.

MISSOURI HIGHWAYS AND TRANSPORTATION COMMISSION
105 WEST CAPITOL
JEFFERSON CITY, MO 65102
1-888-ASK-MODOT (1-888-275-6636)

CMT
© Copyright CMT, Inc.
CRAWFORD, MURPHY & TILLY, INC.
1631 WEST ELFINDALE STREET
SPRINGFIELD, MO 65807 (417) 869-6009
ENGINEERING CORPORATION - 000631

IF A SEAL IS PRESENT ON THIS SHEET IT HAS BEEN ELECTRONICALLY SEALED AND DATED.

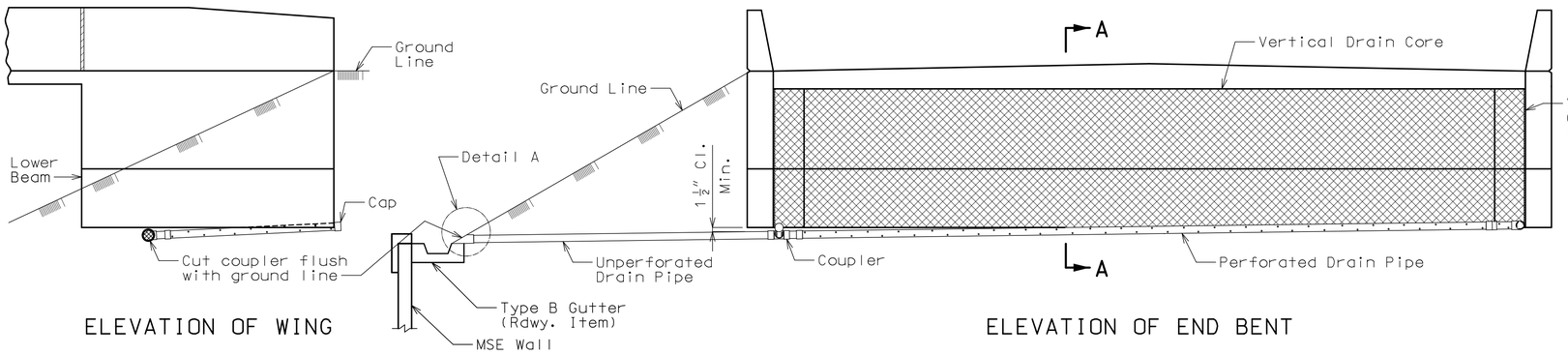

ELEVATION OF WING

ELEVATION OF END BENT

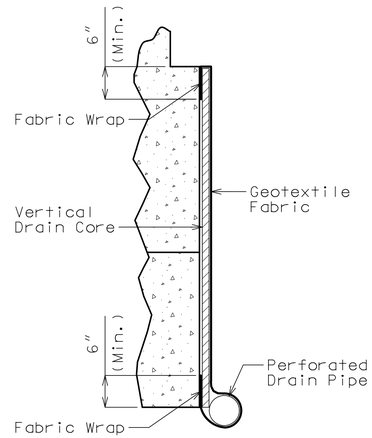

PART SECTION A-A
(Section thru wing similar)

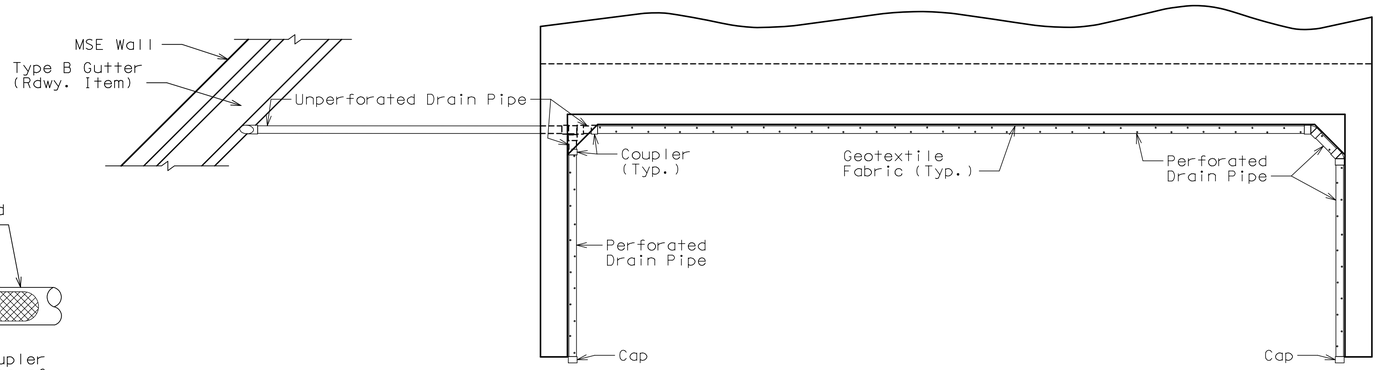

PLAN OF END BENT

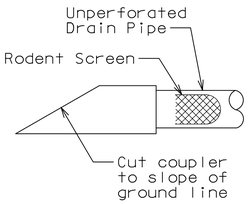

DETAIL A

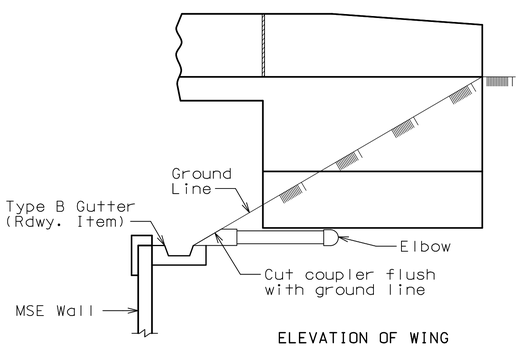

ELEVATION OF WING

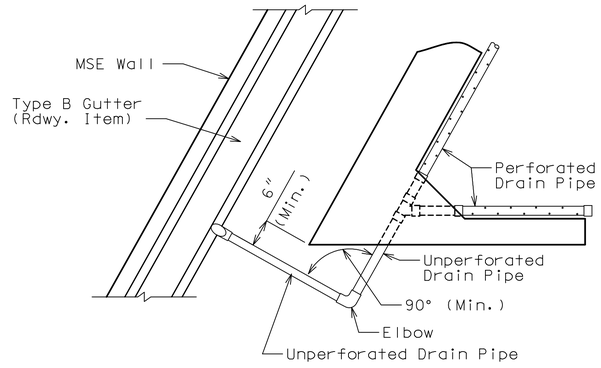

PART PLAN

OPTIONAL TURNED DRAIN
(Use only when straight drain is not practical.)

General Notes:

All drain pipe shall be sloped 1 to 2 percent.

Drain pipe may be either 6-inch diameter corrugated metallic-coated steel pipe underdrain, 4-inch diameter corrugated polyvinyl chloride (PVC) drain pipe, or 4-inch diameter corrugated polyethylene (PE) drain pipe.

Drain pipe shall be placed at fill face of end bent and inside face of wings. The pipe shall slope to lowest grade of ground line, also missing the lower beam of end bent by a minimum of 1 1/2 inches.

Perforated pipe shall be placed at fill face side and inside face of wings at the bottom of end bent and plain pipe shall be used where the vertical drain ends to the exit at ground line.

Drain should outlet to Type B Gutter behind MSE walls.

VERTICAL DRAIN AT END BENTS

(Squared end bent shown, skewed end bent similar)

Detailed May 2024
Checked June 2024

Note: This drawing is not to scale. Follow dimensions.

STATE OF MISSOURI
JOSHUA D. JOLLIFF
NUMBER PE-2006002824
PROFESSIONAL ENGINEER

08/02/2024 1:52:18 PM
Joshua D. Jolliff
MO PE-2006002824

DATE PREPARED
8/2/2024

ROUTE	STATE
NN	MO
DISTRICT	SHEET NO.
BR	7

COUNTY
WEBSTER

JOB NO.
J7P3425C

CONTRACT ID.

PROJECT NO.

BRIDGE NO.
A9353

DATE	DESCRIPTION

IF A SEAL IS PRESENT ON THIS SHEET IT HAS BEEN ELECTRONICALLY SEALED AND DATED.

MISSOURI HIGHWAYS AND TRANSPORTATION COMMISSION
105 WEST CAPITOL
JEFFERSON CITY, MO 65102
1-888-ASK-MODOT (1-888-275-6636)

©Copyright CMT, Inc.
CRAWFORD, MURPHY & TILLY, INC.
1631 WEST ELFINDALE STREET
SPRINGFIELD, MO 65807 (417) 869-6009
ENGINEERING CORPORATION - 000631

REV.

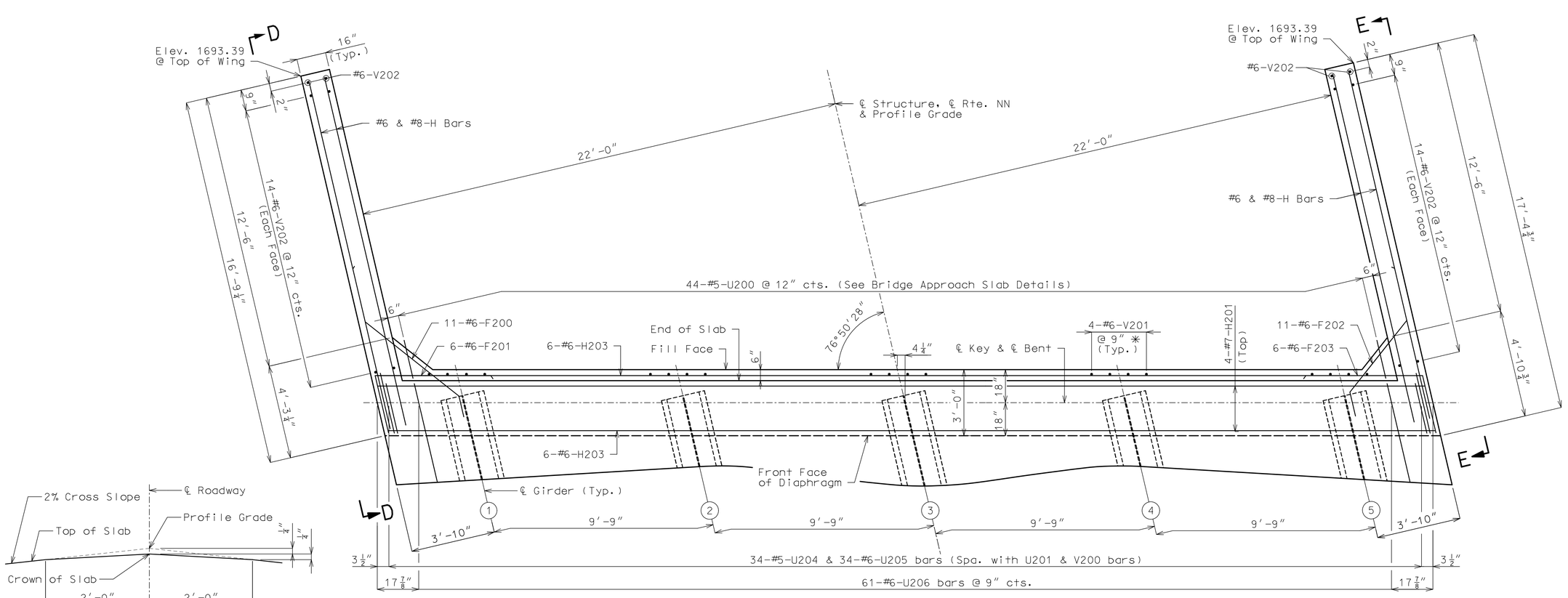

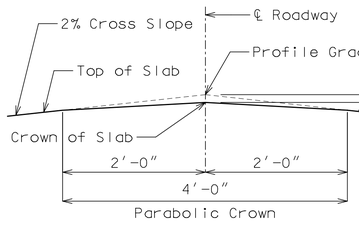

DETAIL A

PART PLAN

✳ Centered behind girders

General Notes:

For Details of End Bent No. 2 not shown, see Sheets No. 9 & 10.

For Sections A-A, B-B, & C-C, see Sheet No. 10.

For Elevations D-D & E-E, see Sheet No. 10.

All concrete in the end bent above top of beam and below top of slab shall be Class B-2.

Concrete diaphragms at the integral end bents shall be poured a minimum of 12 hours before the slab is poured.

For details of vertical drain at end bents, see Sheet No. 7.

The #6-F200 and #6-F202 bars shall be bent in field to clear girder.

The U bars and pairs of V bars shall be placed parallel to centerline of roadway.

For details of bridge approach slab, see Sheet No. 22.

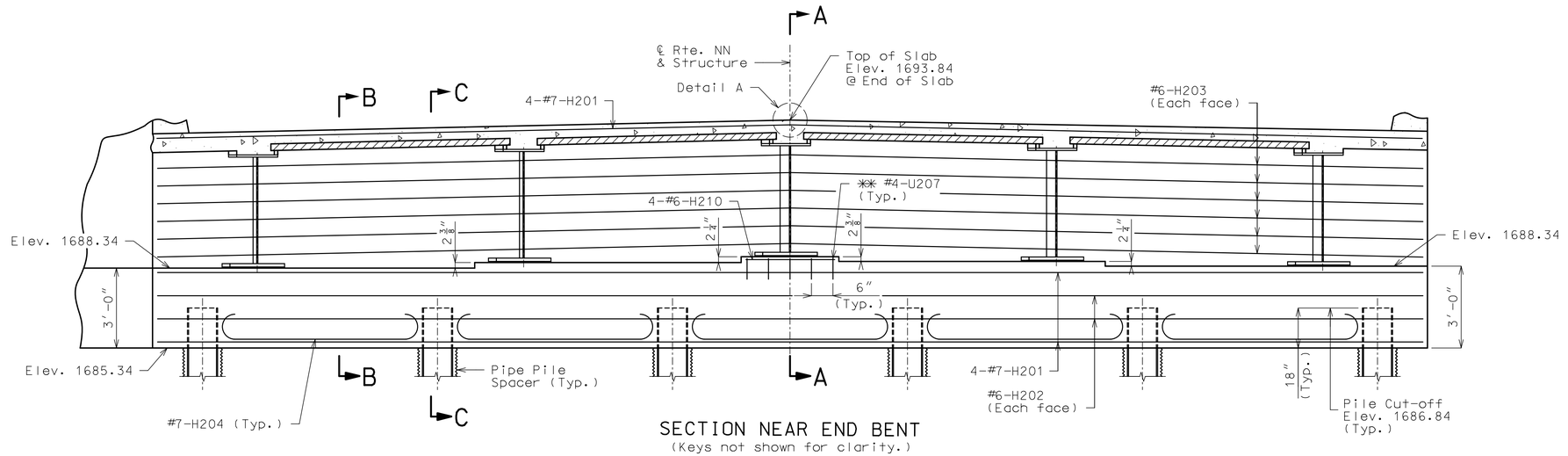

SECTION NEAR END BENT
(Keys not shown for clarity.)

✳✳ Bars placed perpendicular to ℄ Bent

DETAILS OF END BENT NO. 2

Detailed May 2024
Checked June 2024

Note: This drawing is not to scale. Follow dimensions.

STATE OF MISSOURI
JOSHUA D. JOLLIFF
NUMBER PE-2006002824
PROFESSIONAL ENGINEER

08/02/2024 1:52:23 PM
Joshua D. Jolliff
MO PE-2006002824

DATE PREPARED
8/2/2024

ROUTE	STATE
NN	MO
DISTRICT	SHEET NO.
BR	8

COUNTY
WEBSTER

JOB NO.
J7P3425C

CONTRACT ID.

PROJECT NO.

BRIDGE NO.
A9353

DATE	DESCRIPTION

IF A SEAL IS PRESENT ON THIS SHEET IT HAS BEEN ELECTRONICALLY SEALED AND DATED.

MISSOURI HIGHWAYS AND TRANSPORTATION COMMISSION

105 WEST CAPITOL
JEFFERSON CITY, MO 65102
1-888-ASK-MODOT (1-888-275-6636)

CMT
© Copyright CMT, Inc.
CRAWFORD, MURPHY & TILLY, INC.
1631 WEST ELFINDALE STREET
SPRINGFIELD, MO 65807 (417) 869-6009
ENGINEERING CORPORATION - 000631

REV.

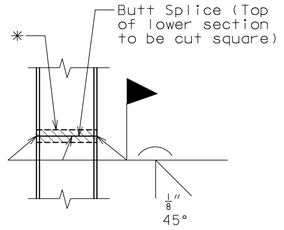

STEEL PILE SPLICE

(If required)

* Galvanizing material shall be omitted or removed one inch clear of weld locations in accordance with Sec 702.

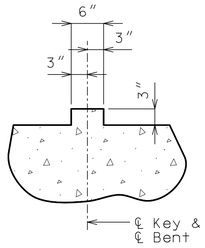

SECTION THRU KEY

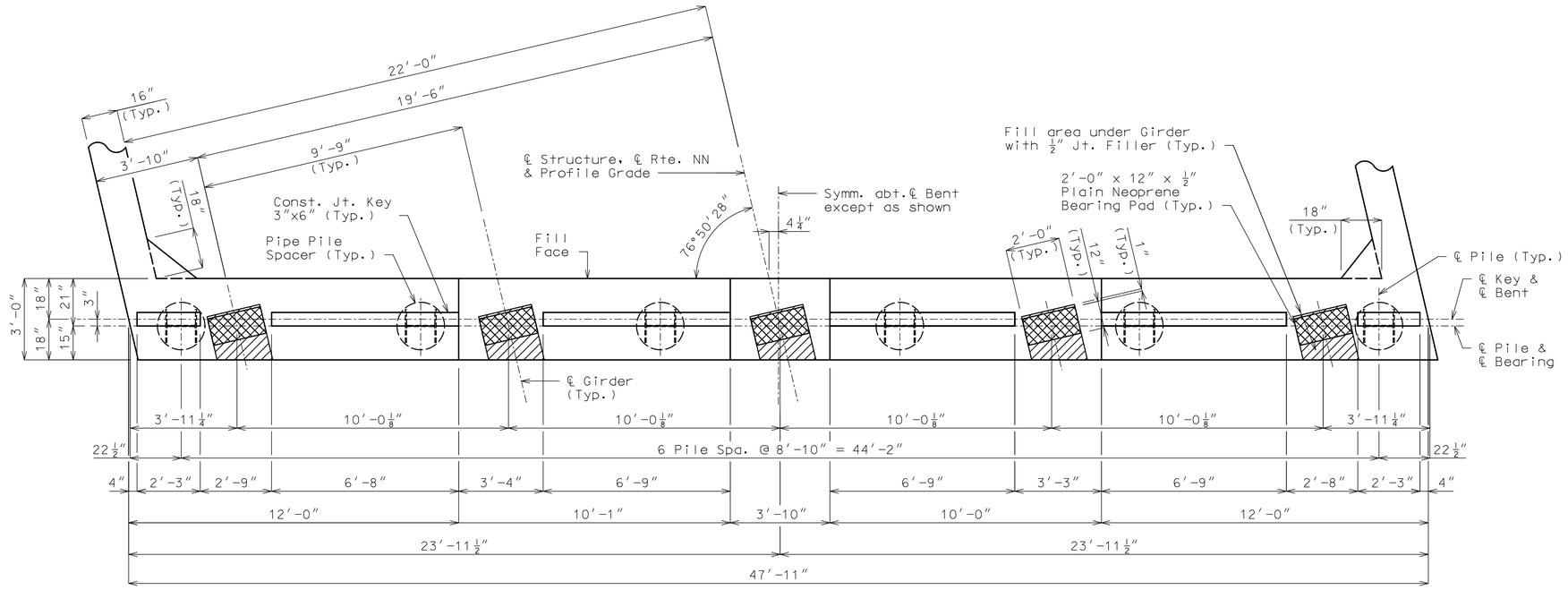

PLAN OF BEAM

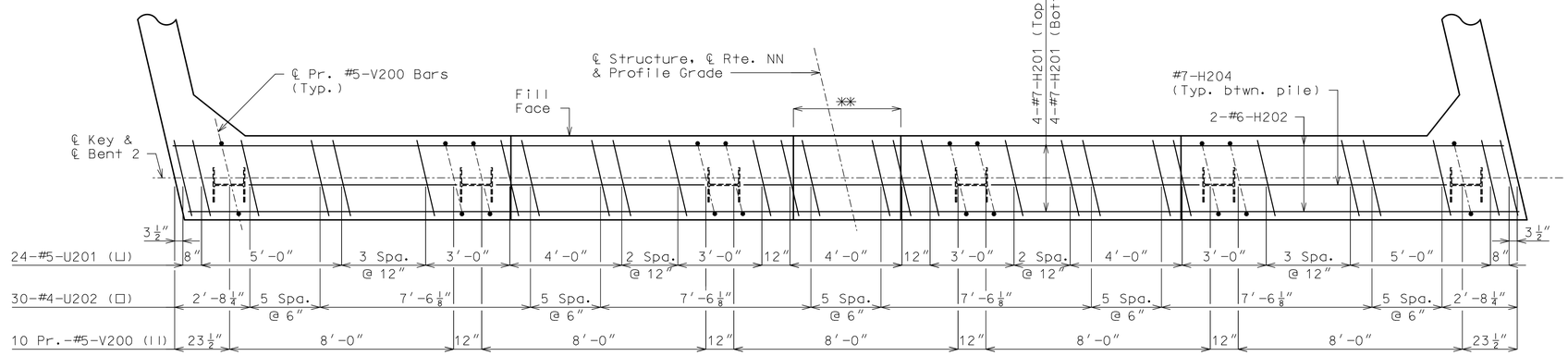

** See Section Near End Bent on Sheet No. 8 for additional bars to be placed in step.

PLAN OF BEAM SHOWING REINFORCEMENT

(Keys not shown for clarity)

Notes:

For Details of End Bent No. 2 not shown, see Sheets No. 8 & 10.

For details of vertical drain at end bents, see Sheet No. 7.

All U bars and pairs of V bars shall be placed parallel to centerline of roadway.

Reinforcing steel shall be shifted to clear piles. U bars shall clear piles by at least 1 1/2".

DETAILS OF END BENT NO. 2

Detailed May 2024
Checked June 2024

Note: This drawing is not to scale. Follow dimensions.

STATE OF MISSOURI
JOSHUA D. JOLLIFF NUMBER PE-2006002824
PROFESSIONAL ENGINEER
08/02/2024 1:52:27 PM
Joshua D. Jolliff
MO PE-2006002824

DATE PREPARED: 8/2/2024
ROUTE: NN | STATE: MO
DISTRICT: BR | SHEET NO.: 9
COUNTY: WEBSTER
JOB NO.: J7P3425C
CONTRACT ID.:
PROJECT NO.:
BRIDGE NO.: A9353

DESCRIPTION | DATE

MISSOURI HIGHWAYS AND TRANSPORTATION COMMISSION
105 WEST CAPITOL
JEFFERSON CITY, MO 65102
1-888-ASK-MODOT (1-888-275-6636)

CMT
©Copyright CMT, Inc.
CRAWFORD, MURPHY & TILLY, INC.
1631 WEST ELFINDALE STREET
SPRINGFIELD, MO 65807 (417) 869-6009
ENGINEERING CORPORATION - 000631

IF A SEAL IS PRESENT ON THIS SHEET IT HAS BEEN ELECTRONICALLY SEALED AND DATED.

REV.

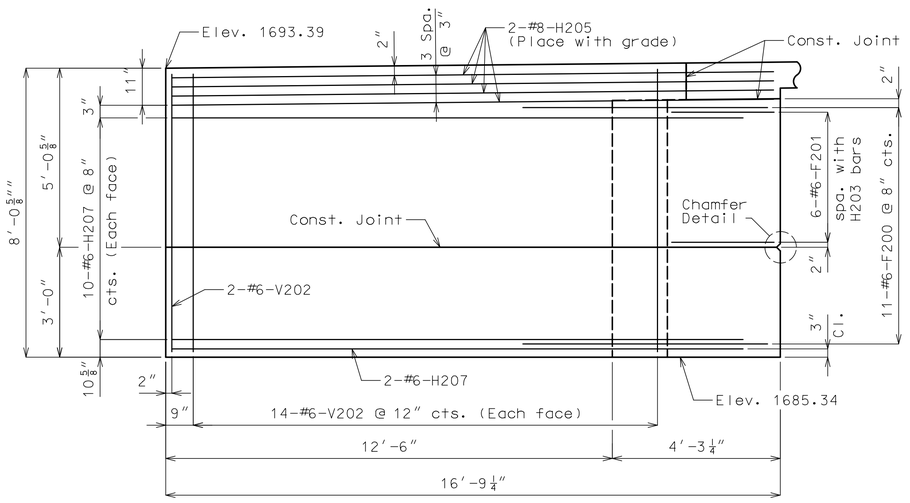

ELEVATION D-D

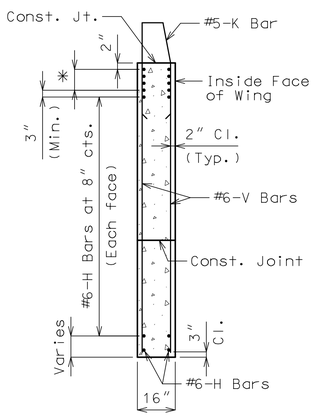

TYPICAL SECTION THRU WING

* #8-H Bars at 3" cts. (Each face)(Place with grade)

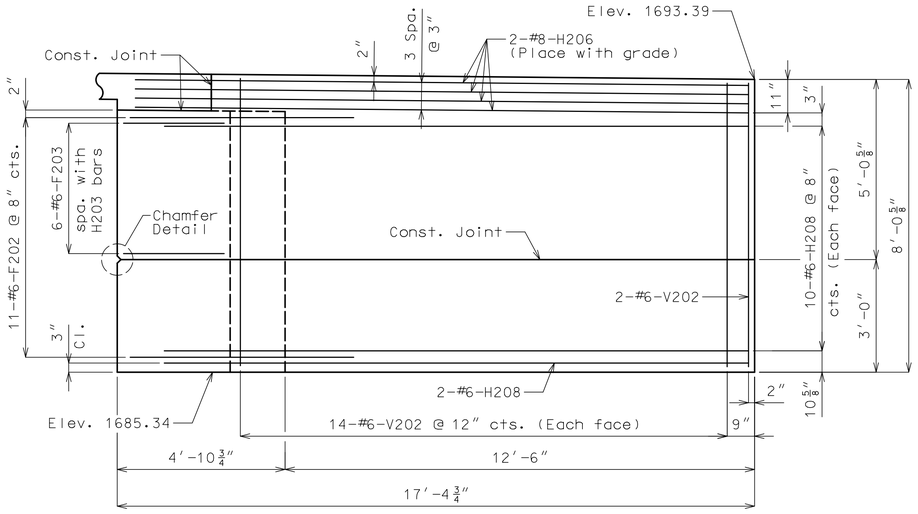

ELEVATION E-E

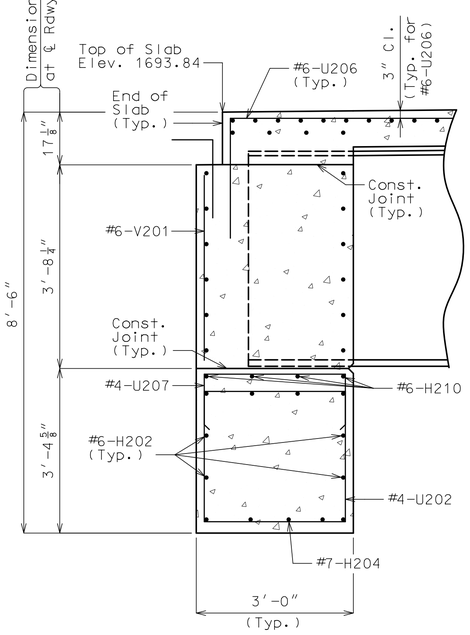

SECTION A-A

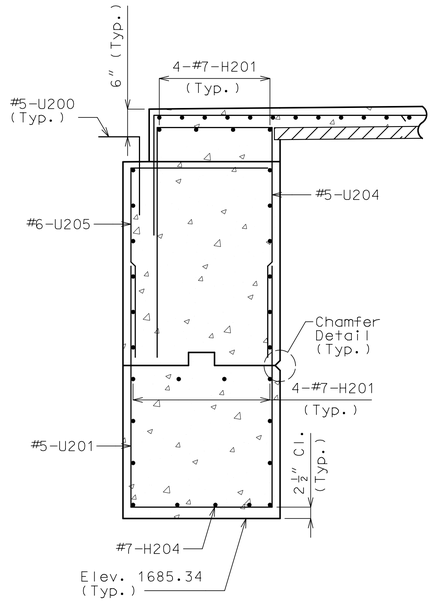

SECTION B-B

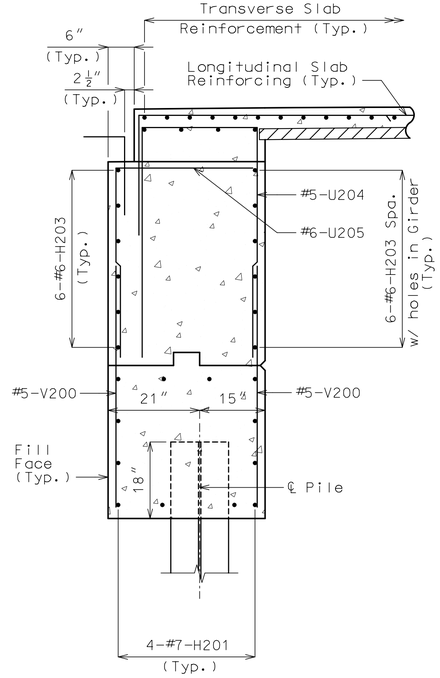

SECTION C-C

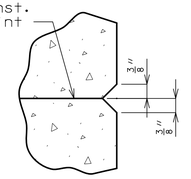

CHAMFER DETAIL

General Notes:

For Details of End Bent No. 2 not shown, see Sheets No. 8 & 9.

For locations of Sections A-A, B-B, & C-C, see Sheet No. 8.

For locations of Elevations D-D & E-E, see Sheet No. 8.

Concrete diaphragms at the integral end bents shall be poured a minimum of 12 hours before the slab is poured.

Substructure Quantity Table for Bent No. 2		
Item		Quantity
Galvanized Structural Steel Piles (14 in.)	linear foot	450
Pre-Bore for Piling	linear foot	204
Pile Point Reinforcement	each	6
Class B Concrete (Substructure)	cu. yard	21.2
Pipe Pile Spacers	each	6

Note:

These quantites are included in the estimated quantities table on Sheet No. 2.

DETAILS OF END BENT NO. 2

Detailed May 2024
Checked June 2024

Note: This drawing is not to scale. Follow dimensions.

L:\MoDOT\20092124-00\Draw\Structures\Sheets\Route NN (A) over BNSF\FinalPlans\Plan Sheet DGNs\B_A9353_010_J7P3425C_END_BENT_2_DETAILS_III.dgn 1:47:32 PM 8/2/2024

STATE OF MISSOURI
JOSHUA D. JOLLIFF
NUMBER PE-2006002824
PROFESSIONAL ENGINEER

08/02/2024 1:52:32 PM
Joshua D. Jolliff
MO PE-2006002824

DATE PREPARED: 8/2/2024

ROUTE	STATE
NN	MO
DISTRICT	SHEET NO.
BR	10

COUNTY: WEBSTER
JOB NO.: J7P3425C
CONTRACT ID.:
PROJECT NO.:
BRIDGE NO.: A9353

REV.	DESCRIPTION	DATE

MISSOURI HIGHWAYS AND TRANSPORTATION COMMISSION
105 WEST CAPITOL
JEFFERSON CITY, MO 65102
1-888-ASK-MODOT (1-888-275-6636)

CMT
© Copyright CMT, Inc.
CRAWFORD, MURPHY & TILLY, INC.
1631 WEST ELFINDALE STREET
SPRINGFIELD, MO 65807 (417) 869-6009
ENGINEERING CORPORATION - 000631

IF A SEAL IS PRESENT ON THIS SHEET IT HAS BEEN ELECTRONICALLY SEALED AND DATED.

Notes:

Longitudinal dimensions are horizontal from ℄ Bearing to ℄ Bearing. See Part Longitudinal Section on this sheet.

For elevation of girder and details of shear connectors, see Sheet No. 12.

For details of optional bolted field splice, see Sheet No. 14.

For details of bearing stiffeners and intermediate diaphragms, see sheet No. 15.

Transverse web stiffeners shall be located as shown in the plan of structural steel.

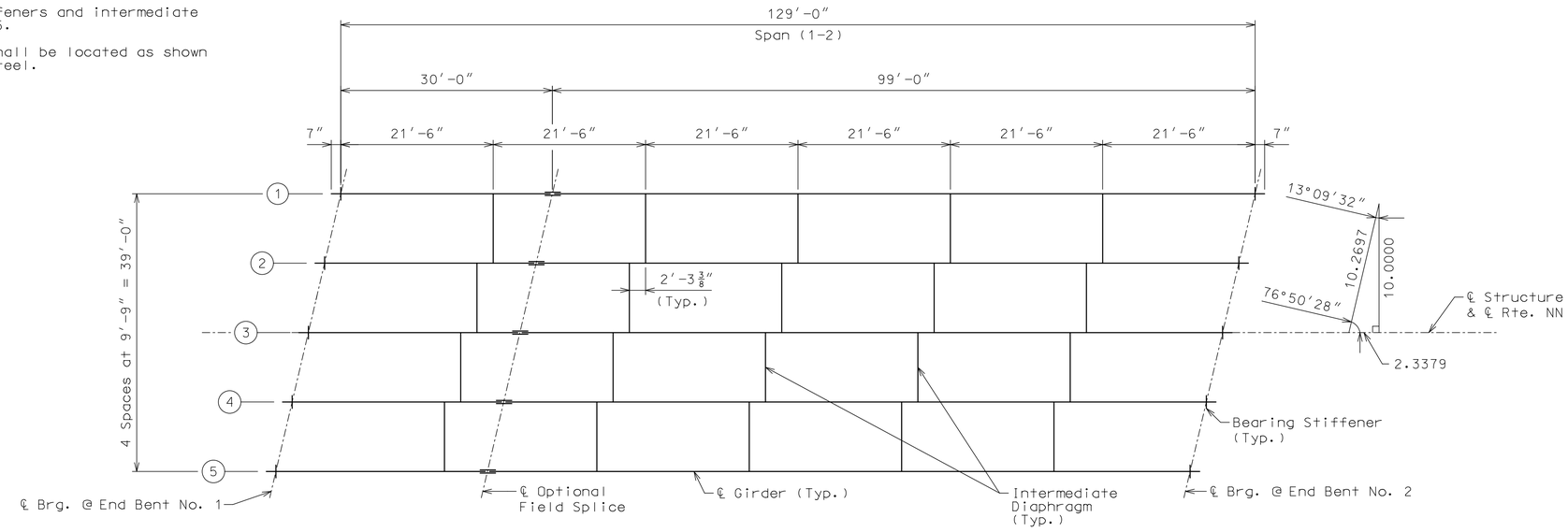

PLAN OF STRUCTURAL STEEL

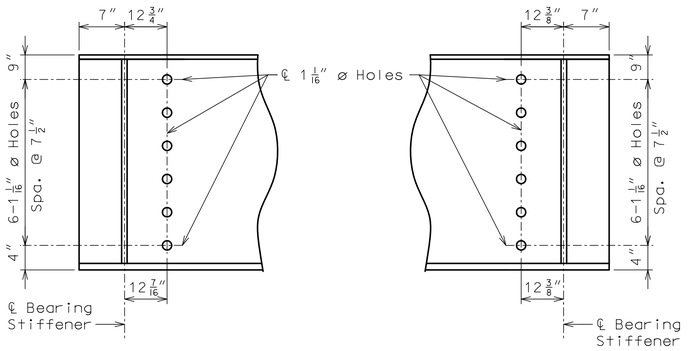

PART ELEVATION AT END BENT NO. 1

PART ELEVATION AT END BENT NO. 2

DETAILS OF WEB HOLES AT END BENTS

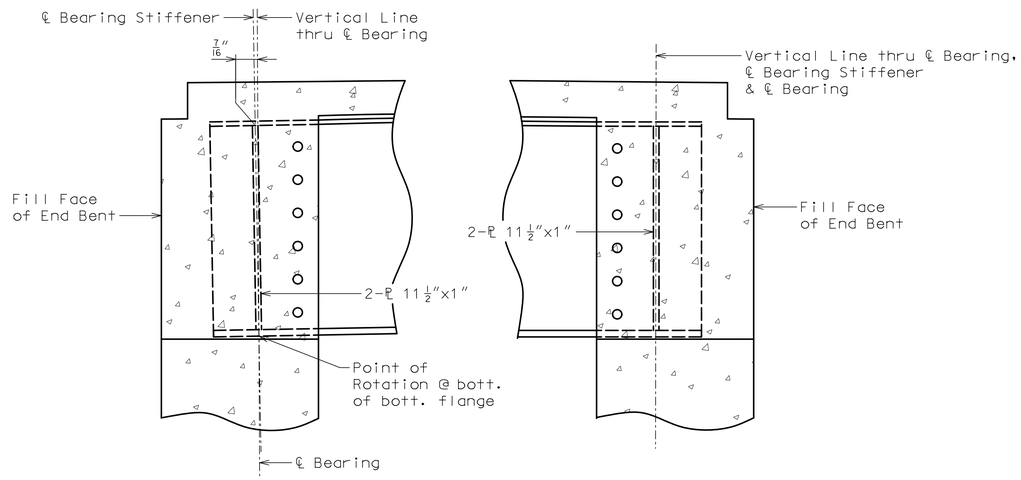

END BENT NO. 1

END BENT NO. 2

PART LONGITUDINAL SECTION

PLAN OF STRUCTURAL STEEL

Detailed May 2024
Checked June 2024

Note: This drawing is not to scale. Follow dimensions.

L:\MoDOT\20092124-00\Draw\Structures\Sheets\Route NN (A) over BNSF\FinalPlans\Plan Sheet DGNs\B_A9353_011_J7P3425C_PLAN_OF_STRUCTURAL_STEEL.dgn 1:47:33 PM 8/2/2024

STATE OF MISSOURI
JOSHUA D. JOLLIFF
NUMBER PE-2006002824
PROFESSIONAL ENGINEER

08/02/2024 1:52:36 PM
Joshua D. Jolliff
MO PE-2006002824

DATE PREPARED
8/2/2024

ROUTE	STATE
NN	MO
DISTRICT	SHEET NO.
BR	11

COUNTY
WEBSTER

JOB NO.
J7P3425C

CONTRACT ID.

PROJECT NO.

BRIDGE NO.
A9353

REV.	DESCRIPTION	DATE

IF A SEAL IS PRESENT ON THIS SHEET IT HAS BEEN ELECTRONICALLY SEALED AND DATED.

MISSOURI HIGHWAYS AND TRANSPORTATION COMMISSION
105 WEST CAPITOL
JEFFERSON CITY, MO 65102
1-888-ASK-MODOT (1-888-275-6636)

CMT
CRAWFORD, MURPHY & TILLY, INC.
1631 WEST ELFINDALE STREET
SPRINGFIELD, MO 65807 (417) 869-6009
ENGINEERING CORPORATION - 000631

© Copyright CMT, Inc.

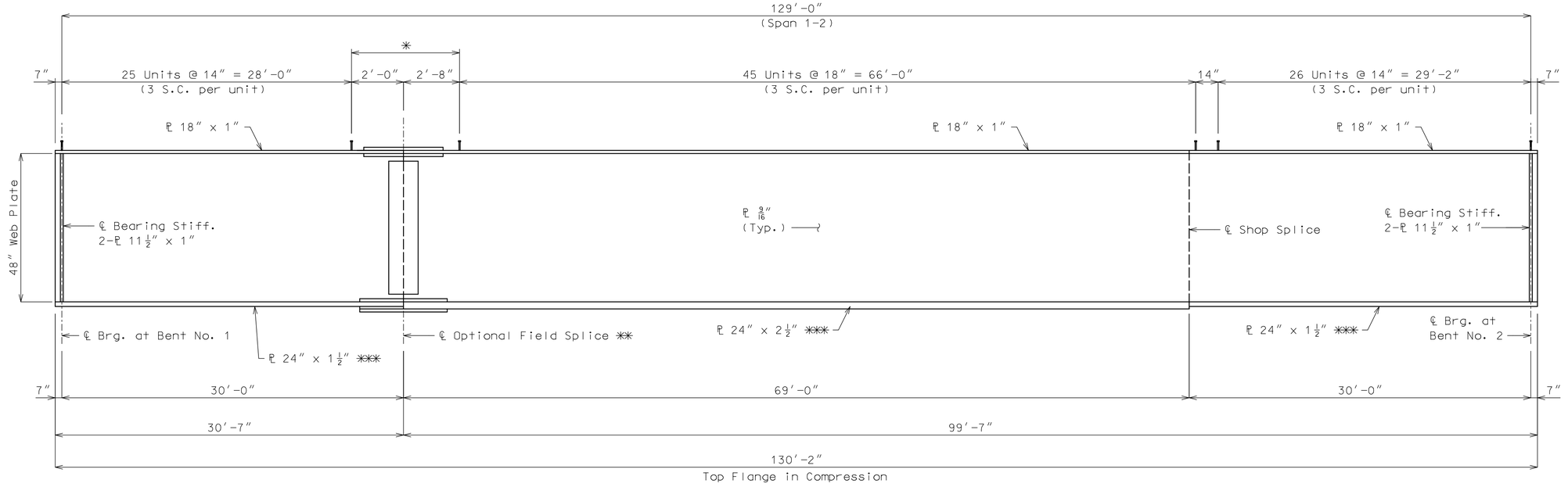

ELEVATION

✳ If optional field splice is not utilized, add 3 units of 3 shear connectors spaced @ 14″.

Additional shear connectors included in weight of Fabricated Structural Low Alloy Steel.

✳✳ Optional field splice is included based on constructability. Weight of optional field splice steel is not included in the estimated quantity for Fabricated Structural Low Alloy Steel. Additional weight of steel due to optional field splice will be considered incidental.

✳✳✳ Indicates flange plates subject to notch toughness requirements.

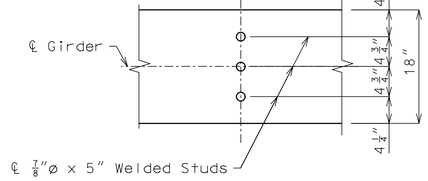

PLAN
(3 studs per unit)
(Transverse with ℄ Girder)

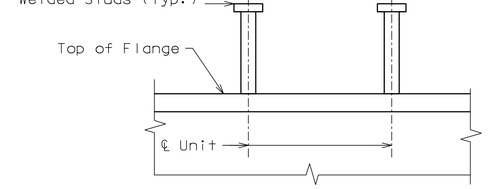

ELEVATION

DETAILS OF SHEAR CONNECTOR UNITS

Notes:

Weight of 1,455 pounds of shear connectors is included in the weight of Fabricated Structural Low Alloy Steel.

Shear connectors shall be in accordance with Sec 712, 1037 & 1080.

Fabricated structural steel shall be ASTM A709 Grade 50W, unless otherwise noted.

All web plates shall be subject to notch toughness requirements.

The flange and web splice plates shall be subject to notch toughness requirements when notch toughness is required for flanges on both sides of splice.

For plan of structural steel, see Sheet No. 11.

Longitudinal dimensions are horizontal from ℄ bearing to ℄ bearing. See Part Longitudinal Section on Sheet No. 11.

Plate girders shall be fabricated in accordance with the camber diagram on Sheet No. 13.

For details of splices, see Sheet No. 14.

For details of bearing stiffeners and intermediate diaphragm connection plates see Sheet No. 15.

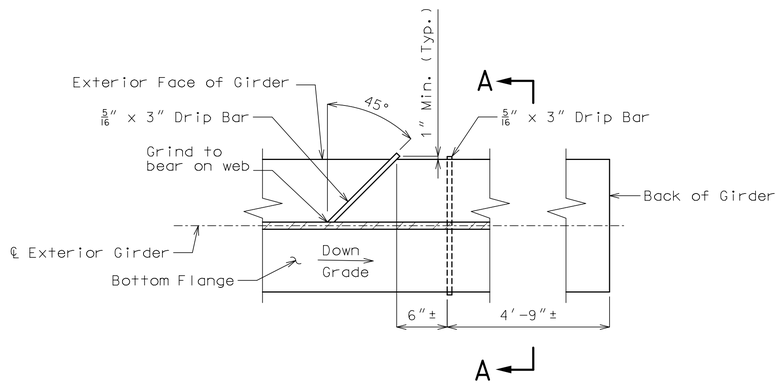

DRIP BAR DETAIL NEAR BENTS

Note:

Steel for drip bars shall be same grade as bottom flange.

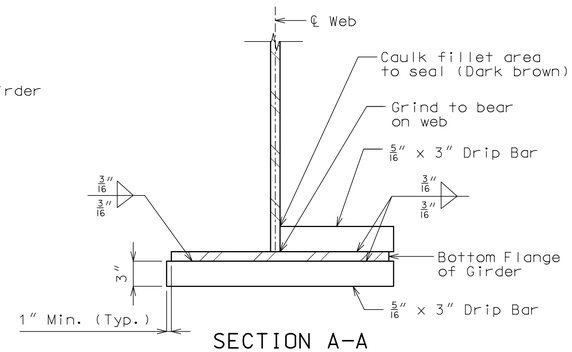

SECTION A-A

GIRDER ELEVATION

Detailed May 2024
Checked June 2024

Note: This drawing is not to scale. Follow dimensions.

STATE OF MISSOURI
JOSHUA D. JOLLIFF
NUMBER PE-2006002824
PROFESSIONAL ENGINEER
08/02/2024 1:52:40 PM
Joshua D. Jolliff
MO PE-2006002824

DATE PREPARED
8/2/2024

ROUTE	STATE
NN	MO
DISTRICT	SHEET NO.
BR	12

COUNTY
WEBSTER

JOB NO.
J7P3425C

CONTRACT ID.

PROJECT NO.

BRIDGE NO.
A9353

REV.	DESCRIPTION	DATE

MISSOURI HIGHWAYS AND TRANSPORTATION COMMISSION
105 WEST CAPITOL
JEFFERSON CITY, MO 65102
1-888-ASK-MODOT (1-888-275-6636)

CMT
CRAWFORD, MURPHY & TILLY, INC.
1631 WEST ELFINDALE STREET
SPRINGFIELD, MO 65807 (417) 869-6009
ENGINEERING CORPORATION - 000631

© Copyright CMT, Inc.

IF A SEAL IS PRESENT ON THIS SHEET IT HAS BEEN ELECTRONICALLY SEALED AND DATED.

Theoretical Bottom of Slab Elevations at Centerline of Girder (Prior to forming for slab) ✳✳

Girder Number	Span (1-2) (129'-0" ℄ Brg. - ℄ Brg.)										
	℄ Brg.	.10	.20	.30	.40	.50	.60	.70	.80	.90	℄ Brg.
1	1692.16	1692.42	1692.64	1692.83	1692.97	1693.05	1693.08	1693.07	1693.00	1692.89	1692.76
2	1692.34	1692.61	1692.85	1693.05	1693.20	1693.29	1693.32	1693.30	1693.22	1693.10	1692.95
3	1692.51	1692.79	1693.03	1693.23	1693.38	1693.47	1693.51	1693.48	1693.41	1693.29	1693.15
4	1692.30	1692.57	1692.82	1693.02	1693.17	1693.26	1693.30	1693.28	1693.21	1693.10	1692.95
5	1692.08	1692.34	1692.58	1692.77	1692.91	1693.01	1693.05	1693.04	1692.98	1692.88	1692.75

✳✳ Elevations are based on a constant slab thickness of 8½" and include allowance for theoretical dead load deflections due to weight of slab (including precast panel), barrier and pedestrian fence.

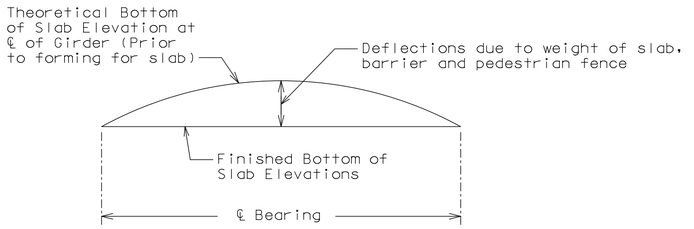

TYPICAL SLAB ELEVATIONS DIAGRAM

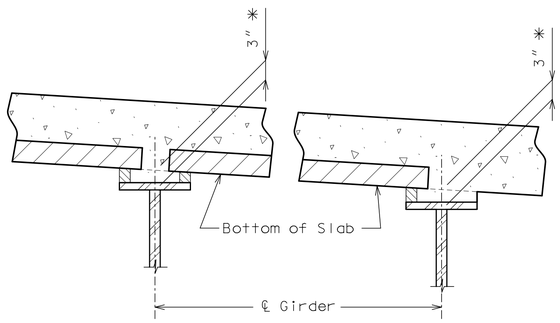

THEORETICAL SLAB HAUNCH

✳ Dimension (bottom of slab to top of web) may vary if girder camber after erection differs from plan camber by more than the % of Dead Load Deflection due to weight of structural steel. No payment will be made for any adjustment in forming or additional concrete required for variation in haunching.

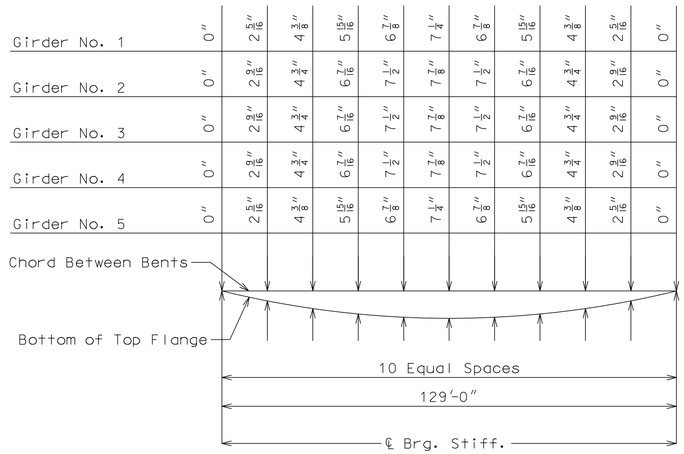

SPAN (1-2)

DEAD LOAD DEFLECTION

23% of dead load deflection is due to the weight of structural steel.

Dead load deflection includes weight of structural steel, concrete slab, barrier, and pedestrian fence.

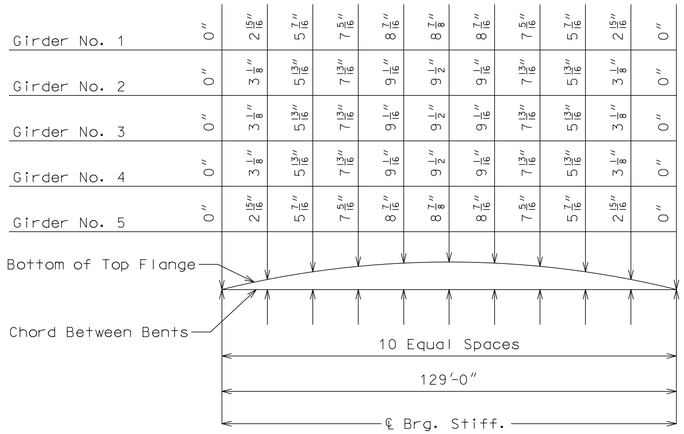

SPAN (1-2)

PLATE GIRDER CAMBER DIAGRAM

Camber includes allowance for vertical curve, and dead load deflection due to concrete slab, barrier, pedestrian fence and structural steel.

THEORETICAL BOTTOM OF SLAB, CAMBER AND DEAD LOAD DEFLECTIONS

Detailed May 2024
Checked June 2024

Note: This drawing is not to scale. Follow dimensions.

IF A SEAL IS PRESENT ON THIS SHEET IT HAS BEEN ELECTRONICALLY SEALED AND DATED.

STATE OF MISSOURI
JOSHUA D. JOLLIFF
NUMBER PE-2006002824
PROFESSIONAL ENGINEER

08/02/2024 1:52:44 PM
Joshua D. Jolliff
MO PE-2006002824

DATE PREPARED
8/2/2024

ROUTE	STATE
NN	MO
DISTRICT	SHEET NO.
BR	13

COUNTY
WEBSTER

JOB NO.
J7P3425C

CONTRACT ID.

PROJECT NO.

BRIDGE NO.
A9353

DESCRIPTION	DATE

MISSOURI HIGHWAYS AND TRANSPORTATION COMMISSION
105 WEST CAPITOL
JEFFERSON CITY, MO 65102
1-888-ASK-MODOT (1-888-275-6636)

© Copyright CMT, Inc.

CMT
CRAWFORD, MURPHY & TILLY, INC.
1631 WEST ELFINDALE STREET
SPRINGFIELD, MO 65807 (417) 869-6009
ENGINEERING CORPORATION - 000631

REV.

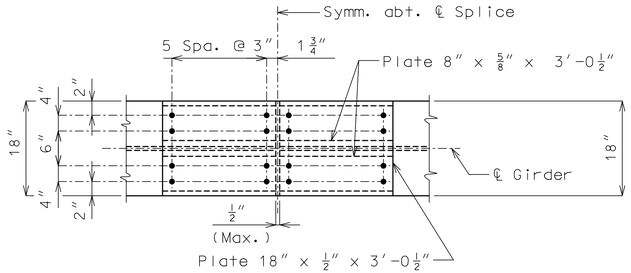

PLAN OF TOP FLANGE SPLICE

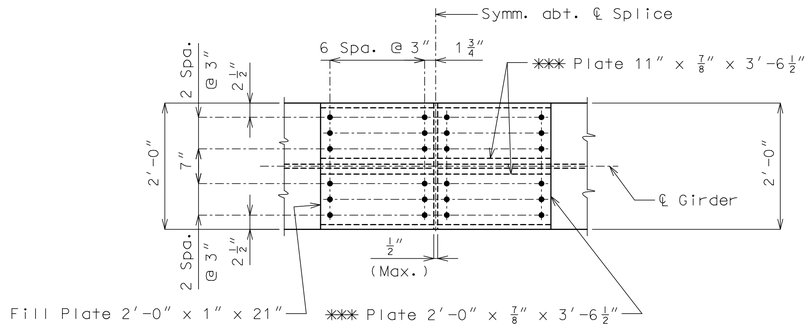

PLAN OF BOTTOM FLANGE SPLICE

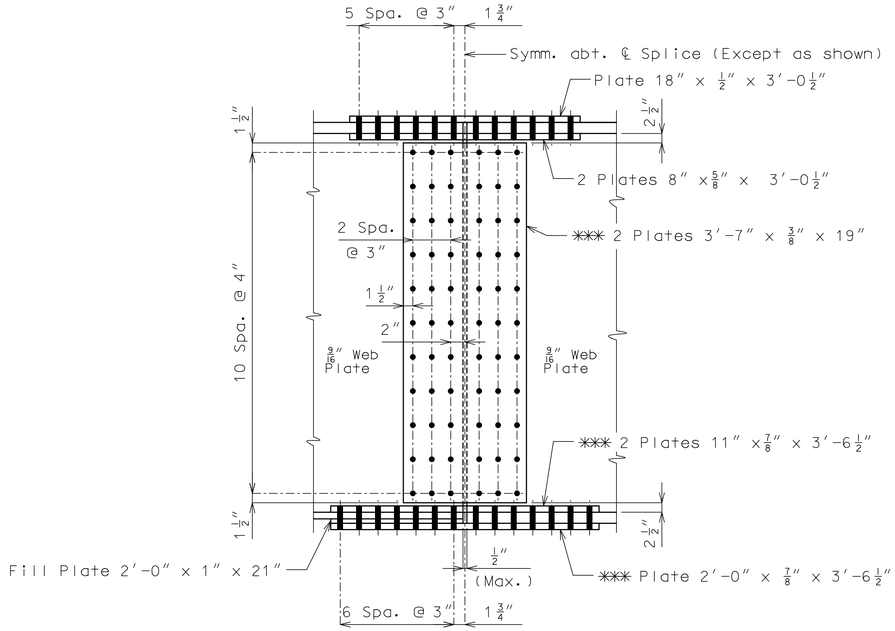

DETAIL OF OPTIONAL BOLTED FIELD SPLICE

Bolts shall be 7/8-inch diameter ASTM F3125 Grade A325 Type 3 in 15/16-inch diameter holes.

Contact surfaces shall be in accordance with Sec 1081 for surface preparation.

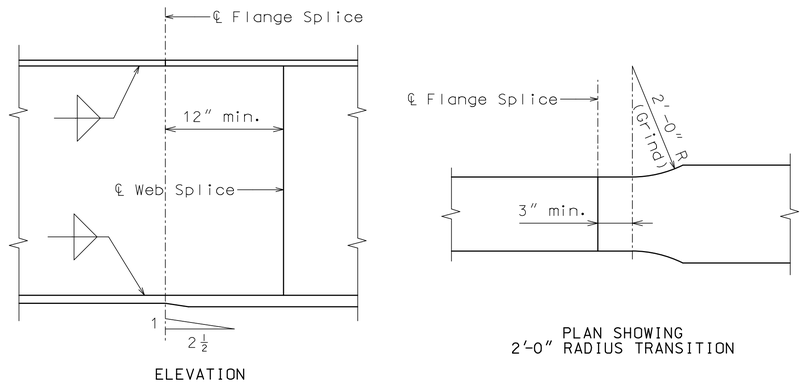

WELDED SHOP WEB AND FLANGE SPLICE

Welded shop web and flange splices may be permitted when detailed on the shop drawings and approved by the engineer. No additional payment will be made for optional welded shop web and flange splices.

Notes:

*** Indicates flange or web splice plate subject to notch toughness requirements.

For locations of shop splice and optional bolted field splice, see Sheet No. 12.

SPLICE DETAILS

Note: This drawing is not to scale. Follow dimensions.

Detailed May 2024
Checked June 2024

Note: This drawing is not to scale. Follow dimensions.

L:\MoDOT\20092124-00\Draw\Structures\Sheets\Route NN (A) over BNSF\FinalPlans\Plan Sheet DGNs\B_A9353_014_J7P3425C_SPLICE.dgn 1:47:39 PM 8/2/2024

STATE OF MISSOURI
JOSHUA D. JOLLIFF
NUMBER PE-2006002824
PROFESSIONAL ENGINEER

08/02/2024 1:52:48 PM
Joshua D. Jolliff
MO PE-2006002824

DATE PREPARED
8/2/2024

ROUTE	STATE
NN	MO
DISTRICT	SHEET NO.
BR	14

COUNTY
WEBSTER

JOB NO.
J7P3425C

CONTRACT ID.

PROJECT NO.

BRIDGE NO.
A9353

DESCRIPTION	DATE

REV.

IF A SEAL IS PRESENT ON THIS SHEET IT HAS BEEN ELECTRONICALLY SEALED AND DATED.

MISSOURI HIGHWAYS AND TRANSPORTATION COMMISSION

105 WEST CAPITOL
JEFFERSON CITY, MO 65102
1-888-ASK-MODOT (1-888-275-6636)

CMT
ENGINEERING CORPORATION - 000631
CRAWFORD, MURPHY & TILLY, INC.
1631 WEST ELFINDALE STREET
SPRINGFIELD, MO 65807 (417) 869-6009

© Copyright CMT, Inc.

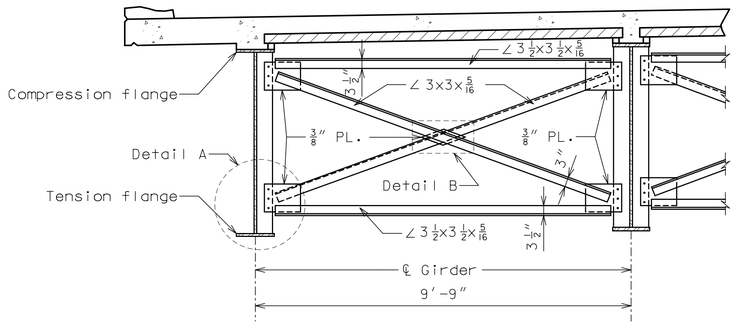

TYPICAL PART SECTION SHOWING INTERMEDIATE DIAPHRAGMS

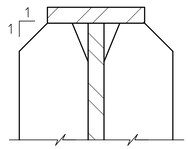

DETAIL C

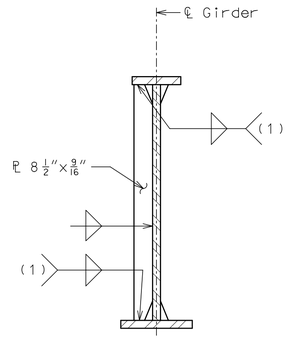

INTERMEDIATE DIAPHRAGM CONNECTION PLATE
(One side only)

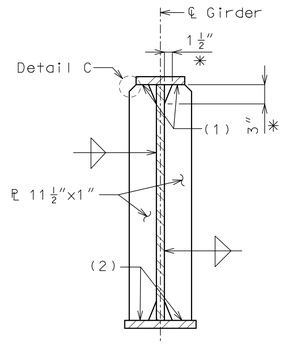

BEARING STIFFENER
(NO ATTACHMENTS)

WELDING DETAILS

(1) Tight fit

(2) Grind or mill to bear.

✳ Typical for all bearing stiffeners and intermediate diaphragm connection plates.

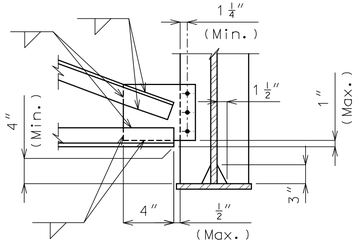

DETAIL A
(Bottom flange shown, top flange similar.)

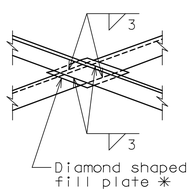

DETAIL B

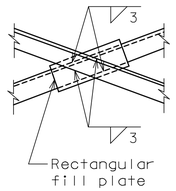

OPTIONAL DETAIL B

✳ At the contractor's option, rectangular fill plates may be used in lieu of diamond fill plates as shown in Optional Detail B.

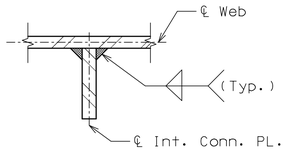

INT. CONN. PL. DETAIL

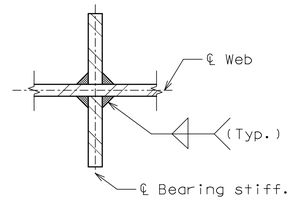

END BEARING STIFFENER DETAIL

Notes:

At the Contractor's option, holes in the diaphragm plate of non slab bearing diaphragms may be made 3/16" larger than the nominal diameter of the bolt. A hardened washer shall be used under the bolt head and nut when this option is used. Holes in the girder diaphragm connection plate shall be standard size.

Fabricated steel shal be ASTM A709 Grade 50W, except as noted.

STEEL DIAPHRAGM DETAILS

Detailed May 2024
Checked June 2024

Note: This drawing is not to scale. Follow dimensions.

STATE OF MISSOURI
JOSHUA D. JOLLIFF
NUMBER PE-2006002824
PROFESSIONAL ENGINEER

08/02/2024 1:52:51 PM
Joshua D. Jolliff
MO PE-2006002824

DATE PREPARED
8/2/2024

ROUTE	STATE
NN	MO
DISTRICT	SHEET NO.
BR	15

COUNTY
WEBSTER

JOB NO.
J7P3425C

CONTRACT ID.

PROJECT NO.

BRIDGE NO.
A9353

REV.	DESCRIPTION	DATE

IF A SEAL IS PRESENT ON THIS SHEET IT HAS BEEN ELECTRONICALLY SEALED AND DATED.

MISSOURI HIGHWAYS AND TRANSPORTATION COMMISSION

105 WEST CAPITOL
JEFFERSON CITY, MO 65102
1-888-ASK-MODOT (1-888-275-6636)

CMT
CRAWFORD, MURPHY & TILLY, INC.
1631 WEST ELFINDALE STREET
SPRINGFIELD, MO 65807 (417) 869-6009
ENGINEERING CORPORATION - 000631

© Copyright CMT, Inc.

✳ #5-S Bars at abt. 9″ cts. (1)
✳✳ #3-P1 at 12″ cts. (End panels only)

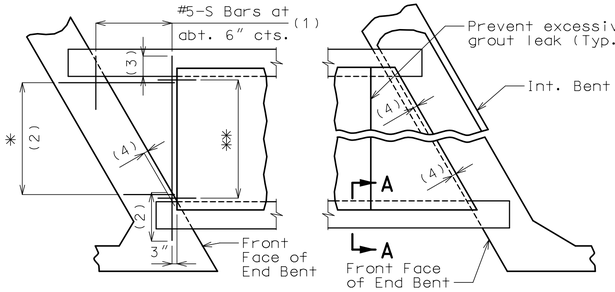

SQUARED END PANELS (INTEGRAL) SKEWED END PANELS (INTEGRAL)

PLAN SHOWING PANEL PLACEMENT

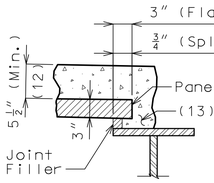

SECTION A-A

Joint Filler Dimensions			
Loc.	Width (W)	Height (H) Min.	Max.
Flange	1½″	1″	2″
Splice Plate	¾″	¼″	1″

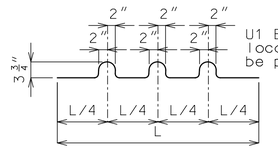

U1 Bars may be oriented at right angles to location and spacing shown. U1 Bars shall be placed between P1 bars.

BENDING DIAGRAM FOR U1 BAR

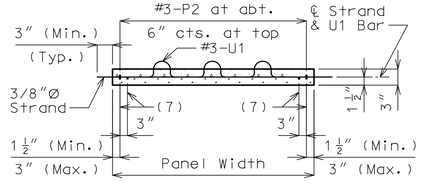

SECTION C-C

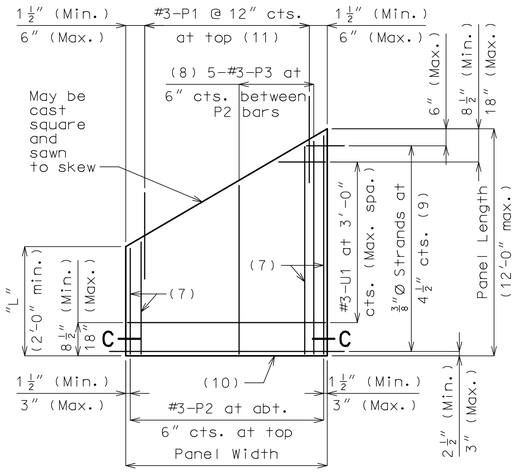

PLAN OF OPTIONAL SKEWED END PANEL

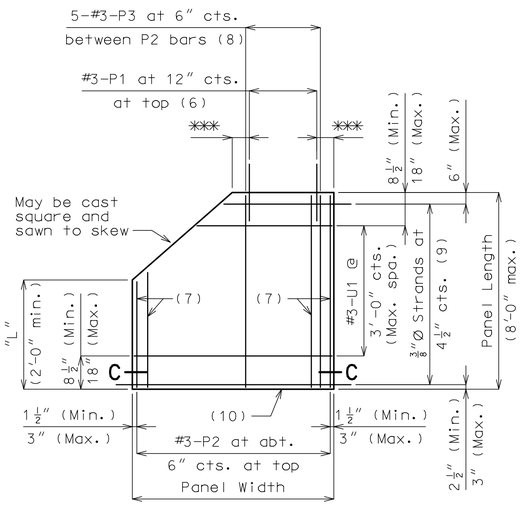

PLAN OF OPTIONAL TRUNCATED END PANEL

✳✳✳ 3″ (Min.), 6″ (Max.)

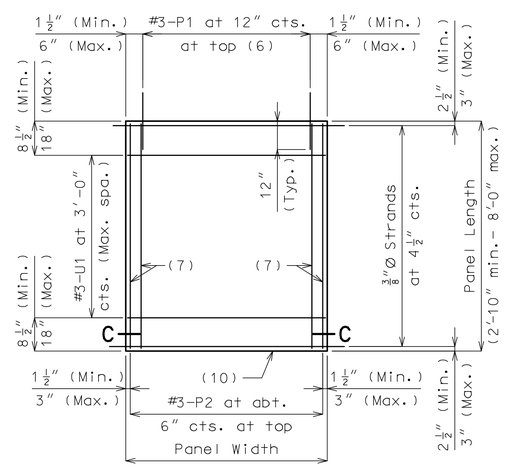

PLAN OF SQUARED PANEL

Reference Notes:

Plan of Panel Placement:

(1) S-bars shown are bottom steel in slab between panels and used with squared and truncated end panels only.

(2) Extend S-bars 18 inches beyond the front face of end bents and int. bents for squared and truncated end panels only.

(3) Extend S-bars 9 inches beyond edge of girder (Typ.).

(4) End panels shall be dimensioned 1/2″ min. to 1 1/2″ max. from the inside face of diaphragm.

(5) For truncated end panels, use a min. of #5-S bars at 6″ crossings in openings, or min. 4x4-W7xW7.

Plans of Panels:

(6) For end panels only, P1 bars shall be 2′-0″ in length and embedded 12″. P1 bars will not be required for panels at squared integral end bents.

(7) #3-P2 bars near edge of panel at bottom (under strands).

(8) Use #3-P3 bars if panel is skewed 45° or greater.

(9) Any strand 2′-0″ or shorter shall have a #4 reinforcing bar on each side of it, centered between strands. Strands 2′-0″ or shorter may then be debonded at the fabricator's option.

(10) Optional 1/2″ x 45° Chamfer one or both sides at bottom.

Section A-A:

(11) P1 bars not required for integral end bents.

(12) Adjustment in the slab thickness, joint filler, or grade will be necessary if the girder camber after erection differs from plan camber by more than the % of dead load deflection due to the weight of structural steel. No payment will be made for additional labor or materials for the adjustment.

(13) Contractor shall ensure proper consolidation under and between panels.

General Notes:

Prestressed Panels:

Concrete for prestressed panels shall be Class A-1 with f′c = 6,000 psi, f′ci = 4,000 psi.

The top surface of all panels shall receive a scored finish with a depth of scoring of 1/8″ perpendicular to the prestressing strands in the panels.

Prestressing tendons shall be high-tensile strength uncoated seven-wire low-relaxation strands for prestressed concrete in accordance with AASHTO M 203 Grade 270, with nominal diameter of strand = 3/8″ and nominal area = 0.085 sq. in. and minimum ultimate strength = 22.95 kips (270 ksi). Larger strands may be used with the same spacing and initial tension.

Initial prestressing force = 17.2 kips/strand.

The method and sequence of releasing the strands shall be shown on the shop drawings.

Suitable anchorage devices for lifting panels may be cast in panels, provided the devices are shown on the shop drawings and approved by the engineer. Panel lengths shall be determined by the contractor and shown on the shop drawings.

When squared end panels are used at skewed bents, the skewed portion shall be cast full depth. No separate payment will be made for additional concrete and reinforcing required.

Support from diaphragm forms is required under the optional skewed end until cast-in-place concrete has reached 3,000 psi compressive strength.

Prestressed panels shall be brought to saturated surface-dry (SSD) condition just prior to the deck pour. There shall be no free standing water on the panels or in the area to be cast.

The prestressed panel quantities are not included in the table of estimated quantities for slab.

Reinforcing Steel:

All dimensions are out to out.

Hooks and bends shall be in accordance with the CRSI Manual of Standard Practice for Detailing Reinforced Concrete Structures, Stirrup and Tie Dimensions.

Minimum clearance to reinforcing steel shall be 1 1/2″, unless otherwise shown.

If U1 bars interfere with placement of slab steel, U1 loops may be bent over, as necessary, to clear slab steel.

Deformed welded wire reinforcement (WWR) providing a minimum area of reinforcing perpendicular to strands of 0.22 sq in./ft, with spacing parallel to strands sufficient to ensure proper handling, may be used in lieu of the #3-P2 bars shown. Wire diameter shall not be larger than 0.375 inch. The above alternative reinforcement criteria may be used in lieu of the #3-P3 bars, when required, and placed over a width not less than 2 feet.

The following reinforcing steel shall be tied securely to the strands with the following maximum spacing in each direction:
#3-P2 bars at 16 inches.
WWR at 24 inches.

The #3-U1 bars shall be tied securely to #3-P2 bars, to WWR or to strands (when placed between P1 bars) at about 3-foot centers.

Minimum reinforcement steel length shall be 2′-0″.

All reinforcement other than prestressing strands shall be epoxy coated.

Precast panels may be in contact with stirrup reinforcing in diaphragms.

S-bars are not listed in the bill of reinforcing.

Cost of S-bars will be considered completely covered by the contract unit price for the Slab.

Joint Filler:

Joint filler shall be preformed fiber expansion joint material in accordance with Sec 1057 or expanded or extruded polystyrene bedding material in accordance with Sec 1073.

The thickness of the joint filler shall be adjusted to achieve the slab haunching dimension found on Sheet No. 13. These adjustments shall be within the limits noted in the table of Joint Filler Dimensions.

Thicker material shall be used on one or both sides of the girder to reduce cast-in-place concrete thickness to within tolerances.

The same thickness of material shall be used under any one edge of any panel except at splices, and the maximum change in thickness between adjacent panels shall be 1/4 inch to correct for variations from Girder Camber Diagram. The polystyrene bedding material may be cut to match haunch height above top of flange.

Joint filler shall be glued to the girder. When thickness exceeds 1 1/2 inches, the joint filler shall be glued top and bottom. The glue used shall be the type recommended by the joint filler manufacturer.

Edges of panels shall be uniformly seated on the joint filler before slab reinforcement is placed.

PRESTRESSED PANELS

STATE OF MISSOURI
JOSHUA D. JOLLIFF
NUMBER PE-2006002824
PROFESSIONAL ENGINEER
08/02/2024 1:52:55 PM
Joshua D. Jolliff
MO PE-2006002824

DATE PREPARED: 8/2/2024

ROUTE	STATE
NN	MO
DISTRICT	SHEET NO.
BR	16

COUNTY: WEBSTER
JOB NO.: J7P3425C
CONTRACT ID.:
PROJECT NO.:
BRIDGE NO.: A9353

DATE	DESCRIPTION

IF A SEAL IS PRESENT ON THIS SHEET IT HAS BEEN ELECTRONICALLY SEALED AND DATED.

MISSOURI HIGHWAYS AND TRANSPORTATION COMMISSION
105 WEST CAPITOL
JEFFERSON CITY, MO 65102
1-888-ASK-MODOT (1-888-275-6636)

©Copyright CMT, Inc.

CMT
CRAWFORD, MURPHY & TILLY, INC.
1631 WEST ELFINDALE STREET
SPRINGFIELD, MO 65807 (417) 869-6009
ENGINEERING CORPORATION - 000631

REV.

Detailed May 2024
Checked June 2024

Note: This drawing is not to scale. Follow dimensions.

L:\MoDOT\20092124-00\Draw\Structures\Sheets\Route NN (A) over BNSF\FinalPlans\Plan Sheet DGNs\B_A9353_016_J7P3425C_PRECAST_PRESTRESSED PANELS.dgn 1:47:43 PM 8/2/2024

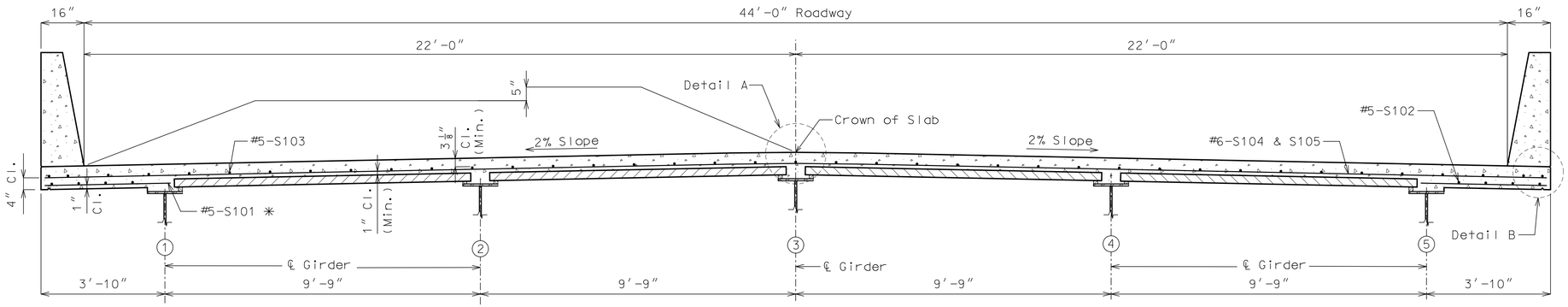

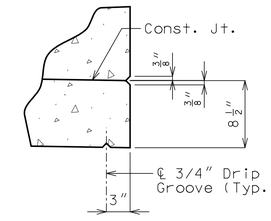

DETAIL B

SECTION THRU SLAB

(Pedestrian fence not shown for clarity)

✳ Alternate bar shape available, see Sheet No. 18.

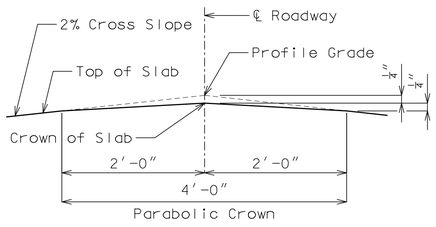

DETAIL A

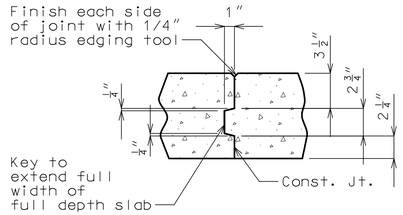

FULL DEPTH SLAB

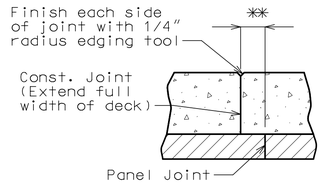

✳✳ Adjust the construction joint to a clearance of 6 inches minimum from the panel joint.

SLAB ON PANELS

SLAB CONSTRUCTION JOINT

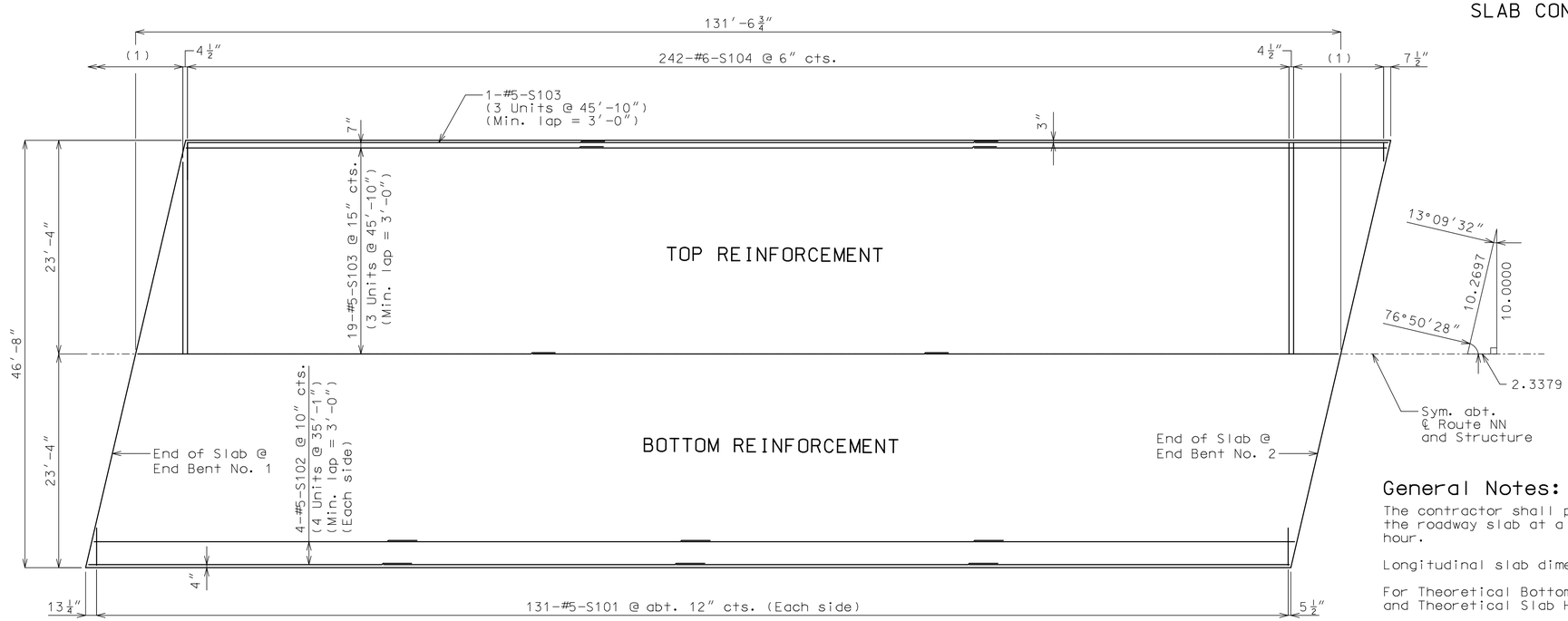

PLAN OF SLAB SHOWING REINFORCEMENT

(1) 21-#6-S105 @ 6″ cts.

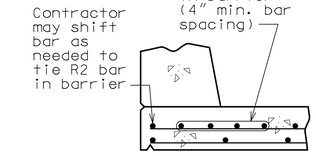

OPTIONAL SHIFTING TOP BARS AT BARRIER

General Notes:

The contractor shall pour up grade and satisfactorily finish the roadway slab at a rate of not less than 25 cubic yards per hour.

Longitudinal slab dimensions are measured horizontally.

For Theoretical Bottom of Slab Elevations, Beam Camber Diagram and Theoretical Slab Haunching Diagram, see Sheet No. 13.

For details of precast prestressed panels, see Sheet No. 16.

SLAB REINFORCEMENT

Detailed May 2024
Checked June 2024

Note: This drawing is not to scale. Follow dimensions.

L:\MoDOT\20092124-00\Draw\Structures\Sheets\Route NN (A) over BNSF\FinalPlans\Plan Sheet DGNs\B_A9353_017_J7P3425C_SLAB_REINFORCEMENT.dgn 1:47:45 PM 8/2/2024

STATE OF MISSOURI
JOSHUA D. JOLLIFF
NUMBER PE-2006002824
PROFESSIONAL ENGINEER
08/02/2024 1:52:58 PM
Joshua D. Jolliff
MO PE-2006002824

DATE PREPARED: 8/2/2024
ROUTE: NN | STATE: MO
DISTRICT: BR | SHEET NO.: 17
COUNTY: WEBSTER
JOB NO.: J7P3425C
CONTRACT ID.:
PROJECT NO.:
BRIDGE NO.: A9353

DESCRIPTION	DATE

IF A SEAL IS PRESENT ON THIS SHEET IT HAS BEEN ELECTRONICALLY SEALED AND DATED.

MISSOURI HIGHWAYS AND TRANSPORTATION COMMISSION
105 WEST CAPITOL
JEFFERSON CITY, MO 65102
1-888-ASK-MODOT (1-888-275-6636)

©Copyright CMT, Inc.
CMT
CRAWFORD, MURPHY & TILLY, INC.
1631 WEST ELFINDALE STREET
SPRINGFIELD, MO 65807 (417) 869-6009
ENGINEERING CORPORATION - 000631

REV.

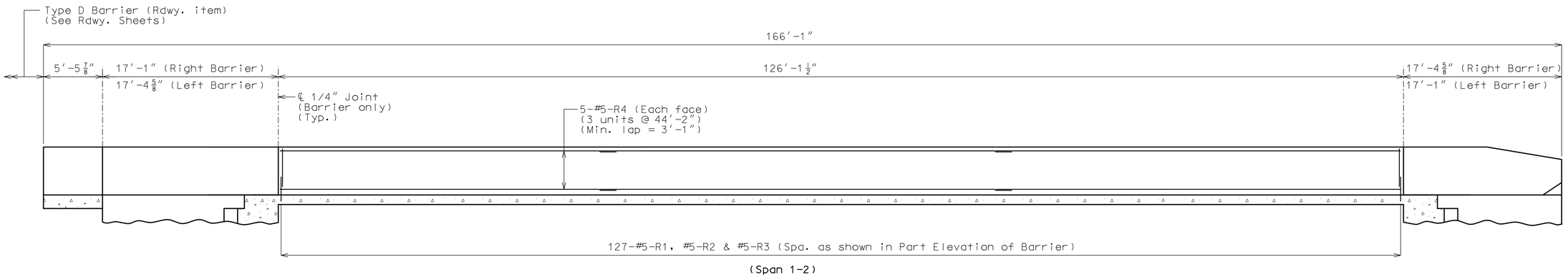

(Span 1-2)

ELEVATION OF BARRIER

Longitudinal dimensions are horizontal.

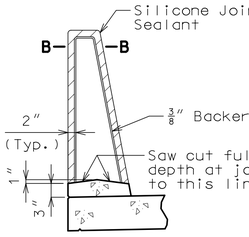

SECTION THRU
SAW CUT JOINT

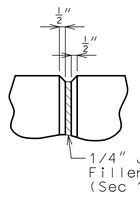

PART ELEVATION
AT FORMED JOINT

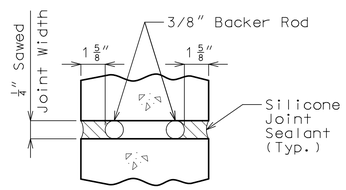

SECTION B-B

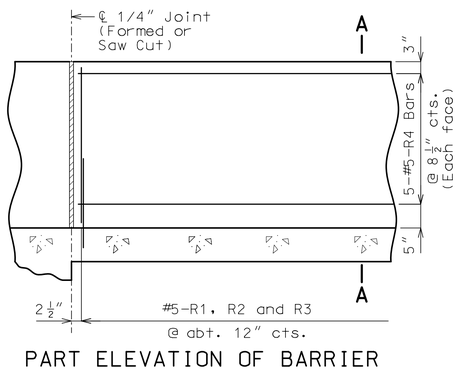

PART ELEVATION OF BARRIER

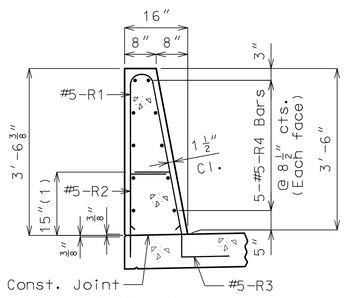

SECTION A-A

Use a minimum lap of 3′-1″ for #5 horizontal barrier bars.

The cross-sectional area above the slab is 3.52 square feet.

(1) To top of bar

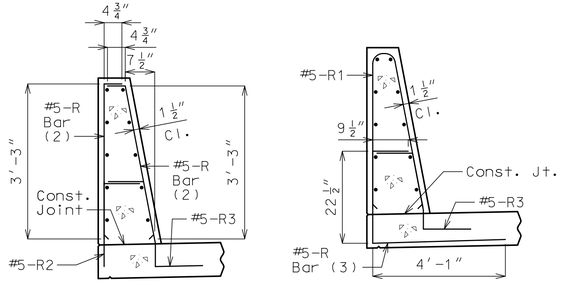

R-BAR PERMISSIBLE ALTERNATE SHAPE

(2) The R1 bar may be separated into two bars as shown, at the contractor's option, only when slip forming is not used. (All dimensions are out to out.)

(3) The R2 bar and #5 bottom transverse slab bar in cantilever (prestressed panels only) combination may be furnished as one bar as shown, at the contractor's option.

General Notes:

Conventional forming shall be used. Saw cut joints may be used with conventional forming.

Top of barrier shall be built parallel to grade and barrier joints (except at end bents) normal to grade.

All exposed edges of barrier shall have either a 1/2-inch radius or a 3/8-inch bevel, unless otherwise noted.

Payment for all concrete and reinforcement, complete in place, will be considered completely covered by the contract unit price for Type D Barrier per linear foot.

Concrete in barrier shall be Class B-1.

Measurement of barrier is to the nearest linear foot for each structure, measured along the outside top of slab from end of approach slab to end of wing.

Concrete traffic barrier delineators shall be placed on top of the barrier as shown on Missouri Standard Plan 617.10 and in accordance with Sec 617. Delineators on bridges with two-lane, two-way traffic shall have retroreflective sheeting on both sides. Concrete traffic barrier delineators will be considered completely covered by the contract unit price for Type D Barrier.

Joint sealant and backer rods shall be in accordance with Sec 717 for silicone joint sealant for saw cut and formed joints.

TYPE D BARRIER

Detailed May 2024
Checked June 2024

Note: This drawing is not to scale. Follow dimensions.

STATE OF MISSOURI
JOSHUA D. JOLLIFF
NUMBER PE-2006002824
PROFESSIONAL ENGINEER
08/02/2024 1:53:02 PM
Joshua D. Jolliff
MO PE-2006002824

DATE PREPARED: 8/2/2024
ROUTE: NN | STATE: MO
DISTRICT: BR | SHEET NO.: 18
COUNTY: WEBSTER
JOB NO.: J7P3425C
CONTRACT ID.:
PROJECT NO.:
BRIDGE NO.: A9353

DESCRIPTION | DATE | REV.

IF A SEAL IS PRESENT ON THIS SHEET IT HAS BEEN ELECTRONICALLY SEALED AND DATED.

MISSOURI HIGHWAYS AND TRANSPORTATION COMMISSION
105 WEST CAPITOL
JEFFERSON CITY, MO 65102
1-888-ASK-MODOT (1-888-275-6636)

CMT
© Copyright CMT, Inc.
CRAWFORD, MURPHY & TILLY, INC.
1631 WEST ELFINDALE STREET
SPRINGFIELD, MO 65807 (417) 869-6009
ENGINEERING CORPORATION - 000631

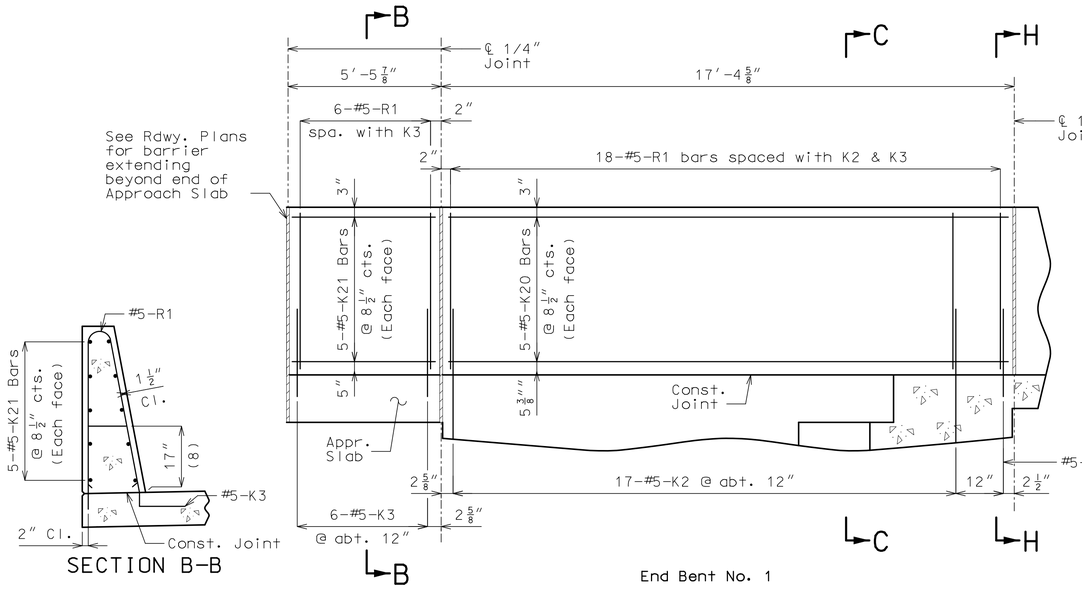

(1) 5-#5-K1 @ 4″ cts.

(2) 2 spaces @ 4″

(3) 5-#5-K4 & K5

(4) 3-#5-K6 & K7

(5) 3-#5-K15 @ 4 1/2″ cts., each face

(6) 3 spaces @ 3 13/16″

(7) Spaced as shown, each face

(8) To top of bar

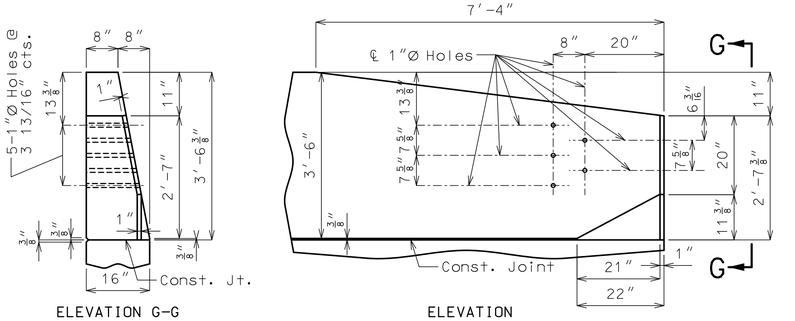

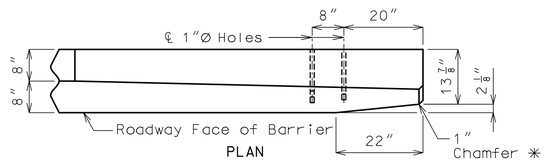

✳ Transition to zero at Type A curb for gutter lines to match.

DETAILS OF GUARD RAIL ATTACHMENT

The top two bars shall be kept with position close to those shown in Section F-F

K10-K11 BAR PERMISSIBLE ALTERNATE SHAPE

(Other K bars not shown for clarity)

The K10-K11 bar combination may be furnished as one bar as shown, at the contractor's option.

All dimensions are out to out.

General Notes:

Concrete traffic barrier delineators shall be placed on top of the barrier as shown on Missouri Standard Plan 617.10 and in accordance with Sec 617. Delineators on bridges with two-lane, two-way traffic shall have retroreflective sheeting on both sides. Concrete traffic barrier delineators will be considered completely covered by the contract unit price for Type D Barrier.

Reinforcing Steel:

Minimum clearance to reinforcing steel shall be 1 1/2" except as shown for bars embedded into end bent.

LEFT TYPE D BARRIER AT END BENTS

Detailed May 2024
Checked June 2024

Note: This drawing is not to scale. Follow dimensions.

STATE OF MISSOURI
JOSHUA D. JOLLIFF
NUMBER PE-2006002824
PROFESSIONAL ENGINEER
08/02/2024 1:53:07 PM
Joshua D. Jolliff
MO PE-2006002824

DATE PREPARED: 8/2/2024
ROUTE: NN | STATE: MO
DISTRICT: BR | SHEET NO.: 19
COUNTY: WEBSTER
JOB NO.: J7P3425C
CONTRACT ID.:
PROJECT NO.:
BRIDGE NO.: A9353

DESCRIPTION | DATE

MISSOURI HIGHWAYS AND TRANSPORTATION COMMISSION
105 WEST CAPITOL
JEFFERSON CITY, MO 65102
1-888-ASK-MODOT (1-888-275-6636)

CMT
CRAWFORD, MURPHY & TILLY, INC.
1631 WEST ELFINDALE STREET
SPRINGFIELD, MO 65807 (417) 869-6009
ENGINEERING CORPORATION - 000631

© Copyright CMT, Inc.

IF A SEAL IS PRESENT ON THIS SHEET IT HAS BEEN ELECTRONICALLY SEALED AND DATED.

REV.

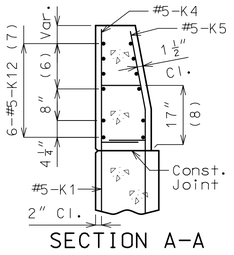

SECTION A-A

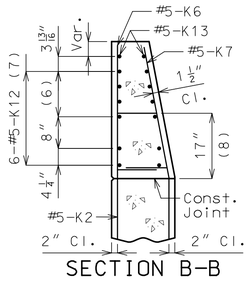

SECTION B-B

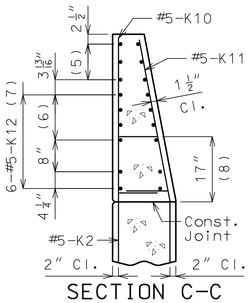

SECTION C-C

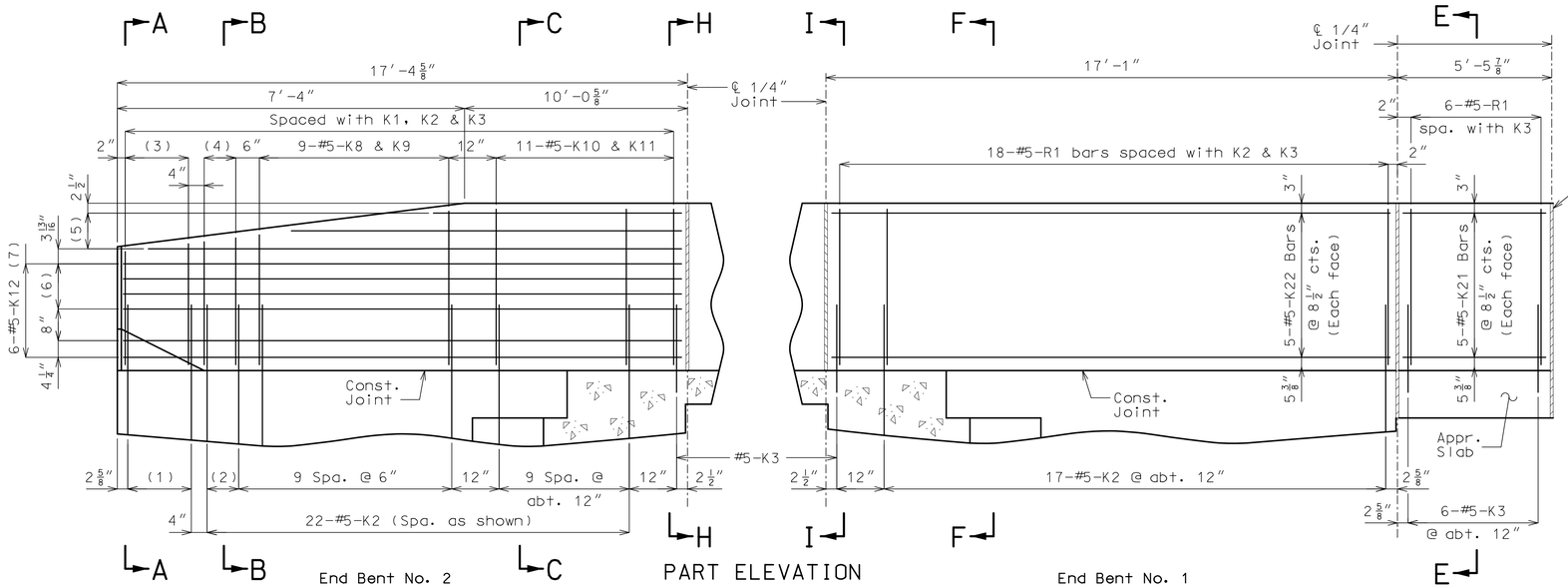

End Bent No. 2 — PART ELEVATION — End Bent No. 1

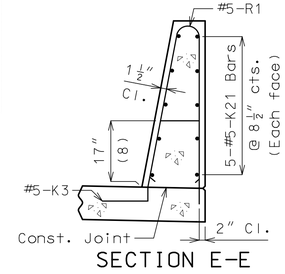

SECTION E-E

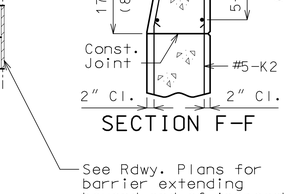

SECTION F-F

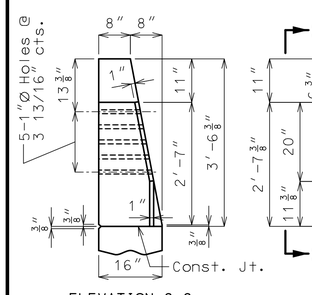

ELEVATION G-G

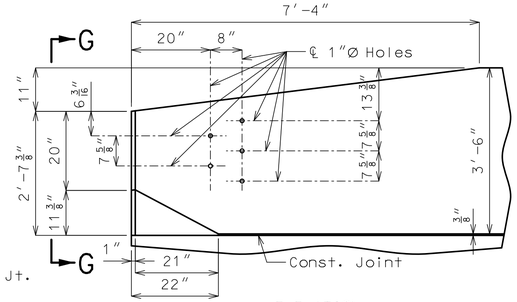

ELEVATION

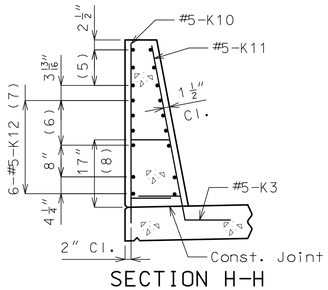

SECTION H-H

(1) 5-#5-K1 @ 4" cts.
(2) 2 spaces @ 4"
(3) 5-#5-K4 & K5
(4) 3-#5-K6 & K7
(5) 3-#5-K13 @ 4½" cts., each face
(6) 3 spaces @ 3 13/16"
(7) Spaced as shown, each face
(8) To top of bar

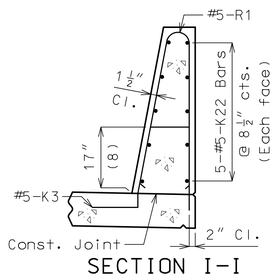

SECTION I-I

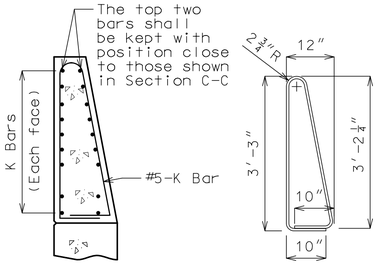

K10-K11 BAR PERMISSIBLE ALTERNATE SHAPE

(Other K bars not shown for clarity)

The K10-K11 bar combination may be furnished as one bar as shown, at the contractor's option.

All dimensions are out to out.

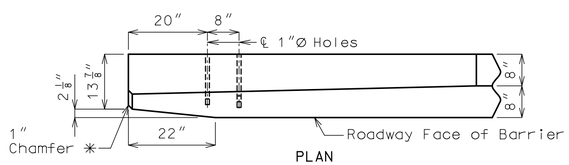

PLAN

DETAILS OF GUARD RAIL ATTACHMENT

✳ Transition to zero at Type A curb for gutter lines to match.

General Notes:

Concrete traffic barrier delineators shall be placed on top of the barrier as shown on Missouri Standard Plan 617.10 and in accordance with Sec 617. Delineators on bridges with two-lane, two-way traffic shall have retroreflective sheeting on both sides. Concrete traffic barrier delineators will be considered completely covered by the contract unit price for Type D Barrier.

Reinforcing Steel:

Minimum clearance to reinforcing steel shall be 1 1/2" except as shown for bars embedded into end bent.

RIGHT TYPE D BARRIER AT END BENTS

Detailed May 2024
Checked June 2024

Note: This drawing is not to scale. Follow dimensions.

STATE OF MISSOURI
JOSHUA D. JOLLIFF
NUMBER PE-2006002824
PROFESSIONAL ENGINEER
08/02/2024 1:53:10 PM
Joshua D. Jolliff
MO PE-2006002824

DATE PREPARED: 8/2/2024
ROUTE: NN | STATE: MO
DISTRICT: BR | SHEET NO.: 20
COUNTY: WEBSTER
JOB NO.: J7P3425C
CONTRACT ID.:
PROJECT NO.:
BRIDGE NO.: A9353

DESCRIPTION | DATE

MISSOURI HIGHWAYS AND TRANSPORTATION COMMISSION
105 WEST CAPITOL
JEFFERSON CITY, MO 65102
1-888-ASK-MODOT (1-888-275-6636)

CMT

© Copyright CMT, Inc.

CRAWFORD, MURPHY & TILLY, INC.
1631 WEST ELFINDALE STREET
SPRINGFIELD, MO 65807 (417) 869-6009
ENGINEERING CORPORATION - 000631

IF A SEAL IS PRESENT ON THIS SHEET IT HAS BEEN ELECTRONICALLY SEALED AND DATED.

REV.

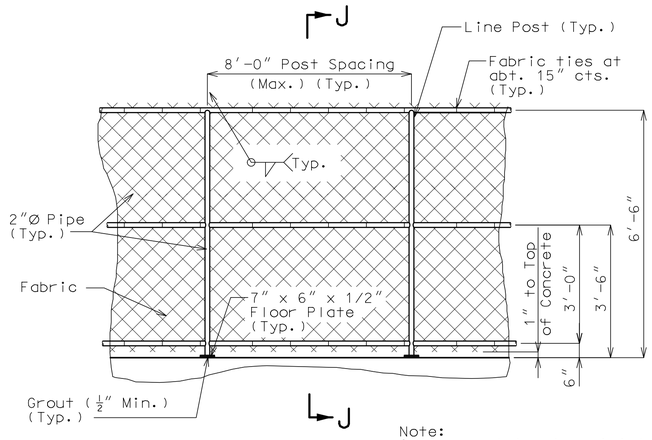

Note:
℄ line post to clear joints or discontinous ends in barrier by a minimum 11" measured longitudinally along the barrier.

ELEVATION SHOWING POST SPACING

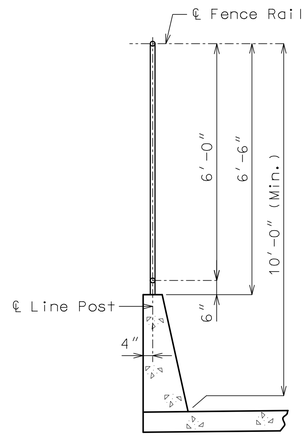

SECTION J-J

GENERAL NOTES:

Pedestrian Fence (Structures) shall be in accordance with Sec 1043 except all fabric shall have the top and bottom edges knuckled.

All posts shall be vertical. Grout of 1/2" minimum thickness shall be placed under floor plates to provide for vertical alignment of posts.

Payment for furnishing, galvanizing and erecting the fence and frame complete with anchor bolts and washers will be considered completely covered by the contract unit price for Pedestrian Fence (Structures) per linear foot.

Dimensions of Pedestrian Fence (Structures) are measured horizontally.

The maximum spacing allowed between pull posts and end posts is 100 ft. Post brace and 1/2"Ø truss rod are required for panels adjacent to pull posts and end posts only.

Connect the lower end of the 1/2"Ø truss rod to the bottom of the pull posts and end posts to which the stretcher bar is attached.

Core wire size for wire fabric shall be 6 gage minimum.

For layout length of Pedestrian Fence (Structures), see Sheet No. 1.

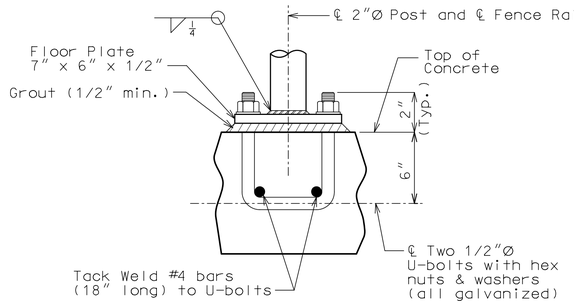

POST CONNECTION
(TYPICAL)

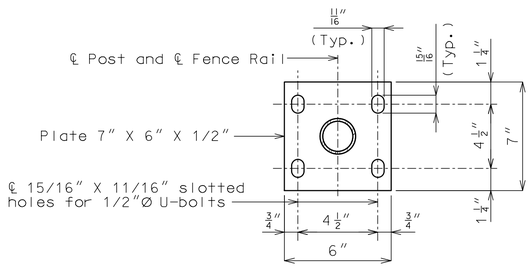

PLAN OF FLOOR PLATE

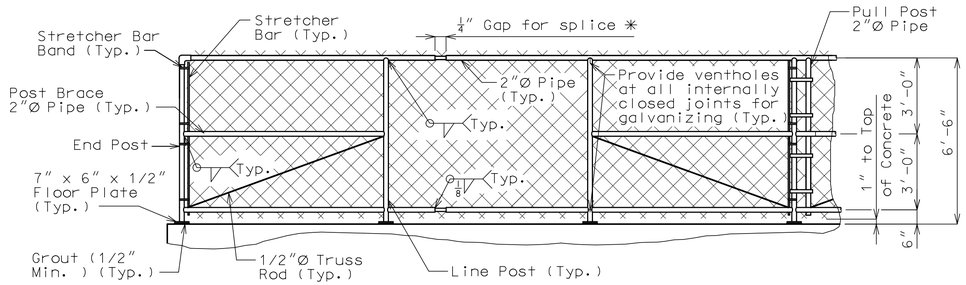

ELEVATION AT SPLICE

* At about 30'-0" centers with at least one splice gap between pull or end posts.

PEDESTRIAN CHAIN LINK FENCE

Detailed May 2024
Checked June 2024

Note: This drawing is not to scale. Follow dimensions.

L:\MoDOT\20092124-00\Draw\Structures\Sheets\Route NN (A) over BNSF\FinalPlans\Plan Sheet DGNs\B_A9353_021_J7P3425C_PEDESTRIAN_FENCE.dgn 1:47:53 PM 8/2/2024

STATE OF MISSOURI
JOSHUA D. JOLLIFF
NUMBER PE-2006002824
PROFESSIONAL ENGINEER

08/02/2024 1:53:14 PM
Joshua D. Jolliff
MO PE-2006002824

DATE PREPARED
8/2/2024

ROUTE	STATE
NN	MO
DISTRICT	SHEET NO.
BR	21

COUNTY
WEBSTER

JOB NO.
J7P3425C

CONTRACT ID.

PROJECT NO.

BRIDGE NO.
A9353

REV.	DESCRIPTION	DATE

IF A SEAL IS PRESENT ON THIS SHEET IT HAS BEEN ELECTRONICALLY SEALED AND DATED.

MISSOURI HIGHWAYS AND TRANSPORTATION COMMISSION
105 WEST CAPITOL
JEFFERSON CITY, MO 65102
1-888-ASK-MODOT (1-888-275-6636)

CMT
© Copyright CMT, Inc.
CRAWFORD, MURPHY & TILLY, INC.
1631 WEST ELFINDALE STREET
SPRINGFIELD, MO 65807 (417) 869-6009
ENGINEERING CORPORATION - 000631

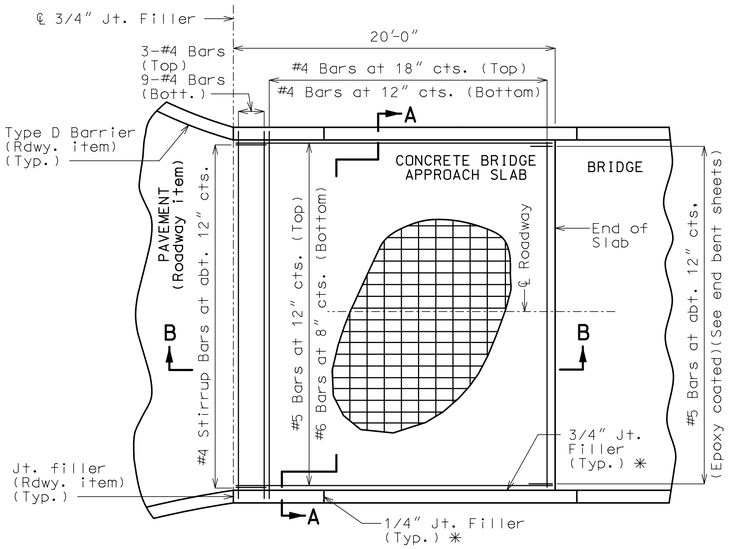

PART PLAN AT BENT 1

(Squared structure shown, skewed structure similiar.)

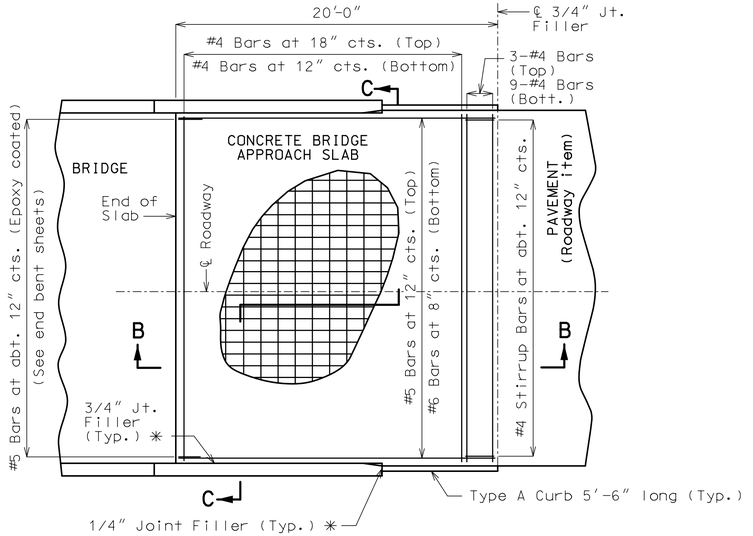

PART PLAN AT BENT 2

(Squared structure shown, skewed structure similiar.)

General Notes

All concrete for the bridge approach slab shall be in accordance with Sec 503 (f'c = 4,000 psi).

The reinforcing steel in the bridge approach slab shall be epoxy coated Grade 60 with fy = 60,000 psi.

Longitudinal construction joints in bridge approach slab shall be aligned with longitudinal construction joints in bridge slab.

Minimum clearance to reinforcing steel shall be 1 1/2", unless otherwise shown.

The reinforcing steel in the bridge approach slab shall be continuous. The transverse reinforcing steel may be made continuous by providing a minimum lap splice of 23 inches for #4 bars, or by mechanical bar splice.

All joint filler shall be in accordance with Sec 1057 for preformed fiber expansion joint filler except as noted.

Payment for furnishing all materials, labor and excavation necessary to construct the concrete bridge approach slab, including the timber header, underdrain, Type 5 aggregate base, joint filler, and all other appurtenances and incidental work as shown on this sheet, complete in place, will be considered completely covered by the contract unit price for Bridge Approach Slab (Minor) per square yard.

See Missouri Standard Plan 609.00 for details of Type A curb.

Drain pipe may be either 6" diameter corrugated metallic-coated pipe underdrain, 4" diameter corrugated polyvinyl chloride (PVC) drain pipe, or 4" diameter corrugated polyethylene (PE) drain pipe.

✳ Seal joint between vertical face of approach slab and wing with sealant in accordance with Sec 717 for silicone joint sealant for saw cut and formed joints.

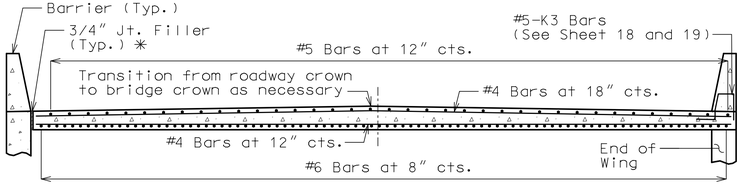

SECTION A-A

With the approval of the engineer, the contractor may crown the bottom of the approach slab to match the crown of the roadway surface.

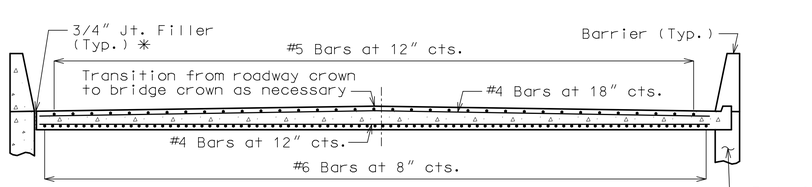

SECTION C-C

With the approval of the engineer, the contractor may crown the bottom of the approach slab to match the crown of the roadway surface.

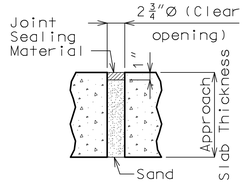

UNDERSEAL ACCESS HOLE DETAIL

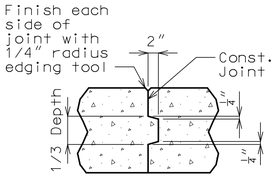

CONSTRUCTION JOINT DETAIL

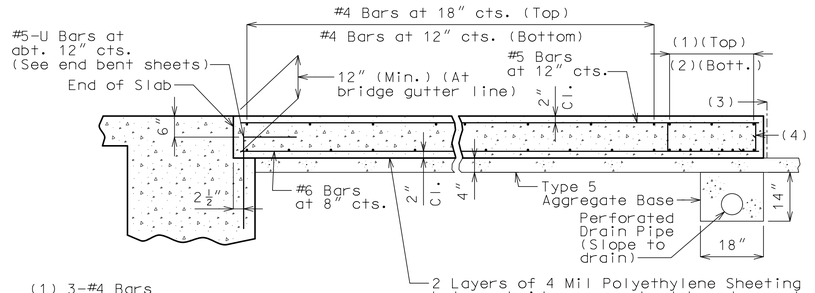

SECTION B-B

(1) 3-#4 Bars

(2) 9-#4 Bars

(3) ℄ 3/4" Jt. Filler

(4) #4 Stirrup Bars at abt. 12" cts.; 2'-0"x 8" (Min.) out to out; Actual length = 5'-10" (Min.); 90° stirrup hook at bottom; Stirrup height (8") and actual length vary due to crown.

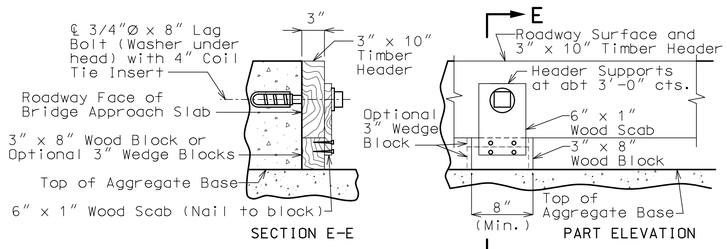

DETAILS OF TIMBER HEADER

Remove timber header when concrete pavement is placed.

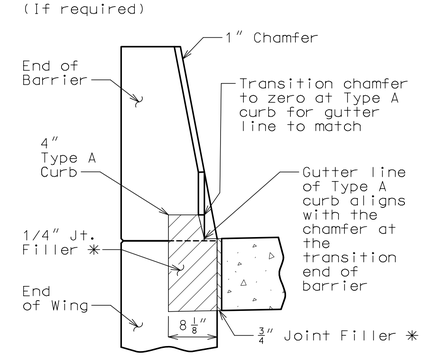

SECTION BETWEEN CURB AND BARRIER

BRIDGE APPROACH SLAB (MINOR)

Detailed May 2024
Checked June 2024

Note: This drawing is not to scale. Follow dimensions.

STATE OF MISSOURI
JOSHUA D. JOLLIFF
NUMBER PE-2006002824
PROFESSIONAL ENGINEER
08/02/2024 1:53:18 PM
Joshua D. Jolliff
MO PE-2006002824

DATE PREPARED 8/2/2024

ROUTE	STATE
NN	MO
DISTRICT	SHEET NO.
BR	22

COUNTY: WEBSTER
JOB NO.: J7P3425C
CONTRACT ID.:
PROJECT NO.:
BRIDGE NO.: A9353

DATE	DESCRIPTION	REV.

IF A SEAL IS PRESENT ON THIS SHEET IT HAS BEEN ELECTRONICALLY SEALED AND DATED.

MISSOURI HIGHWAYS AND TRANSPORTATION COMMISSION
105 WEST CAPITOL
JEFFERSON CITY, MO 65102
1-888-ASK-MODOT (1-888-275-6636)

CMT
CRAWFORD, MURPHY & TILLY, INC.
1631 WEST ELFINDALE STREET
SPRINGFIELD, MO 65807 (417) 869-6009
ENGINEERING CORPORATION - 000631

© Copyright CMT, Inc.

BILL OF REINFORCING STEEL

NO. REQ'D.	MARK NO. SIZE	MARK NO. MARK	LOCATION	EPOXY (E)	SHAPE NO.	STIRRUP (S)	SUBSTR. (X)	VARIES (V)	NO. EACH	DIMENSIONS B FT.	B IN.	C FT.	C IN.	D FT.	D IN.	E FT.	E IN.	F FT.	F IN.	H FT.	H IN.	K FT.	K IN.	NOMINAL LENGTH FT.	NOMINAL LENGTH IN.	ACTUAL LENGTH FT.	ACTUAL LENGTH IN.	WEIGHT LBS.
			END BENT 1																									
20	5	V100	BEAM	E	20					6	5.000													6	5	6	5	134
20	6	V101	DIAPHRAGM	E	20					3	5.000													3	5	3	5	103
30	6	V102	WING	E	20					7	6.000													7	6	7	6	338
30	6	V103	WING	E	20					7	7.000													7	7	7	7	342
44	5	U100	DIAPHRAGM	E	19					2	0.000	15	.000											3	3	3	2	146
24	5	U101	BEAM	E	10	S						6	5.000	2	9.000									15	7	15	4	384
30	4	U102	BEAM	E	13	S				2	9.000	2	8.000	2	9.000	2	8.000							11	7	11	4	228
34	5	U104	DIAPHRAGM	E	10	S						4	6.000	2	3.000									11	3	11	0	391
34	6	U105	DIAPHRAGM	E	19	S				3	5.000	2	9.000											6	2	5	11	303
61	6	U106	DIAPHRAGM	E	19	S				3	5.000	4	8.000											8	1	7	11	726
5	4	U107	BEAM	E	10	S						14	.000	2	7.000									4	11	4	9	16
12	7	H101	BEAM	E	20					47	7.000													47	7	47	7	1168
4	6	H102	BEAM	E	20					47	7.000													47	7	47	7	286
12	6	H103	DIAPHRAGM	E	20					47	7.000													47	7	47	7	858
5	7	H104	BEAM	E	18					7	2.000													8	10	8	10	91
16	8	H105	WING	E	20					16	5.000													16	5	16	5	702
44	6	H107	WING	E	20					15	7.000													15	7	15	7	1030
4	6	H110	BEAM	E	20					3	7.000													3	7	3	7	22
11	6	F100	WING	E	23					2	3.000	5	5.000	14	.000	8	.750	11	.000	16	.750	21	.000	8	10	8	9	145
6	6	F101	DIAPHRAGM	E	21					2	8.000	5	4.000					2	8.000	7	.500			8	0	7	9	70
11	6	F102	WING	E	23						14.000	4	4.000	2	3.000	21	.000	16	.750	11	.000	8	.750	7	9	7	8	127
6	6	F103	DIAPHRAGM	E	14							5	4.000	2	8.000					2	8.000	7	.500	8	0	7	10	71
			END BENT 2																									
20	5	V200	BEAM	E	20					6	4.000													6	4	6	4	133
20	6	V201	DIAPHRAGM	E	20					3	5.000													3	5	3	5	103
60	6	V202	WING	E	20					7	8.000													7	8	7	8	691
44	5	U200	DIAPHRAGM	E	19					2	0.000	15	.000											3	3	3	2	146
24	5	U201	BEAM	E	10	S						6	4.000	2	9.000									15	5	15	2	380
30	4	U202	BEAM	E	13	S				2	9.000	2	8.000	2	9.000	2	8.000							11	7	11	4	228
34	5	U204	DIAPHRAGM	E	10	S						4	6.000	2	3.000									11	3	11	0	391
34	6	U205	DIAPHRAGM	E	19	S				3	5.000	2	9.000											6	2	5	11	303
61	6	U206	DIAPHRAGM	E	19	S				3	5.000	4	8.000											8	1	7	11	726
5	4	U207	BEAM	E	10	S						14	.000	2	7.000									4	11	4	9	16
12	7	H201	BEAM	E	20					47	7.000													47	7	47	7	1168
4	6	H202	BEAM	E	20					47	7.000													47	7	47	7	286
12	6	H203	DIAPHRAGM	E	20					47	7.000													47	7	47	7	858
5	7	H204	BEAM	E	18					7	2.000													8	10	8	10	91
16	8	H205	WING	E	20					16	5.000													16	5	16	5	702
44	6	H207	WING	E	20					15	7.000													15	7	15	7	1030
4	6	H210	BEAM	E	20					3	7.000													3	7	3	7	22
11	6	F200	WING	E	23					2	3.000	5	5.000	14	.000	8	.750	11	.000	16	.750	21	.000	8	10	8	9	145
6	6	F201	DIAPHRAGM	E	21					2	8.000	5	4.000					2	8.000	7	.500			8	0	7	9	70
11	6	F202	WING	E	23						14.000	4	4.000	2	3.000	21	.000	16	.750	11	.000	8	.750	7	9	7	8	127
6	6	F203	DIAPHRAGM	E	14							5	4.000	2	8.000					2	8.000	7	.500	8	0	7	10	71

BILL OF REINFORCING STEEL

NO. REQ'D.	MARK NO. SIZE	MARK NO. MARK	LOCATION	EPOXY (E)	SHAPE NO.	STIRRUP (S)	SUBSTR. (X)	VARIES (V)	NO. EACH	DIMENSIONS B FT.	B IN.	C FT.	C IN.	D FT.	D IN.	E FT.	E IN.	F FT.	F IN.	H FT.	H IN.	K FT.	K IN.	NOMINAL LENGTH FT.	NOMINAL LENGTH IN.	ACTUAL LENGTH FT.	ACTUAL LENGTH IN.	WEIGHT LBS.
			SLAB																									
262	5	S101	SLAB	E	20					4	1.000													4	1	4	1	1116
32	5	S102	SLAB	E	20					35	1.000													35	1	35	1	1171
117	5	S103	SLAB	E	20					45	10.000													45	10	45	10	5594
242	6	S104	SLAB	E	20					46	3.000													46	3	46	3	16812
42	6	S105	SLAB	E	20			V	2	2	0.000													2	0	2	0	
										44	8.000													44	8	44	8	1472
			BARRIER																									
302	5	R1	BARRIER	E	26					3	3.000	5	.500							3	3.000	6	.750	6	11	6	8	2100
254	5	R2	BARRIER	E	19	S					20.500	9	.500											2	6	2	5	641
254	5	R3	BARRIER	E	27	S						9	.500	15	.250	5	.000	12	.000	15	.000	3	.000	3	6	3	4	884
60	5	R4	BARRIER	E	20					44	2.000													44	2	44	2	2764
10	5	K1	BARRIER	E	27	S				3	8.000	9	.250	5	.375	3	2.750			5	.250	1	.000	8	2	8	0	84
77	5	K2	BARRIER	E	27	S				3	8.000	9	.250	14	.500	2	5.750			14	.250	2	.750	8	2	8	0	643
16	5	K3	BARRIER	E	27	S					22.500	9	.250	14	.500	7	.750	12	.000	14	.250	2	.750	5	6	5	4	90
10	5	K4	BARRIER	E	19	S		V	2	2	4.250	10	.000											3	3	3	1	
			INCR.=0.5"							2	6.250	10	.000											3	5	3	3	34
10	5	K5	BARRIER	E	29	S		V	2		0.000	8	.250	9	.500	18	.500			18	.000	4	.000	3	1	2	10	
			INCR.=0.5"								0.000	8	.250	9	.500	20	.500			20	.000	4	.500	3	3	3	0	31
6	5	K6	BARRIER	E	19	S				2	6.750	10	.000											3	5	3	4	21
6	5	K7	BARRIER	E	21	S				2	6.625	10	.000							2	6.000	6	.250	3	5	3	4	21
18	5	K8	BARRIER	E	19	S		V	2	2	8.500	10	.000											3	7	3	6	
			INCR.=0.75"							3	2.500	10	.000											4	1	4	0	71
18	5	K9	BARRIER	E	21	S		V	2	2	8.500	10	.000							2	7.750	6	.750	3	7	3	6	
			INCR.=0.75"							3	2.500	10	.000							3	1.750	7	.750	4	1	4	0	68
21	5	K10	BARRIER	E	19	S				3	3.000	10	.000											4	1	4	0	88
21	5	K11	BARRIER	E	21	S				3	3.000	10	.000							3	2.250	7	.750	4	1	4	0	88
12	5	K12	BARRIER	E	20					17	1.000													17	1	17	1	214
6	5	K13	BARRIER	E	20			V	2	16	4.000													16	4	16	4	
			INCR.=3'							10	4.000													10	4	10	4	84
12	5	K14	BARRIER	E	20					16	10.000													16	10	16	10	211
6	5	K15	BARRIER	E	20			V	2	16	1.000													16	1	16	1	
			INCR.=3'							10	1.000													10	1	10	1	82
10	5	K20	BARRIER	E	20					17	1.000													17	1	17	1	179
20	5	K21	BARRIER	E	20					5	2.000													5	2	5	2	108
10	5	K22	BARRIER	E	20					16	9.000													16	9	16	9	175

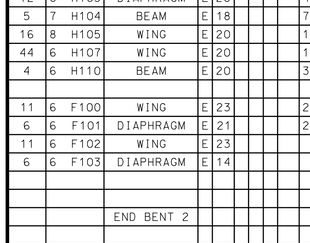

STIRRUP HOOK DIMENSIONS				
GRADES 40 - 50 - 60 KSI				
BAR SIZE	D (IN.)	90° HOOK	135° HOOK	
		HOOK A OR G	HOOK A OR G	APPROX. H
#4	2"	4 1/2"	4 1/2"	3"
#5	2 1/2"	6"	5 1/2"	3 3/4"
#6	4 1/2"	12"	8"	4 1/2"

NOTE: UNLESS OTHERWISE NOTED, DIAMETER "D" IS THE SAME FOR ALL BENDS AND HOOKS ON A BAR.

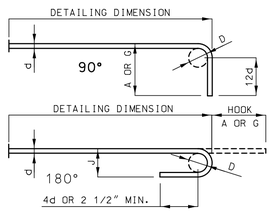

END HOOK DIMENSIONS				
BAR SIZE	D (IN.)	ALL GRADES		
		180° HOOKS		90° HOOKS
		A OR G	J	A OR G
#3	2 1/4"	5"	3"	6"
#4	3"	6"	4"	8"
#5	3 3/4"	7"	5"	10"
#6	4 1/2"	8"	6"	12"
#7	5 1/4"	10"	7"	14"
#8	6"	11"	8"	16"
#9	9 1/2"	15"	11 3/4"	19"
#10	10 3/4"	17"	13 1/4"	22"
#11	12"	19"	14 3/4"	2'-0"
#14	18 1/4"	2'-3"	21 3/4"	2'-7"

NOTE:
ALL STANDARD HOOKS AND BENDS OTHER THAN 180 DEGREE ARE TO BE BENT WITH SAME PROCEDURE AS FOR 90 DEGREE STANDARD HOOKS.

HOOKS AND BENDS SHALL BE IN ACCORDANCE WITH THE PROCEDURES AS SHOWN ON THIS SHEET.

E = EPOXY COATED REINFORCEMENT.
S = STIRRUP.
X = BAR IS INCLUDED IN SUBSTRUCTURE QUANTITIES.
V = BAR DIMENSIONS VARY IN EQUAL INCREMENTS BETWEEN DIMENSIONS SHOWN ON THIS LINE AND THE FOLLOWING LINE.
NO. EA. = NUMBER OF BARS OF EACH LENGTH.

NOMINAL LENGTHS ARE BASED ON OUT TO OUT DIMENSIONS SHOWN IN BENDING DIAGRAMS AND ARE LISTED FOR FABRICATORS USE. (NEAREST INCH)

ACTUAL LENGTHS ARE MEASURED ALONG CENTERLINE BAR TO THE NEAREST INCH.

PAYWEIGHTS ARE BASED ON ACTUAL LENGTHS.

FOUR ANGLE OR CHANNEL SPACERS ARE REQUIRED FOR EACH COLUMN SPIRAL. SPACERS ARE TO BE PLACED ON INSIDE OF SPIRALS. LENGTH AND WEIGHT OF COLUMN SPIRALS DO NOT INCLUDE SPLICES OR SPACERS.

REINFORCING STEEL (GRADE 60) FY = 60.000 PSI.

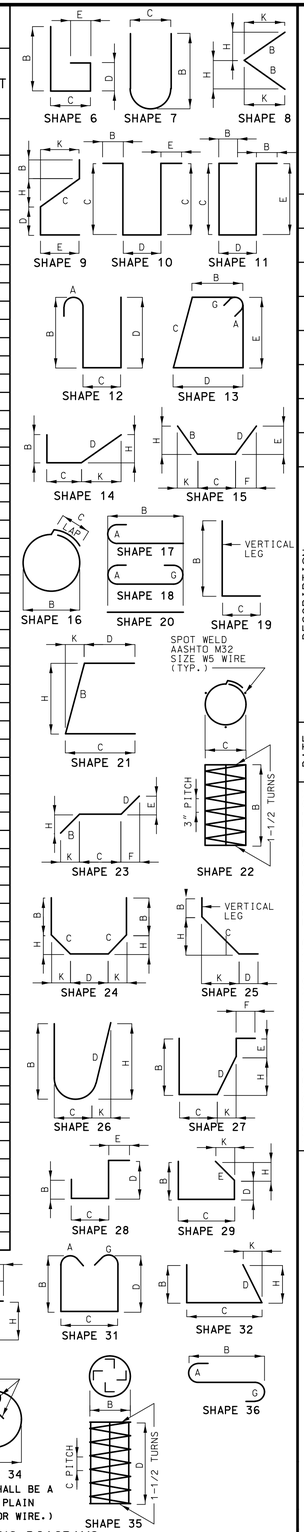

BENDING DIAGRAMS

Detailed May 2024
Checked June 2024

Note: This drawing is not to scale. Follow dimensions.

Sheet No. 23 of 31

JOSHUA D. JOLLIFF NUMBER PE-2006002824 STATE OF MISSOURI PROFESSIONAL ENGINEER
08/02/2024 1:53:23 PM
Joshua D. Jolliff
MO PE-2006002824

DATE PREPARED: 8/2/2024
ROUTE: NN | STATE: MO
DISTRICT: BR | SHEET NO.: 23
COUNTY: WEBSTER
JOB NO.: J7P3425C
CONTRACT ID.:
PROJECT NO.:
BRIDGE NO.: A9353

IF A SEAL IS PRESENT ON THIS SHEET IT HAS BEEN ELECTRONICALLY SEALED AND DATED.

DESCRIPTION | DATE | REV.

MISSOURI HIGHWAYS AND TRANSPORTATION COMMISSION
105 WEST CAPITOL
JEFFERSON CITY, MO 65102
1-888-ASK-MODOT (1-888-275-6636)

CMT
CRAWFORD, MURPHY & TILLY, INC.
1631 WEST ELFINDALE STREET
SPRINGFIELD, MO 65807 (417) 869-6009
ENGINEERING CORPORATION - 000631

© Copyright CMT, Inc.

BILL OF REINFORCING STEEL

NO. REQ'D.	MARK NO. SIZE	MARK	LOCATION	EPOXY (E)	SHAPE NO.	STIRRUP (S)	SUBSTR. (X)	VARIES (V)	NO. EACH	DIMENSIONS B FT.	B IN.	C FT.	C IN.	D FT.	D IN.	E FT.	E IN.	F FT.	F IN.	H FT.	H IN.	K FT.	K IN.	NOMINAL LENGTH FT.	NOMINAL LENGTH IN.	ACTUAL LENGTH FT.	ACTUAL LENGTH IN.	WEIGHT LBS.
			TOTALS																									
	4			E																								488
	5			E																								18667
	6			E																								27137
	7			E																								2518
	8			E																								1404
			TOTAL	E																								50214
			SLAB ON STEEL																									
	4			E																								488
	5			E																								9986
	6			E																								27137
	7			E																								2518
	8			E																								1404
			TOTAL	E																								41533
			TYPE D BARRIER																									
	5			E																								8681
			TOTAL	E																								8681

BILL OF REINFORCING STEEL

NO. REQ'D.	MARK NO. SIZE	MARK	LOCATION	EPOXY (E)	SHAPE NO.	STIRRUP (S)	SUBSTR. (X)	VARIES (V)	NO. EACH	DIMENSIONS B FT.	B IN.	C FT.	C IN.	D FT.	D IN.	E FT.	E IN.	F FT.	F IN.	H FT.	H IN.	K FT.	K IN.	NOMINAL LENGTH FT.	NOMINAL LENGTH IN.	ACTUAL LENGTH FT.	ACTUAL LENGTH IN.	WEIGHT LBS.

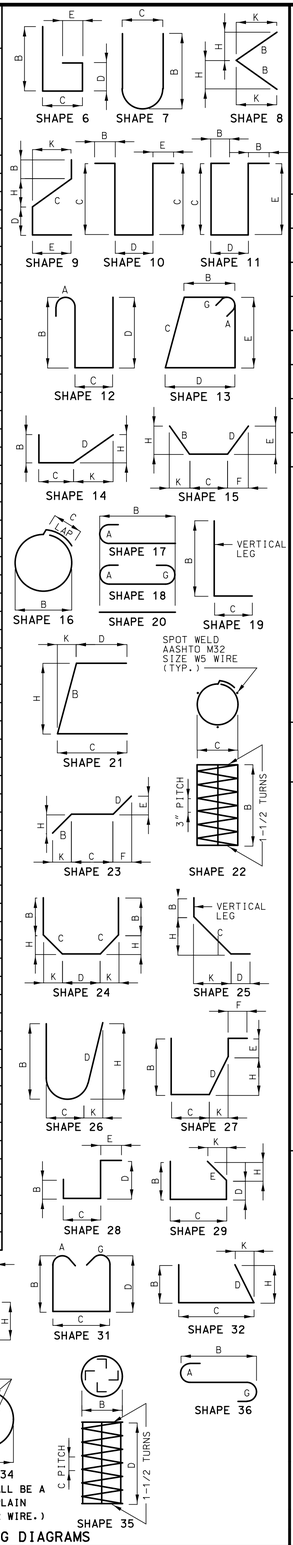

BENDING DIAGRAMS

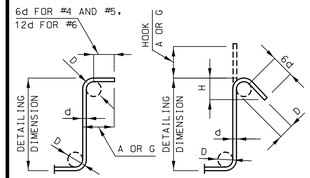

STIRRUP HOOK DIMENSIONS			
GRADES 40 - 50 - 60 KSI			
BAR SIZE	D (IN.)	90° HOOK A OR G	135° HOOK A OR G	135° HOOK APPROX. H
#4	2"	4 1/2"	4 1/2"	3"
#5	2 1/2"	6"	5 1/2"	3 3/4"
#6	4 1/2"	12"	8"	4 1/2"

NOTE: UNLESS OTHERWISE NOTED, DIAMETER "D" IS THE SAME FOR ALL BENDS AND HOOKS ON A BAR.

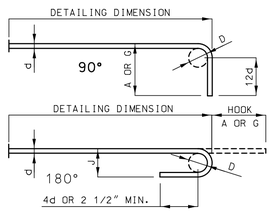

END HOOK DIMENSIONS				
		ALL GRADES		
BAR SIZE	D (IN.)	180° HOOKS		90° HOOKS
		A OR G	J	A OR G
#3	2 1/4"	5"	3"	6"
#4	3"	6"	4"	8"
#5	3 3/4"	7"	5"	10"
#6	4 1/2"	8"	6"	12"
#7	5 1/4"	10"	7"	14"
#8	6"	11"	8"	16"
#9	9 1/2"	15"	11 3/4"	19"
#10	10 3/4"	17"	13 1/4"	22"
#11	12"	19"	14 3/4"	2'-0"
#14	18 1/4"	2'-3"	21 3/4"	2'-7"

NOTE:
ALL STANDARD HOOKS AND BENDS OTHER THAN 180 DEGREE ARE TO BE BENT WITH SAME PROCEDURE AS FOR 90 DEGREE STANDARD HOOKS.

HOOKS AND BENDS SHALL BE IN ACCORDANCE WITH THE PROCEDURES AS SHOWN ON THIS SHEET.

E = EPOXY COATED REINFORCEMENT.
S = STIRRUP.
X = BAR IS INCLUDED IN SUBSTRUCTURE QUANTITIES.
V = BAR DIMENSIONS VARY IN EQUAL INCREMENTS BETWEEN DIMENSIONS SHOWN ON THIS LINE AND THE FOLLOWING LINE.
NO. EA. = NUMBER OF BARS OF EACH LENGTH.

NOMINAL LENGTHS ARE BASED ON OUT TO OUT DIMENSIONS SHOWN IN BENDING DIAGRAMS AND ARE LISTED FOR FABRICATORS USE. (NEAREST INCH)

ACTUAL LENGTHS ARE MEASURED ALONG CENTERLINE BAR TO THE NEAREST INCH.

PAYWEIGHTS ARE BASED ON ACTUAL LENGTHS.

FOUR ANGLE OR CHANNEL SPACERS ARE REQUIRED FOR EACH COLUMN SPIRAL. SPACERS ARE TO BE PLACED ON INSIDE OF SPIRALS. LENGTH AND WEIGHT OF COLUMN SPIRALS DO NOT INCLUDE SPLICES OR SPACERS.

REINFORCING STEEL (GRADE 60) FY = 60,000 PSI.

Detailed May 2024
Checked June 2024

Note: This drawing is not to scale. Follow dimensions.

STATE OF MISSOURI
JOSHUA D. JOLLIFF
NUMBER PE-2006002824
REGISTERED PROFESSIONAL ENGINEER

08/02/2024 1:53:27 PM
Joshua D. Jolliff
MO PE-2006002824

DATE PREPARED: 8/2/2024
ROUTE: NN | STATE: MO
DISTRICT: BR | SHEET NO.: 24
COUNTY: WEBSTER
JOB NO.: J7P3425C
CONTRACT ID.:
PROJECT NO.:
BRIDGE NO.: A9353

DESCRIPTION	DATE

IF A SEAL IS PRESENT ON THIS SHEET IT HAS BEEN ELECTRONICALLY SEALED AND DATED.

MISSOURI HIGHWAYS AND TRANSPORTATION COMMISSION
105 WEST CAPITOL
JEFFERSON CITY, MO 65102
1-888-ASK-MODOT (1-888-275-6636)

© Copyright CMT, Inc.
CRAWFORD, MURPHY & TILLY, INC.
1631 WEST ELFINDALE STREET
SPRINGFIELD, MO 65807 (417) 869-6009
ENGINEERING CORPORATION - 000631

REV.

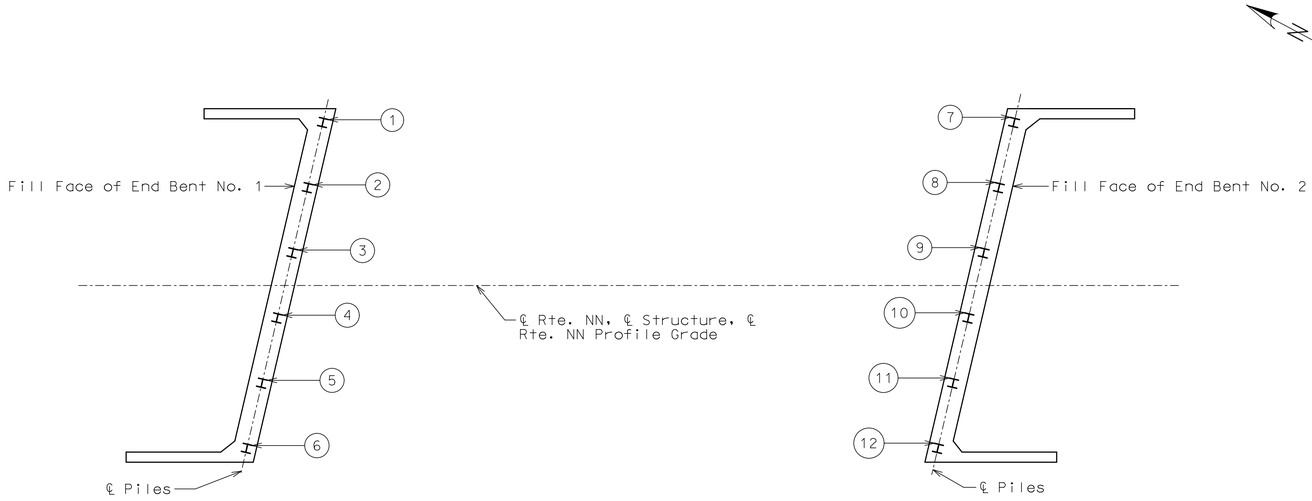

PART PLAN SHOWING PILE NUMBERING FOR RECORDING AS-BUILT PILE DATA

As-Built Pile Data			
Pile No.	Length in Place (ft)	Computed Nominal Axial Compressive Resistance (kips)	Remarks
			End Bent No. 1
1			
2			
3			
4			
5			
6			

As-Built Pile Data			
Pile No.	Length in Place (ft)	Computed Nominal Axial Compressive Resistance (kips)	Remarks
			End Bent No. 2
7			
8			
9			
10			
11			
12			

Note:
Indicate in remark column:
A. Pile type and grade
B. Batter
C. Driven to practical refusal

This sheet to be completed by MoDOT construction personnel.

AS-BUILT PILE DATA

Detailed May 2024
Checked June 2024

Note: This drawing is not to scale. Follow dimensions.

L:\MoDOT\20092124-00\Draw\Structures\Sheets\Route NN (A) over BNSF\FinalPlans\Plan Sheet DGNs\B_A9353_025_J7P3425C_PILE_DATA.dgn 1:48:01 PM 8/2/2024

STATE OF MISSOURI
JOSHUA D. JOLLIFF
NUMBER PE-2006002824
PROFESSIONAL ENGINEER

08/02/2024 1:53:31 PM
Joshua D. Jolliff
MO PE-2006002824

DATE PREPARED
8/2/2024

ROUTE	STATE
NN	MO
DISTRICT	SHEET NO.
BR	25

COUNTY
WEBSTER

JOB NO.
J7P3425C

CONTRACT ID.

PROJECT NO.

BRIDGE NO.
A9353

DESCRIPTION	DATE

IF A SEAL IS PRESENT ON THIS SHEET IT HAS BEEN ELECTRONICALLY SEALED AND DATED.

MISSOURI HIGHWAYS AND TRANSPORTATION COMMISSION

105 WEST CAPITOL
JEFFERSON CITY, MO 65102
1-888-ASK-MODOT (1-888-275-6636)

CMT
© Copyright CMT, Inc.
CRAWFORD, MURPHY & TILLY, INC.
1631 WEST ELFINDALE STREET
SPRINGFIELD, MO 65807 (417) 869-6009
ENGINEERING CORPORATION - 000631

REV.

Missouri Department of Transportation
Construction and Materials

BORING NO. B-7
Page 1 of 3

Job No.: 20231154.00 **County:** Webster **Route:** Route 60
Design: **Skew:** **Location:** Diggins, Missouri
Bent: **Logged By:** JM **Operator:** LRK
Station: **Northing:** **Date of Work:** 03/21/24-04/24/24
Offset: **Easting:** **Depth to Water:** 39.0
Elevation: **Requested Northing:** **Depth Hole Open:**
Requested Station: **Requested Easting:** **Time Change:**
Requested Offset: **Equipment:** CME 550X,Split-Spoon Sampler, Shelby Tube
Requested Elevation: **Location Note:**
Drill No.: **Hammer Efficiency:** 90% **Drilling Method:** HSA

Depth (ft)	Graphic	Description	Elevation (ft)	Sample Type	REC % (RQD %)	Blow Counts (N_{60})	Shear Data	Field Tests	Index Tests
0		0.0-17.0' (CL) Brown and gray, lean CLAY, trace sand and chert gravel							
				X	100	8-16-30 (69)		PP = 3.50 tsf	MC = 17.7%
		3.5' -brown and red, with chert gravel below 3.5 ft.		X	67	9-22-22 (66)		PP >4.50 tsf	MC = 22.3%
5									
		6.0' -rough drilling from 6.0 to 7.0 ft. (possible cobbles) 6.4' -offset 5' East below 6.4 ft.		X	44	50/0.4'		PP >4.50 tsf	MC = 9.3%
				X	33	7-15-16 (47)		PP = 4.00 tsf	MC = 18.6%
10									
		12.0' -rough drilling from 12.0 to 18.5 ft. (possible cobbles)							
				X	39	8-13-13 (39)		PP = 4.00 tsf	MC = 35.3%
15									
		17.0-23.5' (CH) Reddish brown, fat CLAY, trace sand, with chert gravel		X	67	12-8-5 (20)		PP = 3.50 tsf	MC = 40.5%
20									
		23.5-25.0' White, CHERT fragments		X	29	25-24-50/0.4'			MC = 4.4%
25									

N_{60} = (Em/60)Nm N_{60} - Corrected N value for standard 60% SPT efficiency; Em - Measured hammer efficiency in percent; Nm - Observed N-value
(1) = Assumed, (2) = Actual

Coordinate System: U.S. State Plane 1983 **Coordinate Zone:** Missouri Central **Coordinate Proj. Factor:** TBD
Coordinate Datum: NAD 83 (CONUS) **Coordinate Units:** U.S. Survey Feet

* Persons using this information are cautioned that the materials shown are determined by the equipment noted and accuracy of the "log of materials" is limited thereby and by judgement of the operator. THIS INFORMATION IS FOR DESIGN PURPOSES ONLY.

LETTER BOREHOLE - MODOT 20150728.GDT - 5/10/24 16:27 - \\TSI\PROJECTS\STL\GEOTECH\2023 PROJECTS\20231154.00 ROUTE 60 @ A - FINAL DESIGN\WORKING FILES\MODOT WEBSTER COUNTY 20231154.GPJ

Missouri Department of Transportation
Construction and Materials

BORING NO. B-7
Page 2 of 3

Job No.: 20231154.00 **County:** Webster **Route:** Route 60
Design: **Skew:** **Location:** Diggins, Missouri
Bent: **Logged By:** JM **Operator:** LRK
Station: **Northing:** **Date of Work:** 03/21/24-04/24/24
Offset: **Easting:** **Depth to Water:** 39.0
Elevation: **Requested Northing:** **Depth Hole Open:**
Requested Station: **Requested Easting:** **Time Change:**
Requested Offset: **Equipment:** CME 550X,Split-Spoon Sampler, Shelby Tube
Requested Elevation: **Location Note:**
Drill No.: **Hammer Efficiency:** 90% **Drilling Method:** HSA

Depth (ft)	Graphic	Description	Elevation (ft)	Sample Type	REC % (RQD %)	Blow Counts (N_{60})	Shear Data	Field Tests	Index Tests
25		25.0-32.0' (CH) Reddish brown, fat CLAY, trace sand, with chert gravel 25.0' -rough drilling from 24.9 to 28.0 ft. (possible cobbles)							
		28.5' -trace chert gravel below 28.5 ft.		X	72	5-6-12 (27)		PP = 2.00 tsf	MC = 44.0%
30									
		32.0-37.0' (CL) Reddish brown, lean CLAY, trace sand and chert gravel		X	100	2-8-10 (27)		PP = 2.00 tsf	MC = 30.3%
35									
		37.0-41.0' (CH) Reddish brown, fat CLAY, trace sand			100		Qu Test Results UCS = 1.14 ksf MC = 29.5% γ_{moist} = 115.4 pcf	PP = 2.00 tsf	
40		40.0' -rough drilling below 40.0 ft.							
		41.0-42.8' Tan, highly weathered DOLOMITE							
		42.2' -5" core loss and 1" clay seam at 42.2 ft.							
		42.8-50.0' DOLOMITE, tan, hard, slightly weathered, finely crystalline, thin bedded			92 (67)				
45									
		47.0' -gray below 47.0 ft.			100 (98)				
50									

N_{60} = (Em/60)Nm N_{60} - Corrected N value for standard 60% SPT efficiency; Em - Measured hammer efficiency in percent; Nm - Observed N-value
(1) = Assumed, (2) = Actual

Coordinate System: U.S. State Plane 1983 **Coordinate Zone:** Missouri Central **Coordinate Proj. Factor:** TBD
Coordinate Datum: NAD 83 (CONUS) **Coordinate Units:** U.S. Survey Feet

* Persons using this information are cautioned that the materials shown are determined by the equipment noted and accuracy of the "log of materials" is limited thereby and by judgement of the operator. THIS INFORMATION IS FOR DESIGN PURPOSES ONLY.

LETTER BOREHOLE - MODOT 20150728.GDT - 5/10/24 16:27 - \\TSI\PROJECTS\STL\GEOTECH\2023 PROJECTS\20231154.00 ROUTE 60 @ A - FINAL DESIGN\WORKING FILES\MODOT WEBSTER COUNTY 20231154.GPJ

BORING DATA

Note: For locations of borings, see Sheet No. 1.

Note: This drawing is not to scale. Follow dimensions.

Sheet No. 26 of 31

Detailed May 2024
Checked June 2024

STATE OF MISSOURI
JOSHUA D. JOLLIFF
NUMBER PE-2006002824
PROFESSIONAL ENGINEER
08/02/2024 1:53:36 PM
Joshua D. Jolliff
MO PE-2006002824

DATE PREPARED 8/2/2024
ROUTE NN | STATE MO
DISTRICT BR | SHEET NO. 26
COUNTY WEBSTER
JOB NO. J7P3425C
CONTRACT ID.
PROJECT NO.
BRIDGE NO. A9353

DESCRIPTION	DATE

MISSOURI HIGHWAYS AND TRANSPORTATION COMMISSION
105 WEST CAPITOL
JEFFERSON CITY, MO 65102
1-888-ASK-MODOT (1-888-275-6636)

CMT
©Copyright CMT, Inc.
CRAWFORD, MURPHY & TILLY, INC.
1631 WEST ELFINDALE STREET
SPRINGFIELD, MO 65807 (417) 869-6009
ENGINEERING CORPORATION - 000631

IF A SEAL IS PRESENT ON THIS SHEET IT HAS BEEN ELECTRONICALLY SEALED AND DATED.

REV.

L:\MoDOT\20092124-00\Draw\Structures\Sheets\Route NN (A) over BNSF\FinalPlans\Plan Sheet DGNs\B_A9353_026_J7P3425C_BORING_LOGS1.dgn 1:48:03 PM 8/2/2024

Missouri Department of Transportation
Construction and Materials

BORING NO. B-7
Page 3 of 3

Job No.: 20231154.00 **County:** Webster **Route:** Route 60
Design: **Skew:** **Location:** Diggins, Missouri
Bent: **Logged By:** JM **Operator:** LRK
Station: **Northing:** **Date of Work:** 03/21/24-04/24/24
Offset: **Easting:** **Depth to Water:** 39.0
Elevation: **Requested Northing:** **Depth Hole Open:**
Requested Station: **Requested Easting:** **Time Change:**
Requested Offset: **Equipment:** CME 550X,Split-Spoon Sampler, Shelby Tube
Requested Elevation: **Location Note:**
Drill No.: **Hammer Efficiency:** 90% **Drilling Method:** HSA

Depth (ft)	Graphic	Description	Elevation (ft)	Sample Type	REC % (RQD %)	Blow Counts (N_{60})	Shear Data	Field Tests	Index Tests
50		50.0-52.0' DOLOMITE, gray, hard, slightly weathered, finely crystalline, thin bedded, pitted							
		Refusal at 42.0 feet. Bottom of borehole at 52.0 feet.							

N_{60} = (Em/60)Nm N_{60} - Corrected N value for standard 60% SPT efficiency; Em - Measured hammer efficiency in percent; Nm - Observed N-value
(1) = Assumed, (2) = Actual

Coordinate System: U.S. State Plane 1983 **Coordinate Zone:** Missouri Central **Coordinate Proj. Factor:** TBD
Coordinate Datum: NAD 83 (CONUS) **Coordinate Units:** U.S. Survey Feet

* Persons using this information are cautioned that the materials shown are determined by the equipment noted and accuracy of the "log of materials" is limited thereby and by judgement of the operator. THIS INFORMATION IS FOR DESIGN PURPOSES ONLY.

LETTER BOREHOLE - MODOT 20150728.GDT - 5/10/24 16:27 - \\TSI\PROJECTS\STL\GEOTECH\2023 PROJECTS\20231154.00 ROUTE 60 @ A - FINAL DESIGN\WORKING FILES\MODOT WEBSTER COUNTY 20231154.GPJ

Missouri Department of Transportation
Construction and Materials

BORING NO. B-9
Page 1 of 3

Job No.: 20231154.00 **County:** Webster **Route:** Route 60
Design: **Skew:** **Location:** Diggins, Missouri
Bent: **Logged By:** JM **Operator:** LRK
Station: **Northing:** **Date of Work:** 04/25/24-04/25/24
Offset: **Easting:** **Depth to Water:** 38.0
Elevation: **Requested Northing:** **Depth Hole Open:**
Requested Station: **Requested Easting:** **Time Change:** 0 hours
Requested Offset: **Equipment:** CME 550X,Split-Spoon Sampler
Requested Elevation: **Location Note:**
Drill No.: **Hammer Efficiency:** 90% **Drilling Method:** HSA

Depth (ft)	Graphic	Description	Elevation (ft)	Sample Type	REC % (RQD %)	Blow Counts (N_{60})	Shear Data	Field Tests	Index Tests
0		0.0-25.0' (CL) Brownish-red, lean CLAY (CL)							
					67	4-5-6 (17)			MC = 20.0%
		2.0' -trace fine roots and gravel from 0 to 5.5 ft.							
5					89	5-7-8 (23)			MC = 35.7%
		6.0' -gray and brownish-red, below 6.0 ft.							
					67	4-5-7 (18)			MC = 28.6%
					44	11-5-7 (18)			MC = 35.2%
10									
15					44	10-28-34 (93)			MC = 30.3%
					67	9-16-8 (36)			MC = 20.7%
20									
25					67	6-3-8 (17)			MC = 49.0%

N_{60} = (Em/60)Nm N_{60} - Corrected N value for standard 60% SPT efficiency; Em - Measured hammer efficiency in percent; Nm - Observed N-value
(1) = Assumed, (2) = Actual

Coordinate System: U.S. State Plane 1983 **Coordinate Zone:** Missouri Central **Coordinate Proj. Factor:** TBD
Coordinate Datum: NAD 83 (CONUS) **Coordinate Units:** U.S. Survey Feet

* Persons using this information are cautioned that the materials shown are determined by the equipment noted and accuracy of the "log of materials" is limited thereby and by judgement of the operator. THIS INFORMATION IS FOR DESIGN PURPOSES ONLY.

LETTER BOREHOLE - MODOT 20150728.GDT - 5/10/24 16:27 - \\TSI\PROJECTS\STL\GEOTECH\2023 PROJECTS\20231154.00 ROUTE 60 @ A - FINAL DESIGN\WORKING FILES\MODOT WEBSTER COUNTY 20231154.GPJ

BORING DATA

Note: For locations of borings, see Sheet No. 1.

Note: This drawing is not to scale. Follow dimensions.

Sheet No. 27 of 31

Detailed May 2024
Checked June 2024

08/02/2024 1:53:41 PM
Joshua D. Jolliff
MO PE-2006002824

DATE PREPARED
8/2/2024

ROUTE	STATE
NN	MO
DISTRICT	SHEET NO.
BR	27

COUNTY
WEBSTER

JOB NO.
J7P3425C

CONTRACT ID.

PROJECT NO.

BRIDGE NO.
A9353

DESCRIPTION	DATE

IF A SEAL IS PRESENT ON THIS SHEET IT HAS BEEN ELECTRONICALLY SEALED AND DATED.

MISSOURI HIGHWAYS AND TRANSPORTATION COMMISSION

105 WEST CAPITOL
JEFFERSON CITY, MO 65102
1-888-ASK-MODOT (1-888-275-6636)

CRAWFORD, MURPHY & TILLY, INC.
1631 WEST ELFINDALE STREET
SPRINGFIELD, MO 65807 (417) 869-6009
ENGINEERING CORPORATION - 000631

©Copyright CMT, Inc.

REV.

L:\MoDOT\20092124-00\Draw\Structures\Sheets\Route NN (A) over BNSF\Final Plans\Plan Sheet DGNs\B_A9353_027_J7P3425C_BORING_LOGS2.dgn 1:48:35 PM 8/2/2024

Missouri Department of Transportation
Construction and Materials

BORING NO. B-9
Page 2 of 3

Job No.: 20231154.00 **County:** Webster **Route:** Route 60
Design: **Skew:** **Location:** Diggins, Missouri
Bent: **Logged By:** JM **Operator:** LRK
Station: **Northing:** **Date of Work:** 04/25/24-04/25/24
Offset: **Easting:** **Depth to Water:** 38.0
Elevation: **Requested Northing:** **Depth Hole Open:**
Requested Station: **Requested Easting:** **Time Change:** 0 hours
Requested Offset: **Equipment:** CME 550X,Split-Spoon Sampler
Requested Elevation: **Location Note:**
Drill No.: **Hammer Efficiency:** 90% **Drilling Method:** HSA

Depth (ft)	Graphic	Description	Elevation (ft)	Sample Type	REC % (RQD %)	Blow Counts (N_{60})	Shear Data	Field Tests	Index Tests
25		25.0-43.0' (CL) Brownish-red, lean CLAY (CL)							
				X	33	7-4-6 (15)			MC = 38.3%
30									
				X	39	3-5-6 (17)			MC = 45.9%
35									
				X	33	8-6-6 (18)			MC = 44.1%
40									
		43.0-53.0' DOLOMITE, tan, moderately hard to hard, slightly weathered, finely crystalline, thin bedded, dense			100 (67)				
45									
		48.2' -gray and fresh below 48.2 ft.							
50									

N_{60} = (Em/60)Nm N_{60} - Corrected N value for standard 60% SPT efficiency; Em - Measured hammer efficiency in percent; Nm - Observed N-value
(1) = Assumed, (2) = Actual

Coordinate System: U.S. State Plane 1983 **Coordinate Zone:** Missouri Central **Coordinate Proj. Factor:** TBD
Coordinate Datum: NAD 83 (CONUS) **Coordinate Units:** U.S. Survey Feet

* Persons using this information are cautioned that the materials shown are determined by the equipment noted and accuracy of the "log of materials" is limited thereby and by judgement of the operator. THIS INFORMATION IS FOR DESIGN PURPOSES ONLY.

LETTER BOREHOLE - MODOT 20150728.GDT - 5/10/24 16:27 - \\TSI\PROJECTS\STL\GEOTECH\2023 PROJECTS\20231154.00 ROUTE 60 @ A - FINAL DESIGN\WORKING FILES\MODOT WEBSTER COUNTY 20231154.GPJ

Missouri Department of Transportation
Construction and Materials

BORING NO. B-9
Page 3 of 3

Job No.: 20231154.00 **County:** Webster **Route:** Route 60
Design: **Skew:** **Location:** Diggins, Missouri
Bent: **Logged By:** JM **Operator:** LRK
Station: **Northing:** **Date of Work:** 04/25/24-04/25/24
Offset: **Easting:** **Depth to Water:** 38.0
Elevation: **Requested Northing:** **Depth Hole Open:**
Requested Station: **Requested Easting:** **Time Change:** 0 hours
Requested Offset: **Equipment:** CME 550X,Split-Spoon Sampler
Requested Elevation: **Location Note:**
Drill No.: **Hammer Efficiency:** 90% **Drilling Method:** HSA

Depth (ft)	Graphic	Description	Elevation (ft)	Sample Type	REC % (RQD %)	Blow Counts (N_{60})	Shear Data	Field Tests	Index Tests
50		43.0-53.0' DOLOMITE, tan, moderately hard to hard, slightly weathered, finely crystalline, thin bedded, dense *(continued)*			100 (83)				
		Refusal at 43.0 feet. Bottom of borehole at 53.0 feet.							

N_{60} = (Em/60)Nm N_{60} - Corrected N value for standard 60% SPT efficiency; Em - Measured hammer efficiency in percent; Nm - Observed N-value
(1) = Assumed, (2) = Actual

Coordinate System: U.S. State Plane 1983 **Coordinate Zone:** Missouri Central **Coordinate Proj. Factor:** TBD
Coordinate Datum: NAD 83 (CONUS) **Coordinate Units:** U.S. Survey Feet

* Persons using this information are cautioned that the materials shown are determined by the equipment noted and accuracy of the "log of materials" is limited thereby and by judgement of the operator. THIS INFORMATION IS FOR DESIGN PURPOSES ONLY.

LETTER BOREHOLE - MODOT 20150728.GDT - 5/10/24 16:27 - \\TSI\PROJECTS\STL\GEOTECH\2023 PROJECTS\20231154.00 ROUTE 60 @ A - FINAL DESIGN\WORKING FILES\MODOT WEBSTER COUNTY 20231154.GPJ

STATE OF MISSOURI
JOSHUA D. JOLLIFF
NUMBER PE-2006002824
PROFESSIONAL ENGINEER

08/02/2024 1:53:45 PM
Joshua D. Jolliff
MO PE-2006002824

DATE PREPARED
8/2/2024

ROUTE	STATE
NN	MO
DISTRICT	SHEET NO.
BR	28

COUNTY
WEBSTER

JOB NO.
J7P3425C

CONTRACT ID.

PROJECT NO.

BRIDGE NO.
A9353

DESCRIPTION	DATE

MISSOURI HIGHWAYS AND TRANSPORTATION COMMISSION
105 WEST CAPITOL
JEFFERSON CITY, MO 65102
1-888-ASK-MODOT (1-888-275-6636)

CMT
©Copyright CMT, Inc.
CRAWFORD, MURPHY & TILLY, INC.
1631 WEST ELFINDALE STREET
SPRINGFIELD, MO 65807 (417) 869-6009
ENGINEERING CORPORATION - 000631

IF A SEAL IS PRESENT ON THIS SHEET IT HAS BEEN ELECTRONICALLY SEALED AND DATED.

BORING DATA

Note: For locations of borings, see Sheet No. 1.

Detailed May 2024
Checked June 2024

Note: This drawing is not to scale. Follow dimensions.

REV.

L:\MoDOT\20092124-00\Draw\Structures\Sheets\Route NN (A) over BNSF\FinalPlans\Plan Sheet DGNs\B_A9353_028_J7P3425C_BORING_LOGS3.dgn 1:49:05 PM 8/2/2024

Missouri Department of Transportation
Construction and Materials

BORING NO. B-10
Page 1 of 3

Job No.: 20231154.00 **County:** Webster **Route:** Route 60
Design: **Skew:** **Location:** Diggins, Missouri
Bent: **Logged By:** SO **Operator:** LRK
Station: **Northing:** **Date of Work:** 04/04/24-04/04/24
Offset: **Easting:** **Depth to Water:** 33.5
Elevation: **Requested Northing:** **Depth Hole Open:**
Requested Station: **Requested Easting:** **Time Change:**
Requested Offset: **Equipment:** CME 550X,Split-Spoon Sampler
Requested Elevation: **Location Note:**
Drill No.: **Hammer Efficiency:** 90% **Drilling Method:** HSA

Depth (ft)	Graphic	Description	Elevation (ft)	Sample Type	REC % (RQD %)	Blow Counts (N_{60})	Shear Data	Field Tests	Index Tests
0		0.0-3.0' (CH) Brown and gray, fat CLAY, with weathered chert							
					39	2-2-22 (36)		PP = 1.50 tsf	MC = 21.5%
3		3.0-12.0' Brown, weathered CHERT							
					60	50/0.4'			MC = 7.4%
5									
					10	50/0.4'			MC = 0.3%
					10	50/0.4'			MC = 9.1%
10									
		12.0-25.0' (CH) Red, fat CLAY, with weathered chert							
					11	30-25-50/0.5'			MC = 11.1%
15									
					100	50/0.3'		PP = 2.25 tsf	MC = 24.1%
20									
		23.5' -brown below 23.5 ft.							
25					89	3-5-12 (26)		PP = 3.00 tsf	MC = 37.4%

N_{60} = (Em/60)Nm N_{60} - Corrected N value for standard 60% SPT efficiency; Em - Measured hammer efficiency in percent; Nm - Observed N-value
(1) = Assumed, (2) = Actual

Coordinate System: U.S. State Plane 1983 **Coordinate Zone:** Missouri Central **Coordinate Proj. Factor:** TBD
Coordinate Datum: NAD 83 (CONUS) **Coordinate Units:** U.S. Survey Feet

* Persons using this information are cautioned that the materials shown are determined by the equipment noted and accuracy of the "log of materials" is limited thereby and by judgement of the operator. THIS INFORMATION IS FOR DESIGN PURPOSES ONLY.

LETTER BOREHOLE - MODOT 20150728.GDT - 5/10/24 16:26 - \\TSI\PROJECTS\STL\GEOTECH\2023 PROJECTS\20231154.00 ROUTE 60 @ A - FINAL DESIGN\WORKING FILES\MODOT WEBSTER COUNTY 20231154.GPJ

Missouri Department of Transportation
Construction and Materials

BORING NO. B-10
Page 2 of 3

Job No.: 20231154.00 **County:** Webster **Route:** Route 60
Design: **Skew:** **Location:** Diggins, Missouri
Bent: **Logged By:** SO **Operator:** LRK
Station: **Northing:** **Date of Work:** 04/04/24-04/04/24
Offset: **Easting:** **Depth to Water:** 33.5
Elevation: **Requested Northing:** **Depth Hole Open:**
Requested Station: **Requested Easting:** **Time Change:**
Requested Offset: **Equipment:** CME 550X,Split-Spoon Sampler
Requested Elevation: **Location Note:**
Drill No.: **Hammer Efficiency:** 90% **Drilling Method:** HSA

Depth (ft)	Graphic	Description	Elevation (ft)	Sample Type	REC % (RQD %)	Blow Counts (N_{60})	Shear Data	Field Tests	Index Tests
25		25.0-35.5' (CH) Brown, fat CLAY, with weathered chert							
					67	19-12-10 (33)		PP = 2.00 tsf	MC = 27.0%
30									
					67	6-9-11 (30)		PP = 2.00 tsf	MC = 40.5% Sieve Analysis Sieve # % Passing #200 70.4
35		35.5-38.1' DOLOMITE, tan and gray, moderately hard to hard, moderately to highly weathered, finely crystalline to aphanitic, thin to thick bedded, pitted to dense							
					37 (20)		Qu Test Results UCS = 1470 ksf		
		38.1-42.5' Core loss							
40									
					58 (57)		Qu Test Results UCS = 1160 ksf		
45		42.5-50.0' DOLOMITE, tan and gray, moderately hard, moderately to slightly weathered, finely crystalline to aphanitic, medium to thick bedded, dense							
					100 (100)		Qu Test Results UCS = 1680 ksf		
50									

N_{60} = (Em/60)Nm N_{60} - Corrected N value for standard 60% SPT efficiency; Em - Measured hammer efficiency in percent; Nm - Observed N-value
(1) = Assumed, (2) = Actual

Coordinate System: U.S. State Plane 1983 **Coordinate Zone:** Missouri Central **Coordinate Proj. Factor:** TBD
Coordinate Datum: NAD 83 (CONUS) **Coordinate Units:** U.S. Survey Feet

* Persons using this information are cautioned that the materials shown are determined by the equipment noted and accuracy of the "log of materials" is limited thereby and by judgement of the operator. THIS INFORMATION IS FOR DESIGN PURPOSES ONLY.

LETTER BOREHOLE - MODOT 20150728.GDT - 5/10/24 16:26 - \\TSI\PROJECTS\STL\GEOTECH\2023 PROJECTS\20231154.00 ROUTE 60 @ A - FINAL DESIGN\WORKING FILES\MODOT WEBSTER COUNTY 20231154.GPJ

BORING DATA

Note: For locations of borings, see Sheet No. 1.

Note: This drawing is not to scale. Follow dimensions.

Detailed May 2024
Checked June 2024

STATE OF MISSOURI
JOSHUA D. JOLLIFF
NUMBER PE-2006002824
PROFESSIONAL ENGINEER
08/02/2024 1:53:50 PM
Joshua D. Jolliff
MO PE-2006002824

IF A SEAL IS PRESENT ON THIS SHEET IT HAS BEEN ELECTRONICALLY SEALED AND DATED.

DATE PREPARED 8/2/2024
ROUTE NN | STATE MO
DISTRICT BR | SHEET NO. 29
COUNTY WEBSTER
JOB NO. J7P3425C
CONTRACT ID.
PROJECT NO.
BRIDGE NO. A9353

DESCRIPTION | DATE

MISSOURI HIGHWAYS AND TRANSPORTATION COMMISSION
105 WEST CAPITOL
JEFFERSON CITY, MO 65102
1-888-ASK-MODOT (1-888-275-6636)

CMT
CRAWFORD, MURPHY & TILLY, INC.
1631 WEST ELFINDALE STREET
SPRINGFIELD, MO 65807 (417) 869-6009
ENGINEERING CORPORATION - 000631

©Copyright CMT, Inc.

REV.

Missouri Department of Transportation
Construction and Materials

BORING NO. B-10
Page 3 of 3

Job No.: 20231154.00 **County:** Webster **Route:** Route 60
Design: **Skew:** **Location:** Diggins, Missouri
Bent: **Logged By:** SO **Operator:** LRK
Station: **Northing:** **Date of Work:** 04/04/24-04/04/24
Offset: **Easting:** **Depth to Water:** 33.5
Elevation: **Requested Northing:** **Depth Hole Open:**
Requested Station: **Requested Easting:** **Time Change:**
Requested Offset: **Equipment:** CME 550X,Split-Spoon Sampler
Requested Elevation: **Location Note:**
Drill No.: **Hammer Efficiency:** 90% **Drilling Method:** HSA

Depth (ft)	Graphic	Description	Elevation (ft)	Sample Type	REC % (RQD %)	Blow Counts (N_{60})	Shear Data	Field Tests	Index Tests
50		50.0-50.5' DOLOMITE, gray, moderately hard, slightly weathered to fresh, aphanitic, thick bedded, dense Refusal at 35.5 feet. Bottom of borehole at 50.5 feet.							

N_{60} = (Em/60)Nm N_{60} - Corrected N value for standard 60% SPT efficiency; Em - Measured hammer efficiency in percent; Nm - Observed N-value
(1) = Assumed, (2) = Actual

Coordinate System: U.S. State Plane 1983 **Coordinate Zone:** Missouri Central **Coordinate Proj. Factor:** TBD
Coordinate Datum: NAD 83 (CONUS) **Coordinate Units:** U.S. Survey Feet

* Persons using this information are cautioned that the materials shown are determined by the equipment noted and accuracy of the "log of materials" is limited thereby and by judgement of the operator. THIS INFORMATION IS FOR DESIGN PURPOSES ONLY.

LETTER BOREHOLE - MODOT 20150728.GDT - 5/10/24 16:26 - \\TSI\PROJECTS\STL\GEOTECH\2023 PROJECTS\20231154.00 ROUTE 60 @ A - FINAL DESIGN\WORKING FILES\MODOT WEBSTER COUNTY 20231154.GPJ

Missouri Department of Transportation
Construction and Materials

BORING NO. B-12
Page 1 of 3

Job No.: 20231154.00 **County:** Webster **Route:** Route 60
Design: **Skew:** **Location:** Diggins, Missouri
Bent: **Logged By:** SO **Operator:** LRK
Station: **Northing:** **Date of Work:** 04/04/24-04/04/24
Offset: **Easting:** **Depth to Water:** 38.5
Elevation: **Requested Northing:** **Depth Hole Open:**
Requested Station: **Requested Easting:** **Time Change:**
Requested Offset: **Equipment:** CME 550X,Split-Spoon Sampler
Requested Elevation: **Location Note:**
Drill No.: **Hammer Efficiency:** 90% **Drilling Method:** HSA

Depth (ft)	Graphic	Description	Elevation (ft)	Sample Type	REC % (RQD %)	Blow Counts (N_{60})	Shear Data	Field Tests	Index Tests
0		0.0-3.0' (GC) Brown, clayey GRAVEL			28	30-35-24 (89)			MC = 2.0%
5		3.0-25.0' (CH) Red, gravelly fat CLAY			44	9-14-15 (44)			MC = 19.8%
					42	18-50/0.5'			MC = 15.1%
					67	15-50/0.5'		PP = 2.50 tsf	MC = 24.6%
10									
15					33	5-12-13 (38)			MC = 14.6%
20		18.5' -brown, with gravel from 18.5 to 20.0 ft.			100	4-6-7 (20)		PP = 2.50 tsf	MC = 36.8%
25					83	5-8-11 (29)		PP = 2.50 tsf	MC = 27.7%

N_{60} = (Em/60)Nm N_{60} - Corrected N value for standard 60% SPT efficiency; Em - Measured hammer efficiency in percent; Nm - Observed N-value
(1) = Assumed, (2) = Actual

Coordinate System: U.S. State Plane 1983 **Coordinate Zone:** Missouri Central **Coordinate Proj. Factor:** TBD
Coordinate Datum: NAD 83 (CONUS) **Coordinate Units:** U.S. Survey Feet

* Persons using this information are cautioned that the materials shown are determined by the equipment noted and accuracy of the "log of materials" is limited thereby and by judgement of the operator. THIS INFORMATION IS FOR DESIGN PURPOSES ONLY.

LETTER BOREHOLE - MODOT 20150728.GDT - 5/10/24 16:27 - \\TSI\PROJECTS\STL\GEOTECH\2023 PROJECTS\20231154.00 ROUTE 60 @ A - FINAL DESIGN\WORKING FILES\MODOT WEBSTER COUNTY 20231154.GPJ

BORING DATA

Note: For locations of borings, see Sheet No. 1.
Note: This drawing is not to scale. Follow dimensions.

Detailed May 2024
Checked June 2024

Sheet No. 30 of 31

L:\MoDOT\20092124-00\Draw\Structures\Sheets\Route NN (A) over BNSF\Final Plans\Plan Sheet DGNs\B_A9353_030_J7P3425C_BORING_LOGS5.dgn 1:50:08 PM 8/2/2024

STATE OF MISSOURI
JOSHUA D. JOLLIFF
NUMBER PE-2006002824
PROFESSIONAL ENGINEER
08/02/2024 1:53:54 PM
Joshua D. Jolliff
MO PE-2006002824

DATE PREPARED: 8/2/2024
ROUTE: NN | STATE: MO
DISTRICT: BR | SHEET NO.: 30
COUNTY: WEBSTER
JOB NO.: J7P3425C
CONTRACT ID.:
PROJECT NO.:
BRIDGE NO.: A9353

DESCRIPTION | DATE

IF A SEAL IS PRESENT ON THIS SHEET IT HAS BEEN ELECTRONICALLY SEALED AND DATED.

MISSOURI HIGHWAYS AND TRANSPORTATION COMMISSION
105 WEST CAPITOL
JEFFERSON CITY, MO 65102
1-888-ASK-MODOT (1-888-275-6636)

©Copyright CMT, Inc.
CMT
CRAWFORD, MURPHY & TILLY, INC.
1631 WEST ELFINDALE STREET
SPRINGFIELD, MO 65807 (417) 869-6009
ENGINEERING CORPORATION - 000631

REV.

Missouri Department of Transportation
Construction and Materials

BORING NO. B-12
Page 2 of 3

Job No.: 20231154.00 **County:** Webster **Route:** Route 60
Design: **Skew:** **Location:** Diggins, Missouri
Bent: **Logged By:** SO **Operator:** LRK
Station: **Northing:** **Date of Work:** 04/04/24-04/04/24
Offset: **Easting:** **Depth to Water:** 38.5
Elevation: **Requested Northing:** **Depth Hole Open:**
Requested Station: **Requested Easting:** **Time Change:**
Requested Offset: **Equipment:** CME 550X,Split-Spoon Sampler
Requested Elevation: **Location Note:**
Drill No.: **Hammer Efficiency:** 90% **Drilling Method:** HSA

Depth (ft)	Graphic	Description	Elevation (ft)	Sample Type	REC % (RQD %)	Blow Counts (N_{60})	Shear Data	Field Tests	Index Tests
25		25.0-27.0' (CH) Gray and brown, gravelly fat CLAY							
		27.0-42.0' (CH) Brown, fat CLAY, with gravel							
				X	100	4-7-10 (26)		PP = 2.25 tsf	MC = 36.6%
30									
				X	100	38-9-8 (26)		PP = 2.50 tsf	MC = 25.1%
35									
		▽ 38.5' -red and brown below 38.5 ft.		X	88	8-6-50/0.4'		PP = 3.50 tsf	LL = 90 PL = 21 MC = 30.1%
40									
		42.0-50.0' DOLOMITE, tan and gray, moderately hard, slightly weathered to fresh, very finely crystalline to aphanitic, thin to thick bedded, dense			100 (86)		Qu Test Results UCS = 1970 ksf		
45									
					100 (100)		Qu Test Results UCS = 932 ksf		
50									

N_{60} = (Em/60)Nm N_{60} - Corrected N value for standard 60% SPT efficiency; Em - Measured hammer efficiency in percent; Nm - Observed N-value
(1) = Assumed, (2) = Actual

Coordinate System: U.S. State Plane 1983 **Coordinate Zone:** Missouri Central **Coordinate Proj. Factor:** TBD
Coordinate Datum: NAD 83 (CONUS) **Coordinate Units:** U.S. Survey Feet

* Persons using this information are cautioned that the materials shown are determined by the equipment noted and accuracy of the "log of materials" is limited thereby and by judgement of the operator. THIS INFORMATION IS FOR DESIGN PURPOSES ONLY.

LETTER BOREHOLE - MODOT 20150728.GDT - 5/10/24 16:27 - \\TSI\PROJECTS\STL\GEOTECH\2023 PROJECTS\20231154.00 ROUTE 60 @ A - FINAL DESIGN\WORKING FILES\MODOT WEBSTER COUNTY 20231154.GPJ

Missouri Department of Transportation
Construction and Materials

BORING NO. B-12
Page 3 of 3

Job No.: 20231154.00 **County:** Webster **Route:** Route 60
Design: **Skew:** **Location:** Diggins, Missouri
Bent: **Logged By:** SO **Operator:** LRK
Station: **Northing:** **Date of Work:** 04/04/24-04/04/24
Offset: **Easting:** **Depth to Water:** 38.5
Elevation: **Requested Northing:** **Depth Hole Open:**
Requested Station: **Requested Easting:** **Time Change:**
Requested Offset: **Equipment:** CME 550X,Split-Spoon Sampler
Requested Elevation: **Location Note:**
Drill No.: **Hammer Efficiency:** 90% **Drilling Method:** HSA

Depth (ft)	Graphic	Description	Elevation (ft)	Sample Type	REC % (RQD %)	Blow Counts (N_{60})	Shear Data	Field Tests	Index Tests
50		50.0-51.9' DOLOMITE, gray, moderately hard, slightly weathered to fresh, aphanitic, thick bedded, dense			100 (100)				
		Refusal at 42.0 feet. Bottom of borehole at 51.9 feet.							

N_{60} = (Em/60)Nm N_{60} - Corrected N value for standard 60% SPT efficiency; Em - Measured hammer efficiency in percent; Nm - Observed N-value
(1) = Assumed, (2) = Actual

Coordinate System: U.S. State Plane 1983 **Coordinate Zone:** Missouri Central **Coordinate Proj. Factor:** TBD
Coordinate Datum: NAD 83 (CONUS) **Coordinate Units:** U.S. Survey Feet

* Persons using this information are cautioned that the materials shown are determined by the equipment noted and accuracy of the "log of materials" is limited thereby and by judgement of the operator. THIS INFORMATION IS FOR DESIGN PURPOSES ONLY.

LETTER BOREHOLE - MODOT 20150728.GDT - 5/10/24 16:27 - \\TSI\PROJECTS\STL\GEOTECH\2023 PROJECTS\20231154.00 ROUTE 60 @ A - FINAL DESIGN\WORKING FILES\MODOT WEBSTER COUNTY 20231154.GPJ

BORING DATA

Note: For locations of borings, see Sheet No. 1.

Note: This drawing is not to scale. Follow dimensions.

Sheet No. 31 of 31

Detailed May 2024
Checked June 2024

STATE OF MISSOURI
JOSHUA D. JOLLIFF
NUMBER PE-2006002824
PROFESSIONAL ENGINEER
08/02/2024 1:54:00 PM
Joshua D. Jolliff
MO PE-2006002824

DATE PREPARED 8/2/2024
ROUTE NN | STATE MO
DISTRICT BR | SHEET NO. 31
COUNTY WEBSTER
JOB NO. J7P3425C
CONTRACT ID.
PROJECT NO.
BRIDGE NO. A9353

IF A SEAL IS PRESENT ON THIS SHEET IT HAS BEEN ELECTRONICALLY SEALED AND DATED.

DESCRIPTION | DATE | REV.

MISSOURI HIGHWAYS AND TRANSPORTATION COMMISSION
105 WEST CAPITOL
JEFFERSON CITY, MO 65102
1-888-ASK-MODOT (1-888-275-6636)

CMT
CRAWFORD, MURPHY & TILLY, INC.
1631 WEST ELFINDALE STREET
SPRINGFIELD, MO 65807 (417) 869-6009
ENGINEERING CORPORATION - 000631

©Copyright CMT, Inc.

L:\MoDOT\20092124-00\Draw\Structures\Sheets\Route NN (A) over BNSF\FinalPlans\Plan Sheet DGNs\B_A9353_031_J7P3425C_BORING_LOGS6.dgn 1:50:39 PM 8/2/2024

672' MECHANICALLY STABILIZED EARTH (MSE) RETAINING WALL SYSTEM

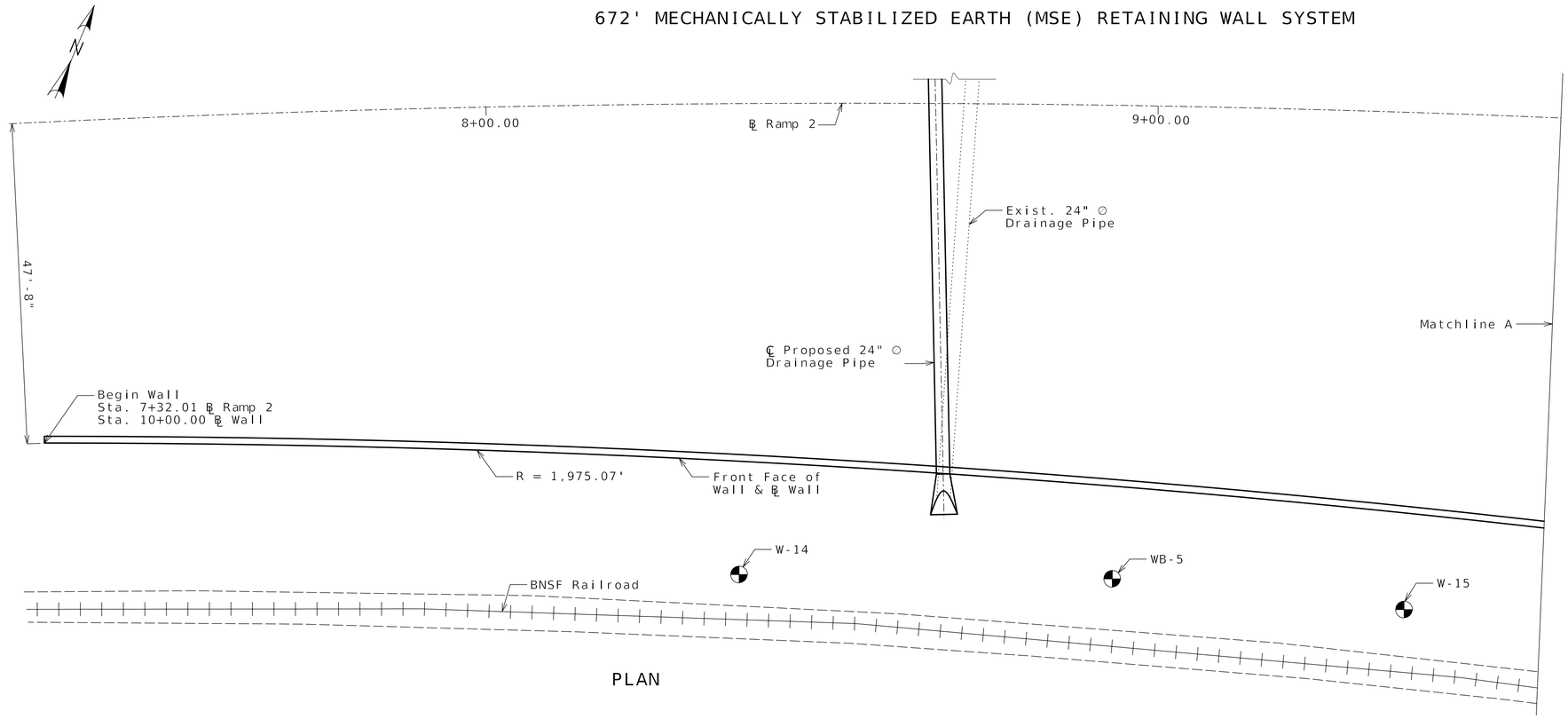

PLAN

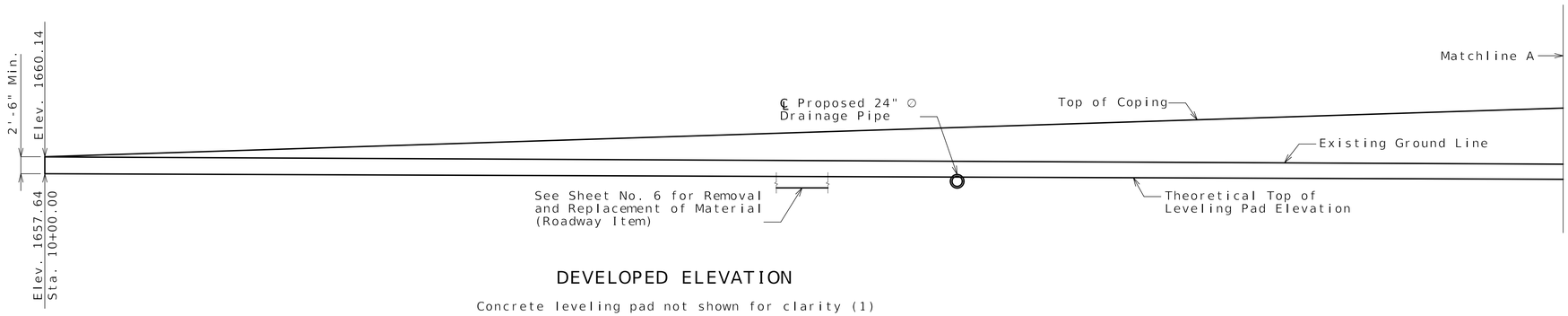

DEVELOPED ELEVATION

Concrete leveling pad not shown for clarity (1)

(1) Wall contractor shall show the following items on the design drawings and/or on the fabricator shop drawings.

- Leveling pad horizontal
- Leveling pad length and step elevations shall be based on wall manufacturer's recommendation. Top of leveling pad elevations shall not be higher than theoretical top of leveling pad elevations shown on these plans.

Designed Apr. 2024
Detailed Apr. 2024
Checked Apr. 2024

Note: This drawing is not to scale. Follow dimensions.

Sheet No. 1 of 13

SEC/SUR	25	TWP	29N	RGE	18W

Indicates location of borings.

Notice and Disclaimer Regarding Boring Log Data

The locations of all subsurface borings for this structure are shown on the plan sheet(s) for this structure. The boring data for all locations indicated, as well as any other boring logs or other factual records of subsurface data and investigations performed by the department for the design of the project, are shown on Sheet(s) No. 7 thru 13 and may be included in the Electronic Bridge Deliverables. They will also be available from the Project Contact upon written request. No greater significance or weight should be given to the boring data depicted on the plan sheets than is given to the subsurface data available from the district or elsewhere.

The Commission does not represent or warrant that any such boring data accurately depicts the conditions to be encountered in constructing this project. A contractor assumes all risks it may encounter in basing its bid prices, time or schedule of performance on the boring data depicted here or those available from the district, or on any other documentation not expressly warranted, which the contractor may obtain from the Comission.

CURVE R2EBOFF_4
PI 7+70.27
PC 5+04.13
PT 10+34.52
Δ 11° 52' 14.7" (RT)
D 2° 14' 17.2"
L 530.39'
T 266.15'
R 2,560.00'

B.M. CONTROL POINT NO. 137
5/8" I.B. W/2" ALUMINUM CAP
N: 487406.2123, E: 1534366.0016, ELEVATION: 1664.2490'

RETAINING WALL ALONG RAMP 2 AND RAMP 4

ROUTE A FROM ROUTE 417 TO ROUTE NN
ABOUT 1.0 MILES SOUTH OF ROUTE 417
BEGINNING STATION 7+30.01 ℄ RAMP 2

STATE OF MISSOURI
CHRIS LINNEMAN
NUMBER PE-2002016690
PROFESSIONAL ENGINEER

07/31/2024 8:37:08 AM
Chris Linneman - Civil
MO PE-2002016690

DATE PREPARED
7/30/2024

ROUTE	STATE
60	MO
DISTRICT	SHEET NO.
BR	1

COUNTY
WEBSTER

JOB NO.
J7P3425C

CONTRACT ID.

PROJECT NO.

BRIDGE NO.
A9354

REV.	DESCRIPTION	DATE

MISSOURI HIGHWAYS AND TRANSPORTATION COMMISSION

MoDOT

105 WEST CAPITOL
JEFFERSON CITY, MO 65102
1-888-ASK-MODOT (1-888-275-6636)

EFK•Moen
Civil Engineering Design
13523 Barrett Parkway Dr
Suite 250
St. Louis, MO 63021
Phone 314-394-3100
Fax 314-394-3199
Missouri Certificate of Authority: 001578

O:\2021R2\MoDOT_ORD_v10.10.01.03\21047 CMT Route 60 at Route A Walls\DGN\Bridge\Final\Plotsheets\A9354\B_A9354_001_J7P3425C_Plans and Elevations.dgn 8:50:50 AM 7/30/2024

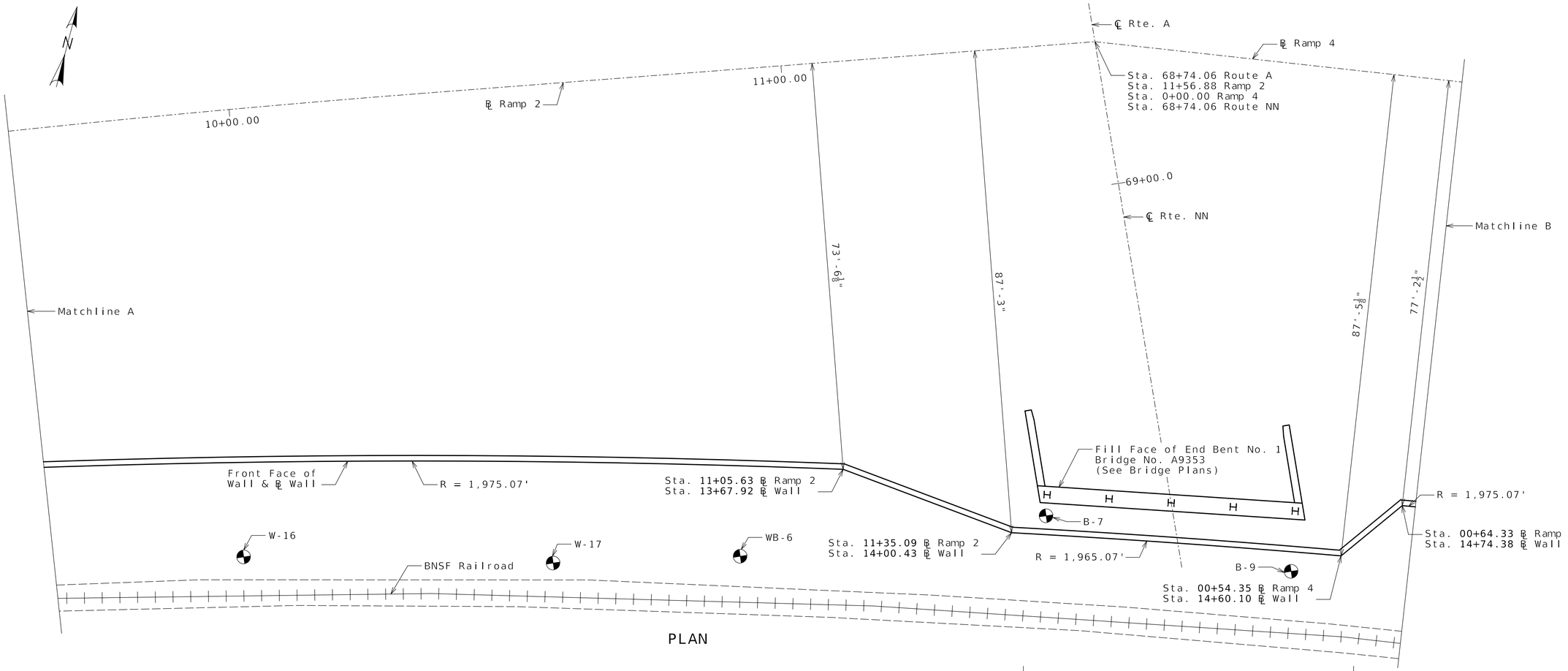

PLAN

(1) Wall contractor shall show the following items on the design drawings and/or on the fabricator shop drawings.

- Leveling pad horizontal
- Leveling pad length and step elevations shall be based on wall manufacturer's recommendation. Top of leveling pad elevations shall not be higher than theoretical top of leveling pad elevations shown on these plans.

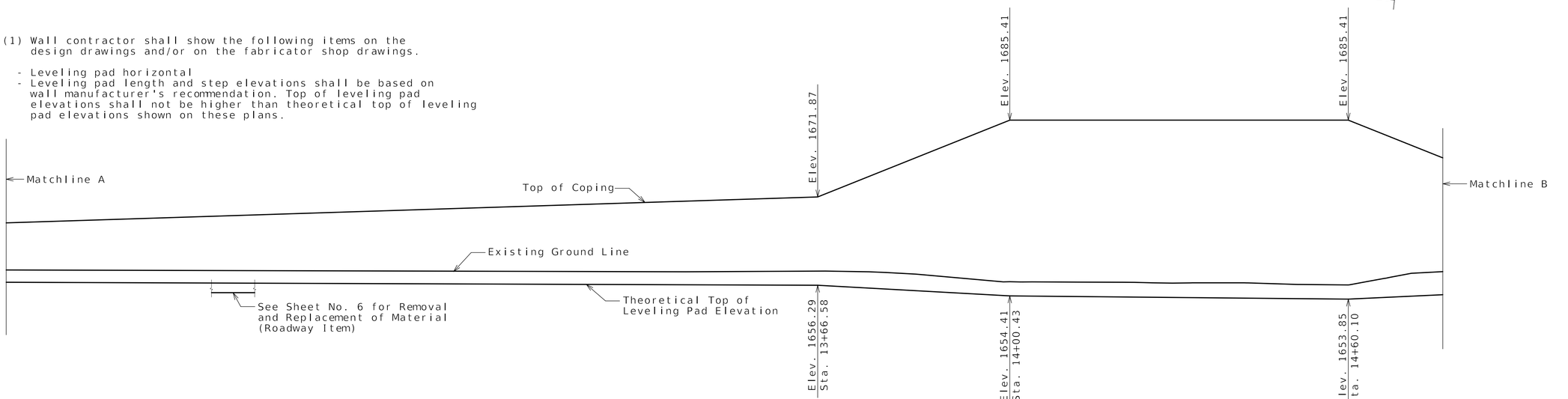

DEVELOPED ELEVATION

Concrete leveling pad not shown for clarity (1)

Detailed Apr. 2024
Checked Apr. 2024

Note: This drawing is not to scale. Follow dimensions.

Sheet No. 2 of 13

CHRIS LINNEMAN
NUMBER PE-2002016690
STATE OF MISSOURI
PROFESSIONAL ENGINEER

07/31/2024 8:37:02 AM
Chris Linneman - Civil
MO PE-2002016690

DATE PREPARED	
7/30/2024	
ROUTE	STATE
60	MO
DISTRICT	SHEET NO.
BR	2

COUNTY: WEBSTER
JOB NO.: J7P3425C
CONTRACT ID.:
PROJECT NO.:
BRIDGE NO.: A9354

DESCRIPTION	DATE

MISSOURI HIGHWAYS AND TRANSPORTATION COMMISSION
105 WEST CAPITOL
JEFFERSON CITY, MO 65102
1-888-ASK-MODOT (1-888-275-6636)

EFK•Moen
Civil Engineering Design
13523 Barrett Parkway Dr
Suite 250
St. Louis, MO 63021
Phone 314-394-3100
Fax 314-394-3199
Missouri Certificate of Authority: 001578

REV.

O:\2021R2\MoDOT_ORD_v10.10.01.03\21047 CMT Route 60 at Route A Walls\DGN\Bridge\Final\Plotsheets\A9354\B_A9354_002_J7P3425C_Plans and Elevations1.dgn 8:50:51 AM 7/30/2024

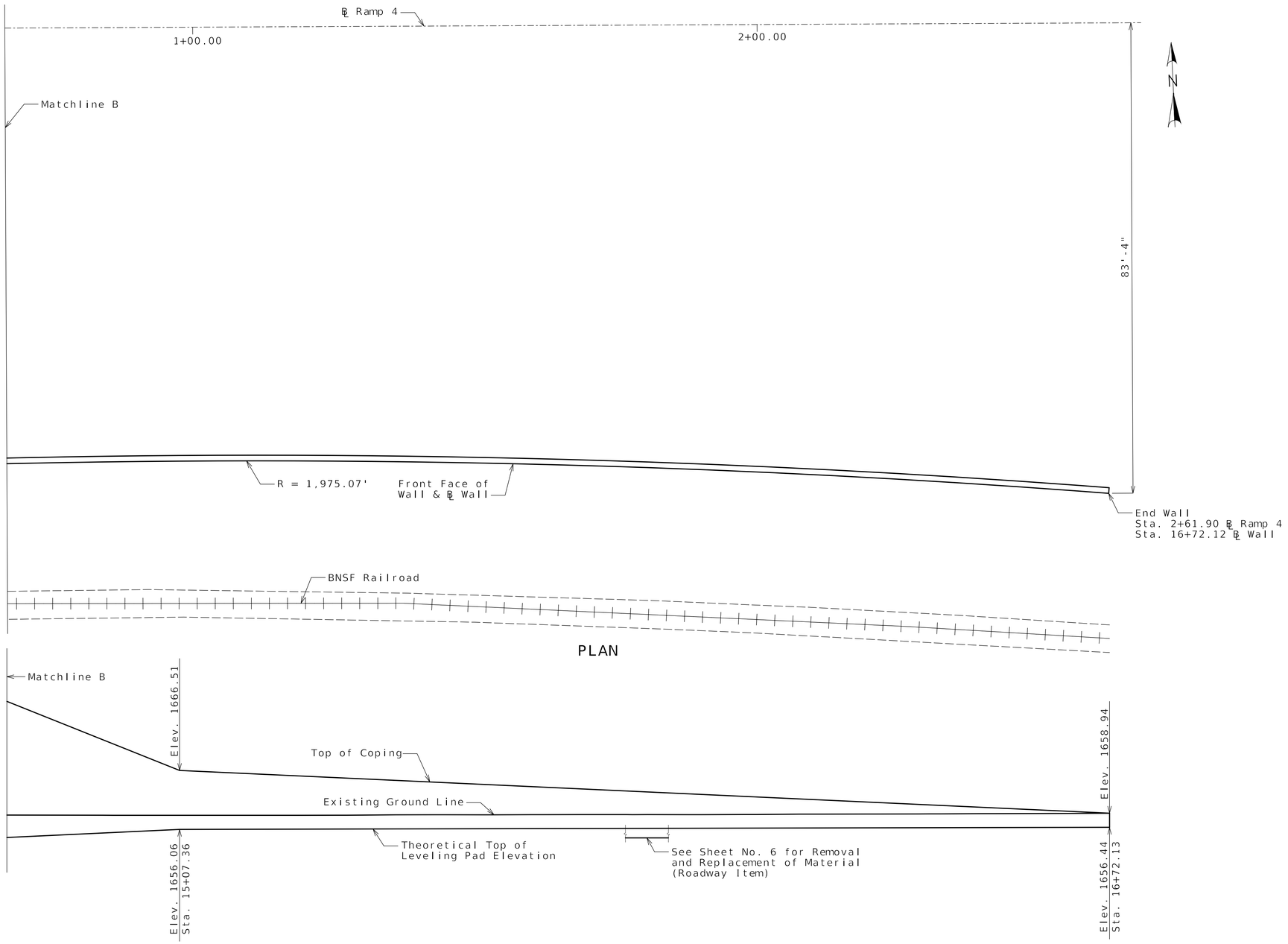

DEVELOPED ELEVATION

Concrete leveling pad not shown for clarity (1)

(1) Wall contractor shall show the following items on the design drawings and/or on the fabricator shop drawings.

- Leveling pad horizontal
- Leveling pad length and step elevations shall be based on wall manufacturer's recommendation. Top of leveling pad elevations shall not be higher than theoretical top of leveling pad elevations shown on these plans.

Detailed Apr. 2024
Checked Apr. 2024

Note: This drawing is not to scale. Follow dimensions.

STATE OF MISSOURI
CHRIS LINNEMAN
NUMBER PE-2002016690
PROFESSIONAL ENGINEER

07/31/2024 8:36:55 AM
Chris Linneman - Civil
MO PE-2002016690

DATE PREPARED
7/30/2024

ROUTE	STATE
60	MO
DISTRICT	SHEET NO.
BR	3

COUNTY
WEBSTER

JOB NO.
J7P3425C

CONTRACT ID.

PROJECT NO.

BRIDGE NO.
A9354

DESCRIPTION	DATE

MISSOURI HIGHWAYS AND TRANSPORTATION COMMISSION
105 WEST CAPITOL
JEFFERSON CITY, MO 65102
1-888-ASK-MODOT (1-888-275-6636)

EFK•Moen
Civil Engineering Design
13523 Barrett Parkway Dr
Suite 250
St. Louis, MO 63021
Phone 314-394-3100
Fax 314-394-3199
Missouri Certificate of Authority: 001578

REV.

Estimated Quantities		
Item		Total
Mechanically Stabilized Earth Wall Systems	sq. foot	8028

MSE Wall Systems Data Table					
Proprietary Wall Systems		Combination Wall Systems			
Manufacturer	System	Facing Unit Manufacturer	Facing Unit	Geogrid Manufacturer	Geogrid

MSE Wall Systems Data Table is to be completed by MoDOT construction personnel to record the manufacturer of the proprietary wall system or the manufacturers of the combination wall system that was used for constructing the MSE wall.

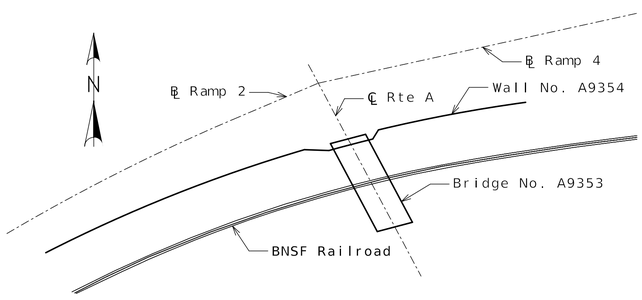

LOCATION SKETCH

General Notes:

Design Specifications:

2002 AASHTO LFD (17th Ed.) Standard Specifications (Section 5 ASD Design)
Seismic Performance Category = A
Acceleration Coefficient = 0.04

Design Loading:

Φ_f = 26° and Unit weight, γ_s = 120 pcf for retained backfill material to be retained by the mechanically stabilized earth wall system.

Φ_f = 22° for unimproved foundation ground where wall is to bear.
Φ_f = 36° for improved foundation ground where wall is to bear.

For unimproved foundation ground, the allowable bearing pressure is 3.4 to 5.1 ksf.
For improved foundation ground, the allowable bearing pressure is 6.0 ksf.

The maximum applied bearing pressure for the controlling design case at the foundation level shall be shown on the shop drawings and shall be less than the allowable bearing pressure for foundation ground provided herein. For seismic design the maximum applied bearing pressure shall be less than two times the allowable bearing pressure.

Allowable bearing pressure and limits of improved foundation ground shall not be adjusted from that as shown on the plans.

Contractor shall include design Φ_f (actual Φ_f ≥34°) and the total unit weight, γ_s, for the select granular backfill (reinforced backfill and wedge area backfill) for structural systems on shop drawings. Contractor shall identify source of select granular backfill material, submit proctor in accordance with AASHTO T 99 (ASTM D698) and gradation with the shop drawings. When backfill material is too coarse to develop a proctor curve the contractor shall determine the maximum dry density (relative density) in accordance with ASTM D4253 and ASTM D4254 and assume percent passing the 200 sieve for optimum water content.

Total unit weight, γ_s = (95% compaction) x (maximum dry density) x (1 + optimum water content)

Design Φ_f = 34°for the select granular backfill (reinforced backfill) only for structural systems.

Factor of safety shall be 2.0 for overturning and 1.5 for sliding.

For seismic design the factor of safety shall be 1.5 for overturning and 1.1 for sliding.

Use default values for the pullout friction factor, F^*, in accordance with AASHTO figure 5.8.5.2A and default value for scale effect correction factor, α, in accordance with AASHTO table 5.8.5.2A. For approved steel strips not shown in AASHTO figure 5.8.5.2A, use $F^* \leq 2.0$ at zero depth and $F^* \leq \tan \Phi_f$ at 20 feet depth and Φ_f design = 34°. F^* and α values shall be shown on the shop drawings.

Design Unit Stresses:

All concrete for leveling pad and coping shall be Class B or B-1 with f'c = 4000 psi.

The minimum compressive strength of concrete for precast panel shall be 4,000 psi in accordance with Sec 1052.

Miscellaneous:

The MSE wall system shall be built vertical.

The MSE wall system shall be built in accordance with Sec 720.

The MSE wall system shall be a large block wall system.

The cost of joint filler and joint seal, complete in place, will be considered completely covered by the contract unit price for Concrete Traffic Barrier (Type D). See Roadway Plans.

Panel and coping (or capstone) reinforcement shall be epoxy coated.

A filter cloth meeting the requirements for a Separation Geotextile material shall be placed between the select granular backfill for structural systems and the backfill being retained by the mechanically stabilized earth wall system.

Coping shall be required on this structure. When CIP coping sections extend beyond the limits of a single panel, bond breaker (roofing felt or other approved alternate) between wall panel and coping is required. Coping joints shall use 3/4-inch chamfers and shall be sealed with 3/4-inch joint filler. Coping reinforcement shall terminate 1 1/2-inch minimum from face of coping joint.

The contractor shall be solely responsible to coordinate construction of the wall with bridge and roadway construction and ensure that the bridge and roadway construction, resulting or existing obstructions, shall not impact the construction or performance of the wall. Soil reinforcement shall be designed and placed to avoid damage by pile driving, guardrail post installation, utility and sign foundations. (See Roadway and Bridge plans.)

STATE OF MISSOURI
CHRIS LINNEMAN
NUMBER PE-2002016690
PROFESSIONAL ENGINEER

07/31/2024 8:36:44 AM
Chris Linneman - Civil
MO PE-2002016690

DATE PREPARED
7/30/2024

ROUTE	STATE
60	MO
DISTRICT	SHEET NO.
BR	4

COUNTY
WEBSTER

JOB NO.
J7P3425C

CONTRACT ID.

PROJECT NO.

BRIDGE NO.
A9354

DESCRIPTION	DATE

MISSOURI HIGHWAYS AND TRANSPORTATION COMMISSION
105 WEST CAPITOL
JEFFERSON CITY, MO 65102
1-888-ASK-MODOT (1-888-275-6636)

EFK•Moen
Civil Engineering Design
13523 Barrett Parkway Dr
Suite 250
St. Louis, MO 63021
Phone 314-394-3100
Fax 314-394-3199
Missouri Certificate of Authority: 001578

GENERAL NOTES AND QUANTITIES

Detailed Apr. 2024
Checked Apr. 2024

Note: This drawing is not to scale. Follow dimensions.

REV.

O:\2021R2\MoDOT_ORD_v10.10.01.03\21047 CMT Route 60 at Route A Walls\DGN\Bridge\Final\Plotsheets\A9354\B_A9354_004_J7P3425C_Retaining Wall Systems.dgn 8:50:52 AM 7/30/2024

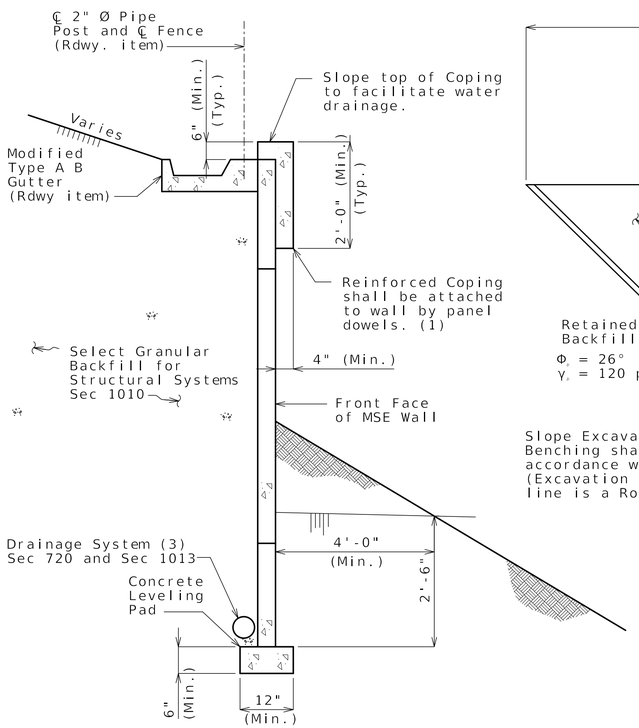

TYPICAL SECTION THRU
LARGE BLOCK WALL

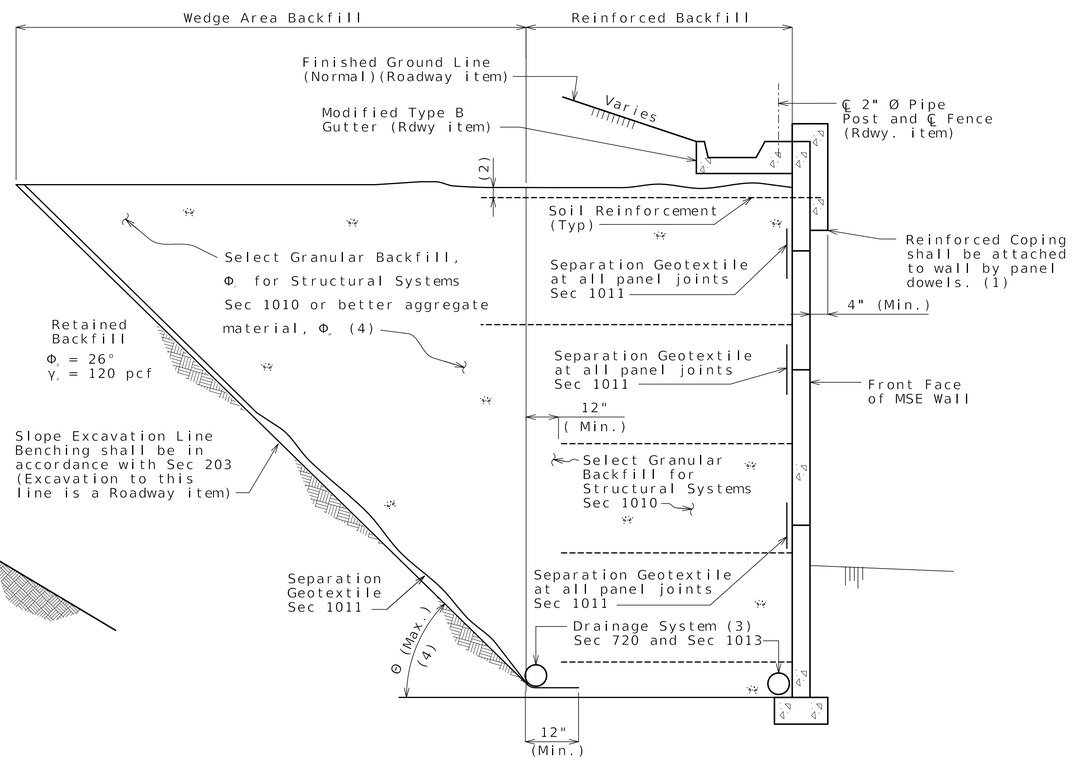

TYPICAL SECTION THRU
LARGE BLOCK WALL SHOWING FILTER CLOTH

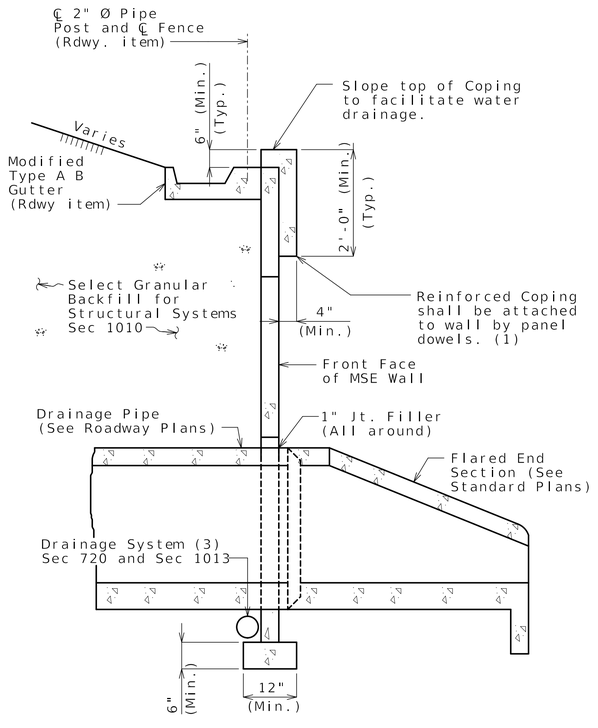

TYPICAL SECTION THRU
LARGE BLOCK WALL AT CULVERT

Vertical joint in MSE wall shall be located at each exterior culvert wall.

General Notes Cont.:

Minimum 18" wide Geotextile strips shall be centered at vertical and horizontal joints of panel. Geotextile material shall be adhered to back face of panel using an adhesive compound supplied by the manufacturer. All edges of each fabric strip shall provide a positive seal. A minimum 18" overlap shall be provided between spliced filter fabric.

Aluminized soil reinforcement shall have edges coated with coating material per manufacturer.

Soil reinforcement shall be spaced to avoid roadway drop inlet behind wall.

All steel soil reinforcements shall be separated from other metallic elements by at least 3 inches.

The splay angle should be less than 15° and tensile capacity of splayed reinforcement shall be reduced by the cosine of the splay angle. Soil reinforcement shall clear the obstruction by at least 3 inches.

No reinforcement shall be left unconnected to the wall face or arbitrarily cut/bent in the field to avoid the obstruction.

Where interference between the vertical obstruction and the soil reinforcement is unavoidable, the design of the wall near the obstruction may be modified using one of the alternatives in FHWA-NHI-10-24, Section 5.4.2. Show detail layout on the drawings. For wall designs with horizontal obstructions in reinforced soil mass, see FHWA-NHI-10-024, Section 5.4.3.

Excavation:
Excavation quantities and pay items are given on the roadway plans. Excavation quantities are based on a soil reinforcement length of 29 ft. The soil reinforcement length may vary based upon the wall design selected by the contractor. Plan excavation quantities will be paid regardless of any actual quantities removed based on the soil reinforcement length and design selected.

(1) Inverted U-shape reinforced capstone may be used in lieu of coping. Panel dowels for level-up concrete shall be required and provided by manufacturer. The dowels shall be field trimmed to clear the capstone by a minimum of 1 1/2 inches and a maximum of 2 1/2 inches.

(2) Topmost layer of reinforcement shall be fully covered with select granular backfill for structural systems, as approved by the wall manufacturer, before placement of the Separation Geotextile.

(3) Minimum 6" diameter perforated PVC or PE pipe.

Manufacturer shall show drain details on design plans to be submitted as shown on MoDOT MSE wall plans and/or roadway plans.

Contractor shall modify the drain details as shown if it will improve flow as may be the case for stepped leveling pad, and for an uneven ground line (approval of the engineer required).

(4) Select granular backfill shall extend a minimum of 12" beyond the end of all soil reinforcement. Where the angle, Θ, between the retained backfill excavation/fill line and the horizontal is less than 90°, the wedge area backfill between Θ and 90° shall be filled with select granular backfill for structural systems meeting the requirements of Section 1010.

- For $(45° + \Phi_r/3) < \Theta \leq 90°$, properties for retained backfill shall be used for active force computations.

- For $\Theta \leq (45° + \Phi_r/3)$, contractor shall have the option to use select granular backfill, Φ_r, or better aggregate material, Φ_* for active force computations in the wedge area backfill. For active force computations, the angle of internal friction for wedge area backfill material, Φ_r or Φ_*, shall be limited to 34° unless determined otherwise in accordance with Section 1010. If Φ_r or Φ_* > 34°is desired for wedge area backfill then test report shall be submitted with shop drawings. Φ_r or Φ_* shall not be greater than 40° for computations. Final configuration of this option shall be sent to Geotechnical Section for a new overall global stability analysis. Design Φ_* shall be shown on the shop drawings if used.

Material Properties Used in Design				
Reinf. Fill/Select Granular Backfill		Active Force Computations		Foundation
Φ°	γ (pcf)	Φ°	γ (pcf)	Φ°

Note: MSE Wall designer shall include table on shop drawings and provide values used in the design computations. Effects of cohesion shall be ignored unless approved by the engineer.

The slope excavation line shall be benched and separation geotextile shall be placed between the retained backfill and either select granular backfill or better aggregate material, and between the select granular backfill and better aggregate material.

Show range of acceptable theta (Θ) angle on shop drawings which must be consistent with design computations and proposed construction of wall. Show active force computation properties on shop drawings and in design computations. Coordination between wall designer (manufacturer) and contractor is required before shop drawing submittal.

DETAILS FOR GENERIC MSE WALL

Detailed Apr. 2024
Checked Apr. 2024

Note: This drawing is not to scale. Follow dimensions.

STATE OF MISSOURI
CHRIS LINNEMAN
NUMBER PE-2002016690
PROFESSIONAL ENGINEER
07/31/2024 8:35:13 AM
Chris Linneman - Civil
MO PE-2002016690

DATE PREPARED 7/30/2024

ROUTE	STATE
60	MO
DISTRICT	SHEET NO.
BR	5

COUNTY WEBSTER
JOB NO. J7P3425C
CONTRACT ID.
PROJECT NO.
BRIDGE NO. A9354

DESCRIPTION | DATE | REV.

MISSOURI HIGHWAYS AND TRANSPORTATION COMMISSION
105 WEST CAPITOL
JEFFERSON CITY, MO 65102
1-888-ASK-MODOT (1-888-275-6636)

EFK•Moen
Civil Engineering Design
13523 Barrett Parkway Dr
Suite 250
St. Louis, MO 63021
Phone 314-394-3100
Fax 314-394-3199
Missouri Certificate of Authority: 001578

Missouri Department of Transportation
Construction and Materials

BORING NO. B-7
Page 1 of 3

Job No.: 20231154.00 **County:** Webster **Route:** Route 60
Design: **Skew:** **Location:** Webster County
Bent: **Logged By:** JM **Operator:** LRK
Station: **Northing:** **Date of Work:** 03/21/24-04/24/24
Offset: **Easting:** **Depth to Water:** 39.0
Elevation: **Requested Northing:** **Depth Hole Open:**
Requested Station: **Requested Easting:** **Time Change:**
Requested Offset: **Equipment:** CME 550X,Split-Spoon Sampler, Shelby Tube
Requested Elevation: **Location Note:**
Drill No.: **Hammer Efficiency:** **Drilling Method:** HSA

Depth (ft)	Graphic	Description	Elevation (ft)	Sample Type	REC % (RQD %)	Blow Counts (N_{60})	Shear Data	Field Tests	Index Tests
0		0.0-17.0' (CL) Brown and gray, lean CLAY, trace sand and chert gravel							
					100	8-16-30 (69)		PP = 3.50 tsf	
		3.5' -brown and red, with chert gravel below 3.5 ft.			67	9-22-22 (66)		PP >4.50 tsf	
5									
		6.0' -rough drilling from 6.0 to 7.0 ft. (possible cobbles) 6.4' -offset 5' East below 6.4 ft.			44	50/0.4', 10/0'		PP >4.50 tsf	
					33	7-15-16 (47)		PP = 4.00 tsf	
10									
		12.0' -rough drilling from 12.0 to 18.5 ft. (possible cobbles)							
					39	8-13-13 (39)		PP = 4.00 tsf	
15									
		17.0-23.5' (CH) Reddish brown, fat CLAY, trace sand, with chert gravel							
					67	12-8-5 (20)		PP = 3.50 tsf	
20									
		23.5-25.0' White, CHERT fragments			29	25-24-50/0.4', 10/0'			
25									

N_{60} = (Em/60)Nm N_{60} - Corrected N value for standard 60% SPT efficiency; Em - Measured hammer efficiency in percent; Nm - Observed N-value
(1) = Assumed, (2) = Actual

Coordinate System: U.S. State Plane 1983 **Coordinate Zone:** Missouri Central **Coordinate Proj. Factor:** TBD
Coordinate Datum: NAD 83 (CONUS) **Coordinate Units:** U.S. Survey Feet

* Persons using this information are cautioned that the materials shown are determined by the equipment noted and accuracy of the "log of materials" is limited thereby and by judgement of the operator. THIS INFORMATION IS FOR DESIGN PURPOSES ONLY.

Missouri Department of Transportation
Construction and Materials

BORING NO. B-7
Page 2 of 3

Job No.: 20231154.00 **County:** Webster **Route:** Route 60
Design: **Skew:** **Location:** Webster County
Bent: **Logged By:** JM **Operator:** LRK
Station: **Northing:** **Date of Work:** 03/21/24-04/24/24
Offset: **Easting:** **Depth to Water:** 39.0
Elevation: **Requested Northing:** **Depth Hole Open:**
Requested Station: **Requested Easting:** **Time Change:**
Requested Offset: **Equipment:** CME 550X,Split-Spoon Sampler, Shelby Tube
Requested Elevation: **Location Note:**
Drill No.: **Hammer Efficiency:** **Drilling Method:** HSA

Depth (ft)	Graphic	Description	Elevation (ft)	Sample Type	REC % (RQD %)	Blow Counts (N_{60})	Shear Data	Field Tests	Index Tests
25		25.0-32.0' (CH) Reddish brown, fat CLAY, trace sand, with chert gravel 25.0' -rough drilling from 24.9 to 28.0 ft. (possible cobbles)							
		28.5' -trace chert gravel below 28.5 ft.			72	5-6-12 (27)		PP = 2.00 tsf	
30									
		32.0-37.0' (CL) Reddish brown, lean CLAY, trace sand and chert gravel							
					100	2-8-10 (27)		PP = 2.00 tsf	
35									
		37.0-41.0' (CH) Reddish brown, fat CLAY, trace sand							
					100			PP = 2.00 tsf	
40		40.0' -rough drilling below 40.0 ft.							
		41.0-42.8' Tan, highly weathered DOLOMITE							
		42.2' -5" core loss and 1" clay seam at 42.2 ft.							
		42.8-50.0' DOLOMITE, tan, hard, slightly weathered, finely crystalline, thin bedded			92 (67)				
45									
		47.0' -gray below 47.0 ft.							
					100 (98)				
50									

N_{60} = (Em/60)Nm N_{60} - Corrected N value for standard 60% SPT efficiency; Em - Measured hammer efficiency in percent; Nm - Observed N-value
(1) = Assumed, (2) = Actual

Coordinate System: U.S. State Plane 1983 **Coordinate Zone:** Missouri Central **Coordinate Proj. Factor:** TBD
Coordinate Datum: NAD 83 (CONUS) **Coordinate Units:** U.S. Survey Feet

* Persons using this information are cautioned that the materials shown are determined by the equipment noted and accuracy of the "log of materials" is limited thereby and by judgement of the operator. THIS INFORMATION IS FOR DESIGN PURPOSES ONLY.

BORING DATA

Note: For locations of borings, see Sheets No. 1 thru 3.

Note: This drawing is not to scale. Follow dimensions.

Detailed Apr. 2024
Checked Apr. 2024

Sheet No. 7 of 13

STATE OF MISSOURI
CHRIS LINNEMAN
NUMBER PE-2002016690
PROFESSIONAL ENGINEER
07/31/2024 5:40:35 PM
Chris Linneman - Civil
MO PE-2002016690

DATE PREPARED 7/30/2024
ROUTE 60 | STATE MO
DISTRICT BR | SHEET NO. 7
COUNTY WEBSTER
JOB NO. J7P3425C
CONTRACT ID.
PROJECT NO.
BRIDGE NO. A9354

DESCRIPTION | DATE | REV.

MISSOURI HIGHWAYS AND TRANSPORTATION COMMISSION
105 WEST CAPITOL
JEFFERSON CITY, MO 65102
1-888-ASK-MODOT (1-888-275-6636)

EFK·Moen
Civil Engineering Design
13523 Barrett Parkway Dr
Suite 250
St. Louis, MO 63021
Phone 314-394-3100
Fax 314-394-3199
Missouri Certificate of Authority: 001578

LETTER BOREHOLE - MODOT 20150728.GDT - 4/26/24 16:35 - \\TSI\PROJECTS\STL\GEOTECH\2023 PROJECTS\20231154.00 ROUTE 60 @ A - FINAL DESIGN\WORKING FILES\MODOT WEBSTER COUNTY 20231154.GPJ

Missouri Department of Transportation
Construction and Materials

BORING NO. B-7
Page 3 of 3

Job No.: 20231154.00 **County:** Webster **Route:** Route 60
Design: **Skew:** **Location:** Webster County
Bent: **Logged By:** JM **Operator:** LRK
Station: **Northing:** **Date of Work:** 03/21/24-04/24/24
Offset: **Easting:** **Depth to Water:** 39.0
Elevation: **Requested Northing:** **Depth Hole Open:**
Requested Station: **Requested Easting:** **Time Change:**
Requested Offset: **Equipment:** CME 550X,Split-Spoon Sampler, Shelby Tube
Requested Elevation: **Location Note:**
Drill No.: **Hammer Efficiency:** **Drilling Method:** HSA

Depth (ft)	Graphic	Description	Elevation (ft)	Sample Type	REC % (RQD %)	Blow Counts (N_{60})	Shear Data	Field Tests	Index Tests
50		50.0-52.0' DOLOMITE, gray, hard, slightly weathered, finely crystalline, thin bedded, pitted							
		Refusal at 42.0 feet. Bottom of borehole at 52.0 feet.							

N_{60} = (Em/60)Nm N_{60} - Corrected N value for standard 60% SPT efficiency; Em - Measured hammer efficiency in percent; Nm - Observed N-value
(1) = Assumed, (2) = Actual

Coordinate System: U.S. State Plane 1983 **Coordinate Zone:** Missouri Central **Coordinate Proj. Factor:** TBD
Coordinate Datum: NAD 83 (CONUS) **Coordinate Units:** U.S. Survey Feet

* Persons using this information are cautioned that the materials shown are determined by the equipment noted and accuracy of the "log of materials" is limited thereby and by judgement of the operator. THIS INFORMATION IS FOR DESIGN PURPOSES ONLY.

LETTER BOREHOLE - MODOT 20150728.GDT - 4/26/24 16:36 - \\TSI\PROJECTS\STL\GEOTECH\2023 PROJECTS\20231154.00 ROUTE 60 @ A - FINAL DESIGN\WORKING FILES\MODOT WEBSTER COUNTY 20231154.GPJ

Missouri Department of Transportation
Construction and Materials

BORING NO. B-9
Page 1 of 3

Job No.: 20231154.00 **County:** Webster **Route:** Route 60
Design: **Skew:** **Location:** Webster County
Bent: **Logged By:** JM **Operator:** LRK
Station: **Northing:** **Date of Work:** 04/25/24-04/25/24
Offset: **Easting:** **Depth to Water:** 38.0
Elevation: **Requested Northing:** **Depth Hole Open:**
Requested Station: **Requested Easting:** **Time Change:** 0 hours
Requested Offset: **Equipment:** CME 550X,Split-Spoon Sampler
Requested Elevation: **Location Note:**
Drill No.: **Hammer Efficiency:** **Drilling Method:** HSA

Depth (ft)	Graphic	Description	Elevation (ft)	Sample Type	REC % (RQD %)	Blow Counts (N_{60})	Shear Data	Field Tests	Index Tests
0		0.0-43.0' (CL) Brownish-red, lean CLAY (CL)							
		2.0' -trace fine roots and gravel from 0 to 5.5 ft.			67	4-5-6 (0)			
5					89	5-7-8 (0)			
		6.0' -gray and brownish-red, below 6.0 ft.			67	4-5-7 (0)			
10					44	11-5-7 (0)			
15					44	10-28-34 (0)			
20					67	9-16-8 (0)			
25					67	6-3-8 (0)			

N_{60} = (Em/60)Nm N_{60} - Corrected N value for standard 60% SPT efficiency; Em - Measured hammer efficiency in percent; Nm - Observed N-value
(1) = Assumed, (2) = Actual

Coordinate System: U.S. State Plane 1983 **Coordinate Zone:** Missouri Central **Coordinate Proj. Factor:** TBD
Coordinate Datum: NAD 83 (CONUS) **Coordinate Units:** U.S. Survey Feet

* Persons using this information are cautioned that the materials shown are determined by the equipment noted and accuracy of the "log of materials" is limited thereby and by judgement of the operator. THIS INFORMATION IS FOR DESIGN PURPOSES ONLY.

LETTER BOREHOLE - MODOT 20150728.GDT - 4/26/24 16:36 - \\TSI\PROJECTS\STL\GEOTECH\2023 PROJECTS\20231154.00 ROUTE 60 @ A - FINAL DESIGN\WORKING FILES\MODOT WEBSTER COUNTY 20231154.GPJ

STATE OF MISSOURI
CHRIS LINNEMAN
NUMBER PE-2002016690
PROFESSIONAL ENGINEER
07/31/2024 5:38:37 PM
Chris Linneman - Civil
MO PE-2002016690

DATE PREPARED 7/30/2024
ROUTE 60 | STATE MO
DISTRICT BR | SHEET NO. 8
COUNTY WEBSTER
JOB NO. J7P3425C
CONTRACT ID.
PROJECT NO.
BRIDGE NO. A9354

DESCRIPTION | DATE

MISSOURI HIGHWAYS AND TRANSPORTATION COMMISSION
105 WEST CAPITOL
JEFFERSON CITY, MO 65102
1-888-ASK-MODOT (1-888-275-6636)

EFK•Moen
Civil Engineering Design
13523 Barrett Parkway Dr Phone 314-394-3100
Suite 250 Fax 314-394-3199
St. Louis, MO 63021
Missouri Certificate of Authority: 001578

REV.

BORING DATA

Note: For locations of borings, see Sheets No. 1 thru 3.

Detailed Apr. 2024
Checked Apr. 2024

Note: This drawing is not to scale. Follow dimensions.

Missouri Department of Transportation
Construction and Materials

BORING NO. B-9
Page 2 of 3

Job No.: 20231154.00 **County:** Webster **Route:** Route 60
Design: **Skew:** **Location:** Webster County
Bent: **Logged By:** JM **Operator:** LRK
Station: **Northing:** **Date of Work:** 04/25/24-04/25/24
Offset: **Easting:** **Depth to Water:** 38.0
Elevation: **Requested Northing:** **Depth Hole Open:**
Requested Station: **Requested Easting:** **Time Change:** 0 hours
Requested Offset: **Equipment:** CME 550X,Split-Spoon Sampler
Requested Elevation: **Location Note:**
Drill No.: **Hammer Efficiency:** **Drilling Method:** HSA

Depth (ft)	Graphic	Description	Elevation (ft)	Sample Type	REC % (RQD %)	Blow Counts (N_{60})	Shear Data	Field Tests	Index Tests
25		0.0-43.0' (CL) Brownish-red, lean CLAY (CL) *(continued)*							
					33	7-4-6 (0)			
30									
					39	3-5-6 (0)			
35									
					33	8-6-6 (0)			
40									
		43.0-53.0' DOLOMITE, tan, moderately hard to hard, slightly weathered, finely crystalline, thin bedded, dense			100 (67)				
45									
		48.2' -gray and fresh below 48.2 ft.							
50									

N_{60} = (Em/60)Nm N_{60} - Corrected N value for standard 60% SPT efficiency; Em - Measured hammer efficiency in percent; Nm - Observed N-value
(1) = Assumed, (2) = Actual

Coordinate System: U.S. State Plane 1983 **Coordinate Zone:** Missouri Central **Coordinate Proj. Factor:** TBD
Coordinate Datum: NAD 83 (CONUS) **Coordinate Units:** U.S. Survey Feet

* Persons using this information are cautioned that the materials shown are determined by the equipment noted and accuracy of the "log of materials" is limited thereby and by judgement of the operator. THIS INFORMATION IS FOR DESIGN PURPOSES ONLY.

Missouri Department of Transportation
Construction and Materials

BORING NO. B-9
Page 3 of 3

Job No.: 20231154.00 **County:** Webster **Route:** Route 60
Design: **Skew:** **Location:** Webster County
Bent: **Logged By:** JM **Operator:** LRK
Station: **Northing:** **Date of Work:** 04/25/24-04/25/24
Offset: **Easting:** **Depth to Water:** 38.0
Elevation: **Requested Northing:** **Depth Hole Open:**
Requested Station: **Requested Easting:** **Time Change:** 0 hours
Requested Offset: **Equipment:** CME 550X,Split-Spoon Sampler
Requested Elevation: **Location Note:**
Drill No.: **Hammer Efficiency:** **Drilling Method:** HSA

Depth (ft)	Graphic	Description	Elevation (ft)	Sample Type	REC % (RQD %)	Blow Counts (N_{60})	Shear Data	Field Tests	Index Tests
50		43.0-53.0' DOLOMITE, tan, moderately hard to hard, slightly weathered, finely crystalline, thin bedded, dense *(continued)*			100 (83)				
		Refusal at 43.0 feet. Bottom of borehole at 53.0 feet.							

N_{60} = (Em/60)Nm N_{60} - Corrected N value for standard 60% SPT efficiency; Em - Measured hammer efficiency in percent; Nm - Observed N-value
(1) = Assumed, (2) = Actual

Coordinate System: U.S. State Plane 1983 **Coordinate Zone:** Missouri Central **Coordinate Proj. Factor:** TBD
Coordinate Datum: NAD 83 (CONUS) **Coordinate Units:** U.S. Survey Feet

* Persons using this information are cautioned that the materials shown are determined by the equipment noted and accuracy of the "log of materials" is limited thereby and by judgement of the operator. THIS INFORMATION IS FOR DESIGN PURPOSES ONLY.

STATE OF MISSOURI
CHRIS LINNEMAN
NUMBER PE-2002016690
PROFESSIONAL ENGINEER
07/31/2024 5:35:58 PM
Chris Linneman - Civil
MO PE-2002016690

DATE PREPARED 7/30/2024
ROUTE 60 | STATE MO
DISTRICT BR | SHEET NO. 9
COUNTY WEBSTER
JOB NO. J7P3425C
CONTRACT ID.
PROJECT NO.
BRIDGE NO. A9354

DESCRIPTION | DATE

MISSOURI HIGHWAYS AND TRANSPORTATION COMMISSION
105 WEST CAPITOL
JEFFERSON CITY, MO 65102
1-888-ASK-MODOT (1-888-275-6636)

EFK•Moen
Civil Engineering Design
13523 Barrett Parkway Dr Phone 314-394-3100
Suite 250 Fax 314-394-3199
St. Louis, MO 63021
Missouri Certificate of Authority: 001578

REV.

BORING DATA

Note: For locations of borings, see Sheets No. 1 thru 3.

Detailed Apr. 2024
Checked Apr. 2024

Note: This drawing is not to scale. Follow dimensions.

LETTER BOREHOLE - MODOT 20150728.GDT - 4/26/24 16:36 - \\TSI\PROJECTS\STL\GEOTECH\2023 PROJECTS\20231154.00 ROUTE 60 @ A - FINAL DESIGN\WORKING FILES\MODOT WEBSTER COUNTY 20231154.GPJ

O:\2021R2\MoDOT_ORD_v10.10.01.03\21047 CMT Route 60 at Route A Walls\DGN\Bridge\Final\Plotsheets\A9354\B_A9354_009_J7P3425C_Boring-DataB6.dgn 8:52:08 AM 7/30/2024

TSI geotechnical, inc.

Missouri Department of Transportation
Construction and Materials

BORING NO. W-14
Page 1 of 1

Job No.: 20231154.00 **County:** Webster **Route:** Route 60
Design: **Skew:** **Location:** Webster County
Bent: **Logged By:** JM **Operator:** LRK
Station: **Northing:** **Date of Work:** 03/20/24-03/20/24
Offset: **Easting:** **Depth to Water:**
Elevation: **Requested Northing:** **Depth Hole Open:**
Requested Station: **Requested Easting:** **Time Change:**
Requested Offset: **Equipment:** CME 550X,Auger Cuttings
Requested Elevation: **Location Note:** Offset 5' 3" South (37.171983°, -92.862641°)
Drill No.: **Hammer Efficiency:** **Drilling Method:** HSA

Depth (ft)	Graphic	Description	Elevation (ft)	Sample Type	REC % (RQD %)	Blow Counts (N_{60})	Shear Data	Field Tests	Index Tests
0		0.0-15.0' (CL) Brown, lean CLAY, trace sand 0.1' -gray from 0.1 to 5.0 ft. 2.0' -rough drilling from 2.0 to 3.0 ft. 2.0' -with chert from 2.0 to 3.0 ft. 5.0' -trace gravel below 5.0 ft. 8.0' -rough drilling below 8.0 ft. (possible cobbles) Bottom of borehole at 15.0 feet.							
5									
10									
15									

N_{60} = (Em/60)Nm N_{60} - Corrected N value for standard 60% SPT efficiency; Em - Measured hammer efficiency in percent; Nm - Observed N-value
(1) = Assumed, (2) = Actual

Coordinate System: U.S. State Plane 1983 **Coordinate Zone:** Missouri Central **Coordinate Proj. Factor:** TBD
Coordinate Datum: NAD 83 (CONUS) **Coordinate Units:** U.S. Survey Feet

* Persons using this information are cautioned that the materials shown are determined by the equipment noted and accuracy of the "log of materials" is limited thereby and by judgement of the operator. THIS INFORMATION IS FOR DESIGN PURPOSES ONLY.

TSI geotechnical, inc.

Missouri Department of Transportation
Construction and Materials

BORING NO. W-15
Page 1 of 1

Job No.: 20231154.00 **County:** Webster **Route:** Route 60
Design: **Skew:** **Location:** Webster County
Bent: **Logged By:** JM **Operator:** LRK
Station: **Northing:** **Date of Work:** 03/21/24-03/21/24
Offset: **Easting:** **Depth to Water:**
Elevation: **Requested Northing:** **Depth Hole Open:**
Requested Station: **Requested Easting:** **Time Change:**
Requested Offset: **Equipment:** CME 550X,Auger Cuttings
Requested Elevation: **Location Note:** Offset 6' 8" South (37.172228°, -92.862672°)
Drill No.: **Hammer Efficiency:** **Drilling Method:** HSA

Depth (ft)	Graphic	Description	Elevation (ft)	Sample Type	REC % (RQD %)	Blow Counts (N_{60})	Shear Data	Field Tests	Index Tests
0		0.0-0.1' (CH) Dark brown, fat CLAY, trace sand, gravel, and fine roots 0.1-15.0' (CL) Brown, lean CLAY, trace sand 2.0' -rough drilling below 2.0 ft. (possible cobbles) 6.0' -with chert below 6.0 ft. Bottom of borehole at 15.0 feet.							
5									
10									
15									

N_{60} = (Em/60)Nm N_{60} - Corrected N value for standard 60% SPT efficiency; Em - Measured hammer efficiency in percent; Nm - Observed N-value
(1) = Assumed, (2) = Actual

Coordinate System: U.S. State Plane 1983 **Coordinate Zone:** Missouri Central **Coordinate Proj. Factor:** TBD
Coordinate Datum: NAD 83 (CONUS) **Coordinate Units:** U.S. Survey Feet

* Persons using this information are cautioned that the materials shown are determined by the equipment noted and accuracy of the "log of materials" is limited thereby and by judgement of the operator. THIS INFORMATION IS FOR DESIGN PURPOSES ONLY.

LETTER BOREHOLE - MODOT 20150728.GDT - 4/26/24 16:36 - \\TSI\PROJECTS\STL\GEOTECH\2023 PROJECTS\20231154.00 ROUTE 60 @ A - FINAL DESIGN\WORKING FILES\MODOT WEBSTER COUNTY 20231154.GPJ

STATE OF MISSOURI
CHRIS LINNEMAN
NUMBER PE-2002016690
PROFESSIONAL ENGINEER
07/31/2024 5:34:25 PM
Chris Linneman - Civil
MO PE-2002016690

DATE PREPARED 7/30/2024
ROUTE 60 | STATE MO
DISTRICT BR | SHEET NO. 10
COUNTY WEBSTER
JOB NO. J7P3425C
CONTRACT ID.
PROJECT NO.
BRIDGE NO. A9354

DESCRIPTION | DATE

MISSOURI HIGHWAYS AND TRANSPORTATION COMMISSION
105 WEST CAPITOL
JEFFERSON CITY, MO 65102
1-888-ASK-MODOT (1-888-275-6636)

EFK·Moen
Civil Engineering Design
13523 Barrett Parkway Dr
Suite 250
St. Louis, MO 63021
Phone 314-394-3100
Fax 314-394-3199
Missouri Certificate of Authority: 001578

BORING DATA

Note: For locations of borings, see Sheets No. 1 thru 3.

Detailed Apr. 2024
Checked Apr. 2024

Note: This drawing is not to scale. Follow dimensions.

REV.

TSI geotechnical, inc.

Missouri Department of Transportation
Construction and Materials

BORING NO. W-16
Page 1 of 1

Job No.: 20231154.00 **County:** Webster **Route:** Route 60
Design: **Skew:** **Location:** Webster County
Bent: **Logged By:** JM **Operator:** LRK
Station: **Northing:** **Date of Work:** 03/21/24-03/21/24
Offset: **Easting:** **Depth to Water:**
Elevation: **Requested Northing:** **Depth Hole Open:**
Requested Station: **Requested Easting:** **Time Change:**
Requested Offset: **Equipment:** CME 550X,Auger Cuttings
Requested Elevation: **Location Note:** Offset 5.0' South (37.172213°, -92.862305°)
Drill No.: **Hammer Efficiency:** **Drilling Method:** HSA

Depth (ft)	Graphic	Description	Elevation (ft)	Sample Type	REC % (RQD %)	Blow Counts (N_{60})	Shear Data	Field Tests	Index Tests
0		0.0-0.1' (CH) Dark brown, fat CLAY, trace roots and sand 0.1-15.0' (CL) Brown, lean CLAY, trace sand and chert 3.0' -rough drilling below 3.0 ft (possible cobbles) 4.0' -with chert below 4.0 ft.							
15		Bottom of borehole at 15.0 feet.							

N_{60} = (Em/60)Nm N_{60} - Corrected N value for standard 60% SPT efficiency; Em - Measured hammer efficiency in percent; Nm - Observed N-value
(1) = Assumed, (2) = Actual

Coordinate System: U.S. State Plane 1983 **Coordinate Zone:** Missouri Central **Coordinate Proj. Factor:** TBD
Coordinate Datum: NAD 83 (CONUS) **Coordinate Units:** U.S. Survey Feet

* Persons using this information are cautioned that the materials shown are determined by the equipment noted and accuracy of the "log of materials" is limited thereby and by judgement of the operator. THIS INFORMATION IS FOR DESIGN PURPOSES ONLY.

TSI geotechnical, inc.

Missouri Department of Transportation
Construction and Materials

BORING NO. W-17
Page 1 of 1

Job No.: 20231154.00 **County:** Webster **Route:** Route 60
Design: **Skew:** **Location:** Webster County
Bent: **Logged By:** JM **Operator:** LRK
Station: **Northing:** **Date of Work:** 03/21/24-03/21/24
Offset: **Easting:** **Depth to Water:**
Elevation: **Requested Northing:** **Depth Hole Open:**
Requested Station: **Requested Easting:** **Time Change:**
Requested Offset: **Equipment:** CME 550X,Auger Cuttings
Requested Elevation: **Location Note:** Offset 3' 8" (37.172242°, -92.862129°) Standing water in ditch 10' North of boring.
Drill No.: **Hammer Efficiency:** **Drilling Method:** HSA

Depth (ft)	Graphic	Description	Elevation (ft)	Sample Type	REC % (RQD %)	Blow Counts (N_{60})	Shear Data	Field Tests	Index Tests
0		0.0-5.0' (CH) Brown, fat CLAY, trace sand and gravel							
5		5.0-15.0' (CL) Reddish brown, lean CLAY, with chert, trace sand							
15		Bottom of borehole at 15.0 feet.							

N_{60} = (Em/60)Nm N_{60} - Corrected N value for standard 60% SPT efficiency; Em - Measured hammer efficiency in percent; Nm - Observed N-value
(1) = Assumed, (2) = Actual

Coordinate System: U.S. State Plane 1983 **Coordinate Zone:** Missouri Central **Coordinate Proj. Factor:** TBD
Coordinate Datum: NAD 83 (CONUS) **Coordinate Units:** U.S. Survey Feet

* Persons using this information are cautioned that the materials shown are determined by the equipment noted and accuracy of the "log of materials" is limited thereby and by judgement of the operator. THIS INFORMATION IS FOR DESIGN PURPOSES ONLY.

LETTER BOREHOLE - MODOT 20150728.GDT - 4/26/24 16:36 - \\TSI\PROJECTS\STL\GEOTECH\2023 PROJECTS\20231154.00 ROUTE 60 @ A - FINAL DESIGN\WORKING FILES\MODOT WEBSTER COUNTY 20231154.GPJ

BORING DATA

Note: For locations of borings, see Sheets No. 1 thru 3.

Note: This drawing is not to scale. Follow dimensions.

Sheet No. 11 of 13

Detailed Apr. 2024
Checked Apr. 2024

STATE OF MISSOURI
CHRIS LINNEMAN
NUMBER PE-2002016690
PROFESSIONAL ENGINEER
07/31/2024 5:30:30 PM
Chris Linneman - Civil
MO PE-2002016690

DATE PREPARED 7/30/2024
ROUTE 60 | STATE MO
DISTRICT BR | SHEET NO. 11
COUNTY WEBSTER
JOB NO. J7P3425C
CONTRACT ID.
PROJECT NO.
BRIDGE NO. A9354

DESCRIPTION | DATE | REV.

MISSOURI HIGHWAYS AND TRANSPORTATION COMMISSION
105 WEST CAPITOL
JEFFERSON CITY, MO 65102
1-888-ASK-MODOT (1-888-275-6636)

EFK•Moen
Civil Engineering Design
13523 Barrett Parkway Dr
Suite 250
St. Louis, MO 63021
Phone 314-394-3100
Fax 314-394-3199
Missouri Certificate of Authority: 001578

O:\2021R2\MoDOT_ORD_v10.10.01.03\21047 CMT Route 60 at Route A Walls\DGN\Bridge\Final\Plotsheets\A9354\B_A9354_011_J7P3425C_Boring-DataW16W17.dgn 8:53:14 AM 7/30/2024

TSI geotechnical, inc.

Missouri Department of Transportation
Construction and Materials

BORING NO. WB-5
Page 1 of 2

Job No.: 20231154.00 **County:** Webster **Route:** Route 60
Design: **Skew:** **Location:** Webster County
Bent: **Logged By:** JM **Operator:** LRK
Station: **Northing:** **Date of Work:** 03/21/24-03/21/24
Offset: **Easting:** **Depth to Water:** 27.0
Elevation: **Requested Northing:** **Depth Hole Open:**
Requested Station: **Requested Easting:** **Time Change:**
Requested Offset: **Equipment:** CME 550X,Split-Spoon Sampler, Shelby Tube
Requested Elevation: **Location Note:** Offset 5' 1" South. (37.172092°, -92.862586°)
Drill No.: **Hammer Efficiency:** **Drilling Method:** HSA

Depth (ft)	Graphic	Description	Elevation (ft)	Sample Type	REC % (RQD %)	Blow Counts (N_{60})	Shear Data	Field Tests	Index Tests
0		0.0-22.0' (CL) Brown, lean CLAY, trace sand							
		1.0' -trace fine roots and limestone from 1.0 to 2.5 ft.		X	67	3-4-9 (20)		PP = 2.50 tsf	
		1.0' -trace chert below 1.0 ft.		■	100		Qu Test Results	PP = 3.00 tsf	
5				X	100	11-18-17 (53)		PP = 4.00 tsf	
		5.0' -rough drilling from 5.0 to 26.0 ft. (possible cobbles)							
				X	6	18-18-19 (56)			
		8.5' -reddish brown and gray below 8.5 ft.		X	28	8-29-22 (77)		PP = 4.00 tsf	
10									
				X	61	4-14-21 (53)		PP >4.50 tsf	
15									
		18.5' -cherty below 18.5 ft.		X	33	19-44-32 (114)		PP >4.50 tsf	
20									
		22.0-25.0' (CH) Reddish brown and gray, fat CLAY, with chert, trace sand		X	72	6-21-8 (44)		PP = 3.00 tsf	
25									

N_{60} = (Em/60)Nm N_{60} - Corrected N value for standard 60% SPT efficiency; Em - Measured hammer efficiency in percent; Nm - Observed N-value
(1) = Assumed, (2) = Actual

Coordinate System: U.S. State Plane 1983 **Coordinate Zone:** Missouri Central **Coordinate Proj. Factor:** TBD
Coordinate Datum: NAD 83 (CONUS) **Coordinate Units:** U.S. Survey Feet

* Persons using this information are cautioned that the materials shown are determined by the equipment noted and accuracy of the "log of materials" is limited thereby and by judgement of the operator. THIS INFORMATION IS FOR DESIGN PURPOSES ONLY.

TSI geotechnical, inc.

Missouri Department of Transportation
Construction and Materials

BORING NO. WB-5
Page 2 of 2

Job No.: 20231154.00 **County:** Webster **Route:** Route 60
Design: **Skew:** **Location:** Webster County
Bent: **Logged By:** JM **Operator:** LRK
Station: **Northing:** **Date of Work:** 03/21/24-03/21/24
Offset: **Easting:** **Depth to Water:** 27.0
Elevation: **Requested Northing:** **Depth Hole Open:**
Requested Station: **Requested Easting:** **Time Change:**
Requested Offset: **Equipment:** CME 550X,Split-Spoon Sampler, Shelby Tube
Requested Elevation: **Location Note:** Offset 5' 1" South. (37.172092°, -92.862586°)
Drill No.: **Hammer Efficiency:** **Drilling Method:** HSA

Depth (ft)	Graphic	Description	Elevation (ft)	Sample Type	REC % (RQD %)	Blow Counts (N_{60})	Shear Data	Field Tests	Index Tests
25		25.0-44.2' (CH) Reddish brown and gray, fat CLAY, with chert							
		28.0' -trace sand from 28.0 to 30.0 ft.		■	67		Qu Test Results UCS = 1.98 ksf	PP = 2.00 tsf	
30									
		31.0' -rough drilling from 31.0 to 44.5 ft. (possible cobbles)							
				X	67	4-21-35 (84)		PP = 1.50 tsf	
35									
		38.0' -trace chert below 38.0 ft.		■	100		Qu Test Results	PP = 2.00 tsf	
40									
		44.2-44.5' Tan, highly weathered DOLOMITE		■	70			PP = 1.00 tsf	
		Refusal at 44.5 feet. Bottom of borehole at 44.5 feet.							

N_{60} = (Em/60)Nm N_{60} - Corrected N value for standard 60% SPT efficiency; Em - Measured hammer efficiency in percent; Nm - Observed N-value
(1) = Assumed, (2) = Actual

Coordinate System: U.S. State Plane 1983 **Coordinate Zone:** Missouri Central **Coordinate Proj. Factor:** TBD
Coordinate Datum: NAD 83 (CONUS) **Coordinate Units:** U.S. Survey Feet

* Persons using this information are cautioned that the materials shown are determined by the equipment noted and accuracy of the "log of materials" is limited thereby and by judgement of the operator. THIS INFORMATION IS FOR DESIGN PURPOSES ONLY.

LETTER BOREHOLE - MODOT 20150728.GDT - 4/26/24 16:36 - \\TSI\PROJECTS\STL\GEOTECH\2023 PROJECTS\2023154.00 ROUTE 60 @ A - FINAL DESIGN\WORKING FILES\MODOT WEBSTER COUNTY 20231154.GPJ

CHRIS LINNEMAN
STATE OF MISSOURI
NUMBER PE-2002016690
PROFESSIONAL ENGINEER
07/31/2024 5:26:07 PM
Chris Linneman - Civil
MO PE-2002016690

DATE PREPARED 7/30/2024
ROUTE 60 | STATE MO
DISTRICT BR | SHEET NO. 12
COUNTY WEBSTER
JOB NO. J7P3425C
CONTRACT ID.
PROJECT NO.
BRIDGE NO. A9354

DESCRIPTION | DATE | REV.

MISSOURI HIGHWAYS AND TRANSPORTATION COMMISSION
MoDOT
105 WEST CAPITOL
JEFFERSON CITY, MO 65102
1-888-ASK-MODOT (1-888-275-6636)

EFK•Moen
Civil Engineering Design
13523 Barrett Parkway Dr Phone 314-394-3100
Suite 250 Fax 314-394-3199
St. Louis, MO 63021
Missouri Certificate of Authority: 001578

BORING DATA

Note: For locations of borings, see Sheets No. 1 thru 3.

Detailed Apr. 2024
Checked Apr. 2024

Note: This drawing is not to scale. Follow dimensions.

O:\2021R2\MoDOT_ORD_v10.10.01.03\21047 CMT Route 60 at Route A Walls\DGN\Bridge\Final\Plotsheets\A9354\B_A9354_012_J7P3425C_Boring-DataWB5.1.2.dgn 8:53:48 AM 7/30/2024

TSI geotechnical, inc.

Missouri Department of Transportation
Construction and Materials

BORING NO. WB-6
Page 1 of 1

Job No.: 20231154.00 **County:** Webster **Route:** Route 60
Design: **Skew:** **Location:** Webster County
Bent: **Logged By:** JM **Operator:** LRK
Station: **Northing:** **Date of Work:** 03/21/24-03/21/24
Offset: **Easting:** **Depth to Water:**
Elevation: **Requested Northing:** **Depth Hole Open:**
Requested Station: **Requested Easting:** **Time Change:**
Requested Offset: **Equipment:** CME 550X,Split-Spoon Sampler
Requested Elevation: **Location Note:** Offset 5' 1" South. (37.172306°, -92.861959°)
Drill No.: **Hammer Efficiency:** **Drilling Method:** HSA

Depth (ft)	Graphic	Description	Elevation (ft)	Sample Type	REC % (RQD %)	Blow Counts (N_{60})	Shear Data	Field Tests	Index Tests
0		0.0-14.0' (CL) Brown and gray, lean CLAY, trace chert							
		1.0' -trace sand from 1.0 to 2.5 ft.		X	72	1-4-8 (18)		PP = 3.50 tsf	
		3.0' -rough drilling after 3.0 ft. (possible cobbles)		X	100	40-50/0.3', 10/0'		PP = 3.50 tsf	
5									
		6.0' -with chert below 6.0 ft.		X	67	7-18-17 (53)		PP = 4.50 tsf	
				X	28	15-15-17 (48)		PP >4.50 tsf	
10									
15		14.0-15.0' White, CHERT		X	89	15-21-16 (56)		PP >4.50 tsf	
		Bottom of borehole at 15.0 feet.							

N_{60} = (Em/60)Nm N_{60} - Corrected N value for standard 60% SPT efficiency; Em - Measured hammer efficiency in percent; Nm - Observed N-value
(1) = Assumed, (2) = Actual

Coordinate System: U.S. State Plane 1983 **Coordinate Zone:** Missouri Central **Coordinate Proj. Factor:** TBD
Coordinate Datum: NAD 83 (CONUS) **Coordinate Units:** U.S. Survey Feet

* Persons using this information are cautioned that the materials shown are determined by the equipment noted and accuracy of the "log of materials" is limited thereby and by judgement of the operator. THIS INFORMATION IS FOR DESIGN PURPOSES ONLY.

LETTER BOREHOLE - MODOT 20150728.GDT - 4/26/24 16:36 - \\TSI\PROJECTS\STL\GEOTECH\2023 PROJECTS\20231154.00 ROUTE 60 @ A - FINAL DESIGN\WORKING FILES\MODOT WEBSTER COUNTY 20231154.GPJ

BORING DATA

Note: For locations of borings, see Sheets No. 1 thru 3.

Detailed Apr. 2024
Checked Apr. 2024

Note: This drawing is not to scale. Follow dimensions.

Sheet No. 13 of 13

STATE OF MISSOURI
CHRIS LINNEMAN
NUMBER PE-2002016690
PROFESSIONAL ENGINEER
07/31/2024 5:43:17 PM
Chris Linneman - Civil
MO PE-2002016690

DATE PREPARED 7/30/2024
ROUTE 60 | STATE MO
DISTRICT BR | SHEET NO. 13
COUNTY WEBSTER
JOB NO. J7P3425C
CONTRACT ID.
PROJECT NO.
BRIDGE NO. A9354

DESCRIPTION | DATE | REV.

MISSOURI HIGHWAYS AND TRANSPORTATION COMMISSION
105 WEST CAPITOL
JEFFERSON CITY, MO 65102
1-888-ASK-MODOT (1-888-275-6636)

EFK•Moen
Civil Engineering Design
13523 Barrett Parkway Dr
Suite 250
St. Louis, MO 63021
Phone 314-394-3100
Fax 314-394-3199
Missouri Certificate of Authority: 001578

284' MECHANICALLY STABILIZED EARTH (MSE) RETAINING WALL SYSTEM

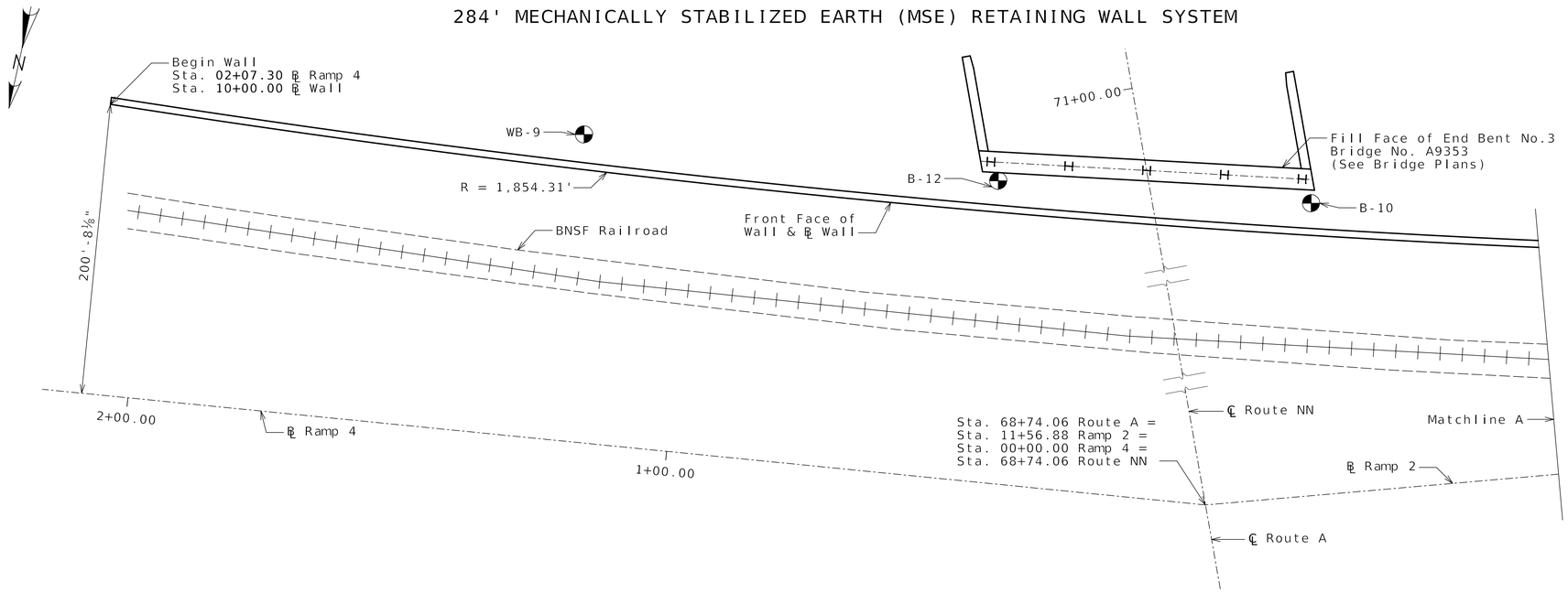

PLAN

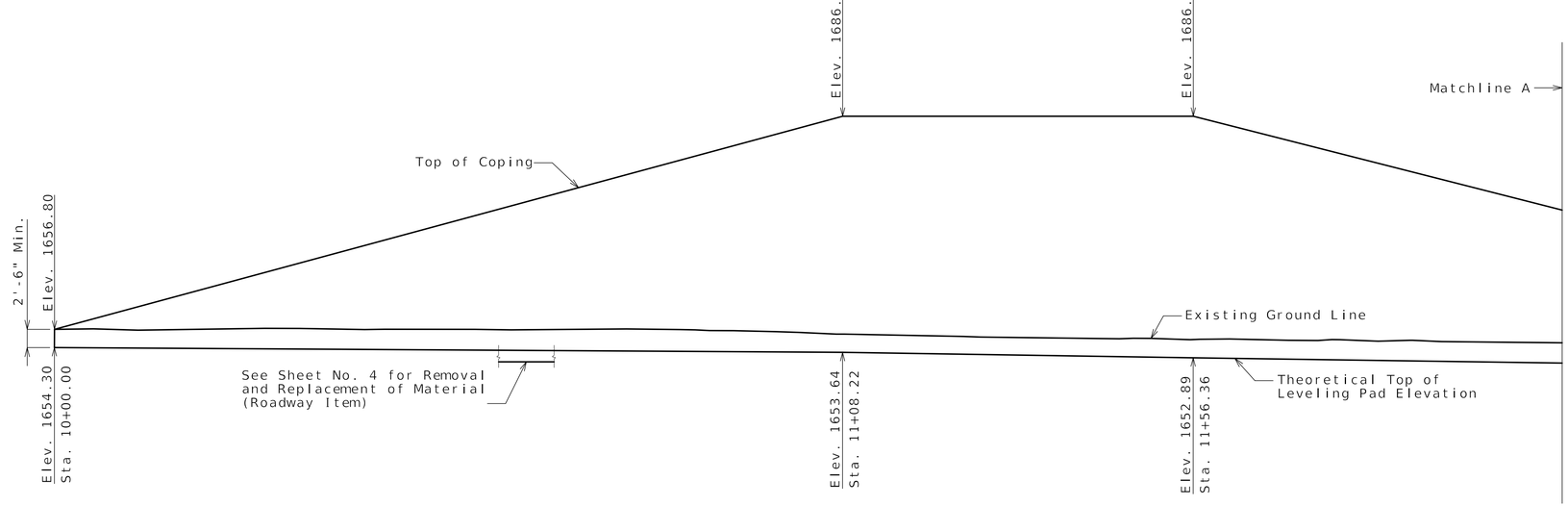

DEVELOPED ELEVATION

Concrete leveling pad not shown for clarity (1)

(1) Wall contractor shall show the following items on the design drawings and/or on the fabricator shop drawings.

- Leveling pad horizontal
- Leveling pad length and step elevations shall be based on wall manufacturer's recommendation. Top of leveling pad elevations shall not be higher than theoretical top of leveling pad elevations shown on these plans.

CURVE R2EBOFF_4
PI 7+70.27
PC 5+04.13
PT 10+34.52
Δ 11° 52' 14.7" (RT)
D 2° 14' 17.2"
L 530.39'
T 266.15'
R 2,560.00'

Indicates location of borings.

Notice and Disclaimer Regarding Boring Log Data

The locations of all subsurface borings for this structure are shown on the plan sheet(s) for this structure. The boring data for all locations indicated, as well as any other boring logs or other factual records of subsurface data and investigations performed by the department for the design of the project, are shown on Sheet(s) No. 5 thru 8 and may be included in the Electronic Bridge Deliverables. They will also be available from the Project Contact upon written request. No greater significance or weight should be given to the boring data depicted on the plan sheets than is given to the subsurface data available from the district or elsewhere.

The Commission does not represent or warrant that any such boring data accurately depicts the conditions to be encountered in constructing this project. A contractor assumes all risks it may encounter in basing its bid prices, time or schedule of performance on the boring data depicted here or those available from the district, or on any other documentation not expressly warranted, which the contractor may obtain from the Comission.

B.M. CONTROL POINT NO. 137
5/8" I.B. W/2" ALUMINUM CAP
N: 487406.2123, E: 1534366.0016, ELEVATION: 1664.2490'

RETAINING WALL ALONG RAMP 2 AND RAMP 4

ROUTE A FROM ROUTE 417 TO ROUTE NN
ABOUT 1.0 MILES SOUTH OF ROUTE 417
BEGINNING STATION 2+07.30 ℄ RAMP 4

Designed Apr. 2024
Detailed Apr. 2024
Checked Apr. 2024

Note: This drawing is not to scale. Follow dimensions.

SEC/SUR 25 TWP 29N RGE 18W

STATE OF MISSOURI
CHRIS LINNEMAN
NUMBER PE-2002016690
PROFESSIONAL ENGINEER
07/31/2024 8:38:39 AM
Chris Linneman - Civil
MO PE-2002016690

DATE PREPARED 7/30/2024
ROUTE 60 | STATE MO
DISTRICT BR | SHEET NO. 1
COUNTY WEBSTER
JOB NO. J7P3425C
CONTRACT ID.
PROJECT NO.
BRIDGE NO. A9355

DESCRIPTION | DATE | REV.

MISSOURI HIGHWAYS AND TRANSPORTATION COMMISSION
105 WEST CAPITOL
JEFFERSON CITY, MO 65102
1-888-ASK-MODOT (1-888-275-6636)

EFK•Moen
Civil Engineering Design
13523 Barrett Parkway Dr
Suite 250
St. Louis, MO 63021
Phone 314-394-3100
Fax 314-394-3199
Missouri Certificate of Authority: 001578

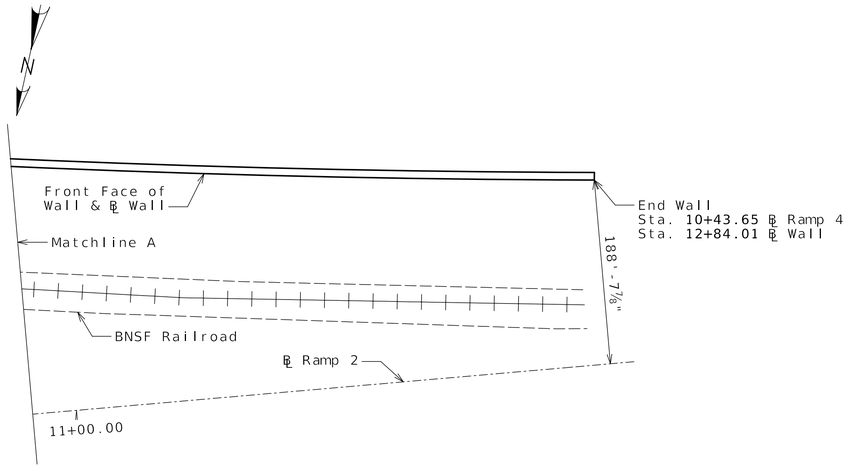

PLAN

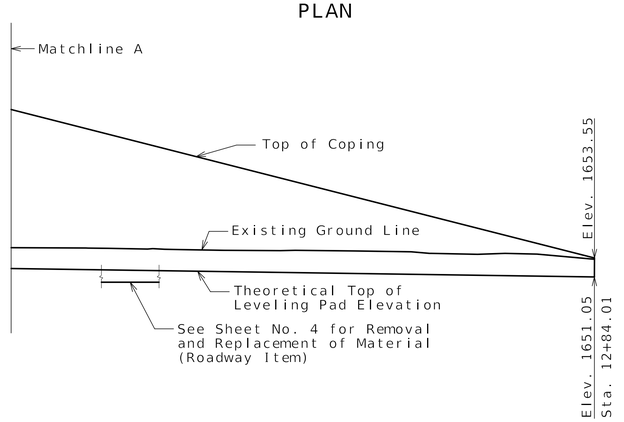

DEVELOPED ELEVATION

Concrete Leveling pad not shown for clarity. (1)

(1) Wall contractor shall show the following items on the design drawings and/or on the fabricator shop drawings.

- Leveling pad horizontal.
- Leveling pad length and step elevations shall be based on wall manufacturer's recommendation.Top of leveling pad elevations shall not be higher than theoretical top of leveling pad elevations shown on these plans.

Estimated Quantities		
Item		Total
Mechanically Stabilized Earth Wall Systems	sq. foot	5740

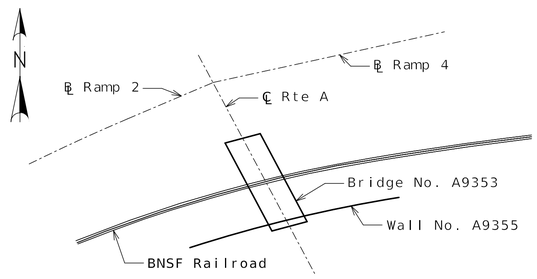

LOCATION SKETCH

MSE Wall Systems Data Table					
Proprietary Wall Systems		Combination Wall Systems			
Manufacturer	System	Facing Unit Manufacturer	Facing Unit	Geogrid Manufacturer	Geogrid

MSE Wall Systems Data Table is to be completed by MoDOT construction personnel to record the manufacturer of the proprietary wall system or the manufacturers of the combination wall system that was used for constructing the MSE wall.

General Notes:

SEC/SUR 25 TWP 29N RGE 18W

Design Specifications:

2002 AASHTO LFD (17th Ed.) Standard Specifications (Section 5 ASD Design)
Seismic Performance Category = A
Acceleration Coefficient = 0.04

Design Loading:

Φ_f = 26° and Unit weight, γ_s = 120 pcf for retained backfill material to be retained by the mechanically stabilized earth wall system.

Φ_f = 22° for unimproved foundation ground where wall is to bear.
Φ_f = 36° for improved foundation ground where wall is to bear.

For unimproved foundation ground, the allowable bearing pressure is 3.4 to 5.1 ksf.
For improved foundation ground, the allowable bearing pressure is 6.0 ksf.

The maximum applied bearing pressure for the controlling design case at the foundation level shall be shown on the shop drawings and shall be less than the allowable bearing pressure for foundation ground provided herein. For seismic design the maximum applied bearing pressure shall be less than two times the allowable bearing pressure.

Allowable bearing pressure and limits of improved foundation ground shall not be adjusted from that as shown on the plans.
Contractor shall include design Φ_f (actual $\Phi_f \geq 34°$) and the total unit weight, γ_s, for the select granular backfill (reinforced backfill and wedge area backfill) for structural systems on shop drawings. Contractor shall identify source of select granular backfill material, submit proctor in accordance with AASHTO T 99 (ASTM D698) and gradation with the shop drawings. When backfill material is too coarse to develop a proctor curve the contractor shall determine the maximum dry density (relative density) in accordance with ASTM D4253 and ASTM D4254 and assume percent passing the 200 sieve for optimum water content.

Total unit weight, γ_s = (95% compaction) x (maximum dry density) x (1 + optimum water content)

Design Φ_f = 34°for the select granular backfill (reinforced backfill) only for structural systems.

Factor of safety shall be 2.0 for overturning and 1.5 for sliding.

For seismic design the factor of safety shall be 1.5 for overturning and 1.1 for sliding.

Use default values for the pullout friction factor, F^*, in accordance with AASHTO figure 5.8.5.2A and default value for scale effect correction factor, α, in accordance with AASHTO table 5.8.5.2A. For approved steel strips not shown in AASHTO figure 5.8.5.2A, use $F^* \leq 2.0$ at zero depth and $F^* \leq \tan \Phi_f$ at 20 feet depth and Φ_f design = 34°. F^* and α values shall be shown on the shop drawings.

Design Unit Stresses:

All concrete for leveling pad and coping shall be Class B or B-1 with f'c = 4000 psi.

The minimum compressive strength of concrete for precast panel precast concrete block shall be 4,000 psi in accordance with Sec 1052.

Miscellaneous:

The MSE wall system shall be built vertical.

The MSE wall system shall be built in accordance with Sec 720.

The MSE wall system shall be a large block wall system.

The cost of joint filler and joint seal, complete in place, will be considered completely covered by the contract unit price for Concrete Traffic Barrier (Type A D). See Roadway Plans.

Panel, concrete block and coping (or capstone) reinforcement shall be epoxy coated.

A filter cloth meeting the requirements for a Separation Geotextile material shall be placed between the select granular backfill for structural systems and the backfill being retained by the mechanically stabilized earth wall system.

Coping shall be required on this structure. When CIP coping sections extend beyond the limits of a single panel, bond breaker (roofing felt or other approved alternate) between wall panel and coping is required. Coping joints shall use 3/4-inch chamfers and shall be sealed with 3/4-inch joint filler. Coping reinforcement shall terminate 1 1/2-inch minimum from face of coping joint.

The contractor shall be solely responsible to coordinate construction of the wall with bridge and roadway construction and ensure that the bridge and roadway construction, resulting or existing obstructions, shall not impact the construction or performance of the wall. Soil reinforcement shall be designed and placed to avoid damage by pile driving, guardrail post installation, utility and sign foundations. (See Roadway and Bridge plans.)

STATE OF MISSOURI
CHRIS LINNEMAN
NUMBER PE-2002016690
PROFESSIONAL ENGINEER
07/31/2024 8:38:33 AM
Chris Linneman - Civil
MO PE-2002016690

DATE PREPARED 7/30/2024
ROUTE 60 | STATE MO
DISTRICT BR | SHEET NO. 2
COUNTY WEBSTER
JOB NO. J7P3425C
CONTRACT ID.
PROJECT NO.
BRIDGE NO. A9355

DESCRIPTION	DATE

MISSOURI HIGHWAYS AND TRANSPORTATION COMMISSION
105 WEST CAPITOL
JEFFERSON CITY, MO 65102
1-888-ASK-MODOT (1-888-275-6636)

EFK•Moen
Civil Engineering Design
13523 Barrett Parkway Dr
Suite 250
St. Louis, MO 63021
Phone 314-394-3100
Fax 314-394-3199
Missouri Certificate of Authority: 001578

Detailed MAR 2024
Checked MAR 2024

Note: This drawing is not to scale. Follow dimensions.

REV.

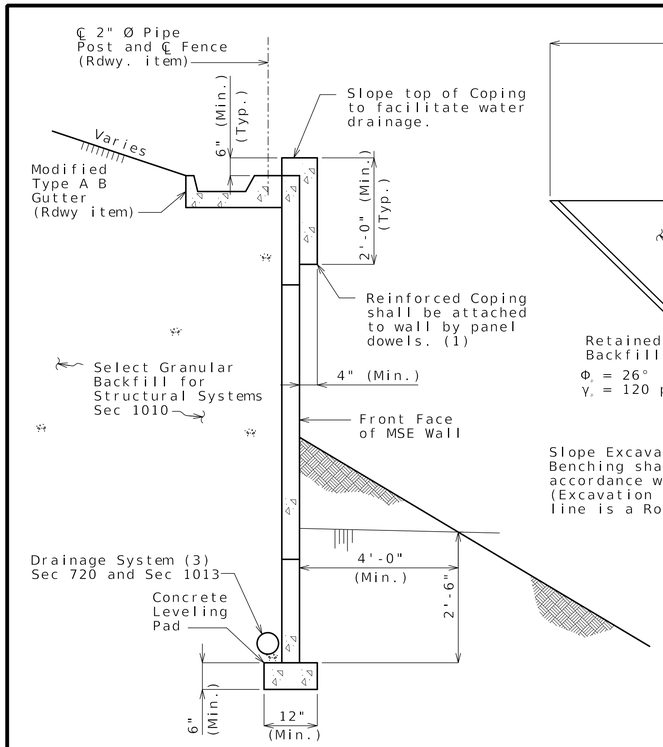

TYPICAL SECTION THRU
LARGE BLOCK WALL

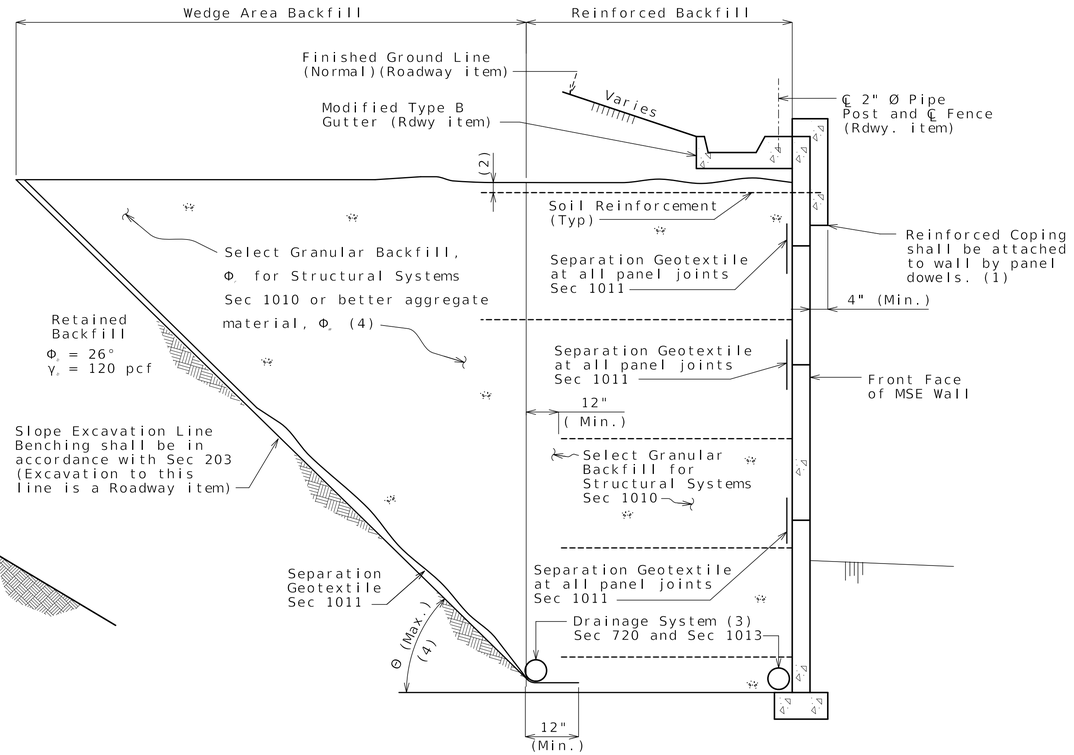

TYPICAL SECTION THRU
LARGE BLOCK WALL SHOWING FILTER CLOTH

General Notes Cont.:

Minimum 18" wide Geotextile strips shall be centered at vertical and horizontal joints of panel. Geotextile material shall be adhered to back face of panel using an adhesive compound supplied by the manufacturer. All edges of each fabric strip shall provide a positive seal. A minimum 18" overlap shall be provided between spliced filter fabric.

Aluminized soil reinforcement shall have edges coated with coating material per manufacturer.

Soil reinforcement shall be spaced to avoid roadway drop inlet behind wall.

All steel soil reinforcements shall be separated from other metallic elements by at least 3 inches.

The splay angle should be less than 15° and tensile capacity of splayed reinforcement shall be reduced by the cosine of the splay angle. Soil reinforcement shall clear the obstruction by at least 3 inches.

No reinforcement shall be left unconnected to the wall face or arbitrarily cut/bent in the field to avoid the obstruction.

Where interference between the vertical obstruction and the soil reinforcement is unavoidable, the design of the wall near the obstruction may be modified using one of the alternatives in FHWA-NHI-10-24, Section 5.4.2. Show detail layout on the drawings. For wall designs with horizontal obstructions in reinforced soil mass, see FHWA-NHI-10-024, Section 5.4.3.

Excavation:
Excavation quantities and pay items are given on the roadway plans. Excavation quantities are based on a soil reinforcement length of 23 ft. The soil reinforcement length may vary based upon the wall design selected by the contractor. Plan excavation quantities will be paid regardless of any actual quantities removed based on the soil reinforcement length and design selected.

(1) Inverted U-shape reinforced capstone may be used in lieu of coping. Panel dowels for level-up concrete shall be required and provided by manufacturer. The dowels shall be field trimmed to clear the capstone by a minimum of 1 1/2 inches and a maximum of 2 1/2 inches.

(2) Topmost layer of reinforcement shall be fully covered with select granular backfill for structural systems, as approved by the wall manufacturer, before placement of the Separation Geotextile.

(3) Minimum 6" diameter perforated PVC or PE pipe.

Manufacturer shall show drain details on design plans to be submitted as shown on MoDOT MSE wall plans and/or roadway plans.

Contractor shall modify the drain details as shown if it will improve flow as may be the case for stepped leveling pad, and for an uneven ground line (approval of the engineer required).

(4) Select granular backfill shall extend a minimum of 12" beyond the end of all soil reinforcement. Where the angle, Θ, between the retained backfill excavation/fill line and the horizontal is less than 90°, the wedge area backfill between Θ and 90° shall be filled with select granular backfill for structural systems meeting the requirements of Section 1010.

- For (45°+ Φ꜀/3) < Θ ≤ 90°, properties for retained backfill shall be used for active force computations.

- For Θ ≤ (45°+ Φ꜀/3), contractor shall have the option to use select granular backfill, Φ꜀, or better aggregate material, Φ꜀ for active force computations in the wedge area backfill. For active force computations, the angle of internal friction for wedge area backfill material, Φ꜀ or Φ꜀, shall be limited to 34° unless determined otherwise in accordance with Section 1010. If Φ꜀ or Φ꜀ > 34°is desired for wedge area backfill then test report shall be submitted with shop drawings. Φ꜀ or Φ꜀ shall not be greater than 40° for computations. Final configuration of this option shall be sent to Geotechnical Section for a new overall global stability analysis. Design Φ꜀ shall be shown on the shop drawings if used.

Material Properties Used in Design				
Reinf. Fill/Select Granular Backfill		Active Force Computations		Foundation
Φ°	γ (pcf)	Φ°	γ (pcf)	Φ°

Note: MSE Wall designer shall include table on shop drawings and provide values used in the design computations. Effects of cohesion shall be ignored unless approved by the engineer.

The slope excavation line shall be benched and separation geotextile shall be placed between the retained backfill and either select granular backfill or better aggregate material, and between the select granular backfill and better aggregate material.

Show range of acceptable theta (Θ) angle on shop drawings which must be consistent with design computations and proposed construction of wall. Show active force computation properties on shop drawings and in design computations. Coordination between wall designer (manufacturer) and contractor is required before shop drawing submittal.

DETAILS FOR GENERIC MSE WALL

Detailed Apr. 2024
Checked Apr. 2024

Note: This drawing is not to scale. Follow dimensions.

STATE OF MISSOURI
CHRIS LINNEMAN
NUMBER PE-2002016690
PROFESSIONAL ENGINEER
07/31/2024 8:38:28 AM
Chris Linneman - Civil
MO PE-2002016690

DATE PREPARED
7/30/2024

ROUTE	STATE
60	MO
DISTRICT	SHEET NO.
BR	3

COUNTY
WEBSTER

JOB NO.
J7P3425C

CONTRACT ID.

PROJECT NO.

BRIDGE NO.
A9355

DESCRIPTION	DATE

MISSOURI HIGHWAYS AND TRANSPORTATION COMMISSION
105 WEST CAPITOL
JEFFERSON CITY, MO 65102
1-888-ASK-MODOT (1-888-275-6636)

EFK•Moen
Civil Engineering Design
13523 Barrett Parkway Dr
Suite 250
St. Louis, MO 63021
Phone 314-394-3100
Fax 314-394-3199
Missouri Certificate of Authority: 001578

REV.

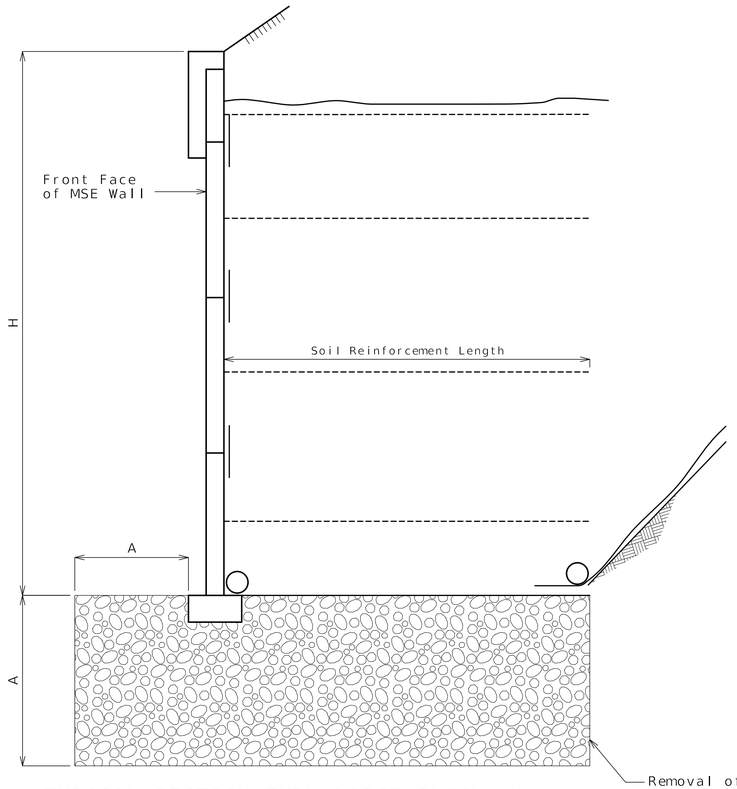

TYPICAL SECTION THRU LARGE BLOCK WALL
SHOWING REMOVAL AND REPLACEMENT OF MATERIAL

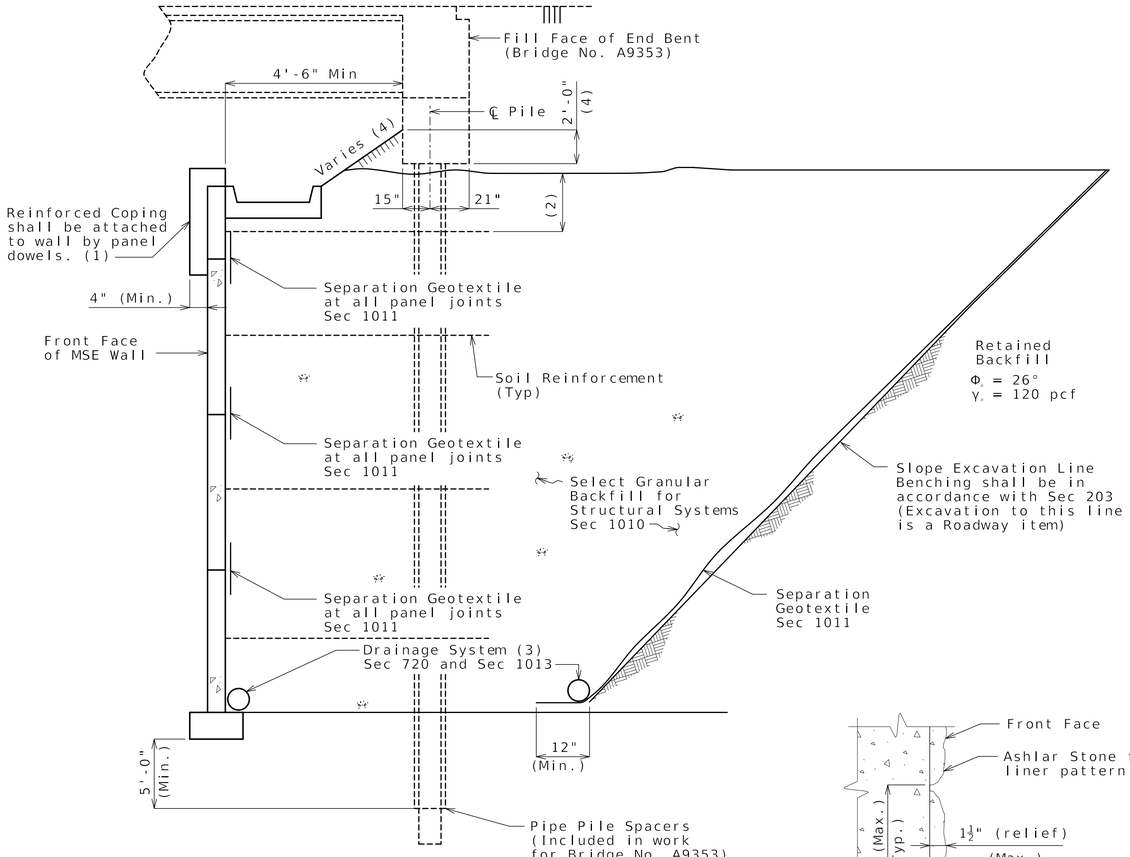

TYPICAL SECTION THRU
LARGE BLOCK WALL UNDER BRIDGE

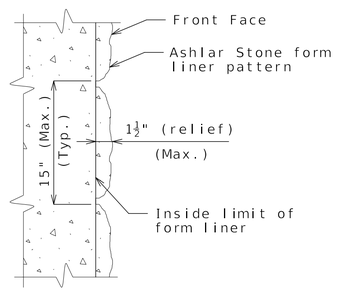

FORM LINER DETAIL
(Large Block Wall)

REMOVAL AND REPLACEMENT OF MATERIAL	
Wall Height	A
0ft<H≤10ft	2'-0"
10ft<H≤15ft	3'-0"
15ft<H≤20ft	4'-0"
20ft<H≤29ft	5'-0"

Note: For additional information, see "TYPICAL SECTION THRU LARGE BLOCK WALL SHOWING FILTER CLOTH".

(1) Inverted U-shape reinforced capstone may be used in lieu of coping. Panel dowels for level-up concrete shall be required and provided by manufacturer. The dowels shall be field trimmed to clear the capstone by a minimum of 1 1/2 inches and a maximum of 2 1/2 inches.

(2) Topmost layer of reinforcement shall be fully covered with select granular backfill for structural systems, as approved by the wall manufacturer, before placement of the Separation Geotextile.

(3) Minimum 6" diameter perforated PVC or PE pipe.

Manufacturer shall show drain details on design plans to be submitted as shown on MoDOT MSE wall plans and/or roadway plans.

Contractor shall modify the drain details as shown if it will improve flow as may be the case for stepped leveling pad, and for an uneven ground line (approval of the engineer required).

(4) See bridge plans.

Notes:

The cost of form liners for MSE wall systems, complete in place, will be considered completely covered by the contract unit price for Mechanically Stabilized Earth Wall System.

Form liner shall be constructed in accordance with Special Provisions.

The following is a list of form liner manufacturers and types which may be used. Depth of relief for all form liner pattern's shall vary up to 1 1/2". The height of any single 'stone' shall be 15" maximum.

- Scott System, Inc.: Form liner pattern #167 "Ashlar Stone"
- Fitzgerald Formliners: Form liner pattern #16986 "Ashlar Stone"
- Greenstreak: Form liner pattern #330 "Ashlar Stone"
- Spec Formliners: Form liner pattern #1515 "Ashlar Stone"
- Customrock: Form liner pattern #12020 "Tollway Ashlar"
- An approved equal

DETAILS FOR GENERIC MSE WALL

Detailed Apr. 2024
Checked Apr. 2024

Note: This drawing is not to scale. Follow dimensions.

STATE OF MISSOURI
ALEX BENZ
NUMBER PE-2018003121
PROFESSIONAL ENGINEER
Alex C. Benz
10/30/2024 8:15:10 AM
Alex Benz - Civil
MO PE-2018003121

DATE PREPARED
10/30/2024

ROUTE	STATE
60	MO
DISTRICT	SHEET NO.
BR	4

COUNTY
WEBSTER

JOB NO.
J7P3425C

CONTRACT ID.

PROJECT NO.

BRIDGE NO.
A9355

DATE	DESCRIPTION	REV.

MISSOURI HIGHWAYS AND TRANSPORTATION COMMISSION
105 WEST CAPITOL
JEFFERSON CITY, MO 65102
1-888-ASK-MODOT (1-888-275-6636)

EFK•Moen
Civil Engineering Design
13523 Barrett Parkway Dr
Suite 250
St. Louis, MO 63021
Phone 314-394-3100
Fax 314-394-3199
Missouri Certificate of Authority: 001578

TSI geotechnical, inc.

Missouri Department of Transportation
Construction and Materials

BORING NO. B-10
Page 1 of 3

Job No.: 20231154.00 **County:** Webster **Route:** Route 60
Design: **Skew:** **Location:** Webster County
Bent: **Logged By:** SO **Operator:** LRK
Station: **Northing:** **Date of Work:** 04/04/24-04/04/24
Offset: **Easting:** **Depth to Water:** 33.5
Elevation: **Requested Northing:** **Depth Hole Open:**
Requested Station: **Requested Easting:** **Time Change:**
Requested Offset: **Equipment:** CME 550X,Split-Spoon Sampler
Requested Elevation: **Location Note:**
Drill No.: **Hammer Efficiency:** **Drilling Method:** HSA

Depth (ft)	Graphic	Description	Elevation (ft)	Sample Type	REC % (RQD %)	Blow Counts (N_{60})	Shear Data	Field Tests	Index Tests
0		0.0-3.0' (CH) Brown and gray, fat CLAY, with weathered chert							
					39	2-2-22 (36)		PP = 1.50 tsf	
		3.0-12.0' Brown, weathered CHERT							
5					60	50/0.4', 10/0'			
					10	50/0.4', 10/0'			
10		12.0-25.0' (CH) Red, fat CLAY, with weathered chert							
15					11	30-25-50/0.5', 10/0'			
					100	50/0.3', 10/0'		PP = 2.25 tsf	
20									
		23.5' -brown below 23.5 ft.			89	3-5-12 (26)		PP = 3.00 tsf	
25									

N_{60} = (Em/60)Nm N_{60} - Corrected N value for standard 60% SPT efficiency; Em - Measured hammer efficiency in percent; Nm - Observed N-value
(1) = Assumed, (2) = Actual

Coordinate System: U.S. State Plane 1983 **Coordinate Zone:** Missouri Central **Coordinate Proj. Factor:** TBD
Coordinate Datum: NAD 83 (CONUS) **Coordinate Units:** U.S. Survey Feet

* Persons using this information are cautioned that the materials shown are determined by the equipment noted and accuracy of the "log of materials" is limited thereby and by judgement of the operator. THIS INFORMATION IS FOR DESIGN PURPOSES ONLY.

TSI geotechnical, inc.

Missouri Department of Transportation
Construction and Materials

BORING NO. B-10
Page 2 of 3

Job No.: 20231154.00 **County:** Webster **Route:** Route 60
Design: **Skew:** **Location:** Webster County
Bent: **Logged By:** SO **Operator:** LRK
Station: **Northing:** **Date of Work:** 04/04/24-04/04/24
Offset: **Easting:** **Depth to Water:** 33.5
Elevation: **Requested Northing:** **Depth Hole Open:**
Requested Station: **Requested Easting:** **Time Change:**
Requested Offset: **Equipment:** CME 550X,Split-Spoon Sampler
Requested Elevation: **Location Note:**
Drill No.: **Hammer Efficiency:** **Drilling Method:** HSA

Depth (ft)	Graphic	Description	Elevation (ft)	Sample Type	REC % (RQD %)	Blow Counts (N_{60})	Shear Data	Field Tests	Index Tests
25		25.0-35.5' (CH) Brown, fat CLAY, with weathered chert							
30					67	19-12-10 (33)		PP = 2.00 tsf	
35		35.5-38.1' DOLOMITE, tan and gray, moderately hard to hard, moderately to highly weathered, finely crystalline to aphanitic, thin to thick bedded, pitted to dense			67	6-9-11 (30)		PP = 2.00 tsf	
		38.1-42.5' Core loss			37 (20)				
40									
		42.5-50.0' DOLOMITE, tan and gray, moderately hard, moderately to slightly weathered, finely crystalline to aphanitic, medium to thick bedded, dense			58 (57)				
45									
					100 (100)				
50									

N_{60} = (Em/60)Nm N_{60} - Corrected N value for standard 60% SPT efficiency; Em - Measured hammer efficiency in percent; Nm - Observed N-value
(1) = Assumed, (2) = Actual

Coordinate System: U.S. State Plane 1983 **Coordinate Zone:** Missouri Central **Coordinate Proj. Factor:** TBD
Coordinate Datum: NAD 83 (CONUS) **Coordinate Units:** U.S. Survey Feet

* Persons using this information are cautioned that the materials shown are determined by the equipment noted and accuracy of the "log of materials" is limited thereby and by judgement of the operator. THIS INFORMATION IS FOR DESIGN PURPOSES ONLY.

LETTER BOREHOLE - MODOT 20150728.GDT - 4/26/24 16:35 - \\TSI\PROJECTS\STL\GEOTECH\2023 PROJECTS\202311154.00 ROUTE 60 @ A - FINAL DESIGN\WORKING FILES\MODOT WEBSTER COUNTY 20231154.GPJ

CHRIS LINNEMAN — STATE OF MISSOURI — NUMBER PE-2002016690 — PROFESSIONAL ENGINEER
07/31/2024 5:49:04 PM
Chris Linneman - Civil
MO PE-2002016690

DATE PREPARED 7/30/2024
ROUTE 60 | STATE MO
DISTRICT BR | SHEET NO. 5
COUNTY WEBSTER
JOB NO. J7P3425C
CONTRACT ID.
PROJECT NO.
BRIDGE NO. A9355

DESCRIPTION | DATE

MISSOURI HIGHWAYS AND TRANSPORTATION COMMISSION
105 WEST CAPITOL
JEFFERSON CITY, MO 65102
1-888-ASK-MODOT (1-888-275-6636)

EFK•Moen
Civil Engineering Design
13523 Barrett Parkway Dr Phone 314-394-3100
Suite 250 Fax 314-394-3199
St. Louis, MO 63021
Missouri Certificate of Authority: 001578

REV.

BORING DATA

Note: For locations of borings, see Sheet No. 1.

Detailed Apr. 2024
Checked Apr. 2024

Note: This drawing is not to scale. Follow dimensions.

Sheet No. 5 of 8

Missouri Department of Transportation
Construction and Materials

BORING NO. B-10
Page 3 of 3

Job No.: 20231154.00 **County:** Webster **Route:** Route 60
Design: **Skew:** **Location:** Webster County
Bent: **Logged By:** SO **Operator:** LRK
Station: **Northing:** **Date of Work:** 04/04/24-04/04/24
Offset: **Easting:** **Depth to Water:** 33.5
Elevation: **Requested Northing:** **Depth Hole Open:**
Requested Station: **Requested Easting:** **Time Change:**
Requested Offset: **Equipment:** CME 550X,Split-Spoon Sampler
Requested Elevation: **Location Note:**
Drill No.: **Hammer Efficiency:** **Drilling Method:** HSA

Depth (ft)	Graphic	Description	Elevation (ft)	Sample Type	REC % (RQD %)	Blow Counts (N_{60})	Shear Data	Field Tests	Index Tests
50		50.0-50.5' DOLOMITE, gray, moderately hard, slightly weathered to fresh, aphanitic, thick bedded, dense Refusal at 35.5 feet. Bottom of borehole at 50.5 feet.							

N_{60} = (Em/60)Nm N_{60} - Corrected N value for standard 60% SPT efficiency; Em - Measured hammer efficiency in percent; Nm - Observed N-value
(1) = Assumed, (2) = Actual

Coordinate System: U.S. State Plane 1983 **Coordinate Zone:** Missouri Central **Coordinate Proj. Factor:** TBD
Coordinate Datum: NAD 83 (CONUS) **Coordinate Units:** U.S. Survey Feet

* Persons using this information are cautioned that the materials shown are determined by the equipment noted and accuracy of the "log of materials" is limited thereby and by judgement of the operator. THIS INFORMATION IS FOR DESIGN PURPOSES ONLY.

LETTER BOREHOLE - MODOT 20150728.GDT - 4/26/24 16:35 - \\TSI\PROJECTS\STL\GEOTECH\2023 PROJECTS\20231154.00 ROUTE 60 @ A - FINAL DESIGN\WORKING FILES\MODOT WEBSTER COUNTY 20231154.GPJ

Missouri Department of Transportation
Construction and Materials

BORING NO. B-12
Page 1 of 3

Job No.: 20231154.00 **County:** Webster **Route:** Route 60
Design: **Skew:** **Location:** Webster County
Bent: **Logged By:** SO **Operator:** LRK
Station: **Northing:** **Date of Work:** 04/04/24-04/04/24
Offset: **Easting:** **Depth to Water:** 38.5
Elevation: **Requested Northing:** **Depth Hole Open:**
Requested Station: **Requested Easting:** **Time Change:**
Requested Offset: **Equipment:** CME 550X,Split-Spoon Sampler
Requested Elevation: **Location Note:**
Drill No.: **Hammer Efficiency:** **Drilling Method:** HSA

Depth (ft)	Graphic	Description	Elevation (ft)	Sample Type	REC % (RQD %)	Blow Counts (N_{60})	Shear Data	Field Tests	Index Tests
0		0.0-3.0' (GC) Brown, clayey GRAVEL		X	28	30-35-24 (89)			
		3.0-25.0' (CH) Red, gravelly fat CLAY		X	44	9-14-15 (44)			
5				X	42	18-50/0.5', 10/0'			
				X	67	15-50/0.5', 10/0'		PP = 2.50 tsf	
10									
				X	33	5-12-13 (38)			LL = 90 PL = 21
15									
		18.5' -brown, with gravel from 18.5 to 20.0 ft.		X	100	4-6-7 (20)		PP = 2.50 tsf	
20									
				X	83	5-8-11 (29)		PP = 2.50 tsf	
25									

N_{60} = (Em/60)Nm N_{60} - Corrected N value for standard 60% SPT efficiency; Em - Measured hammer efficiency in percent; Nm - Observed N-value
(1) = Assumed, (2) = Actual

Coordinate System: U.S. State Plane 1983 **Coordinate Zone:** Missouri Central **Coordinate Proj. Factor:** TBD
Coordinate Datum: NAD 83 (CONUS) **Coordinate Units:** U.S. Survey Feet

* Persons using this information are cautioned that the materials shown are determined by the equipment noted and accuracy of the "log of materials" is limited thereby and by judgement of the operator. THIS INFORMATION IS FOR DESIGN PURPOSES ONLY.

LETTER BOREHOLE - MODOT 20150728.GDT - 4/26/24 16:35 - \\TSI\PROJECTS\STL\GEOTECH\2023 PROJECTS\20231154.00 ROUTE 60 @ A - FINAL DESIGN\WORKING FILES\MODOT WEBSTER COUNTY 20231154.GPJ

BORING DATA

Note: For locations of borings, see Sheet No. 1.

Detailed Apr. 2024
Checked Apr. 2024

Note: This drawing is not to scale. Follow dimensions.

Sheet No. 6 of 8

STATE OF MISSOURI
CHRIS LINNEMAN
NUMBER PE-2002016690
PROFESSIONAL ENGINEER

07/31/2024 5:46:18 PM
Chris Linneman - Civil
MO PE-2002016690

DATE PREPARED 7/30/2024
ROUTE 60 | STATE MO
DISTRICT BR | SHEET NO. 6
COUNTY WEBSTER
JOB NO. J7P3425C
CONTRACT ID.
PROJECT NO.
BRIDGE NO. A9355

DESCRIPTION | DATE | REV.

MISSOURI HIGHWAYS AND TRANSPORTATION COMMISSION
105 WEST CAPITOL
JEFFERSON CITY, MO 65102
1-888-ASK-MODOT (1-888-275-6636)

EFK•Moen
Civil Engineering Design
13523 Barrett Parkway Dr
Suite 250
St. Louis, MO 63021
Phone 314-394-3100
Fax 314-394-3199
Missouri Certificate of Authority: 001578

Missouri Department of Transportation
Construction and Materials

BORING NO. B-12
Page 2 of 3

Job No.: 20231154.00 **County:** Webster **Route:** Route 60
Design: **Skew:** **Location:** Webster County
Bent: **Logged By:** SO **Operator:** LRK
Station: **Northing:** **Date of Work:** 04/04/24-04/04/24
Offset: **Easting:** **Depth to Water:** 38.5
Elevation: **Requested Northing:** **Depth Hole Open:**
Requested Station: **Requested Easting:** **Time Change:**
Requested Offset: **Equipment:** CME 550X,Split-Spoon Sampler
Requested Elevation: **Location Note:**
Drill No.: **Hammer Efficiency:** **Drilling Method:** HSA

Depth (ft)	Graphic	Description	Elevation (ft)	Sample Type	REC % (RQD %)	Blow Counts (N_{60})	Shear Data	Field Tests	Index Tests
25		25.0-27.0' (CH) Gray and brown, gravelly fat CLAY							
		27.0-42.0' (CH) Brown, fat CLAY, with gravel							
				X	100	4-7-10 (26)		PP = 2.25 tsf	
30									
				X	100	38-9-8 (26)		PP = 2.50 tsf	
35									
		38.5' -red and brown below 38.5 ft.		X	88	8-6-50/0.4', 10/0'		PP = 3.50 tsf	
40									
		42.0-50.0' DOLOMITE, tan and gray, moderately hard, slightly weathered to fresh, very finely crystalline to aphanitic, thin to thick bedded, dense			100 (86)				
45									
					100 (100)				
50									

N_{60} = (Em/60)Nm N_{60} - Corrected N value for standard 60% SPT efficiency; Em - Measured hammer efficiency in percent; Nm - Observed N-value
(1) = Assumed, (2) = Actual

Coordinate System: U.S. State Plane 1983 **Coordinate Zone:** Missouri Central **Coordinate Proj. Factor:** TBD
Coordinate Datum: NAD 83 (CONUS) **Coordinate Units:** U.S. Survey Feet

* Persons using this information are cautioned that the materials shown are determined by the equipment noted and accuracy of the "log of materials" is limited thereby and by judgement of the operator. THIS INFORMATION IS FOR DESIGN PURPOSES ONLY.

Missouri Department of Transportation
Construction and Materials

BORING NO. B-12
Page 3 of 3

Job No.: 20231154.00 **County:** Webster **Route:** Route 60
Design: **Skew:** **Location:** Webster County
Bent: **Logged By:** SO **Operator:** LRK
Station: **Northing:** **Date of Work:** 04/04/24-04/04/24
Offset: **Easting:** **Depth to Water:** 38.5
Elevation: **Requested Northing:** **Depth Hole Open:**
Requested Station: **Requested Easting:** **Time Change:**
Requested Offset: **Equipment:** CME 550X,Split-Spoon Sampler
Requested Elevation: **Location Note:**
Drill No.: **Hammer Efficiency:** **Drilling Method:** HSA

Depth (ft)	Graphic	Description	Elevation (ft)	Sample Type	REC % (RQD %)	Blow Counts (N_{60})	Shear Data	Field Tests	Index Tests
50		50.0-51.9' DOLOMITE, gray, moderately hard, slightly weathered to fresh, aphanitic, thick bedded, dense			100 (100)				
		Refusal at 42.0 feet. Bottom of borehole at 51.9 feet.							

N_{60} = (Em/60)Nm N_{60} - Corrected N value for standard 60% SPT efficiency; Em - Measured hammer efficiency in percent; Nm - Observed N-value
(1) = Assumed, (2) = Actual

Coordinate System: U.S. State Plane 1983 **Coordinate Zone:** Missouri Central **Coordinate Proj. Factor:** TBD
Coordinate Datum: NAD 83 (CONUS) **Coordinate Units:** U.S. Survey Feet

* Persons using this information are cautioned that the materials shown are determined by the equipment noted and accuracy of the "log of materials" is limited thereby and by judgement of the operator. THIS INFORMATION IS FOR DESIGN PURPOSES ONLY.

LETTER BOREHOLE - MODOT 20150728.GDT - 4/26/24 16:35 - \\TSI\PROJECTS\STL\GEOTECH\2023.PROJECTS\20231154.00 ROUTE 60 @ A - FINAL DESIGN\WORKING FILES\MODOT WEBSTER COUNTY 20231154.GPJ

CHRIS LINNEMAN
STATE OF MISSOURI
NUMBER PE-2002016690
PROFESSIONAL ENGINEER
07/31/2024 5:44:37 PM
Chris Linneman - Civil
MO PE-2002016690

DATE PREPARED 7/30/2024
ROUTE 60 | STATE MO
DISTRICT BR | SHEET NO. 7
COUNTY WEBSTER
JOB NO. J7P3425C
CONTRACT ID.
PROJECT NO.
BRIDGE NO. A9355

DESCRIPTION | DATE | REV.

MISSOURI HIGHWAYS AND TRANSPORTATION COMMISSION
105 WEST CAPITOL
JEFFERSON CITY, MO 65102
1-888-ASK-MODOT (1-888-275-6636)

EFK•Moen
Civil Engineering Design
13523 Barrett Parkway Dr
Suite 250
St. Louis, MO 63021
Phone 314-394-3100
Fax 314-394-3199
Missouri Certificate of Authority: 001578

BORING DATA

Note: For locations of borings, see Sheet No. 1.

Detailed Apr. 2024
Checked Apr. 2024

Note: This drawing is not to scale. Follow dimensions.

TSI geotechnical, inc.

Missouri Department of Transportation
Construction and Materials

BORING NO. WB-9
Page 1 of 1

Job No.: 20231154.00 **County:** Webster **Route:** Route 60
Design: **Skew:** **Location:** Webster County
Bent: **Logged By:** SO **Operator:** LRK
Station: **Northing:** **Date of Work:** 04/04/24-04/04/24
Offset: **Easting:** **Depth to Water:**
Elevation: **Requested Northing:** **Depth Hole Open:**
Requested Station: **Requested Easting:** **Time Change:**
Requested Offset: **Equipment:** CME 550X,Split-Spoon Sampler, Shelby Tube
Requested Elevation: **Location Note:**
Drill No.: **Hammer Efficiency:** **Drilling Method:** HSA

Depth (ft)	Graphic	Description	Elevation (ft)	Sample Type	REC % (RQD %)	Blow Counts (N_{60})	Shear Data	Field Tests	Index Tests
0		0.0-6.5' (GC) Brown, clayey GRAVEL							
				X	44	27-35-24 (89)			MC = 9.9%
				X	38	41-35-50/0.3', 10/0'			MC = 12.3%
5									
				■	100		Qu Test Results		
		6.5-15.0' (CH) Red, gravelly fat CLAY		X	56	15-20-10 (45)			MC = 28.4%
				X	100	50/0.5', 10/0'		PP = 2.75 tsf	LL = 155 PL = 27
10									
				X	67	16-27-28 (83)		PP = 3.00 tsf	MC = 16.9%
		13.5' -brown and gray, with gravel below 13.5 ft.		X	100	10-7-50/0.5', 10/0'		PP = 3.25 tsf	MC = 22.5%
15		Bottom of borehole at 15.0 feet.							

N_{60} = (Em/60)Nm N_{60} - Corrected N value for standard 60% SPT efficiency; Em - Measured hammer efficiency in percent; Nm - Observed N-value
(1) = Assumed, (2) = Actual

Coordinate System: U.S. State Plane 1983 **Coordinate Zone:** Missouri Central **Coordinate Proj. Factor:** TBD
Coordinate Datum: NAD 83 (CONUS) **Coordinate Units:** U.S. Survey Feet

* Persons using this information are cautioned that the materials shown are determined by the equipment noted and accuracy of the "log of materials" is limited thereby and by judgement of the operator. THIS INFORMATION IS FOR DESIGN PURPOSES ONLY.

LETTER BOREHOLE - MODOT 20150728.GDT - 4/26/24 16:36 - \\TSIPROJECTSISTL\GEOTECH\2023 PROJECTS\20231154.00 ROUTE 60 @ A - FINAL DESIGN\WORKING FILES\MODOT WEBSTER COUNTY 20231154.GPJ

CHRIS LINNEMAN — STATE OF MISSOURI — NUMBER PE-2002016690 — PROFESSIONAL ENGINEER
07/31/2024 5:50:30 PM
Chris Linneman - Civil
MO PE-2002016690

DATE PREPARED 7/30/2024
ROUTE 60 | STATE MO
DISTRICT BR | SHEET NO. 8
COUNTY WEBSTER
JOB NO. J7P3425C
CONTRACT ID.
PROJECT NO.
BRIDGE NO. A9355

DESCRIPTION | DATE | REV.

MISSOURI HIGHWAYS AND TRANSPORTATION COMMISSION
MoDOT
105 WEST CAPITOL
JEFFERSON CITY, MO 65102
1-888-ASK-MODOT (1-888-275-6636)

EFK•Moen
Civil Engineering Design
13523 Barrett Parkway Dr
Suite 250
St. Louis, MO 63021
Phone 314-394-3100
Fax 314-394-3199
Missouri Certificate of Authority: 001578

BORING DATA

Note: For locations of borings, see Sheet No. 1.

Detailed Apr. 2024
Checked Apr. 2024

Note: This drawing is not to scale. Follow dimensions.

Sheet No. 8 of 8

O:\2021R2\MoDOT_ORD_v10.10.01.03\21047 CMT Route 60 at Route A Walls\DGN\Bridge\Final\Plotsheets\A9355\B_A9355_008_J7P3425C_Boring-DataWB9.dgn 9:02:27 AM 7/30/2024