MISSOURI HIGHWAYS AND TRANSPORTATION COMMISSION

PLANS FOR PROPOSED STATE HIGHWAY

MONTGOMERY COUNTY

DESIGN DESIGNATION

A.A.D.T. - 2025 = 465
A.A.D.T. - 2055 = 540
D.H.V. = 7%
T = 9%
V = 55 M.P.H.

FUNCTIONAL CLASSIFICATION - MAJOR COLLECTOR

NO RIGHT OF WAY REQUIRED

KEY MAP
LOCATION OF MONTGOMERY COUNTY

NOT TO SCALE

BEGIN PROJECT
STA 447+10.00

PROJECT LOCATION

GRADING, DRAINAGE, PAVING AND REPLACEMENT OF BRIDGE L0564 OVER DRY FORK CREEK

END PROJECT
STA 458+30.00

T47N

T46N

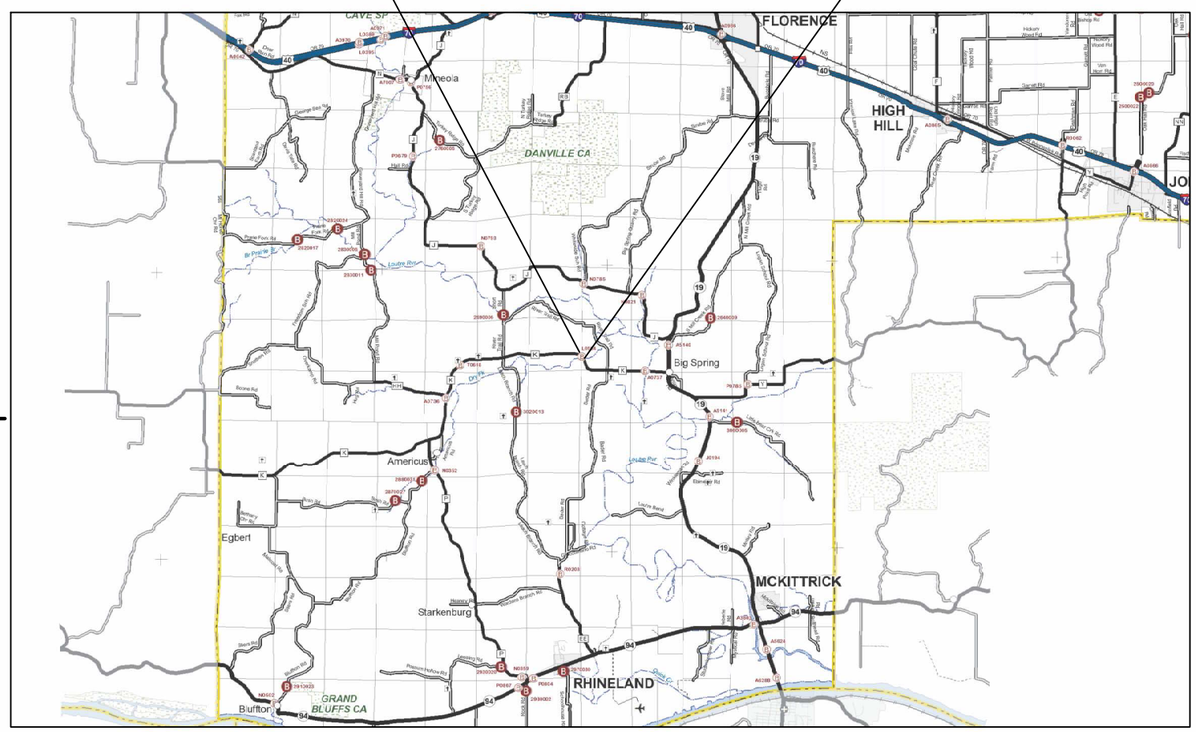

R6W | R5W

CONVENTIONAL SYMBOLS
(USED IN PLANS)

	EXISTING	NEW
BUILDINGS AND STRUCTURES		
GUARD RAIL		
GUARD CABLE		
CONCRETE RIGHT-OF-WAY MARKER		
STEEL RIGHT-OF-WAY MARKER		
LOCATION SURVEY MARKER		
UTILITIES		
FIBER OPTICS	—FO—	~~FO~~
OVERHEAD CABLE TV	-OTV-	~~OTV~~
UNDERGROUND CABLE TV	-UTV-	~~UTV~~
OVERHEAD TELEPHONE	—OT—	~~OT~~
UNDERGROUND TELEPHONE	—UT—	~~UT~~
OVERHEAD POWER	—OE—	~~OE~~
UNDERGROUND POWER	—UE—	~~UE~~
SANITARY SEWER	—S—	~~S~~
STORM SEWER	—SS—	~~SS~~
GAS	—G—	~~G~~
WATER	—W—	~~W~~
MANHOLE	SAN	
FIRE HYDRANT	HYD	
WATER VALVE	WV	
WATER METER	WM	
DROP INLET	DI	
DITCH BLOCK		
GROUND MOUNTED SIGN	SIGN	
LIGHT POLE		
H-FRAME POWER POLE		
TELEPHONE PEDESTAL	PED	
FENCE		
CHAIN LINK	—V—	
WOVEN WIRE	—X—	
GATE POST		
BENCHMARK	BM	

NOTE: DASHED OR OPEN SYMBOLS INDICATE EXISTING FEATURES

INDEX OF SHEETS

LENGTH OF PROJECT

BEGINNING OF PROJECT STA. 447 + 10.00
END OF PROJECT STA. 458 + 30.00

APPARENT LENGTH 1,120.00 FEET

EQUATIONS AND EXCEPTIONS:
STA. 456 + 87.80 (BK) = STA. 457+97.50 (AH)

TOTAL CORRECTIONS 109.70 FEET
NET LENGTH OF PROJECT 1010.30 FEET
STATE LENGTH 0.191 MILES

FOR INFORMATION ONLY
ESTIMATED DISTURBED ACRES 1 ACRE

STATE OF MISSOURI
DONALD THOMAS SAIKO
NUMBER PE-28475
PROFESSIONAL ENGINEER
THIS SHEET HAS BEEN SIGNED, SEALED AND DATED ELECTRONICALLY.

DATE PREPARED 11/11/2024

ROUTE	STATE
K	MO
DISTRICT	SHEET NO.
NE	1

COUNTY MONTGOMERY
JOB NO. JNE0053
CONTRACT ID.
PROJECT NO.
BRIDGE NO.

DESCRIPTION	DATE

MISSOURI HIGHWAYS AND TRANSPORTATION COMMISSION
105 WEST CAPITOL
JEFFERSON CITY, MO 65102
1-888-ASK-MODOT (1-888-275-6636)

GARVER, LLC.
7509 NW TIFFANY SPRINGS PARKWAY, SUITE 200
KANSAS CITY, MO 64153
PHONE: (816) 298-6465
CERTIFICATE OF AUTHORITY NO. 2008013090

001_TITLE_01_NE0053_i1.dgn 11:43:17 AM 11/11/2024

OPTIONAL PAVEMENT

1.75" BP-1 PG64-22
8.25" BIT. BASE PG64-22

OR

8" PCCP

(1) 10:1 OR FLATTER

(2) WIDENING FOR GUARDRAIL WIDTH VARIES
SEE STD PLANS 606.81

(3) REFER TO SUPERELEVATION DIAGRAM ON
PROFILE FOR CROSS SLOPE INFORMATION
IN SECTION ON CURVE

(4) CONTRACTOR SHALL MODIFY ROCK FILL AS NEEDED
TO ALLOW PLACEMENT OF GUARDRAIL

(5) STA. 455+50.00 TO 456+00.00
SHOULDER WIDTH TRANSITION: 2'-0'
STA. 456+00.00 TO 458+30.00
SHOULDER WIDTH: 0'

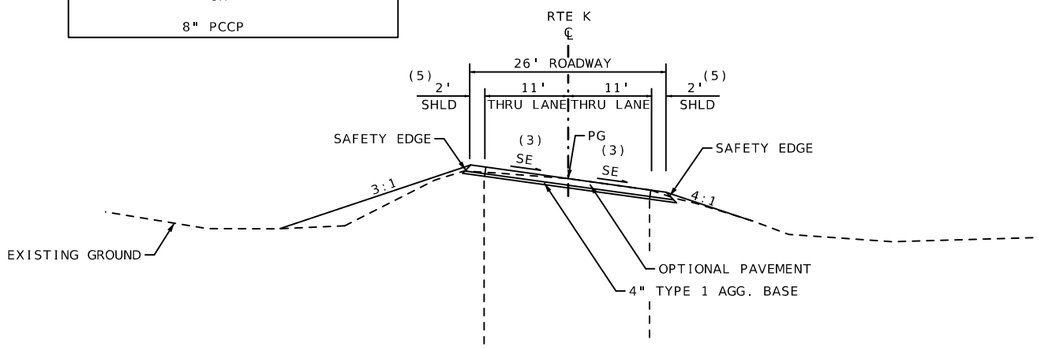

SECTION ON SUPERELEVATED CURVE

STA. 447+10.00 TO STA. 451+29.91
STA. 453+84.16 TO STA. 457+97.97

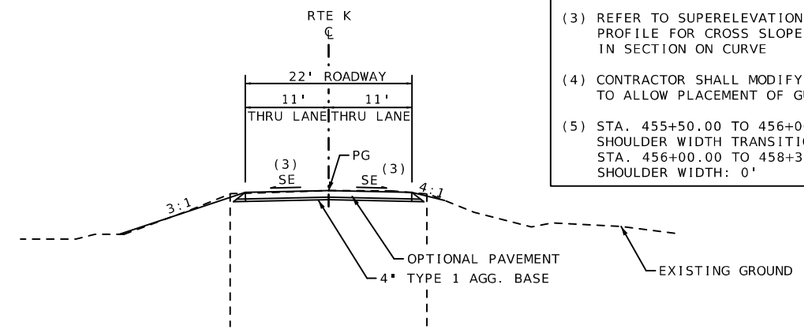

SECTION ON TANGENT

STA. 457+97.97 TO STA. 458+30.00

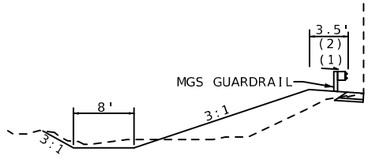

STA. 450+66.04 TO STA. 451+41.28
STA. 453+90.14 TO STA. 455+02.48

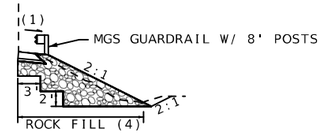

STA. 449+41.26 TO STA. 451+19.50

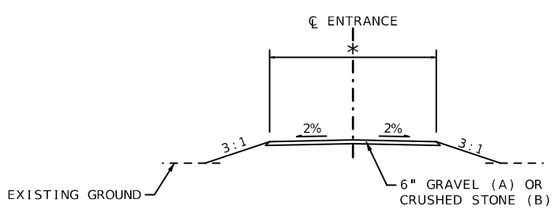

ENTRANCE TYPICAL SECTION

STA. 454+37.95 TO STA. 454+78.93 *= 20'
STA. 455+37.94 TO STA. 455+55.77 *= 16'

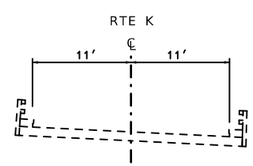

EXISTING TYPICAL SECTION - BRIDGE L0564

STA. 451+36.00 TO STA. 453+73.17

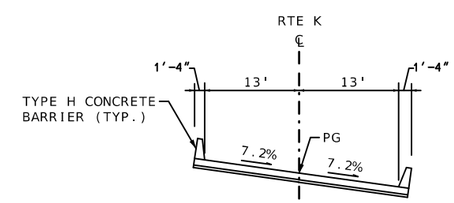

PROPOSED TYPICAL SECTION - BRIDGE A9536

STA. 451+29.91 TO STA. 453+84.16

TYPICAL SECTIONS
SHEET 1 OF 1

STATE OF MISSOURI
DONALD THOMAS SAKO
NUMBER PE-28475
PROFESSIONAL ENGINEER

THIS SHEET HAS BEEN SIGNED, SEALED AND DATED ELECTRONICALLY.

DATE PREPARED	
10/24/2024	
ROUTE K	STATE MO
DISTRICT NE	SHEET NO. 2
COUNTY MONTGOMERY	
JOB NO. JNE0053	
CONTRACT ID.	
PROJECT NO.	
BRIDGE NO.	

DATE	DESCRIPTION

MISSOURI HIGHWAYS AND TRANSPORTATION COMMISSION
105 WEST CAPITOL
JEFFERSON CITY, MO 65102
1-888-ASK-MODOT (1-888-275-6636)

GARVER, LLC.
7509 NW TIFFANY SPRINGS
PARKWAY, SUITE 200
KANSAS CITY, MO 64153
PHONE: (816) 298-6465
CERTIFICATE OF AUTHORITY
NO. 2008013090

002_TS_01_NE0053_i10.dgn 9:59:47 AM 10/24/2024

REMOVAL OF IMPROVEMENTS

SHEET	ROADWAY	STA	STA	LOCATION	DESCRIPTION	UNIT	AMOUNT	REMARKS
4	RTE K	444+00.00		RT	WEIGHT LIMIT SIGN	EA	1.0	BEYOND PROJECT LIMITS
4	RTE K	447+10.00		LT/RT	SAWCUT	LF	21.0	
4	RTE K	447+10.00	451+36.92	LT/RT	PAVEMENT	SY	992.0	
4	RTE K	451+27.15		RT	OBJECT MARKER SIGN	EA	1.0	
4	RTE K	451+43.52		LT	OBJECT MARKER SIGN	EA	1.0	
4	RTE K	453+68.10		RT	OBJECT MARKER SIGN	EA	1.0	
4	RTE K	453+74.53	458+30.00	LT/RT	PAVEMENT	SY	813.0	
4	RTE K	453+85.11		LT	OBJECT MARKER SIGN	EA	1.0	
4	RTE K	454+31.37	454+72.95	RT	30" PIPE	LF	36.1	
4	RTE K	455+37.58	455+58.55	LT	24" PIPE	LF	21.8	
4	RTE K	458+30.00		LT/RT	SAWCUT	LF	21.0	
4	RTE K	467+40.00		LT	WEIGHT LIMIT SIGN	EA	1.0	BEYOND PROJECT LIMITS
						TOTAL	LUMP SUM	

MOBILIZATION

LUMP SUM

CONTRACTOR FURNISHED SURVEYING AND STAKING

LUMP SUM

NOTE: SEEDING ACRES FOR INFORMATION PURPOSES ONLY

MISC. SEEDING & MULCHING

SHEET NO	ROADWAY	BEGIN STA.	END STA.	LOCATION	SEEDING (PERMANENT) (ACRE)	SEEDING (TEMPORARY) (ACRE)	REMARKS
4	RTE K	447+10.00	451+29.94	LT	0.27	0.27	
4	RTE K	447+10.00	451+29.94	RT	0.08	0.08	
4	RTE K	453+84.16	458+30.00	LT	0.17	0.17	
4	RTE K	453+84.16	458+30.00	RT	0.07	0.07	
PROJECT TOTAL					0.6	0.6	
USE					1 LUMP SUM		

EARTHWORK

SHEET	ROADWAY	BEGIN STA.	END STA.	CLASS A EXCAVATION (CY)	COMPACTING EMBANKMENT (CY)	EMBANKMENT IN PLACE (CY)	REMARKS
4	RTE K	447+10.00	451+29.91	693	591	0	
4	RTE K	453+84.16	458+30.00	673	333	0	
PROJECT TOTAL				1,366	924	0	

PAVEMENT

SHEET	ROADWAY	STA.	STA.	LOCATION	OPTIONAL PAVEMENT (SY)	TYPE 1 AGGREGATE FOR BASE (4") (SY)	SUBGRADE COMPACTION (6") (STA)	REMARKS
4	RTE K	447+10.00	451+10.41	LT/RT	1,157	1,157	4.0	
4	RTE K	454+03.66	458+30.00	LT/RT	852	852	5.0	
PROJECT TOTAL					2,009	2,009	9	

PAVEMENT MARKING

SHEET NO	ROADWAY	BEGIN STA.	END STA.	LOCATION	4" WHITE WATERBORNE PAVEMENT MARKING PAINT, TYPE P BEADS SOLID (LF)	4" YELLOW WATERBORNE PAVEMENT MARKING PAINT, TYPE P BEADS SOLID (LF)	REMARKS
11	RTE K	447+10.00	458+30.00	LT	780.30		SOLID WHITE
11	RTE K	447+10.00	458+30.00	℄		2020.60	DOUBLE SOLID YELLOW
11	RTE K	447+10.00	458+30.00	RT	780.30		SOLID WHITE
PROJECT TOTAL					1,561	2,021	

ENTRANCES

SHEET	ROADWAY	STA.	STA.	LOCATION	GRAVEL (A) OR CRUSHED STONE (B) (6") (TON)	REMARKS
4	RTE K	454+38.99	454+75.63	RT	15	
4	RTE K	455+38.34	455+55.68	LT	10	
PROJECT TOTAL					25	

PIPE CULVERTS

SHEET	ROADWAY	BEGIN STA.	END STA.	LOCATION	24" GROUP C PIPE (LF)	24" FES (EA)	CLASS 3 EXC. (CY)	REMARKS
4	RTE K	453+67.80	454+70.60	RT	100	2	39	DRIVEWAY 454+53.51
4	RTE K	455+34.33	455+60.24	LT	27	2	12	DRIVEWAY 455+46.86
PROJECT TOTAL					127	4	51	

REMOVAL AND REINSTALLATION

SHEET	ROADWAY	STA	STA	LOCATION	DESCRIPTION	UNIT	AMOUNT	REMARKS
4	RTE K	447+90.00		RT	WATER GAUGE SIGN	EA	1	SEE JSP
						TOTAL	1	

PERMANENT EROSION CONTROL

SHEET	ROADWAY	BEGIN STA.	END STA.	LOCATION	ROCK FILL PLACING (CY)	ROCK FILL FURNISHING (CY)	TYPE 2 ROCK BLANKET PLACING (CY)	TYPE 2 ROCK BLANKET FURNISHING (CY)	PERM EROSION CONTROL GEOTEXTILE (SY)	REMARKS
4	RTE K	448+77.53	451+29.91	RT	262	262	-	-	196	
4	RTE K	451+29.91	451+53.91	LT/RT	-	-	93	93	139	
4	RTE K	453+51.16	453+84.16	LT/RT	-	-	150	150	225	
PROJECT TOTAL					262	262	243	243	560	

GUARDRAIL

SHEET	ROADWAY	BEGIN STA.	END STA.	LOCATION	MGS GUARDRAIL 8 FT. POSTS, 6'-3" SPACING (LF)	MGS GUARDRAIL (LF)	MGS BRIDGE APPROACH TRANSITION SECTION (EACH)	TYPE A CRASHWORTHY END TERMINAL (MASH) (EACH)	REMARKS
4	RTE K	449+41.27	451+19.50	RT	100.00		1	1	
4	RTE K	450+66.01	451+41.28	LT			1	1	
4	RTE K	453+90.14	455+02.51	LT		37.5	1	1	
PROJECT TOTAL					100	38	3	3	

SUMMARY OF QUANTITIES
SHEET 1 OF 3

STATE OF MISSOURI
DONALD THOMAS SAKO
NUMBER PE-28475
PROFESSIONAL ENGINEER
THIS SHEET HAS BEEN SIGNED, SEALED AND DATED ELECTRONICALLY.

DATE PREPARED 10/24/2024
ROUTE K | STATE MO
DISTRICT NE | SHEET NO. 3
COUNTY MONTGOMERY
JOB NO. JNE0053
CONTRACT ID.
PROJECT NO.
BRIDGE NO.

DESCRIPTION
DATE

MISSOURI HIGHWAYS AND TRANSPORTATION COMMISSION
105 WEST CAPITOL
JEFFERSON CITY, MO 65102
1-888-ASK-MODOT (1-888-275-6636)

GARVER, LLC.
7509 NW TIFFANY SPRINGS PARKWAY, SUITE 200
KANSAS CITY, MO 64153
PHONE: (816) 298-6465
CERTIFICATE OF AUTHORITY NO. 2008013090

TEMPORARY EROSION CONTROL

SHEET	ROADWAY	BEGIN STA.	END STA.	LOCATION	SILT FENCE (LF)	ROCK DITCH CHECK (LF)	TYPE C BERM (LF)	SEDIMENT REMOVAL (CY)	REMARKS
8	RTE K	447+10.00	449+27.54	LT	227	-	-	3	
8	RTE K	447+10.00	450+16.84	RT	314	-	-	4	
8	RTE K	449+28.20	451+44.96	LT	-	14	-	1	
8	RTE K	450+16.84	451+65.97	LT/RT	-	24	189	3	
8	RTE K	453+41.22	453+99.50	LT/RT	-	24	124	3	
8	RTE K	453+99.50	454+83.87	LT	94	-	-	1	
8	RTE K	453+84.00	454+34.91	RT	-	18	-	1	
8	RTE K	454+34.91	458+30.00	RT	245	-	-	3	
8	RTE K	454+85.58	458+30.00	LT	-	12	-	1	
PROJECT TOTAL					880	92	313	20	

SIGNS / PERFORATED SQUARE STEEL TUBE

SIGN NO.	SIGN SIZE	STATION	HORZ CLEAR IF NOT STD	LOCATION	SIGN DTL. SHT. NO.	2 IN. POST: POST NO.1 (LF)	POST NO.2 (LF)	TOTAL ITEM NO. 9031270A (LF)	ANCHORS: DRIVEN 12-GA. ITEM NO. 9031271A (EA)	DRIVEN 7-GA. ITEM NO. 9031273A (EA)	CONCRETE 7-GA. ITEM NO. 9031274 (EA)	BREAKAWAY ASSEMBLY ITEM NO. 9031241 (EA)	REMARKS AND OTHER REQUIRED ITEMS
1	12"x36"	453+78		SW CORNER		7.75		10.75	1.00				
2	12"x36"	453+98		SW CORNER		7.75		10.75	1.00				
3	12"x36"	454+18		SW CORNER		7.75		10.75	1.00				
				SUBTOTAL				32.25	3.00	0.00	0.00	0.00	
				TOTAL				33.0	3.00	0.0	0.0	0.0	

STANDARD SIGN ASSEMBLIES / SIGN SUMMARY

SIGN NUMBER	STATION	LOCATION	TYPE: OM3-L	STANDARD SIGN OR SPECIAL SIGN NUMBER	SIGN DETAIL SHEET NO.	NO. EACH	SIZE	FLAT SHEET SH ITEM NO. 9035004A	FLAT SHEET FLUORESCENT SHF * ITEM NO. 9035069A	STRUCTURAL ST ITEM NO. 9035011A	STRUCTURAL FLUORESCENT STF * ITEM NO. 9035071A
1	453+78	SW CORNER	1	TYPE III OBJECT MARKER (LEFT)	STD.	1	12"x36"		3.0		
2	453+98	SW CORNER	1	TYPE III OBJECT MARKER (LEFT)	STD.	1	12"x36"		3.0		
3	454+18	SW CORNER	1	TYPE III OBJECT MARKER (LEFT)	STD.	1	12"x36"		3.0		
		TOTAL	3				TOTAL		9		

* ORANGE, YELLOW & YELLOW/GREEN

SUMMARY OF QUANTITIES
SHEET 2 OF 3

STATE OF MISSOURI
DONALD THOMAS SAIKO
NUMBER PE-28475
PROFESSIONAL ENGINEER
THIS SHEET HAS BEEN SIGNED, SEALED AND DATED ELECTRONICALLY.

DATE PREPARED 11/11/2024
ROUTE K | STATE MO
DISTRICT NE | SHEET NO. 3
COUNTY MONTGOMERY
JOB NO. JNE0053
CONTRACT ID.
PROJECT NO.
BRIDGE NO.

DESCRIPTION | DATE

MISSOURI HIGHWAYS AND TRANSPORTATION COMMISSION
105 WEST CAPITOL
JEFFERSON CITY, MO 65102
1-888-ASK-MODOT (1-888-275-6636)

GARVER, LLC.
7509 NW TIFFANY SPRINGS PARKWAY, SUITE 200
KANSAS CITY, MO 64153
PHONE: (816) 298-6465
CERTIFICATE OF AUTHORITY NO. 2008013090

EFFECTIVE: 07-01-2024

SIGN	SIZE IN.	AREA SQ.FT.	QTY EACH	TOTAL AREA SQ.FT.	QTY RELOC EACH	TOTAL RELOC SQ.FT.	SIGN NUM.	DESCRIPTION
WARNING SIGNS								
WO1-1L	48X48	16.00						TURN (SYMBOL LEFT)
WO1-1R	48X48	16.00						TURN (SYMBOL RIGHT)
WO1-2L	48X48	16.00						CURVE (SYMBOL LEFT)
WO1-2R	48X48	16.00						CURVE (SYMBOL RIGHT)
WO1-3L	48X48	16.00						REVERSE TURN (SYMBOL LEFT)
WO1-3R	48X48	16.00						REVERSE TURN (SYMBOL RIGHT)
WO1-4L	48X48	16.00						REVERSE CURVE (SYMBOL LEFT)
WO1-4R	48X48	16.00						REVERSE CURVE (SYMBOL RIGHT)
WO1-4bL	48X48	16.00						DOUBLE ARROW REVERSE CURVE (SYMBOL LEFT)
WO1-4bR	48X48	16.00						DOUBLE ARROW REVERSE CURVE (SYMBOL RIGHT)
WO1-4cL	48X48	16.00						TRIPLE ARROW REVERSE CURVE (SYMBOL LEFT)
WO1-4cR	48X48	16.00						TRIPLE ARROW REVERSE CURVE (SYMBOL RIGHT)
WO1-6	60X30	12.50						HORIZONTAL ARROW (SYMBOL)
WO1-6a	72X36	18.00						HORIZ. ARROW (SYMBOL ON PERMANENT BARRICADE)
WO1-7	60X30	12.50						DOUBLE HEAD HORIZONTAL ARROW (SYMBOL)
WO1-7a	72X36	18.00						DOUBLE HEAD HORIZ. ARROW (SYMBOL ON PERM. BARR.)
WO1-8	18X24	3.00						CHEVRON (SYMBOL)
WO1-8a	30X36	7.50						CHEVRON (SYMBOL FOR DIVIDED HIGHWAYS)
WO3-1	48X48	16.00						STOP AHEAD (SYMBOL)
WO3-2	48X48	16.00						YIELD AHEAD (SYMBOL)
WO3-3	48X48	16.00						SIGNAL AHEAD (SYMBOL)
WO3-4	48X48	16.00						BE PREPARED TO STOP
WO3-5	48X48	16.00						SPEED LIMIT AHEAD
WO4-1L	48X48	16.00						MERGE (SYMBOL FROM LEFT)
WO4-1R	48X48	16.00						MERGE (SYMBOL FROM RIGHT)
WO4-1aL	48X48	16.00						MERGE (LEFT)
WO4-1aR	48X48	16.00						MERGE (RIGHT)
WO5-1	48X48	16.00						ROAD/BRIDGE/RAMP NARROWS
WO5-3	48X48	16.00						ONE LANE BRIDGE
WO5-5	48X48	16.00						NARROW LANES
WO6-1	48X48	16.00						DIVIDED HIGHWAY (SYMBOL)
WO6-2	48X48	16.00						DIVIDED HIGHWAY END (SYMBOL)
WO6-3	48X48	16.00						TWO WAY TRAFFIC (SYMBOL)
WO7-3a	30X24	5.00						NEXT XX MILES (PLAQUE)
WO8-1	48X48	16.00						BUMP
WO8-2	48X48	16.00						DIP
WO8-3	48X48	16.00						PAVEMENT ENDS
WO8-4	48X48	16.00						SOFT SHOULDER
WO8-5	48X48	16.00						SLIPPERY WHEN WET (SYMBOL)
WO8-6	48X48	16.00						TRUCK CROSSING
WO8-6c	48X48	16.00						TRUCK ENTRANCE
WO8-7	36X36	9.00						LOOSE GRAVEL
WO8-7a	36X36	9.00						FRESH OIL / LOOSE GRAVEL
WO8-9	48X48	16.00						LOW SHOULDER
WO8-11	48X48	16.00						UNEVEN LANES
WO8-12	48X48	16.00						NO CENTER LINE
WO8-15	48X48	16.00						GROOVED PAVEMENT
WO8-15P	30X24	5.00						MOTORCYCLE (PLAQUE)
WO8-17L	48X48	16.00						SHOULDER DROP-OFF (SYMBOL LEFT)
WO8-17R	48X48	16.00						SHOULDER DROP-OFF (SYMBOL RIGHT)
WO8-17P	30X24	5.00						SHOULDER DROP-OFF (PLAQUE)
W10-1	42RND.	9.62						RAILROAD CROSSING
WO12-1	24X24	4.00						DOUBLE DOWN ARROW (SYMBOL)
WO12-2	48X48	16.00						LOW CLEARANCE (SYMBOL)
WO12-2x	24X18	3.00						LOW CLEARANCE (PLAQUE)
WO12-2a	84X24	14.00						OVERHEAD LOW CLEARANCE (FEET AND INCHES)
WO12-4	120X60	50.00						LOW CLEARANCE XX FT XX IN XX MILES AHEAD
WO12-5	120X60	50.00						WIDTH RESTRICTION XX FT XX IN XX MILES AHEAD
WO13-1	30X30	6.25						ADVISORY SPEED (PLAQUE)
WO16-2	30X24	5.00						XXX FEET (PLAQUE)
WO16-3	30X24	5.00						X MILE (PLAQUE)
WO20-1	48X48	16.00						ROAD/BRIDGE/RAMP WORK AHEAD
WO20-2	48X48	16.00						DETOUR AHEAD
WO20-3	48X48	16.00	4	64.00			20A/B	ROAD CLOSED AHEAD/ROAD CLOSED 500 FT
WO20-4	48X48	16.00						ONE LANE ROAD AHEAD
WO20-5	48X48	16.00						RIGHT/CENTER/LEFT LANE CLOSED AHEAD
WO20-5a	48X48	16.00						2 RIGHT/CENTER/LEFT LANES CLOSED AHEAD
WO20-6a	48X48	16.00						RIGHT/CENTER/LEFT LANE CLOSED
WO20-7a	48X48	16.00						FLAGGER (SYMBOL)
WO21-2	36X36	9.00						FRESH OIL
WO21-5	48X48	16.00						SHOULDER WORK / SHOULDER WORK AHEAD
WO22-1	48X48	16.00						BLASTING ZONE AHEAD
WO22-2	42X36	10.50						TURN OFF 2-WAY RADIO AND PHONE
WO22-3	42X36	10.50						END BLASTING ZONE
GO22-1	21X15	2.19						WET PAINT (ARROW PIVOTS)

SIGN	SIZE IN.	AREA SQ.FT.	QTY EACH	TOTAL SQ.FT.	QTY RELOC EACH	TOTAL RELOC SQ.FT.	SIGN NUM.	DESCRIPTION
GUIDE SIGNS								
E05-1	36X48	12.00						GORE EXIT
E05-2	48X36	12.00						EXIT OPEN
E05-2a	48X36	12.00						EXIT CLOSED
GO20-1	60X24	10.00						ROAD WORK NEXT XX MILES
GO20-2	48X24	8.00						END ROAD WORK
GO20-4	36X18	4.50						PILOT CAR FOLLOW ME
GO20-4a	42X30	8.75						PILOT CAR IN USE WAIT & FOLLOW
GO20-4a	18X12	1.50						PILOT CAR IN USE WAIT & FOLLOW
GO20-5aP	36X24	6.00						WORK ZONE (PLAQUE)
MO4-8a	24X18	3.00						END DETOUR
MO4-9L	48X36	12.00						DETOUR (LEFT)
MO4-9R	48X36	12.00						DETOUR (RIGHT)
MO4-9P	48X12	4.00						STREET NAME (PLAQUE)
MO4-10L	48X18	6.00						DETOUR ARROW (LEFT)
MO4-10R	48X18	6.00						DETOUR ARROW (RIGHT)
REGULATORY SIGNS								
R1-1	48X48	13.25						STOP
R1-2	48TRI.	6.93						YIELD
R1-2a	36X36	9.00						TO ONCOMING TRAFFIC (PLAQUE)
R1-3P	30X12	2.50						ALL WAY (PLAQUE)
R2-1	36X48	12.00						SPEED LIMIT XX
R3-1	48X48	16.00						NO RIGHT TURN (SYMBOL)
R3-2	48X48	16.00						NO LEFT TURN (SYMBOL)
R3-3	36X36	9.00						NO TURNS
R3-4	48X48	16.00						NO U-TURN (SYMBOL)
R3-7L	30X30	6.25						LEFT LANE MUST TURN LEFT
R3-7R	30X30	6.25						RIGHT LANE MUST TURN RIGHT
R4-1	36X48	12.00						DO NOT PASS
R4-2	36X48	12.00						PASS WITH CARE
R4-7a	36X48	12.00						KEEP RIGHT (HORIZONTAL ARROW)
R4-8a	36X48	12.00						KEEP LEFT (HORIZONTAL ARROW)
R5-1	30X30	6.25						DO NOT ENTER
R5-1a	36X24	6.00						WRONG WAY
R6-1L	54X18	6.75						ONE WAY ARROW (LEFT)
R6-1R	54X18	6.75						ONE WAY ARROW (RIGHT)
R6-2L	24X30	5.00						ONE WAY (LEFT)
R6-2R	24X30	5.00						ONE WAY (RIGHT)
R9-9	24X12	2.00						SIDEWALK CLOSED
R9-11L	24X18	3.00						SIDEWALK CLOSED AHEAD, (ARROW LEFT) CROSS HERE
R9-11R	24X18	3.00						SIDEWALK CLOSED AHEAD, (ARROW RIGHT) CROSS HERE
R10-6	24X36	6.00						STOP HERE ON RED (45^ ARROW)
R11-2	48X30	10.00	2	20.00			29	ROAD CLOSED
R11-3a	60X30	12.50						ROAD CLOSED XX MILES AHEAD LOCAL TRAFFIC ONLY
R11-4	60X30	12.50	3	37.50			61	ROAD CLOSED TO THRU TRAFFIC
CONST-3A	60X48	20.00						FINE SIGN
CONST-3X	56X12	4.67						SPEEDING/PASSING (PLATE)
MISCELLANEOUS SIGNS								
SPECIAL	96X48	32.00	2	64.00	2	64.00	55A&B	BRIDGE CLOSED

616-10.05 CONSTRUCTION SIGNS	TOTAL	186
616-10.10 RELOCATED SIGNS	TOTAL	64

ITEM NUMBER	TOTAL QTY	DESCRIPTION
6122008		IMPACT ATTENUATOR 40 MPH (SAND BARRELS)
6122009		IMPACT ATTENUATOR 45 MPH (SAND BARRELS)
6122010		IMPACT ATTENUATOR 50 MPH (SAND BARRELS)
6122012		IMPACT ATTENUATOR 55 MPH (SAND BARRELS)
6122014		IMPACT ATTENUATOR 60 MPH (SAND BARRELS)
6122017		IMPACT ATTENUATOR 65 MPH (SAND BARRELS)
6122019		IMPACT ATTENUATOR 70 MPH (SAND BARRELS)
6122020		REPLACEMENT SAND BARREL
6122030		IMPACT ATTENUATOR (RELOCATION)
6123001		TRUCK MOUNTED ATTENUATOR (TMA)
6161008	2	ADVANCED WARNING RAIL SYSTEM
6161012		BUOYS (BOATS KEEP OUT)
6161013		BUOYS (NO WAKE)
6161014		SPECIAL SIGN ASSEMBLY (BOATS KEEP OUT)
6161025	25	CHANNELIZER (TRIM LINE)
6161030	12	TYPE III MOVEABLE BARRICADE
6161033		DIRECTION INDICATOR BARRICADE
6161040		FLASHING ARROW PANEL
6161047		TYPE III OBJECT MARKER
6161055		SEQUENTIAL FLASHING WARNING LIGHT
6161070		TUBULAR MARKER
6161095		RADAR SPEED ADVISORY SYSTEM
6161096		CHANGEABLE MESSAGE SIGN, COMMISSION FURNISHED/RETAINED
6161098A		CHANGEABLE MESSAGE SIGN W/O COMM. INTERFACE - CONTRACTOR FURNISHED/RETAINED
6161099		CHANGEABLE MESSAGE SIGN WITH COMM. INTERFACE - CONTRACTOR FURNISHED/RETAINED
6162000A		WORK ZONE TRAFFIC SIGNAL SYSTEM
6162002		TEMPORARY LONG-TERM RUMBLE STRIPS
6173600D		TEMPORARY TRAFFIC BARRIER CONTRACTOR FURNISHED/RETAINED
6173602B		TEMPORARY TRAFFIC BARRIER CONTRACTOR FURNISHED/COMMISSION RETAINED
6174000A		TEMP. TRAFFIC BARRIER HEIGHT TRANSITION
6175010A		RELOCATING TEMPORARY TRAFFIC BARRIER
6176000B		TEMPORARY TRAFFIC BARRIER COMMISSION FURNISHED/RETAINED
6177000B		TEMP. TRAFFIC BARRIER HEIGHT TRANSITION COMMISSION FURNISHED/RETAINED
6208064A		TEMPORARY RAISED PAVEMENT MARKER
9029400		TEMPORARY TRAFFIC SIGNALS
9029401		TEMPORARY TRAFFIC SIGNALS AND LIGHTING

SUMMARY OF QUANTITIES
SHEET 3 OF 3

STATE OF MISSOURI
DONALD THOMAS SAKO
NUMBER PE-28475
PROFESSIONAL ENGINEER
THIS SHEET HAS BEEN SIGNED, SEALED AND DATED ELECTRONICALLY.

DATE PREPARED 10/24/2024

ROUTE	STATE
K	MO
DISTRICT	SHEET NO.
NE	3

COUNTY: MONTGOMERY
JOB NO.: JNE0053
CONTRACT ID.:
PROJECT NO.:
BRIDGE NO.:

DESCRIPTION | DATE

MISSOURI HIGHWAYS AND TRANSPORTATION COMMISSION
105 WEST CAPITOL
JEFFERSON CITY, MO 65102
1-888-ASK-MODOT (1-888-275-6636)

GARVER, LLC.
7509 NW TIFFANY SPRINGS PARKWAY, SUITE 200
KANSAS CITY, MO 64153
PHONE: (816) 298-6465
CERTIFICATE OF AUTHORITY NO. 2008013090

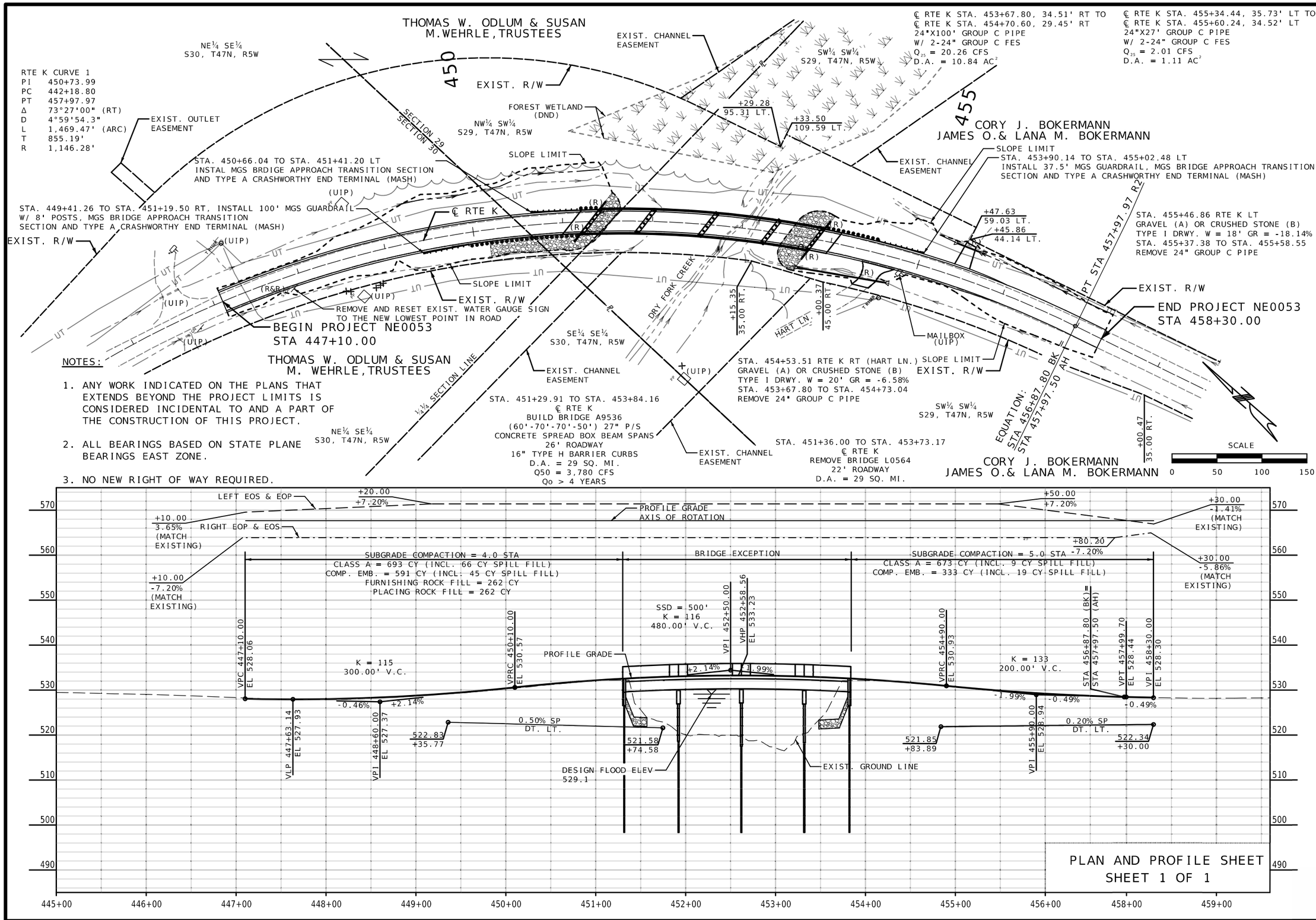

NOTES:

1. ANY WORK INDICATED ON THE PLANS THAT EXTENDS BEYOND THE PROJECT LIMITS IS CONSIDERED INCIDENTAL TO AND A PART OF THE CONSTRUCTION OF THIS PROJECT.
2. ALL BEARINGS BASED ON STATE PLANE BEARINGS EAST ZONE.
3. NO NEW RIGHT OF WAY REQUIRED.

PLAN AND PROFILE SHEET
SHEET 1 OF 1

STATE OF MISSOURI
DONALD THOMAS SAKO
NUMBER PE-28475
PROFESSIONAL ENGINEER
THIS SHEET HAS BEEN SIGNED, SEALED AND DATED ELECTRONICALLY.

DATE PREPARED	
10/24/2024	
ROUTE K	STATE MO
DISTRICT NE	SHEET NO. 4
COUNTY MONTGOMERY	
JOB NO. JNE0053	
CONTRACT ID.	
PROJECT NO.	
BRIDGE NO.	

DESCRIPTION

DATE

MISSOURI HIGHWAYS AND TRANSPORTATION COMMISSION
105 WEST CAPITOL
JEFFERSON CITY, MO 65102
1-888-ASK-MODOT (1-888-275-6636)

GARVER, LLC.
7509 NW TIFFANY SPRINGS
PARKWAY, SUITE 200
KANSAS CITY, MO 64153
PHONE: (816) 298-6465
CERTIFICATE OF AUTHORITY
NO. 2008013090

004_PP_01_NE0053_150.dgn 10:03:06 AM 10/24/2024

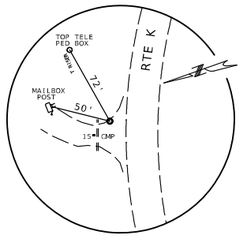

CONTROL POINT #1

SET"100D" NAIL 0.4' DEEP

N: 1,084,719.0039

E: 532,059.7214

ELEV. 527.82

℄ RTE K

STA. 446+72.80, 24.53' LT

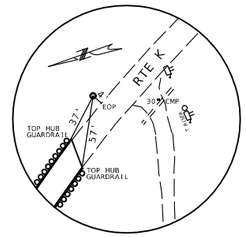

CONTROL POINT #2

SET"100D" NAIL 0.5' DEEP

N: 1,084,205.7966

E: 532,599.6335

ELEV. 531.62

℄ RTE K

STA. 454+18.10, 14.95' LT

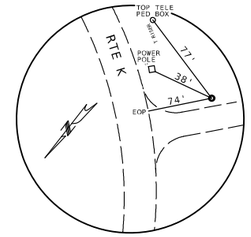

CONTROL POINT #3

SET"100D" NAIL 0.5' DEEP

N: 1,083,044.4328

E: 533,144.8497

ELEV. 539.47

℄ RTE K

STA. 468+02.58, 84.51' RT

REFERENCE POINT SHEET
SHEET 1 OF 1

STATE OF MISSOURI
DONALD THOMAS SAKO
NUMBER PE-28475
PROFESSIONAL ENGINEER

THIS SHEET HAS BEEN SIGNED, SEALED AND DATED ELECTRONICALLY.

DATE PREPARED
10/24/2024

ROUTE	STATE
K	MO
DISTRICT	SHEET NO.
NE	5

COUNTY
MONTGOMERY

JOB NO.
JNE0053

CONTRACT ID.

PROJECT NO.

BRIDGE NO.

DESCRIPTION	DATE

MISSOURI HIGHWAYS AND TRANSPORTATION COMMISSION

105 WEST CAPITOL
JEFFERSON CITY, MO 65102
1-888-ASK-MODOT (1-888-275-6636)

GARVER, LLC.
7509 NW TIFFANY SPRINGS
PARKWAY, SUITE 200
KANSAS CITY, MO 64153
PHONE: (816) 298-6465
CERTIFICATE OF AUTHORITY
NO. 2008013090

ALL PROJECT COORDINATES HAVE BEEN PROJECTED FROM THE MISSOURI STATE PLANE COORDINATE (SPC) SYSTEM OF 1983 USING AN AVERAGE PROJECT PROJECTION (GRID TO GROUND) FACTOR. TO GET BACK TO STATE PLANE COORDINATES MULTIPY THE PROJECT COORDINATES BY THE AVERAGE GRID FACTOR AS SHOWN IN THE "REFERENCE CONTROL INFORMATION" PORTION OF THIS TABLE.

PROJECT COORDINATE INFORMATION

COORDINATE SYSTEM	MODIFIED STATE PLANE (GROUND)
HORIZONTAL DATUM	NAD 83(2011) EPOCH 2010.0
VERTICAL DATUM	NAVD 88: GNSS DERIVED
GEOID MODEL	9
ELEVATIONS DETERMINED BY	DIFFERENTIAL LEVELING / GPS - MODOT VRS
PROJECT PROJECTION FACTOR	0.99999287

REFERENCE CONTROL INFORMATION

COORDINATE SYSTEM	MO COORDINATE SYSTEM OF 1983
CONTROL STATION	MISSOURI CORS
DESIGNATION	MODOT WARRENTON CORS ARP
CORS_ID	MOWR
PID	DL6157
LATITUDE	38 48 52.70169 N
LONGITUDE	91 09 40.92390 W
NORTHING (M)	331062.3840
EASTING (M)	192562.4610
ZONE	EAST
PROJECT AVERAGE GRID FACTOR	1.000007130

EXAMPLE OF PROJECT COORDINATE TO S.P.C.

PROJECT NORTHING X AVERAGE GRID FACTOR
= STATE PLANE NORTHING
PROJECT EASTING X AVERAGE GRID FACTOR
= STATE PLANE EASTING

EXAMPLE: CONTROL POINT #__GPS 1_
N 1084719.00390 X 1.000007130 = N1084726.738
E 532059.721387 X 1.000007130 = E532063.515

LINEAR UNIT CONVERSION

1 METER = 3.280833333 US SURVEY FEET (USFT)

COORDINATE POINT LISTING

SHEET NO	STATION	LOCATION	OFFSET (USFT)	MODIFIED STATE PLANE (GROUND) NORTHING (US SURVEY FT)	EASTING (US SURVEY FT)	ELEVATION (US SURVEY FT)	DESCRIPTION	GPK POINT ID
PROJECT CONTROL POINTS								
5	446+72.80	RTE K	24.53' LT	1,084,719.0039	532,059.7214	527.82	CONTROL POINT 1	
5	454+18.10	RTE K	14.95' LT	1,084,205.7966	532,599.6335	531.62	CONTROL POINT 2	
5	468+02.58	RTE K	84.51' RT	1,083,044.4328	533,144.8497	539.47	CONTROL POINT 3	
4	451+30.01	RTE K	11.58' RT	1,084,431.9251	532,418.7264	532.52	BENCHMARK 1	
4	453+80.79	RTE K	12.01' RT	1,084,231.1459	532,568.1465	532.59	BENCHMARK 2	
ALIGNMENTS								
-	442+18.80	RTE K	-	1,084,797.1467	531,609.9575		PC	
4	447+10.00	RTE K	-	1,084,680.8248	532,083.3253		BEGIN PROJECT	
-	450+73.99	RTE K	283.86' LT	1,084,774.3161	532,464.8412		PI	
4	456+87.80	RTE K	-	1,083,948.7958	532,686.3509		STA EQUATION	
4	457+97.50	RTE K	-	1,083,948.7958	532,686.3509		STA EQUATION	
4	457+97.97	RTE K	-	1,083,948.3456	532,686.4718		PT	
4	458+30.00	RTE K	-	1,083,917.4062	532,694.7736		END PROJECT	

COORDINATE POINT SHEET
SHEET 1 OF 1

STATE OF MISSOURI
DONALD THOMAS SAKO
NUMBER PE-28475
PROFESSIONAL ENGINEER
THIS SHEET HAS BEEN SIGNED, SEALED AND DATED ELECTRONICALLY.

DATE PREPARED 10/24/2024

ROUTE	STATE
K	MO
DISTRICT	SHEET NO.
NE	6

COUNTY: MONTGOMERY
JOB NO.: JNE0053
CONTRACT ID.
PROJECT NO.
BRIDGE NO.

DESCRIPTION	DATE

MISSOURI HIGHWAYS AND TRANSPORTATION COMMISSION
105 WEST CAPITOL
JEFFERSON CITY, MO 65102
1-888-ASK-MODOT (1-888-275-6636)

GARVER, LLC.
7509 NW TIFFANY SPRINGS PARKWAY, SUITE 200
KANSAS CITY, MO 64153
PHONE: (816) 298-6465
CERTIFICATE OF AUTHORITY NO. 2008013090

006_CP_01_NE0053_i50.dgn 10:04:44 AM 10/24/2024

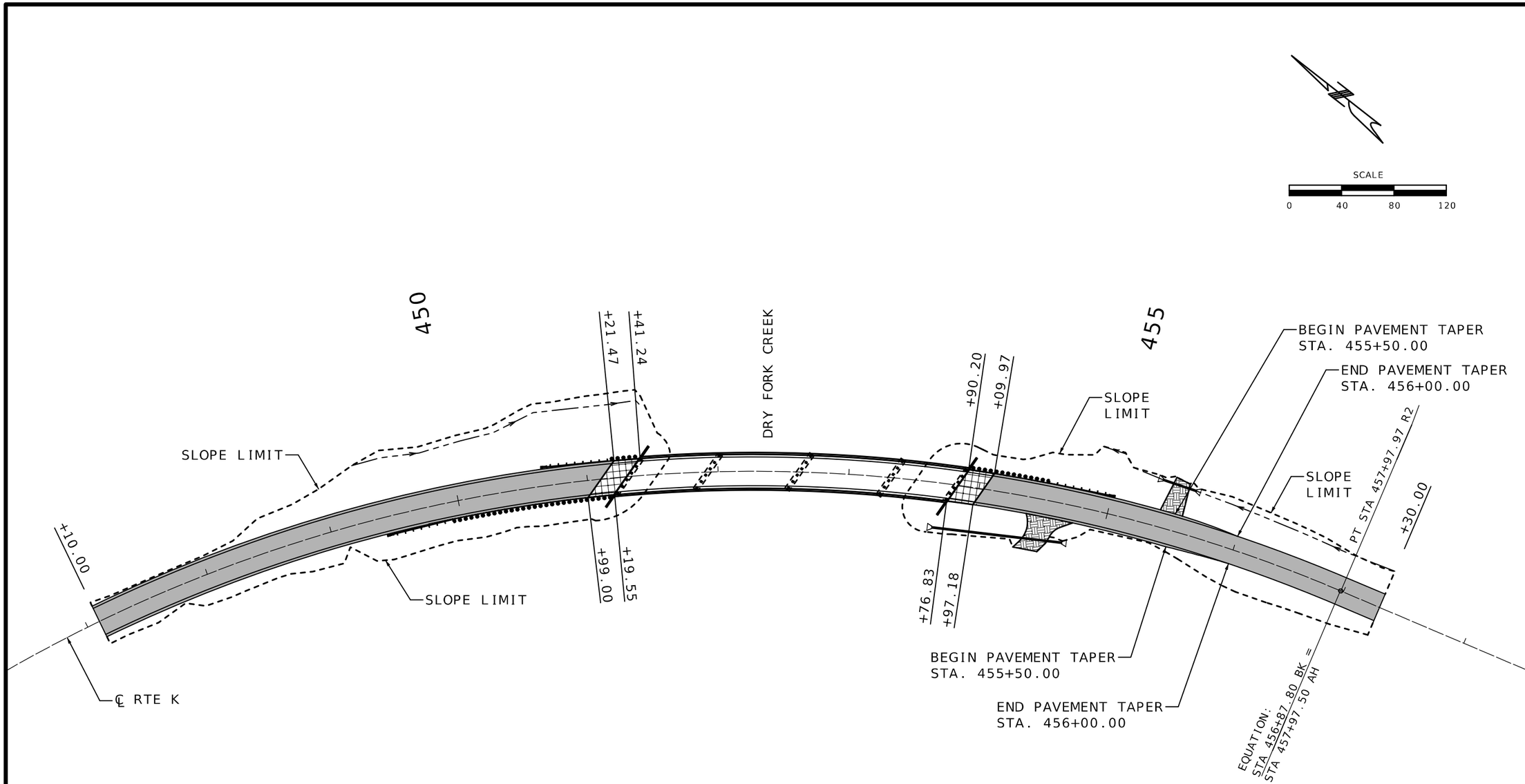

OPTIONAL PAVEMENT

6" GRAVEL (A) OR CRUSHED STONE (B)

BRIDGE APPROACH SLAB

SPECIAL SHEET
PAVING DETAILS
SHEET 1 OF 1

STATE OF MISSOURI
DONALD THOMAS SAKO
NUMBER PE-28475
PROFESSIONAL ENGINEER

THIS SHEET HAS BEEN SIGNED, SEALED AND DATED ELECTRONICALLY.

DATE PREPARED	10/24/2024
ROUTE	K
STATE	MO
DISTRICT	NE
SHEET NO.	7
COUNTY	MONTGOMERY
JOB NO.	JNE0053
CONTRACT ID.	
PROJECT NO.	
BRIDGE NO.	

DATE	DESCRIPTION

MISSOURI HIGHWAYS AND TRANSPORTATION COMMISSION
105 WEST CAPITOL
JEFFERSON CITY, MO 65102
1-888-ASK-MODOT (1-888-275-6636)

GARVER, LLC.
7509 NW TIFFANY SPRINGS PARKWAY, SUITE 200
KANSAS CITY, MO 64153
PHONE: (816) 298-6465
CERTIFICATE OF AUTHORITY NO. 2008013090

007_SS_01_NE0053_i50.dgn 10:05:45 AM 10/24/2024

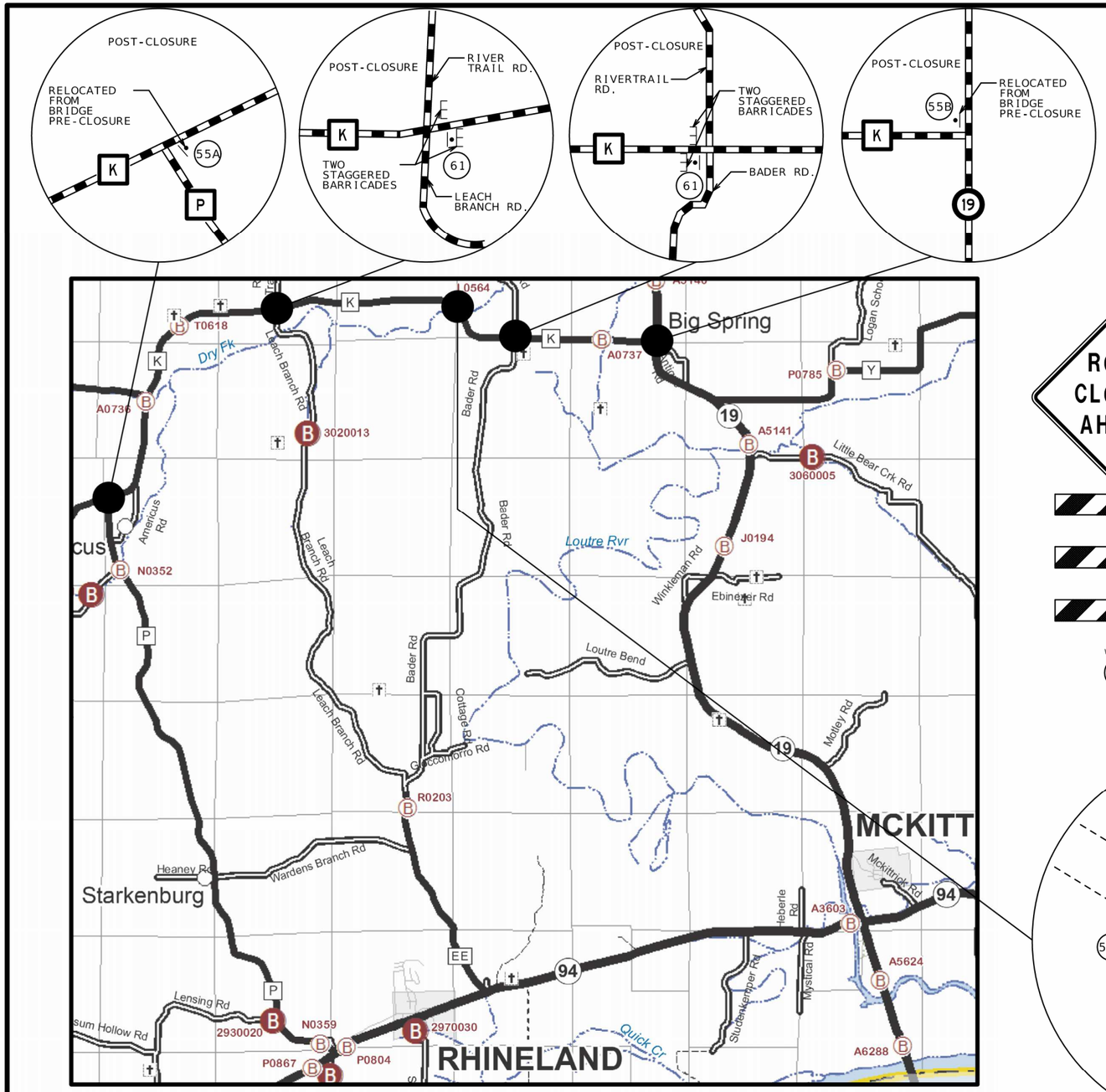

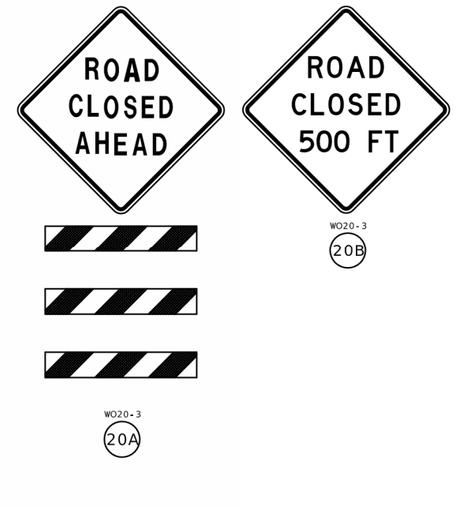

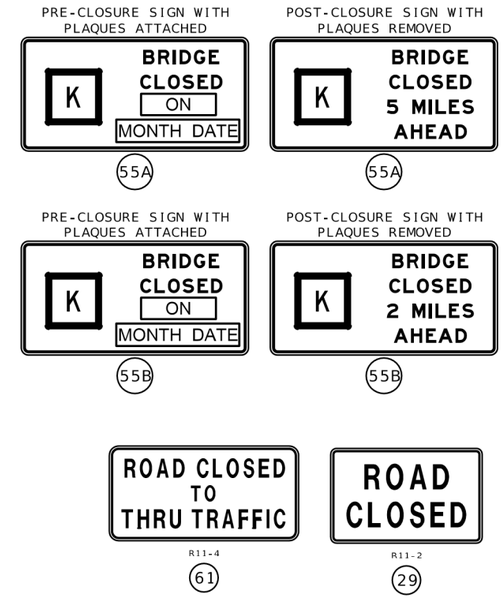

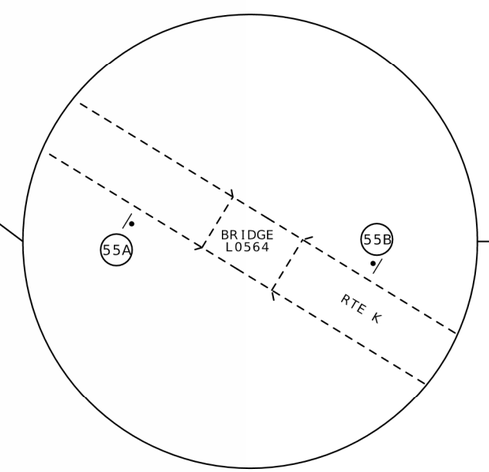

PRE-CLOSURE
SIGNAGE AT BRIDGE
(TO BE RELOCATED)

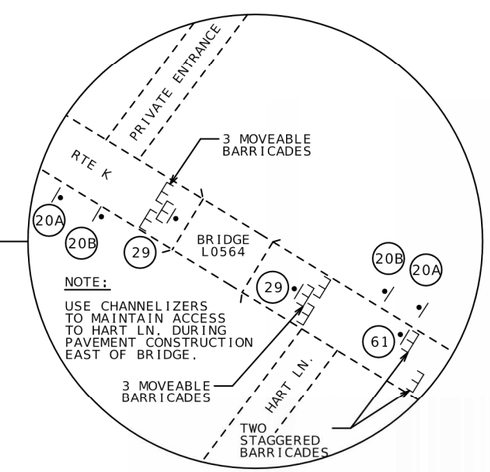

DURING BRIDGE
A9536 CONSTRUCTION
AND PAVEMENT CONSTRUCTION

TRAFFIC CONTROL LEGEND

- SIGN (SINGLE SIDED)
- TYPE III MOVEABLE BARRICADE

NOTES:

INSTALL PRE-CLOSURE SIGNS WITH PLAQUES A MINIMUM OF 2 WEEKS PRIOR TO CLOSURE.

WHEN BRIDGE CLOSURE OCCURS - REMOVE SPECIAL SIGN PLAQUES AND RELOCATE NOTED SIGNS.

SEE SHEET 9 FOR SPECIAL SIGN DETAILS.

LOCATE SIGNS 100' FROM INTERSECTIONS AND WILL REMAIN IN PLACE FOR DURATION OF PROJECT.

ALL SIGNS SHALL BE SPACED AT 500 FEET UNLESS OTHERWISE NOTED.

USE IN PLACE ALL SIGNS WHICH DO NOT CONFLICT WITH THIS PLAN. COVER OR REMOVE CONFLICTING SIGNS.

PLACE ALL SIGNS AS SHOWN OR AS DIRECTED BY THE ENGINEER.

TRAFFIC CONTROL
SHEET 1 OF 2

STATE OF MISSOURI
DONALD THOMAS SAIKO
NUMBER PE-28475
PROFESSIONAL ENGINEER
THIS SHEET HAS BEEN SIGNED, SEALED AND DATED ELECTRONICALLY.

DATE PREPARED	10/24/2024
ROUTE	K
STATE	MO
DISTRICT	NE
SHEET NO.	8
COUNTY	MONTGOMERY
JOB NO.	JNE0053
CONTRACT ID.	
PROJECT NO.	
BRIDGE NO.	

DESCRIPTION

DATE

MISSOURI HIGHWAYS AND TRANSPORTATION COMMISSION
105 WEST CAPITOL
JEFFERSON CITY, MO 65102
1-888-ASK-MODOT (1-888-275-6636)

GARVER, LLC.
7509 NW TIFFANY SPRINGS
PARKWAY, SUITE 200
KANSAS CITY, MO 64153
PHONE: (816) 298-6465
CERTIFICATE OF AUTHORITY
NO. 2008013090

008_TC_01_NE0053_T1.dgn 10:06:43 AM 10/24/2024

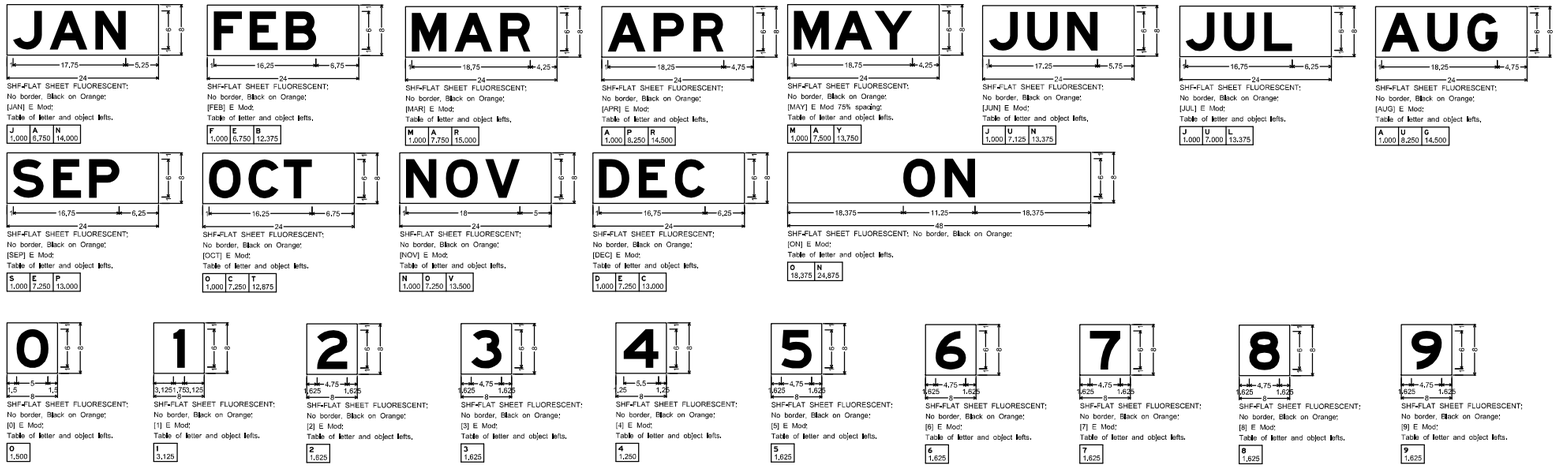

PRE-CLOSURE SPECIAL SIGN

SPECIAL WITH CLOSURE PLATES

55A

PRE-CLOSURE SPECIAL SIGN

SPECIAL WITH CLOSURE PLATES

55B

POST-CLOSURE SPECIAL SIGN

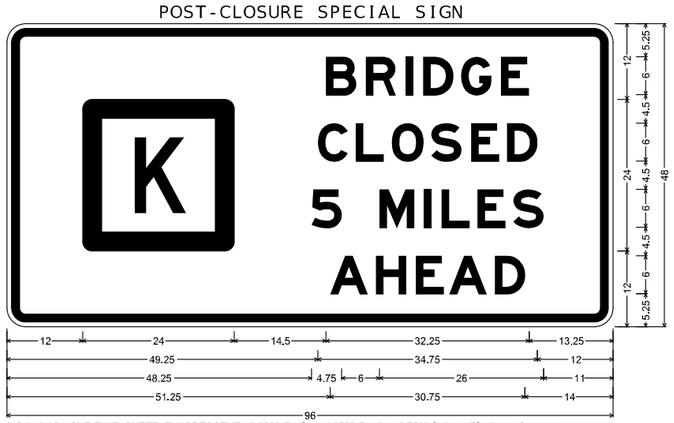

MO4-13-96 SHF-FLAT SHEET FLUORESCENT; 3.000" Radius, 1.250" Border, 0.750" Indent, Black on Orange;
[BRIDGE] E Mod; [CLOSED] E Mod; [5 MILES] E Mod; [AHEAD] E Mod;
Table of letter and object lefts.

12.000	B 50.500	R 56.875	I 63.125	D 65.875	G 71.875	E 78.250
C 49.250	L 55.250	O 61.000	S 67.250	E 73.500	D 79.250	
5 48.250	M 59.000	I 66.125	L 68.875	E 74.500	S 80.250	
A 51.250	H 58.375	E 64.750	A 70.000	D 77.250		

55A

POST-CLOSURE SPECIAL SIGN

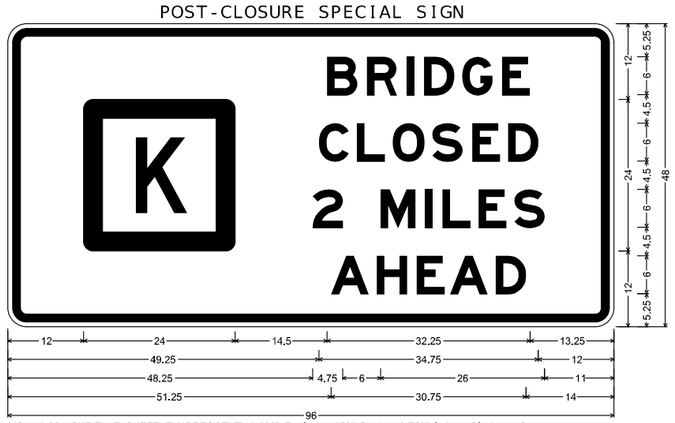

MO4-13-96 SHF-FLAT SHEET FLUORESCENT; 3.000" Radius, 1.250" Border, 0.750" Indent, Black on Orange;
[BRIDGE] E Mod; [CLOSED] E Mod; [7 MILES] E Mod; [AHEAD] E Mod;
Table of letter and object lefts.

12.000	B 50.500	R 56.875	I 63.125	D 65.875	G 71.875	E 78.250
C 49.250	L 55.250	O 61.000	S 67.250	E 73.500	D 79.250	
2 48.250	M 59.000	I 66.125	L 68.875	E 74.500	S 80.250	
A 51.250	H 58.375	E 64.750	A 70.000	D 77.250		

55B

TRAFFIC CONTROL
SHEET 2 OF 2

STATE OF MISSOURI
DONALD THOMAS SAKO
NUMBER PE-28475
PROFESSIONAL ENGINEER

THIS SHEET HAS BEEN SIGNED, SEALED AND DATED ELECTRONICALLY.

DATE PREPARED
10/24/2024

ROUTE	STATE
K	MO
DISTRICT	SHEET NO.
NE	9

COUNTY
MONTGOMERY

JOB NO.
JNE0053

CONTRACT ID.

PROJECT NO.

BRIDGE NO.

DATE	DESCRIPTION

MISSOURI HIGHWAYS AND TRANSPORTATION COMMISSION
105 WEST CAPITOL
JEFFERSON CITY, MO 65102
1-888-ASK-MODOT (1-888-275-6636)

GARVER, LLC.
7509 NW TIFFANY SPRINGS
PARKWAY, SUITE 200
KANSAS CITY, MO 64153
PHONE: (816) 298-6465
CERTIFICATE OF AUTHORITY
NO. 2008013090

GARVER

009_TC_02_NE0053_i1.dgn 10:07:59 AM 10/24/2024

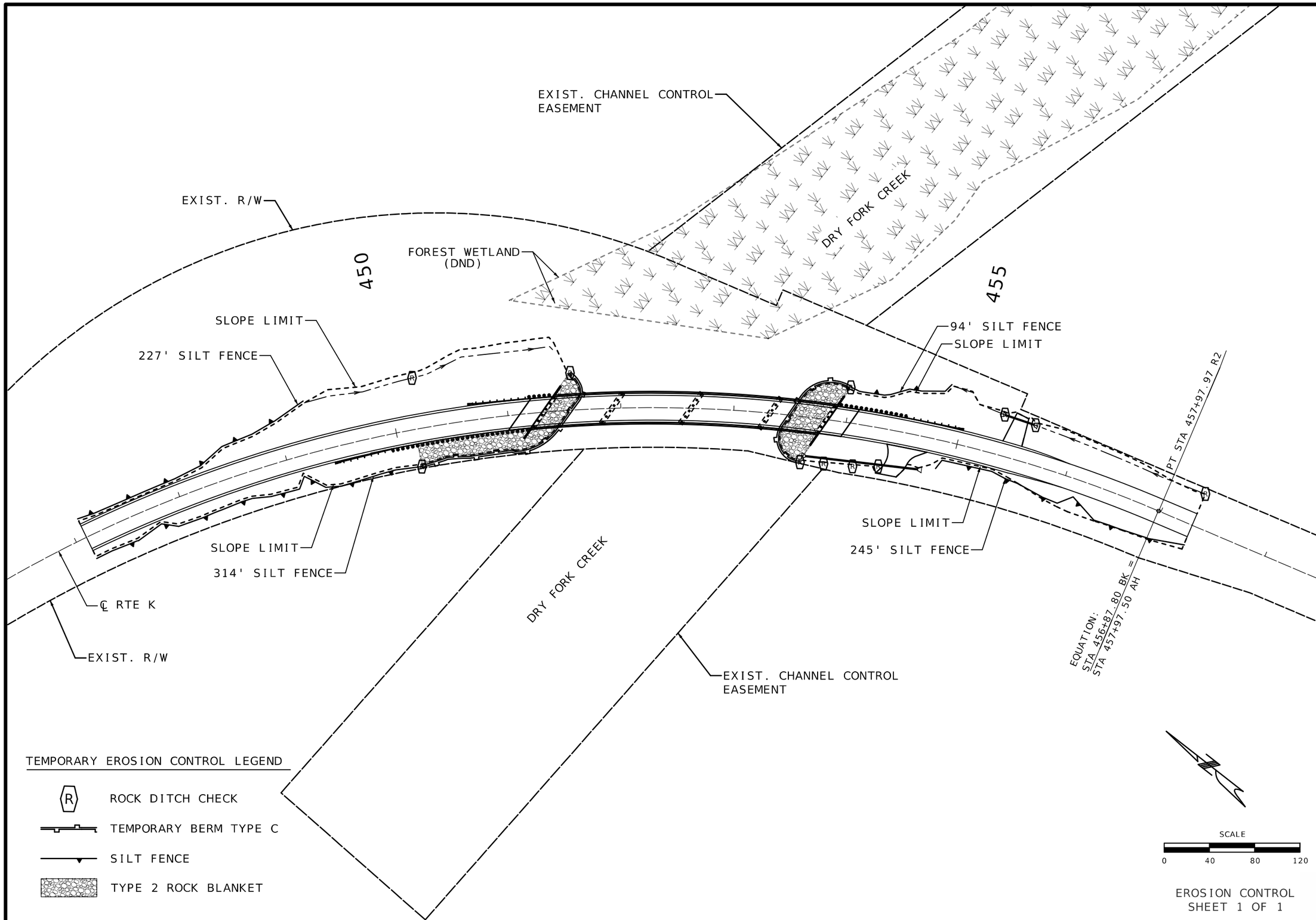

EROSION CONTROL
SHEET 1 OF 1

STATE OF MISSOURI
DONALD THOMAS SAKO
NUMBER PE-28475
PROFESSIONAL ENGINEER

THIS SHEET HAS BEEN SIGNED, SEALED AND DATED ELECTRONICALLY.

DATE PREPARED	10/24/2024
ROUTE	K
STATE	MO
DISTRICT	NE
SHEET NO.	10
COUNTY	MONTGOMERY
JOB NO.	JNE0053
CONTRACT ID.	
PROJECT NO.	
BRIDGE NO.	

DATE	DESCRIPTION

MISSOURI HIGHWAYS AND TRANSPORTATION COMMISSION
105 WEST CAPITOL
JEFFERSON CITY, MO 65102
1-888-ASK-MODOT (1-888-275-6636)

GARVER, LLC.
7509 NW TIFFANY SPRINGS PARKWAY, SUITE 200
KANSAS CITY, MO 64153
PHONE: (816) 298-6465
CERTIFICATE OF AUTHORITY NO. 2008013090

010_EC_01_NE0053_i40.dgn 10:08:59 AM 10/24/2024

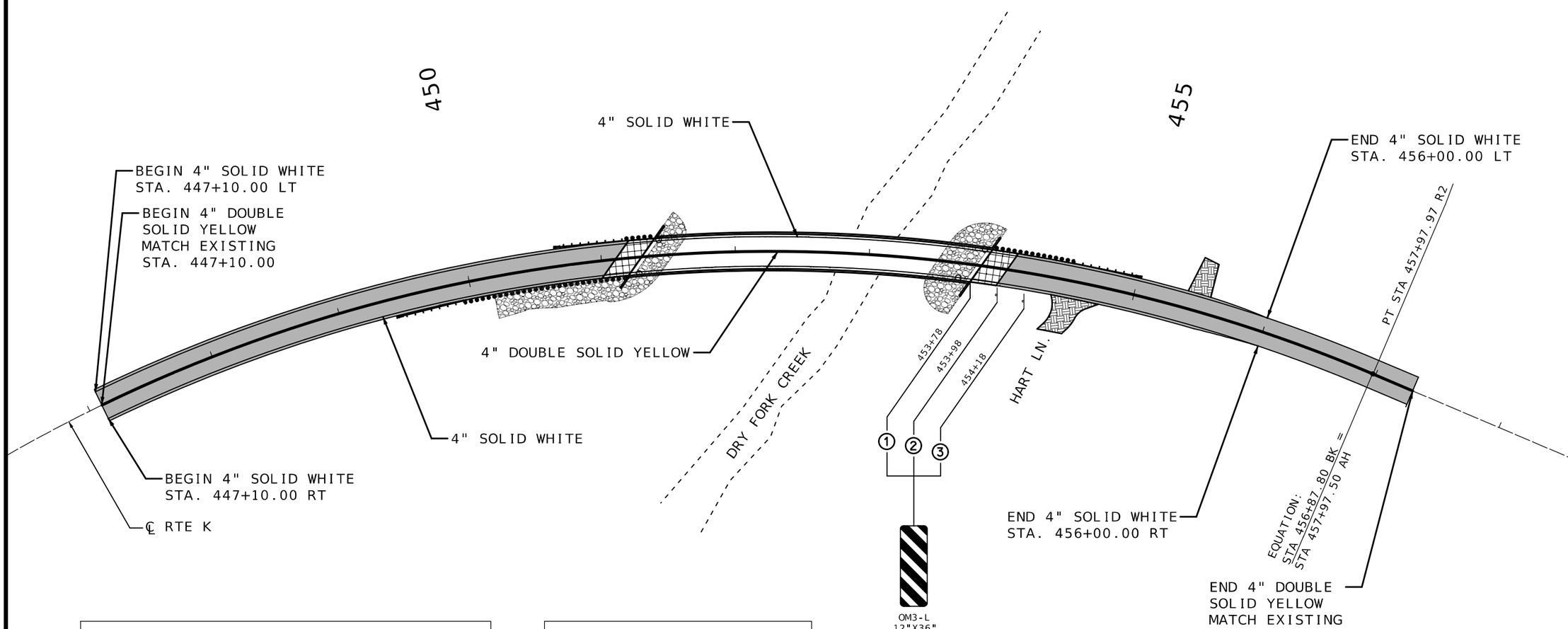

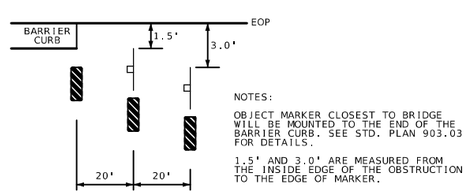

TYPE 3 OBJECT MARKER
PLAN DETAIL

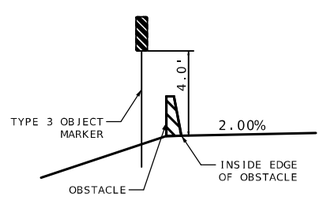

TYPE 3 OBJECT MARKER
SECTION DETAIL

SCALE
0 40 80 120

PAVEMENT MARKING
& DELINEATION
SHEET 1 OF 1

STATE OF MISSOURI
DONALD THOMAS SAIKO
NUMBER PE-28475
PROFESSIONAL ENGINEER
THIS SHEET HAS BEEN SIGNED, SEALED AND DATED ELECTRONICALLY.

DATE PREPARED	11/11/2024
ROUTE	K
STATE	MO
DISTRICT	NE
SHEET NO.	11
COUNTY	MONTGOMERY
JOB NO.	JNE0053
CONTRACT ID.	
PROJECT NO.	
BRIDGE NO.	

DATE	DESCRIPTION

MISSOURI HIGHWAYS AND TRANSPORTATION COMMISSION
105 WEST CAPITOL
JEFFERSON CITY, MO 65102
1-888-ASK-MODOT (1-888-275-6636)

GARVER, LLC.
7509 NW TIFFANY SPRINGS
PARKWAY, SUITE 200
KANSAS CITY, MO 64153
PHONE: (816) 298-6465
CERTIFICATE OF AUTHORITY
NO. 2008013090

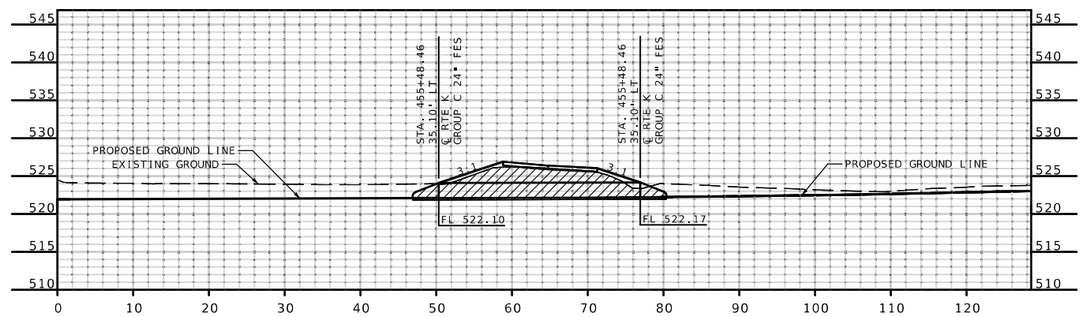

24"X27' GROUP C PIPE @ 0.28%
11.4 CY CL. 3 EXC.

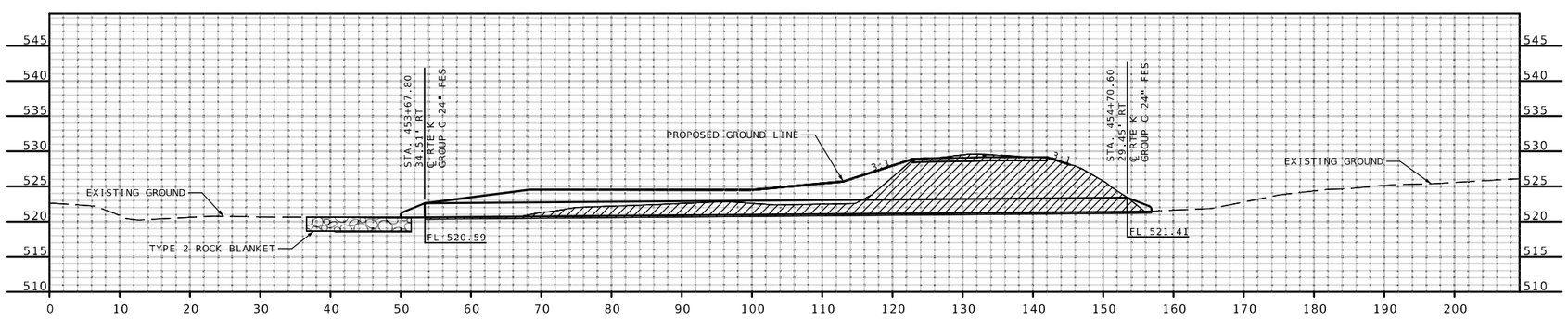

24"X100' GROUP C PIPE @ 0.83%
39.1 CY CL. 3 EXC.

CULVERT SECTION
SHEET 1 OF 1

STATE OF MISSOURI
DONALD THOMAS SAKO
NUMBER PE-28475
PROFESSIONAL ENGINEER

THIS SHEET HAS BEEN SIGNED, SEALED AND DATED ELECTRONICALLY.

DATE PREPARED	10/24/2024
ROUTE	K
STATE	MO
DISTRICT	NE
SHEET NO.	12
COUNTY	MONTGOMERY
JOB NO.	JNE0053
CONTRACT ID.	
PROJECT NO.	
BRIDGE NO.	

DESCRIPTION	DATE

MISSOURI HIGHWAYS AND TRANSPORTATION COMMISSION
105 WEST CAPITOL
JEFFERSON CITY, MO 65102
1-888-ASK-MODOT (1-888-275-6636)

GARVER, LLC.
7509 NW TIFFANY SPRINGS PARKWAY, SUITE 200
KANSAS CITY, MO 64153
PHONE: (816) 298-6465
CERTIFICATE OF AUTHORITY NO. 2008013090

012_CS_01_NE0053.dgn 10:11:04 AM 10/24/2024

SEC/SUR 29 TWP 47N RGE 5W

(60'-70'-70'-50') PRESTRESSED CONCRETE SPREAD BOX BEAM SPANS

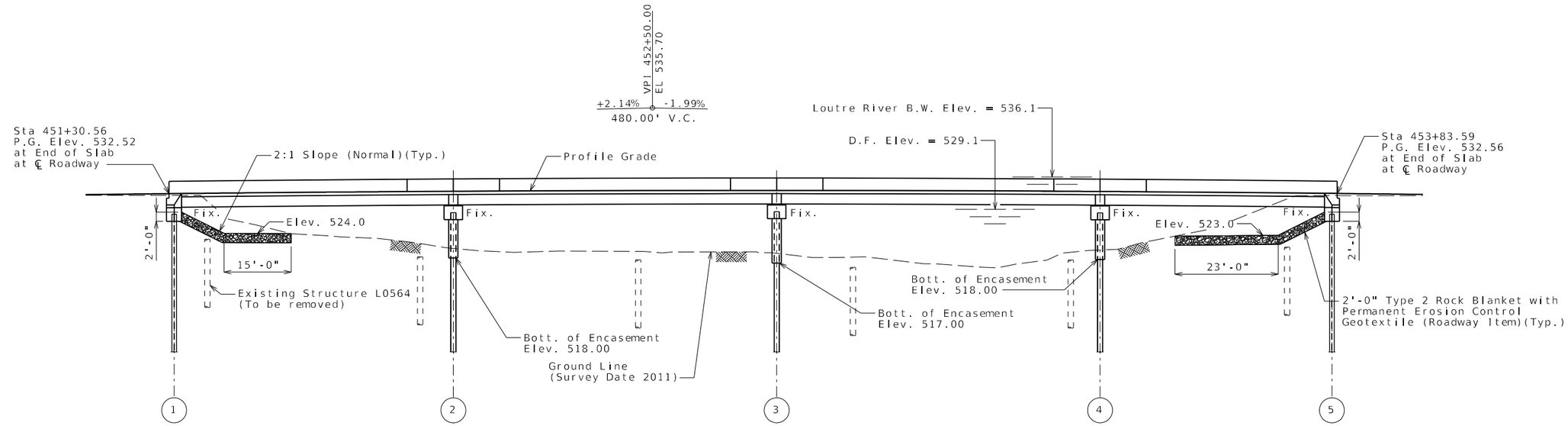

GENERAL ELEVATION
(All Bents are Parallel)

Roadway fill shall be completed to the final roadway section and up to the elevation of the bottom of the concrete beam within the limits of the structure and for not less than 25 feet in back of the fill face of the end bents before any piles are driven for any bents falling within the embankment section.

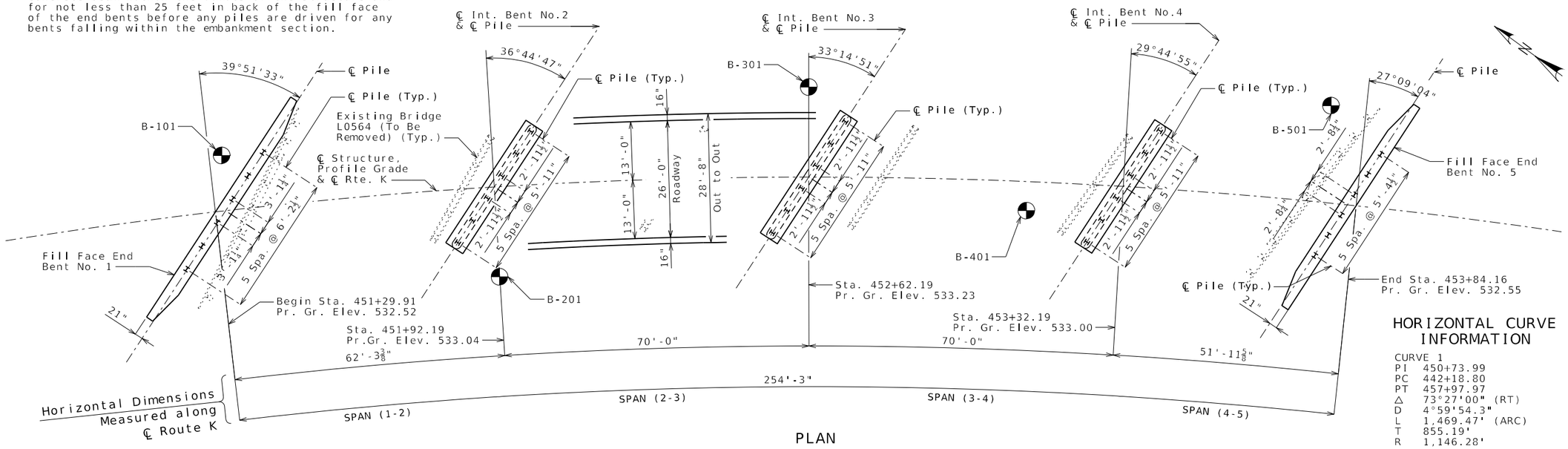

PLAN

HORIZONTAL CURVE INFORMATION

CURVE 1
PI 450+73.99
PC 442+18.80
PT 457+97.97
Δ 73°27'00" (RT)
D 4°59'54.3"
L 1,469.47' (ARC)
T 855.19'
R 1,146.28'

Indicates location of boring.

The locations of all subsurface borings for this structure are shown on the plan sheet(s) for this structure. The boring data for all locations indicated, as well as any other boring logs or other factual records of subsurface data and investigations performed by the department for the design of the project, are shown on Sheets No. 35 thru 41 and may also be included in the Electronic Bridge Deliverables. They will also be available from the Project Contact upon written request. No greater significance or weight should be given to the boring data depicted on the plan sheets than is given to the subsurface data available from the district or elsewhere.

The Commission does not represent or warrant that any such boring data accurately depicts the conditions to be encountered in constructing this project. A contractor assumes all risks it may encounter in basing its bid prices, time or schedule of performance on the boring data depicted here or those available from the district, or any other documentation not expressly warranted, which the contractor may obtain from the Commission.

Notes:

For General Notes, Estimated Quantities, Estimated Quantities for Slab on Concrete Beams, Hydrologic Data and Foundation Data, See Sheet No. 2.

Designed Apr. 2024
Detailed Apr. 2024
Checked Sep. 2024

Note: This drawing is not to scale. Follow dimensions.

Sheet No. 1 of 41

C.P. #1 STA. 446+72.80, 24.53' LT., ELEV. 527.82'
100d NAIL

C.P. #2 STA. 454+18.10, 14.95' LT., ELEV. 531.62'
100d NAIL

BRIDGE: ROUTE K OVER DRY FORK CREEK

ROUTE K FROM ROUTE P TO ROUTE 19
ABOUT 1.8 MILES WEST OF ROUTE 19
BEGIN STATION 451+29.91

STATE OF MISSOURI
DEREK S. BUTLER
NUMBER PE-2016009828
PROFESSIONAL ENGINEER

THIS SHEET HAS BEEN SIGNED, SEALED AND DATED ELECTRONICALLY

DATE PREPARED	
12/31/2024	
ROUTE K	STATE MO
DISTRICT BR	SHEET NO. 1
COUNTY MONTGOMERY	
JOB NO. JNE0053	
CONTRACT ID.	
PROJECT NO.	
BRIDGE NO. A9536	

DESCRIPTION

DATE

IF A SEAL IS PRESENT ON THIS SHEET IT HAS BEEN ELECTRONICALLY SEALED AND DATED.

MISSOURI HIGHWAYS AND TRANSPORTATION COMMISSION
105 WEST CAPITOL
JEFFERSON CITY, MO 65102
1-888-ASK-MODOT (1-888-275-6636)

GARVER, LLC.
7509 NW TIFFANY SPRINGS
PARKWAY, SUITE 200
KANSAS CITY, MO 64153
PHONE: (816) 298-6465
CERTIFICATE OF AUTHORITY
NO. 2008013090

B_A9536_001_NE0053_GEP.dgn 10:01:41 AM 12/31/2024

General Notes:

Design Specifications:
2020 AASHTO LRFD Bridge Design Specifications (9th Edition)
2011 AASHTO Guide Specifications for LRFD Seismic Bridge Design (2nd Ed.) and 2014 Interim Revisions (Seismic Details)
Seismic Design Category = B
Design earthquake response spectral acceleration coefficient at 1.0 second period, S_{D1}= 0.228g
Acceleration Coefficient (effective peak ground acceleration coefficient), A_S= 0.183g

Design Loading:
Vehicular = HL-93
Future Wearing Surface = 35 lb/sf
Earth = 120 lb/cf
Equivalent Fluid Pressure = 45 lb/cf
Superstructure: Simply supported, non-composite for dead load.
Continuous Composite for live load.

Design Unit Stresses:

Class B Concrete (Substructure)	f'c = 3,000 psi
Class B-1 Concrete (Type H Barrier)	f'c = 4,000 psi
Class B-2 Concrete (Superstructure, except Prestressed Box Beams and Type H Barrier)	f'c = 4,000 psi
Reinforcing Steel (ASTM A706 Grade 60)	fy = 60,000 psi
Structural Steel HP Pile (ASTM A709 Grade 50)	fy = 50,000 psi

For prestressed box beam stresses, see Sheets No. 18 thru 21.

Neoprene Pads:
Neoprene bearing pads shall be 60 durometer and shall be in accordance with Sec 716.

Joint Filler:
All joint filler shall be in accordance with Section 1057 for preformed sponge rubber expansion and partition joint filler, except as noted.

Reinforcing Steel:
Minimum clearance to reinforcing steel shall be 1 1/2", unless otherwise shown.
Minimum clearance between galvanized piles and uncoated (plain) reinforcing steel including bar supports shall be 1 1/2". Nylon, PVC, or polyethylene spacers shall be used to maintain clearance. Nylon cable ties shall be used to bind the spacers to the reinforcement.

Traffic Handling:
Structure to be closed during construction. Traffic to be maintained on other routes. See roadway plans for traffic control.

Miscellaneous:
Outline of existing work is indicated by light dashed lines. Heavy lines indicate new work.

Estimated Quantities

	Item		Substr.	Superstr.	Total
	Class 1 Excavation	cu. yard	215		215
	Removal of Bridges (L0546)	lump sum			1
	Bridge Approach Slab (Minor)	sq. yard		116	116
1	Galvanized Structural Steel Piles (12 in.)	linear foot	534		534
1	Galvanized Structural Steel Piles (14 in.)	linear foot	834		834
	Pile Point Reinforcement	each	30		30
	Class B Concrete (Substructure)	cu. yard	164.7		164.7
	Type H Barrier	linear foot		511	511
	Slab on Concrete Beam	sq. yard		807	807
	27in., Prestressed Concrete Spread Box Beam	linear foot		744	744
	Reinforcing Steel (Bridges)	pound	12,820		12,820
	Vertical Drain at End Bents	each			2
	Plain Neoprene Bearing Pad	each		6	6
	Laminated Neoprene Bearing Pad	each		18	18

1 Cost of L4x4 ASTM A709 Grade 36 HP pile anchors and 3/4-inch diameter ASTM F3125 Grade A325 Type 1 bolts, complete in place, will be considered completely covered by the contract unit price for Galvanized Structural Steel Piles (12 in.) and Galvanized Structural Steel Piles (14 in.).

All concrete above the construction joint in the end bents is included in the Estimated Quantities for Slab on Concrete Beam.

All reinforcement in the end bents is included in the Estimated Quantities for Slab on Concrete Beam.

All reinforcement in the intermediate bent concrete diaphragm except reinforcement embedded in the beam cap is included in the Estimated Quantities for Slab on Concrete Beam.

All concrete above the intermediate bent cap is included in the Estimated Quantities for Slab on Concrete Beam.

Foundation Data

	Bent No.		1	2	3	4	5
Load Bearing Pile	Pile Type and Size		HP12X53	HP14X73	HP14X73	HP14X73	HP12X53
	Number	ea	6	6	6	6	6
	Approximate Length per Each	ft	44	46	45	48	45
	Pile Point Reinforcement	ea	All	All	All	All	All
	Min. Galvanized Penetration (Elev.)	ft	Full Length	Full Length	Full Length	Full Length	Full Length
	Est. Max. Scour Depth 100 (Elev.)	ft	-	515.8	514.7	515.5	-
	Min. Tip Penetration (Elev.)	ft	488.0	485.0	488.0	489.0	485.0
	Criteria for Min. Tip Penetration		(1)	(1)	(1)	(1)	(1)
	Pile Driving Verification Method		DF	DF	DF	DF	DF
	Resistance Factor		0.40	0.40	0.40	0.40	0.40
	Minimum Nominal Axial Compressive Resistance	kip	316	600	600	600	316

$$\text{Minimum Nominal Axial Compressive Resistance} = \frac{\text{Maximum Factored Loads}}{\text{Resistance Factor}}$$

DF= FHWA-modified Gates Dynamic Pile Formula

All piles shall be galvanized down to minimum galvanized penetration (elevation).

Pile point reinforcement need not be galvanized. Shop drawings will not be required for pile point reinforcement.

HP Piles are anticipated to be driven to refusal in rock. Review all borings for depth of rock and restrict driving as appropriate to comply with hard rock driving criteria in accordance with Sec 702. When pile refusal on rock occurs, as approved by the engineer, the minimum nominal axial compressive resistance is verified and no additional pile driving verification method is required.

(1) Penetration anticipated soft geotechnical layers.

Estimated Quantities for Slab on Concrete Beam

Item		Total
Class B-2 Concrete	cu. yard	269
Reinforcing Steel (Epoxy Coated)	pound	89,930

The table of Estimated Quantities for Slab on Concrete Beam represents the quantities used by the State in preparing the cost estimate for concrete slabs. The area of the concrete slab will be measured to the nearest square yard longitudinally from end of slab to end of slab and transversely from out to out of bridge slab (or with the horizontal dimensions shown on the plan of slab). Payment for stay-in-place corrugated steel forms, conventional forms, all concrete and epoxy coated reinforcing steel will be considered completely covered by the contract unit price for the slab. Variations may be encountered in the estimated quantities but the variations cannot be used for an adjustment in the contract unit price.

Method of forming the slab shall be as shown on the plans and in accordance with Sec 703. All hardware for forming the slab to be left in place as a permanent part of the structure shall be coated in accordance with ASTM A123 or ASTM B633 with a thickness class SC 4 and a finish type I, II or III.

Slab shall be cast-in-place with conventional forms or stay-in-place corrugated steel forms. Precast prestressed panels will not be permitted.

Stay-In-Place Forms:

Corrugated steel forms, supports, closure elements and accessories shall be in accordance with grade requirement and coating designation G165 of ASTM A653. Complete shop drawings of the permanent steel deck forms shall be required in accordance with Sec 1080.

Corrugations of stay-in-place forms shall be filled with an expanded polystyrene material. The polystyrene material shall be placed in the forms with an adhesive in accordance with the manufacturer's recommendations.

Form sheets shall not rest directly on the top of beam. Sheets shall be securely fastened to form supports with a minimum bearing length of one inch on each end. Form supports shall be placed in direct contact with the beam. Welding on or drilling holes in the beam will not be permitted. All steel fabrication and construction shall be in accordance with Secs 1080 and 712. Certified field welders will not be required for welding of the form supports.

The design of stay-in-place corrugated steel forms is per manufacturer which shall be in accordance with Sec 703 for false work and forms. Maximum actual weight of corrugated steel forms allowed shall be 4 psf assumed for beam loading.

For details of stay-in-place forms, see Sheet No. 26.

Hydrologic Data

Drainage Area = 29 mi^2
Design Flood Frequency = 50 years
Design Flood Discharge = 7,600 cfs
Design Flood (D.F.) Elevation = 529.1
Base Flood (100-year)
Base Flood Elevation = 529.2
Base Flood Discharge = 8,800 cfs
Estimated Backwater = 0.5 ft
Average Velocity thru Opening = 5.5 ft/s
Freeboard (50-year)
Freeboard = -0.6 ft
Roadway Overtopping
Overtopping Flood Discharge = 4,900 cfs
Overtopping Flood Frequency = 10 years
Overtopping Flood Elevation = 528.1

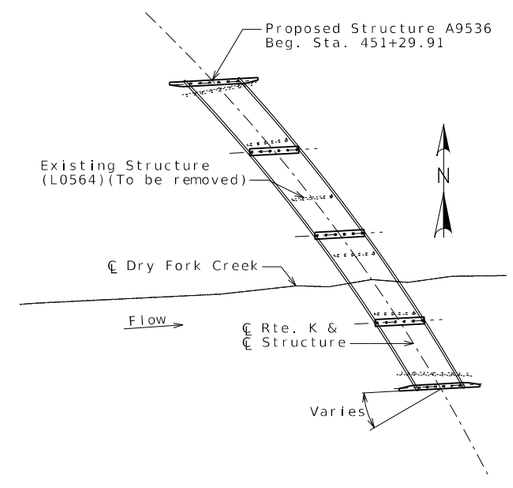

LOCATION SKETCH

STATE OF MISSOURI
DEREK S. BUTLER
NUMBER PE-2016009828
PROFESSIONAL ENGINEER

THIS SHEET HAS BEEN SIGNED, SEALED AND DATED ELECTRONICALLY

DATE PREPARED	
12/31/2024	
ROUTE: K	STATE: MO
DISTRICT: BR	SHEET NO.: 2
COUNTY: MONTGOMERY	
JOB NO.: JNE0053	
CONTRACT ID.	
PROJECT NO.	
BRIDGE NO.: A9536	

DATE	DESCRIPTION

IF A SEAL IS PRESENT ON THIS SHEET IT HAS BEEN ELECTRONICALLY SEALED AND DATED.

MISSOURI HIGHWAYS AND TRANSPORTATION COMMISSION
105 WEST CAPITOL
JEFFERSON CITY, MO 65102
1-888-ASK-MODOT (1-888-275-6636)

GARVER, LLC.
7509 NW TIFFANY SPRINGS PARKWAY, SUITE 200
KANSAS CITY, MO 64153
PHONE: (816) 298-6465
CERTIFICATE OF AUTHORITY NO. 2008013090

GENERAL NOTES AND QUANTITIES

Detailed Jul. 2024
Checked Sep. 2024

Note: This drawing is not to scale. Follow dimensions.

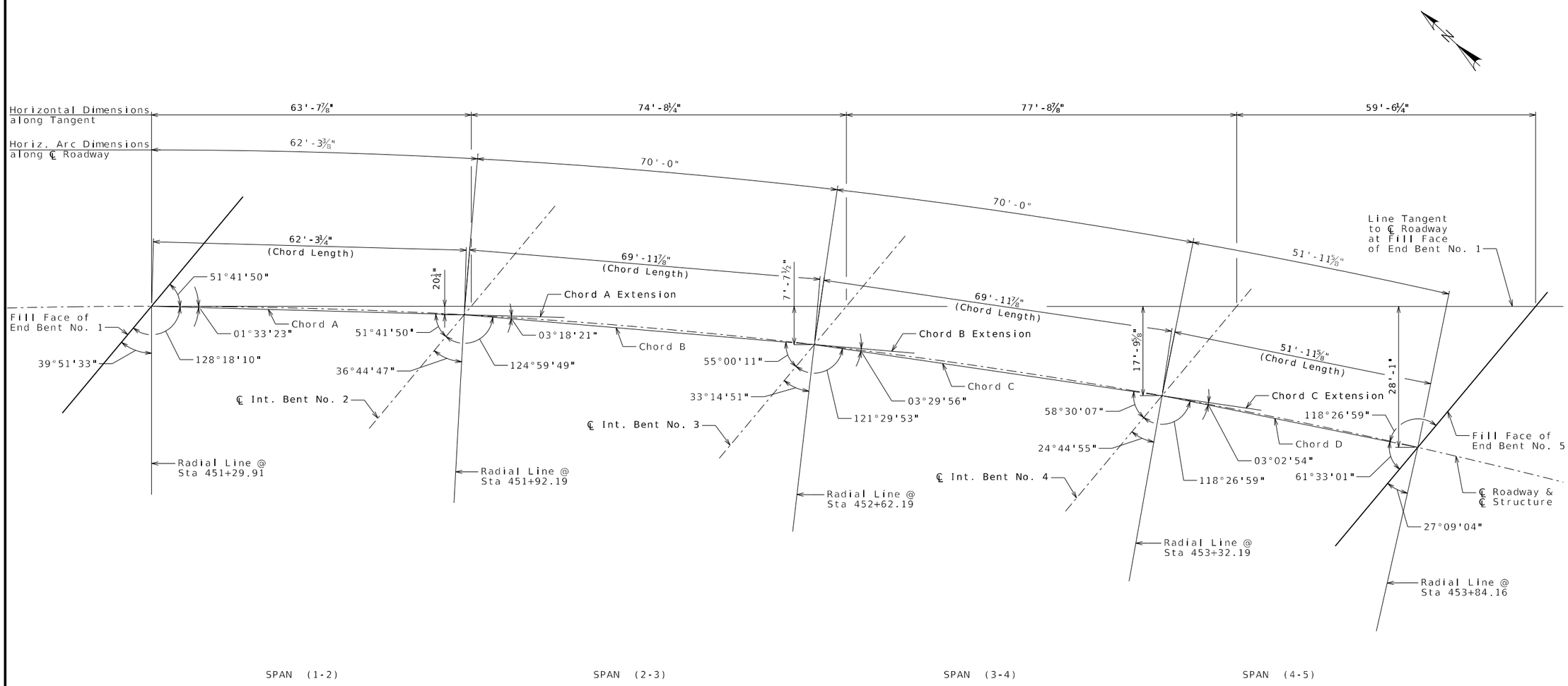

PLAN

Notes:
All bents are parallel.
All dimensions are horizontal.

SUBSTRUCTURE LAYOUT

Detailed Sep. 2024
Checked Sep. 2024

Note: This drawing is not to scale. Follow dimensions.

STATE OF MISSOURI
DEREK S. BUTLER
NUMBER PE-2016009628
PROFESSIONAL ENGINEER

THIS SHEET HAS BEEN SIGNED, SEALED AND DATED ELECTRONICALLY

DATE PREPARED	12/19/2024
ROUTE	K
STATE	MO
DISTRICT	BR
SHEET NO.	3
COUNTY	MONTGOMERY
JOB NO.	JNE0053
CONTRACT ID.	
PROJECT NO.	
BRIDGE NO.	A9536

DATE	DESCRIPTION

MISSOURI HIGHWAYS AND TRANSPORTATION COMMISSION
105 WEST CAPITOL
JEFFERSON CITY, MO 65102
1-888-ASK-MODOT (1-888-275-6636)

GARVER, LLC.
7509 NW TIFFANY SPRINGS PARKWAY, SUITE 200
KANSAS CITY, MO 64153
PHONE: (816) 298-6465
CERTIFICATE OF AUTHORITY NO. 2008013090

IF A SEAL IS PRESENT ON THIS SHEET IT HAS BEEN ELECTRONICALLY SEALED AND DATED.

Substructure Quantity Table for End Bent No. 1		
Item		Quantity
Class 1 Excavation	cu. yard	80
Galvanized Structural Steel Piles (12 in.)	linear foot	264
Pile Point Reinforcement	each	6
Class B Concrete (Substructure)	cu. yard	25.7

These quantities are included in the Estimated Quantities table on Sheet No. 2.

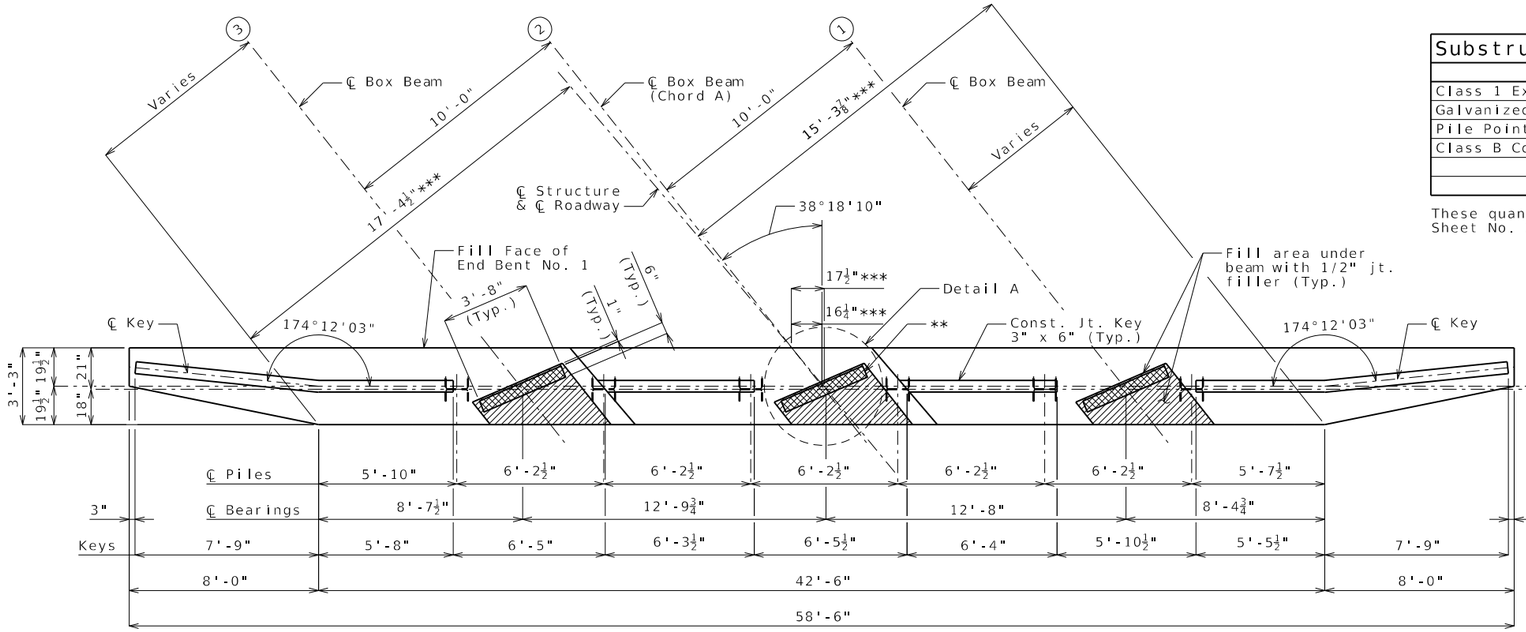

PLAN OF BEAM SHOWING DIMENSIONS

** 3'-8" x 6" x 1/2" Plain Neoprene Bearing Pad (Typ.)

*** Measured to ℄ Roadway

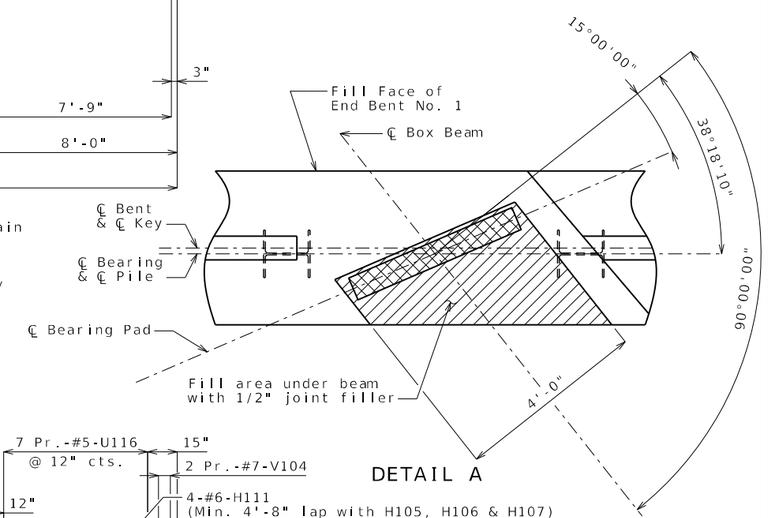

DETAIL A

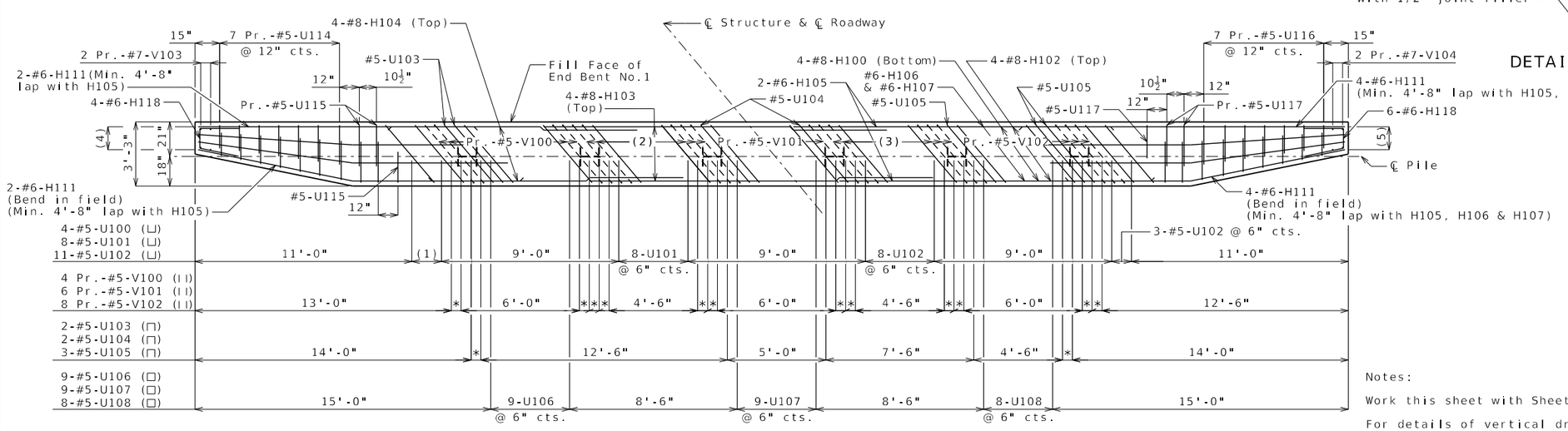

PLAN OF BEAM SHOWING REINFORCEMENT

(Steps and keys not shown for clarity)

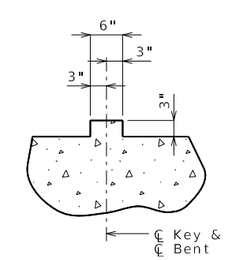

SECTION THRU KEY

* 6"

(1) 4-#5-U100 @ 6" cts.

(2) Pr.-#5-V101

(3) Pr.-#5-V102

(4) 4-#6-H111 (Top & Bottom)(Bend in field) (Min. 4'-8" lap with H100 & H104)

(5) 4-#6-H111 (Top & Bottom)(Bend in field) (Min. 4'-8" lap with H100 & H102)

Notes:

Work this sheet with Sheets No. 5 & 6.

For details of vertical drain at end bents, see Sheet No. 7.

All concrete in the end bent above top of beam and below top of slab shall be Class B-2.

All U-bars and pairs of V-bars shall be placed parallel to the centerline of box beam unless shown otherwise.

Reinforcing steel shall be shifted to clear piles. U bars shall be shifted to clear piles by at least 1 1/2 inches.

DETAILS OF END BENT NO. 1

Detailed Sep. 2024
Checked Sep. 2024

Note: This drawing is not to scale. Follow dimensions.

STATE OF MISSOURI
DEREK S. BUTLER
NUMBER PE-2016009626
PROFESSIONAL ENGINEER

THIS SHEET HAS BEEN SIGNED, SEALED AND DATED ELECTRONICALLY

DATE PREPARED	
12/31/2024	
ROUTE: K	STATE: MO
DISTRICT: BR	SHEET NO.: 4
COUNTY: MONTGOMERY	
JOB NO.: JNE0053	
CONTRACT ID.	
PROJECT NO.	
BRIDGE NO.: A9536	

DATE	DESCRIPTION

MISSOURI HIGHWAYS AND TRANSPORTATION COMMISSION
105 WEST CAPITOL
JEFFERSON CITY, MO 65102
1-888-ASK-MODOT (1-888-275-6636)

GARVER, LLC.
7509 NW TIFFANY SPRINGS PARKWAY, SUITE 200
KANSAS CITY, MO 64153
PHONE: (816) 298-6465
CERTIFICATE OF AUTHORITY NO. 2008013090

IF A SEAL IS PRESENT ON THIS SHEET IT HAS BEEN ELECTRONICALLY SEALED AND DATED.

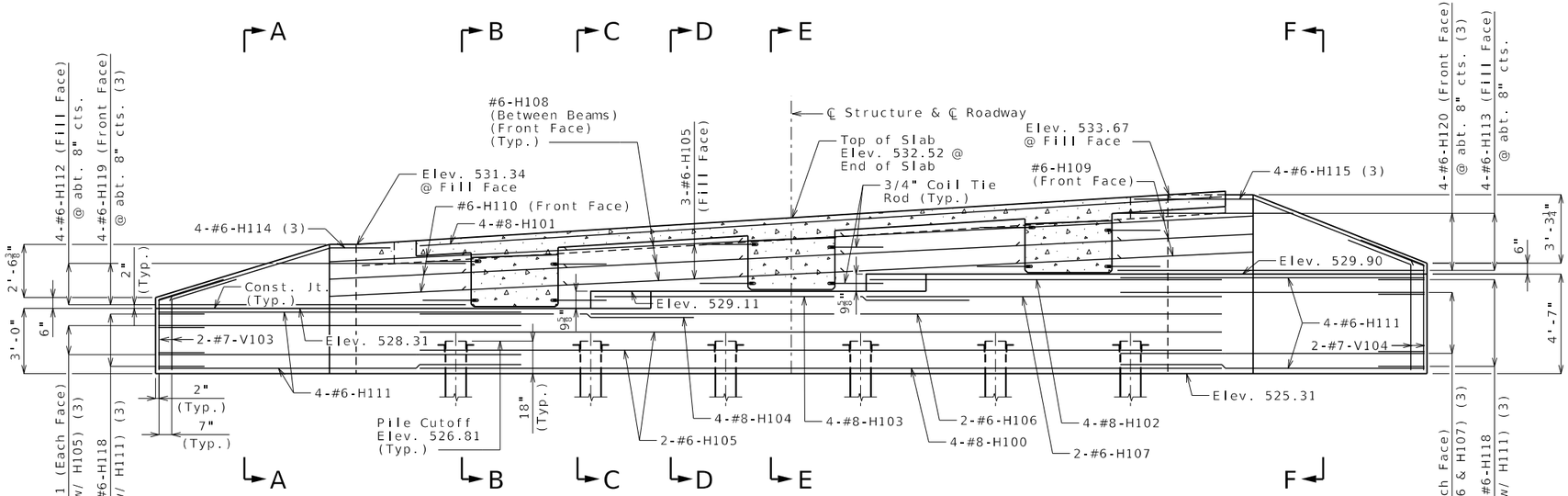

SECTION NEAR END BENT

(Looking back station)

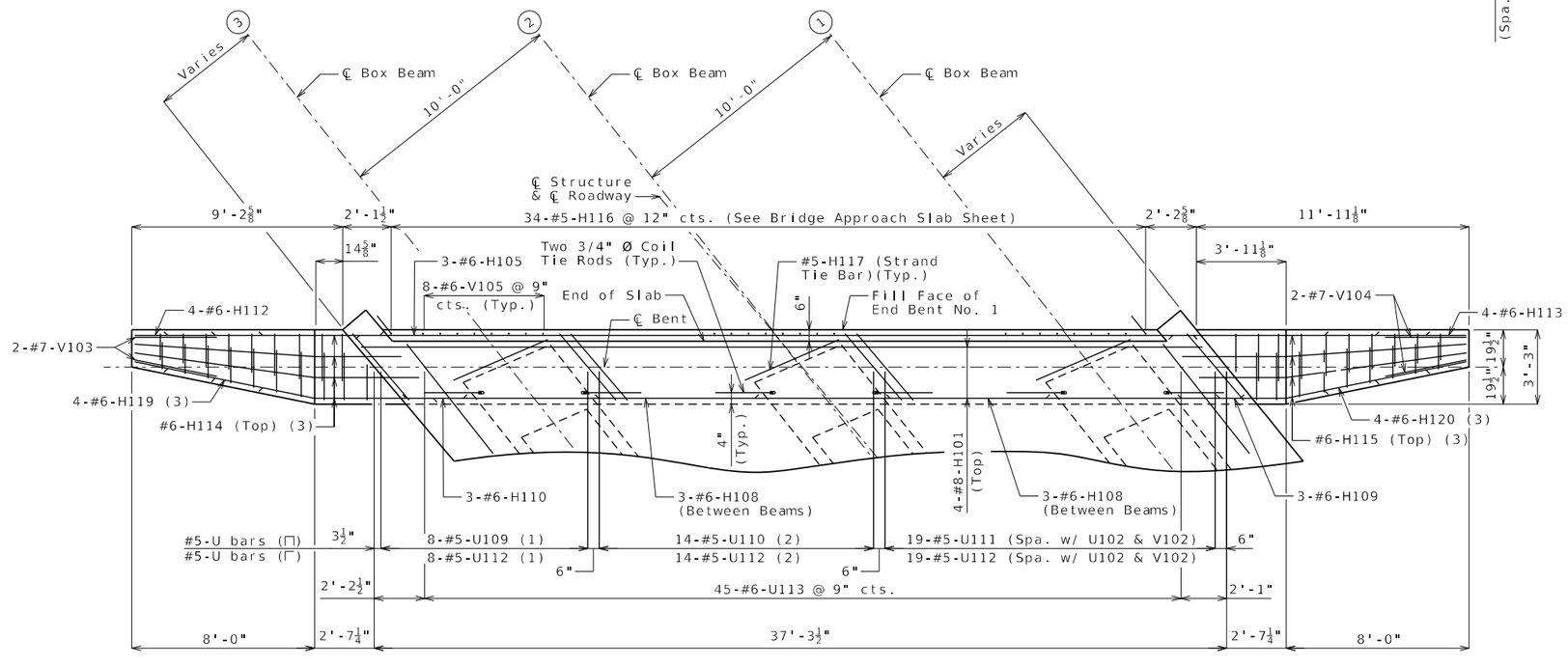

(1) Spa. w/ U100 & V100

(2) Spa. w/ U101 & V101

(3) Bend in Field

PART PLAN

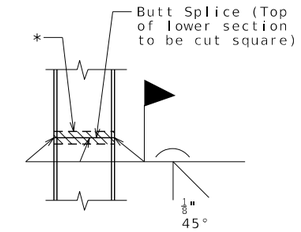

STEEL PILE SPLICE

(If required)

* Galvanizing material shall be omitted or removed one inch clear of weld locations in accordance with Sec 702.

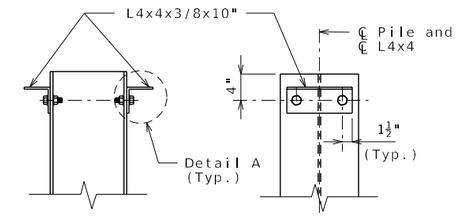

DETAILS OF HP PILE ANCHORS

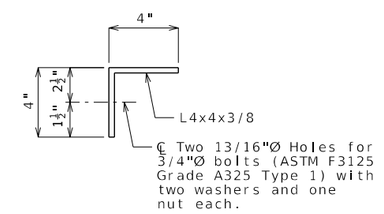

DETAIL A

Angles shall be coated with a minimum of two coats of non-aluminum epoxy mastic primer to provide a dry film thickness of 4 mils minimum, 8 mils maximum, or galvanized in accordance with Sec 1081. Bolts, washers and nuts shall be galvanized in accordance with AASHTO M 232 (ASTM A153), Class C.

Notes:

Work this sheet with Sheets No. 4 & 6.

For Sections A-A thru F-F, see Sheet No. 6.

For details and reinforcement of Type H Barrier not shown, see Sheets No. 28 & 29.

Reinforcing steel shall be shifted to clear piles. U-bars shall clear piles by at least 1 1/2 inches.

For details of vertical drain at end bents, see Sheet No. 7.

For location of #5 H-118 (Strand Tie Bar) and coil tie rods, see Sheet No. 18.

Strands at end of beams shall be field bent or, if necessary, cut in the field to maintain 1 1/2-inch minimum clearance to fill face of end bent.

The U-bars shall be placed parallel to centerline box beam unless shown otherwise.

All concrete in the end bent above top of beam and below top of slab shall be Class B-2.

For details of bridge approach slab, see Sheet No. 30.

DETAILS OF END BENT NO. 1

Detailed Sep. 2024
Checked Sep. 2024

Note: This drawing is not to scale. Follow dimensions.

STATE OF MISSOURI
DEREK S. BUTLER
NUMBER PE-2016009626
PROFESSIONAL ENGINEER

THIS SHEET HAS BEEN SIGNED, SEALED AND DATED ELECTRONICALLY

DATE PREPARED	
12/31/2024	
ROUTE K	STATE MO
DISTRICT BR	SHEET NO. 5
COUNTY MONTGOMERY	
JOB NO. JNE0053	
CONTRACT ID.	
PROJECT NO.	
BRIDGE NO. A9536	

DATE	DESCRIPTION

IF A SEAL IS PRESENT ON THIS SHEET IT HAS BEEN ELECTRONICALLY SEALED AND DATED.

MISSOURI HIGHWAYS AND TRANSPORTATION COMMISSION
105 WEST CAPITOL
JEFFERSON CITY, MO 65102
1-888-ASK-MODOT (1-888-275-6636)

GARVER, LLC.
7509 NW TIFFANY SPRINGS PARKWAY, SUITE 200
KANSAS CITY, MO 64153
PHONE: (816) 298-6465
CERTIFICATE OF AUTHORITY NO. 2008013090

B_A9536_005_NE0053_End_Bent1_2.dgn 10:04:02 AM 12/31/2024

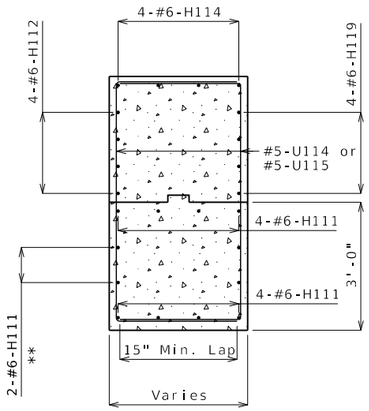

** (Each Face)

SECTION A-A

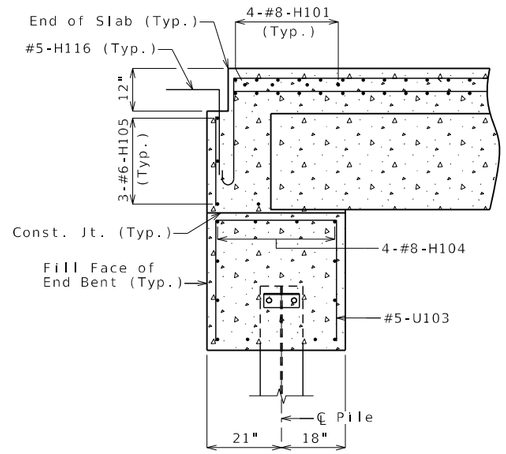

SECTION B-B

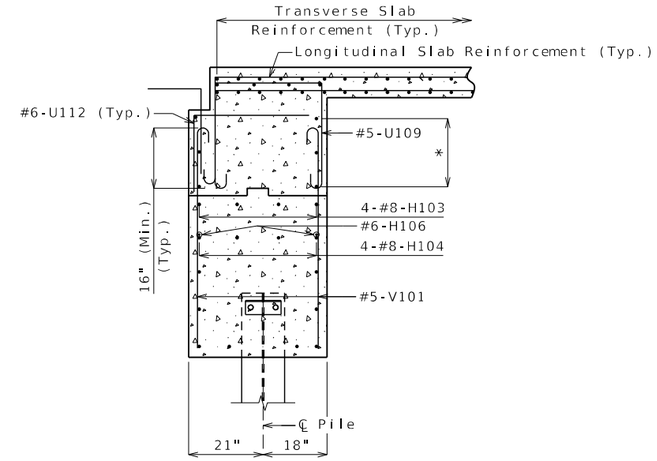

* 3-#6-H108 (Between Beams)(Typ.)

SECTION C-C

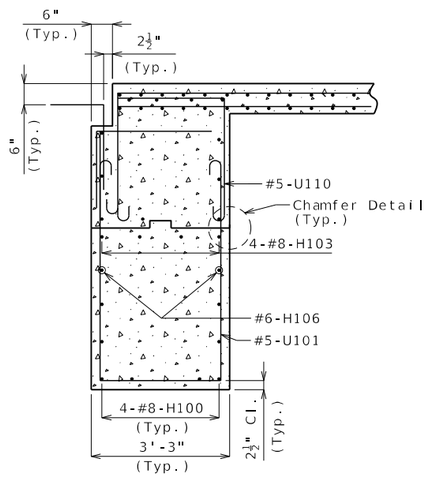

SECTION D-D

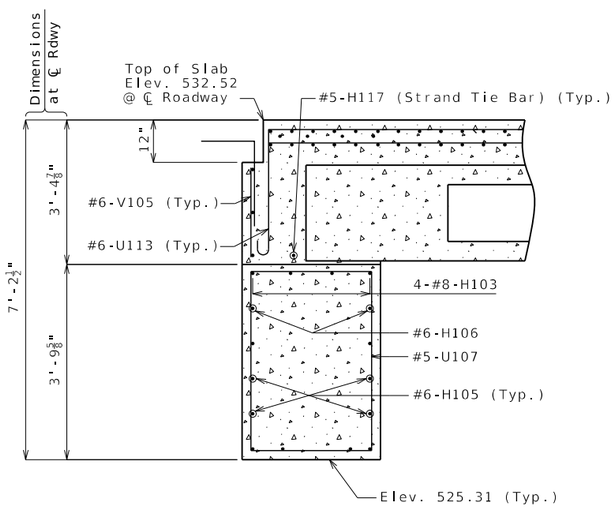

SECTION E-E

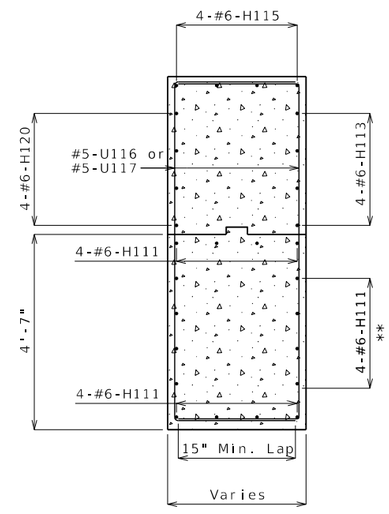

SECTION F-F

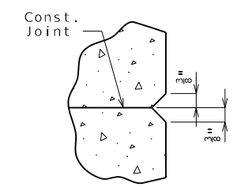

CHAMFER DETAIL

Notes:

Work this sheet with Sheets No. 4 & 5.

For location of Sections A-A thru F-F, see Sheet No. 5.

For details and reinforcement of Type H Barrier not shown, see Sheets No. 28 & 29.

For details of vertical drain at end bents, see Sheet No. 7.

For location of #5-H117 (Strand Tie Bar), see Sheet No. 18.

All concrete in the end bent above top of beam and below top of slab shall be Class B-2.

For details of bridge approach slab, see Sheet No. 30.

DETAILS OF END BENT NO. 1

Detailed Sep. 2024
Checked Sep. 2024

Note: This drawing is not to scale. Follow dimensions.

STATE OF MISSOURI
DEREK S. BUTLER
NUMBER PE-2016009626
PROFESSIONAL ENGINEER

THIS SHEET HAS BEEN SIGNED, SEALED AND DATED ELECTRONICALLY

DATE PREPARED	
12/19/2024	
ROUTE: K	STATE: MO
DISTRICT: BR	SHEET NO.: 6
COUNTY: MONTGOMERY	
JOB NO.: JNE0053	
CONTRACT ID.	
PROJECT NO.	
BRIDGE NO.: A9536	

DATE	DESCRIPTION

IF A SEAL IS PRESENT ON THIS SHEET IT HAS BEEN ELECTRONICALLY SEALED AND DATED.

MISSOURI HIGHWAYS AND TRANSPORTATION COMMISSION
105 WEST CAPITOL
JEFFERSON CITY, MO 65102
1-888-ASK-MODOT (1-888-275-6636)

GARVER, LLC.
7509 NW TIFFANY SPRINGS PARKWAY, SUITE 200
KANSAS CITY, MO 64153
PHONE: (816) 298-6465
CERTIFICATE OF AUTHORITY NO. 2008013090

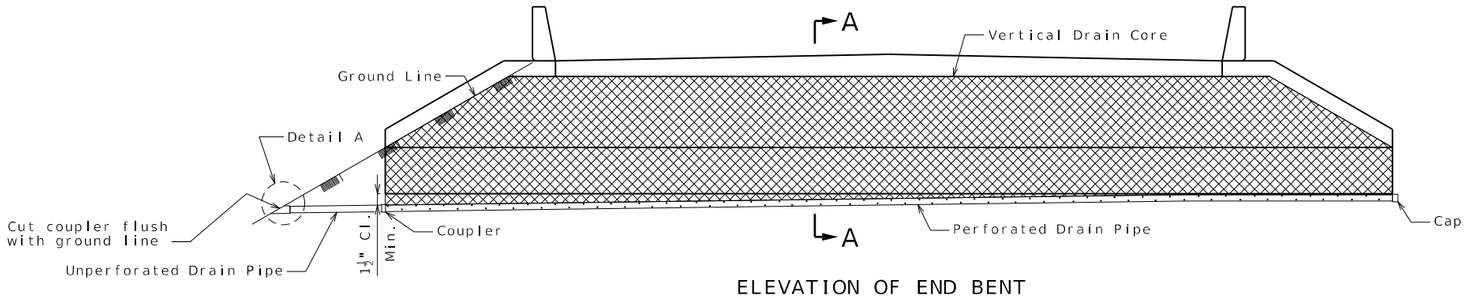

ELEVATION OF END BENT

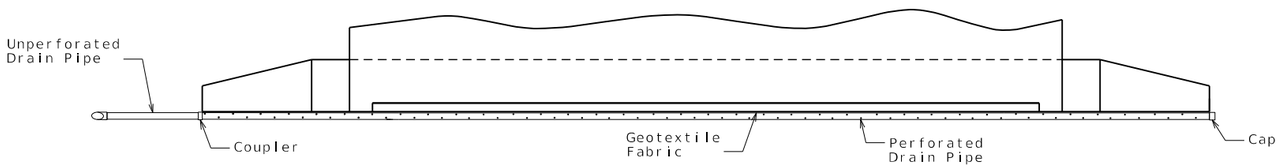

PLAN OF END BENT

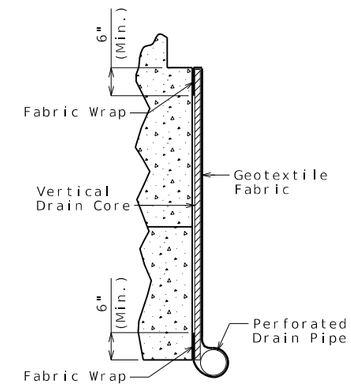

PART SECTION A-A
(Section thru wing similar)

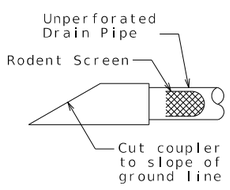

DETAIL A

General Notes:

All drain pipe shall be sloped 1 to 2 percent.

Drain pipe may be either 6-inch diameter corrugated metallic-coated steel pipe underdrain, 4-inch diameter corrugated polyvinyl chloride (PVC) drain pipe, or 4-inch diameter corrugated polyethylene (PE) drain pipe.

Drain pipe shall be placed at fill face of end bent and fill face of wings. The pipe shall slope to lowest grade of ground line, also missing the lower beam of end bent by a minimum of 1 1/2 inches.

Perforated pipe shall be placed at fill face side and fill face of wings at the bottom of end bent and plain pipe shall be used where the vertical drain ends to the exit at ground line.

VERTICAL DRAIN AT END BENTS

(Squared end bent shown, skewed end bent similar)

Detailed Sep. 2024
Checked Sep. 2024

Note: This drawing is not to scale. Follow dimensions.

STATE OF MISSOURI
DEREK S. BUTLER
NUMBER PE-2016009828
PROFESSIONAL ENGINEER

THIS SHEET HAS BEEN SIGNED, SEALED AND DATED ELECTRONICALLY

DATE PREPARED	
12/19/2024	
ROUTE: K	STATE: MO
DISTRICT: BR	SHEET NO.: 7
COUNTY: MONTGOMERY	
JOB NO.: JNE0053	
CONTRACT ID.	
PROJECT NO.	
BRIDGE NO.: A9536	

DESCRIPTION	DATE

MISSOURI HIGHWAYS AND TRANSPORTATION COMMISSION
105 WEST CAPITOL
JEFFERSON CITY, MO 65102
1-888-ASK-MODOT (1-888-275-6636)

GARVER, LLC.
7509 NW TIFFANY SPRINGS PARKWAY, SUITE 200
KANSAS CITY, MO 64153
PHONE: (816) 298-6465
CERTIFICATE OF AUTHORITY NO. 2008013090

IF A SEAL IS PRESENT ON THIS SHEET IT HAS BEEN ELECTRONICALLY SEALED AND DATED.

(1) 8-#4-H210 @ 11" cts. (Each Face) (Typ.)

Notes:

Work this sheet with Sheet No. 9.

Reinforcing steel shall be shifted to clear piles by at least 1 1/2 inches.

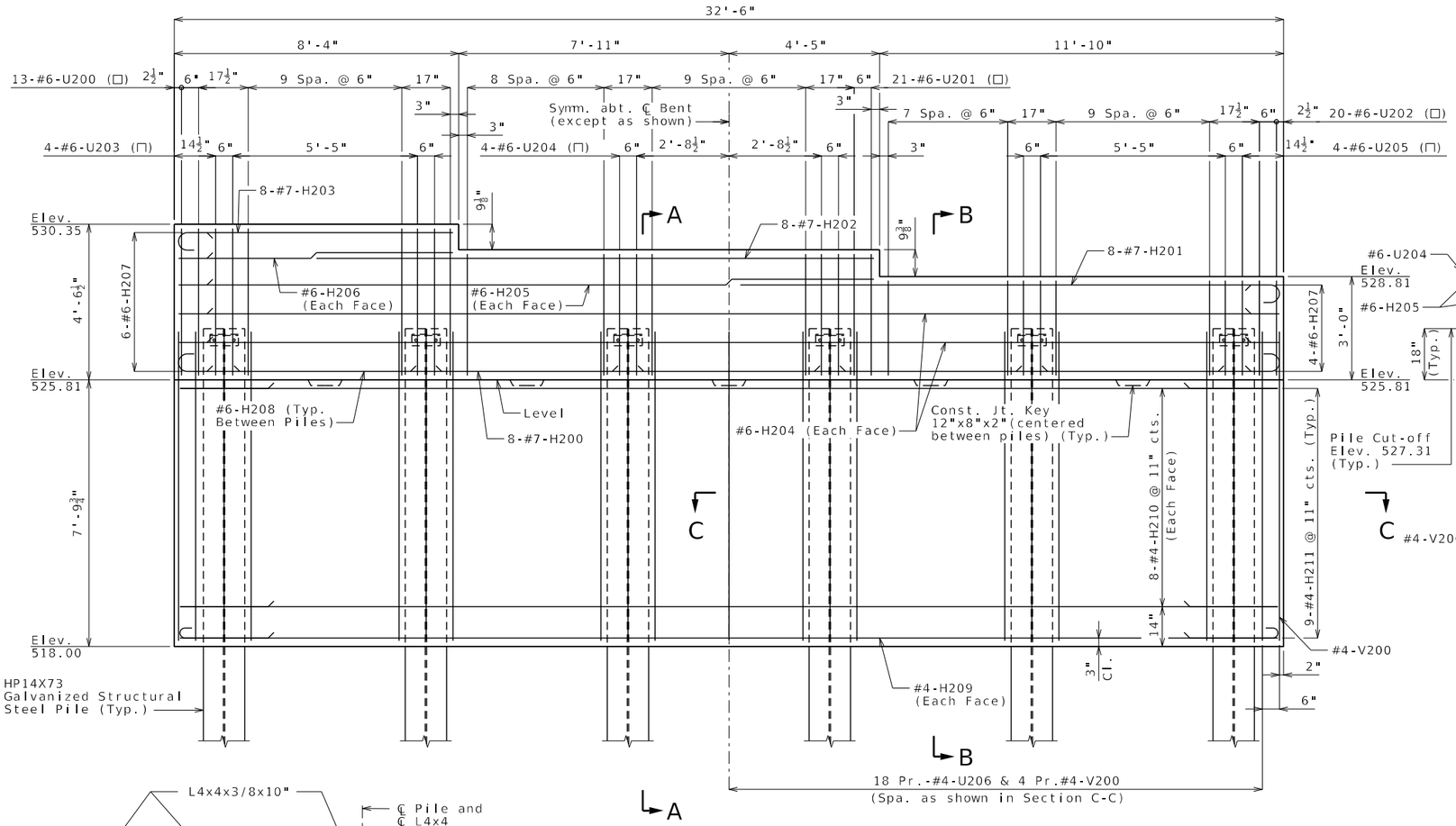

ELEVATION

(Note: Keys on beam not shown for clarity)

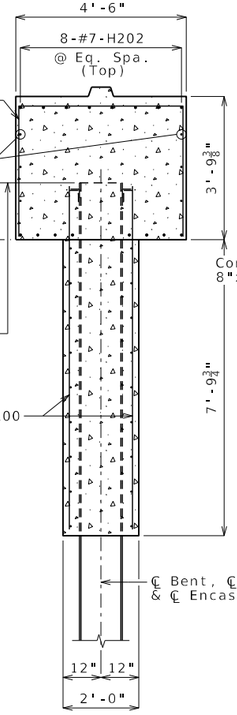

SECTION A-A

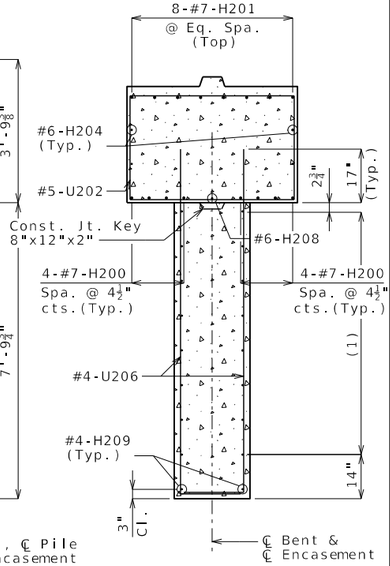

SECTION B-B

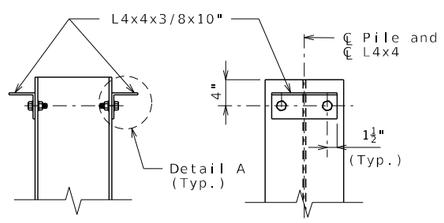

DETAILS OF HP PILE ANCHORS

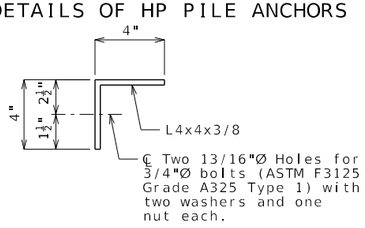

DETAIL A

Angles shall be coated with a minimum of two coats of non-aluminum epoxy mastic primer to provide a dry film thickness of 4 mils minimum, 8 mils maximum, or galvanized in accordance with Sec 1081. Bolts, washers and nuts shall be galvanized in accordance with AASHTO M 232 (ASTM A153), Class C.

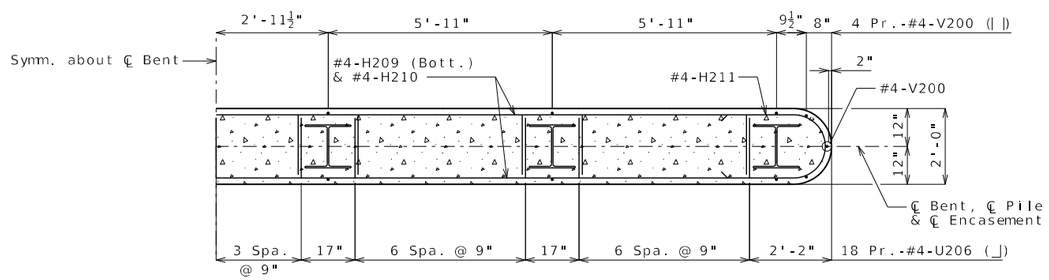

SECTION C-C

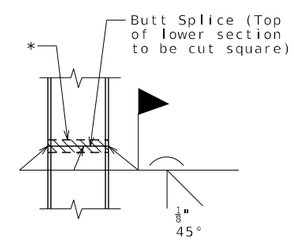

STEEL PILE SPLICE

(If required)

* Galvanizing material shall be omitted or removed one inch clear of weld locations in accordance with Sec 702.

DETAIL OF INTERMEDIATE BENT NO. 2

Detailed Aug. 2024
Checked Sep. 2024

Note: This drawing is not to scale. Follow dimensions.

STATE OF MISSOURI — DEREK S. BUTLER — NUMBER PE-2016009626 — PROFESSIONAL ENGINEER

THIS SHEET HAS BEEN SIGNED, SEALED AND DATED ELECTRONICALLY

DATE PREPARED 12/31/2024

ROUTE	STATE
K	MO
DISTRICT	SHEET NO.
BR	8

COUNTY: MONTGOMERY
JOB NO.: JNE0053
CONTRACT ID.:
PROJECT NO.:
BRIDGE NO.: A9536

DESCRIPTION | DATE

MISSOURI HIGHWAYS AND TRANSPORTATION COMMISSION
105 WEST CAPITOL
JEFFERSON CITY, MO 65102
1-888-ASK-MODOT (1-888-275-6636)

GARVER, LLC.
7509 NW TIFFANY SPRINGS PARKWAY, SUITE 200
KANSAS CITY, MO 64153
PHONE: (816) 298-6465
CERTIFICATE OF AUTHORITY NO. 2008013090

IF A SEAL IS PRESENT ON THIS SHEET IT HAS BEEN ELECTRONICALLY SEALED AND DATED.

B_A9536_008_NE0053_Int_Bent2_1.dgn 10:05:01 AM 12/31/2024

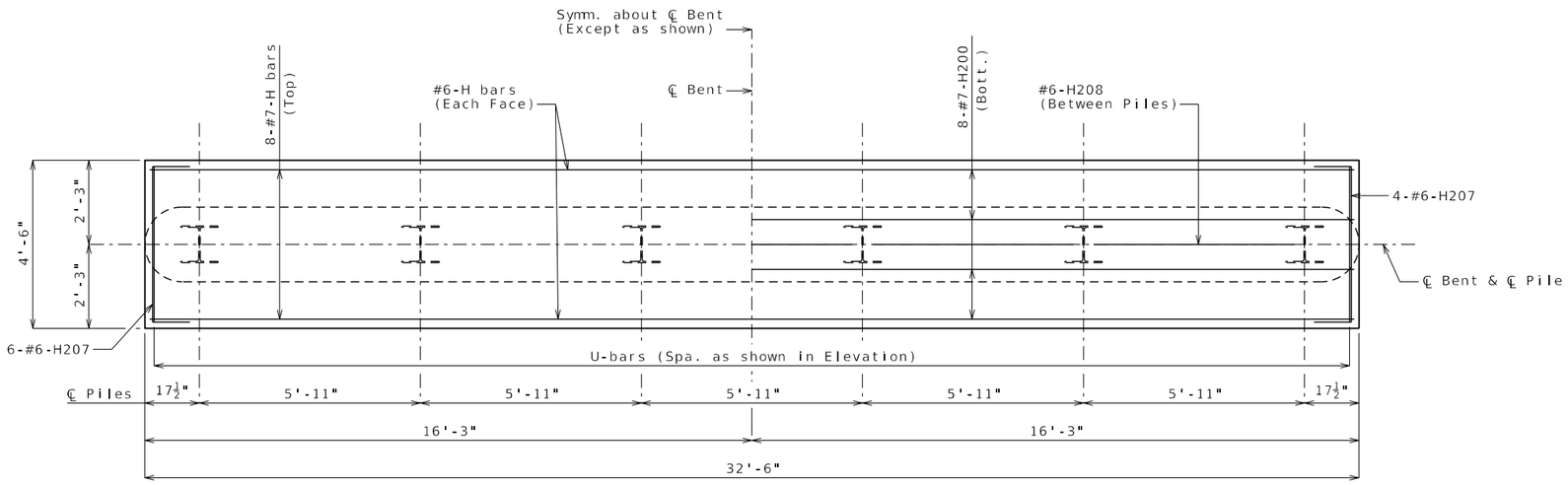

TOP REINFORCEMENT & PILES

BOTTOM REINFORCEMENT & PILES

PLAN SHOWING REINFORCEMENT

(Steps & Keys not shown for clarity)

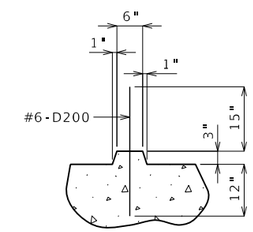

SECTION THRU KEY

Substructure Quantity Table for Bent No. 2		
Item		Quantity
Class 1 Excavation	cu. yard	20
Galvanized Structural Steel Piles (14 in.)	linear foot	276
Pile Point Reinforcement	each	6
Class B Concrete (Substructure)	cu. yard	38.3
Reinforcing Steel (Bridges)	pound	4210

These quantities are included in the Estimated Quantities table on Sheet No. 2.

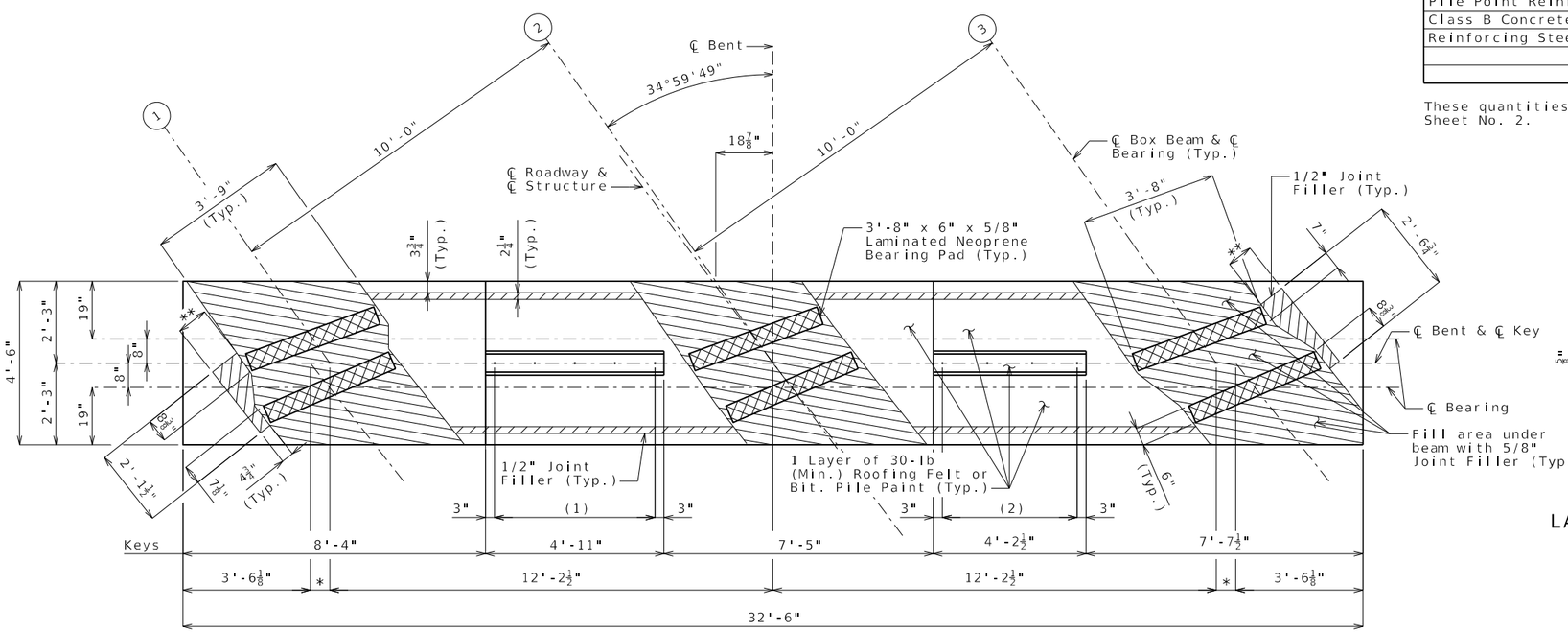

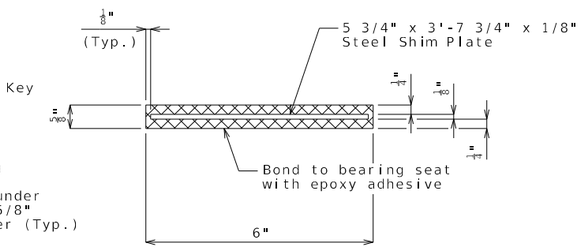

SECTION THRU 6"x3'-8"x5/8"
LAMINATED NEOPRENE BEARING PAD

* 6⅜"

** 11" (Left) or 9⅜" (Right)

(1) 5-#6-D200 (Equally Spa.)

(2) 4-#6-D200 (Equally Spa.)

PLAN OF BEAM

Notes:

Work this sheet with Sheet No. 8.

Reinforcing steel shall be shifted to clear piles by at least 1 1/2 inches.

For steps 2 inches or more, use 2 1/4 x 1/2 inch joint filler up vertical face.

DETAIL OF INTERMEDIATE BENT NO. 2

Detailed Aug. 2024
Checked Sep. 2024

Note: This drawing is not to scale. Follow dimensions.

STATE OF MISSOURI
DEREK S. BUTLER
NUMBER PE-2016009828
PROFESSIONAL ENGINEER

THIS SHEET HAS BEEN SIGNED, SEALED AND DATED ELECTRONICALLY

DATE PREPARED	
12/31/2024	
ROUTE: K	STATE: MO
DISTRICT: BR	SHEET NO.: 9
COUNTY: MONTGOMERY	
JOB NO.: JNE0053	
CONTRACT ID.	
PROJECT NO.	
BRIDGE NO.: A9536	

DATE	DESCRIPTION

IF A SEAL IS PRESENT ON THIS SHEET IT HAS BEEN ELECTRONICALLY SEALED AND DATED.

MISSOURI HIGHWAYS AND TRANSPORTATION COMMISSION
105 WEST CAPITOL
JEFFERSON CITY, MO 65102
1-888-ASK-MODOT (1-888-275-6636)

GARVER, LLC.
7509 NW TIFFANY SPRINGS
PARKWAY, SUITE 200
KANSAS CITY, MO 64153
PHONE: (816) 298-6465
CERTIFICATE OF AUTHORITY
NO. 2008013090

(1) 11-#4-H310 @ abt. 10" cts. (Each Face) (Typ.)

Notes:

Work this sheet with Sheet No. 11.

Reinforcing steel shall be shifted to clear piles by at least 1 1/2 inches.

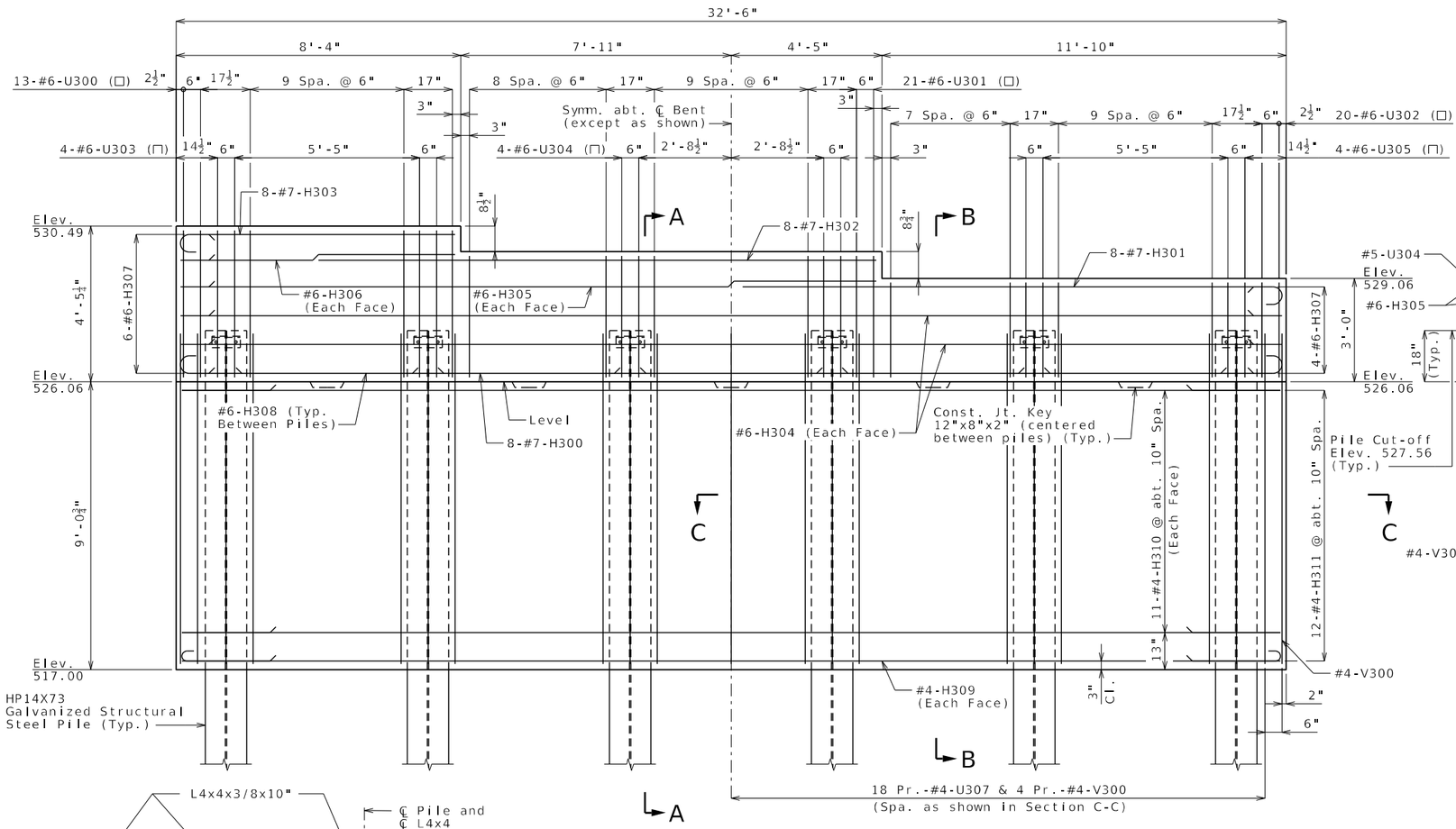

ELEVATION
(Note: Keys on beam not shown for clarity)

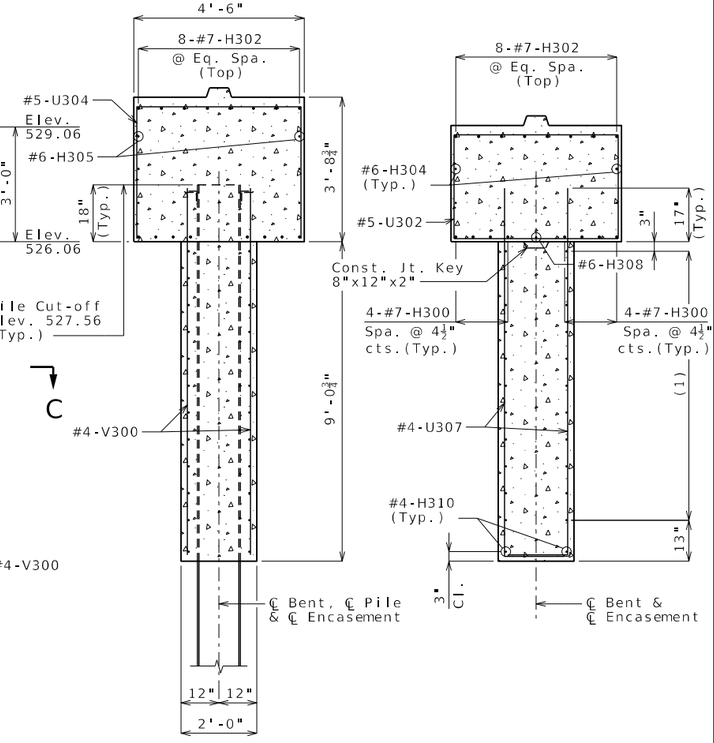

SECTION A-A

SECTION B-B

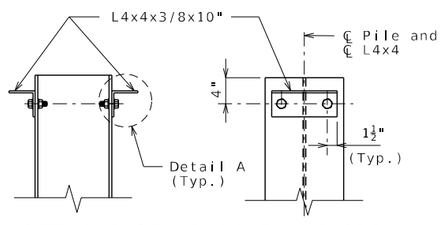

DETAILS OF HP PILE ANCHORS

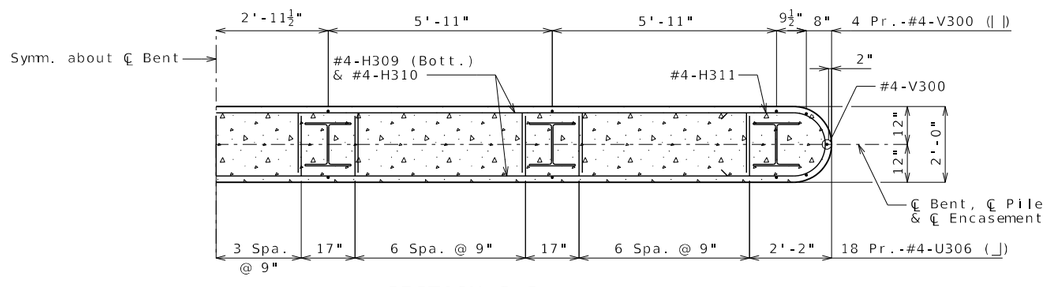

SECTION C-C

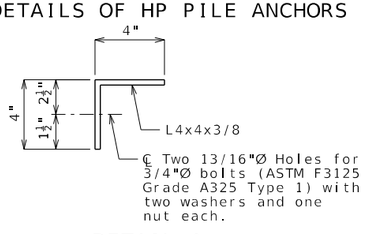

DETAIL A

Angles shall be coated with a minimum of two coats of non-aluminum epoxy mastic primer to provide a dry film thickness of 4 mils minimum, 8 mils maximum, or galvanized in accordance with Sec 1081. Bolts, washers and nuts shall be galvanized in accordance with AASHTO M 232 (ASTM A153), Class C.

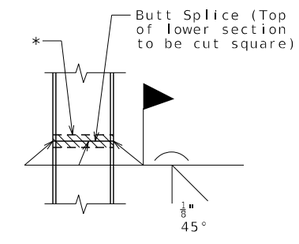

STEEL PILE SPLICE
(If required)

* Galvanizing material shall be omitted or removed one inch clear of weld locations in accordance with Sec 702.

DETAIL OF INTERMEDIATE BENT NO. 3

Detailed Aug. 2024
Checked Sep. 2024

Note: This drawing is not to scale. Follow dimensions.

STATE OF MISSOURI
DEREK S. BUTLER
NUMBER PE-2016009626
PROFESSIONAL ENGINEER
THIS SHEET HAS BEEN SIGNED, SEALED AND DATED ELECTRONICALLY

DATE PREPARED 12/31/2024
ROUTE K | STATE MO
DISTRICT BR | SHEET NO. 10
COUNTY MONTGOMERY
JOB NO. JNE0053
CONTRACT ID.
PROJECT NO.
BRIDGE NO. A9536

DESCRIPTION
DATE

MISSOURI HIGHWAYS AND TRANSPORTATION COMMISSION
105 WEST CAPITOL
JEFFERSON CITY, MO 65102
1-888-ASK-MODOT (1-888-275-6636)

GARVER, LLC.
7509 NW TIFFANY SPRINGS PARKWAY, SUITE 200
KANSAS CITY, MO 64153
PHONE: (816) 298-6465
CERTIFICATE OF AUTHORITY NO. 2008013090

IF A SEAL IS PRESENT ON THIS SHEET IT HAS BEEN ELECTRONICALLY SEALED AND DATED.

B_A9536_010_NE0053_Int_Bent3_1.dgn 10:06:25 AM 12/31/2024

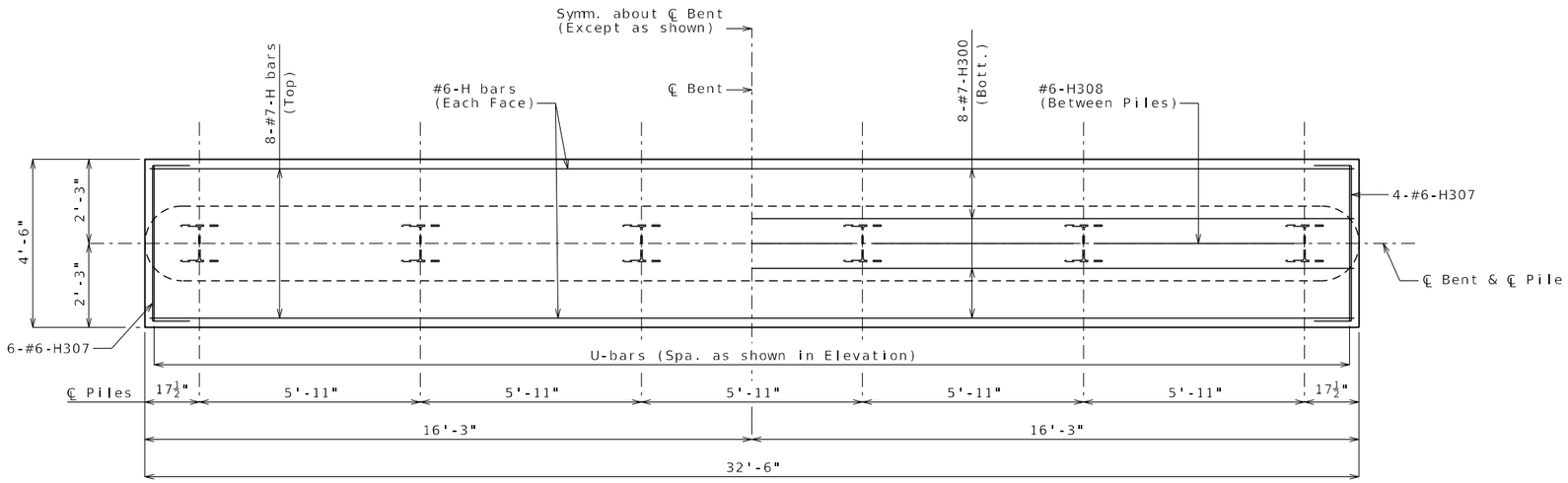

TOP REINFORCEMENT & PILES

BOTTOM REINFORCEMENT & PILES

PLAN SHOWING REINFORCEMENT

(Steps & Keys not shown for clarity)

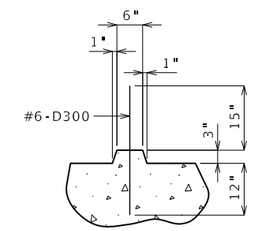

SECTION THRU KEY

Substructure Quantity Table for Bent No. 3		
Item		Quantity
Class 1 Excavation	cu. yard	20
Galvanized Structural Steel Piles (14 in.)	linear foot	270
Pile Point Reinforcement	each	6
Class B Concrete (Substructure)	cu. yard	41.0
Reinforcing Steel (Bridges)	pound	4410

These quantities are included in the Estimated Quantities table on Sheet No. 2.

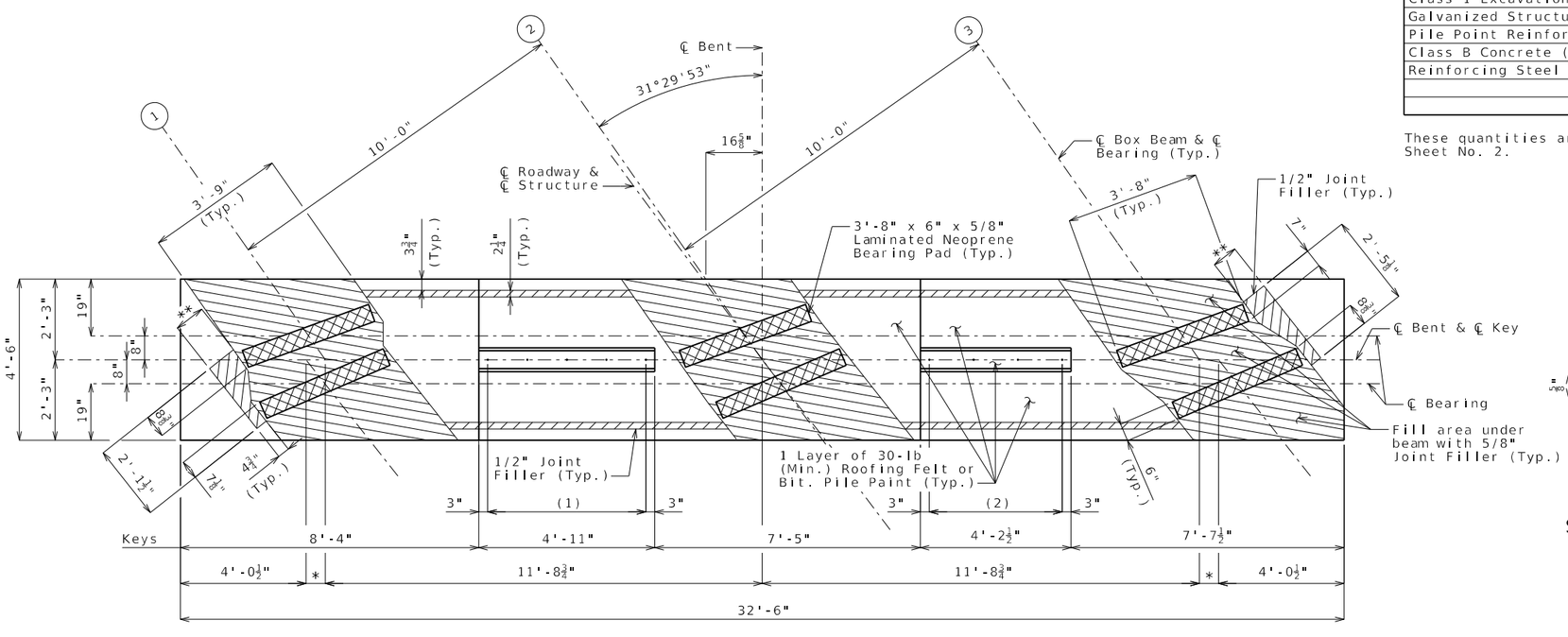

* 5¾"

** 10¾" (Left) or 9" (Right)

(1) 5-#6-D300 (Equally Spa.)

(2) 4-#6-D300 (Equally Spa.)

PLAN OF BEAM

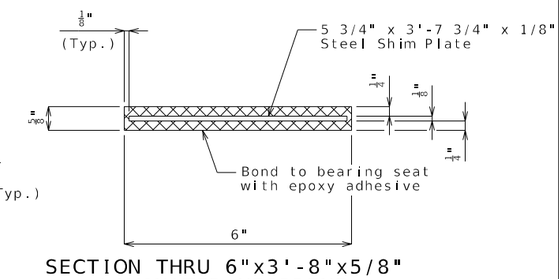

SECTION THRU 6"x3'-8"x5/8"
LAMINATED NEOPRENE
BEARING PAD

DETAIL OF INTERMEDIATE BENT NO. 3

Note: This drawing is not to scale. Follow dimensions.

Notes:

Work this sheet with Sheet No. 10.

Reinforcing steel shall be shifted to clear piles by at least 1 1/2 inches.

For steps 2 inches or more, use 2 1/4 x 1/2 inch joint filler up vertical face.

Detailed Aug. 2024
Checked Sep. 2024

STATE OF MISSOURI
DEREK S. BUTLER
NUMBER PE-2016009628
PROFESSIONAL ENGINEER

THIS SHEET HAS BEEN SIGNED, SEALED AND DATED ELECTRONICALLY

DATE PREPARED	12/31/2024
ROUTE	K
STATE	MO
DISTRICT	BR
SHEET NO.	11
COUNTY	MONTGOMERY
JOB NO.	JNE0053
CONTRACT ID.	
PROJECT NO.	
BRIDGE NO.	A9536

DESCRIPTION	DATE

IF A SEAL IS PRESENT ON THIS SHEET IT HAS BEEN ELECTRONICALLY SEALED AND DATED.

MISSOURI HIGHWAYS AND TRANSPORTATION COMMISSION
105 WEST CAPITOL
JEFFERSON CITY, MO 65102
1-888-ASK-MODOT (1-888-275-6636)

GARVER, LLC.
7509 NW TIFFANY SPRINGS
PARKWAY, SUITE 200
KANSAS CITY, MO 64153
PHONE: (816) 298-6465
CERTIFICATE OF AUTHORITY
NO. 2008013090

(1) 8-#4-H410 @ 11" cts. (Each Face) (Typ.)

Notes:

Work this sheet with Sheet No. 13.

Reinforcing steel shall be shifted to clear piles by at least 1 1/2 inches.

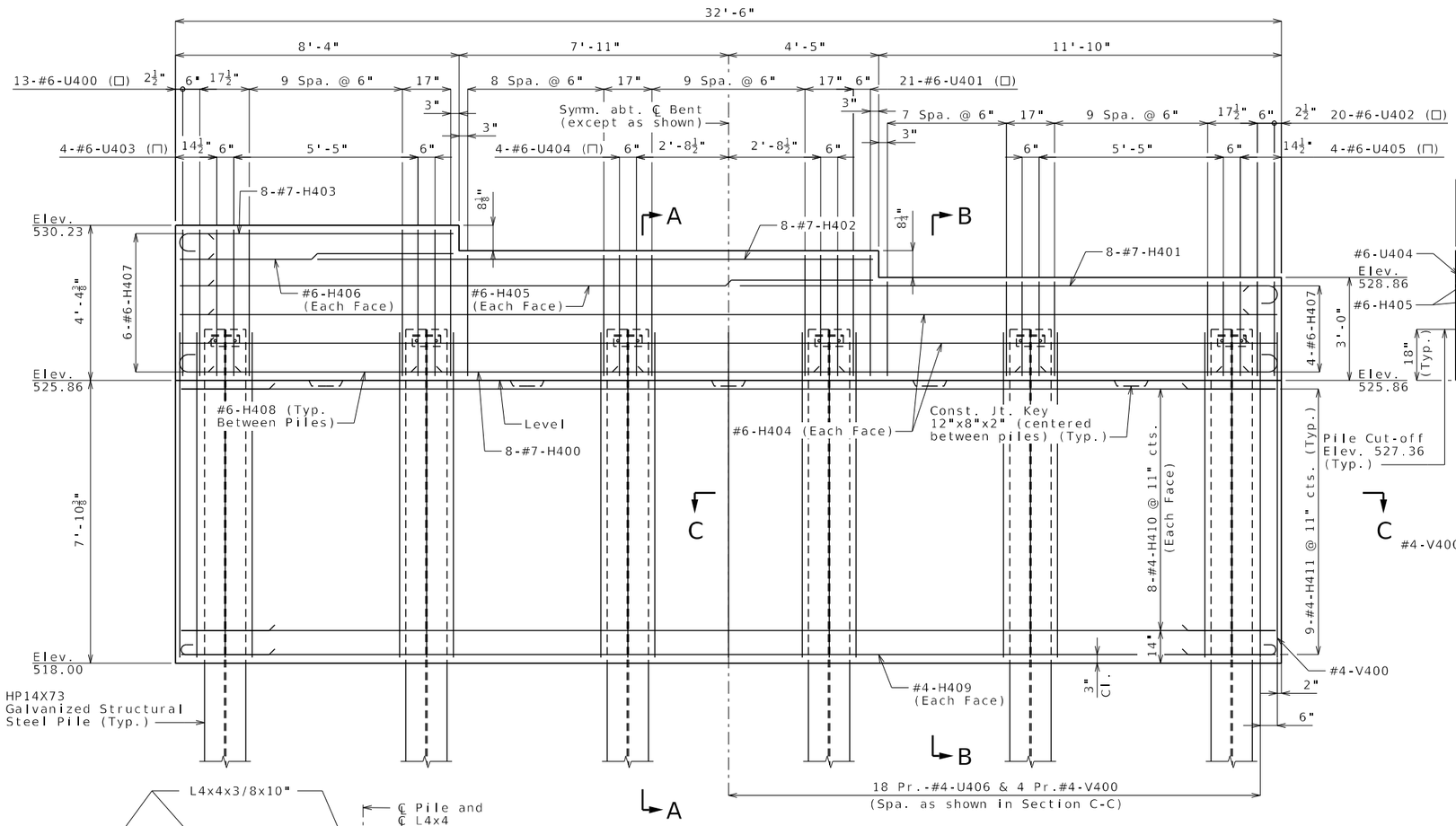

ELEVATION

(Note: Keys on beam not shown for clarity)

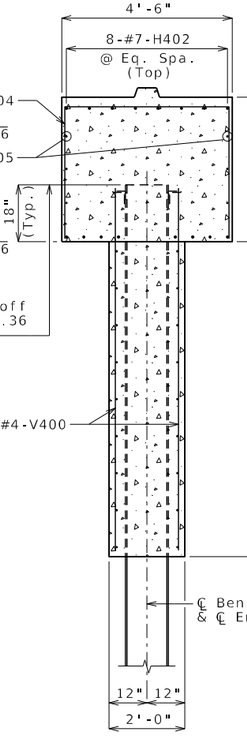

SECTION A-A

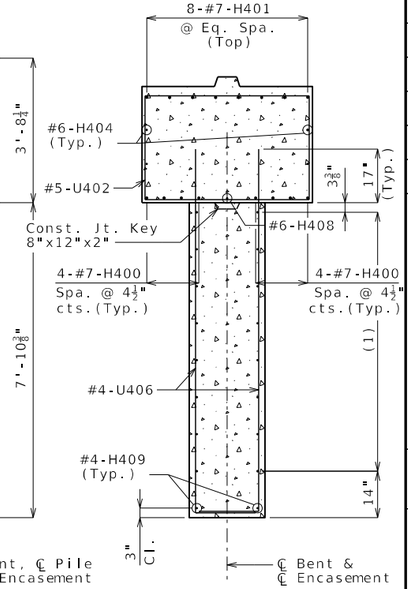

SECTION B-B

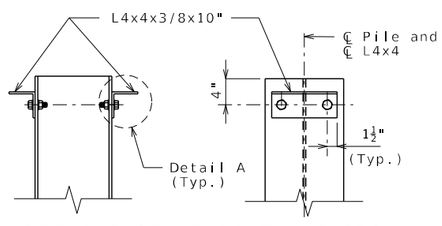

DETAILS OF HP PILE ANCHORS

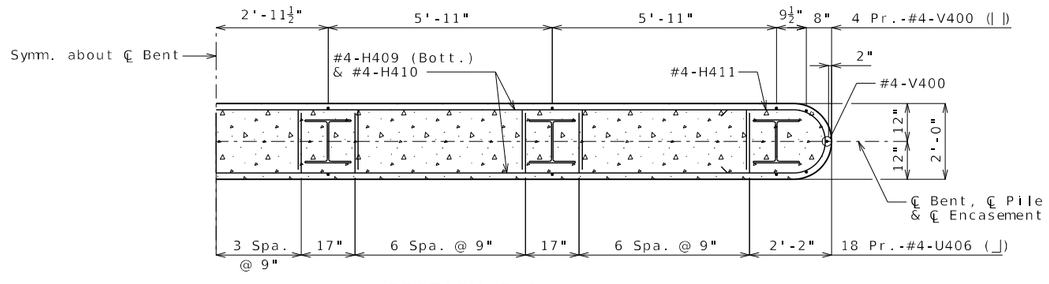

SECTION C-C

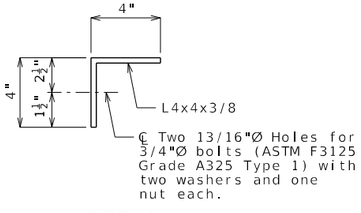

DETAIL A

Angles shall be coated with a minimum of two coats of non-aluminum epoxy mastic primer to provide a dry film thickness of 4 mils minimum, 8 mils maximum, or galvanized in accordance with Sec 1081. Bolts, washers and nuts shall be galvanized in accordance with AASHTO M 232 (ASTM A153), Class C.

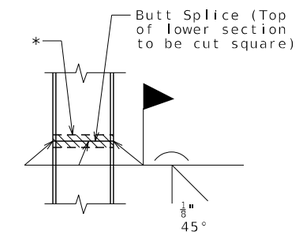

STEEL PILE SPLICE

(If required)

* Galvanizing material shall be omitted or removed one inch clear of weld locations in accordance with Sec 702.

DETAIL OF INTERMEDIATE BENT NO. 4

Detailed Aug. 2024
Checked Sep. 2024

Note: This drawing is not to scale. Follow dimensions.

STATE OF MISSOURI — DEREK S. BUTLER — NUMBER PE-2016009626 — PROFESSIONAL ENGINEER

THIS SHEET HAS BEEN SIGNED, SEALED AND DATED ELECTRONICALLY

DATE PREPARED	
12/31/2024	
ROUTE: K	STATE: MO
DISTRICT: BR	SHEET NO.: 12
COUNTY: MONTGOMERY	
JOB NO.: JNE0053	
CONTRACT ID.	
PROJECT NO.	
BRIDGE NO.: A9536	

DESCRIPTION

DATE

MISSOURI HIGHWAYS AND TRANSPORTATION COMMISSION
105 WEST CAPITOL
JEFFERSON CITY, MO 65102
1-888-ASK-MODOT (1-888-275-6636)

GARVER, LLC.
7509 NW TIFFANY SPRINGS PARKWAY, SUITE 200
KANSAS CITY, MO 64153
PHONE: (816) 298-6465
CERTIFICATE OF AUTHORITY NO. 2008013090

IF A SEAL IS PRESENT ON THIS SHEET IT HAS BEEN ELECTRONICALLY SEALED AND DATED.

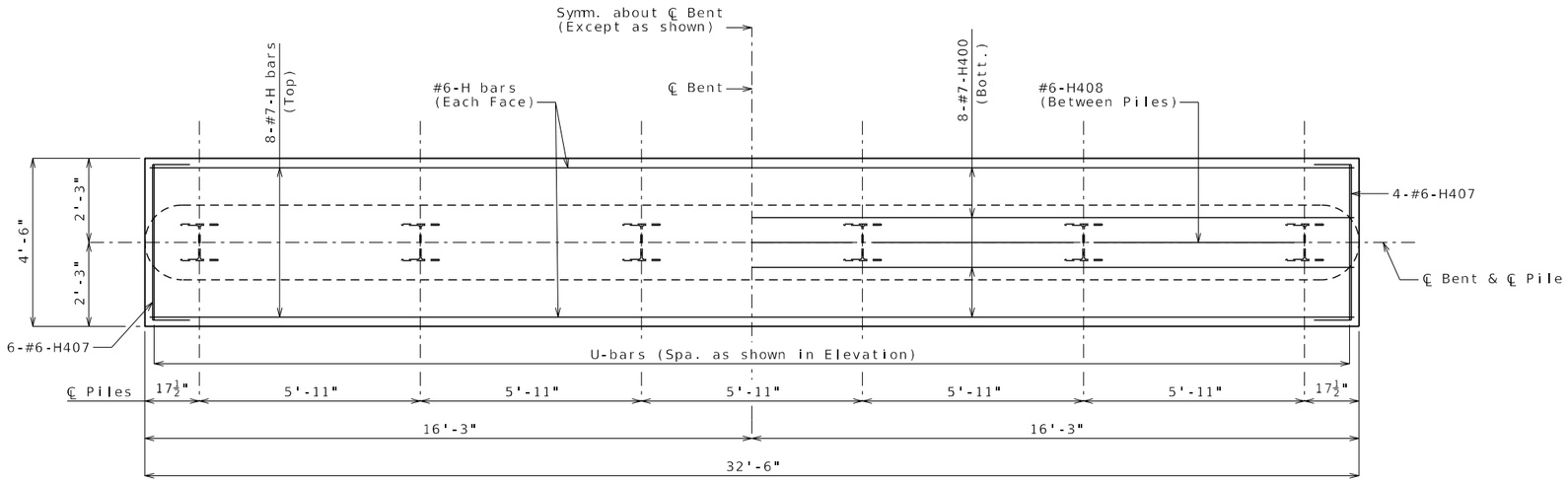

TOP REINFORCEMENT & PILES

BOTTOM REINFORCEMENT & PILES

PLAN SHOWING REINFORCEMENT

(Steps & Keys not shown for clarity)

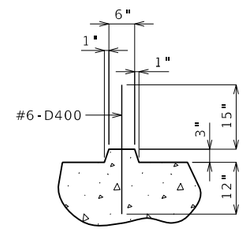

SECTION THRU KEY

Substructure Quantity Table for Bent No. 4		
Item		Quantity
Class 1 Excavation	cu. yard	20
Galvanized Structural Steel Piles (14 in.)	linear foot	288
Pile Point Reinforcement	each	6
Class B Concrete (Substructure)	cu. yard	38.0
Reinforcing Steel (Bridges)	pound	4200

These quantities are included in the Estimated Quantities table on Sheet No. 2.

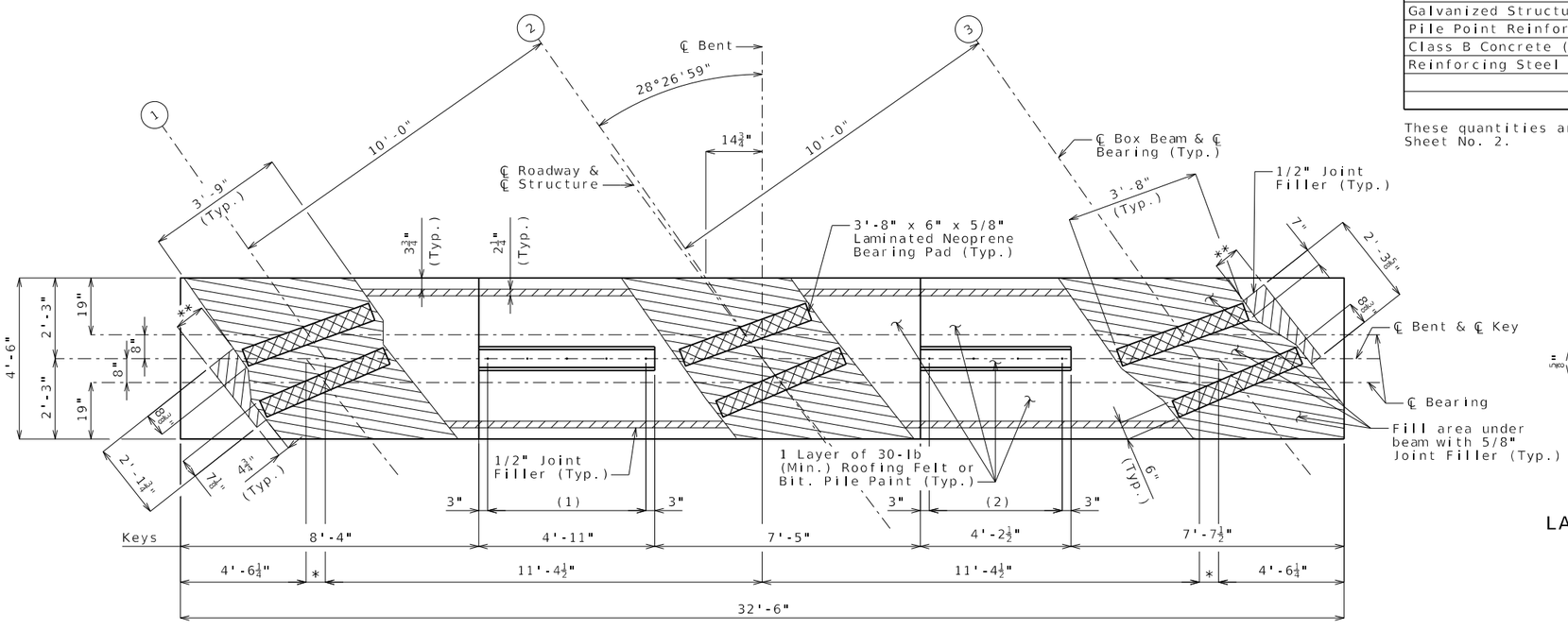

* 4¼"

** 9½" (Left) or 8" (Right)

(1) 5-#6-D400 (Equally Spa.)

(2) 4-#6-D400 (Equally Spa.)

PLAN OF BEAM

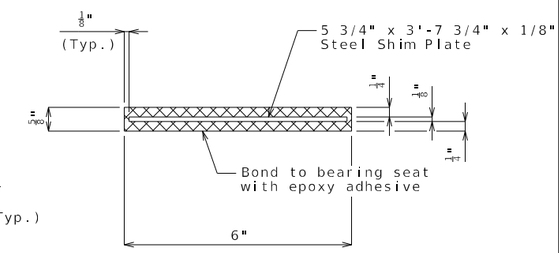

SECTION THRU 6"x3'-8"x5/8"
LAMINATED NEOPRENE BEARING PAD

Notes:

Work this sheet with Sheet No. 12.

Reinforcing steel shall be shifted to clear piles by at least 1 1/2 inches.

For steps 2 inches or more, use 2 1/4 x 1/2 inch filler up vertical face.

DETAIL OF INTERMEDIATE BENT NO. 4

Detailed Aug. 2024
Checked Sep. 2024

Note: This drawing is not to scale. Follow dimensions.

STATE OF MISSOURI
DEREK S. BUTLER
NUMBER PE-2016009828
PROFESSIONAL ENGINEER

THIS SHEET HAS BEEN SIGNED, SEALED AND DATED ELECTRONICALLY

DATE PREPARED	
12/31/2024	
ROUTE: K	STATE: MO
DISTRICT: BR	SHEET NO.: 13
COUNTY: MONTGOMERY	
JOB NO.: JNE0053	
CONTRACT ID.	
PROJECT NO.	
BRIDGE NO.: A9536	

DATE	DESCRIPTION

IF A SEAL IS PRESENT ON THIS SHEET IT HAS BEEN ELECTRONICALLY SEALED AND DATED.

MISSOURI HIGHWAYS AND TRANSPORTATION COMMISSION

105 WEST CAPITOL
JEFFERSON CITY, MO 65102
1-888-ASK-MODOT (1-888-275-6636)

GARVER, LLC.
7509 NW TIFFANY SPRINGS
PARKWAY, SUITE 200
KANSAS CITY, MO 64153
PHONE: (816) 298-6465
CERTIFICATE OF AUTHORITY
NO. 2008013090

Substructure Quantity Table for End Bent No. 5		
Item		Quantity
Class 1 Excavation	cu. yard	75
Galvanized Structural Steel Piles (12 in.)	linear foot	270
Pile Point Reinforcement	each	6
Class B Concrete (Substructure)	cu. yard	21.7

These quantities are included in the Estimated Quantities table on Sheet No. 2.

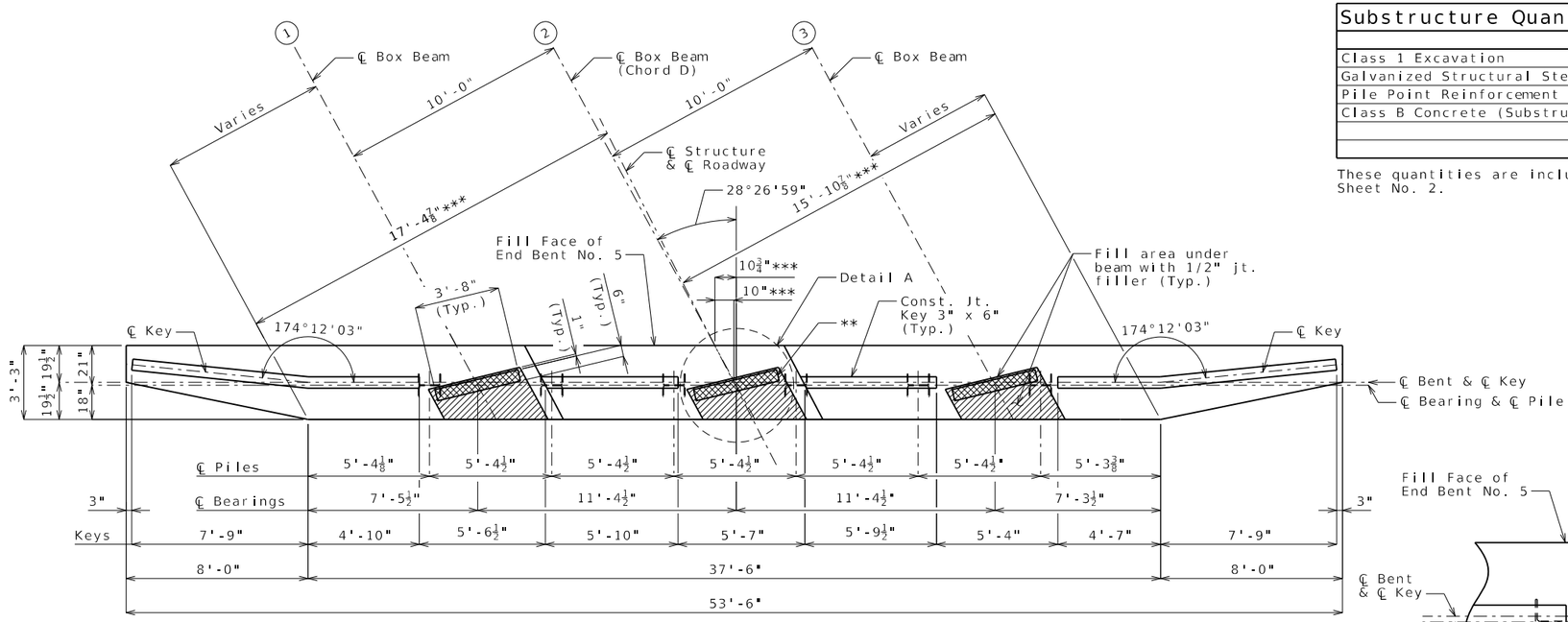

PLAN OF BEAM SHOWING DIMENSIONS

** 3'-8" x 6" x 1/2" Plain Neoprene Bearing Pad (Typ.)

*** Measured to ℄ Structure & ℄ Roadway

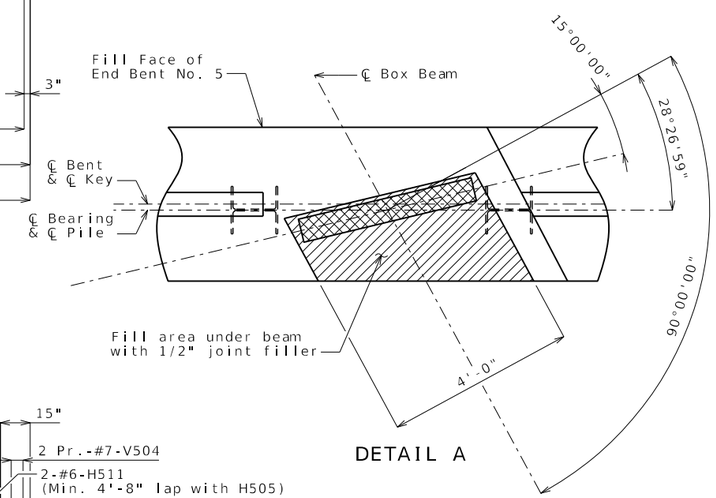

DETAIL A

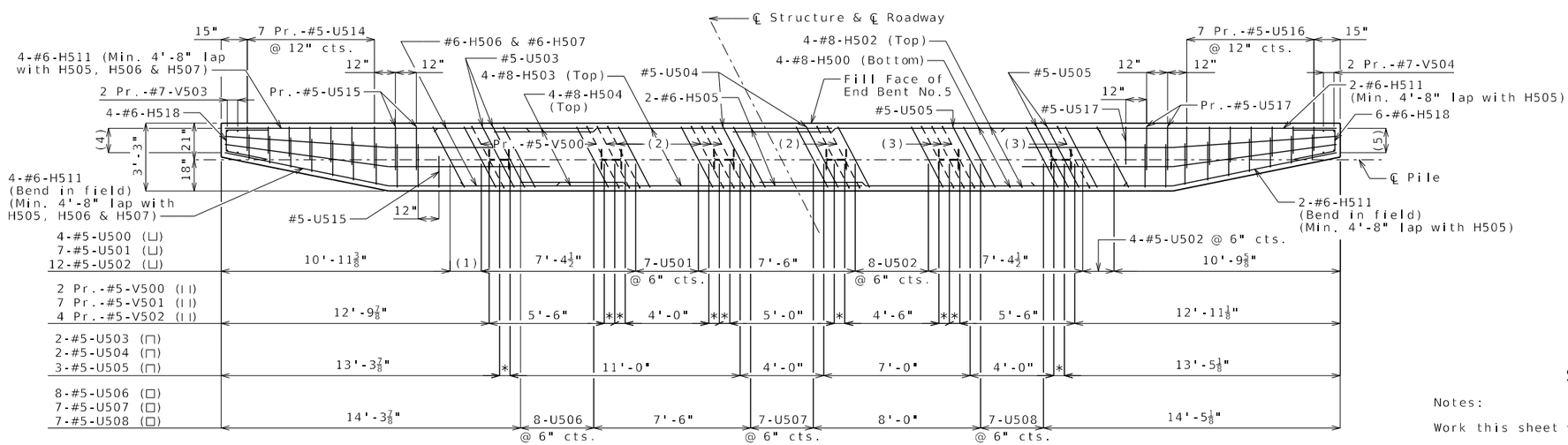

PLAN OF BEAM SHOWING REINFORCEMENT

(Steps and keys not shown for clarity)

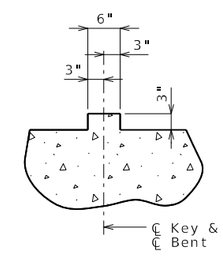

SECTION THRU KEY

* 6"

(1) 4-#5-U500 @ 6" cts.

(2) Pr.-#5-V501

(3) Pr.-#5-V502

(4) 4-#6-H511 (Top & Bottom)(Bend in field) (Min. 4'-8" lap with H500 & H504)

(5) 4-#6-H511 (Top & Bottom)(Bend in field) (Min. 4'-8" lap with H500 & H502)

Notes:

Work this sheet with Sheets No. 15 & 16.

For details of vertical drain at end bents, see Sheet No. 7.

All concrete in the end bent above top of beam and below top of slab shall be Class B-2.

All U-bars and pairs of V-bars shall be placed parallel to the centerline of box beam unless shown otherwise.

Reinforcing steel shall be shifted to clear piles. U bars shall be shifted to clear piles by at least 1 1/2 inches.

DETAILS OF END BENT NO. 5

Detailed Sep. 2024
Checked Sep. 2024

Note: This drawing is not to scale. Follow dimensions.

STATE OF MISSOURI
DEREK S. BUTLER
NUMBER PE-2016009626
PROFESSIONAL ENGINEER

THIS SHEET HAS BEEN SIGNED, SEALED AND DATED ELECTRONICALLY

IF A SEAL IS PRESENT ON THIS SHEET IT HAS BEEN ELECTRONICALLY SEALED AND DATED.

DATE PREPARED	
12/31/2024	
ROUTE: K	STATE: MO
DISTRICT: BR	SHEET NO.: 14
COUNTY: MONTGOMERY	
JOB NO.: JNE0053	
CONTRACT ID.	
PROJECT NO.	
BRIDGE NO.: A9536	

DATE	DESCRIPTION

MISSOURI HIGHWAYS AND TRANSPORTATION COMMISSION
105 WEST CAPITOL
JEFFERSON CITY, MO 65102
1-888-ASK-MODOT (1-888-275-6636)

GARVER, LLC.
7509 NW TIFFANY SPRINGS PARKWAY, SUITE 200
KANSAS CITY, MO 64153
PHONE: (816) 298-6465
CERTIFICATE OF AUTHORITY NO. 2008013090

B_A9536_014_NE0053_End_Bent5_1.dgn 10:09:02 AM 12/31/2024

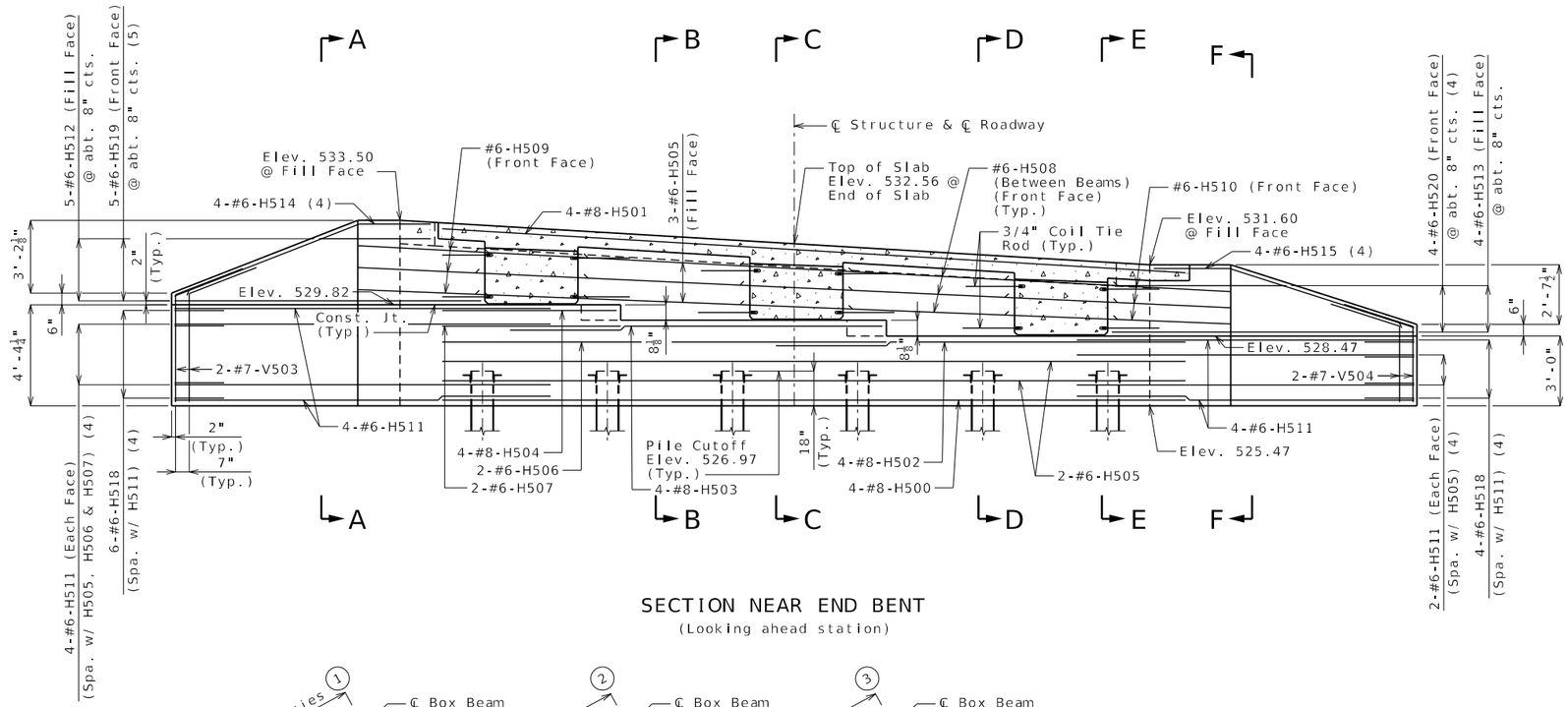

SECTION NEAR END BENT

(Looking ahead station)

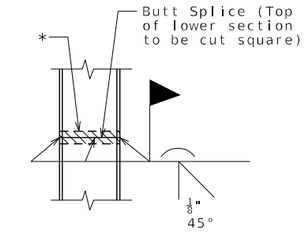

STEEL PILE SPLICE

(If required)

* Galvanizing material shall be omitted or removed one inch clear of weld locations in accordance with Sec 702.

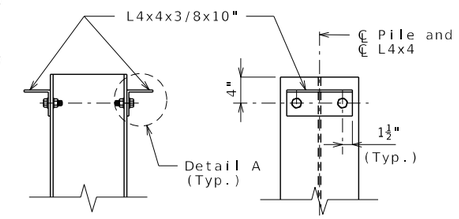

DETAILS OF HP PILE ANCHORS

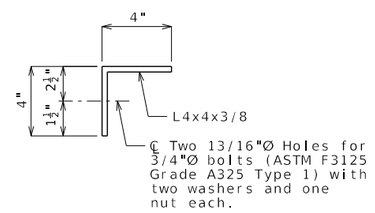

DETAIL A

Angles shall be coated with a minimum of two coats of non-aluminum epoxy mastic primer to provide a dry film thickness of 4 mils minimum, 8 mils maximum, or galvanized in accordance with Sec 1081. Bolts, washers and nuts shall be galvanized in accordance with AASHTO M 232 (ASTM A153), Class C.

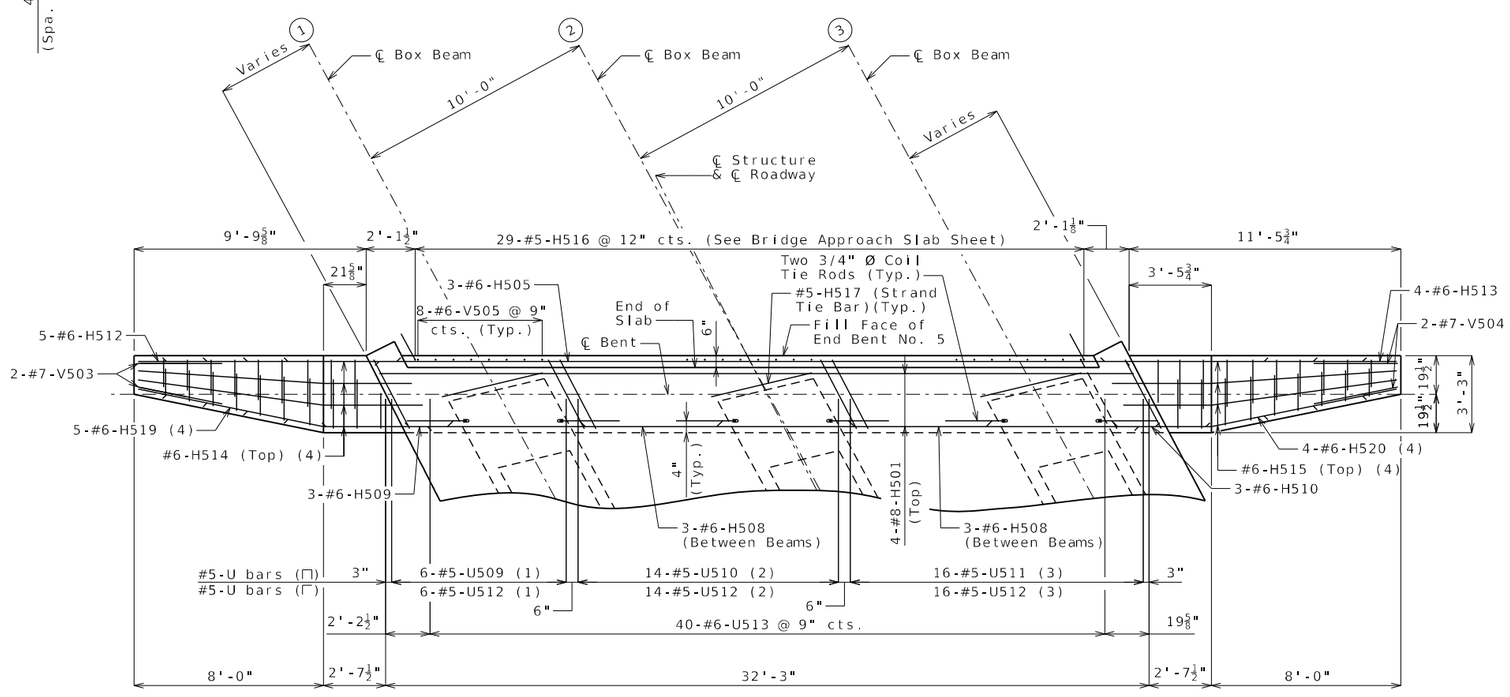

(1) Spa. w/ U500 & V500

(2) Spa. w/ U501 & V501

(3) Spa. w/ U502 & V502

(4) Bend in field

Notes:

Work this sheet with Sheets No. 14 & 16.

For Sections A-A thru F-F, see Sheet No. 16.

For details and reinforcement of Type H Barrier not shown, see Sheets No. 28 & 29.

Reinforcing steel shall be shifted to clear piles. U-bars shall clear piles by at least 1 1/2 inches.

For details of vertical drain at end bents, see Sheet No. 7.

For location of #5-H517 (Strand Tie Bar) and coil tie rods, see Sheet No. 21.

Strands at end of beams shall be field bent or, if necessary, cut in the field to maintain 1 1/2-inch minimum clearance to fill face of end bent.

The U-bars shall be placed parallel to centerline box beam unless shown otherwise.

All concrete in the end bent above top of beam and below top of slab shall be Class B-2.

For details of bridge approach slab, see Sheet No. 30.

DETAILS OF END BENT NO. 5

Detailed Sep. 2024
Checked Sep. 2024

Note: This drawing is not to scale. Follow dimensions.

STATE OF MISSOURI
DEREK S. BUTLER
NUMBER PE-2016009626
PROFESSIONAL ENGINEER

THIS SHEET HAS BEEN SIGNED, SEALED AND DATED ELECTRONICALLY

DATE PREPARED	
12/19/2024	
ROUTE: K	STATE: MO
DISTRICT: BR	SHEET NO.: 15
COUNTY: MONTGOMERY	
JOB NO.: JNE0053	
CONTRACT ID.	
PROJECT NO.	
BRIDGE NO.: A9536	

DATE	DESCRIPTION

IF A SEAL IS PRESENT ON THIS SHEET IT HAS BEEN ELECTRONICALLY SEALED AND DATED.

MISSOURI HIGHWAYS AND TRANSPORTATION COMMISSION
105 WEST CAPITOL
JEFFERSON CITY, MO 65102
1-888-ASK-MODOT (1-888-275-6636)

GARVER, LLC.
7509 NW TIFFANY SPRINGS PARKWAY, SUITE 200
KANSAS CITY, MO 64153
PHONE: (816) 298-6465
CERTIFICATE OF AUTHORITY NO. 2008013090

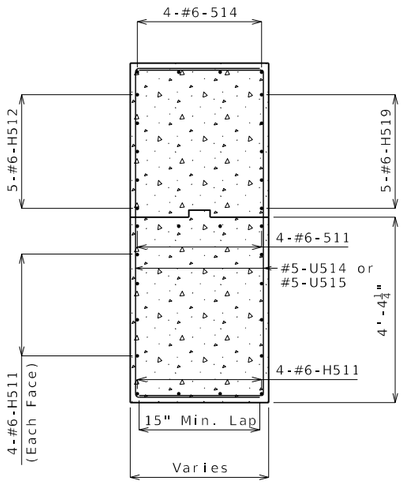

SECTION A-A

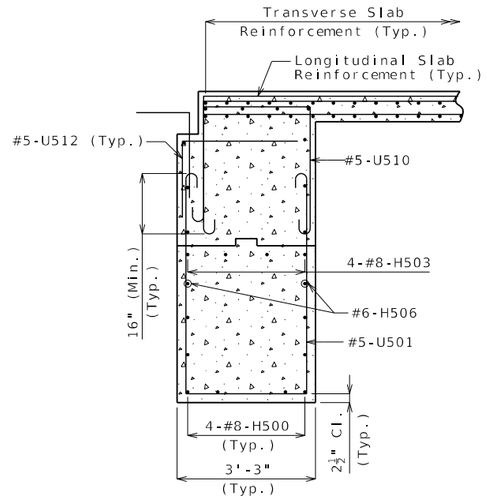

SECTION B-B

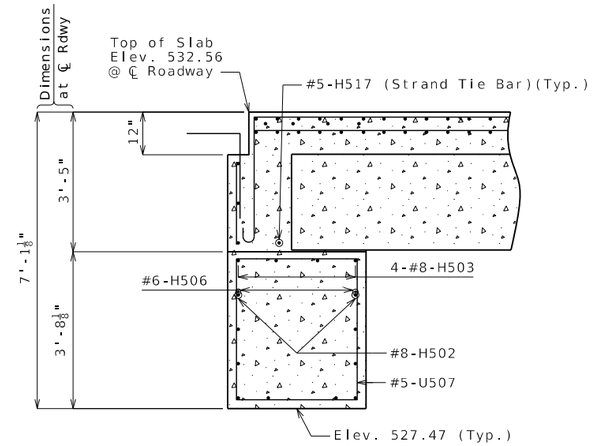

SECTION C-C

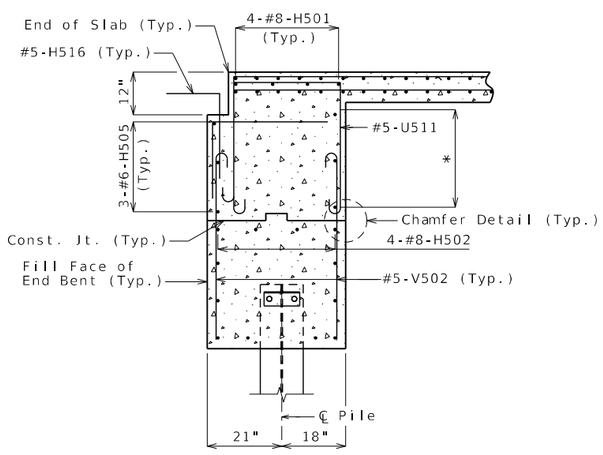

* 3-#6-H508 (Between Beams) (Typ.)

SECTION D-D

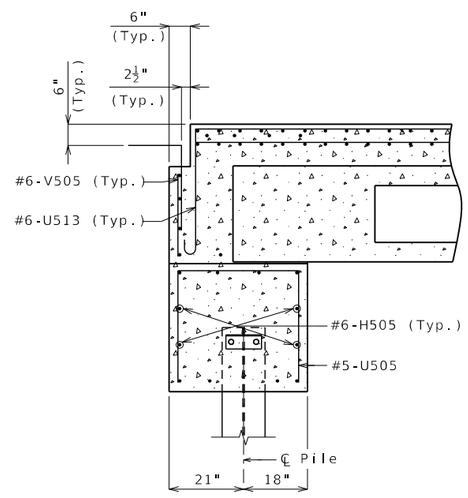

SECTION E-E

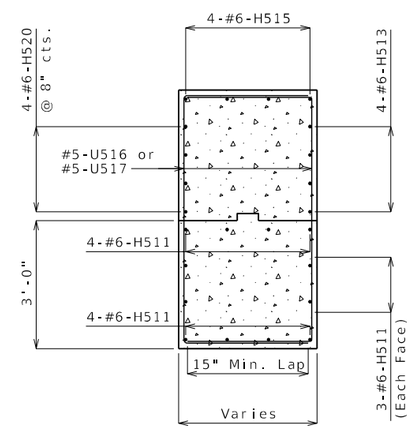

SECTION F-F

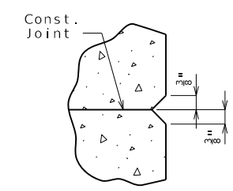

CHAMFER DETAIL

Notes:

Work this sheet with Sheets No. 14 & 15.

For location of Sections A-A thru F-F, see Sheet No. 15.

For details and reinforcement of Type H Barrier not shown, see Sheets No. 28 & 29.

For details of vertical drain at end bents, see Sheet No. 7.

For location of #5-H517 (Strand Tie Bar), see Sheet No. 21.

All concrete in the end bent above top of beam and below top of slab shall be Class B-2.

For details of bridge approach slab, see Sheet No. 30.

DETAILS OF END BENT NO. 5

Detailed Sep. 2024
Checked Sep. 2024

Note: This drawing is not to scale. Follow dimensions.

STATE OF MISSOURI
DEREK S. BUTLER
NUMBER PE-2016009626
PROFESSIONAL ENGINEER

THIS SHEET HAS BEEN SIGNED, SEALED AND DATED ELECTRONICALLY

DATE PREPARED	
12/19/2024	
ROUTE: K	STATE: MO
DISTRICT: BR	SHEET NO.: 16
COUNTY: MONTGOMERY	
JOB NO.: JNE0053	
CONTRACT ID.	
PROJECT NO.	
BRIDGE NO.: A9536	

DESCRIPTION	DATE

IF A SEAL IS PRESENT ON THIS SHEET IT HAS BEEN ELECTRONICALLY SEALED AND DATED.

MISSOURI HIGHWAYS AND TRANSPORTATION COMMISSION
105 WEST CAPITOL
JEFFERSON CITY, MO 65102
1-888-ASK-MODOT (1-888-275-6636)

GARVER, LLC.
7509 NW TIFFANY SPRINGS PARKWAY, SUITE 200
KANSAS CITY, MO 64153
PHONE: (816) 298-6465
CERTIFICATE OF AUTHORITY NO. 2008013090

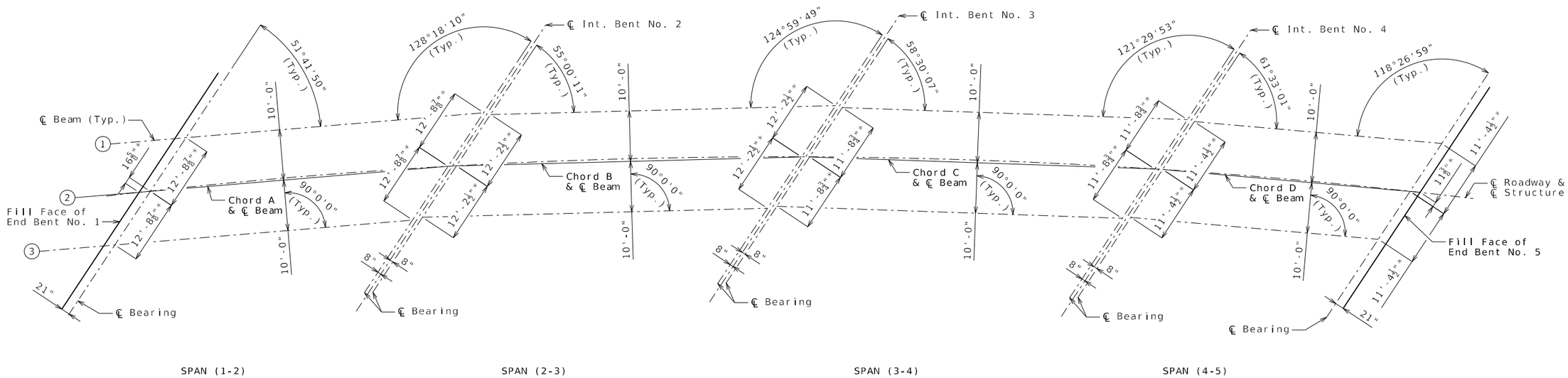

PLAN

Notes:

All dimensions are horizontal.

All bents are parallel.

Beams within a span are parallel to chords.

* Dimensions along centerline of bearing are to Chords A, B, C and D.

FRAMING PLAN

Detailed Jul. 2024
Checked Sep. 2024

Note: This drawing is not to scale. Follow dimensions.

STATE OF MISSOURI
DEREK S. BUTLER
NUMBER PE-2016009626
PROFESSIONAL ENGINEER

THIS SHEET HAS BEEN SIGNED, SEALED AND DATED ELECTRONICALLY

DATE PREPARED	
12/19/2024	
ROUTE: K	STATE: MO
DISTRICT: BR	SHEET NO.: 17
COUNTY: MONTGOMERY	
JOB NO.: JNE0053	
CONTRACT ID.	
PROJECT NO.	
BRIDGE NO.: A9536	

DATE	DESCRIPTION

IF A SEAL IS PRESENT ON THIS SHEET IT HAS BEEN ELECTRONICALLY SEALED AND DATED.

MISSOURI HIGHWAYS AND TRANSPORTATION COMMISSION
105 WEST CAPITOL
JEFFERSON CITY, MO 65102
1-888-ASK-MODOT (1-888-275-6636)

GARVER, LLC.
7509 NW TIFFANY SPRINGS PARKWAY, SUITE 200
KANSAS CITY, MO 64153
PHONE: (816) 298-6465
CERTIFICATE OF AUTHORITY NO. 2008013090

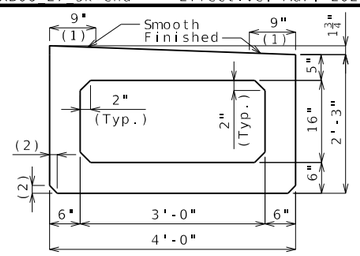

DIMENSIONS

(1) Fabricator shall apply a bond breaker to this region excluding where joint filler will be applied.

(2) 1½" (Typ.) (¾" Optional)

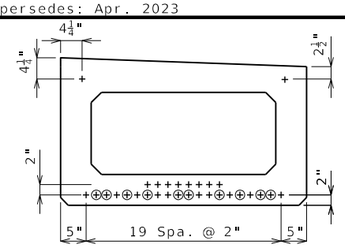

STRAND ARRANGEMENT

All strands are fully bonded unless otherwise noted.

\+ Indicates prestressing strand.

○ Indicates cut and shop bend with 2'-0" projection.

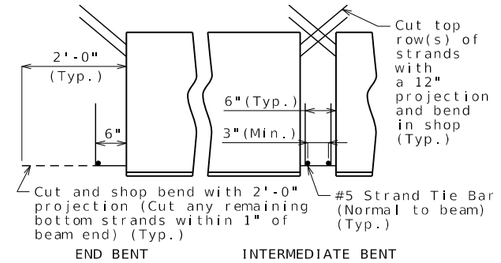

STRANDS AT BEAM ENDS

BILL OF REINFORCING STEEL - EACH BEAM			
NO.	SIZE & MARK	ACTUAL LENGTH	SHAPE
5	5 A1	59'-8"	20
4	4 A2	59'-8"	20
18	4 C1	3'-7"	20
62	5 S1	7'-4"	10S
62	5 S2	8'-0"	51S
62	4 S3	4'-6"	50S
18	5 S4	7'-6"	10S
18	5 S5	7'-6"	10S
2	5 S6	6'-6"	10S
2	5 S7	6'-6"	10S
12	6 U1	5'-1"	10S
6	4 U2	8'-4"	21S

BENDING DIAGRAM

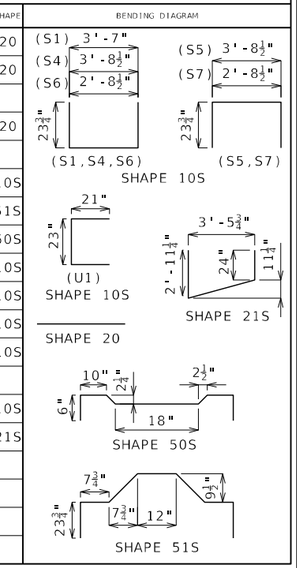

All dimensions are out to out. Use symmetry for dimensions not shown.

Hooks and bends shall be in accordance with the CRSI Manual of Standard Practice for Detailing Reinforced Concrete Structures, Stirrup and Tie Dimensions.

Actual lengths are measured along centerline of bar to the nearest inch.

Minimum clearance to reinforcing shall be one inch, unless otherwise shown.

All reinforcement shall be Grade 60.

All S2 bars shall be epoxy coated.

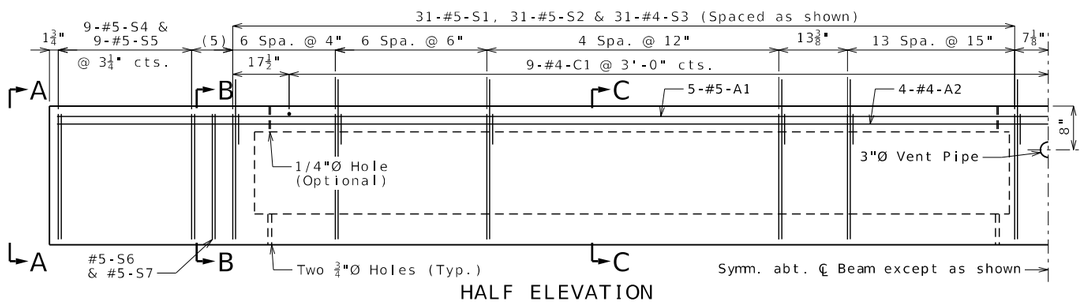

HALF ELEVATION

Dimensions taken along ℄ Beam.

(5) 2 Spa. @ 4"

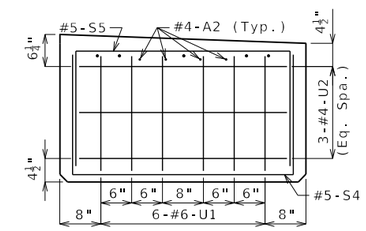

ELEVATION A-A

Strands not shown for clarity.

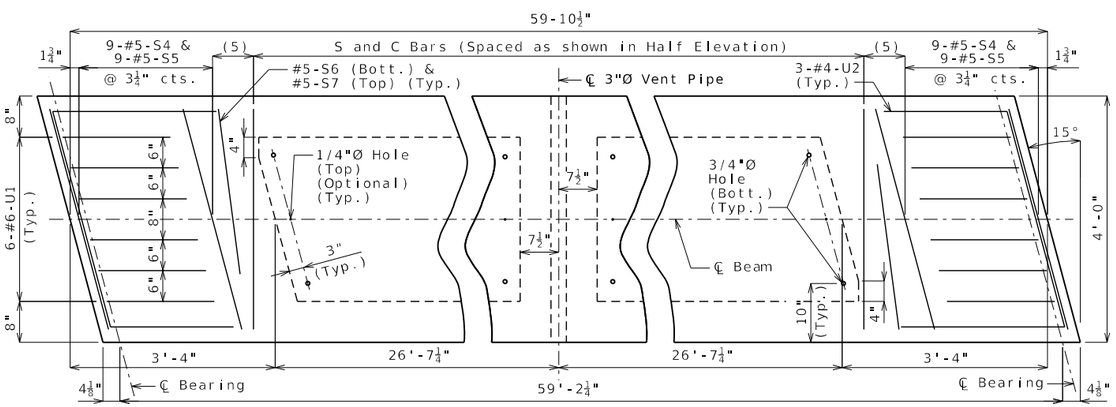

PART PLAN

Mirror about ℄ Beam for left advanced.

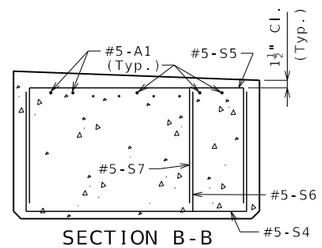

SECTION B-B

Mirror for left advanced.

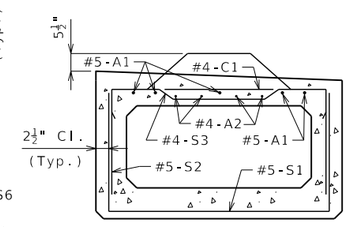

SECTION C-C

(4) ℄ 3/4"Ø (Min.) Coil Tie Rods 2'-6" long

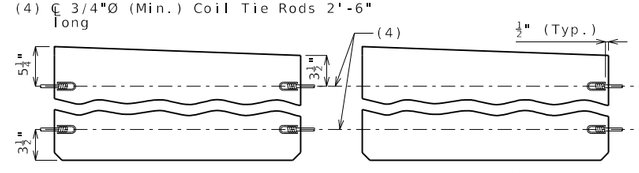

EXTERIOR BEAMS AT END BENTS
INTERIOR BEAMS AT ALL BENTS

EXTERIOR BEAMS AT INTERMEDIATE BENTS

COIL TIES

General Notes:

Concrete for prestressed beams shall be Class A-1 with f'c = 8,000 psi and f'ci = 6,500 psi.

Use 30 strands, 0.6"Ø Grade 270, with an initial prestress force of 1,318 kips.

Pretensioned members shall be in accordance with Sec 1029.

Fabricator shall be responsible for location and design of lifting devices.

Exterior and interior beams are the same except: coil ties, application of bond breaker.

For Beam Camber Diagram, see Sheet No. 23.

For location of coil ties at concrete bent diaphragms, see Sheets No. 5 and 22.

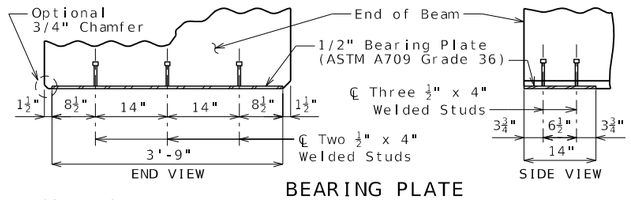

BEARING PLATE

Detailed Jul. 2024
Checked Sep. 2024

Note: This drawing is not to scale. Follow dimensions.

SPREAD BOX BEAMS - SPAN (1-2)

STATE OF MISSOURI
DEREK S. BUTLER
NUMBER PE-2016009626
PROFESSIONAL ENGINEER
THIS SHEET HAS BEEN SIGNED, SEALED AND DATED ELECTRONICALLY

DATE PREPARED 12/19/2024
ROUTE K
STATE MO
DISTRICT BR
SHEET NO. 18
COUNTY MONTGOMERY
JOB NO. JNE0053
CONTRACT ID.
PROJECT NO.
BRIDGE NO. A9536

DESCRIPTION
DATE

MISSOURI HIGHWAYS AND TRANSPORTATION COMMISSION
105 WEST CAPITOL
JEFFERSON CITY, MO 65102
1-888-ASK-MODOT (1-888-275-6636)

GARVER, LLC.
7509 NW TIFFANY SPRINGS PARKWAY, SUITE 200
KANSAS CITY, MO 64153
PHONE: (816) 298-6465
CERTIFICATE OF AUTHORITY NO. 2008013090

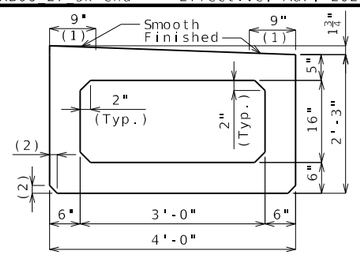

DIMENSIONS

(1) Fabricator shall apply a bond breaker to this region excluding where joint filler will be applied.

(2) 1½" (Typ.) (¾" Optional)

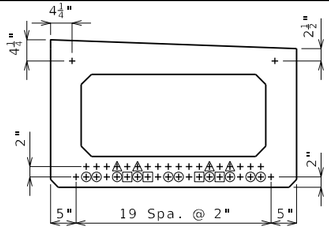

STRAND ARRANGEMENT

All strands are fully bonded unless otherwise noted.

+ Indicates prestressing strand.

○ Indicates cut and shop bend with 2'-0" projection.

□ Indicates debonded for 15'-0" from end of beam.

△ Indicates debonded for 10'-0" from end of beam.

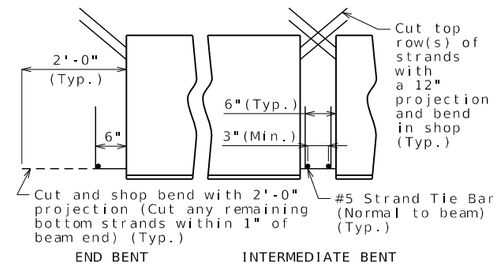

STRANDS AT BEAM ENDS

BILL OF REINFORCING STEEL - EACH BEAM				
NO.	SIZE & MARK	ACTUAL LENGTH	SHAPE	BENDING DIAGRAM
10	5 A1	35'-9"	20	
8	4 A2	35'-6"	20	
18	4 C1	3'-7"	20	
78	5 S1	7'-4"	10S	
78	5 S2	8'-0"	51S	
78	4 S3	4'-6"	50S	
18	6 S4	7'-6"	10S	
18	6 S5	7'-6"	10S	
2	5 S6	6'-6"	10S	
2	5 S7	6'-6"	10S	
12	6 U1	5'-1"	10S	
6	4 U2	8'-4"	21S	

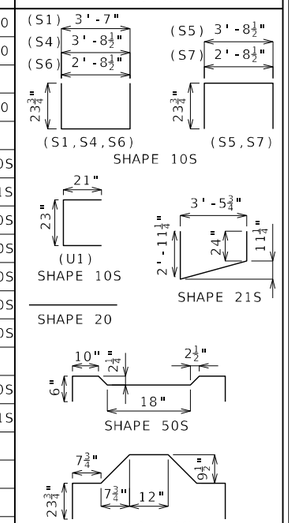

All dimensions are out to out. Use symmetry for dimensions not shown.

Hooks and bends shall be in accordance with the CRSI Manual of Standard Practice for Detailing Reinforced Concrete Structures, Stirrup and Tie Dimensions.

Actual lengths are measured along centerline of bar to the nearest inch.

Minimum clearance to reinforcing shall be one inch, unless otherwise shown.

All reinforcement shall be Grade 60.

All S2 bars shall be epoxy coated.

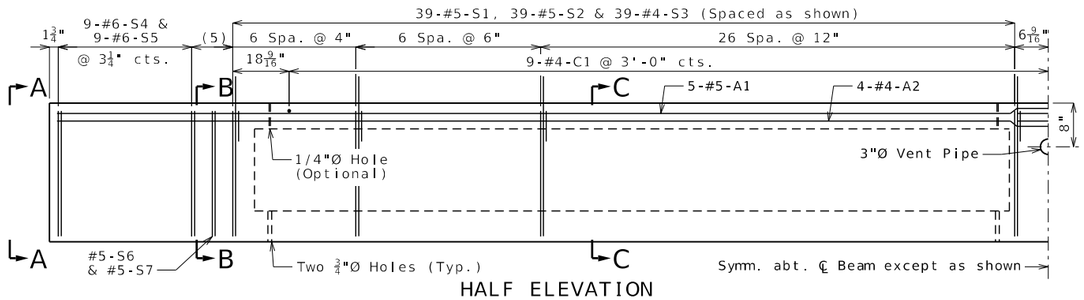

HALF ELEVATION

Dimensions taken along ℄ Beam.

(5) 2 Spa. @ 4"

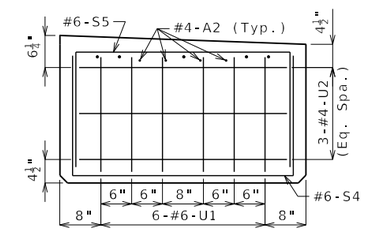

ELEVATION A-A

Strands not shown for clarity.

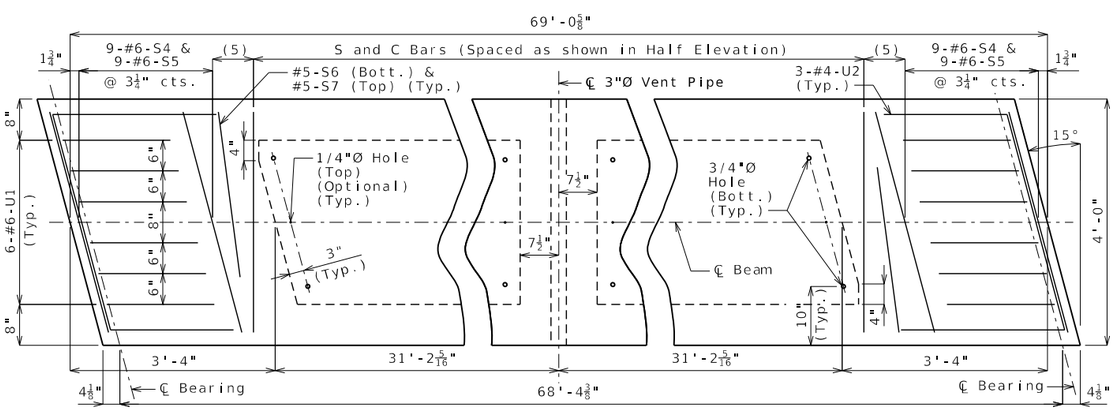

PART PLAN

Mirror about ℄ Beam for left advanced.

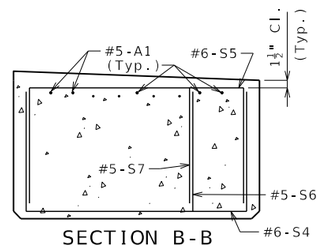

SECTION B-B

Mirror for left advanced.

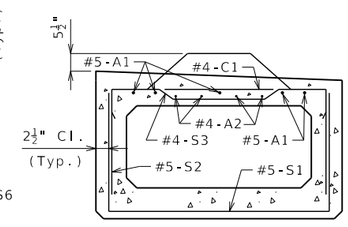

SECTION C-C

(4) ℄ 3/4"Ø (Min.) Coil Tie Rods 2'-6" long

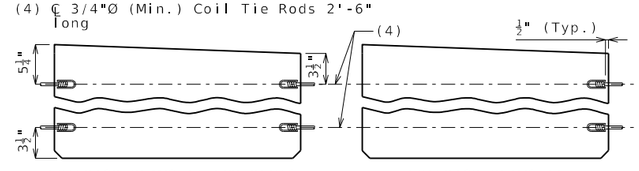

EXTERIOR BEAMS AT END BENTS
INTERIOR BEAMS AT ALL BENTS

EXTERIOR BEAMS AT INTERMEDIATE BENTS

COIL TICES

General Notes:

Concrete for prestressed beams shall be Class A-1 with f'c = 8,000 psi and f'ci = 6,500 psi.

Use 40 strands, 0.6"Ø Grade 270, with an initial prestress force of 1,758 kips.

Pretensioned members shall be in accordance with Sec 1029.

Fabricator shall be responsible for location and design of lifting devices.

Exterior and interior beams are the same except: coil ties, application of bond breaker.

For Beam Camber Diagram, see Sheet No. 23.

For location of coil ties at concrete bent diaphragms, see Sheet No. 22.

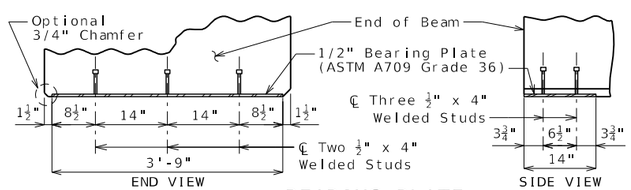

BEARING PLATE

Detailed Jul. 2024
Checked Sep. 2024

SPREAD BOX BEAMS - SPAN (2-3)

Note: This drawing is not to scale. Follow dimensions.

STATE OF MISSOURI
DEREK S. BUTLER
NUMBER PE-2016009828
PROFESSIONAL ENGINEER
THIS SHEET HAS BEEN SIGNED, SEALED AND DATED ELECTRONICALLY

DATE PREPARED 12/19/2024

ROUTE	STATE
K	MO
DISTRICT	SHEET NO.
BR	19

COUNTY: MONTGOMERY

JOB NO. JNE0053

CONTRACT ID.

PROJECT NO.

BRIDGE NO. A9536

DESCRIPTION	DATE

IF A SEAL IS PRESENT ON THIS SHEET IT HAS BEEN ELECTRONICALLY SEALED AND DATED.

MISSOURI HIGHWAYS AND TRANSPORTATION COMMISSION
105 WEST CAPITOL
JEFFERSON CITY, MO 65102
1-888-ASK-MODOT (1-888-275-6636)

GARVER, LLC.
7509 NW TIFFANY SPRINGS PARKWAY, SUITE 200
KANSAS CITY, MO 64153
PHONE: (816) 298-6465
CERTIFICATE OF AUTHORITY NO. 2008013090

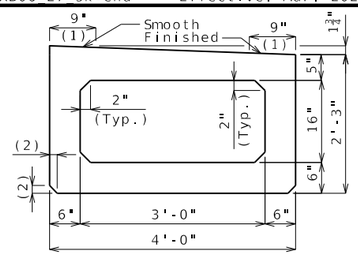

DIMENSIONS

(1) Fabricator shall apply a bond breaker to this region excluding where joint filler will be applied.

(2) 1½" (Typ.) (¾" Optional)

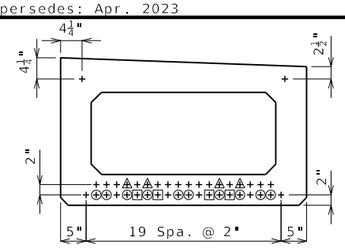

STRAND ARRANGEMENT

All strands are fully bonded unless otherwise noted.

+ Indicates prestressing strand.

○ Indicates cut and shop bend with 2'-0" projection.

□ Indicates debonded for 15'-0" from end of beam.

△ Indicates debonded for 10'-0"from end of beam.

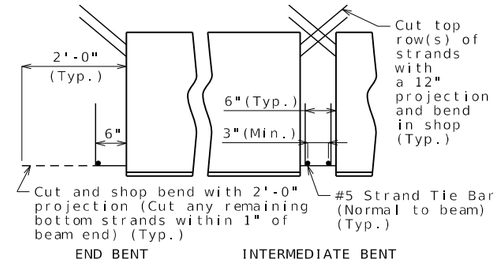

STRANDS AT BEAM ENDS

BILL OF REINFORCING STEEL - EACH BEAM				
NO.	SIZE & MARK	ACTUAL LENGTH	SHAPE	BENDING DIAGRAM
10	5 A1	35'-10"	20	
8	4 A2	35'-7"	20	
21	4 C1	3'-7"	20	
78	5 S1	7'-4"	10S	
78	5 S2	8'-0"	51S	
78	4 S3	4'-6"	50S	
18	6 S4	7'-6"	10S	
18	6 S5	7'-6"	10S	
2	5 S6	6'-6"	10S	
2	5 S7	6'-6"	10S	
12	6 U1	5'-1"	10S	
6	4 U2	8'-4"	21S	

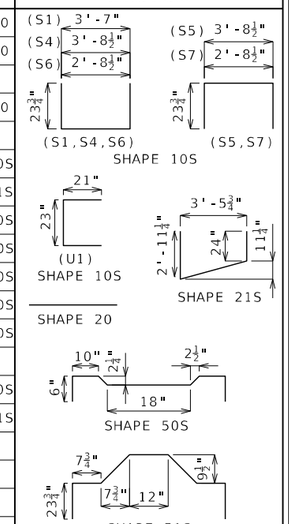

All dimensions are out to out. Use symmetry for dimensions not shown.

Hooks and bends shall be in accordance with the CRSI Manual of Standard Practice for Detailing Reinforced Concrete Structures, Stirrup and Tie Dimensions.

Actual lengths are measured along centerline of bar to the nearest inch.

Minimum clearance to reinforcing shall be one inch, unless otherwise shown.

All reinforcement shall be Grade 60.

All S2 bars shall be epoxy coated.

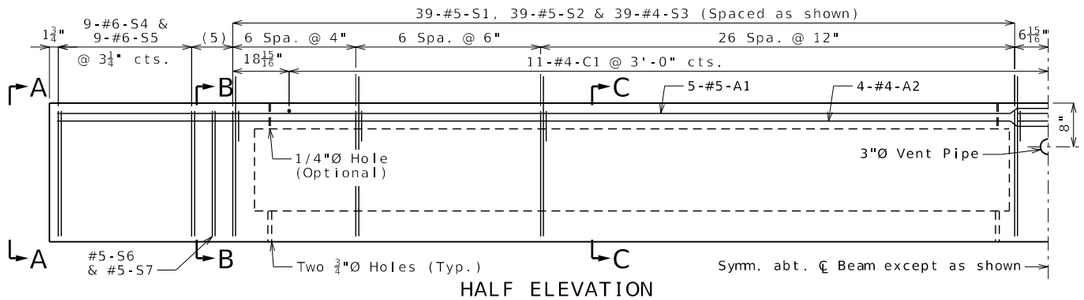

HALF ELEVATION

Dimensions taken along ℄ Beam.

(5) 2 Spa. @ 4"

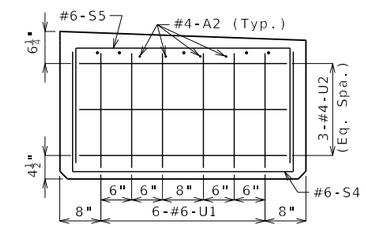

ELEVATION A-A

Strands not shown for clarity.

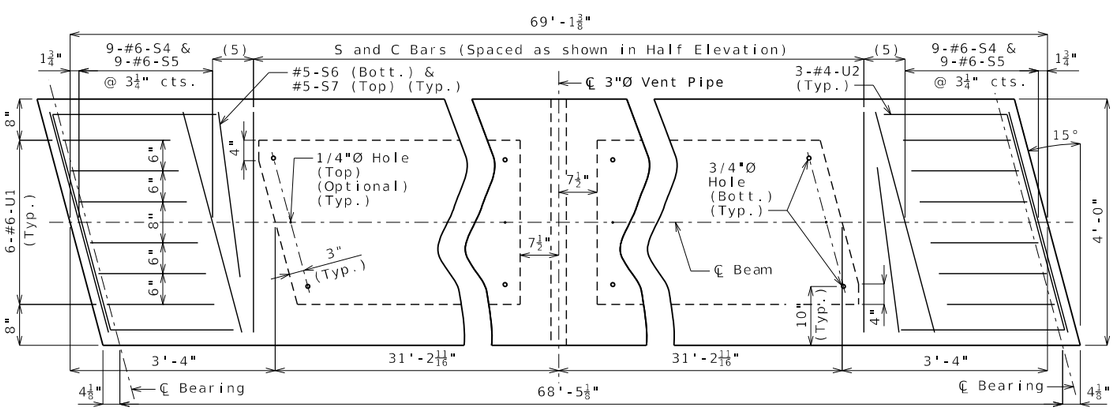

PART PLAN

Mirror about ℄ Beam for left advanced.

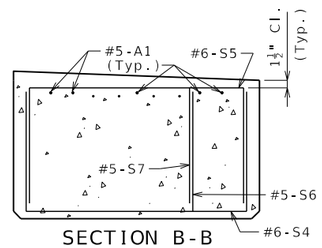

SECTION B-B

Mirror for left advanced.

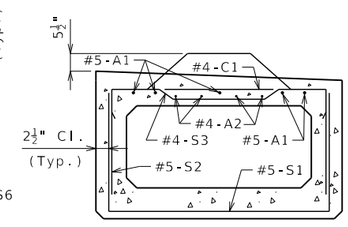

SECTION C-C

General Notes:

Concrete for prestressed beams shall be Class A-1 with f'c = 8,000 psi and f'ci = 6,500 psi.

Use 40 strands, 0.6"Ø Grade 270, with an initial prestress force of 1,758 kips.

Pretensioned members shall be in accordance with Sec 1029.

Fabricator shall be responsible for location and design of lifting devices.

Exterior and interior beams are the same except: coil ties, application of bond breaker.

For Beam Camber Diagram, see Sheet No. 23.

For location of coil ties at concrete bent diaphragms, see Sheet No. 22.

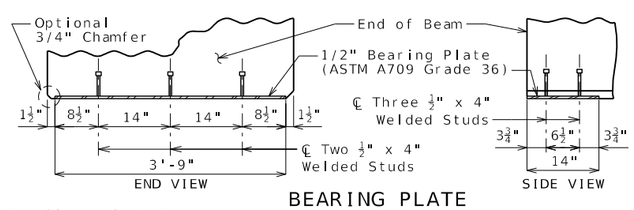

BEARING PLATE

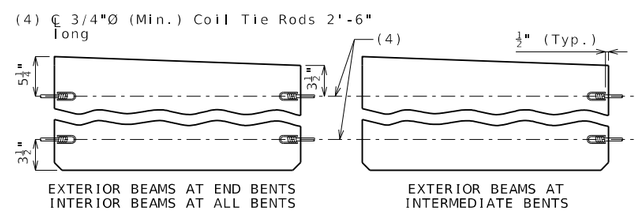

EXTERIOR BEAMS AT END BENTS
INTERIOR BEAMS AT ALL BENTS

EXTERIOR BEAMS AT INTERMEDIATE BENTS

COIL TIES

SPREAD BOX BEAMS - SPAN (3-4)

Detailed Jul. 2024
Checked Aug. 2024

Note: This drawing is not to scale. Follow dimensions.

STATE OF MISSOURI
DEREK S. BUTLER
NUMBER PE-2016009626
PROFESSIONAL ENGINEER
THIS SHEET HAS BEEN SIGNED, SEALED AND DATED ELECTRONICALLY

DATE PREPARED 12/19/2024
ROUTE K | STATE MO
DISTRICT BR | SHEET NO. 20
COUNTY MONTGOMERY
JOB NO. JNE0053
CONTRACT ID.
PROJECT NO.
BRIDGE NO. A9536

DESCRIPTION | DATE

IF A SEAL IS PRESENT ON THIS SHEET IT HAS BEEN ELECTRONICALLY SEALED AND DATED.

MISSOURI HIGHWAYS AND TRANSPORTATION COMMISSION
105 WEST CAPITOL
JEFFERSON CITY, MO 65102
1-888-ASK-MODOT (1-888-275-6636)

GARVER, LLC.
7509 NW TIFFANY SPRINGS PARKWAY, SUITE 200
KANSAS CITY, MO 64153
PHONE: (816) 298-6465
CERTIFICATE OF AUTHORITY NO. 2008013090

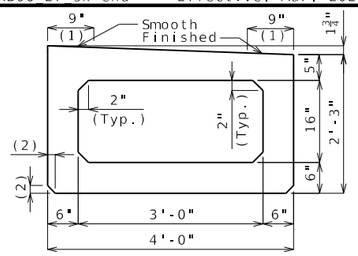

DIMENSIONS

(1) Fabricator shall apply a bond breaker to this region excluding where joint filler will be applied.

(2) 1½" (Typ.) (¾" Optional)

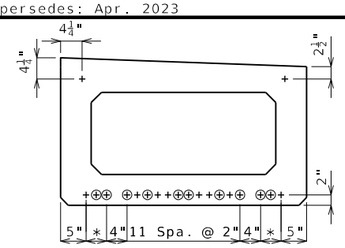

* 2 Spa. @ 2"

STRAND ARRANGEMENT

All strands are fully bonded unless otherwise noted.

+ Indicates prestressing strand.

○ Indicates cut and shop bend with 2'-0" projection.

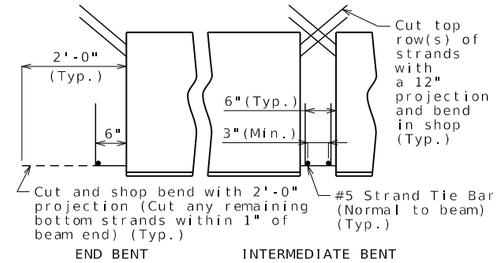

STRANDS AT BEAM ENDS

BILL OF REINFORCING STEEL - EACH BEAM			
NO.	SIZE & MARK	ACTUAL LENGTH	SHAPE
5	5 A1	49'-8"	20
4	4 A2	49'-8"	20
15	4 C1	3'-7"	20
56	5 S1	7'-4"	10S
56	5 S2	8'-0"	51S
56	4 S3	4'-6"	50S
18	5 S4	7'-6"	10S
18	5 S5	7'-6"	10S
2	5 S6	6'-6"	10S
2	5 S7	6'-6"	10S
12	6 U1	5'-1"	10S
6	4 U2	8'-4"	21S

BENDING DIAGRAM

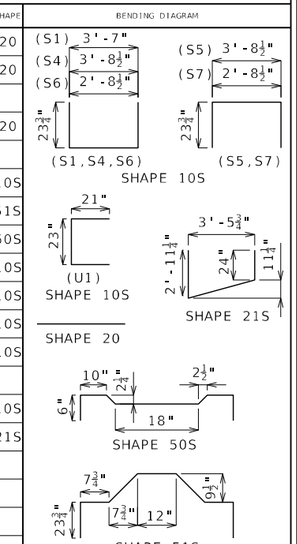

All dimensions are out to out. Use symmetry for dimensions not shown.

Hooks and bends shall be in accordance with the CRSI Manual of Standard Practice for Detailing Reinforced Concrete Structures, Stirrup and Tie Dimensions.

Actual lengths are measured along centerline of bar to the nearest inch.

Minimum clearance to reinforcing shall be one inch, unless otherwise shown.

All reinforcement shall be Grade 60.

All S2 bars shall be epoxy coated.

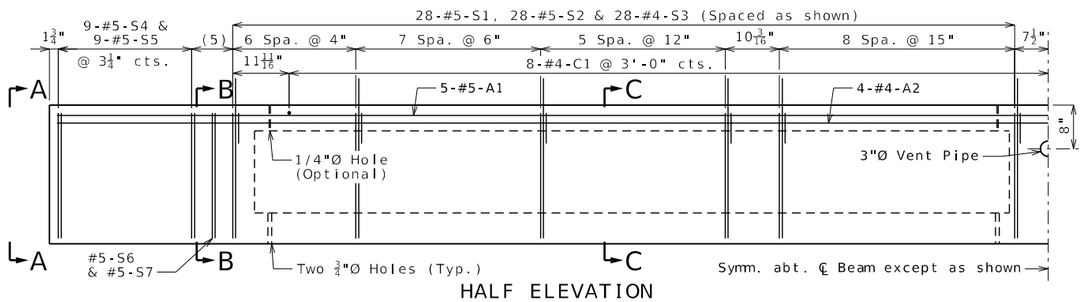

HALF ELEVATION

Dimensions taken along ℄ Beam.

(5) 2 Spa. @ 4"

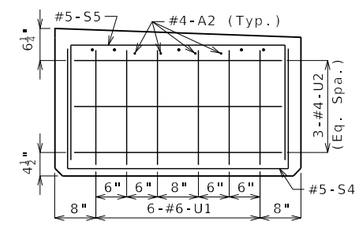

ELEVATION A-A

Strands not shown for clarity.

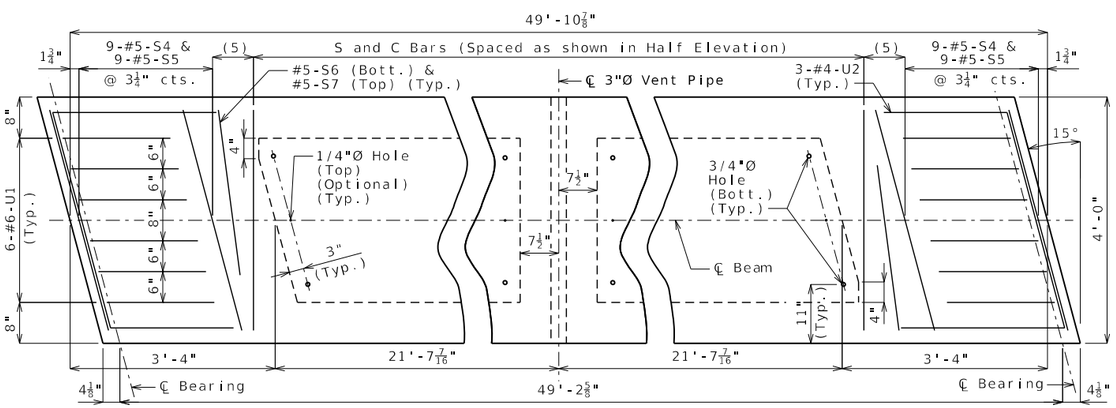

PART PLAN

Mirror about ℄ Beam for left advanced.

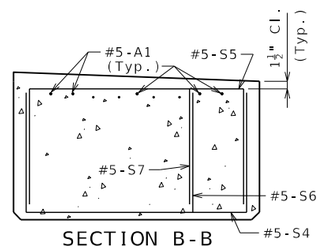

SECTION B-B

Mirror for left advanced.

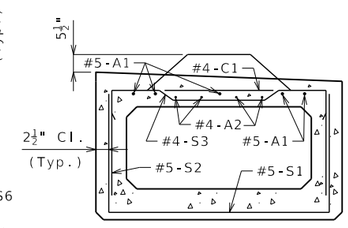

SECTION C-C

(4) ℄ 3/4"Ø (Min.) Coil Tie Rods 2'-6" long

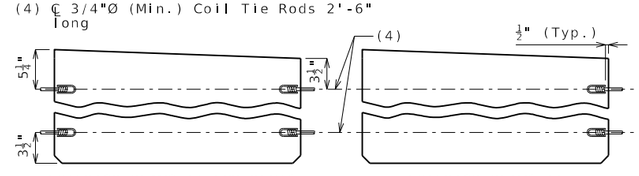

EXTERIOR BEAMS AT END BENTS
INTERIOR BEAMS AT ALL BENTS

EXTERIOR BEAMS AT INTERMEDIATE BENTS

COIL TIES

General Notes:

Concrete for prestressed beams shall be Class A-1 with f'c = 8,000 psi and f'ci = 6,500 psi.

Use 20 strands, 0.6"Ø Grade 270, with an initial prestress force of 879 kips.

Pretensioned members shall be in accordance with Sec 1029.

Fabricator shall be responsible for location and design of lifting devices.

Exterior and interior beams are the same except: coil ties, application of bond breaker.

For Beam Camber Diagram, see Sheet No. 23.

For location of coil ties at concrete bent diaphragms, see Sheets No. 15 and 22.

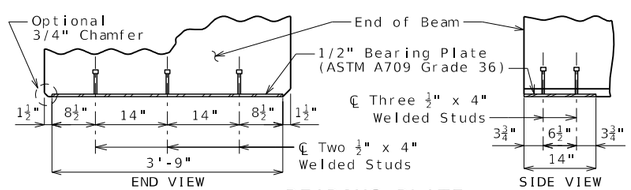

BEARING PLATE

Detailed Jul. 2024
Checked Aug. 2024

Note: This drawing is not to scale. Follow dimensions.

SPREAD BOX BEAMS - SPAN (4-5)

STATE OF MISSOURI
DEREK S. BUTLER
NUMBER PE-2016009828
PROFESSIONAL ENGINEER

THIS SHEET HAS BEEN SIGNED, SEALED AND DATED ELECTRONICALLY

DATE PREPARED 12/19/2024

ROUTE	STATE
K	MO
DISTRICT	SHEET NO.
BR	21

COUNTY: MONTGOMERY

JOB NO. JNE0053

CONTRACT ID.

PROJECT NO.

BRIDGE NO. A9536

DATE	DESCRIPTION

IF A SEAL IS PRESENT ON THIS SHEET IT HAS BEEN ELECTRONICALLY SEALED AND DATED.

MISSOURI HIGHWAYS AND TRANSPORTATION COMMISSION
105 WEST CAPITOL
JEFFERSON CITY, MO 65102
1-888-ASK-MODOT (1-888-275-6636)

GARVER, LLC.
7509 NW TIFFANY SPRINGS PARKWAY, SUITE 200
KANSAS CITY, MO 64153
PHONE: (816) 298-6465
CERTIFICATE OF AUTHORITY NO. 2008013090

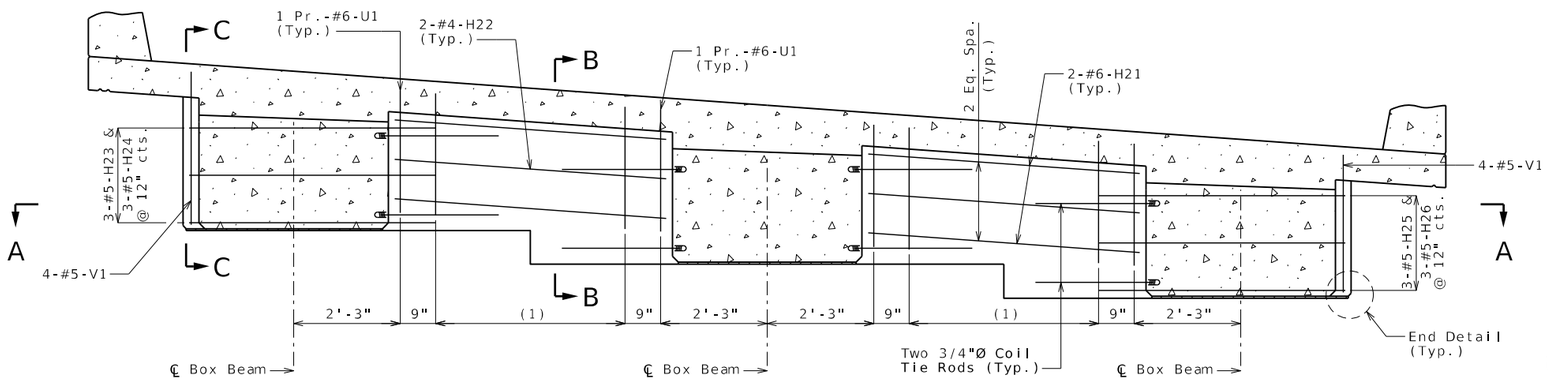

(1) 5 Pr.-#4-U2 @ 12" cts.

SECTION NEAR INTERMEDIATE BENT

(Normal to centerline of beams)

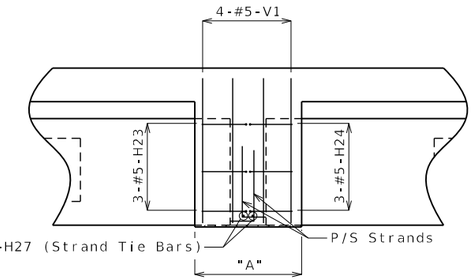

ELEVATION C-C

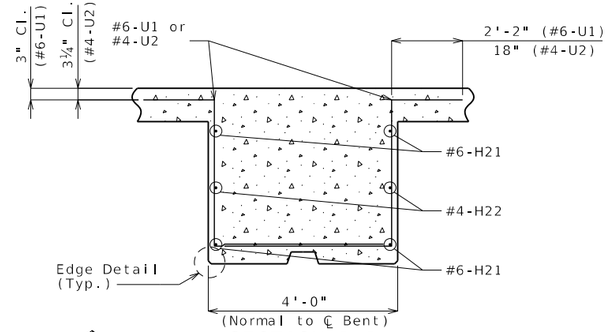

SECTION B-B

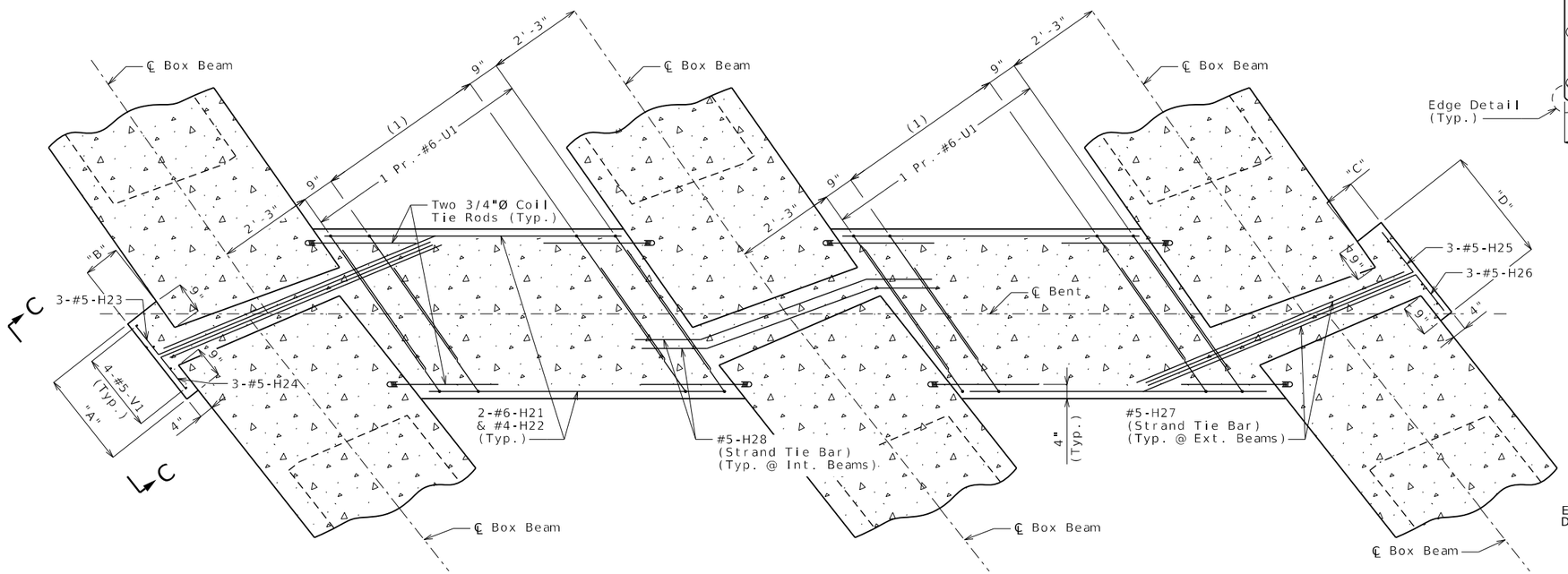

SECTION A-A

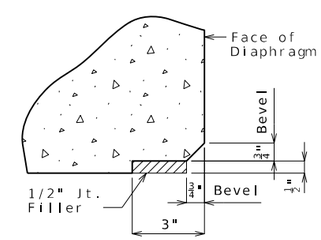

EDGE DETAIL

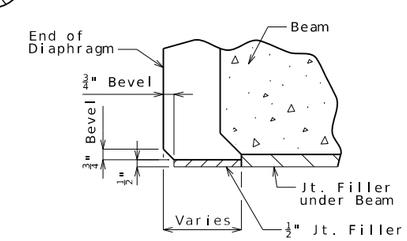

END DETAIL

	Bent No. 2	Bent No. 3	Bent No. 4
"A"	2'-3"	2'-3"	2'-3¼"
"B"	10¼"	10"	8¾"
"C"	8⅝"	8¼"	7¼"
"D"	2'-8¼"	2'-6⅝"	2'-5⅛"

Notes:

Stirrup alignment and spacing based on beam alignment of upstation span.

Diaphragm at Bent No. 2 shown, substitute H3X and H4X for H2X bars at Bents No. 3 & 4.

DETAILS OF CONCRETE DIAPHRAGMS AT INTERMEDIATE BENTS

Detailed Aug. 2024
Checked Sep. 2024

Note: This drawing is not to scale. Follow dimensions.

STATE OF MISSOURI
DEREK S. BUTLER
NUMBER PE-2016009626
PROFESSIONAL ENGINEER

THIS SHEET HAS BEEN SIGNED, SEALED AND DATED ELECTRONICALLY

DATE PREPARED	
12/31/2024	
ROUTE: K	STATE: MO
DISTRICT: BR	SHEET NO.: 22
COUNTY: MONTGOMERY	
JOB NO.: JNE0053	
CONTRACT ID.	
PROJECT NO.	
BRIDGE NO.: A9536	

DESCRIPTION	DATE

MISSOURI HIGHWAYS AND TRANSPORTATION COMMISSION
105 WEST CAPITOL
JEFFERSON CITY, MO 65102
1-888-ASK-MODOT (1-888-275-6636)

GARVER, LLC.
7509 NW TIFFANY SPRINGS PARKWAY, SUITE 200
KANSAS CITY, MO 64153
PHONE: (816) 298-6465
CERTIFICATE OF AUTHORITY NO. 2008013090

IF A SEAL IS PRESENT ON THIS SHEET IT HAS BEEN ELECTRONICALLY SEALED AND DATED.

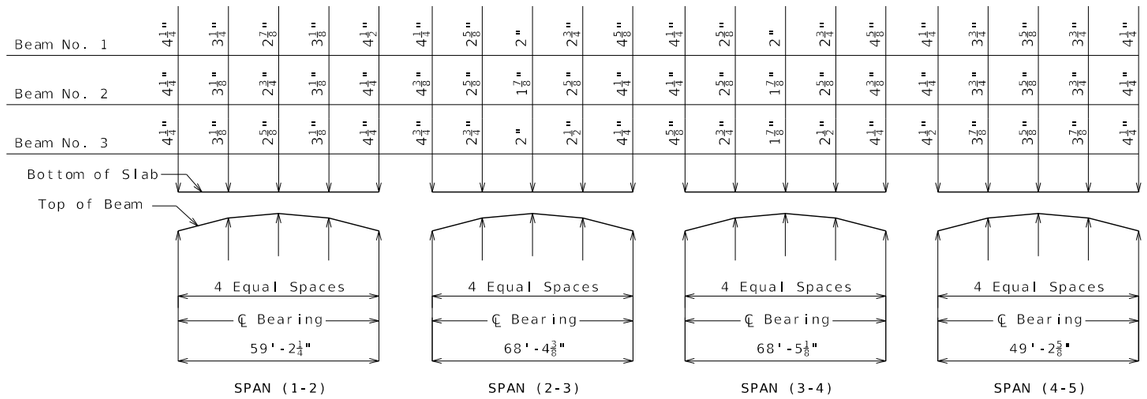

THEORETICAL SLAB HAUNCHING DIAGRAM (ESTIMATED AT 90 DAYS)

(Measured at ℄ Beam)

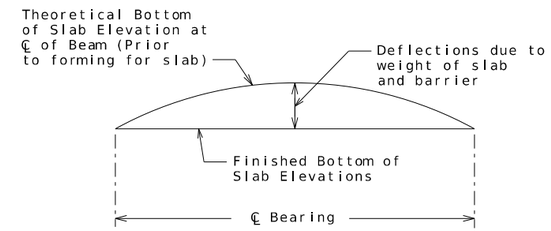

TYPICAL SLAB ELEVATIONS DIAGRAM

Theoretical Bottom of Slab Elevations at Centerline of Beam (Prior to forming for slab) (Estimated at 90 days)					
Beam Number	Span (1-2) (59'-2 1/4" ℄ Brg. - ℄ Brg.)				
	℄ Brg.	.25	.50	.75	℄ Brg.
1	532.62	532.81	532.96	533.03	533.10
2	531.83	532.02	532.17	532.27	532.32
3	531.03	531.22	531.38	531.48	531.54
Beam Number	Span (2-3) (68'-4 3/8" ℄ Brg. - ℄ Brg.)				
	℄ Brg.	.25	.50	.75	℄ Brg.
1	533.08	533.23	533.32	533.32	533.25
2	532.33	532.50	532.59	532.59	532.52
3	531.59	531.74	531.84	531.84	531.78
Beam Number	Span (3-4) (68'-5 1/8" ℄ Brg. - ℄ Brg.)				
	℄ Brg.	.25	.50	.75	℄ Brg.
1	533.22	533.28	533.27	533.16	532.99
2	532.52	532.58	532.57	532.47	532.29
3	531.81	531.87	531.86	531.76	531.59
Beam Number	Span (4-5) (49'-2 5/8" ℄ Brg. - ℄ Brg.)				
	℄ Brg.	.25	.50	.75	℄ Brg.
1	532.96	532.88	532.79	532.67	532.54
2	532.28	532.21	532.12	532.00	531.86
3	531.61	531.53	531.44	531.33	531.19

Elevations are based on a constant slab thickness of 8 1/2" and include allowance for theoretical dead load deflections due to weight of slab (including SIP metal forms) and barrier.

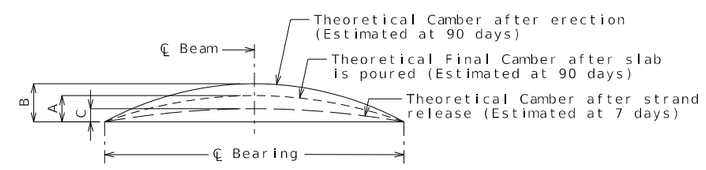

Beam	Span (1-2)			Span (2-3)			Span (3-4)			Span (4-5)		
	A	B	C	A	B	C	A	B	C	A	B	C
1	1 11/16"	2 11/16"	1 1/2"	2 5/8"	4 3/8"	2 1/2"	2 5/8"	4 3/8"	2 1/2"	3/4"	1 1/4"	11/16"
2	1 5/8"			2 9/16"			2 9/16"			3/4"		
3	1 3/4"			2 3/4"			2 3/4"			3/4"		

BEAM CAMBER DIAGRAM

If beam camber is different from that shown in the camber diagram, in order to maintain minimum slab thickness, an adjustment of the slab haunches, an increase in slab thickness or a raise in grade uniformly throughout the structure shall be necessary. No payment will be made for additional labor or materials required for variation in haunching, slab thickness or grade adjustment.

Concrete in the slab haunches is included in the Estimated Quantities for Slab on Concrete Beam.

Conversion Factors for Beam Camber (Estimated at 90 days):

0.25 pt. = 0.7125 x 0.5 pt.

SLAB HAUNCHING DIAGRAM AND BOTTOM OF SLAB ELEVATION

Detailed Jul. 2024
Checked Sep. 2024

Note: This drawing is not to scale. Follow dimensions.

STATE OF MISSOURI
DEREK S. BUTLER
NUMBER PE-2016009828
PROFESSIONAL ENGINEER

THIS SHEET HAS BEEN SIGNED, SEALED AND DATED ELECTRONICALLY

DATE PREPARED 12/19/2024

ROUTE	STATE
K	MO
DISTRICT	SHEET NO.
BR	23

COUNTY: MONTGOMERY
JOB NO.: JNE0053
CONTRACT ID.:
PROJECT NO.:
BRIDGE NO.: A9536

DATE	DESCRIPTION

MISSOURI HIGHWAYS AND TRANSPORTATION COMMISSION
105 WEST CAPITOL
JEFFERSON CITY, MO 65102
1-888-ASK-MODOT (1-888-275-6636)

GARVER, LLC.
7509 NW TIFFANY SPRINGS PARKWAY, SUITE 200
KANSAS CITY, MO 64153
PHONE: (816) 298-6465
CERTIFICATE OF AUTHORITY NO. 2008013090

IF A SEAL IS PRESENT ON THIS SHEET IT HAS BEEN ELECTRONICALLY SEALED AND DATED.

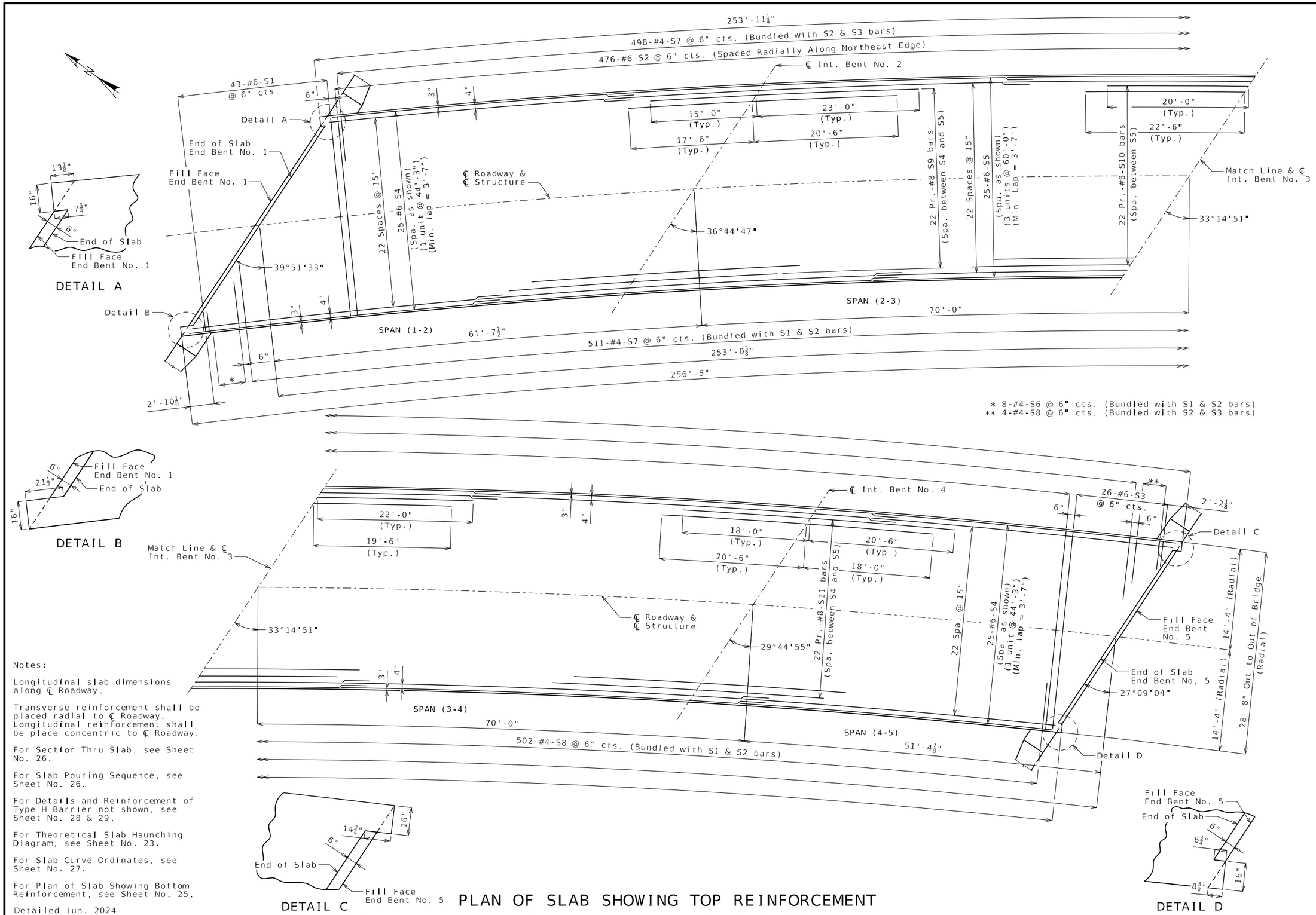

Notes:

Longitudinal slab dimensions along ℄ Roadway.

Transverse reinforcement shall be placed radial to ℄ Roadway. Longitudinal reinforcement shall be place concentric to ℄ Roadway.

For Section Thru Slab, see Sheet No. 26.

For Slab Pouring Sequence, see Sheet No. 26.

For Details and Reinforcement of Type H Barrier not shown, see Sheet No. 28 & 29.

For Theoretical Slab Haunching Diagram, see Sheet No. 23.

For Slab Curve Ordinates, see Sheet No. 27.

For Plan of Slab Showing Bottom Reinforcement, see Sheet No. 25.

Detailed Jun. 2024
Checked Aug. 2024

PLAN OF SLAB SHOWING TOP REINFORCEMENT

Note: This drawing is not to scale. Follow dimensions.

STATE OF MISSOURI
DEREK S. BUTLER
NUMBER PE-2016009626
PROFESSIONAL ENGINEER

THIS SHEET HAS BEEN SIGNED, SEALED AND DATED ELECTRONICALLY

DATE PREPARED	
12/31/2024	
ROUTE: K	STATE: MO
DISTRICT: BR	SHEET NO.: 24
COUNTY: MONTGOMERY	
JOB NO.: JNE0053	
CONTRACT ID.	
PROJECT NO.	
BRIDGE NO.: A9536	

DATE	DESCRIPTION

MISSOURI HIGHWAYS AND TRANSPORTATION COMMISSION
105 WEST CAPITOL
JEFFERSON CITY, MO 65102
1-888-ASK-MODOT (1-888-275-6636)

GARVER, LLC.
7509 NW TIFFANY SPRINGS PARKWAY, SUITE 200
KANSAS CITY, MO 64153
PHONE: (816) 298-6465
CERTIFICATE OF AUTHORITY NO. 2008013090

IF A SEAL IS PRESENT ON THIS SHEET IT HAS BEEN ELECTRONICALLY SEALED AND DATED.

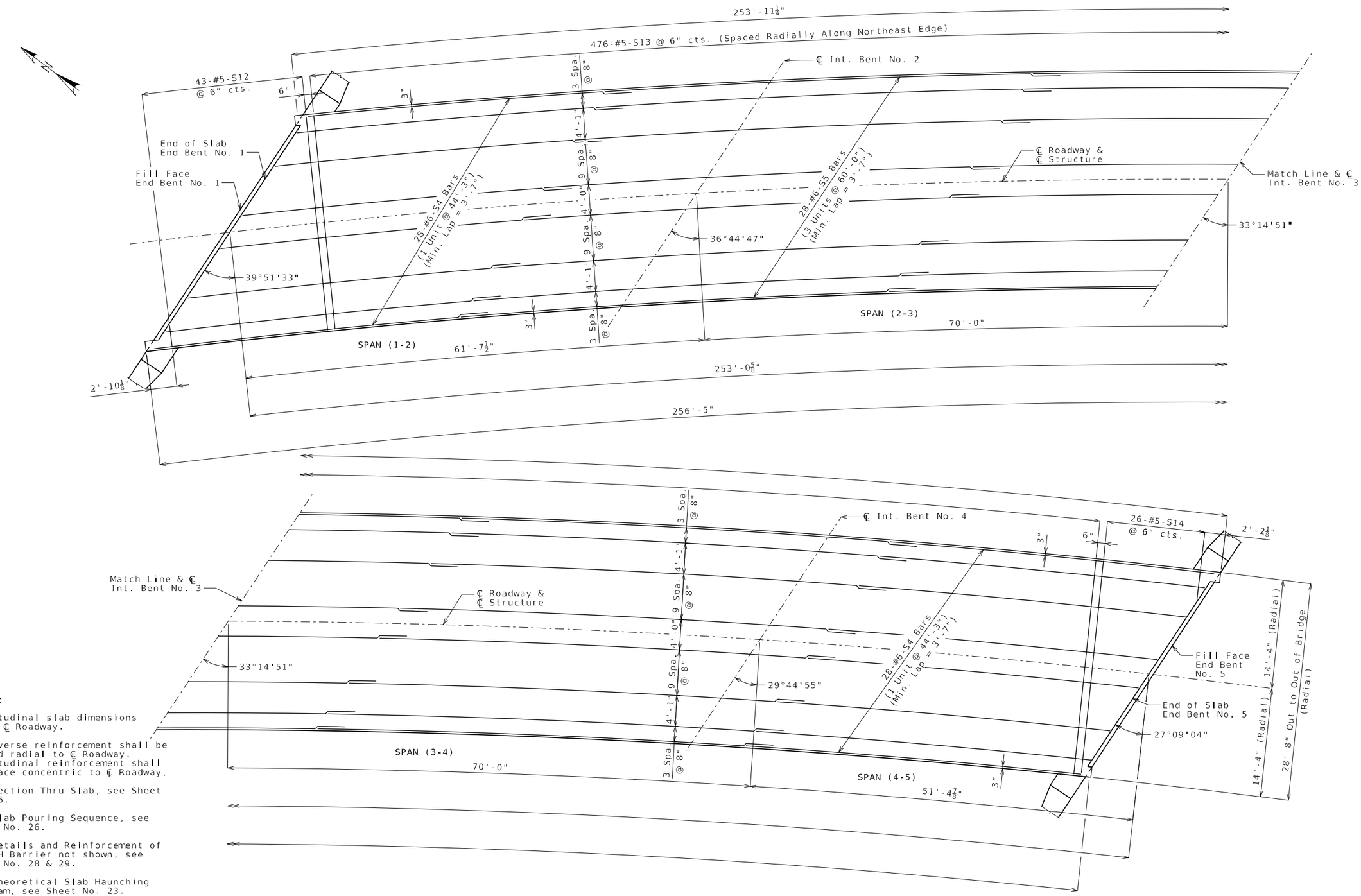

Notes:

Longitudinal slab dimensions along ℄ Roadway.

Transverse reinforcement shall be placed radial to ℄ Roadway. Longitudinal reinforcement shall be place concentric to ℄ Roadway.

For Section Thru Slab, see Sheet No. 26.

For Slab Pouring Sequence, see Sheet No. 26.

For Details and Reinforcement of Type H Barrier not shown, see Sheet No. 28 & 29.

For Theoretical Slab Haunching Diagram, see Sheet No. 23.

For Slab Curve Ordinates, see Sheet No. 27.

For Plan of Slab Showing Top Reinforcement, see Sheet No. 24.

Detailed Jun. 2024
Checked Aug. 2024

PLAN OF SLAB SHOWING BOTTOM REINFORCEMENT

Note: This drawing is not to scale. Follow dimensions.

STATE OF MISSOURI
DEREK S. BUTLER
NUMBER PE-2016009626
PROFESSIONAL ENGINEER

THIS SHEET HAS BEEN SIGNED, SEALED AND DATED ELECTRONICALLY

DATE PREPARED	12/31/2024
ROUTE	K
STATE	MO
DISTRICT	BR
SHEET NO.	25
COUNTY	MONTGOMERY
JOB NO.	JNE0053
CONTRACT ID.	
PROJECT NO.	
BRIDGE NO.	A9536

DESCRIPTION	DATE

MISSOURI HIGHWAYS AND TRANSPORTATION COMMISSION
105 WEST CAPITOL
JEFFERSON CITY, MO 65102
1-888-ASK-MODOT (1-888-275-6636)

GARVER, LLC.
7509 NW TIFFANY SPRINGS
PARKWAY, SUITE 200
KANSAS CITY, MO 64153
PHONE: (816) 298-6465
CERTIFICATE OF AUTHORITY
NO. 2008013090

IF A SEAL IS PRESENT ON THIS SHEET IT HAS BEEN ELECTRONICALLY SEALED AND DATED.

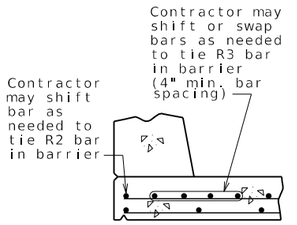

OPTIONAL SHIFTING TOP BARS AT BARRIER

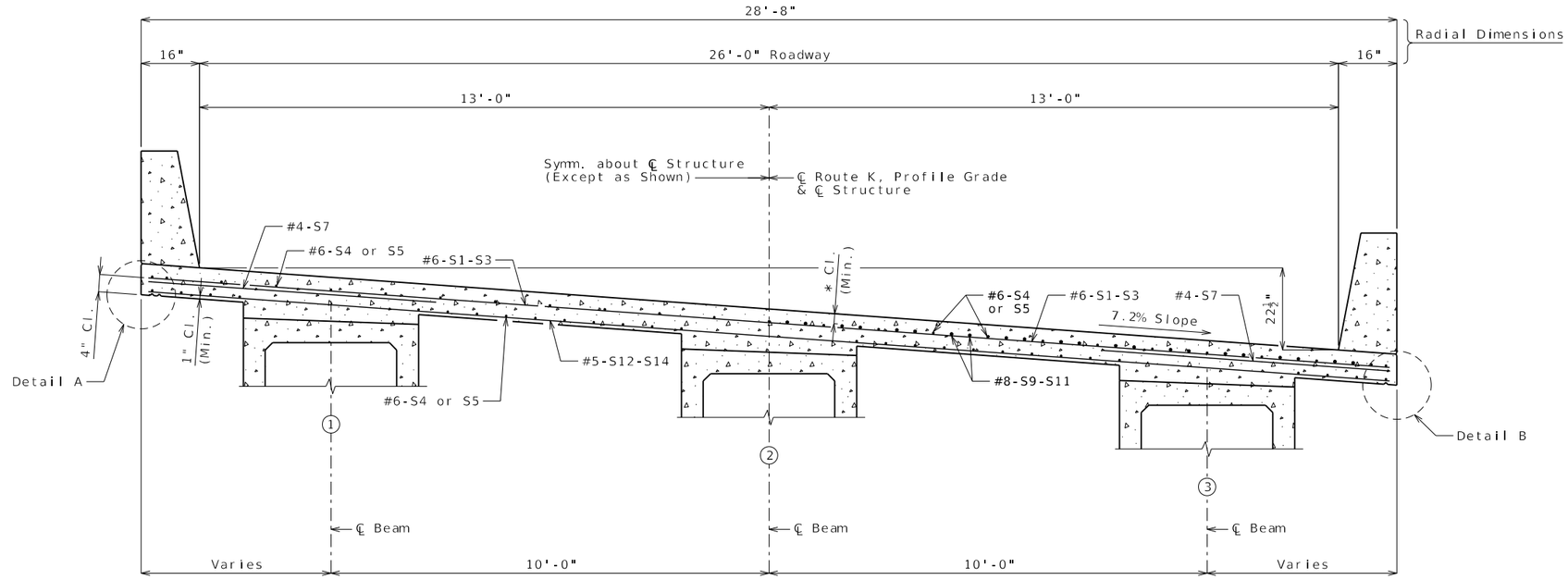

SECTION THRU SLAB

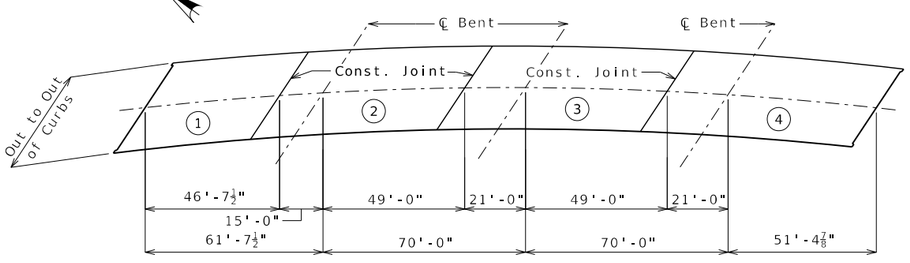

Note: Longitudinal dimensions are along ℄ Structure.

	Sequence of Pours				Min. Rate of Pour Cu. Yds./Hr.
	Direction				With Retarder
Basic Sequence	1	2	3	4	25
	End to 2	1 to 3	2 to 4	3 to End	
Alternate pours to the basic sequence are subject to the approval of the engineer in accordance with Sec 703.					
Alternate A Pours	1 + 2		3	4	25
	End to 3		2 to 4	3 to End	
Alternate B Pours	1 + 2		3 + 4		25
	End to 3		2 to End		
Alternate C Pours	1 + 2 + 3 + 4				25
	End to End				

The contractor shall furnish an approved retarder to retard the set of the concrete to 2.5 hours, and shall pour and satisfactorily finish the slab pours at the rate given.

The concrete diaphragm at the intermediate bents and integral end bents shall be poured a minimum of 30 minutes and a maximum of 2 hours before the slab is poured.

SLAB POURING SEQUENCE

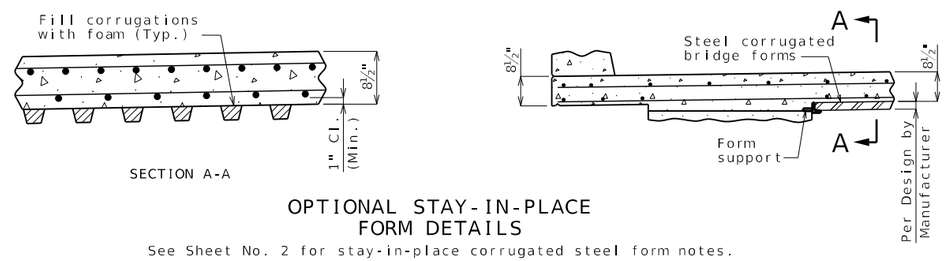

OPTIONAL STAY-IN-PLACE FORM DETAILS

See Sheet No. 2 for stay-in-place corrugated steel form notes.

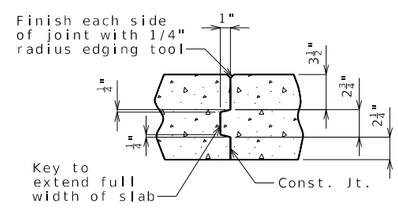

SLAB CONSTRUCTION JOINT

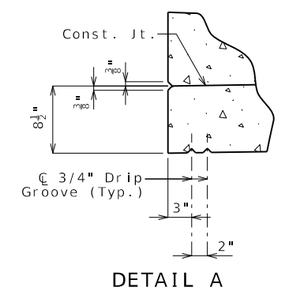

DETAIL A

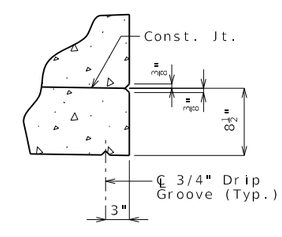

DETAIL B

Notes:

For reinforcement of barrier not shown, see Sheets No. 28 & 29.

For Theoretical Bottom of Slab Elevations, Beam Camber Diagram and Theoretical Slab Haunching Diagram, see Sheet No. 23.

For Plan of Slab Showing Reinforcement, see Sheets No. 24 & 25.

SLAB DETAILS

Detailed Jul. 2024
Checked Aug. 2024

Note: This drawing is not to scale. Follow dimensions.

STATE OF MISSOURI
DEREK S. BUTLER
NUMBER PE-2016009628
PROFESSIONAL ENGINEER

THIS SHEET HAS BEEN SIGNED, SEALED AND DATED ELECTRONICALLY

DATE PREPARED	
12/19/2024	
ROUTE K	STATE MO
DISTRICT BR	SHEET NO. 26
COUNTY MONTGOMERY	
JOB NO. JNE0053	
CONTRACT ID.	
PROJECT NO.	
BRIDGE NO. A9536	

DESCRIPTION	DATE

IF A SEAL IS PRESENT ON THIS SHEET IT HAS BEEN ELECTRONICALLY SEALED AND DATED.

MISSOURI HIGHWAYS AND TRANSPORTATION COMMISSION
105 WEST CAPITOL
JEFFERSON CITY, MO 65102
1-888-ASK-MODOT (1-888-275-6636)

GARVER, LLC.
7509 NW TIFFANY SPRINGS PARKWAY, SUITE 200
KANSAS CITY, MO 64153
PHONE: (816) 298-6465
CERTIFICATE OF AUTHORITY NO. 2008013090

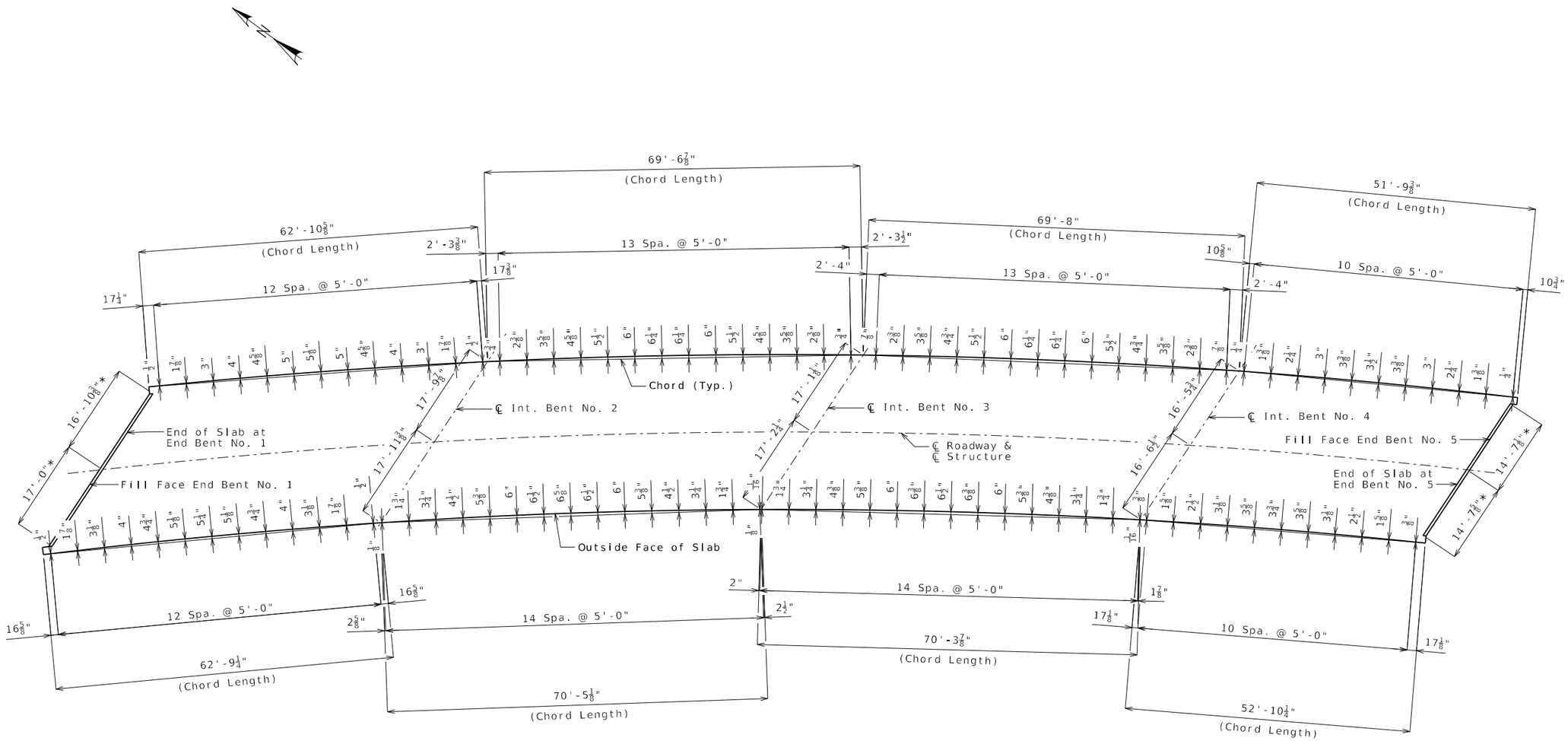

PLAN

Notes:

All dimensions are horizontal.
All bents are parallel.

* Measured to roadway face of barrier.

SLAB CURVE ORDINATES

Detailed Jul. 2024
Checked Aug. 2024

Note: This drawing is not to scale. Follow dimensions.

STATE OF MISSOURI
DEREK S. BUTLER
NUMBER PE-2016009628
PROFESSIONAL ENGINEER

THIS SHEET HAS BEEN SIGNED, SEALED AND DATED ELECTRONICALLY

DATE PREPARED	
12/31/2024	
ROUTE: K	STATE: MO
DISTRICT: BR	SHEET NO.: 27
COUNTY: MONTGOMERY	
JOB NO.: JNE0053	
CONTRACT ID.	
PROJECT NO.	
BRIDGE NO.: A9536	

DATE	DESCRIPTION

MISSOURI HIGHWAYS AND TRANSPORTATION COMMISSION
105 WEST CAPITOL
JEFFERSON CITY, MO 65102
1-888-ASK-MODOT (1-888-275-6636)

GARVER, LLC.
7509 NW TIFFANY SPRINGS PARKWAY, SUITE 200
KANSAS CITY, MO 64153
PHONE: (816) 298-6465
CERTIFICATE OF AUTHORITY NO. 2008013090

IF A SEAL IS PRESENT ON THIS SHEET IT HAS BEEN ELECTRONICALLY SEALED AND DATED.

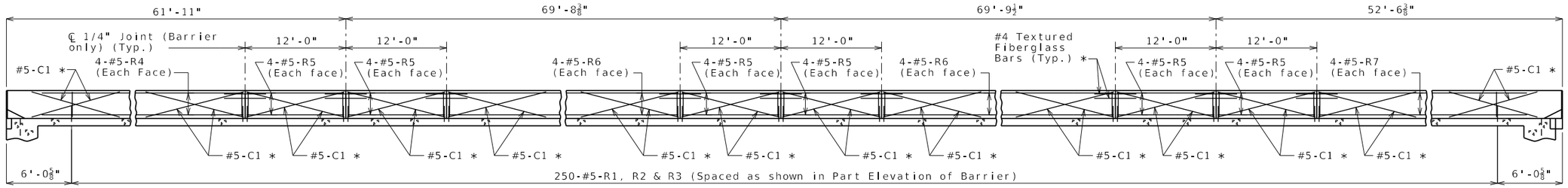

ELEVATION OF LEFT BARRIER

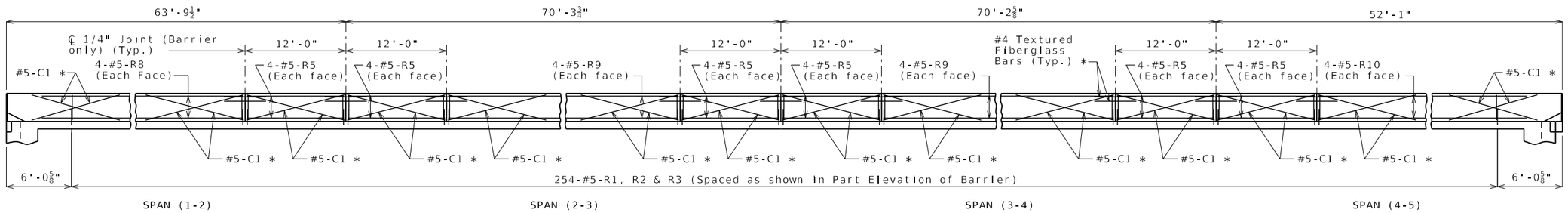

ELEVATION OF RIGHT BARRIER

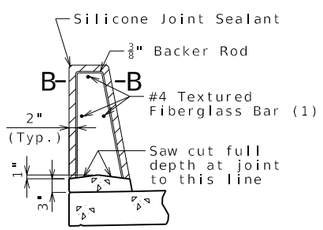

SECTION THRU SAW CUT JOINT

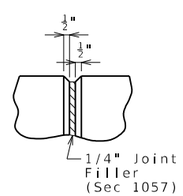

PART ELEVATION AT FORMED JOINT

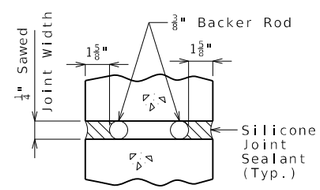

SECTION B-B

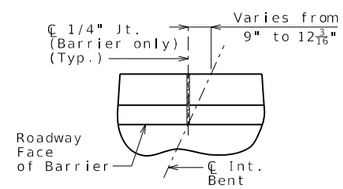

PART PLAN SHOWING JOINT LOCATION

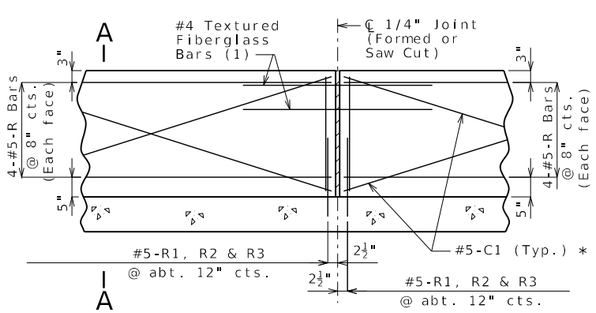

PART ELEVATION OF BARRIER

(1) Four feet long, centered on joint, slip-formed option only

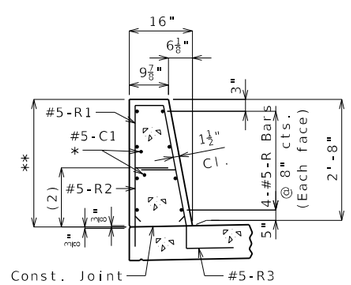

SECTION A-A

Use a minimum lap of 3'-1" for #5 horizontal barrier bars.

The cross-sectional area above the slab is: 2.81 square feet (left barrier)
2.94 square feet (right barrier)

(2) 13 1/2" To top of bar (Left Barrier)
15 7/8" To top of bar (Right Barrier)

** 2'-6 7/8" (Left Barrier)
2'-9 1/8" (Right Barrier)

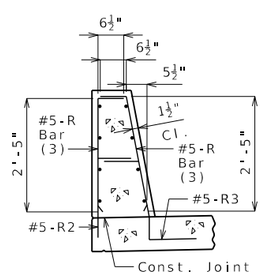

R-BAR PERMISSIBLE ALTERNATE SHAPE

(3) The R1 bar may be separated into two bars as shown, at the contractor's option, only when slip forming is not used. (All dimensions are out to out.)

General Notes:

Longitudinal dimensions are horizontal.

* Slip-formed option only.

Conventional forming or slip forming may be used. Saw cut joints may be used with conventional forming.

Top of barrier shall be built parallel to grade and barrier joints normal to grade.

All exposed edges of barrier shall have either a 1/2-inch radius or a 3/8-inch bevel, unless otherwise noted.

Payment for all concrete and reinforcement, complete in place, will be considered completely covered by the contract unit price for Type H Barrier per linear foot.

Concrete in barrier shall be Class B-1.

Measurement of barrier is to the nearest linear foot for each structure, measured along the outside top of slab from end of slab to end of slab.

Concrete traffic barrier delineators shall be placed on top of the barrier as shown on Missouri Standard Plan 617.10 and in accordance with Sec 617. Delineators on bridges with two-lane, two-way traffic shall have retroreflective sheeting on both sides. Concrete traffic barrier delineators will be considered completely covered by the contract unit price for Type H Barrier.

Joint sealant and backer rods shall be in accordance with Sec 717 for silicone joint sealant for saw cut and formed joints.

For slip-formed option, both sides of barrier shall have a vertically broomed finish and the top shall have a transversely broomed finish.

TYPE H BARRIER

Detailed Jul. 2024
Checked Sep. 2024

Note: This drawing is not to scale. Follow dimensions.

STATE OF MISSOURI
DEREK S. BUTLER
NUMBER PE-2016009626
PROFESSIONAL ENGINEER

THIS SHEET HAS BEEN SIGNED, SEALED AND DATED ELECTRONICALLY

DATE PREPARED	
12/19/2024	
ROUTE K	STATE MO
DISTRICT BR	SHEET NO. 28
COUNTY MONTGOMERY	
JOB NO. JNE0053	
CONTRACT ID.	
PROJECT NO.	
BRIDGE NO. A9536	

DESCRIPTION	DATE

MISSOURI HIGHWAYS AND TRANSPORTATION COMMISSION
105 WEST CAPITOL
JEFFERSON CITY, MO 65102
1-888-ASK-MODOT (1-888-275-6636)

GARVER, LLC.
7509 NW TIFFANY SPRINGS PARKWAY, SUITE 200
KANSAS CITY, MO 64153
PHONE: (816) 298-6465
CERTIFICATE OF AUTHORITY NO. 2008013090

IF A SEAL IS PRESENT ON THIS SHEET IT HAS BEEN ELECTRONICALLY SEALED AND DATED.

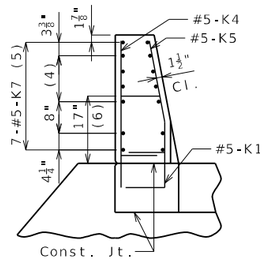

ELEVATION A-A

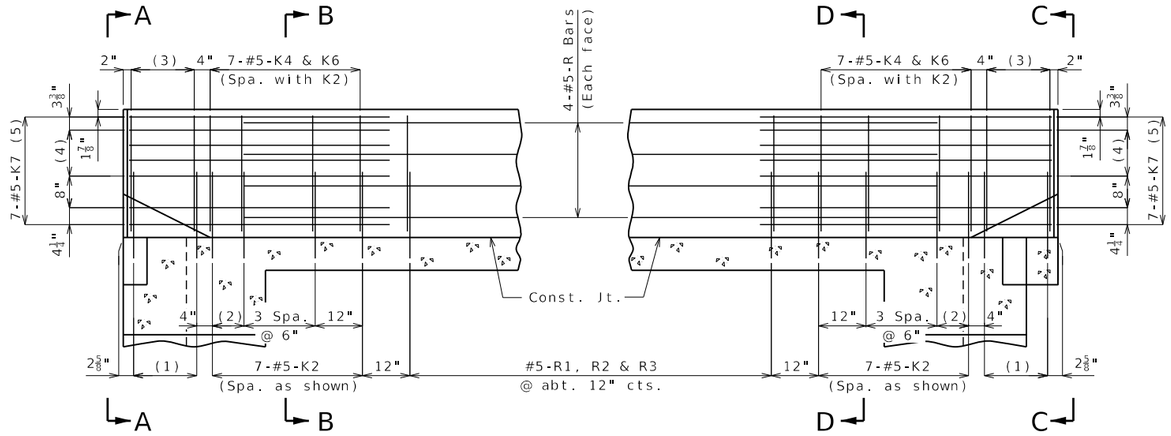

PART ELEVATION

(1) 5-#5-K1 @ 4" cts.

(2) 2 Spaces @ 4"

(3) 5-#5-K4 and 5-#5-K5, spaced with K1

(4) 3 Spaces @ $3\frac{13}{16}$"

(5) Spaced as shown, each face

(6) To top of bar

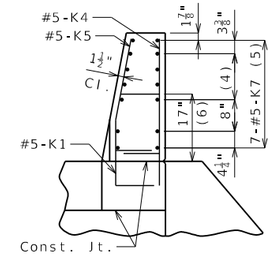

ELEVATION C-C

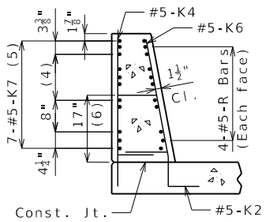

SECTION B-B

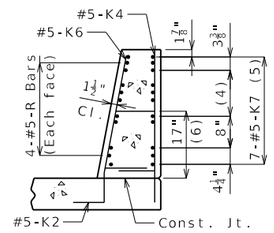

SECTION D-D

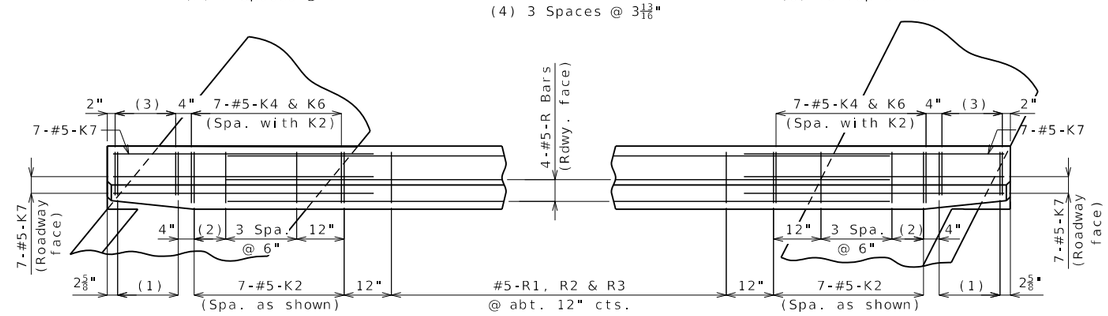

PART PLAN

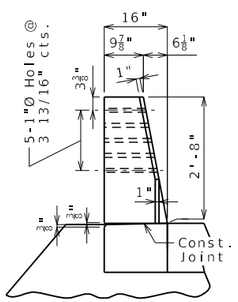

ELEVATION E-E

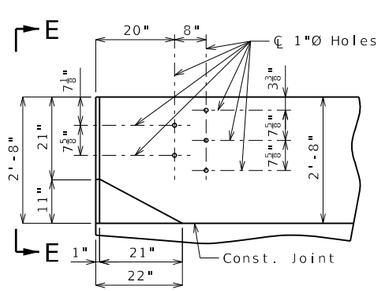

ELEVATION

* Transition to zero at Type A curb for gutter lines to match.

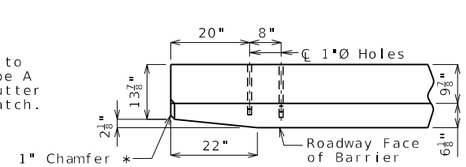

PLAN

DETAILS OF GUARD RAIL ATTACHMENT

General Notes:

Concrete traffic barrier delineators shall be placed on top of the barrier as shown on Missouri Standard Plan 617.10 and in accordance with Sec 617. Delineators on bridges with two-lane, two-way traffic shall have retroreflective sheeting on both sides. Concrete traffic barrier delineators will be considered completely covered by the contract unit price for Type H Barrier.

Reinforcing Steel:

Minimum clearance to reinforcing steel shall be 1 1/2".

Use a minimum lap of 3'-1" between K7 bars and R bars.

TYPE H BARRIER AT END BENTS

(Left barrier shown, right barrier similar)

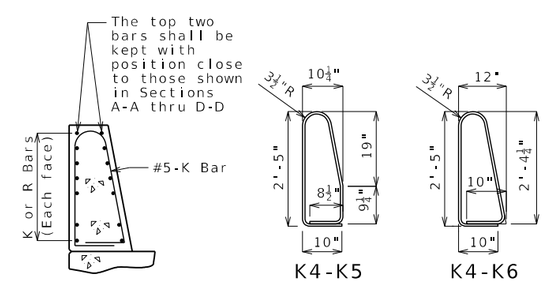

PERMISSIBLE ALTERNATE SHAPES

(Other K bars not shown for clarity)

The K4-K5 and K4-K6 bar combination may be furnished as one bar as shown, at the contractor's option.

All dimensions are out to out.

Detailed Jul. 2024
Checked Sep. 2024

Note: This drawing is not to scale. Follow dimensions.

STATE OF MISSOURI
DEREK S. BUTLER
NUMBER PE-2016009626
PROFESSIONAL ENGINEER

THIS SHEET HAS BEEN SIGNED, SEALED AND DATED ELECTRONICALLY

DATE PREPARED	
12/19/2024	
ROUTE K	STATE MO
DISTRICT BR	SHEET NO. 29
COUNTY MONTGOMERY	
JOB NO. JNE0053	
CONTRACT ID.	
PROJECT NO.	
BRIDGE NO. A9536	

DATE	DESCRIPTION

IF A SEAL IS PRESENT ON THIS SHEET IT HAS BEEN ELECTRONICALLY SEALED AND DATED.

MISSOURI HIGHWAYS AND TRANSPORTATION COMMISSION
105 WEST CAPITOL
JEFFERSON CITY, MO 65102
1-888-ASK-MODOT (1-888-275-6636)

GARVER, LLC.
7509 NW TIFFANY SPRINGS PARKWAY, SUITE 200
KANSAS CITY, MO 64153
PHONE: (816) 298-6465
CERTIFICATE OF AUTHORITY NO. 2008013090

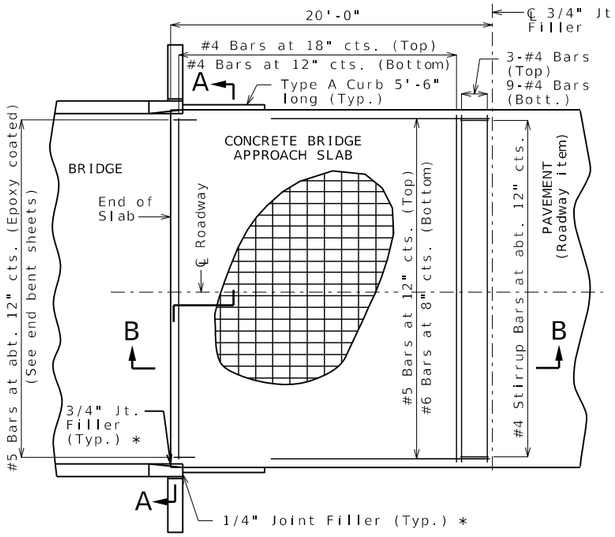

PART PLAN OF SQUARED STRUCTURE
(Skewed structure similar)

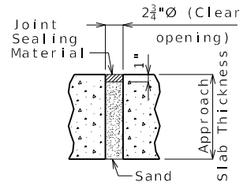

UNDERSEAL ACCESS HOLE DETAIL
(If required)

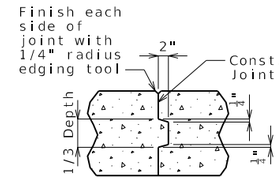

CONSTRUCTION JOINT DETAIL

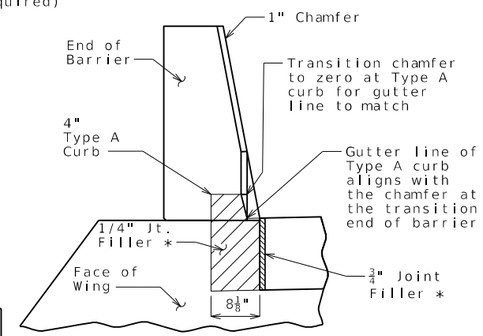

SECTION BETWEEN CURB AND BARRIER

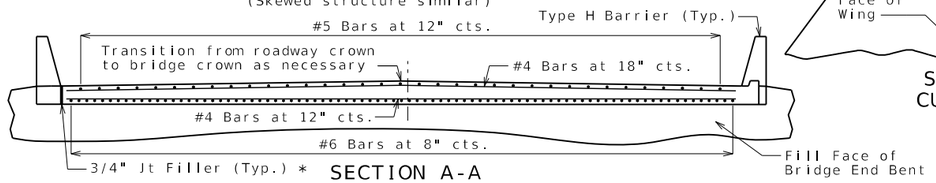

SECTION A-A

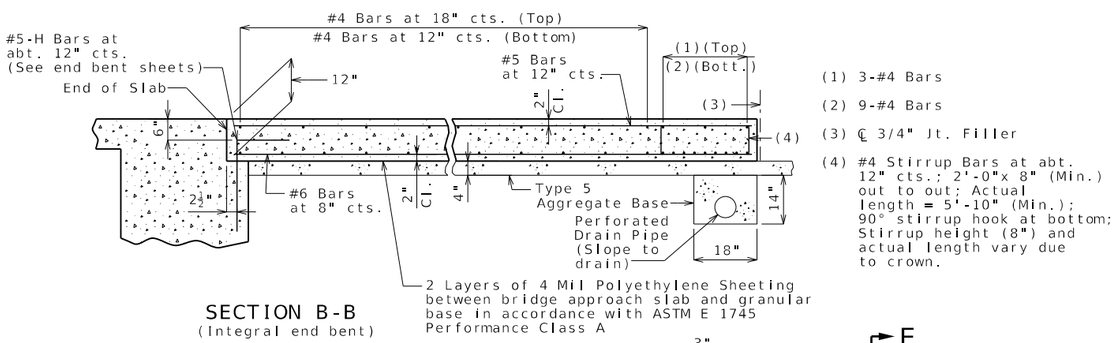

(1) 3-#4 Bars
(2) 9-#4 Bars
(3) ℄ 3/4" Jt. Filler
(4) #4 Stirrup Bars at abt. 12" cts.; 2'-0"x 8" (Min.) out to out; Actual length = 5'-10" (Min.); 90° stirrup hook at bottom; Stirrup height (8") and actual length vary due to crown.

SECTION B-B
(Integral end bent)

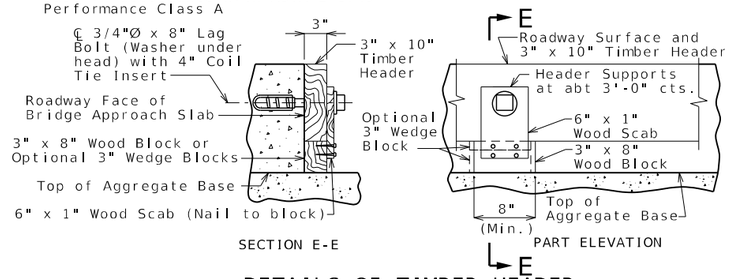

SECTION E-E

PART ELEVATION

DETAILS OF TIMBER HEADER
Remove timber header when concrete pavement is placed.

OPTIONAL CONCRETE SLAB

Notes For Concrete Slab Only:

All concrete for the bridge approach slab shall be in accordance with Sec 503 (f'c = 4,000 psi).

The reinforcing steel in the bridge approach slab shall be epoxy coated Grade 60 with fy = 60,000 psi.

Longitudinal construction joints in bridge approach slab shall be aligned with longitudinal construction joints in bridge slab.

Minimum clearance to reinforcing steel shall be 1 1/2", unless otherwise shown.

The reinforcing steel in the bridge approach slab shall be continuous. The transverse reinforcing steel may be made continuous by providing a minimum lap splice of 23 inches for #4 bars, or by mechanical bar splice.

All joint filler shall be in accordance with Sec 1057 for preformed fiber expansion joint filler except as noted.

Payment for furnishing all materials, labor and excavation necessary to construct the concrete bridge approach slab, including the timber header, underdrain, Type 5 aggregate base, joint filler, and all other appurtenances and incidental work as shown on this sheet, complete in place, will be considered completely covered by the contract unit price for Bridge Approach Slab (Minor) per square yard.

Drain pipe may be either 6" diameter corrugated metallic-coated pipe underdrain, 4" diameter corrugated polyvinyl chloride (PVC) drain pipe, or 4" diameter corrugated polyethylene (PE) drain pipe.

See Missouri Standard Plan 609.00 for details of Type A curb.

* Seal joint between vertical face of approach slab and wing with sealant in accordance with Sec 717 for silicone joint sealant for saw cut and formed joints.

General Notes:

Contractor shall have the option to construct either slab except as noted.

The contractor shall pour and satisfactorily finish the bridge slab before placing the bridge approach slab.

MoDOT Construction personnel will indicate the bridge approach slab used for this structure:

☐ Concrete Bridge Approach Slab
☐ Asphalt Bridge Approach Slab

Notes For Asphalt Slab Only:

Payment for furnishing all materials, labor and excavation necessary to construct the asphalt bridge approach slab, including tack, curb, and Type 5 aggregate base within the pay limits shown, complete in place, will be considered completely covered by the contract unit price for Bridge Approach Slab (Minor) per square yard.

Application of tack is required between lifts per Sec 403.

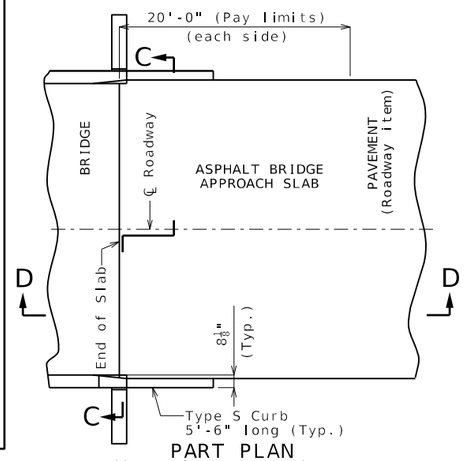

PART PLAN
(Squared structure shown, skewed structure similar)

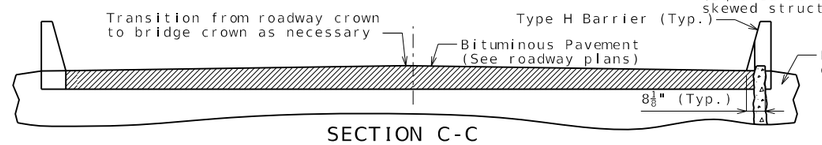

SECTION C-C

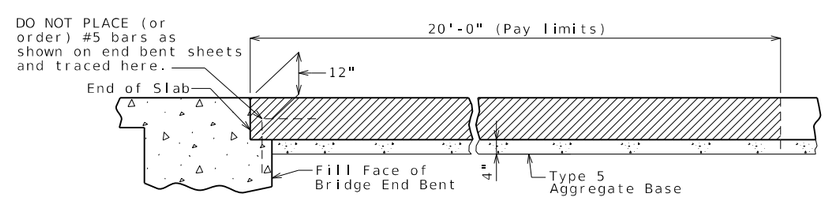

SECTION D-D

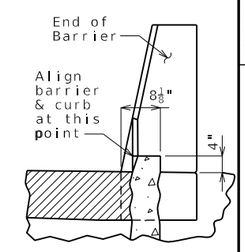

4" TYPE S CURB
See Missouri Standard Plan 609.00 for details of Type S curb.

OPTIONAL ASPHALT SLAB (NOT ALLOWED WITH CONCRETE PAVEMENT)

BRIDGE APPROACH SLAB (MINOR)

Integral end bents shown, non-integral end bent similar.

Detailed Sep. 2024
Checked Sep. 2024

Note: This drawing is not to scale. Follow dimensions.

STATE OF MISSOURI
DEREK S. BUTLER
NUMBER PE-2016009626
PROFESSIONAL ENGINEER

THIS SHEET HAS BEEN SIGNED, SEALED AND DATED ELECTRONICALLY

DATE PREPARED	12/19/2024
ROUTE	K
STATE	MO
DISTRICT	BR
SHEET NO.	30
COUNTY	MONTGOMERY
JOB NO.	JNE0053
CONTRACT ID.	
PROJECT NO.	
BRIDGE NO.	A9536

DATE	DESCRIPTION

MISSOURI HIGHWAYS AND TRANSPORTATION COMMISSION
105 WEST CAPITOL
JEFFERSON CITY, MO 65102
1-888-ASK-MODOT (1-888-275-6636)

GARVER, LLC.
7509 NW TIFFANY SPRINGS PARKWAY, SUITE 200
KANSAS CITY, MO 64153
PHONE: (816) 298-6465
CERTIFICATE OF AUTHORITY NO. 2008013090

IF A SEAL IS PRESENT ON THIS SHEET IT HAS BEEN ELECTRONICALLY SEALED AND DATED.

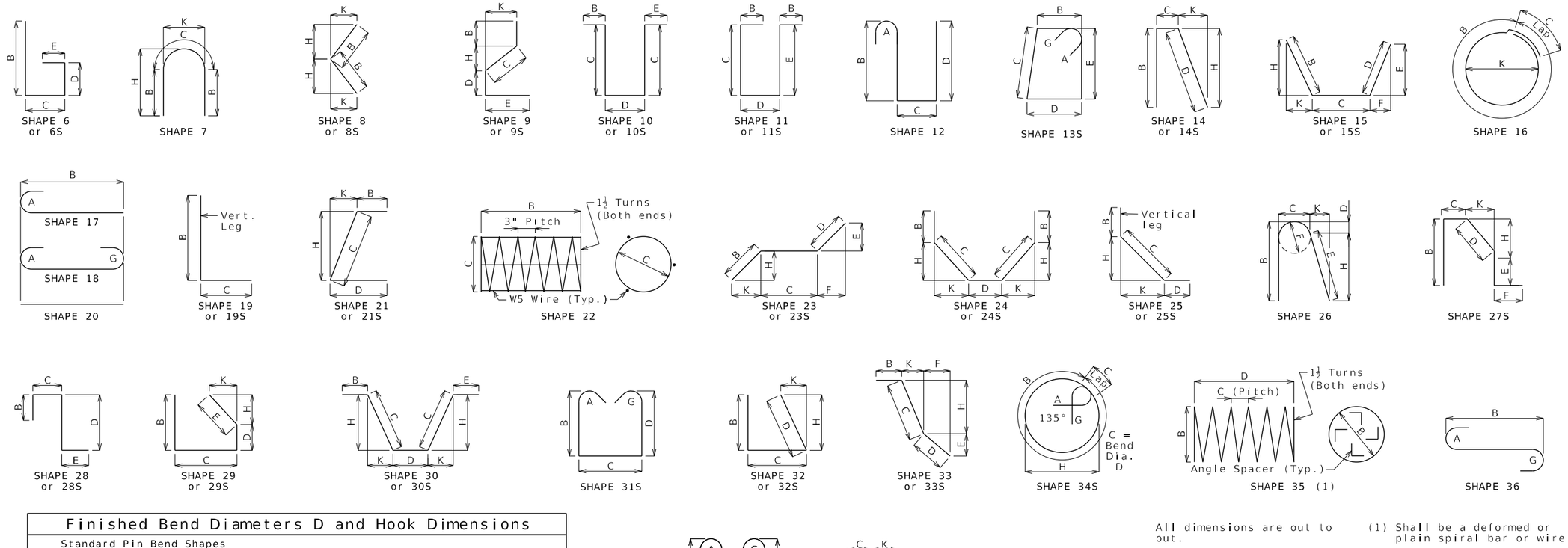

Finished Bend Diameters D and Hook Dimensions

Standard Pin Bend Shapes

Size	Case	D	A or G 90°	A or G 180°	J 180°
#4	1	3"	8"	6"	4"
#5	1	3¾"	10"	7"	5"
#6	1	4½"	12"	8¼"	6"
#7	2	5¼"	14"	9¾"	7"
	3	7"	15"	11½"	8¾"
#8	2	6"	16"	11"	8"
	3	8"	17"	13¼"	10"
#9	1	9½"	19½"	15½"	11¾"
#10	1	10¾"	22"	17½"	13¼"
#11	1	12"	24½"	19½"	14⅞"
#14	1	18¼"	31¼"	27½"	21⅝"
#18	1	24"	41½"	36¼"	28½"

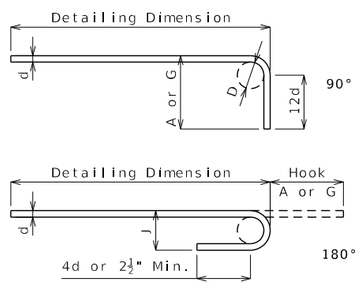

Stirrup Pin Bend Shapes (S)

Size	Case	D	A or G 90°	A or G 135°	A or G 180°	H 135°	J 180°
#4	2	2"	4½"	4½"	5"	2⅝"	3"
	3	3"	5"	5¼"	6"	3"	4"
#5	2	2½"	5¾"	5¾"	5¾"	3⅝"	3¾"
	3	3¾"	6¼"	6½"	7"	3⅞"	5"
#6	1	4½"	12"	7¾"	8¼"	4⅜"	6"

Applicable for all grades of steel.

Case 1 applies to all reinforcement. Case 2 applies to all reinforcement except for galvanized bars. Case 3 applies to galvanized bars only.

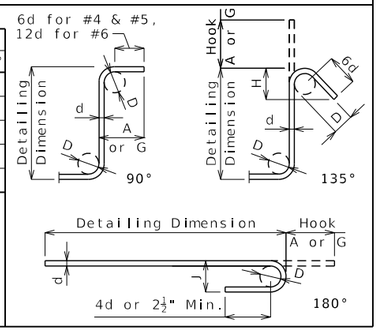

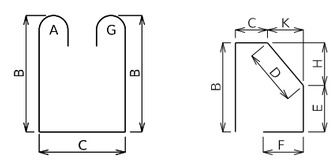

BENDING DIAGRAMS

All dimensions are out to out.

Shapes ending with an S shall be bent in accordance with stirrup pin bend shapes.

Unless otherwise noted, finished bending diameter D is the same for all bends of a shape.

(1) Shall be a deformed or plain spiral bar or wire.

Four angle or channel spacers are required for each column spiral. Spacers are to be placed on inside of spirals. Length and weight of column spirals do not include splices or spacers.

Reinforcing Steel Totals (Pounds)

	Size	Substructure Plain	Substructure Epoxy	Superstructure Slab Plain	Superstructure Slab Epoxy	Superstructure Barrier	Superstructure Slip Form	Entire Bridge Plain	Entire Bridge Epoxy
By Size	W5	0	0	0	0	0	0	0	0
	4	3,391	0	0	4,816	0	0	3,391	4,816
	5	0	0	0	19,819	10,781	701	0	31,301
	6	5,709	0	0	48,704	0	0	5,709	48,704
	7	3,720	0	0	216	0	0	3,720	216
	8	0	0	0	16,368	0	0	0	16,368
	9	0	0	0	0	0	0	0	0
	10	0	0	0	0	0	0	0	0
	11	0	0	0	0	0	0	0	0
	14	0	0	0	0	0	0	0	0
	18	0	0	0	0	0	0	0	0
By Type		12,820	0	0	89,923	10,781	701	12,820	101,405

All superstructure reinforcing steel shall be epoxy coated unless otherwise specified.

BENDING DIAGRAMS AND REINFORCING STEEL TOTALS

Detailed Sep. 2024
Checked Sep. 2024

Note: This drawing is not to scale. Follow dimensions.

STATE OF MISSOURI
DEREK S. BUTLER
NUMBER PE-2016009626
PROFESSIONAL ENGINEER
THIS SHEET HAS BEEN SIGNED, SEALED AND DATED ELECTRONICALLY

DATE PREPARED	
12/19/2024	
ROUTE: K	STATE: MO
DISTRICT: BR	SHEET NO.: 31
COUNTY: MONTGOMERY	
JOB NO.: JNE0053	
CONTRACT ID.	
PROJECT NO.	
BRIDGE NO.: A9536	

DATE	DESCRIPTION

IF A SEAL IS PRESENT ON THIS SHEET IT HAS BEEN ELECTRONICALLY SEALED AND DATED.

MISSOURI HIGHWAYS AND TRANSPORTATION COMMISSION
105 WEST CAPITOL
JEFFERSON CITY, MO 65102
1-888-ASK-MODOT (1-888-275-6636)

GARVER, LLC.
7509 NW TIFFANY SPRINGS PARKWAY, SUITE 200
KANSAS CITY, MO 64153
PHONE: (816) 298-6465
CERTIFICATE OF AUTHORITY NO. 2008013090

Bill of Reinforcing Steel

No. Req.	Size/ Mark	Location	Codes C	SH	V	Dimensions B ft in.	C ft in.	D ft in.	E ft in.	F ft in.	H ft in.	K ft in.	Nom. Length ft in.	Actual Length ft in.	Weight lb
		SUBSTRUCTURE													
		INT. BENT NO. 2													
9	6 D200	BEAM		20		2 6.00							2 6	2 6	34
8	7 H200	BEAM		18		32 2.00							33 10	33 10	554
8	7 H201	BEAM		17		15 10.00							16 8	16 8	273
8	7 H202	BEAM		20		16 4.00							16 4	16 4	268
8	7 H203	BEAM		17		8 0.00							8 10	8 10	145
4	6 H204	BEAM		20		32 4.00							32 4	32 4	195
2	6 H205	BEAM		20		20 4.00							20 4	20 4	62
2	6 H206	BEAM		20		8 0.00							8 0	8 0	25
10	6 H207	BEAM		10			12.00	4 2.00					6 2	5 11	89
5	6 H208	BEAM		20		4 3.00							4 3	4 3	32
2	4 H209	WEBWALL		18		30 6.00							31 6	31 6	43
16	4 H210	WEBWALL		20		30 6.00							30 6	30 6	326
18	4 H211	WEBWALL		7		23.00	2 7.38				2 9.00	20.00	6 5	6 5	78
13	6 U200	BEAM		13S		4 2.00	4 2.50	4 2.00	4 2.50				18 1	17 6	342
21	6 U201	BEAM		13S		4 2.00	3 5.38	4 2.00	3 5.38				16 6	15 11	503
20	6 U202	BEAM		13S		4 2.00	2 8.00	4 2.00	2 8.00				15 0	14 5	434
4	6 U203	BEAM		10S			4 2.50	4 2.00					12 7	12 3	74
4	6 U204	BEAM		10S			3 5.38	4 2.00					11 1	10 9	65
4	6 U205	BEAM		10S			2 8.00	4 2.00					9 6	9 2	56
70	4 U206	WEBWALL		19S		9 1.00	20.00						10 9	10 8	499
18	4 V200	WEBWALL		20		9 1.00							9 1	9 1	110
		INT. BENT NO. 3													
9	6 D300	BEAM		20		2 6.00							2 6	2 6	34
8	7 H300	BEAM		18		32 2.00							33 10	33 10	554
8	7 H301	BEAM		17		15 10.00							16 8	16 8	273
8	7 H302	BEAM		20		16 4.00							16 4	16 4	268
8	7 H303	BEAM		17		8 0.00							8 10	8 10	145
4	6 H304	BEAM		20		32 4.00							32 4	32 4	195
2	6 H305	BEAM		20		20 4.00							20 4	20 4	62
2	6 H306	BEAM		20		8 0.00							8 0	8 0	25
10	6 H307	BEAM		10			12.00	4 2.00					6 2	5 11	89
5	6 H308	BEAM		20		4 3.00							4 3	4 3	32
2	4 H309	WEBWALL		18		30 6.00							31 6	31 6	43
22	4 H310	WEBWALL		20		30 6.00							30 6	30 6	449
24	4 H311	WEBWALL		7		23.00	2 7.38				2 9.00	20.00	6 5	6 5	103
13	6 U300	BEAM		13S		4 2.00	4 1.25	4 2.00	4 1.25				17 10	17 3	337
21	6 U301	BEAM		13S		4 2.00	3 4.75	4 2.00	3 4.75				16 5	15 10	500
20	6 U302	BEAM		13S		4 2.00	2 8.00	4 2.00	2 8.00				15 0	14 5	434
4	6 U303	BEAM		10S			4 1.25	4 2.00					12 5	12 1	73
4	6 U304	BEAM		10S			3 4.75	4 2.00					11 0	10 8	65
4	6 U305	BEAM		10S			2 8.00	4 2.00					9 6	9 2	56
70	4 U306	WEBWALL		19S		10 4.00	20.00						12 0	11 10	554
18	4 V300	WEBWALL		20		10 4.00							10 4	10 4	125
		INT. BENT NO. 4													
9	6 D400	BEAM		20		2 6.00							2 6	2 6	34
8	7 H400	BEAM		18		32 2.00							33 10	33 10	554
8	7 H401	BEAM		17		15 10.00							16 8	16 8	273
8	7 H402	BEAM		20		16 4.00							16 4	16 4	268
8	7 H403	BEAM		17		8 0.00							8 10	8 10	145
4	6 H404	BEAM		20		32 4.00							32 4	32 4	195
2	6 H405	BEAM		20		20 4.00							20 4	20 4	62
2	6 H406	BEAM		20		8 0.00							8 0	8 0	25
10	6 H407	BEAM		10			12.00	4 2.00					6 2	5 11	89
5	6 H408	BEAM		20		4 3.00							4 3	4 3	32
2	4 H409	WEBWALL		18		30 6.00							31 6	31 6	43
16	4 H410	WEBWALL		20		30 6.00							30 6	30 6	326
18	4 H411	WEBWALL		7		23.00	2 7.38				2 9.00	20.00	6 5	6 5	78
13	6 U400	BEAM		13S		4 2.00	4 0.50	4 2.00	4 0.50				17 9	17 2	336
21	6 U401	BEAM		13S		4 2.00	3 4.25	4 2.00	3 4.25				16 4	15 9	497
20	6 U402	BEAM		13S		4 2.00	2 8.00	4 2.00	2 8.00				15 0	14 5	434
4	6 U403	BEAM		10S			4 0.50	4 2.00					12 3	11 11	72
4	6 U404	BEAM		10S			3 4.25	4 2.00					10 11	10 7	64

Bill of Reinforcing Steel

No. Req.	Size/ Mark	Location	Codes C	SH	V	Dimensions B ft in.	C ft in.	D ft in.	E ft in.	F ft in.	H ft in.	K ft in.	Nom. Length ft in.	Actual Length ft in.	Weight lb
		INT. BENT NO. 4 (CONT.)													
4	6 U405	BEAM		10S			2 8.00	4 2.00					9 6	9 2	56
70	4 U406	WEBWALL		19S		9 2.00	20.00						10 10	10 9	503
18	4 V400	WEBWALL		20		9 2.00							9 2	9 2	111
		SUPERSTRUCTURE													
		END BENT NO. 1													
4	8 H100	BEAM	E	20		36 10.00							36 10	36 10	394
4	8 H101	DIAPHRAGM	E	20		36 10.00							36 10	36 10	394
4	8 H102	BEAM	E	20		14 10.00							14 10	14 10	159
4	8 H103	BEAM	E	20		18 4.00							18 4	18 4	196
4	8 H104	BEAM	E	20		15 1.00							15 1	15 1	162
7	6 H105	BEAM/DIAPHRAGM	E	20		36 10.00							36 10	36 10	388
2	6 H106	BEAM	E	20		27 5.00							27 5	27 5	83
2	6 H107	BEAM	E	20		14 9.00							14 9	14 9	45
6	6 H108	DIAPHRAGM	E	20		7 1.00							7 1	7 1	64
3	6 H109	DIAPHRAGM	E	20		4 6.00							4 6	4 6	21
3	6 H110	DIAPHRAGM	E	20		4 5.00							4 5	4 5	20
28	6 H111	WINGWALL	E	20		16 6.00							16 6	16 6	694
4	6 H112	WINGWALL	E	20	1	8 3.00							8 3	8 3	67
		INCR =22.75"				13 11.00							13 11	13 11	
4	6 H113	WINGWALL	E	20	1	12 3.00							12 3	12 3	87
		INCR = 17.25"				16 7.00							16 7	16 7	
4	6 H114	WINGWALL	E	20		12 0.00							12 0	12 0	73
4	6 H115	WINGWALL	E	20		11 8.00							11 8	11 8	71
34	5 H116	APP NOTCH	E	19		2 0.00	15.00						3 3	3 2	113
3	5 H117	DIAPHRAGM	E	20		5 6.00							5 6	5 6	18
10	6 H118	WINGWALL	E	14S		2 6.00	13.50	2 6.50			2 6.00	6.00	6 2	5 11	89
4	6 H119	WINGWALL	E	20	1	7 0.00							7 0	7 0	60
		INCR =22.75"				12 8.00							12 8	12 8	
4	6 H120	WINGWALL	E	20	1	8 4.00							8 4	8 4	64
		INCR = 17.25"				12 8.00							12 8	12 8	
4	5 U100	BEAM	E	37S		4 8.50	3 10.00						14 3	14 0	59
8	5 U101	BEAM	E	37S		5 5.00	3 10.00						15 8	15 5	129
11	5 U102	BEAM	E	37S		6 1.50	3 10.00						17 1	16 10	194
2	5 U103	BEAM	E	10S			2 8.00	3 10.00					9 2	8 11	19
2	5 U104	BEAM	E	10S			3 4.50	3 10.00					10 7	10 4	22
3	5 U105	BEAM	E	10S			4 3.00	3 10.00					12 4	12 1	38
9	5 U106	BEAM	E	13S		3 10.00	2 8.00	3 10.00	2 8.00				14 0	13 8	129
9	5 U107	BEAM	E	13S		3 10.00	3 4.50	3 10.00	3 4.50				15 4	15 0	141
8	5 U108	BEAM	E	13S		3 10.00	4 3.00	3 10.00	4 3.00				17 2	16 10	141
8	5 U109	DIAPHRAGM	E	37S	1	2 8.50	3 2.00						9 7	9 4	83
		INCR = 3.00"				3 3.00	3 2.00						10 8	10 5	
14	5 U110	DIAPHRAGM	E	37S	1	2 7.50	3 2.00						9 5	9 2	142
		INCR = 1.50"				3 2.00	3 2.00						10 6	10 3	
19	5 U111	DIAPHRAGM	E	37S	1	2 7.00	3 2.00						9 4	9 1	195
		INCR = 1.50"				3 4.00	3 2.00						10 10	10 7	
41	5 U112	DIAPHRAGM	E	19S		21.00	3 10.00						5 7	5 5	232
45	6 U113	DIAPHRAGM	E	12		2 6.00	5 2.00						8 4	8 2	552
14	5 U114	WINGWALL	E	10S	2		18.00	3 6.00					6 6	6 3	114
		INCR = 6.25"					2 1.00	5 5.00					9 7	9 4	
5	5 U115	WINGWALL	E	10S			2 2.00	5 8.00					10 0	9 9	51
14	5 U116	WINGWALL	E	10S	2		18.00	5 2.00					8 2	7 11	143
		INCR = 7.25"					2 1.00	7 8.00					11 10	11 7	
5	5 U117	WINGWALL	E	10S			2 2.00	8 0.00					12 4	12 1	64
8	5 V100	BEAM	E	17		4 8.50							5 4	5 4	45
12	5 V101	BEAM	E	17		5 5.00							6 0	6 0	76
16	5 V102	BEAM	E	17		6 1.50							6 9	6 9	113
4	7 V103	WINGWALL	E	23		3 0.00	3 2.00				2 10.25	10.75	6 2	5 10	48
4	7 V104	WINGWALL	E	23		3 0.00	4 9.00				2 9.25	13.50	7 9	7 5	61
24	6 V105	DIAPHRAGM	E	20		2 0.00							2 0	2 0	73
		END BENT NO. 5													
4	8 H500	BEAM	E	20		31 10.00							31 10	31 10	340
4	8 H501	DIAPHRAGM	E	20		31 10.00							31 10	31 10	340
4	8 H502	BEAM	E	20		18 7.00							18 7	18 7	199
4	8 H503	BEAM	E	20		16 11.00							16 11	16 11	181
4	8 H504	BEAM	E	20		7 5.00							7 5	7 5	80

Nominal lengths are based on out to out dimensions shown in bending diagrams and are listed to the nearest inch for fabricator's use. Actual lengths are measured along centerline bar to the nearest inch. Weights are based on actual lengths.

For bending diagrams and steel reinforcing totals, see Sheet No. 31.

Detailed Sep. 2024
Checked Sep. 2024

All bars shall be Grade 60.

Note: This drawing is not to scale. Follow dimensions.

Codes: C = Required coatings, where E = Epoxy Coated and G = Galvanized.

SH = Required shape, see bending diagrams.

V = Sets of varied bars and number of bars of each length. Bar dimensions vary in equal increments between dimensions shown on this line and the following line and the actual length dimension shown on this line and the following line vary by the specified increment.

BILL OF REINFORCING STEEL

STATE OF MISSOURI
DEREK S. BUTLER
NUMBER PE-2016009828
PROFESSIONAL ENGINEER

THIS SHEET HAS BEEN SIGNED, SEALED AND DATED ELECTRONICALLY

DATE PREPARED 12/19/2024
ROUTE K
STATE MO
DISTRICT BR
SHEET NO. 32
COUNTY MONTGOMERY
JOB NO. JNE0053
CONTRACT ID.
PROJECT NO.
BRIDGE NO. A9536

DESCRIPTION
DATE

IF A SEAL IS PRESENT ON THIS SHEET IT HAS BEEN ELECTRONICALLY SEALED AND DATED.

MISSOURI HIGHWAYS AND TRANSPORTATION COMMISSION
105 WEST CAPITOL
JEFFERSON CITY, MO 65102
1-888-ASK-MODOT (1-888-275-6636)

GARVER, LLC.
7509 NW TIFFANY SPRINGS PARKWAY, SUITE 200
KANSAS CITY, MO 64153
PHONE: (816) 298-6465
CERTIFICATE OF AUTHORITY NO. 2008013090

Bill of Reinforcing Steel

No. Req.	Size/ Mark	Location	Codes C	SH	V	Dimensions B ft in.	C ft in.	D ft in.	E ft in.	F ft in.	H ft in.	K ft in.	Nom. Length ft in.	Actual Length ft in.	Weight lb
		END BENT NO. 5													
		(CONT.)													
7	6 H505	BEAM/DIAPHRAGM	E	20		31 10.00							31 10	31 10	335
2	6 H506	BEAM	E	20		19 0.00							19 0	19 0	58
2	6 H507	BEAM	E	20		7 7.00							7 7	7 7	23
6	6 H508	DIAPHRAGM	E	20		6 6.00							6 6	6 6	59
3	6 H509	DIAPHRAGM	E	20		5 7.00							5 7	5 7	26
3	6 H510	DIAPHRAGM	E	20		3 11.00							3 11	3 11	18
28	6 H511	WINGWALL	E	20		16 2.00							16 2	16 2	680
10	6 H512	WINGWALL	E	20	1	8 4.00							8 4	8 4	171
		INCR =18.25"				14 5.00							14 5	14 5	
8	6 H513	WINGWALL	E	20	1	10 9.00							10 9	10 9	162
		INCR = 21.75"				16 2.00							16 2	16 2	
4	6 H514	WINGWALL	E	20		11 6.00							11 6	11 6	70
4	6 H515	WINGWALL	E	20		11 6.00							11 6	11 6	70
29	5 H516	APP NOTCH	E	19		2 0.00	15.00						3 3	3 2	96
3	5 H517	DIAPHRAGM	E	20		5 6.00							5 6	5 6	18
10	6 H518	WINGWALL	E	14S		2 6.00	13.50	2 6.50			2 6.00	6.00	6 2	5 11	89
5	6 H519	WINGWALL	E	20	1	7 4.00							7 4	7 4	79
		INCR =18.50"				13 6.00							13 6	13 6	
4	6 H520	WINGWALL	E	20	1	6 6.00							6 6	6 6	58
		INCR = 21.75"				11 11.00							12 8	12 8	
4	5 U500	BEAM	E	37S		6 3.00	3 5.00						16 11	16 8	70
7	5 U501	BEAM	E	37S		5 4.50	3 5.00						15 2	14 11	109
12	5 U502	BEAM	E	37S		4 9.00	3 5.00						13 11	13 8	172
2	5 U503	BEAM	E	10S			4 0.00	3 5.00					11 5	11 2	24
2	5 U504	BEAM	E	10S			3 4.00	3 5.00					10 1	9 10	21
3	5 U505	BEAM	E	10S			2 8.00	3 5.00					8 9	8 6	27
8	5 U506	BEAM	E	13S		3 5.00	4 0.00	3 5.00	4 0.00				15 10	15 6	130
7	5 U507	BEAM	E	13S		3 5.00	3 4.00	3 3.00	3 4.00				14 6	14 2	104
7	5 U508	BEAM	E	13S		3 5.00	2 8.00	3 5.00	2 8.00				13 2	12 10	94
6	5 U509	DIAPHRAGM	E	37S	1	2 10.50	2 10.00						9 7	9 4	62
		INCR = 1.13"				3 4.00	2 10.00						10 6	10 3	
14	5 U510	DIAPHRAGM	E	37S	1	2 10.00	2 10.00						9 6	9 3	145
		INCR = 0.63"				3 6.00	2 10.00						10 9	10 6	
16	5 U511	DIAPHRAGM	E	37S	1	2 9.00	2 10.00						9 4	9 1	164
		INCR = 0.63"				3 6.00	2 10.00						10 9	10 6	
36	5 U512	DIAPHRAGM	E	19S		21.00	3 5.00						5 2	5 0	188
40	6 U513	DIAPHRAGM	E	12		2 8.00	5 2.00						8 6	8 4	501
14	5 U514	WINGWALL	E	10S	2		18.00	5 0.00					8 0	7 9	139
		INCR = 7.00"					2 1.00	7 4.00					11 6	11 3	
5	5 U515	WINGWALL	E	10S			2 2.00	7 8.00					12 0	11 9	62
14	5 U516	WINGWALL	E	10S	2		18.00	3 6.00					6 6	6 3	115
		INCR = 6.75"					2 1.00	5 6.00					9 8	9 5	
5	5 U517	WINGWALL	E	10S			2 2.00	5 9.00					10 1	9 10	52
4	5 V500	BEAM	E	17		6 0.00							6 7	6 7	28
14	5 V501	BEAM	E	17		5 4.50							6 0	6 0	88
8	5 V502	BEAM	E	17		4 9.00							5 4	5 4	45
4	7 V503	WINGWALL	E	23		3 0.00	4 6.00				2 9.50	12.25	7 6	7 2	59
4	7 V504	WINGWALL	E	23		3 0.00	3 2.00				2 10.25	11.25	6 2	5 10	48
24	6 V505	DIAPHRAGM	E	20		2 0.00							2 0	2 0	73
		SLAB													
43	6 S1	SLAB	E	20	1	2 3.00							2 3	2 3	950
		INCR = 7.13"				27 2.00							27 2	27 2	
476	6 S2	SLAB	E	20		28 5.00							28 5	28 5	20,317
26	6 S3	SLAB	E	20	1	2 9.00							2 9	2 9	577
		INCR = 11.50"				26 9.00							26 9	26 9	
106	6 S4	SLAB	E	20		44 3.00							44 3	44 3	7,046
159	6 S5	SLAB	E	20		60 0.00							60 0	60 0	14,330
8	4 S6	SLAB	E	20	1	2 3.00							2 3	2 3	23
		INCR = 6.88"				6 3.00							6 3	6 3	
1009	4 S7	SLAB	E	20		6 7.00							6 7	6 7	4,438
4	4 S8	SLAB	E	20	1	2 9.00							2 9	2 9	12
		INCR = 11.62"				5 8.00							5 8	5 8	
44	8 S9	SLAB	E	20		38 0.00							38 0	38 0	4,465
44	8 S10	SLAB	E	20		42 0.00							42 0	42 0	4,935
44	8 S11	SLAB	E	20		38 6.00							38 6	38 6	4,523
43	5 S12	SLAB	E	20	1	2 3.00							2 3	2 3	660
		INCR = 7.13"				27 2.00							27 2	27 2	
476	5 S13	SLAB	E	20		28 5.00							28 5	28 5	14,108

Bill of Reinforcing Steel

No. Req.	Size/ Mark	Location	Codes C	SH	V	Dimensions B ft in.	C ft in.	D ft in.	E ft in.	F ft in.	H ft in.	K ft in.	Nom. Length ft in.	Actual Length ft in.	Weight lb
		SLAB (CONT.)													
26	5 S14	SLAB	E	20		2 9.00							2 9	2 9	400
		INCR = 11.50"				26 9.00							26 9	26 9	
		INT. DIAPHRAGMS													
8	6 H21	DIAPH. BENT NO. 2	E	20		7 0.00							7 0	7 0	85
4	4 H22	DIAPH. BENT NO. 2	E	20		7 0.00							7 0	7 0	19
3	5 H23	DIAPH. BENT NO. 2	E	21		10.00	5 8.00				5 5.13	19.50	6 6	6 4	20
3	5 H24	DIAPH. BENT NO. 2	E	21			5 8.00	13.00			5 5.13	19.50	6 9	6 7	21
3	5 H25	DIAPH. BENT NO. 2	E	21			5 8.00	15.00			5 5.13	19.50	6 11	6 9	22
3	5 H26	DIAPH. BENT NO. 2	E	21		13.00	5 8.00				5 5.13	19.50	6 9	6 7	21
4	5 H27	DIAPH. BENT NO. 2	E	20		5 8.00							5 8	5 8	24
2	5 H28	DIAPH. BENT NO. 2	E	23		15.00	4 2.00	15.00	5.50	14.00	5.50	14.00	6 8	6 7	14
8	6 H31	DIAPH. BENT NO. 3	E	20		6 8.00							6 8	6 8	81
4	4 H32	DIAPH. BENT NO. 3	E	20		6 8.00							6 8	6 8	18
3	5 H33	DIAPH. BENT NO. 3	E	21		9.00	5 8.00				5 5.13	19.63	6 5	6 3	20
3	5 H34	DIAPH. BENT NO. 3	E	21			5 8.00	12.00			5 5.13	19.63	6 8	6 6	21
3	5 H35	DIAPH. BENT NO. 3	E	21			5 8.00	14.00			5 5.13	19.63	6 10	6 8	21
3	5 H36	DIAPH. BENT NO. 3	E	21		11.00	5 8.00				5 5.13	19.63	6 7	6 5	21
4	5 H37	DIAPH. BENT NO. 3	E	20		5 8.00							5 8	5 8	24
2	5 H38	DIAPH. BENT NO. 3	E	23		15.00	4 2.00	15.00	4.75	14.25	4.75	14.25	6 8	6 7	14
8	6 H41	DIAPH. BENT NO. 4	E	20		6 6.00							6 6	6 6	79
4	4 H42	DIAPH. BENT NO. 4	E	20		6 6.00							6 6	6 6	18
3	5 H43	DIAPH. BENT NO. 4	E	21		9.00	5 6.00				5 4.25	18.75	6 3	6 1	20
3	5 H44	DIAPH. BENT NO. 4	E	21			5 6.00	12.00			5 4.25	18.75	6 6	6 4	20
3	5 H45	DIAPH. BENT NO. 4	E	21			5 6.00	13.00			5 4.25	18.75	6 7	6 5	21
3	5 H46	DIAPH. BENT NO. 4	E	21		10.00	5 6.00				5 4.25	18.75	6 4	6 2	20
4	5 H47	DIAPH. BENT NO. 4	E	20		5 6.00							5 6	5 6	23
2	5 H48	DIAPH. BENT NO. 4	E	23		15.00	4 2.00	15.00	3.88	14.50	3.88	14.50	6 8	6 7	14
24	6 U1	DIAPHRAGM	E	28S			4 2.00	2 7.00	2 2.00				8 11	8 9	316
60	4 U2	DIAPHRAGM	E	28S			3 3.00	2 7.00	18.00				7 4	7 2	288
24	5 V1	DIAPHRAGM	E	20		3 0.00							3 0	3 0	76
		TYPE H BARRIER													
20	5 K1	BARRIER	E	38S		2 3.00	9.25	5.38	21.25	9.50	5.25	1.00	6 0	5 8	119
28	5 K2	BARRIER	E	27S		22.50	9.25	17.25	5.00	12.00	17.00	3.25	5 6	5 2	151
48	5 K4	BARRIER	E	19S		2 5.00	10.00						3 3	3 2	159
20	5 K5	BARRIER	E	38S				19.25	9.50	8.25	18.75	4.25	3 1	3 0	63
28	5 K6	BARRIER	E	21S			2 4.88	10.00			2 4.25	6.00	3 3	3 1	91
56	5 K7	BARRIER	E	20		5 6.00							5 6	5 6	322
504	5 R1	BARRIER	E	14S		2 5.00	6.50	2 5.50			2 5.00	5.50	5 5	5 3	2,760
504	5 R2	BARRIER	E	19S		20.50	9.50						2 6	2 5	1,271
504	5 R3	BARRIER	E	27S			9.50	15.25	5.00	12.00	15.00	3.00	3 6	3 3	1,709
8	5 R4	BARRIER	E	20		47 3.00							47 3	47 3	395
96	5 R5	BARRIER	E	20		11 9.00							11 9	11 9	1,177
16	5 R6	BARRIER	E	20		45 5.00							45 5	45 5	758
8	5 R7	BARRIER	E	20		37 10.00							37 10	37 10	316
8	5 R8	BARRIER	E	20		49 1.00							49 1	49 1	410
16	5 R9	BARRIER	E	20		45 11.00							45 11	45 11	767
8	5 R10	BARRIER	E	20		37 5.00							37 5	37 5	313
		SLIP FORM													
56	5 C1	SLIP FORM	E	20		12 0.00							12 0	12 0	701

Nominal lengths are based on out to out dimensions shown in bending diagrams and are listed to the nearest inch for fabricator's use. Actual lengths are measured along centerline bar to the nearest inch. Weights are based on actual lengths.

For bending diagrams and steel reinforcing totals, see Sheet No. 31.

Detailed Sep. 2024
Checked Sep. 2024

All bars shall be Grade 60.

BILL OF REINFORCING STEEL

Note: This drawing is not to scale. Follow dimensions.

Codes: C = Required coatings, where E = Epoxy Coated and G = Galvanized.

SH = Required shape, see bending diagrams.

V = Sets of varied bars and number of bars of each length. Bar dimensions vary in equal increments between dimensions shown on this line and the following line and the actual length dimension shown on this line and the following line vary by the specified increment.

STATE OF MISSOURI
DEREK S. BUTLER
NUMBER PE-2016009828
PROFESSIONAL ENGINEER

THIS SHEET HAS BEEN SIGNED, SEALED AND DATED ELECTRONICALLY

DATE PREPARED 12/19/2024
ROUTE K
STATE MO
DISTRICT BR
SHEET NO. 33
COUNTY MONTGOMERY
JOB NO. JNE0053
CONTRACT ID.
PROJECT NO.
BRIDGE NO. A9536

DESCRIPTION
DATE

MISSOURI HIGHWAYS AND TRANSPORTATION COMMISSION
105 WEST CAPITOL
JEFFERSON CITY, MO 65102
1-888-ASK-MODOT (1-888-275-6636)

GARVER, LLC.
7509 NW TIFFANY SPRINGS PARKWAY, SUITE 200
KANSAS CITY, MO 64153
PHONE: (816) 298-6465
CERTIFICATE OF AUTHORITY NO. 2008013090

IF A SEAL IS PRESENT ON THIS SHEET IT HAS BEEN ELECTRONICALLY SEALED AND DATED.

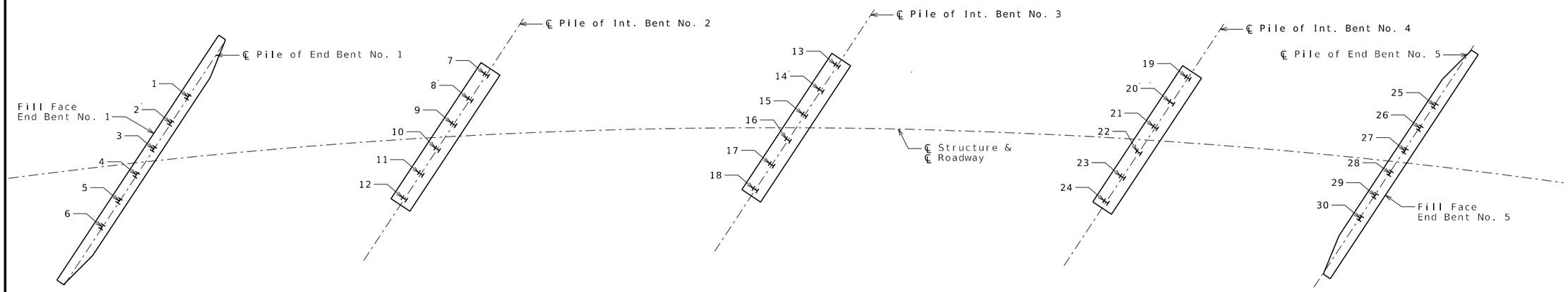

PART PLAN SHOWING PILE NUMBERING FOR RECORDING AS-BUILT PILE DATA

As-Built Pile Data			
Pile No.	Length in Place (ft)	Computed Nominal Axial Compressive Resistance (kips)	Remarks
			End Bent No. 1
1			
2			
3			
4			
5			
6			
			Intermediate Bent No. 2
7			
8			
9			
10			
11			
12			
			Intermediate Bent No. 3
13			
14			
15			
16			
17			
18			

As-Built Pile Data			
Pile No.	Length in Place (ft)	Computed Nominal Axial Compressive Resistance (kips)	Remarks
			Intermediate Bent No. 4
19			
20			
21			
22			
23			
24			
			End Bent No. 5
25			
26			
27			
28			
29			
30			

Note:
Indicate in remarks column:
A. Pile type and grade
B. Batter
C. Driven to practical refusal

This sheet to be completed by MoDOT construction personnel.

Detailed Sept. 2024
Checked Sept. 2024

Note: This drawing is not to scale. Follow dimensions.

STATE OF MISSOURI
DEREK S. BUTLER
NUMBER PE-2016009626
PROFESSIONAL ENGINEER

THIS SHEET HAS BEEN SIGNED, SEALED AND DATED ELECTRONICALLY

DATE PREPARED	12/19/2024
ROUTE	K
STATE	MO
DISTRICT	BR
SHEET NO.	34
COUNTY	MONTGOMERY
JOB NO.	JNE0053
CONTRACT ID.	
PROJECT NO.	
BRIDGE NO.	A9536

DESCRIPTION	DATE

MISSOURI HIGHWAYS AND TRANSPORTATION COMMISSION
105 WEST CAPITOL
JEFFERSON CITY, MO 65102
1-888-ASK-MODOT (1-888-275-6636)

GARVER, LLC.
7509 NW TIFFANY SPRINGS
PARKWAY, SUITE 200
KANSAS CITY, MO 64153
PHONE: (816) 298-6465
CERTIFICATE OF AUTHORITY
NO. 2008013090

IF A SEAL IS PRESENT ON THIS SHEET IT HAS BEEN ELECTRONICALLY SEALED AND DATED.

Missouri Department of Transportation
Construction and Materials

BORING NO. 101
Page 1 of 2

Job No.: NE0053 **County:** Montgomery **Route:** K
Design: A9536 **Skew:** 33.25 LA **Location:** Over Dry Fork Creek
Bent: 1 **Logged By:** Matthew Kistler **Operator:**
Station: **Northing:** 1084438.3 **Date of Work:** 04/24/24-04/24/24
Offset: **Easting:** 532429.6 **Depth to Water:** 15.1
Elevation: 532.5 **Requested Northing:** **Depth Hole Open:**
Requested Station: **Requested Easting:** **Time Change:** 0 hours
Requested Offset: **Equipment:** UES_CME550 ,Grab Sample, Split-Spoon Sampler, NQ
Requested Elevation: **Location Note:** Offset due to slope
Drill No.: Rig #357883 **Hammer Efficiency:** 82% **Drilling Method:** Hollow Stem Auger

Depth (ft)	Description	Elevation (ft)	Sample Type	REC % (RQD %)	Blow Counts (N_{60})	Shear Data	Field Tests	Index Tests
0	0.0-9.1' Dark brown, LEAN CLAY, soft to medium stiff, moist	530						
5				7	2-1-1 (3)			
		525		100				MC = 24.4% γ_{sat} = 126 pcf(1)
10	9.1-13.5' Dark gray, LEAN CLAY, stiff, dry to moist	520		73	3-5-3 (11)		PP = 3.00 tsf	MC = 19.6% γ_{sat} = 131 pcf(1) LL = 27 PL = 18
	13.5-15.3' Dark gray, LEAN CLAY, soft, moist to wet							
15	15.3-29.5' Dark gray, SAND with lean clay, with fine gravel, loose to medium dense, wet, Fine to medium grained	515		67	2-1-4 (7)		PP = 0.50 tsf	MC = 30.7% γ_{sat} = 120 pcf(1)
20		510		13	7-4-2 (8)			
25		505		33	0-4-4 (11)			Sieve Analysis Sieve # % Passing 1" 100.0 3/4" 89.1 3/8" 78.0 #4 64.3 #10 50.6 #16 44.1 #40 24.3 #50 16.6 #100 10.2 #200 8.9
30	29.5-40.5' Dark gray, LEAN CLAY, very soft to soft, wet	500		40	2-1-0 (1)		PP = 0.00 tsf	LL = 46 PL = 24
35					1-2-1			

N_{60} = (Em/60)Nm N_{60} - Corrected N value for standard 60% SPT efficiency; Em - Measured hammer efficiency in percent; Nm - Observed N-value; (1) = Assumed, (2) = Actual

Coordinate System: Modified U.S. State Plane 1983 **Coordinate Zone:** Missouri East **Coordinate Proj. Factor:** 0.99999287
Coordinate Datum: NAD 83 (CONUS) **Coordinate Units:** U.S. Survey Feet

* Persons using this information are cautioned that the materials shown are determined by the equipment noted and accuracy of the "log of materials" is limited thereby and by judgement of the operator. THIS INFORMATION IS FOR DESIGN PURPOSES ONLY.

(Continued Next Page)

Missouri Department of Transportation
Construction and Materials

BORING NO. 101
Page 2 of 2

Job No.: NE0053 **County:** Montgomery **Route:** K
Design: A9536 **Skew:** 33.25 LA **Location:** Over Dry Fork Creek
Bent: 1 **Logged By:** Matthew Kistler **Operator:**
Station: **Northing:** 1084438.3 **Date of Work:** 04/24/24-04/24/24
Offset: **Easting:** 532429.6 **Depth to Water:** 15.1
Elevation: 532.5 **Requested Northing:** **Depth Hole Open:**
Requested Station: **Requested Easting:** **Time Change:** 0 hours
Requested Offset: **Equipment:** UES_CME550 ,Grab Sample, Split-Spoon Sampler, NQ
Requested Elevation: **Location Note:** Offset due to slope
Drill No.: Rig #357883 **Hammer Efficiency:** 82% **Drilling Method:** Hollow Stem Auger

Depth (ft)	Description	Elevation (ft)	Sample Type	REC % (RQD %)	Blow Counts (N_{60})	Shear Data	Field Tests	Index Tests
35	29.5-40.5' Dark gray, LEAN CLAY, very soft to soft, wet *(continued)*	495		67	(4)		PP = 0.25 tsf	
40	40.5-44.3' Dark gray, LEAN CLAY, medium stiff to stiff, wet	490		100	3-3-3 (8)		PP = 0.75 tsf	LL = 45 PL = 22
45	44.3-49.3' Light tan, SAND with fine gravel, medium dense, wet	485		33	5-8-9 (23)			Sieve Analysis Sieve # % Passing 3/4" 100.0 3/8" 82.4 #4 68.7 #10 59.1 #16 56.8 #40 33.6 #50 15.7 #100 5.8 #200 4.6
50	49.3-54.3' Dolomite, tan and gray, very weak rock, highly weathered	480		50	37/0.4'			
55	54.3-56.0' Dolomite, light gray, thin bedded, moderately weathered to slightly weathered 54.3' Auger Refusal			76 (24)				
60	56.0-59.0' Dolomite, light gray and dark tan, thin bedded, very strong rock, slightly weathered 59.0-66.0' Dolomite, light gray, thin bedded, strong rock, slightly weathered, With shale partings	475		100 (72)		Qu Test Results UCS = 1250 ksf MC = 0% γ_{moist} = 155.2 pcf		
65	62.3-63.6' pitted 63.0' lost water while coring	470		94 (52)		Qu Test Results UCS = 641 ksf MC = 0% γ_{moist} = 134.8 pcf		
	Bottom of borehole at 66.0 feet.							

N_{60} = (Em/60)Nm N_{60} - Corrected N value for standard 60% SPT efficiency; Em - Measured hammer efficiency in percent; Nm - Observed N-value; (1) = Assumed, (2) = Actual

Coordinate System: Modified U.S. State Plane 1983 **Coordinate Zone:** Missouri East **Coordinate Proj. Factor:** 0.99999287
Coordinate Datum: NAD 83 (CONUS) **Coordinate Units:** U.S. Survey Feet

* Persons using this information are cautioned that the materials shown are determined by the equipment noted and accuracy of the "log of materials" is limited thereby and by judgement of the operator. THIS INFORMATION IS FOR DESIGN PURPOSES ONLY.

LETTER BOREHOLE - MODOT_20151118.GDT - 6/18/24 14:40 - Z:\SG\GINT\PROJECT FILES\NE0053_A9536_MONTGOMERY RTK_DRYFORKCREEK.GPJ

THIS SHEET HAS BEEN SIGNED, SEALED AND DATED ELECTRONICALLY

DATE PREPARED 12/19/2024
ROUTE K STATE MO
DISTRICT BR SHEET NO. 35
COUNTY MONTGOMERY
JOB NO. JNE0053
CONTRACT ID.
PROJECT NO.
BRIDGE NO. A9536

DESCRIPTION
DATE

MISSOURI HIGHWAYS AND TRANSPORTATION COMMISSION
105 WEST CAPITOL
JEFFERSON CITY, MO 65102
1-888-ASK-MODOT (1-888-275-6636)

GARVER, LLC.
7509 NW TIFFANY SPRINGS PARKWAY, SUITE 200
KANSAS CITY, MO 64153
PHONE: (816) 298-6465
CERTIFICATE OF AUTHORITY NO. 2008013090

BORING DATA

Note: For locations of borings, see Sheet No. 1.
Note: This drawing is not to scale. Follow dimensions.

Detailed Sep. 2024
Checked Sep. 2024

Missouri Department of Transportation
Construction and Materials

BORING NO. 201
Page 1 of 3

Job No.: NE0053 **County:** Montgomery **Route:** K
Design: A9536 **Skew:** 33.25 LA **Location:** Over Dry Fork Creek
Bent: 2 **Logged By:** Matthew Kistler **Operator:**
Station: **Northing:** 1084372.5 **Date of Work:** 04/23/24-04/24/24
Offset: **Easting:** 532444.4 **Depth to Water:** 4.8
Elevation: 520.7 **Requested Northing:** **Depth Hole Open:**
Requested Station: **Requested Easting:** **Time Change:** At Time of Drilling
Requested Offset: **Equipment:** UES_CME550 ,Split-Spoon Sampler, NQ
Requested Elevation: **Location Note:** On stake
Drill No.: Rig #357883 **Hammer Efficiency:** 82% **Drilling Method:** Hollow Stem Auger

Depth (ft)	Graphic	Description	Elevation (ft)	Sample Type	REC % (RQD %)	Blow Counts (N_{60})	Shear Data	Field Tests	Index Tests
0		0.0-4.0' Light brown, LEAN CLAY with fine sand, medium stiff, moist	520						
5		4.0-19.3' Dark gray and brown, SAND with fine gravel, loose, moist to wet, fine grained	515		27	5-3-2 (7)			
10			510		7	2-3-1 (5)			
15			505		33	2-4-3 (10)			
20		19.3-24.3' Dark gray, SAND with lean clay, with fine gravel, dense, wet	500		60	11-18-17 (45)			Sieve Analysis Sieve # % Passing 1" 100.0 3/4" 94.3 3/8" 73.1 #4 55.6 #10 35.3 #16 29.9 #40 17.8 #50 12.9 #100 7.9 #200 6.3 MC = 30.3% γ_{sat} = 120 pcf(1) LL = 35 PL = 21
25		24.3-34.6' Dark gray, LEAN CLAY, stiff to medium stiff, wet	495		87	5-3-4 (10)		PP = 2.25 tsf	
30			490		100	3-2-3 (7)		PP = 1.00 tsf	MC = 43.2% γ_{sat} = 111 pcf(1)
35						5-7-11			

N_{60} = (Em/60)Nm N_{60} - Corrected N value for standard 60% SPT efficiency; Em - Measured hammer efficiency in percent; Nm - Observed N-value; (1) = Assumed, (2) = Actual

Coordinate System: Modified U.S. State Plane 1983 **Coordinate Zone:** Missouri East **Coordinate Proj. Factor:** 0.99999287
Coordinate Datum: NAD 83 (CONUS) **Coordinate Units:** U.S. Survey Feet

* Persons using this information are cautioned that the materials shown are determined by the equipment noted and accuracy of the "log of materials" is limited thereby and by judgement of the operator. THIS INFORMATION IS FOR DESIGN PURPOSES ONLY.

(Continued Next Page)

Missouri Department of Transportation
Construction and Materials

BORING NO. 201
Page 2 of 3

Job No.: NE0053 **County:** Montgomery **Route:** K
Design: A9536 **Skew:** 33.25 LA **Location:** Over Dry Fork Creek
Bent: 2 **Logged By:** Matthew Kistler **Operator:**
Station: **Northing:** 1084372.5 **Date of Work:** 04/23/24-04/24/24
Offset: **Easting:** 532444.4 **Depth to Water:** 4.8
Elevation: 520.7 **Requested Northing:** **Depth Hole Open:**
Requested Station: **Requested Easting:** **Time Change:** At Time of Drilling
Requested Offset: **Equipment:** UES_CME550 ,Split-Spoon Sampler, NQ
Requested Elevation: **Location Note:** On stake
Drill No.: Rig #357883 **Hammer Efficiency:** 82% **Drilling Method:** Hollow Stem Auger

Depth (ft)	Graphic	Description	Elevation (ft)	Sample Type	REC % (RQD %)	Blow Counts (N_{60})	Shear Data	Field Tests	Index Tests
35		34.6-39.2' Tan, GRAVEL with lean clay, medium dense, wet, medium to coarse grained *(continued)*	485		27	(25)			
40		39.2-44.7' Dolomite, tan and gray, very weak rock, highly weathered	480		100	37/0.1'			
45		44.7-47.9' Dolomite, light gray, thin bedded, extremely strong rock to strong rock, slightly weathered	475		100	(47)	Qu Test Results UCS = 2620 ksf MC = 0% γ_{moist} = 159.4 pcf		
50		47.9-48.7' Dolomite, gray, highly weathered 48.7-51.2' Dolomite, light gray and grayish tan, thin bedded, moderately weathered, With thin shale partings	470		78	(32)	Qu Test Results UCS = 980 ksf MC = 0% γ_{moist} = 151.6 pcf		
55		51.2-52.6' Dolomite, dark gray, very thin bedded, moderately weathered, Pitted 52.6-71.2' Dolomite, light gray, thin bedded to medium bedded, strong rock to very strong rock, slightly weathered, With shale partings	465		100	(92)	Qu Test Results UCS = 751 ksf MC = 0% γ_{moist} = 144.4 pcf		
60			460		100	(56)	Qu Test Results UCS = 1030 ksf MC = 0% γ_{moist} = 150.2 pcf		
65			455		100	(76)	Qu Test Results UCS = 788 ksf MC = 0% γ_{moist} = 152 pcf		
70					100	(82)			

N_{60} = (Em/60)Nm N_{60} - Corrected N value for standard 60% SPT efficiency; Em - Measured hammer efficiency in percent; Nm - Observed N-value; (1) = Assumed, (2) = Actual

Coordinate System: Modified U.S. State Plane 1983 **Coordinate Zone:** Missouri East **Coordinate Proj. Factor:** 0.99999287
Coordinate Datum: NAD 83 (CONUS) **Coordinate Units:** U.S. Survey Feet

* Persons using this information are cautioned that the materials shown are determined by the equipment noted and accuracy of the "log of materials" is limited thereby and by judgement of the operator. THIS INFORMATION IS FOR DESIGN PURPOSES ONLY.

(Continued Next Page)

STATE OF MISSOURI
DEREK S. BUTLER
NUMBER PE-2016009626
PROFESSIONAL ENGINEER
THIS SHEET HAS BEEN SIGNED, SEALED AND DATED ELECTRONICALLY

IF A SEAL IS PRESENT ON THIS SHEET IT HAS BEEN ELECTRONICALLY SEALED AND DATED.

DATE PREPARED: 12/19/2024
ROUTE: K STATE: MO
DISTRICT: BR SHEET NO.: 36
COUNTY: MONTGOMERY
JOB NO.: JNE0053
CONTRACT ID.
PROJECT NO.
BRIDGE NO.: A9536

DESCRIPTION | DATE

MISSOURI HIGHWAYS AND TRANSPORTATION COMMISSION
105 WEST CAPITOL
JEFFERSON CITY, MO 65102
1-888-ASK-MODOT (1-888-275-6636)

GARVER, LLC.
7509 NW TIFFANY SPRINGS PARKWAY, SUITE 200
KANSAS CITY, MO 64153
PHONE: (816) 298-6465
CERTIFICATE OF AUTHORITY NO. 2008013090

BORING DATA

Note: For locations of borings, see Sheet No. 1.
Note: This drawing is not to scale. Follow dimensions.

Detailed Sep. 2024
Checked Sep. 2024

Missouri Department of Transportation
Construction and Materials

BORING NO. 201
Page 3 of 3

Job No.: NE0053 **County:** Montgomery **Route:** K
Design: A9536 **Skew:** 33.25 LA **Location:** Over Dry Fork Creek
Bent: 2 **Logged By:** Matthew Kistler **Operator:**
Station: **Northing:** 1084372.5 **Date of Work:** 04/23/24-04/24/24
Offset: **Easting:** 532444.4 **Depth to Water:** 4.8
Elevation: 520.7 **Requested Northing:** **Depth Hole Open:**
Requested Station: **Requested Easting:** **Time Change:** At Time of Drilling
Requested Offset: **Equipment:** UES_CME550 ,Split-Spoon Sampler, NQ
Requested Elevation: **Location Note:** On stake
Drill No.: Rig #357883 **Hammer Efficiency:** 82% **Drilling Method:** Hollow Stem Auger

Depth (ft)	Graphic	Description	Elevation (ft)	Sample Type	REC % (RQD %)	Blow Counts (N_{60})	Shear Data	Field Tests	Index Tests
70			450						
		Bottom of borehole at 71.2 feet.							

N_{60} = (Em/60)Nm N_{60} - Corrected N value for standard 60% SPT efficiency; Em - Measured hammer efficiency in percent; Nm - Observed N-value; (1) = Assumed, (2) = Actual

Coordinate System: Modified U.S. State Plane 1983 **Coordinate Zone:** Missouri East **Coordinate Proj. Factor:** 0.99999287
Coordinate Datum: NAD 83 (CONUS) **Coordinate Units:** U.S. Survey Feet

* Persons using this information are cautioned that the materials shown are determined by the equipment noted and accuracy of the "log of materials" is limited thereby and by judgement of the operator. THIS INFORMATION IS FOR DESIGN PURPOSES ONLY.

LETTER BOREHOLE - MODOT_20151118.GDT - 6/18/24 14:40 - Z:\SGIGINT\PROJECT FILES\NE0053_A9536_MONTGOMERY_RTK_DRYFORKCREEK.GPJ

Missouri Department of Transportation
Construction and Materials

BORING NO. 301
Page 1 of 3

Job No.: NE0053 **County:** Montgomery **Route:** K
Design: A9536 **Skew:** 33.25 LA **Location:** Over Dry Fork Creek
Bent: 3 **Logged By:** Matthew Kistler **Operator:**
Station: **Northing:** 1084342 **Date of Work:** 04/22/24-04/22/24
Offset: **Easting:** 532519.1 **Depth to Water:** 9.8
Elevation: 522.9 **Requested Northing:** **Depth Hole Open:**
Requested Station: **Requested Easting:** **Time Change:** 0 hours
Requested Offset: **Equipment:** UES_CME550 ,Split-Spoon Sampler, NQ
Requested Elevation: **Location Note:** On Stake
Drill No.: Rig #357883 **Hammer Efficiency:** 82% **Drilling Method:** Hollow Stem Auger

Depth (ft)	Graphic	Description	Elevation (ft)	Sample Type	REC % (RQD %)	Blow Counts (N_{60})	Shear Data	Field Tests	Index Tests
0		0.0-4.7' Light brown, LEAN CLAY with fine sand, scattered fine gravel, medium stiff, moist	520						
5		4.7-9.8' Dark gray, LEAN CLAY with fine sand, medium stiff, moist	515		40	4-3-2 (7)		PP = 2.50 tsf	MC = 24.5% γ_{sat} = 125 pcf(1)
10		9.8-14.1' Grayish brown, SAND, loose, wet	510		7	2-1-1 (3)			
15		14.1-17.3' Grayish brown, SAND scattered gravel, loose, wet	505		13	7-5-2 (10)			
20		17.3-29.3' Tan, GRAVEL with fine sand, dense to medium dense, wet	500		47	8-16-19 (49)			
25			495		40	3-8-5 (18)			
30		29.3-34.3' Dark gray, FAT CLAY, stiff, wet	490		93	3-3-5 (11)		PP = 1.50 tsf	MC = 35.8% γ_{sat} = 116 pcf(1) LL = 56 PL = 26
35						6-12-11			

N_{60} = (Em/60)Nm N_{60} - Corrected N value for standard 60% SPT efficiency; Em - Measured hammer efficiency in percent; Nm - Observed N-value; (1) = Assumed, (2) = Actual

Coordinate System: Modified U.S. State Plane 1983 **Coordinate Zone:** Missouri East **Coordinate Proj. Factor:** 0.99999287
Coordinate Datum: NAD 83 (CONUS) **Coordinate Units:** U.S. Survey Feet

* Persons using this information are cautioned that the materials shown are determined by the equipment noted and accuracy of the "log of materials" is limited thereby and by judgement of the operator. THIS INFORMATION IS FOR DESIGN PURPOSES ONLY.

LETTER BOREHOLE - MODOT_20151118.GDT - 6/18/24 14:40 - Z:\SGIGINT\PROJECT FILES\NE0053_A9536_MONTGOMERY_RTK_DRYFORKCREEK.GPJ

(Continued Next Page)

STATE OF MISSOURI
DEREK S. BUTLER
NUMBER PE-2016009626
PROFESSIONAL ENGINEER
THIS SHEET HAS BEEN SIGNED, SEALED AND DATED ELECTRONICALLY

DATE PREPARED 12/19/2024
ROUTE K STATE MO
DISTRICT BR SHEET NO. 37
COUNTY MONTGOMERY
JOB NO. JNE0053
CONTRACT ID.
PROJECT NO.
BRIDGE NO. A9536

DESCRIPTION | DATE

MISSOURI HIGHWAYS AND TRANSPORTATION COMMISSION
105 WEST CAPITOL
JEFFERSON CITY, MO 65102
1-888-ASK-MODOT (1-888-275-6636)

GARVER, LLC.
7509 NW TIFFANY SPRINGS PARKWAY, SUITE 200
KANSAS CITY, MO 64153
PHONE: (816) 298-6465
CERTIFICATE OF AUTHORITY NO. 2008013090

IF A SEAL IS PRESENT ON THIS SHEET IT HAS BEEN ELECTRONICALLY SEALED AND DATED.

BORING DATA

Note: For locations of borings, see Sheet No. 1.
Note: This drawing is not to scale. Follow dimensions.

Detailed Sep. 2024
Checked Sep. 2024

Missouri Department of Transportation
Construction and Materials

BORING NO. 301
Page 2 of 3

Job No.: NE0053 **County:** Montgomery **Route:** K
Design: A9536 **Skew:** 33.25 LA **Location:** Over Dry Fork Creek
Bent: 3 **Logged By:** Matthew Kistler **Operator:**
Station: **Northing:** 1084342 **Date of Work:** 04/22/24-04/22/24
Offset: **Easting:** 532519.1 **Depth to Water:** 9.8
Elevation: 522.9 **Requested Northing:** **Depth Hole Open:**
Requested Station: **Requested Easting:** **Time Change:** 0 hours
Requested Offset: **Equipment:** UES_CME550 ,Split-Spoon Sampler, NQ
Requested Elevation: **Location Note:** On Stake
Drill No.: Rig #357883 **Hammer Efficiency:** 82% **Drilling Method:** Hollow Stem Auger

Depth (ft)	Graphic	Description	Elevation (ft)	Sample Type	REC % (RQD %)	Blow Counts (N_{60})	Shear Data	Field Tests	Index Tests
35		34.3-39.5' Tan, SAND with fine gravel, dense to very dense, wet *(continued)*			40	(31)			
			485						
40		39.5-43.0' Dolomite, very weak rock, highly weathered			33	50/0.3'			
			480						
45		43.0-52.3' Dolomite, light gray, very thin bedded, extremely strong rock, slightly weathered			81 (71)				
			475		100 (56)		Qu Test Results UCS = 2860 ksf MC = 0% γ_{moist} = 156.2 pcf		
50		52.3-54.6' Dolomite, dark gray, very thin bedded, moderately weathered, Oolitic, pitted	470		90 (64)		Qu Test Results UCS = 535 ksf MC = 0% γ_{moist} = 148.7 pcf		
55		54.3-70.8' scattered thin shale partings throughout 54.6-70.8' Dolomite, light gray, thin bedded to medium bedded, strong rock to very strong rock, slightly weathered 55.1-55.2' hard shale	465		100 (94)		Qu Test Results UCS = 809 ksf MC = 0% γ_{moist} = 148 pcf		
60			460		100 (100)		Qu Test Results UCS = 1130 ksf MC = 0% γ_{moist} = 150.7 pcf		
65			455		100 (100)		Qu Test Results UCS = 1710 ksf MC = 0% γ_{moist} = 157.4 pcf		
70									

N_{60} = (Em/60)Nm N_{60} - Corrected N value for standard 60% SPT efficiency; Em - Measured hammer efficiency in percent; Nm - Observed N-value; (1) = Assumed, (2) = Actual

Coordinate System: Modified U.S. State Plane 1983 **Coordinate Zone:** Missouri East **Coordinate Proj. Factor:** 0.99999287
Coordinate Datum: NAD 83 (CONUS) **Coordinate Units:** U.S. Survey Feet

* Persons using this information are cautioned that the materials shown are determined by the equipment noted and accuracy of the "log of materials" is limited thereby and by judgement of the operator. THIS INFORMATION IS FOR DESIGN PURPOSES ONLY.

(Continued Next Page)

Missouri Department of Transportation
Construction and Materials

BORING NO. 301
Page 3 of 3

Job No.: NE0053 **County:** Montgomery **Route:** K
Design: A9536 **Skew:** 33.25 LA **Location:** Over Dry Fork Creek
Bent: 3 **Logged By:** Matthew Kistler **Operator:**
Station: **Northing:** 1084342 **Date of Work:** 04/22/24-04/22/24
Offset: **Easting:** 532519.1 **Depth to Water:** 9.8
Elevation: 522.9 **Requested Northing:** **Depth Hole Open:**
Requested Station: **Requested Easting:** **Time Change:** 0 hours
Requested Offset: **Equipment:** UES_CME550 ,Split-Spoon Sampler, NQ
Requested Elevation: **Location Note:** On Stake
Drill No.: Rig #357883 **Hammer Efficiency:** 82% **Drilling Method:** Hollow Stem Auger

Depth (ft)	Graphic	Description	Elevation (ft)	Sample Type	REC % (RQD %)	Blow Counts (N_{60})	Shear Data	Field Tests	Index Tests
70		Bottom of borehole at 70.8 feet.							

N_{60} = (Em/60)Nm N_{60} - Corrected N value for standard 60% SPT efficiency; Em - Measured hammer efficiency in percent; Nm - Observed N-value; (1) = Assumed, (2) = Actual

Coordinate System: Modified U.S. State Plane 1983 **Coordinate Zone:** Missouri East **Coordinate Proj. Factor:** 0.99999287
Coordinate Datum: NAD 83 (CONUS) **Coordinate Units:** U.S. Survey Feet

* Persons using this information are cautioned that the materials shown are determined by the equipment noted and accuracy of the "log of materials" is limited thereby and by judgement of the operator. THIS INFORMATION IS FOR DESIGN PURPOSES ONLY.

STATE OF MISSOURI
DEREK S. BUTLER
NUMBER PE-2016009626
PROFESSIONAL ENGINEER
THIS SHEET HAS BEEN SIGNED, SEALED AND DATED ELECTRONICALLY

DATE PREPARED	
12/19/2024	
ROUTE: K	STATE: MO
DISTRICT: BR	SHEET NO.: 38
COUNTY: MONTGOMERY	
JOB NO.: JNE0053	
CONTRACT ID.	
PROJECT NO.	
BRIDGE NO.: A9536	

DESCRIPTION	DATE

MISSOURI HIGHWAYS AND TRANSPORTATION COMMISSION
105 WEST CAPITOL
JEFFERSON CITY, MO 65102
1-888-ASK-MODOT (1-888-275-6636)

GARVER, LLC.
7509 NW TIFFANY SPRINGS PARKWAY, SUITE 200
KANSAS CITY, MO 64153
PHONE: (816) 298-6465
CERTIFICATE OF AUTHORITY NO. 2008013090

BORING DATA

Note: For locations of borings, see Sheet No. 1.

Detailed Sep. 2024
Checked Sep. 2024

Note: This drawing is not to scale. Follow dimensions.

Missouri Department of Transportation
Construction and Materials

BORING NO. 401
Page 1 of 3

Job No.: NE0053 **County:** Montgomery **Route:** K
Design: A9536 **Skew:** 33.25 LA **Location:** Over Dry Fork Creek
Bent: 4 **Logged By:** Matthew Kistler **Operator:**
Station: **Northing:** 1084286.7 **Date of Work:** 04/25/24-05/07/24
Offset: **Easting:** 532525.6 **Depth to Water:** 10.5
Elevation: 532.0 **Requested Northing:** **Depth Hole Open:**
Requested Station: **Requested Easting:** **Time Change:** End of Drilling
Requested Offset: **Equipment:** UES_CME550 ,Split-Spoon Sampler, NQ
Requested Elevation: **Location Note:** Offset due to rirap
Drill No.: Rig #357883 **Hammer Efficiency:** 82% **Drilling Method:** Casing Advancer

Depth (ft)	Graphic	Description	Elevation (ft)	Sample Type	REC % (RQD %)	Blow Counts (N_{60})	Shear Data	Field Tests	Index Tests
0		0.0-0.2' ASPHALT 0.2-1.0' CONCRETE, Existing Bridge Deck (L0564) 1.0-10.5' Air (7 May 2024) 1.0-15.0' WATER (14 May 2024)	530						
5			525						
10		10.5-15.0' WATER, (7 May 2024)	520						
15		15.0-32.5' Grayish white and brown, GRAVEL, medium dense to dense, wet, Fine grained	515						
20					72	21-6-2 (11)			
			510						
25					72	12-8-7 (21)			
			505						
30					72	12-14-12 (36)			
			500						
35		32.5-38.0' Dark gray, LEAN CLAY, soft to medium stiff, wet			93	0-2-2		PP = 0.50 tsf	MC = 35.0%

N_{60} = (Em/60)Nm N_{60} - Corrected N value for standard 60% SPT efficiency; Em - Measured hammer efficiency in percent; Nm - Observed N-value; (1) = Assumed, (2) = Actual

Coordinate System: Modified U.S. State Plane 1983 **Coordinate Zone:** Missouri East **Coordinate Proj. Factor:** 0.99999287
Coordinate Datum: NAD 83 (CONUS) **Coordinate Units:** U.S. Survey Feet

* Persons using this information are cautioned that the materials shown are determined by the equipment noted and accuracy of the "log of materials" is limited thereby and by judgement of the operator. THIS INFORMATION IS FOR DESIGN PURPOSES ONLY.

(Continued Next Page)

Missouri Department of Transportation
Construction and Materials

BORING NO. 401
Page 2 of 3

Job No.: NE0053 **County:** Montgomery **Route:** K
Design: A9536 **Skew:** 33.25 LA **Location:** Over Dry Fork Creek
Bent: 4 **Logged By:** Matthew Kistler **Operator:**
Station: **Northing:** 1084286.7 **Date of Work:** 04/25/24-05/07/24
Offset: **Easting:** 532525.6 **Depth to Water:** 10.5
Elevation: 532.0 **Requested Northing:** **Depth Hole Open:**
Requested Station: **Requested Easting:** **Time Change:** End of Drilling
Requested Offset: **Equipment:** UES_CME550 ,Split-Spoon Sampler, NQ
Requested Elevation: **Location Note:** Offset due to rirap
Drill No.: Rig #357883 **Hammer Efficiency:** 82% **Drilling Method:** Casing Advancer

Depth (ft)	Graphic	Description	Elevation (ft)	Sample Type	REC % (RQD %)	Blow Counts (N_{60})	Shear Data	Field Tests	Index Tests
35		32.5-38.0' Dark gray, LEAN CLAY, soft to medium stiff, wet *(continued)*				(5)			γ_{sat} = 116 pcf(1) LL = 39 PL = 21
			495						
40		38.0-43.0' Dark gray, LEAN CLAY, stiff, wet 40.3-40.5' trace wood fragments			100	3-4-5 (12)		PF = 2.00 tsf	MC = 26.4% γ_{sat} = 124 pcf(1)
			490						
45		43.0-49.6' Gray and brown, SAND with fine gravel, dense, wet, Cherty			40	16-15-10 (34)			Sieve Analysis Sieve # % Passing 1" 100.0 3/4" 94.3 3/8" 78.7 #4 55.8 #10 27.5 #16 21.5 #40 13.5 #50 9.9 #100 6.0 #200 4.6
			485						
50		49.6-52.0' Light grayish white, LEAN CLAY trace cobbles (Completely to highly weathered Dolomite), stiff, moist			47	10-21-16 (51)		PF = 1.00 tsf	MC = 17.3% γ_{sat} = 134 pcf(1)
		52.0-54.7' Dolomite, highly weathered to moderately weathered	480						
55		54.7-58.2' Dolomite, light gray, thin bedded, strong rock, slightly weathered			0 24 (9) 94 (50)	10/0.0', 10/0'	Qu Test Results UCS = 940 ksf MC = 0% γ_{moist} = 149.6 pcf		
			475						
60		58.2-58.5' Void 58.5-80.1' Dolomite, light gray, thin bedded to medium bedded, strong rock to very strong rock, slightly weathered, With shale partings			100 (72)		Qu Test Results UCS = 531 ksf MC = 0% γ_{moist} = 158.7 pcf		
			470						
65					100 (96)		Qu Test Results UCS = 840 ksf MC = 0% γ_{moist} = 157.7 pcf		
			465						
70									

N_{60} = (Em/60)Nm N_{60} - Corrected N value for standard 60% SPT efficiency; Em - Measured hammer efficiency in percent; Nm - Observed N-value; (1) = Assumed, (2) = Actual

Coordinate System: Modified U.S. State Plane 1983 **Coordinate Zone:** Missouri East **Coordinate Proj. Factor:** 0.99999287
Coordinate Datum: NAD 83 (CONUS) **Coordinate Units:** U.S. Survey Feet

* Persons using this information are cautioned that the materials shown are determined by the equipment noted and accuracy of the "log of materials" is limited thereby and by judgement of the operator. THIS INFORMATION IS FOR DESIGN PURPOSES ONLY.

(Continued Next Page)

LETTER BOREHOLE - MODOT: 20151118.GDT - 6/18/24 14:40 - Z:\SG\GINT\PROJECT FILES\NE0053_A9536_MONTGOMERY RTK_DRYFORKCREEK.GPJ

DATE PREPARED 12/19/2024
ROUTE K STATE MO
DISTRICT BR SHEET NO. 39
COUNTY MONTGOMERY
JOB NO. JNE0053
CONTRACT ID.
PROJECT NO.
BRIDGE NO. A9536

DESCRIPTION
DATE

MISSOURI HIGHWAYS AND TRANSPORTATION COMMISSION
105 WEST CAPITOL
JEFFERSON CITY, MO 65102
1-888-ASK-MODOT (1-888-275-6636)

GARVER, LLC.
7509 NW TIFFANY SPRINGS PARKWAY, SUITE 200
KANSAS CITY, MO 64153
PHONE: (816) 298-6465
CERTIFICATE OF AUTHORITY NO. 2008013090

BORING DATA

Detailed Sep. 2024
Checked Sep. 2024

Note: For locations of borings, see Sheet No. 1.
Note: This drawing is not to scale. Follow dimensions.

Missouri Department of Transportation
Construction and Materials

BORING NO. 401
Page 3 of 3

Job No.: NE0053 **County:** Montgomery **Route:** K
Design: A9536 **Skew:** 33.25 LA **Location:** Over Dry Fork Creek
Bent: 4 **Logged By:** Matthew Kistler **Operator:**
Station: **Northing:** 1084286.7 **Date of Work:** 04/25/24-05/07/24
Offset: **Easting:** 532525.6 **Depth to Water:** 10.5
Elevation: 532.0 **Requested Northing:** **Depth Hole Open:**
Requested Station: **Requested Easting:** **Time Change:** End of Drilling
Requested Offset: **Equipment:** UES_CME550 ,Split-Spoon Sampler, NQ
Requested Elevation: **Location Note:** Offset due to rirap
Drill No.: Rig #357883 **Hammer Efficiency:** 82% **Drilling Method:** Casing Advancer

Depth (ft)	Graphic	Description	Elevation (ft)	Sample Type	REC % (RQD %)	Blow Counts (N_{60})	Shear Data	Field Tests	Index Tests
70		58.5-80.1' Dolomite, light gray, thin bedded to medium bedded, strong rock to very strong rock, slightly weathered, With shale partings *(continued)*	460		100 (78)		Qu Test Results UCS = 1180 ksf MC = 0% γ_{moist} = 151.8 pcf		
75			455		100 (86)		Qu Test Results UCS = 768 ksf MC = 0% γ_{moist} = 160.7 pcf		
80		Bottom of borehole at 80.1 feet.							

N_{60} = (Em/60)Nm N_{60} - Corrected N value for standard 60% SPT efficiency; Em - Measured hammer efficiency in percent; Nm - Observed N-value; (1) = Assumed, (2) = Actual

Coordinate System: Modified U.S. State Plane 1983 **Coordinate Zone:** Missouri East **Coordinate Proj. Factor:** 0.99999287
Coordinate Datum: NAD 83 (CONUS) **Coordinate Units:** U.S. Survey Feet

* Persons using this information are cautioned that the materials shown are determined by the equipment noted and accuracy of the "log of materials" is limited thereby and by judgement of the operator. THIS INFORMATION IS FOR DESIGN PURPOSES ONLY.

LETTER BOREHOLE - MODOT_20151118.GDT - 6/18/24 14:40 - Z:\SIGN\TPROJECT FILES\NE0053_A9536_MONTGOMERY_RTK_DRYFORKCREEK.GPJ

Missouri Department of Transportation
Construction and Materials

BORING NO. 501 (O-24-31)
Page 1 of 2

Job No.: NE0053 **County:** Montgomery **Route:** K
Design: A9536 **Skew:** 33.25 LA **Location:** Over Dry Fork Creek
Bent: 5 **Logged By:** Matthew Kistler **Operator:** Bradley Wadlow
Station: **Northing:** 1084245.9 **Date of Work:** 05/13/24-05/14/24
Offset: **Easting:** 532584.5 **Depth to Water:** 1.0
Elevation: 527.7 **Requested Northing:** **Depth Hole Open:**
Requested Station: **Requested Easting:** **Time Change:** 0 hours
Requested Offset: **Equipment:** Acker Soil XLS ,Split-Spoon Sampler, NWD4
Requested Elevation: **Location Note:** Offset due to slope
Drill No.: G-9462 **Hammer Efficiency:** 81% **Drilling Method:** Hollow Stem Auger

Depth (ft)	Graphic	Description	Elevation (ft)	Sample Type	REC % (RQD %)	Blow Counts (N_{60})	Shear Data	Field Tests	Index Tests
0		0.0-9.9' Dark brown, LEAN CLAY scattered fine sand, medium stiff, moist to wet	525						
5					47	0-3-3 (8)		PP = 0.50 tsf	MC = 20.0% γ_{sat} = 130 pcf(1) LL = 29 PL = 20
		7.7-8.0' scattered cobbles	520						
10		9.9-20.5' Tannish brown, SAND with fine to coarse gravel, medium dense, wet, Cherty 10.5-11.5' gravel wedged in SPT shoe inflated count	515		20	4-6-9 (20)			
15		15.0-47.1' drilling fluid utilized	510		87	6-15-9 (32)			Sieve Analysis Sieve # % Passing 1" 100.0 3/4" 97.0 3/8" 85.2 #4 69.9 #10 59.3 #16 56.8 #40 39.7 #50 21.1 #100 3.7 #200 1.9
20		20.5-22.9' Dark gray, LEAN CLAY scattered fine gravel, soft to medium stiff, wet	505		33	3-8-5 (18)		PP = 0.25 tsf	MC = 21.3% γ_{sat} = 129 pcf(1)
25		22.9-30.1' Brownish tan, GRAVEL with lean clay, dense, wet, Cherty	500		53	16-23-19 (57)			
30		30.1-42.8' Dark gray, LEAN CLAY, soft to medium stiff, wet	495		100	1-1-2 (4)		PP = 0.75 tsf	MC = 36.8% γ_{sat} = 115 pcf(1) LL = 36 PL = 19
35									

N_{60} = (Em/60)Nm N_{60} - Corrected N value for standard 60% SPT efficiency; Em - Measured hammer efficiency in percent; Nm - Observed N-value; (1) = Assumed, (2) = Actual

Coordinate System: Modified U.S. State Plane 1983 **Coordinate Zone:** Missouri East **Coordinate Proj. Factor:** 0.99999287
Coordinate Datum: NAD 83 (CONUS) **Coordinate Units:** U.S. Survey Feet

* Persons using this information are cautioned that the materials shown are determined by the equipment noted and accuracy of the "log of materials" is limited thereby and by judgement of the operator. THIS INFORMATION IS FOR DESIGN PURPOSES ONLY.

LETTER BOREHOLE - MODOT_20151118.GDT - 6/18/24 14:40 - Z:\SIGN\TPROJECT FILES\NE0053_A9536_MONTGOMERY_RTK_DRYFORKCREEK.GPJ

(Continued Next Page)

STATE OF MISSOURI
DEREK S. BUTLER
NUMBER PE-2016009626
PROFESSIONAL ENGINEER
THIS SHEET HAS BEEN SIGNED, SEALED AND DATED ELECTRONICALLY

IF A SEAL IS PRESENT ON THIS SHEET IT HAS BEEN ELECTRONICALLY SEALED AND DATED.

DATE PREPARED 12/19/2024
ROUTE K STATE MO
DISTRICT BR SHEET NO. 40
COUNTY MONTGOMERY
JOB NO. JNE0053
CONTRACT ID.
PROJECT NO.
BRIDGE NO. A9536

DESCRIPTION
DATE

MISSOURI HIGHWAYS AND TRANSPORTATION COMMISSION
105 WEST CAPITOL
JEFFERSON CITY, MO 65102
1-888-ASK-MODOT (1-888-275-6636)

GARVER, LLC.
7509 NW TIFFANY SPRINGS PARKWAY, SUITE 200
KANSAS CITY, MO 64153
PHONE: (816) 298-6465
CERTIFICATE OF AUTHORITY NO. 2008013090

BORING DATA

Note: For locations of borings, see Sheet No. 1.

Detailed Sep. 2024
Checked Sep. 2024

Note: This drawing is not to scale. Follow dimensions.

Missouri Department of Transportation
Construction and Materials

BORING NO. 501 (O-24-31)
Page 2 of 2

Job No.:	NE0053	**County:**	Montgomery	**Route:**	K
Design:	A9536	**Skew:**	33.25 LA	**Location:**	Over Dry Fork Creek
Bent:	5	**Logged By:**	Matthew Kistler	**Operator:**	Bradley Wadlow
Station:		**Northing:**	1084245.9	**Date of Work:**	05/13/24-05/14/24
Offset:		**Easting:**	532584.5	**Depth to Water:**	1.0
Elevation:	527.7	**Requested Northing:**		**Depth Hole Open:**	
Requested Station:		**Requested Easting:**		**Time Change:**	0 hours
Requested Offset:		**Equipment:**	Acker Soil XLS ,Split-Spoon Sampler, NWD4		
Requested Elevation:		**Location Note:**	Offset due to slope		
Drill No.:	G-9462	**Hammer Efficiency:**	81%	**Drilling Method:**	Hollow Stem Auger

Depth (ft)	Graphic	Description	Elevation (ft)	Sample Type	REC % (RQD %)	Blow Counts (N_{60})	Shear Data	Field Tests	Index Tests
35		30.1-42.8' Dark gray, LEAN CLAY, soft to medium stiff, wet *(continued)*			100	1-2-4 (8)		PP = 1.25 tsf	MC = 37.9% γ_{soil} = 114 pcf(1)
			490						
40					100	2-4-4 (11)		PP = 1.50 tsf	MC = 20.9% γ_{soil} = 129 pcf(1)
			485						
45		42.8-45.1' GRAVEL with fine sand, dense, wet 44.0-45.0' sand heave							
		45.1-47.1' Dolomite, light gray, completely weathered to highly weathered			67	37/0.3', 10/0'			
		47.1-52.4' Dolomite, light gray, thin bedded, moderately weathered, Scattered shale partings	480		82 (11)				
50									
		52.4-55.9' Dolomite, dark to light gray, thin bedded, strong rock, moderately weathered to slightly weathered	475		90 (30)		Qu Test Results UCS = 654 ksf MC = 0% γ_{moist} = 152.3 pcf		
55		55.9-60.9' Argillaceous Dolomite, light gray, thin bedded, medium strong rock, moderately weathered to slightly weathered	470		94 (32)		Qu Test Results UCS = 356 ksf MC = 0% γ_{moist} = 159 pcf		
60		Bottom of borehole at 60.9 feet.							

N_{60} = (Em/60)Nm N_{60} - Corrected N value for standard 60% SPT efficiency; Em - Measured hammer efficiency in percent; Nm - Observed N-value; (1) = Assumed, (2) = Actual

Coordinate System: Modified U.S. State Plane 1983 **Coordinate Zone:** Missouri East **Coordinate Proj. Factor:** 0.99999287

Coordinate Datum: NAD 83 (CONUS) **Coordinate Units:** U.S. Survey Feet

* Persons using this information are cautioned that the materials shown are determined by the equipment noted and accuracy of the "log of materials" is limited thereby and by judgement of the operator. THIS INFORMATION IS FOR DESIGN PURPOSES ONLY.

LETTER BOREHOLE - MODOT_20151118.GDT - 6/18/24 14:40 - Z:\SG\GINT\PROJECT FILES\NE0053_A9536_MONTGOMERY_RTK_DRYFORKCREEK.GPJ

KEY TO SYMBOLS

MoDOT-Geotechnical Section
1617 Missouri Blvd
Jefferson City, MO 65109

CLIENT _____ **PROJECT NAME** Bridge Replacement-MGK

PROJECT NUMBER NE0053 **PROJECT LOCATION** Over Dry Fork Creek

LITHOLOGIC SYMBOLS (Unified Soil Classification System)

- Asphalt
- USCS High Plasticity Clay
- USCS Low Plasticity Clay
- Concrete
- Dolomite
- USCS Poorly-graded Gravel
- Highly Weathered Dolomite
- No Core
- USCS Poorly-graded Sand
- USCS Poorly-graded Sand with Clay
- USCS Well-graded Sand
- USCS Well-graded Sand with Clay
- Water

SAMPLER SYMBOLS

- Rock Core Barrel
- Grab Sample
- Split-Spoon Sampler

WELL CONSTRUCTION SYMBOLS

ABBREVIATIONS

LL - LIQUID LIMIT (%)
PI - PLASTIC INDEX (%)
W - MOISTURE CONTENT (%)
DD - DRY DENSITY (PCF)
NP - NON PLASTIC
-200 - PERCENT PASSING NO. 200 SIEVE
PP - POCKET PENETROMETER (TSF)
Qu - UNCONFINED COMPRESSIVE STRENGTH (PSF)

TV - TORVANE
PID - PHOTOIONIZATION DETECTOR
UC - UNCONFINED COMPRESSION
ppm - PARTS PER MILLION

Water Level at Time of Drilling
Water Level at End of Drilling
Water Level after Drilling

KEY TO SYMBOLS - MODOT_20150728.GDT - 6/18/24 14:54 - Z:\SG\GINT\PROJECT FILES\NE0053_A9536_MONTGOMERY_RTK_DRYFORKCREEK.GPJ

STATE OF MISSOURI — DEREK S. BUTLER — NUMBER PE-2016009626 — PROFESSIONAL ENGINEER

THIS SHEET HAS BEEN SIGNED, SEALED AND DATED ELECTRONICALLY

DATE PREPARED	12/19/2024
ROUTE	K
STATE	MO
DISTRICT	BR
SHEET NO.	41
COUNTY	MONTGOMERY
JOB NO.	JNE0053
CONTRACT ID.	
PROJECT NO.	
BRIDGE NO.	A9536

DESCRIPTION | DATE

IF A SEAL IS PRESENT ON THIS SHEET IT HAS BEEN ELECTRONICALLY SEALED AND DATED.

MISSOURI HIGHWAYS AND TRANSPORTATION COMMISSION
105 WEST CAPITOL
JEFFERSON CITY, MO 65102
1-888-ASK-MODOT (1-888-275-6636)

GARVER, LLC.
7509 NW TIFFANY SPRINGS PARKWAY, SUITE 200
KANSAS CITY, MO 64153
PHONE: (816) 298-6465
CERTIFICATE OF AUTHORITY NO. 2008013090

BORING DATA

Note: For locations of borings, see Sheet No. 1.

Detailed Sep. 2024
Checked Sep. 2024

Note: This drawing is not to scale. Follow dimensions.

B_A9536_041_NE0053_Boring_7.dgn 1:53:17 PM 12/19/2024

MISSOURI HIGHWAYS AND TRANSPORTATION COMMISSION

PLANS FOR PROPOSED STATE HIGHWAY

MONTGOMERY COUNTY

T47N R5W

DESIGN DESIGNATION

A.A.D.T. - 2025 = 465
A.A.D.T. - 2055 = 540
D.H.V. = 7.21%
T = 8.52%
V = 55 M.P.H.
DIRECTIONAL DISTRIBUTION = 50.0% E / 50.0% W
FUNCTIONAL CLASSIFICATION = MAJOR COLLECTOR

NORMAL R/W

NO NEW R/W

KEY MAP
LOCATION OF MONTGOMERY COUNTY

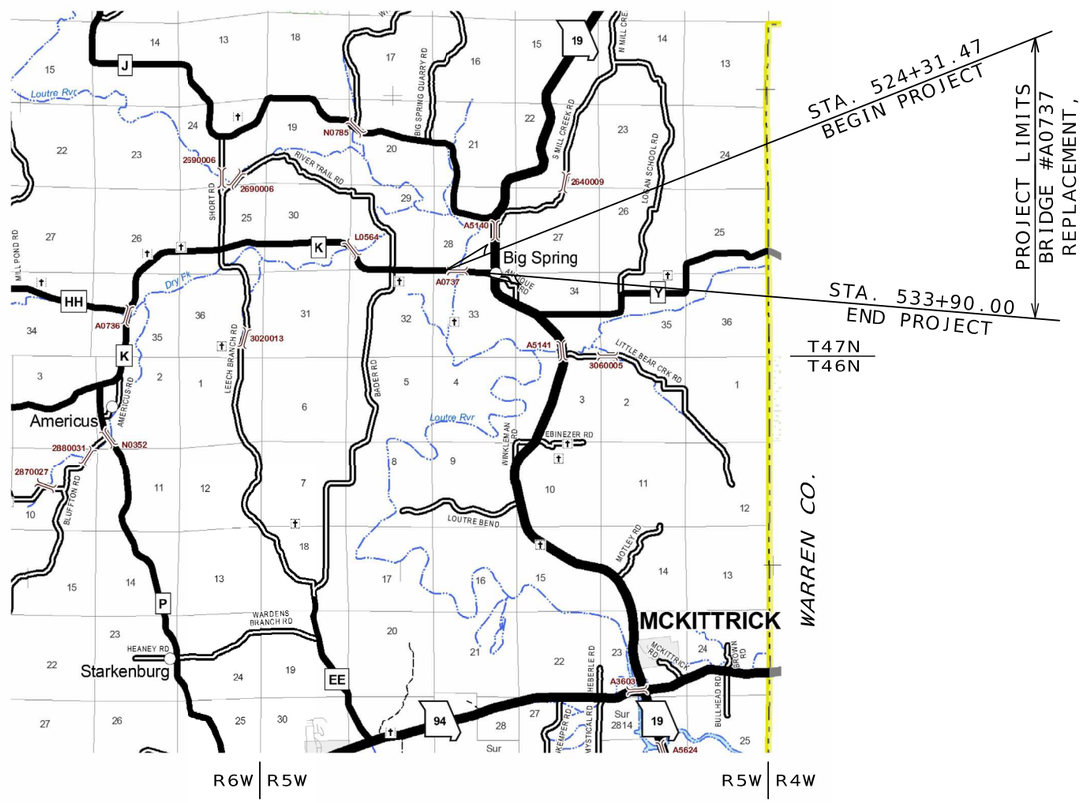

CONVENTIONAL SYMBOLS

(USED IN PLANS)

	EXISTING	NEW
BUILDINGS AND STRUCTURES		
GUARD RAIL		
GUARD CABLE		
CONCRETE RIGHT-OF-WAY MARKER		
STEEL RIGHT-OF-WAY MARKER		
LOCATION SURVEY MARKER		
UTILITIES		
FIBER OPTICS	—FO—	—FO—
OVERHEAD CABLE TV	-OTV-	-OTV-
UNDERGROUND CABLE TV	-UTV-	-UTV-
OVERHEAD TELEPHONE	—OT—	—OT—
UNDERGROUND TELEPHONE	—UT—	—UT—
OVERHEAD POWER	—OE—	—OE—
UNDERGROUND POWER	—UE—	—UE—
SANITARY SEWER	—S—	—S—
STORM SEWER	—SS—	—SS—
GAS	—G—	—G—
WATER	—W—	—W—
MANHOLE	SAN	
FIRE HYDRANT	HYD	
WATER VALVE	WV	
WATER METER	WM	
DROP INLET	D	
DITCH BLOCK		
GROUND MOUNTED SIGN	SIGN	
LIGHT POLE		
H-FRAME POWER POLE		
TELEPHONE PEDESTAL	PED	
FENCE		
CHAIN LINK	—V—	
WOVEN WIRE	—X—	
GATE POST		
BENCHMARK	BM	

NOTE: DASHED OR OPEN SYMBOLS INDICATE EXISTING FEATURES

THE EXISTENCE AND APPROXIMATE LOCATION OF UTILITY FACILITIES KNOWN TO EXIST, AS SHOWN ON THE PLANS, ARE BASED ON THE BEST INFORMATION AVAILABLE TO THE COMMISSION AT THIS TIME. THIS INFORMATION IS PROVIDED BY THE COMMISSION "AS-IS" AND THE COMMISSION EXPRESSLY DISCLAIMS ANY REPRESENTATION OR WARRANTY AS TO THE COMPLETENESS, ACCURACY, OR SUITABILITY OF THE INFORMATION FOR ANY USE. RELIANCE UPON THIS INFORMATION IS DONE AT THE RISK AND PERIL OF THE USER, AND THE COMMISSION SHALL NOT BE LIABLE FOR ANY DAMAGES THAT MAY ARISE FROM ANY ERROR IN THE INFORMATION. IT IS, THEREFORE, THE RESPONSIBILITY OF THE CONTRACTOR TO VERIFY THE EXISTENCE, LOCATION AND STATUS OF ANY FACILITY. SUCH VERIFICATION INCLUDES DIRECT CONTACT WITH THE LISTED UTILITIES.

INDEX OF SHEETS

LENGTH OF PROJECT

BEGINNING OF PROJECT	STA. 524+31.47
END OF PROJECT	STA. 533+90.00
APPARENT LENGTH	958.530 FEET
EQUATIONS AND EXCEPTIONS:	
NONE	-0.000 MILES
TOTAL CORRECTIONS	-0.000 FEET
NET LENGTH OF PROJECT	958.530 FEET
STATE LENGTH	0.182 MILES
FOR INFORMATION ONLY ESTIMATED DISTURBED ACRES	0.68 ACRES

STATE OF MISSOURI
ZACHARY S. WALKER
NUMBER PE-2010000877
PROFESSIONAL ENGINEER
ZACHARY S. WALKER - CIVIL
MO-PE-2010000877

DATE PREPARED	12/2/2024
ROUTE	K
STATE	MO
DISTRICT	NE
SHEET NO.	1
COUNTY	MONTGOMERY
JOB NO.	JNE0154
CONTRACT ID.	
PROJECT NO.	
BRIDGE NO.	

DESCRIPTION	DATE

MISSOURI HIGHWAYS AND TRANSPORTATION COMMISSION
105 WEST CAPITOL
JEFFERSON CITY, MO 65102
1-888-ASK-MODOT (1-888-275-6636)

TITLE SHEET

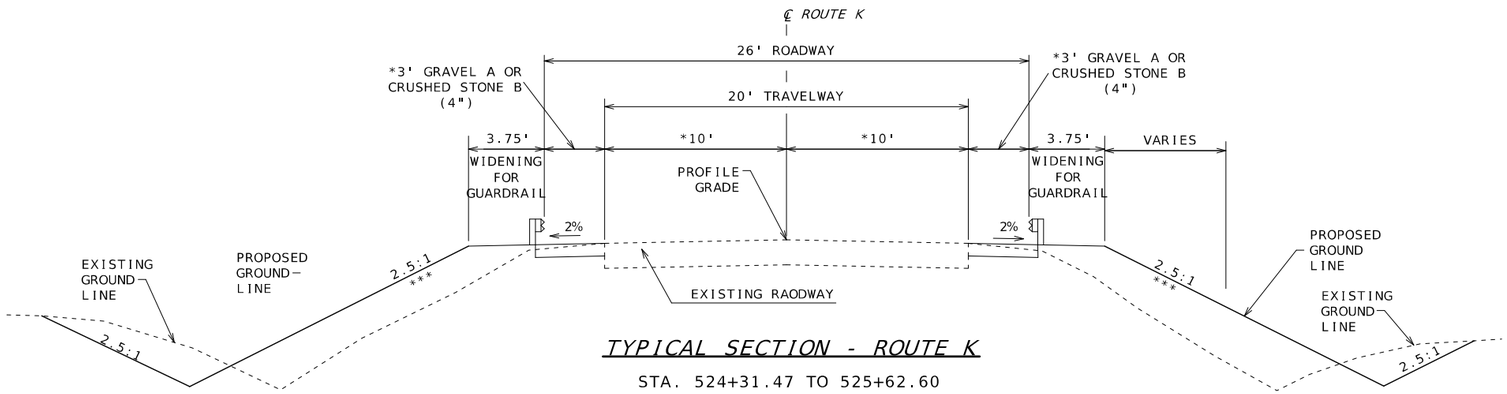

TYPICAL SECTION - ROUTE K

STA. 524+31.47 TO 525+62.60

* MATCH ROADWAY TO EXISTING SHOULDERS AND INCREASE ROCK SHOULDERS TO KEEP 26' WIDTH BETWEEN GUARDRAILS

*** FILL SLOPE TRANSITIONS FROM EXISTING SLOPE TO 2.5:1 FROM STA. 524+31.47 TO STA. 524+81.47

INSTALL GUARDRAIL IN ACCORDANCE WITH STANDARD PLANS 606.50F

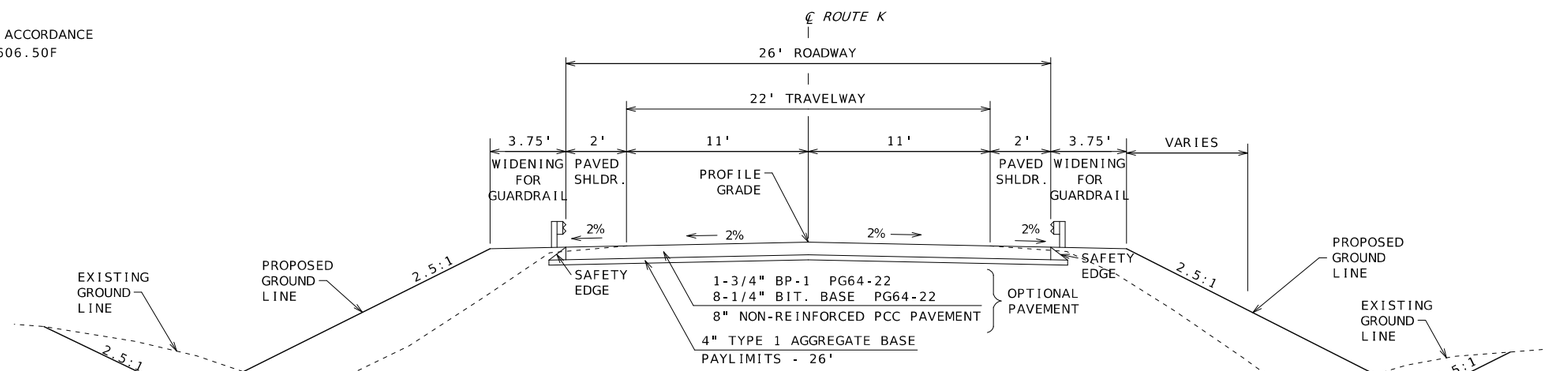

TYPICAL SECTION - ROUTE K

**STA. 525+62.60 TO 526+12.60

** INSTALL MINOR BRDIGE APPRAOCH SLAB FROM STA. 525+92.60 TO STA. 526+12.60 (SEE BRIDGE PLANS FOR DETAILS)

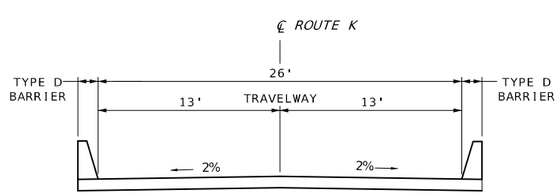

PROPOSED TYPICAL SECTION

BRIDGE #A9537

STA. 526+12.60 TO STA. 529+56.40

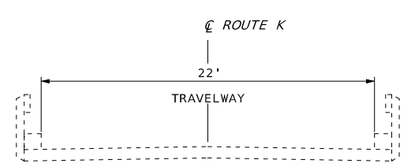

EXISTING TYPICAL SECTION

BRIDGE #A0737

STA. 526+24.90 TO STA. 529+44.90

SEE STANDARD PLANS FOR SAFETY EDGE DETAIL

STATE OF MISSOURI
ZACHARY S. WALKER
NUMBER
PE-2010000877
PROFESSIONAL ENGINEER

ELECTRONICALLY SEALED FOR ZACHARY S. WALKER - CIVIL MO-PE-2010000877

DATE PREPARED	
12/2/2024	
ROUTE K	STATE MO
DISTRICT NE	SHEET NO. 2
COUNTY MONTGOMERY	
JOB NO. JNE0154	
CONTRACT ID.	
PROJECT NO.	
BRIDGE NO.	

DESCRIPTION	DATE

MISSOURI HIGHWAYS AND TRANSPORTATION COMMISSION

105 WEST CAPITOL
JEFFERSON CITY, MO 65102
1-888-ASK-MODOT (1-888-275-6636)

TYPICAL SECTIONS
SHEET 1 OF 2
NOT TO SCALE

*** INSTALL ROCK FILL FROM
STA. 529+61.90 TO STA. 530+07.63

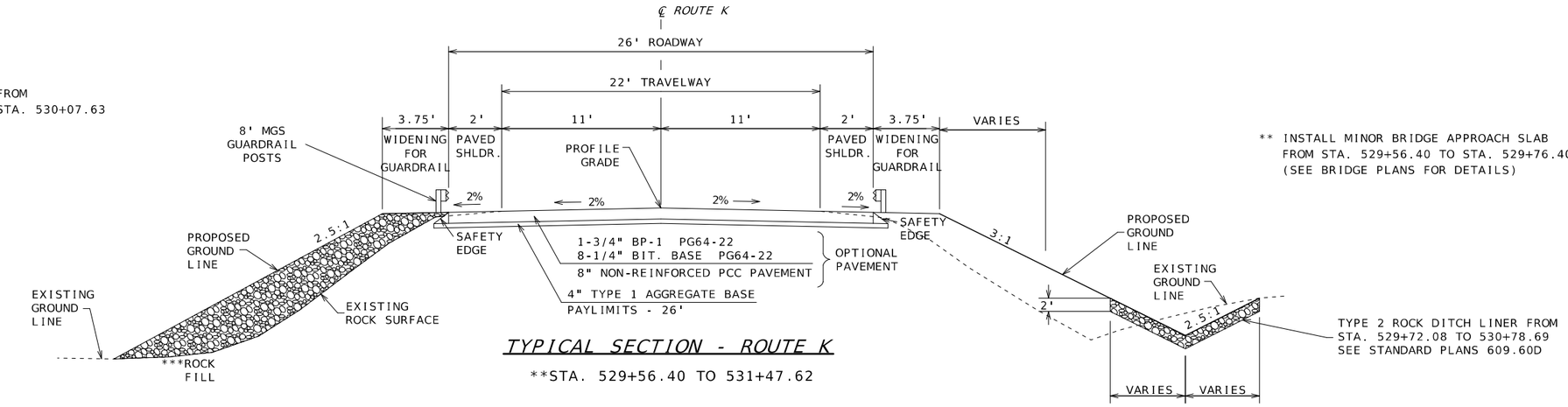

** INSTALL MINOR BRIDGE APPROACH SLAB
FROM STA. 529+56.40 TO STA. 529+76.40
(SEE BRIDGE PLANS FOR DETAILS)

TYPE 2 ROCK DITCH LINER FROM
STA. 529+72.08 TO 530+78.69
SEE STANDARD PLANS 609.60D

TYPICAL SECTION - ROUTE K

**STA. 529+56.40 TO 531+47.62

INSTALLL GUARDRAIL IN ACCORDANCE
WITH STANDARD PLANS 606.50F

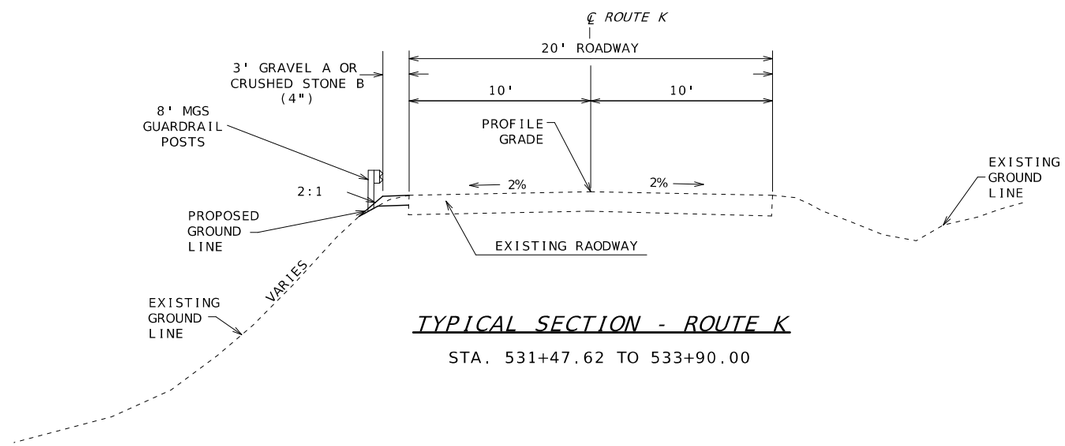

TYPICAL SECTION - ROUTE K

STA. 531+47.62 TO 533+90.00

SEE STANDARD PLANS FOR SAFETY EDGE DETAIL

STATE OF MISSOURI
ZACHARY S. WALKER
NUMBER
PE-2010000877
PROFESSIONAL ENGINEER

ZACHARY S. WALKER - CIVIL
MO-PE-2010000877

DATE PREPARED	12/2/2024
ROUTE	K
STATE	MO
DISTRICT	NE
SHEET NO.	2
COUNTY	MONTGOMERY
JOB NO.	JNE0154
CONTRACT ID.	
PROJECT NO.	
BRIDGE NO.	

DATE	DESCRIPTION

MISSOURI HIGHWAYS AND TRANSPORTATION COMMISSION

105 WEST CAPITOL
JEFFERSON CITY, MO 65102
1-888-ASK-MODOT (1-888-275-6636)

TYPICAL SECTIONS
SHEET 2 OF 2
NOT TO SCALE

REMOVAL OF IMPROVEMENTS

SHEET	STATION	STATION	LOCATION	QUANTITY UNITS	REMARKS
11	526+13.28	529+51.76	RTE K	4 EACH	REMOVE OBJECT MARKER SIGNS AND POSTS AT 4 BRIDGE CORNERS
11	524+45.54	530+73.54	RTE K	256 LIN. FT.	REMOVE GUARDRAIL ON EAST SIDE OF BRIDGE
11	525+62.60	531+47.62	RTE K	40.88 LIN. FT.	SAW CUT AT BEGIN AND END OF NEW PAVEMENT
11	525+62.60	526+23.45	RTE K	136 SQ.YD.	REMOVE EXISTING PAVEMENT ON THE WEST END OF THE BRIDGE
11	529+45.54	531+47.62	RTE K	463 SQ.YD.	REMOVE EXISTING PAVEMENT ON THE EAST END OF THE BRIDGE
11	524+33.63	533+10.15	RTE K	5 EACH	PSST POST ANCHORS FROM RELOCATED SIGNS
11	524+33.63	533+10.15	RTE K	5 EACH	PSST POSTS FROM RELOCATED SIGNS
			TOTAL	1 LUMP SUM	

EARTHWORK

SHEET	STATION	STATION	LOCATION	CLASS A EXCAVATION C.Y.	COMPACTING EMBANKMENT C.Y.	EMBANKMENT IN PLACE C.Y.	FURNISHING ROCK FILL C.Y.	PLACING ROCK FILL C.Y.	REMARKS
4	524+31.47	526+12.60	RTE K	1830	1619	817	-	-	WEST END OF BRIDGE
4	529+56.40	533+90.00	RTE K	793	702	598	-	-	EAST END OF BRIDGE
7	529+61.90	530+07.63	RTE K	-	-	-	215.0	215.0	NE BR. CORNER ROCK FILL
			TOTALS	2623	2321	1415	215	215	

NOTE: COMPACTION FACTOR OF 1.13 USED FOR COMPACTING EMBANKMENT.

NOTE: QUANTITIES INCLUDE BRIDGE END SPILL SLOPES AND EXCAVATION FOR ROCK BLANKET.

SUBGRADE COMPACTION (6 INCH DEPTH)

SHEET	STATION	STATION	LOCATION	LENGTH 100 FT.	REMARKS
4	525+62.60	526+12.60	RTE K	0.50	SUBGRADE PREPARATION FOR PAVEMENT WEST END OF BRIDGE
4	529+56.40	531+47.60	RET K	1.90	SUBGRADE PREPARATION FOR PAVEMENT EAST END OF BRIDGE
			TOTAL	2.40	
			USE	3.00	

OPTIONAL PAVEMENT AND 4" TYPE 1 AGGREGATE BASE

SHEET	STATION	STATION	LOCATION	LENGTH FT.	WIDTH FT.	OPTIONAL PAVEMENT S.Y.	TYPE 1 AGG. FOR BASE (4") S.Y.	REMARKS
4	525+62.60	525+92.60	RTE. K	30.00	26	86.67	86.67	WEST END PAVEMENT
4	529+76.40	531+47.62	RTE. K	171.22	26	494.64	494.64	EAST END PAVEMENT
					TOTAL	581.31	581.31	
					USE	581.3	582.0	

ROCK DITCH LINER

SHEET	STATION	STATION	WIDTH FT.	LENGTH FT.	DEPTH FT.	AREA SF	FURNISHING TYPE 2 ROCK DITCH LINER CY	PLACING TYPE 2 ROCK DITCH LINER CY	PERMANENT EROSION CONTROL GEOTEXTILE SY	REMARKS
7	529+72.08	529+97.08	13	25	2	325	24.1	24.1	36.1	ROCK DICTCH TRANSITION FROM 12' TO 14'
7	529+97.08	530+53.69	14	56.61	2	792.54	58.7	58.7	88.1	ROCK DITCH LINER 14'
7	530+53.69	530+78.69	13	25	2	325	24.1	24.1	36.1	ROCK DICTCH TRANSITION FROM 12' TO 14'
						TOTAL	106.9	106.9	160.3	
						USE	107	107	161	

ROCK BLANKET

SHEET	LOCATION	LENGTH FT.	DEPTH FT.	AREA SF	FURNISHING TYPE 2 ROCK BLANKET CY	PLACING TYPE 2 ROCK BLANKET CY	PERMANENT EROSION CONTROL GEOTEXTILE SY	REMARKS
7	RTE K	VAR.	2	7898	585.0	585.0	877.6	WEST ROCK BLANKET
7	RTE K	VAR.	2	8057	596.8	596.8	895.2	EAST ROCK BLANKET
				TOTAL	1181.8	1181.8	1772.8	
				USE	1182.0	1182.0	1773	

STATE OF MISSOURI
ZACHARY S. WALKER
NUMBER
PE-2010000877
PROFESSIONAL ENGINEER

LICENSED SITE AND FIRM
ZACHARY S. WALKER - CIVIL
MO-PE-2010000877

DATE PREPARED
12/2/2024

ROUTE	STATE
K	MO
DISTRICT	SHEET NO.
NE	3

COUNTY
MONTGOMERY

JOB NO.
JNE0154

CONTRACT ID.

PROJECT NO.

BRIDGE NO.

DESCRIPTION	DATE

MISSOURI HIGHWAYS AND TRANSPORTATION COMMISSION

105 WEST CAPITOL
JEFFERSON CITY, MO 65102
1-888-ASK-MODOT (1-888-275-6636)

QUANTITIES SHEET
1 OF 3

GUARDRAIL

SHEET	STATION	STATION	MGS GUARDRAIL L.F.	MGS GUARDRAIL 8' POST 6' - 3 SPACING L.F.	MASH BRIDGE APPROACH TRANSITION SECTION (REGULAR/NO CURB) EACH	TYPE A CRASHWORTHY END TERMINAL (MASH) EACH	REMARKS
7	525+07.08	526+07.08	12.50	-	1	1	SW QUANDRANT OF BRIDGE
7	525+18.12	526+18.12	12.50	-	1	1	NW QUANDRANT OF BRIDGE
7	529+50.89	530+50.89	12.50	-	1	1	SE QUANDRANT OF BRIDGE
7	529+61.91	534+64.50	-	325.00	1	1	NE QUANDRANT OF BRIDGE
		TOTALS	38	325	4	4	

RELOCATED SIGNS, PSST POSTS, AND PSST ANCHORS

SHEET	SIGN NO.	STATION FROM	STATION TO	LOCATION	RELOCATE SIGN QUANTITY EACH	2 IN. PSST POST ANCHOR DRIVEN 12 GAUGE EACH	2.5 IN. PSST POST ANCHOR DRIVEN 7 GAUGE EACH	2 IN. PSST POST LF	2.5 IN. PSST POST LF	REMARKS
11	1	524+33.63	524+33.63	RTE K	1		1		16	SPEED LIMIT SIGN - 55 MPH (R2-1)
11	2	533+10.15	534+00.00	RTE K	1		1		16	IMPASSABLE DURING HIGH WATER - FLIP SIGN (W8-34)
11	3	524+32.48	519+32.48	RTE K	1	1		16		REDUCED SPEED LIMIT AHEAD SIGN - 40 MPH (W3-5)
11	4	530+22.44	531+04.00	RTE K	1	1		16		INTERSECTION WARNING SIGN (W2-2)
11	5	531+04.00	524+32.48	RTE K	1		1		16	SPEED LIMIT SIGN - 40 MPH (R2-1)
				TOTAL	5	2	3	32	48	

TEMPORARY EROSION CONTROL

SHEET	SILT FENCE L.F.	ROCK DITCH CHECK L.F.	TYPE C BERM L.F.	SEDIMENT REMOVAL C.Y.	TYPE 2D EROSION CONTROL BLANKET S.Y.	REMARKS
10	872	375	394	34	1756	ADJUST FOR FIELD CONDITIONS
TOTAL	872	375	394	34	1756	
SEDIMENT REMOVAL ESTIMATED AT 1 CY PER DITCH CHECK AND 1 CY PER 100' OF SILT FENCE						
NOTE: EROSION CONTROL BLANKET TO BE USED WITH PERMANENT SEEDING AT THE LOCATIONS SHOWN ON THE PLANS.						

CONTRACTOR FURNISHED SURVEYING AND STAKING

QUANTITY = 1 LUMP SUM

MOBILIZATION

QUANTITY = 1 LUMP SUM

GRAVEL A OR CRUSHED STONE B - AGGREGATE SHOULDER

SHEET	STATION	STATION	WIDTH FT.	LENGTH FT.	AREA SF	GRAVEL A OR CRUSHED STONE B TONS	REMARKS
7	524+96.59	525+62.60	3	66	198	3.42	NW AGG. SHOULDER
7	524+86.51	525+62.60	3	76	228.0	3.94	SW AGG. SHOULDER
7	531+47.62	533+83.62	3	209	627.0	10.84	NE AGG. SHOULDER
					TOTAL	18.2	
					USE	19.0	
NOTE: 1.4 TONS/CY FACTOR USED. 4" DEPTH OF ROCK ASSUMED							

MISCELLANEOUS SEEDING

0.68 ACRES	ESTIMATED PERMANENT SEEDING
0.68 ACRES	ESTIMATED TEMPORARY SEEDING
TOTAL	1 LUMP SUM
NOTE: SEEDING ACRES FOR INFORMATION ONLY.	

CLEARING AND GRUBBING

TOTAL	CLEARING AND GRUBBING 0.68 ACRES
USE	1 ACRE

PAVEMENT MARKING

SHEET	STATION	STATION	WATERBORNE MARKING PAINT WITH TYPE P BEADS 4" YELLOW L.F.	WATERBORNE MARKING PAINT WITH TYPE P BEADS 4" WHITE L.F.	REMARKS
7	524+31.47	526+12.60	45	-	INTERMITTENT STRIPE CENTERLINE MARKING
7	526+12.60	533+90.00	972	-	SOLID EBL INTERMITTENT STRIPE WBL CENTERLINE MARKING
7	524+31.47	533+90.00	-	959	EBL EDGELINE
7	524+31.47	533+90.00	-	959	WBL EDGELINE
		TOTALS	1017	1918	

STATE OF MISSOURI
ZACHARY S. WALKER
NUMBER
PE-2010000877
PROFESSIONAL ENGINEER

16:06:00 2024-10-02 PM
ZACHARY S. WALKER - CIVIL
MO-PE-2010000877

DATE PREPARED
12/2/2024

ROUTE	STATE
K	MO
DISTRICT	SHEET NO.
NE	3

COUNTY
MONTGOMERY

JOB NO.
JNE0154

CONTRACT ID.

PROJECT NO.

BRIDGE NO.

DATE	DESCRIPTION

MISSOURI HIGHWAYS AND TRANSPORTATION COMMISSION
105 WEST CAPITOL
JEFFERSON CITY, MO 65102
1-888-ASK-MODOT (1-888-275-6636)

QUANTITIES SHEET
2 OF 3

SIGN	SIZE IN.	AREA SQ.FT.	QTY EACH	TOTAL AREA SQ.FT.	QTY RELOC EACH	TOTAL RELOC SQ.FT.	SIGN NUM.	DESCRIPTION
WARNING SIGNS								
WO1-1L	48X48	16.00						TURN (SYMBOL LEFT)
WO1-1R	48X48	16.00						TURN (SYMBOL RIGHT)
WO1-2L	48X48	16.00						CURVE (SYMBOL LEFT)
WO1-2R	48X48	16.00						CURVE (SYMBOL RIGHT)
WO1-3L	48X48	16.00						REVERSE TURN (SYMBOL LEFT)
WO1-3R	48X48	16.00						REVERSE TURN (SYMBOL RIGHT)
WO1-4L	48X48	16.00						REVERSE CURVE (SYMBOL LEFT)
WO1-4R	48X48	16.00						REVERSE CURVE (SYMBOL RIGHT)
WO1-4bL	48X48	16.00						DOUBLE ARROW REVERSE CURVE (SYMBOL LEFT)
WO1-4bR	48X48	16.00						DOUBLE ARROW REVERSE CURVE (SYMBOL RIGHT)
WO1-4cL	48X48	16.00						TRIPLE ARROW REVERSE CURVE (SYMBOL LEFT)
WO1-4cR	48X48	16.00						TRIPLE ARROW REVERSE CURVE (SYMBOL RIGHT)
WO1-6	60X30	12.50						HORIZONTAL ARROW (SYMBOL)
WO1-6a	72X36	18.00						HORIZ. ARROW (SYMBOL ON PERMANENT BARRICADE)
WO1-7	60X30	12.50						DOUBLE HEAD HORIZONTAL ARROW (SYMBOL)
WO1-7a	72X36	18.00						DOUBLE HEAD HORIZ. ARROW (SYMBOL ON PERM. BARR.)
WO1-8	18X24	3.00						CHEVRON (SYMBOL)
WO1-8a	30X36	7.50						CHEVRON (SYMBOL FOR DIVIDED HIGHWAYS)
WO3-1	48X48	16.00						STOP AHEAD (SYMBOL)
WO3-2	48X48	16.00						YIELD AHEAD (SYMBOL)
WO3-3	48X48	16.00						SIGNAL AHEAD (SYMBOL)
WO3-4	48X48	16.00						BE PREPARED TO STOP
WO3-5	48X48	16.00						SPEED LIMIT AHEAD
WO4-1L	48X48	16.00						MERGE (SYMBOL FROM LEFT)
WO4-1R	48X48	16.00						MERGE (SYMBOL FROM RIGHT)
WO4-1aL	48X48	16.00						MERGE (LEFT)
WO4-1aR	48X48	16.00						MERGE (RIGHT)
WO5-1	48X48	16.00						ROAD/BRIDGE/RAMP NARROWS
WO5-3	48X48	16.00						ONE LANE BRIDGE
WO5-5	48X48	16.00						NARROW LANES
WO6-1	48X48	16.00						DIVIDED HIGHWAY (SYMBOL)
WO6-2	48X48	16.00						DIVIDED HIGHWAY END (SYMBOL)
WO6-3	48X48	16.00						TWO WAY TRAFFIC (SYMBOL)
WO7-3a	30X24	5.00						NEXT XX MILES (PLAQUE)
WO8-1	48X48	16.00						BUMP
WO8-2	48X48	16.00						DIP
WO8-3	48X48	16.00						PAVEMENT ENDS
WO8-4	48X48	16.00						SOFT SHOULDER
WO8-5	48X48	16.00						SLIPPERY WHEN WET (SYMBOL)
WO8-6	48X48	16.00						TRUCK CROSSING
WO8-6c	48X48	16.00						TRUCK ENTRANCE
WO8-7	36X36	9.00						LOOSE GRAVEL
WO8-7a	36X36	9.00						FRESH OIL / LOOSE GRAVEL
WO8-9	48X48	16.00						LOW SHOULDER
WO8-11	48X48	16.00						UNEVEN LANES
WO8-12	48X48	16.00						NO CENTER LINE
WO8-15	48X48	16.00						GROOVED PAVEMENT
WO8-15P	30X24	5.00						MOTORCYCLE (PLAQUE)
WO8-17L	48X48	16.00						SHOULDER DROP-OFF (SYMBOL LEFT)
WO8-17R	48X48	16.00						SHOULDER DROP-OFF (SYMBOL RIGHT)
WO8-17P	30X24	5.00						SHOULDER DROP-OFF (PLAQUE)
W10-1	42RND.	9.62						RAILROAD CROSSING
WO12-1	24X24	4.00						DOUBLE DOWN ARROW (SYMBOL)
WO12-2	48X48	16.00						LOW CLEARANCE (SYMBOL)
WO12-2x	24X18	3.00						LOW CLEARANCE (PLAQUE)
WO12-2a	84X24	14.00						OVERHEAD LOW CLEARANCE (FEET AND INCHES)
WO12-4	120X60	50.00						LOW CLEARANCE XX FT XX IN XX MILES AHEAD
WO12-5	120X60	50.00						WIDTH RESTRICTION XX FT XX IN XX MILES AHEAD
WO13-1	30X30	6.25						ADVISORY SPEED (PLAQUE)
WO16-2	30X24	5.00						XXX FEET (PLAQUE)
WO16-3	30X24	5.00						X MILE (PLAQUE)
WO20-1	48X48	16.00						ROAD/BRIDGE/RAMP WORK AHEAD
WO20-2	48X48	16.00						DETOUR AHEAD
WO20-3	48X48	16.00	5	80.00			20A/B	ROAD CLOSED AHEAD/ROAD CLOSED 500 FT
WO20-4	48X48	16.00						ONE LANE ROAD AHEAD
WO20-5	48X48	16.00						RIGHT/CENTER/LEFT LANE CLOSED AHEAD
WO20-5a	48X48	16.00						2 RIGHT/CENTER/LEFT LANES CLOSED AHEAD
WO20-6a	48X48	16.00						RIGHT/CENTER/LEFT LANE CLOSED
WO20-7a	48X48	16.00						FLAGGER (SYMBOL)
WO21-2	36X36	9.00						FRESH OIL
WO21-5	48X48	16.00						SHOULDER WORK / SHOULDER WORK AHEAD
WO22-1	48X48	16.00						BLASTING ZONE AHEAD
WO22-2	42X36	10.50						TURN OFF 2-WAY RADIO AND PHONE
WO22-3	42X36	10.50						END BLASTING ZONE
GO22-1	21X15	2.19						WET PAINT (ARROW PIVOTS)

SIGN	SIZE IN.	AREA SQ.FT.	QTY EACH	TOTAL SQ.FT.	QTY RELOC EACH	TOTAL RELOC SQ.FT.	SIGN NUM.	DESCRIPTION
GUIDE SIGNS								
E05-1	36X48	12.00						GORE EXIT
E05-2	48X36	12.00						EXIT OPEN
E05-2a	48X36	12.00						EXIT CLOSED
GO20-1	60X24	10.00						ROAD WORK NEXT XX MILES
GO20-2	48X24	8.00						END ROAD WORK
GO20-4	36X18	4.50						PILOT CAR FOLLOW ME
GO20-4a	42X30	8.75						PILOT CAR IN USE WAIT & FOLLOW
GO20-4a	18X12	1.50						PILOT CAR IN USE WAIT & FOLLOW
GO20-5aP	36X24	6.00						WORK ZONE (PLAQUE)
MO4-8a	24X18	3.00						END DETOUR
MO4-9L	48X36	12.00						DETOUR (LEFT)
MO4-9R	48X36	12.00						DETOUR (RIGHT)
MO4-9P	48X12	4.00						STREET NAME (PLAQUE)
MO4-10L	48X18	6.00						DETOUR ARROW (LEFT)
MO4-10R	48X18	6.00						DETOUR ARROW (RIGHT)
REGULATORY SIGNS								
R1-1	48X48	13.25						STOP
R1-2	48TRI.	6.93						YIELD
R1-2a	36X36	9.00						TO ONCOMING TRAFFIC (PLAQUE)
R1-3P	30X12	2.50						ALL WAY (PLAQUE)
R2-1	36X48	12.00						SPEED LIMIT XX
R3-1	48X48	16.00						NO RIGHT TURN (SYMBOL)
R3-2	48X48	16.00						NO LEFT TURN (SYMBOL)
R3-3	36X36	9.00						NO TURNS
R3-4	48X48	16.00						NO U-TURN (SYMBOL)
R3-7L	30X30	6.25						LEFT LANE MUST TURN LEFT
R3-7R	30X30	6.25						RIGHT LANE MUST TURN RIGHT
R4-1	36X48	12.00						DO NOT PASS
R4-2	36X48	12.00						PASS WITH CARE
R4-7a	36X48	12.00						KEEP RIGHT (HORIZONTAL ARROW)
R4-8a	36X48	12.00						KEEP LEFT (HORIZONTAL ARROW)
R5-1	30X30	6.25						DO NOT ENTER
R5-1a	36X24	6.00						WRONG WAY
R6-1L	54X18	6.75						ONE WAY ARROW (LEFT)
R6-1R	54X18	6.75						ONE WAY ARROW (RIGHT)
R6-2L	24X30	5.00						ONE WAY (LEFT)
R6-2R	24X30	5.00						ONE WAY (RIGHT)
R9-9	24X12	2.00						SIDEWALK CLOSED
R9-11L	24X18	3.00						SIDEWALK CLOSED AHEAD, (ARROW LEFT) CROSS HERE
R9-11R	24X18	3.00						SIDEWALK CLOSED AHEAD, (ARROW RIGHT) CROSS HERE
R10-6	24X36	6.00						STOP HERE ON RED (45^ ARROW)
R11-2	48X30	10.00	3	30.00			29	ROAD CLOSED
R11-3a	60X30	12.50						ROAD CLOSED XX MILES AHEAD LOCAL TRAFFIC ONLY
R11-4	60X30	12.50	2	25.00			61	ROAD CLOSED TO THRU TRAFFIC
CONST-3A	60X48	20.00						FINE SIGN
CONST-3X	56X12	4.67						SPEEDING/PASSING (PLATE)
MISCELLANEOUS SIGNS								
CONST-5	48X36	12.00						POINT OF PRESENCE
CONST-5	96X48	32.00						POINT OF PRESENCE
CONST-8	48X36	12.00						WORK ZONE NO PHONE ZONE
SPECIAL	96X48	32.00	2	64.00	2	64.00	48A/B	BRIDGE CLOSURE AHEAD XX MILES

616-10.05 CONSTRUCTION SIGNS	TOTAL
	199

616-10.10 RELOCATED SIGNS	TOTAL
	64

EFFECTIVE: 07-01-2024

ITEM NUMBER	TOTAL QTY	DESCRIPTION
6122008		IMPACT ATTENUATOR 40 MPH (SAND BARRELS)
6122009		IMPACT ATTENUATOR 45 MPH (SAND BARRELS)
6122010		IMPACT ATTENUATOR 50 MPH (SAND BARRELS)
6122012		IMPACT ATTENUATOR 55 MPH (SAND BARRELS)
6122014		IMPACT ATTENUATOR 60 MPH (SAND BARRELS)
6122017		IMPACT ATTENUATOR 65 MPH (SAND BARRELS)
6122019		IMPACT ATTENUATOR 70 MPH (SAND BARRELS)
6122020		REPLACEMENT SAND BARREL
6122030		IMPACT ATTENUATOR (RELOCATION)
6123001		TRUCK MOUNTED ATTENUATOR (TMA)
6161008	2	ADVANCED WARNING RAIL SYSTEM
6161012		BUOYS (BOATS KEEP OUT)
6161013		BUOYS (NO WAKE)
6161014		SPECIAL SIGN ASSEMBLY (BOATS KEEP OUT)
6161025		CHANNELIZER (TRIM LINE)
6161030	13	TYPE III MOVEABLE BARRICADE
6161033		DIRECTION INDICATOR BARRICADE
6161040		FLASHING ARROW PANEL
6161047		TYPE III OBJECT MARKER
6161055		SEQUENTIAL FLASHING WARNING LIGHT
6161070		TUBULAR MARKER
6161095		RADAR SPEED ADVISORY SYSTEM
6161096		CHANGEABLE MESSAGE SIGN, COMMISSION FURNISHED/RETAINED
6161098A		CHANGEABLE MESSAGE SIGN WITHOUT COMM. INTERFACE- CONTRACTOR FURNISHED/RETAINED
6161099		CHANGEABLE MESSAGE SIGN WITH COMM. INTERFACE- CONTRACTOR FURNISHED/RETAINED
6162000A		WORK ZONE TRAFFIC SIGNAL SYSTEM
6162002		TEMPORARY LONG-TERM RUMBLE STRIPS
6173600D		TEMPORARY TRAFFIC BARRIER CONTRACTOR FURNISHED/RETAINED
6173602B		TEMPORARY TRAFFIC BARRIER CONTRACTOR FURNISHED/COMMISSION RETAINED
6174000A		TEMP. TRAFFIC BARRIER HEIGHT TRANSITION
6175010A		RELOCATING TEMPORARY TRAFFIC BARRIER
6176000B		TEMPORARY TRAFFIC BARRIER COMMISSION FURNISHED/RETAINED
6177000B		TEMP. TRAFFIC BARRIER HEIGHT TRANSITION COMMISSION FURNISHED/RETAINED
6208064A		TEMPORARY RAISED PAVEMENT MARKER
9029400		TEMPORARY TRAFFIC SIGNALS
9029401		TEMPORARY TRAFFIC SIGNALS AND LIGHTING

STATE OF MISSOURI
ZACHARY S. WALKER
NUMBER PE-2010000877
PROFESSIONAL ENGINEER

ZACHARY S. WALKER - CIVIL
MO-PE-2010000877

DATE PREPARED: 12/2/2024

ROUTE	STATE
K	MO

DISTRICT	SHEET NO.
NE	3

COUNTY: MONTGOMERY

JOB NO.: JNE0154

CONTRACT ID.

PROJECT NO.

BRIDGE NO.

DESCRIPTION	DATE

MISSOURI HIGHWAYS AND TRANSPORTATION COMMISSION
105 WEST CAPITOL
JEFFERSON CITY, MO 65102
1-888-ASK-MODOT (1-888-275-6636)

QUANTITIES SHEET
3 OF 3

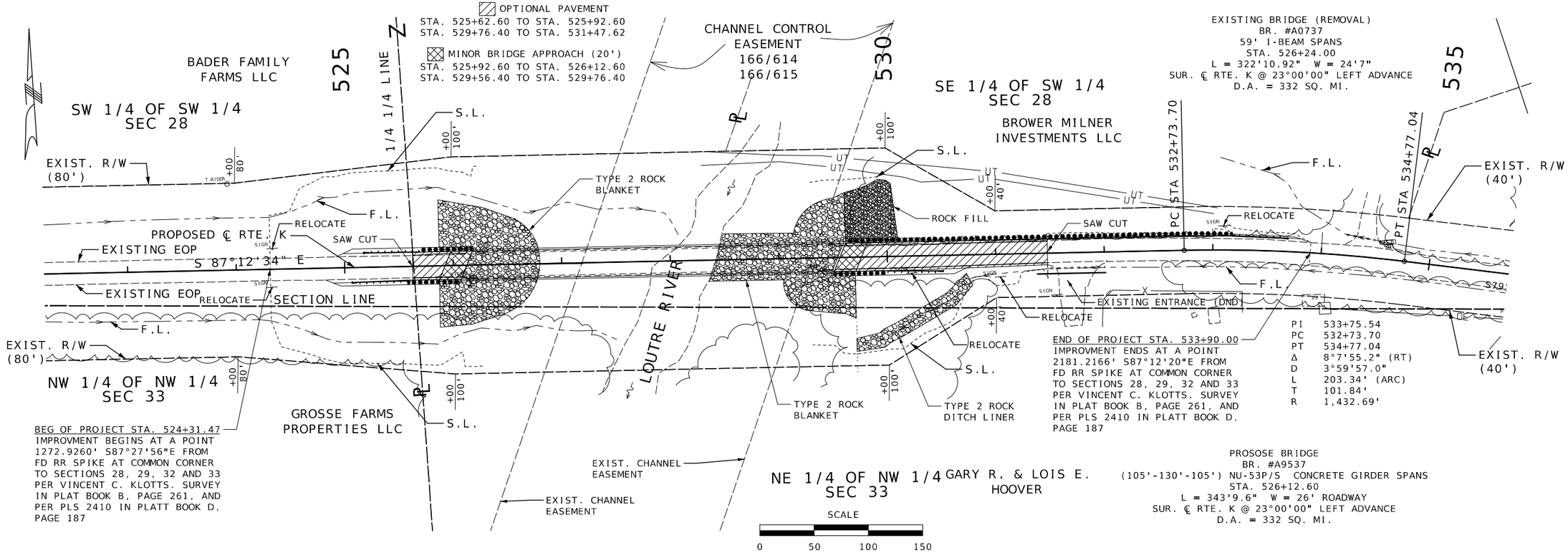

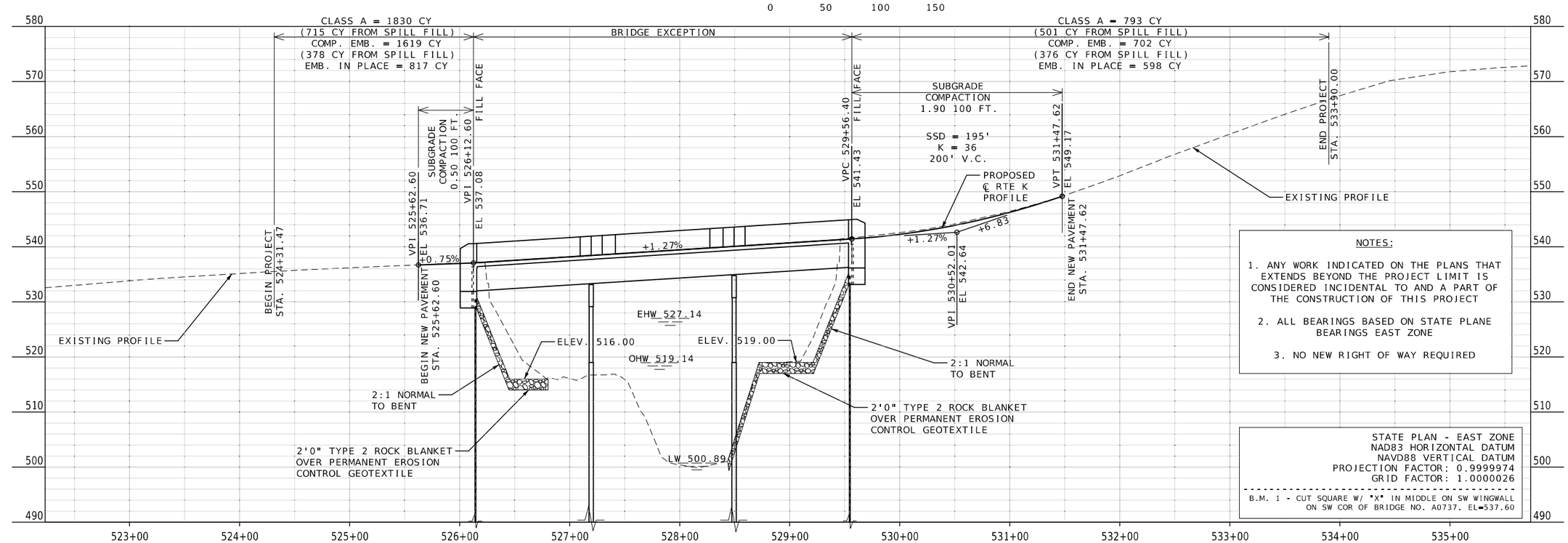

NOTES:

1. ANY WORK INDICATED ON THE PLANS THAT EXTENDS BEYOND THE PROJECT LIMIT IS CONSIDERED INCIDENTAL TO AND A PART OF THE CONSTRUCTION OF THIS PROJECT
2. ALL BEARINGS BASED ON STATE PLANE BEARINGS EAST ZONE
3. NO NEW RIGHT OF WAY REQUIRED

STATE PLAN - EAST ZONE
NAD83 HORIZONTAL DATUM
NAVD88 VERTICAL DATUM
PROJECTION FACTOR: 0.9999974
GRID FACTOR: 1.0000026

B.M. 1 - CUT SQUARE W/ "X" IN MIDDLE ON SW WINGWALL ON SW COR OF BRIDGE NO. A0737. EL=537.60

STATE OF MISSOURI
ZACHARY S. WALKER
NUMBER PE-2010000877
PROFESSIONAL ENGINEER
ZACHARY S. WALKER - CIVIL
MO-PE-2010000877

DATE PREPARED	12/2/2024
ROUTE	K
STATE	MO
DISTRICT	NE
SHEET NO.	4
COUNTY	MONTGOMERY
JOB NO.	JNE0154
CONTRACT ID.	
PROJECT NO.	
BRIDGE NO.	

DESCRIPTION

DATE

MISSOURI HIGHWAYS AND TRANSPORTATION COMMISSION

105 WEST CAPITOL
JEFFERSON CITY, MO 65102
1-888-ASK-MODOT (1-888-275-6636)

PLAN-PROFILE

ALL PROJECT COORDINATES HAVE BEEN PROJECTED FROM THE MISSOURI STATE PLANE COORDINATE (SPC) SYSTEM OF 1983 USING AN AVERAGE PROJECT PROJECTION (GRID TO GROUND) FACTOR. TO GET BACK TO STATE PLANE COORDINATES MULTIPY THE PROJECT COORDINATES BY THE AVERAGE GRID FACTOR AS SHOWN IN THE "REFERENCE CONTROL INFORMATION" PORTION OF THIS TABLE.

PROJECT COORDINATE INFORMATION

COORDINATE SYSTEM	MODIFIED STATE PLANE
HORIZONTAL DATUM	NAD 83(2011) EPOCH 2010
VERTICAL DATUM	NAVD 88: GNSS
GEOID MODEL	18
ELEVATIONS DETERMINED BY	DIFFERENTIAL LEVELING/GPS-MODOT VRS
PROJECT PROJECTION FACTOR	1.000002606

REFERENCE CONTROL INFORMATION

COORDINATE SYSTEM	MISSOURI COORDINATE SYSTEM OF 1983
CONTROL STATION	MISSOURI CORPS
DESIGNATION	MODOT WARRENTON CORPS ARP
CORS_ID	MOWR
PID	DL6157
LATITUDE	38 48 52.70169 N
LONGITUDE	091 09 40.92390 W
NORTHING (M)	331062.3840
EASTING (M)	192562.4610
ZONE	EAST
PROJECT AVERAGE GRID FACTOR	0.99997394

EXAMPLE OF PROJECT COORDINATE TO S.P.C.

PROJECT NORTHING X AVERAGE GRID FACTOR
= STATE PLANE NORTHING
PROJECT EASTING X AVERAGE GRID FACTOR
= STATE PLANE EASTING

EXAMPLE: CONTROL POINT #100
N 1082809.49 X 0.99997394 = N 1082781.272
E 538400.74 X 0.99997394 = E 538386.7093

LINEAR UNIT CONVERSION

1 METER = 3.280833333 US SURVEY FEET (USFT)

COORDINATE POINT LISTING

SHEET NO	STATION	LOCATION	OFFSET (USFT)	MODIFIED STATE PLANE (GROUND) NORTHING (US SURVEY FT)	EASTING (US SURVEY FT)	ELEVATION (US SURVEY FT)	DESCRIPTION	GPK POINT ID
PROJECT CONTROL POINTS								
6	520+35.58	CL RTE K	14.15' LT	1,082,809.49	538,400.75	528.950	5/8" REBAR	100
6	526+17.21	CL RTE K	13.44' LT	1,082,780.46	538,981.66	535.547	5/8" REBAR	101
6	530+93.63	CL RTE K	12.95' LT	1,082,756.78	539,457.49	545.378	5/8" REBAR	102
6	534+25.16	CL RTE K	12.68' LT	1,082,732.25	539,789.28	568.803	5/8" REBAR	103
6	538+29.52	CL RTE K	28.61' RT	1,082,621.90	540,182.81	568.311	5/8" REBAR	104
6	526+18.29	CL RTE K	13.30' RT	1,082,753.70	538,981.44	534.597	CUT SQ. W/ X IN MIDDLE ON SW WW ON SW COR. BR.	BM-1
6	529+40.22	CL RTE K	13.44' RT	1,082,737.89	539,302.98	541.768	CUT SQ. ON SE WW OF BR.	BM-2
ALIGNMENTS								
6	524+31.47	CL RTE K	-	1,082,776.08	538,795.49	-	BEG PROJECT	-
6	525+62.60	CL RTE K	-	1,082,769.69	538,926.46	536.71	BEGIN NEW PAVEMENT	-
6	525+92.60	CL RTE K	-	1,082,768.23	538,956.43	-	BEGIN BRIDGE APPROACH SLAB	-
6	529+76.40	CL RTE K	-	1,082,749.55	539,339.77	-	END BRIDGE APPROACH SLAB	-
6	531+47.62	CL RTE K	-	1,082,741.21	539,510.80	549.17	END NEW PAVEMENT	-
6	533+90.00	CL RTE K	-	1,082,724.71	539,752.53	-	END OF PROJECT	-
6	532+73.70	CL RTE K	-	1,082,735.07	539,636.72	-	PC	-

STATE OF MISSOURI
ZACHARY S. WALKER
NUMBER
PE-2010000877
PROFESSIONAL ENGINEER
ZACHARY S. WALKER - CIVIL
MO-PE-2010000877

DATE PREPARED
12/2/2024

ROUTE	STATE
K	MO
DISTRICT	SHEET NO.
NE	5

COUNTY
MONTGOMERY

JOB NO.
JNE0154

CONTRACT ID.

PROJECT NO.

BRIDGE NO.

DESCRIPTION	DATE

MISSOURI HIGHWAYS AND TRANSPORTATION COMMISSION
105 WEST CAPITOL
JEFFERSON CITY, MO 65102
1-888-ASK-MODOT (1-888-275-6636)

COORDINATE POINTS
SHEET 1 OF 1

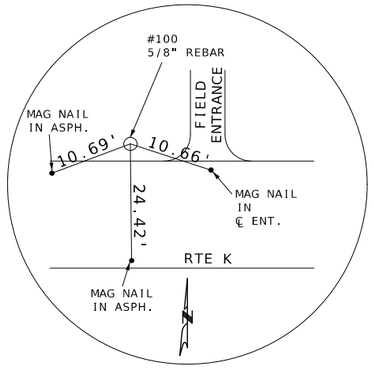

CP #100
STA. 520+35.58 - 14.15' LT
N = 1,082,809.4850
E = 538,400.7542
ELEV. = 528.9500'

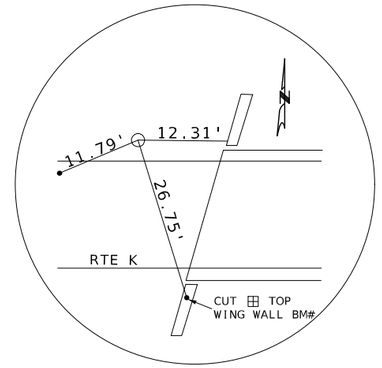

CP #101
STA. 526+17.21 - 13.44' LT
N = 1,082,780.4630
E = 538,981.6606
ELEV. = 535.5470'

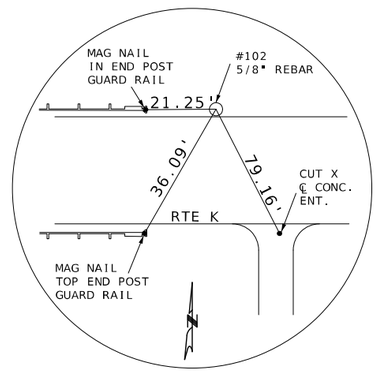

CP #102
STA. 530+93.63 - 12.95' LT
N = 1,082,756.7780
E = 539,457.4934
ELEV. = 545.3780'

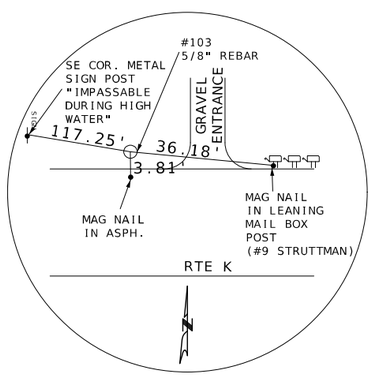

CP #103
STA. 534+25.16 - 12.68' LT
N = 1,082,732.2460
E = 539,789.2795
ELEV. = 568.8030'

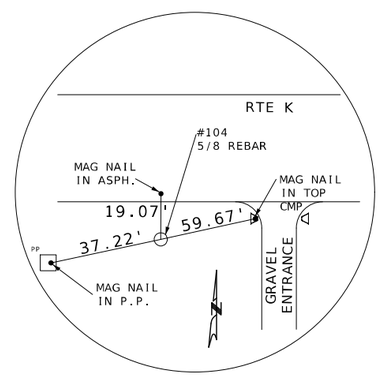

CP #104
STA. 538+29.52 - 28.61' RT
N = 1,082,621.9040
E = 540,182.8135
ELEV. = 538.3110'

STATE OF MISSOURI
ZACHARY S. WALKER
NUMBER
PE-2010000877
PROFESSIONAL ENGINEER

ZACHARY S. WALKER - CIVIL
MO-PE-2010000877

DATE PREPARED	12/2/2024
ROUTE	K
STATE	MO
DISTRICT	NE
SHEET NO.	6
COUNTY	MONTGOMERY
JOB NO.	JNE0154
CONTRACT ID.	
PROJECT NO.	
BRIDGE NO.	

DATE	DESCRIPTION

MISSOURI HIGHWAYS AND TRANSPORTATION COMMISSION

105 WEST CAPITOL
JEFFERSON CITY, MO 65102
1-888-ASK-MODOT (1-888-275-6636)

REFERENCE POINTS
SHEET 1 OF 1

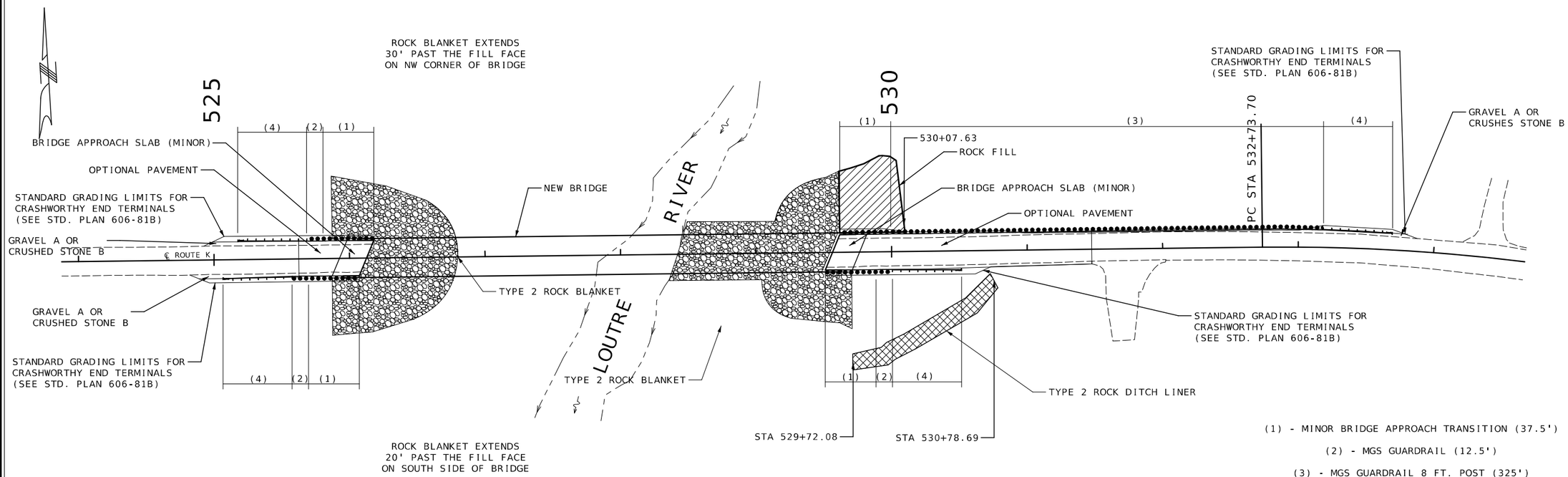

GUARDRAIL AND ROCK BLANKET

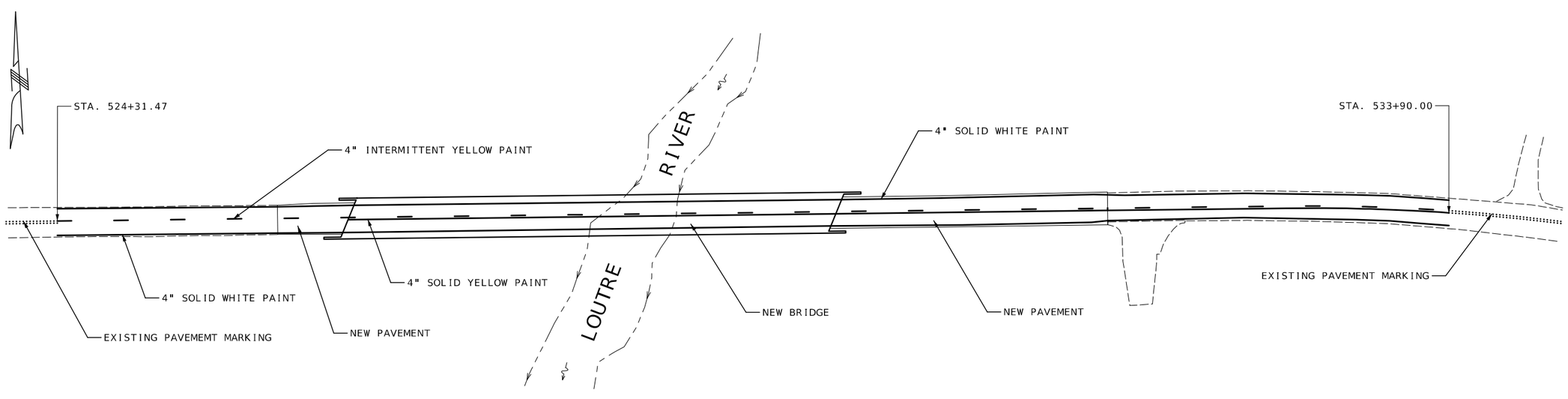

PAVEMENT MARKING

STATE OF MISSOURI
ZACHARY S. WALKER
NUMBER
PE-2010000877
PROFESSIONAL ENGINEER

ZACHARY S. WALKER - CIVIL
MO-PE-2010000877

DATE PREPARED	12/2/2024
ROUTE	K
STATE	MO
DISTRICT	NE
SHEET NO.	7
COUNTY	MONTGOMERY
JOB NO.	JNE0154
CONTRACT ID.	
PROJECT NO.	
BRIDGE NO.	

DATE	DESCRIPTION

MISSOURI HIGHWAYS AND TRANSPORTATION COMMISSION

105 WEST CAPITOL
JEFFERSON CITY, MO 65102
1-888-ASK-MODOT (1-888-275-6636)

SPECIAL SHEET
GUARDRAIL
ROCK BLANKET
PAVEMENT MARKING
1 OF 1

SPECIAL 48A 48B

PRE-CLOSURE SIGNAGE AT BRIDGE WITH PLAQUES (TO BE RELOCATED)

SPECIAL 48A

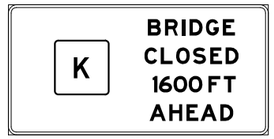

SPECIAL 48B

POST-CLOSURE
RELOCATED SIGNS 48 WITHOUT PLAQUES, MAINTAIN FOR THE DURATION OF THE CLOSURE

SEE SHEET 9 FOR SPECIAL SIGN DETAILS

W020-3 20A

W020-3 20B

R11-2 29

R11-4 61

NOTES:

PLACE ALL SIGNS AND DEVICES AS SHOWN. ADJUST SPACING AND LOCATION AS NEEDED FOR FIELD CONDITIONS, AS DIRECTED BY THE ENGINEER.

✳ LOCATE SIGNS 100' FROM INTERSECTION UNLESS OTHERWISE INSTRUCTED BY THE ENGINEER.

USE IN PLACE ALL SIGNS WHICH DO NOT CONFLICT WITH THIS PLAN. COVER OR REMOVE CONFLICTING SIGNS.

PLACE SIGNS 48 AS SHOWN AT LEAST TWO WEEKS IN ADVANCE OF THE ROAD CLOSURE.

AT THE TIME OF CLOSURE, RELOCATE SIGNS 48 TO ROUTE 19 AND ROUTE P AND REMOVE THE MONTH AND DATE PLAQUES AS SHOWN.

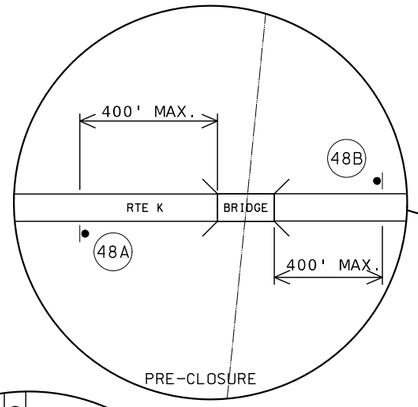

PRE-CLOSURE

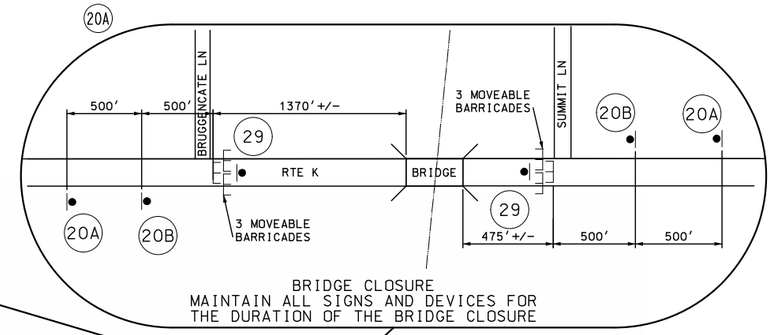

BRIDGE CLOSURE
MAINTAIN ALL SIGNS AND DEVICES FOR THE DURATION OF THE BRIDGE CLOSURE

TRAFFIC CONTROL LEGEND

- ● SIGN (SINGLE SIDED)
- ■ CHANNELIZER
- E TYPE III MOVABLE BARRICADE

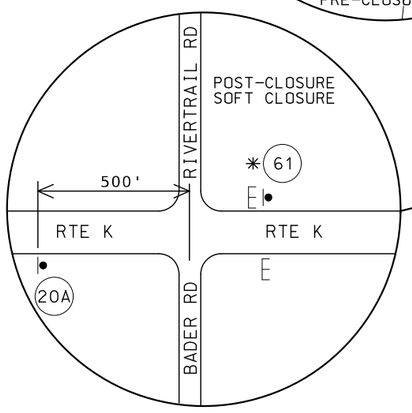

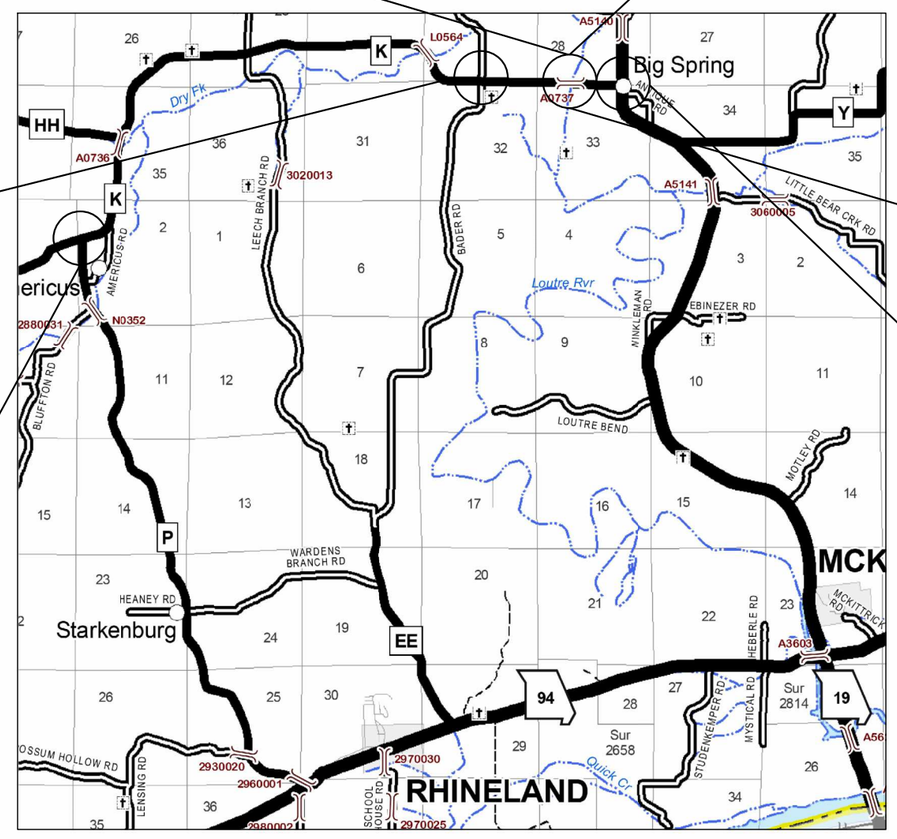

1 ½ 0 1 2 3 4
SCALE IN MILES

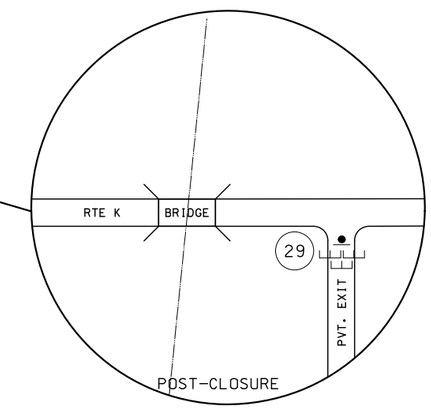

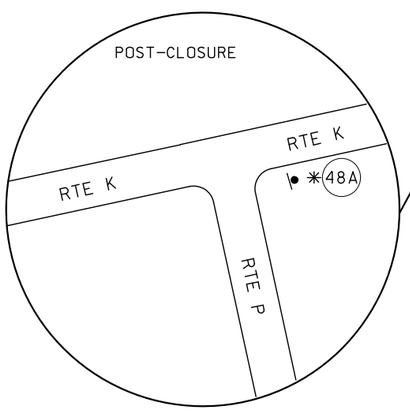

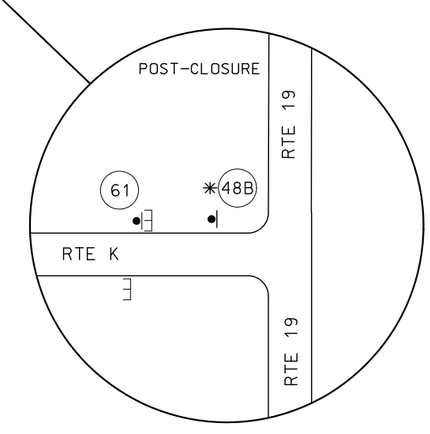

STATE OF MISSOURI
ZACHARY S. WALKER
NUMBER PE-2010000877
PROFESSIONAL ENGINEER
12/02/2024 3:22:18 PM
ZACHARY S. WALKER - CIVIL
MO-PE-2010000877

DATE PREPARED	12/2/2024
ROUTE	K
STATE	MO
DISTRICT	NE
SHEET NO.	8
COUNTY	MONTGOMERY
JOB NO.	JNE0154
CONTRACT ID.	
PROJECT NO.	
BRIDGE NO.	

DESCRIPTION

DATE

MISSOURI HIGHWAYS AND TRANSPORTATION COMMISSION

105 WEST CAPITOL
JEFFERSON CITY, MO 65102
1-888-ASK-MODOT (1-888-275-6636)

TRAFFIC CONTROL
SHEET 1 OF 2

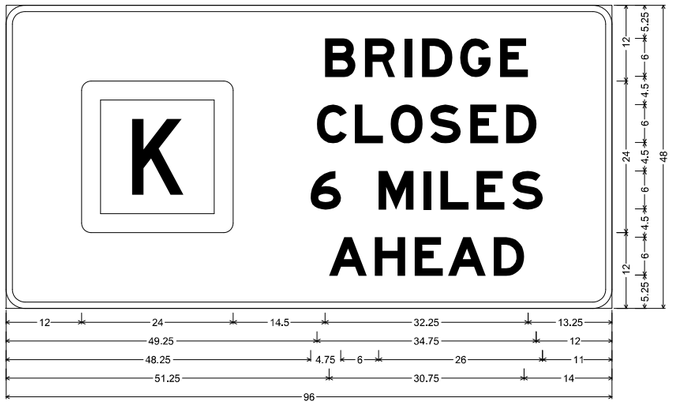

MO4-13 SHF-FLAT SHEET FLUORESCENT;
3.000" Radius, 1.000" Border, Black on, Orange;
"BRIDGE", E Mod; "CLOSED", E Mod; "6 MILES", E Mod; "AHEAD", E Mod;
Table of letter and object lefts

B 12.000	B 50.500	R 56.875	I 63.125	D 65.875	G 71.875	E 78.250
C 49.250	L 55.250	O 61.000	S 67.250	E 73.500	D 79.250	
6 48.250	M 59.000	I 66.125	L 68.875	E 74.500	S 80.250	
A 51.250	H 58.375	E 64.750	A 70.000	D 77.250		

55A

POST-CLOSURE
(RELOCATED SIGN
W/O PLAQUES)
(NO DIRECT PAY)

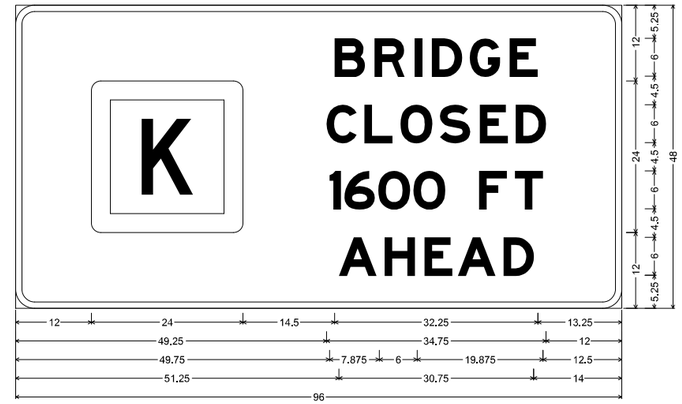

MO4-13 SHF-FLAT SHEET FLUORESCENT;
3.000" Radius, 1.000" Border, Black on, Orange;
"BRIDGE", E Mod; "CLOSED", E Mod; "1600 FT", E Mod; "AHEAD", E Mod;
Table of letter and object lefts

B 12.000	B 50.500	R 56.875	I 63.125	D 65.875	G 71.875	E 78.250
C 49.250	L 55.250	O 61.000	S 67.250	E 73.500	D 79.250	
1600 49.750	63.625	F 70.625	T 73.375	79.125		
A 51.250	H 58.375	E 64.750	A 70.000	D 77.250		

55B

POST-CLOSURE
(RELOCATED SIGN
W/O PLAQUES)
(NO DIRECT PAY)

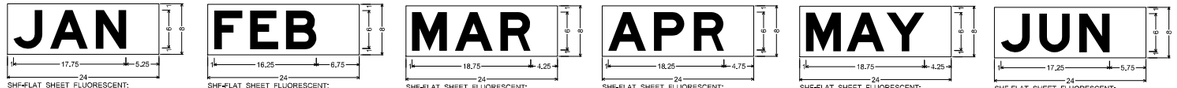

SHF-FLAT SHEET FLUORESCENT;
No border, Black on Orange;
[JAN] E Mod;
Table of letter and object lefts.

J 1.000	A 6.750	N 14.000

SHF-FLAT SHEET FLUORESCENT;
No border, Black on Orange;
[FEB] E Mod;
Table of letter and object lefts.

F 1.000	E 6.750	B 12.375

SHF-FLAT SHEET FLUORESCENT;
No border, Black on Orange;
[MAR] E Mod;
Table of letter and object lefts.

M 1.000	A 7.750	R 15.000

SHF-FLAT SHEET FLUORESCENT;
No border, Black on Orange;
[APR] E Mod;
Table of letter and object lefts.

A 1.000	P 8.250	R 14.500

SHF-FLAT SHEET FLUORESCENT;
No border, Black on Orange;
[MAY] E Mod 75% spacing;
Table of letter and object lefts.

M 1.000	A 7.500	Y 13.750

SHF-FLAT SHEET FLUORESCENT;
No border, Black on Orange;
[JUN] E Mod;
Table of letter and object lefts.

J 1.000	U 7.125	N 13.375

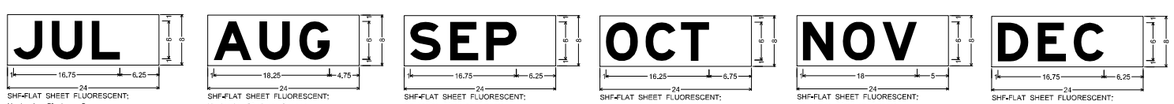

SHF-FLAT SHEET FLUORESCENT;
No border, Black on Orange;
[JUL] E Mod;
Table of letter and object lefts.

J 1.000	U 7.000	L 13.375

SHF-FLAT SHEET FLUORESCENT;
No border, Black on Orange;
[AUG] E Mod;
Table of letter and object lefts.

A 1.000	U 8.250	G 14.500

SHF-FLAT SHEET FLUORESCENT;
No border, Black on Orange;
[SEP] E Mod;
Table of letter and object lefts.

S 1.000	E 7.250	P 13.000

SHF-FLAT SHEET FLUORESCENT;
No border, Black on Orange;
[OCT] E Mod;
Table of letter and object lefts.

O 1.000	C 7.250	T 12.875

SHF-FLAT SHEET FLUORESCENT;
No border, Black on Orange;
[NOV] E Mod;
Table of letter and object lefts.

N 1.000	O 7.250	V 13.500

SHF-FLAT SHEET FLUORESCENT;
No border, Black on Orange;
[DEC] E Mod;
Table of letter and object lefts.

D 1.000	E 7.250	C 13.000

SHF-FLAT SHEET FLUORESCENT;
No border, Black on Orange;
[0] E Mod;
Table of letter and object lefts.

0 1.500

SHF-FLAT SHEET FLUORESCENT;
No border, Black on Orange;
[1] E Mod;
Table of letter and object lefts.

1 3.125

SHF-FLAT SHEET FLUORESCENT;
No border, Black on Orange;
[2] E Mod;
Table of letter and object lefts.

2 1.625

SHF-FLAT SHEET FLUORESCENT;
No border, Black on Orange;
[3] E Mod;
Table of letter and object lefts.

3 1.625

SHF-FLAT SHEET FLUORESCENT;
No border, Black on Orange;
[4] E Mod;
Table of letter and object lefts.

4 1.250

SHF-FLAT SHEET FLUORESCENT;
No border, Black on Orange;
[5] E Mod;
Table of letter and object lefts.

5 1.625

SHF-FLAT SHEET FLUORESCENT;
No border, Black on Orange;
[6] E Mod;
Table of letter and object lefts.

6 1.625

SHF-FLAT SHEET FLUORESCENT;
No border, Black on Orange;
[7] E Mod;
Table of letter and object lefts.

7 1.625

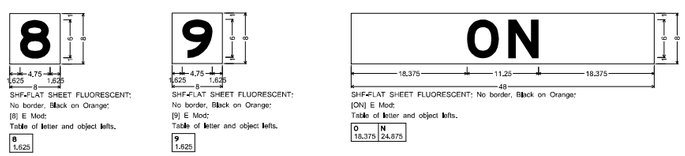

SHF-FLAT SHEET FLUORESCENT;
No border, Black on Orange;
[8] E Mod;
Table of letter and object lefts.

8 1.625

SHF-FLAT SHEET FLUORESCENT;
No border, Black on Orange;
[9] E Mod;
Table of letter and object lefts.

9 1.625

SHF-FLAT SHEET FLUORESCENT; No border, Black on Orange;
[ON] E Mod;
Table of letter and object lefts.

O 18.375	N 24.875

STATE OF MISSOURI
ZACHARY S. WALKER
NUMBER
PE-2010000877
PROFESSIONAL ENGINEER

12/02/2024 3:22:16 PM
ZACHARY S. WALKER - CIVIL
MO-PE-2010000877

DATE PREPARED	
12/2/2024	
ROUTE K	STATE MO
DISTRICT NE	SHEET NO. 9
COUNTY MONTGOMERY	
JOB NO. JNE0154	
CONTRACT ID.	
PROJECT NO.	
BRIDGE NO.	

DESCRIPTION	DATE

MISSOURI HIGHWAYS AND TRANSPORTATION COMMISSION

105 WEST CAPITOL
JEFFERSON CITY, MO 65102
1-888-ASK-MODOT (1-888-275-6636)

TRAFFIC CONTROL
(SPEACIAL SIGN DESIGN)
SHEET 2 OF 2

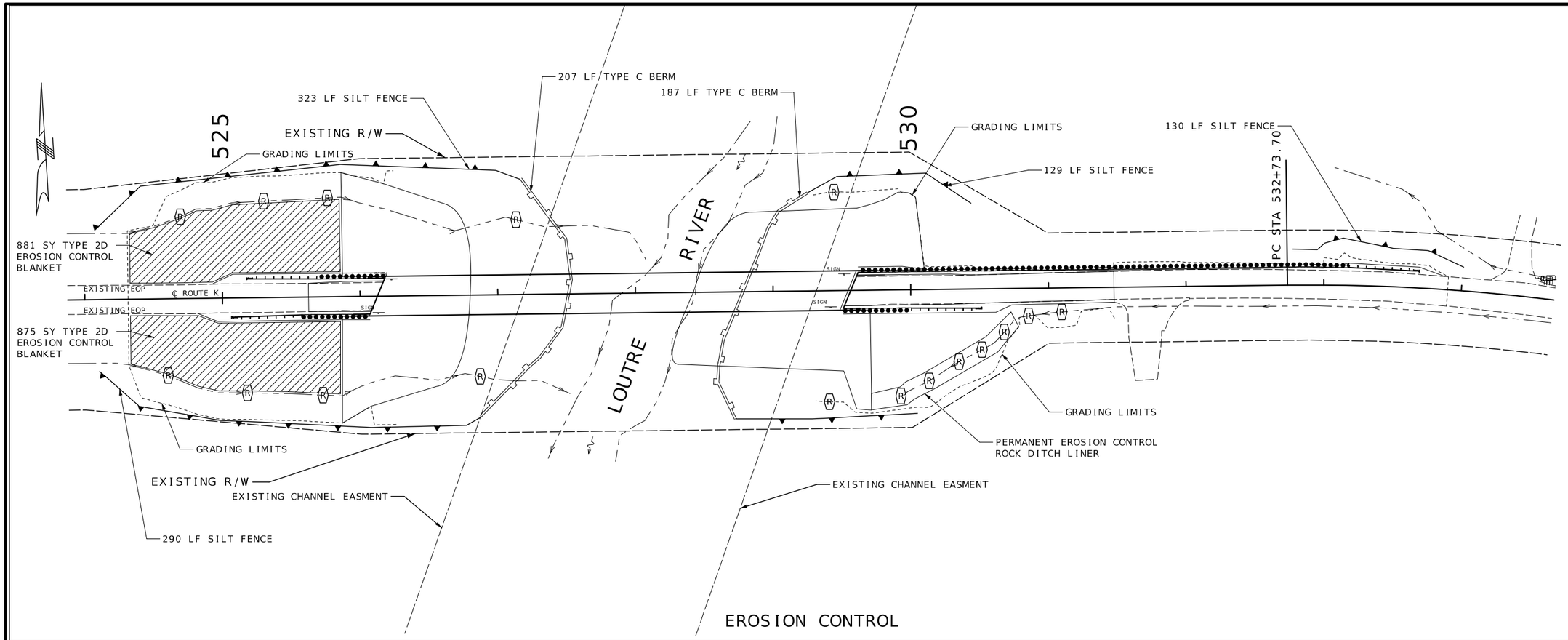

EROSION CONTROL

GENERAL NOTES:

CONTRACTOR SHALL FURNISH, INSTALL, MAINTAIN, AND REMOVE EROSION CONTROL DEVICES IN ACCORDANCE WITH MISSOURI STANDARD SEPCIFICATIONS FOR HIGHWAY CONSTRUCTION SECTION 806. ALL WORK TO BE IN ACCORDANCE WITH THE MISSOURI STATE OPERATING PERMIT FOR LAND DISTURBANCE AND THE STORMWATER POLLUTION PREVENTION PLAN (SWPPP). REFER TO MODOT ENGINEERING POLICY GUIDE (EPG).

INSTALLATION OF TEMPORARY EROSION CONTROL MEASURES SHALL COINCIDE WITH CLEARING AND GRUBBING OPERATIONS AND PRIOR TO ANY GRADING OPERATION.

LOCATE DEVICES AS SHOWN OR ADJUST TO SITE CONDITIONS AS DIRECTED BY THE ENGINEER.

IF SITE CONDITIONS DUE TO CONTRACTOR OPERATIONS DIFFER FROM THE TEMPORARY EROSION CONTROL PLAN, ADDITIONAL BEST MANAGEMENT PRECTICES(BMP) SHALL BE APPLIED AS APPROVED BY THE ENGINEER. ADDITIONAL TEMPORARY MEASURES SHALL BE USED TO CORRECT CONDITIONS THAT DEVELOP DURING CONSTRUCTION WHICH WERE NOT FORESEEN DURING THE DESIGN STAGE.

ALL PERMANENT EROSION CONTROL FEATURES SHALL BE INCORPORATED INTO THE PROJECT AT THE EARLIEST PRACTICAL TIME.

FIELD NOTES:

TEMPORARY EROSION CONTROL LEGEND

TEMPORARY BERM TYPE C

SILT FENCE

ROCK DITCH CHECK

TYPE 2D EROSION CONTROL BLANKET

STATE OF MISSOURI
ZACHARY S. WALKER
NUMBER
PE-2010000877
PROFESSIONAL ENGINEER

REVIEWED BY:
ZACHARY S. WALKER - CIVIL
MO-PE-2010000877

DATE PREPARED	
12/2/2024	
ROUTE	STATE
K	MO
DISTRICT	SHEET NO.
NE	10
COUNTY	
MONTGOMERY	
JOB NO.	
JNE0154	
CONTRACT ID.	
PROJECT NO.	
BRIDGE NO.	

DATE	DESCRIPTION

MISSOURI HIGHWAYS AND TRANSPORTATION COMMISSION

105 WEST CAPITOL
JEFFERSON CITY, MO 65102
1-888-ASK-MODOT (1-888-275-6636)

TEMPORARY EROSION CONTROL PLAN
SHEET 1 OF 1

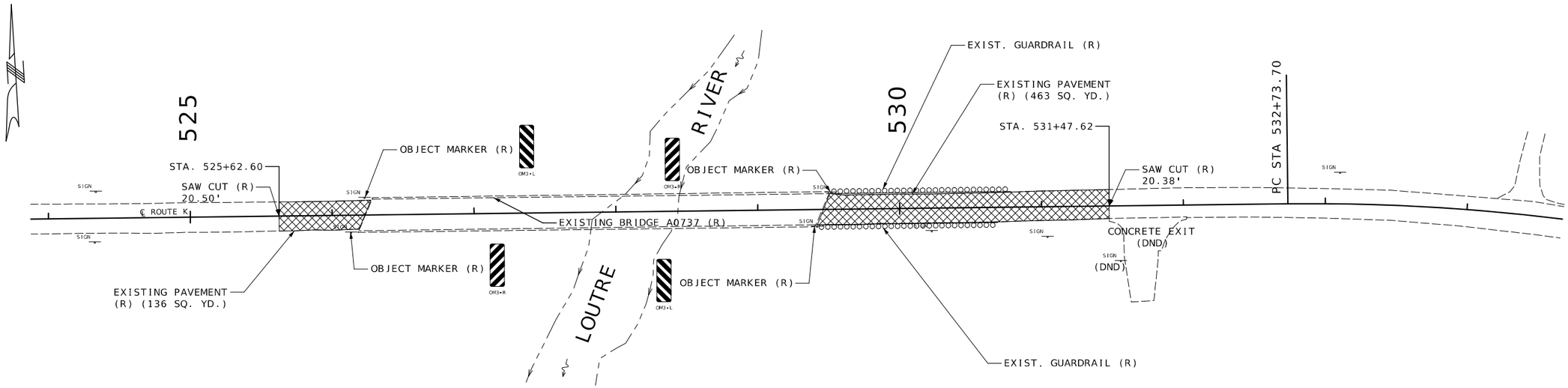

REMOVALS

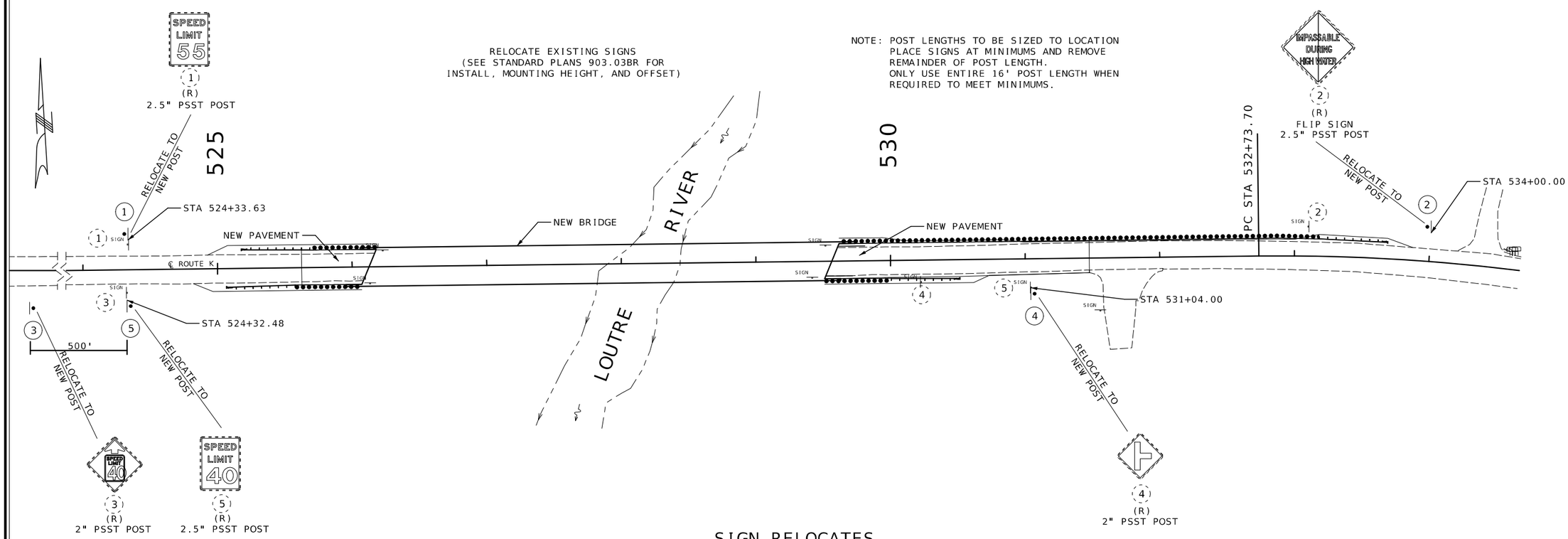

SIGN RELOCATES

STATE OF MISSOURI
ZACHARY S. WALKER
NUMBER
PE-2010000877
PROFESSIONAL ENGINEER

12/02/2024 3:24:19 PM
ZACHARY S. WALKER - CIVIL
MO-PE-2010000877

DATE PREPARED	
12/2/2024	
ROUTE: K	STATE: MO
DISTRICT: NE	SHEET NO.: 11
COUNTY: MONTGOMERY	
JOB NO.: JNE0154	
CONTRACT ID.	
PROJECT NO.	
BRIDGE NO.	

DATE	DESCRIPTION

MISSOURI HIGHWAYS AND TRANSPORTATION COMMISSION

105 WEST CAPITOL
JEFFERSON CITY, MO 65102
1-888-ASK-MODOT (1-888-275-6636)

SIGN SHEET
RELOCATES
REMOVALS
1 OF 1

SEC/SUR 28/33 TWP 47N RGE 5W

(105'- 130'- 105') PRESTRESSED CONCRETE NU-GIRDER SPANS

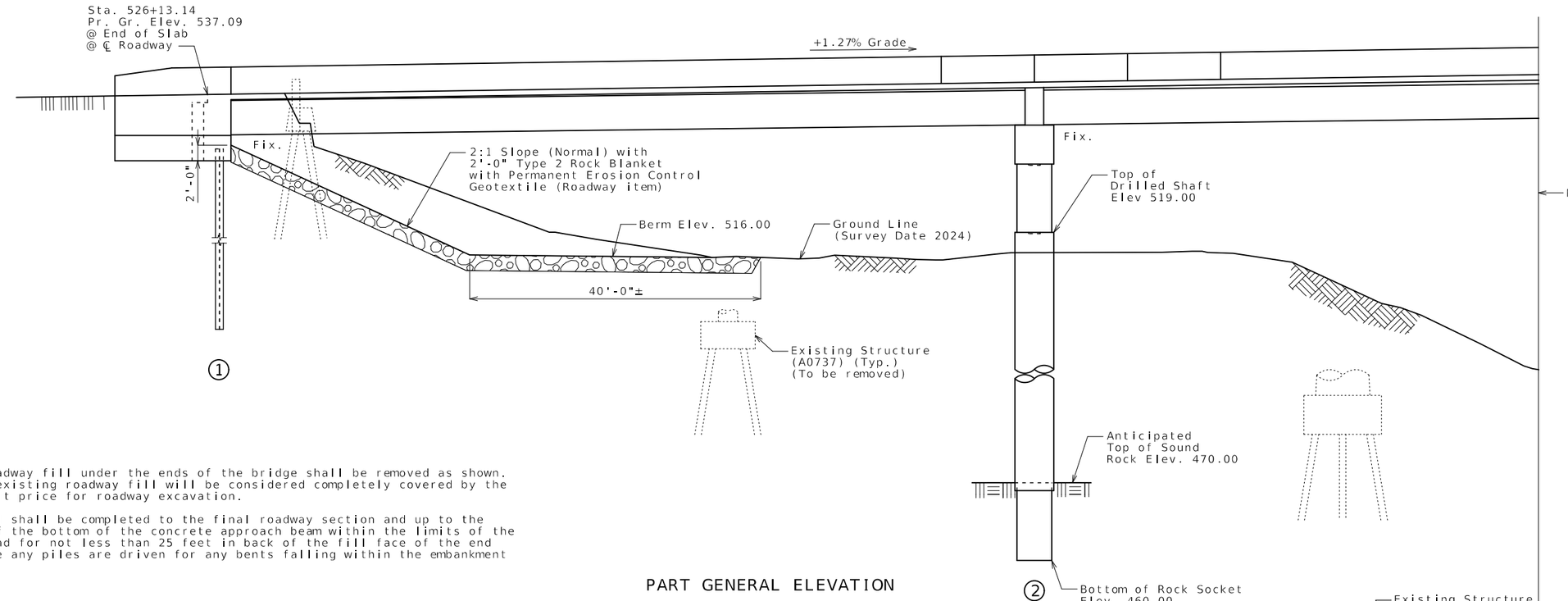

Notes:

Existing roadway fill under the ends of the bridge shall be removed as shown. Removal of existing roadway fill will be considered completely covered by the contract unit price for roadway excavation.

Roadway fill shall be completed to the final roadway section and up to the elevation of the bottom of the concrete approach beam within the limits of the structure and for not less than 25 feet in back of the fill face of the end bents before any piles are driven for any bents falling within the embankment section.

PART GENERAL ELEVATION

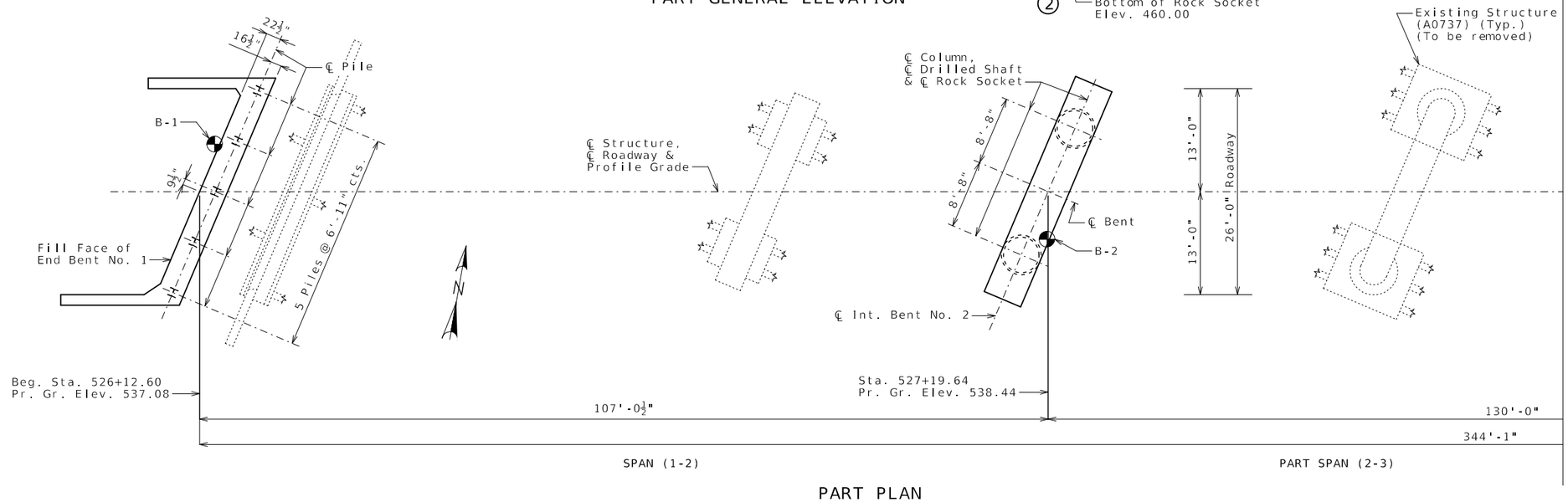

PART PLAN

Note: Work this sheet with Sheet No. 2.

B.M. 1 - CUT SQUARE W/ "X" IN MIDDLE ON SW WINGWALL
ON SW COR OF BRIDGE NO. A0737, EL. 537.60

BRIDGE: ROUTE K OVER LOUTRE RIVER

ROUTE K FROM ROUTE 19 TO ROUTE HH
ABOUT 0.4 MILE WEST OF ROUTE 19
BEGINNING STATION 526+12.60

Designed Oct. 2024
Detailed Nov. 2024
Checked Nov. 2024

Note: This drawing is not to scale. Follow dimensions.

STATE OF MISSOURI
TED S. KOESTER
NUMBER
PE-2013000591
PROFESSIONAL ENGINEER
12/13/2024 11:08:20 AM
TED S. KOESTER - CIVIL
MO-PE-2013000591

DATE PREPARED	12/13/2024
ROUTE	K
STATE	MO
DISTRICT	BR
SHEET NO.	1
COUNTY	MONTGOMERY
JOB NO.	JNE0154
CONTRACT ID.	
PROJECT NO.	
BRIDGE NO.	A9537

DESCRIPTION

DATE

MISSOURI HIGHWAYS AND TRANSPORTATION COMMISSION
105 WEST CAPITOL
JEFFERSON CITY, MO 65102
1-888-ASK-MODOT (1-888-275-6636)

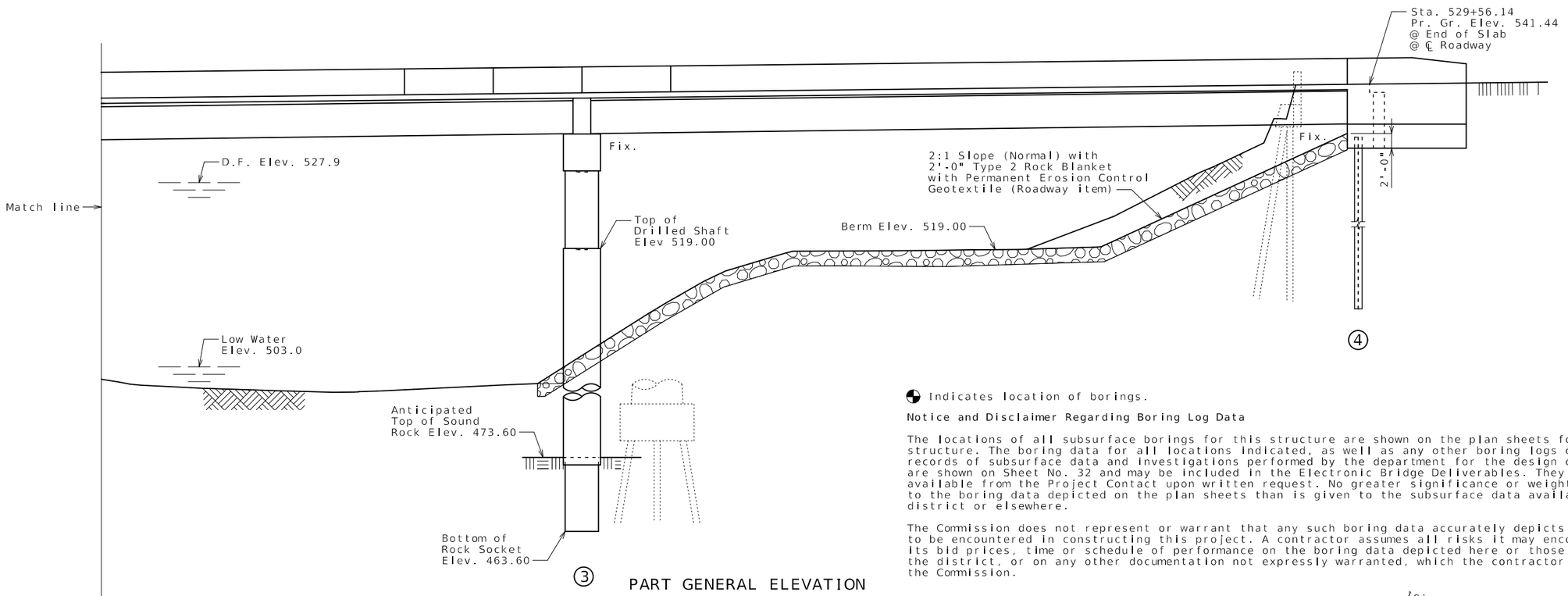

PART GENERAL ELEVATION

Indicates location of borings.

Notice and Disclaimer Regarding Boring Log Data

The locations of all subsurface borings for this structure are shown on the plan sheets for this structure. The boring data for all locations indicated, as well as any other boring logs or other factual records of subsurface data and investigations performed by the department for the design of the project, are shown on Sheet No. 32 and may be included in the Electronic Bridge Deliverables. They will also be available from the Project Contact upon written request. No greater significance or weight should be given to the boring data depicted on the plan sheets than is given to the subsurface data available from the district or elsewhere.

The Commission does not represent or warrant that any such boring data accurately depicts the conditions to be encountered in constructing this project. A contractor assumes all risks it may encounter in basing its bid prices, time or schedule of performance on the boring data depicted here or those available from the district, or on any other documentation not expressly warranted, which the contractor may obtain from the Commission.

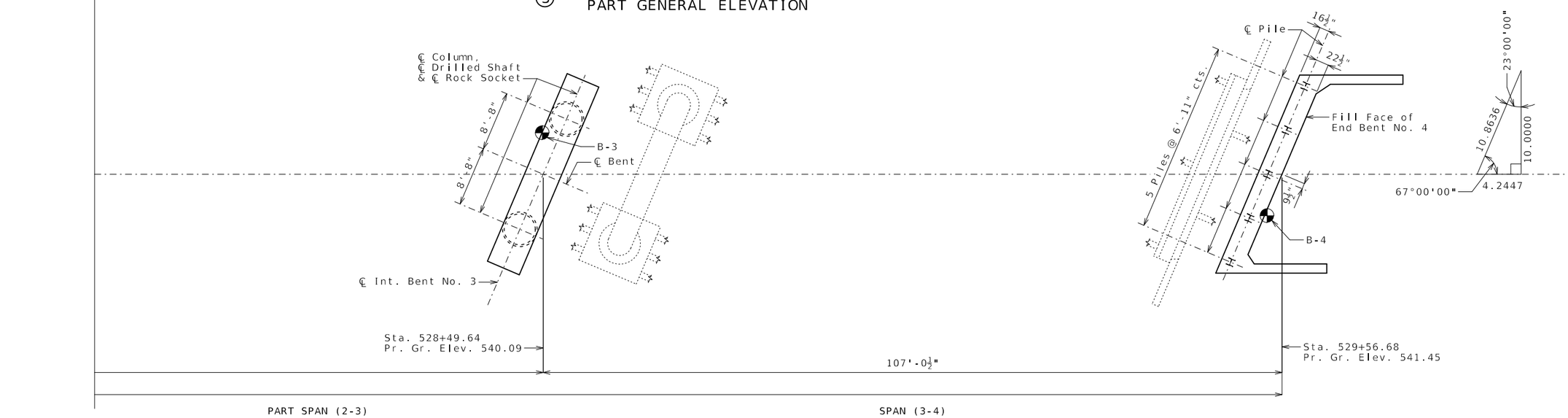

PART PLAN

Note: Work this sheet with Sheet No. 1.

STATE OF MISSOURI
TED S. KOESTER
NUMBER
PE-2013000591
PROFESSIONAL ENGINEER
12/13/2024 11:08:51 AM
TED S. KOESTER - CIVIL
MO-PE-2013000591

DATE PREPARED	12/13/2024
ROUTE	K
STATE	MO
DISTRICT	BR
SHEET NO.	2
COUNTY	MONTGOMERY
JOB NO.	JNE0154
CONTRACT ID.	
PROJECT NO.	
BRIDGE NO.	A9537

DESCRIPTION

DATE

MISSOURI HIGHWAYS AND TRANSPORTATION COMMISSION
105 WEST CAPITOL
JEFFERSON CITY, MO 65102
1-888-ASK-MODOT (1-888-275-6636)

Detailed Nov. 2024
Checked Nov. 2024

Note: This drawing is not to scale. Follow dimensions.

General Notes:

Design Specifications:
2020 AASHTO LRFD Bridge Design Specifications (9th Ed.)
2011 AASHTO Guide Specifications for LRFD Seismic Bridge Design (2nd Ed.) and 2014 Interim Revisions (Seismic Details)
Seismic Design Category = B

Design Loading:
Vehicular = HL-93
Future Wearing Surface = 35 lb/sf
Earth = 120 lb/cf
Equivalent Fluid Pressure = 45 lb/cf (Min.)
Superstructure: Simply-Supported, Non-Composite for dead load.
Continuous Composite for live load.

Design Unit Stresses:

Class B Concrete (Substructure)	f'c = 3,000 psi
Class B-2 Concrete (Drilled Shafts & Rock Sockets)	f'c = 4,000 psi
Class B-2 Concrete (Superstructure, except Prestressed Girder and Barrier)	f'c = 4,000 psi
Class B-1 Concrete (Barrier)	f'c = 4,000 psi
Reinforcing Steel (ASTM A706 Grade 60)	fy = 60,000 psi
Structural Steel HP Pile (ASTM A709 Grade 50)	fy = 50,000 psi

For prestressed girder stresses, see Sheets No. 13 thru 16.

For precast prestressed panel stresses, see Sheet No. 19.

Neoprene Pads:
Neoprene bearing pads shall be 60 durometer and shall be in accordance with Sec 716.

Joint Filler:
All joint filler shall be in accordance with Sec 1057 for preformed sponge rubber expansion and partition filler, except as noted.

Reinforcing Steel:
Minimum clearance to reinforcing steel shall be 1 1/2", unless otherwise shown.

Traffic Handling:
Structure to be closed during construction. Traffic to be maintained on other routes. See roadway plans for traffic control.

Miscellaneous:
MoDOT Construction personnel will indicate the type of joint filler option used under the precast panels for this structure:

☐ Constant Joint Filler
☐ Variable Joint Filler

Estimated Quantities

Item		Substr.	Superstr.	Total
Class 1 Excavation	cu. yard	100		100
Removal of Bridges (A0737)	lump sum			1
Bridge Approach Slab (Minor)	sq. yard			117
Drilled Shafts (5 ft. 0 in. Dia.)	linear foot	188.8		188.8
Rock Sockets (4 ft. 6 in. Dia.)	linear foot	40.0		40.0
Video Camera Inspection	each	4		4
Foundation Inspection Holes	linear foot	80.0		80.0
Sonic Logging Testing	each	4		4
Galvanized Structural Steel Piles (12 in.)	linear foot	540		540
Pile Point Reinforcement	each	10		10
Class B Concrete (Substructure)	cu. yard	112.3		112.3
Type D Barrier	linear foot		736	736
Slab on Concrete NU-Girder	sq. yard		1093	1093
NU 53, Prestressed Concrete NU-Girder	linear foot		1359	1359
Reinforcing Steel (Bridges)	pound	31,640		31,640
Steel Intermediate Diaphragm for P/S Concrete Girders	each		18	18
Slab Drain	each		12	12
Vertical Drain at End Bents	each			2
Plain Neoprene Bearing Pad	each		8	8
Laminated Neoprene Bearing Pad	each		16	16

All concrete above the construction joint in the end bents is included in the Estimated Quantities for Slab on Concrete NU-Girder.

All reinforcement in the end bents is included in the Estimated Quantities for Slab on Concrete NU-Girder.

All reinforcement in the intermediate bent concrete diaphragm except reinforcement embedded in the beam cap is included in the Estimated Quantities for Slab on Concrete NU-Girder.

All concrete above the intermediate beam cap is included in the Estimated Quantities for Slab on Concrete NU-Girder.

Estimated Quantities for Slab on Concrete NU-Girder

Item		Total
Class B-2 Concrete	cu. yard	343
Reinforcing Steel (Epoxy Coated)	pound	87,700

The table of Estimated Quantities for Slab on Concrete NU-Girder represents the quantities used by the State in preparing the cost estimate for concrete slabs. The area of the concrete slab will be measured to the nearest square yard longitudinally from end of slab to end of slab and transversely from out to out of bridge slab (or with the horizontal dimensions as shown on the plan of slab). Payment for prestressed panels, conventional forms, all concrete, and epoxy coated reinforcing steel will be considered completely covered by the contract unit price for the slab. Variations may be encountered in the estimated quantities but the variations cannot be used for an adjustment in the contract unit price.

Method of forming the slab shall be as shown on the plans and in accordance with Sec 703. All hardware for forming the slab to be left in place as a permanent part of the structure shall be coated in accordance with ASTM A123 or ASTM B633 with a thickness class SC 4 and a finish type I, II or III.

The Estimated Quantities for Slab on Concrete NU-Girder are based on skewed precast prestressed end panels.

Class B-2 Concrete quantity is based on minimum top flange thickness and minimum joint material thickness.

The prestressed panel quantities are not included in the table of Estimated Quantities for Slab on Concrete NU-Girder.

Foundation Data

Type	Design Data		Bent Number 1	2	3	4
Load Bearing Pile	Pile Type and Size		HP 12x53	--	--	HP 12x53
	Number	ea	5	--	--	5
	Approximate Length Per Each	ft	59	--	--	49
	Pile Point Reinforcement	ea	All	--	--	All
	Min. Galvanized Penetration (Elev.)	ft	508.0	--	--	Full length
	Pile Driving Verification Method		DF	--	--	DF
	Resistance Factor		0.40	--	--	0.40
	Minimum Nominal Axial Compressive Resistance	kip	580	--	--	581
Rock Socket	Number	ea	--	2	2	--
	Foundation Material		--	Strong Rock	Strong Rock	--
	Elevation Range	ft	--	467.0-438.6	470.6-449.9	--
	Minimum Nominal Axial Compressive Resistance (Side Resistance)	ksf	--	30.5	30.5	--
	Minimum Nominal Axial Compressive Resistance (Tip Resistance)	ksf	--	262.5	262.5	--

Hydrologic Data

Drainage Area = 332 mi^2
Design Flood Frequency = 50 years
Design Flood Discharge = 27,000 cfs
Design Flood (D.F.) Elevation = 527.9
Base Flood (100-year)
Base Flood Elevation = 529.0
Base Flood Discharge = 30,700 cfs
Estimated Backwater = 0.0 ft
Average Velocity thru Opening = 1.9 ft/s
Freeboard (50-year)
Freeboard = 3.5 ft
Roadway Overtopping
Overtopping Flood Discharge = 18,200 cfs
Overtopping Flood Frequency = 10 years
Overtopping Flood Elevation = 525.9

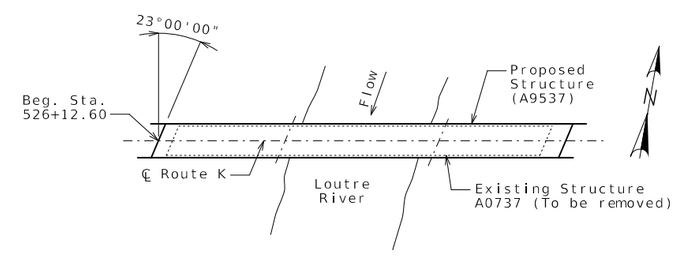

LOCATION SKETCH

Foundation Data Notes:

DF = FHWA-modified Gates Dynamic Pile Formula

Load Bearing Pile:

Minimum Nominal Axial Compressive Resistance = $\frac{\text{Maximum Factored Loads}}{\text{Resistance Factor}}$

Rock Socket (Drilled Shafts):

Minimum Nominal Axial Compressive Resistance (Side Resistance + Tip Resistance) = $\frac{\text{Maximum Factored Loads}}{\text{Resistance Factors}}$

All piles shall be galvanized down to the minimum galvanized penetration (elevation).

Pile point reinforcement need not be galvanized. Shop drawings will not be required for pile point reinforcement.

The contractor shall make every effort to achieve the minimum galvanized penetration (elevation) shown on the plans for all piles. Deviations in penetration less than 5 feet of the minimum will be considered acceptable provided the contractor makes the necessary corrections to ensure the minimum penetration is achieved on subsequent piles.

Detailed Nov. 2024
Checked Nov. 2024

Note: This drawing is not to scale. Follow dimensions.

STATE OF MISSOURI
TED S. KOESTER
NUMBER
PE-2013000591
PROFESSIONAL ENGINEER
12/13/2024 11:09:19 AM
TED S. KOESTER - CIVIL
MO-PE-2013000591

DATE PREPARED 12/13/2024

ROUTE	STATE
K	MO
DISTRICT	SHEET NO.
BR	3

COUNTY MONTGOMERY
JOB NO. JNE0154
CONTRACT ID.
PROJECT NO.
BRIDGE NO. A9537

DATE	DESCRIPTION

MISSOURI HIGHWAYS AND TRANSPORTATION COMMISSION
105 WEST CAPITOL
JEFFERSON CITY, MO 65102
1-888-ASK-MODOT (1-888-275-6636)

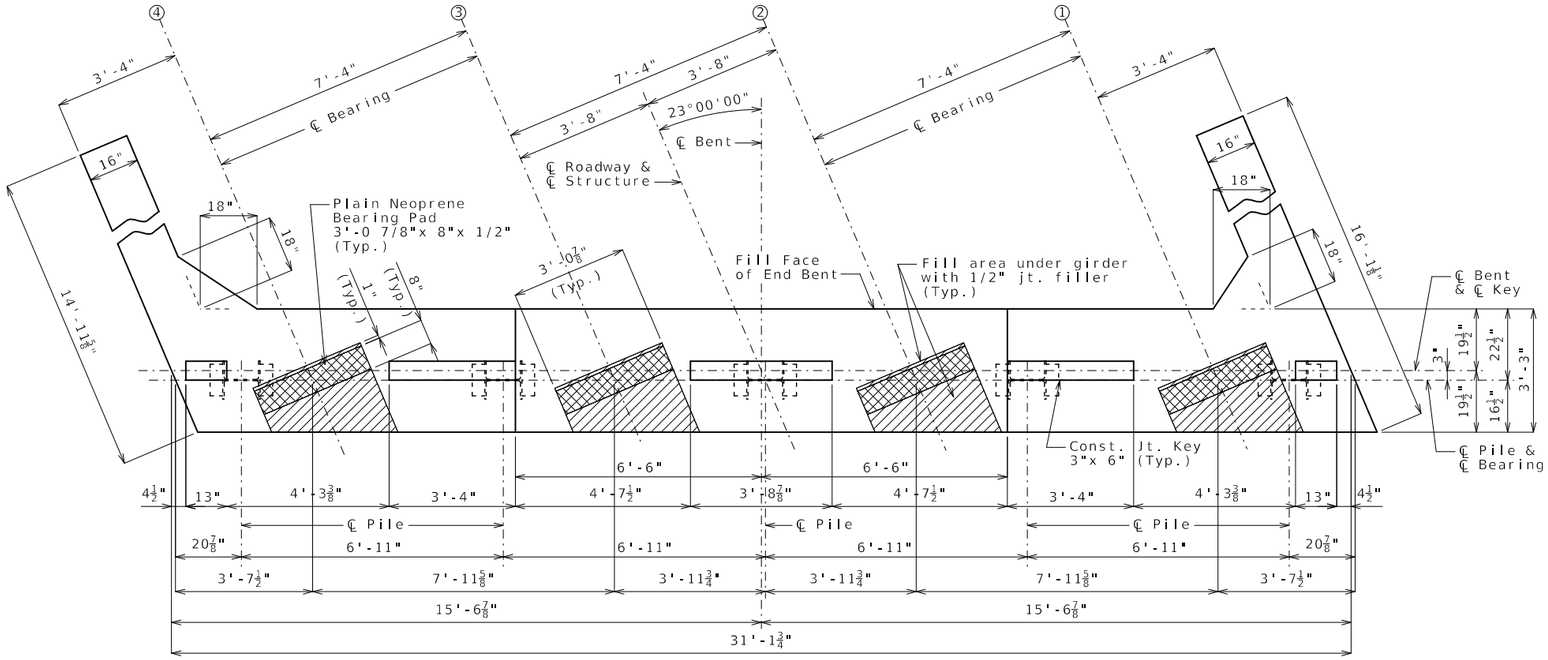

PLAN OF BEAM

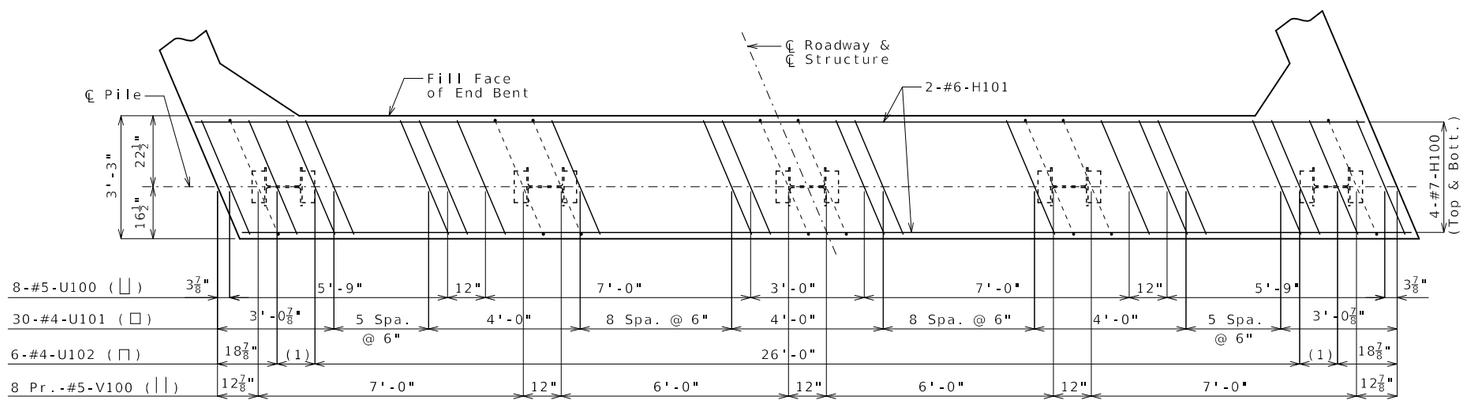

PLAN OF BEAM SHOWING REINFORCEMENT

Beam keys and steps not shown for clarity.

(1) 2 Spa. @ 6"

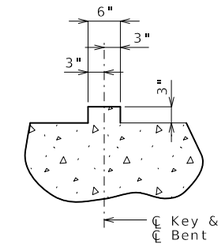

SECTION THRU KEY

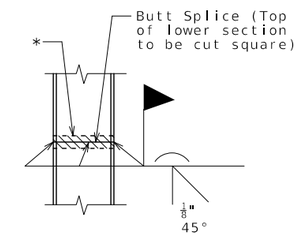

STEEL PILE SPLICE

(If required)

* Galvanizing material shall be omitted or removed one inch clear of weld locations in accordance with Sec 702.

Notes:

Work this sheet with Sheets No. 5 & 6.

The U bars and pairs V bars shall be placed parallel to the centerline of roadway.

Reinforcing steel shall be shifted to clear piles. U bars shall clear piles by at least 1 1/2 inch.

Substructure Quantity Table for Bent No. 1		
Item		Quantity
Class 1 Excavation	cu. yard	50
Galvanized Structural Steel Piles (12 in.)	linear foot	295
Pile Point Reinforcement	each	5
Class B Concrete (Substructure)	cu. yard	16.8

These quantities are included in the Estimated Quantities table on Sheet No. 3.

END BENT NO. 1

Detailed Nov. 2024
Checked Nov. 2024

Note: This drawing is not to scale. Follow dimensions.

STATE OF MISSOURI
TED S. KOESTER
NUMBER PE-2013000591
PROFESSIONAL ENGINEER
12/13/2024 11:09:49 AM
TED S. KOESTER - CIVIL
MO-PE-2013000591

DATE PREPARED	
12/13/2024	
ROUTE K	STATE MO
DISTRICT BR	SHEET NO. 4
COUNTY MONTGOMERY	
JOB NO. JNE0154	
CONTRACT ID.	
PROJECT NO.	
BRIDGE NO. A9537	

DESCRIPTION	DATE

MISSOURI HIGHWAYS AND TRANSPORTATION COMMISSION
105 WEST CAPITOL
JEFFERSON CITY, MO 65102
1-888-ASK-MODOT (1-888-275-6636)

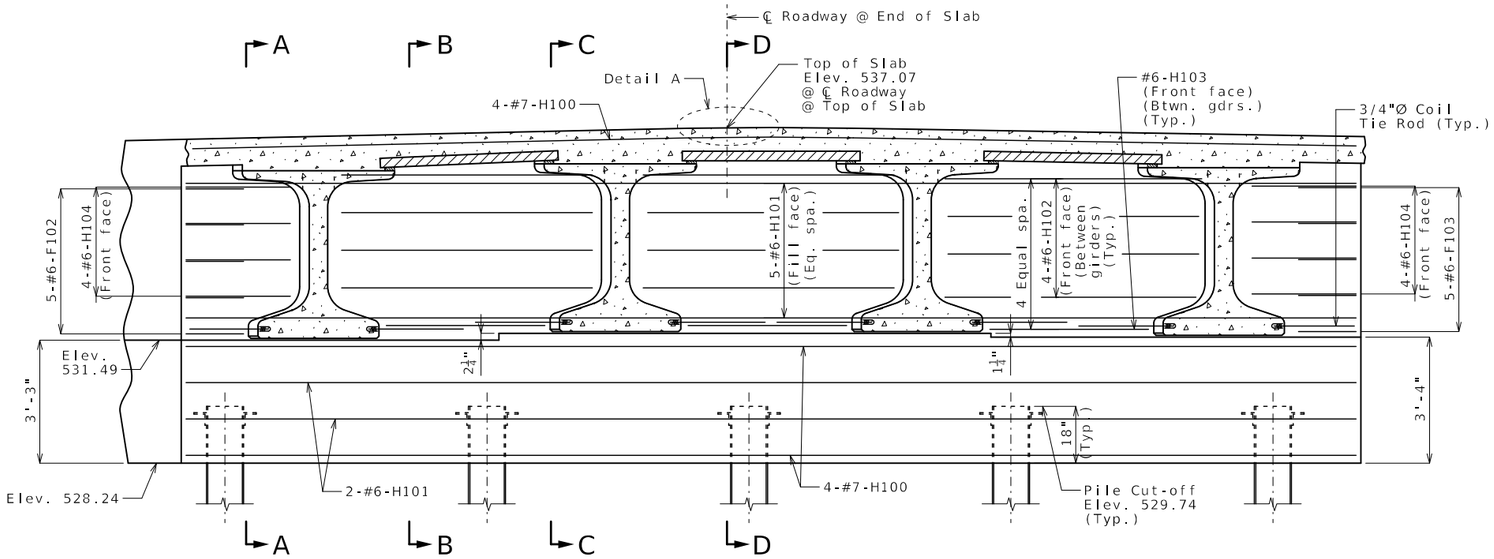

SECTION NEAR END BENT

Keys not shown for clarity.

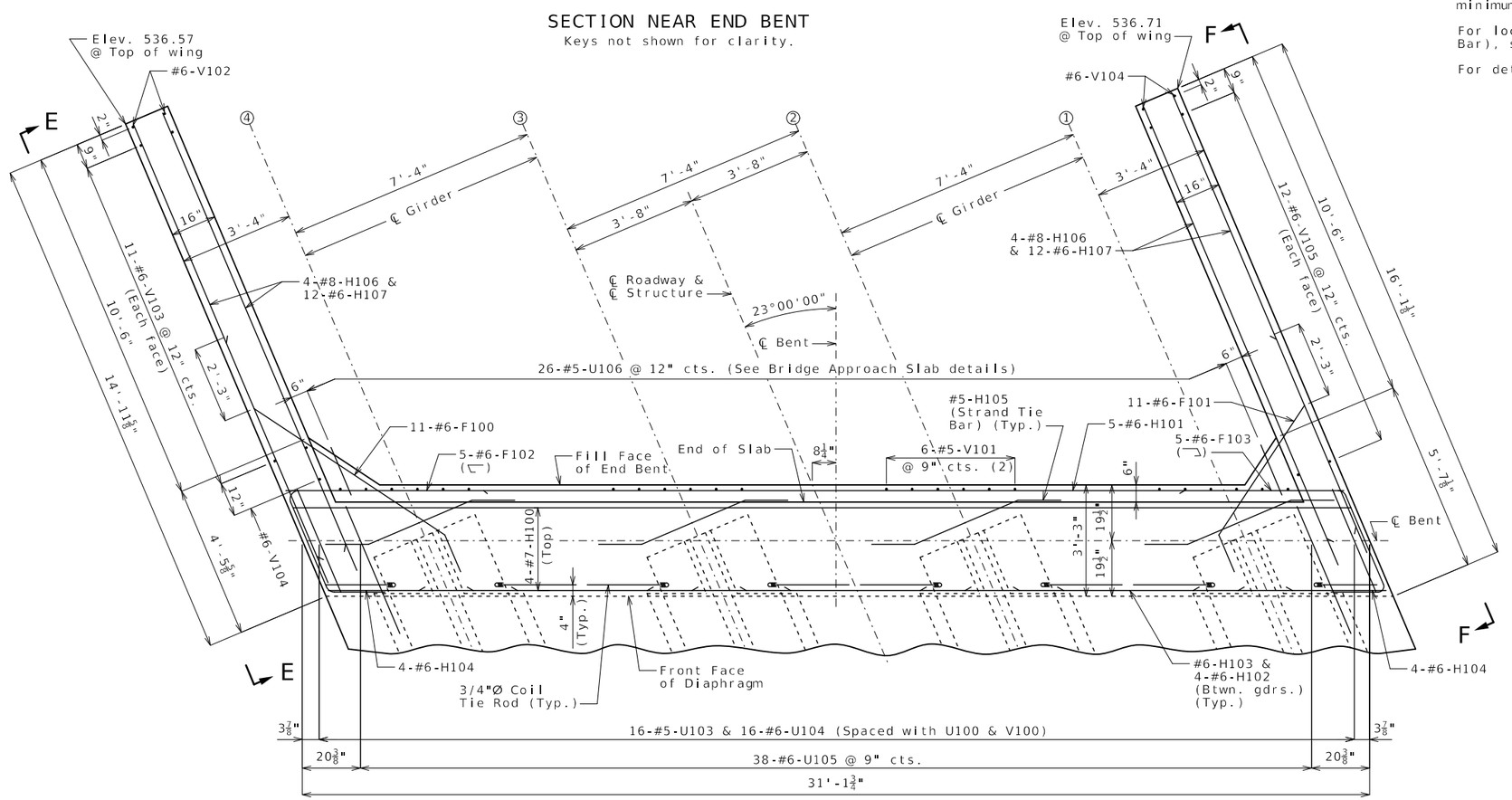

PART PLAN

(2) Centered behind girders (Typ.)

END BENT NO. 1

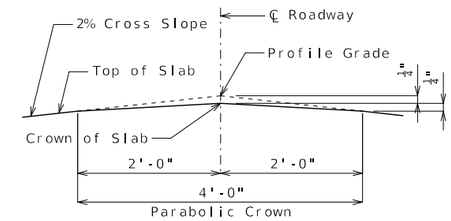

DETAIL A

Notes:

Work this sheet with Sheets No. 4 & 6.

The #6-F100 and #6-F101 bars shall be bent in the field to clear girders.

The U bars shall be placed parallel to centerline of roadway.

All concrete in the end bent above top of beam and below top of slab shall be Class B-2.

Strands at end of the girders shall be field bent or, if necessary, cut in field to maintain 1 1/2-inch minimum clearance to fill face of end bent.

For location of coil tie rods and #5-H105 (Strand Tie Bar), see Sheets No. 13 & 14.

For details of bridge approach slab, see Sheet No. 27.

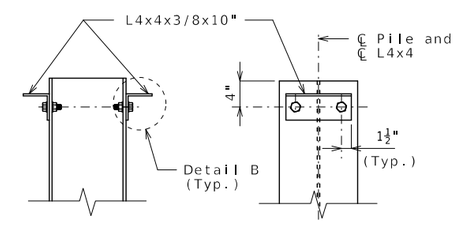

DETAILS OF HP PILE ANCHORS

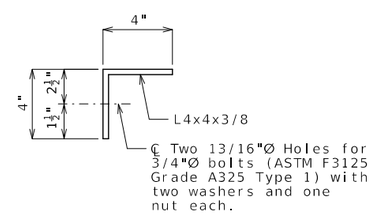

DETAIL B

Angles shall be coated with a minimum of two coats of non-aluminum epoxy mastic primer to provide a dry film thickness of 4 mils minimum, 8 mils maximum, or galvanized in accordance with Sec 1081. Bolts, washers and nuts shall be galvanized in accordance with AASHTO M 232 (ASTM A153), Class C.

STATE OF MISSOURI
TED S. KOESTER
NUMBER
PE-2013000591
PROFESSIONAL ENGINEER
12/13/2024 11:10:21 AM
TED S. KOESTER - CIVIL
MO-PE-2013000591

DATE PREPARED	12/13/2024
ROUTE	K
STATE	MO
DISTRICT	BR
SHEET NO.	5
COUNTY	MONTGOMERY
JOB NO.	JNE0154
CONTRACT ID.	
PROJECT NO.	
BRIDGE NO.	A9537

DATE	DESCRIPTION

MISSOURI HIGHWAYS AND TRANSPORTATION COMMISSION
105 WEST CAPITOL
JEFFERSON CITY, MO 65102
1-888-ASK-MODOT (1-888-275-6636)

Detailed Nov. 2024
Checked Nov. 2024

Note: This drawing is not to scale. Follow dimensions.

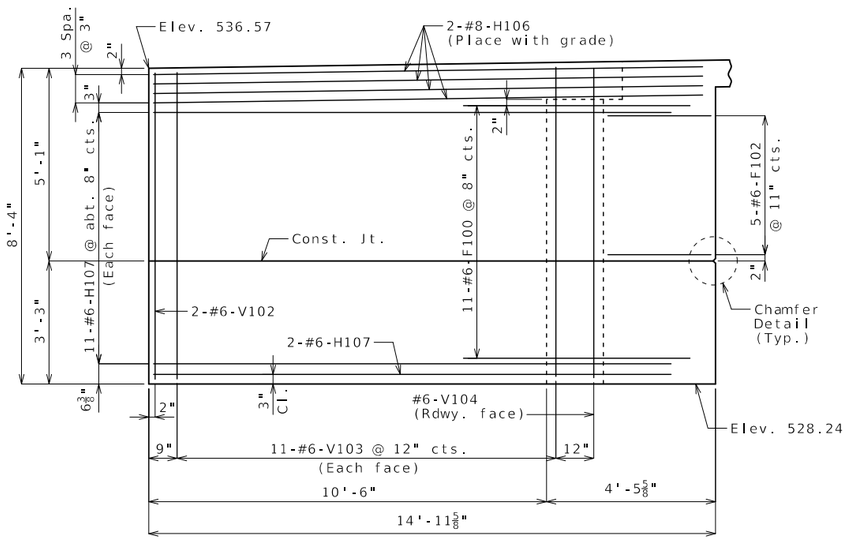

ELEVATION E-E

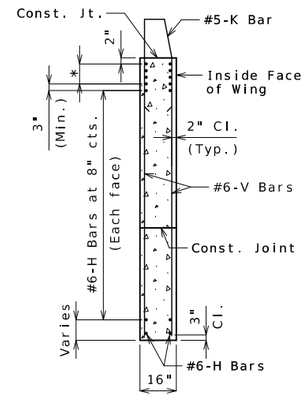

TYPICAL SECTION THRU WING

* #8-H Bars at 3" cts. (Each face)(Place with grade)

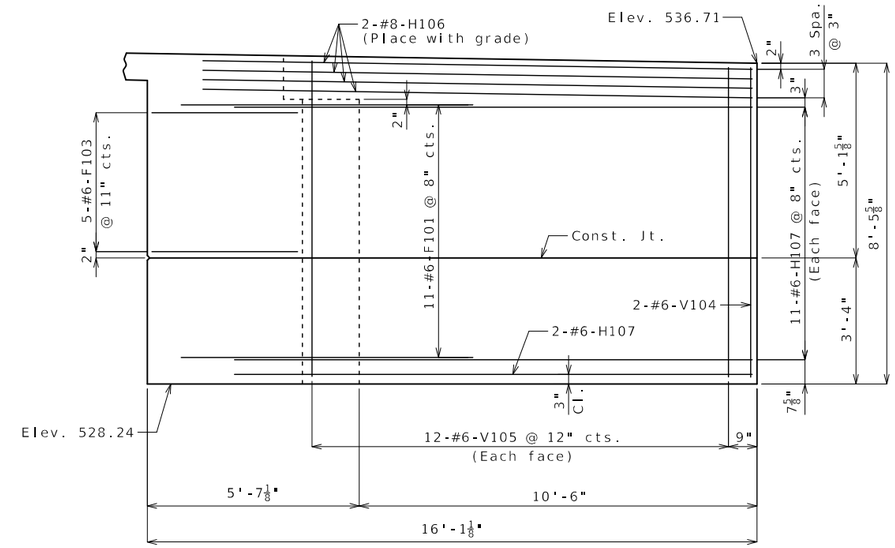

ELEVATION F-F

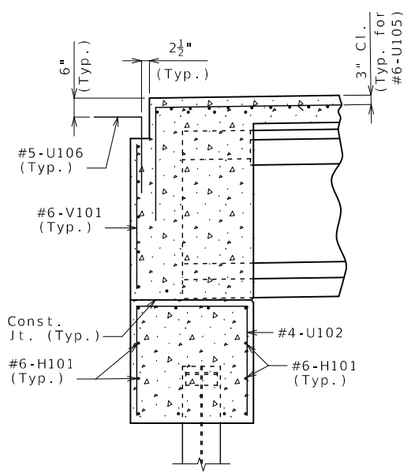

SECTION A-A

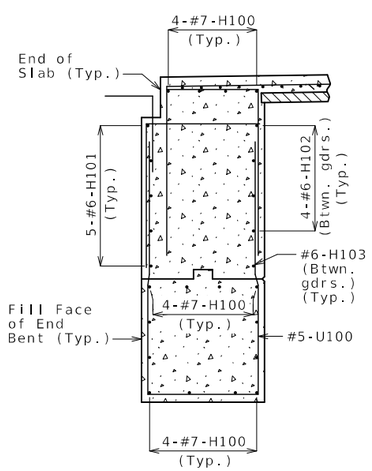

SECTION B-B

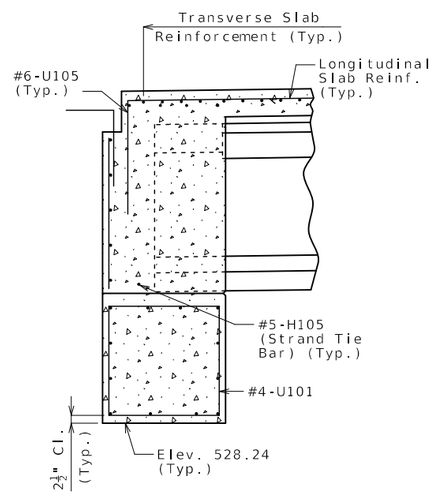

SECTION C-C

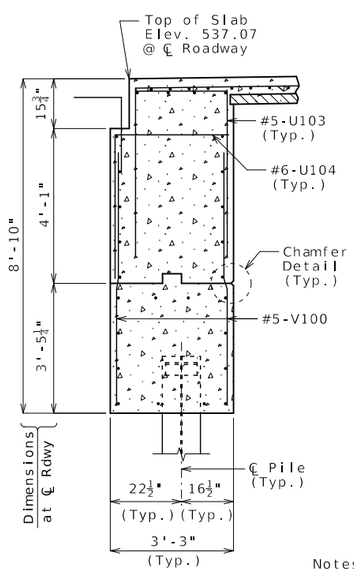

SECTION D-D

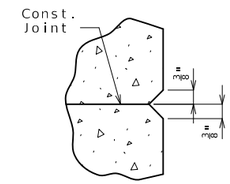

CHAMFER DETAIL

Notes:

Work this sheet with Sheets No. 4 & 5.

For reinforcement of the barrier, see Sheet No. 26.

For details of bridge approach slab, see Sheet No. 27.

For details of vertical drain at end bent, see Sheet No. 7.

END BENT NO. 1

Detailed Nov. 2024
Checked Nov. 2024

Note: This drawing is not to scale. Follow dimensions.

STATE OF MISSOURI
TED S. KOESTER
NUMBER PE-2013000591
PROFESSIONAL ENGINEER
12/13/2024 11:10:46 AM
TED S. KOESTER - CIVIL
MO-PE-2013000591

DATE PREPARED	
12/13/2024	
ROUTE: K	STATE: MO
DISTRICT: BR	SHEET NO.: 6
COUNTY: MONTGOMERY	
JOB NO.: JNE0154	
CONTRACT ID.	
PROJECT NO.	
BRIDGE NO.: A9537	

DATE	DESCRIPTION

MISSOURI HIGHWAYS AND TRANSPORTATION COMMISSION
105 WEST CAPITOL
JEFFERSON CITY, MO 65102
1-888-ASK-MODOT (1-888-275-6636)

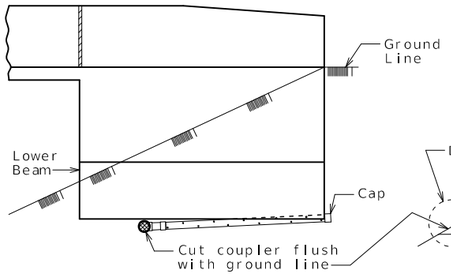

ELEVATION OF WING

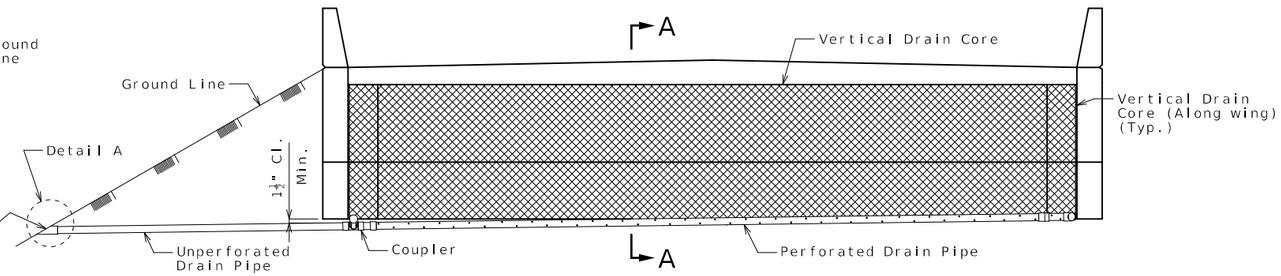

ELEVATION OF END BENT

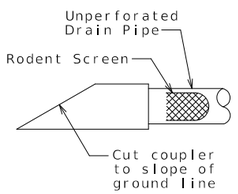

DETAIL A

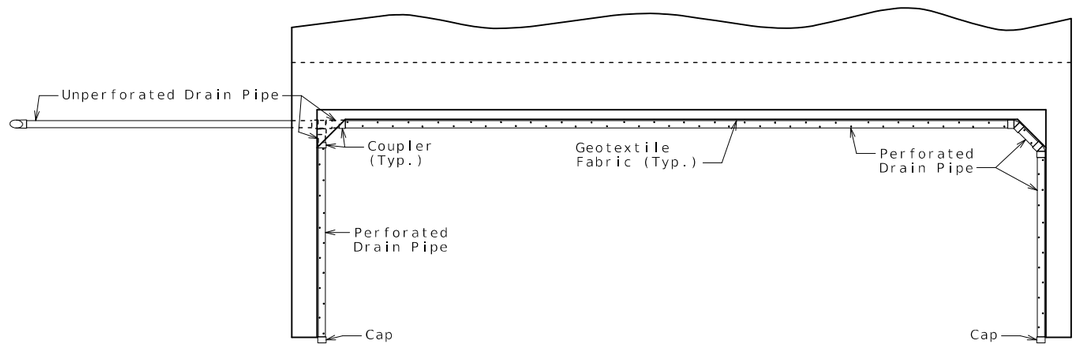

PLAN OF END BENT

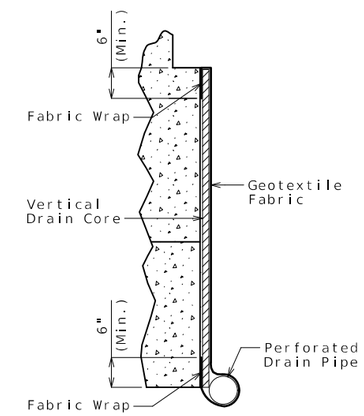

PART SECTION A-A
(Section thru wing similar)

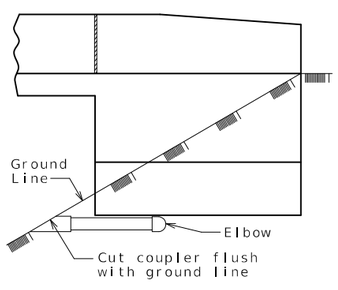

ELEVATION OF WING

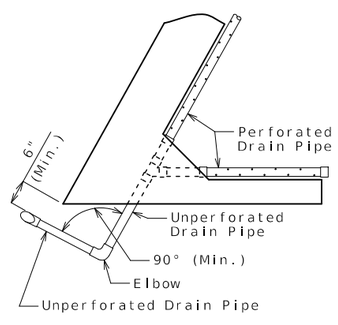

PART PLAN

OPTIONAL TURNED DRAIN
(Use only when straight drain is not practical.)

General Notes:

All drain pipe shall be sloped 1 to 2 percent.

Drain pipe may be either 6-inch diameter corrugated metallic-coated steel pipe underdrain, 4-inch diameter corrugated polyvinyl chloride (PVC) drain pipe, or 4-inch diameter corrugated polyethylene (PE) drain pipe.

Drain pipe shall be placed at fill face of end bent and inside face of wings. The pipe shall slope to lowest grade of ground line, also missing the lower beam of end bent by a minimum of 1 1/2 inches.

Perforated pipe shall be placed at fill face side and inside face of wings at the bottom of end bent and plain pipe shall be used where the vertical drain ends to the exit at ground line.

VERTICAL DRAIN AT END BENTS

(Squared end bent shown, skewed end bent similar)

Detailed Nov. 2024
Checked Nov. 2024

Note: This drawing is not to scale. Follow dimensions.

STATE OF MISSOURI
TED S. KOESTER
NUMBER PE-2013000591
PROFESSIONAL ENGINEER
12/13/2024 11:11:16 AM
TED S. KOESTER - CIVIL
MO-PE-2013000591

DATE PREPARED	
12/13/2024	
ROUTE: K	STATE: MO
DISTRICT: BR	SHEET NO.: 7
COUNTY: MONTGOMERY	
JOB NO.: JNE0154	
CONTRACT ID.	
PROJECT NO.	
BRIDGE NO.: A9537	

DATE	DESCRIPTION

MISSOURI HIGHWAYS AND TRANSPORTATION COMMISSION
105 WEST CAPITOL
JEFFERSON CITY, MO 65102
1-888-ASK-MODOT (1-888-275-6636)

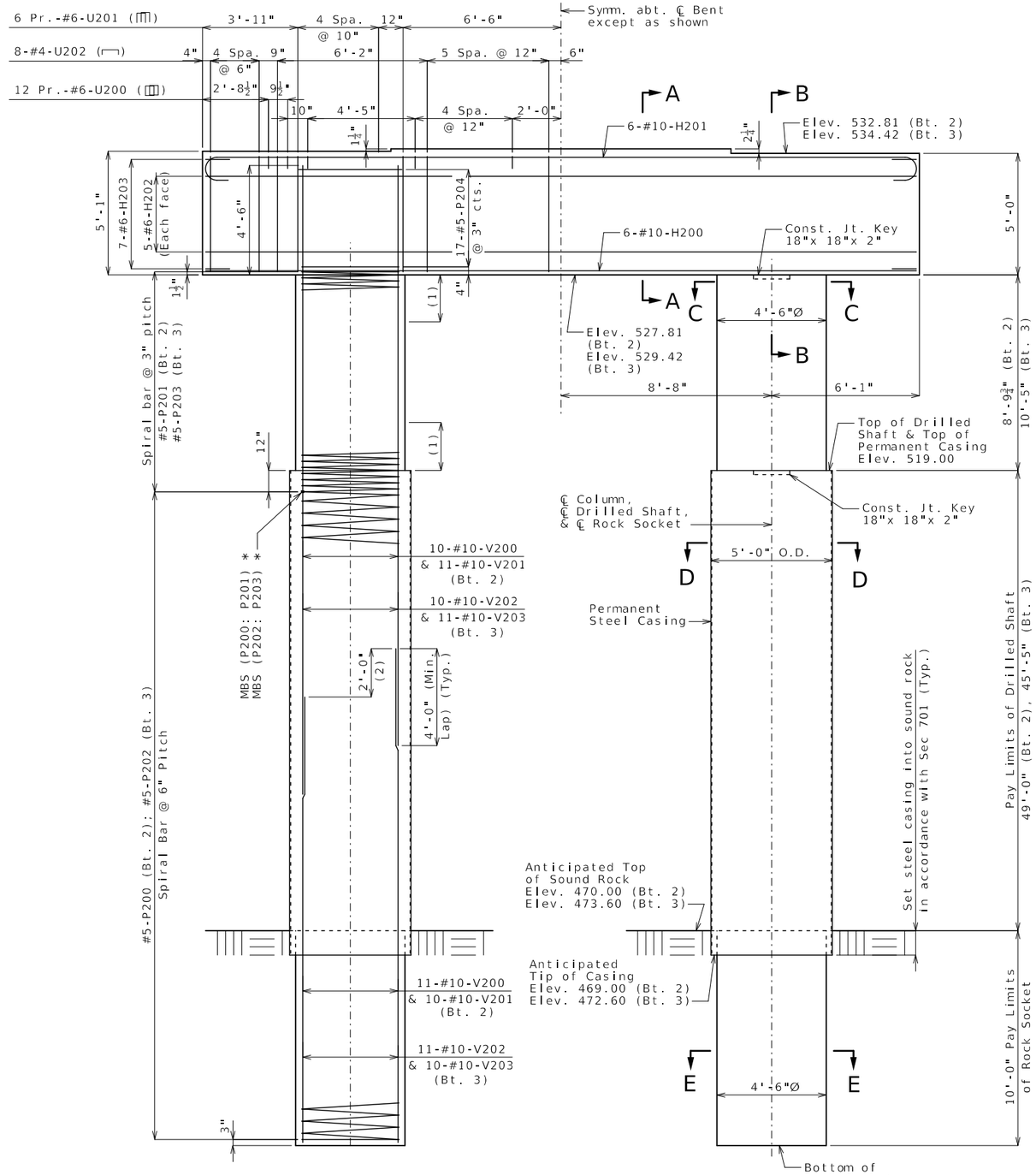

* Mechanical Bar Splices (MBS) are included in the contract unit price for Reinforcing Steel (Bridges).

ELEVATION

Beam keys not shown for clarity.

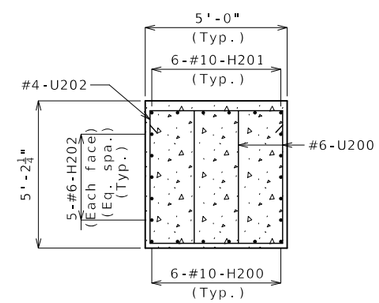

SECTION A-A

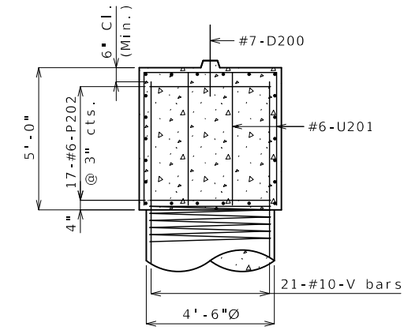

SECTION B-B

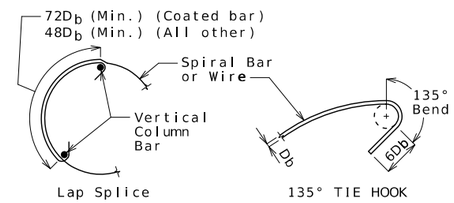

INTERMEDIATE SPLICE OF SPIRALS

Standard 135-degree tie hooks that engage vertical column reinforcing bars shall be provided at each end of splice.

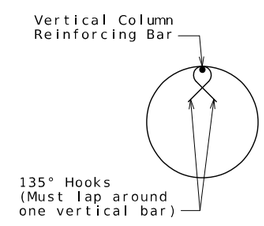

SEISMIC STIRRUP BAR

(1) Lapping of spirals not permitted in these regions. If unavoidable, a mechanical bar splice (MBS) will be required, and no additional payment will be made for these MBS.

(2) Lap #10-V200 with #10-V201 with a 4'-0" minimum lap. Stagger location of splices by 2'-0" minimum.

Work this sheet with Sheet No. 9.

Thickness of permanent steel casing shall be in accordance with Sec 701.

An additional 4 feet has been added to V-bar and spiral P200 & P202 bar lengths, if required, for possible change in drilled shaft or rock socket length. The additional V-bar length shall be cut off or included in the reinforcement lap if not required. The additional P bar spiral pitch shall be spaced similarly to that shown in elevation (not less than 6-inch centers in drilled shaft and rock socket).

Sonic logging testing shall be performed on all drilled shafts and rock sockets.

All reinforcement in drilled shaft and rock socket is included in the substructure quantities.

The tip of casing shall not extend into the rock socket elevation range reported in the Foundation Data table without approval by the engineer.

MBS at any location shall be capable of developing 125% of the specified minimum yield stress of the connection bars.

Substructure Quantity Table for Bents No. 2 & 3

Item		Quantity Bent 2	Quantity Bent 3
Drilled Shafts (5 ft. 0 in. Dia.)	linear foot	98.0	90.8
Rock Sockets (4 ft. 6 in. Dia.)	linear foot	20.0	20.0
Video Camera Inspection	each	2	2
Foundation Inspection Holes	linear foot	40.0	40.0
Sonic Logging Testing	each	2	2
Class B Concrete (Substructure)	cu. yard	38.4	40.3
Reinforcing Steel (Bridges)	pound	15,920	15,720

These quantities are included in the Estimated Quantities table on Sheet No. 3.

INTERMEDIATE BENTS NO. 2 & 3

Detailed Nov. 2024
Checked Nov. 2024

Note: This drawing is not to scale. Follow dimensions.

STATE OF MISSOURI
TED S. KOESTER
NUMBER PE-2013000591
PROFESSIONAL ENGINEER
12/13/2024 11:11:53 AM
TED S. KOESTER - CIVIL
MO-PE-2013000591

DATE PREPARED	
12/13/2024	
ROUTE K	STATE MO
DISTRICT BR	SHEET NO. 8
COUNTY MONTGOMERY	
JOB NO. JNE0154	
CONTRACT ID.	
PROJECT NO.	
BRIDGE NO. A9537	

DESCRIPTION

DATE

MISSOURI HIGHWAYS AND TRANSPORTATION COMMISSION
105 WEST CAPITOL
JEFFERSON CITY, MO 65102
1-888-ASK-MODOT (1-888-275-6636)

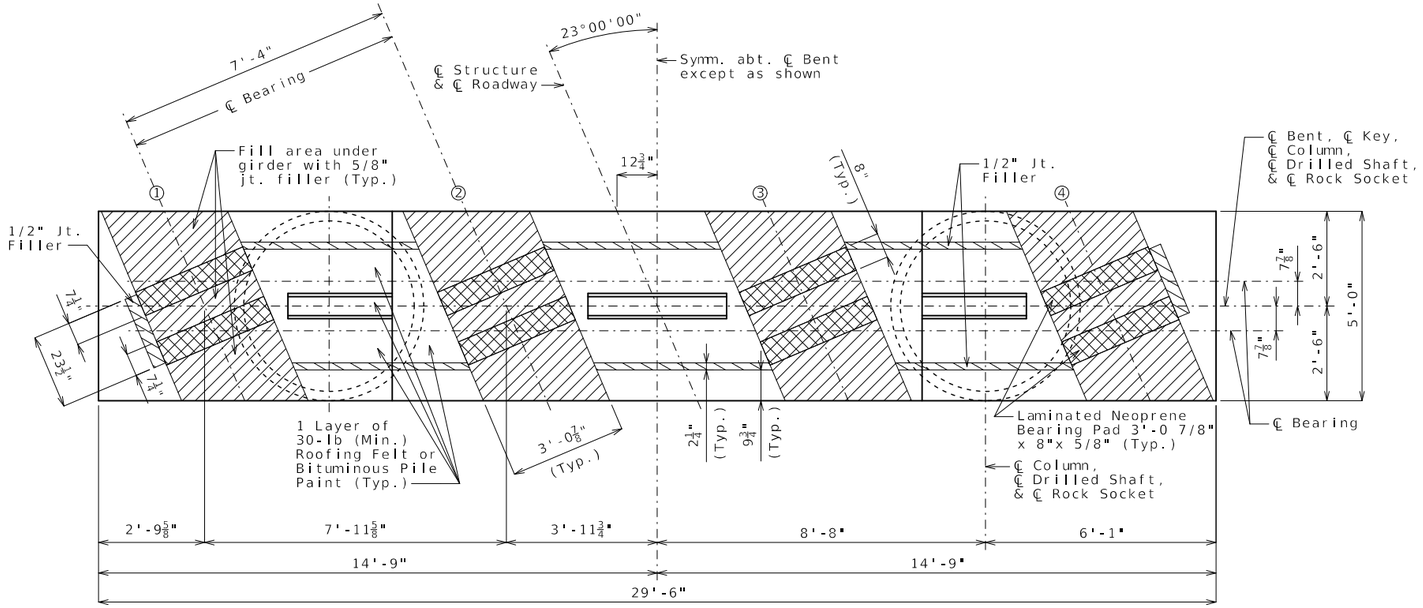

PLAN OF BEAM

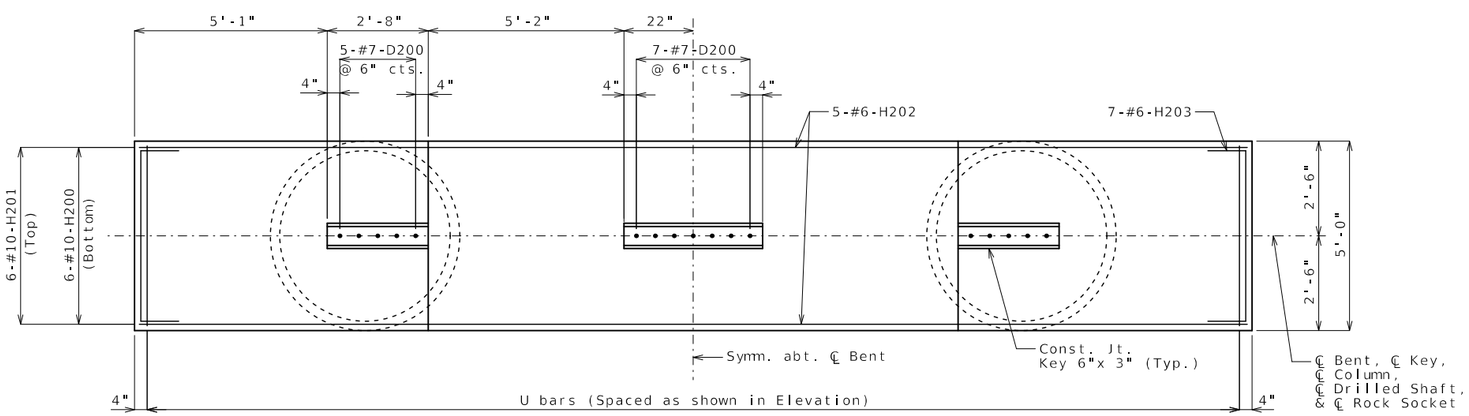

PLAN OF BEAM SHOWING REINFORCEMENT

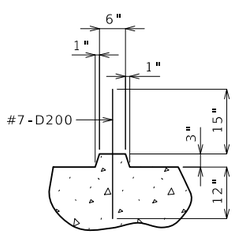

SECTION THRU KEY

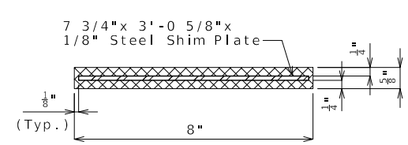

TYPICAL SECTION
THRU LAMINATED
NEOPRENE BEARING PAD

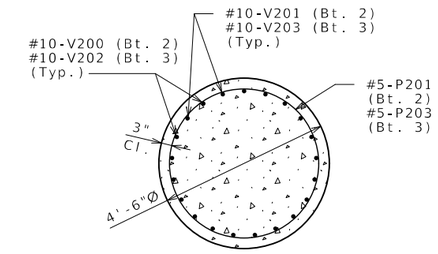

SECTION C-C
(COLUMN)

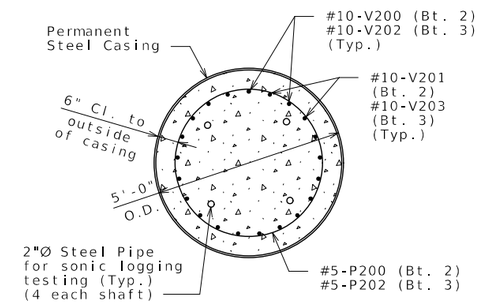

SECTION D-D
(DRILLED SHAFT)

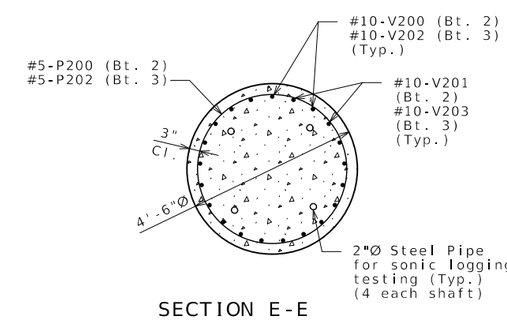

SECTION E-E
(ROCK SOCKET)

Notes:

Work this sheet with Sheet No. 8.

For steps 2 inches or more, use 2 1/4 x 1/2 inch joint filler up vertical face.

INTERMEDIATE BENTS NO. 2 & 3

Detailed Nov. 2024
Checked Nov. 2024

Note: This drawing is not to scale. Follow dimensions.

STATE OF MISSOURI
TED S. KOESTER
NUMBER
PE-2013000591
PROFESSIONAL ENGINEER
12/13/2024 11:12:19 AM
TED S. KOESTER - CIVIL
MO-PE-2013000591

DATE PREPARED	
12/13/2024	
ROUTE K	STATE MO
DISTRICT BR	SHEET NO. 9
COUNTY MONTGOMERY	
JOB NO. JNE0154	
CONTRACT ID.	
PROJECT NO.	
BRIDGE NO. A9537	

DESCRIPTION

DATE

MISSOURI HIGHWAYS AND TRANSPORTATION COMMISSION
105 WEST CAPITOL
JEFFERSON CITY, MO 65102
1-888-ASK-MODOT (1-888-275-6636)

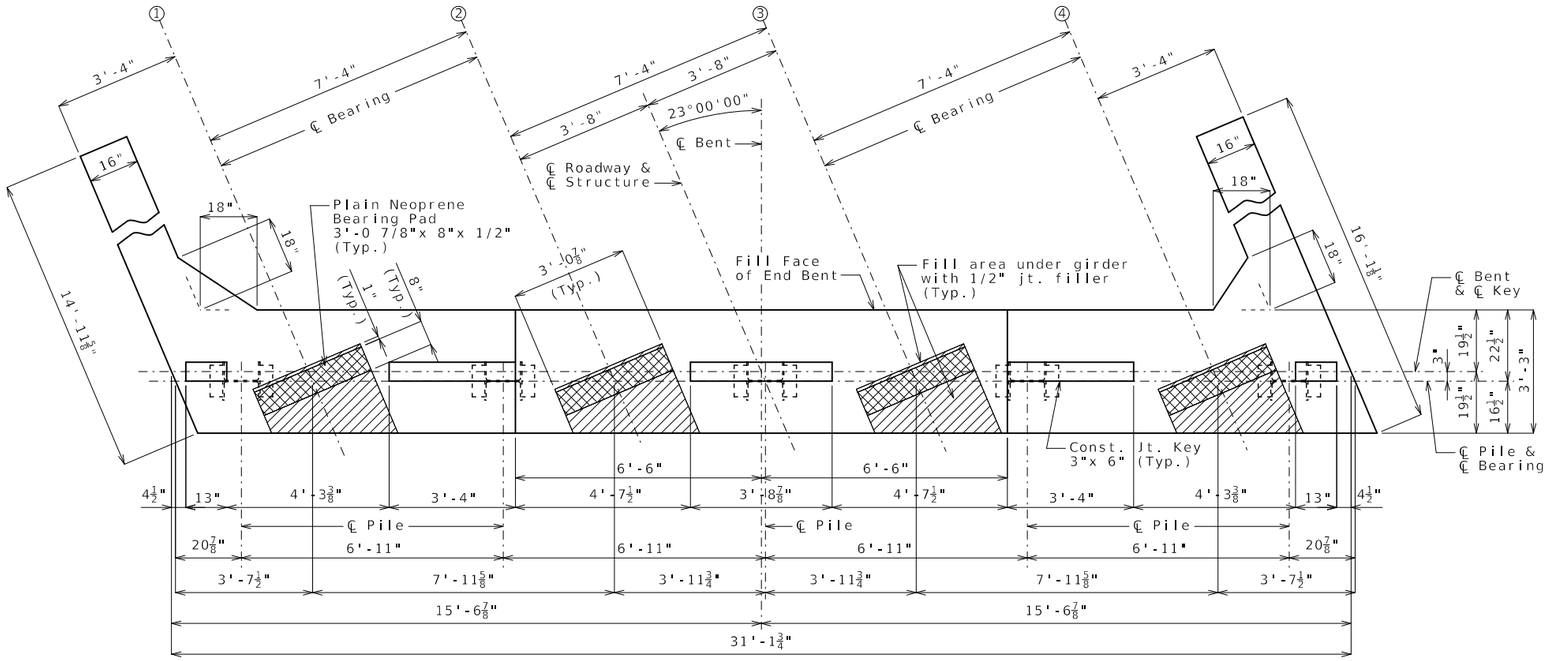

PLAN OF BEAM

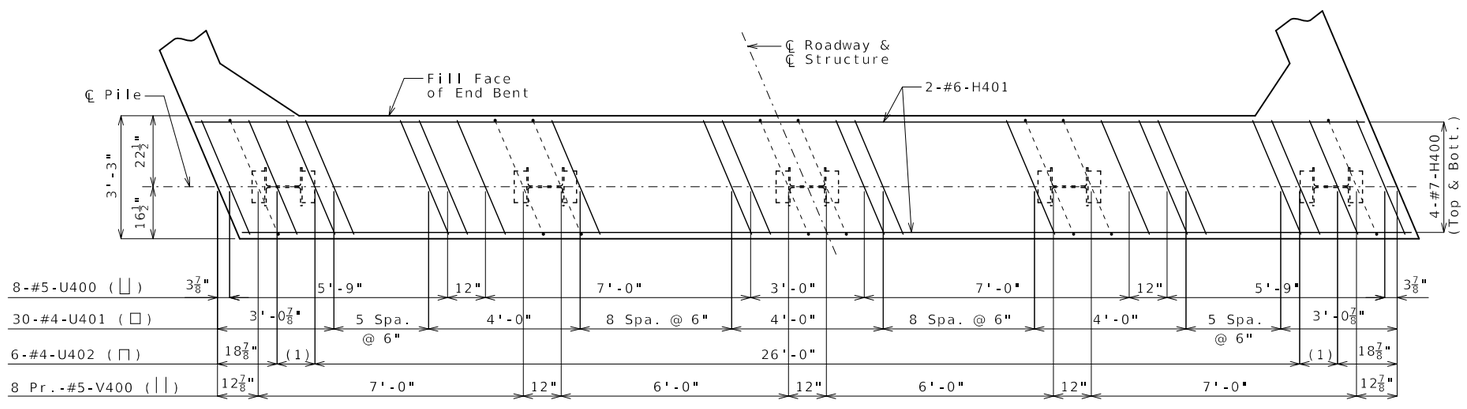

PLAN OF BEAM SHOWING REINFORCEMENT

Beam keys and steps not shown for clarity.

(1) 2 Spa. @ 6"

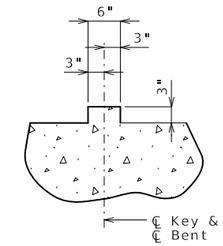

SECTION THRU KEY

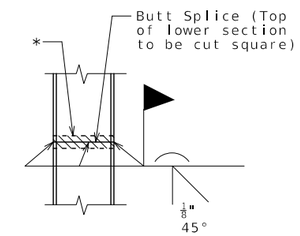

STEEL PILE SPLICE

(If required)

* Galvanizing material shall be omitted or removed one inch clear of weld locations in accordance with Sec 702.

Notes:

Work this sheet with Sheets No. 11 & 12.

The U bars and pairs V bars shall be placed parallel to the centerline of roadway.

Reinforcing steel shall be shifted to clear piles. U bars shall clear piles by at least 1 1/2 inch.

Substructure Quantity Table for Bent No. 4		
Item		Quantity
Class 1 Excavation	cu. yard	50
Galvanized Structural Steel Piles (12 in.)	linear foot	245
Pile Point Reinforcement	each	5
Class B Concrete (Substructure)	cu. yard	16.8

These quantities are included in the Estimated Quantities table on Sheet No. 3.

END BENT NO. 4

Detailed Nov. 2024
Checked Nov. 2024

Note: This drawing is not to scale. Follow dimensions.

STATE OF MISSOURI
TED S. KOESTER
NUMBER
PE-2013000591
PROFESSIONAL ENGINEER
12/13/2024 11:12:43 AM
TED S. KOESTER - CIVIL
MO-PE-2013000591

DATE PREPARED	
12/13/2024	
ROUTE K	STATE MO
DISTRICT BR	SHEET NO. 10
COUNTY MONTGOMERY	
JOB NO. JNE0154	
CONTRACT ID.	
PROJECT NO.	
BRIDGE NO. A9537	

DATE	DESCRIPTION

MISSOURI HIGHWAYS AND TRANSPORTATION COMMISSION
105 WEST CAPITOL
JEFFERSON CITY, MO 65102
1-888-ASK-MODOT (1-888-275-6636)

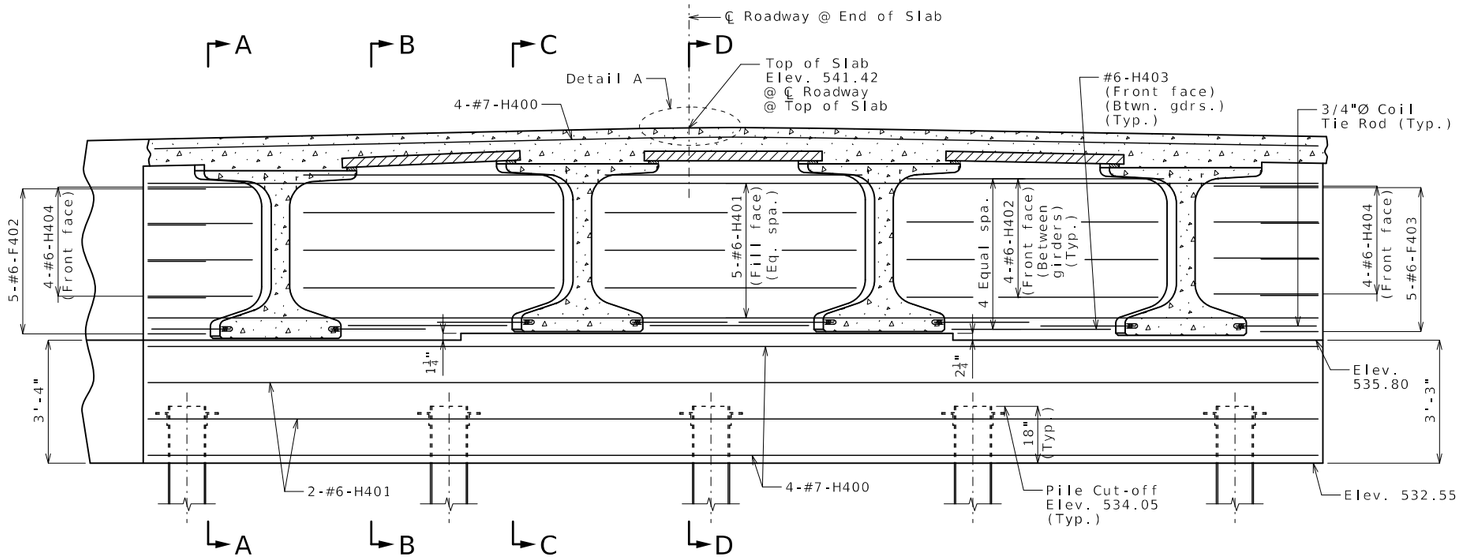

SECTION NEAR END BENT

Keys not shown for clarity.

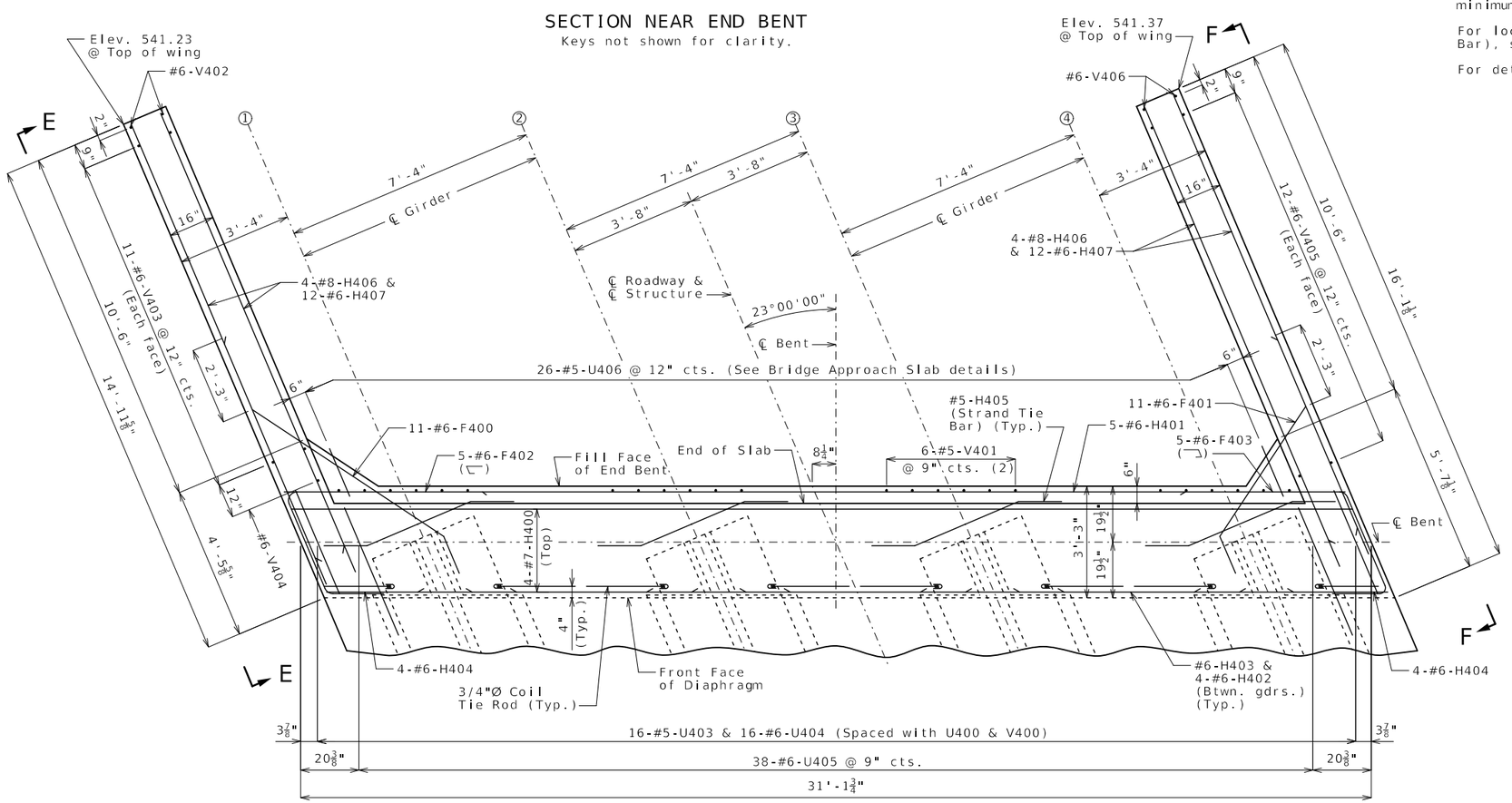

PART PLAN

(2) Centered behind girders (Typ.)

END BENT NO. 4

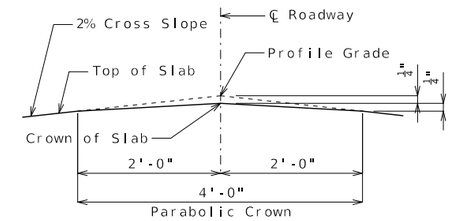

DETAIL A

Notes:

Work this sheet with Sheets No. 10 & 12.

The #6-F400 and #6-F401 bars shall be bent in the field to clear girders.

The U bars shall be placed parallel to centerline of roadway.

All concrete in the end bent above top of beam and below top of slab shall be Class B-2.

Strands at end of the girders shall be field bent or, if necessary, cut in field to maintain 1 1/2-inch minimum clearance to fill face of end bent.

For location of coil tie rods and #5-H405 (Strand Tie Bar), see Sheets No. 13 & 14.

For details of bridge approach slab, see Sheet No. 27.

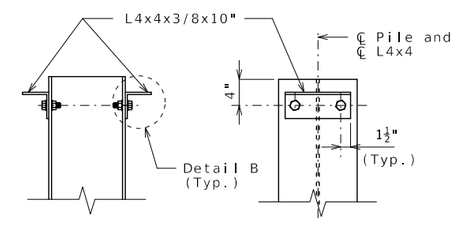

DETAILS OF HP PILE ANCHORS

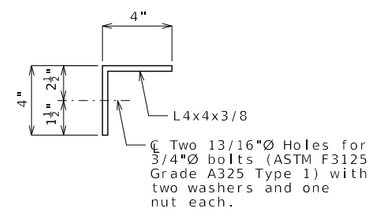

DETAIL B

Angles shall be coated with a minimum of two coats of non-aluminum epoxy mastic primer to provide a dry film thickness of 4 mils minimum, 8 mils maximum, or galvanized in accordance with Sec 1081. Bolts, washers and nuts shall be galvanized in accordance with AASHTO M 232 (ASTM A153), Class C.

STATE OF MISSOURI
TED S. KOESTER
NUMBER
PE-2013000591
PROFESSIONAL ENGINEER
12/13/2024 11:13:08 AM
TED S. KOESTER - CIVIL
MO-PE-2013000591

DATE PREPARED	
12/13/2024	
ROUTE K	STATE MO
DISTRICT BR	SHEET NO. 11
COUNTY MONTGOMERY	
JOB NO. JNE0154	
CONTRACT ID.	
PROJECT NO.	
BRIDGE NO. A9537	

DATE	DESCRIPTION

MISSOURI HIGHWAYS AND TRANSPORTATION COMMISSION
105 WEST CAPITOL
JEFFERSON CITY, MO 65102
1-888-ASK-MODOT (1-888-275-6636)

Detailed Nov. 2024
Checked Nov. 2024

Note: This drawing is not to scale. Follow dimensions.

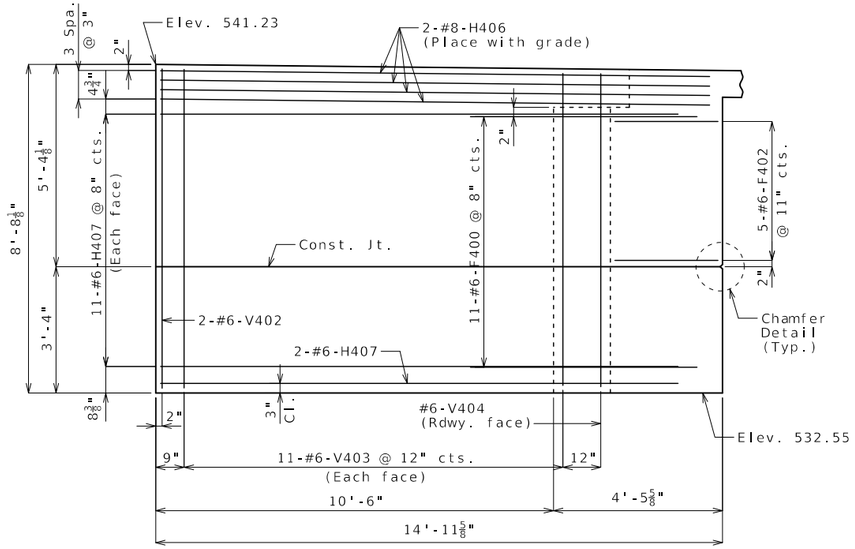

ELEVATION E-E

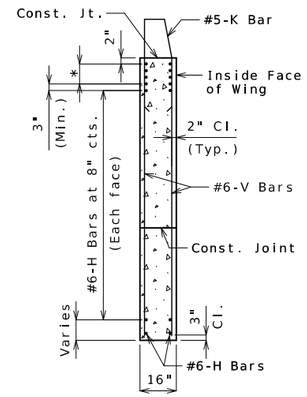

TYPICAL SECTION THRU WING

* #8-H Bars at 3" cts. (Each face)(Place with grade)

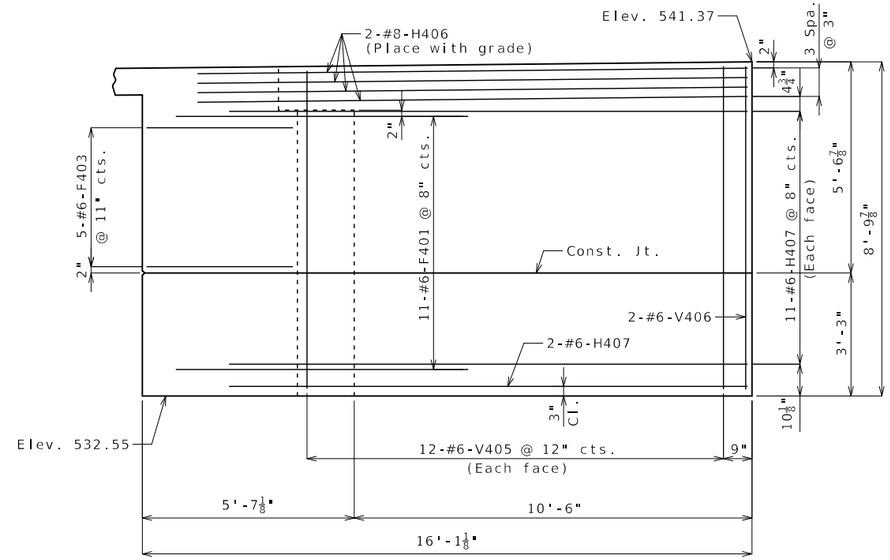

ELEVATION F-F

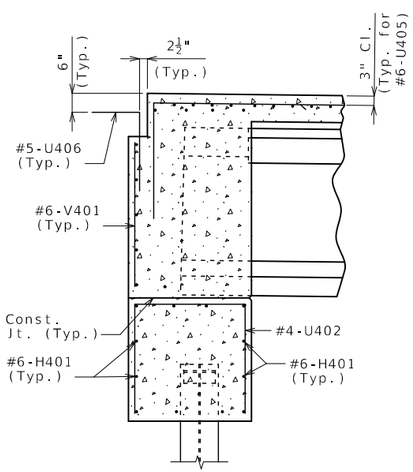

SECTION A-A

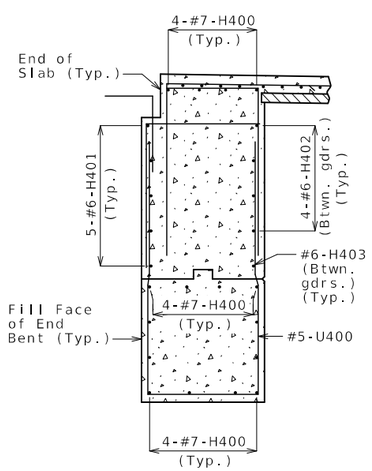

SECTION B-B

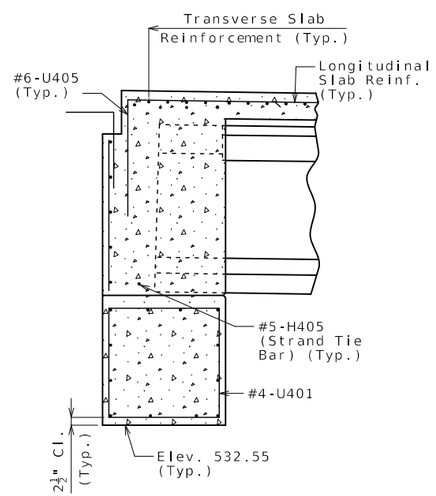

SECTION C-C

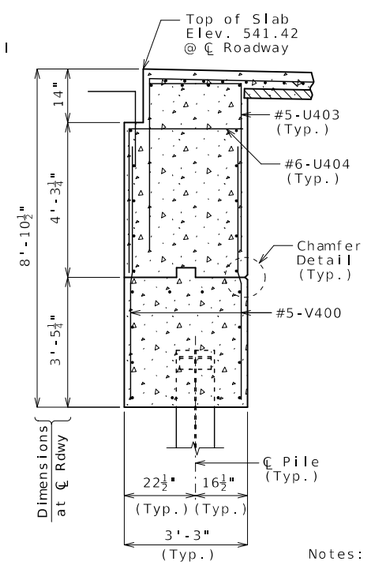

SECTION D-D

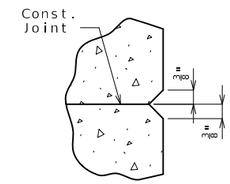

CHAMFER DETAIL

Notes:

Work this sheet with Sheets No. 10 & 11.

For reinforcement of the barrier, see Sheet No. 26.

For details of bridge approach slab, see Sheet No. 27.

For details of vertical drain at end bents, see Sheet No. 7.

END BENT NO. 4

Detailed Nov. 2024
Checked Nov. 2024

Note: This drawing is not to scale. Follow dimensions.

STATE OF MISSOURI
TED S. KOESTER
NUMBER PE-2013000591
PROFESSIONAL ENGINEER
12/13/2024 11:13:32 AM
TED S. KOESTER - CIVIL
MO-PE-2013000591

DATE PREPARED	
12/13/2024	
ROUTE K	STATE MO
DISTRICT BR	SHEET NO. 12
COUNTY MONTGOMERY	
JOB NO. JNE0154	
CONTRACT ID.	
PROJECT NO.	
BRIDGE NO. A9537	

DATE	DESCRIPTION

MISSOURI HIGHWAYS AND TRANSPORTATION COMMISSION
105 WEST CAPITOL
JEFFERSON CITY, MO 65102
1-888-ASK-MODOT (1-888-275-6636)

(1) Fabricator shall apply a bond breaker to this region excluding where joint filler will be applied.

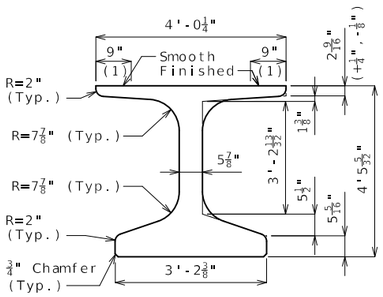

DIMENSIONS

(2) Outer strands tensioned to 2.02 kips/strand and inner strands to 8 kips/strand. Placed symmetrical about ℄ Girder. May be moved laterally in pairs.

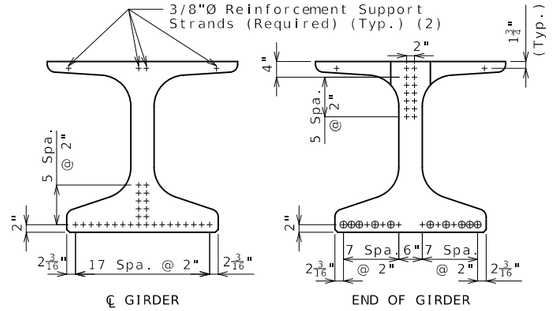

STRAND ARRANGEMENT

+ Indicates prestressing strand.

o Indicates cut & shop bend with 3'-0" projection.

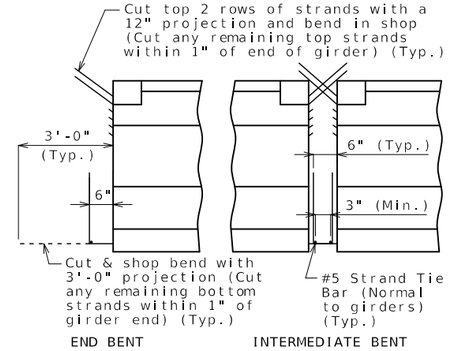

STRANDS AT GIRDER ENDS

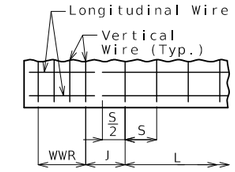

WELDED WIRE PLACEMENT

S = Vertical wire spacing

L = Length of WWR mats

J = Distance between WWR mats

Bill of Reinforcing Steel

Bars Each Girder				
No.	Size/Mark		Length	Shape
109	3	G1	2'-10"	8
2	4	G3	4'-2"	20
2	4	G4	2'-3"	20
2	4	G5	2'-10"	20
6	4	G6	Varies	20

Welded Wire Each Girder					
Mark	Size	S	W	L	J
WWR1	D31	4"	W12	5'-0"	4"
WWR2	D31	8"	W12	11'-4"	8"
WWR3	D31	20"	W12	33'-4"	--
WWR6	D31	2"	W12	16"	5"

Bending Diagrams

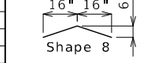

Shape 20

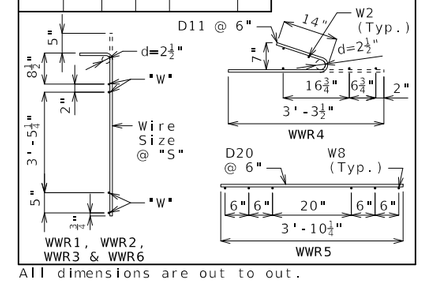

All dimensions are out to out.

Hooks and bends shall be in accordance with the CRSI Manual of Standard Practice for Detailing Reinforced Concrete Structures, Stirrup and Tie Dimensions.

Actual bar lengths are measured along centerline of bar to the nearest inch.

Minimum clearance to reinforcing shall be 1", unless otherwise shown.

All bar reinforcement shall be Grade 60.

WWR shall not be epoxy coated.

G4 and G5 not required for interior girders. G3 and G6 not required for exterior girders of intermediate spans. Half no. of G3, G4, G5 and G6 not required for ext. girders of end spans.

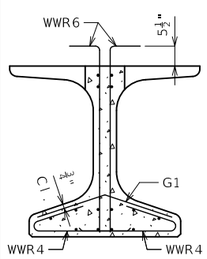

SECTION A-A

Strands not shown for clarity.

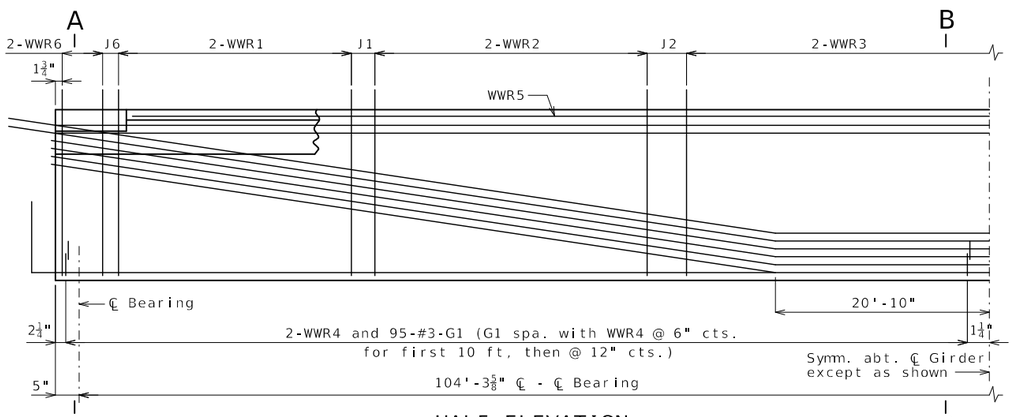

HALF ELEVATION

Reinforcement support strands not shown for clarity.

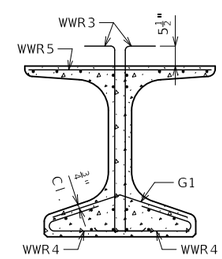

SECTION B-B

Strands not shown for clarity.

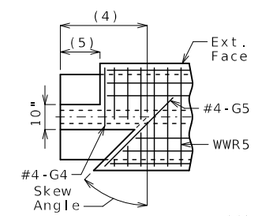

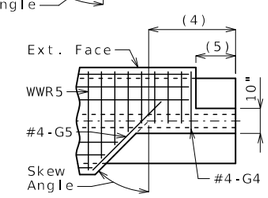

LEFT EXTERIOR GIRDER AT INTERMEDIATE BENT

Rotate 180° for right ext.

Location	(4)	(5)
End Bent No. 1	22"	-
Int. Bent No. 2	17"	6⅞"
Int. Bent No. 3	18⅜"	8¼"
End Bent No. 4	20⅝"	-

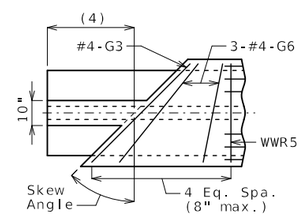

INTERIOR GIRDER AT ALL BENTS & EXTERIOR GIRDER AT END BENT

TOP FLANGE BLOCKOUT

General Notes:

Concrete for prestressed beams shall be Class A-1 with f'c = 8000 psi and f'ci = 6500 psi.

Use 28 strands, 0.6"Ø Grade 270, with an initial prestress force of 1230 kips.

Pretensioned members shall be in accordance with Sec 1029.

Fabricator shall be responsible for location and design of lifting devices.

Exterior and interior girders are the same except: coil ties, top flange blockout, application of bond breaker, coil inserts for slab drains, holes for steel intermediate diaphragms.

For Girder Camber Diagram, see Sheet No. 21.

The 1 1/2"Ø holes shall be cast in the web for steel intermediate diaphragms. Drilling is not allowed. For location of holes and details of steel intermediate diaphragms, see Sheet No. 17.

For location of coil inserts at slab drains, see Sheet No. 20.

For location of coil ties at concrete diaphragms and integral bents, see Sheets No. 5, 11, and 18.

Alternate bar reinforcing steel details are provided and may be used. The same type of reinforcing steel shall be used for all girders in all spans.

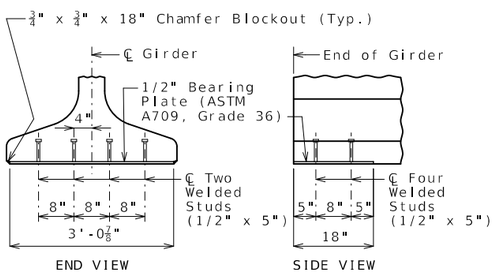

BEARING PLATE

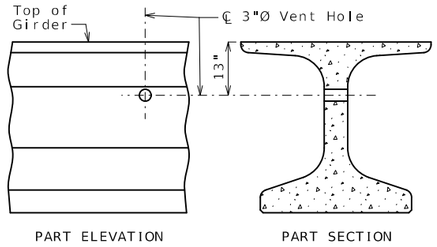

VENT HOLE

Place vent holes at or near upgrade 1/3 point of girders and clear reinforcing steel or strands by 1 1/2" minimum and steel intermediate diaphragm bolt connections by 6" minimum.

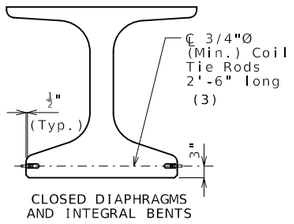

COIL TIES

Exclude coil tie at exterior face of exterior girders except at integral end bents.

(3) 2'-3" at exterior face of exterior girders at end bents

NU-GIRDERS - SPANS (1-2) AND (3-4)

Detailed Oct. 2024
Checked Nov. 2024

Note: This drawing is not to scale. Follow dimensions.

STATE OF MISSOURI
TED S. KOESTER
NUMBER PE-2013000591
PROFESSIONAL ENGINEER
12/13/2024 11:13:57 AM
TED S. KOESTER - CIVIL
MO-PE-2013000591

DATE PREPARED	12/13/2024
ROUTE	K
STATE	MO
DISTRICT	BR
SHEET NO.	13
COUNTY	MONTGOMERY
JOB NO.	JNE0154
CONTRACT ID.	
PROJECT NO.	
BRIDGE NO.	A9537

DESCRIPTION

DATE

MISSOURI HIGHWAYS AND TRANSPORTATION COMMISSION
105 WEST CAPITOL
JEFFERSON CITY, MO 65102
1-888-ASK-MODOT (1-888-275-6636)

(1) Fabricator shall apply a bond breaker to this region excluding where joint filler will be applied.

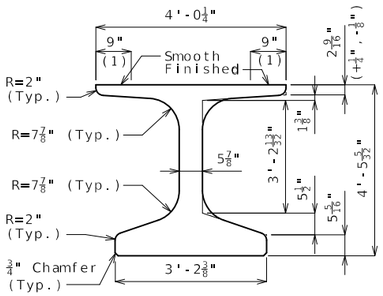

DIMENSIONS

(2) Outer strands tensioned to 2.02 kips/strand and inner strands to 8 kips/strand. Placed symmetrical about ℄ Girder. May be moved laterally in pairs.

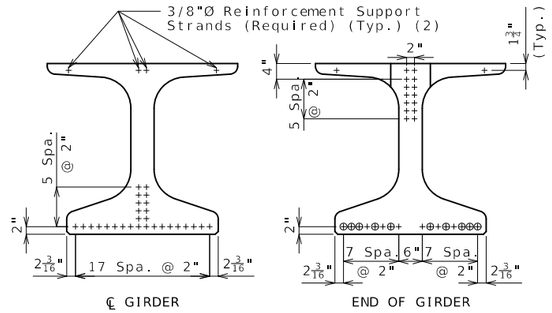

STRAND ARRANGEMENT

+ Indicates prestressing strand.

o Indicates cut & shop bend with 3'-0" projection.

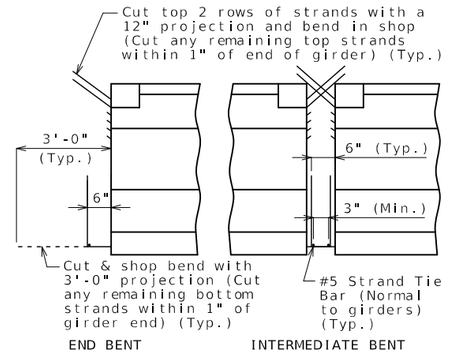

STRANDS AT GIRDER ENDS

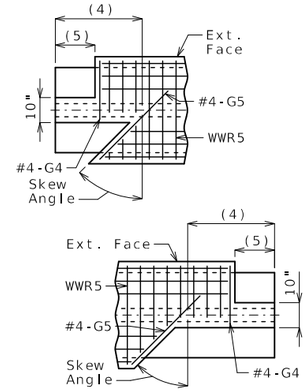

LEFT EXTERIOR GIRDER AT INTERMEDIATE BENT

Rotate 180° for right ext.

Location	(4)	(5)
End Bent No. 1	22"	-
Int. Bent No. 2	17"	6⅞"
Int. Bent No. 3	18⅜"	8¼"
End Bent No. 4	20⅝"	-

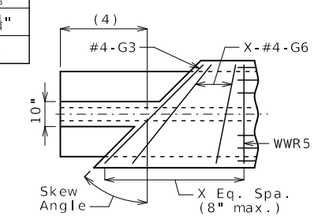

INTERIOR GIRDER AT ALL BENTS & EXTERIOR GIRDER AT END BENT

TOP FLANGE BLOCKOUT

Bill of Reinforcing Steel - Each Girder			
No.	Size/ Mark	Length	Shape
182	5 B1	5'-10"	11S
202	4 D1	4'-0"	9S
2	4 G3	4'-2"	20
2	4 G4	2'-3"	20
2	4 G5	2'-10"	20
6	4 G6	Varies	20

Bending Diagrams

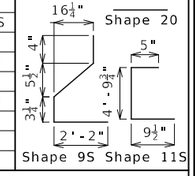

Welded Wire Reinforcement - Each Girder

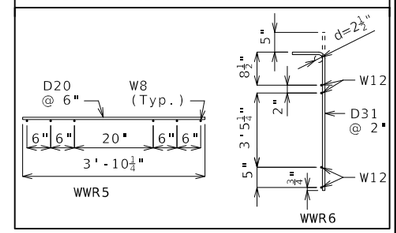

All dimensions are out to out.

Hooks and bends shall be in accordance with the CRSI Manual of Standard Practice for Detailing Reinforced Concrete Structures, Stirrup and Tie Dimensions.

Actual bar lengths are measured along centerline of bar to the nearest inch.

Minimum clearance to reinforcing shall be one inch.

All bar reinforcement shall be Grade 60.

The two D1 bars may be furnished as one bar at the fabricator's option.

All B1 bars shall be epoxy coated.

G4 and G5 not required for interior girders. G3 and G6 not required for exterior girders of intermediate spans. Half no. of G3, G4, G5 and G6 not required for ext. girders of end spans.

General Notes:

Concrete for prestressed girders shall be Class A-1 with f'c = 8000 psi and f'ci = 6500 psi.

Use 28 strands, 0.6"Ø Grade 270, with an initial prestress force of 1230 kips.

Pretensioned members shall be in accordance with Sec 1029.

Fabricator shall be responsible for location and design of lifting devices.

Exterior and interior girders are the same except: coil ties, top flange blockout, application of bond breaker, coil inserts for slab drains, holes for steel intermediate diaphragms.

For Girder Camber Diagram, see Sheet No. 21.

The 1 1/2"Ø holes shall be cast in the web for steel intermediate diaphragms. Drilling is not allowed. For location of holes and details of steel intermediate diaphragms, see Sheet No. 17.

For location of coil inserts at slab drains, see Sheet No. 20.

For location of coil ties at concrete diaphragms and integral bents, see Sheets No. 5, 11, and 18.

Alternate bar reinforcing steel details are provided and may be used. The same type of reinforcing steel shall be used for all girders in all spans.

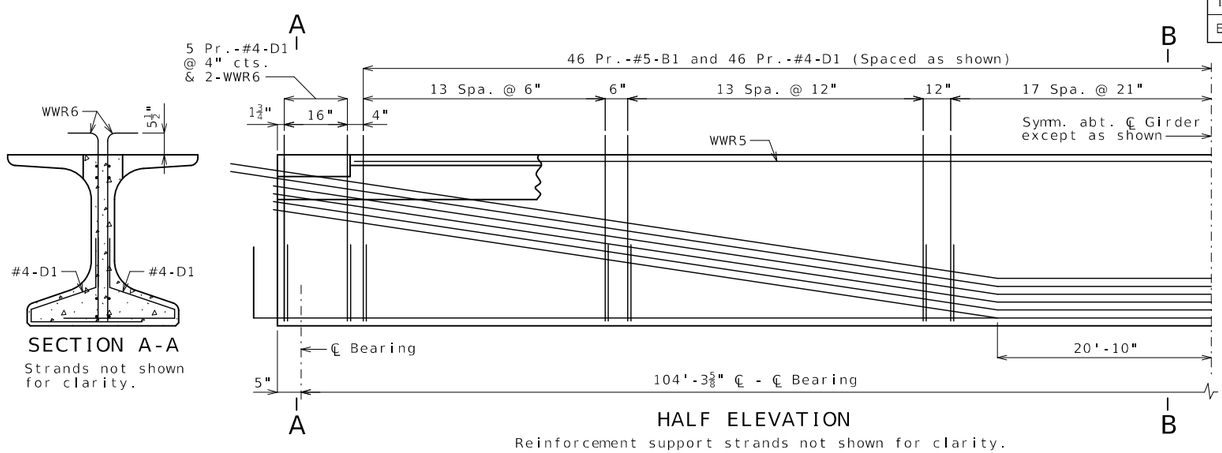

SECTION A-A

Strands not shown for clarity.

HALF ELEVATION

Reinforcement support strands not shown for clarity.

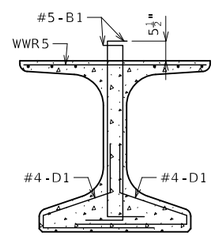

SECTION B-B

Strands not shown for clarity.

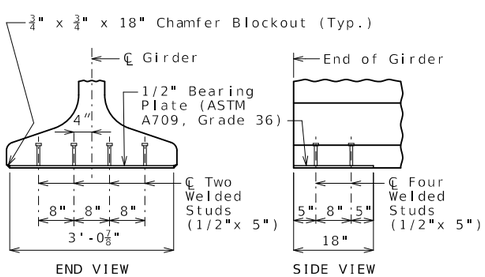

END VIEW

SIDE VIEW

BEARING PLATE

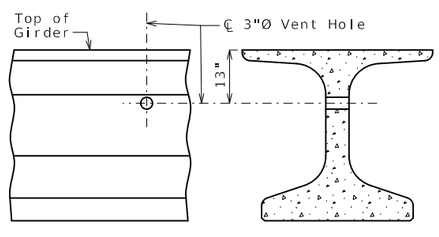

PART ELEVATION

PART SECTION

VENT HOLE

Place vent holes at or near upgrade 1/3 point of girders and clear reinforcing steel or strands by 1 1/2" minimum and steel intermediate diaphragm bolt connections by 6" minimum.

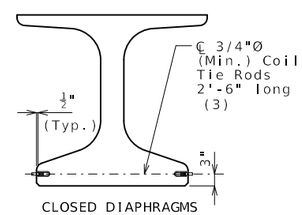

CLOSED DIAPHRAGMS AND INTEGRAL BENTS

COIL TIES

Exclude coil tie at exterior face of exterior girders except at integral end bents.

(3) 2'-3" at exterior face of exterior girders at end bents

NU-GIRDERS (ALTERNATE REINFORCEMENT) - SPANS (1-2) AND (3-4)

Note: This drawing is not to scale. Follow dimensions.

Detailed Oct. 2024
Checked Nov. 2024

STATE OF MISSOURI
TED S. KOESTER
NUMBER PE-2013000591
PROFESSIONAL ENGINEER
12/13/2024 11:14:23 AM
TED S. KOESTER - CIVIL
MO-PE-2013000591

DATE PREPARED 12/13/2024

ROUTE	STATE
K	MO
DISTRICT	SHEET NO.
BR	14

COUNTY: MONTGOMERY
JOB NO.: JNE0154
CONTRACT ID.:
PROJECT NO.:
BRIDGE NO.: A9537

DATE	DESCRIPTION

MISSOURI HIGHWAYS AND TRANSPORTATION COMMISSION
105 WEST CAPITOL
JEFFERSON CITY, MO 65102
1-888-ASK-MODOT (1-888-275-6636)

(1) Fabricator shall apply a bond breaker to this region excluding where joint filler will be applied.

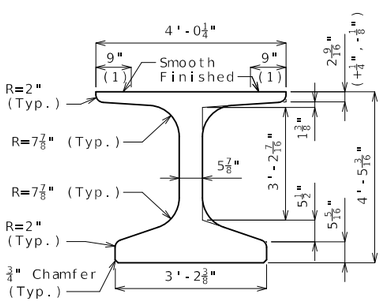

DIMENSIONS

(2) Outer strands tensioned to 2.02 kips/strand and inner strands to 8 kips/strand. Placed symmetrical about ℄ Girder. May be moved laterally in pairs.

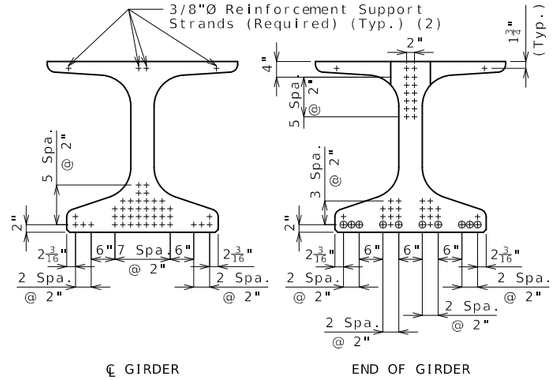

STRAND ARRANGEMENT

+ Indicates prestressing strand.

o Indicates cut & shop bend with 3'-0" projection.

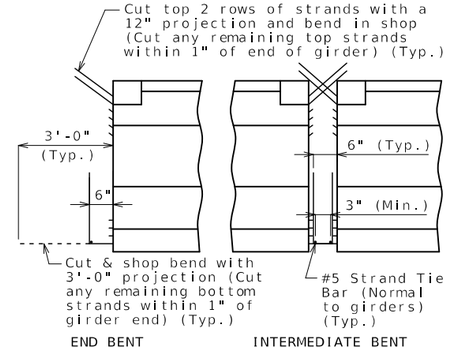

STRANDS AT GIRDER ENDS

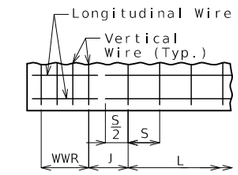

WELDED WIRE PLACEMENT

S = Vertical wire spacing

L = Length of WWR mats

J = Distance between WWR mats

Bill of Reinforcing Steel

Bars Each Girder

No.	Size/Mark		Length	Shape
128	3	G1	2'-10"	8
2	4	G3	4'-2"	20
2	4	G4	2'-3"	20
2	4	G5	2'-10"	20
6	4	G6	Varies	20

Welded Wire Each Girder

Mark	Size	S	W	L	J
WWR1	D31	4"	W12	5'-7"	4"
WWR2	D31	8"	W12	12'-0"	8"
WWR3	D31	20"	W12	43'-4"	10"
WWR6	D31	2"	W12	16"	5¾"

Bending Diagrams

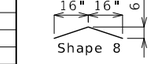

Shape 20

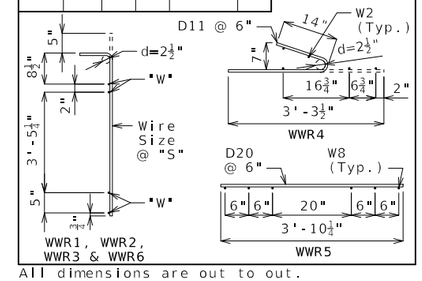

All dimensions are out to out.

Hooks and bends shall be in accordance with the CRSI Manual of Standard Practice for Detailing Reinforced Concrete Structures, Stirrup and Tie Dimensions.

Actual bar lengths are measured along centerline of bar to the nearest inch.

Minimum clearance to reinforcing shall be 1", unless otherwise shown.

All bar reinforcement shall be Grade 60.

WWR shall not be epoxy coated.

G4 and G5 not required for interior girders. G3 and G6 not required for exterior girders of intermediate spans. Half no. of G3, G4, G5 and G6 not required for ext. girders of end spans.

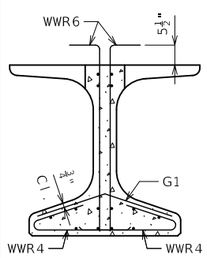

SECTION A-A

Strands not shown for clarity.

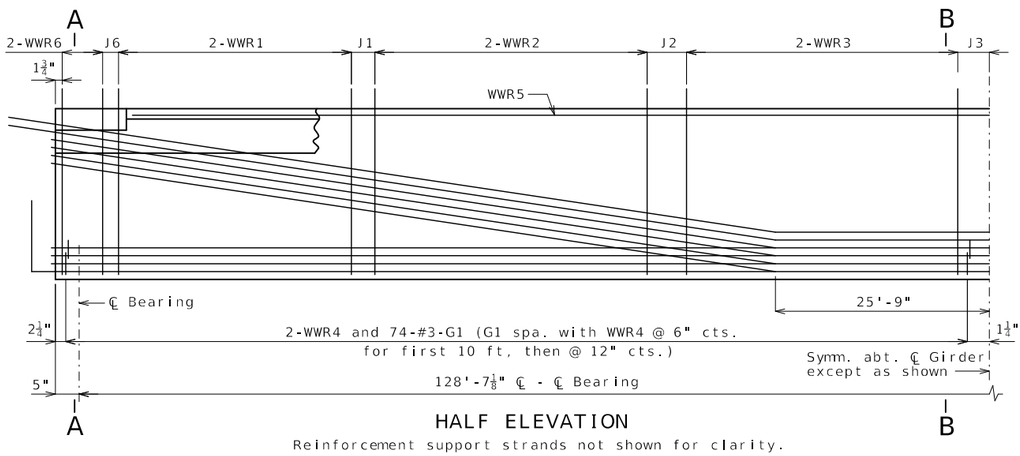

HALF ELEVATION

Reinforcement support strands not shown for clarity.

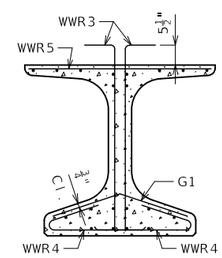

SECTION B-B

Strands not shown for clarity.

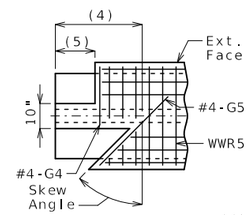

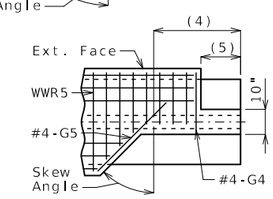

LEFT EXTERIOR GIRDER AT INTERMEDIATE BENT

Rotate 180° for right ext.

Location	(4)	(5)
Int. Bent No. 2	17"	6⅞"
Int. Bent No. 3	18⅜"	8¼"

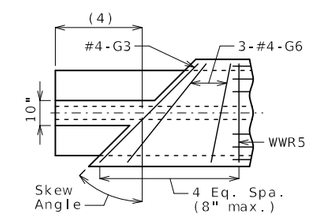

INTERIOR GIRDER AT ALL BENTS

TOP FLANGE BLOCKOUT

Mirror for right advanced.

General Notes:

Concrete for prestressed beams shall be Class A-1 with f'c = 8000 psi and f'ci = 6500 psi.

Use 42 strands, 0.6"Ø Grade 270, with an initial prestress force of 1846 kips.

Pretensioned members shall be in accordance with Sec 1029.

Fabricator shall be responsible for location and design of lifting devices.

Exterior and interior girders are the same except: coil ties, top flange blockout, application of bond breaker, coil inserts for slab drains, holes for steel intermediate diaphragms.

For Girder Camber Diagram, see Sheet No. 21.

The 1 1/2"Ø holes shall be cast in the web for steel intermediate diaphragms. Drilling is not allowed. For location of holes and details of steel intermediate diaphragms, see Sheet No. 17.

For location of coil inserts at slab drains, see Sheet No. 20.

For location of coil ties at concrete diaphragms and integral bents, see Sheet No. 18.

Alternate bar reinforcing steel details are provided and may be used. The same type of reinforcing steel shall be used for all girders in all spans.

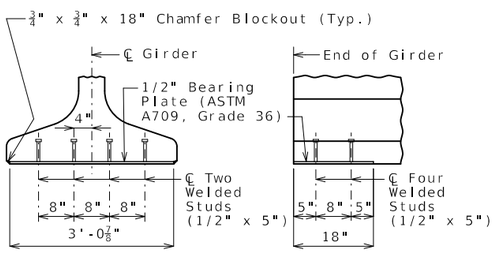

BEARING PLATE

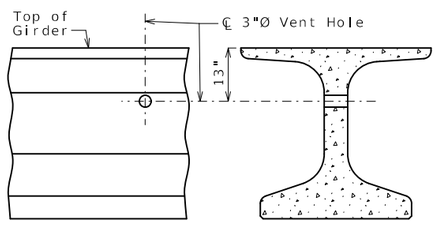

VENT HOLE

Place vent holes at or near upgrade 1/3 point of girders and clear reinforcing steel or strands by 1 1/2" minimum and steel intermediate diaphragm bolt connections by 6" minimum.

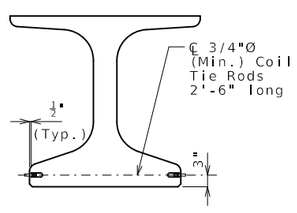

COIL TIES

Exclude coil tie at exterior face of exterior girders.

NU-GIRDERS - SPAN (2-3)

Detailed Oct. 2024
Checked Nov. 2024

Note: This drawing is not to scale. Follow dimensions.

STATE OF MISSOURI
TED S. KOESTER
NUMBER PE-2013000591
PROFESSIONAL ENGINEER
12/13/2024 11:14:49 AM
TED S. KOESTER - CIVIL
MO-PE-2013000591

DATE PREPARED	12/13/2024
ROUTE K	STATE MO
DISTRICT BR	SHEET NO. 15
COUNTY	MONTGOMERY
JOB NO.	JNE0154
CONTRACT ID.	
PROJECT NO.	
BRIDGE NO.	A9537

DESCRIPTION

DATE

MISSOURI HIGHWAYS AND TRANSPORTATION COMMISSION
105 WEST CAPITOL
JEFFERSON CITY, MO 65102
1-888-ASK-MODOT (1-888-275-6636)

(1) Fabricator shall apply a bond breaker to this region excluding where joint filler will be applied.

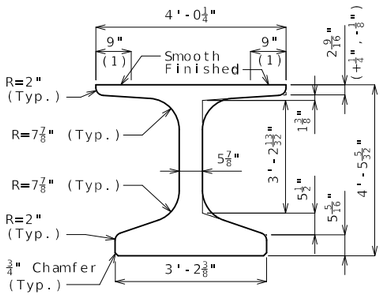

DIMENSIONS

(2) Outer strands tensioned to 2.02 kips/strand and inner strands to 8 kips/strand. Placed symmetrical about ℄ Girder. May be moved laterally in pairs.

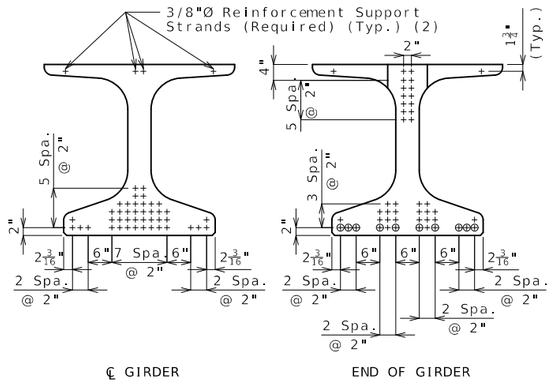

℄ GIRDER END OF GIRDER

STRAND ARRANGEMENT

+ Indicates prestressing strand.

o Indicates cut & shop bend with 3'-0" projection.

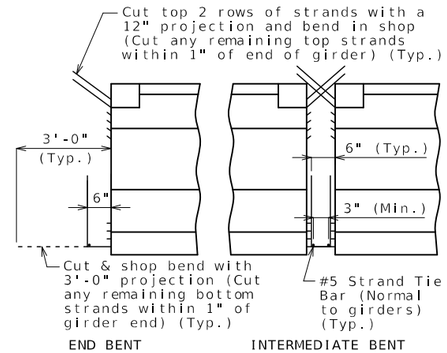

END BENT INTERMEDIATE BENT

STRANDS AT GIRDER ENDS

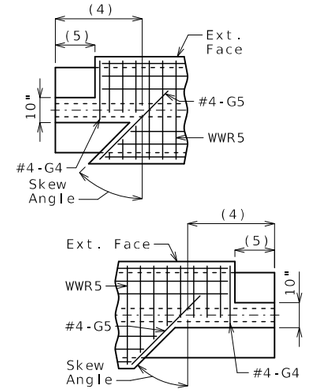

LEFT EXTERIOR GIRDER AT INTERMEDIATE BENT

Rotate 180° for right ext.

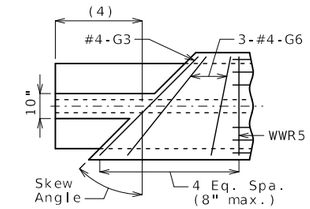

INTERIOR GIRDER AT ALL BENTS

TOP FLANGE BLOCKOUT

Bill of Reinforcing Steel - Each Girder			
No.	Size/ Mark	Length	Shape
212	5 B1	5'-10"	11S
232	4 D1	4'-0"	9S
2	4 G3	4'-2"	20
2	4 G4	2'-3"	20
2	4 G5	2'-11"	20
6	4 G6	Varies	20

Bending Diagrams

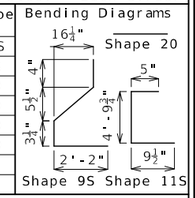

Welded Wire Reinforcement - Each Girder

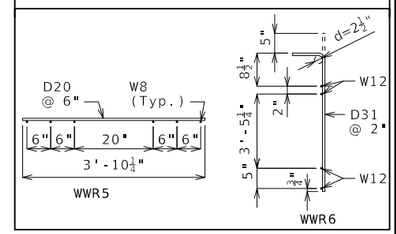

All dimensions are out to out.

Hooks and bends shall be in accordance with the CRSI Manual of Standard Practice for Detailing Reinforced Concrete Structures, Stirrup and Tie Dimensions.

Actual bar lengths are measured along centerline of bar to the nearest inch.

Minimum clearance to reinforcing shall be one inch.

All bar reinforcement shall be Grade 60.

The two D1 bars may be furnished as one bar at the fabricator's option.

All B1 bars shall be epoxy coated.

G4 and G5 not required for interior girders. G3 and G6 not required for exterior girders of intermediate spans.

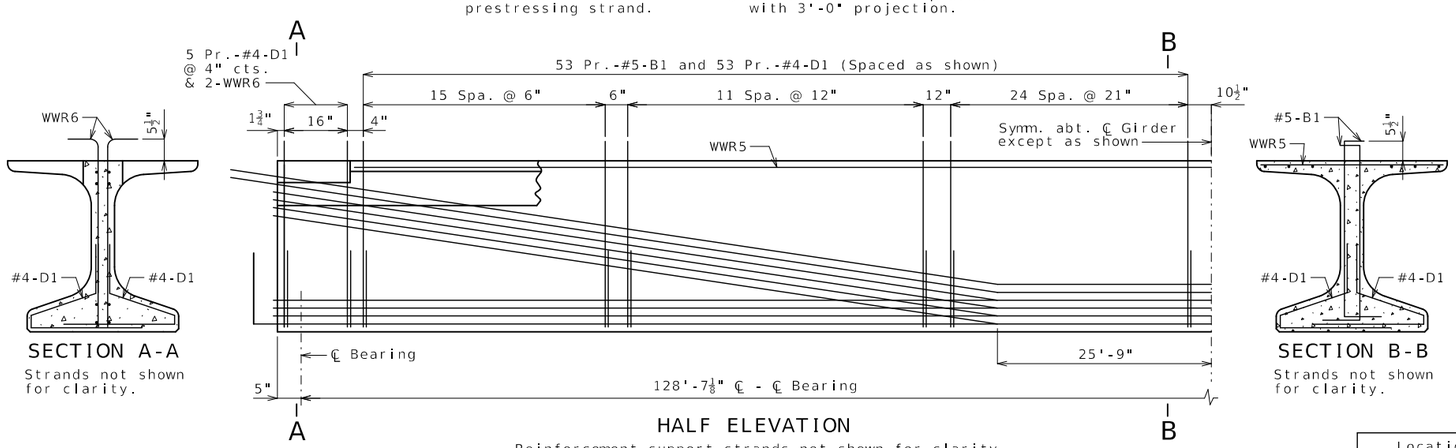

SECTION A-A

Strands not shown for clarity.

HALF ELEVATION

Reinforcement support strands not shown for clarity.

SECTION B-B

Strands not shown for clarity.

Location	(4)	(5)
Int. Bent No. 2	17"	6⅞"
Int. Bent No. 3	18⅜"	8¼"

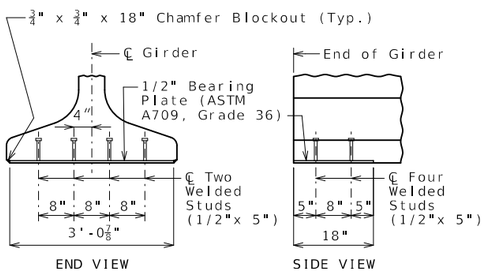

END VIEW SIDE VIEW

BEARING PLATE

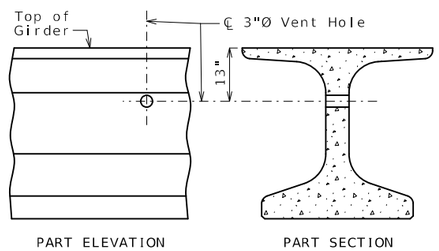

PART ELEVATION PART SECTION

VENT HOLE

Place vent holes at or near upgrade 1/3 point of girders and clear reinforcing steel or strands by 1 1/2" minimum and steel intermediate diaphragm bolt connections by 6" minimum.

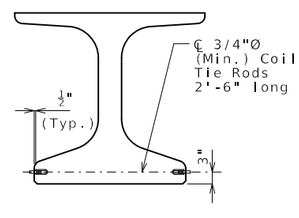

COIL TIES

Exclude coil tie at exterior face of exterior girders.

General Notes:

Concrete for prestressed girders shall be Class A-1 with f'c = 8000 psi and f'ci = 6500 psi.

Use 42 strands, 0.6"Ø Grade 270, with an initial prestress force of 1846 kips.

Pretensioned members shall be in accordance with Sec 1029.

Fabricator shall be responsible for location and design of lifting devices.

Exterior and interior girders are the same except: coil ties, top flange blockout, application of bond breaker, coil inserts for slab drains, holes for steel intermediate diaphragms.

For Girder Camber Diagram, see Sheet No. 21.

The 1 1/2"Ø holes shall be cast in the web for steel intermediate diaphragms. Drilling is not allowed. For location of holes and details of steel intermediate diaphragms, see Sheet No. 17.

For location of coil inserts at slab drains, see Sheet No. 20.

For location of coil ties at concrete diaphragms and integral bents, see Sheet No. 18.

Alternate bar reinforcing steel details are provided and may be used. The same type of reinforcing steel shall be used for all girders in all spans.

STATE OF MISSOURI
TED S. KOESTER
NUMBER PE-2013000591
PROFESSIONAL ENGINEER
Ted Koester
12/13/2024 11:15:14 AM
TED S. KOESTER - CIVIL
MO-PE-2013000591

DATE PREPARED	
12/13/2024	
ROUTE K	STATE MO
DISTRICT BR	SHEET NO. 16
COUNTY MONTGOMERY	
JOB NO. JNE0154	
CONTRACT ID.	
PROJECT NO.	
BRIDGE NO. A9537	

DATE	DESCRIPTION

MISSOURI HIGHWAYS AND TRANSPORTATION COMMISSION
105 WEST CAPITOL
JEFFERSON CITY, MO 65102
1-888-ASK-MODOT (1-888-275-6636)

NU-GIRDERS (ALTERNATE REINFORCEMENT) - SPAN (2-3)

Detailed Oct. 2024
Checked Nov. 2024

Note: This drawing is not to scale. Follow dimensions.

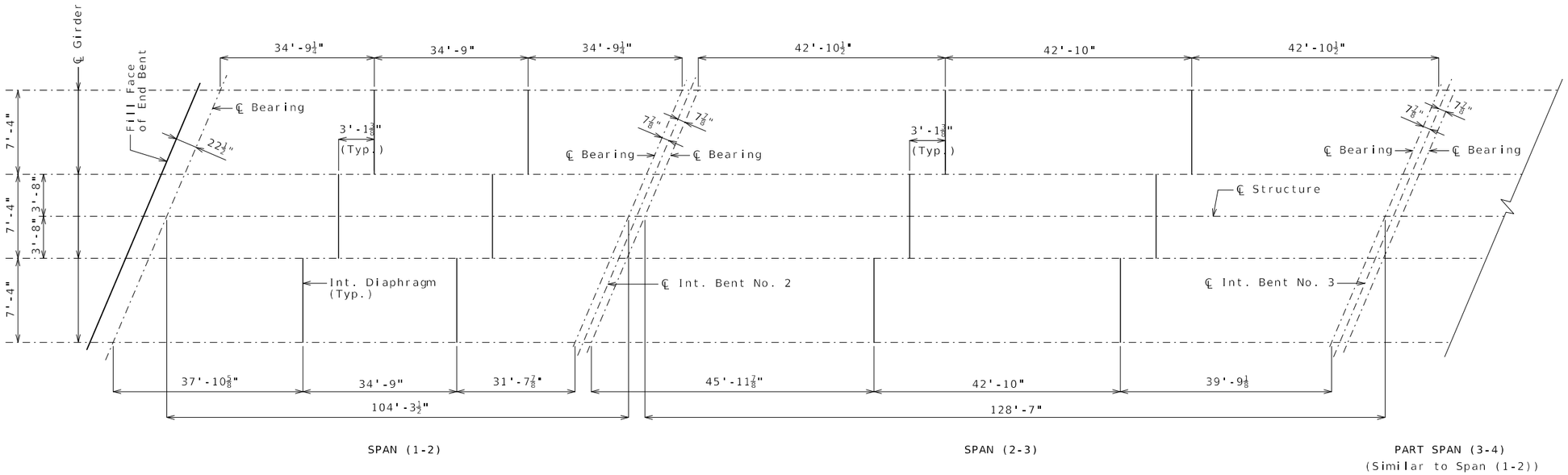

PART PLAN SHOWING LOCATION OF STEEL INTERMEDIATE DIAPHRAGMS

Longitudinal dimensions are horizontal.

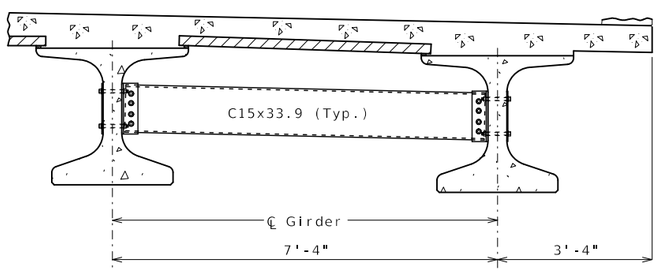

PART SECTION SHOWING INTERMEDIATE DIAPHRAGMS

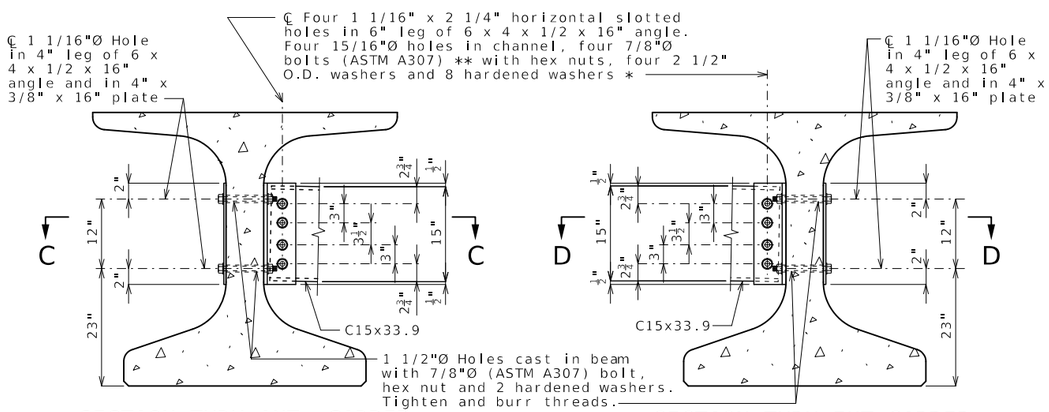

SECTION THRU INT. GIRDER AT DIAPHRAGM

SECTION THRU EXT.GIRDER AT DIAPHRAGM

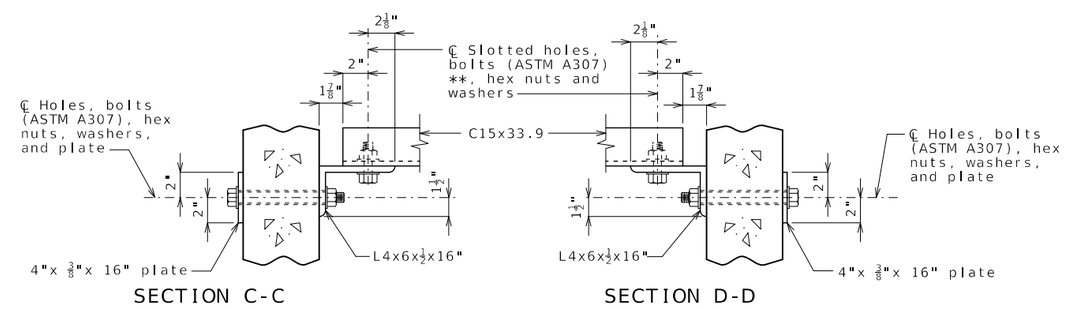

SECTION C-C

SECTION D-D

STEEL DIAPHRAGM NOTES:

* In lieu of 2 1/2" outside diameter washers, contractor may substitute a 3/16" (Min. thickness) plate with four 15/16" Ø holes and one hardened washer per bolt.

** Bolts shall be tightened to provide a tension of one-half that specified in Sec 712 for high strength bolt installation. ASTM F3125 Grade A325 Type 1 bolts may be substituted for and installed in accordance with the requirements for the specified ASTM A307 bolts.

All diaphragm materials including bolts, nuts, and washers shall be galvanized.

Fabricated structural steel shall be ASTM A709 Grade 36 except as noted.

Payment for furnishing and installing steel intermediate diaphragms will be considered completely covered by the contract unit price for Steel Intermediate Diaphragm for P/S Concrete Girders.

Shop drawings will not be required for steel intermediate diaphragms and angle connections.

STEEL INTERMEDIATE DIAPHRAGMS

Detailed Nov. 2024
Checked Nov. 2024

Note: This drawing is not to scale. Follow dimensions.

STATE OF MISSOURI
TED S. KOESTER
NUMBER PE-2013000591
PROFESSIONAL ENGINEER
12/13/2024 11:15:38 AM
TED S. KOESTER - CIVIL
MO-PE-2013000591

DATE PREPARED	12/13/2024
ROUTE	K
STATE	MO
DISTRICT	BR
SHEET NO.	17
COUNTY	MONTGOMERY
JOB NO.	JNE0154
CONTRACT ID.	
PROJECT NO.	
BRIDGE NO.	A9537

DESCRIPTION

DATE

MISSOURI HIGHWAYS AND TRANSPORTATION COMMISSION
105 WEST CAPITOL
JEFFERSON CITY, MO 65102
1-888-ASK-MODOT (1-888-275-6636)

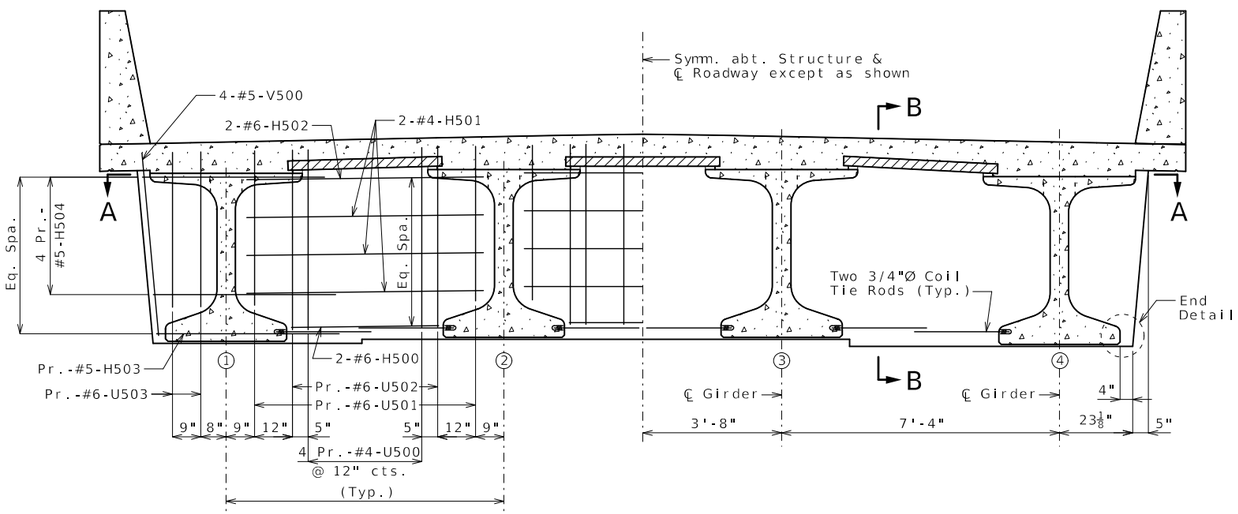

SECTION NEAR INTERMEDIATE BENT

(Normal to ℄ Structure)

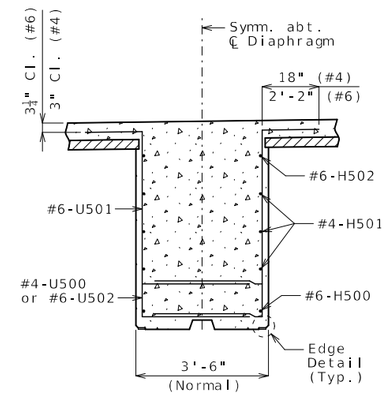

SECTION B-B

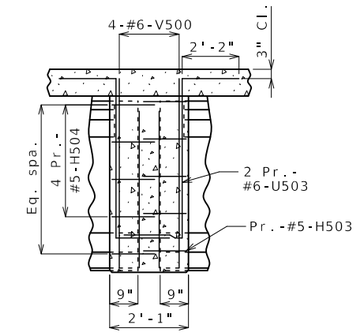

ELEVATION C-C

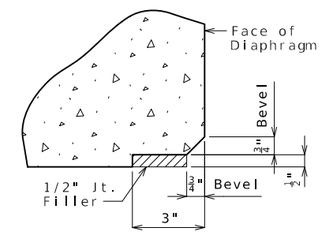

EDGE DETAIL

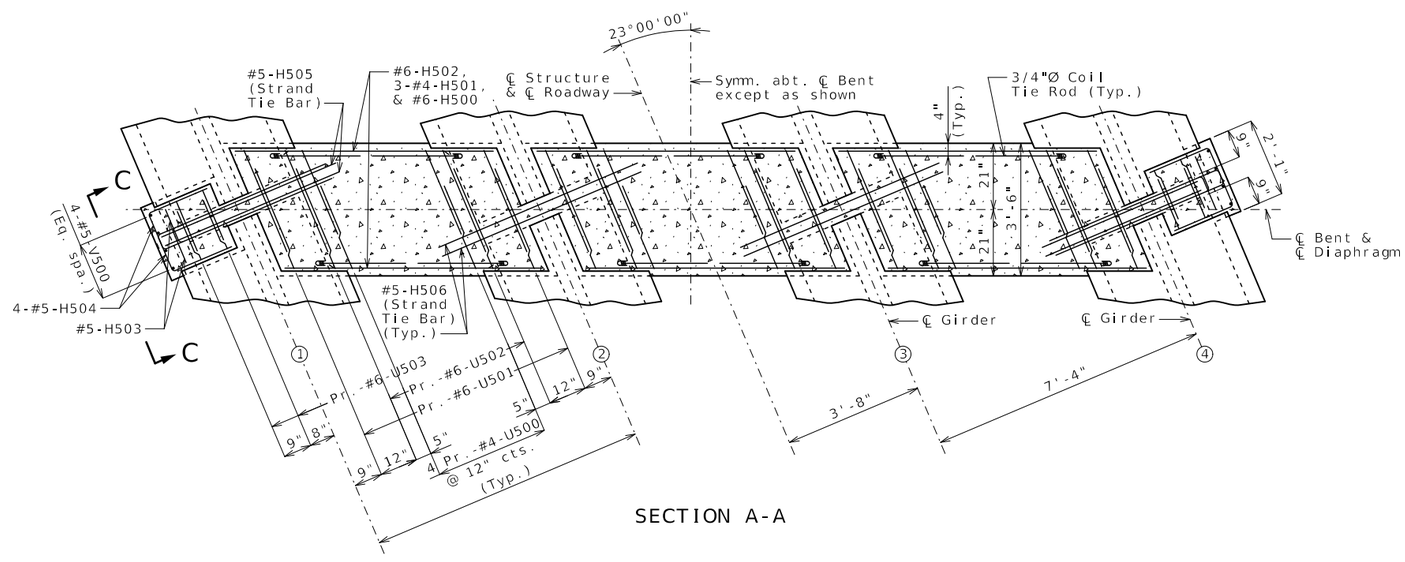

SECTION A-A

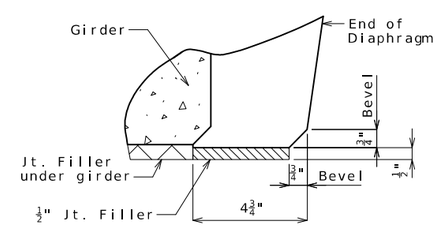

END DETAIL

Notes:

Diaphragms at intermediate bents shall be built vertical.

For location of #5-H505 & #5-H506 (Strand Tie Bars), and coil tie rods, see Sheets No. 13 thru 16.

All U bars in diaphragm shall be placed parallel to centerline of roadway.

Slab reinforcing bars not shown for clarity.

CONCRETE DIAPHRAGM AT INTERMEDIATE BENTS NO. 2 & 3

Detailed Nov. 2024
Checked Nov. 2024

Note: This drawing is not to scale. Follow dimensions.

STATE OF MISSOURI
TED S. KOESTER
NUMBER PE-2013000591
PROFESSIONAL ENGINEER
12/13/2024 11:16:02 AM
TED S. KOESTER - CIVIL
MO-PE-2013000591

DATE PREPARED	12/13/2024
ROUTE	K
STATE	MO
DISTRICT	BR
SHEET NO.	18
COUNTY	MONTGOMERY
JOB NO.	JNE0154
CONTRACT ID.	
PROJECT NO.	
BRIDGE NO.	A9537

DESCRIPTION

DATE

MISSOURI HIGHWAYS AND TRANSPORTATION COMMISSION

105 WEST CAPITOL
JEFFERSON CITY, MO 65102
1-888-ASK-MODOT (1-888-275-6636)

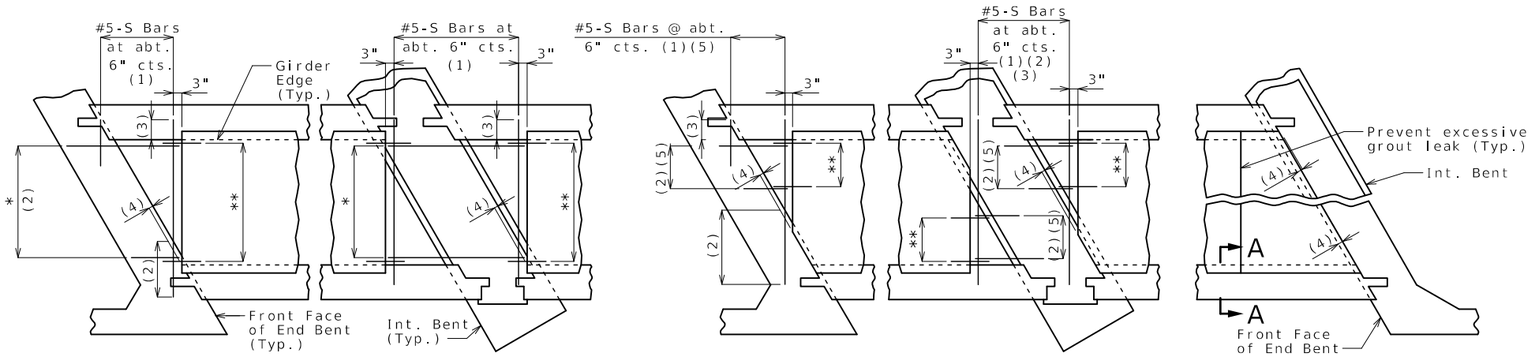

SQUARED END PANELS OR TRUNCATED END PANELS

PLAN SHOWING PANEL PLACEMENT

* #5-S Bars at abt. 9" cts. (1)
** #3-P1 at 12" cts. (End panels only)

SKEWED END PANELS

Joint Filler Dimensions		
Width	Height	
	Min.	Max.
3"	1"	4"

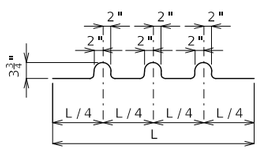

BENDING DIAGRAM FOR U1 BAR

U1 Bars may be oriented at right angles to location and spacing shown. U1 Bars shall be placed between P1 bars.

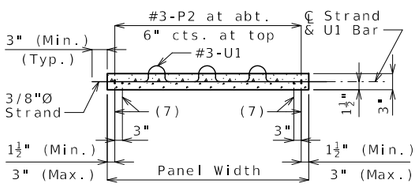

SECTION B-B

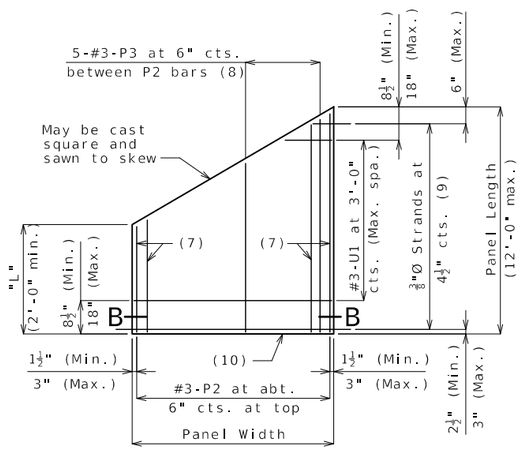

PLAN OF OPTIONAL SKEWED END PANEL

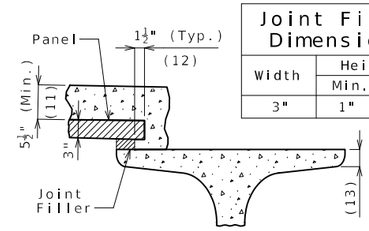

SECTION A-A

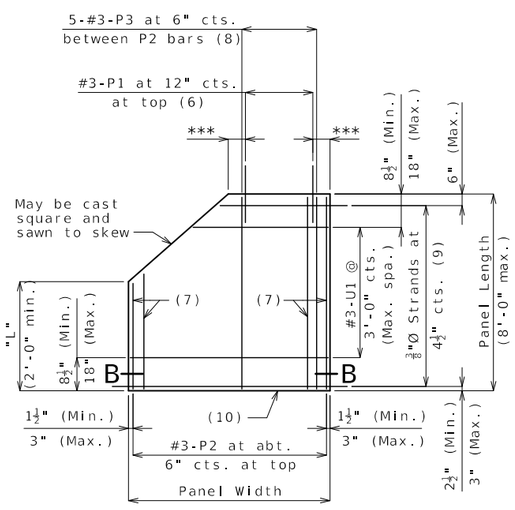

PLAN OF OPTIONAL TRUNCATED END PANEL

*** 3" (Min.), 6" (Max.)

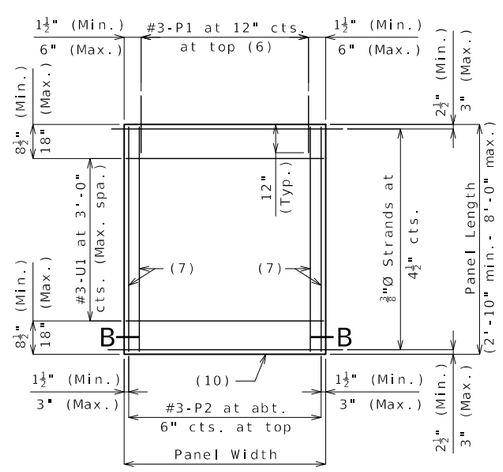

PLAN OF SQUARED PANEL

Reference Notes:

Plan of Panel Placement:

(1) S-bars shown are bottom steel in slab between panels and used with squared and truncated end panels only.

(2) Extend S-bars 18 inches beyond the front face of end bents and int. bents for squared and truncated end panels only.

(3) Extend S-bars 9 inches beyond edge of girder (Typ.).

(4) End panels shall be dimensioned 1/2" min. to 1 1/2" max. from the inside face of diaphragm.

(5) For truncated end panels, use a min. of #5-S bars at 6" crossings in openings, or min. 4x4-W7xW7.

Plans of Panels:

(6) For end panels only, P1 bars shall be 2'-0" in length and embedded 12". P1 bars will not be required for panels at squared integral end bents.

(7) #3-P2 bars near edge of panel at bottom (under strands).

(8) Use #3-P3 bars if panel is skewed 45° or greater.

(9) Any strand 2'-0" or shorter shall have a #4 reinforcing bar on each side of it, centered between strands. Strands 2'-0" or shorter may then be debonded at the fabricator's option.

(10) Optional 1/2" x 45° Chamfer one or both sides at bottom.

Section A-A:

(11) Slab thickness over prestressed panels varies due to girder camber. In order to maintain minimum slab thickness, it may be necessary to raise the grade uniformly throughout the structure. No payment will be made for additional labor or materials required for necessary grade adjustment.

(12) Contractor shall ensure proper consolidation under and between panels.

(13) At the contractor's option, the variation in slab thickness over prestressed panels may be eliminated or reduced by increasing and varying the girder top flange thickness. Dimensions shall be shown on the shop drawings.

General Notes:

Prestressed Panels:

Concrete for prestressed panels shall be Class A-1 with f'c = 6,000 psi, f'ci = 4,000 psi.

The top surface of all panels shall receive a scored finish with a depth of scoring of 1/8" perpendicular to the prestressing strands in the panels.

Prestressing tendons shall be high-tensile strength, uncoated, seven-wire, low-relaxation strands for prestressed concrete in accordance with AASHTO M 203 Grade 270, with nominal diameter of strand = 3/8" and nominal area = 0.085 sq.in. and minimum ultimate strength = 22.95 kips (270 ksi). Larger strands may be used with the same spacing and initial tension.

Initial prestressing force = 17.2 kips/strand.

The method and sequence of releasing the strands shall be shown on the shop drawings.

Suitable anchorage devices for lifting panels may be cast in panels, provided the devices are shown on the shop drawings and approved by the engineer. Panel lengths shall be determined by the contractor and shown on the shop drawings.

When squared end panels are used at skewed bents, the skewed portion shall be cast full depth. No separate payment will be made for additional concrete and reinforcing required.

Support from diaphragm forms is required under the optional skewed end until cast-in-place concrete has reached 3,000 psi compressive strength.

Prestressed panels shall be brought to saturated surface-dry (SSD) condition just prior to the deck pour. There shall be no free standing water on the panels or in the area to be cast.

The prestressed panel quantities are not included in the table of estimated quantities for the slab.

Reinforcing Steel:

All dimensions are out to out.

Hooks and bends shall be in accordance with the CRSI Manual of Standard Practice for Detailing Reinforced Concrete Structures, Stirrup and Tie Dimensions.

Minimum clearance to reinforcing steel shall be 1 1/2", unless otherwise shown.

If U1 bars interfere with placement of slab steel, U1 loops may be bent over, as necessary, to clear slab steel.

Deformed welded wire reinforcement (WWR) providing a minimum area of reinforcing perpendicular to strands of 0.22 sq in./ft, with spacing parallel to strands sufficient to ensure proper handling, may be used in lieu of the #3-P2 bars shown. Wire diameter shall not be larger than 0.375 inch. The above alternative reinforcement criteria may be used in lieu of the #3-P3 bars, when required, and placed over a width not less than 2 feet.

The following reinforcing steel shall be tied securely to the strands with the following maximum spacing in each direction:
#3-P2 bars at 16 inches.
WWR at 24 inches.

The #3-U1 bars shall be tied securely to #3-P2 bars, to WWR or to strands (when placed between P1 bars) at about 3-foot centers.

Minimum reinforcement steel length shall be 2'-0".

All reinforcement other than prestressing strands shall be epoxy coated.

Precast panels may be in contact with stirrup reinforcing in diaphragms.

S-bars are not listed in the bill of reinforcing.

Cost of S-bars will be considered completely covered by the contract unit price for the slab.

Joint Filler:

Joint filler shall be preformed fiber expansion joint material in accordance with Sec 1057 or expanded or extruded polystyrene bedding material in accordance with Sec 1073.

Use Slab Haunching Diagram on Sheet No. 21 for determining thickness of joint filler within the limits noted in the table of Joint Filler Dimensions.

Thicker material may be used on one or both sides of the girder to reduce cast-in-place concrete thickness to within tolerances.

The same thickness of preformed fiber expansion joint material shall be used under any one edge of any panel except at locations where top flange thickness may be stepped. The maximum change in thickness between adjacent panels shall be 1/2 inch. The polystyrene bedding material may be cut with a transition to match haunch height above top of flange.

Joint filler shall be glued to the girder. When thickness exceeds 1 1/2 inches, the joint filler shall be glued top and bottom. The glue used shall be the type recommended by the joint filler manufacturer.

Edges of panels shall be uniformly seated on the joint filler before slab reinforcement is placed.

STATE OF MISSOURI
TED S. KOESTER
NUMBER PE-2013000591
PROFESSIONAL ENGINEER
12/13/2024 11:16:23 AM
TED S. KOESTER - CIVIL
MO-PE-2013000591

DATE PREPARED	
12/13/2024	
ROUTE: K	STATE: MO
DISTRICT: BR	SHEET NO.: 19
COUNTY: MONTGOMERY	
JOB NO.: JNE0154	
CONTRACT ID.	
PROJECT NO.	
BRIDGE NO.: A9537	

DESCRIPTION

DATE

MISSOURI HIGHWAYS AND TRANSPORTATION COMMISSION
105 WEST CAPITOL
JEFFERSON CITY, MO 65102
1-888-ASK-MODOT (1-888-275-6636)

Detailed Nov. 2024
Checked Nov. 2024

Note: This drawing is not to scale. Follow dimensions.

PRESTRESSED PANELS

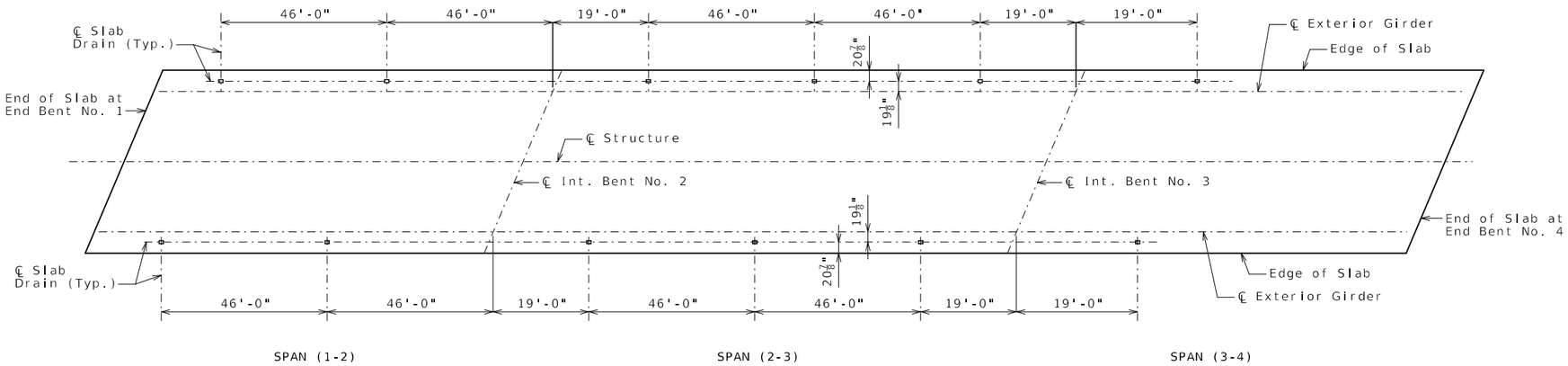

PLAN OF SLAB SHOWING SLAB DRAIN LOCATIONS

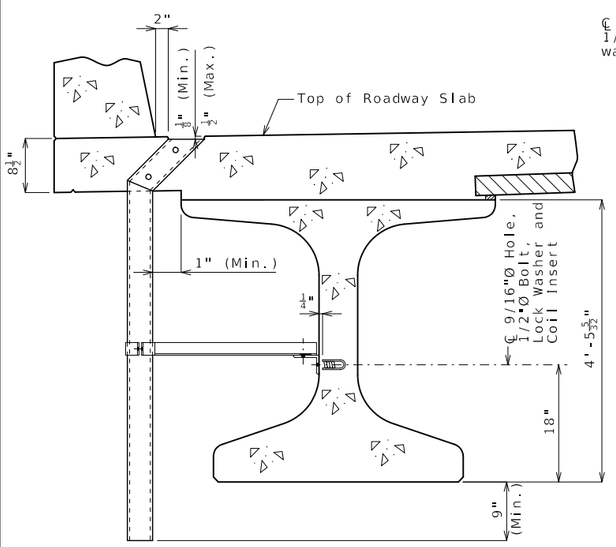

PART SECTION NEAR DRAIN

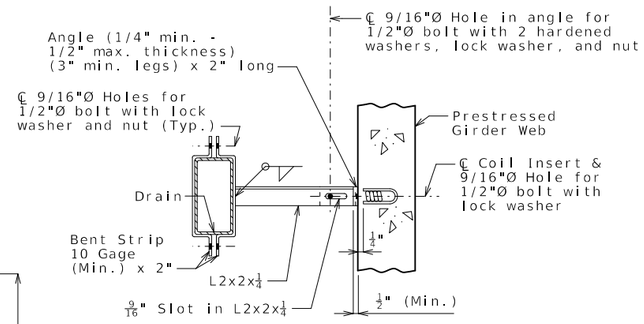

PART SECTION SHOWING BRACKET ASSEMBLY

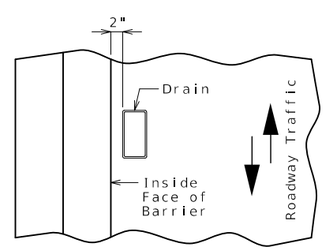

PART PLAN OF SLAB AT DRAIN

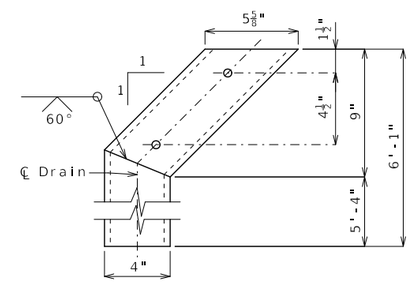

ELEVATION OF DRAIN

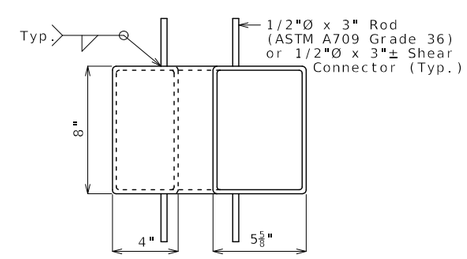

PLAN OF STEEL DRAIN OPTION

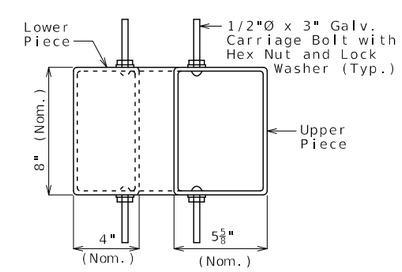

PLAN OF FRP DRAIN OPTION

General Notes:

Contractor shall have the option to construct either steel or FRP slab drains. All drains shall be of same type.

Slab drain bracket assembly shall be ASTM A709 Grade 36 steel.

Locate drains in slab by dimensions shown in Part Section Near Drain.

Reinforcing steel shall be shifted to clear drains.

The coil inserts and bracket assembly shall be galvanized in accordance with ASTM A123.

All bolts, hardened washers, lock washers and nuts shall be galvanized in accordance with AASHTO M 232 (ASTM A153), Class C.

All 1/2"Ø bolts shall be ASTM A307.

Shop drawings will not be required for the slab drains and the bracket assembly.

The coil insert required for the bracket assembly attachment shall be located on the prestressed girder shop drawings.

Coil inserts shall have a concrete pull-out strength (ultimate load) of at least 2,500 pounds in 5,000 psi concrete.

The bolt required to attach the slab drain bracket assembly to the prestressed girder web shall be supplied by the prestressed girder fabricator.

Notes for Steel Drain:

Slab drains may be fabricated of either 1/4" welded sheets of ASTM A709 Grade 36 steel or from 1/4" structural steel tubing ASTM A500 or A501.

Outside dimensions of drains are 8" x 4".

The drains shall be galvanized in accordance with ASTM A123.

Notes for FRP Drain:

Drains shall be machine filament-wound thermosetting resin tubing meeting the requirements of ASTM D2996 with the following exceptions:

Shape of drains shall be rectangular with outside nominal dimensions of 8" x 4".

Minimum reinforced wall thickness shall be 1/4 inch.

The resin used shall be ultraviolet (UV) resistant and/or have UV inhibitors mixed throughout. Drains may have an exterior coating for additional UV resistance.

The color of the slab drain shall be gray (Federal Standard 26373). The color shall be uniform throughout the resin and any coating used.

The combination of materials used in the manufacture of the drains shall be tested for UV resistance in accordance with ASTM D4329 Cycle A. The representative material shall withstand at least 500 hours of testing with only minor discoloration and without any physical deterioration. The contractor shall furnish the results of the required ultraviolet testing prior to acceptance of the slab drains.

At the contractor's option, drains may be field cut. The method of cutting FRP slab drain shall be as recommended by the manufacturer to ensure a smooth, chip free cut.

Both upper and lower drain pieces shall be rigidly connected to each other. Drain flow shall not be obstructed. Approval of the engineer is required.

STATE OF MISSOURI
TED S. KOESTER
NUMBER PE-2013000591
PROFESSIONAL ENGINEER
12/13/2024 11:16:48 AM
TED S. KOESTER - CIVIL
MO-PE-2013000591

DATE PREPARED	
12/13/2024	
ROUTE K	STATE MO
DISTRICT BR	SHEET NO. 20
COUNTY MONTGOMERY	
JOB NO. JNE0154	
CONTRACT ID.	
PROJECT NO.	
BRIDGE NO. A9537	

DESCRIPTION	DATE

MISSOURI HIGHWAYS AND TRANSPORTATION COMMISSION
105 WEST CAPITOL
JEFFERSON CITY, MO 65102
1-888-ASK-MODOT (1-888-275-6636)

SLAB DRAINS

Detailed Nov. 2024
Checked Nov. 2024

Note: This drawing is not to scale. Follow dimensions.

Theoretical Bottom of Slab Elevations at Centerline of Girder (Prior to forming for slab) (Estimated at 90 days)

Girder Number	Span (1-2) (104'-3½" ℄ Brg. - ℄ Brg.)										
	℄ Brg.	.10	.20	.30	.40	.50	.60	.70	.80	.90	℄ Brg.
1	536.24	536.40	536.56	536.72	536.87	537.01	537.13	537.25	537.36	537.46	537.56
2	536.34	536.51	536.67	536.83	536.98	537.12	537.24	537.36	537.47	537.57	537.67
3	536.30	536.47	536.63	536.79	536.94	537.08	537.20	537.32	537.43	537.53	537.63
4	536.12	536.28	536.45	536.60	536.75	536.89	537.01	537.13	537.24	537.34	537.44
Girder Number	**Span (2-3) (128'-7" ℄ Brg. - ℄ Brg.)**										
	℄ Brg.	.10	.20	.30	.40	.50	.60	.70	.80	.90	℄ Brg.
1	537.58	537.82	538.05	538.27	538.47	538.64	538.79	538.92	539.03	539.13	539.21
2	537.68	537.93	538.16	538.38	538.58	538.76	538.91	539.04	539.14	539.24	539.32
3	537.65	537.89	538.12	538.34	538.54	538.72	538.87	539.00	539.10	539.20	539.28
4	537.46	537.70	537.93	538.15	538.35	538.52	538.67	538.80	538.91	539.01	539.09
Girder Number	**Span (3-4) (104'-3½" ℄ Brg. - ℄ Brg.)**										
	℄ Brg.	.10	.20	.30	.40	.50	.60	.70	.80	.90	℄ Brg.
1	539.23	539.40	539.56	539.72	539.86	540.00	540.13	540.25	540.35	540.46	540.55
2	539.34	539.50	539.67	539.83	539.98	540.11	540.24	540.36	540.46	540.56	540.66
3	539.30	539.46	539.63	539.79	539.94	540.07	540.20	540.32	540.42	540.52	540.62
4	539.11	539.28	539.44	539.60	539.75	539.88	540.01	540.13	540.24	540.34	540.43

Elevations are based on a constant slab thickness of 8 1/2" and include allowance for theoretical dead load deflections due to weight of slab (including precast panel) and barrier.

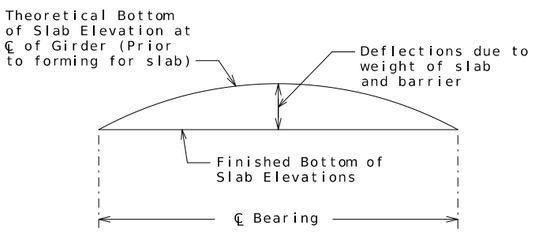

TYPICAL SLAB ELEVATIONS DIAGRAM

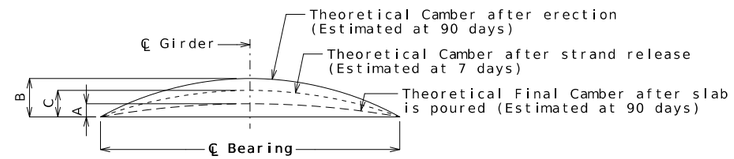

Girder	Span (1-2)			Span (2-3)			Span (3-4)		
	A	B	C	A	B	C	A	B	C
Exterior	3/8"	1 5/8"	1 1/4"	5/8"	3 5/8"	2 5/8"	3/8"	1 5/8"	1 1/4"
Interior	1/4"			1/2"			1/4"		

GIRDER CAMBER DIAGRAM

Conversion Factors for Girder Camber (Estimated at 90 days):

0.1 pt. = 0.314 x 0.5 pt.
0.2 pt. = 0.593 x 0.5 pt.
0.3 pt. = 0.813 x 0.5 pt.
0.4 pt. = 0.952 x 0.5 pt.

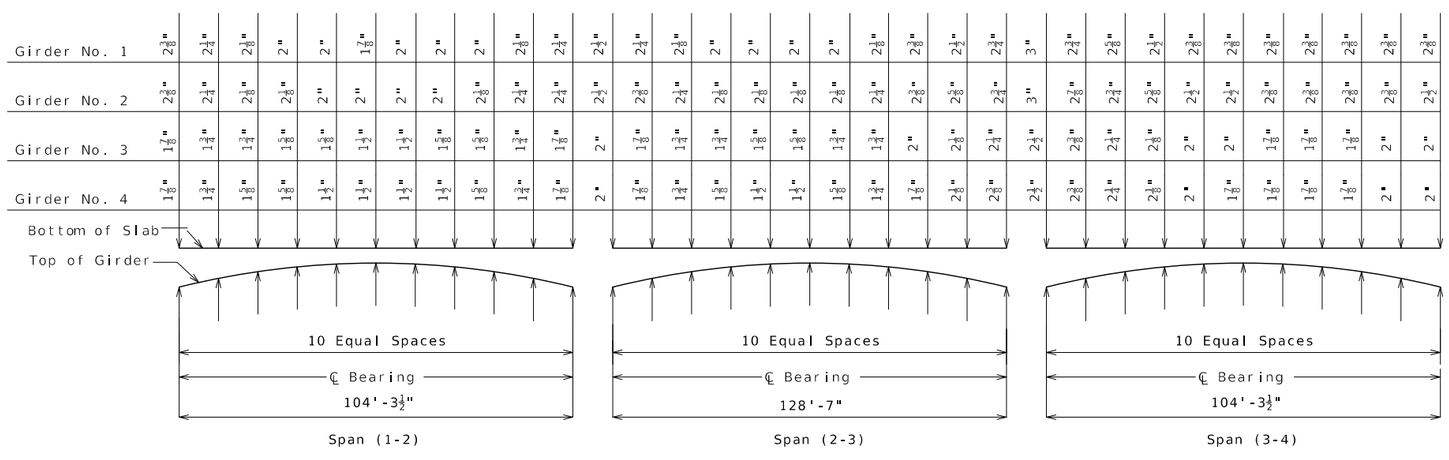

THEORETICAL SLAB HAUNCHING DIAGRAM (ESTIMATED AT 90 DAYS)

If girder camber is different from that shown in the camber diagram, in order to maintain minimum slab thickness, an adjustment of the slab haunches, an increase in slab thickness or a raise in grade uniformly throughout the structure shall be necessary. No payment will be made for additional labor or materials required for variation in haunching, slab thickness or grade adjustment.

Concrete in the slab haunches is included in the Estimated Quantities for Slab on Concrete NU-Girder.

Detailed Nov. 2024
Checked Nov. 2024

Note: This drawing is not to scale. Follow dimensions.

STATE OF MISSOURI
TED S. KOESTER
NUMBER PE-2013000591
PROFESSIONAL ENGINEER
12/13/2024 11:17:16 AM
TED S. KOESTER - CIVIL
MO-PE-2013000591

DATE PREPARED 12/13/2024

ROUTE	STATE
K	MO
DISTRICT	SHEET NO.
BR	21

COUNTY MONTGOMERY
JOB NO. JNE0154
CONTRACT ID.
PROJECT NO.
BRIDGE NO. A9537

DESCRIPTION
DATE

MISSOURI HIGHWAYS AND TRANSPORTATION COMMISSION
105 WEST CAPITOL
JEFFERSON CITY, MO 65102
1-888-ASK-MODOT (1-888-275-6636)

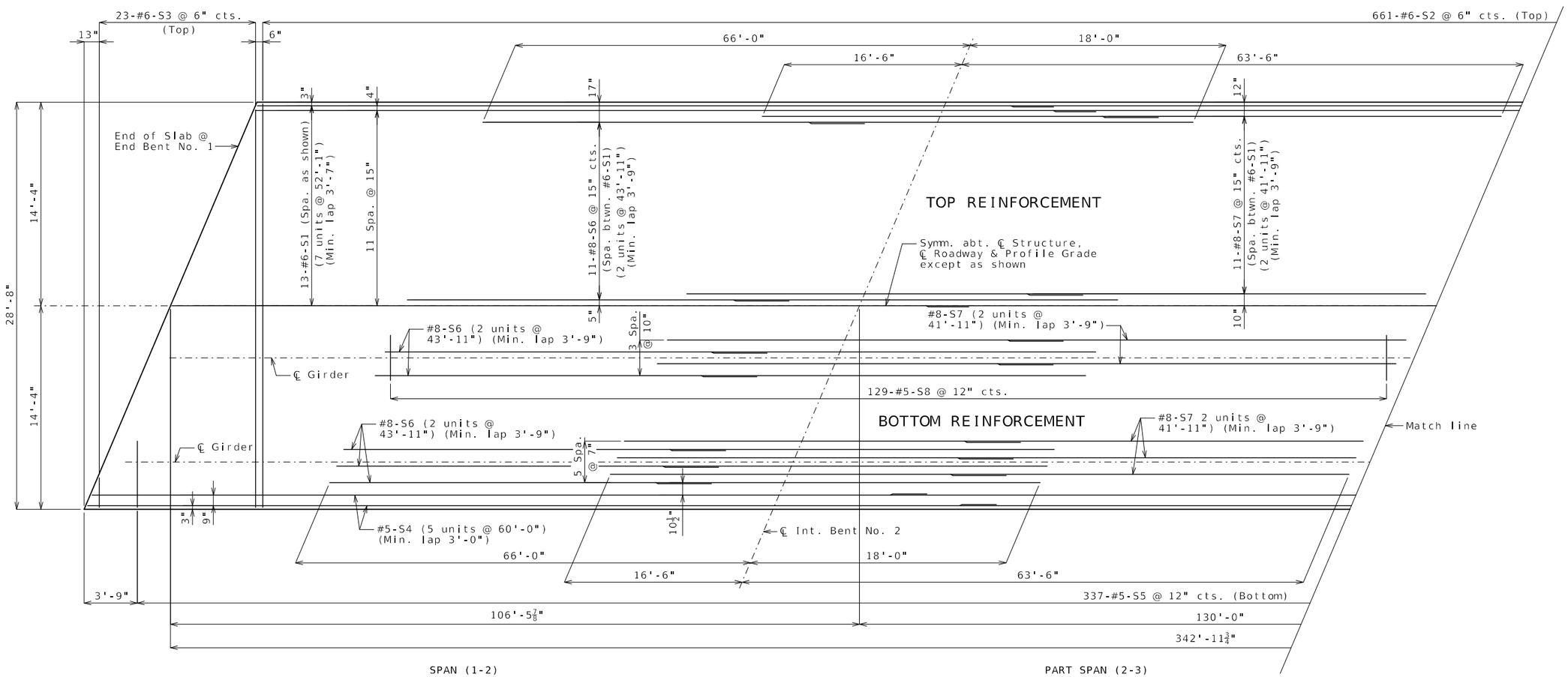

PART PLAN OF SLAB SHOWING REINFORCEMENT

Longitudinal slab dimensions are measured horizontally.

Notes:

Work this sheet with Sheet No. 23.

For Section thru Slab and Slab Pouring Sequence, see Sheet No. 24.

For details of Precast Prestressed Panels, see Sheet No. 19.

For details and reinforcement of the barrier, see Sheets No. 25 & 26.

For details and locations of slab drains, see Sheet No. 20.

For Theoretical Slab Haunching Diagram, Girder Camber Diagram, and Theoretical Bottom of Slab Elevations, see Sheet No. 21.

SLAB DETAILS

Detailed Nov. 2024
Checked Nov. 2024

Note: This drawing is not to scale. Follow dimensions.

STATE OF MISSOURI
TED S. KOESTER
NUMBER PE-2013000591
PROFESSIONAL ENGINEER
12/13/2024 11:17:49 AM
TED S. KOESTER - CIVIL
MO-PE-2013000591

DATE PREPARED	12/13/2024
ROUTE	K
STATE	MO
DISTRICT	BR
SHEET NO.	22
COUNTY	MONTGOMERY
JOB NO.	JNE0154
CONTRACT ID.	
PROJECT NO.	
BRIDGE NO.	A9537

DESCRIPTION

DATE

MISSOURI HIGHWAYS AND TRANSPORTATION COMMISSION
105 WEST CAPITOL
JEFFERSON CITY, MO 65102
1-888-ASK-MODOT (1-888-275-6636)

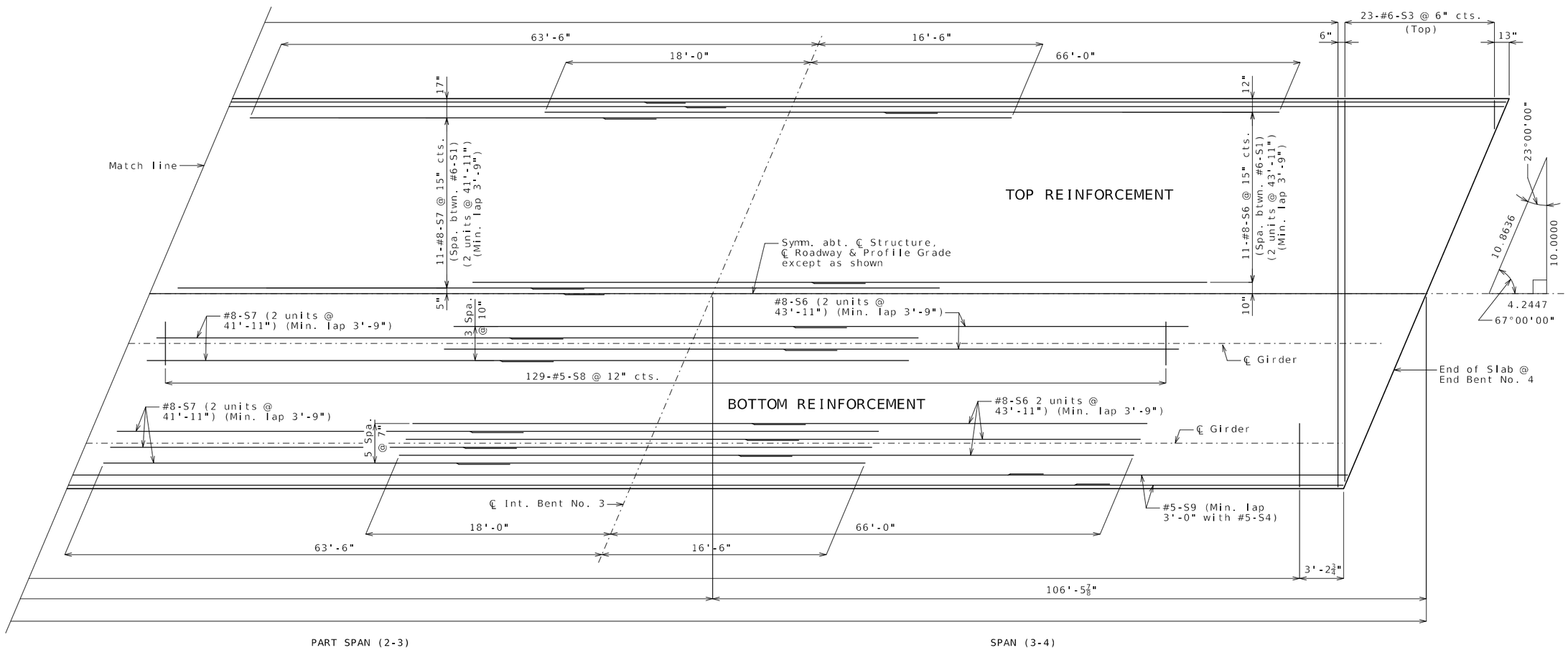

PART PLAN OF SLAB SHOWING REINFORCEMENT

Longitudinal slab dimensions are measured horizontally.

Notes:

Work this sheet with Sheet No. 22.

STATE OF MISSOURI
TED S. KOESTER
NUMBER
PE-2013000591
PROFESSIONAL ENGINEER

12/13/2024 11:18:34 AM
TED S. KOESTER - CIVIL
MO-PE-2013000591

DATE PREPARED	
12/13/2024	
ROUTE K	STATE MO
DISTRICT BR	SHEET NO. 23
COUNTY MONTGOMERY	
JOB NO. JNE0154	
CONTRACT ID.	
PROJECT NO.	
BRIDGE NO. A9537	

DATE	DESCRIPTION

MISSOURI HIGHWAYS AND TRANSPORTATION COMMISSION

105 WEST CAPITOL
JEFFERSON CITY, MO 65102
1-888-ASK-MODOT (1-888-275-6636)

SLAB DETAILS

Detailed Nov. 2024
Checked Nov. 2024

Note: This drawing is not to scale. Follow dimensions.

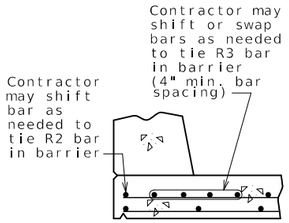

OPTIONAL SHIFTING TOP BARS AT BARRIER

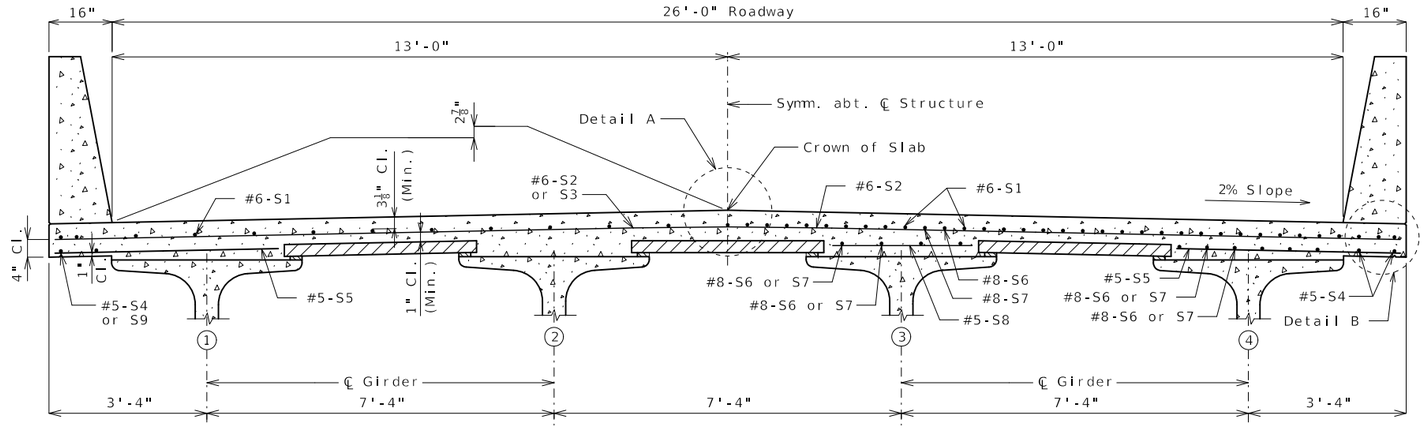

HALF SECTION NEAR MIDSPAN AND NEAR END BENTS

HALF SECTION NEAR INTERMEDIATE BENT

SECTION THRU SLAB

* Alternate bar shape available, see barrier sheet.

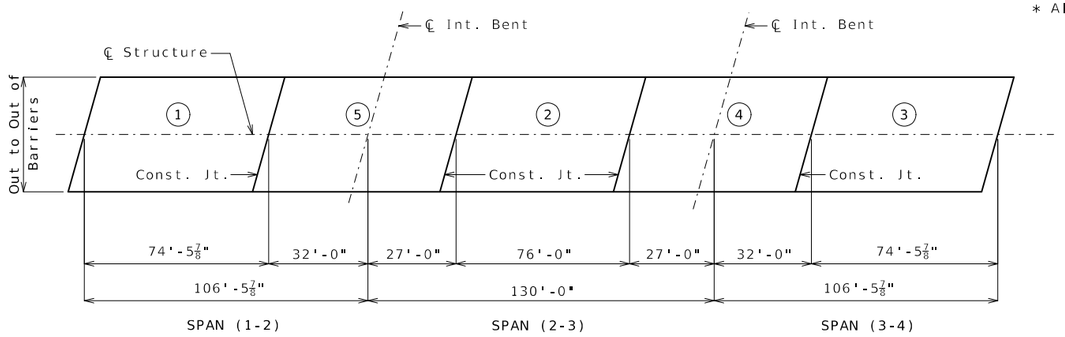

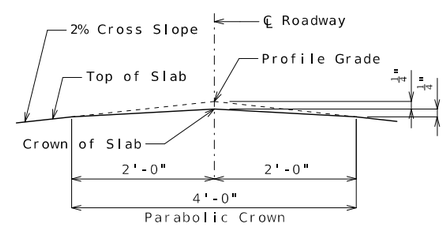

DETAIL A

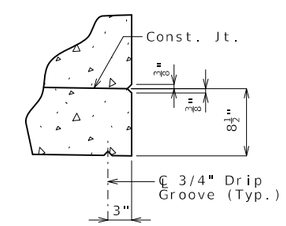

DETAIL B

	Sequence of Pours					Min. Rate of Pour Cu. Yds./Hr.
	Direction					With Retarder
Basic Sequence	1	2	3	4	5	25
	Either Direction					
Alternate pours to the basic skip sequence are subject to the approval of the engineer in accordance with Sec 703.						
Alternate A Pours	1	5 + 2		4 + 3		25
	End to 5	1 to 4		2 to End		
Alternate B Pours	1 + 5 + 2		4 + 3			25
	End to 4		2 to End			
Alternate C Pours	1 + 5 + 2 + 4 + 3					25
	End to End					

The contractor shall furnish an approved retarder to retard the set of the concrete to 2.5 hours, and shall pour up grade and satisfactorily finish the slab pours at the rate given.

The concrete diaphragm at the intermediate bents and integral end bents shall be poured a minimum of 30 minutes and a maximum of 2 hours before the slab is poured.

SLAB POURING SEQUENCE

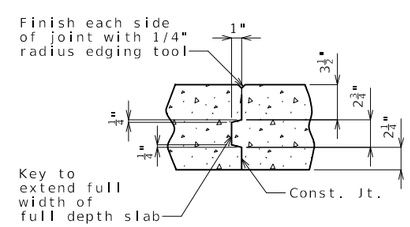

FULL DEPTH SLAB

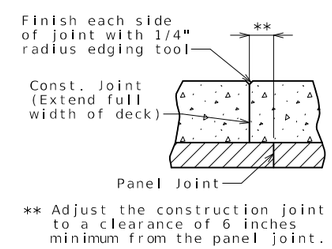

SLAB ON PANELS

SLAB CONSTRUCTION JOINT

Notes:

For details of precast prestressed panels, see Sheet No. 19.

For reinforcement of barrier not shown, see Sheets No. 25 & 26.

For Theoretical Bottom of Slab Elevations, Girder Camber Diagram and Theoretical Slab Haunching Diagram, see Sheet No. 21.

For Plan of Slab Showing Reinforcement, see Sheets No. 22 & 23.

SLAB DETAILS

Detailed Nov. 2024
Checked Nov. 2024

Note: This drawing is not to scale. Follow dimensions.

STATE OF MISSOURI
TED S. KOESTER
NUMBER PE-2013000591
PROFESSIONAL ENGINEER
12/13/2024 11:18:57 AM
TED S. KOESTER - CIVIL
MO-PE-2013000591

DATE PREPARED	
12/13/2024	
ROUTE K	STATE MO
DISTRICT BR	SHEET NO. 24
COUNTY MONTGOMERY	
JOB NO. JNE0154	
CONTRACT ID.	
PROJECT NO.	
BRIDGE NO. A9537	

DESCRIPTION

DATE

MISSOURI HIGHWAYS AND TRANSPORTATION COMMISSION
105 WEST CAPITOL
JEFFERSON CITY, MO 65102
1-888-ASK-MODOT (1-888-275-6636)

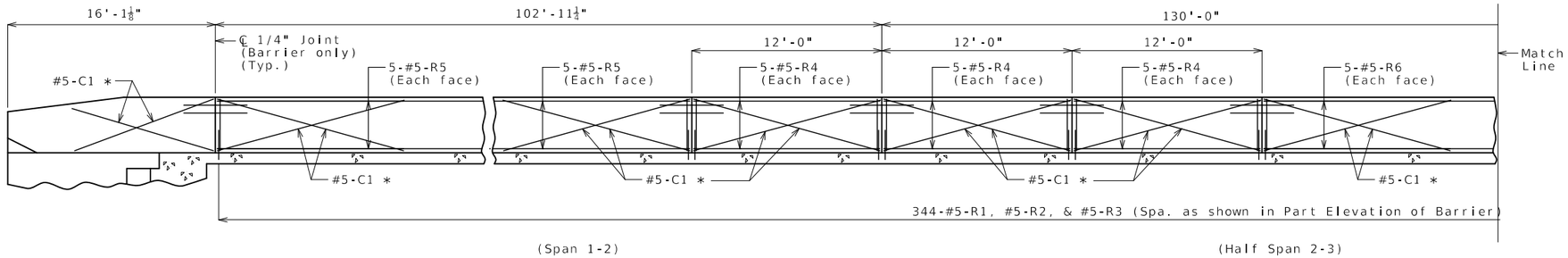

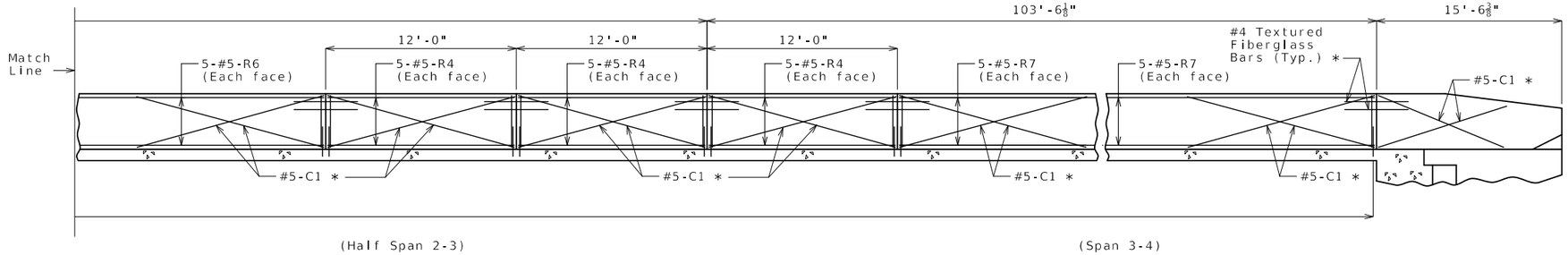

ELEVATION OF BARRIER

(Left barrier shown, right barrier similar)

Longitudinal dimensions are horizontal.

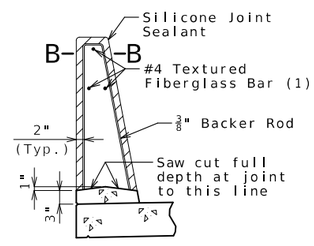

SECTION THRU SAW CUT JOINT

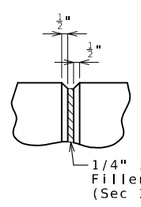

PART ELEVATION AT FORMED JOINT

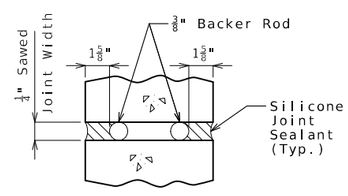

SECTION B-B

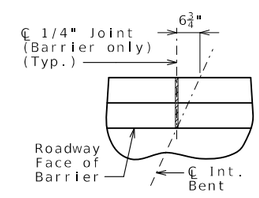

PART PLAN SHOWING JOINT LOCATION

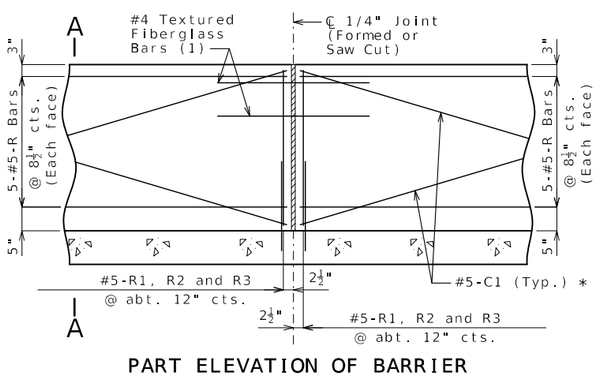

PART ELEVATION OF BARRIER

(1) Four feet long, centered on joint, slip-formed option only

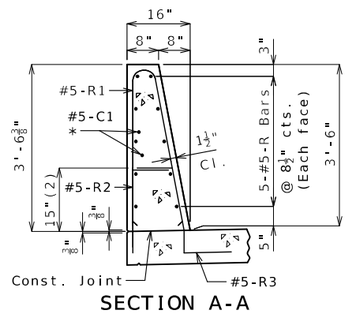

SECTION A-A

Use a minimum lap of 3'-1" for #5 horizontal barrier bars.

The cross-sectional area above the slab is 3.52 square feet.

(2) To top of bar

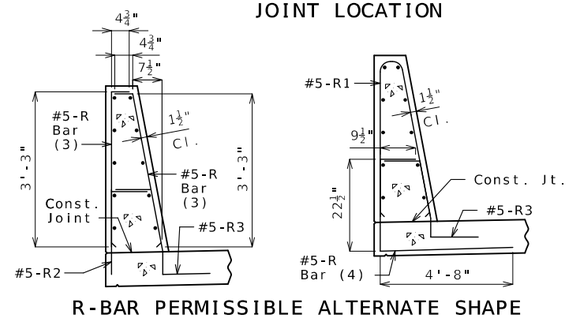

R-BAR PERMISSIBLE ALTERNATE SHAPE

(3) The R1 bar may be separated into two bars as shown, at the contractor's option, only when slip forming is not used. (All dimensions are out to out.)

(4) The R2 bar and #5 bottom transverse slab bar in cantilever (prestressed panels only) combination may be furnished as one bar as shown, at the contractor's option.

General Notes:

* Slip-formed option only.

Conventional forming or slip forming may be used. Saw cut joints may be used with conventional forming.

Top of barrier shall be built parallel to grade and barrier joints (except at end bents) normal to grade.

All exposed edges of barrier shall have either a 1/2-inch radius or a 3/8-inch bevel, unless otherwise noted.

Payment for all concrete and reinforcement, complete in place, will be considered completely covered by the contract unit price for Type D Barrier per linear foot.

Concrete in barrier shall be Class B-1.

Measurement of barrier is to the nearest linear foot for each structure, measured along the outside top of slab from end of wing to end of wing.

Concrete traffic barrier delineators shall be placed on top of the barrier as shown on Missouri Standard Plan 617.10 and in accordance with Sec 617. Delineators on bridges with two-lane, two-way traffic shall have retroreflective sheeting on both sides. Concrete traffic barrier delineators will be considered completely covered by the contract unit price for Type D Barrier.

Joint sealant and backer rods shall be in accordance with Sec 717 for silicone joint sealant for saw cut and formed joints.

For slip-formed option, both sides of barrier shall have a vertically broomed finish and the top shall have a transversely broomed finish.

TYPE D BARRIER

Detailed Nov. 2024
Checked Nov. 2024

Note: This drawing is not to scale. Follow dimensions.

STATE OF MISSOURI
TED S. KOESTER
NUMBER PE-2013000591
PROFESSIONAL ENGINEER
12/13/2024 11:19:22 AM
TED S. KOESTER - CIVIL
MO-PE-2013000591

DATE PREPARED	
12/13/2024	
ROUTE K	STATE MO
DISTRICT BR	SHEET NO. 25
COUNTY MONTGOMERY	
JOB NO. JNE0154	
CONTRACT ID.	
PROJECT NO.	
BRIDGE NO. A9537	

DESCRIPTION	DATE

MISSOURI HIGHWAYS AND TRANSPORTATION COMMISSION
105 WEST CAPITOL
JEFFERSON CITY, MO 65102
1-888-ASK-MODOT (1-888-275-6636)

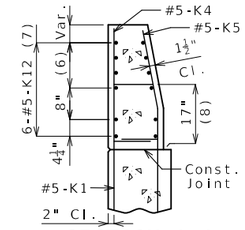

SECTION A-A

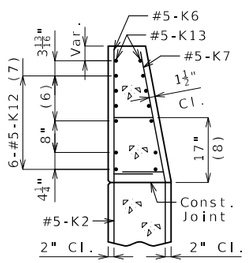

SECTION B-B

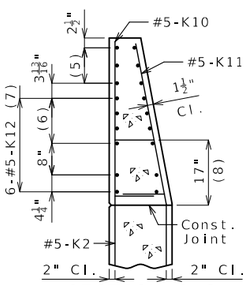

SECTION C-C

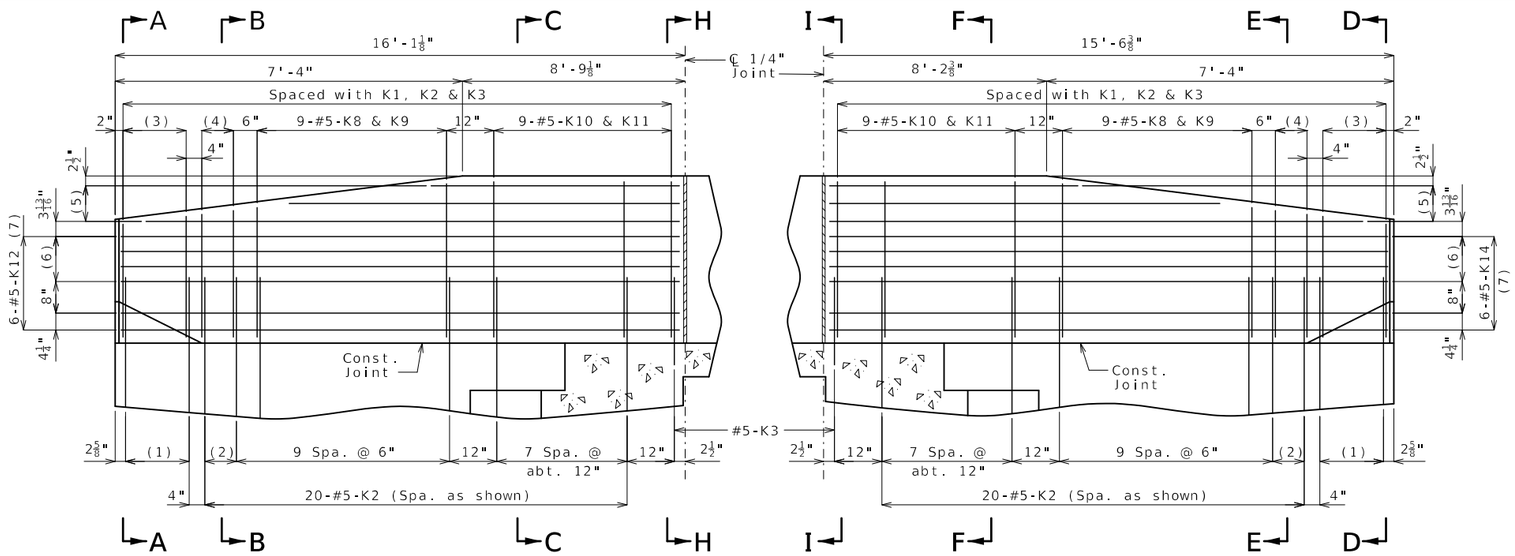

PART ELEVATION

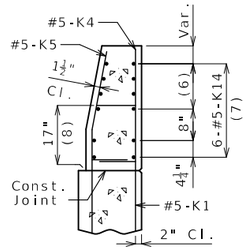

SECTION D-D

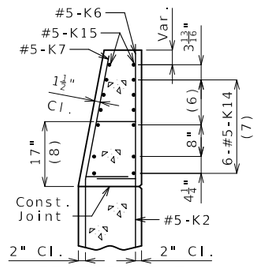

SECTION E-E

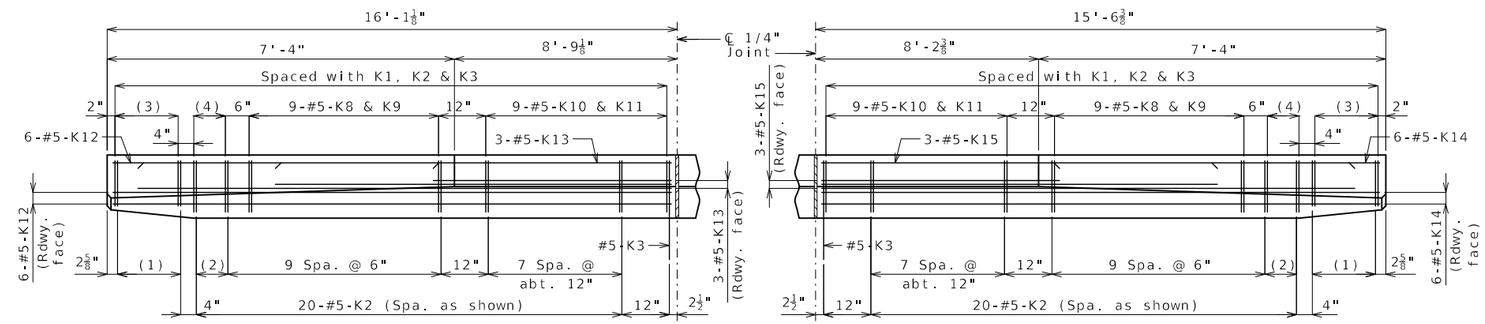

PART PLAN

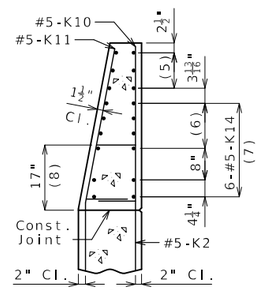

SECTION F-F

(1) 5-#5-K1 @ 4" cts.

(2) 2 spaces @ 4"

(3) 5-#5-K4 & K5

(4) 3-#5-K6 & K7

(5) 3-#5-K13 or K15 @ 4½" cts., each face

(6) 3 spaces @ 3 13/16"

(7) Spaced as shown, each face

(8) To top of bar

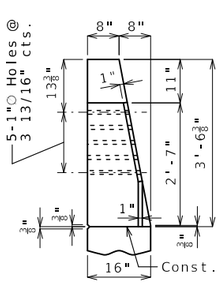

ELEVATION G-G

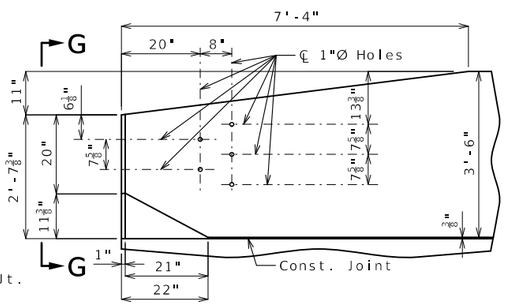

ELEVATION

SECTION H-H

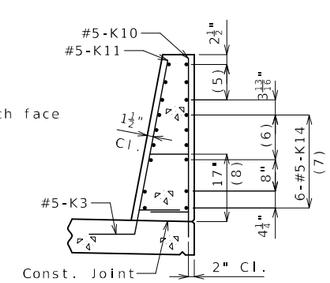

SECTION I-I

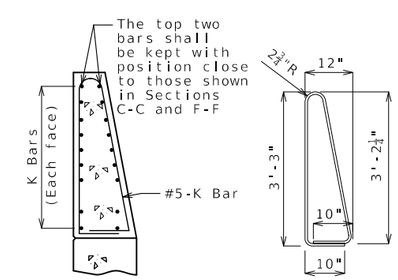

K10-K11 BAR PERMISSIBLE ALTERNATE SHAPE

(Other K bars not shown for clarity)

The K10-K11 bar combination may be furnished as one bar as shown, at the contractor's option.

All dimensions are out to out.

* Transition to zero at Type A curb for gutter lines to match.

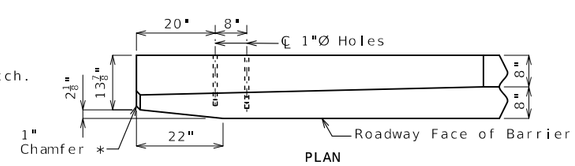

PLAN

DETAILS OF GUARD RAIL ATTACHMENT

General Notes:

Concrete traffic barrier delineators shall be placed on top of the barrier as shown on Missouri Standard Plan 617.10 and in accordance with Sec 617. Delineators on bridges with two-lane, two-way traffic shall have retroreflective sheeting on both sides. Concrete traffic barrier delineators will be considered completely covered by the contract unit price for Type D Barrier.

Reinforcing Steel:
Minimum clearance to reinforcing steel shall be 1 1/2" except as shown for bars embedded into end bent.

TYPE D BARRIER AT END BENTS

(Left barrier shown, right barrier similar)

Detailed Nov. 2024
Checked Nov. 2024

Note: This drawing is not to scale. Follow dimensions.

STATE OF MISSOURI
TED S. KOESTER
NUMBER
PE-2013000591
PROFESSIONAL ENGINEER
12/13/2024 11:19:47 AM
TED S. KOESTER - CIVIL
MO-PE-2013000591

DATE PREPARED	
12/13/2024	
ROUTE: K	STATE: MO
DISTRICT: BR	SHEET NO.: 26
COUNTY: MONTGOMERY	
JOB NO.: JNE0154	
CONTRACT ID.	
PROJECT NO.	
BRIDGE NO.: A9537	

DATE	DESCRIPTION

MISSOURI HIGHWAYS AND TRANSPORTATION COMMISSION
105 WEST CAPITOL
JEFFERSON CITY, MO 65102
1-888-ASK-MODOT (1-888-275-6636)

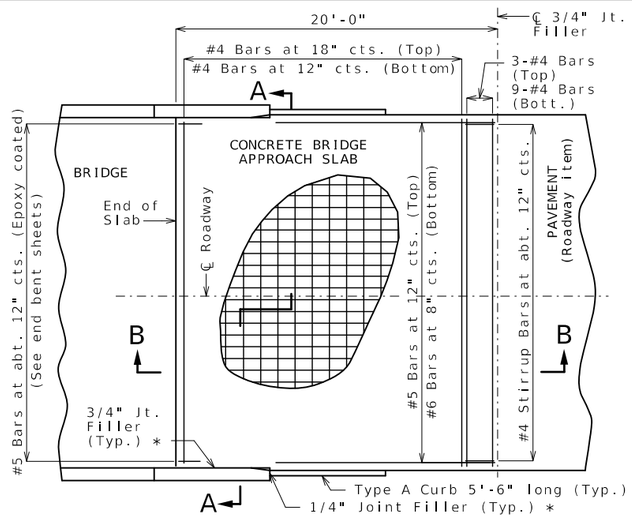

PART PLAN OF SQUARED STRUCTURE
(Skewed structure similar)

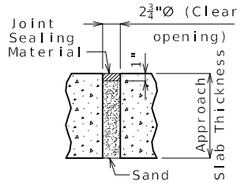

UNDERSEAL ACCESS HOLE DETAIL
(If required)

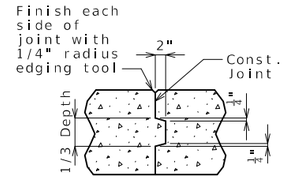

CONSTRUCTION JOINT DETAIL

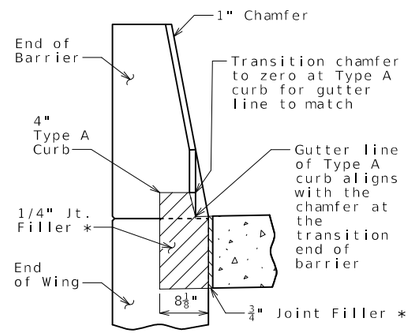

SECTION BETWEEN CURB AND BARRIER

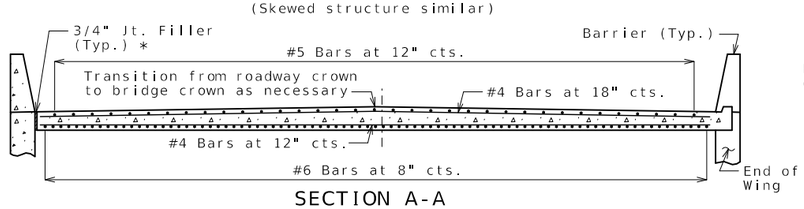

SECTION A-A

With the approval of the engineer, the contractor may crown the bottom of the approach slab to match the crown of the roadway surface.

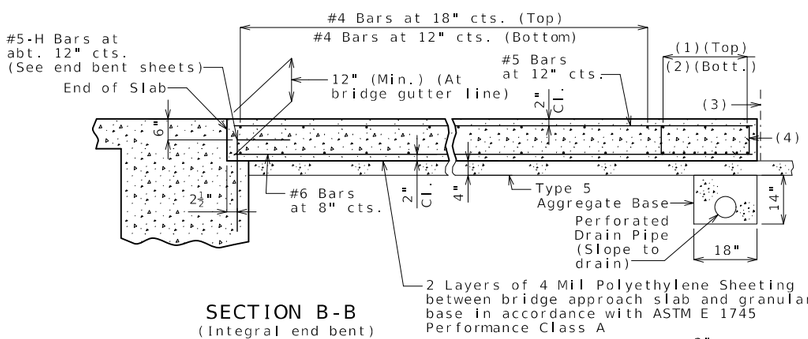

(1) 3-#4 Bars
(2) 9-#4 Bars
(3) ℄ 3/4" Jt. Filler
(4) #4 Stirrup Bars at abt. 12" cts.; 2'-0"x 8" (Min.) out to out; Actual length = 5'-10" (Min.); 90° stirrup hook at bottom; Stirrup height (8") and actual length vary due to crown.

SECTION B-B
(Integral end bent)

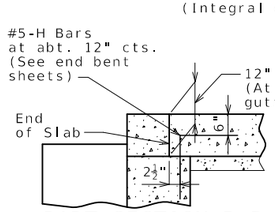

PART SECTION B-B
(Non-integral end bent)

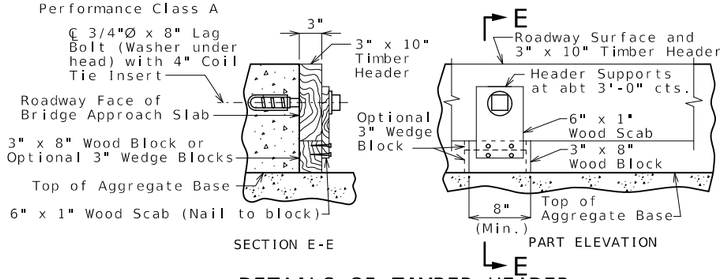

SECTION E-E

PART ELEVATION

DETAILS OF TIMBER HEADER
Remove timber header when concrete pavement is placed.

OPTIONAL CONCRETE SLAB

Notes For Concrete Slab Only:

All concrete for the bridge approach slab shall be in accordance with Sec 503 (f'c = 4,000 psi).

The reinforcing steel in the bridge approach slab shall be epoxy coated Grade 60 with fy = 60,000 psi.

Longitudinal construction joints in bridge approach slab shall be aligned with longitudinal construction joints in bridge slab.

Minimum clearance to reinforcing steel shall be 1 1/2", unless otherwise shown.

The reinforcing steel in the bridge approach slab shall be continuous. The transverse reinforcing steel may be made continuous by providing a minimum lap splice of 23 inches for #4 bars, or by mechanical bar splice.

Mechanical bar splices shall be in accordance with Sec 710.

All joint filler shall be in accordance with Sec 1057 for preformed fiber expansion joint filler except as noted.

Payment for furnishing all materials, labor and excavation necessary to construct the concrete bridge approach slab, including the timber header, underdrain, Type 5 aggregate base, joint filler, and all other appurtenances and incidental work as shown on this sheet, complete in place, will be considered completely covered by the contract unit price for Bridge Approach Slab (Minor) per square yard.

See Missouri Standard Plan 609.00 for details of Type A curb.

Drain pipe may be either 6" diameter corrugated metallic-coated pipe underdrain, 4" diameter corrugated polyvinyl chloride (PVC) drain pipe, or 4" diameter corrugated polyethylene (PE) drain pipe.

* Seal joint between vertical face of approach slab and wing with sealant in accordance with Sec 717 for silicone joint sealant for saw cut and formed joints.

General Notes:

Contractor shall have the option to construct either slab except as noted.

The contractor shall pour and satisfactorily finish the bridge slab before placing the bridge approach slab.

MoDOT Construction personnel will indicate the bridge approach slab used for this structure:

☐ Concrete Bridge Approach Slab
☐ Asphalt Bridge Approach Slab

Notes For Asphalt Slab Only:

Payment for furnishing all materials, labor and excavation necessary to construct the asphalt bridge approach slab, including tack, curb, and Type 5 aggregate base within the pay limits shown, complete in place, will be considered completely covered by the contract unit price for Bridge Approach Slab (Minor) per square yard.

Application of tack is required between lifts per Sec 403.

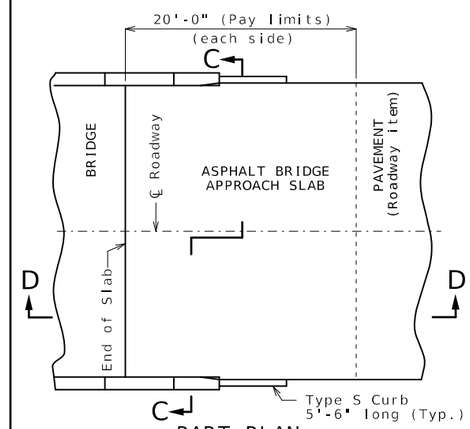

PART PLAN
(Squared structure shown, skewed structure similar)

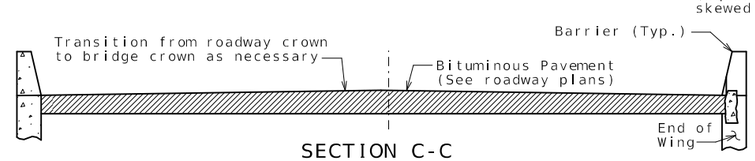

SECTION C-C

With the approval of the engineer, the contractor may crown the bottom of the approach slab to match the crown of the roadway surface.

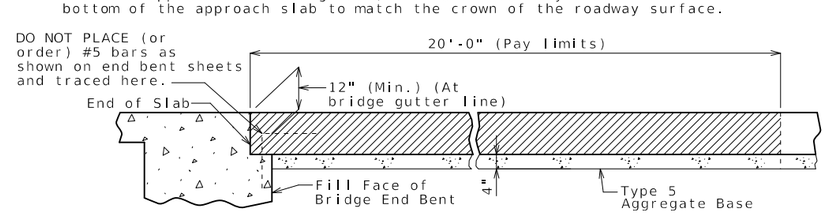

SECTION D-D

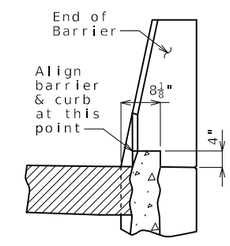

4" TYPE S CURB
See Missouri Standard Plan 609.00 for details of Type S curb.

OPTIONAL ASPHALT SLAB (NOT ALLOWED WITH CONCRETE PAVEMENT)

BRIDGE APPROACH SLAB (MINOR)

Integral end bents shown, non-integral end bent similar.

Detailed Nov. 2024
Checked Nov. 2024

Note: This drawing is not to scale. Follow dimensions.

STATE OF MISSOURI
TED S. KOESTER
NUMBER PE-2013000591
PROFESSIONAL ENGINEER
12/13/2024 11:20:12 AM
TED S. KOESTER - CIVIL
MO-PE-2013000591

DATE PREPARED	12/13/2024
ROUTE	K
STATE	MO
DISTRICT	BR
SHEET NO.	27
COUNTY	MONTGOMERY
JOB NO.	JNE0154
CONTRACT ID.	
PROJECT NO.	
BRIDGE NO.	A9537

DESCRIPTION
DATE

MISSOURI HIGHWAYS AND TRANSPORTATION COMMISSION
105 WEST CAPITOL
JEFFERSON CITY, MO 65102
1-888-ASK-MODOT (1-888-275-6636)

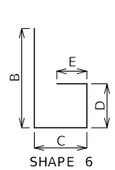

SHAPE 6
or 6S

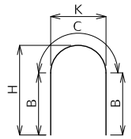

SHAPE 7

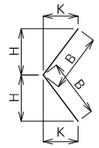

SHAPE 8
or 8S

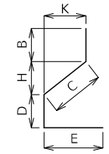

SHAPE 9
or 9S

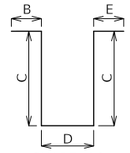

SHAPE 10
or 10S

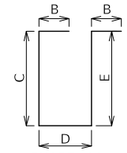

SHAPE 11
or 11S

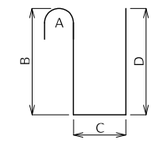

SHAPE 12

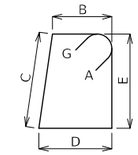

SHAPE 13S

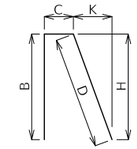

SHAPE 14
or 14S

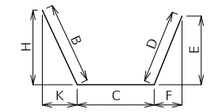

SHAPE 15
or 15S

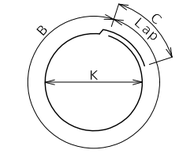

SHAPE 16

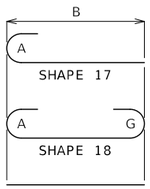

SHAPE 17
SHAPE 18
SHAPE 20

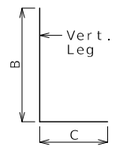

SHAPE 19
or 19S

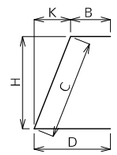

SHAPE 21
or 21S

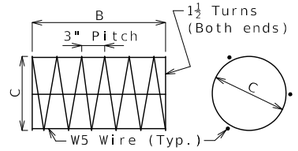

SHAPE 22

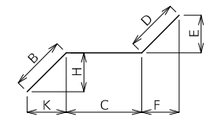

SHAPE 23
or 23S

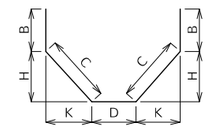

SHAPE 24
or 24S

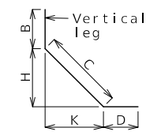

SHAPE 25
or 25S

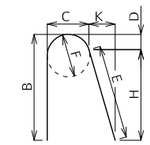

SHAPE 26

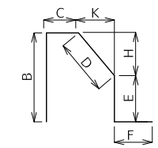

SHAPE 27S

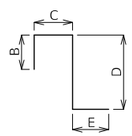

SHAPE 28
or 28S

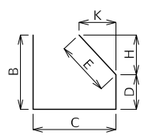

SHAPE 29
or 29S

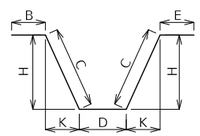

SHAPE 30
or 30S

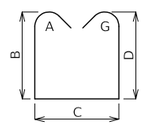

SHAPE 31S

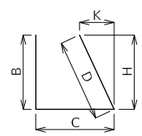

SHAPE 32
or 32S

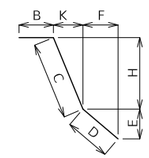

SHAPE 33
or 33S

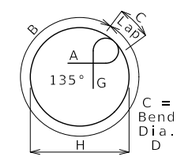

SHAPE 34S

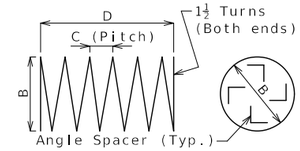

SHAPE 35 (1)

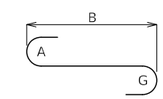

SHAPE 36

Finished Bend Diameters D and Hook Dimensions

Standard Pin Bend Shapes

Size	Case	D	A or G 90°	A or G 180°	J 180°
#4	1	3"	8"	6"	4"
#5	1	3¾"	10"	7"	5"
#6	1	4½"	12"	8¼"	6"
#7	2	5¼"	14"	9¾"	7"
	3	7"	15"	11½"	8¾"
#8	2	6"	16"	11"	8"
	3	8"	17"	13¼"	10"
#9	1	9½"	19½"	15½"	11¾"
#10	1	10¾"	22"	17½"	13¼"
#11	1	12"	24½"	19½"	14⅞"
#14	1	18¼"	31¼"	27½"	21⅝"
#18	1	24"	41½"	36¼"	28½"

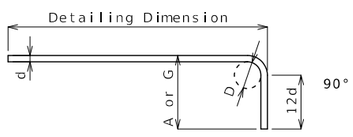

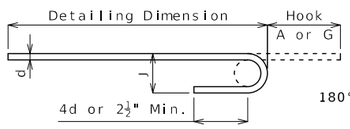

Stirrup Pin Bend Shapes (S)

Size	Case	D	A or G 90°	A or G 135°	A or G 180°	H 135°	J 180°
#4	2	2"	4½"	4½"	5"	2⅝"	3"
	3	3"	5"	5¼"	6"	3"	4"
#5	2	2½"	5¾"	5¾"	5¾"	3⅝"	3¾"
	3	3¾"	6¼"	6½"	7"	3⅞"	5"
#6	1	4½"	12"	7¾"	8¼"	4⅜"	6"

Applicable for all grades of steel.

Case 1 applies to all reinforcement. Case 2 applies to all reinforcement except for galvanized bars. Case 3 applies to galvanized bars only.

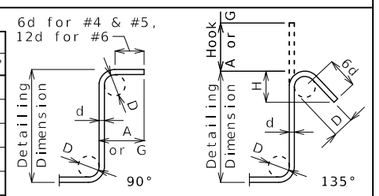

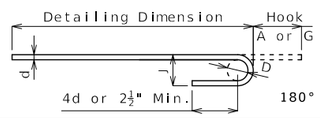

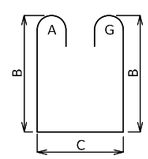

SHAPE 37S

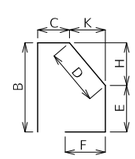

SHAPE 38S

BENDING DIAGRAMS

All dimensions are out to out.

Shapes ending with an S shall be bent in accordance with stirrup pin bend shapes.

Unless otherwise noted, finished bending diameter D is the same for all bends of a shape.

(1) Shall be a deformed or plain spiral bar or wire.

Four angle or channel spacers are required for each column spiral. Spacers are to be placed on inside of spirals. Length and weight of column spirals do not include splices or spacers.

Reinforcing Steel Totals (Pounds)

	Size	Substructure Plain	Substructure Epoxy	Superstructure Slab	Superstructure Barrier	Superstructure Slip Form	Entire Bridge Plain	Entire Bridge Epoxy
By Size	W5	0	0	0	0	0	0	0
	4	210	0	1,029	0	0	210	1,029
	5	9,294	0	7,864	18,831	701	9,294	27,396
	6	4,438	0	51,309	0	0	4,438	51,309
	7	174	0	1,512	0	0	174	1,512
	8	0	0	25,989	0	0	0	25,989
	9	0	0	0	0	0	0	0
	10	17,521	0	0	0	0	17,521	0
	11	0	0	0	0	0	0	0
	14	0	0	0	0	0	0	0
	18	0	0	0	0	0	0	0
By Type		31,637	0	87,703	18,831	701	31,637	107,235

All superstructure reinforcing steel shall be epoxy coated unless otherwise specified.

STATE OF MISSOURI
TED S. KOESTER
NUMBER
PE-2013000591
PROFESSIONAL ENGINEER
12/13/2024 11:20:36 AM
TED S. KOESTER - CIVIL
MO-PE-2013000591

DATE PREPARED	12/13/2024
ROUTE	K
STATE	MO
DISTRICT	BR
SHEET NO.	28
COUNTY	MONTGOMERY
JOB NO.	JNE0154
CONTRACT ID.	
PROJECT NO.	
BRIDGE NO.	A9537

DESCRIPTION

DATE

MISSOURI HIGHWAYS AND TRANSPORTATION COMMISSION
105 WEST CAPITOL
JEFFERSON CITY, MO 65102
1-888-ASK-MODOT (1-888-275-6636)

BENDING DIAGRAMS AND REINFORCING STEEL TOTALS

Detailed Nov. 2024
Checked Nov. 2024

Note: This drawing is not to scale. Follow dimensions.

Bill of Reinforcing Steel

No. Req.	Size/ Mark	Location	Codes C	Codes SH	Codes V	Dimensions B ft in.	C ft in.	D ft in.	E ft in.	F ft in.	H ft in.	K ft in.	Nom. Length ft in.	Actual Length ft in.	Weight lb
		Substructure													
		Int Bent 2													
17	7 D200	BEAM		20		2 6.00							2 6	2 6	87
6	10 H200	BEAM		20		29 3.00							29 3	29 3	755
6	10 H201	BEAM		18		29 3.00							32 1	32 1	828
10	6 H202	BEAM		20		29 3.00							29 3	29 3	439
14	6 H203	BEAM		10S			12.00	4 7.50					6 8	6 4	133
2	5 P200	DRILLED SHAFT		35		4 0.00	6.00	57 9.00					1490 3	1470 11	3,068
2	5 P201	COLUMN		35		4 0.00	3.00	9 11.25					537 4	530 4	1,106
34	5 P204	COLUMN		34S		12 6.75	2.50				4 0.00		13 8	13 6	479
48	6 U200	BEAM		13S		3 2.00	4 9.00	3 2.00	4 9.00				17 2	16 8	1,202
24	6 U201	BEAM		10S			4 9.00	3 2.00					12 8	12 4	445
16	4 U202	BEAM		10S			4 9.00	6.00					10	9 10	105
20	10 V200	COLUMN/SHAFT		20		39 2.00							39 2	39 2	3,371
22	10 V201	COLUMN/SHAFT		20		41 2.00							41 2	41 2	3,897
		Int Bent 3													
17	7 D200	BEAM		20		2 6.00							2 6	2 6	87
6	10 H200	BEAM		20		29 3.00							29 3	29 3	755
6	10 H201	BEAM		18		29 3.00							32 1	32 1	828
10	6 H202	BEAM		20		29 3.00							29 3	29 3	439
14	6 H203	BEAM		10S			12.00	4 7.50					6 8	6 4	133
2	5 P202	DRILLED SHAFT		35		4 0.00	6.00	54 2.00					1400 2	1381 11	2,883
2	5 P203	COLUMN		35		4 0.00	3.00	11 7.25					621 1	613	1,279
34	5 P204	COLUMN		34S		12 6.75	2.50				4 0.00		13 8	13 6	479
48	6 U200	BEAM		13S		3 2.00	4 9.00	3 2.00	4 9.00				17 2	16 8	1,202
24	6 U201	BEAM		10S			4 9.00	3 2.00					12 8	12 4	445
16	4 U202	BEAM		10S			4 9.00	6.00					10	9 10	105
20	10 V202	COLUMN/SHAFT		20		38 2.00							38 2	38 2	3,285
22	10 V203	COLUMN/SHAFT		20		40 2.00							40 2	40 2	3,802
		Superstructure													
		End Bent 1													
11	6 F100	WING BRACE	E	23S		2 3.00	6 9.00	14.00	7.75	11.75	14.75	22.50	10 2	10 1	167
11	6 F101	WING BRACE	E	23S		2 3.00	4 7.00	14.00	11.75	7.75	22.50	14.75	8	7 11	131
5	6 F102	DIAPHRAGM	E	21S		19.00	3 3.00	5 10.00			3 0.00	15.25	10 8	10 3	77
5	6 F103	DIAPHRAGM	E	21S		4 8.00	3 3.00	19.00			3 0.00	15.25	9 6	9 1	68
12	7 H100	BM & DIAPH	E	20		30 10.00							30 10	30 10	756
9	6 H101	BM & DIAPH	E	20		30 10.00							30 10	30 10	417
12	6 H102	DIAPHRAGM	E	20		6 9.00							6 9	6 9	122
3	6 H103	DIAPHRAGM	E	20		4 2.00							4 2	4 2	19
8	6 H104	DIAPHRAGM	E	20		2 10.00							2 10	2 10	34
4	5 H105	STRAND TIE	E	23S		15.00	3 2.50	15.00	6.00	13.75	6.00	13.75	5 9	5 8	24
16	8 H106	WING	E	20		14 6.00							14 6	14 6	619
48	6 H107	WING	E	20		13 8.00							13 8	13 8	985
8	5 U100	BEAM	E	10S			6 8.00	3 3.00					16 7	16 4	136
30	4 U101	BEAM	E	13S		3 3.00	2 11.00	3 3.00	2 11.00				13 1	12 10	257
6	4 U102	BEAM	E	10S			2 11.00	3 3.00					9 1	8 11	36
16	5 U103	DIAPHRAGM	E	10S			4 9.00	2 8.50					12 3	12	200
38	6 U104	DIAPHRAGM	E	19S		3 10.00	3 3.00						7 1	6 11	395
38	6 U105	DIAPHRAGM	E	23S		5 1.00	3 3.00				5 1.00	0.75	8 4	8	457
26	5 U106	DIAPHRAGM	E	19S		2 0.00	15.00						3 3	3 2	86
16	5 V100	BEAM	E	20		6 8.00							6 8	6 8	111
24	6 V101	DIAPHRAGM	E	20		3 10.00							3 10	3 10	138
2	6 V102	WING	E	20		8 1.00							8 1	8 1	24
22	6 V103	WING	E	20	2	8 1.00							8 1	8 1	
		Incr. = 0.125"				8 2.00							8 2	8 2	268
3	6 V104	WING	E	20		8 2.00							8 2	8 2	37
24	6 V105	WING	E	20	2	8 2.00							8 2	8 2	
		Incr. = 0.125"				8 4.00							8 4	8 4	297

Bill of Reinforcing Steel

No. Req.	Size/ Mark	Location	Codes C	Codes SH	Codes V	Dimensions B ft in.	C ft in.	D ft in.	E ft in.	F ft in.	H ft in.	K ft in.	Nom. Length ft in.	Actual Length ft in.	Weight lb
		End Bent 4													
11	6 F400	WING BRACE	E	23S		2 3.00	6 9.00	14.00	7.75	11.75	14.75	22.50	10 2	10 1	167
11	6 F401	WING BRACE	E	23S		2 3.00	4 7.00	14.00	11.75	7.75	22.50	14.75	8	7 11	131
5	6 F402	DIAPHRAGM	E	21S		19.00	3 3.00	5 10.00			3 0.00	15.25	10 8	10 3	77
5	6 F403	DIAPHRAGM	E	21S		4 8.00	3 3.00	19.00			3 0.00	15.25	9 6	9 1	68
12	7 H400	BM & DIAPH	E	20		30 10.00							30 10	30 10	756
9	6 H401	BM & DIAPH	E	20		30 10.00							30 10	30 10	417
12	6 H402	DIAPHRAGM	E	20		6 9.00							6 9	6 9	122
3	6 H403	DIAPHRAGM	E	20		4 2.00							4 2	4 2	19
8	6 H404	DIAPHRAGM	E	20		2 10.00							2 10	2 10	34
4	5 H405	STRAND TIE	E	23S		15.00	3 2.50	15.00	6.00	13.75	6.00	13.75	5 9	5 8	24
16	8 H406	WING	E	20		14 6.00							14 6	14 6	619
48	6 H407	WING	E	20		13 8.00							13 8	13 8	985
8	5 U400	BEAM	E	10S			6 8.00	3 3.00					16 7	16 4	136
30	4 U401	BEAM	E	13S		3 3.00	2 11.00	3 3.00	2 11.00				13 1	12 10	257
6	4 U402	BEAM	E	10S			2 11.00	3 3.00					9 1	8 11	36
16	5 U403	DIAPHRAGM	E	10S			4 9.00	2 8.50					12 3	12	200
38	6 U404	DIAPHRAGM	E	19S		3 10.00	3 3.00						7 1	6 11	395
38	6 U405	DIAPHRAGM	E	21S			5 1.00	3 3.00			5 1.00	0.75	8 4	8 2	466
26	5 U406	DIAPHRAGM	E	19S		2 0.00	15.00						3 3	3 2	86
16	5 V400	BEAM	E	20		6 8.00							6 8	6 8	111
24	6 V401	DIAPHRAGM	E	20		3 10.00							3 10	3 10	138
2	6 V402	WING	E	20		8 5.00							8 5	8 5	25
22	6 V403	WING	E	20	2	8 5.00							8 5	8 5	
		Incr. = 0.250"				8 3.00							8 3	8 3	275
1	6 V404	WING	E	20		8 3.00							8 3	8 3	12
24	6 V405	WING	E	20	2	8 5.00							8 5	8 5	
		Incr. = 0.125"				8 6.00							8 6	8 6	305
2	6 V406	WING	E	20		8 6.00							8 6	8 6	26
		Int Diaphragms													
12	6 H500	DIAPHRAGM	E	20		4 2.00							4 2	4 2	75
36	4 H501	DIAPHRAGM	E	20		6 9.00							6 9	6 9	162
12	6 H502	DIAPHRAGM	E	20		6 9.00							6 9	6 9	122
8	5 H503	DIAPHRAGM	E	19S		4 5.00	11.00						5 4	5 3	44
32	5 H504	DIAPHRAGM	E	6S		4 10.00	19.00	11.00					7 4	7 1	236
48	4 U500	DIAPHRAGM	E	28S			18.00	4 9.00	2 8.00				8 11	8 9	281
24	6 U501	DIAPHRAGM	E	28S			2 2.00	4 1.00	3 4.00				9 7	9 3	333
24	6 U502	DIAPHRAGM	E	28S			2 2.00	4 9.00	3 4.00				10 3	9 11	357
16	6 U503	DIAPHRAGM	E	28S			2 2.00	4 1.00	20.00				7 11	7 7	182
16	5 V500	DIAPHRAGM	E	20		4 10.00							4 10	4 10	81
		Slab													
175	6 S1	SLAB	E	20		52 1.00							52 1	52 1	13,690
661	6 S2	SLAB	E	20		28 5.00							28 5	28 5	28,213
46	6 S3	SLAB	E	20	2	28 0.00							28	28	
		Incr. = 14.125"				2 1.00							2 1	2 1	1,039
20	5 S4	SLAB	E	20		60 0.00							60	60	1,252
674	5 S5	SLAB	E	20		4 8.00							4 8	4 8	3,281
108	8 S6	SLAB	E	20		43 11.00							43 11	43 11	12,664
108	8 S7	SLAB	E	20		41 11.00							41 11	41 11	12,087
516	5 S8	SLAB	E	20		3 0.00							3 0	3 0	1,615
4	5 S9	SLAB	E	20		57 9.00							57 9	57 9	241
		Barrier													
		Type D													
20	5 K1	BARRIER	E	27S		3 8.00	9.25	5.25	3 2.75		5.25	1.00	8 1	7 11	165
80	5 K2	BARRIER	E	27S		3 8.00	9.25	14.50	2 5.75		14.25	2.75	8 2	7 11	661
4	5 K3	BARRIER	E	27S		22.50	9.25	14.50	7.75	12.00	14.25	2.75	5 6	5 2	22
20	5 K4	BARRIER	E	19S	4	2 4.25	10.00						3 2	3 1	
		Incr. = 0.500"				2 6.25	10.00						3 4	3 3	66
20	5 K5	BARRIER	E	38S	4			18.50	9.50	8.25	18.00	4.00	3	2 10	
		Incr. = 0.750"						20.50	9.50	8.25	20.00	4.50	3 2	3 1	62

Nominal lengths are based on out to out dimensions shown in bending diagrams and are listed to the nearest inch for fabricator's use. Actual lengths are measured along centerline bar to the nearest inch. Weights are based on actual lengths.

For bending diagrams and steel reinforcing totals, see Sheet No. 28.

Detailed Nov. 2024
Checked Nov. 2024

All bars shall be Grade 60.

BILL OF REINFORCING STEEL

Note: This drawing is not to scale. Follow dimensions.

Codes: C = Required coatings, where E = Epoxy Coated and G = Galvanized.

SH = Required shape, see bending diagrams.

V = Sets of varied bars and number of bars of each length. Bar dimensions vary in equal increments between dimensions shown on this line and the following line and the actual length dimension shown on this line and the following line vary by the specified increment.

STATE OF MISSOURI
TED S. KOESTER
NUMBER PE-2013000591
PROFESSIONAL ENGINEER
12/13/2024 11:20:57 AM
TED S. KOESTER - CIVIL
MO-PE-2013000591

DATE PREPARED 12/13/2024

ROUTE	STATE
K	MO
DISTRICT	SHEET NO.
BR	29

COUNTY: MONTGOMERY
JOB NO.: JNE0154
CONTRACT ID.:
PROJECT NO.:
BRIDGE NO.: A9537

DESCRIPTION
DATE

MISSOURI HIGHWAYS AND TRANSPORTATION COMMISSION
105 WEST CAPITOL
JEFFERSON CITY, MO 65102
1-888-ASK-MODOT (1-888-275-6636)

Bill of Reinforcing Steel

No. Req.	Size/ Mark	Location	Codes C	Codes SH	Codes V	Dimensions B ft in.	C ft in.	D ft in.	E ft in.	F ft in.	H ft in.	K ft in.	Nom. Length ft in.	Actual Length ft in.	Weight lb
12	5 K6	BARRIER	E	19S		2 6.75	10.00						3 5	3 3	41
12	5 K7	BARRIER	E	21S			10.00	10.00			2 6.00	6.25	3 6	3 4	42
36	5 K8	BARRIER	E	19S	4	2 8.50	10.00						3 7	3 5	
		Incr. = 0.750"				3 2.50	10.00						4 1	3 11	138
36	5 K9	BARRIER	E	21S	4		10.00	10.00			2 7.75	6.75	3 8	3 6	
		Incr. = 0.750"					10.00	10.00			3 1.75	7.75	4 2	4	141
36	5 K10	BARRIER	E	19S		3 3.00	10.00						4 1	4	150
36	5 K11	BARRIER	E	21S			3 3.00	10.00			3 2.25	7.75	4 1	4	150
24	5 K12	BARRIER	E	20		15 10.00							15 10	15 10	396
12	5 K13	BARRIER	E	20	4	15 1.00							15 1	15 1	
		Incr. = 54.000"				6 1.00							6 1	6 1	132
24	5 K14	BARRIER	E	20		15 3.00							15 3	15 3	382
12	5 K15	BARRIER	E	20	4	14 6.00							14 6	14 6	
		Incr. = 36.000"				8 6.00							8 6	8 6	144
688	5 R1	BARRIER	E	26		3 3.00	5.50	2.25	3 1.25	5.50	3 0.75	6.75	7	6 9	4,844
688	5 R2	BARRIER	E	19S		20.50	9.50						2 6	2 5	1,734
688	5 R3	BARRIER	E	27S			9.50	15.25	5.00	12.00	15.00	3.00	3 6	3 4	2,392
120	5 R4	BARRIER	E	20		11 9.00							11 9	11 9	1,471
40	5 R5	BARRIER	E	20		46 11.00							46 11	46 11	1,957
40	5 R6	BARRIER	E	20		42 5.00							42 5	42 5	1,770
40	5 R7	BARRIER	E	20		47 3.00							47 3	47 3	1,971
		Slip-Form													
56	5 C1	SLIP FORM	E	20		12 0.00							12	12	701

Bill of Reinforcing Steel

No. Req.	Size/ Mark	Location	Codes C	Codes SH	Codes V	Dimensions B ft in.	C ft in.	D ft in.	E ft in.	F ft in.	H ft in.	K ft in.	Nom. Length ft in.	Actual Length ft in.	Weight lb

Nominal lengths are based on out to out dimensions shown in bending diagrams and are listed to the nearest inch for fabricator's use. Actual lengths are measured along centerline bar to the nearest inch. Weights are based on actual lengths.

For bending diagrams and steel reinforcing totals, see Sheet No. 28.

All bars shall be Grade 60.

Codes: C = Required coatings, where E = Epoxy Coated and G = Galvanized.

SH = Required shape, see bending diagrams.

V = Sets of varied bars and number of bars of each length. Bar dimensions vary in equal increments between dimensions shown on this line and the following line and the actual length dimension shown on this line and the following line vary by the specified increment.

Detailed Nov. 2024
Checked Nov. 2024

BILL OF REINFORCING STEEL

Note: This drawing is not to scale. Follow dimensions.

STATE OF MISSOURI
TED S. KOESTER
NUMBER PE-2013000591
PROFESSIONAL ENGINEER
Ted Koester
12/13/2024 11:21:22 AM
TED S. KOESTER - CIVIL
MO-PE-2013000591

DATE PREPARED 12/13/2024

ROUTE	STATE
K	MO
DISTRICT	SHEET NO.
BR	30

COUNTY MONTGOMERY

JOB NO. JNE0154

CONTRACT ID.

PROJECT NO.

BRIDGE NO. A9537

DESCRIPTION	DATE

MISSOURI HIGHWAYS AND TRANSPORTATION COMMISSION
105 WEST CAPITOL
JEFFERSON CITY, MO 65102
1-888-ASK-MODOT (1-888-275-6636)

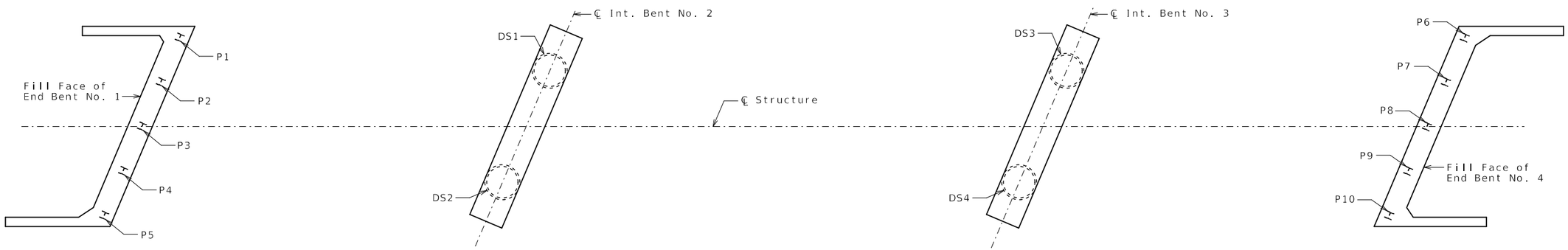

PART PLAN SHOWING NUMBERING FOR RECORDING AS-BUILT PILE AND DRILLED SHAFT DATA

As-Built Pile Data

Pile No.	Length in Place (ft)	Computed Nominal Axial Compressive Resistance (kips)	Remarks
			End Bent No. 1
P1			
P2			
P3			
P4			
P5			

As-Built Drilled Shaft Data

Shaft No.	Top of Sound Rock (Elev.)	Tip of Casing (Elev.)	Bottom of Rock Socket (Elev.)	Remarks
				Int. Bent No. 2
DS1				
DS2				
				Int. Bent No. 3
DS3				
DS4				

As-Built Pile Data

Pile No.	Length in Place (ft)	Computed Nominal Axial Compressive Resistance (kips)	Remarks
			End Bent No. 4
P6			
P7			
P8			
P9			
P10			

Note:
Indicate in remarks column:
A. Pile type and grade
B. Batter
C. Driven to practical refusal

This sheet to be completed by MoDOT construction personnel.

AS-BUILT PILE AND DRILLED SHAFT DATA

Detailed Nov. 2024
Checked Nov. 2024

Note: This drawing is not to scale. Follow dimensions.

STATE OF MISSOURI
TED S. KOESTER
NUMBER
PE-2013000591
PROFESSIONAL ENGINEER
12/13/2024 11:21:48 AM
TED S. KOESTER - CIVIL
MO-PE-2013000591

DATE PREPARED	
12/13/2024	
ROUTE: K	STATE: MO
DISTRICT: BR	SHEET NO.: 31
COUNTY: MONTGOMERY	
JOB NO.: JNE0154	
CONTRACT ID.	
PROJECT NO.	
BRIDGE NO.: A9537	

DESCRIPTION	DATE

MISSOURI HIGHWAYS AND TRANSPORTATION COMMISSION
105 WEST CAPITOL
JEFFERSON CITY, MO 65102
1-888-ASK-MODOT (1-888-275-6636)

MoDOT-Geotechnical Section
1617 Missouri Blvd
Jefferson City, MO 65109

SUBSURFACE DIAGRAM

PROJECT NAME Bridge Replacement-mgk
PROJECT LOCATION Over Loutre River
CLIENT
PROJECT NUMBER NE0154

Asphalt
USCS Poorly-graded Sand with Silt
Concrete
USCS Clayey Gravel
USCS Well-graded Gravel
Highly Weathered Dolomite
USCS Silt
USCS Low Plasticity Gravelly Clay
USCS Low Plasticity Clay
Dolomite
USCS Poorly-graded Sand
USCS Poorly-graded Gravel

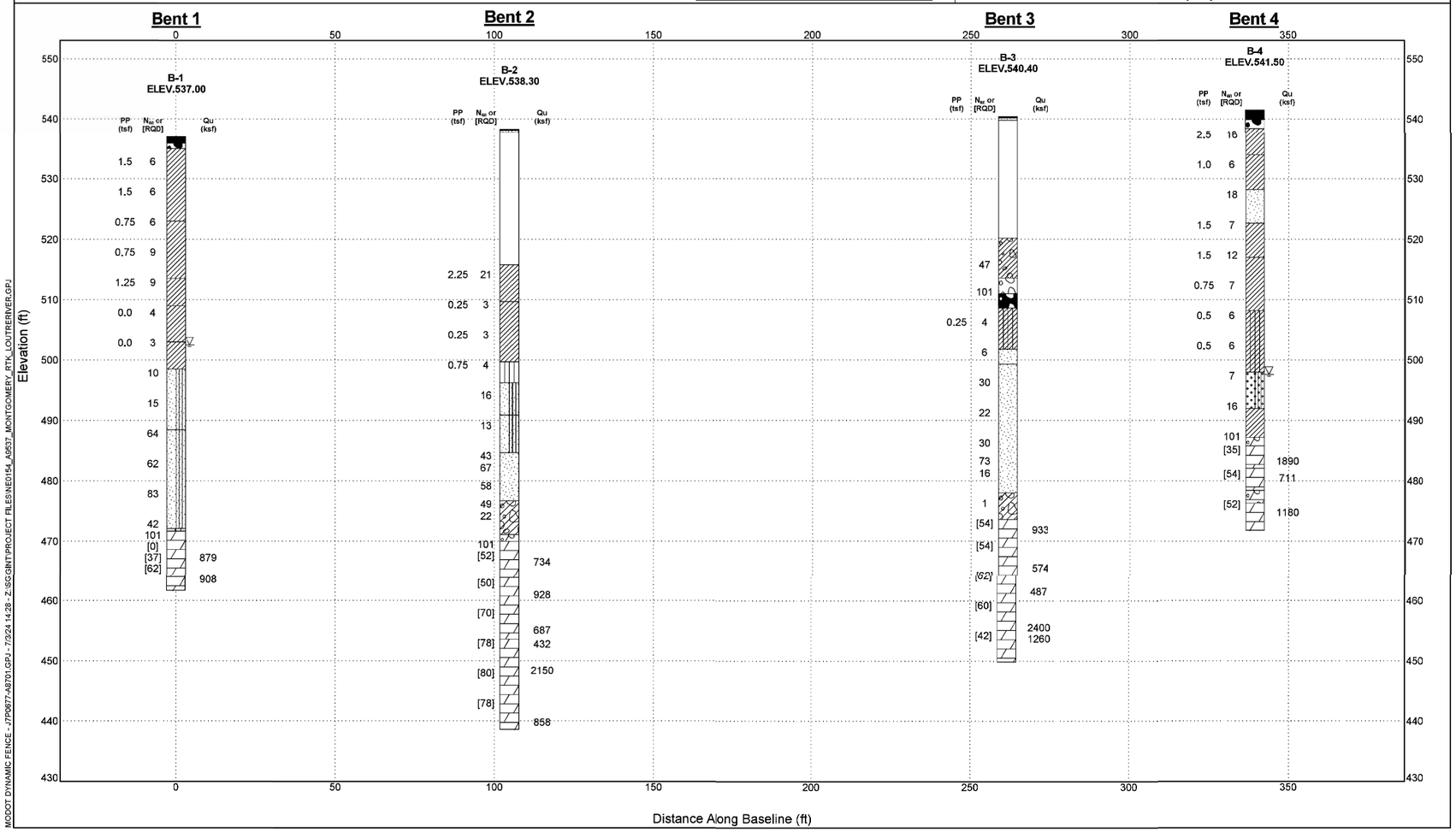

MODOT DYNAMIC FENCE - J7P0677-A8701.GPJ - 7/3/24 14:28 - Z:\SG\GINT\PROJECT FILES\NE0154_A9537_MONTGOMERY_RTK_LOUTRERIVER.GPJ

BORING DATA

Note: For locations of borings, see Sheets No. 1 & 2.

Note: This drawing is not to scale. Follow dimensions.

Detailed Nov. 2024
Checked Nov. 2024

STATE OF MISSOURI
TED S. KOESTER
NUMBER PE-2013000591
PROFESSIONAL ENGINEER
12/13/2024 11:22:23 AM
TED S. KOESTER - CIVIL
MO-PE-2013000591

DATE PREPARED	12/13/2024
ROUTE	K
STATE	MO
DISTRICT	BR
SHEET NO.	32
COUNTY	MONTGOMERY
JOB NO.	JNE0154
CONTRACT ID.	
PROJECT NO.	
BRIDGE NO.	A9537

DESCRIPTION
DATE

MISSOURI HIGHWAYS AND TRANSPORTATION COMMISSION
105 WEST CAPITOL
JEFFERSON CITY, MO 65102
1-888-ASK-MODOT (1-888-275-6636)