DESIGN DESIGNATION

RTE Y - AUDRAIN/MONROE CO.

A.A.D.T - 2023 = 421

V = 55 M.P.H

MISSOURI HIGHWAYS AND TRANSPORTATION COMMISSION

PLANS FOR PROPOSED

STATE HIGHWAY

AUDRAIN & MONROE COUNTIES

T51N-T52N, R12W

KEY MAP
LOCATION OF
AUDRAIN & MONROE COUNTY

BEG OF PROJECT
LM 0.016

1" SURFACE LEVELING

BRIDGE B0176 EXCEPTION
LOG MI. 4.641 TO 4.661

RAILROAD CROSSING EXCEPTION
LOG MI. 10.618 TO 10.650

END OF PROJECT
LM 11.953

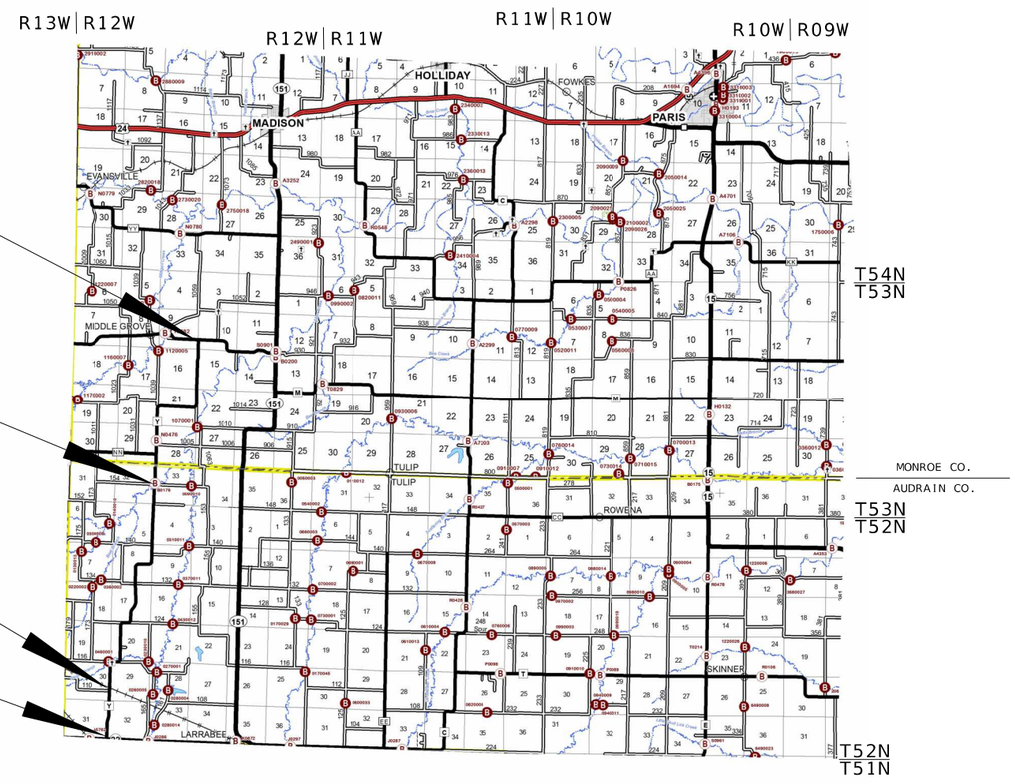

SCALE IN MILES

INDEX OF SHEETS

DESCRIPTION	SHEET NUMBER
TITLE SHEET	1
TYPICAL SECTIONS (TS) (1 SHEET)	2
QUANTITIES (QU) (2 SHEETS)	3
SPECIAL SHEETS (SS) (2 SHEETS)	4-5

LENGTH OF PROJECT

RTE Y

BEGIN OF PROJECT	LOG MILE 0.016
END OF PROJECT	LOG MILE 11.953
APPARENT LENGTH	MILES 11.937

EXCEPTIONS:

BRIDGE B0176	0.020 MILES
RAILROAD CROSSING	0.032 MILES

TOTAL CORRECTIONS	0.052 MILES
NET LENGTH OF PROJECT	11.885 MILES
STATE LENGTH	11.885 MILES

STATE OF MISSOURI
KEITH ALLEN KILLEN
NUMBER PE-2007020292
PROFESSIONAL ENGINEER

01/22/2025 3:12:00 PM
KEITH ALLEN KILLEN - CIVIL
MO-PE-2007020292

DATE PREPARED
1/22/2025

ROUTE	STATE
Y	MO
DISTRICT	SHEET NO.
NE	1

COUNTY
AUDRAIN/MONROE

JOB NO.
JST0128

CONTRACT ID.

PROJECT NO.

BRIDGE NO.

DATE	DESCRIPTION

MISSOURI HIGHWAYS AND TRANSPORTATION COMMISSION

105 WEST CAPITOL
JEFFERSON CITY, MO 65102
1-888-ASK-MODOT (1-888-275-6636)

TITLESHEET

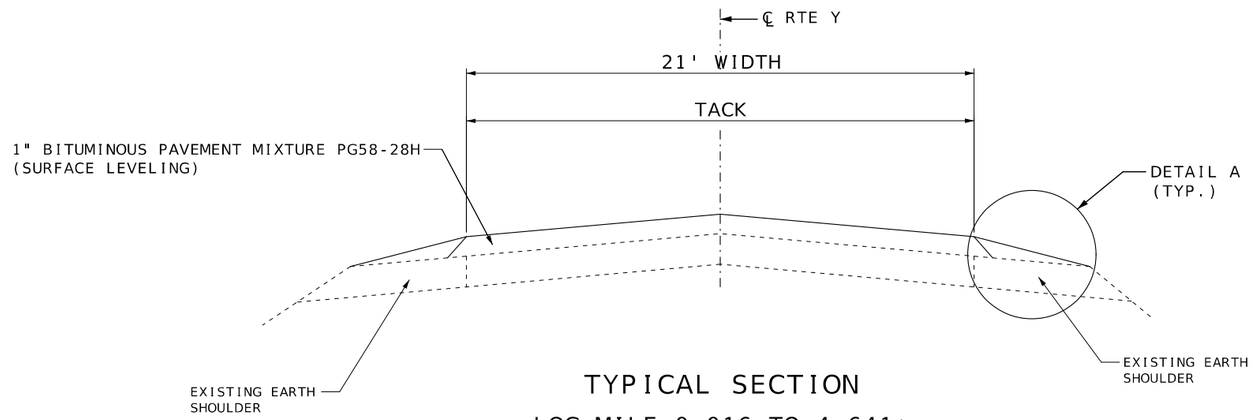

TYPICAL SECTION

LOG MILE 0.016 TO 4.641*
LOG MILE 4.661 TO 10.618†
LOG MILE 10.650 TO 11.953

EXCEPTIONS

*BRIDGE B0176 EXCEPTION
LOG MILE 4.641 TO 4.661

†R.R. EXCEPTION
LOG MILE 10.618 TO 10.650

NOTE:
SURFACE PLACEMENT SHALL BE ONE PASS PER LANE
NO S.E. CORRECTION.

ESTIMATE FACTORS
PROVIDED FOR INFORMATION PURPOSES ONLY
BITUMINOUS PAVEMENT MIXTURE PG 58-28H (SURFACE LEVELING) = 1.948 TON/CY
TACK COAT (EXISTING SURFACE) = 0.08 GAL/SY
TACK COAT (COLDMILLED SURFACE) = 0.10 GAL/SY
GRAVEL, CRUSH STONE AND CHAT = 1.40 TONS / CY OF LOOSE AGG.

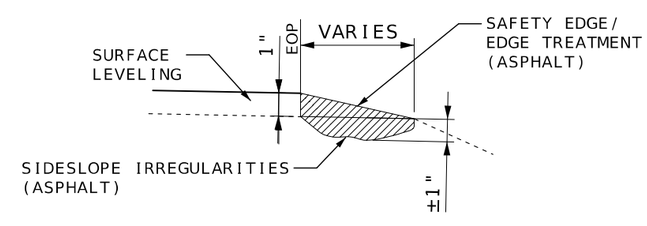

NOTE:

THE ASPHALT SAFETY EDGE/EDGE TREATMENT (ASPHALT) AS WELL AS THE SIDESLOPE IRREGULARITIES (ASPHALT) SHALL BE LAID MONOLITHICALLY WITH THE SURFACE LEVELING AND ONE PASS.

DETAIL A

STATE OF MISSOURI
KEITH ALLEN KILLEN
NUMBER
PE-2007020292
PROFESSIONAL ENGINEER
01/22/2025 3:19:01 PM
KEITH ALLEN KILLEN - CIVIL
MO-PE-2007020292

DATE PREPARED	1/22/2025
ROUTE	Y
STATE	MO
DISTRICT	NE
SHEET NO.	2
COUNTY	AUDRAIN/MONROE
JOB NO.	JST0128
CONTRACT ID.	
PROJECT NO.	
BRIDGE NO.	

DESCRIPTION	DATE

MISSOURI HIGHWAYS AND TRANSPORTATION COMMISSION
105 WEST CAPITOL
JEFFERSON CITY, MO 65102
1-888-ASK-MODOT (1-888-275-6636)

TYPICAL SECTION SHEET
SHEET 1 OF 1
NOT TO SCALE

1" BITUMINOUS PAVEMENT MIXTURE PG58-28H (SURFACE LEVELING)

LOG MILE	LOG MILE	LENGTH (FT)	THICKNESS (IN)	WIDTH (FT)	AREA (SQ YD)	1" SURFACE LEVELING @ 1.948 TONS/CY (TONS)	TACK COAT 0.08 GAL/ SQ. YD. (GAL)	REMARKS
0.016	4.641	24420.00	1.00	21	56980.00	3083.3	4558.4	BEG PROJECT
4.641	4.661	105.60	-	-	-	-	-	BRIDGE B0176 EXCEPTION
4.661	10.618	31452.96	1.00	21	73390.24	3971.2	5871.2	
10.618	10.650	168.96	-	-	-	-	-	R.R. EXCEPTION
10.650	11.944	6832.32	1.00	21	15942.08	862.6	1275.4	
11.944	11.953	47.52	1.00	VARIES	375.00	20.3	30.0	END PROJECT
0.016	11.953	63027.36	-	-	-	3581.1	-	ADDTL. 300 TONS/MILE FOR SURFACE IRREGULARITIES
0.016	11.953	63027.36	-	-	-	757.9	-	SAFETY EDGE/EDGE TREATMENT - 1 FT LEFT AND RIGHT (VARIES)
					SUBTOTAL	12,276.4	11,735.0	
					SUBTOTAL	18.1	26.7	JUNCTION W/ RTE NN
					TOTAL	12,295	11,762	

CONSTRUCTION SIGNS

SIGN NO.	SIGN	SIZE INCHES	AREA (SQ.FT.)	QUANTITY	TOTAL AREA (SQ.FT.)	DESCRIPTION
1	G020-1	60 X 24	10.00	2	20.00	ROAD WORK NEXT 12 MILES
2	W020-1	48 X 48	16.00	4	64.00	ROAD WORK AHEAD
7	W020-4	48 X 48	16.00	6	96.00	ONE LANE ROAD AHEAD
8	W020-7a	48 X 48	16.00	4	64.00	FLAGGER (SYMBOL)
26	G020-2	48 X 24	8.00	2	16.00	END ROAD WORK
35	W08-12	48 X 48	16.00	12	192.00	NO CENTER LINE
53	G020-4	36 X 18	4.50	3	13.50	PILOT CAR FOLLOW ME
36	W08-11	48 X 48	16.00	24	384.00	UNEVEN LANES
59	CONST-8	48 X 36	12.00	2	24.00	WORK ZONE NO PHONE ZONE
	G022-1	21 X 15	2.19	4	8.76	WET PAINT (ARROW PIVOTS)
SIDE ROAD PACKAGE - NON-STATE ROUTE - 9 TOTAL						
2	W020-1	48 X 48	16.00	9	144.00	ROAD WORK AHEAD
8	W020-7a	48 X 48	16.00	9	144.00	FLAGGER (SYMBOL)
11	W03-4	48 X 48	16.00	9	144.00	BE PREPARED TO STOP
58	SPECIAL	18 X 12	1.50	9	13.50	PILOT CAR IN USE WAIT & FOLLOW
SIDE ROAD PACKAGE - STATE ROUTE - 2 TOTAL						
2	W020-1	48 X 48	16.00	2	32.00	ROAD WORK AHEAD
8	W020-7a	48 X 48	16.00	2	32.00	FLAGGER (SYMBOL)
11	W03-4	48 X 48	16.00	2	32.00	BE PREPARED TO STOP
58	G020-4a	42 X 30	8.75	2	17.50	PILOT CAR IN USE WAIT & FOLLOW
CONSTRUCTION SIGNS TOTAL					1441.26	
NOTE: FOR INFORMATIONAL PURPOSES ONLY. SEE LUMP SUM PAY ITEM						

REFER TO STD. PLAN 616.20 FOR TEMPORARY TRAFFIC CONTROL PLANS
REFER TO STD. PLAN 616.10 FOR SIGN AND SIGN MOUNTING REQUIREMENTS
MOBILE OPERATION TMA'S ARE CONSIDERED INCIDENTAL TO CONSTRUCTION

LUMP SUM TEMPORARY TRAFFIC CONTROL

ITEM NO.	UNIT	DESCRIPTION
616-99.01	1 LUMP SUM	MISC. LUMP SUM TEMPORARY TRAFFIC CONTROL

TRAFFIC CONTROL DEVICES

ITEM NO.	QTY.	DESCRIPTION
616-10.25	100	CHANNELIZERS (TRIM-LINE)

NOTE: FOR INFORMATIONAL PURPOSES ONLY.
SEE LUMP SUM PAY ITEM

MOBILIZATION

1 LUMP SUM

REMOVAL AND REPLACEMENT OF DAMAGED PAVEMENT

LOG MILE	LOG MILE	LENGTH (MI)	REMOVAL OF DAMAGED PAVEMENT (SQ. YD.)	REPLACEMENT OF DAMAGED PAVEMENT (TONS)	REMARKS
0.016	11.953	11.94	1340.0	540.0	
		TOTAL	1,340	540	

AGGREGATE ENTRANCES

LOG MILE	LOG MILE	NUMBER OF ENTRANCES	AVERAGE TONS PER ENTRANCE	GRAVEL A, CRUSHED STONE B 0.039 TON/SY/INCH TONS	REMARKS
0.016	11.953	123	2.0	246.0	PRIVATE AND FIELD ENTRANCES
0.016	11.953	19	4.0	76.0	COUNTY ROADS, CITY STREETS, COMMERCIAL ENTRANCES
			TOTAL	322.0	

MODIFIED COLDMILLING (DEPTH TRANSITIONS)

LOG MILE	LOG MILE	LENGTH (FT)	THICKNESS (IN)	WIDTH (FT)	MODIFIED COLDMILLING (SY)	REMARKS
0.016	0.025	50.00	1.00	21	117	BEGIN PROJECT
4.632	4.641	50.00	1.00	21	117	MODIFIED COLDMILLING TO BRIDGE B0176 EXCEPTION
4.661	4.670	50.00	1.00	21	117	MODIFIED COLDMILLING FROM BRIDGE B0176 EXCEPTION
3.920	-	50.00	1.00	VARIES	24	RTE NN
10.609	10.618	50.00	1.00	21	117	MODIFIED COLDMILLING TO R.R.EXCEPTION
10.650	10.659	50.00	1.00	21	117	MODIFIED COLDMILLING FROM R.R. EXCEPTION
11.944	11.953	50.00	1.00	VARIES	375	END PROJECT
				SUBTOTAL	984	
				TOTAL	984	

DURABLE INTERSECTION MARKING

PREFORMED THERMOPLASTIC PAVEMENT MARKING

LOG MILE	24" WHITE STOP BAR L.F.	RAILROAD CROSSING MARKER EACH	REMARKS
9.917	-	1	
10.030	11	-	
10.042	11	-	
10.152	-	1	
TOTAL	22	2	

STATE OF MISSOURI
KEITH ALLEN KILLEN
NUMBER PE-2007020292
PROFESSIONAL ENGINEER
01/22/2025 3:13:27 PM
KEITH ALLEN KILLEN - CIVIL
MO-PE-2007020292

DATE PREPARED	
1/22/2025	
ROUTE: Y	STATE: MO
DISTRICT: NE	SHEET NO.: 3
COUNTY: AUDRAIN/MONROE	
JOB NO.: JST0128	
CONTRACT ID.	
PROJECT NO.	
BRIDGE NO.	

DATE	DESCRIPTION

MISSOURI HIGHWAYS AND TRANSPORTATION COMMISSION
105 WEST CAPITOL
JEFFERSON CITY, MO 65102
1-888-ASK-MODOT (1-888-275-6636)

SUMMARY OF QUANTITIES SHEET
SHEET 1 OF 2

PAVEMENT MARKINGS

LOG MILE	LOG MILE	LOCATION	STANDARD WATERBORNE PAINT, TYPE P BEADS: 4" YELLOW INTERMITTENT CENTERLINE L.F.	4" YELLOW SOLID/ INTERMITTENT CENTERLINE L.F.	4" SOLID DOUBLE YELLOW CENTERLINE L.F.	REMARKS
0.007	0.059	RTE Y			549	
0.059	0.139	RTE Y	110			
0.139	0.299	RTE Y		1,056		SB SOLID/NB INTERM
0.299	0.858	RTE Y			5,903	
0.858	1.038	RTE Y		1,188		NB SOLID/SB INTERM
1.038	1.398	RTE Y	480			
1.398	1.577	RTE Y		1,181		SB SOLID/NB INTERM
1.577	2.001	RTE Y			4,477	
2.001	2.121	RTE Y				NB SOLID/SB INTERM
2.121	2.161	RTE Y			422	
2.161	2.301	RTE Y		924		SB SOLID/NB INTERM
2.301	2.401	RTE Y			1,056	
2.401	2.482	RTE Y		535		NB SOLID/SB INTERM
2.482	2.567	RTE Y			898	
2.567	2.622	RTE Y		363		SB SOLID/NB INTERM
2.622	2.962	RTE Y			3,590	
2.962	3.085	RTE Y		812		NB SOLID/SB INTERM
3.085	3.248	RTE Y		1,076		SB SOLID/NB INTERM
3.248	3.278	RTE Y	40			
3.278	3.418	RTE Y		924		SB SOLID/NB INTERM
3.418	3.805	RTE Y	520			
3.805	3.957	RTE Y				SB SOLID/NB INTERM
3.957	3.999	RTE Y			444	
3.999	4.086	RTE Y		574		NB SOLID/SB INTERM
4.086	4.161	RTE Y			792	
4.161	4.235	RTE Y		488		SB SOLID/NB INTERM
4.235	4.340	RTE Y			1,109	
4.340	4.518	RTE Y		1,175		NB SOLID/SB INTERM
4.518	4.564	RTE Y	70			
4.564	4.699	RTE Y		891		SB SOLID/NB INTERM
4.699	5.174	RTE Y			5,016	
5.174	5.337	RTE Y		1,076		NB SOLID/SB INTERM
5.337	5.422	RTE Y	120			
5.422	5.536	RTE Y		752		SB SOLID/NB INTERM
5.536	5.592	RTE Y	80			
5.592	5.722	RTE Y				NB SOLID/SB INTERM
5.722	5.880	RTE Y	210			
5.880	6.020	RTE Y		924		SB SOLID/NB INTERM
6.020	6.061	RTE Y	60			
6.061	6.115	RTE Y		356		NB SOLID/SB INTERM
6.115	6.237	RTE Y			1,288	
6.237	6.303	RTE Y		436		SB SOLID/NB INTERM
6.303	6.344	RTE Y			433	
6.344	6.497	RTE Y		1,010		NB SOLID/SB INTERM
6.497	6.644	RTE Y		970		SB SOLID/NB INTERM
6.644	6.744	RTE Y			1,056	
6.744	6.841	RTE Y		640		NB SOLID/SB INTERM
6.841	6.906	RTE Y			686	
6.906	7.030	RTE Y		818		SB SOLID/NB INTERM
7.030	7.107	RTE Y			813	
7.107	7.283	RTE Y		1,162		NB SOLID/SB INTERM
7.283	7.378	RTE Y	130			
7.378	7.482	RTE Y		686		SB SOLID/NB INTERM
7.482	7.560	RTE Y	110			
7.560	7.654	RTE Y		620		NB SOLID/SB INTERM
7.654	7.799	RTE Y	200			
7.799	7.971	RTE Y		1,135		SB SOLID/NB INTERM
7.971	8.932	RTE Y			10,148	
8.932	9.092	RTE Y		1,056		NB SOLID/SB INTERM
9.092	9.192	RTE Y		660		SB SOLID/NB INTERM
9.192	9.293	RTE Y	140			
9.293	9.413	RTE Y		792		NB SOLID/SB INTERM
8.932	9.552	RTE Y	820			
9.552	9.713	RTE Y		1,063		SB SOLID/NB INTERM
9.713	10.218	RTE Y			5,333	
10.218	10.383	RTE Y		1,089		NB SOLID/SB INTERM
10.383	10.419	RTE Y	50			
10.419	10.578	RTE Y		1,049		SB SOLID/NB INTERM
10.578	10.737	RTE Y			1,679	
10.737	10.898	RTE Y		1,063		NB SOLID/SB INTERM
10.898	11.017	RTE Y	160			
11.017	11.177	RTE Y		1,056		SB SOLID/NB INTERM
11.177	11.538	RTE Y			3,812	
11.538	11.696	RTE Y		1,043		NB SOLID/SB INTERM
11.696	11.896	RTE Y	270			
11.896	11.945	RTE Y			517	
		SUBTOTAL	3,570	30,643	50,021	
		TOTAL		84,234		

LOG MILES ARE APPROXIMATE - MATCH EXISTING STRIPING

STATE OF MISSOURI
KEITH ALLEN KILLEN
NUMBER PE-2007020292
PROFESSIONAL ENGINEER
01/22/2025 3:14:27 PM
KEITH ALLEN KILLEN - CIVIL
MO-PE-2007020292

DATE PREPARED: 1/22/2025

ROUTE	STATE
Y	MO

DISTRICT	SHEET NO.
NE	3

COUNTY: AUDRAIN/MONROE

JOB NO.: JST0128

CONTRACT ID.

PROJECT NO.

BRIDGE NO.

DESCRIPTION	DATE

MISSOURI HIGHWAYS AND TRANSPORTATION COMMISSION

105 WEST CAPITOL
JEFFERSON CITY, MO 65102
1-888-ASK-MODOT (1-888-275-6636)

SUMMARY OF QUANTITIES SHEET

SHEET 2 OF 2

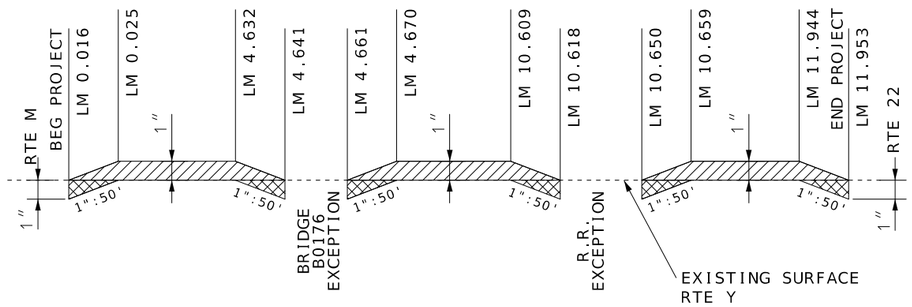

LONGITUDINAL TRAVELWAY
DEPTH TRANSITION

LEGEND

- GRAVEL OR CRUSHED STONE
- OVERLAY
- MODIFIED COLDMILLING
- CONCRETE PAVEMENT

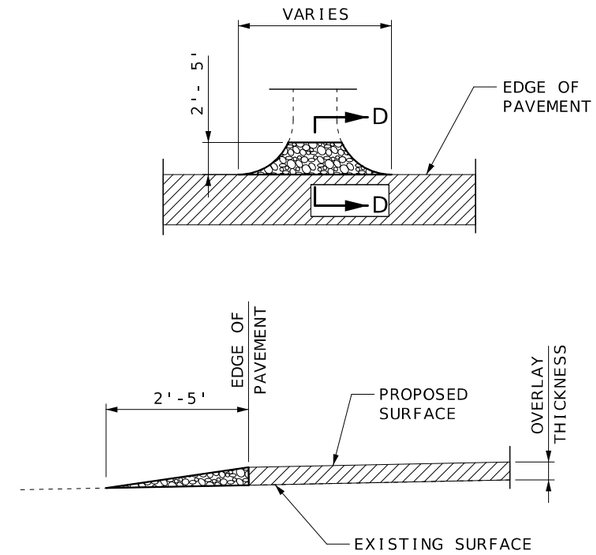

SECTION D-D
TYPICAL AGGREGATE ENTRANCE
(FIELD, PRIVATE, COMMERCIAL ENTRANCES,
COUNTY ROADS AND CITY STREETS)

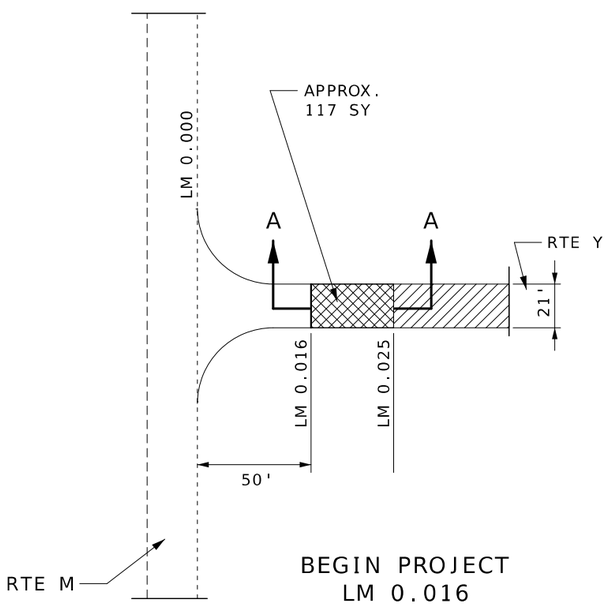

BEGIN PROJECT
LM 0.016

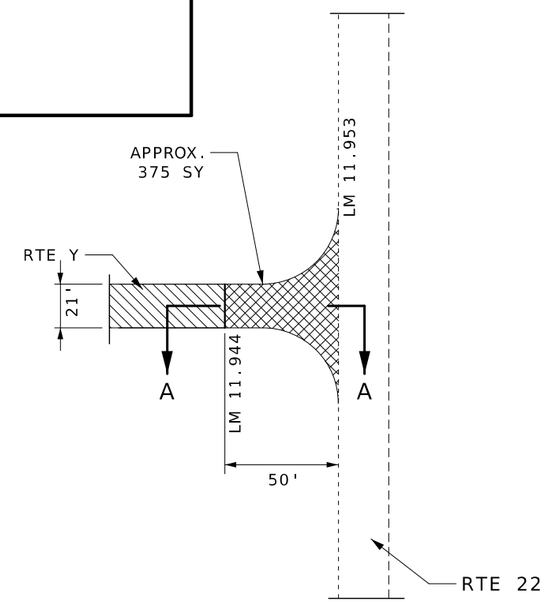

END PROJECT
LM 11.953

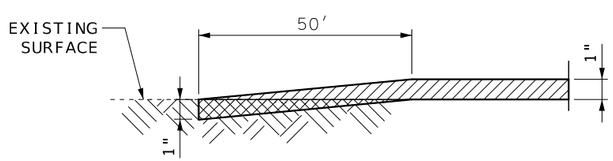

SECTION A-A

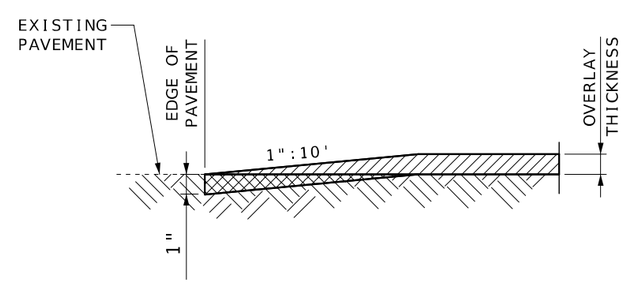

SECTION B-B
TRAVELWAY DEPTH TRANSITIONS

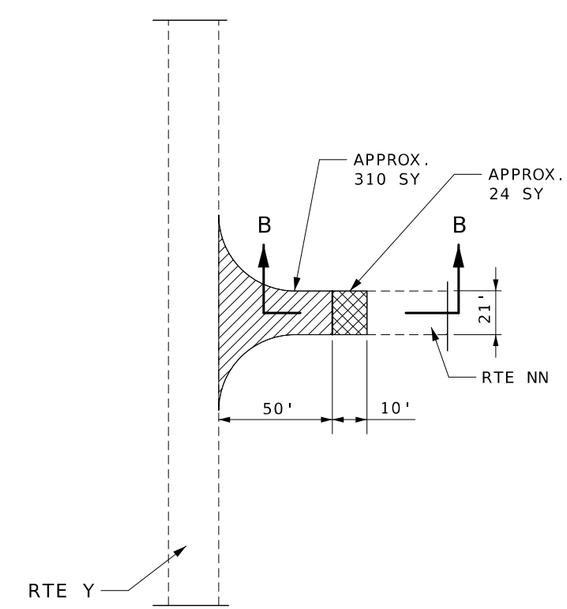

RTE NN
LM 3.920

STATE OF MISSOURI
KEITH ALLEN KILLEN
NUMBER
PE-2007020292
PROFESSIONAL ENGINEER
01/22/2025 3:15:15 PM
KEITH ALLEN KILLEN - CIVIL
MO-PE-2007020292

DATE PREPARED	1/22/2025
ROUTE Y	STATE MO
DISTRICT NE	SHEET NO. 4
COUNTY	AUDRAIN/MONROE
JOB NO.	JST0128
CONTRACT ID.	
PROJECT NO.	
BRIDGE NO.	

DATE	DESCRIPTION

MISSOURI HIGHWAYS AND TRANSPORTATION COMMISSION
105 WEST CAPITOL
JEFFERSON CITY, MO 65102
1-888-ASK-MODOT (1-888-275-6636)

SPECIAL SHEET
SHEET 1 OF 2
NOT TO SCALE

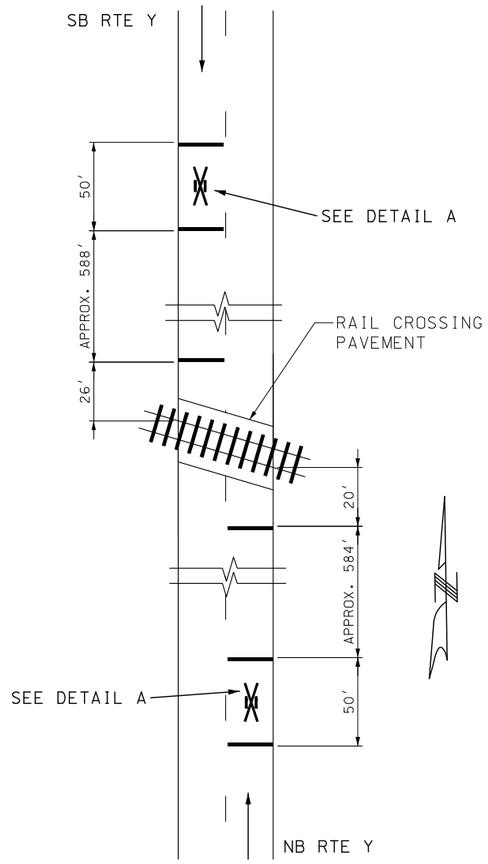

R.R. CROSSING EXCEPTION
LOG MILE 10.644

LEGEND

OVERLAY

MODIFIED COLDMILLING

COLDMILL AND OVERLAY

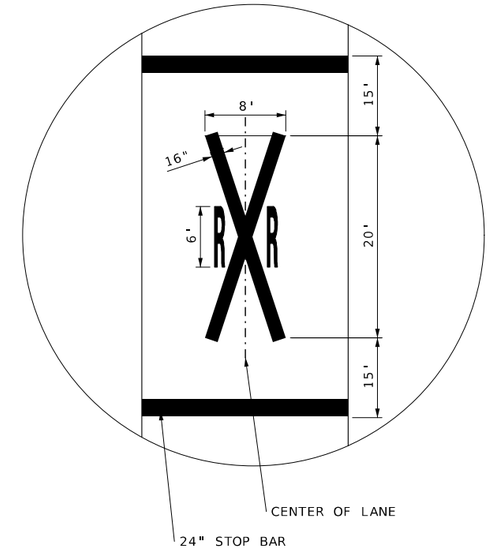

DETAIL A

NOTE:
LOG MILES AND DISTANCES ARE APPROXIMATE.
SEE JOB SPECIAL PROVISIONS FOR RAILROAD REQUIREMENTS.

ACTUAL LIMITS OF RESURFACING MAY BE ADJUSTED IN THE FIELD AS DIRECTED BY RAILROAD FIELD REPRESENTATIVE.

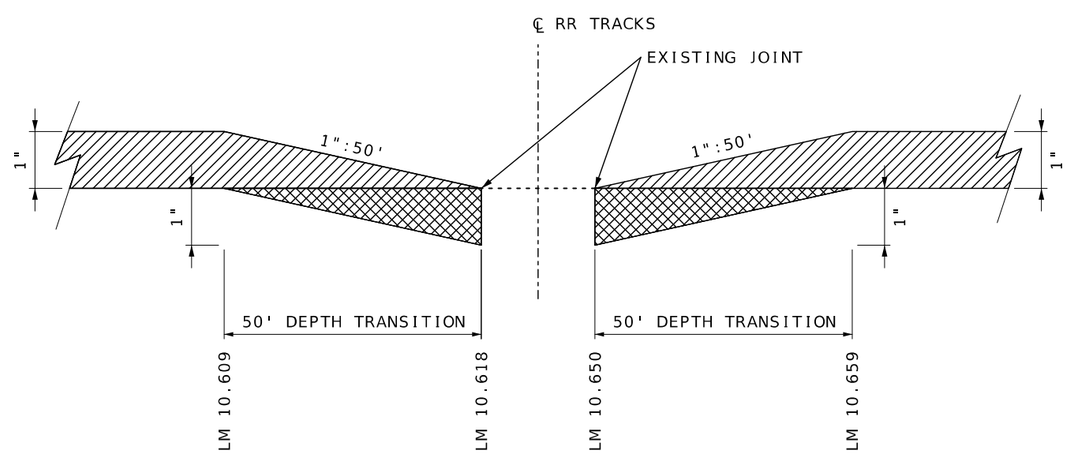

R.R. CROSSING EXCEPTION
LOG MILE 10.644

STATE OF MISSOURI
KEITH ALLEN KILLEN
NUMBER
PE-2007020292
PROFESSIONAL ENGINEER
01/23/2025 11:13:53 AM
KEITH ALLEN KILLEN - CIVIL
MO-PE-2007020292

DATE PREPARED	1/23/2025
ROUTE	Y
STATE	MO
DISTRICT	NE
SHEET NO.	5
COUNTY	AUDRAIN/MONROE
JOB NO.	JST0128
CONTRACT ID.	
PROJECT NO.	
BRIDGE NO.	

DESCRIPTION	DATE

MISSOURI HIGHWAYS AND TRANSPORTATION COMMISSION
105 WEST CAPITOL
JEFFERSON CITY, MO 65102
1-888-ASK-MODOT (1-888-275-6636)

SPECIAL SHEET
SHEET 2 OF 2
NOT TO SCALE