MISSOURI HIGHWAYS AND TRANSPORTATION COMMISSION

PLANS FOR PROPOSED

STATE HIGHWAY

FINAL PLANS
PLATTE COUNTY

DESIGN DESIGNATION

A.A.D.T. - 2024 = 550
A.A.D.T. - 2044 = 950
T = 10%
V = 45 M.P.H.
D = 52% (NB)

FUNCTIONAL CLASSIFICATION-MAJOR COLLECTOR

TEMPORARY EASEMENT NEEDED FOR THIS PROJECT. NO NEW RIGHT OF WAY REQUIRED.

KEY MAP
LOCATION OF PLATTE COUNTY

BEGIN PROJECT
STA. 119+83.17
SB LOG MI. 4.028

REPLACE BRIDGE R0247
BUILD BRIDGE A9335
ROUTE B OVER GROVE CREEK

END PROJECT
STA. 125+62.25
SB LOG MI. 4.138

NOT TO SCALE

R33W
T54N

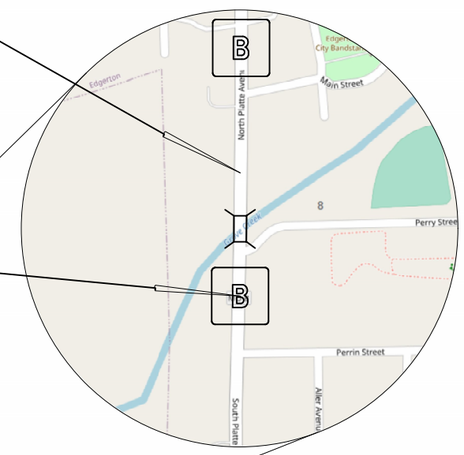

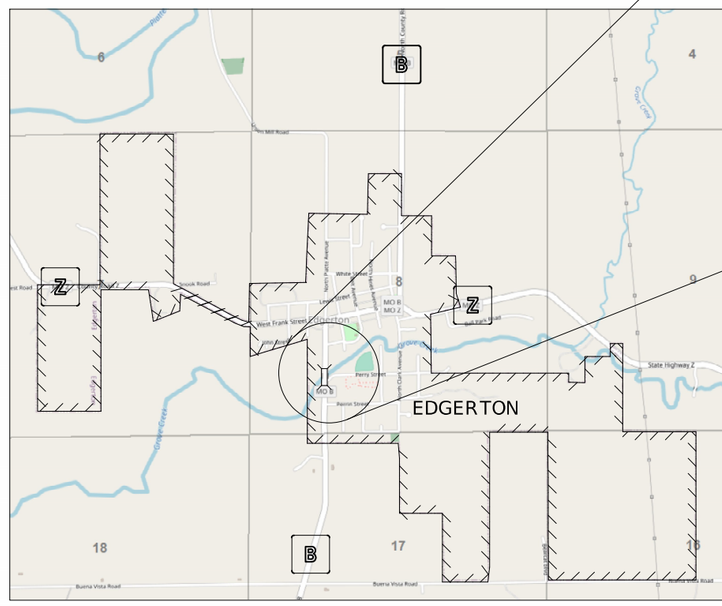

INDEX OF SHEETS

DESCRIPTION	SHEET NUMBER
TITLE SHEET	1
TYPICAL SECTIONS (TS) (3 SHEETS)	2
QUANTITIES (QU) (4 SHEETS)	3
PLAN-PROFILE (PP)	4-5
RIGHT OF WAY (RW)	6
REFERENCE POINTS (RP)	7
COORDINATE POINTS (CP)	7
SPECIAL SHEETS (SS)	8-9
TRAFFIC CONTROL SHEETS (TC)	10-13
EROSION CONTROL SHEETS (EC)	14
SIGNING (SN)	15-20
CULVERT SECTIONS (CS)	21-22
PAVEMENT MARKING (PM)	23
BRIDGE DRAWINGS (B)	
A9335	1-20
CROSS SECTIONS (XS)	1-8

LENGTH OF PROJECT

BEGINNING OF PROJECT	STA. 119+83.17	
END OF PROJECT	STA. 125+62.25	
APPARENT LENGTH	579.07	FEET
EQUATIONS AND EXCEPTIONS:		
TOTAL CORRECTIONS	0	FEET
NET LENGTH OF PROJECT	579.07	FEET
STATE LENGTH	0.104	MILES
FOR INFORMATION ONLY ESTIMATED DISTURBED ACRES	1.005	ACRES

CONVENTIONAL SYMBOLS
(USED IN PLANS)

	EXISTING	NEW
BUILDINGS AND STRUCTURES		
GUARD RAIL		
GUARD CABLE		
CONCRETE RIGHT-OF-WAY MARKER		
STEEL RIGHT-OF-WAY MARKER		
LOCATION SURVEY MARKER		
UTILITIES		
FIBER OPTICS	—FO—	—FO—
OVERHEAD CABLE TV	—OTV—	—OTV—
UNDERGROUND CABLE TV	—UTV—	—UTV—
OVERHEAD TELEPHONE	—OT—	—OT—
UNDERGROUND TELEPHONE	—UT—	—UT—
OVERHEAD POWER	—OE—	—OE—
UNDERGROUND POWER	—UE—	—UE—
SANITARY SEWER	—S—	—S—
STORM SEWER	—SS—	—SS—
GAS	—G—	—G—
WATER	—W—	—W—
MANHOLE	SAN	
FIRE HYDRANT	HYD	
WATER VALVE	WV	
WATER METER	WM	
DROP INLET	DI	
DITCH BLOCK		
GROUND MOUNTED SIGN	SIGN	
LIGHT POLE		
H-FRAME POWER POLE		
TELEPHONE PEDESTAL	PED	
FENCE		
CHAIN LINK	—V—	
WOVEN WIRE	—X—	
GATE POST		
BENCHMARK	BM	

NOTE: DASHED OR OPEN SYMBOLS INDICATE EXISTING FEATURES

THE EXISTENCE AND APPROXIMATE LOCATION OF UTILITY FACILITIES KNOWN TO EXIST, AS SHOWN ON THE PLANS, ARE BASED ON THE BEST INFORMATION AVAILABLE TO THE COMMISSION AT THIS TIME. THIS INFORMATION IS PROVIDED BY THE COMMISSION "AS-IS" AND THE COMMISSION EXPRESSLY DISCLAIMS ANY REPRESENTATION OR WARRANTY AS TO THE COMPLETENESS, ACCURACY, OR SUITABILITY OF THE INFORMATION FOR ANY USE. RELIANCE UPON THIS INFORMATION IS DONE AT THE RISK AND PERIL OF THE USER, AND THE COMMISSION SHALL NOT BE LIABLE FOR ANY DAMAGES THAT MAY ARISE FROM ANY ERROR IN THE INFORMATION. IT IS, THEREFORE, THE RESPONSIBILITY OF THE CONTRACTOR TO VERIFY THE EXISTENCE, LOCATION AND STATUS OF ANY FACILITY. SUCH VERIFICATION INCLUDES DIRECT CONTACT WITH THE LISTED UTILITIES.

STATE OF MISSOURI
HEATHER R. BARROWS
NUMBER PE-2016040670
PROFESSIONAL ENGINEER
01/27/2025 3:06:03 PM
HEATHER R. BARROWS - CIVIL
MO-PE-2016040670

DATE PREPARED	1/27/2025
ROUTE	B
STATE	MO
DISTRICT	KC
SHEET NO.	1
COUNTY	PLATTE
JOB NO.	J4S3492
CONTRACT ID.	
PROJECT NO.	
BRIDGE NO.	A9335

DATE	DESCRIPTION

MISSOURI HIGHWAYS AND TRANSPORTATION COMMISSION
105 WEST CAPITOL
JEFFERSON CITY, MO 65102
1-888-ASK-MODOT (1-888-275-6636)

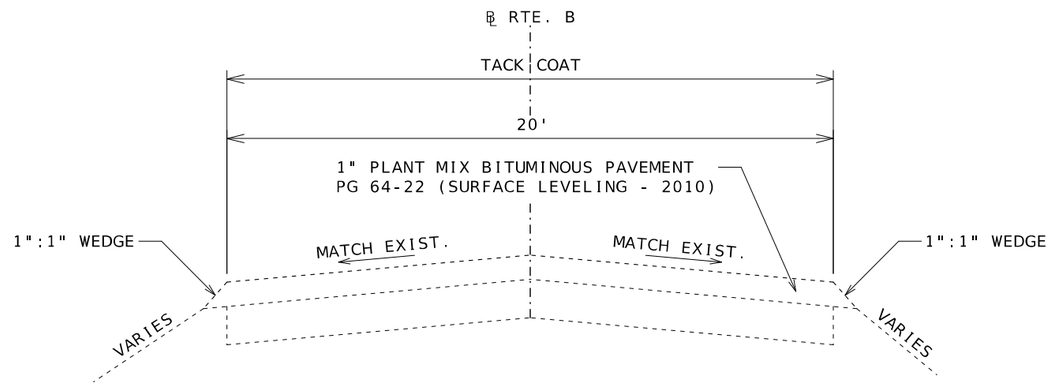

TYPICAL SECTION

EXISTING ROUTE B ON TANGENT

STA. 119+83.17 TO STA. 122+33.73
STA. 123+26.27 TO 125+62.25

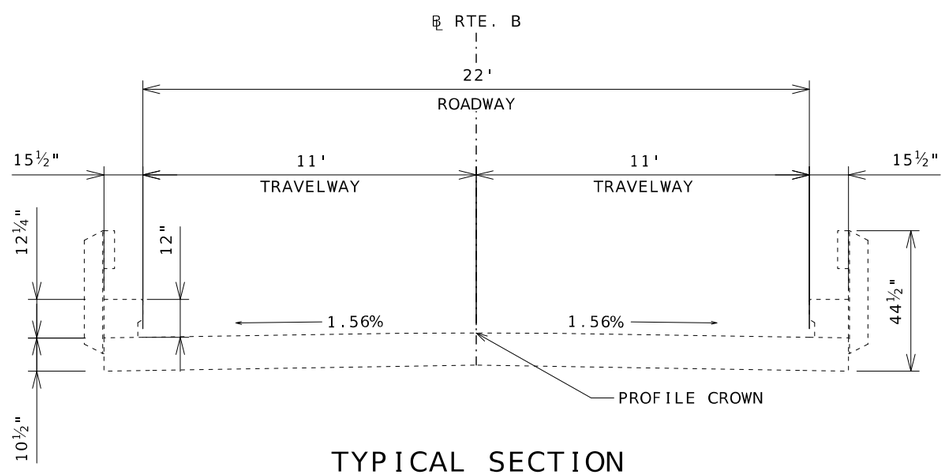

TYPICAL SECTION

EXISTING BRIDGE ROUTE B

STA. 122+33.73 TO STA. 123+26.27

NOT TO SCALE

TYPICAL SHEET
SHEET 1 OF 3

STATE OF MISSOURI
HEATHER R. BARROWS
NUMBER
PE-2016040670
PROFESSIONAL ENGINEER

01/27/2025 3:06:58 PM
HEATHER R. BARROWS-CIML
MO-PE-2016040670

DATE PREPARED	1/27/2025
ROUTE	B
STATE	MO
DISTRICT	KC
SHEET NO.	2
COUNTY	PLATTE
JOB NO.	J4S3492
CONTRACT ID.	
PROJECT NO.	
BRIDGE NO.	A9335

DESCRIPTION	DATE

MISSOURI HIGHWAYS AND TRANSPORTATION COMMISSION
105 WEST CAPITOL
JEFFERSON CITY, MO 65102
1-888-ASK-MODOT (1-888-275-6636)

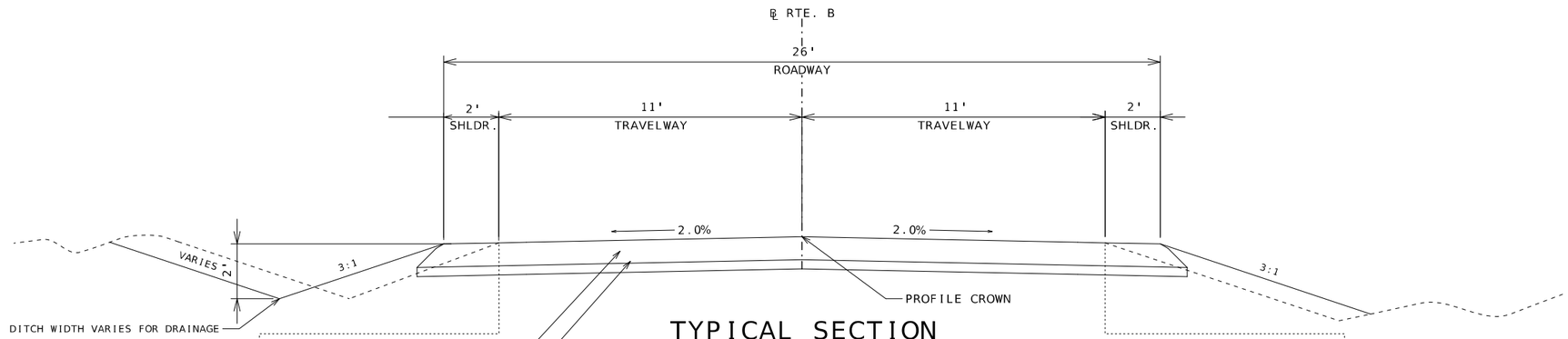

TYPICAL SECTION

ROUTE B ON TANGENT

STA. 119+83.17 TO STA. 122+01.76
STA. 122+01.76 TO STA. 122+21.76 (BR APPR. SLAB — BRIDGE ITEM)
STA. 123+34.33 TO STA. 123+54.33 (BR APPR. SLAB — BRIDGE ITEM)
STA. 123+54.33 TO 125+62.25

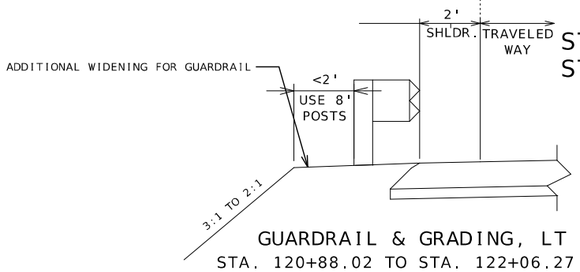

GUARDRAIL & GRADING, LT
STA. 120+88.02 TO STA. 122+06.27 LT

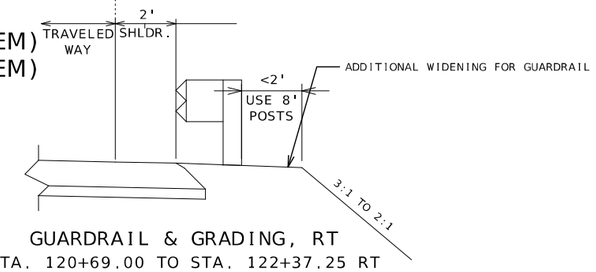

GUARDRAIL & GRADING, RT
STA. 120+69.00 TO STA. 122+37.25 RT
STA. 123+49.82 TO STA. 124+68.07 RT

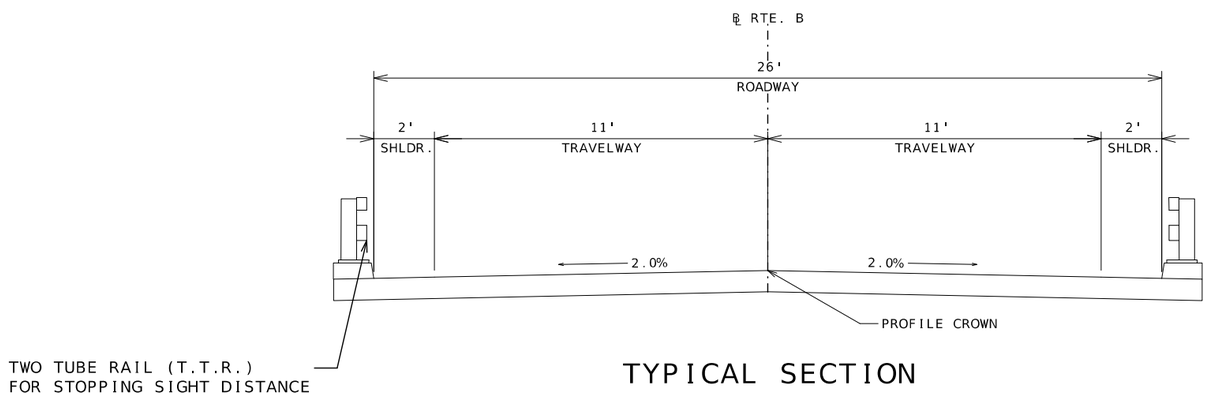

TYPICAL SECTION

BRIDGE A9335
ROUTE B

STA. 122+21.76 TO STA. 123+34.33

FOR INFORMATION PURPOSES ONLY:

ESTIMATE FACTORS	
BP-1 w/ PG 64-22	1.998 TON/CY
BB w/ PG 64-22	2.014 TON/CY
TACK COAT	0.10 GAL/SQYD

OPTIONAL PAVEMENT:

8" JPCP
OVER 4" TYPE 5 AGGREGATE BASE

OR

10" HMA
2" BP-1 W/ PG 64-22
OVER 8" BB W/ PG 64-22
OVER 4" TYPE 5 AGGREGATE BASE

NOT TO SCALE

TYPICAL SHEET
SHEET 2 OF 3

STATE OF MISSOURI
HEATHER R. BARROWS
NUMBER PE-2016040670
PROFESSIONAL ENGINEER
01/27/2025 3:07:23 PM
HEATHER R. BARROWS - CIVIL
MO-PE-2016040670

DATE PREPARED	
1/27/2025	
ROUTE: B	STATE: MO
DISTRICT: KC	SHEET NO.: 2
COUNTY: PLATTE	
JOB NO.: J4S3492	
CONTRACT ID.	
PROJECT NO.	
BRIDGE NO.: A9335	

DESCRIPTION

DATE

MISSOURI HIGHWAYS AND TRANSPORTATION COMMISSION
105 WEST CAPITOL
JEFFERSON CITY, MO 65102
1-888-ASK-MODOT (1-888-275-6636)

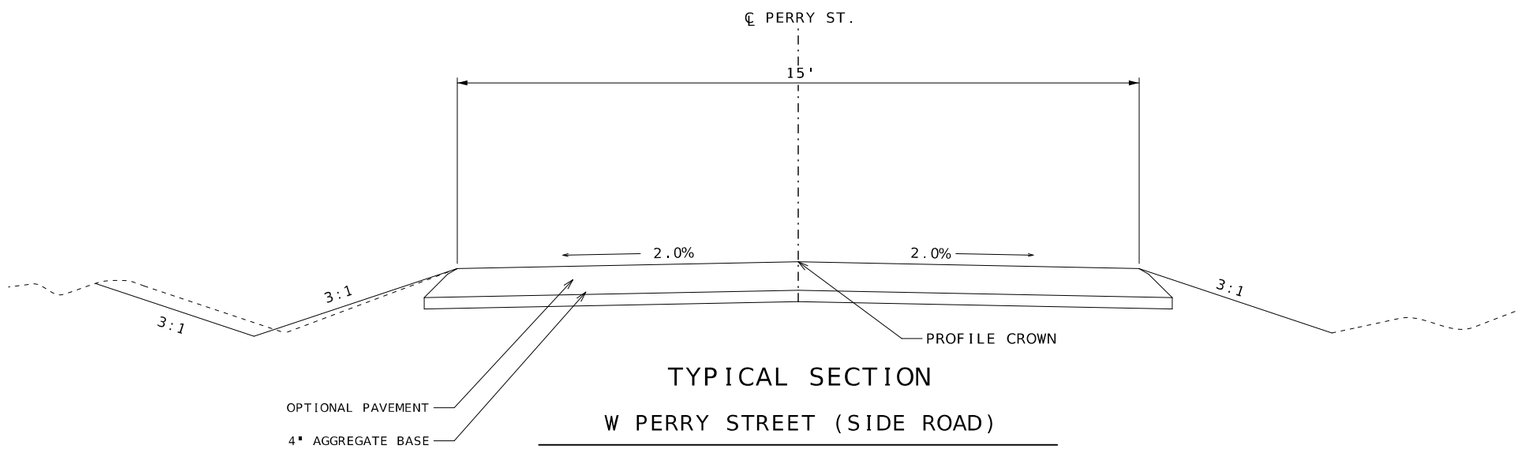

TYPICAL SECTION

W PERRY STREET (SIDE ROAD)

STA. 00+12.96 TO STA.00+44.00

NOT TO SCALE

TYPICAL SHEET
SHEET 3 OF 3

STATE OF MISSOURI
HEATHER R. BARROWS
NUMBER
PE-2016040670
PROFESSIONAL ENGINEER

Heather R. Barrows

01/27/2025 3:07:53 PM
HEATHER R. BARROWS - CIVIL
MO-PE-2016040670

DATE PREPARED	1/27/2025
ROUTE	B
STATE	MO
DISTRICT	KC
SHEET NO.	2
COUNTY	PLATTE
JOB NO.	J4S3492
CONTRACT ID.	
PROJECT NO.	
BRIDGE NO.	A9335

DATE	DESCRIPTION

MISSOURI HIGHWAYS AND TRANSPORTATION COMMISSION

105 WEST CAPITOL
JEFFERSON CITY, MO 65102
1-888-ASK-MODOT (1-888-275-6636)

MOBILIZATION
PAY TOTAL = 1 LUMP SUM

EARTHWORK					
STATION	STATION	LOCATION	CLASS A EXCAVATION CY	COMPACTING EMBANKMENT CY	REMARK
119+83.17	122+50.00	ROUTE B	819.1	79.7	
123+08.88	125+62.25	ROUTE B	354.4	63.7	
		SUBTOTAL	1,173.5	143.4	
		PAY TOTAL	1,174	144	

CLEARING AND GRUBBING						
SHEET	STATION	STATION	LOCATION	SIDE	AREA AC	REMARKS
4	121+02.79	122+82.67	ROUTE B	RT	0.17	NW QUADRANT
4	121+86.27	122+33.73	ROUTE B	LT	0.03	NE QUADRANT
4	122+62.68	123+46.87	ROUTE B	LT	0.05	SE QUADRANT
4	123+01.88	123+49.82	ROUTE B	RT	0.02	SW QUADRANT
4	124+42.93	125+23.32	ROUTE B	RT	0.09	SW QUADRANT
				SUBTOTAL	0.36	
				PAY TOTAL	1	

REMOVAL OF IMPROVEMENTS								
SHEET NO.	STATION	STATION	LOCATION	SIDE	DESCRIPTION	UNITS	QUANTITY	REMARKS
4	119+83.17		ROUTE B		FULL DEPTH SAW CUT	LF	20.1	
4	119+83.17	122+21.76	ROUTE B		EXIST. ASPHALT PAVEMENT	SY	604	
4	120+50.64		ROUTE B	LT	SIGN POST	EA	1	
4	120+38.39	120+78.49	ROUTE B	RT	CHAIN LINK FENCE	LF	140.7	
4	120+31.76	120+51.90	ROUTE B	LT	CULVERT	LF	20.2	PRIVATE DRIVE (CITY PARK)
4	120+34.35	120+57.69	ROUTE B	RT	CULVERT	LF	23.4	PRIVATE DRIVE (LIFT STATION)
4	121+08.04		ROUTE B	RT	SIGN POST	EA	1	
4	121+10.24		ROUTE B	LT	SIGN POST	EA	1	
4	121+46.55		ROUTE B	LT	SIGN POST	EA	2	
4	122+20.57		ROUTE B	LT	SIGN POST	EA	1	
4	122+23.68		ROUTE B	RT	SIGN POST	EA	1	
4	122+24.39		ROUTE B	RT	SIGN POST	EA	1	
4	123+14.74		ROUTE B	LT	SIGN POST	EA	1	
4	123+26.90		ROUTE B	LT	SIGN POST	EA	1	
4	123+32.66	124+02.03	ROUTE B	LT	EXIST. ASPHALT PAVEMENT	SY	111	W PERRY STREET
4	123+36.24		ROUTE B	RT	SIGN POST	EA	1	
4	123+40.83		ROUTE B	RT	SIGN POST	EA	1	
4	123+34.33	125+62.25	ROUTE B		EXIST. ASPHALT PAVEMENT	SY	576	
4	123+43.76	123+82.01	ROUTE B	LT	CULVERT	LF	38.3	W PERRY STREET
4	124+17.06	124+45.23	ROUTE B	LT	CULVERT	LF	28.2	PRIVATE DRIVE (206 N PLATTE AVE)
4	124+93.48	125+13.46	ROUTE B	RT	FENCE	LF	16.0	PRIVATE DRIVE (FIELD ENTRANCE)
4	125+62.25		ROUTE B		FULL DEPTH SAW CUT	LF	21.3	
						PAY TOTAL	1 LUMP SUM	

PAVEMENT TREATMENT									
SHEET NO.	STATION	STATION	LOCATION	SIDE	AVERAGE MAINLINE WIDTH FT	TYPE 1 AGGREGATE FOR BASE (4" THICK) SY	OPTIONAL PAVEMENT SY	LINEAR GRADING CLASS I STA	REMARKS
4	119+83.17	122+01.76	ROUTE B	CENTER	26	603.2	603.2		FULL DEPTH PAVEMENT
4	123+54.33	125+62.25	ROUTE B	CENTER	26	575.4	575.4		FULL DEPTH PAVEMENT
4	120+27.18	120+57.20	ROUTE B	LT	10	27.0		0.3	PRIVATE DRIVE (CITY PARK)
4	120+33.84	120+55.83	ROUTE B	RT	10	19.4		0.2	PRIVATE DRIVE (LIFT STATION)
4	123+34.87	124+05.34	ROUTE B	LT	20	95.5	95.5	0.7	W PERRY STREET
4	124+16.45	124+54.93	ROUTE B	LT	13	35.9		0.4	PRIVATE DRIVE (206 N PLATTE AVE)
4	124+86.70	125+18.68	ROUTE B	RT	12	74.2		0.3	PRIVATE DRIVE (FIELD ENTRANCE)
					SUBTOTAL	1,430.6	1,274.10	1.9	
					PAY TOTAL	1,431	1,275	2.0	

SUMMARY OF QUANTITIES
SHEET 1 OF 4

STATE OF MISSOURI
HEATHER R. BARROWS
NUMBER PE-2016040670
PROFESSIONAL ENGINEER
01/27/2025 3:09:29 PM
HEATHER R. BARROWS - CIVIL
MO-PE-2016040670

DATE PREPARED 1/27/2025
ROUTE B | STATE MO
DISTRICT KC | SHEET NO. 3
COUNTY PLATTE
JOB NO. J4S3492
CONTRACT ID.
PROJECT NO.
BRIDGE NO. A9335

DESCRIPTION | DATE

MISSOURI HIGHWAYS AND TRANSPORTATION COMMISSION
105 WEST CAPITOL
JEFFERSON CITY, MO 65102
1-888-ASK-MODOT (1-888-275-6636)

ROCK

SHEET NO.	STATION	STATION	LOCATION	SIDE	TYPE 2 ROCK DITCH LINER FURNISHING CY	TYPE 2 ROCK DITCH LINER PLACING CY	TYPE 2 ROCK BLANKET FURNISHING (2' THICK) CY	TYPE 2 ROCK BLANKET PLACING (2' THICK) CY	PERMANENT EROSION CONTROL GEOTEXTILE SY	REMARK
4 & 16	121+81.76	122+82.67	ROUTE B	CENTER			207.4	207.4	16.8	BRIDGE BENT 1
4 & 16	122+62.75	123+49.82	ROUTE B	CENTER			205.9	205.9	23.3	BRIDGE BENT 2
4 & 16	121+86.27	122+06.27	ROUTE B	LT	12.3	12.3			34.4	NE QUADRANT
4 & 16	122+17.25	122+49.39	ROUTE B	RT	30.4	30.4			88.4	NW QUADRANT
4 & 16	123+08.86	123+46.87	ROUTE B	LT	27.0	27.0			78.3	SE QUADRANT
				SUBTOTAL	69.7	69.7	413.3	413.3	241.2	
				PAY TOTAL	70	70	414	414	242	

GUARDRAIL

SHEET NO.	STATION	STATION	LOCATION	SIDE	LENGTH	MGS GUARDRAIL SYSTEM 8' POSTS 6'-3" SPACING FT	MGS BRIDGE APPROACH TRANSITION SECTION WITHOUT CURB EA	TYPE A CRASHWORTHY END TERMINAL MASH EA	REMARKS
4	120+99.00	122+37.25	ROUTE B	RT	138.25	50	1	1	NW QUADRANT
4	121+18.02	122+06.27	ROUTE B	LT	88.25		1	1	NE QUADRANT
4	124+38.07	123+49.82	ROUTE B	RT	88.25		1	1	SW QUADRANT
					SUBTOTAL	50	3	3	
					PAY TOTAL	50	3	3	

EROSION & SEDIMENT CONTROL

SHEET NO.	STATION	STATION	OFFSET FT	LOCATION	SIDE	TEMPORARY SEDIMENT TRAP EXC. CY	TEMPORARY SEDIMENT TRAP ROCK CY	TEMPORARY ALT. DITCH CHECK LF	TEMPORARY SEDIMENT REMOVAL CY	TEMPORARY SILT FENCE LF	TEMPORARY TYPE C BERM LF	REMARKS
16	119+83.17	121+86.27		ROUTE B	LT				3	202		NE QUADRANT
16	119+83.17	122+97.03		ROUTE B	RT				4	314		NW QUADRANT
16	123+56.12	125+62.25		ROUTE B	RT				4	308		SW QUADRANT
16	119+99.53		21	ROUTE B	LT			24	1			
16	120+00.04		19	ROUTE B	RT			18	1			
16	120+15.90		21	ROUTE B	LT			24	1			
16	120+16.92		20	ROUTE B	RT			19	1			
16	121+01.26		27	ROUTE B	LT			31	1			
16	121+06.43		29	ROUTE B	RT			27	1			
16	121+47.26		28	ROUTE B	LT			28	1			
16	121+54.09		27	ROUTE B	RT			29	1			
16	121+95.44		26	ROUTE B	LT	4.8	1.2		1			
16	122+01.74		27	ROUTE B	RT			27	1			
16	122+36.75			ROUTE B	CENTER				1		47	BRIDGE BENT 1
16	122+45.39		24	ROUTE B	RT	6.0	1.5		1			
16	123+26.76		24	ROUTE B	LT	6.6	1.7		1			
16	123+27.01			ROUTE B	CENTER				1		63	BRIDGE BENT 4
16	123+99.61		23	ROUTE B	LT			18	1			
16	124+59.57		23	ROUTE B	LT			15	1			
16	124+72.66		23	ROUTE B	LT			13	1			
16	124+85.76		23	ROUTE B	LT			13	1			
16	124+98.86		23	ROUTE B	LT			12	1			
16	125+11.96		23	ROUTE B	LT			12	1			
					SUBTOTAL	17.4	4.4	310	31	824	110	
					PAY TOTAL	17.4	4.4	310	31	824	110	

SUMMARY OF QUANTITIES
SHEET 2 OF 4

STATE OF MISSOURI
HEATHER R. BARROWS
NUMBER
PE-2016040670
PROFESSIONAL ENGINEER

01/27/2025 3:09:56 PM
HEATHER R. BARROWS - CIVIL
MO-PE-2016040670

DATE PREPARED
1/27/2025

ROUTE	STATE
B	MO
DISTRICT	SHEET NO.
KC	3

COUNTY
PLATTE

JOB NO.
J4S3492

CONTRACT ID.

PROJECT NO.

BRIDGE NO.
A9335

DESCRIPTION

DATE

MISSOURI HIGHWAYS AND TRANSPORTATION COMMISSION
105 WEST CAPITOL
JEFFERSON CITY, MO 65102
1-888-ASK-MODOT (1-888-275-6636)

ADDITIONAL MOBILIZATION FOR SEEDING
PAY TOTAL = 4 EACH

NON-CONTRACTUAL
TREE CLEARING
PAY TOTAL = 1 LUMP SUM

CONTRACTOR FURNISHED SURVEYING AND STAKING
PAY TOTAL = 1 LUMP SUM

DRAINAGE STRUCTURES

SHEET NO.	STATION	LOCATION	SIDE	CLASS 3 EXCAVATION CY	GROUP C 24" FLARED END SECTION EA	GROUP C 24" PIPE LF	REMARKS
4 & 8	120+41.44	ROUTE B	LT	13.3	2	23	PRIVATE DRIVE (CITY PARK)
4 & 8	120+45.04	ROUTE B	RT	17.1	2	25	PRIVATE DRIVE (LIFT STATION)
4 & 8	123+65.85	ROUTE B	LT	33.1	2	48	W PERRY STREET
4 & 9	124+31.26	ROUTE B	LT	21.1	2	32	PRIVATE DRIVE (206 N PLATTE AVE)
			SUBTOTAL	84.6	8	128	
			PAY TOTAL	85	8	128	

PAVEMENT MARKING

SHEET NO.	STATION	STATION	LOCATION	4" WHITE HB WATERBORNE PAVEMENT MARKING LF	4" YELLOW HB INTERMITTENT WATERBORNE P'VMT MARKING LF	4" YELLOW HB WATERBORNE PAVEMENT MARKING LF	REMARKS
23	119+83.17	122+21.76	CL		59.65		
23	122+21.76	125+62.25	CL		85.12	340.49	
23	119+83.17	125+62.25	EOP	1,158.16			
			SUBTOTAL	1,158.16	144.77	340.49	
			PAY TOTAL	1,159	485		

SEEDING AND MULCH

STATION	STATION	LOCATION	SIDE	COOL SEASON MIXTURE AC	TEMPORARY SEEDING AND MULCH AC	REMARKS
119+83.17	121+86.27	ROUTE B	LT	0.2	0.2	NE QUADRANT
119+83.17	122+93.29	ROUTE B	RT	0.3	0.3	NW QUADRANT
123+05.96	125+62.25	ROUTE B	LT	0.2	0.2	SE QUADRANT
123+46.42	125+62.25	ROUTE B	RT	0.2	0.2	SW QUADRANT
			SUBTOTAL	0.9	0.9	
			PAY TOTAL	0.9	0.9	

MAILBOX POST

SHEET NO.	STATION	LOCATION	WOOD POST 4" x 4" LF	REMARKS
4 & 6	124+30.59	RT	8	REMOVE & RELOCATE
		SUBTOTAL	8	
		PAY TOTAL	8	

FENCING

SHEET NO.	STATION	STATION	LOCATION	SIDE	CHAIN-LINK FENCE (60 IN) LF	MISC. (12 FT TUBE GATE) EA	REMARKS
4	120+38.39	120+78.49	ROUTE B	RT	141		PRIVATE DRIVE (LIFT STATION)
4	125+02.25		ROUTE B	RT		1	PRIVATE DRIVE (FIELD ENTRANCE)
				SUBTOTAL	141	1	
				PAY TOTAL	141	1	

SUMMARY OF QUANTITIES
SHEET 3 OF 4

STATE OF MISSOURI
HEATHER R. BARROWS
NUMBER
PE-2016040670
PROFESSIONAL ENGINEER

Heather R. Barrows

01/27/2025 3:10:16 PM
HEATHER R. BARROWS - CIVIL
MO-PE-2016040670

DATE PREPARED
1/27/2025

ROUTE	STATE
B	MO
DISTRICT	SHEET NO.
KC	3

COUNTY
PLATTE

JOB NO.
J4S3492

CONTRACT ID.

PROJECT NO.

BRIDGE NO.
A9335

DATE	DESCRIPTION

MISSOURI HIGHWAYS AND TRANSPORTATION COMMISSION
105 WEST CAPITOL
JEFFERSON CITY, MO 65102
1-888-ASK-MODOT (1-888-275-6636)

SIGN	SIZE IN.	AREA SQ.FT.	QTY EACH	TOTAL AREA SQ.FT.	QTY RELOC EACH	TOTAL RELOC SQ.FT.	SIGN NUM.	DESCRIPTION
WARNING SIGNS								
WO1-1L	48X48	16.00						TURN (SYMBOL LEFT)
WO1-1R	48X48	16.00						TURN (SYMBOL RIGHT)
WO1-2L	48X48	16.00						CURVE (SYMBOL LEFT)
WO1-2R	48X48	16.00						CURVE (SYMBOL RIGHT)
WO1-3L	48X48	16.00						REVERSE TURN (SYMBOL LEFT)
WO1-3R	48X48	16.00						REVERSE TURN (SYMBOL RIGHT)
WO1-4L	48X48	16.00						REVERSE CURVE (SYMBOL LEFT)
WO1-4R	48X48	16.00						REVERSE CURVE (SYMBOL RIGHT)
WO1-4bL	48X48	16.00						DOUBLE ARROW REVERSE CURVE (SYMBOL LEFT)
WO1-4bR	48X48	16.00						DOUBLE ARROW REVERSE CURVE (SYMBOL RIGHT)
WO1-4cL	48X48	16.00						TRIPLE ARROW REVERSE CURVE (SYMBOL LEFT)
WO1-4cR	48X48	16.00						TRIPLE ARROW REVERSE CURVE (SYMBOL RIGHT)
WO1-6	60X30	12.50						HORIZONTAL ARROW (SYMBOL)
WO1-6a	72X36	18.00						HORIZ. ARROW (SYMBOL ON PERMANENT BARRICADE)
WO1-7	60X30	12.50						DOUBLE HEAD HORIZONTAL ARROW (SYMBOL)
WO1-7a	72X36	18.00						DOUBLE HEAD HORIZ. ARROW (SYMBOL ON PERM. BARR.)
WO1-8	18X24	3.00						CHEVRON (SYMBOL)
WO1-8a	30X36	7.50						CHEVRON (SYMBOL FOR DIVIDED HIGHWAYS)
WO3-1	48X48	16.00						STOP AHEAD (SYMBOL)
WO3-2	48X48	16.00						YIELD AHEAD (SYMBOL)
WO3-3	48X48	16.00						SIGNAL AHEAD (SYMBOL)
WO3-4	48X48	16.00						BE PREPARED TO STOP
WO3-5	48X48	16.00						SPEED LIMIT AHEAD
WO4-1L	48X48	16.00						MERGE (SYMBOL FROM LEFT)
WO4-1R	48X48	16.00						MERGE (SYMBOL FROM RIGHT)
WO4-1aL	48X48	16.00						MERGE (LEFT)
WO4-1aR	48X48	16.00						MERGE (RIGHT)
WO5-1	48X48	16.00						ROAD/BRIDGE/RAMP NARROWS
WO5-3	48X48	16.00						ONE LANE BRIDGE
WO5-5	48X48	16.00						NARROW LANES
WO6-1	48X48	16.00						DIVIDED HIGHWAY (SYMBOL)
WO6-2	48X48	16.00						DIVIDED HIGHWAY END (SYMBOL)
WO6-3	48X48	16.00						TWO WAY TRAFFIC (SYMBOL)
WO7-3a	30X24	5.00						NEXT XX MILES (PLAQUE)
WO8-1	48X48	16.00						BUMP
WO8-2	48X48	16.00						DIP
WO8-3	48X48	16.00						PAVEMENT ENDS
WO8-4	48X48	16.00						SOFT SHOULDER
WO8-5	48X48	16.00						SLIPPERY WHEN WET (SYMBOL)
WO8-6	48X48	16.00						TRUCK CROSSING
WO8-6c	48X48	16.00						TRUCK ENTRANCE
WO8-7	36X36	9.00						LOOSE GRAVEL
WO8-7a	36X36	9.00						FRESH OIL / LOOSE GRAVEL
WO8-9	48X48	16.00						LOW SHOULDER
WO8-11	48X48	16.00						UNEVEN LANES
WO8-12	48X48	16.00						NO CENTER LINE
WO8-15	48X48	16.00						GROOVED PAVEMENT
WO8-15P	30X24	5.00						MOTORCYCLE (PLAQUE)
WO8-17L	48X48	16.00						SHOULDER DROP-OFF (SYMBOL LEFT)
WO8-17R	48X48	16.00						SHOULDER DROP-OFF (SYMBOL RIGHT)
WO8-17P	30X24	5.00						SHOULDER DROP-OFF (PLAQUE)
W10-1	42RND.	9.62						RAILROAD CROSSING
WO12-1	24X24	4.00						DOUBLE DOWN ARROW (SYMBOL)
WO12-2	48X48	16.00						LOW CLEARANCE (SYMBOL)
WO12-2x	24X18	3.00						LOW CLEARANCE (PLAQUE)
WO12-2a	84X24	14.00						OVERHEAD LOW CLEARANCE (FEET AND INCHES)
WO12-4	120X60	50.00						LOW CLEARANCE XX FT XX IN XX MILES AHEAD
WO12-5	120X60	50.00						WIDTH RESTRICTION XX FT XX IN XX MILES AHEAD
WO13-1	30X30	6.25						ADVISORY SPEED (PLAQUE)
WO16-2	30X24	5.00						XXX FEET (PLAQUE)
WO16-3	30X24	5.00						X MILE (PLAQUE)
WO20-1	48X48	16.00						ROAD/BRIDGE/RAMP WORK AHEAD
WO20-2	48X48	16.00	7	112.00				DETOUR AHEAD
WO20-3	48X48	16.00	2	32.00				ROAD CLOSED AHEAD
WO20-4	48X48	16.00						ONE LANE ROAD AHEAD
WO20-5	48X48	16.00						RIGHT/CENTER/LEFT LANE CLOSED AHEAD
WO20-5a	48X48	16.00						2 RIGHT/CENTER/LEFT LANES CLOSED AHEAD
WO20-6a	48X48	16.00						RIGHT/CENTER/LEFT LANE CLOSED
WO20-7a	48X48	16.00						FLAGGER (SYMBOL)
WO21-2	36X36	9.00						FRESH OIL
WO21-5	48X48	16.00						SHOULDER WORK / SHOULDER WORK AHEAD
WO22-1	48X48	16.00						BLASTING ZONE AHEAD
WO22-2	42X36	10.50						TURN OFF 2-WAY RADIO AND PHONE
WO22-3	42X36	10.50						END BLASTING ZONE
GO22-1	21X15	2.19						WET PAINT (ARROW PIVOTS)

SIGN	SIZE IN.	AREA SQ.FT.	QTY EACH	TOTAL SQ.FT.	QTY RELOC EACH	TOTAL RELOC SQ.FT.	SIGN NUM.	DESCRIPTION
GUIDE SIGNS								
E05-1	36X48	12.00						GORE EXIT
E05-2	48X36	12.00						EXIT OPEN
E05-2a	48X36	12.00						EXIT CLOSED
GO20-1	60X24	10.00						ROAD WORK NEXT XX MILES
GO20-2	48X24	8.00						END ROAD WORK
GO20-4	36X18	4.50						PILOT CAR FOLLOW ME
GO20-4a	42X30	8.75						PILOT CAR IN USE WAIT & FOLLOW
GO20-4a	18X12	1.50						PILOT CAR IN USE WAIT & FOLLOW
GO20-5aP	36X24	6.00						WORK ZONE (PLAQUE)
MO4-8a	24X18	3.00	2	6.00				END DETOUR
MO4-9L	48X36	12.00						DETOUR (LEFT)
MO4-9R	48X36	12.00						DETOUR (RIGHT)
MO4-9P	48X12	4.00						STREET NAME (PLAQUE)
MO4-10L	48X18	6.00						DETOUR ARROW (LEFT)
MO4-10R	48X18	6.00						DETOUR ARROW (RIGHT)
REGULATORY SIGNS								
R1-1	48X48	13.25						STOP
R1-2	48TRI.	6.93						YIELD
R1-2a	36X36	9.00						TO ONCOMING TRAFFIC (PLAQUE)
R1-3P	30X12	2.50						ALL WAY (PLAQUE)
R2-1	36X48	12.00						SPEED LIMIT XX
R3-1	48X48	16.00						NO RIGHT TURN (SYMBOL)
R3-2	48X48	16.00						NO LEFT TURN (SYMBOL)
R3-3	36X36	9.00						NO TURNS
R3-4	48X48	16.00						NO U-TURN (SYMBOL)
R3-7L	30X30	6.25						LEFT LANE MUST TURN LEFT
R3-7R	30X30	6.25						RIGHT LANE MUST TURN RIGHT
R4-1	36X48	12.00						DO NOT PASS
R4-2	36X48	12.00						PASS WITH CARE
R4-7a	36X48	12.00						KEEP RIGHT (HORIZONTAL ARROW)
R4-8a	36X48	12.00						KEEP LEFT (HORIZONTAL ARROW)
R5-1	30X30	6.25						DO NOT ENTER
R5-1a	36X24	6.00						WRONG WAY
R6-1L	54X18	6.75						ONE WAY ARROW (LEFT)
R6-1R	54X18	6.75						ONE WAY ARROW (RIGHT)
R6-2L	24X30	5.00						ONE WAY (LEFT)
R6-2R	24X30	5.00						ONE WAY (RIGHT)
R9-9	24X12	2.00						SIDEWALK CLOSED
R9-11L	24X18	3.00						SIDEWALK CLOSED AHEAD, (ARROW LEFT) CROSS HERE
R9-11R	24X18	3.00						SIDEWALK CLOSED AHEAD, (ARROW RIGHT) CROSS HERE
R10-6	24X36	6.00						STOP HERE ON RED (45^ ARROW)
R11-2	48X30	10.00	7	70.00				ROAD CLOSED
R11-3a	60X30	12.50	1	12.50				ROAD CLOSED 3 MILES AHEAD LOCAL TRAFFIC ONLY
R11-4	60X30	12.50						ROAD CLOSED TO THRU TRAFFIC
CONST-3A	60X48	20.00						FINE SIGN
CONST-3X	56X12	4.67						SPEEDING/PASSING (PLATE)
MISCELLANEOUS SIGNS								
CONST-5	48X36	12.00						POINT OF PRESENCE
CONST-5	96X48	32.00						POINT OF PRESENCE
CONST-8	48X36	12.00						WORK ZONE NO PHONE ZONE
WO20-3a	48X48	16.00	1	16.00				ROAD CLOSED 200 FT
WO20-3a	48X48	16.00	1	16.00				ROAD CLOSED 350 FT
MO4-12	36X60	15.00	41	615.00				DETOUR ASSEMBLY
SPECIAL	96X48	32.00	1	32.00				CLOSED AHEAD
SPECIAL	96X48	32.00	1	32.00				CLOSED 4 MILES AHEAD

	TOTAL
616-10.05 CONSTRUCTION SIGNS	944

	TOTAL
616-10.10 RELOCATED SIGNS	0

EFFECTIVE: 07-01-2024

ITEM NUMBER	TOTAL QTY	DESCRIPTION
6122008		IMPACT ATTENUATOR 40 MPH (SAND BARRELS)
6122009		IMPACT ATTENUATOR 45 MPH (SAND BARRELS)
6122010		IMPACT ATTENUATOR 50 MPH (SAND BARRELS)
6122012		IMPACT ATTENUATOR 55 MPH (SAND BARRELS)
6122014		IMPACT ATTENUATOR 60 MPH (SAND BARRELS)
6122017		IMPACT ATTENUATOR 65 MPH (SAND BARRELS)
6122019		IMPACT ATTENUATOR 70 MPH (SAND BARRELS)
6122020		REPLACEMENT SAND BARREL
6122030		IMPACT ATTENUATOR (RELOCATION)
6123001		TRUCK MOUNTED ATTENUATOR (TMA)
6161008		ADVANCED WARNING RAIL SYSTEM
6161012		BUOYS (BOATS KEEP OUT)
6161013		BUOYS (NO WAKE)
6161014		SPECIAL SIGN ASSEMBLY (BOATS KEEP OUT)
6161025	35	CHANNELIZER (TRIM LINE)
6161030	13	TYPE III MOVEABLE BARRICADE
6161033		DIRECTION INDICATOR BARRICADE
6161040		FLASHING ARROW PANEL
6161047		TYPE III OBJECT MARKER
6161055		SEQUENTIAL FLASHING WARNING LIGHT
6161070		TUBULAR MARKER
6161095		RADAR SPEED ADVISORY SYSTEM
6161096		CHANGEABLE MESSAGE SIGN, COMMISSION FURNISHED/RETAINED
6161098A	7	CHANGEABLE MESSAGE SIGN WITHOUT COMM. INTERFACE- CONTRACTOR FURNISHED/RETAINED
6161099		CHANGEABLE MESSAGE SIGN WITH COMM. INTERFACE- CONTRACTOR FURNISHED/RETAINED
6162000A		WORK ZONE TRAFFIC SIGNAL SYSTEM
6162002		TEMPORARY LONG-TERM RUMBLE STRIPS
6173600D		TEMPORARY TRAFFIC BARRIER CONTRACTOR FURNISHED/RETAINED
6173602B		TEMPORARY TRAFFIC BARRIER CONTRACTOR FURNISHED/COMMISSION RETAINED
6174000A		TEMP. TRAFFIC BARRIER HEIGHT TRANSITION
6175010A		RELOCATING TEMPORARY TRAFFIC BARRIER
6176000B		TEMPORARY TRAFFIC BARRIER COMMISSION FURNISHED/RETAINED
6177000B		TEMP. TRAFFIC BARRIER HEIGHT TRANSITION COMMISSION FURNISHED/RETAINED
6208064A		TEMPORARY RAISED PAVEMENT MARKER
9029400		TEMPORARY TRAFFIC SIGNALS
9029401		TEMPORARY TRAFFIC SIGNALS AND LIGHTING

SUMMARY OF QUANTITIES
SHEET 4 OF 4

STATE OF MISSOURI
HEATHER R. BARROWS
NUMBER PE-2016040670
PROFESSIONAL ENGINEER

01/27/2025 3:10:34 PM
HEATHER R. BARROWS - CIVIL
MO-PE-2016040670

DATE PREPARED 1/27/2025

ROUTE	STATE
B	MO
DISTRICT	SHEET NO.
KC	3

COUNTY PLATTE

JOB NO. J4S3492

CONTRACT ID.

PROJECT NO.

BRIDGE NO. A9335

DESCRIPTION	DATE

MISSOURI HIGHWAYS AND TRANSPORTATION COMMISSION

105 WEST CAPITOL
JEFFERSON CITY, MO 65102
1-888-ASK-MODOT (1-888-275-6636)

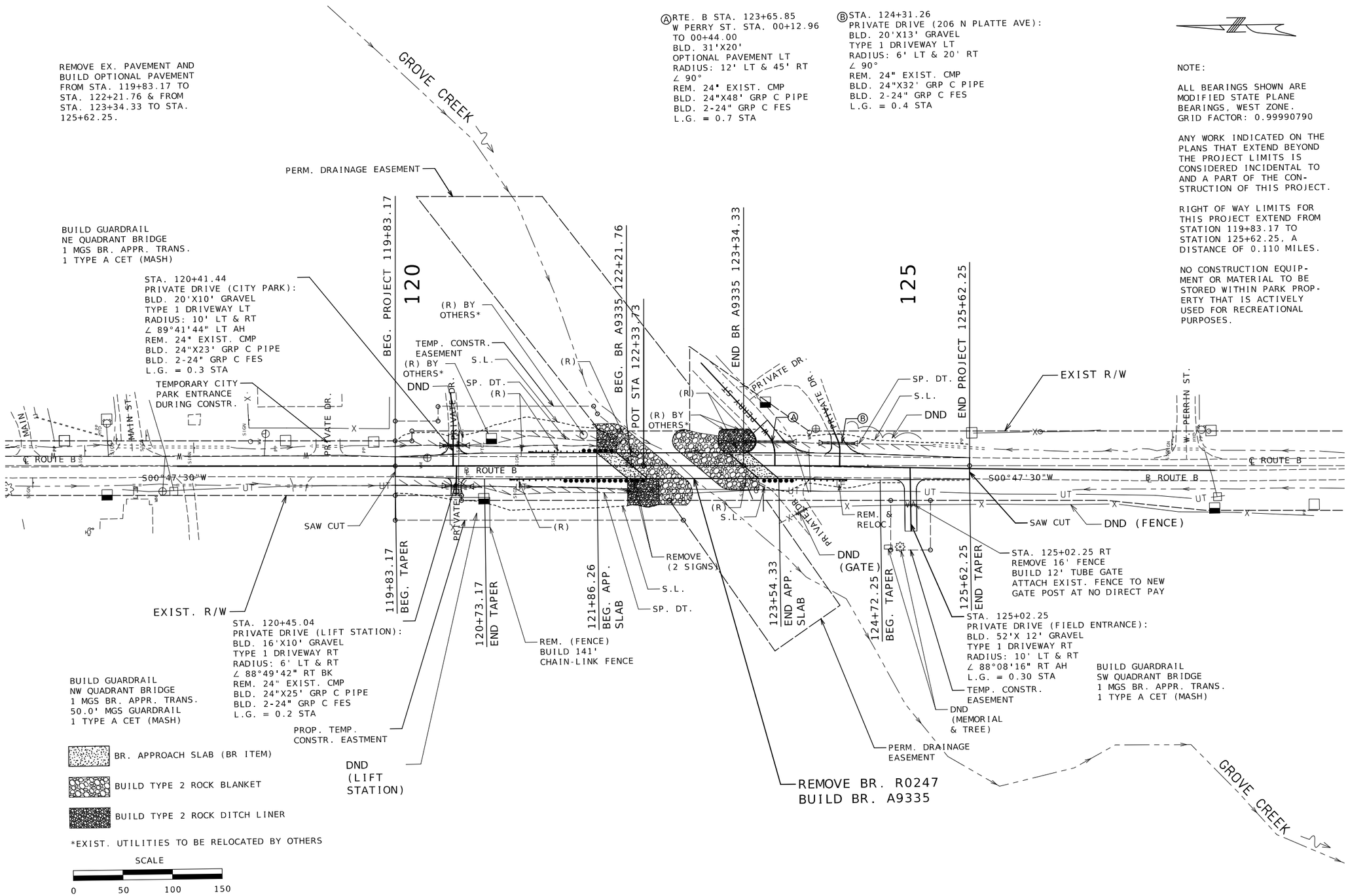

NOTE:

ALL BEARINGS SHOWN ARE MODIFIED STATE PLANE BEARINGS, WEST ZONE. GRID FACTOR: 0.99990790

ANY WORK INDICATED ON THE PLANS THAT EXTEND BEYOND THE PROJECT LIMITS IS CONSIDERED INCIDENTAL TO AND A PART OF THE CONSTRUCTION OF THIS PROJECT.

RIGHT OF WAY LIMITS FOR THIS PROJECT EXTEND FROM STATION 119+83.17 TO STATION 125+62.25, A DISTANCE OF 0.110 MILES.

NO CONSTRUCTION EQUIPMENT OR MATERIAL TO BE STORED WITHIN PARK PROPERTY THAT IS ACTIVELY USED FOR RECREATIONAL PURPOSES.

STATE OF MISSOURI
HEATHER R. BARROWS
NUMBER PE-2016040670
PROFESSIONAL ENGINEER

01/27/2025 3:14:31 PM
HEATHER R. BARROWS - CIVIL
MO-PE-2016040670

DATE PREPARED	1/27/2025
ROUTE	B
STATE	MO
DISTRICT	KC
SHEET NO.	4
COUNTY	PLATTE
JOB NO.	J4S3492
CONTRACT ID.	
PROJECT NO.	
BRIDGE NO.	A9335

DESCRIPTION

DATE

MISSOURI HIGHWAYS AND TRANSPORTATION COMMISSION

105 WEST CAPITOL
JEFFERSON CITY, MO 65102
1-888-ASK-MODOT (1-888-275-6636)

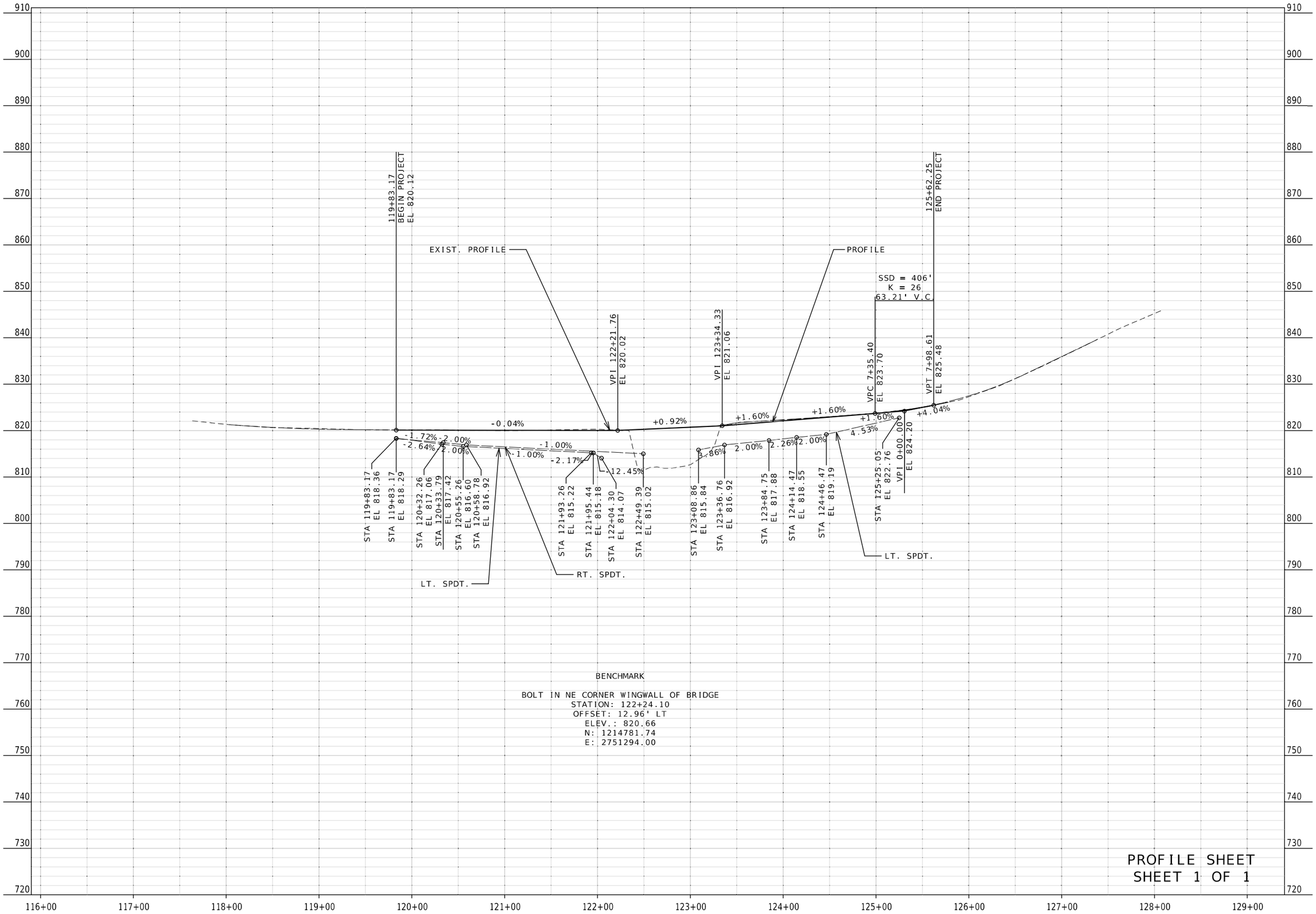

PROFILE SHEET
SHEET 1 OF 1

STATE OF MISSOURI
HEATHER R. BARROWS
NUMBER
PE-2016040670
PROFESSIONAL ENGINEER

Heather R. Barrows

01/27/2025 3:15:10 PM
HEATHER R. BARROWS - CIVIL
MO-PE-2016040670

DATE PREPARED	
1/27/2025	
ROUTE	STATE
B	MO
DISTRICT	SHEET NO.
KC	5
COUNTY	
PLATTE	
JOB NO.	
J4S3492	
CONTRACT ID.	
PROJECT NO.	
BRIDGE NO.	
A9335	

DATE	DESCRIPTION

MISSOURI HIGHWAYS AND TRANSPORTATION COMMISSION

105 WEST CAPITOL
JEFFERSON CITY, MO 65102
1-888-ASK-MODOT (1-888-275-6636)

08-54N-33W
¼ NE - ¼ SW

① CITY OF EDGERTON
TEMP. ESM'T.: 4,792 SF
REMAINING: 37,710 SF

② CITY OF EDGERTON
TEMP. ESM'T.: 1,100 SF
REMAINING: 1,991 SF

NOTE:

NO CONSTRUCTION EQUIPMENT OR MATERIAL TO BE STORED WITHIN PARK PROPERTY THAT IS ACTIVELY USED FOR RECREATIONAL PURPOSES.

08-54N-33W
¼ SE - ¼ SW

GROVE CREEK

¼ - ¼ SECTION LINE

BEG. PROJECT 119+83.17

120

REMOVE EX. BR. R0247
BUILD BR. A9335

PERM. DRAINAGE EASEMENT

+41.44, P.E., +1.37% 10', (GRAVEL)

+65.85, S.R., 1.68% 20', (OPTIONAL P'VMT)

+31.25, P.E., -2.10% 13', (GRAVEL)

HALE, HAYWARD DON

125

END PROJECT 125+62.45

POWELL, JULIANA

EXIST. R/W

SURVEY ℄ ROUTE B

MAIN ST.

PRIVATE DR.

+83.17 25'-45' LT

+00.00 25'-35' LT

+26.27 45'-60' LT

PROP. TEMP. CONSTR. E'SMT

(R) BY OTHERS*

DND

S.L.

+83.19 60' LT

+86.97 52' LT

+08.87 35' LT

STA 122+33.73

POT STA

(R) BY OTHERS*

PERRY ST.

PRIVATE DR.

EXIST R/W

S.L.

W. PERRIN ST.

SURVEY ℄ ROUTE B

¼ - ¼ SECTION LINE

POT STA 129+93.20

130

PRIVATE DR.

℄ ROUTE B

S00°47'30"W

REM. & RELOC.

DND (FENCE)

DND (MEMORIAL &TREE)

DND (FENCE)
STA. 125+02.25 RT
REMOVE 16' FENCE
BUILD 12' TUBE GATE
ATTACH EXIST. FENCE TO NEW GATE POST AT NO DIRECT PAY

TEMP. ESM'T

EXIST. R/W

¼ - ¼ SECTION LINE

LANEY, DR. C.E.

EXIST. R/W

(R) BY OTHERS*

+83.17 30'-55' RT

+10.00 30' RT

+10.15 55' RT

+50.00 30'-35' RT

+45.04 10', P.E., +15.0% (GRAVEL)

+55.15 55' RT

+55.03 35' RT

DND (LIFT STATION)

REM. (FENCE) BUILD 141' CHAIN-LINK FENCE

+59.68 35' RT

+73.68 55' RT

TEMP. ESM'T

S.L.

EXIST. R/W

¼ - ¼ SECTION LINE

PERM. DRAINAGE EASEMENT

+82.70 35-85' RT

+02.25 12', P.E., -7.69% (GRAVEL)

+22.70 35-85' RT

LAND CORNER TIE #2 1522.68' N61°08'56"E

④
RICHARDSON, RODNEY & SHERI
TEMP. ESM'T.: 2,000 SF
REMAINING: 219,542 SF

LAND CORNER TIE #2
¼ SW - ¼ SW COR. SEC08 T54N R33W
N=1214443.5994; E=2751276.3652
DOC #: 600-79952; PLS #: 2379
3/4" IRON BAR

③
LANEY, CHARLES E & PANSY L TRUST
TEMP. ESM'T.: 4,904 (0.11 AC)
REMAINING: 946,994 SF (21.74 AC)

LAND CORNER TIE #1 1888.60' S44°26'49"E

NOTE:

ACCESS TO LIFT STATION TO REMAIN OPEN TO PUBLIC WORKS EMPLOYEES THROUGHOUT CONSTRUCTION.

LAND CORNER TIE #1
¼ NW - ¼ SW COR. SEC08 T54N R33W
N=1215022.8211; E=2751284.3689
DOC #: 600-79953; PLS #: 2379
5/8" IRON BAR WITH ALUMINUM CAP

SCALE
0 50 100 150

08-54N-33W
¼ NW - ¼ SW

¼ - ¼ SECTION LINE

08-54N-33W
¼ SW - ¼ SW

LANEY, CHARLES E & PANSY L TRUST

GROVE CREEK

*EXIST. UTILITIES TO BE RELOCATED BY OTHERS

NOTE:

ALL BEARINGS SHOWN ARE MODIFIED STATE PLANE BEARINGS, WEST ZONE. GRID FACTOR:0.99990790

ANY WORK INDICATED ON THE PLANS THAT EXTEND BEYOND THE PROJECT LIMITS IS CONSIDERED INCIDENTAL TO AND A PART OF THE CONSTRUCTION OF THIS PROJECT.

RIGHT OF WAY LIMITS FOR THIS PROJECT EXTEND FROM STATION 119+83.17 TO STATION 125+62.25. A DISTANCE OF 0.110 MILES.

THE APPROXIMATE LOCATION OF PROPERTY LINES AS SHOWN ON THE PLANS ARE BASED ON THE BEST INFORMATION AVAILABLE TO THE COMMISSION AT THIS TIME. THIS INFORMATION IS PROVIDED BY THE COMMISSION "AS-IS" AND THE COMMISSION EXPRESSLY DISCLAIMS AND REPRESENTATION OR WARRANTY AS TO THE COMPLETENESS, ACCURACY, OR SUITABILITY OF THE INFORMATION FOR ANY USE.

RIGHT OF WAY SHEET
SHEET 1 OF 1

STATE OF MISSOURI
HEATHER R. BARROWS
NUMBER PE-2016040670
PROFESSIONAL ENGINEER
01/27/2025 3:15:43 PM
HEATHER R. BARROWS - CIVIL
MO-PE-2016040670

DATE PREPARED	
1/27/2025	
ROUTE	STATE
B	MO
DISTRICT	SHEET NO.
KC	6
COUNTY	
PLATTE	
JOB NO.	
J4S3492	
CONTRACT ID.	
PROJECT NO.	
BRIDGE NO.	
A9335	

DATE	DESCRIPTION

MISSOURI HIGHWAYS AND TRANSPORTATION COMMISSION
105 WEST CAPITOL
JEFFERSON CITY, MO 65102
1-888-ASK-MODOT (1-888-275-6636)

ALL PROJECT COORDINATES HAVE BEEN PROJECTED FROM THE MISSOURI STATE PLANE COORDINATE (SPC) SYSTEM OF 1983 USING AN AVERAGE PROJECT PROJECTION (GRID TO GROUND) FACTOR. TO GET BACK TO STATE PLANE COORDINATES MULTIPY THE PROJECT COORDINATES BY THE AVERAGE GRID FACTOR AS SHOWN IN THE "REFERENCE CONTROL INFORMATION" PORTION OF THIS TABLE.

PROJECT COORDINATE INFORMATION

COORDINATE SYSTEM	MODIFIED STATE PLANE (GROUND)
HORIZONTAL DATUM	NAD83
VERTICAL DATUM	NAVD88
GEOID MODEL	GEOID18
ELEVATIONS DETERMINED BY	GPS OBSERVATION
PROJECT PROJECTION FACTOR	1.00009211

REFERENCE CONTROL INFORMATION

COORDINATE SYSTEM	MO COORDINATE SYSTEM OF 1983
CONTROL STATION	MO GEOGRAPHIC REFERENCE SYSTEM
DESIGNATION	PL-63
CORS_ID	XX
PID	165063
LATITUDE	39°30'18.60563"
LONGITUDE	94°37'41.14303"
NORTHING (M)	370537.8590
EASTING (M)	838983.5490
ZONE	WEST
PROJECT AVERAGE GRID FACTOR	0.99990790

EXAMPLE OF PROJECT COORDINATE TO S.P.C.

PROJECT NORTHING X AVERAGE GRID FACTOR
= STATE PLANE NORTHING
PROJECT EASTING X AVERAGE GRID FACTOR
= STATE PLANE EASTING

EXAMPLE: CONTROL POINT # 1
N 1215682.167 X 0.99990790 = N 1215570.203
E 2751306.400 X 0.99990790 = E 2751053.005

LINEAR UNIT CONVERSION

1 METER = 3.280833333 US SURVEY FEET (USFT)

COORDINATE POINT LISTING

SHEET NO	STATION	LOCATION	OFFSET (USFT)	MODIFIED STATE PLANE (GROUND) NORTHING (US SURVEY FT)	EASTING (US SURVEY FT)	ELEVATION (US SURVEY FT)	DESCRIPTION	GPK POINT ID
PROJECT CONTROL POINTS								
	113+23.58	RTE. B	12.92 LT	1,215,682.17	2,751,306.40	831.90	STEEL IN ASPHALT	CP #1
	123+48.48	RTE. B	19.62 RT	1,214,657.81	2,751,259.70	820.94	5/8" IRON BAR W/ ORANGE MODOT CONTROL CAP	CP #2
	130+37.31	RTE. B	15.56 LT	1,213,969.01	2,751,286.34	855.20	5/8" IRON BAR W/ ORANGE MODOT CONTROL CAP	CP #3
ALIGNMENTS								
	119+77.65	RTE. B	0	1,215,028.34	2,751,284.45	820.14	BEGINNING OF PROJECT	492
	125+46.14	RTE. B	0	1,214,459.91	2,751,276.59	824.72	END OF PROJECT	492
	122+33.73	RTE. B	0	1,214,829.32	2,751,281.70	820.73	POT	492

REFERENCE POINT LISTING

CONTROL POINT NO. 1

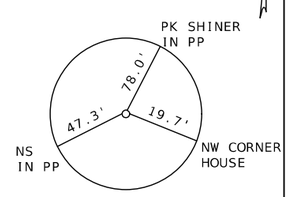

STEEL IN ASPHALT
N: 1215682.17
E: 2751306.40
STA.: 113+23.58
OFF.: 12.92 LT
ELEV.: 831.90'

CONTROL POINT NO. 2

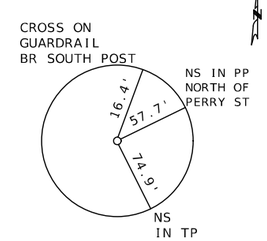

5/8" IRON BAR W/ ORANGE
CONTROL CAP SW OF BR
N: 1214657.812
E: 2751259.700
STA.: 123+48.48
OFF.: 19.62 RT
ELEV.: 820.94'

CONTROL POINT NO. 3

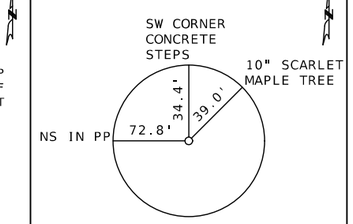

5/8" IRON BAR W/ ORANGE
CONTROL CAP N OF PRIVATE
DRIVE AT 106 S PLATTE AVE.
N: 1213969.011
E: 2751286.337
STA.: 130+37.31
OFF.: 15.56 LT
ELEV.: 855.20'

REFERENCE POINTS AND
COORDINATE POINTS SHEET
SHEET 1 OF 1

STATE OF MISSOURI
HEATHER R. BARROWS
NUMBER
PE-2016040670
PROFESSIONAL ENGINEER

01/27/2025 3:16:18 PM
HEATHER R. BARROWS - CIVIL
MO-PE-2016040670

DATE PREPARED	1/27/2025
ROUTE	B
STATE	MO
DISTRICT	KC
SHEET NO.	7
COUNTY	PLATTE
JOB NO.	J4S3492
CONTRACT ID.	
PROJECT NO.	
BRIDGE NO.	A9335

DESCRIPTION

DATE

MISSOURI HIGHWAYS AND TRANSPORTATION COMMISSION

105 WEST CAPITOL
JEFFERSON CITY, MO 65102
1-888-ASK-MODOT (1-888-275-6636)

STA. 120+41.44 LT
PRIVATE DRIVE (CITY PARK):
BLD 20'X10' GRAVEL
LINEAR GRADING = 0.3 STA

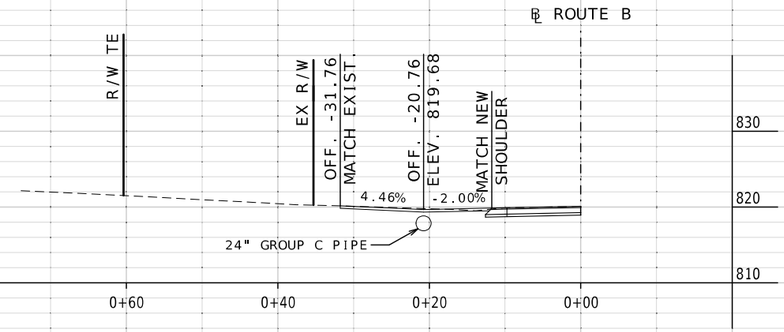

STA. 120+45.04 RT
PRIVATE DRIVE
(LIFT STATION):
BLD 16'X10' GRAVEL
LINEAR GRADING = 0.2 STA

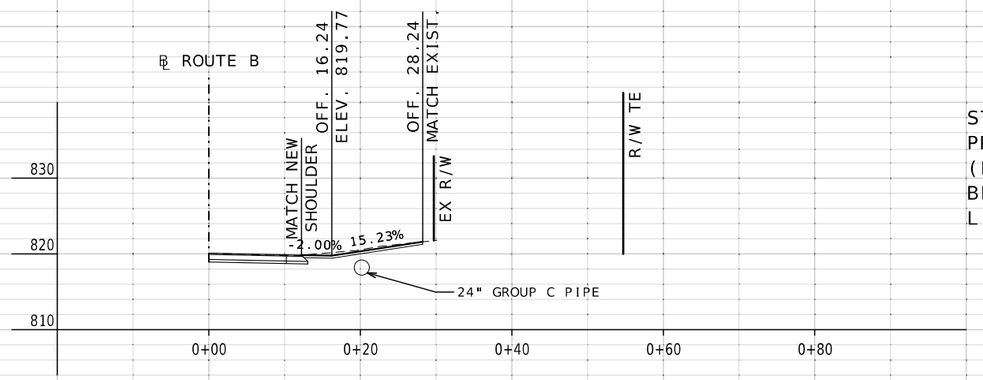

STA. 123+65.85 LT
W PERRY STREET:
BLD 31'X20' OPTIONAL P'VMT
LINEAR GRADING = 0.7 STA

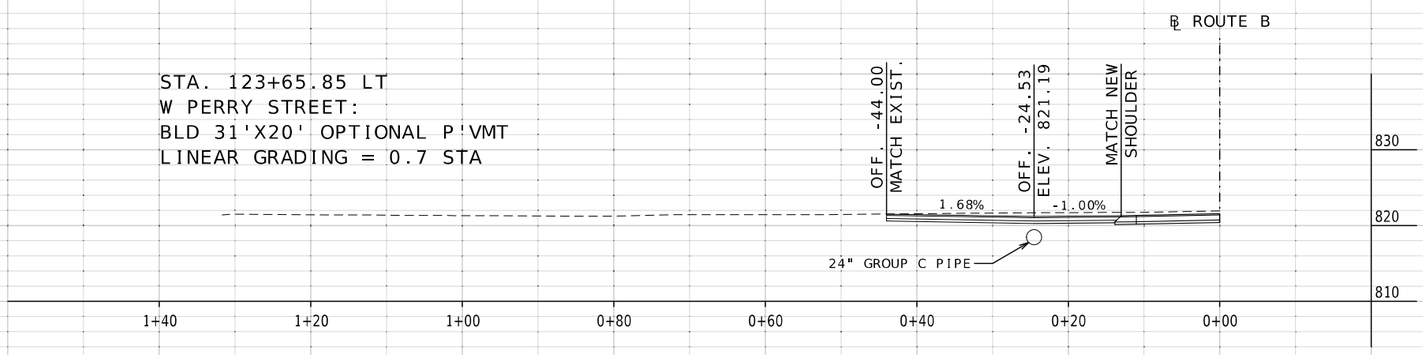

ENTRANCE PROFILES
SHEET 1 OF 2

STATE OF MISSOURI
HEATHER R. BARROWS
NUMBER
PE-2016040670
PROFESSIONAL ENGINEER

Heather R. Barrows

01/28/2025 8:42:41 AM
HEATHER R. BARROWS - CIVIL
MO-PE-2016040670

DATE PREPARED	1/27/2025
ROUTE	B
STATE	MO
DISTRICT	KC
SHEET NO.	8
COUNTY	PLATTE
JOB NO.	J4S3492
CONTRACT ID.	
PROJECT NO.	
BRIDGE NO.	A9335

DESCRIPTION	DATE

MISSOURI HIGHWAYS AND TRANSPORTATION COMMISSION
105 WEST CAPITOL
JEFFERSON CITY, MO 65102
1-888-ASK-MODOT (1-888-275-6636)

STA. 124+31.26 LT
PRIVATE DRIVE
(206 N PLATTE AVE):
BLD 20'X13' GRAVEL
LINEAR GRADING = 0.4 STA

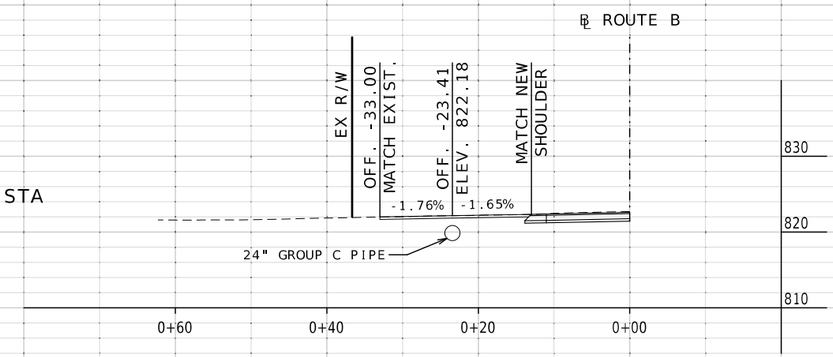

STA. 125+02.25 RT
PRIVATE DRIVE
(FIELD ENTRANCE):
BLD 52'X12' GRAVEL
LINEAR GRADING = 0.3 STA

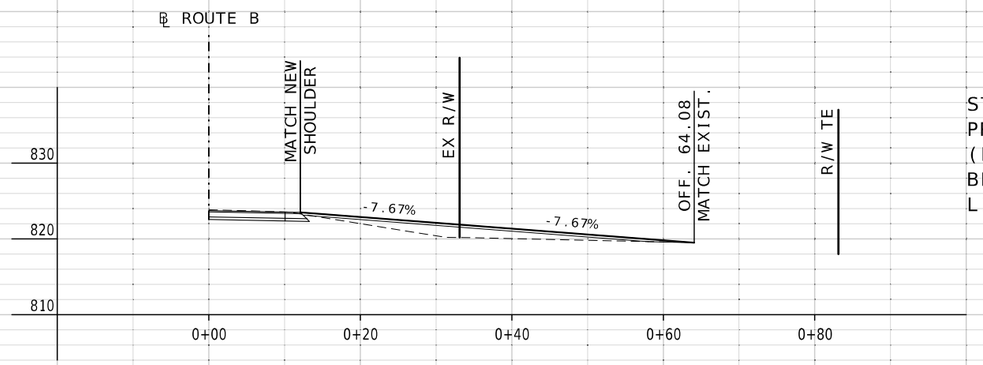

ENTRANCE PROFILES
SHEET 2 OF 2

STATE OF MISSOURI
HEATHER R. BARROWS
NUMBER
PE-2016040670
PROFESSIONAL ENGINEER

Heather R. Barrows
01/28/2025 8:43:32 AM
HEATHER R. BARROWS - CIVIL
MO-PE-2016040670

DATE PREPARED	1/27/2025
ROUTE	B
STATE	MO
DISTRICT	KC
SHEET NO.	9
COUNTY	PLATTE
JOB NO.	J4S3492
CONTRACT ID.	
PROJECT NO.	
BRIDGE NO.	A9335

DATE	DESCRIPTION

MISSOURI HIGHWAYS AND TRANSPORTATION COMMISSION
105 WEST CAPITOL
JEFFERSON CITY, MO 65102
1-888-ASK-MODOT (1-888-275-6636)

SIGN SPACING, DEVICE SPACING AND CHANNELIZING TAPER LENGTHS

SIGN SPACING (S) FOR ADVANCE SIGN SERIES (1) (2)		
SPEED MPH	UNDIVIDED HIGHWAYS	DIVIDED HIGHWAYS
0-35	200	200
40-45	350	500
50-55	500	1000
60-70	1000	SA-1000 SB-1500 SC-2640

LONGITUDINAL BUFFER SPACE (B)	
SPEED MPH	BUFFER SPACE
0-35	250
40-45	360
50-55	495
60-70	730

TAPER LENGTHS AND SPACING OF CHANNELIZING DEVICES					
SPEED MPH	MINIMUM TAPER LENGTHS (L) FOR LANE WIDTHS (W)			MAXIMUM CHANNELIZER SPACING	
	10 FT	11 FT	12 FT	THROUGH TAPER	THROUGH WORK AREA
0-35	205	225	245	35	40
40-45	450	495	540	40	80
50-55	550	605	660	50	80
60-70	700	770	840	60	120

TAPER LENGTH (L):

L = WS FOR 40 MPH OR MORE

$L = \frac{WS^2}{60}$ FOR 35 MPH OR LESS

FOR SHOULDER TAPER USE L/3

WHERE:

L = TAPER LENGTH IN FEET

W = LATERAL SHIFT IN FEET

S = POSTED SPEED IN MPH

NOTES:

DIMENSIONS IN FEET UNLESS OTHERWISE NOTED.

(1) SPACING BETWEEN SIGNS AND SPACING BETWEEN LAST SIGN AND FLAGGER, BEGINNING OF TAPER, OR SIGNED CONDITION

(2) SPACINGS MAY BE ADJUSTED AS NECESSARY TO MEET FIELD CONDITIONS

TRAFFIC CONTROL DEVICES

GENERAL NOTES:

1. SEE STANDARD PLAN 616.10 FOR DETAILS AND ITEMS NOT SHOWN
2. EXISTING SIGNS SHALL BE COVERED DURING WORKING HOURS ONLY IF IN CONFLICT WITH TRAFFIC CONTROL PLANS.
3. NO DIRECT PAYMENT WILL BE MADE FOR RELOCATING, COVERING, UNCOVERING OR REMOVING SIGNS.
4. CONES ALLOWABLE FOR DAYTIME OPERATIONS ONLY.
6. LOCATE FLASHING ARROW PANEL AT BEGINNING OF TAPER WHEN FEASIBLE, ARROW PANELS ARE ALWAYS LOCATED BEHIND CHANNELIZERS OR CONES.

TRAFFIC CONTROL LEGEND

- SIGN (SINGLE SIDED)
- SIGN (DOUBLE SIDED)
- FLAGGER
- DIRECTIONAL INDICATOR BARRICADE
- CHANNELIZER
- BARRICADE
- CHANGEABLE MESSAGE BOARD
- TMA TRUCK MOUNTED ATTENUATOR W/ FLASHING ARROW

TEMPORARY
TRAFFIC CONTROL SHEET
SHEET 1 OF 4

STATE OF MISSOURI
HEATHER R. BARROWS
NUMBER
PE-2016040670
PROFESSIONAL ENGINEER

01/27/2025 3:17:09 PM
HEATHER R. BARROWS - CIVIL
MO-PE-2016040670

DATE PREPARED	
1/27/2025	
ROUTE B	STATE MO
DISTRICT KC	SHEET NO. 10
COUNTY PLATTE	
JOB NO. J4S3492	
CONTRACT ID.	
PROJECT NO.	
BRIDGE NO. A9335	

DATE	DESCRIPTION

MISSOURI HIGHWAYS AND TRANSPORTATION COMMISSION

105 WEST CAPITOL
JEFFERSON CITY, MO 65102
1-888-ASK-MODOT (1-888-275-6636)

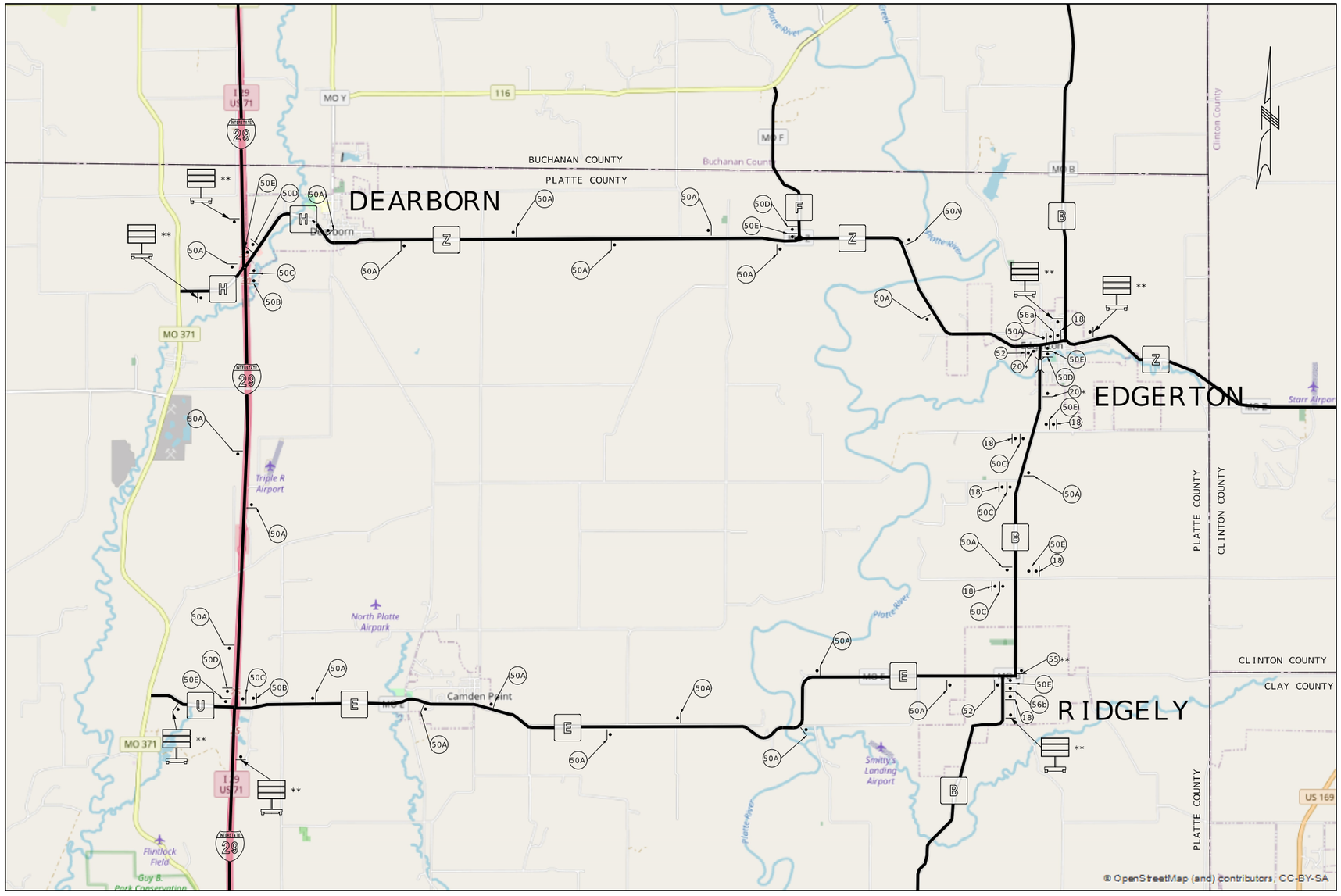

*PLACE SB AND NB ROUTE B
**CMS WITH 5 CHANNELIZERS

NOT TO SCALE

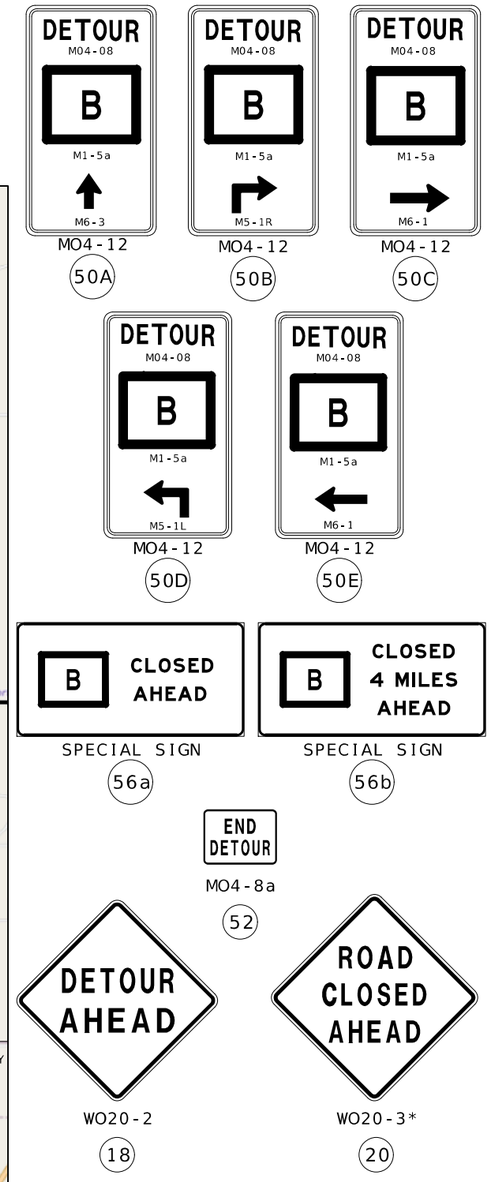

TRAFFIC CONTROL LEGEND

SIGN (SINGLE SIDED)

CHANGEABLE MESSAGE BOARD

TEMPORARY
TRAFFIC CONTROL SHEET
SHEET 2 OF 4

STATE OF MISSOURI
HEATHER R. BARROWS
NUMBER PE-2016040670
PROFESSIONAL ENGINEER

01/27/2025 3:23:26 PM
HEATHER R. BARROWS - CML
MO-PE-2016040670

DATE PREPARED	
1/27/2025	
ROUTE: B	STATE: MO
DISTRICT: KC	SHEET NO.: 11
COUNTY: PLATTE	
JOB NO.: J4S3492	
CONTRACT ID.	
PROJECT NO.	
BRIDGE NO.: A9335	

DATE	DESCRIPTION

MISSOURI HIGHWAYS AND TRANSPORTATION COMMISSION
105 WEST CAPITOL
JEFFERSON CITY, MO 65102
1-888-ASK-MODOT (1-888-275-6636)

EFFECTIVE: 02-01-2009

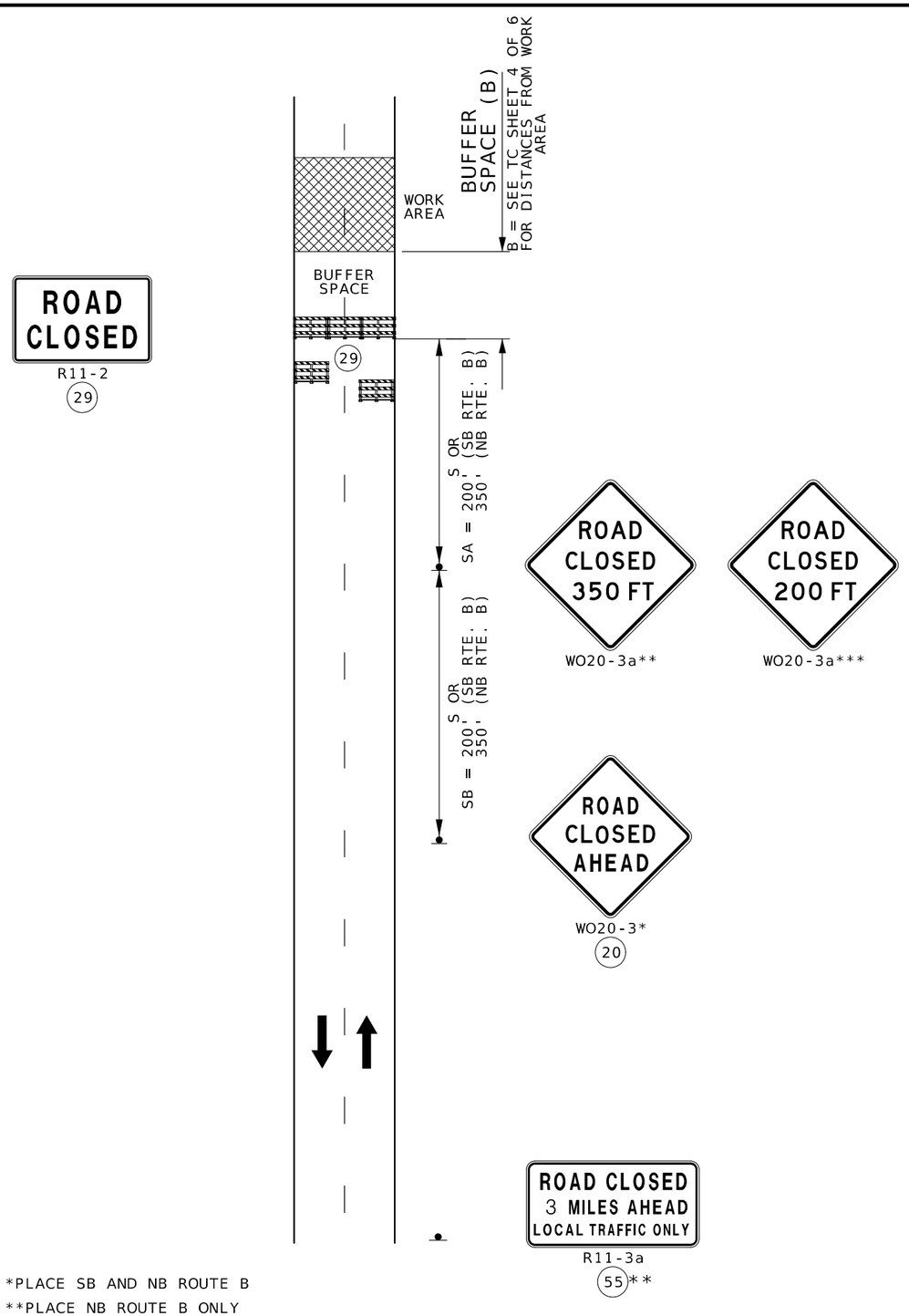

*PLACE SB AND NB ROUTE B
**PLACE NB ROUTE B ONLY
***PLACE SB ROUTE B ONLY

ROUTE B CLOSURE

NOTES:

SEE TRAFFIC CONTROL SHEET 1 FOR WORK ZONE SPEED LIMIT GUIDELINES.

SEE TRAFFIC CONTROL SHEET 1 FOR SIGN SPACING, DEVICE SPACING AND CHANNELIZING TAPER LENGTHS.

WHEN A SIDE ROAD INTERSECTS THE HIGHWAY WITHIN THE TTC ZONE ADDITIONAL TTC DEVICES SHALL BE PLACED AS NEEDED.

"ROAD CLOSED" SIGN MAY BE PLACED 7-10 FEET BEHIND THE BARRICADES AND AT A SIGN HEIGHT APPROPRIATE TO THE TYPE OF ROADWAY. ONE BARRICADE SHOULD BE REQUIRED TO COMPLETELY CLOSE EACH 8-FEET OF PAVEMENT. PAVED SHOULDERS SHALL BE INCLUDED IN THE AREA TO BE CLOSED.

IF USED, THE "ROAD CLOSED XX MILES AHEAD LOCAL TRAFFIC ONLY" OR "ROAD CLOSED TO THRU TRAFFIC" SIGN SHOULD BE LOCATED AT THE FIRST STATE ROUTE OR, UPON THE DISCRETION OF THE ENGINEER, ANY OTHER INTERSECTION IN ADVANCE OF THE CLOSURE. ADDITIONAL BARRICADES MAY BE USED AND OFFSETTED TO FACILITATE ACCESS FOR WORK VEHICLES, LOCAL TRAFFIC, ETC.

TRAFFIC CONTROL LEGEND

- SIGN (SINGLE SIDED)
- TYPE 3 MOVEABLE BARRICADE (SEE TC SHEET 4 OF 4 FOR PLACEMENT)

HIGHWAY CLOSURE ON
UNDIVIDED HIGHWAY
TEMPORARY
TRAFFIC CONTROL SHEET
SHEET 3 OF 4

STATE OF MISSOURI
HEATHER R. BARROWS
NUMBER PE-2016040670
PROFESSIONAL ENGINEER
01/27/2025 3:23:50 PM
HEATHER R. BARROWS - CIVIL
MO-PE-2016040670

DATE PREPARED	1/27/2025
ROUTE	B
STATE	MO
DISTRICT	KC
SHEET NO.	12
COUNTY	PLATTE
JOB NO.	J4S3492
CONTRACT ID.	
PROJECT NO.	
BRIDGE NO.	A9335

DATE	DESCRIPTION

MISSOURI HIGHWAYS AND TRANSPORTATION COMMISSION
105 WEST CAPITOL
JEFFERSON CITY, MO 65102
1-888-ASK-MODOT (1-888-275-6636)

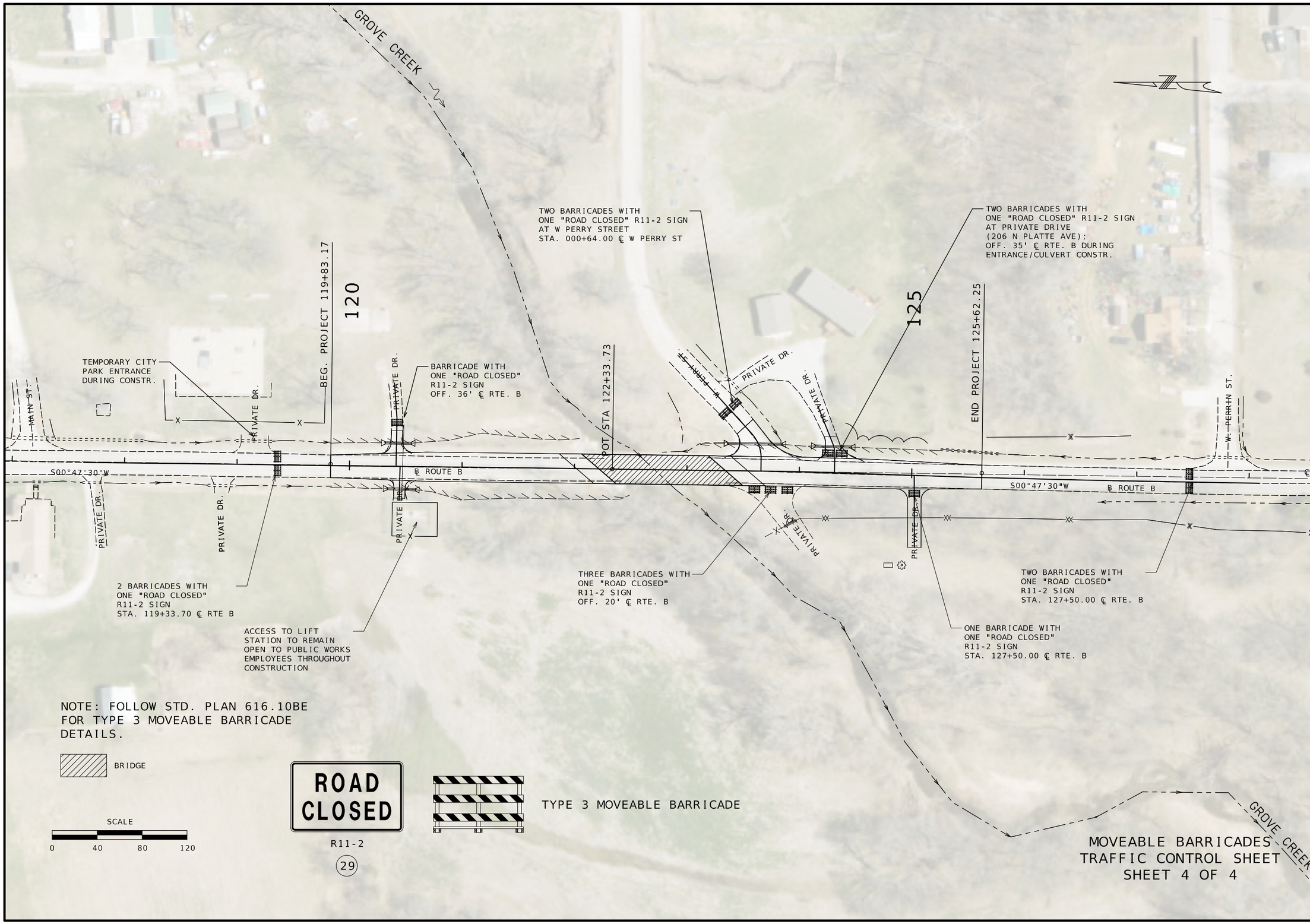

STATE OF MISSOURI
HEATHER R. BARROWS
NUMBER
PE-2016040670
PROFESSIONAL ENGINEER

01/28/2025 8:47:32 AM
HEATHER R. BARROWS - CIVIL
MO-PE-2016040670

DATE PREPARED	1/27/2025
ROUTE	B
STATE	MO
DISTRICT	KC
SHEET NO.	13
COUNTY	PLATTE
JOB NO.	J4S3492
CONTRACT ID.	
PROJECT NO.	
BRIDGE NO.	A9335

DATE	DESCRIPTION

MISSOURI HIGHWAYS AND TRANSPORTATION COMMISSION

105 WEST CAPITOL
JEFFERSON CITY, MO 65102
1-888-ASK-MODOT (1-888-275-6636)

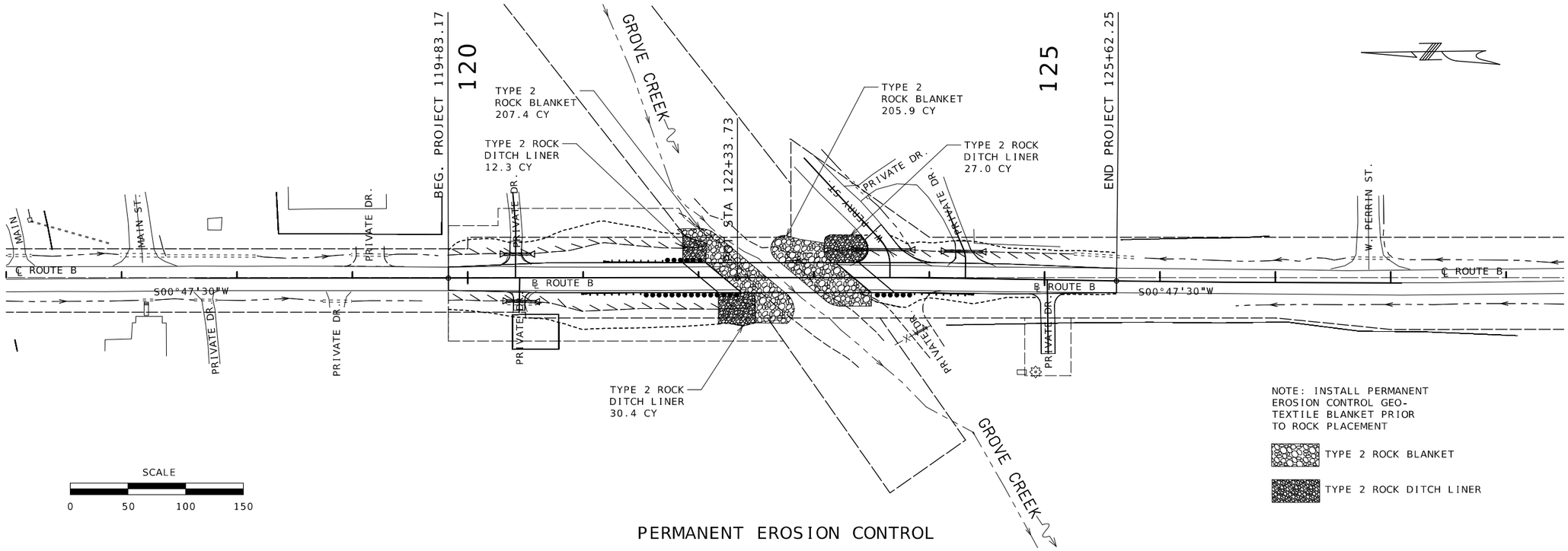

PERMANENT EROSION CONTROL

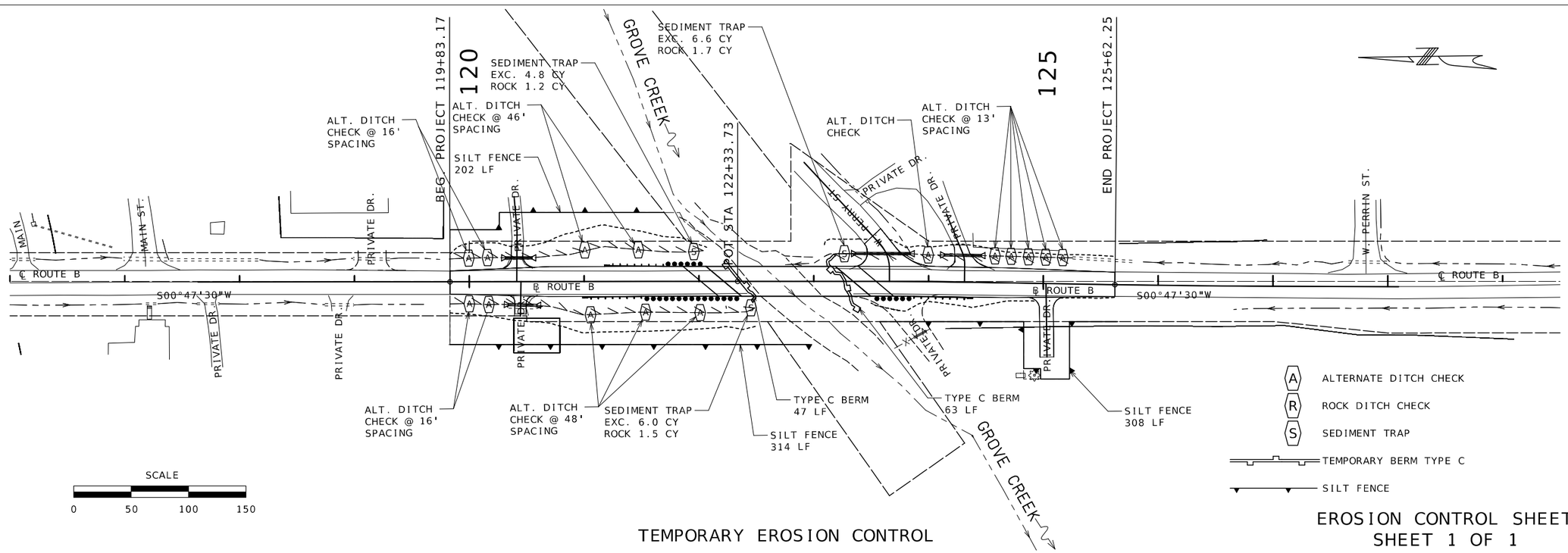

TEMPORARY EROSION CONTROL

EROSION CONTROL SHEET
SHEET 1 OF 1

STATE OF MISSOURI
HEATHER R. BARROWS
NUMBER PE-2016040670
PROFESSIONAL ENGINEER

01/28/2025 8:48:39 AM
HEATHER R. BARROWS - CIVIL
MO-PE-2016040670

DATE PREPARED	1/28/2025
ROUTE	B
STATE	MO
DISTRICT	KC
SHEET NO.	14
COUNTY	PLATTE
JOB NO.	J4S3492
CONTRACT ID.	
PROJECT NO.	
BRIDGE NO.	A9335

DATE	DESCRIPTION

MISSOURI HIGHWAYS AND TRANSPORTATION COMMISSION
105 WEST CAPITOL
JEFFERSON CITY, MO 65102
1-888-ASK-MODOT (1-888-275-6636)

1a. M2-1
21"x15"
STA 119+83.17
OFF 21.5' LT

1b. M1-5a
24"x24"
STA 119+83.17
OFF 21.5' LT

2. R2-1
36"x48"
STA 121+08.04
OFF 23' RT

3. R2-1
36"x48"
STA 121+10.23
OFF 23' LT

4. OM-3R
12"x36"
STA 123+18.86
OFF 13' LT

5. R1-1
36"x36"
STA 43.78 ℄ W PERRY ST
OFF 16' ℄ W PERRY ST

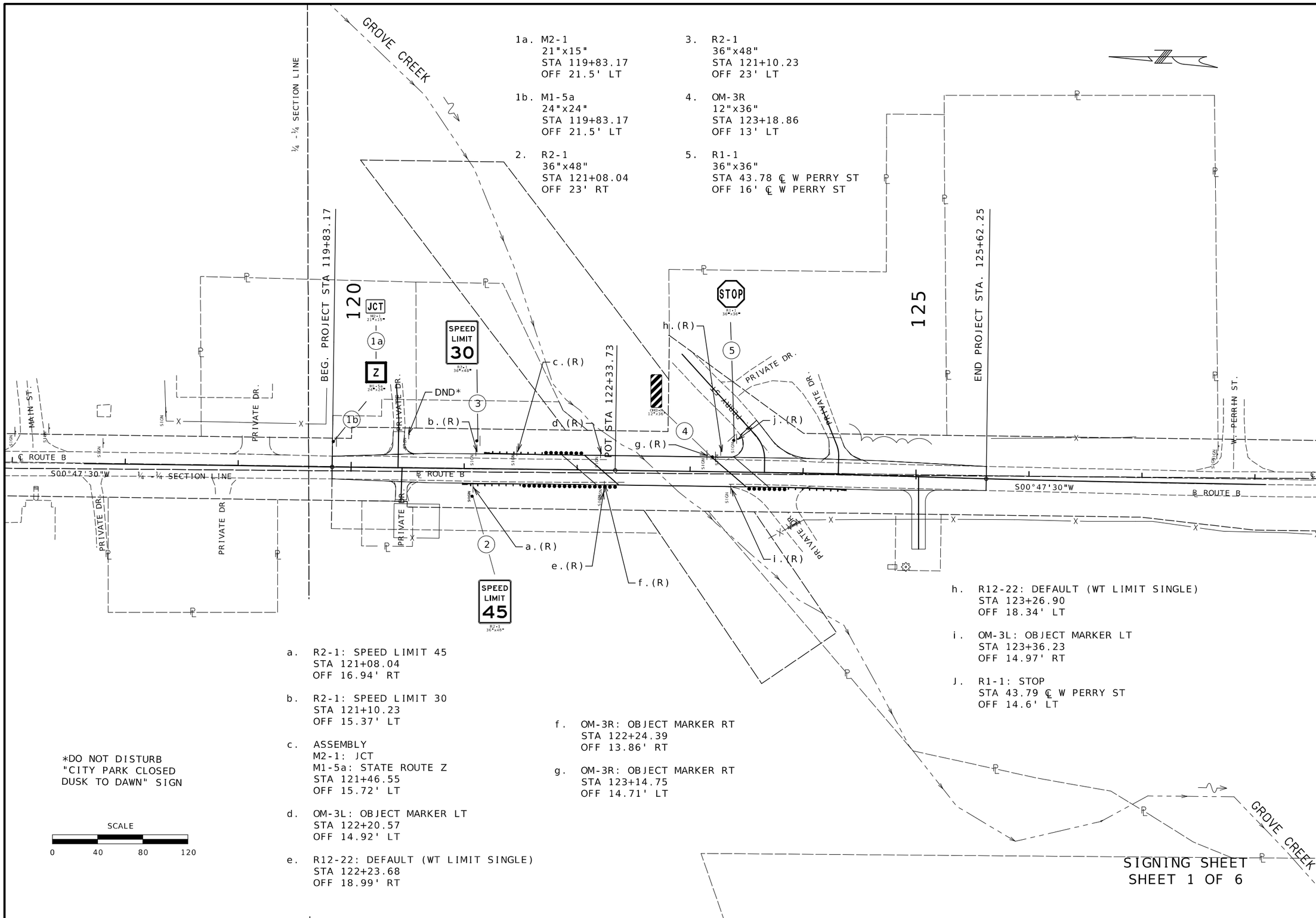

a. R2-1: SPEED LIMIT 45
STA 121+08.04
OFF 16.94' RT

b. R2-1: SPEED LIMIT 30
STA 121+10.23
OFF 15.37' LT

c. ASSEMBLY
M2-1: JCT
M1-5a: STATE ROUTE Z
STA 121+46.55
OFF 15.72' LT

d. OM-3L: OBJECT MARKER LT
STA 122+20.57
OFF 14.92' LT

e. R12-22: DEFAULT (WT LIMIT SINGLE)
STA 122+23.68
OFF 18.99' RT

f. OM-3R: OBJECT MARKER RT
STA 122+24.39
OFF 13.86' RT

g. OM-3R: OBJECT MARKER RT
STA 123+14.75
OFF 14.71' LT

h. R12-22: DEFAULT (WT LIMIT SINGLE)
STA 123+26.90
OFF 18.34' LT

i. OM-3L: OBJECT MARKER LT
STA 123+36.23
OFF 14.97' RT

J. R1-1: STOP
STA 43.79 ℄ W PERRY ST
OFF 14.6' LT

*DO NOT DISTURB
"CITY PARK CLOSED
DUSK TO DAWN" SIGN

SCALE
0 40 80 120

SIGNING SHEET
SHEET 1 OF 6

STATE OF MISSOURI
HEATHER R. BARROWS
NUMBER
PE-2016040670
PROFESSIONAL ENGINEER

01/28/2025 8:50:39 AM
HEATHER R. BARROWS - CIVIL
MO-PE-2016040670

DATE PREPARED	1/28/2025
ROUTE	B
STATE	MO
DISTRICT	KC
SHEET NO.	15
COUNTY	PLATTE
JOB NO.	J4S3492
CONTRACT ID.	
PROJECT NO.	
BRIDGE NO.	A9335

DESCRIPTION

DATE

MISSOURI HIGHWAYS AND TRANSPORTATION COMMISSION
105 WEST CAPITOL
JEFFERSON CITY, MO 65102
1-888-ASK-MODOT (1-888-275-6636)

EFFECTIVE: 07-01-2024

SIGNS (902 SIGNAL SIGNS TABULATED ON D-37A SHEET)						CONCRETE FOOTINGS EMBEDDED	STRUCTURAL STEEL POSTS*						PIPE POSTS*					BACKING BARS**				U-CHANNEL POST	PERFORATED SQUARE STEEL TUBE: 2-INCH POST						2.5-INCH POST						BREAK-AWAY ASSEMBLY	REMARKS AND OTHER REQUIRED ITEMS
																									TOTAL	ANCHORS					TOTAL	2.25"	ANCHORS				
SIGN NO.	SIGN SIZE	STATION OR LOG MILE	HORIZ CLEAR IF NOT STD	LOCATION	SIGN DTL SHT NO.	ITEM NO. 9031010	POST DES NO.	POST NO. 1	POST NO. 2	POST NO. 3	LBS PER FT	TOTAL ITEM NO. 9031210	PIPE SIZE	POST NO. 1	POST NO. 2	LBS PER FT	TOTAL ITEM NO. 9031220	2" X 3/8" BARS AT 2.55 LBS/FT NO.	LGTH	TOTAL	TOTAL	ITEM NO. 9031250A	POST NO. 1	POST NO. 2	ITEM NO. 9031270A	DRIVEN 12 GA. ITEM NO. 9031271A	DRIVEN 7 GA. ITEM NO. 9031273A	CONCRETE 7 GA. ITEM NO. 9031274	POST NO. 1	POST NO. 2	ITEM NO. 9031280	INSERT (6 FT) ITEM NO. 9031272A	DRIVEN 7 GA. ITEM NO. 9031281A	CONCRETE 7 GA. ITEM NO. 9031285	ITEM NO. 9031241	
						CY		LF	LF	LF		LBS	IN	LF	LF		LBS	EACH	IN.	LF	LBS	LF	LF	LF	LF	EACH	EACH	EACH	LF	LF	LF	EACH	EACH	EACH	EACH	
1a	21"x15"	119+83.17		℄ RTE. B																			11.25		11.25	1										
1b	24"x24"	119+83.17		℄ RTE. B																																
2	36"x48"	121+08.04		℄ RTE. B																			14.25		14.25	1										
3	36"x48"	121+10.23		℄ RTE. B																			14.50		14.50	1										
4	12"x36"	123+18.86		℄ RTE. B																			6.25		6.25	1										
5	36"x36"	000+43.78		℄ W PERRY ST		0.13							2.5	16		5.79	93																			
SUBTOTAL						0.13											93								46.25	4										
TOTAL						0.20											90				**				47	4										

*BREAKAWAY ASSEMBLY IS INCIDENTAL FOR STRUCTURAL STEEL AND PIPE POSTS.
**BACKING BARS ARE TOTALED WITH STRUCTURAL STEEL OR PIPE POSTS.

ROUND PIPE POST AND FOOTING DATA TABLE

NOM.SIZE (IN.)	WEIGHT LBS/FT	WEIGHT LBS/IN	STUB LENGTH	FOOTING DIA.	FOOTING DEPTH	CONCRETE C.Y.
2½	5.79	0.48	4'- 3½"	12"	4~6"	0.13
4	10.79	0.90	5'- 3½"	18"	5~6"	0.36

STRUCTURAL STEEL POST AND FOOTING DATA TABLE

POST DES. NO.	NOM. SIZE	POST WEIGHT LBS/FT	POST WEIGHT LBS/IN	STUB LENGTH	FOOTING DIA.	LEVEL GROUND DEPTH	LEVEL GROUND C.Y.	6:1 GRADE DEPTH	6:1 GRADE C.Y.	4:1 GRADE DEPTH	4:1 GRADE C.Y.	3:1 OR 2:1 GRADE DEPTH	3:1 OR 2:1 GRADE C.Y.
1	W6	9.0	0.75	3'-0"	15"	3'-0"	0.14	3'-2"	0.15	3'-3"	0.16	3'-6"	0.17
2	W6	15.0	1.25	4'-0"	24"	4'-0"	0.47	4'-2"	0.50	4'-3"	0.51	4'-6"	0.54
3	W8	18.0	1.50	4'-6"	28"	4'-6"	0.71	4'-8"	0.73	4'-9"	0.74	5'-0"	0.78
4	W10	22.0	1.83	5'-0"	36"	5'-0"	1.31	5'-2"	1.36	5'-3"	1.39	5'-6"	1.45
5	W10	26.0	2.17	5'-0"	36"	5'-0"	1.31	5'-3"	1.37	5'-5"	1.43	5'-9"	1.52
6	W12	35.0	2.92	5'-6"	36"	5'-6"	1.44	5'-9"	1.52	5'-11"	1.56	6'-3"	1.65

SIGNING SHEET
SHEET 2 OF 6

D-29

STATE OF MISSOURI
HEATHER R. BARROWS
NUMBER PE-2016040670
PROFESSIONAL ENGINEER

Heather R. Barrows
01/27/2025 3:27:01 PM
HEATHER R. BARROWS - CIVIL
MO-PE-2016040670

DATE PREPARED
1/27/2025

ROUTE	STATE
B	MO
DISTRICT	SHEET NO.
KC	16

COUNTY
PLATTE

JOB NO.
J4S3492

CONTRACT ID.

PROJECT NO.

BRIDGE NO.
A9335

DESCRIPTION	DATE

MISSOURI HIGHWAYS AND TRANSPORTATION COMMISSION
105 WEST CAPITOL
JEFFERSON CITY, MO 65102
1-888-ASK-MODOT (1-888-275-6636)

STANDARD SIGN ASSEMBLIES

SIGN NO.	STATION OR LOG MILE	LOCATION	M2-1 (JCT)	M1-5a (Z)	R2-1 (SPEED LIMIT 45)	R2-1 (SPEED LIMIT 30)	OM3-R	R1-1 (STOP)
			SIGN, TYPE, DESIGNATION, SIZE & NUMBER OF EACH					
1a	119+83.17	℄ RTE. B	1					
1b	119+83.17	℄ RTE. B		1				
2	121+08.04	℄ RTE. B			1			
3	121+10.23	℄ RTE. B				1		
4	123+18.86	℄ RTE. B					1	
5	000+43.78	℄ W PERRY ST						1
		TOTALS	1	1	1	1	1	1

SIGN SUMMARY

EFFECTIVE: 10-01-2016

STANDARD OR SPECIAL SIGN DESIGNATION	SIGN DTL. SHT. NO.	NO. EACH	SIGN SIZE	TYPE & SQUARE FEET: FLAT SHEET SH ITEM NO. 9035004A	FLAT SHEET FLUORESCENT SHF* ITEM NO. 9035069A	STRUCTURAL ST ITEM NO. 9035011A	STRUCTURAL FLUORESCENT STF* ITEM NO. 9035071A
M2-1	STD	1	21"x15"	2.19			
M1-5a (RTE Z)	STD	1	24"x24"	4			
R2-1 (45 MPH)	STD	1	36"x48"	12			
R2-1 (30 MPH)	STD	1	36"x48"	12			
OM-3R	STD	1	12"x36"	3			
R1-1	STD	1	36"x36"	9			
			TOTALS	43			

*ORANGE, YELLOW AND YELLOW-GREEN

SIGNING SHEET
SHEET 3 OF 6

STATE OF MISSOURI
HEATHER R. BARROWS
NUMBER PE-2016040670
PROFESSIONAL ENGINEER

01/27/2025 3:27:42 PM
HEATHER R. BARROWS - CIVIL
MO-PE-2016040670

DATE PREPARED: 1/27/2025
ROUTE: B
STATE: MO
DISTRICT: KC
SHEET NO.: 17
COUNTY: PLATTE
JOB NO.: J4S3492
CONTRACT ID.
PROJECT NO.
BRIDGE NO.: A9335

DESCRIPTION
DATE

MISSOURI HIGHWAYS AND TRANSPORTATION COMMISSION
105 WEST CAPITOL
JEFFERSON CITY, MO 65102
1-888-ASK-MODOT (1-888-275-6636)

SIGN NO.	50A
STATION	
ROADWAY	ROUTE B

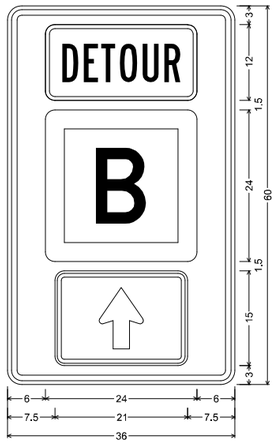

MO4-12 SHF-FLAT SHEET FLUORESCENT;
2.250" Radius, 0.875" Border, 0.625" Indent, Black on, Orange;
Table of letter and object lefts

6.000
6.000
7.500

SIGN NO.	50B
STATION	
ROADWAY	ROUTE B

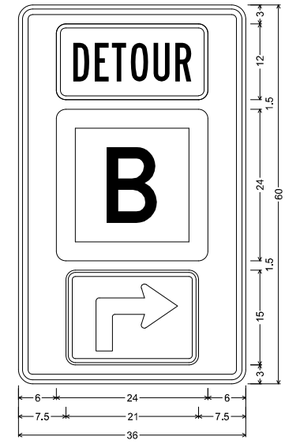

MO4-12 SHF-FLAT SHEET FLUORESCENT;
2.250" Radius, 0.875" Border, 0.625" Indent, Black on, Orange;
Table of letter and object lefts

6.000
6.000
7.500

SIGN NO.	50C
STATION	
ROADWAY	ROUTE B

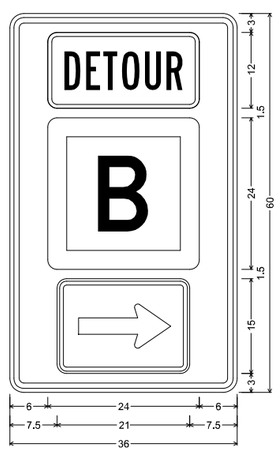

MO4-12 SHF-FLAT SHEET FLUORESCENT;
2.250" Radius, 0.875" Border, 0.625" Indent, Black on, Orange;
Table of letter and object lefts

6.000
6.000
7.500

SIGN NO.	50D
STATION	
ROADWAY	ROUTE B

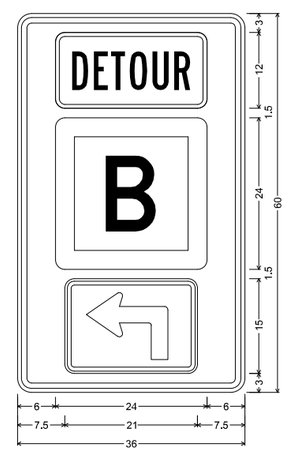

MO4-12 SHF-FLAT SHEET FLUORESCENT;
2.250" Radius, 0.875" Border, 0.625" Indent, Black on, Orange;
Table of letter and object lefts

6.000
6.000
7.500

SIGNING SHEET
SHEET 4 OF 6

STATE OF MISSOURI
HEATHER R. BARROWS
NUMBER
PE-2016040670
PROFESSIONAL ENGINEER

01/27/2025 3:28:15 PM
HEATHER R. BARROWS - CIVIL
MO-PE-2016040670

DATE PREPARED	1/27/2025
ROUTE	B
STATE	MO
DISTRICT	KC
SHEET NO.	18
COUNTY	PLATTE
JOB NO.	J4S3492
CONTRACT ID.	
PROJECT NO.	
BRIDGE NO.	A9335

DESCRIPTION	DATE

MISSOURI HIGHWAYS AND TRANSPORTATION COMMISSION
105 WEST CAPITOL
JEFFERSON CITY, MO 65102
1-888-ASK-MODOT (1-888-275-6636)

SIGN NO.	50E
STATION	
ROADWAY	ROUTE B

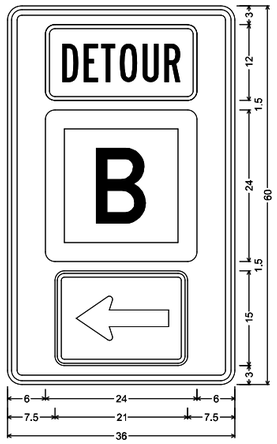

MO4-12 SHF-FLAT SHEET FLUORESCENT;
2.250" Radius, 0.875" Border, 0.625" Indent, Black on, Orange;
Table of letter and object lefts

DETOUR	6.000
B	6.000
⇦	7.500

SIGN NO.	56a
STATION	
ROADWAY	ROUTE B

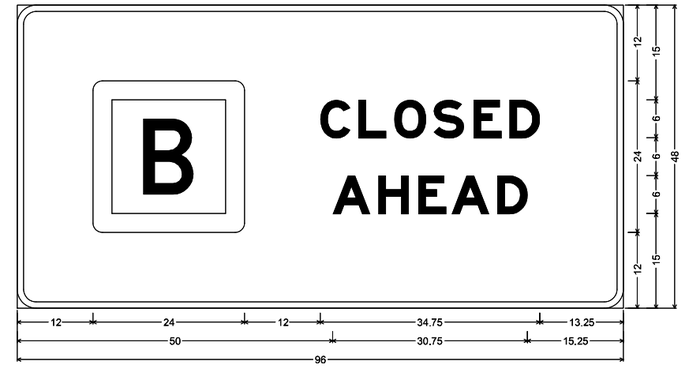

MO4-13 SHF-FLAT SHEET FLUORESCENT;
3.000" Radius, 1.000" Border, Black on, Orange;
"CLOSED", E Mod; "AHEAD", E Mod;
Table of letter and object lefts

B	C	L	O	S	E	D
12.000	48.000	54.000	59.750	66.000	72.250	78.000

A	H	E	A	D
50.000	57.125	63.500	68.750	76.000

SIGN NO.	56b
STATION	
ROADWAY	ROUTE B

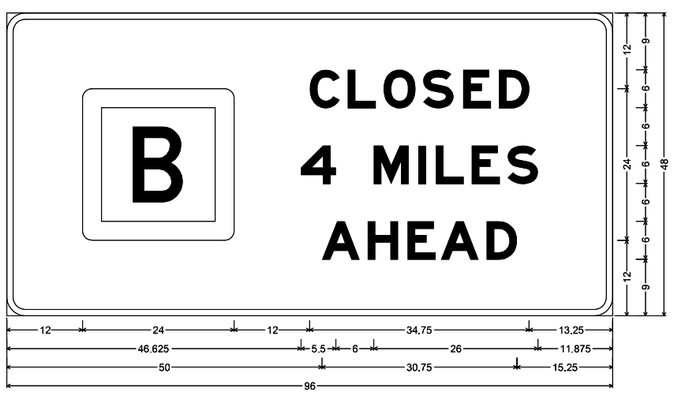

MO4-13 SHF-FLAT SHEET FLUORESCENT;
3.000" Radius, 1.000" Border, Black on, Orange;
"CLOSED", E Mod; "4 MILES", E Mod; "AHEAD", E Mod;
Table of letter and object lefts

B	C	L	O	S	E	D
12.000	48.000	54.000	59.750	66.000	72.250	78.000

4	M	I	L	E	S
46.625	58.125	65.250	68.000	73.625	79.375

A	H	E	A	D
50.000	57.125	63.500	68.750	76.000

SIGNING SHEET
SHEET 5 OF 6

STATE OF MISSOURI
HEATHER R. BARROWS
NUMBER
PE-2016040670
PROFESSIONAL ENGINEER

Heather R. Barrows

01/27/2025 3:28:35 PM
HEATHER R. BARROWS - CIVIL
MO-PE-2016040670

DATE PREPARED	1/27/2025
ROUTE	B
STATE	MO
DISTRICT	KC
SHEET NO.	19
COUNTY	PLATTE
JOB NO.	J4S3492
CONTRACT ID.	
PROJECT NO.	
BRIDGE NO.	A9335

DESCRIPTION	DATE

MISSOURI HIGHWAYS AND TRANSPORTATION COMMISSION

105 WEST CAPITOL
JEFFERSON CITY, MO 65102
1-888-ASK-MODOT (1-888-275-6636)

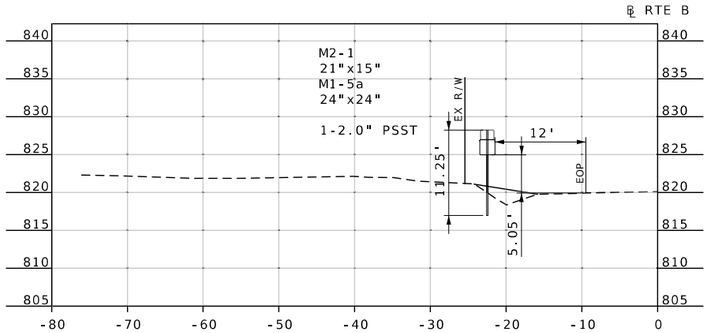

STA 119+83.17

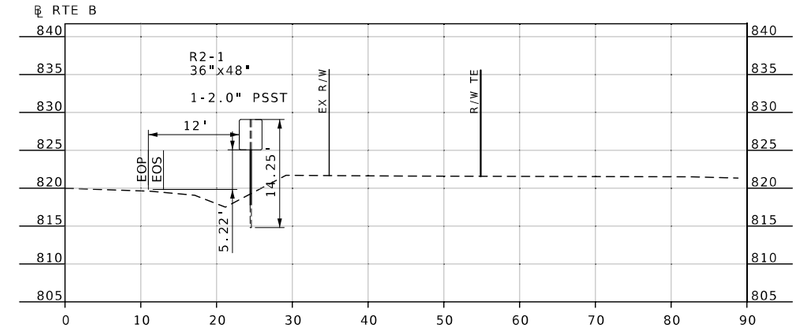

STA 121+08.04

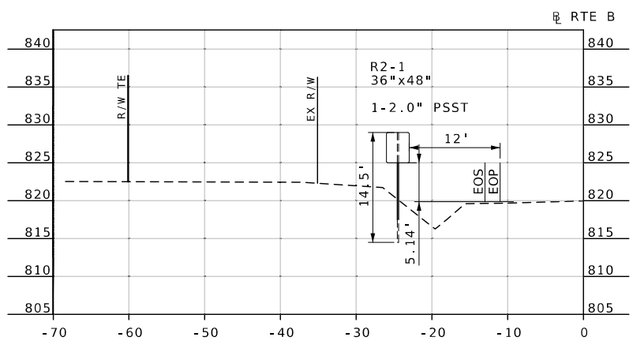

STA 121+10.23

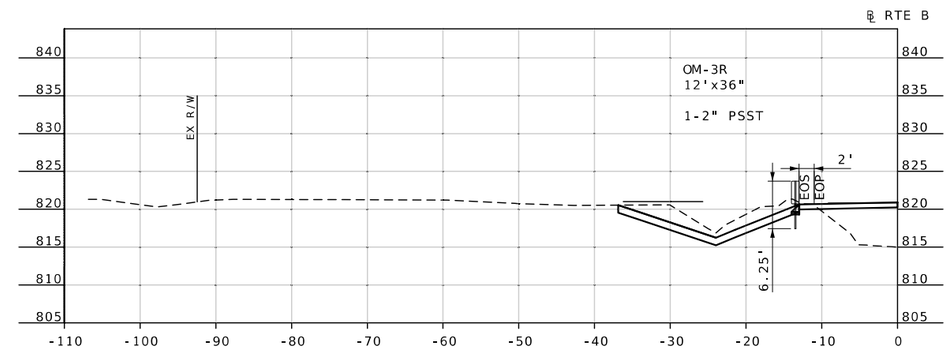

STA 123+18.86

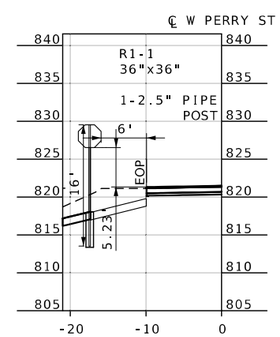

STA 0+43.78

SIGNING SHEET
SHEET 6 OF 6

STATE OF MISSOURI
HEATHER R. BARROWS
NUMBER
PE-2016040670
PROFESSIONAL ENGINEER

01/27/2025 3:29:05 PM
HEATHER R. BARROWS - CIVIL
MO-PE-2016040670

DATE PREPARED	1/27/2025
ROUTE	B
STATE	MO
DISTRICT	KC
SHEET NO.	20
COUNTY	PLATTE
JOB NO.	J4S3492
CONTRACT ID.	
PROJECT NO.	
BRIDGE NO.	A9335

DESCRIPTION

DATE

MISSOURI HIGHWAYS AND TRANSPORTATION COMMISSION

105 WEST CAPITOL
JEFFERSON CITY, MO 65102
1-888-ASK-MODOT (1-888-275-6636)

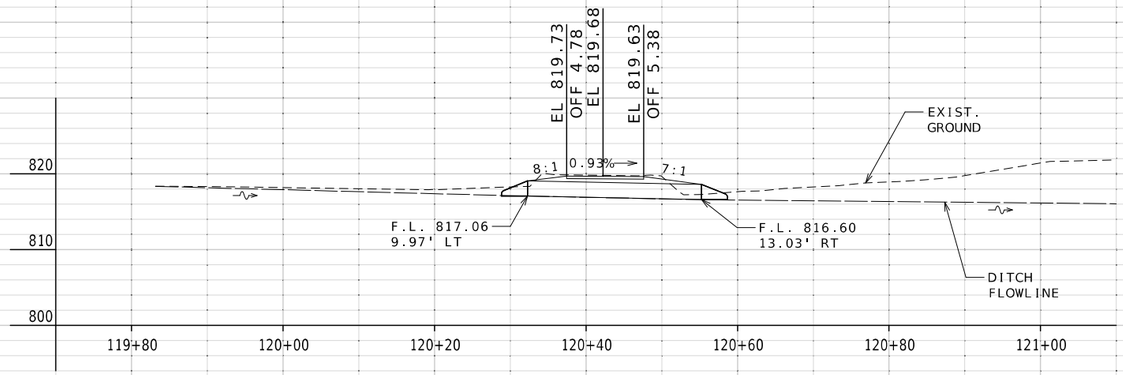

STA. 120+41.44 LT
PRIVATE DRIVE (CITY PARK):
BLD 24"X23' GROUP C PIPE
BLD 2-24" GROUP C FES
CL. 3 EXC. - 13.3 C.Y.

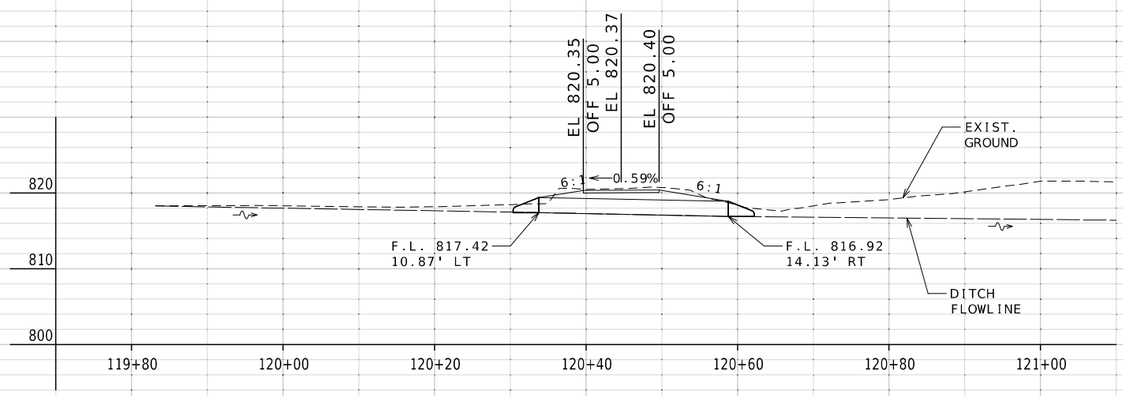

STA. 120+45.04 RT
PRIVATE DRIVE (LIFT STATION):
BLD 24"X25' GROUP C PIPE
BLD 2-24" GROUP C FES
CL. 3 EXC. - 17.1 C.Y.

CULVERT SECTIONS
SHEET 1 OF 2

STATE OF MISSOURI
HEATHER R. BARROWS
NUMBER
PE-2016040670
PROFESSIONAL ENGINEER

Heather R. Barrows

01/27/2025 3:30:08 PM
HEATHER R. BARROWS - CIVIL
MO-PE-2016040670

DATE PREPARED	1/27/2025
ROUTE	B
STATE	MO
DISTRICT	KC
SHEET NO.	21
COUNTY	PLATTE
JOB NO.	J4S3492
CONTRACT ID.	
PROJECT NO.	
BRIDGE NO.	A9335

DATE	DESCRIPTION

MISSOURI HIGHWAYS AND TRANSPORTATION COMMISSION
105 WEST CAPITOL
JEFFERSON CITY, MO 65102
1-888-ASK-MODOT (1-888-275-6636)

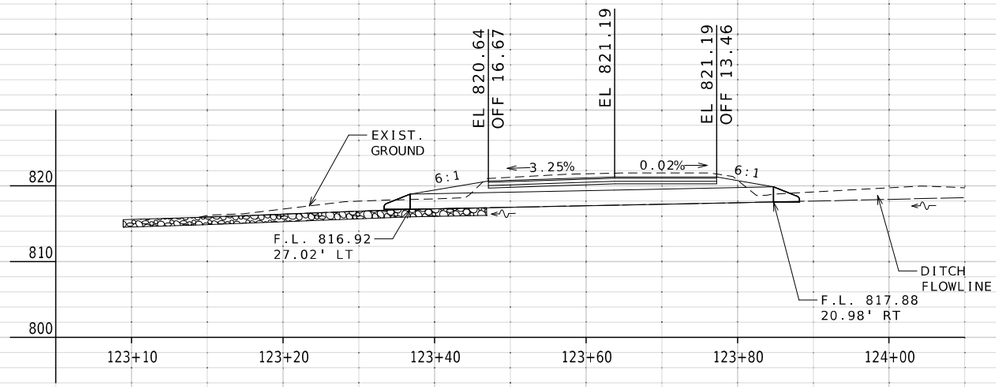

STA. 123+65.85 LT
W PERRY STREET:
BLD 24"X48' GROUP C PIPE
BLD 2-24" GROUP C FES
TYPE 2 ROCK DITCH LINER = 27 CY
CL. 3 EXC. - 33.1 C.Y.

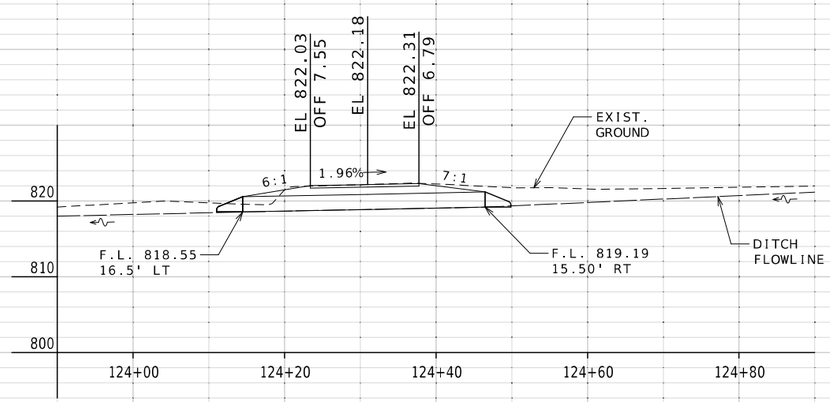

STA. 124+31.26 LT
PRIVATE DRIVE
(206 N PLATTE AVE):
BLD 24"X32' GROUP C PIPE
BLD 2-24" GROUP C FES
CL. 3 EXC. - 21.1 C.Y.

CULVERT SECTIONS
SHEET 2 OF 2

STATE OF MISSOURI
HEATHER R. BARROWS
NUMBER
PE-2016040670
PROFESSIONAL ENGINEER

Heather R. Barrows

01/27/2025 3:30:40 PM
HEATHER R. BARROWS - CIVIL
MO-PE-2016040670

DATE PREPARED	1/27/2025
ROUTE	B
STATE	MO
DISTRICT	KC
SHEET NO.	22
COUNTY	PLATTE
JOB NO.	J4S3492
CONTRACT ID.	
PROJECT NO.	
BRIDGE NO.	A9335

DESCRIPTION	DATE

MISSOURI HIGHWAYS AND TRANSPORTATION COMMISSION

105 WEST CAPITOL
JEFFERSON CITY, MO 65102
1-888-ASK-MODOT (1-888-275-6636)

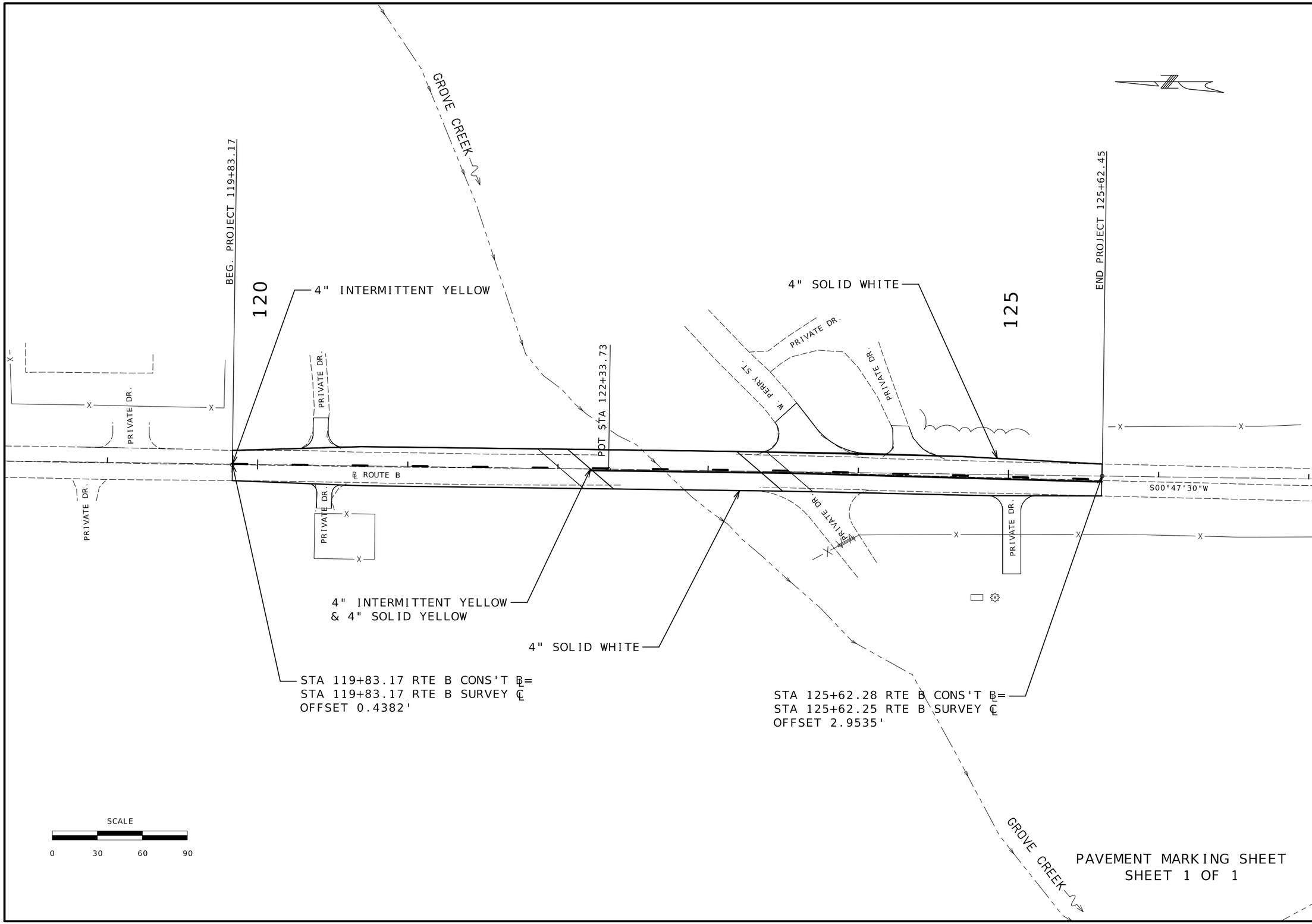

PAVEMENT MARKING SHEET
SHEET 1 OF 1

STATE OF MISSOURI
HEATHER R. BARROWS
NUMBER
PE-2016040670
PROFESSIONAL ENGINEER

01/28/2025 8:51:45 AM
HEATHER R. BARROWS - CIVIL
MO-PE-2016040670

DATE PREPARED	
1/28/2025	
ROUTE	STATE
B	MO
DISTRICT	SHEET NO.
KC	23
COUNTY	
PLATTE	
JOB NO.	
J4S3492	
CONTRACT ID.	
PROJECT NO.	
BRIDGE NO.	
A9335	

DESCRIPTION	DATE

MISSOURI HIGHWAYS AND TRANSPORTATION COMMISSION
105 WEST CAPITOL
JEFFERSON CITY, MO 65102
1-888-ASK-MODOT (1-888-275-6636)

SEC/SUR 8 TWP 54N RGE 33W

(34'-40'-34') CONTINUOUS CONCRETE SOLID SLAB SPANS
(SKEW: 40° R.A.)

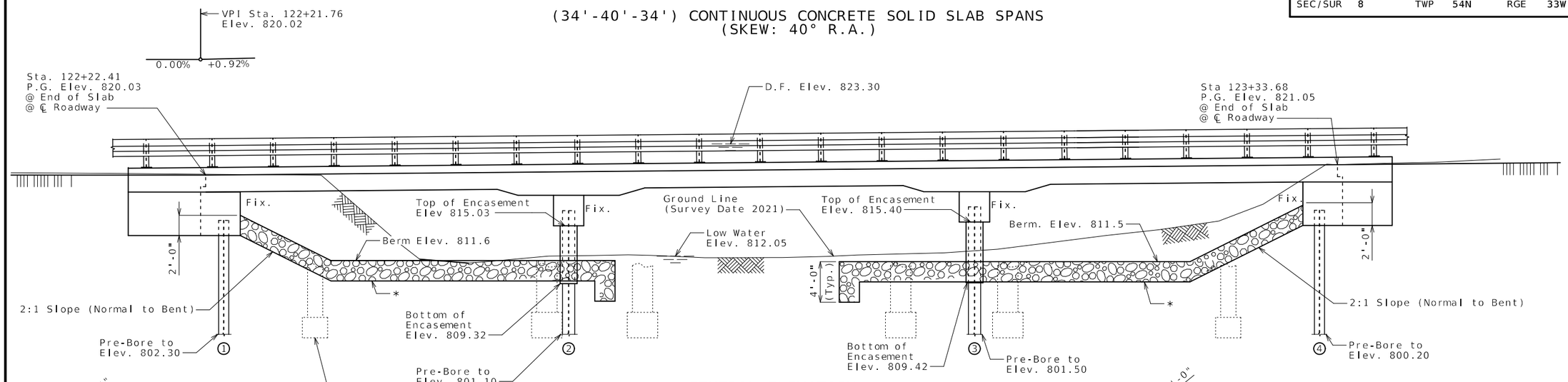

GENERAL ELEVATION

* 2'-0" Type 2 Rock Blanket with Permanent Erosion Control Geotextile (Rdwy. Item)

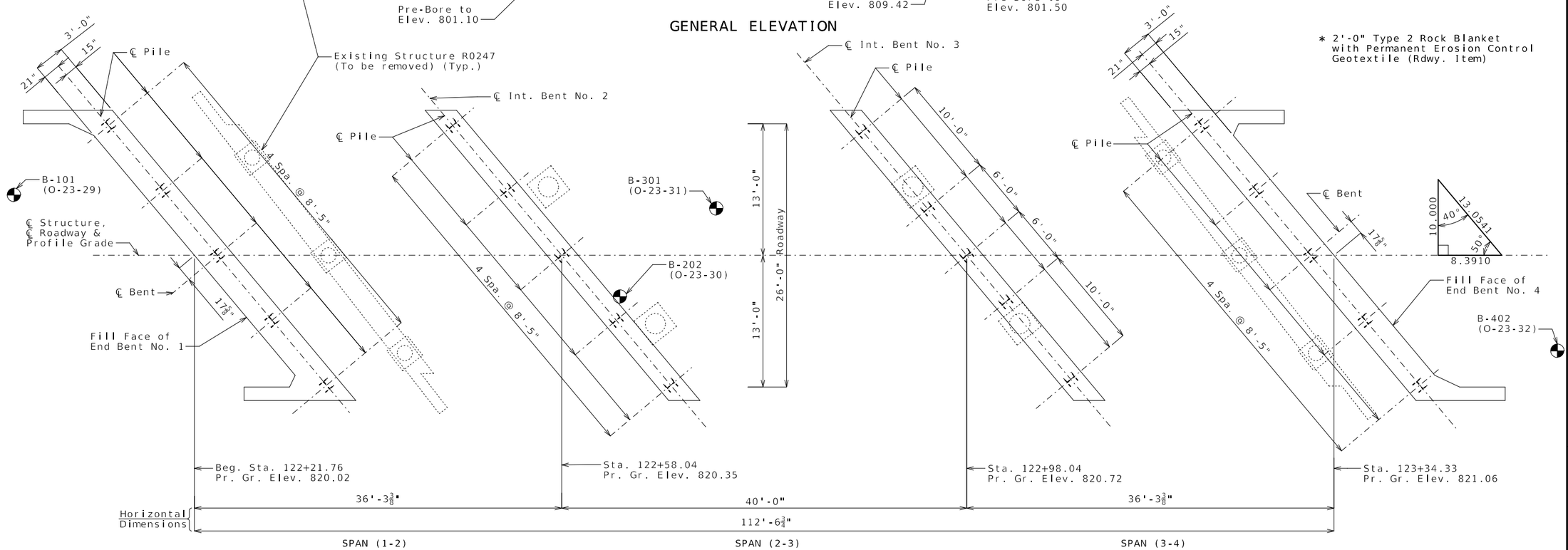

PLAN

Indicates locations of borings.

Notice and Disclaimer Regarding Boring Log Data

The locations of all substructure borings for this structure are shown in the plan sheet(s) for this structure. The boring data for all locations indicated, as well as any other boring logs or other factual records of subsurface data and investigations performed by the department of the design of the project, are shown on Sheet No. 18 and may be included in the Electronic Bridge Deliverables. They will also be available from the Project Contract upon written request. No greater significance or weight should be given to the boring data depicted on the plan sheets than is given to the subsurface data available from the district or elsewhere.

The Commission does not represent or warrant that any such boring data accurately depicts the conditions to be encountered in constructing this project. A contrator assumes all risks it may encounter in basing it's bid prices, time or schedule of performance on the boring data depicted here on those available from the district, or any other documentation not expressly warranted, which the contractor may obtain from the Commission.

Existing roadway fill under the ends of the bridge shall be removed as shown. Removal of existing roadway fill will be considered completely covered by the contract unit price for roadway excavation.

B.M. SURVEY BOLT @ NE CORNER WINGWALL
OF BR R0247 OVER GROVE CREEK. EL. 820.66
NORTHING: 1214781.74 EASTING: 2751294.00

BRIDGE: ROUTE B OVER GROVE CREEK

ROUTE B FROM ROUTE Z TO ROUTE E
ABOUT 0.2 MILE SOUTH OF ROUTE Z
BEGINNING STATION 122+21.76

Designed Dec. 2024
Detailed Dec. 2024
Checked Feb. 2025

Note: This drawing is not to scale. Follow dimensions.

STATE OF MISSOURI
TED S. KOESTER
NUMBER
PE-2013000591
PROFESSIONAL ENGINEER
03-25-2025 9:44:34 AM
TED S. KOESTER - CIVIL
MO-PE-2013000591

DATE PREPARED	3/25/2025
ROUTE	B
STATE	MO
DISTRICT	BR
SHEET NO.	1
COUNTY	PLATTE
JOB NO.	J4S3492
CONTRACT ID.	
PROJECT NO.	
BRIDGE NO.	A9335

DESCRIPTION

DATE

MISSOURI HIGHWAYS AND TRANSPORTATION COMMISSION
105 WEST CAPITOL
JEFFERSON CITY, MO 65102
1-888-ASK-MODOT (1-888-275-6636)

GENERAL NOTES:

Design Specifications:
2020 AASHTO LRFD Bridge Design Specifications (9th Ed.)

Seismic Design Category = A

Design Loading:
Vehicular = HL-93
Future Wearing Surface = 35 lb/sf
Earth = 120 lb/cf
Equivalent Fluid Pressure = 45 lb/cf (Min.)

Superstructure:
Simply-supported, shored for dead load. Continuous for live load.

Design Unit Stresses:

Class B Concrete (Substructure)	f'c = 3,000 psi
Class B-1 Concrete (Barrier & Substructure)	f'c = 4,000 psi
Class B-2 Concrete (Superstructure, except Barrier)	f'c = 4,000 psi
Reinforcing Steel (ASTM A615 Grade 60)	fy = 60,000 psi
Structural Steel HP Pile (ASTM A709 Grade 50)	fy = 50,000 psi

Joint Filler:
All joint filler shall be in accordance with Sec 1057 for performance sponge rubber expansion and partition joint filler, except as noted.

Reinforcing Steel:
Minimum clearance to reinforcing steel shall be 1 1/2", unless otherwise shown.

Miscellaneous:
Outline of existing work is indicated by light dashed lines. Heavy lines indicate new work.

Traffic Handling:
Structure to be closed during construction. Traffic to be maintained on other routes. See roadway plans for traffic control.

Estimated Quantities

Item		Substr.	Superstr.	Total
Class 1 Excavation	cu. yard	70		70
Removal of Bridges (R0247)	lump sum			1
Bridge Approach Slab (Minor)	sq. yard			117
Galvanized Structural Steel Piles (12 in.)	linear foot	165		165
Galvanized Structural Steel Piles (14 in.)	linear foot	170		170
Pre-Bore for Piling	linear foot	215		215
Pile Point Reinforcement	each	20		20
Class B Concrete (Substructure)	cu. yard	31.1		31.1
Class B-1 Concrete (Substructure)	cu. yard	63.2		63.2
Class B-2 Concrete (Superstructure Solid Slab)	cu. yard		279.1	279.1
Concrete Curb (Bridge Rail)	linear foot		249	249
Reinforcing Steel (Bridges)	pound			5,330
Reinforcing Steel (Epoxy Coated)	pound			50,400
Bridge Rail (Two Tube Structural Steel)	linear foot			251
Vertical Drain At End Bents	each		2	2

All concrete above the construction joint in the end bents and intermediate bent caps (including drop panels) is included with the superstructure quantities.

All concrete in the intermediate bent cap is included in the contract unit price for Class B-1 Concrete (Substructure).

All concrete in the intermediate encasement is included in the contract unit price for Class B Concrete (Substructure).

Foundation Data

Type	Design Data		Bent Number 1	2	3	4
Load Bearing Pile	HP Pile Type and Size		HP 12x53	HP 14x72	HP 14x72	HP 12x53
	Number	ea	5	5	5	5
	Approximate Length Per Each	ft	15	17	17	18
	Pile Point Reinforcement	ea	All	All	All	All
	Min. Galvanized Penetration (Elev.)	ft	Full Length	Full Length	Full Length	Full Length
	Est. Max Scour Depth 100 (Elev.)	ft	807.3	806.1	806.5	805.2
	Criteria for Min. Tip Penetration		Min. Embed.	Min. Embed.	Min. Embed.	Min. Embed.
	Pile Driving Verification Method		DF	DF	DF	DF
	Resistance Factor		0.4	0.4	0.4	0.4
	Minimum Nominal Axial Compressive Resistance	kip	247	481	483	247

DF = FHWA-modified Gates Dynamic Pile Formula

Load Bearing Pile:
Minimum Nominal Axial Compressive Resistance = Maximum Factored Loads/Resistance Factor

HP piles are anticipated to be driven to refusal on rock. Review all borings for depth of rock and restrict driving as appropiate to comply with hard rock driving citeria in accordance with Sec 702. When pile refusal on rock occurs, as approved by the engineer, the minimum nominal axial compressive resistance is verified and no additional pile driving verification method is required.

Pile point reinforcement need not be galvanized. Shop drawings will not be required for pile point reinforcement.

All piles shall be galavanized down to the minimum galavanized penetration (elevation).

The contractor shall make every effort to achieve the minimum galvanized penetration (elevation) shown on the plans for all piles. Deviations in penetration less that 5 feet of the minimum will be considered acceptable provided the contractor makes the necessary corrections to ensure the minimum penetration is achieved on subsequent piles.

Prebore for piles at Bent(s) No. 1,2,3 and 4 to elevation(s) 802.3, 801.1, 801.5 and 800.2, respectively.

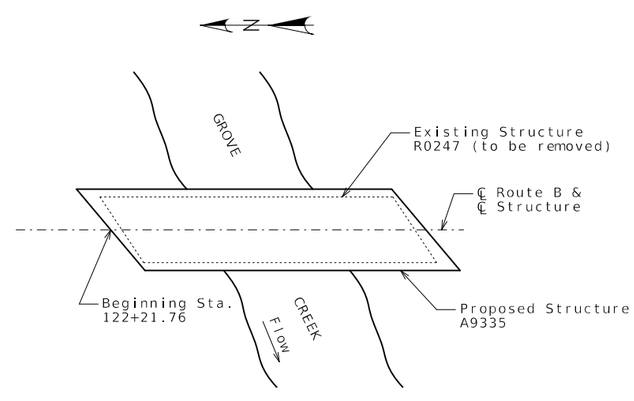

LOCATION SKETCH

Hydrologic Data

Drainage Area = 10 mi^2
Design Flood Frequency = 50 years
Design Flood Discharge = 4800 cfs
Design Flood (D.F.) Elevation = 823.3
Base Flood (100-year)
Base Flood Elevation = 823.6
Base Flood Discharge = 5600 cfs
Estimated Backwater = -0.2 ft
Average Velocity thru Opening = 3.3 ft/s
Freeboard (50-year)
Freeboard = -5.0 ft
Roadway Overtopping
Overtopping Flood Discharge = 1320 cfs
Overtopping Flood Frequency < 10 years
Overtopping Flood Elevation = 819.9

STATE OF MISSOURI
TED S. KOESTER
NUMBER PE-2013000591
PROFESSIONAL ENGINEER
03/25/2025 9:45:00 AM
TED S. KOESTER - CIVIL
MO-PE-2013000591

DATE PREPARED 3/25/2025
ROUTE B | STATE MO
DISTRICT BR | SHEET NO. 2
COUNTY PLATTE
JOB NO. J4S3492
CONTRACT ID.
PROJECT NO.
BRIDGE NO. A9335

DESCRIPTION | DATE

MISSOURI HIGHWAYS AND TRANSPORTATION COMMISSION
105 WEST CAPITOL
JEFFERSON CITY, MO 65102
1-888-ASK-MODOT (1-888-275-6636)

Detailed Dec. 2024
Checked Feb. 2025

Note: This drawing is not to scale. Follow dimensions.

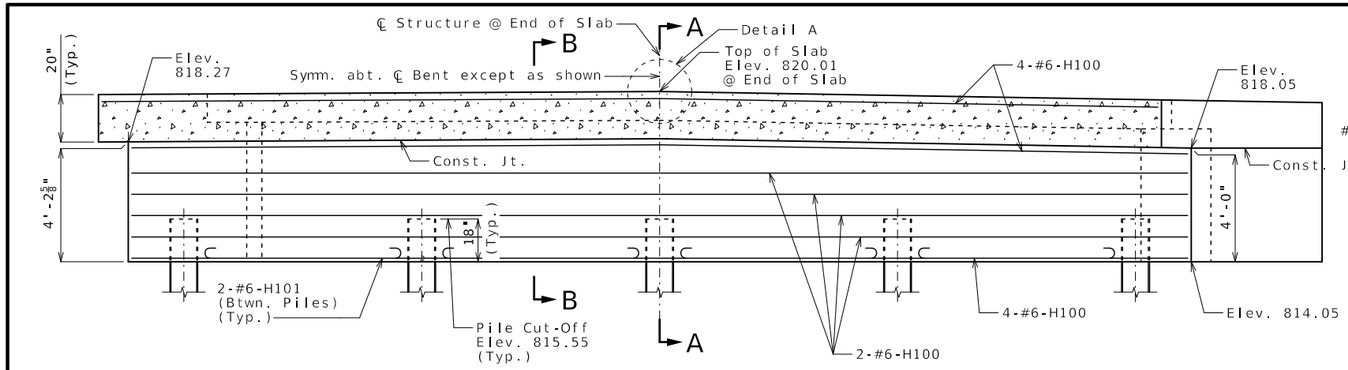

SECTION NEAR END BENT

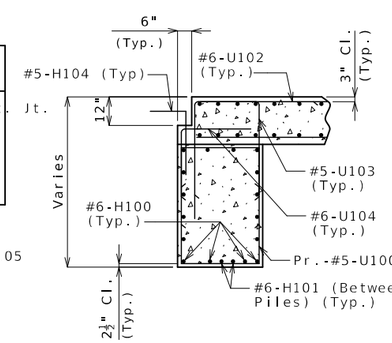

SECTION B-B

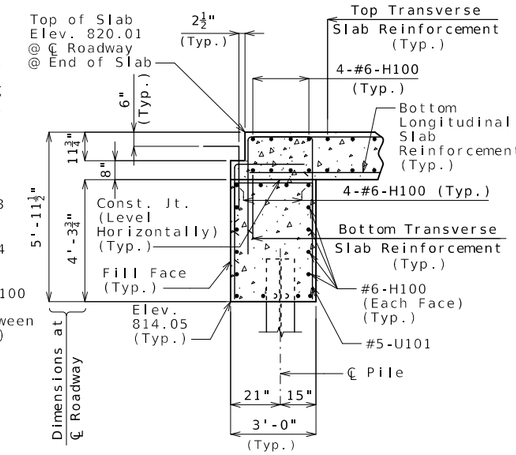

SECTION A-A

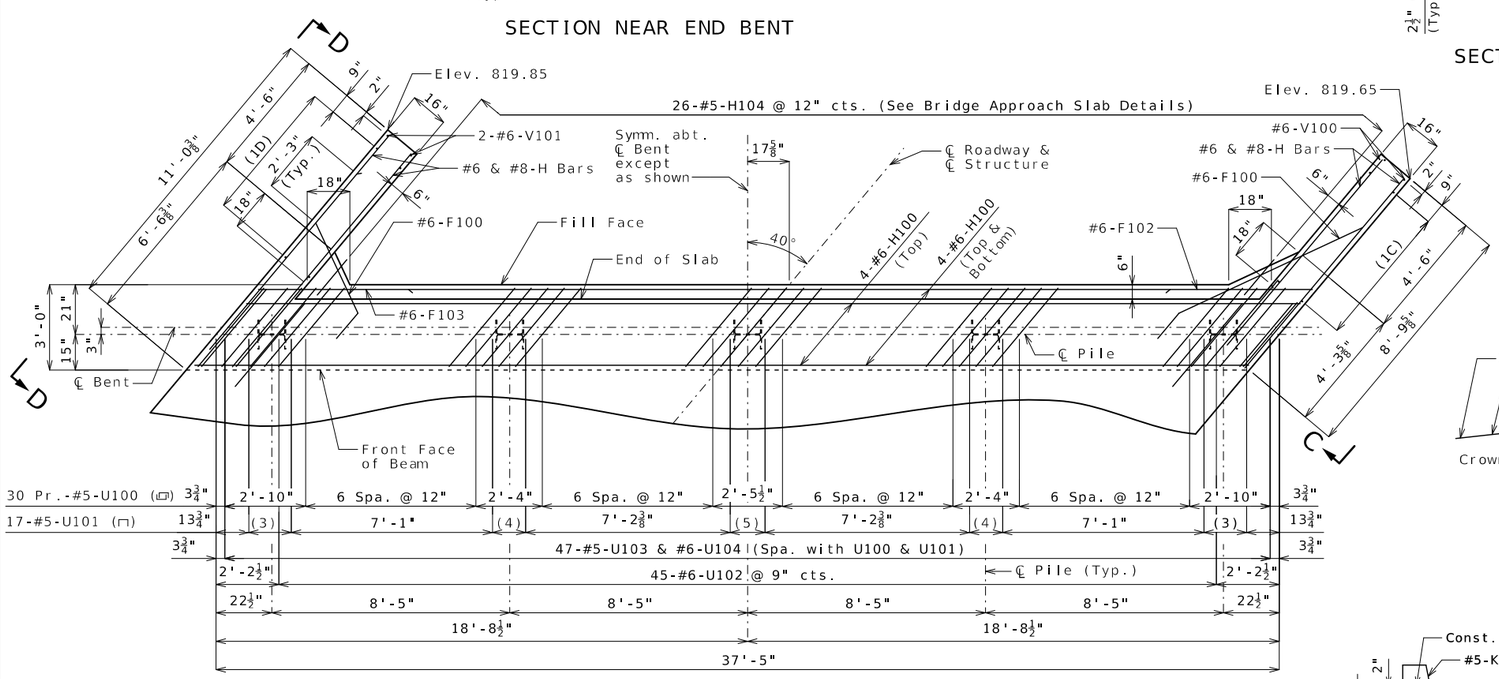

PART PLAN
(#6-H101 (Btwn. Piles)
not shown for clarity)

(1C) 6-#6-V100 @ 12" cts. (Each Face)
(1D) 6-#6-V101 @ 12" cts. (Each Face)
(2C) 7-#6-H103 @ abt. 8" cts (Each Face)
(2D) 7-#6-H103 @ abt. 8" cts. (Each Face)
(3) 3 Spa. @ 6"
(4) 2 Spa. @ 7"
(5) 2 Spa. @ 7⅜"

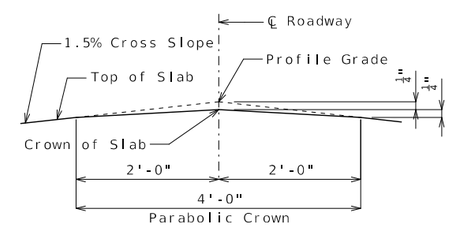

DETAIL A

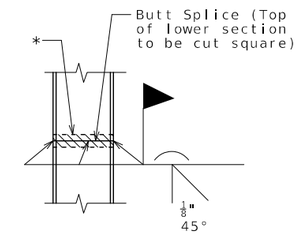

STEEL PILE SPLICE
(If required)

* Galvanizing material shall be omitted or removed one inch clear of weld locations in accordance with Sec 702.

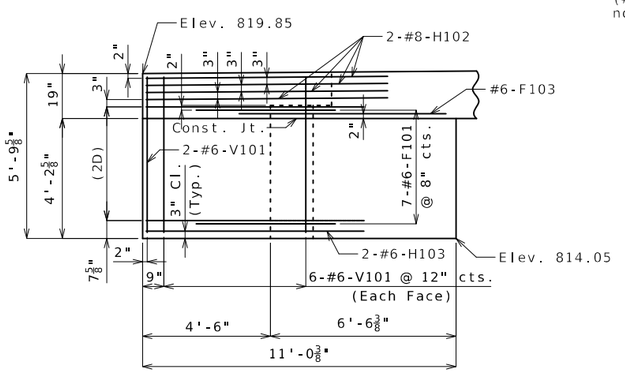

ELEVATION D-D

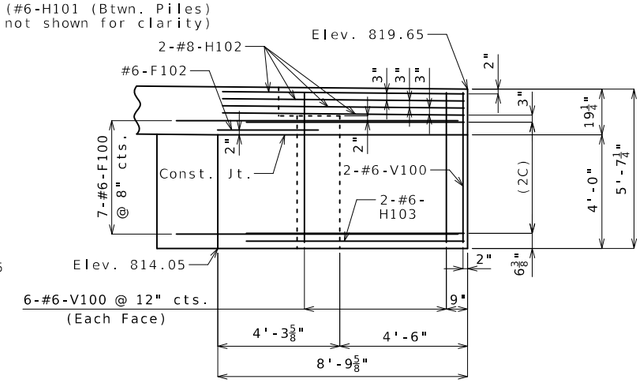

ELEVATION C-C

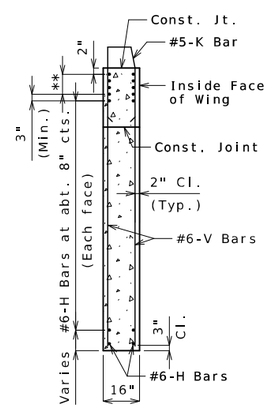

TYPICAL SECTION
THRU WING

** #8-H Bars at 3" cts.
(Each face)(Place with grade)

Notes:

For details of vertical drain at end bent, see Sheet No. 4.

For details of bridge approach slab, see Sheet No. 15.

All concrete in the end bent above the construction joint shall be Class B-2.

Reinforcing steel shall be shifted to clear piles. U bars shall clear piles by at least 1 1/2 inches.

The U bars and #5-H104 shall be placed parallel to the centerline of roadway.

For details and reinforcement of curb, see Sheet 11.

Substructure Quantities Table for Bent No. 1		
Item		Quantity
Class 1 Excavation	cu. yard	35
Galvanized Structural Steel Piles (12 in.)	linear foot	75
Pre-Bore for Piling	linear foot	59
Pile Point Reinforcement	each	5
Class B-1 Concrete (Substructure)	cu. yard	20.2

These quantities are included in the Estimated Quantities table on Sheet No. 2.

END BENT NO. 1

Detailed Dec. 2024
Checked Feb. 2025

Note: This drawing is not to scale. Follow dimensions.

STATE OF MISSOURI
TED S. KOESTER
NUMBER
PE-2013000591
PROFESSIONAL ENGINEER
03/25/2025 9:45:23 AM
TED S. KOESTER - CIVIL
MO-PE-2013000591

DATE PREPARED	
3/25/2025	
ROUTE B	STATE MO
DISTRICT BR	SHEET NO. 3
COUNTY PLATTE	
JOB NO. J4S3492	
CONTRACT ID.	
PROJECT NO.	
BRIDGE NO. A9335	

DATE	DESCRIPTION

MISSOURI HIGHWAYS AND TRANSPORTATION COMMISSION
105 WEST CAPITOL
JEFFERSON CITY, MO 65102
1-888-ASK-MODOT (1-888-275-6636)

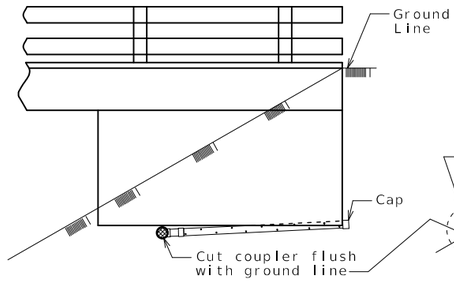

ELEVATION OF WING

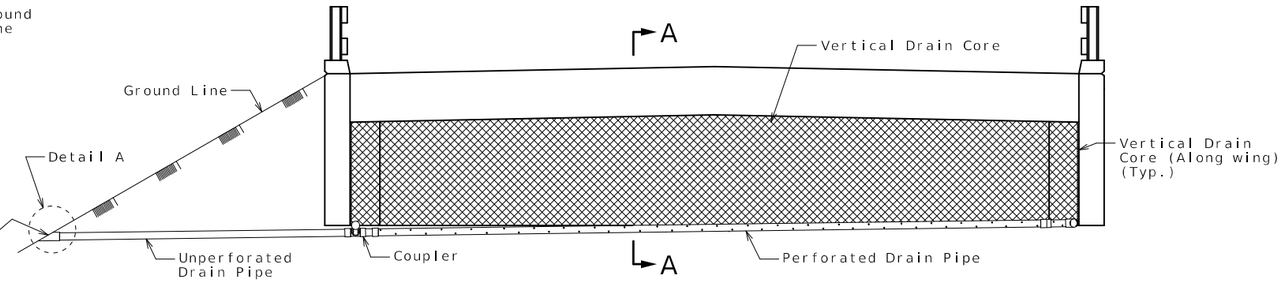

ELEVATION OF END BENT

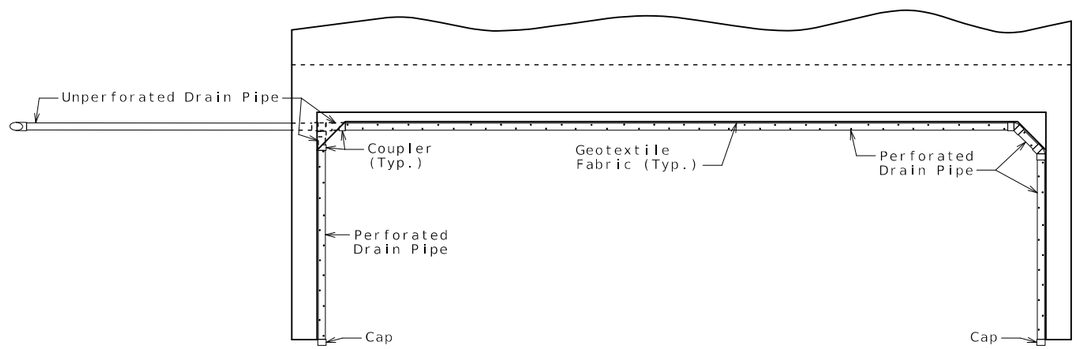

PLAN OF END BENT

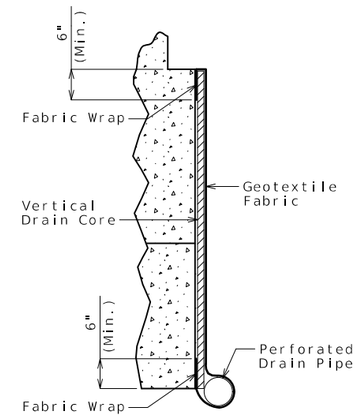

PART SECTION A-A
(Section thru wing similar)

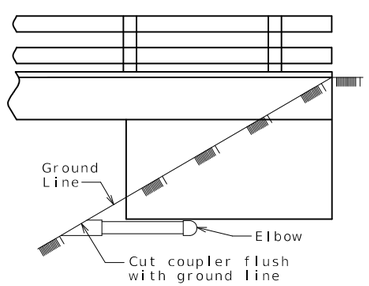

ELEVATION OF WING

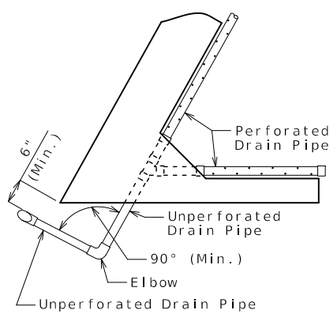

PART PLAN

OPTIONAL TURNED DRAIN
(Use only when straight drain is not practical.)

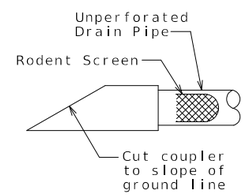

DETAIL A

General Notes:

All drain pipe shall be sloped 1 to 2 percent.

Drain pipe may be either 6-inch diameter corrugated metallic-coated steel pipe underdrain, 4-inch diameter corrugated polyvinyl chloride (PVC) drain pipe, or 4-inch diameter corrugated polyethylene (PE) drain pipe.

Drain pipe shall be placed at fill face of end bent and inside face of wings. The pipe shall slope to lowest grade of ground line, also missing the lower beam of end bent by a minimum of 1 1/2 inches.

Perforated pipe shall be placed at fill face side and inside face of wings at the bottom of end bent and plain pipe shall be used where the vertical drain ends to the exit at ground line.

VERTICAL DRAIN AT END BENTS

(Squared end bent shown, skewed end bent similar)

Detailed Dec. 2024
Checked Feb. 2025

Note: This drawing is not to scale. Follow dimensions.

STATE OF MISSOURI
TED S. KOESTER
NUMBER PE-2013000591
PROFESSIONAL ENGINEER
03/25/2025 9:46:01 AM
TED S. KOESTER - CIVIL
MO-PE-2013000591

DATE PREPARED	3/25/2025
ROUTE	B
STATE	MO
DISTRICT	BR
SHEET NO.	4
COUNTY	PLATTE
JOB NO.	J4S3492
CONTRACT ID.	
PROJECT NO.	
BRIDGE NO.	A9335

DESCRIPTION

DATE

MISSOURI HIGHWAYS AND TRANSPORTATION COMMISSION
105 WEST CAPITOL
JEFFERSON CITY, MO 65102
1-888-ASK-MODOT (1-888-275-6636)

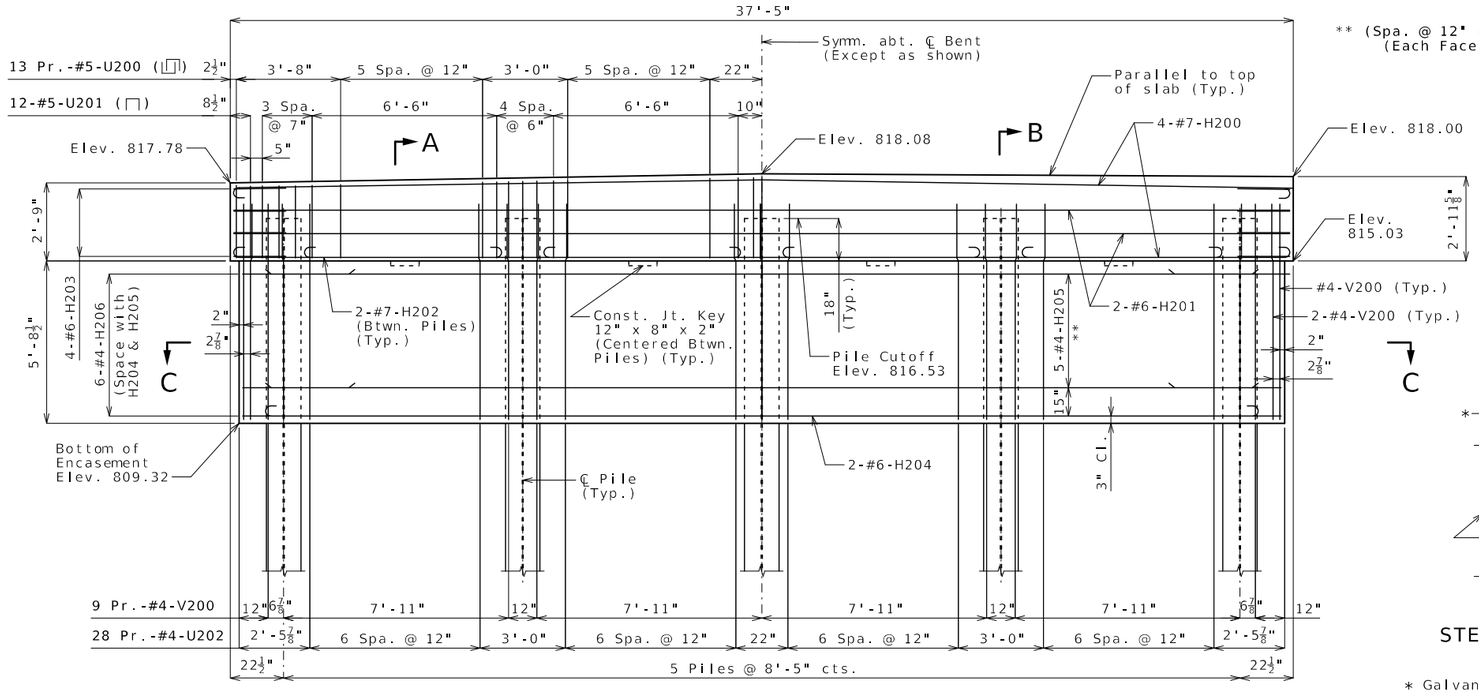

ELEVATION
Note: Key not shown for clarity.

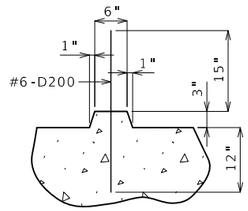

SECTION THRU KEY

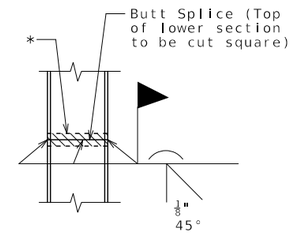

STEEL PILE SPLICE
(If required)

* Galvanizing material shall be omitted or removed one inch clear of weld locations in accordance with Sec 702.

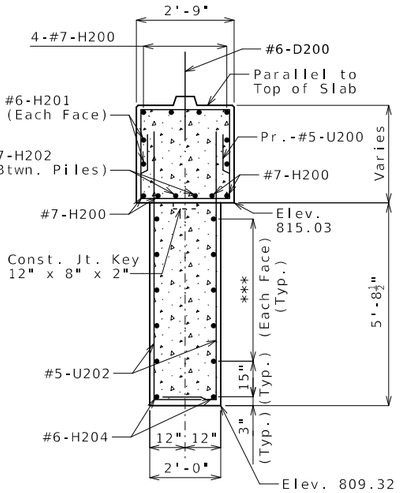

SECTION A-A

*** 5-#4-H205 @ 12" cts.

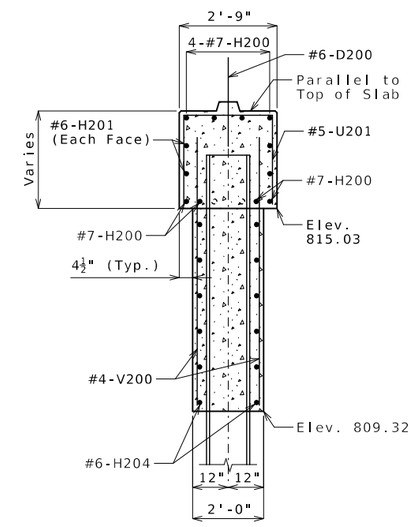

SECTION B-B

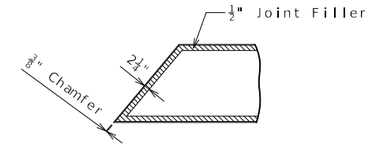

JOINT FILLER DETAIL
Note: Joint Filler to go around the entire beam cap.

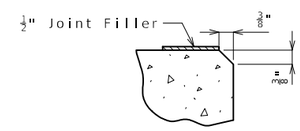

CHAMFER DETAIL AT TOP OF BEAM EDGES

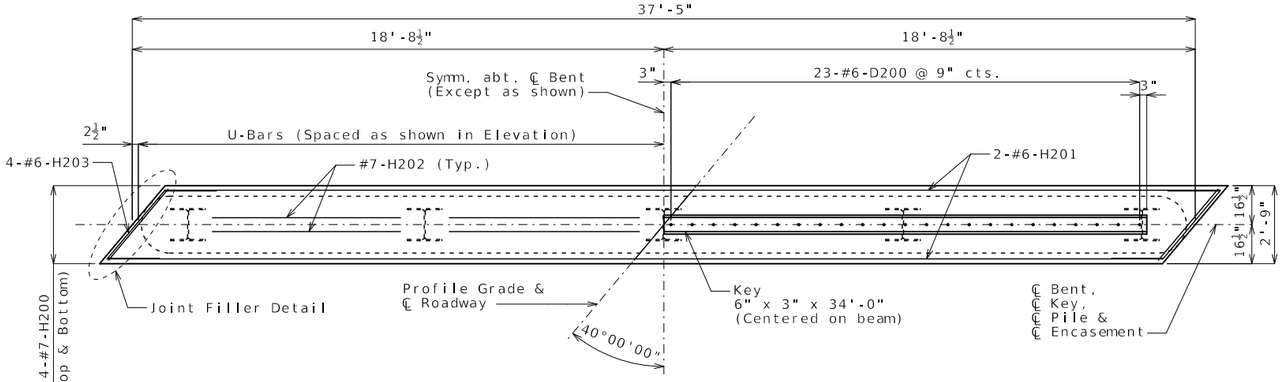

PLAN OF BEAM SHOWING REINFORCEMENT

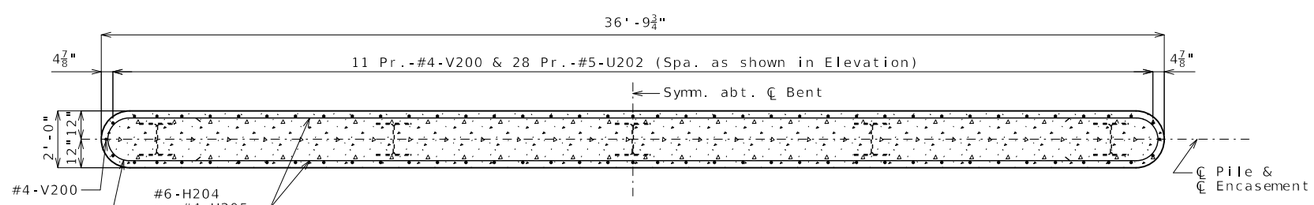

SECTION C-C

INTERMEDIATE BENT NO. 2

Substructure Quantities for Bent No. 2		
Item		Quantity
Galvanized Structural Steel Piles (14 in.)	linear foot	85
Pre-Bore for Piling	linear foot	41
Pile Point Reinforcement	each	5
Class B Concrete (Substructure)	cu. yard	15.2
Class B-1 Concrete (Substructure)	cu. yard	11.4
Reinforcing Steel (Bridges)	pound	2,510

Notes:

These quantities are included in the estimated quantities table on Sheet No. 2.

Reinforcing steel shall be shifted to clear piles. U-bars shall clear pile by at least 1 1/2 inches.

Detailed Jan. 2025
Checked Feb. 2025

Note: This drawing is not to scale. Follow dimensions.

STATE OF MISSOURI
TED S. KOESTER
NUMBER PE-2013000591
PROFESSIONAL ENGINEER
03/25/2025 9:46:25 AM
TED S. KOESTER - CIVIL
MO-PE-2013000591

DATE PREPARED	
3/25/2025	
ROUTE B	STATE MO
DISTRICT BR	SHEET NO. 5
COUNTY PLATTE	
JOB NO. J4S3492	
CONTRACT ID.	
PROJECT NO.	
BRIDGE NO. A9335	

DESCRIPTION

DATE

MISSOURI HIGHWAYS AND TRANSPORTATION COMMISSION
105 WEST CAPITOL
JEFFERSON CITY, MO 65102
1-888-ASK-MODOT (1-888-275-6636)

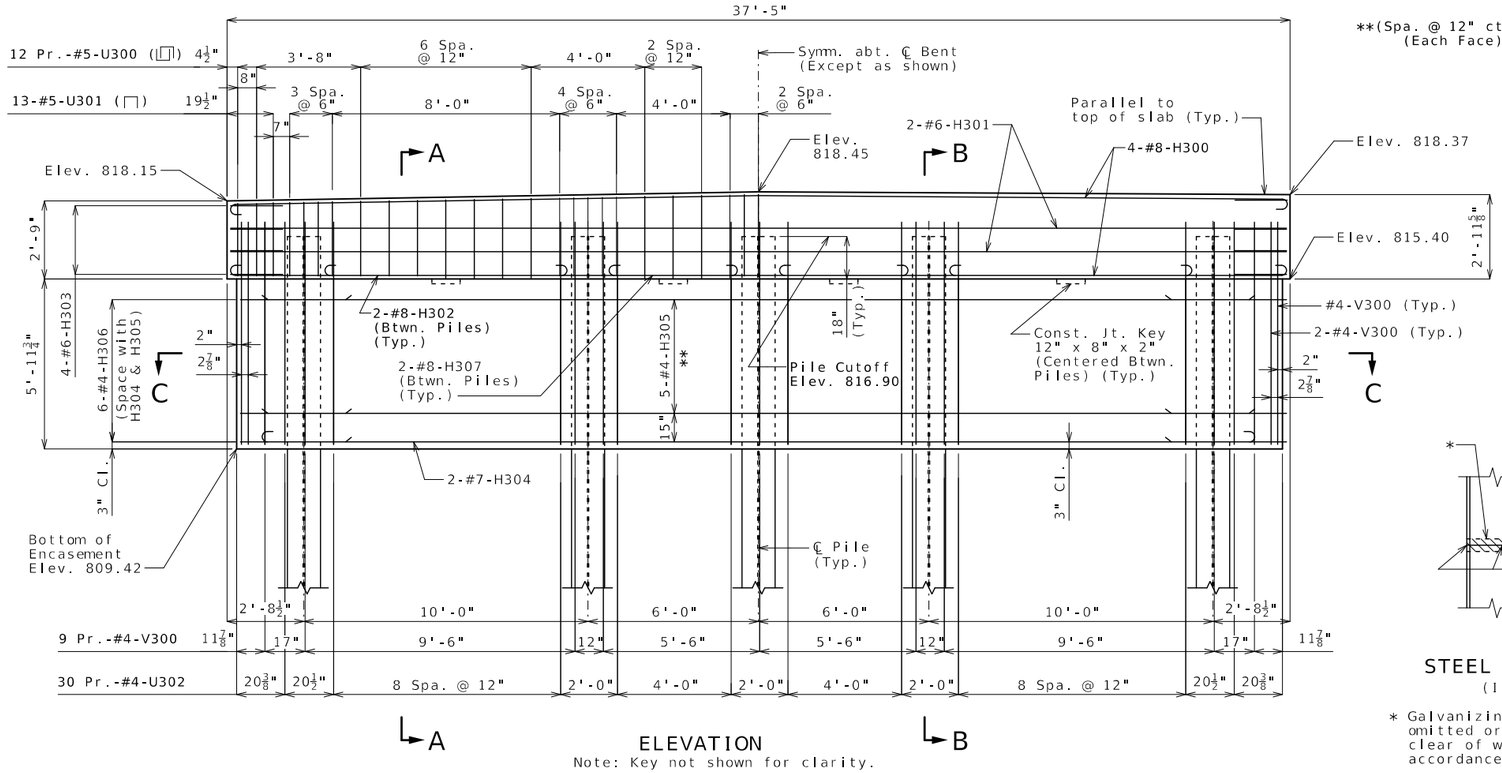

ELEVATION
Note: Key not shown for clarity.

**(Spa. @ 12" cts.) (Each Face)

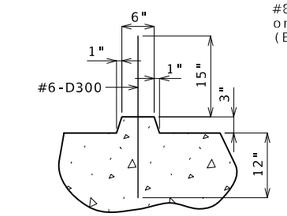

SECTION THRU KEY

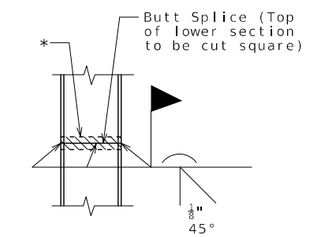

STEEL PILE SPLICE
(If required)

* Galvanizing material shall be omitted or removed one inch clear of weld locations in accordance with Sec 702.

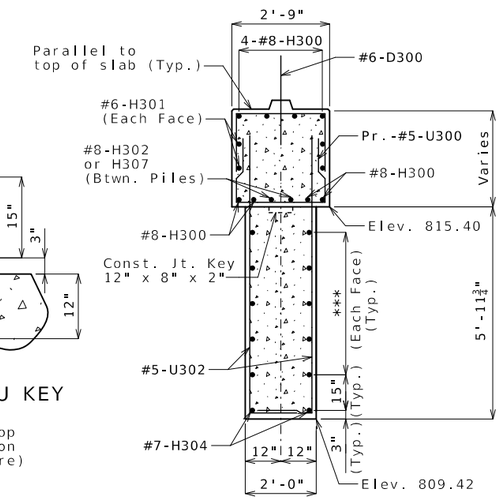

SECTION A-A

*** 5-#4-H305 @ 12" cts.

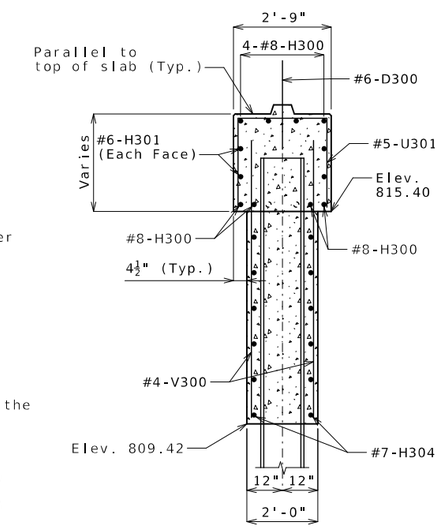

SECTION B-B

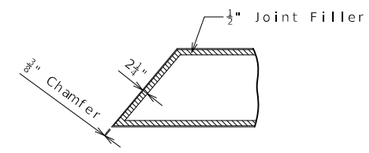

JOINT FILLER DETAIL
Note: Joint Filler to go around the entire beam cap.

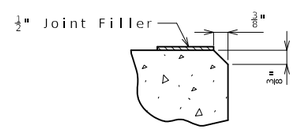

CHAMFER DETAIL AT TOP OF BEAM EDGES

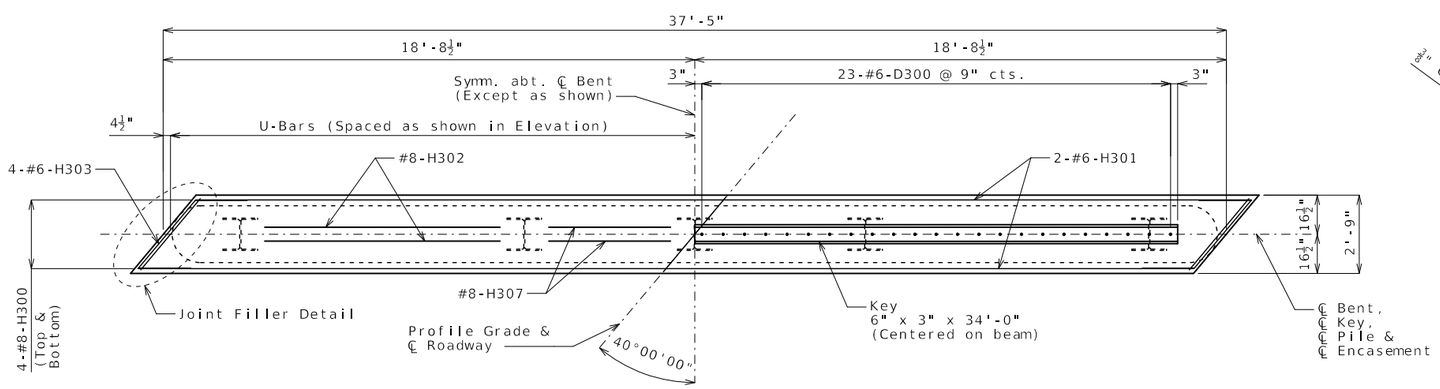

PLAN OF BEAM SHOWING REINFORCEMENT

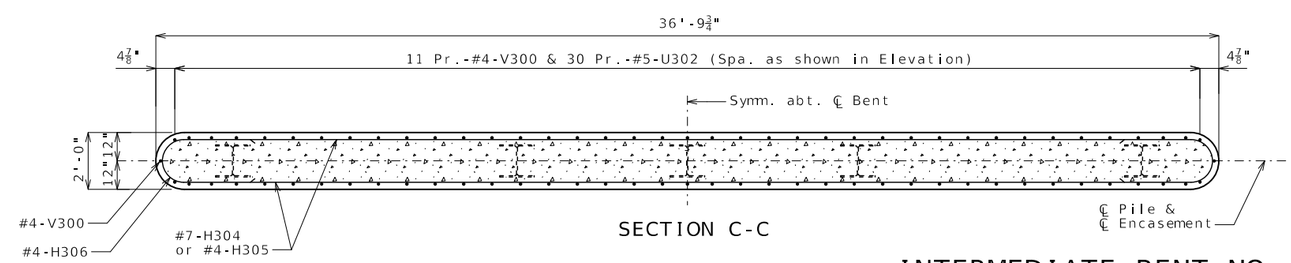

SECTION C-C

INTERMEDIATE BENT NO. 3

Substructure Quantities for Bent No. 3		
Item		Quantity
Galvanized Structural Steel Piles (14 in.)	linear foot	85
Pre-Bore for Piling	linear foot	40
Pile Point Reinforcement	each	5
Class B Concrete (Substructure)	cu. yard	15.9
Class B-1 Concrete (Substructure)	cu. yard	11.4
Reinforcing Steel (Bridges)	pound	2,820

Notes:

These quantities are included in the estimated quantities table on Sheet No. 2.

Reinforcing steel shall be shifted to clear piles. U-bars shall clear pile by at least 1 1/2 inches.

Detailed Jan. 2025
Checked Feb. 2025

Note: This drawing is not to scale. Follow dimensions.

STATE OF MISSOURI
TED S. KOESTER
NUMBER PE-2013000591
PROFESSIONAL ENGINEER
Ted Koester
03/25/2025 9:46:50 AM
TED S. KOESTER - CIVIL
MO-PE-2013000591

DATE PREPARED	
3/25/2025	
ROUTE B	STATE MO
DISTRICT BR	SHEET NO. 6
COUNTY PLATTE	
JOB NO. J4S3492	
CONTRACT ID.	
PROJECT NO.	
BRIDGE NO. A9335	

DESCRIPTION

DATE

MISSOURI HIGHWAYS AND TRANSPORTATION COMMISSION
105 WEST CAPITOL
JEFFERSON CITY, MO 65102
1-888-ASK-MODOT (1-888-275-6636)

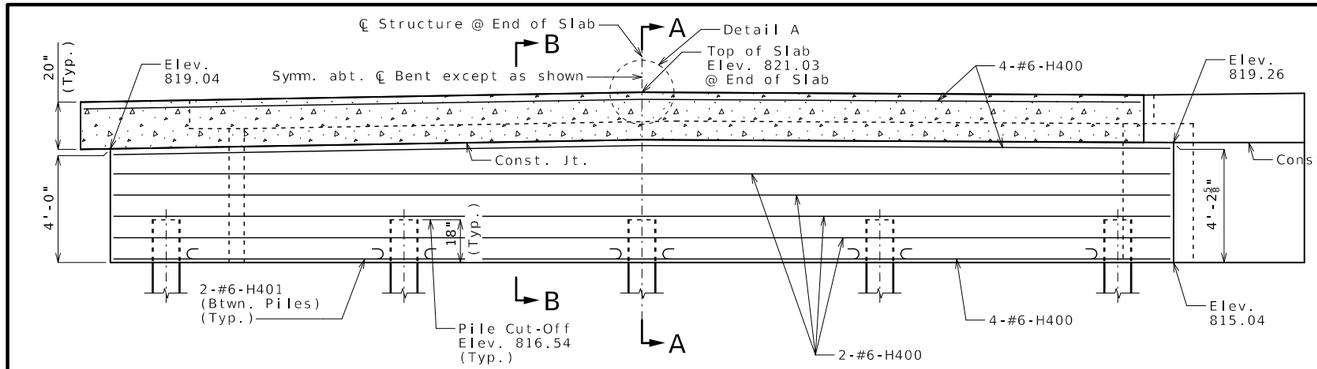

SECTION NEAR END BENT

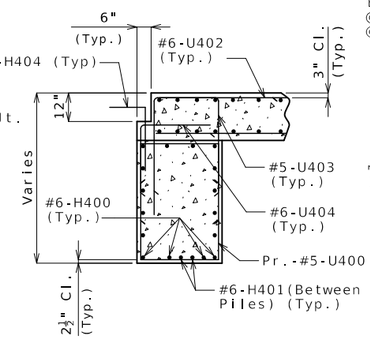

SECTION B-B

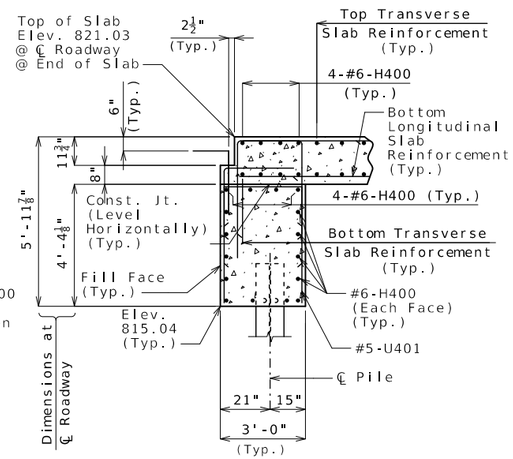

SECTION A-A

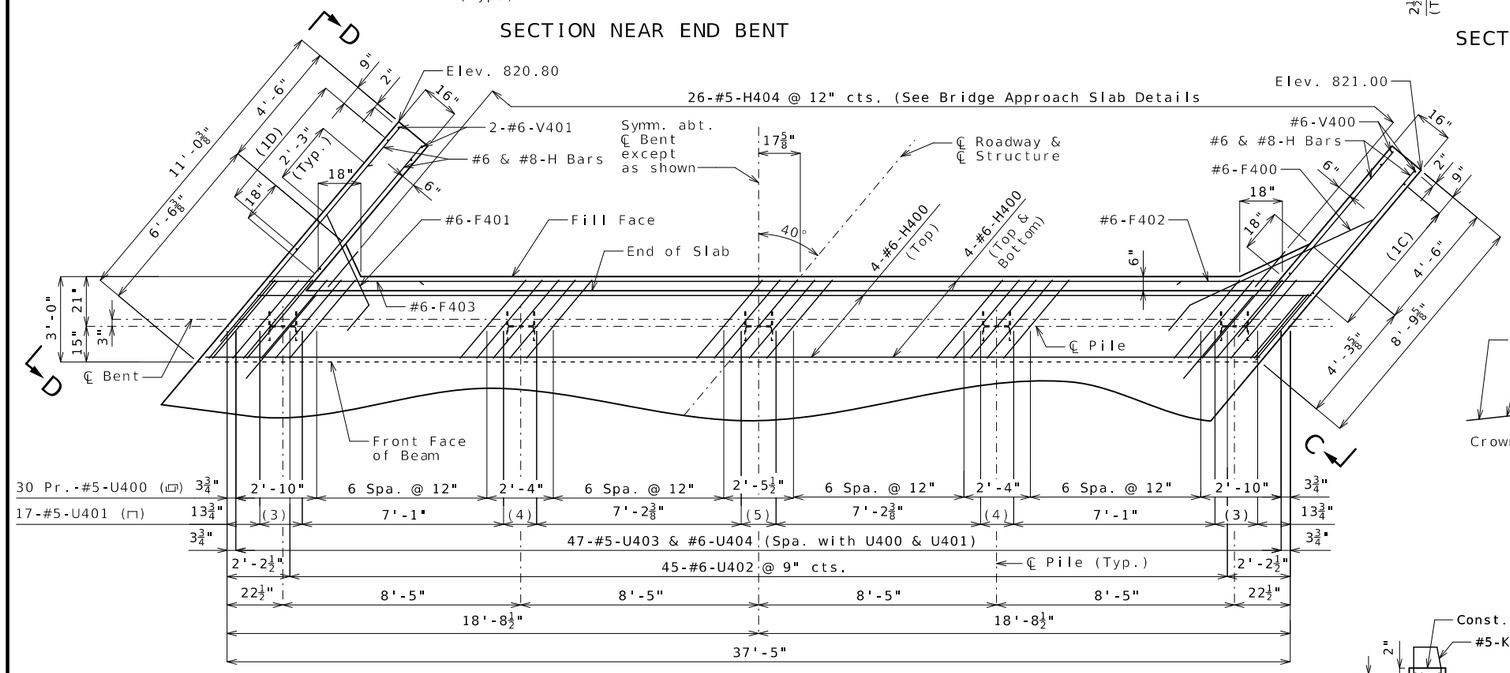

PART PLAN
(#6-H401 (Btwn. Piles)
not shown for clarity)

(1C) 6-#6-V400 @ 12" cts. (Each Face)
(1D) 6-#6-V401 @ 12" cts. (Each Face)
(2C) 7-#6-H403 @ abt. 8" cts. (Each Face)
(2D) 7-#6-H403 @ abt. 8" cts. (Each Face)
(3) 3 Spa. @ 6"
(4) 2 Spa. @ 7"
(5) 2 Spa. @ 7 3/8"

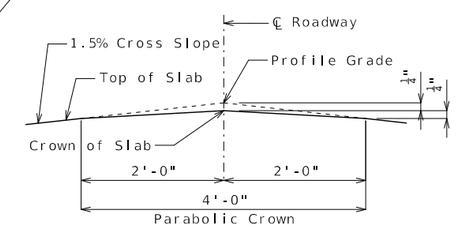

DETAIL A

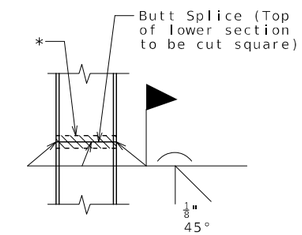

STEEL PILE SPLICE
(If required)

* Galvanizing material shall be omitted or removed one inch clear of weld locations in accordance with Sec 702.

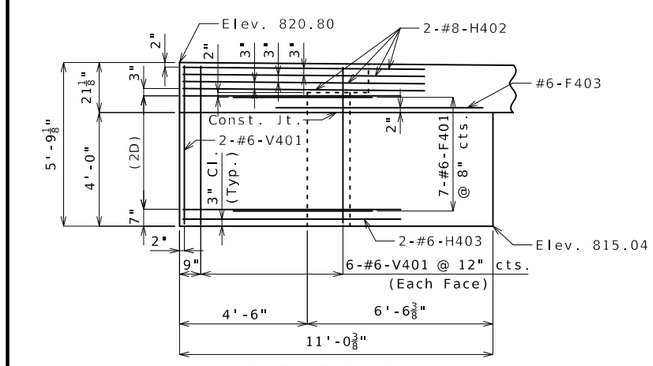

ELEVATION D-D

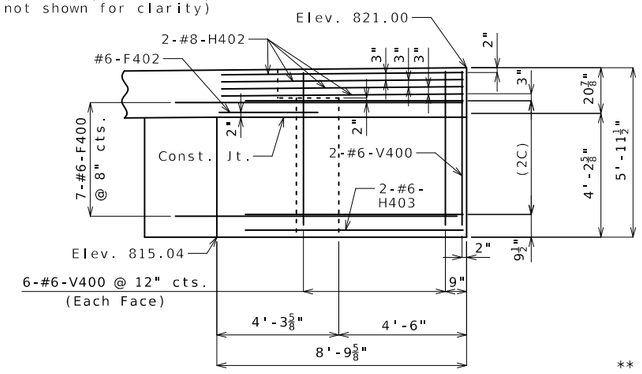

ELEVATION C-C

END BENT NO. 4

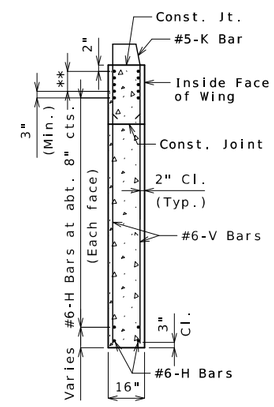

TYPICAL SECTION
THRU WING
** #8-H Bars at 3" cts.
(Each face)(Place with grade)

Notes:

For details of vertical drain at end bent, see Sheet No. 4.

For details of bridge approach slab, see Sheet No. 15.

All concrete in the end bent above the construction joint shall be Class B-2.

Reinforcing steel shall be shifted to clear piles. U bars shall clear piles by at least 1 1/2 inches.

The U bars and #5-H404 shall be placed parallel to the centerline of roadway.

For details and reinforcement of curb, see Sheet 11.

Substructure Quantities Table for Bent No. 4

Item		Quantity
Class 1 Excavation	cu. yard	35
Galvanized Structural Steel Piles (12 in.)	linear foot	90
Pre-Bore for Piling	linear foot	75
Pile Point Reinforcement	each	5
Class B-1 Concrete (Substructure)	cu. yard	20.3

These quantities are included in the Estimated Quantities table on Sheet No. 2.

STATE OF MISSOURI
TED S. KOESTER
NUMBER
PE-2013000591
PROFESSIONAL ENGINEER
03/25/2025 9:47:15 AM
TED S. KOESTER - CIVIL
MO-PE-2013000591

DATE PREPARED	
3/25/2025	
ROUTE B	STATE MO
DISTRICT BR	SHEET NO. 7
COUNTY PLATTE	
JOB NO. J4S3492	
CONTRACT ID.	
PROJECT NO.	
BRIDGE NO. A9335	

DESCRIPTION

DATE

MISSOURI HIGHWAYS AND TRANSPORTATION COMMISSION
105 WEST CAPITOL
JEFFERSON CITY, MO 65102
1-888-ASK-MODOT (1-888-275-6636)

Detailed Dec. 2024
Checked Feb. 2025

Note: This drawing is not to scale. Follow dimensions.

Theoretical Bottom of Slab Elevations*
(Prior to Forming for Slab)

Slab Location	Span (1-2) (34'-0" ℄ Bent End Bent No. 1 - ℄ Int. Bent No. 2)													
	℄ Bent	.10	.20	.30	.40	.50	.60	.70	Taper Start	.80	Drop Panel	.90	℄ Bent	
Left Edge of Deck	818.05	818.09	818.12	818.16	818.19	818.22	818.25	818.28	818.30	818.25	817.74	817.75	817.78	
℄ Roadway	818.37	818.41	818.45	818.49	818.52	818.55	818.58	818.60	818.63	818.57	818.06	818.07	818.10	
Right Edge of Deck	818.27	818.31	818.35	818.38	818.41	818.44	818.47	818.50	818.52	818.47	817.96	817.97	818.00	

Slab Location	Span (2-3) (40'-0" ℄ Int. Bent No.2 - ℄ Int. Bent No.3)														
	℄ Bent	.10	Drop Panel	Taper End	.20	.30	.40	.50	.60	.70	.80	Taper Start	Drop Panel	.90	℄ Bent
Left Edge of Deck	817.78	817.81	817.82	818.43	818.44	818.48	818.52	818.55	818.59	818.62	818.66	818.67	818.10	818.11	818.15
℄ Roadway	818.10	818.14	818.15	818.75	818.76	818.80	818.84	818.88	818.91	818.95	818.98	818.99	818.43	818.43	818.47
Right Edge of Deck	818.00	818.04	818.05	818.65	818.66	818.70	818.74	818.77	818.81	818.84	818.88	818.89	818.32	818.33	818.37

Slab Location	Span (3-4) (34'-0" ℄ Int. Bent No. 3 - ℄ Bent End Bent No.4)												
	℄ Bent	.10	Drop Panel	.20	Taper End	.30	.40	.50	.60	.70	.80	.90	℄ Bent
Left Edge of Deck	818.15	818.18	818.20	818.74	818.80	818.83	818.87	818.90	818.94	818.97	818.99	819.02	819.04
℄ Roadway	818.47	818.51	818.52	819.07	819.13	819.16	819.20	819.23	819.26	819.29	819.32	819.34	819.37
Right Edge of Deck	818.37	818.40	818.42	818.96	819.02	819.06	819.09	819.12	819.16	819.19	819.21	819.24	819.26

*Elevations include camber equal to the dead load deflection due to weight of slab, curb and rail. These elevations have not accounted for any formwork crush, falsework deflection or falsework settlement due to the weight of slab concrete. The contractor shall be reponsible for any elevation adjustments needed for these items.

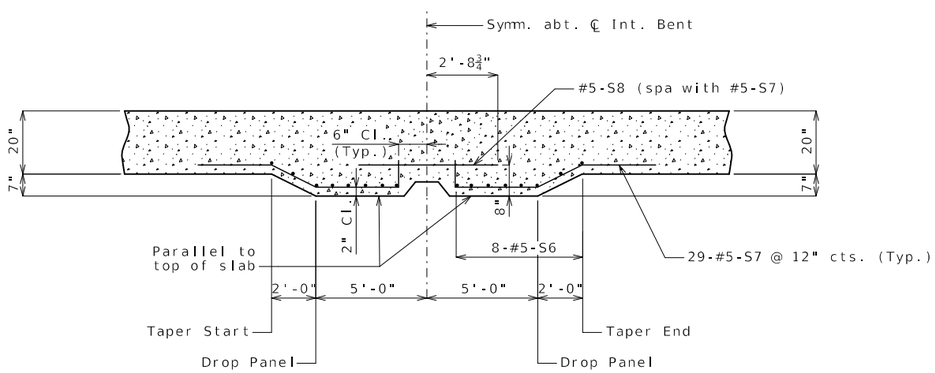

DROP PANEL ELEVATION
Showing Bottom Reinforcement

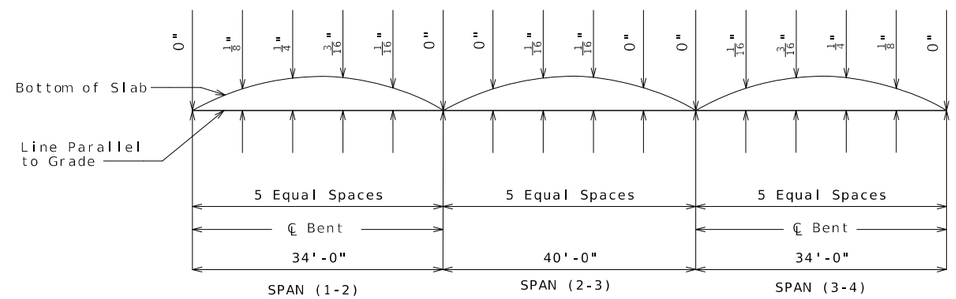

CAMBER DIAGRAM

DROP PANEL, CAMBER AND SLAB ELEVATIONS

Detailed Jan. 2025
Checked Feb. 2025

Note: This drawing is not to scale. Follow dimensions.

STATE OF MISSOURI
TED S. KOESTER
NUMBER PE-2013000591
PROFESSIONAL ENGINEER
03/25/2025 9:47:38 AM
TED S. KOESTER - CIVIL
MO-PE-2013000591

DATE PREPARED	3/25/2025
ROUTE	B
STATE	MO
DISTRICT	BR
SHEET NO.	8
COUNTY	PLATTE
JOB NO.	J4S3492
CONTRACT ID.	
PROJECT NO.	
BRIDGE NO.	A9335

DESCRIPTION

DATE

MISSOURI HIGHWAYS AND TRANSPORTATION COMMISSION
105 WEST CAPITOL
JEFFERSON CITY, MO 65102
1-888-ASK-MODOT (1-888-275-6636)

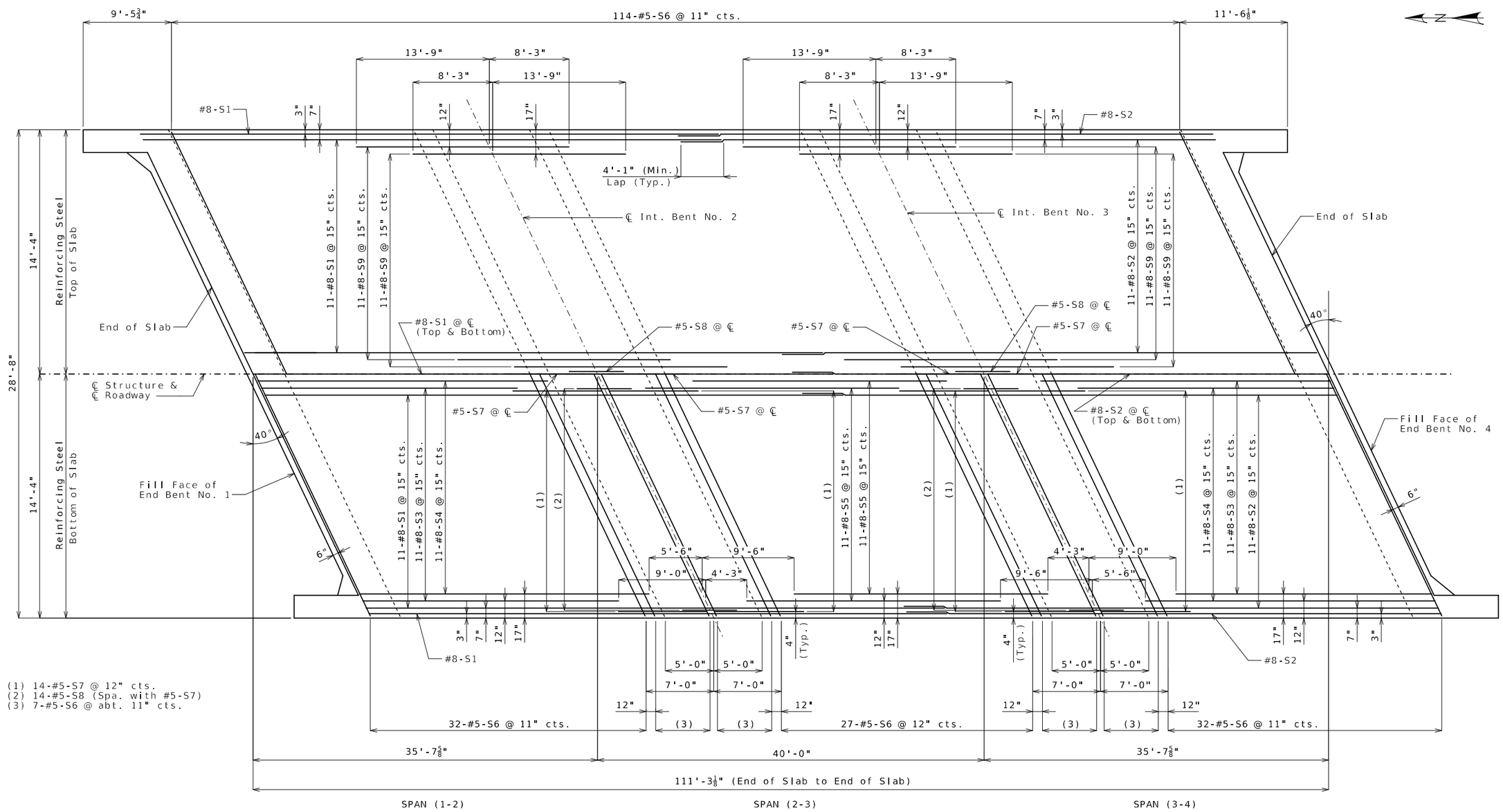

(1) 14-#5-S7 @ 12" cts.
(2) 14-#5-S8 (Spa. with #5-S7)
(3) 7-#5-S6 @ abt. 11" cts.

PLAN

Notes:

For Theoretical Bottom of Slab Elevations and Section Thru Slab, see Sheet No. 10.

For details of Bridge Rail, see Sheets No. 13 & 14.

For Drop Panel Elevations, see Sheet No. 8.

PLAN OF SLAB SHOWING TOP AND BOTTOM REINFORCEMENT

Detailed Jan. 2025
Checked Feb. 2025

Note: This drawing is not to scale. Follow dimensions.

STATE OF MISSOURI
TED S. KOESTER
NUMBER PE-2013000591
PROFESSIONAL ENGINEER
03/25/2025 9:48:04 AM
TED S. KOESTER - CIVIL
MO-PE-2013000591

DATE PREPARED	3/25/2025
ROUTE B	STATE MO
DISTRICT BR	SHEET NO. 9
COUNTY	PLATTE
JOB NO.	J4S3492
CONTRACT ID.	
PROJECT NO.	
BRIDGE NO.	A9335

DESCRIPTION

DATE

MISSOURI HIGHWAYS AND TRANSPORTATION COMMISSION
105 WEST CAPITOL
JEFFERSON CITY, MO 65102
1-888-ASK-MODOT (1-888-275-6636)

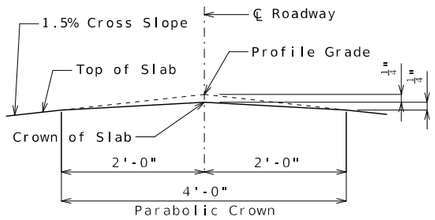

DETAIL A

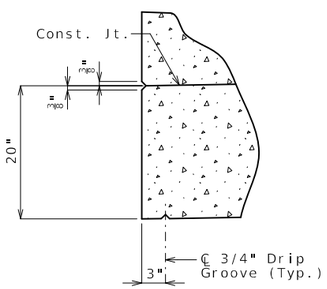

DETAIL B

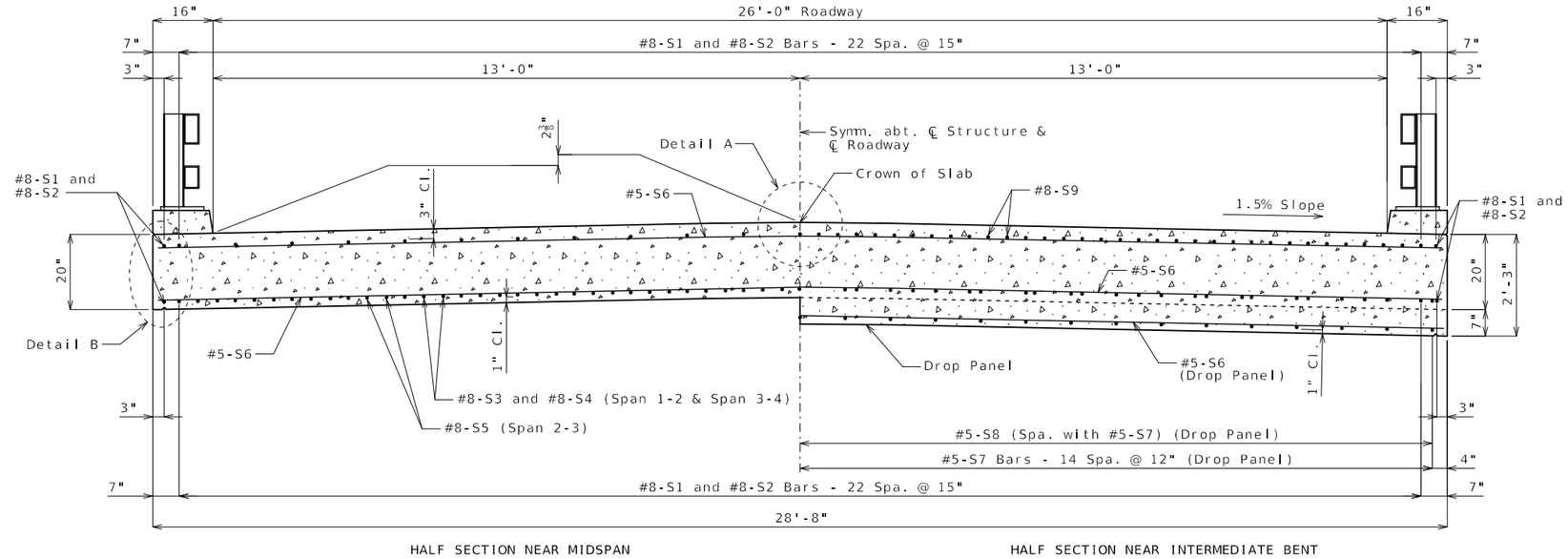

HALF SECTION NEAR MIDSPAN

HALF SECTION NEAR INTERMEDIATE BENT

SECTION THRU SLAB

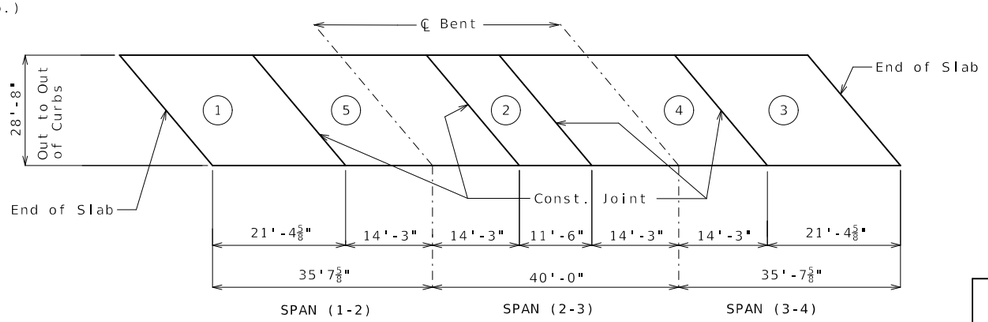

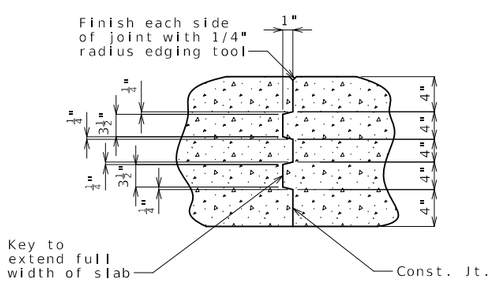

SLAB CONSTRUCTION JOINT DETAIL

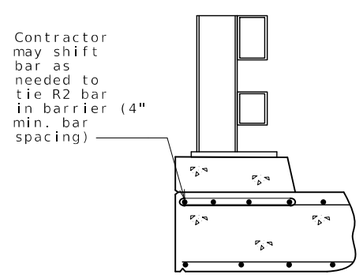

OPTIONAL SHIFTING TOP BARS AT BARRIER

	Sequence of Pours					Min. Rate of Pour Cu. Yds./Hr.
	Direction					With Retarder
Basic Sequence	1	2	3	4	5	36
	Either Direction					
Alternate pours to the basic skip sequence are subject to the approval of the engineer in accordance with Sec 703.						
Alternate A Pours	1	5 + 2	4 + 3			36
	End to 5	1 to 4	2 to End			
Alternate B Pours	1 + 5 + 2	4 + 3				36
	End to 4	2 to End				
Alternate C Pours	1 + 5 + 2 + 4 + 3					36
	End to End					

The contractor shall furnish an approved retarder to retard the set of concrete to 2.5 hours and shall pour satisfactorily finish the roadway slab at a rate of not less than 36 cubic yards per hour. The contractor shall observe the transverse construction joints shown on plans, unless the contractor is equipped to pour and satisfactorily finish the roadway slab at a rate which permits a continuous pouring through some or all joints as approved by the engineer.

SLAB POURING SEQUENCE

Notes:

For details of curb not shown, see Sheet No. 11.

For Theoretical Bottom of Slab Elevations and Camber Diagram, see Sheet No. 8.

For Plan of Slab Showing Reinforcement, see Sheet No. 9.

For Drop Panel Elevation, see Sheet No. 8.

SLAB DETAILS

Detailed Dec. 2024
Checked Feb. 2025

Note: This drawing is not to scale. Follow dimensions.

STATE OF MISSOURI
TED S. KOESTER
NUMBER PE-2013000591
PROFESSIONAL ENGINEER
03-25-2025 9:48:30 AM
TED S. KOESTER - CIVIL
MO-PE-2013000591

DATE PREPARED	3/25/2025
ROUTE	B
STATE	MO
DISTRICT	BR
SHEET NO.	10
COUNTY	PLATTE
JOB NO.	J4S3492
CONTRACT ID.	
PROJECT NO.	
BRIDGE NO.	A9335

DESCRIPTION

DATE

MISSOURI HIGHWAYS AND TRANSPORTATION COMMISSION
105 WEST CAPITOL
JEFFERSON CITY, MO 65102
1-888-ASK-MODOT (1-888-275-6636)

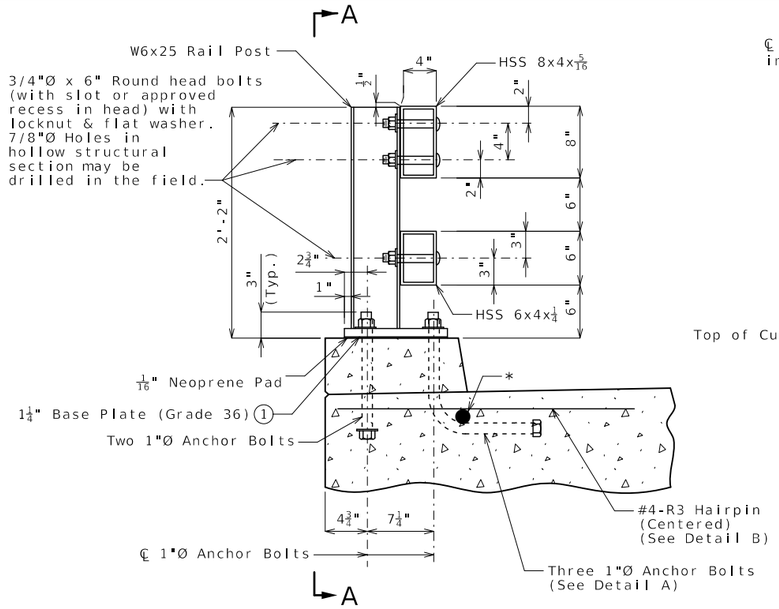

SECTION AT RAIL POST

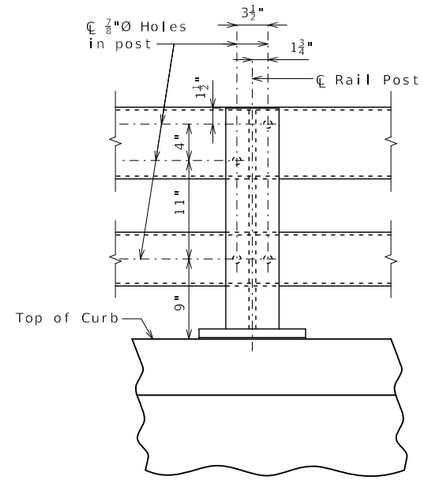

PART ELEVATION A-A

* Tack weld same size bar (2'-8" long and centered) as slab longitudinal reinf. Optional to wrap bolt under slab long. reinf. provided that 1" clearance is maintained to bottom of slab.

1 Bevel bottom of post (slope 2% or slab cross slope).

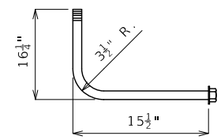

DETAIL A

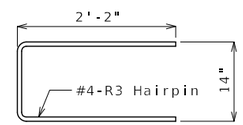

DETAIL B

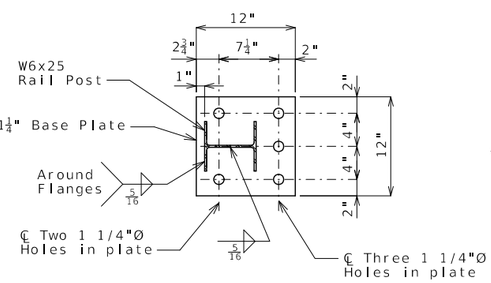

PLAN OF BASE PLATE

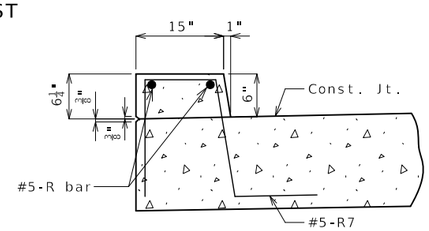

PART SECTION SHOWING CURB

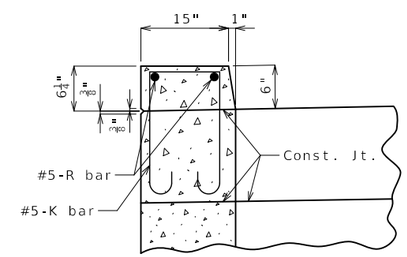

PART SECTION SHOWING CURB OVER WING

Bridge Rail Notes:

Rail posts shall be set perpendicular to roadway profile grade, vertically in cross section and aligned in accordance with Sec 713 except that the rail posts shall be aligned by the use of shims such that the post deviates not more than 1/2 inch from true horizontal alignment after final adjustment. The shims shall be 3" x 1 3/4" and placed between the post and the rail. The thickness of the shims shall be determined by the contractor and verified by the engineer before ordering material for this work.

Rail posts shall be seated on elastomeric pads having the same dimensions as the base plate and 1/16-inch thickness. Pads may be any elastomeric material, plain or fibered, having a hardness (Durometer) of 50 or greater, and certified by the manufacturer. Additional pads or half pads may be used for shimming for alignment. Post heights shown will increase by the thickness of the pad.

HSS = Hollow Structural Section

Dimensions of bridge rails are measured horizontally.

Bridge Rails will be measured to the nearest linear foot for each structure measured from end of wing to end of wing.

Payment for furnishing all materials and labor necessary to install Bridge Rail, complete in place, will be considered completely covered by the contract unit price for Bridge Rail (Two Tube Structural Steel) per linear foot.

Guardrail delineators shall be attached to the top of the guardrail post using galvanized anchorage as shown on Missouri Standard Plan 606.00 and in accordance with Sec 606. Delineators on bridges with two-lane, two-way traffic shall have retroreflective sheeting on both sides. Guardrail delineators will be considered completely covered by the contract unit price for Bridge Rail (Two Tube Structural Steel).

Curb Notes:

Top of curb shall be built parallel to grade.

All exposed edges of curb shall have either a 1/2-inch radius or a 3/8-inch bevel, unless unless otherwise noted.

Use a minimum lap of 2'-11" for #5-R bars.

The cross-sectional area of curb above the slab = 0.66 sq. ft.

Concrete in the curb shall be Class B-2.

The curb shall be cured by application of Type 1-D Liquid Membrane-Forming Curing Compound in accordance with Sec 1055 and sealed in accordance with Sec 703. The contractor shall remove all curing compound in accordance with the manufacturer's recommendations before the concrete sealer is applied.

Measurement of the curb is to the nearest linear foot for each structure, measured along the outside top of slab from end of wing to end of wing.

Payment for all concrete and reinforcement, complete in place, will be considered completely covered by the contract unit price for Concrete Curb (Bridge Rail) per linear foot.

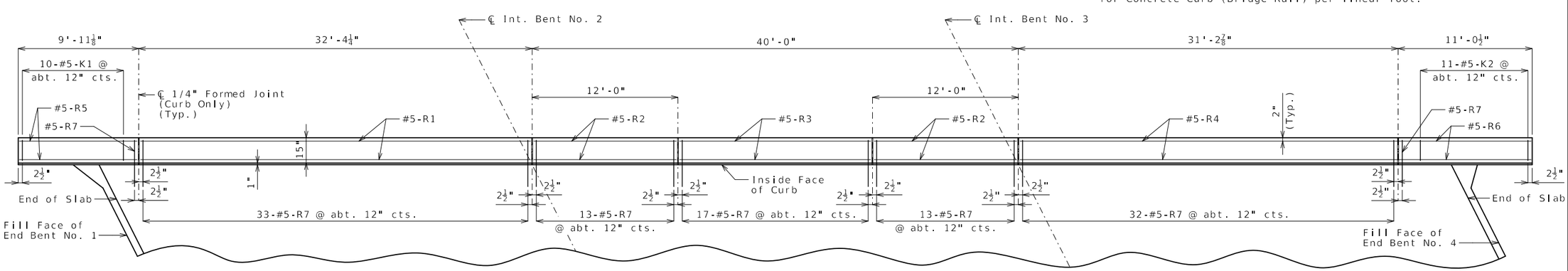

PLAN OF LEFT CURB SHOWING REINFORCEMENT

(Left curb shown. Right curb similar.)

Note: Longitudinal dimensions are horizontal along outside face of curb.

Detailed Jan. 2025
Checked Feb. 2025

Note: This drawing is not to scale. Follow dimensions.

STATE OF MISSOURI
TED S. KOESTER
NUMBER PE-2013000591
PROFESSIONAL ENGINEER
03/25/2025 9:48:55 AM
TED S. KOESTER - CIVIL
MO-PE-2013000591

DATE PREPARED	3/25/2025
ROUTE B	STATE MO
DISTRICT BR	SHEET NO. 11
COUNTY	PLATTE
JOB NO.	J4S3492
CONTRACT ID.	
PROJECT NO.	
BRIDGE NO.	A9335

DESCRIPTION

DATE

MISSOURI HIGHWAYS AND TRANSPORTATION COMMISSION
105 WEST CAPITOL
JEFFERSON CITY, MO 65102
1-888-ASK-MODOT (1-888-275-6636)

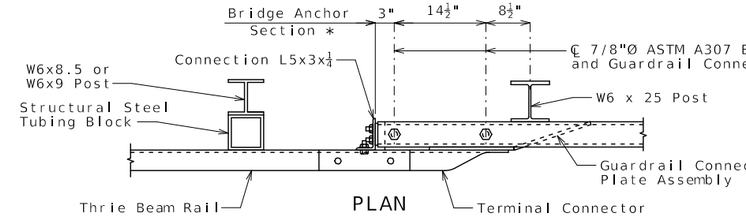

PLAN

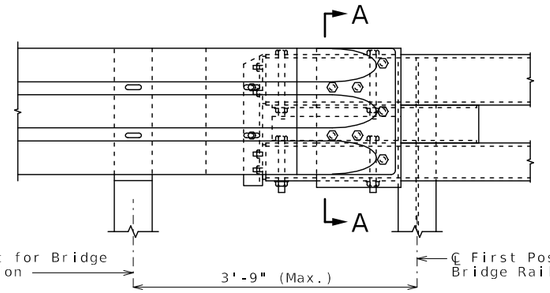

DETAIL A

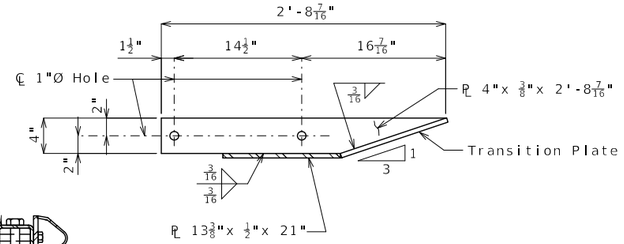

SECTION B-B

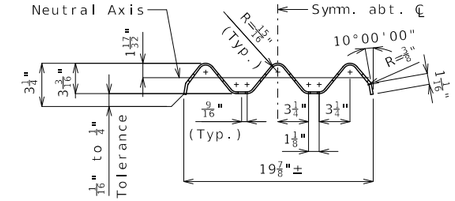

SECTION THRU THRIE BEAM RAIL

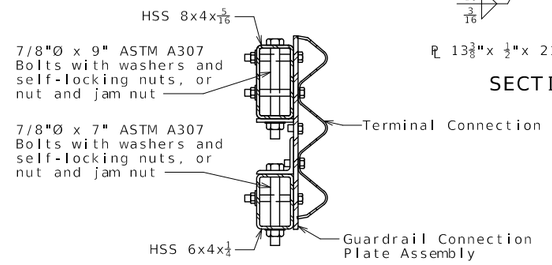

SECTION A-A

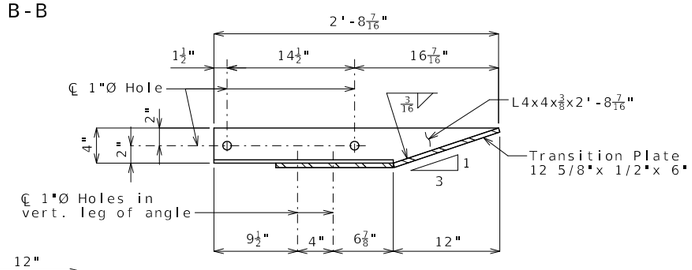

SECTION C-C

(Part elevation of bridge anchor section)

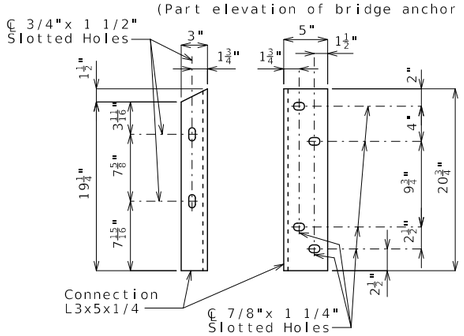

CONNECTION ANGLE DETAILS

Install angles to rail caps using 5/8"Ø washers and self-locking nuts, or nuts and jam nuts.

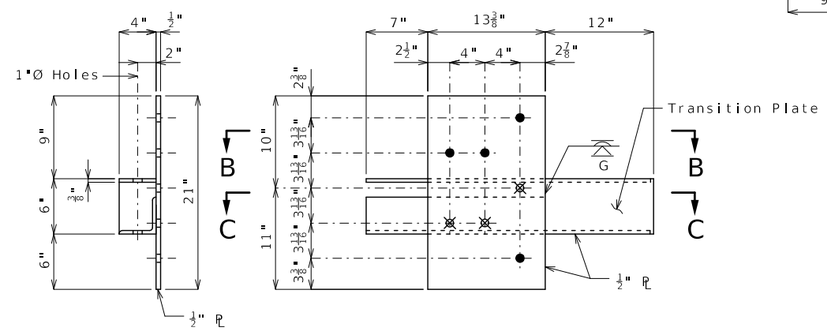

GUARDRAIL CONNECTION PLATE ASSEMBLY DETAILS

(Mirror for opposite end)

⊗ Drill and tap 3 holes for 7/8-inch diameter ASTM F3125 Grade A325 Type 1 bolts.

● Four 1-inch diameter holes for 7/8-inch diameter ASTM F3125 Grade A325 Type 1 bolts and nuts

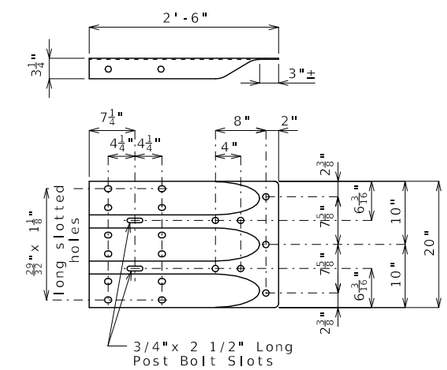

TERMINAL CONNECTOR

Notes:

Work this sheet with Sheets No. 11 & 13.

Provide railing expansion joints at 50 foot maxium intervals. Railing shall be continuous over two posts minimum. Railing expansion joints are required in rail sections that span bridge expansion joints.

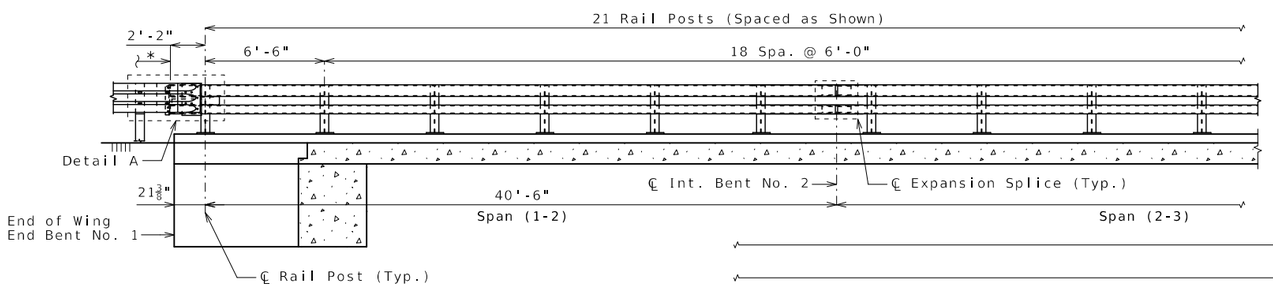

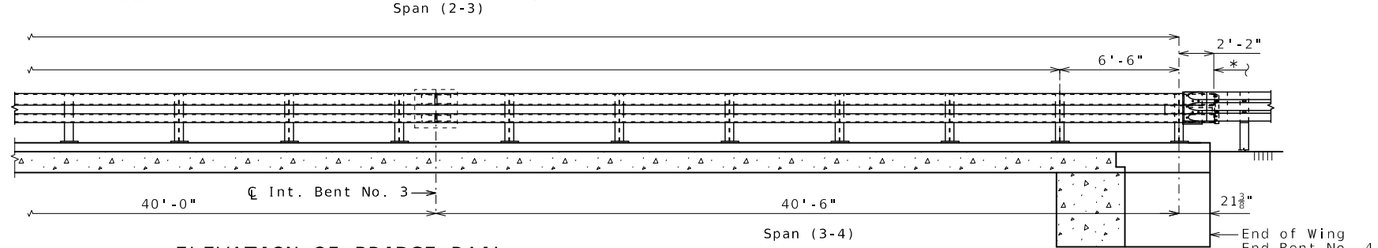

* Bridge anchor section shall be in accordance with Missouri Standard Plan 606.22 except bearing plate and connector plate will not be required.

ELEVATION OF BRIDGE RAIL

(Left bridge rail shown, right bridge rail similar)
Longitudinal dimensions are horizontal.
Dimensions measured along back of curb.

Detailed Jan. 2025
Checked Feb. 2025

Note: This drawing is not to scale. Follow dimensions.

STATE OF MISSOURI
TED S. KOESTER
NUMBER PE-2013000591
PROFESSIONAL ENGINEER
03/26/2025 9:49:22 AM
TED S. KOESTER - CIVIL
MO-PE-2013000591

DATE PREPARED	3/25/2025
ROUTE	B
STATE	MO
DISTRICT	BR
SHEET NO.	12
COUNTY	PLATTE
JOB NO.	J4S3492
CONTRACT ID.	
PROJECT NO.	
BRIDGE NO.	A9335

DESCRIPTION

DATE

MISSOURI HIGHWAYS AND TRANSPORTATION COMMISSION
105 WEST CAPITOL
JEFFERSON CITY, MO 65102
1-888-ASK-MODOT (1-888-275-6636)

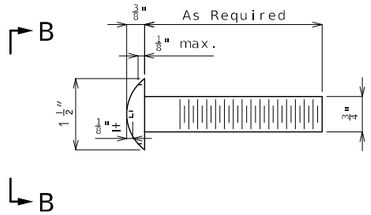

DETAIL OF $\frac{3}{4}$"Ø ROUND HEAD BOLT

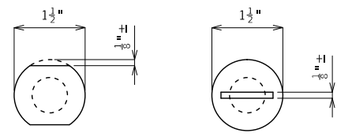

VIEW B-B

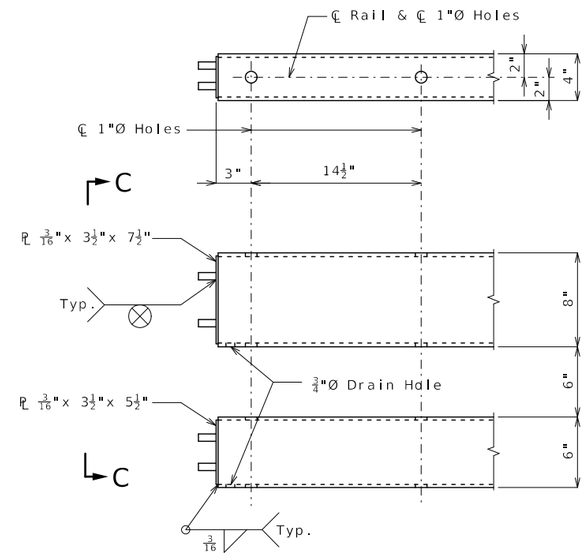

END OF RAIL DETAILS

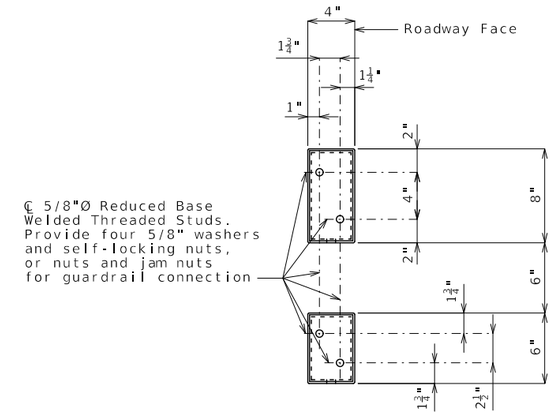

SECTION C-C

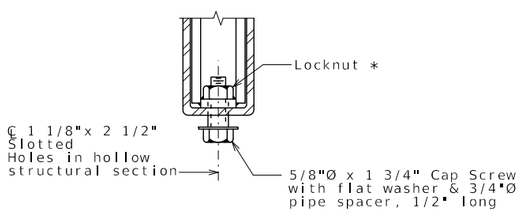

RAIL SPLICE CONNECTION
AT EXPANSION JOINT

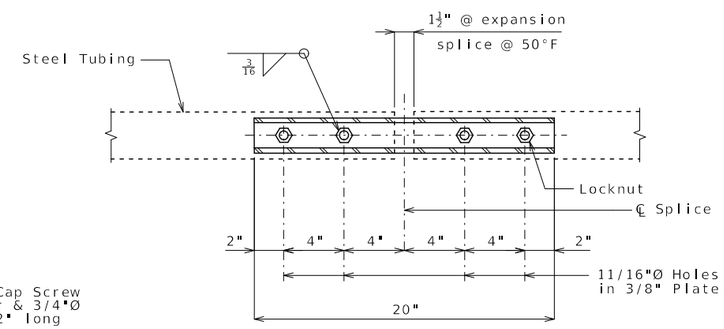

PLAN BOTTOM SPLICE PLATE
TYPICAL

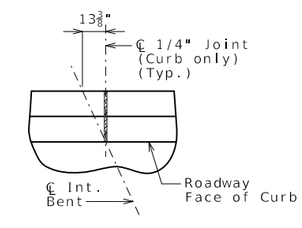

PART PLAN SHOWING
JOINT LOCATION

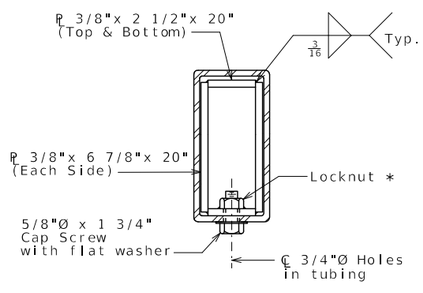

TOP RAIL

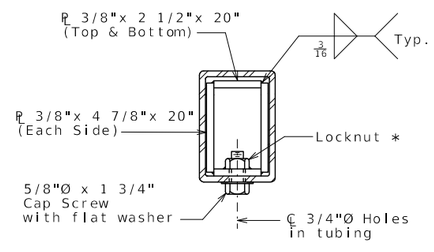

BOTTOM RAIL

SECTIONS AT RAIL SPLICE

Notes:

Fabrication of structural steel shall be in accordance with Sec 712 and 1080.

Hollow structural sections shall be in accordance with ASTM designation A 500 Grade B Structural Steel Tubing and shall meet the longitudinal CVN requirements of 15 ft-lbs at 0° F, see Sec 1080 for reporting.

All other steel shapes and plates shall be in accordance with AASHTO M 270 Grade 36 except posts shall be in accordance with AASHTO M 270, Grade 50.

All anchor bolts shall be ASTM F1554 Grade 36 with ASTM A563 Grade A hex nuts and ASTM F436 hardened washers.

Bolts, cap screws, and nuts shall be in accordance with ASTM designation A307 except for high strength bolts, nuts and washers noted which shall be in accordance with AASHTO M 164.

All anchor bolts, bolts, nuts, cap screws, washers and lock washers shall be galvanized in accordance with AASHTO M 232 (ASTM A153), Class C.

All posts, railing, rail splices, and angles shall be galvanized after shop fabrication in accordance with AASHTO M 111 and ASTM A385. Galvanized rail shall not be painted.

Railing shall be in accordance with Sec 713, except as noted.

All field drilled holes shall be coated with an approved zinc rich paint before erection.

HSS = Hollow Structural Section

* Tack weld nut to plate.

STATE OF MISSOURI
TED S. KOESTER
NUMBER
PE-2013000591
PROFESSIONAL ENGINEER
03/25/2025 9:49:50 AM
TED S. KOESTER - CIVIL
MO-PE-2013000591

DATE PREPARED	3/25/2025
ROUTE	B
STATE	MO
DISTRICT	BR
SHEET NO.	13
COUNTY	PLATTE
JOB NO.	J4S3492
CONTRACT ID.	
PROJECT NO.	
BRIDGE NO.	A9335

DESCRIPTION

DATE

MISSOURI HIGHWAYS AND TRANSPORTATION COMMISSION

105 WEST CAPITOL
JEFFERSON CITY, MO 65102
1-888-ASK-MODOT (1-888-275-6636)

Detailed Jan. 2025
Checked Feb. 2025

Note: This drawing is not to scale. Follow dimensions.

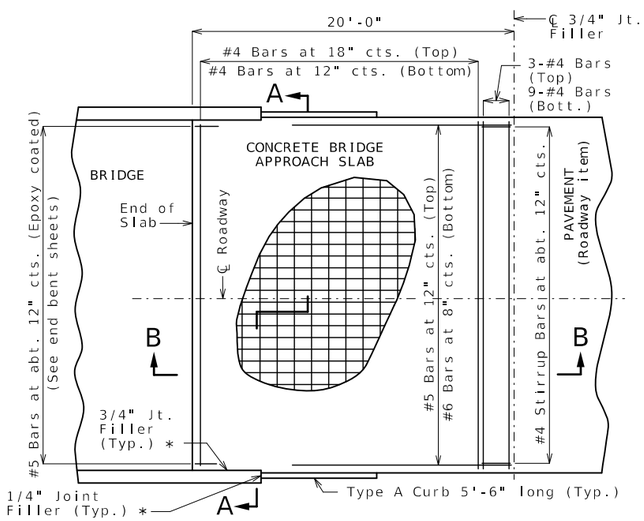

PART PLAN OF SQUARED STRUCTURE
(Skewed structure similar)

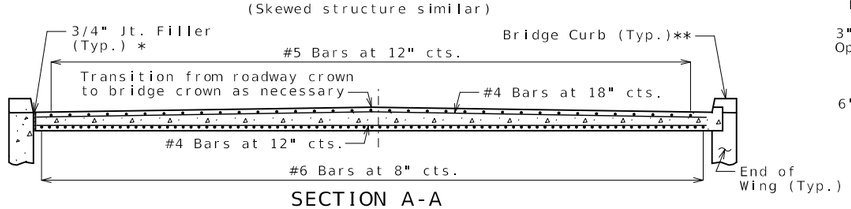

SECTION A-A

With the approval of the engineer, the contractor may crown the bottom of the approach slab to match the crown of the roadway surface.

**Two Tube rail not shown for clarity.

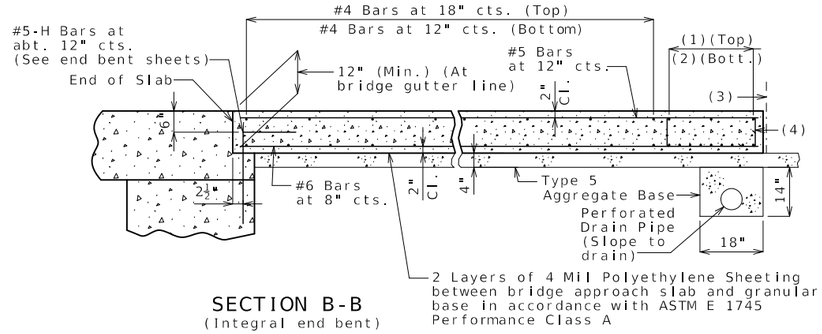

SECTION B-B
(Integral end bent)

(1) 3-#4 Bars

(2) 9-#4 Bars

(3) ℄ 3/4" Jt. Filler

(4) #4 Stirrup Bars at abt. 12" cts.; 2'-0"x 8" (Min.) out to out; Actual length = 5'-10" (Min.); 90° stirrup hook at bottom; Stirrup height (8") and actual length vary due to crown.

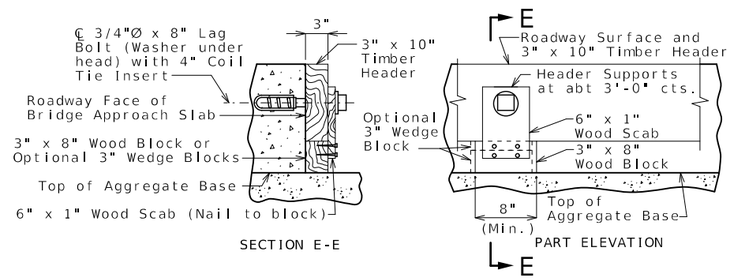

DETAILS OF TIMBER HEADER
Remove timber header when concrete pavement is placed.

General Notes:

Contractor shall have the option to construct slab except as noted.

The contractor shall pour and satisfactorily finish the bridge slab before placing the bridge approach slab.

All concrete for the bridge approach slab shall be in accordance with Sec 503 (f'c = 4,000 psi).

The reinforcing steel in the bridge approach slab shall be epoxy coated Grade 60 with fy = 60,000 psi.

Longitudinal construction joints in bridge approach slab shall be aligned with longitudinal construction joints in bridge slab.

Minimum clearance to reinforcing steel shall be 1 1/2", unless otherwise shown.

The reinforcing steel in the bridge approach slab shall be continuous. The transverse reinforcing steel may be made continuous by providing a minimum lap splice of 23 inches for #4 bars, or by mechanical bar splice.

Mechanical bar splices shall be in accordance with Sec 710.

All joint filler shall be in accordance with Sec 1057 for preformed fiber expansion joint filler except as noted.

Payment for furnishing all materials, labor and excavation necessary to construct the concrete bridge approach slab, including the timber header, underdrain, Type 5 aggregate base, joint filler, and all other appurtenances and incidental work as shown on this sheet, complete in place, will be considered completely covered by the contract unit price for Bridge Approach Slab (Minor) per square yard.

See Missouri Standard Plan 609.00 for details of Type A curb.

Drain pipe may be either 6" diameter corrugated metallic-coated pipe underdrain, 4" diameter corrugated polyvinyl chloride (PVC) drain pipe, or 4" diameter corrugated polyethylene (PE) drain pipe.

* Seal joint between vertical face of approach slab and wing with sealant in accordance with Sec 717 for silicone joint sealant for saw cut and formed joints.

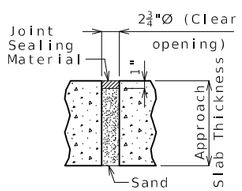

UNDERSEAL ACCESS HOLE DETAIL

(If required)

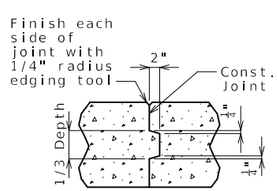

CONSTRUCTION JOINT DETAIL

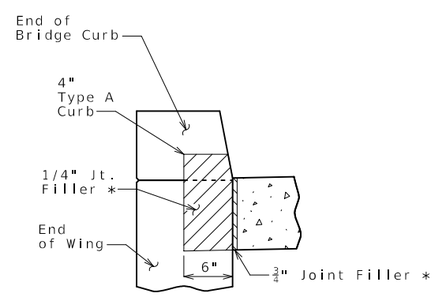

SECTION BETWEEN TYPE A CURB AND BRIDGE CURB

BRIDGE APPROACH SLAB (MINOR)

Detailed Jan. 2025
Checked Feb. 2025

Note: This drawing is not to scale. Follow dimensions.

STATE OF MISSOURI
TED S. KOESTER
NUMBER PE-2013000591
PROFESSIONAL ENGINEER
03/25/2025 9:50:12 AM
TED S. KOESTER - CIVIL
MO-PE-2013000591

DATE PREPARED	3/25/2025
ROUTE B	STATE MO
DISTRICT BR	SHEET NO. 14
COUNTY	PLATTE
JOB NO.	J4S3492
CONTRACT ID.	
PROJECT NO.	
BRIDGE NO.	A9335

DESCRIPTION

DATE

MISSOURI HIGHWAYS AND TRANSPORTATION COMMISSION
105 WEST CAPITOL
JEFFERSON CITY, MO 65102
1-888-ASK-MODOT (1-888-275-6636)

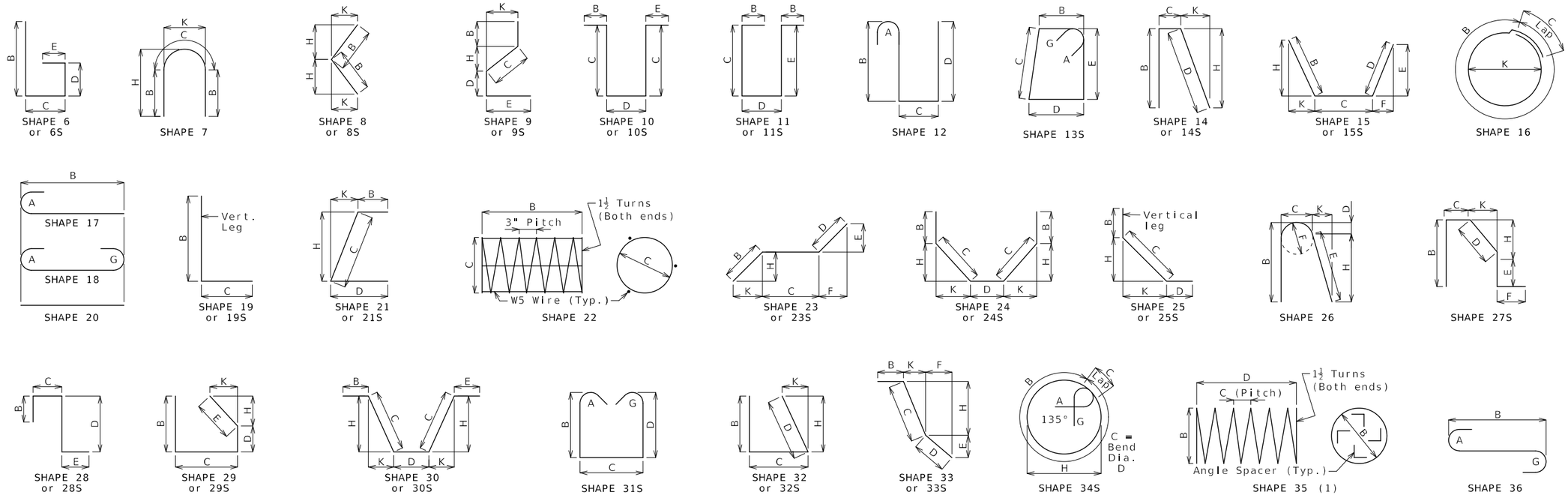

Finished Bend Diameters D and Hook Dimensions

Standard Pin Bend Shapes

Size	Case	D	A or G 90°	A or G 180°	J 180°
#4	1	3"	8"	6"	4"
#5	1	3¾"	10"	7"	5"
#6	1	4½"	12"	8¼"	6"
#7	2	5¼"	14"	9¾"	7"
	3	7"	15"	11½"	8¾"
#8	2	6"	16"	11"	8"
	3	8"	17"	13¼"	10"
#9	1	9½"	19½"	15½"	11¾"
#10	1	10¾"	22"	17½"	13¼"
#11	1	12"	24½"	19½"	14⅞"
#14	1	18¼"	31¼"	27½"	21⅝"
#18	1	24"	41½"	36¼"	28½"

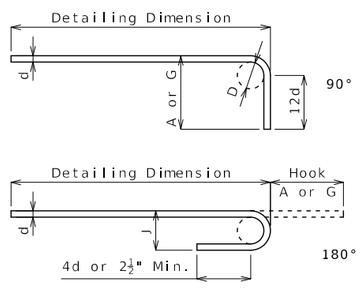

Stirrup Pin Bend Shapes (S)

Size	Case	D	A or G 90°	A or G 135°	A or G 180°	H 135°	J 180°
#4	2	2"	4½"	4½"	5"	2⅞"	3"
	3	3"	5"	5¼"	6"	3"	4"
#5	2	2½"	5¾"	5¾"	5¾"	3⅝"	3¾"
	3	3¾"	6¼"	6½"	7"	3⅞"	5"
#6	1	4½"	12"	7¾"	8¼"	4⅜"	6"

Applicable for all grades of steel.

Case 1 applies to all reinforcement. Case 2 applies to all reinforcement except for galvanized bars. Case 3 applies to galvanized bars only.

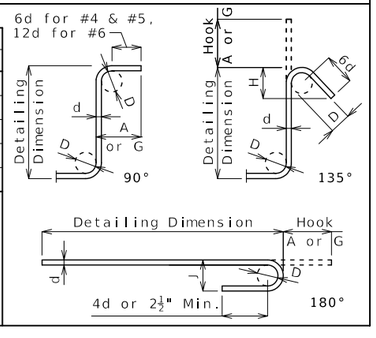

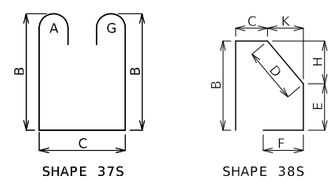

BENDING DIAGRAMS

All dimensions are out to out.

Shapes ending with an S shall be bent in accordance with stirrup pin bend shapes.

Unless otherwise noted, finished bending diameter D is the same for all bends of a shape.

(1) Shall be a deformed or plain spiral bar or wire.

Four angle or channel spacers are required for each column spiral. Spacers are to be placed on inside of spirals. Length and weight of column spirals do not include splices or spacers.

Reinforcing Steel Totals (Pounds)

	Size	Substructure Plain	Substructure Epoxy	Superstructure Slab	Superstructure Barrier	Superstructure Slip Form	Entire Bridge Plain	Entire Bridge Epoxy
By Size	W5	0	0	0	0	0	0	0
	4	802	0	0	0	0	802	0
	5	1,618	0	13,094	3,081	148	1,618	16,323
	6	1,001	0	6,513	0	0	655	6,859
	7	920	0	0	0	0	920	0
	8	987	0	30,788	0	0	987	30,788
	9	0	0	0	0	0	0	0
	10	0	0	0	0	0	0	0
	11	0	0	0	0	0	0	0
	14	0	0	0	0	0	0	0
	18	0	0	0	0	0	0	0
By Type		5,328	0	50,395	3,081	148	4,982	53,970

All superstructure reinforcing steel shall be epoxy coated unless otherwise specified.

BENDING DIAGRAMS AND REINFORCING STEEL TOTALS

Detailed Jan. 2025
Checked Feb. 2025

Note: This drawing is not to scale. Follow dimensions.

STATE OF MISSOURI
TED S. KOESTER
NUMBER PE-2013000591
PROFESSIONAL ENGINEER
03-25-2025 9:50:37 AM
TED S. KOESTER - CIVIL
MO-PE-2013000591

DATE PREPARED	3/25/2025
ROUTE	B
STATE	MO
DISTRICT	BR
SHEET NO.	15
COUNTY	PLATTE
JOB NO.	J4S3492
CONTRACT ID.	
PROJECT NO.	
BRIDGE NO.	A9335

DESCRIPTION

DATE

MISSOURI HIGHWAYS AND TRANSPORTATION COMMISSION
105 WEST CAPITOL
JEFFERSON CITY, MO 65102
1-888-ASK-MODOT (1-888-275-6636)

Bill of Reinforcing Steel

No. Req.	Size/ Mark	Location	Codes C	Codes SH	Codes V	Dimensions B ft in.	C ft in.	D ft in.	E ft in.	F ft in.	H ft in.	K ft in.	Nom. Length ft in.	Actual Length ft in.	Weight lb
		Substructure													
		Int Bent 2													
46	6 D200	DOWEL		20		2 6.00							2 6	2 6	173
8	7 H200	BEAM		18		37 2.00							38 10	38 10	635
4	6 H201	BEAM		20		37 2.00							37 2	37 2	223
8	7 H202	BEAM		18		6 8.25							8 4	8 4	136
8	6 H203	BEAM		10S			12.00	2 6.00					4 6	4 2	50
2	6 H204	ENCASEMENT		18		34 9.75							36 2	36 2	109
10	4 H205	ENCASEMENT		20		34 9.75							34 10	34 10	233
12	4 H206	ENCASEMENT		7		2 2.00	2 7.50				3 0.00	20.00	7	6 11	55
26	5 U200	BEAM		10S			2 5.25	2 6.00					7 5	7 2	194
12	5 U201	BEAM		10S			2 6.25	2 6.00					7 7	7 4	92
56	5 U202	ENCASEMENT		19S		7 3.00	17.50						8 9	8 7	501
24	4 V200	ENCASEMENT		20		6 11.00							6 11	6 11	111
		Int Bent 3													
46	6 D300	DOWEL		20		2 6.00							2 6	2 6	173
8	8 H300	BEAM		18		37 2.00							39	39	833
4	6 H301	BEAM		20		37 2.00							37 2	37 2	223
4	8 H302	BEAM		18		8 3.25							10 1	10 1	108
8	6 H303	BEAM		10S			12.00	2 6.00					4 6	4 2	50
2	7 H304	ENCASEMENT		18		34 9.75							36 6	36 6	149
10	4 H305	ENCASEMENT		20		34 9.75							34 10	34 10	233
12	4 H306	ENCASEMENT		7		2 2.00	2 7.50				3 0.00	20.00	7	6 11	55
4	8 H307	ENCASEMENT		20		4 4.00							4 4	4 4	46
24	5 U300	BEAM		10S			2 5.25	2 6.00					7 5	7 2	179
13	5 U301	BEAM		10S			2 6.25	2 6.00					7 7	7 4	99
60	5 U302	ENCASEMENT		19S		7 6.25	17.50						9	8 10	553
24	4 V300	ENCASEMENT		20		7 2.25							7 2	7 2	115
		Superstructure													
		End Bent 1													
7	6 F100	WING BRACE	E	23S		14.00	7 2.00	14.00	6.00	12.75	6.00	12.75	9 6	9 6	100
7	6 F101	WING BRACE	E	23S		14.00	3 6.00	14.00	12.75	6.00	12.75	6.00	5 10	5 9	60
1	6 F102	WING BRACE	E	19		3 6.50	5 7.00						9 2	9	14
1	6 F103	WING BRACE	E	19		3 5.75	5 11.00						9 5	9 3	14
20	6 H100	BEAM	E	20		37 2.00							37 2	37 2	1,116
8	6 H101	WING	E	18		6 11.25							8 3	8 3	99
16	8 H102	WING	E	20		8 6.00							8 6	8 6	363
32	6 H103	WING	E	20		7 8.00							7 8	7 8	368
26	5 H104	APPROACH NOTCH	E	19S		2 0.00	15.00						3 3	3 2	86
60	5 U100	BEAM	E	10S			3 1.50	3 7.00					9 10	9 7	600
17	5 U101	BEAM	E	10S			3 10.75	3 7.00					11 5	11 2	198
45	6 U102	SLAB/BEAM	E	19S		4 0.00	4 6.50						8 7	8 5	569
47	6 U103	BEAM	E	10S			3 11.50	2 11.25					10 10	10 6	741
47	6 U104	BEAM	E	19S		2 7.00	3 5.00						6	5 10	412
14	6 V100	WING	E	20		5 3.00							5 3	5 3	110
14	6 V101	WING	E	20		5 5.00							5 5	5 5	114
		End Bent 4													
7	6 F400	WING BRACE	E	23S		14.00	7 2.00	14.00	6.00	12.75	6.00	12.75	9 6	9 6	100
7	6 F401	WING BRACE	E	23S		14.00	3 6.00	14.00	12.75	6.00	12.75	6.00	5 10	5 9	60
1	6 F102	WING BRACE	E	19		3 6.50	5 7.00						9 2	9	14
1	6 F103	WING BRACE	E	19		3 5.75	5 11.00						9 5	9 3	14
20	6 H400	BEAM	E	20		37 2.00							37 2	37 2	1,116
8	6 H401	WING	E	18		6 11.25							8 3	8 3	99
8	8 H402	WING	E	20		8 6.00							8 6	8 6	182
16	6 H403	WING	E	20		7 8.00							7 8	7 8	184
26	5 H404	APPROACH NOTCH	E	19S		2 0.00	15.00						3 3	3 2	86
60	5 U400	BEAM	E	10S			3 1.50	3 7.00					9 10	9 7	600
17	5 U401	BEAM	E	10S			3 10.75	3 7.00					11 5	11 2	198

Bill of Reinforcing Steel

No. Req.	Size/ Mark	Location	Codes C	Codes SH	Codes V	Dimensions B ft in.	C ft in.	D ft in.	E ft in.	F ft in.	H ft in.	K ft in.	Nom. Length ft in.	Actual Length ft in.	Weight lb
45	6 U402	BEAM	E	19S		4 0.00	4 6.50						8 7	8 5	569
47	5 U403	BEAM	E	10S			3 11.50	2 11.25					10 10	10 8	523
47	6 U404	BEAM	E	19S		2 7.00	3 5.00						6	5 10	412
14	6 V400	WING	E	20		5 6.25							5 6	5 6	116
14	6 V401	WING	E	20		5 4.00							5 4	5 4	112
		Slab													
50	8 S1	SLAB	E	20		60 0.00							60	60	8,010
50	8 S2	SLAB	E	20		55 0.25							55	55	7,343
44	8 S3	DROP PANEL	E	20		26 5.50							26 6	26 6	3,113
44	8 S4	SLAB	E	20		29 11.50							30	30	3,524
44	8 S5	SLAB	E	20		26 3.00							26 3	26 3	3,084
241	5 S6	SLAB	E	20		37 1.00							37 1	37 1	9,321
116	5 S7	SLAB	E	9S		2 3.00	2 1.00	4 6.00	9.00		2 0.00	7.00	9 7	9 6	1,149
58	5 S8	SLAB	E	20		5 5.50							5 6	5 6	333
88	8 S9	SLAB	E	20		22 0.00							22	22	5,169
		Barrier													
		Type D													
20	5 K1	BARRIER	E	37S		23.00							4 10	4 7	96
22	5 K2	BARRIER	E	37S		23.00							4 10	4 7	105
4	5 K3	BARRIER	E	27S		22.50	9.25	14.50	7.75	12.00	14.25	2.75	5 6	5 2	22
20	5 K4	BARRIER	E	19S	4	2 4.25	10.00						3 2	3 1	
		Incr. = 0.500"				2 6.25	10.00						3 4	3 3	66
20	5 K5	BARRIER	E	38S	4			18.50	9.50	8.25	18.00	4.00	3	2 10	
		Incr. = 0.750"						20.50	9.50	8.25	20.00	4.50	3 2	3 1	62
12	5 K6	BARRIER	E	19S		2 6.75	10.00						3 5	3 3	41
12	5 K7	BARRIER	E	21S			10.00	10.00			2 6.00	6.25	3 6	3 4	42
36	5 K8	BARRIER	E	19S	4	2 8.50	10.00						3 7	3 5	
		Incr. = 0.750"				3 2.50	10.00						4 1	3 11	138
36	5 K9	BARRIER	E	21S	4		10.00	10.00			2 7.75	6.75	3 8	3 6	
		Incr. = 0.750"					10.00	10.00			3 1.75	7.75	4 2	4	141
16	5 K10	BARRIER	E	19S		3 3.00	10.00						4 1	4	67
16	5 K11	BARRIER	E	21S			10.00	10.00			3 2.25	7.75	4 2	4	67
48	5 K12	BARRIER	E	20		10 9.00							10 9	10 9	538
4	5 R1	BARRIER	E	20		32 0.00							32	32	134
8	5 R2	BARRIER	E	20		11 8.00							11 8	11 8	97
4	5 R3	BARRIER	E	20		15 8.00							15 8	15 8	65
4	5 R4	BARRIER	E	20		30 10.75							30 11	30 11	129
4	5 R5	BARRIER	E	20		9 7.00							9 7	9 7	40
4	5 R6	BARRIER	E	20		10 8.50							10 9	10 9	45
220	5 R7	BARRIER	E	9S		12.00	20.50	12.00	20.50		3.25	20.25	5 5	5 2	1,186
		Slip-Form													
8	5 C1	SLIP FORM	E	20		12 0.00							12	12	100
8	5 C2	SLIP FORM	E	20		5 0.00							5 9	5 9	48

Nominal lengths are based on out to out dimensions shown in bending diagrams and are listed to the nearest inch for fabricator's use. Actual lengths are measured along centerline bar to the nearest inch. Weights are based on actual lengths.

For bending diagrams and steel reinforcing totals, see Sheet No. 16.

All bars shall be Grade 60.

Codes: C = Required coatings, where E = Epoxy Coated and G = Galvanized.

SH = Required shape, see bending diagrams.

V = Sets of varied bars and number of bars of each length. Bar dimensions vary in equal increments between dimensions shown on this line and the following line and the actual length dimension shown on this line and the following line vary by the specified increment.

Detailed Jan. 2025
Checked Feb. 2025

BILL OF REINFORCING STEEL

Note: This drawing is not to scale. Follow dimensions.

STATE OF MISSOURI
TED S. KOESTER
NUMBER PE-2013000591
PROFESSIONAL ENGINEER
03-25-2025 9:51:03 AM
TED S. KOESTER - CIVIL
MO-PE-2013000591

DATE PREPARED 3/25/2025

ROUTE	STATE
B	MO
DISTRICT	SHEET NO.
BR	16

COUNTY: PLATTE
JOB NO.: J4S3492
CONTRACT ID.:
PROJECT NO.:
BRIDGE NO.: A9335

DESCRIPTION | DATE

MISSOURI HIGHWAYS AND TRANSPORTATION COMMISSION
105 WEST CAPITOL
JEFFERSON CITY, MO 65102
1-888-ASK-MODOT (1-888-275-6636)

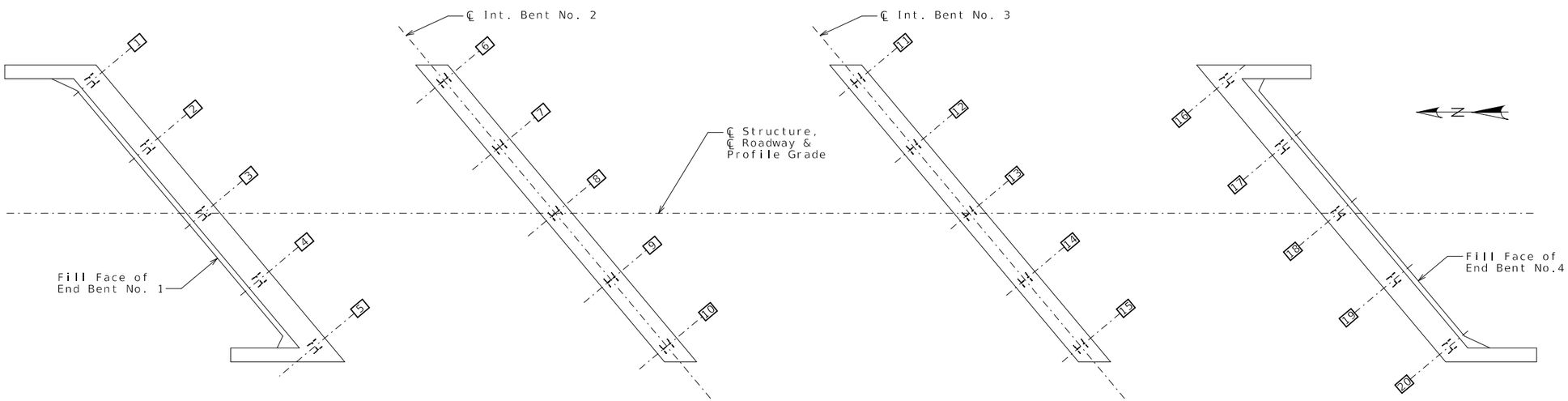

PART PLAN SHOWING PILE NUMBERING FOR RECORDING AS-BUILT PILE DATA

As-Built Pile Data			
Pile No.	Length in Place (ft)	Computed Nominal Axial Compressive Resistance (kips)	Remarks
End Bent No. 1			
1			
2			
3			
4			
5			
Intermediate Bent No. 2			
6			
7			
8			
9			
10			

As-Built Pile Data			
Pile No.	Length in Place (ft)	Computed Nominal Axial Compressive Resistance (kips)	Remarks
Intermediate Bent No. 3			
11			
12			
13			
14			
15			
End Bent No. 4			
16			
17			
18			
19			
20			

Note:
Indicate in remarks column:
A. Pile type and grade
B. Batter
C. Driven to practical refusal

This sheet to be completed by MoDot construction personnel.

AS-BUILT PILE DATA

Detailed Jan. 2025
Checked Feb. 2025

Note: This drawing is not to scale. Follow dimensions.

STATE OF MISSOURI
TED S. KOESTER
NUMBER PE-2013000591
PROFESSIONAL ENGINEER
03/25/2025 9:51:28 AM
TED S. KOESTER - CIVIL
MO-PE-2013000591

DATE PREPARED	3/25/2025
ROUTE	B
STATE	MO
DISTRICT	BR
SHEET NO.	17
COUNTY	PLATTE
JOB NO.	J4S3492
CONTRACT ID.	
PROJECT NO.	
BRIDGE NO.	A9335

DESCRIPTION

DATE

MISSOURI HIGHWAYS AND TRANSPORTATION COMMISSION
105 WEST CAPITOL
JEFFERSON CITY, MO 65102
1-888-ASK-MODOT (1-888-275-6636)

MoDOT-Geotechnical Section
1617 Missouri Blvd
Jefferson City, MO 65109

SUBSURFACE DIAGRAM

PROJECT NAME Bridge Replacement
PROJECT LOCATION Over Grove Creek
CLIENT
PROJECT NUMBER J4S3492

Asphalt
USCS Low Plasticity Clay
Limestone
Water
USCS Well-graded Gravel
USCS Well-graded Sand with Clay
Concrete
USCS Poorly-graded Sand
USCS Clayey Gravel
Shale
No Core
Boulders and cobbles

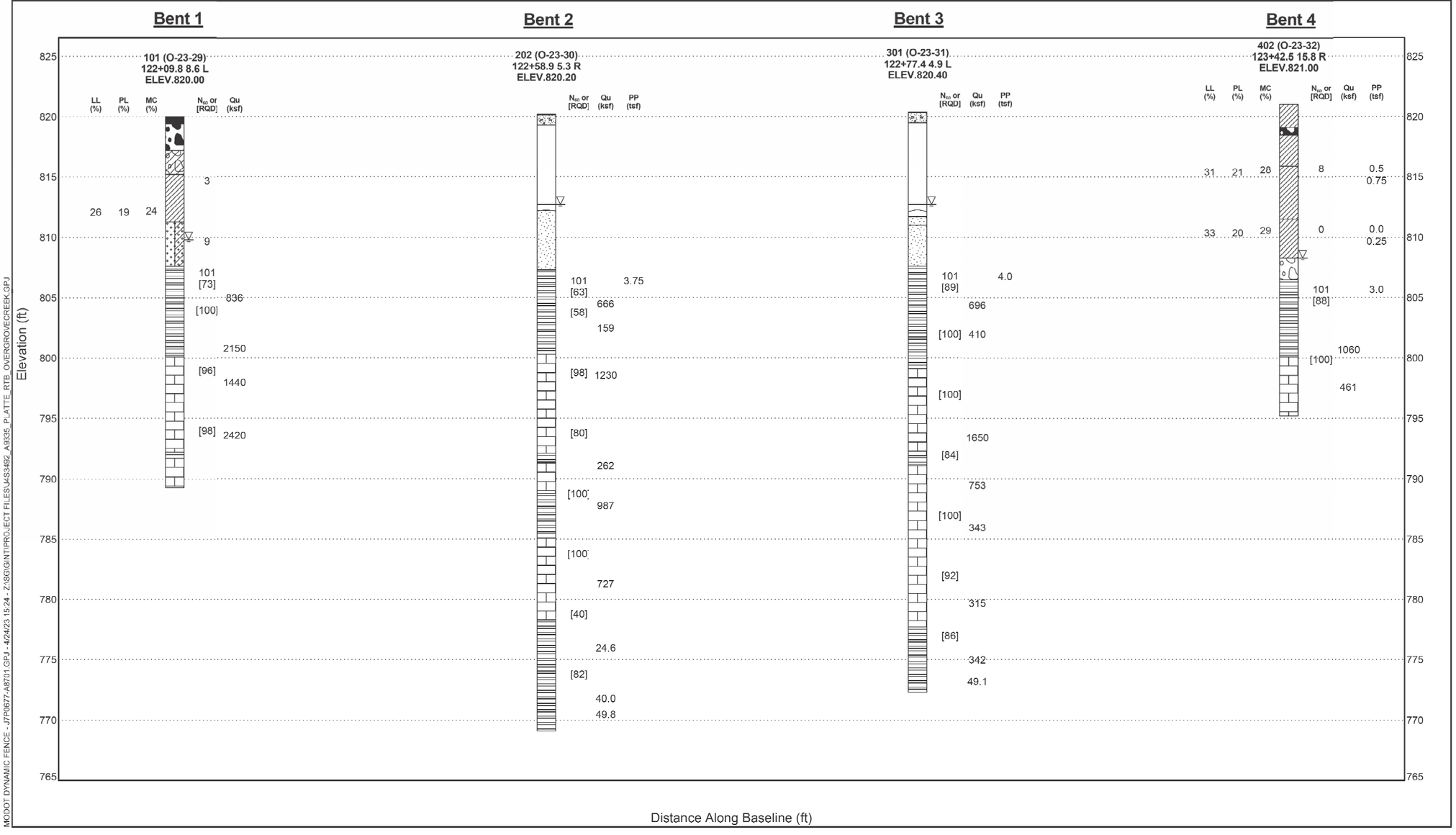

BORING DATA

Note: For locations of borings, see Sheet No. 1.

Note: This drawing is not to scale. Follow dimensions.

Detailed Jan. 2025
Checked Feb. 2025

STATE OF MISSOURI
TED S. KOESTER
NUMBER PE-2013000591
PROFESSIONAL ENGINEER
03-25-2025 9:51:52 AM
TED S. KOESTER - CIVIL
MO-PE-2013000591

DATE PREPARED	3/25/2025
ROUTE	B
STATE	MO
DISTRICT	BR
SHEET NO.	18
COUNTY	PLATTE
JOB NO.	J4S3492
CONTRACT ID.	
PROJECT NO.	
BRIDGE NO.	A9335

DESCRIPTION
DATE

MISSOURI HIGHWAYS AND TRANSPORTATION COMMISSION
105 WEST CAPITOL
JEFFERSON CITY, MO 65102
1-888-ASK-MODOT (1-888-275-6636)

MODOT DYNAMIC FENCE - JTP0677-A8701.GPJ - 4/24/23 15:24 - Z:\SGI\GINT\PROJECT FILES\J4S3492_A9335_PLATTE_RTB_OVERGROVECREEK.GPJ