MISSOURI HIGHWAYS AND TRANSPORTATION COMMISSION

PLANS FOR PROPOSED STATE HIGHWAY

DUNKLIN/PEMISCOT COUNTY

DESIGN DESIGNATION

MO 164 E OF RTE V
- A.A.D.T. - 2025 = 810
- A.A.D.T. - 2035 = 851
- D.H.V. = 7.23%
- T = 10.85%
- V = 55 M.P.H.
- D = 50%

MO 164 S OF RTE Y
- A.A.D.T. - 2025 = 1354
- A.A.D.T. - 2035 = 1424
- D.H.V. = 10.82%
- T = 12.26%
- V = 55 M.P.H.
- D = 50%

MO 164 E OF RTE TT
- A.A.D.T. - 2025 = 1786
- A.A.D.T. - 2035 = 2073
- D.H.V. = 9.68%
- T = 15.96%
- V = 55 M.P.H.
- D = 50%

MO 164 E OF RTE NN
- A.A.D.T. - 2025 = 1463
- A.A.D.T. - 2035 = 1537
- D.H.V. = 10.53%
- T = 10.65%
- V = 55 M.P.H.
- D = 50%

FUNCTIONAL CLASSIFICATION-RURAL MINOR ARTERIAL

NO NEW RIGHT OF WAY

CONVENTIONAL SYMBOLS
(USED IN PLANS)

	EXISTING	NEW
BUILDINGS AND STRUCTURES		
GUARD RAIL		
GUARD CABLE		
CONCRETE RIGHT-OF-WAY MARKER		
STEEL RIGHT-OF-WAY MARKER		
LOCATION SURVEY MARKER		
UTILITIES		
FIBER OPTICS	—FO—	—FO—
OVERHEAD CABLE TV	-OTV-	-OTV-
UNDERGROUND CABLE TV	-UTV-	-UTV-
OVERHEAD TELEPHONE	—OT—	—OT—
UNDERGROUND TELEPHONE	—UT—	—UT—
OVERHEAD POWER	—OE—	—OE—
UNDERGROUND POWER	—UE—	—UE—
SANITARY SEWER	—S—	—S—
STORM SEWER	—SS—	—SS—
GAS	—G—	—G—
WATER	—W—	—W—
MANHOLE	SAN	
FIRE HYDRANT	HYD	
WATER VALVE	WV	
WATER METER	WM	
DROP INLET		
DITCH BLOCK		
GROUND MOUNTED SIGN	SIGN	
LIGHT POLE		
H-FRAME POWER POLE		
TELEPHONE PEDESTAL	PED	
FENCE		
CHAIN LINK	—V—	
WOVEN WIRE	—X—	
GATE POST		
BENCHMARK	BM	

NOTE: DASHED OR OPEN SYMBOLS INDICATE EXISTING FEATURES

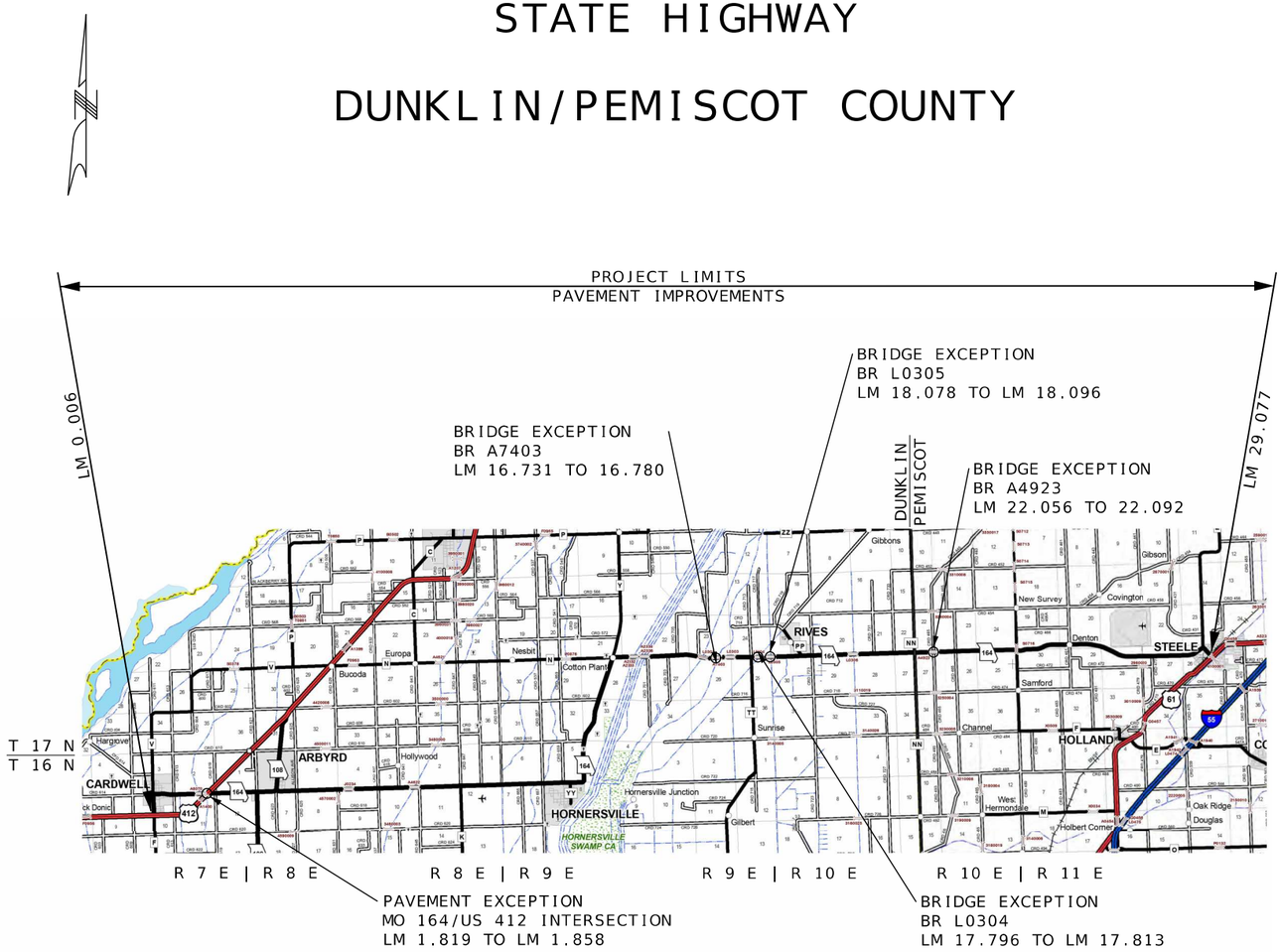

THE EXISTENCE AND APPROXIMATE LOCATION OF UTILITY FACILITIES KNOWN TO EXIST, AS SHOWN ON THE PLANS, ARE BASED ON THE BEST INFORMATION AVAILABLE TO THE COMMISSION AT THIS TIME. THIS INFORMATION IS PROVIDED BY THE COMMISSION "AS-IS" AND THE COMMISSION EXPRESSLY DISCLAIMS ANY REPRESENTATION OR WARRANTY AS TO THE COMPLETENESS, ACCURACY, OR SUITABILITY OF THE INFORMATION FOR ANY USE. RELIANCE UPON THIS INFORMATION IS DONE AT THE RISK AND PERIL OF THE USER, AND THE COMMISSION SHALL NOT BE LIABLE FOR ANY DAMAGES THAT MAY ARISE FROM ANY ERROR IN THE INFORMATION. IT IS, THEREFORE, THE RESPONSIBILITY OF THE CONTRACTOR TO VERIFY THE EXISTENCE, LOCATION AND STATUS OF ANY FACILITY. SUCH VERIFICATION INCLUDES DIRECT CONTACT WITH THE LISTED UTILITIES.

INDEX OF SHEETS

LENGTH OF PROJECT

BEGINNING OF PROJECT	LM 0.006
END OF PROJECT	LM 29.077
APPARENT LENGTH	153494.88 FT

EQUATIONS AND EXCEPTIONS:

PAVEMENT EXCEPTION:

LM 1.819 TO LM 1.858	-205.92

BRIDGE EXCEPTION:

BR A7403: LM 16.731 TO LM 16.780	-258.72
BR L0304: LM 17.796 TO LM 17.813	- 89.76
BR L0305: LM 18.078 TO LM 18.096	- 95.04
BR A4923: LM 22.056 TO LM 22.092	-190.08

TOTAL CORRECTIONS	-839.52 FT
NET LENGTH OF PROJECT	152655.36 FT
STATE LENGTH	28.912 MI
FOR INFORMATION ONLY ESTIMATED DISTURBED ACRES	70.5 AC

STATE OF MISSOURI
DONNA RENE PHILPOT
NUMBER PE-2019000205
PROFESSIONAL ENGINEER
Donna Rene Philpot
DONNA RENE PHILPOT - CIVIL
MO-PE-2019000205

DATE PREPARED	
4/1/2025	
ROUTE 164	STATE MO
DISTRICT SE	SHEET NO. 1
COUNTY DUNKLIN/PEMISCOT	
JOB NO. J9S3780	
CONTRACT ID.	
PROJECT NO.	
BRIDGE NO.	

DATE	DESCRIPTION

MISSOURI HIGHWAYS AND TRANSPORTATION COMMISSION
105 WEST CAPITOL
JEFFERSON CITY, MO 65102
1-888-ASK-MODOT (1-888-275-6636)

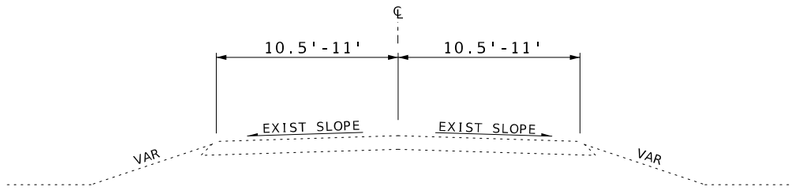

EXISTING TYPICAL SECTION

RTE 164
LM 0.006 TO LM 0.111
LM 0.273 TO LM 1.658
LM 1.704 TO LM 6.716
LM 7.120 TO LM 8.967
LM 9.158 TO LM 9.850
LM 10.119 TO LM 14.690
LM 15.045 TO LM 16.731
LM 16.780 TO LM 21.970
LM 22.216 TO LM 25.650
LM 25.834 TO LM 26.353
LM 26.554 TO LM 28.817

PAVEMENT EXCEPTION:
LM 1.819 TO 1.858

BRIDGE EXCEPTION:
A7403: LM 16.731 TO LM 16.780
L0304: LM 17.796 TO LM 17.813
L0305: LM 18.078 TO LM 18.096

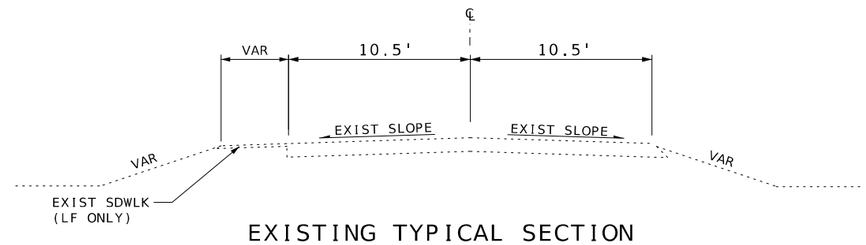

EXISTING TYPICAL SECTION

RTE 164
LM 0.111 TO LM 0.273

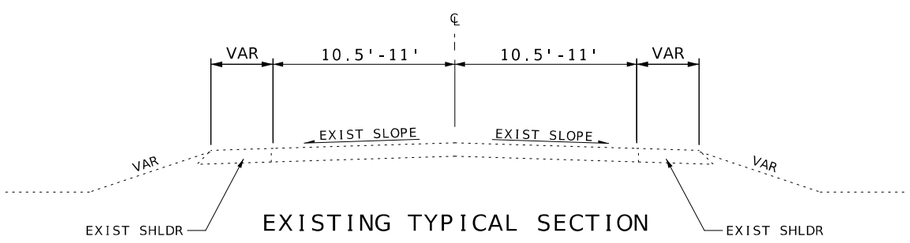

EXISTING TYPICAL SECTION

RTE 164
LM 1.658 TO LM 1.704
LM 6.716 TO LM 7.120
LM 8.967 TO LM 9.158
LM 9.850 TO LM 10.119
LM 14.690 TO LM 15.045
LM 16.731 TO LM 16.780
LM 21.970 TO LM 22.056
LM 22.092 TO LM 22.216
LM 25.650 TO LM 25.834
LM 26.353 TO LM 26.554

BRIDGE EXCEPTION:
A4923: LM 22.056 TO LM 22.092

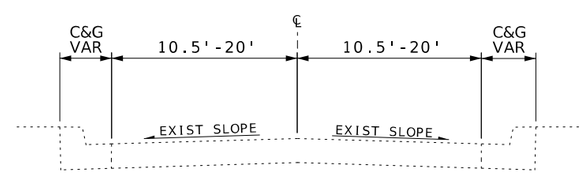

EXISTING TYPICAL SECTION

RTE 164
LM 28.817 TO LM 29.077

NOTES:

ANY EXISTING PAVEMENT SHOWN IS
FOR INFORMATIONAL PURPOSES ONLY.
LAYERS MAY VARY FROM TYPICAL SECTIONS.

NOT TO SCALE. FOLLOW DIMENSIONS.

STATE OF MISSOURI
DONNA RENE PHILPOT
NUMBER
PE-2019000205
PROFESSIONAL ENGINEER
Donna Rene Philpot
VERIFIED TEXT-DSTM
DONNA RENE PHILPOT • CIVIL
MO-PE-2019000205

DATE PREPARED	2/26/2025
ROUTE	164
STATE	MO
DISTRICT	SE
SHEET NO.	2
COUNTY	DUNKLIN/PEMISCOT
JOB NO.	J9S3780
CONTRACT ID.	
PROJECT NO.	
BRIDGE NO.	

DATE	DESCRIPTION

MISSOURI HIGHWAYS AND TRANSPORTATION COMMISSION
105 WEST CAPITOL
JEFFERSON CITY, MO 65102
1-888-ASK-MODOT (1-888-275-6636)

TYPICAL SECTION
SHEET 1 OF 2

OPTIONAL SHOULDER DETAIL

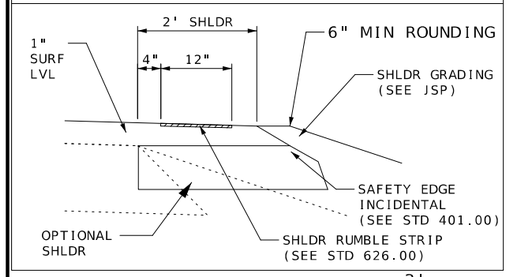

OPTIONAL SHLDR
4" PMBB PG64-22 OR 4" PCC

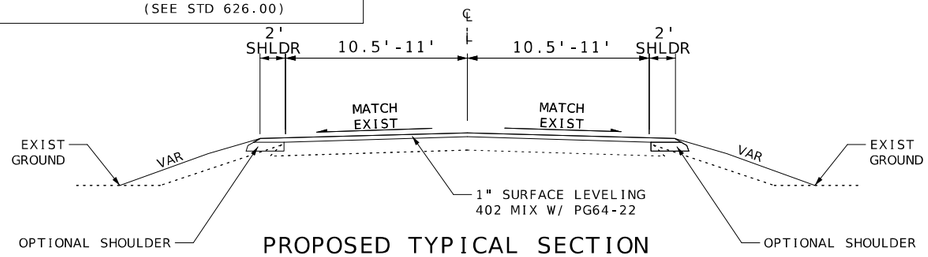

PROPOSED TYPICAL SECTION

RTE 164

LM 0.006 TO LM 0.111
LM 0.273 TO LM 1.658
LM 1.704 TO LM 1.819
LM 3.510 TO LM 6.716
LM 7.120 TO LM 8.967
LM 9.158 TO LM 9.850
LM 10.119 TO LM 14.690
LM 15.045 TO LM 16.731
LM 16.780 TO LM 21.970
LM 22.216 TO LM 25.650
LM 25.834 TO LM 26.353
LM 26.554 TO LM 28.817

PAVEMENT EXCEPTION:
LM 1.819 TO 1.858

BRIDGE EXCEPTION:
A7403: LM 16.731 TO LM 16.780
L0304: LM 17.796 TO LM 17.813
L0305: LM 18.078 TO LM 18.096

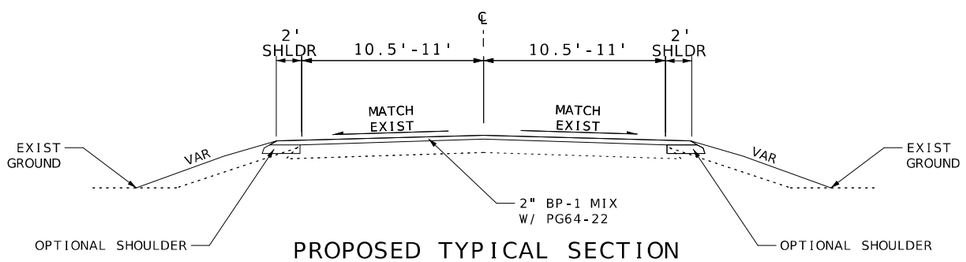

PROPOSED TYPICAL SECTION

RTE 164

LM 1.858 TO LM 3.510

NOTES:

PROVIDE CLEAN STRAIGHT EDGE BETWEEN EXIST PAVT & OPTIONAL SHLDR AT NO DIRECT PAY. METHOD SHALL BE APPROVED BY THE ENGINEER PRIOR TO BEGINNING OPERATION.

ANY SAWCUTS REQUIRED FOR INSTALLATION SHALL BE AT NO DIRECT PAY.

INSTALL SAFETY EDGE ON ALL SHLDR PAVT WIDTH ≤ 4'.

SHLDR GRADING SLOPES SHALLBE 3:1 OR FLATTER. SELECT AREAS MAY BE STEEPENED UP TO 2:1 AS DIRECTED BY THE ENGINEER.

FINAL SURFACE SHALL BE A MONOLITHIC LIFT WITH TRAVELWAY LANE FOR SHLDRS ≤ 4'.

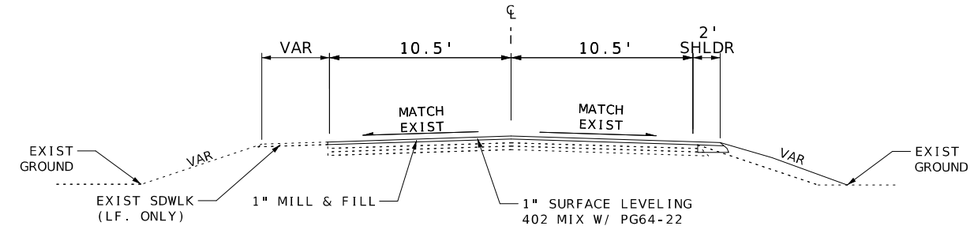

PROPOSED TYPICAL SECTION

RTE 164

LM 0.111 TO LM 0.273

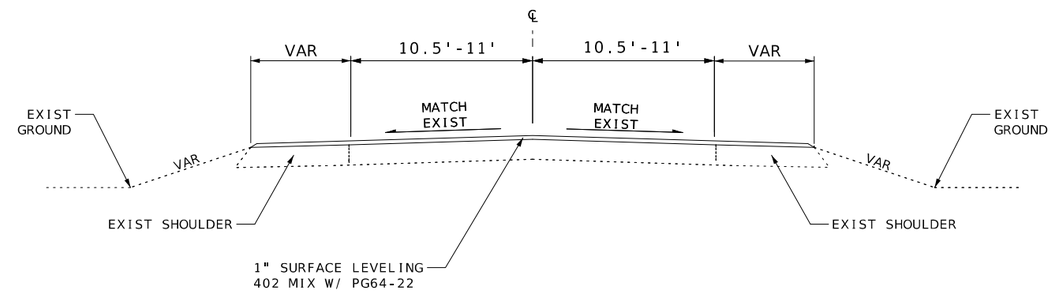

PROPOSED TYPICAL SECTION

RTE 164

LM 1.658 TO LM 1.704
LM 6.716 TO LM 7.120
LM 8.967 TO LM 9.158
LM 9.850 TO LM 10.119
LM 14.690 TO LM 15.045
LM 21.970 TO LM 22.056
LM 22.092 TO LM 22.216
LM 25.650 TO LM 25.834
LM 26.353 TO LM 26.554

BRIDGE EXCEPTION:
A4923: LM 22.056 TO LM 22.092

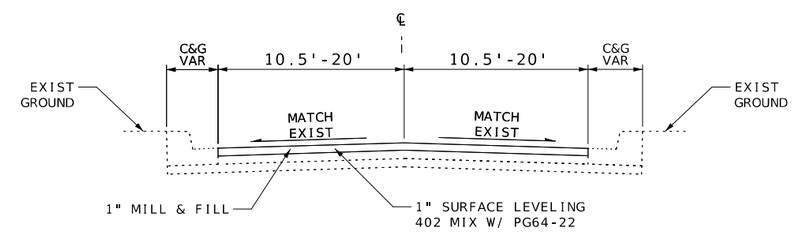

PROPOSED TYPICAL SECTION

RTE 164

LM 28.817 TO LM 29.077

NOT TO SCALE. FOLLOW DIMENSIONS.

STATE OF MISSOURI
DONNA RENE PHILPOT
NUMBER PE-2019000205
PROFESSIONAL ENGINEER

Donna Rene Philpot
LICENSED VERIFIER
DONNA RENE PHILPOT - CIVIL
MO-PE-2019000205

DATE PREPARED	2/26/2025
ROUTE 164	STATE MO
DISTRICT SE	SHEET NO. 2
COUNTY	DUNKLIN/PEMISCOT
JOB NO.	J9S3780
CONTRACT ID.	
PROJECT NO.	
BRIDGE NO.	

DESCRIPTION	DATE

MISSOURI HIGHWAYS AND TRANSPORTATION COMMISSION

105 WEST CAPITOL
JEFFERSON CITY, MO 65102
1-888-ASK-MODOT (1-888-275-6636)

TYPICAL SECTION
SHEET 2 OF 2

REMOVAL OF IMPROVEMENTS- LUMP SUM ONE

LM	LM	LOC	DESCRIPTION	REMARKS
0.006	29.077	LT & RT	SIGNS/ASSEMBLIES	247 ASSEMBLIES
1.640	1.722	LT & RT	DEPART GUARDRAIL	BR A6070
1.645	1.712	LT & RT	APPROACH GUARDRAIL	BR A6070
6.861	6.976	LT & RT	APPROACH GUARDRAIL	BR A4622
9.033	9.078	LT & RT	CULV A4699 GUARDRAIL	
9.954	10.021	LT & RT	CULV A4700 GUARDRAIL	
13.709	13.714	℄	22' X 25' PVMT REMOVAL	AT PIPE LOCATION
13.841	13.846	℄	22' X 25' PVMT REMOVAL	AT PIPE LOCATION
14.043	14.048	℄	22' X 25' PVMT REMOVAL	AT PIPE LOCATION
14.203	LT	℄	WEST ISLAND	RT N ISLAND
14.209	LT	℄	EAST ISLAND	RT Y ISLAND
14.655	14.682	RT	APPROACH GUARDRAIL	BR A2332
14.657	14.666	LT	DEPART GUARDRAIL	BR A2332
15.040	15.064	RT	DEPART GUARDRAIL	BR A2336
15.045	15.068	LT	APPROACH GUARDRAIL	BR A2336
16.406	16.442	LT & RT	APPROACH GUARDRAIL	BR L0301
16.405	16.440	LT & RT	DEPART GUARDRAIL	BR L0301
16.723	16.778	LT & RT	APPROACH GUARDRAIL	BR A7403
16.727	16.772	LT & RT	DEPART GUARDRAIL	BR A7403
20.054	20.126	LT & RT	APPROACH GUARDRAIL	BR A4923
20.055	20.080	LT	DEPART GUARDRAIL	BR A4923

LOCATIONS AND QUANTITIES ARE APPROXIMATE FOLLOW SEC 202.30

OPTIONAL SHOULDER AND GRADING

LM	LM	LOC	LENGTH FT	WIDTH FT	4" OPT SHLDR BASE PG 64-22 2.067 TON/CY CY	TON	SHOULDER GRADING 100 FT	REMARKS
0.006	0.111	LT & RT	554.40	4	30.14	62.30	11.1	
0.111	0.273	RT	855.36	2	25.37	52.44	8.6	
0.273	1.658	LT & RT	7312.80	4	397.48	821.60	146.3	
1.704	1.819	LT & RT	607.20	4	33.01	68.24	12.1	
1.858	3.510	LT & RT	8722.56	4	485.53	1003.60	174.5	
3.510	5.290	LT & RT	9398.40	4	510.83	1055.89	188.0	
5.304	6.716	LT & RT	7455.36	4	405.23	837.62	149.1	
6.716	6.778	LT	327.36	2	9.71	20.08	3.3	
7.040	7.120	LT	422.40	2	12.53	25.90	4.2	
7.120	8.967	LT & RT	9752.16	4	530.06	1095.64	195.0	
9.158	9.850	LT & RT	3653.76	4	198.59	410.49	73.1	
10.119	14.645	LT & RT	23897.28	4	1298.89	2684.81	477.9	
14.645	14.683	LT & RT	200.00	16	40.50	83.72	2.0	
15.045	15.083	LT & RT	200.00	16	40.50	83.72	2.0	
15.083	16.396	LT & RT	6932.64	4	376.81	778.87	138.7	
16.424	16.706	LT & RT	1488.96	4	80.93	167.29	29.8	
16.794	17.056	LT & RT	1383.36	4	75.19	155.42	27.7	
17.116	17.760	LT & RT	3400.32	4	184.82	382.03	68.0	
17.830	18.054	LT & RT	1182.72	4	64.29	132.89	23.7	
18.120	20.057	LT & RT	10227.36	4	555.88	1149.01	204.5	
20.126	21.590	LT & RT	7729.92	4	420.14	868.43	154.6	RTE NN
21.610	21.982	LT & RT	1964.16	4	106.76	220.68	39.3	
21.982	22.020	LT	200.64	2	5.95	12.30	2.0	
22.180	22.220	LT	211.20	2	6.26	12.94	2.1	
22.220	24.110	LT & RT	9979.20	4	542.40	1121.15	199.6	RTE C/F
24.120	25.654	LT & RT	8099.52	4	440.24	909.98	162.0	
25.834	26.353	LT & RT	2740.32	4	148.94	307.86	54.8	
26.554	28.788	LT & RT	11795.52	4	641.12	1325.20	235.9	
					TOTAL	15850.1	2790	

SAFETY EDGE QUANTITIES ARE INCLUDED WITH OPTIONAL SHLDR BASE QUANTITIES.

PLANT MIX BIT BASE AND TYPE 5 AGGREGATE

LM	LOC	LENGTH FT	WIDTH FT	8" PMBB PG 64-22 2.067 TON/CY CY	TON	TACK 0.8 GAL/SY GAL	6" TYPE 5 AGGR SY	REMARKS
13.709	℄	25.00	22	13.58	28.07	4.9	61.2	AT PIPE LOCATION
13.841	℄	25.00	22	13.58	28.07	4.9	61.2	AT PIPE LOCATION
14.043	℄	25.00	22	13.58	28.07	4.9	61.2	AT PIPE LOCATION
14.219	℄	80.89	VAR	9.10	18.81	32.8	41.0	RTE Y WIDENING
				TOTAL	103.1	48	225	

LOG MI ARE APPROXIMATE. EXACT LOCATIONS TO BE DETERMINED BY ENGINEER.

COLDMILLING

LM	LM	LOC	LENGTH FT	WIDTH FT	DEPTH IN	COLDMILLING DEPTH TRANSITIONS SQ YD	COLDMILLING = 3" SQ YD	REMARKS
0.006	0.530	℄	2766.72	VAR	1.0		8951.0	BEGIN PROJECT TO RTE V INTERSECTION
0.530	0.539	℄	50.00	21.00	VAR	116.7		RT V (EAST)
1.649	1.658	℄	50.00	21.00	VAR	116.7		BR A6070 (WEST)
1.658	1.704	℄	242.88	39.00	1.0		1052.5	BR A6070
1.704	1.713	℄	50.00	21.00	VAR	116.7		BR A6070 (EAST)
1.810	1.819	℄	50.00	VAR	VAR	127.0		US 412 (WEST)
1.858	1.867	℄	100.00	VAR	VAR	137.0		US 412 (EAST)
5.276	5.285	℄	50.00	21.00	VAR	116.7		BR J0234 (WEST)
5.285	5.304	℄	100.32	20.00	1.00		222.9	BR J0234
5.304	5.313	℄	50.00	21.00	VAR	116.7		BR J0234 (EAST)
6.872	6.881	℄	50.00	37.00	VAR	205.6		BR A4622 (WEST)
6.881	6.910	℄	153.12	37.00	1.0		629.5	BR A4622
6.910	6.919	℄	50.00	37.00	VAR	205.6		BR A4622 (EAST)
14.183	14.192	℄	50.00	VAR	VAR	127.0		MO 164 & RTE N/RTE Y INTERSECTION (SOUTH)
14.192	14.219	℄	VAR	VAR	1.0		1172.4	RTE N & RTE Y INTERSECTION
14.219	14.228	℄	50.00	VAR	VAR	128.0		MO 164 & RTE N/RTE Y INTERSECTION (EAST)
14.636	14.645	℄	50.00	22.00	VAR	122.2		BR A2332 DEPTH TRANSITION
14.645	14.683	℄	200.00	22.00	1.0		488.9	200' FROM BR A2332
14.683	15.045	℄	1911.36	38.00	1.0		8070.2	BR A2332 TO BR A2336
15.045	15.083	℄	200.00	22.00	1.0		488.9	200' FROM BR A2336
15.083	15.092	℄	50.00	22.00	VAR	122.2		BR A2336 DEPTH TRANSITION
16.387	16.396	℄	50.00	22.00	VAR	122.2		BR L0301 (WEST)
16.396	16.414	℄	95.00	22.00	1.0		232.2	BR L0301
16.414	16.423	℄	50.00	22.00	VAR	122.2		BR L0301 (EAST)
16.722	16.731	℄	50.00	32.00	VAR	177.8		BR A7403 (WEST)
16.780	16.789	℄	50.00	32.00	VAR	177.8		BR A7403 (EAST)
17.060	17.069	℄	50.00	22.00	VAR	122.2		BR L0303 (WEST)
17.069	17.084	℄	77.00	22.00	1.0		188.2	BR L0303
17.084	17.093	℄	50.00	22.00	VAR	122.2		BR L0303 (EAST)
17.787	17.796	℄	50.00	22.00	VAR	122.2		BR L0304 (WEST)
17.813	17.822	℄	50.00	22.00	VAR	122.2		BR L0304 (EAST)
18.069	18.078	℄	50.00	22.00	VAR	122.2		BR L0305 (WEST)
18.096	18.105	℄	50.00	22.00	VAR	122.2		BR L0305 (EAST)
20.057	20.066	℄	50.00	22.00	VAR	122.2		BR L0306 (WEST)
20.066	20.086	℄	107.00	22.00	1.0	261.6	261.6	BR L0306
20.086	20.095	℄	50.00	22.00	VAR	122.2		BR L0306 (EAST)
22.047	22.056	℄	50.00	35.00	VAR	194.4		BR A4923 (WEST)
22.092	22.101	℄	50.00	35.00	VAR	194.4		BR A4923 (EAST)
28.809	29.030	℄	1166.88	VAR	1.0		4574.5	MILL/FILL START AT C&G TO RR
29.032	29.077	℄	237.60	40.00	1.0		1019.0	MILL/FILL RR TO END OF PROJECT
2.990		RT	100.00	VAR	VAR	299.2		MO 164 ONTO MO 108 (WEST)
3.040		RT	100.00	VAR	VAR	299.3		MO 108 (WEST) ONTO MO 164
3.510		LT	100.00	24.00	VAR	266.7		
8.030		RT	50.00	22.00	VAR	122.2		RTE K
10.700		RT	50.00	VAR	VAR	186.0		MO 164 ONTO RT YY (WEST)
10.760		RT	50.00	VAR	VAR	178.0		RT YY ONTO MO 164 (EAST)
17.590		RT	50.00	29.00	VAR	161.1		RTE TT
18.836		LT	10.00	VAR	VAR	156.5		RTE PP
28.800		LT	50.00	22.00	VAR	122.2		RTE Z
0.006	29.077	LT & RT	2610.00	VAR	VAR	2560.0		PRIVATE & COMM ENTRANCES (PAVED)
0.006	29.077	LT & RT	10.00	VAR	VAR	292.2		COUNTY RD & CITY STREETS (PAVED)
0.006	29.077	LT & RT	VAR	VAR	VAR			ENTRANCES AS DIRECTED BY ENGINEER
					TOTAL	8630	27352	

LOG MILES ARE APPROXIMATE. EXACT LOCATIONS TO BE DETERMINED BY ENGINEER.

LINEAR GRADING CLASS I

LM	LOC	LENGTH FT	CLASS I LINEAR GRADING STA	REMARKS
14.219	LT	80.90	0.90	RTE Y WIDENING
		TOTAL	0.9	

STATE OF MISSOURI
DONNA RENE PHILPOT
NUMBER PE-2019000205
PROFESSIONAL ENGINEER

Donna Rene Philpot
Digitally signed by DONNA RENE PHILPOT - CIVIL
MO-PE-2019000205

DATE PREPARED
2/27/2025

ROUTE	STATE
164	MO
DISTRICT	SHEET NO.
SE	3

COUNTY
DUNKLIN/PEMISCOT

JOB NO.
J9S3780

CONTRACT ID.

PROJECT NO.

BRIDGE NO.

DATE	DESCRIPTION

MISSOURI HIGHWAYS AND TRANSPORTATION COMMISSION

105 WEST CAPITOL
JEFFERSON CITY, MO 65102
1-888-ASK-MODOT (1-888-275-6636)

SUMMARY OF QUANTITIES
SHEET 1 OF 4

1" SURFACE LEVEL PG 64-22

LM	LM	LOC	LENGTH FT	WIDTH FT	AREA SQ FT	DEPTH IN	SURFACE LEVEL PG 64-22 2.034 TONS/CY CY	TON	TACK 0.08 GAL/SY GAL	REMARKS
0.006	0.111	℄	554.40	25.00	554.4	1.0	1.71	3.48	4.9	2-10.5' LANES AND 2-2' SHOULDERS
0.111	0.273	RT	855.36	23.00	19673.3	1.0	60.72	123.50	174.9	2*10.5' LANES AND 1-2' SHOULDER
0.273	0.491	℄	1151.04	25.00	28776.0	1.0	88.81	180.64	255.8	2-10.5' LANES AND 2-2' SHOULDERS
0.491	0.530	℄	205.92	VAR	16383.8	1.0	50.57	102.86	145.6	RTE V INTERSECTION
0.530	1.658	℄	5955.84	25.00	148896.0	1.0	459.56	934.75	1323.5	2-10.5' LANES AND 2-2' SHLDR TO BR A6070
1.658	1.704	℄	242.88	39.00	9472.3	1.0	29.24	59.47	84.2	BR A6070
1.704	1.819	℄	607.20	25.00	15180.0	1.0	46.85	95.29	134.9	2-10.5' LANES AND 2-2' SHLDR TO US 412
3.510	5.285	℄	9372.00	25.00	234300.0	1.0	723.15	1470.89	2082.7	2-10.5' LANES AND 2-2' SHLDRS TO BR J0234
5.285	5.304	℄	100.32	20.00	2006.4	1.0	6.19	12.59	17.8	BR J0234
5.304	6.716	℄	7455.36	25.00	186384.0	1.0	575.26	1170.08	1656.7	2-10.5' LANES AND 2-2' SHLDRS TO BR A4622
6.716	7.120	LT & RT	VAR	VAR	73465.1	1.0	226.74	461.19	653.0	BR A4622
7.120	8.967	℄	9752.16	25.00	243804.0	1.0	752.48	1530.54	2167.1	2-10.5' LANES AND 2-2' SHLDRS TO CULVERT A4699
8.967	9.158	LT & RT	1008.48	40.00	40339.2	1.0	124.50	253.23	358.6	2-10.5' LANES AND EXISTING SHOULDERS AT CULVERT A4699
9.158	9.850	℄	3653.76	25.00	91344.0	1.0	281.93	573.45	811.9	2-10.5' LANES AND 2-2' SHOULDERS TO CULVERT A4700
9.850	10.119	LT & RT	1420.32	40.00	56812.8	1.0	175.35	356.66	505.0	2-10.5' LANES AND EXISTING SHOULDERS AT CULVERT A4700
10.119	14.192	℄	21505.44	25.00	537636.0	1.0	1659.37	3375.16	4779.0	2-10.5' LANES AND 2-2' SHOULDERS
14.192	14.219	LT & RT	VAR	VAR	8407.0	1.0	25.95	52.78	74.7	RTE Y/RTE N
14.219	14.645	℄	2249.28	26.00	58481.3	1.0	180.50	367.14	519.8	2-11' LANES AND 2-2' SHOULDERS
14.645	14.683	℄	200.00	38.00	7600.0	1.0	23.46	47.72	67.6	2-11' LANES AND 2-8' SHOULDERS TO BR A2332
14.683	15.045	℄	1911.36	38.00	72631.7	1.0	224.17	455.96	645.6	BR A2332, BR A2333, BR A2334, AND BR A2336
15.045	15.083	℄	200.00	38.00	7600.0	1.0	23.46	47.72	67.6	2-11' LANES AND 2-8' SHOULDERS
15.083	16.396	℄	6932.64	26.00	180248.6	1.0	556.32	1131.55	1602.2	2-11' LANES AND 2-2' SHOULDERS TO BR L0301
16.396	16.414	℄	95.04	22.00	2090.9	1.0	6.45	13.12	18.6	BR L0301
16.414	16.731	℄	1673.76	26.00	43517.8	1.0	134.31	273.19	386.8	2-11' LANES AND 2-2' SHLDRS TO BR A7403
16.780	17.069	℄	1525.92	26.00	39673.9	1.0	122.45	249.06	352.7	2-11' LANES AND 2-2' SHLDRS TO BR L0303
17.069	17.084	℄	79.20	22.00	1742.4	1.0	5.38	10.94	15.5	BR L0303
17.084	17.796	℄	3759.36	26.00	97743.4	1.0	301.68	613.62	868.8	2-11' LANES AND 2-2' SHLDRS TO BR L0304
17.813	18.078	℄	1399.20	26.00	36379.2	1.0	112.28	228.38	323.4	2-11' LANES AND 2-2' SHLDRS TO BR L0305
18.096	20.066	℄	10401.60	26.00	270441.6	1.0	834.70	1697.78	2403.9	2-11' LANES AND 2-2' SHLDRS TO BR L0306
20.066	20.086	℄	105.60	22.00	2323.2	1.0	7.17	14.58	20.7	BR L0306
20.086	21.970	℄	9947.52	26.00	258635.5	1.0	798.26	1623.66	2299.0	2-11' LANES AND 2-2' SHLDRS
21.970	22.056	℄	454.08	VAR	19391.7	1.0	59.85	121.73	172.4	EXISTING SHOULDER TO BR A4923
22.092	22.216	℄	654.72	VAR	19700.3	1.0	60.80	123.67	175.1	EXISTING SHLDRS
22.216	25.650	℄	18131.52	26.00	471419.5	1.0	1455.00	2959.47	4190.4	2-11' LANES AND 2-2' SHLDRS
25.650	25.834	℄	971.52	28.00	27202.6	1.0	83.96	170.77	241.8	EXISTING SHOULDERS (ASSUME 2' SHOULDER)
25.834	26.353	℄	2740.32	26.00	71248.3	1.0	219.90	447.28	633.3	2-11' LANES AND 2-2' SHLDRS
26.353	26.554	℄	1061.28	28.00	29715.8	1.0	91.72	186.56	264.1	EXISTING SHOULDERS (ASSUME 2' SHOULDER)
26.554	28.817	℄	11948.64	26.00	310664.6	1.0	958.84	1950.28	2761.5	2-11' LANES AND 2-2' SHLDRS TO CITY OF STEELE
28.817	29.077	℄	1372.80	VAR	48990.0	1.0	151.20	307.54	435.5	CITY OF STEELE
2.990	3.040	RT	100.00	VAR	2925.8	1.0	9.03	18.37	26.0	MO 108 (WEST)
7.020		RT	60.00	VAR	1873.9	1.0	5.78	11.76	16.7	CR 645
8.030		RT	10.00	VAR	1482.9	1.0	4.58	9.32	13.2	RT K
10.710		RT	100.00	VAR	4005.0	1.0	12.36	25.14	35.6	RT YY
17.590		RT	10.00	VAR	1211.0	1.0	3.74	7.61	10.8	RTE TT
18.836		LT	10.00	VAR	1317.2	1.0	4.07	8.28	11.7	RTE PP
28.798		LT	65.00	VAR	3119.0	1.0	9.63	19.59	27.7	RTE Z
0.006	29.077	LT & RT	522.00	VAR	20880	1.0	64.44	131.07	185.6	PRIVATE AND COMM ENTRANCES (PAVED)
0.006	29.077	LT & RT	52.00	VAR	2630.0	1.0	8.12	16.52	23.4	CITY ST AND COUNTY RD (PAVED)
0.006	29.077	LT & RT	72.00	VAR	3960.0	1.0	12.22	24.86	35.2	CITY ST AND COUNTY RD (NON-PAVED)
0.006	29.077	℄		VAR		VAR		2900.70		IRREGULARITIES (100 TONS/MILE)
							TOTAL	26971.5	34083	

LOG MILES ARE APPROXIMATE. EXACT LOCATIONS TO BE DETERMINED BY THE ENGINEER. SAFETY EDGE IS INCLUDED IN OPT. SHLDR TONNAGE.

2" BP-1 PG 64-22

LM	LM	LOC	LENGTH FT	WIDTH FT	DEPTH IN	2" BP-1 PG 64-22 2.050 TON/CY CY	TON	TACK 0.08 GAL/SQ YD GAL	REMARKS
1.858	3.510	℄	8722.56	25.00	2.0	1346.07	2759.44	1938.3	2-10.5' SHLDRS TO MO 108 E INTERSECTION
2.993	3.049	RT	VAR	VAR	2.0	1.64	3.36	2.4	MO 108 WEST
1.858	3.510	LT & RT	54.00	VAR	2.0	16.67	34.17	24.0	PRIVATE AND COMM ENTRANCES (PAVED)
1.858	3.510	LT & RT	14.00	VAR	2.0	3.46	7.09	5.0	CITY ST AND COUNTY RD (PAVED)
1.858	3.510	LT & RT	6.00	VAR	2.0	1.02	2.09	2.1	CITY ST AND COUNTY RD (NON-PAVED)
ADD QUANTITY							165.20		IRREGULARITIES (100 TONS/MI)
						TOTAL	2971.4	1972	

LOG MILES ARE APPROXIMATE. EXACT LOCATIONS TO BE DETERMINED BY ENGINEER.

BITUMINOUS RUMBLE STRIPS

LM	LM	LOC	LENGTH FT	BITUMINOUS SHOULDER RUMBLE STRIPS STA	REMARKS
1.038	1.667	LT & RT	811.12	16.22	
1.704	3.406	LT & RT	5343.56	106.87	
4.036	5.285	LT & RT	5829.72	116.59	
5.298	10.079	LT & RT	21173.68	423.47	
11.122	14.199	LT & RT	15756.56	315.13	
14.218	16.390	LT & RT	11193.16	223.86	
16.420	17.069	LT & RT	3181.72	63.63	
17.084	17.760	LT & RT	3429.28	68.59	
17.840	18.050	LT & RT	103.80	2.08	
18.130	20.060	LT & RT	9500.40	190.01	
20.117	21.590	LT & RT	4632.44	92.65	
21.612	24.106	LT & RT	10023.32	200.47	
24.127	28.768	LT & RT	21359.48	427.19	
			TOTAL	2246.8	

OMIT SHOULDER RUMBLE STRIPS THROUGH SIDE ROAD APPROACHES, ENTRANCES, AND ON BRIDGES.

SEEDING AND MULCHING

LM	LM	LOC	COOL SEASON SEEDING AC	MULCHING AC	REMARKS
0.006	29.077	LT & RT	70.48	70.48	
		TOTAL	70.5	70.5	

MAILBOX POSTS

LM	LM	LOC	WOOD POST LF	REMARKS
0.006	29.077	LT & RT	112.0	EST 10% OF 140 POSTS
		TOTAL	112	

LOCATIONS TO BE DETERMINED BY ENGINEER.

LOW PROFILE ISLANDS

LM	LOC	CONC MEDIAN STRIP 3" SQ YD	REMARKS
14.203	LT	15.01	
14.209	LT	9.85	
	TOTAL	24.9	

TEMPORARY EROSION CONTROL

LM	LM	SILT FENCE LF	ROCK DITCH CHECK LF	ALT DITCH CHECK LF	SEDIMENT REMOVAL CY	TEMP SEED AC	MULCH AC	REMARKS
0.006	29.077	3225.0	2450.0	1480.0	360.0	35.24	35.24	
	TOTAL	3225	2450	1480	360	35.3	35.3	

ALT DITCH CHECKS ARE TO BE USED IN RESIDENTIAL/FINISHED MOWED LOCATIONS

STATE OF MISSOURI
DONNA RENE PHILPOT
NUMBER PE-2019000205
PROFESSIONAL ENGINEER

Donna Rene Philpot
DOCUSIGNED BY:
DONNA RENE PHILPOT - DIVE
MO-PE-2019000205

DATE PREPARED
2/26/2025

ROUTE	STATE
164	MO
DISTRICT	SHEET NO.
SE	3

COUNTY
DUNKLIN/PEMISCOT

JOB NO.
J9S3780

CONTRACT ID.

PROJECT NO.

BRIDGE NO.

DATE	DESCRIPTION

MISSOURI HIGHWAYS AND TRANSPORTATION COMMISSION
105 WEST CAPITOL
JEFFERSON CITY, MO 65102
1-888-ASK-MODOT (1-888-275-6636)

SUMMARY OF QUANTITIES
SHEET 2 OF 4

PAVEMENT MARKING

LM	LM	STANDARD WATERBORNE PAVEMENT MARKING PAINT TYPE P BEADS 4" INT YELLOW LF	4" SOLID YELLOW LF	4" SOLID WHITE LF	PREFORMED THERMOPLASTIC PAVEMENT MARKING 24" WHITE LF	R/R CROSSING EACH	6" WHITE CROSSWALK LF	REMARKS
0.006	29.077	37070.1	27526.2	300528.4	60.0	2		
0.271					30.0		48.7	PEDESTRIAN CROSSING
0.506					30.0		48.7	PEDESTRIAN CROSSING
0.530					30.0		48.7	PEDESTRIAN CROSSING
	TOTAL	64597		300529	150	2	147	

LOG MILES ARE APPROXIMATE.
SEE PAVEMENT MARKING LOG JSP PRIOR TO CONSTRUCTION.

TEMPORARY PAVEMENT MARKING

LOC	TEMPORARY REMOVABLE TAPE WHITE 4" LF	WHITE 24" LF	YELLOW 4" LF	PAVEMENT MARKING REMOVAL LF	REMARKS
BR A2332	686.0	22.0	2000.0	2708.0	
BR A2333	686.0	22.0	2000.0	2708.0	
BR A2334	686.0	22.0	2000.0	2708.0	
BR A2336	686.0	22.0	2000.0	2708.0	
TOTAL	2744	88	8000	10832	

GUARDRAIL

LM	BR#	OFFSET	MGS BRIDGE APPROACH TRANSITION EACH	MGS 6' POST GUARDRAIL LF	CRASHWORTHY END TERMINAL TYPE A (MASH) EACH	CRASHWORTHY END TERMINAL TYPE C (MASH) EACH	REMARKS
1.658	A6070	RT	1	62.5	1		A6070 EB APPROACH
1.658	A6070	LT	1	62.5	1		A6070 EB OPPOSING
1.691	A6070	LT	1	62.5	1		A6070 WB APPROACH
1.691	A6070	RT	1	62.5	1		A6070 WB OPPOSING
6.866	A4622	RT	1	62.5	1		A4622 EB APPROACH
6.956	A4622	LT	1	62.5	1		A4622 EB OPPOSING
6.866	A4622	LT	1	62.5	1		A4622 WB APPROACH
6.957	A4622	RT	1	32.5	1		A4622 WB OPPOSING
9.044	A4699	RT		87.5	1		CULVERT A4699 EB APPROACH
9.044	A4699	LT		87.5	1		CULVER A4699 EB OPPOSING
9.070	A4699	LT		87.5	1		CULVERT A4699 WB APPROACH
9.070	A4699	RT		87.5	1		CULVERT A4669 WB OPPOSING
9.998	A4700	RT		112.5	1		CULVERT A4700 EB APPROACH
9.998	A4700	LT		112.5	1		CULVERT A4700 EB OPPOSING
10.029	A4700	LT		112.5	1		CULVERT A4700 WB APPROACH
10.029	A4700	RT		112.5	1		CULVERT A4700 WB OPPOSING
14.690	A2332	RT	1		1		A2332 EB APPROACH
14.69	A2332	LT	1		1		A2332 EB OPPOSING
15.015	A2336	LT	1		1		A2336 WB APPROACH
15.015	A2336	RT	1		1		A2336 WB OPPOSING
16.410	L0301	RT	1	100.0	1		L0301 EB APPROACH
16.410	L0301	LT	1	25.0	1		L0301 WB OPPOSING
16.422	L0301	RT	1	25.0	1		L0301 EB OPPOSING
16.422	L0301	LT	1	100.0	1		L0301 WB APPROACH
16.731	A7403	RT				1	A7403 EB APPROACH
16.731	A7403	LT	1		1		A7403 EB OPPOSING
16.774	A7403	LT	1	75.0	1		A7403 WB APPROACH
16.774	A7403	RT	1		1		A7403 WB OPPOSING
22.056	A4923	RT	1		1		A4923 EB APPROACH
22.056	A4923	LT	1	25.0	1		A4923 WB OPPOSING
22.117	A4923	LT	1	25.0	1		A4923 WB OPPOSING
22.117	A4923	RT	1	100.0	1		A4923 WB APPROACH
		TOTAL	23	1745	31	1	

ANY ADDITIONAL MATERIAL AND LABOR REQUIRED TO INSTALL PER MANUFACTURER'S RECOMMENDATION SHALL BE CONSIDERED COMPLETELY COVERED BY THE ABOVE PAY ITEMS.

PERMANENT AGGREGATE EDGE TREATMENT

LM	LM	LOC	LENGTH FT	WIDTH FT	DEPTH IN	PERM AGG EDGE TREATMENT 1.7 TON/CY TONS	REMARKS
6.716	6.778	RT	327.36	2	3.0	5.15	
6.778	6.871	LT & RT	491.04	2,2	3.0	15.46	
6.963	7.040	LT & RT	406.56	2,2	3.0	12.80	
7.040	7.120	RT	422.40	2	3.0	6.65	
8.967	9.023	LT & RT	295.68	2,2	3.0	9.31	
9.084	9.158	LT & RT	390.72	2,2	3.0	12.30	
9.850	9.953	LT & RT	543.84	2,2	3.0	17.12	
10.021	10.119	LT & RT	517.44	2,2	3.0	16.29	
14.219	14.645	LT & RT	2249.28	2,2	3.0	70.81	
15.083	17.588	LT & RT	13226.40	2,2	3.0	416.39	
21.982	22.017	RT	184.80	2	3.0	2.91	
22.017	22.048	LT & RT	163.68	2,2	3.0	5.15	
22.131	22.220	RT	469.92	2	3.0	7.40	
22.164	22.169	LT	26.40	2	3.0	0.42	
25.654	25.834	LT & RT	950.40	2,2	3.0	29.92	
26.353	26.554	LT & RT	1061.28	2,2	3.0	33.41	
					TOTAL	661.5	

DIMENSIONS MAY BE ADJUSTED AS APPROVED BY THE ENGINEER

GRAVEL A OR CRUSHED STONE B

LM	LM	LOC	LENGTH FT	WIDTH FT	AVG DEPTH IN	GRAVEL A OR CRUSHED STONE B 1.75 TON/CY TONS	REMARKS
0.006	29.077	LT & RT	9840	2	3	318.9	PRIVATE & COMM ENTRANCES
0.006	29.077	LT & RT	2005	2	3	65.0	UNPAVED CITY STREETS & COUNTY ROADS
ADD QUANTITY		LT & RT	VAR	VAR	3	200.0	MAILBOX TURNOUTS
ADD QUANTITY		LT & RT	VAR	VAR	VAR	20.0	ENTRANCES AS DIRECTED BY ENGINEER
					TOTAL	604	

BRIDGE SEAL COAT

LM	LM	LOC	LENGTH FT	WIDTH FT	SEAL COAT AGGREGATE GRADE B1 SY	EMULSIFIED ASPHALT SEAL COAT 0.3 GAL/ SY GAL	REMARKS
1.667	1.687	℄	107.20	39.40	469.3	140.8	BR A6070
5.285	5.304	℄	98.00	20.00	217.8	65.3	BR J0234
6.881	6.910	℄	154.00	36.80	629.7	188.9	BR A4622
14.69	14.744	℄	287.00	38.00	1211.8	363.5	BR A2332
14.777	14.839	℄	328.00	38.00	1384.9	415.5	BR A2333
14.872	14.993	℄	641.00	38.00	2706.4	811.9	BR A2334
15.015	15.072	℄	299.00	38.00	1262.4	378.7	BR A2336
16.396	16.414	℄	95.00	22.00	232.2	69.7	BR L0301
17.069	17.084	℄	77.00	22.00	188.2	56.5	BR L0303
20.066	20.086	℄	107.00	22.00	261.6	78.5	BR L0306
				TOTAL	8565	2570	

LOG MILES ARE APPROXIMATE. EXACT LOCATIONS TO BE DETERMINED BY THE ENGINEER.

MOBILIZATION
LUMP SUM ONE

ADDITIONAL MOBILIZATION FOR SEEDING
4 EACH

STATE OF MISSOURI
DONNA RENE PHILPOT
NUMBER PE-2019000205
PROFESSIONAL ENGINEER
Donna Rene Philpot
DONNA RENE PHILPOT - DN/L
MO=PE=2019000205

DATE PREPARED
2/26/2025

ROUTE	STATE
164	MO
DISTRICT	SHEET NO.
SE	3

COUNTY
DUNKLIN/PEMISCOT

JOB NO.
J9S3780

CONTRACT ID.

PROJECT NO.

BRIDGE NO.

DESCRIPTION

DATE

MISSOURI HIGHWAYS AND TRANSPORTATION COMMISSION

105 WEST CAPITOL
JEFFERSON CITY, MO 65102
1-888-ASK-MODOT (1-888-275-6636)

SUMMARY OF QUANTITIES
SHEET 3 OF 4

EFFECTIVE: 07-01-2024

SIGN	SIZE IN.	AREA SQ.FT.	QTY EACH	TOTAL AREA SQ.FT.	QTY RELOC EACH	TOTAL RELOC SQ.FT.	SIGN NUM.	DESCRIPTION
WARNING SIGNS								
WO1-1L	48X48	16.00						TURN (SYMBOL LEFT)
WO1-1R	48X48	16.00						TURN (SYMBOL RIGHT)
WO1-2L	48X48	16.00						CURVE (SYMBOL LEFT)
WO1-2R	48X48	16.00						CURVE (SYMBOL RIGHT)
WO1-3L	48X48	16.00						REVERSE TURN (SYMBOL LEFT)
WO1-3R	48X48	16.00						REVERSE TURN (SYMBOL RIGHT)
WO1-4L	48X48	16.00						REVERSE CURVE (SYMBOL LEFT)
WO1-4R	48X48	16.00						REVERSE CURVE (SYMBOL RIGHT)
WO1-4bL	48X48	16.00						DOUBLE ARROW REVERSE CURVE (SYMBOL LEFT)
WO1-4bR	48X48	16.00						DOUBLE ARROW REVERSE CURVE (SYMBOL RIGHT)
WO1-4cL	48X48	16.00						TRIPLE ARROW REVERSE CURVE (SYMBOL LEFT)
WO1-4cR	48X48	16.00						TRIPLE ARROW REVERSE CURVE (SYMBOL RIGHT)
WO1-6	60X30	12.50						HORIZONTAL ARROW (SYMBOL)
WO1-6a	72X36	18.00						HORIZ. ARROW (SYMBOL ON PERMANENT BARRICADE)
WO1-7	60X30	12.50						DOUBLE HEAD HORIZONTAL ARROW (SYMBOL)
WO1-7a	72X36	18.00						DOUBLE HEAD HORIZ. ARROW (SYMBOL ON PERM. BARR.)
WO1-8	18X24	3.00						CHEVRON (SYMBOL)
WO1-8a	30X36	7.50						CHEVRON (SYMBOL FOR DIVIDED HIGHWAYS)
WO3-1	48X48	16.00						STOP AHEAD (SYMBOL)
WO3-2	48X48	16.00						YIELD AHEAD (SYMBOL)
WO3-3	48X48	16.00	2	32				SIGNAL AHEAD (SYMBOL)
WO3-4	48X48	16.00	14	224				BE PREPARED TO STOP
WO3-5	48X48	16.00						SPEED LIMIT AHEAD
WO4-1L	48X48	16.00						MERGE (SYMBOL FROM LEFT)
WO4-1R	48X48	16.00						MERGE (SYMBOL FROM RIGHT)
WO4-1aL	48X48	16.00						MERGE (LEFT)
WO4-1aR	48X48	16.00						MERGE (RIGHT)
WO5-1	48X48	16.00						ROAD/BRIDGE/RAMP NARROWS
WO5-3	48X48	16.00						ONE LANE BRIDGE
WO5-5	48X48	16.00						NARROW LANES
WO6-1	48X48	16.00						DIVIDED HIGHWAY (SYMBOL)
WO6-2	48X48	16.00						DIVIDED HIGHWAY END (SYMBOL)
WO6-3	48X48	16.00						TWO WAY TRAFFIC (SYMBOL)
WO7-3a	30X24	5.00						NEXT XX MILES (PLAQUE)
WO8-1	48X48	16.00						BUMP
WO8-2	48X48	16.00						DIP
WO8-3	48X48	16.00						PAVEMENT ENDS
WO8-4	48X48	16.00						SOFT SHOULDER
WO8-5	48X48	16.00						SLIPPERY WHEN WET (SYMBOL)
WO8-6	48X48	16.00						TRUCK CROSSING
WO8-6c	48X48	16.00						TRUCK ENTRANCE
WO8-7	36X36	9.00						LOOSE GRAVEL
WO8-7a	36X36	9.00						FRESH OIL / LOOSE GRAVEL
WO8-9	48X48	16.00						LOW SHOULDER
WO8-11	48X48	16.00	60	960				UNEVEN LANES
WO8-12	48X48	16.00	36	576				NO CENTER LINE
WO8-15	48X48	16.00						GROOVED PAVEMENT
WO8-15P	30X24	5.00						MOTORCYCLE (PLAQUE)
WO8-17L	48X48	16.00						SHOULDER DROP-OFF (SYMBOL LEFT)
WO8-17R	48X48	16.00						SHOULDER DROP-OFF (SYMBOL RIGHT)
WO8-17P	30X24	5.00						SHOULDER DROP-OFF (PLAQUE)
W10-1	42RND.	9.62						RAILROAD CROSSING
WO12-1	24X24	4.00						DOUBLE DOWN ARROW (SYMBOL)
WO12-2	48X48	16.00						LOW CLEARANCE (SYMBOL)
W012-2x	24X18	3.00						LOW CLEARANCE (PLAQUE)
WO12-2a	84X24	14.00						OVERHEAD LOW CLEARANCE (FEET AND INCHES)
WO12-4	120X60	50.00						LOW CLEARANCE XX FT XX IN XX MILES AHEAD
WO12-5	120X60	50.00						WIDTH RESTRICTION XX FT XX IN XX MILES AHEAD
WO13-1	30X30	6.25						ADVISORY SPEED (PLAQUE)
WO16-2	30X24	5.00						XXX FEET (PLAQUE)
WO16-3	30X24	5.00						X MILE (PLAQUE)
WO20-1	48X48	16.00	14	224				ROAD/BRIDGE/RAMP WORK AHEAD
WO20-2	48X48	16.00						DETOUR AHEAD
WO20-3	48X48	16.00						ROAD CLOSED AHEAD
WO20-4	48X48	16.00	14	224				ONE LANE ROAD AHEAD
WO20-5	48X48	16.00						RIGHT/CENTER/LEFT LANE CLOSED AHEAD
WO20-5a	48X48	16.00						2 RIGHT/CENTER/LEFT LANES CLOSED AHEAD
WO20-6a	48X48	16.00						RIGHT/CENTER/LEFT LANE CLOSED
WO20-7a	48X48	16.00	14	224				FLAGGER (SYMBOL)
WO21-2	36X36	9.00						FRESH OIL
WO21-5	48X48	16.00	9	144				SHOULDER WORK / SHOULDER WORK AHEAD
WO22-1	48X48	16.00						BLASTING ZONE AHEAD
WO22-2	42X36	10.50						TURN OFF 2-WAY RADIO AND PHONE
WO22-3	42X36	10.50						END BLASTING ZONE
GO22-1	21X15	2.19	4	8.76				WET PAINT (ARROW PIVOTS)

SIGN	SIZE IN.	AREA SQ.FT.	QTY EACH	TOTAL SQ.FT.	QTY RELOC EACH	TOTAL RELOC SQ.FT.	SIGN NUM.	DESCRIPTION
GUIDE SIGNS								
E05-1	36X48	12.00						GORE EXIT
E05-2	48X36	12.00						EXIT OPEN
E05-2a	48X36	12.00						EXIT CLOSED
GO20-1	60X24	10.00	2	20				ROAD WORK NEXT XX MILES
GO20-2	48X24	8.00	2	16				END ROAD WORK
GO20-4	36X18	4.50	1	4.5				PILOT CAR FOLLOW ME
GO20-4a	42X30	8.75	10	87.5				PILOT CAR IN USE WAIT & FOLLOW
GO20-4a	18X12	1.50	24	36				PILOT CAR IN USE WAIT & FOLLOW
GO20-5aP	36X24	6.00						WORK ZONE (PLAQUE)
MO4-8a	24X18	3.00						END DETOUR
MO4-9L	48X36	12.00						DETOUR (LEFT)
MO4-9R	48X36	12.00						DETOUR (RIGHT)
MO4-9P	48X12	4.00						STREET NAME (PLAQUE)
MO4-10L	48X18	6.00						DETOUR ARROW (LEFT)
MO4-10R	48X18	6.00						DETOUR ARROW (RIGHT)
REGULATORY SIGNS								
R1-1	48X48	13.25						STOP
R1-2	48TRI.	6.93						YIELD
R1-2a	36X36	9.00						TO ONCOMING TRAFFIC (PLAQUE)
R1-3P	30X12	2.50						ALL WAY (PLAQUE)
R2-1	36X48	12.00						SPEED LIMIT XX
R3-1	48X48	16.00						NO RIGHT TURN (SYMBOL)
R3-2	48X48	16.00						NO LEFT TURN (SYMBOL)
R3-3	36X36	9.00						NO TURNS
R3-4	48X48	16.00						NO U-TURN (SYMBOL)
R3-7L	30X30	6.25						LEFT LANE MUST TURN LEFT
R3-7R	30X30	6.25						RIGHT LANE MUST TURN RIGHT
R4-1	36X48	12.00						DO NOT PASS
R4-2	36X48	12.00						PASS WITH CARE
R4-7a	36X48	12.00						KEEP RIGHT (HORIZONTAL ARROW)
R4-8a	36X48	12.00						KEEP LEFT (HORIZONTAL ARROW)
R5-1	30X30	6.25						DO NOT ENTER
R5-1a	36X24	6.00						WRONG WAY
R6-1L	54X18	6.75						ONE WAY ARROW (LEFT)
R6-1R	54X18	6.75						ONE WAY ARROW (RIGHT)
R6-2L	24X30	5.00						ONE WAY (LEFT)
R6-2R	24X30	5.00						ONE WAY (RIGHT)
R9-9	24X12	2.00						SIDEWALK CLOSED
R9-11L	24X18	3.00						SIDEWALK CLOSED AHEAD, (ARROW LEFT) CROSS HERE
R9-11R	24X18	3.00						SIDEWALK CLOSED AHEAD, (ARROW RIGHT) CROSS HERE
R10-6	24X36	6.00	2	12				STOP HERE ON RED (45^ ARROW)
R11-2	48X30	10.00						ROAD CLOSED
R11-3a	60X30	12.50						ROAD CLOSED XX MILES AHEAD LOCAL TRAFFIC ONLY
R11-4	60X30	12.50						ROAD CLOSED TO THRU TRAFFIC
CONST-3A	60X48	20.00						FINE SIGN
CONST-3X	56X12	4.67						SPEEDING/PASSING (PLATE)
MISCELLANEOUS SIGNS								
CONST-5	48X36	12.00						POINT OF PRESENCE
CONST-5	96X48	32.00						POINT OF PRESENCE
CONST-8	48X36	12.00	2	24				WORK ZONE NO PHONE ZONE

	TOTAL
616-10.05 CONSTRUCTION SIGNS	2817
616-10.10 RELOCATED SIGNS	0

ITEM NUMBER	TOTAL QTY	DESCRIPTION
6122008		IMPACT ATTENUATOR 40 MPH (SAND BARRELS)
6122009		IMPACT ATTENUATOR 45 MPH (SAND BARRELS)
6122010		IMPACT ATTENUATOR 50 MPH (SAND BARRELS)
6122012		IMPACT ATTENUATOR 55 MPH (SAND BARRELS)
6122014		IMPACT ATTENUATOR 60 MPH (SAND BARRELS)
6122017		IMPACT ATTENUATOR 65 MPH (SAND BARRELS)
6122019		IMPACT ATTENUATOR 70 MPH (SAND BARRELS)
6122020		REPLACEMENT SAND BARREL
6122030		IMPACT ATTENUATOR (RELOCATION)
6123001		TRUCK MOUNTED ATTENUATOR (TMA)
6161008		ADVANCED WARNING RAIL SYSTEM
6161012		BUOYS (BOATS KEEP OUT)
6161013		BUOYS (NO WAKE)
6161014		SPECIAL SIGN ASSEMBLY (BOATS KEEP OUT)
6161025	250	CHANNELIZER (TRIM LINE)
6161030		TYPE III MOVEABLE BARRICADE
6161033		DIRECTION INDICATOR BARRICADE
6161040		FLASHING ARROW PANEL
6161047		TYPE III OBJECT MARKER
6161055		SEQUENTIAL FLASHING WARNING LIGHT
6161070		TUBULAR MARKER
6161095		RADAR SPEED ADVISORY SYSTEM
6161096		CHANGEABLE MESSAGE SIGN, COMMISSION FURNISHED/RETAINED
6161098A	4	CHANGEABLE MESSAGE SIGN W/O COMM. INTERFACE - CONTRACTOR FURNISHED/RETAINED
6161099		CHANGEABLE MESSAGE SIGN WITH COMM. INTERFACE - CONTRACTOR FURNISHED/RETAINED
6162000A	1	WORK ZONE TRAFFIC SIGNAL SYSTEM
6162002		TEMPORARY LONG-TERM RUMBLE STRIPS
6173600D		TEMPORARY TRAFFIC BARRIER CONTRACTOR FURNISHED/RETAINED
6173602B		TEMPORARY TRAFFIC BARRIER CONTRACTOR FURNISHED/COMMISSION RETAINED
6174000A		TEMP. TRAFFIC BARRIER HEIGHT TRANSITION
6175010A		RELOCATING TEMPORARY TRAFFIC BARRIER
6176000B		TEMPORARY TRAFFIC BARRIER COMMISSION FURNISHED/RETAINED
6177000B		TEMP. TRAFFIC BARRIER HEIGHT TRANSITION COMMISSION FURNISHED/RETAINED
6208064A		TEMPORARY RAISED PAVEMENT MARKER
9029400		TEMPORARY TRAFFIC SIGNALS
9029401		TEMPORARY TRAFFIC SIGNALS AND LIGHTING
6122040	8	WORK ZONE CRASH CUSHION (NARROW)
6122041	8	WORK ZONE CRASH CUSHION (NARROW) RELOCATION

NOTE: SEE STANDARD PLANS 616.20 FOR ADDITIONAL TRAFFIC CONTROL PLANS.
NO DIRECT PAY FOR RELOCATION OF TRAFFIC CONTROL ITEMS.

STATE OF MISSOURI
DONNA RENE PHILPOT
NUMBER PE-2019000205
PROFESSIONAL ENGINEER

Donna Rene Philpot
Digitally signed by DONNA RENE PHILPOT-CIVIL
DN: c=US, o=MoDOT, cn=DONNA RENE PHILPOT-CIVIL, email=donna.philpot@modot.mo.gov, ou=MO-PE-2019000205
Date: 2025.02.27 14:16:17 -06'00'

DATE PREPARED
2/27/2025

ROUTE	STATE
164	MO
DISTRICT	SHEET NO.
SE	3

COUNTY
DUNKLIN/PEMISCOT

JOB NO.
J9S3780

CONTRACT ID.

PROJECT NO.

BRIDGE NO.

DESCRIPTION	DATE

MISSOURI HIGHWAYS AND TRANSPORTATION COMMISSION
105 WEST CAPITOL
JEFFERSON CITY, MO 65102
1-888-ASK-MODOT (1-888-275-6636)

SUMMARY OF QUANTITIES
SHEET 4 OF 4

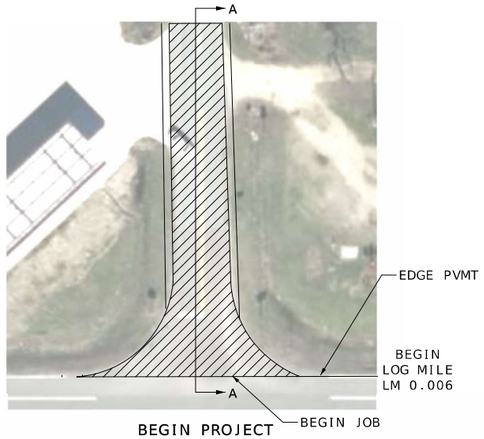

BEGIN PROJECT
PLAN VIEW
MO 164 TO US 412

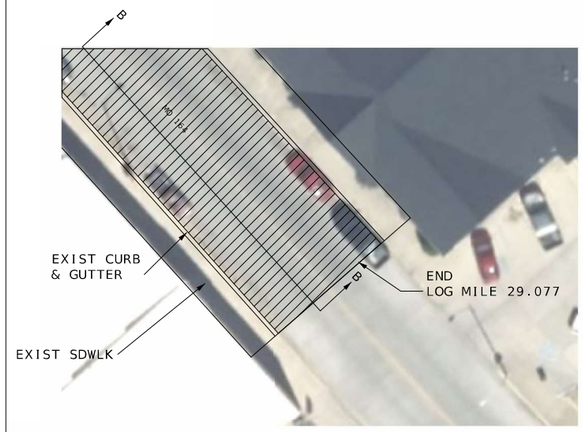

END PROJECT
PLAN VIEW
LM 29.077

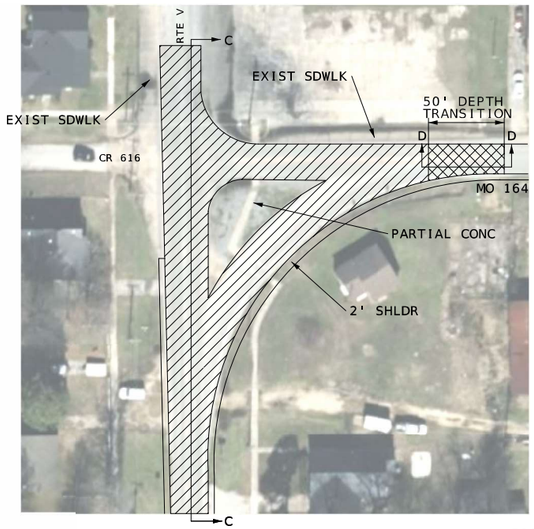

MILL/FILL

MODIFIED COLDMILLING
(DEPTH TRANSITION)

TYPICAL
MO 164 RTE V/CR 616
INTERSECTION

TYPICAL A-A
MO 164

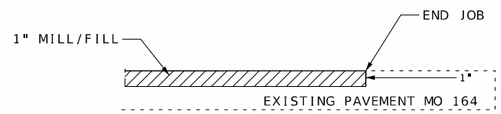

TYPICAL B-B
MO 164

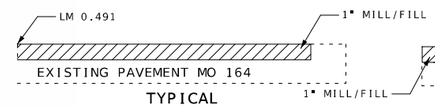

TYPICAL
SECTION C-C

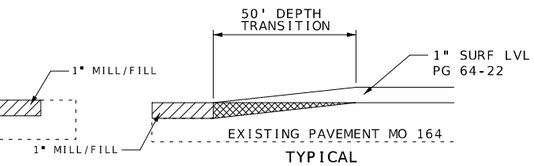

TYPICAL
SECTION D-D

PLAN VIEW
MO 164 & US 412 INTERSECTION

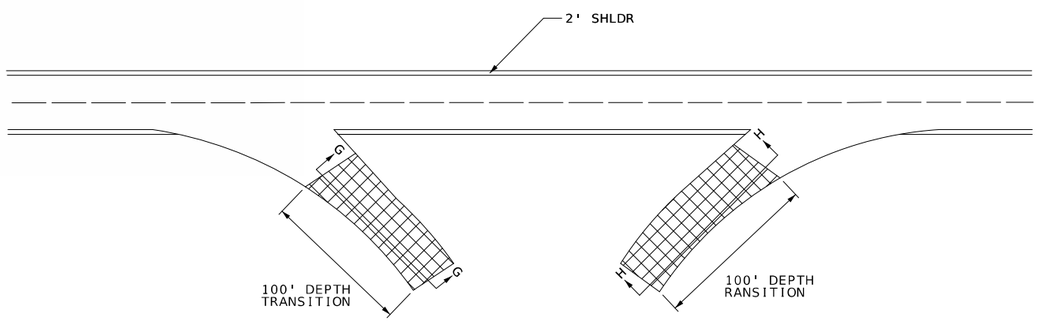

TYPICAL
MO 164 INTERSECTIONS
MO 108 & RTE YY

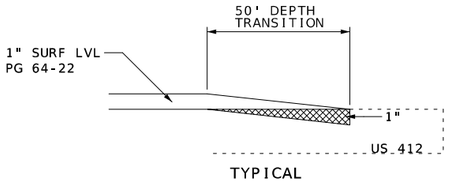

TYPICAL
SECTION E-E

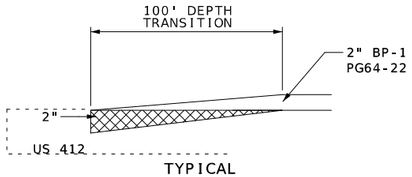

TYPICAL
SECTION F-F

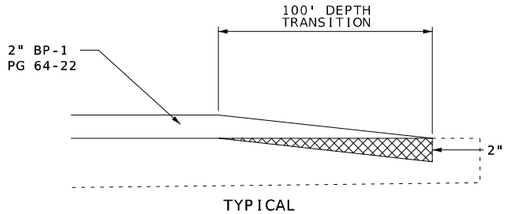

TYPICAL
SECTION G-G

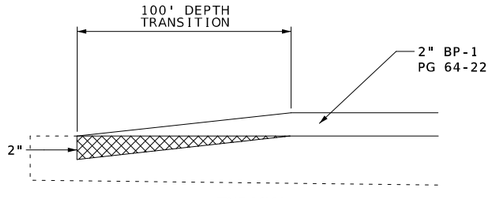

TYPICAL
SECTION H-H

NOT TO SCALE. FOLLOW DIMENSIONS.

STATE OF MISSOURI
DONNA RENE PHILPOT
NUMBER PE-2019000205
PROFESSIONAL ENGINEER
Donna Rene Philpot
02/27/2025 12:49:29 PM
DONNA RENE PHILPOT - CIVIL
MO-PE-2019000205

DATE PREPARED	2/26/2025
ROUTE	164
STATE	MO
DISTRICT	SE
SHEET NO.	4
COUNTY	DUNKLIN/PEMISCOT
JOB NO.	J9S3780
CONTRACT ID.	
PROJECT NO.	
BRIDGE NO.	

DESCRIPTION	DATE

MISSOURI HIGHWAYS AND TRANSPORTATION COMMISSION
105 WEST CAPITOL
JEFFERSON CITY, MO 65102
1-888-ASK-MODOT (1-888-275-6636)

SPECIAL SHEET
SHEET 1 OF 5

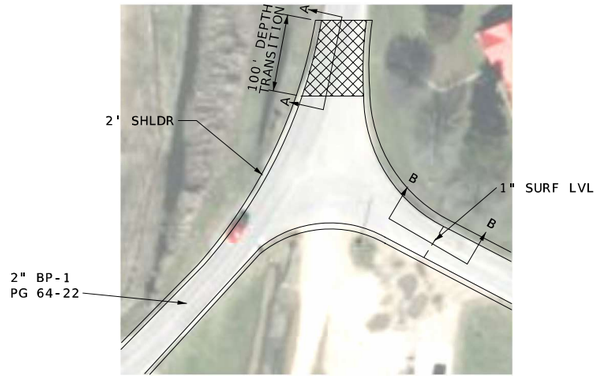

TYPICAL
MO 164 & MO 108 INTERSECTION

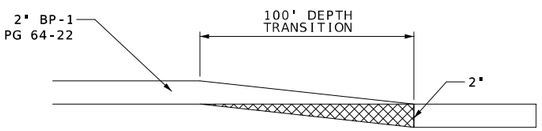

TYPICAL
SECTION A-A

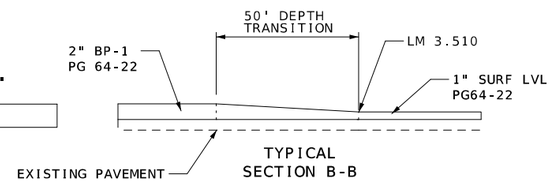

TYPICAL
SECTION B-B

MILL/FILL

MODIFIED COLDMILLING
(DEPTH TRANSITION)

GRAVEL A OR
CRUSHED STONE B

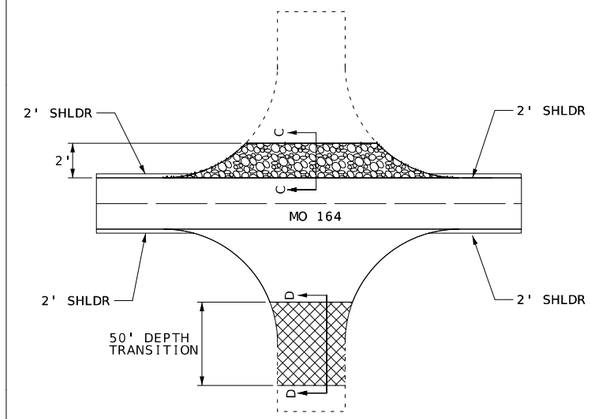

PLAN VIEW
RT K & CR 647
LM 8.018 TO LM 8.051

RT TT & CR 719
LM 17.573 TO LM 17.605

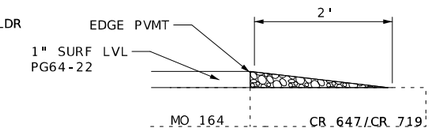

TYPICAL
SECTION C-C

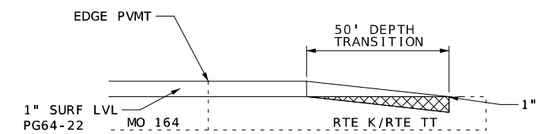

TYPICAL
SECTION D-D

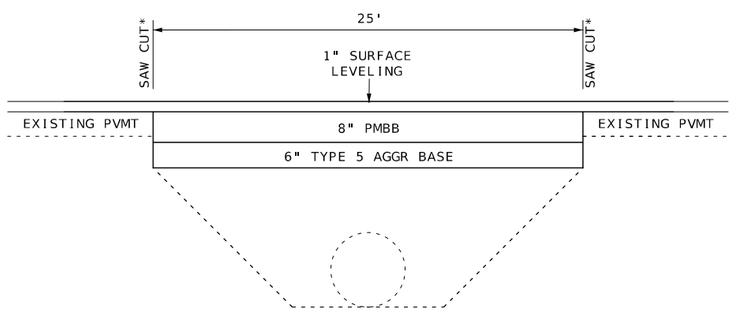

TYPICAL AT PIPES
LM 13.709
LM 13.841
LM 14.043

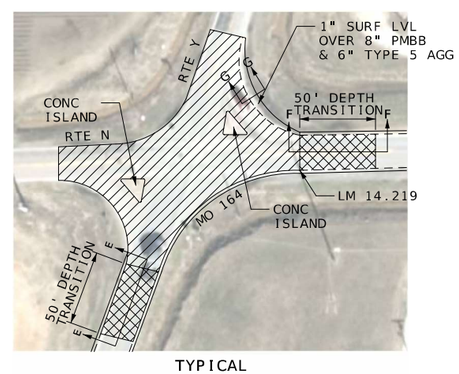

TYPICAL
MO 164/RTE N/RTE Y

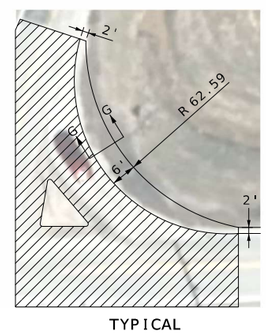

TYPICAL
RTE Y WIDENING

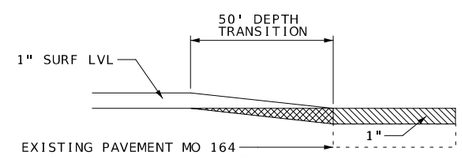

TYPICAL
SECTION E-E

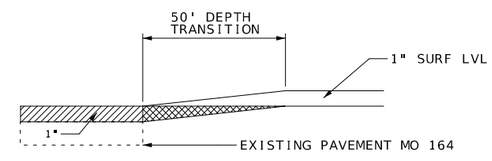

TYPICAL
SECTION F-F

RTE Y WIDENING DETAIL

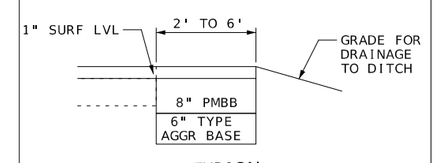

TYPICAL
SECTION G-G

NOT TO SCALE. FOLLOW DIMENSIONS.

*SAW CUTS AT NO DIRECT PAY

STATE OF MISSOURI
DONNA RENE PHILPOT
NUMBER PE-2019000205
PROFESSIONAL ENGINEER

Donna Rene Philpot
DONNA RENE PHILPOT • CIVIL
MO-PE-2019000205

DATE PREPARED	
2/26/2025	
ROUTE 164	STATE MO
DISTRICT SE	SHEET NO. 5
COUNTY DUNKLIN/PEMISCOT	
JOB NO. J9S3780	
CONTRACT ID.	
PROJECT NO.	
BRIDGE NO.	

DATE	DESCRIPTION

MISSOURI HIGHWAYS AND TRANSPORTATION COMMISSION
105 WEST CAPITOL
JEFFERSON CITY, MO 65102
1-888-ASK-MODOT (1-888-275-6636)

SPECIAL SHEET
SHEET 2 OF 5

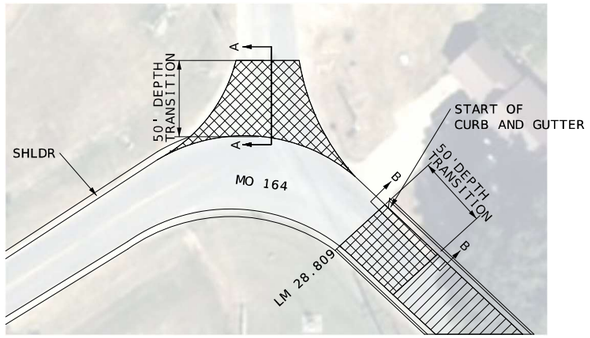

PLAN VIEW
MO 164 & RTE Z

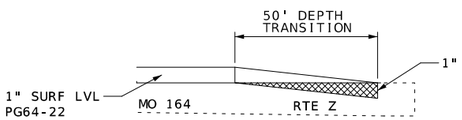

TYPICAL
SECTION A-A

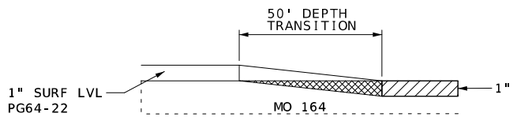

TYPICAL
SECTION B-B

MILL/FILL

MODIFIED COLDMILLING (DEPTH TRANSITION)

PLAN VIEW
MO 164 AT RAILROAD

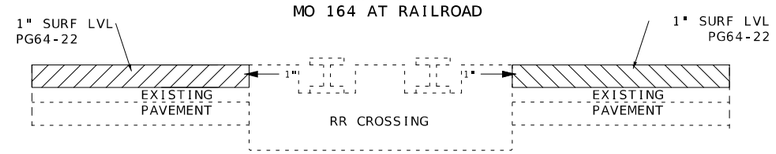

TYPICAL AT RAILROAD
LOG MILE 29.031

LOG MILE LOCATIONS APPROXIMATE.
ADJUST AS DIRECTED BY ENGINEER
TO FIT FIELD CONDITIONS.

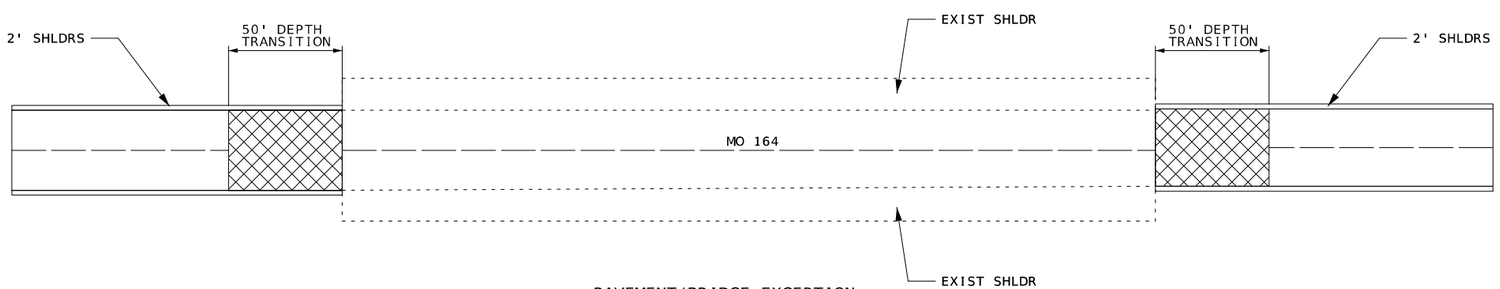

PAVEMENT/BRIDGE EXCEPTION:
BR A7403
BR L0304
BR L0305
BR A4923

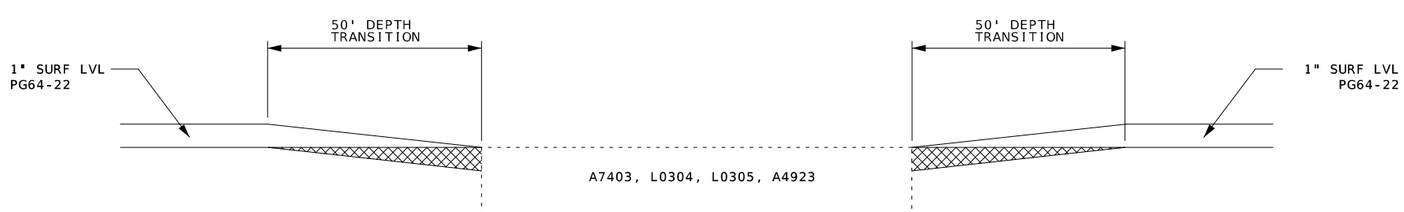

TYPICAL AT BRIDGES:
A7403
L0304
L0305
A4923

DRAWING NOT TO SCALE. FOLLOW DIMENSIONS.

STATE OF MISSOURI
DONNA RENE PHILPOT
NUMBER
PE-2019000205
PROFESSIONAL ENGINEER

Donna Rene Philpot
VERIFICATION ON FILE
DONNA RENE PHILPOT - CIVIL
MO-PE-2019000205

DATE PREPARED
2/26/2025

ROUTE	STATE
164	MO
DISTRICT	SHEET NO.
SE	6

COUNTY
DUNKLIN/PEMISCOT

JOB NO.
J9S3780

CONTRACT ID.

PROJECT NO.

BRIDGE NO.

DATE	DESCRIPTION

MISSOURI HIGHWAYS AND TRANSPORTATION COMMISSION
105 WEST CAPITOL
JEFFERSON CITY, MO 65102
1-888-ASK-MODOT (1-888-275-6636)

SPECIAL SHEET
SHEET 3 OF 5

MILL/FILL

MODIFIED COLDMILLING (DEPTH TRANSITION)

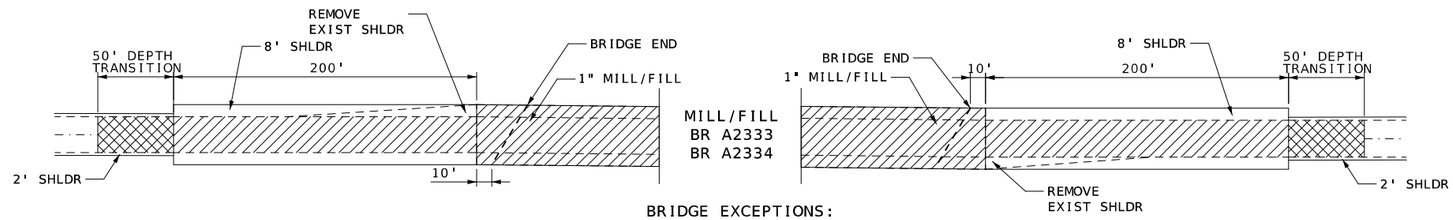

BRIDGE EXCEPTIONS:
BR A2332
BR A2333
BR A2334
BR A2336

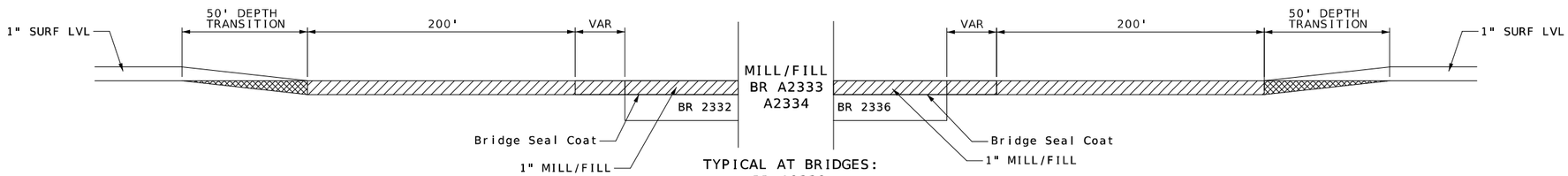

TYPICAL AT BRIDGES:
BR A2332
BR A2333
BR A2334
BR A2336

*SAW CUT EXISTING SHOULDER AT NO DIRECT PAY

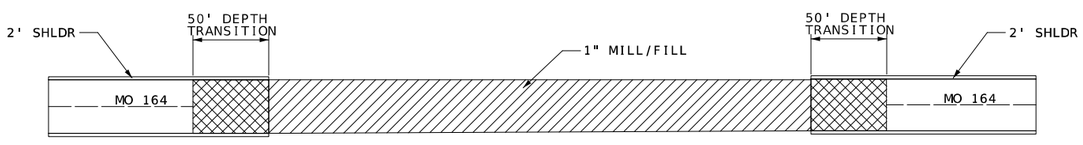

PAVEMENT/BRIDGE EXCEPTIONS:
BR A6070
BR J0234
BR A4622
BR L0301
BR L0303
BR L0306

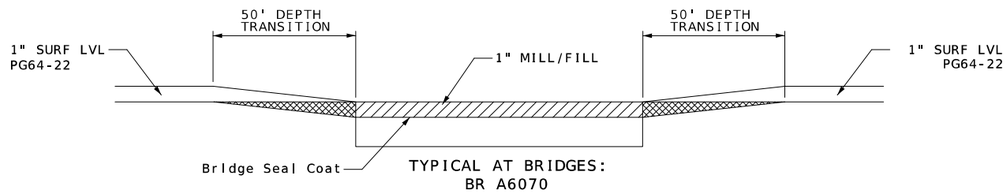

TYPICAL AT BRIDGES:
BR A6070
BR J0234
BR A4622
BR L0301
BR L0303
BR L0306

DRAWING NOT TO SCALE. FOLLOW DIMENSIONS.

STATE OF MISSOURI
DONNA RENE PHILPOT
NUMBER PE-2019000205
PROFESSIONAL ENGINEER

Donna Rene Philpot
DONNA RENE PHILPOT - CIVIL
MO-PE-2019000205

DATE PREPARED	2/26/2025
ROUTE 164	STATE MO
DISTRICT SE	SHEET NO. 7
COUNTY	DUNKLIN/PEMISCOT
JOB NO.	J9S3780
CONTRACT ID.	
PROJECT NO.	
BRIDGE NO.	

DATE	DESCRIPTION

MISSOURI HIGHWAYS AND TRANSPORTATION COMMISSION

105 WEST CAPITOL
JEFFERSON CITY, MO 65102
1-888-ASK-MODOT (1-888-275-6636)

SPECIAL SHEET
SHEET 4 OF 5

NOTES:

2' TRANSITION
FOR 1" SURF LVL

4' TRANSITION
FOR 2" BP-1

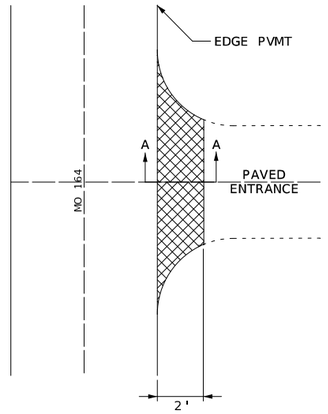

PLAN VIEW FOR PAVED
PRIVATE AND COMMERCIAL ENTRANCES

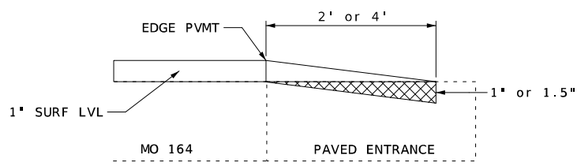

TYPICAL
SECTION A-A

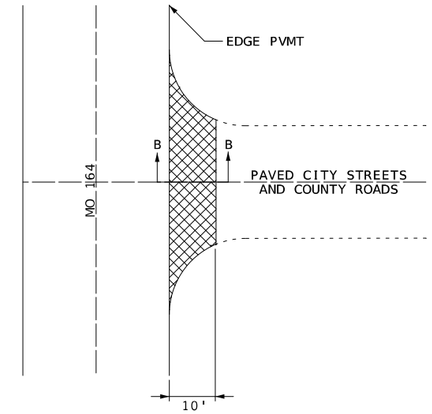

PLAN VIEW FOR PAVED
CITY STREETS AND COUNTY ROADS

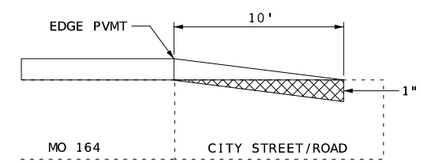

TYPICAL
SECTION B-B

MODIFIED COLDMILLING
(DEPTH TRANSITION)

GRAVEL A OR
CRUSHED STONE B

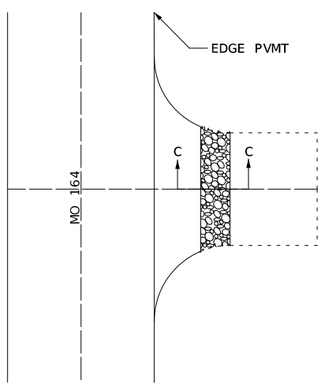

PLAN VIEW FOR NON-PAVED PRIVATE
AND COMMERCIAL ENTRANCES WITH EXISTING APRON

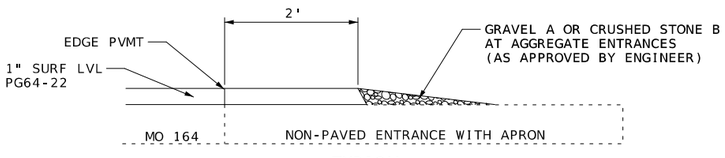

TYPICAL
SECTION C-C

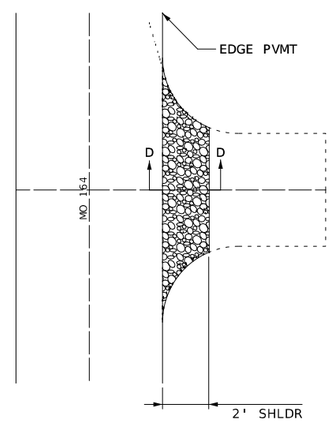

PLAN VIEW FOR NON-PAVED PRIVATE
AND COMMERCIAL ENTRANCES WITHOUT EXISTING APRON

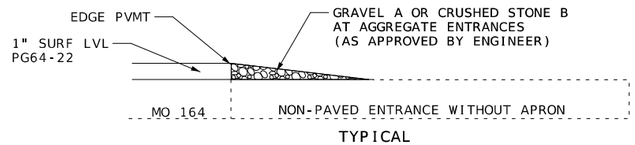

TYPICAL
SECTION D-D

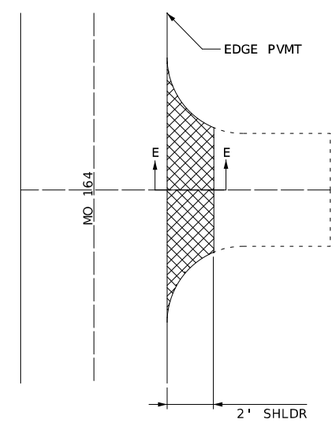

PLAN VIEW FOR NON-PAVED
CITY STREETS AND COUNTY ROADS

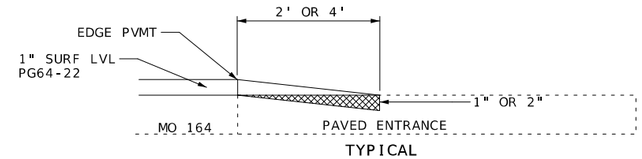

TYPICAL
SECTION E-E

DRAWING NOT TO SCALE. FOLLOW DIMENSIONS.

STATE OF MISSOURI
DONNA RENE PHILPOT
NUMBER
PE-2019000205
PROFESSIONAL ENGINEER

Donna Rene Philpot
DONNA RENE PHILPOT - CIVIL
MO-PE-2019000205

DATE PREPARED	2/26/2025
ROUTE	164
STATE	MO
DISTRICT	SE
SHEET NO.	8
COUNTY	DUNKLIN/PEMISCOT
JOB NO.	J9S3780
CONTRACT ID.	
PROJECT NO.	
BRIDGE NO.	

DATE	DESCRIPTION

MISSOURI HIGHWAYS AND TRANSPORTATION COMMISSION

105 WEST CAPITOL
JEFFERSON CITY, MO 65102
1-888-ASK-MODOT (1-888-275-6636)

SPECIAL SHEET
SHEET 5 OF 5

W020-1

(2)

W020-4

(7)

W020-7a

(8)

W021-5

(21)

TRAFFIC CONTROL LEGEND

- SIGN (SINGLE SIDED)
- CHANNELIZER
- FLAGGER

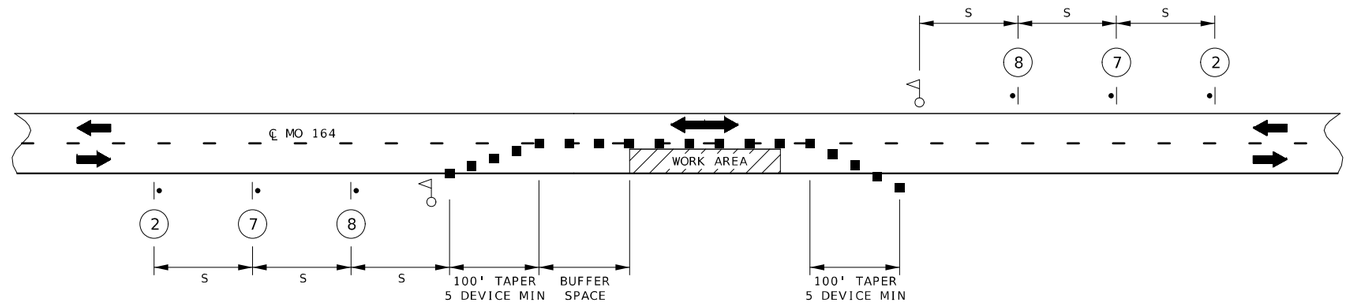

LANE CLOSURE WITH FLAGGER CONTROL

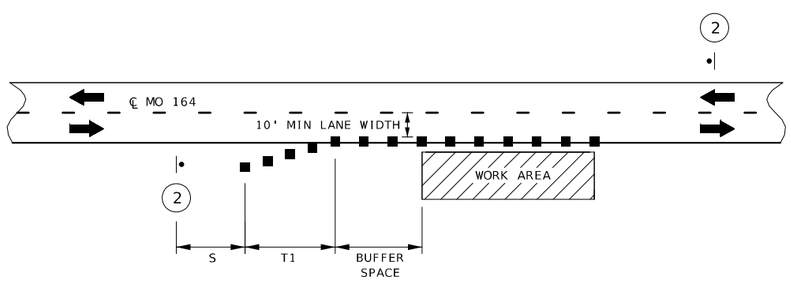

SHOULDER WORK WITH MINOR ENCROACHMENT

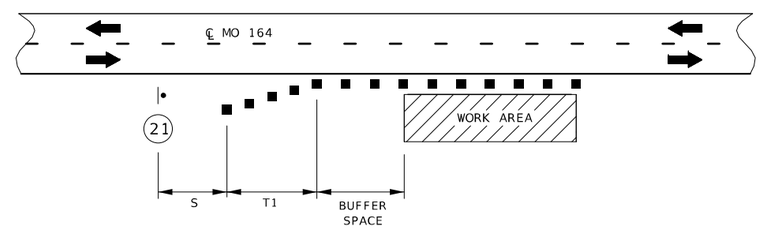

SHOULDER WORK

NOTES:

DAYLIGHT FLAGGING OPERATIONS ONLY.

DISTANCE MAY BE ADJUSTED ACCORDING TO FIELD CONDITIONS.

NO PAYMENT WILL BE MADE FOR RELOCATION OF CONSTRUCTION SIGNS.

ANY EXISTING SIGNING THAT CONFLICTS WITH THE TRAFFIC CONTROL SIGNING SHALL BE COMPLETELY COVERED OR REMOVED.

AUTOMATED FLAGGER ASSISTANCE DEVICES AND PORTABLE SIGNAL FLAGGING DEVICES MAY BE USED AS AN ALTERNATIVE FLAGGING OPERATION.

FOR ADDITIONAL TRAFFIC CONTROL PLANS FOR THIS PROJECT, USE STANDARD PLANS 616.20 (SHEETS 1 THROUGH 5).

DRAWING NOT TO SCALE. FOLLOW DIMENSIONS.

PERMANENT POSTED SPEED (MPH)	SIGN SPACING (1) (FT)	
	NON-DIVIDED HIGHWAYS (S)	DIVIDED HIGHWAYS (S)
0 - 35	200 FT	200 FT
40 - 45	350 FT	500 FT
50 - 55	500 FT	1000 FT
60 - 70	1000 FT	SA - 1000 FT SB - 1500 FT SC - 2640 FT

(1) SPACING BETWEEN SIGNS, BETWEEN LAST SIGN AND FLAGGER, BEGINNING OF TAPER OR SIGNED CONDITION. SPACINGS MAY BE ADJUSTED AS NECESSARY TO MEET FIELD CONDITIONS.

TAPER LENGTH AND SPACING							
PERMANENT POSTED SPEED (MPH)	TAPER LENGTH T1 SHOULDER (1)	TAPER LENGTH L FOR LATERAL SHIFTS (2)			BUFFER SPACE LENGTH	CHANNELIZER SPACING (3)	
		10 FT	11 FT	12 FT		TAPERS	BUFFER SPACE WORK AREA
0 - 35	70 FT	205 FT	225 FT	245 FT	280 FT	35 FT (4)	40 FT (4)
40 - 45	150 FT	450 FT	495 FT	540 FT	400 FT	40 FT (4)	80 FT (4)
50 - 55	185 FT	550 FT	605 FT	660 FT	560 FT	50 FT (5)	80 FT (5)
60 - 70	235 FT	700 FT	770 FT	840 FT	840 FT	60 FT (5)	120 FT (5)

(1) SHOULDER TAPER LENGTH BASED ON 10' (STANDARD SHOULDER WIDTH) OFFSET.

(2) TAPER LENGTHS MAY BE ADJUSTED TO ACCOMMODATE CROSSROADS, CURVES, RAMPS, INTERSECTIONS, OR OTHER GEOMETIC FEATURES.

(3) SPACING MAY BE REDUCED TO DISCOURAGE TRAFFIC ENCROACHMENT.

(4) SPACING REDUCED TO ONE-HALF AT INTERSECTIONS.

(5) SPACING MAY BE REDUCED TO ONE-HALF AT INTERSECTIONS.

STATE OF MISSOURI
DONNA RENE PHILPOT
NUMBER PE-2019000205
PROFESSIONAL ENGINEER

Donna Rene Philpot
DONNA RENE PHILPOT - CIVIL
MO-PE-2019000205

DATE PREPARED	2/26/2025
ROUTE	164
STATE	MO
DISTRICT	SE
SHEET NO.	9
COUNTY	DUNKLIN/PEMISCOT
JOB NO.	J9S3780
CONTRACT ID.	
PROJECT NO.	
BRIDGE NO.	

DATE	DESCRIPTION

MISSOURI HIGHWAYS AND TRANSPORTATION COMMISSION

105 WEST CAPITOL
JEFFERSON CITY, MO 65102
1-888-ASK-MODOT (1-888-275-6636)

TRAFFIC CONTROL
SHEET 1 OF 2

WO20-1

(2)

WO20-4

(7)

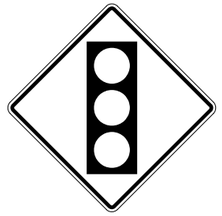

WO3-3

(12)

R10-6L

(47)

TRAFFIC CONTROL LEGEND

- SIGN (SINGLE SIDED)
- CHANNELIZER
- PORTABLE TRAFFIC SIGNAL

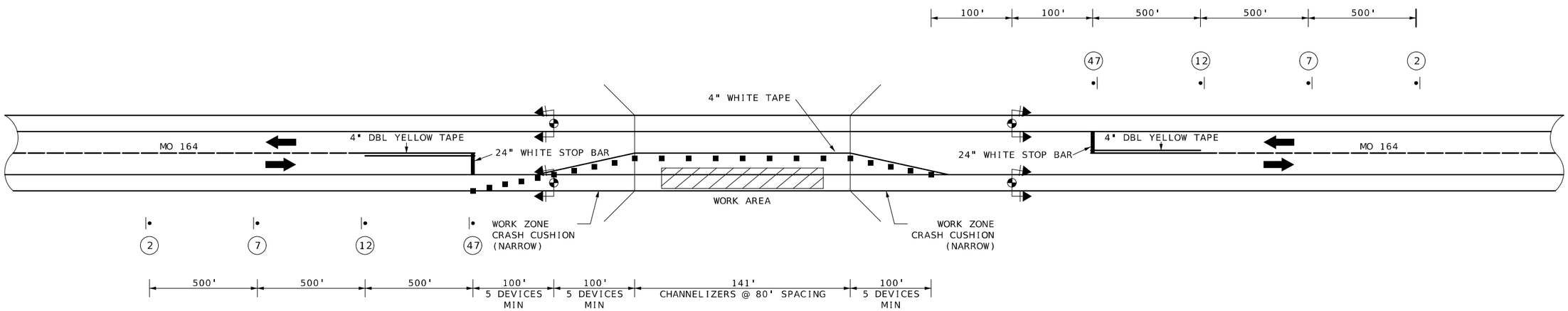

LANE CLOSURE WITH SIGNALS FOR CURB BLOCKOUT

BR A2332
BR A2333
BR A2334
BR A2336

NOTES:

DISTANCE MAY BE ADJUSTED ACCORDING TO FIELD CONDITIONS.

ANY EXISTING SIGNING THAT CONFLICTS WITH THE TRAFFIC CONTROL SIGNING SHALL BE COMPLETELY COVERED OR REMOVED.

NO PAYMENT WILL BE MADE FOR RELOCATION OF CONSTRUCTION SIGNS.

CONTRACTOR SHALL CONSULT WITH THE ENGINEER REGARDING PHASING, INTERCONNECTION AND OPERATION OF SIGNALS PRIOR TO ENGINEER'S APPROVAL OF SIGNAL INSTALLATIONS

DRAWING NOT TO SCALE. FOLLOW DIMENSIONS

STATE OF MISSOURI
DONNA RENE PHILPOT
NUMBER PE-2019000205
PROFESSIONAL ENGINEER

Donna Rene Philpot
DONNA RENE PHILPOT - CIVIL
MO-PE-2019000205

DATE PREPARED	2/26/2025
ROUTE	164
STATE	MO
DISTRICT	SE
SHEET NO.	10
COUNTY	DUNKLIN/PEMISCOT
JOB NO.	J9S3780
CONTRACT ID.	
PROJECT NO.	
BRIDGE NO.	

DATE	DESCRIPTION

MISSOURI HIGHWAYS AND TRANSPORTATION COMMISSION

105 WEST CAPITOL
JEFFERSON CITY, MO 65102
1-888-ASK-MODOT (1-888-275-6636)

TRAFFIC CONTROL
SHEET 2 OF 2

EROSION CONTROL AT BRIDGE ENDS

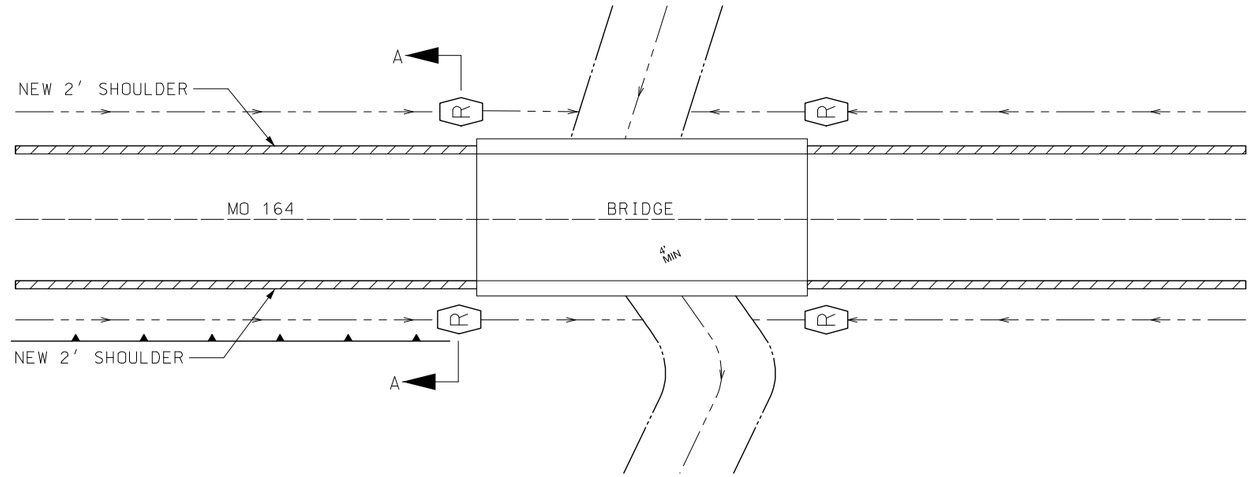

PLAN VIEW

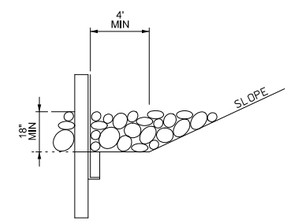

SECTION A-A

R ROCK DITCH CHECK

SILT FENCE

EROSION CONTROL AT DRIVEWAYS

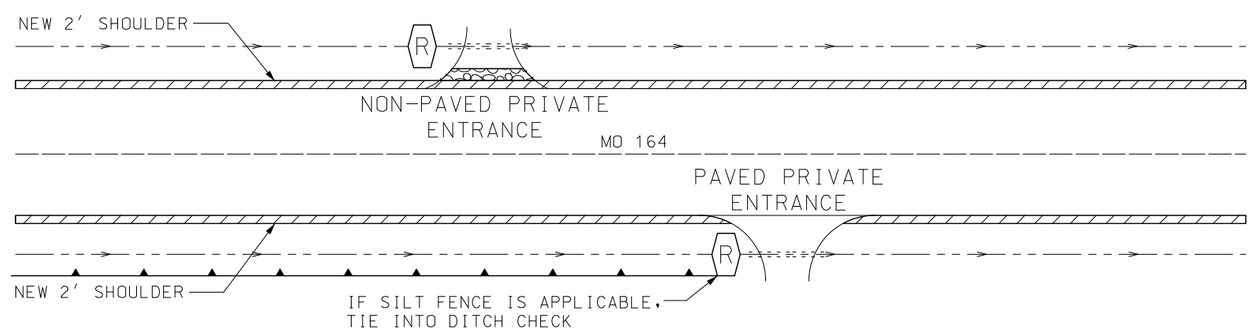

PLAN VIEW

NOTE:

ROCK DITCH CHECKS TO BE LOCATED AT EACH BRIDGE CORNER.

ROCK DITCH CHECKS SHALL BE PLACED UPSTREAM OF ANY DW OR CROSSROAD CULVERT AND ANY ADDITIONAL LOCATIONS, AS DIRECTED BY THE ENGINEER.

USE SILT FENCE IN AREAS WITH NO DEFINED DITCH WHERE WATER EXITS R/W AND TIE ENDS INTO NEARBY ROCK DITCH CHECK OR SEDIMENT TRAP.

SEE STD 806.10 FOR ADDITIONAL DETAILS.

DRAWING NOT TO SCALE. FOLLOW DIMENSIONS.

STATE OF MISSOURI
DONNA RENE PHILPOT
NUMBER
PE-2019000205
PROFESSIONAL ENGINEER

Donna Rene Philpot
DONNA RENE PHILPOT • CIVIL
MO-PE-2019000205

DATE PREPARED	2/26/2025
ROUTE	164
STATE	MO
DISTRICT	SE
SHEET NO.	11
COUNTY	DUNKLIN/PEMISCOT
JOB NO.	J9S3780
CONTRACT ID.	
PROJECT NO.	
BRIDGE NO.	

DESCRIPTION	DATE

MISSOURI HIGHWAYS AND TRANSPORTATION COMMISSION

105 WEST CAPITOL
JEFFERSON CITY, MO 65102
1-888-ASK-MODOT (1-888-275-6636)

EROSION CONTROL
SHEET 1 OF 1

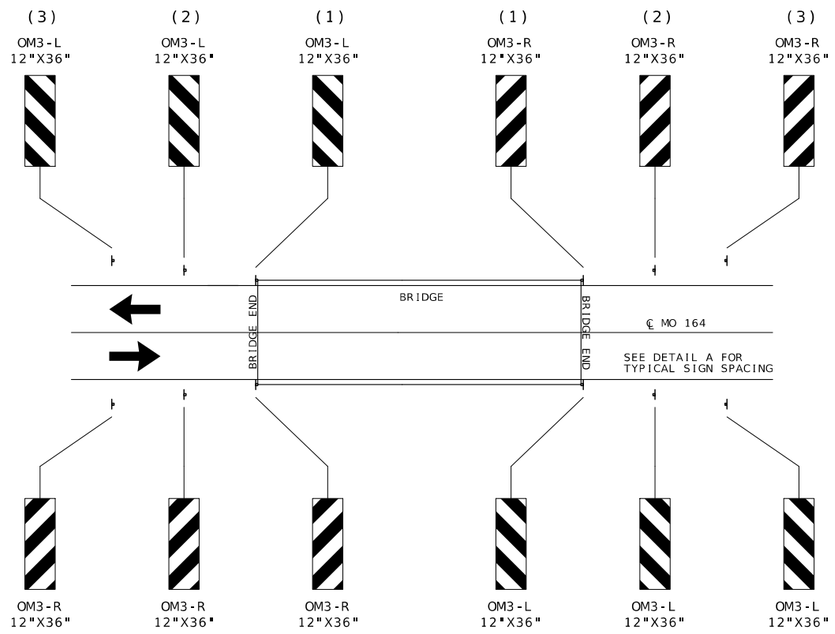

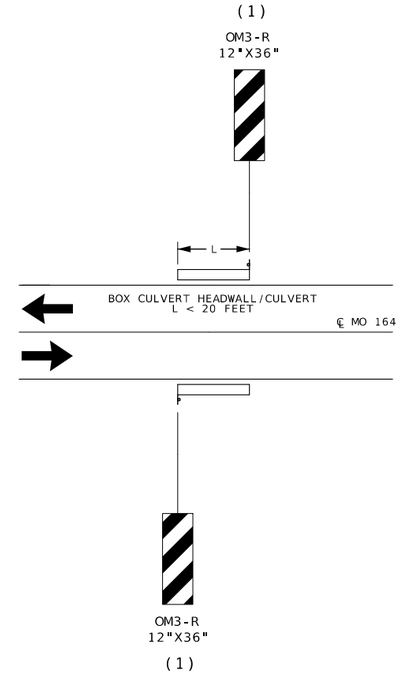

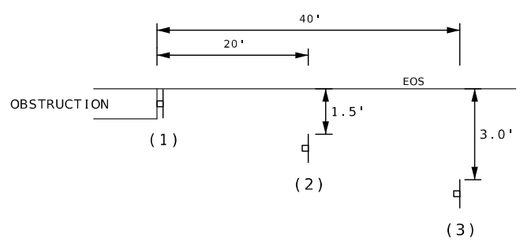

DETAIL A

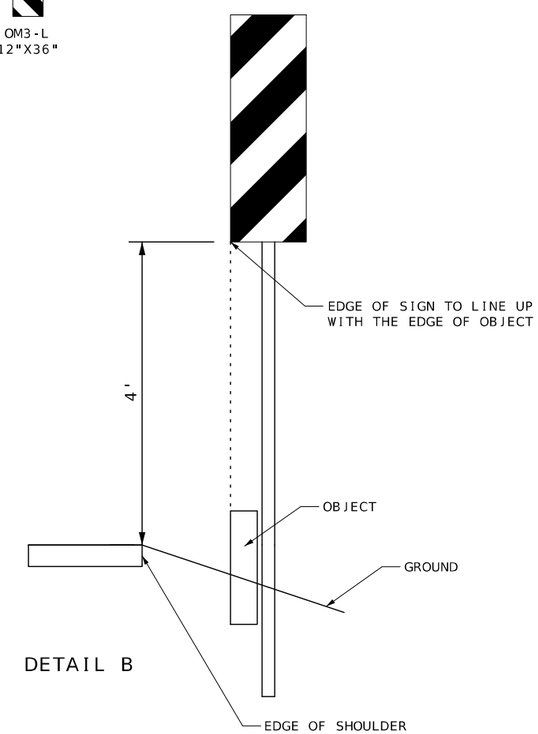

DETAIL B

NOTES:

(1) PLACE AS NEAR THE OBSTRUCTION AS POSSIBLE AND SET TO LINE UP WITH INSIDE EDGE OF OBSTRUCTION.
(2) PLACE 1.5 FEET OFF THE EDGE OF PAVEMENT AND 20 FEET FROM THE END OF OBSTRUCTION.
(3) PLACE 3.0 FEET OFF THE EDGE OF PAVEMENT AND 40 FEET FROM THE END OF THE OBSTRUCTION.

IN AREAS WHERE THERE IS HIGH AGRICULTURAL EQUIPMENT IMPACTS WITH OBJECT MARKERS, THE MOUNTING HEIGHT MAY BE ADJUSTED.

TYPE 3 OBJECT MARKER MOUNTING HEIGHT FOR OBJECTS 2' OR LESS FROM EDGE OF SHOULDER:
- OBJECT MARKER (1) MOUNT AT GROUND LEVEL.
- OBJECT MARKER (2) MOUNT AT 1/2 STANDARD HEIGHT.
- OBJECT MARKER (3) MOUNT AT STANDARD HEIGHT (SEE DETAIL B).

SEE DETAIL B FOR STANDARD MOUNTING HEIGHT DETAILS FOR TYPE 3 OBJECT MARKERS FOR OBJECTS GREATER THAN 2' FROM EDGE OF SHOULDER.

STATE OF MISSOURI
DONNA RENE PHILPOT
NUMBER PE-2019000205
PROFESSIONAL ENGINEER
Donna Rene Philpot
DONNA RENE PHILPOT - CIVIL
MO-PE-2019000205

DATE PREPARED	2/27/2025
ROUTE 164	STATE MO
DISTRICT SE	SHEET NO. 12
COUNTY	DUNKLIN/PEMISCOT
JOB NO.	J9S3780
CONTRACT ID.	
PROJECT NO.	
BRIDGE NO.	

DESCRIPTION	DATE

MISSOURI HIGHWAYS AND TRANSPORTATION COMMISSION
105 WEST CAPITOL
JEFFERSON CITY, MO 65102
1-888-ASK-MODOT (1-888-275-6636)

SIGNING
SHEET 1 OF 13

SIGNS						PERFORATED SQUARE STEEL TUBE													**BACKING BARS				
902 SIGNAL SIGNS TABULATED ON D37-1 SHEET						2 IN. POST						2.5 IN. POST						BREAK AWAY	ITEM NO. 9031210				REMARKS AND OTHER REQUIRED ITEMS
									ANCHORS						2.25" INSERT	ANCHORS			2" X 3/8" BARS				
									DRIVEN	DRIVEN	CONCRETE				(6 FT)	DRIVEN	CONCRETE		@ 2.55 LBS PER FOOT				
SIGN NO.	SIGN SIZE	LOG MILE	HORZ CLEAR IF NOT STD	LOCATION	SIGN DTL. SHT. NO.	POST NO. 1	POST NO. 2	TOTAL ITEM NO. 9031270A	12-GA. ITEM NO. 9031271A	7-GA. ITEM NO. 9031273A	7-GA. ITEM NO. 9031274	POST NO. 1	POST NO. 2	TOTAL ITEM NO. 9031280	ITEM NO. 9031272A	7-GA. ITEM NO. 9031281A	7-GA. ITEM NO. 9031285	ITEM NO. 9031241	NO. EACH	LGTH IN.	TOTAL LF	TOTAL LBS	
						LF	LF	LF	EA	EA	EA	LF	LF	LF	EA	EA	EA	EA					
1	ASSEMBLY	0.004*		RT								10.75		10.75		1			4	50	16.67	42.51	
2	36X36	0.004		LT		11.00		11.00	1														
3	36X36	0.004		RT		11.00		11.00	1														
4	ASSEMBLY	0.027		RT	D-31 1							14.25		14.25	1	1		1					
5	36X36	0.053		LT		12.50		12.50	1														
6	84X24	0.057		LT	D-31 1	10.00	11.50	21.50	2														ALSO SEE D-31 FOR CITY LIMIT SIGN
7	ASSEMBLY	0.065*		RT		11.00		11.00	1														
8	ASSEMBLY	0.165		LT								11.75		11.75		1			2	50	8.33	21.24	
9	ASSEMBLY	0.168		RT								11.75		11.75		1							
10	36X48	0.251		RT								12.00		12.00		1							
11	ASSEMBLY	0.273		RT								11.75		11.75		1							
12	ASSEMBLY	0.276		LT								11.75		11.75		1							
13	ASSEMBLY	0.331		RT		11.25		11.25	1														
14	ASSEMBLY	0.366		LT								11.75		11.75		1							
15	ASSEMBLY	0.453		LT		11.00		11.00	1														
16	ASSEMBLY	0.476		RT								10.75		10.75		1			4	50	16.67	42.51	
17	36X48	0.476		LT								12.00		12.00		1							
18	ASSEMBLY	0.500**		LT								13.25		13.25		1							
19	ASSEMBLY	0.500**		RT								13.25		13.25		1							
20	36X36	0.500		LT		11.00		11.00	1														
21	48X48	0.517		RT		12.25		12.25	1														
22	30X30	0.525		RT		10.50		10.50	1														
23	ASSEMBLY	0.574		LT								11.00		11.00		1			4	50	16.67	42.51	
24	36X48	0.598		RT								12.00		12.00		1							
25	ASSEMBLY	0.630		LT		10.25		10.25	1														
26	ASSEMBLY	0.709		LT		11.25		11.25	1														
27	36X36	0.766		RT		11.00		11.00	1														
28	36X48	0.866		LT								12.00		12.00		1							
29	36X48	0.869		RT								12.00		12.00		1							
30	ASSEMBLY	1.014		LT	D-31 1							14.25		14.25	1	1		1					ALSO SEE D-31 FOR CITY LIMIT SIGN
31	36X48	1.038		RT								12.00		12.00		1							
32	36X36	1.762*		LT		12.50		12.50	1														
33	36X36	1.762*		RT		12.50		12.50	1														
34	72X24	1.769		RT	D-31 1	10.00	11.25	21.25	2														
35	ASSEMBLY	1.791		LT		11.00		11.00	1														
36	ASSEMBLY	1.833		RT								12.75		12.75		1							
37	ASSEMBLY	1.835		LT								12.75		12.75		1							
38	ASSEMBLY	1.836		LT								10.75		10.75		1			4	50	16.67	42.51	
39	ASSEMBLY	1.862		RT								10.75		10.75		1			4	50	16.67	42.51	
40	ASSEMBLY	1.863		RT								12.75		12.75		1							
41	ASSEMBLY	1.865		LT								12.75		12.75		1							
42	ASSEMBLY	1.880		RT		11.00		11.00	1														
43	84X36	1.946		LT	D-31 1							11.25	12.5	23.75	2	2							
44	36X36	1.959*		LT		12.50		12.50	1														
45	36X36	1.959*		RT		12.50		12.50	1														
46	36X48	1.993		RT								12.00		12.00		1							
47	ASSEMBLY	2.064		LT		11.25		11.25	1														
48	12X36	2.782		LT		9.75		9.75	1														
49	12X36	2.786		RT		9.75		9.75	1														
50	ASSEMBLY	2.822		RT		11.25		11.25	1														
51	ASSEMBLY	2.986		LT		11.00		11.00	1														
52	ASSEMBLY	3.007		RT								10.75		10.75		1			2	50	8.33	21.24	
																			2	36	6.00	15.30	
53	12X36	3.031		LT		9.75		9.75	1														
54	12X36	3.035		RT		9.75		9.75	1														
55	ASSEMBLY	3.059		LT								10.75		10.75		1			4	50	16.67	42.51	
56	ASSEMBLY	3.088		RT	D-31 1							14.25		14.25	1	1		1					ALSO SEE D-31 FOR CITY LIMIT SIGN
57	ASSEMBLY	3.119		RT		10.50		10.50	1														
58	84X24	3.150		LT	D-31 1	10.00	11.50	21.50	2														
59	ASSEMBLY	3.245		LT								10.75		10.75		1			4	50	16.67	42.51	
60	36X48	3.250		RT								12.00		12.00		1							
61	ASSEMBLY	3.320		RT								10.75		10.75		1			4	50	16.67	42.51	
62	36X48	3.403		LT								12.00		12.00		1							
63	36X48	3.359*		RT								12.00		12.00		1							
64	ASSEMBLY	3.402**		RT								13.75		13.75		1							
65	48X24	3.455**		RT		10.00	10.75	20.75	2														
66	12X36	3.473**		RT		9.75		9.75	1														
67	12X36	3.481**		LT		9.75		9.75	1														
68	48X24	3.485**		RT		10.00	10.75	20.75	2														
69	ASSEMBLY	3.491		LT		10.50		10.50											4	50	16.67	42.51	
70	12X36	3.508**		LT		9.75		9.75	1														
			SUB TOTAL 1					434.50	39					433.50	5	36		3				440.37	

** BACKING BARS ARE PAID FOR WITH STRUCTURAL STEEL OR PIPE POSTS PAY ITEM NUMBER.

STATE OF MISSOURI
DONNA RENE PHILPOT
NUMBER PE-2019000205
PROFESSIONAL ENGINEER

Donna Rene Philpot
Digitally signed by DONNA RENE PHILPOT
DONNA RENE PHILPOT - CIVIL
MO-PE-2019000205

DATE PREPARED
2/27/2025

ROUTE	STATE
164	MO
DISTRICT	SHEET NO.
SE	13

COUNTY
DUNKLIN/PEMISCOT

JOB NO.
J9S3780

CONTRACT ID.

PROJECT NO.

BRIDGE NO.

DATE	DESCRIPTION

MISSOURI HIGHWAYS AND TRANSPORTATION COMMISSION
105 WEST CAPITOL
JEFFERSON CITY, MO 65102
1-888-ASK-MODOT (1-888-275-6636)

SIGNING
SHEET 2 OF 13

SIGNS

902 SIGNAL SIGNS TABULATED ON D37-1 SHEET

PERFORATED SQUARE STEEL TUBE

SIGN NO.	SIGN SIZE	LOG MILE	HORZ CLEAR IF NOT STD	LOCATION	SIGN DTL. SHT. NO.	2 IN. POST POST NO. 1 LF	2 IN. POST POST NO. 2 LF	2 IN. POST TOTAL ITEM NO. 9031270A LF	2 IN. POST ANCHORS DRIVEN 12-GA. ITEM NO. 9031271A EA	2 IN. POST ANCHORS DRIVEN 7-GA. ITEM NO. 9031273A EA	2 IN. POST ANCHORS CONCRETE 7-GA. ITEM NO. 9031274 EA	2.5 IN. POST POST NO. 1 LF	2.5 IN. POST POST NO. 2 LF	2.5 IN. POST TOTAL ITEM NO. 9031280 LF	2.25" INSERT (6 FT) ITEM NO. 9031272A EA	2.5 IN. POST ANCHORS DRIVEN 7-GA. ITEM NO. 9031281A EA	2.5 IN. POST ANCHORS CONCRETE 7-GA. ITEM NO. 9031285 EA	BREAK AWAY ASSEMBLY ITEM NO. 9031241 EA	**BACKING BARS ITEM NO. 9031210 2" X 3/8" BARS @ 2.55 LBS PER FOOT NO. EACH	LGTH IN.	TOTAL LF	TOTAL LBS	REMARKS AND OTHER REQUIRED ITEMS
71	ASSEMBLY	3.509		RT								10.75		10.75		1			4	50	16.67	42.51	
72	12X36	3.515		RT		9.75		9.75	1														
73	ASSEMBLY	3.516		LT								10.00		10.00		1			4	50	4.17	10.63	
																			1	36	3.00	7.65	
74	48X24	3.516		LT		9.75	9.75	19.50	2														
75	ASSEMBLY	3.516		LT								10.75		10.75		1			4	50	16.67	42.51	
76	ASSEMBLY	3.950**		LT/108 E								13.75		13.75		1							
77	36X36	3.532		LT		11.00		11.00	1														
78	ASSEMBLY	3.549		RT		11.00		11.00	1														
79	12X36	3.582		LT		9.75		9.75	1														
80	12X36	3.585		RT		9.75		9.75	1														
81	72X24	3.596		LT	D-31 1	10.00	11.25	21.25	2														
82	ASSEMBLY	3.673		LT		10.25		10.25	1														
83	36X48	3.724		RT								12.00		12.00		1							
84	36X48	3.736		LT								12.00		12.00		1							
85	ASSEMBLY	3.790		LT		11.25		11.25	1														
86	36X48	3.845		LT								12.00		12.00		1							
87	ASSEMBLY	4.019		LT	D-31 1							14.25		14.25	1	1		1					ALSO SEE D-31 FOR CITY LIMIT SIGN
88	12X36	4.027		RT		9.75		9.75	1														
89	12X36	4.035		LT		9.75		9.75	1														
90	36X48	4.036		RT				0.00				12.00		12.00		1							
91	12X36	5.280	3.00	LT		8.50		8.50	1														
92	12X36	5.280	3.00	LT		8.50		8.50	1														
93	12X36	5.284	1.50	LT		6.00		6.00	1														
94	12X36	5.284	1.50	RT		6.00		6.00	1														
95	12X36	5.288	0.00	RT		4.00		4.00	1														
96	12X36	5.288	0.00	RT		4.00		4.00	1														
97	12X36	5.302	0.00	LT		4.00		4.00	1														
98	12X36	5.302	0.00	LT		4.00		4.00	1														
99	12X36	5.306	1.50	LT		6.00		6.00	1														
100	12X36	5.306	1.50	RT		6.00		6.00	1														
101	12X36	5.310	3.00	RT		8.50		8.50	1														
102	12X36	5.310	3.00	RT		8.50		8.50	1														
103	12X36	6.026		LT		9.75		9.75	1														
104	12X36	6.031		RT		9.75		9.75	1														
105	12X36	6.715		LT		9.75		9.75	1														
106	12X36	6.721		RT		9.75		9.75	1														
107	ASSEMBLY	7.882		RT		11.25		11.25	1														
108	36X48	7.882**		LT								12.00		12.00		1							
109	ASSEMBLY	8.018		LT		11.00		11.00	1														
110	ASSEMBLY	8.025		RT								11.00		11.00		1			4	50	4.17	10.63	
111	ASSEMBLY	8.063		RT		11.00		11.00	1														
112	ASSEMBLY	8.063		LT								10.75		10.75		1			4	50	4.17	10.63	
113	36X48	8.145		RT								12.00		12.00		1							
114	ASSEMBLY	8.245		LT		11.25		11.25	1														
115	12X36	8.333		LT		9.75		9.75	1														
116	12X36	8.335		RT		9.75		9.75	1														
117	12X36	9.647		RT		9.75		9.75	1														
118	12X36	9.647		LT		9.75		9.75	1														
119	36X48	10.077		LT								12.00		12.00		1							
120	ASSEMBLY	10.079		RT								10.00	11.00	21.00	2	2			2	50	4.17	10.63	REUSE EXIST CITY LIMIT SIGN
																			1	72	6.00	15.30	
121	ASSEMBLY	10.555		RT		11.25		11.25	1														
122	ASSEMBLY	10.698		LT		11.00		11.00	1														
123	ASSEMBLY	10.710		RT								10.75				1			4	50	16.67	42.51	
124	ASSEMBLY	10.767		LT								10.75				1			4	50	16.67	42.51	
125	ASSEMBLY	10.791		RT		11.00		11.00	1														
126	ASSEMBLY	10.891		LT		11.25		11.25															
127	ASSEMBLY	10.971		RT								13.75				1							
128	ASSEMBLY	10.994		LT	D-31 1							10.00	11.00	21.00	2	2			2	50	4.17	10.63	ALSO SEE D-31 FOR CITY LIMIT SIGN
																			1	72	6.00	15.30	
129	48X24	11.032		RT		10.00	10.75	20.75	2														
130	48X24	11.033		RT		10.00	10.75	20.75	2														
131	36X48	11.122		RT								12.00		12.00		1							
132	ASSEMBLY	11.135		LT								13.75		13.75									
133	36X36	12.342		RT		12.50		12.50	1														
134	36X36	13.102		LT		12.50		12.50	1														
135	36X36	13.132		LT		11.00		11.00	1														
136	36X36	13.143		RT		11.00		11.00	1														
137	ASSEMBLY	13.966		RT		11.75		11.75	1										2	50	4.17	10.63	
138	36X48	14.038		LT								12.00		12.00		1							
				SUB-TOTAL 2				474.25	49					245.00	5	23		1				272.07	

** BACKING BARS ARE PAID FOR WITH STRUCTURAL STEEL OR PIPE POSTS PAY ITEM NUMBER.

STATE OF MISSOURI
DONNA RENE PHILPOT
NUMBER PE-2019000205
PROFESSIONAL ENGINEER

Donna Rene Philpot
DONNA RENE PHILPOT • CIVIL
MO-PE-2019000205

DATE PREPARED
2/27/2025

ROUTE	STATE
164	MO

DISTRICT	SHEET NO.
SE	14

COUNTY
DUNKLIN/PEMISCOT

JOB NO.
J9S3780

CONTRACT ID.

PROJECT NO.

BRIDGE NO.

DESCRIPTION	DATE

MISSOURI HIGHWAYS AND TRANSPORTATION COMMISSION
105 WEST CAPITOL
JEFFERSON CITY, MO 65102
1-888-ASK-MODOT (1-888-275-6636)

SIGNING
SHEET 3 OF 13

SIGNS						PERFORATED SQUARE STEEL TUBE													**BACKING BARS				
						2 IN. POST						2.5 IN. POST						BREAK AWAY	ITEM NO. 9031210				
									ANCHORS						2.25" INSERT (6 FT)	ANCHORS							
902 SIGNAL SIGNS TABULATED ON D37-1 SHEET						POST NO. 1	POST NO. 2	TOTAL	DRIVEN 12-GA.	DRIVEN 7-GA.	CONCRETE 7-GA.	POST NO. 1	POST NO. 2	TOTAL		DRIVEN 7-GA.	CONCRETE 7-GA.	ASSEMBLY	2" X 3/8" BARS @ 2.55 LBS PER FOOT				REMARKS AND OTHER REQUIRED ITEMS
SIGN NO.	SIGN SIZE	LOG MILE	HORZ CLEAR IF NOT STD	LOCATION	SIGN DTL. SHT. NO.			ITEM NO. 9031270A	ITEM NO. 9031271A	ITEM NO. 9031273A	ITEM NO. 9031274			ITEM NO. 9031280	ITEM NO. 9031272A	ITEM NO. 9031281A	ITEM NO. 9031285	ITEM NO. 9031241	NO. EACH	LGTH IN.	TOTAL LF	TOTAL LBS	
						LF	LF	LF	EA	EA	EA	LF	LF	LF	EA	EA	EA	EA					
139	ASSEMBLY	14.045		RT		11.00		11.00	1														
140	72X24	14.114		RT	D-31 1	10.00	11.25	21.25	2														
141	36X36	14.145*		RT		12.5		12.50	1														
142	36X36	14.145*		LT		12.5		12.50	1														
143	ASSEMBLY	14.153		LT		11.00		11.00	1														
144	ASSEMBLY	14.207		RT		11.25		11.25	1														
145	ASSEMBLY	14.208		RT								14.25		14.25	1	1		1	4	50	16.67	42.51	
146	48X48	14.208		LT		12.25		12.25	1														
147	ASSEMBLY	14.209		LT		11.25		11.25	1														
148	ASSEMBLY	14.209		LT		11.25		11.25	1														
149	ASSEMBLY	14.209		LT								14.25		14.25	1	1		1	4	50	16.67	42.51	
150	ASSEMBLY	14.209		LT		11.25		11.25	1														
151	ASSEMBLY	14.210		LT								11.00		11.00		1			4	50	16.67	42.51	
152	ASSEMBLY	14.214		LT		11.25		11.25	1														
153	ASSEMBLY	14.216		LT								10.75		10.75		1			4	50	16.67	42.51	
154	ASSEMBLY	14.217		RT		11.25		11.25	1														
155	48X48	14.218		LT		12.25		12.25	1														
156	ASSEMBLY	14.266		RT		11.00		11.00	1														
157	96X24	14.307		LT	D-31 1	10.25	11.75	22.00	2														
158	36X48	14.333		RT								12.00		12.00		1							
159	ASSEMBLY	14.401		LT		11.75		11.75	1										2	50	8.33	21.24	
160	36X36	14.331*		RT		12.5		12.50	1														
161	36X36	14.331*		LT		12.5		12.50	1														
162	12X36	14.751		RT		9.75		9.75	1														
163	12X36	14.751		LT		9.75		9.75	1														
164	12X36	14.777		RT		9.75		9.75	1														
165	12X36	14.777		LT		9.75		9.75	1														
166	12X36	14.844		RT		9.75		9.75	1														
167	12X36	14.844		LT		9.75		9.75	1														
168	12X36	14.859		RT		9.75		9.75	1														
169	12X36	14.859		LT		9.75		9.75	1														
170	12X36	14.980		RT		9.75		9.75	1														
171	12X36	14.980		LT		9.75		9.75	1														
172	12X36	14.992		RT		9.75		9.75	1														
173	12X36	14.992		LT		9.75		9.75	1														
174	ASSEMBLY	17.422		RT		11.25		11.25	1														
175	36X48	17.456		RT								12.00		12.00		1							
176	96X24	17.506		RT	D-31 2	10.25	11.75	22.00	2														
177	ASSEMBLY	17.574		LT		11.00		11.00	1														
178	ASSEMBLY	17.59		RT								10.75		10.75		1			4	50	16.67	42.51	
179	ASSEMBLY	17.598		LT		10.25		10.25	1														
180	ASSEMBLY	17.599		LT								10.75		10.75		1			4	50	16.67	42.51	
181	ASSEMBLY	17.616		RT		11.00		11.00	1														
182	36X48	17.667		RT								12.00		12.00		1							
183	96X24	17.670		LT	D-31 2	10.25	11.75	22.00	2														
184	ASSEMBLY	17.848		LT		11.25		11.25	1														
185	ASSEMBLY	18.688		RT		11.25		11.25	1														
186	36X48	18.738		LT								12.00		12.00		1							
187	60X24	18.762		RT	D-31 2	10.00	11.00	21.00	2														
188	ASSEMBLY	18.820		LT		11.00		11.00	1														
189	ASSEMBLY	18.848		RT								10.75		10.75		1			4	50	16.67	42.51	
190	48X24	18.848		RT		9.75	9.75	19.50	2														
191	ASSEMBLY	18.848		RT		10.25		10.25	1														
192	ASSEMBLY	18.849		LT								10.75		10.75		1			4	50	16.67	42.51	
193	ASSEMBLY	18.866		RT		11.00		11.00	1														
194	96X24	18.935		LT	D-31 2	10.25	11.75	22.00	2														
195	36X48	18.960		RT								12.00		12.00		1							
196	ASSEMBLY	19.001		LT		11.25		11.25	1														
197	36X48	21.175		LT								12.00		12.00		1							
198	ASSEMBLY	21.182		RT								13.25		13.25		1							
199	ASSEMBLY	21.378		RT		11.25		11.25	1														
200	96X36	21.438		RT	D-31 2							11.25	12.75	24.00	2	2							
201	ASSEMBLY	21.456		LT		11.00		11.00	1														
202	36X36	21.529		RT		12.50		12.50	1														
203	36X36	21.529		LT		12.50		12.50	1														
204	30X18	21.557		LT	D-31 2	9.50		9.50	1														
205	ASSEMBLY	21.593		LT								10.75		10.75		1			4	50	16.67	42.51	
206	ASSEMBLY	21.598		RT		11.25		11.25	1														
207	ASSEMBLY	21.598		LT		11.25		11.25	1														
208	ASSEMBLY	21.615		LT		11.25		11.25	1														
209	ASSEMBLY	21.616		RT		11.25		11.25	1														
				SUB-TOTAL 3				664.75	61					213.25	4	18		2				403.83	

** BACKING BARS ARE PAID FOR WITH STRUCTURAL STEEL OR PIPE POSTS PAY ITEM NUMBER.

STATE OF MISSOURI
DONNA RENE PHILPOT
NUMBER PE-2019000205
PROFESSIONAL ENGINEER

Donna Rene Philpot
2025/02/27 1:33:34 PM
DONNA RENE PHILPOT - CIVIL
MO-PE-2019000205

DATE PREPARED
2/27/2025

ROUTE	STATE
164	MO
DISTRICT	SHEET NO.
SE	15

COUNTY
DUNKLIN/PEMISCOT

JOB NO.
J9S3780

CONTRACT ID.

PROJECT NO.

BRIDGE NO.

DESCRIPTION	DATE

MISSOURI HIGHWAYS AND TRANSPORTATION COMMISSION
105 WEST CAPITOL
JEFFERSON CITY, MO 65102
1-888-ASK-MODOT (1-888-275-6636)

SIGNING
SHEET 4 OF 13

SIGNS						PERFORATED SQUARE STEEL TUBE													**BACKING BARS				REMARKS AND OTHER REQUIRED ITEMS
						2 IN. POST						2.5 IN. POST						BREAK AWAY					
									ANCHORS						2.25"	ANCHORS							
902 SIGNAL SIGNS TABULATED ON D37-1 SHEET						POST NO. 1	POST NO. 2	TOTAL	DRIVEN 12-GA.	DRIVEN 7-GA.	CONCRETE 7-GA.	POST NO. 1	POST NO. 2	TOTAL	INSERT (6 FT)	DRIVEN 7-GA.	CONCRETE 7-GA.	ASSEMBLY	ITEM NO. 9031210				
																			2" X 3/8" BARS @ 2.55 LBS PER FOOT				
SIGN NO.	SIGN SIZE	LOG MILE	HORZ CLEAR IF NOT STD	LOCATION	SIGN DTL. SHT. NO.			ITEM NO. 9031270A	ITEM NO. 9031271A	ITEM NO. 9031273A	ITEM NO. 9031274			ITEM NO. 9031280	ITEM NO. 9031272A	ITEM NO. 9031281A	ITEM NO. 9031285	ITEM NO. 9031241	NO. EACH	LGTH IN.	TOTAL LF	TOTAL LBS	
						LF	LF	LF	EA	EA	EA	LF	LF	LF	EA	EA	EA	EA					
210	ASSEMBLY	21.620		RT								10.75		10.75		1			4	50	16.67	42.51	
211	36X36	21.663*		RT		12.50		12.50	1														
212	36X36	21.663*		LT		12.50		12.50	1														
213	ASSEMBLY	21.747		RT		11.00		11.00	1														
214	96X36	21.748		LT	D-31 2							11.25	12.75	24.00	2	2							
215	36X48	21.785*		RT		12.50		12.50	1														
216	ASSEMBLY	21.814**		LT		11.25		11.25	1														
217	36X36	22.039		RT		12.50		12.50	1														
218	36X36	22.039		LT		12.50		12.50	1														
219	ASSEMBLY	23.949		RT								13.75		13.75		1							
220	36X48	23.968		LT								12.00		12.00		1							
221	72X36	24.033		RT	D-31 2	11.00	12.25	23.25	2														
222	ASSEMBLY	24.015**		RT		11.75		11.75	1										2	50	8.33	21.24	
223	ASSEMBLY	24.048		LT		11.00		11.00	1														
224	ASSEMBLY	24.118		RT								14.25		14.25	1	1		1	4	50	16.67	42.51	
225	ASSEMBLY	24.126		LT								14.25		14.25	1	1		1	4	50	16.67	42.51	
226	ASSEMBLY	24.168		LT								13.75		13.75		1							
227	ASSEMBLY	24.200		RT		11.00		11.00	1														
228	96X36	24.201		LT	D-31 2							11.25	12.75	24.00	2	2							
229	ASSEMBLY	24.272		LT		11.75			1										2	50	8.33	21.24	
230	36X48	24.278		RT								12.00		12.00		1							
231	36X12	25.325		RT	D-31 3	9.00		9.00	1														
232	36X12	25.631		LT	D-31 3	9.00		9.00	1														
233	48X36	27.155		RT	D-31 3	11.25		11.25	1														
234	36X48	27.238		LT								12.00		12.00		1							
235	ASSEMBLY	27.251		RT	D-31 3							14.25		14.25	1	1		1					ALSO SEE D-31 FOR CITY LIMIT SIGN
236	48X36	27.327		LT	D-31 3	11.25		11.25	1														
237	ASSEMBLY	28.701		RT		10.25		10.25	1														
238	36X36	28.727*		RT		12.50		12.50	1														
239	ASSEMBLY	28.751		RT		11.25		11.25	1														
240	ASSEMBLY	28.784		LT		11.00		11.00	1														
241	ASSEMBLY	28.789		RT		11.25		11.25	1														
242	ASSEMBLY	28.797		RT		10.25		10.25	1														
243	ASSEMBLY	28.808		LT								10.75		10.75		1			4	50	16.67	42.51	
244	ASSEMBLY	28.815		LT		11.25		11.25	1														
245	ASSEMBLY	28.815		RT								11.00		11.00		1			4	50	16.67	42.51	
246	ASSEMBLY	28.815		RT		10.25		10.25	1														
247	36X48	28.821		RT								12.00		12.00		1							
SUB-TOTAL 4								270.25	25					198.75	7	16		3				255.03	
SUB-TOTAL 3								664.75	61					213.25	4	18		2				403.83	
SUB-TOTAL 2								474.25	49					245.00	5	23		1				272.07	
SUB-TOTAL 1								434.50	39					433.50	5	36		3				440.37	
TOTAL								1844	174					1091	21	93		9				1380	

** BACKING BARS ARE PAID FOR WITH STRUCTURAL STEEL OR PIPE POSTS PAY ITEM NUMBER.

STATE OF MISSOURI
DONNA RENE PHILPOT
NUMBER PE-2019000205
PROFESSIONAL ENGINEER
Donna Rene Philpot
DONNA RENE PHILPOT • CIVIL
MO-PE-2019000205

DATE PREPARED 2/27/2025

ROUTE	STATE
164	MO
DISTRICT	SHEET NO.
SE	16

COUNTY: DUNKLIN/PEMISCOT
JOB NO.: J9S3780
CONTRACT ID.
PROJECT NO.
BRIDGE NO.

DESCRIPTION
DATE

MISSOURI HIGHWAYS AND TRANSPORTATION COMMISSION
105 WEST CAPITOL
JEFFERSON CITY, MO 65102
1-888-ASK-MODOT (1-888-275-6636)

SIGNING
SHEET 5 OF 13

STANDARD SIGN ASSEMBLIES

SIGN NUMBER	LOG MILE	LOC	SH	SH	SH	SH	SH	SH	SH	SH	SH	SHF	SHF	SH	SH	SH	SH	SH	SH	SHF	SHF	SHF	SHF	SHF	SHF	SHF	SHF	SHF	SHF	SHF	SHF	SHF	SHF	SHF	SHF	REMARKS
			M1-4 30x24	M1-5 30x24	M1-5a 24x24	M1-5a 30x24	M2-1 21x15	M3 24x12	M5-1L 21x15	M5-1R 21x15	M6 21x15	OM3-L 12x36	OM3-R 12x36	R1-1 36x36	R1-2 48x48	R1-3P 30x12	R2-1 36x48	R2-5d 36x48	R5-1 30X30	S1-1 36x36	W1-1L 36x36	W1-1R 36x36	W1-2L 36X36	W1-2R 36X36	W1-4R 36x36	W1-6 48x24	W1-7 48x24	W3-1 36x36	W4-4P 36x18	W8-34 36x36	W11-2 36x36	W13-1P 24x24	W16-3P 21x18	W16-7P 30x18	W16-9P 30x18	
1	0.004*	RT	1	1							2																									412/M6-4 & 164/M6-3
2	0.004	LT												1																						
3	0.004	RT												1																						
4	0.027	RT															1																			35 MPH
5	0.053	LT																										1								
7	0.065*	RT		1				1																												164/EAST
8	0.165	LT	1		1		1																													F/412/JCT
9	0.168	RT																		1															1	
10	0.251	RT															1																			25 MPH
11	0.273	RT																		1														1		
12	0.276	LT																		1														1		
13	0.331	RT			1		1																													V/JCT
14	0.366	LT																		1															1	
15	0.453	LT		1				1																												164/WEST
16	0.476	RT		1	1						2																									V/M6-3 & 164/M6-1R
17	0.476	LT															1																			25 MPH
18	0.500**	LT																													1			1		
19	0.500**	RT																													1			1		
20	0.500	LT												1																						LOG MI APPROX
21	0.517	RT													1																					
22	0.525	LT																	1																	
23	0.574	LT		1	1						2																									164/M6-1L & V/M6-1R
24	0.598	RT															1																			35 MPH
25	0.630	LT		1					1																											
26	0.709	LT			1		1																													V/JCT
27	0.766	RT												1																						HALL ST
28	0.866	LT															1																			35 MPH
29	0.869	RT															1																			35 MPH
30	1.014	LT															1																			45 MPH
31	1.038	RT															1																			55 MPH
32	1.762*	LT																										1								
33	1.762*	RT																										1								
35	1.791	LT		1				1																												164/WEST
36	1.833	RT												1															1							
37	1.835	LT												1															1							
38	1.836	LT	1	1							2																									412/M6-4 & 164/M6-3
39	1.862	RT	1	1							2																									164/M6-3 & 412/M6-4
40	1.863	RT												1															1							
41	1.865	LT												1															1							
42	1.880	RT		1				1																												164/EAST
44	1.959*	LT																										1								
45	1.959*	RT																										1								
46	1.993	RT															1																			55 MPH
47	2.064	LT	1				1																													412/JCT
48	2.782	LT											1																							
49	2.786	RT											1																							
50	2.822	RT		1			1																													MO 108/JCT
51	2.986	LT		1				1																												164/WEST
52	3.007	RT		2							2																									164/M6-3 & 108/M6-6R
53	3.031	LT											1																							
54	3.035	RT											1																							
55	3.059	LT		2						2																										108/M6-1 & 164/M6-3
56	3.088	RT															1																			45 MPH
57	3.119	RT		2				2																												164/EAST & 108/EAST
59	3.245	LT		2					1		1																									108/M5-1L & 164/M6-3
60	3.250	RT																1																		25 SPD EXCEPTION
61	3.320	RT		2					1	1																										108/M5-1L & 164/M5-1R
62	3.403	LT															1																			45 MPH
63	3.359*	RT															1																			35 MPH
64	3.402**	RT																					1									1				25 MPH
65	3.455**	RT																								1										LT ARROW BOARD
66	3.473**	RT											1																							
67	3.481**	LT											1																							
68	3.485**	RT																								1										RT ARROW BOARD
69	3.491	LT		2				2																												164/WEST & 108/WEST
70	3.508**	LT											1																							
71	3.509	RT		2							2																									108/M6-2L & 164/M6-1
72	3.515	RT											1																							
73	3.516	LT		2				1			2																									WEST, 164/M6-1L & 108/M6-4
74	3.516	LT																									1									
75	3.516	LT		2							2																									164/M6-6L & 108/M6-2R
SUB TOTAL 1			5	30	5	0	5	10	3	3	19	0	8	8	1	0	12	1	1	4	0	0	1	0	0	2	1	5	4	0	2	1	0	4	2	

*: RELOCATED
**: ADDED

STATE OF MISSOURI
DONNA RENE PHILPOT
NUMBER PE-2019000205
PROFESSIONAL ENGINEER
Donna Rene Philpot
MODOT-DEVELOPMENT-DESIGN-PMS
DONNA RENE PHILPOT - CIVIL
MO-PE-2019000205

DATE PREPARED
2/27/2025

ROUTE	STATE
164	MO
DISTRICT	SHEET NO.
SE	17

COUNTY
DUNKLIN/PEMISCOT

JOB NO.
J9S3780

CONTRACT ID.

PROJECT NO.

BRIDGE NO.

DESCRIPTION

DATE

MISSOURI HIGHWAYS AND TRANSPORTATION COMMISSION

105 WEST CAPITOL
JEFFERSON CITY, MO 65102
1-888-ASK-MODOT (1-888-275-6636)

SIGNING
SHEET 6 OF 13

STANDARD SIGN ASSEMBLIES

SIGN NUMBER	LOG MILE	LOC	SH	SH	SH	SH	SH	SH	SH	SH	SH	SHF	SHF	SH	SH	SH	SH	SH	SH	SHF	SHF	SHF	SHF	SHF	SHF	SHF	SHF	SHF	SHF	SHF	SHF	SHF	SHF	SHF	SHF	SHF	REMARKS
			M1-4 30x24	M1-5 30x24	M1-5a 24x24	M1-5a 30x24	M2-1 21x15	M3 24x12	M5-1L 21x15	M5-1R 21x15	M6 21x15	OM3-L 12x36	OM3-R 12x36	R1-1 36x36	R1-2 48x48	R1-3P 30x12	R2-1 36x48	R2-5d 36x48	R5-1 30X30	S1-1 36x36	W1-1L 36x36	W1-1R 36x36	W1-2L 36x36	W1-2R 36X36	W1-4R 36x36	W1-6 48x24	W1-7 48x24	W3-1 36x36	W4-4P 36x18	W8-34 36x36	W11-2 36x36	W13-1P 24x24	W16-3P 21x18	W16-7P 30x18	W16-9P 30x18	
76	3.950**	LT/108 E																						1								1				25 MPH/300 FT FROM 164
77	3.532	LT												1																						
78	3.549	RT		1				1																												164/EAST
79	3.582	LT											1																							
80	3.585	RT											1																							
82	3.673	LT		1					1																											164
83	3.724	RT															1																			45 MPH
84	3.736	LT															1																			35 MPH
85	3.790	LT		1			1																													108/JCT
86	3.845	LT																1																		25 SPD EXCEPTION
88	4.027	RT											1																							
89	4.035	LT											1																							
90	4.036	RT															1																			55 MPH
91	5.280	LT										1																								
92	5.280	LT										1																								
93	5.280	LT										1																								
94	5.284	RT											1																							
95	5.284	RT											1																							
96	5.284	RT											1																							
97	5.302	LT										1																								
98	5.302	LT										1																								
99	5.302	LT										1																								
100	5.303	RT											1																							
101	5.303	RT											1																							
102	5.303	RT											1																							
103	6.026	LT											1																							
104	6.031	RT											1																							
105	6.715	LT											1																							
106	6.721	RT											1																							
107	7.882	RT			1		1																													K/JCT
108	7.882**	LT															1																			55 MPH
109	8.018	LT		1				1																												164/WEST
110	8.025	RT		1	1						2																									164/M6-3 & K/M6-1
111	8.063	RT		1				1																												164/EAST
112	8.063	LT		1	1						2																									K/M6-1L & 164/M6-3
113	8.145	RT															1																			55 MPH
114	8.245	LT			1		1																													K/JCT
115	8.333	LT											1																							
116	8.335	RT											1																							
117	9.647	RT											1																							
118	9.647	LT											1																							
119	10.077	LT															1																			55 MPH
120	10.079	RT															1																			45 MPH
121	10.555	RT				1	1																													YY/JCT
122	10.698	LT		1				1																												164/WEST
123	10.710	RT		1		1					2																									164/M6-3 & YY/M6-1
124	10.767	LT		1		1					2																									YY/M6-1L & 164/M6-3
125	10.791	RT		1				1																												164/EAST
126	10.891	LT				1	1																													YY/JCT
127	10.971	RT																			1											1				W1-1L/30 MPH
129	11.032	RT																								1										LEFT
130	11.033	RT																								1										RIGHT
131	11.122	RT															1																			55 MPH
132	11.135	LT																				1										1				WARNING/30MPH
133	12.342	RT																												1						
134	13.102	LT																												1						
135	13.132	LT												1																						
136	13.143	RT												1																						
137	13.966	RT			2		1																													N/Y/JCT
138	14.038	LT															1																			55 MPH
139	14.045	RT		1				1																												164/EAST
141	14.145*	RT																										1								
142	14.145*	LT																										1								
143	14.153	LT		1				1																												164/WEST
144	14.207	RT												1		1																				
145	14.208	RT		1	2						3																									Y/M6-3, N/M6-1L, & 164/M6-1R
146	14.208	LT													1																					LOG MI APPROX
147	14.209	LT												1		1																				LOG MI APPROX
148	14.209	LT												1		1																				LOG MI APPROX
149	14.209	LT		1	2						3																									N/M6-3, 164/M6-1L, & Y/M6-1R
150	14.209	LT												1		1																				
151	14.21	LT		1	1						2																									164/M6-6L & N/M6-1R
SUB TOTAL 2			0	16	11	4	6	7	1	0	16	6	18	7	1	4	9	1	0	0	1	1	0	1	0	2	0	2	0	2	0	3	0	0	0	

*: RELOCATED
**: ADDED

STATE OF MISSOURI
DONNA RENE PHILPOT
NUMBER PE-2019000205
PROFESSIONAL ENGINEER

Donna Rene Philpot
DONNA RENE PHILPOT - CIVIL
MO-PE-2019000205

DATE PREPARED 2/27/2025

ROUTE	STATE
164	MO
DISTRICT	SHEET NO.
SE	18

COUNTY: DUNKLIN/PEMISCOT

JOB NO. J9S3780

CONTRACT ID.

PROJECT NO.

BRIDGE NO.

DESCRIPTION	DATE

MISSOURI HIGHWAYS AND TRANSPORTATION COMMISSION

105 WEST CAPITOL
JEFFERSON CITY, MO 65102
1-888-ASK-MODOT (1-888-275-6636)

SIGNING
SHEET 7 OF 13

STANDARD SIGN ASSEMBLIES

SIGN NUMBER	LOG MILE	LOC	SH	SH	SH	SH	SH	SH	SH	SH	SH	SHF	SHF	SH	SH	SH	SH	SH	SH	SHF	SHF	SHF	SHF	SHF	SHF	SHF	SHF	SHF	SHF	SHF	SHF	SHF	SHF	SHF	SHF	SHF	REMARKS
			M1-4 30x24	M1-5 30x24	M1-5a 24x24	M1-5a 30x24	M2-1 21x15	M3 24x12	M5-1L 21x15	M5-1R 21x15	M6 21x15	OM3-L 12x36	OM3-R 12x36	R1-1 36x36	R1-2 48x48	R1-3P 30x12	R2-1 36x48	R2-5d 36x48	R5-1 30X30	S1-1 36x36	W1-1L 36x36	W1-1R 36x36	W1-2L 36x36	W1-2R 36X36	W1-4R 36x36	W1-6 48x24	W1-7 48x24	W3-1 36x36	W4-4P 36x18	W8-34 36x36	W11-2 36x36	W13-1P 24x24	W16-3P 21x18	W16-7P 30x18	W16-9P 30x18	
152	14.214	LT												1		1																				
153	14.216	LT		1	1						2																									Y/M6-1R & 164/M6-6R
154	14.217	RT												1		1																				
155	14.218	LT													1																					
156	14.266	RT		1				1																												164/EAST
158	14.333	RT															1																			55 MPH
159	14.401	LT			2		1																													N/Y/JCT
160	14.331*	RT																										1								
161	14.331*	LT																										1								
162	14.751	RT											1																							
163	14.751	LT										1																								
164	14.777	RT											1																							
165	14.777	LT										1																								
166	14.844	RT											1																							
167	14.844	LT										1																								
168	14.859	RT											1																							
169	14.859	LT										1																								
170	14.980	RT											1																							
171	14.980	LT										1																								
172	14.992	RT											1																							
173	14.992	LT										1																								
174	17.422	RT				1	1																													TT/JCT
175	17.456	RT															1																			55 MPH
177	17.574	LT		1				1																												164/WEST
178	17.590	RT		1		1					2																									164/M6-3 & TT/M6-1R
179	17.598	LT		1							1																									164/M6-4
180	17.599	LT		1		1					2																									TT/M6-1L & 164/M6-3
181	17.616	RT		1				1																												164/EAST
182	17.667	RT															1																			55 MPH
184	17.848	LT				1	1																													TT/JCT
185	18.688	RT				1	1																													PP/JCT
186	18.738	LT															1																			55 MPH
188	18.820	LT		1				1																												164/WEST
189	18.848	RT		1		1					2																									PP/M6-1L & 164/M6-3
190	18.848	RT																									1									
191	18.848	RT		1							1																									164/M6-4
192	18.849	LT		1		1					2																									164/M6-3 & PP/M6-1R
193	18.866	RT		1				1																												164/EAST
195	18.960	RT															1																			55 MPH
196	19.001	LT				1	1																													PP/JCT
197	21.175	LT															1																			55 MPH
198	21.182	RT																										1					1			1/2 MI
199	21.378	RT				1	1																													NN/JCT
201	21.456	LT		1				1																												164/WEST
202	21.529	RT																										1								
203	21.529	LT																										1								
205	21.593	LT		1		1					2																									164/M6-3 & NN/M6-4
206	21.598	RT												1		1																				
207	21.598	LT												1		1																				
208	21.615	LT												1		1																				
209	21.616	RT												1		1																				
210	21.620	RT		1		1					2																									164/M6-3 & NN/M6-4
211	21.663*	RT																										1								
212	21.663*	LT																										1								
213	21.747	RT		1				1																												164/EAST
215	21.785*	RT															1																			55 MPH
216	21.814**	LT				1	1																													NN/JCT
217	22.039	RT																										1								
218	22.039	LT																										1								
219	23.949	RT																							1							1				WARNING/45 MPH
220	23.968	LT															1																			55 MPH
222	24.015**	RT			2		1																													C/F/JCT
223	24.048	LT		1				1																												164/WEST
224	24.118	RT		1	2						3																									164/M6-3, C/M6-1L, & F/M6-1R
225	24.126	LT		1	2						3																									164/M6-3, F/M6-1L, & C/M6-1R
226	24.168	LT																							1							1				WARNING/45 MPH
227	24.2	RT		1				1																												164/EAST
SUB TOTAL 3			0	20	9	12	8	9	0	0	22	6	6	6	1	6	8	0	0	0	0	0	0	0	2	0	1	9	0	0	0	2	1	0	0	

*: RELOCATED
**: ADDED

STATE OF MISSOURI
DONNA RENE PHILPOT
NUMBER PE-2019000205
PROFESSIONAL ENGINEER
Donna Rene Philpot
DONNA RENE PHILPOT - CIVIL
MO-PE-2019000205

DATE PREPARED
2/27/2025

ROUTE	STATE
164	MO
DISTRICT	SHEET NO.
SE	19

COUNTY
DUNKLIN/PEMISCOT

JOB NO.
J9S3780

CONTRACT ID.

PROJECT NO.

BRIDGE NO.

DESCRIPTION

DATE

MISSOURI HIGHWAYS AND TRANSPORTATION COMMISSION
105 WEST CAPITOL
JEFFERSON CITY, MO 65102
1-888-ASK-MODOT (1-888-275-6636)

SIGNING
SHEET 8 OF 13

STANDARD SIGN ASSEMBLIES

SIGN NUMBER	LOG MILE	LOC	SH	SH	SH	SH	SH	SH	SH	SH	SH	SHF	SHF	SH	SH	SH	SH	SH	SH	SHF	SHF	SHF	SHF	SHF	SHF	SHF	SHF	SHF	SHF	SHF	SHF	SHF	SHF	SHF	SHF	SHF	REMARKS
			412	XXX	X	XX	JCT	EAST WEST						STOP	YIELD	ALL WAY	SPEED LIMIT XX	SPEED LIMIT XX EXCEPT WHERE POSTED	DO NOT ENTER													XX M.P.H.	XX MILES		AHEAD	
			M1-4 30x24	M1-5 30x24	M1-5a 24x24	M1-5a 30x24	M2-1 21x15	M3 24x12	M5-1L 21x15	M5-1R 21x15	M6 21x15	OM3-L 12x36	OM3-R 12x36	R1-1 36x36	R1-2 48x48	R1-3P 30x12	R2-1 36x48	R2-5d 36x48	R5-1 30X30	S1-1 36x36	W1-1L 36x36	W1-1R 36x36	W1-2L 36X36	W1-2R 36X36	W1-4R 36x36	W1-6 48x24	W1-7 48x24	W3-1 36x36	W4-4P 36x18	W8-34 36x36	W11-2 36x36	W13-1P 24x24	W16-3P 21x18	W16-7P 30x18	W16-9P 30x18	
229	24.272	LT			2		1																													F/C/JCT
230	24.278	RT															1																			55 MPH
234	27.238	LT															1																			55 MPH
237	28.701	RT		1						1																										164/M5-1R
238	28.727*	RT																										1								
239	28.751	RT			1		1																													Z/JCT
240	28.784	LT		1				1																												164/WEST
241	28.789	RT												1		1																				
242	28.797	RT		1							1																									164/M6-4
243	28.808	LT		1	1						2																									Z/M6-1R & 164/M6-1L
244	28.815	LT												1		1																				
245	28.815	RT		1	1						2																									164/M6-1R & Z/M6-2R
246	28.815	RT		1							1																									164/M6-4
247	28.821	RT															1																			40 MPH
SUB TOTAL 4			0	6	5	0	2	1	0	1	6	0	0	2	0	2	3	0	0	0	0	0	0	0	0	0	0	1	0	0	0	0	0	0	0	
SUB TOTAL 3			0	20	9	12	8	9	0	0	22	6	6	6	1	6	8	0	0	0	0	0	0	0	2	0	1	9	0	0	0	2	1	0	0	
SUBTOTAL 2			0	16	11	4	6	7	1	0	16	6	18	7	1	4	9	1	0	0	1	1	0	1	0	2	0	2	0	2	0	3	0	0	0	
SUBTOTAL 1			5	30	5	0	5	10	3	3	19	0	8	8	1	0	12	1	1	4	0	0	1	0	0	2	1	5	4	0	2	1	0	4	2	
TOTAL			5	72	30	16	21	27	4	4	63	12	32	23	3	12	32	2	1	4	1	1	1	1	2	4	2	17	4	2	2	6	1	4	2	

*: RELOCATED
**: ADDED

NOTE: LOG MILES ARE APPROXIMATE. UNLESS OTHERWISE NOTED, QUANTIFIED SIGNS ARE TO BE REPLACED AT CURRENT LOCATIONS WITH OFFSETS AS SHOWN IN STD 903.03. EXACT LOCATIONS SHALL BE APPROVED BY THE ENGINEER PRIOR TO INSTALLATION.

STATE OF MISSOURI
DONNA RENE PHILPOT
NUMBER PE-2019000205
PROFESSIONAL ENGINEER

Donna Rene Philpot
DONNA RENE PHILPOT • CIVIL
MO-PE-2019000205

DATE PREPARED: 2/27/2025
ROUTE: 164 | STATE: MO
DISTRICT: SE | SHEET NO.: 20
COUNTY: DUNKLIN/PEMISCOT
JOB NO.: J9S3780
CONTRACT ID.
PROJECT NO.
BRIDGE NO.

DESCRIPTION
DATE

MISSOURI HIGHWAYS AND TRANSPORTATION COMMISSION
105 WEST CAPITOL
JEFFERSON CITY, MO 65102
1-888-ASK-MODOT (1-888-275-6636)

SIGNING
SHEET 9 OF 13

SIGN SUMMARY

STANDARD SIGN OR SPECIAL SIGN NUMBER	SIGN DETAIL SHEET NO.	NO. EACH	SIZE	SIZE, TYPE, & SQUARE FEET			
				FLAT SHEET SH ITEM NO. 9035004A	FLAT SHEET FLORESCENT SHF* ITEM NO. 9035069A	STRUCTURAL ST ITEM NO. 9035011A	STRUCTURAL FLORESCENT STF* ITEM NO. 9035071A
M1-4		5	30X24	25.00			
M1-5 (108)		11	30X24	55.00			
M1-5 (164)		61	30X24	305.00			
M1-5a (C)		4	24X24	16.00			
M1-5a (F)		5	24X24	20.00			
M1-5a (K)		4	24X24	16.00			
M1-5a (N)		5	24X24	20.00			
M1-5a (NN)		4	30X24	20.00			
M1-5a (PP)		4	30X24	20.00			
M1-5a (TT)		4	30X24	20.00			
M1-5a (V)		4	24X24	16.00			
M1-5a (Y)		5	24X24	20.00			
M1-5a (YY)		4	30X24	20.00			
M1-5a (Z)		3	24X24	12.00			
M2-1		21	21X15	45.94			
M3-2		13	24X12	26.00			
M3-4		14	24X12	28.00			
M5-1L		4	21X15	8.75			
M5-1R		4	21X15	8.75			
M6-1		25	21X15	54.69			
M6-3		21	21X15	45.94			
M6-2L		1	21X15	2.19			
M6-2R		2	21X15	4.38			
M6-4		10	21X15	21.88			
M6-6L		2	21X15	4.38			
M6-6R		2	21X15	4.38			
OM3-L		12	12X36		36.00		
OM3-R		32	12X36		96.00		
R1-1		23	36X36	207.00			
R1-2		3	48X48	48.00			
R1-3P		12	30X12	30.00			
R2-1 (25)		2	36X48	24.00			
R2-1 (35)		6	36X48	72.00			
R2-1 (40)		1	36X48	12.00			
R2-1 (45)		5	36X48	60.00			
R2-1 (55)		18	36X48	216.00			
R2-5d		2	36X48	24.00			
R5-1		1	30X30	6.25			
S1-1		4	36X36		36.00		
W1-1L		1	36X36		9.00		
W1-1R		1	36X36		9.00		
W1-2L		1	36X36		9.00		
W1-2R		1	36X36		9.00		
W1-4R		2	36X36		18.00		
W1-6		4	48X24		16.00		
W1-7		2	48X24		16.00		
W3-1		17	36X36		153.00		
W4-4P		4	36X18		18.00		
W8-34		2	36X36		18.00		
W11-2		2	36X36		18.00		
W13-1P (25 M.P.H.)		2	24X24		8.00		
W13-1P (30 M.P.H.)		2	24X24		8.00		
W13-1P (45 M.P.H.)		2	24X24		8.00		
W16-3P		1	24X18		3.00		
W16-7P		4	30X18		15.00		
W16-9P		2	30X18		7.50		
	SUB TOTAL 1			1540	511	0	0

*ORANGE, YELLOW & YELLOW/GREEN

SIGN SUMMARY

STANDARD SIGN OR SPECIAL SIGN NUMBER	SIGN DETAIL SHEET NO.	NO. EACH	SIZE	SIZE, TYPE, & SQUARE FEET			
				FLAT SHEET SH ITEM NO. 9035004A	FLAT SHEET FLORESCENT SHF* ITEM NO. 9035069A	STRUCTURAL ST ITEM NO. 9035011A	STRUCTURAL FLORESCENT STF* ITEM NO. 9035071A
SIGN #4 (I4-1)	D-31	1	48X24	8.00			
SIGN #6 (D1-2a)	D-31	1	84X24			14.00	
SIGN #30 (I4-1)	D-31	1	48X24	8.00			
SIGN #34 (D1-2a)	D-31	1	72X24			12.00	
SIGN #43 (D1-3a)	D-31	1	84X36			21.00	
SIGN #56 (I4-1)	D-31	1	42X24	7.00			
SIGN #58 (D1-2a)	D-31	1	84X24			14.00	
SIGN #81 (D1-2a)	D-31	1	72X24			12.00	
SIGN #87 (I4-1)	D-31	1	42X24			7.00	
SIGN #128 (I4-1)	D-31	1	66X24			11.00	
SIGN #140 (D1-2a)	D-31	1	72X24			12.00	
SIGN #157 (D1-2a)	D-31	1	96X24			16.00	
SIGN #176 (D1-2a)	D-31	1	96X24			16.00	
SIGN #183 (D1-2a)	D-31	1	96X24			16.00	
SIGN #187 (D1-2a)	D-31	1	60X24			10.00	
SIGN #194 (D1-2a)	D-31	1	96X24			16.00	
SIGN #200 (D1-3a)	D-31	1	96X36			24.00	
SIGN #204 (I6-1)	D-31	1	30X18	3.75			
SIGN #212 (D1-3a)	D-31	1	96X36			24.00	
SIGN #221 (D1-3a)	D-31	1	72X36			18.00	
SIGN #228 (D1-3a)	D-31	1	96X36			24.00	
SIGN #231 (I5-1)	D-31	1	36X12	3.00			
SIGN #232 (I5-1)	D-31	1	36X12	3.00			
SIGN #233 (D4-10)	D-31	1	48X36	12.00			
SIGN #235 (I4-1)	D-31	1	36X24	6.00			
SIGN #236 (D4-10)	D-31	1	48X36	12.00			
	SUB TOTAL 2			63	0	267	0
	SUB TOTAL 1			1540	511	0	0
	TOTAL			1603	511	267	0

*ORANGE, YELLOW & YELLOW/GREEN

PERMANENTLY REMOVED SIGNS

LOG MILE	LOCATION	DESCRIPTION
0.021	RT	ADOPT-A-HIGHWAY
0.574	RT	IMPASSABLE HIGH WATER
3.440	RT	CHEVRON
3.460	RT	CHEVRON
3.472	RT	CHEVRON
3.493	RT	CHEVRON
10.904	RT	STOP FOR SCHOOL BUS
14.695	LT	OBJECT MARKER
14.695	RT	OBJECT MARKER
15.035	RT	OBJECT MARKER
15.055	LT	OBJECT MARKER
17.793	RT	OBJECT MARKER
17.796	LT	OBJECT MARKER
17.798	RT	OBJECT MARKER
17.805	LT	OBJECT MARKER
18.077	RT	OBJECT MARKER
18.077	LT	OBJECT MARKER
18.085	RT	OBJECT MARKER
18.085	LT	OBJECT MARKER
20.077	RT	OBJECT MARKER
20.077	LT	OBJECT MARKER
20.105	RT	OBJECT MARKER
20.105	LT	OBJECT MARKER
24.440	RT	ADOPT-A-HIGHWAY
26.471	LT	ADOPT-A-HIGHWAY
26.491	RT	ADOPT-A-HIGHWAY
28.464	LT	ADOPT-A-HIGHWAY

STATE OF MISSOURI
DONNA RENE PHILPOT
NUMBER PE-2019000205
PROFESSIONAL ENGINEER
Donna Rene Philpot
VERIFIED 1-30-25 FTW
DONNA RENE PHILPOT • CIVIL
MO•PE•2019000205

DATE PREPARED 2/27/2025

ROUTE	STATE
164	MO
DISTRICT	SHEET NO.
SE	21

COUNTY: DUNKLIN/PEMISCOT

JOB NO. J9S3780

CONTRACT ID.

PROJECT NO.

BRIDGE NO.

DATE	DESCRIPTION

MISSOURI HIGHWAYS AND TRANSPORTATION COMMISSION

MoDOT
105 WEST CAPITOL
JEFFERSON CITY, MO 65102
1-888-ASK-MODOT (1-888-275-6636)

SIGNING
SHEET 10 OF 13

SIGN NO.	4
LOG MILE	0.027
ROADWAY	MO 164 EB

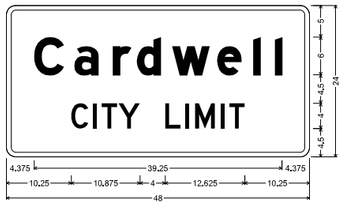

I4-1 SH-FLAT SHEET:
1.500" Radius, 0.750" Border, White on, Green;
"Cardwell", E Mod; "CITY LIMIT", D;
Table of letter and object lefts

C 4.375	a 10.750	r 16.875	d 20.625	w 26.250	e 33.375	l 39.125	l 42.500	
C 10.250	l 13.750	T 15.125	Y 17.750	L 25.125	l 28.375	M 29.875	l 33.875	T 35.250

SIGN NO.	6
LOG MILE	0.057
ROADWAY	MO 164 WB

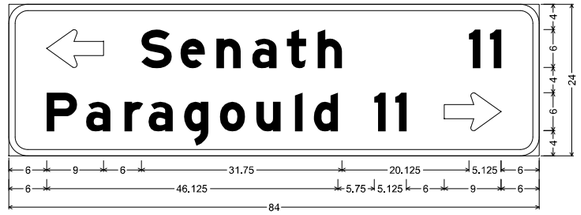

D1-2a ST-STRUCTURAL:
3.000" Radius, 1.000" Border, White on, Green;
Standard Arrow Custom 9.000" X 6.000" 180"; "Senath", E Mod; "11", E Mod; "Paragould", E Mod;
"11", E Mod; Standard Arrow Custom 9.000" X 6.000" 0";
Table of letter and object lefts

⇦ 6.000	S 21.000	e 27.250	n 32.875	a 38.625	t 44.000	h 48.875	l 72.875	l 76.250		
P 6.000	a 12.250	r 18.375	a 22.125	g 27.750	o 33.500	u 39.250	l 45.375	d 48.250	l 57.875	l 61.250	⇨ 69.000

SIGN NO.	30
LOG MILE	1.014
ROADWAY	MO 164 WB

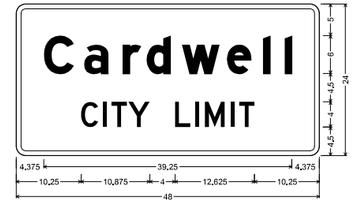

I4-1 SH-FLAT SHEET:
1.500" Radius, 0.750" Border, White on, Green;
"Cardwell", E Mod; "CITY LIMIT", D;
Table of letter and object lefts

C 4.375	a 10.750	r 16.875	d 20.625	w 26.250	e 33.375	l 39.125	l 42.500	
C 10.250	l 13.750	T 15.125	Y 17.750	L 25.125	l 28.375	M 29.875	l 33.875	T 35.250

SIGN NO.	34
LOG MILE	1.769
ROADWAY	MO 164 EB

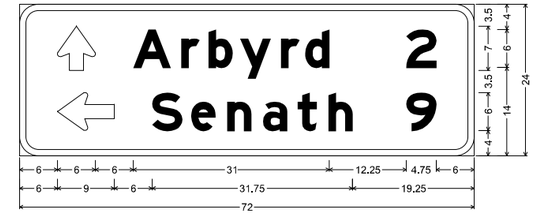

D1-2a ST-STRUCTURAL:
3.000" Radius, 1.000" Border, White on, Green;
Standard Arrow Custom 7.000" X 6.000" 90"; "Arbyrd", E Mod; "2", E Mod;
Standard Arrow Custom 9.000" X 6.000" 180"; "Senath", E Mod; "9", E Mod;
Table of letter and object lefts

⇧ 6.000	A 18.000	r 25.625	b 29.875	y 34.875	r 41.375	d 45.250	2 61.250	
⇦ 6.000	S 21.000	e 27.125	n 32.875	a 38.500	t 44.000	h 48.875	9 61.250	

SIGN NO.	43
LOG MILE	1.946
ROADWAY	MO 164 WB

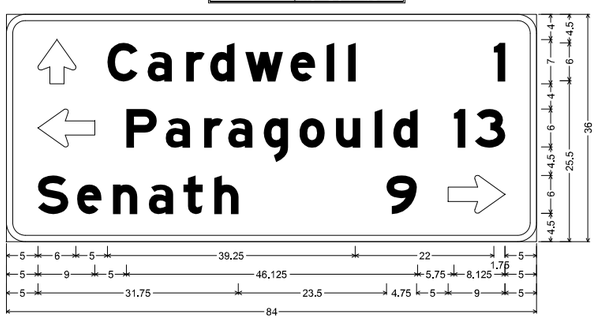

D1-3a ST-STRUCTURAL:
3.000" Radius, 1.000" Border, White on, Green;
Standard Arrow Custom 7.000" X 6.000" 90"; "Cardwell", E Mod; "1", E Mod;
Standard Arrow Custom 9.000" X 6.000" 180"; "Paragould", E Mod; "13", E Mod; "Senath", E Mod;
"9", E Mod; Standard Arrow Custom 9.000" X 6.000" 0";
Table of letter and object lefts

⇧ 5.000	C 16.000	a 22.375	r 28.500	d 32.250	w 37.875	e 45.000	l 50.750	l 54.125	l 77.250		
⇦ 5.000	P 19.000	a 25.250	r 31.375	a 35.125	g 40.750	o 46.500	u 52.250	l 58.375	d 61.250	l 70.875	3 74.250
S 5.000	e 11.250	n 16.875	a 22.625	t 28.000	h 32.875	9 60.250	⇨ 70.000				

SIGN NO.	56
LOG MILE	3.088
ROADWAY	MO 164 EB

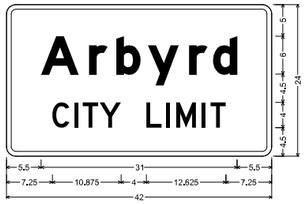

I4-1 SH-FLAT SHEET:
1.500" Radius, 0.750" Border, White on, Green;
"Arbyrd", E Mod; "CITY LIMIT", D;
Table of letter and object lefts

A 5.500	r 13.125	b 17.375	y 22.375	r 28.875	d 32.750	
C 7.250	l 10.750	T 12.125	Y 14.750			
L 22.125	l 25.375	M 26.875	l 30.875	T 32.250		

SIGN NO.	58
LOG MILE	3.150
ROADWAY	MO 164 WB

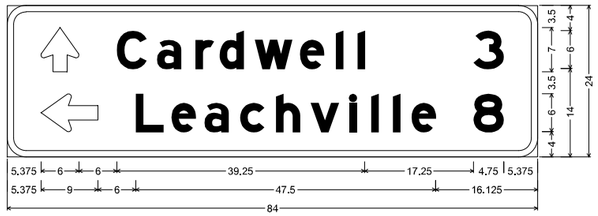

D1-2a ST-STRUCTURAL:
3.000" Radius, 1.000" Border, White on, Green;
Standard Arrow Custom 7.000" X 6.000" 90"; "Cardwell", E Mod; "3", E Mod;
Standard Arrow Custom 9.000" X 6.000" 180"; "Leachville", E Mod; "8", E Mod;
Table of letter and object lefts

⇧ 5.375	C 17.375	a 23.750	r 29.875	d 33.625	w 39.250	e 46.375	l 52.000	l 55.500	3 73.875		
⇦ 5.375	L 20.375	e 26.000	a 31.250	c 36.875	h 42.625	v 48.125	l 54.250	l 57.625	l 61.125	e 64.000	8 73.875

SIGN NO.	81
LOG MILE	3.596
ROADWAY	MO 164 WB

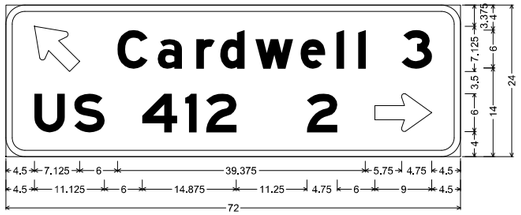

D1-2a ST-STRUCTURAL:
3.000" Radius, 1.000" Border, White on, Green;
Standard Arrow Custom 9.000" X 6.000" 135"; "Cardwell", E Mod; "3", E Mod;
"US 412", E Mod; "2", E Mod; Standard Arrow Custom 9.000" X 6.000" 0";
Table of letter and object lefts

⇖ 4.500	C 17.625	a 24.000	r 30.125	d 34.000	w 39.500	e 46.625	l 52.375	l 55.875	3 62.750		
U 4.500	S 10.875	4 21.625	l 28.375	2 31.750	2 47.750	⇨ 58.500					

SIGN NO.	87
LOG MILE	4.019
ROADWAY	MO 164 WB

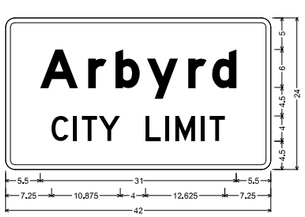

I4-1 SH-FLAT SHEET:
1.500" Radius, 0.750" Border, White on, Green;
"Arbyrd", E Mod; "CITY LIMIT", D;
Table of letter and object lefts

A 5.500	r 13.125	b 17.375	y 22.375	r 28.875	d 32.750	
C 7.250	l 10.750	T 12.125	Y 14.750			
L 22.125	l 25.375	M 26.875	l 30.875	T 32.250		

SIGN NO.	128
LOG MILE	10.994
ROADWAY	MO 164 WB

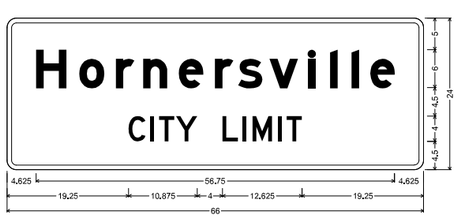

I4-1 SH-FLAT SHEET:
1.500" Radius, 0.750" Border, White on, Green;
"Hornersville", E Mod; "CITY LIMIT", D;
Table of letter and object lefts

H 4.625	o 11.500	r 17.250	n 21.500	e 27.250	r 32.875	s 36.625	v 41.625	l 47.750	l 51.125	l 54.625	e 57.500		
C 19.250	l 22.750	T 24.125	Y 26.750	L 34.125	l 37.375	M 38.875	l 42.875	T 44.250					

SIGN NO.	140
LOG MILE	14.114
ROADWAY	MO 164 EB

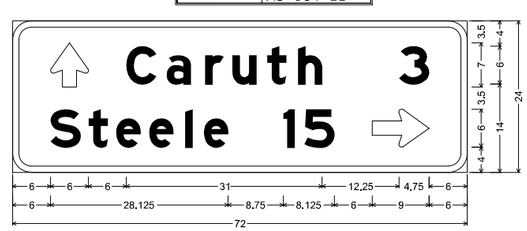

D1-2a ST-STRUCTURAL:
3.000" Radius, 1.000" Border, White on, Green;
Standard Arrow Custom 7.000" X 6.000" 90"; "Caruth", E Mod; "3", E Mod;
"Steele", E Mod; "15", E Mod; Standard Arrow Custom 9.000" X 6.000" 0";
Table of letter and object lefts

⇧ 6.000	C 18.000	a 24.375	r 30.500	u 34.750	t 40.375	h 45.250	3 61.250			
S 6.000	t 12.000	e 16.375	e 21.625	l 27.375	e 30.250	l 42.875	5 46.250	⇨ 57.000		

SIGN NO.	157
LOG MILE	14.307
ROADWAY	MO 164 WB

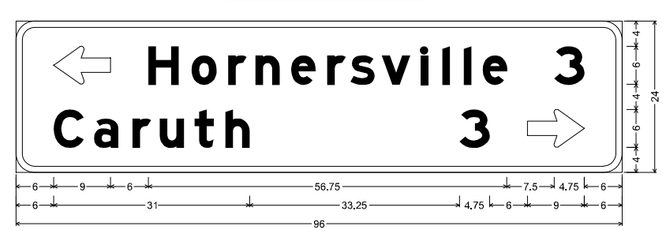

D1-2a ST-STRUCTURAL:
3.000" Radius, 1.000" Border, White on, Green;
Standard Arrow Custom 9.000" X 6.000" 180"; "Hornersville", E Mod; "3", E Mod; "Caruth", E Mod; "3", E Mod;
Standard Arrow Custom 9.000" X 6.000" 0";
Table of letter and object lefts

⇦ 6.000	H 21.000	o 27.875	r 33.625	n 37.875	e 43.625	r 49.250	s 53.000	v 58.000	l 64.125	l 67.500	l 71.000	e 73.875	3 85.250
C 6.000	a 12.375	r 18.500	u 22.750	t 28.250	h 33.125	3 70.250	⇨ 81.000						

STATE OF MISSOURI
DONNA RENE PHILPOT
NUMBER PE-2019000205
PROFESSIONAL ENGINEER
Donna Rene Philpot
VERIFIED 1:36:36 PM
DONNA RENE PHILPOT - CIVIL
MO-PE-2019000205

DATE PREPARED	
2/27/2025	
ROUTE 164	STATE MO
DISTRICT SE	SHEET NO. 22
COUNTY DUNKLIN/PEMISCOT	
JOB NO. J9S3780	
CONTRACT ID.	
PROJECT NO.	
BRIDGE NO.	

DESCRIPTION	DATE

MISSOURI HIGHWAYS AND TRANSPORTATION COMMISSION
105 WEST CAPITOL
JEFFERSON CITY, MO 65102
1-888-ASK-MODOT (1-888-275-6636)

SIGNING
SHEET 11 OF 13

SIGN NO.	176
LOG MILE	17.506
ROADWAY	MO 164 EB

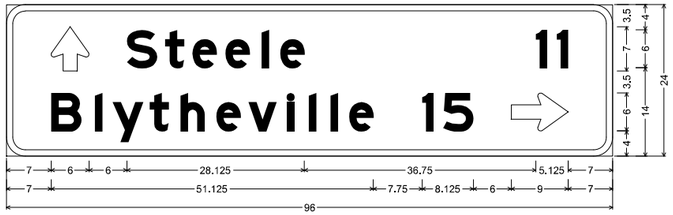

D1-2a ST-STRUCTURAL:
3.000" Radius, 1.000" Border, White on, Green;
Standard Arrow Custom 7.000" X 6.000" 90'; "Steele", E Mod; "11", E Mod; "Blytheville", E Mod; "15", E Mod;
Standard Arrow Custom 9.000" X 6.000" 0';
Table of letter and object lefts

⇧ 7.000	S 19.000	t 25.125	e 29.500	e 34.625	l 40.375	e 43.375	l 83.875	l 87.125	
B 7.000	l 14.000	y 16.750	t 22.625	h 27.500	e 33.250	v 38.250	l 44.500	l 47.875	l 51.250	e 54.250	l 65.875	5 69.125	⇨ 80.000

SIGN NO.	183
LOG MILE	17.670
ROADWAY	MO 164 WB

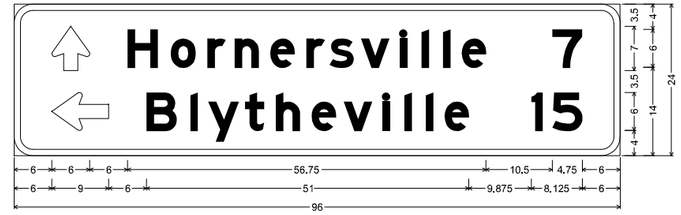

D1-2a ST-STRUCTURAL:
3.000" Radius, 1.000" Border, White on, Green;
Standard Arrow Custom 7.000" X 6.000" 90'; "Hornersville", E Mod; "7", E Mod;
Standard Arrow Custom 9.000" X 6.000" 180'; "Blytheville", E Mod; "15", E Mod;
Table of letter and object lefts

⇧ 6.000	H 18.000	o 24.875	r 30.625	n 34.875	e 40.625	r 46.250	s 50.000	v 55.000	l 61.125	l 64.500	l 68.000	e 70.875	7 85.250	
⇦ 6.000	B 21.000	l 27.875	y 30.750	t 36.625	h 41.500	e 47.125	v 52.250	l 58.375	l 61.750	l 65.250	e 68.250	l 81.875	5 85.250	

SIGN NO.	187
LOG MILE	18.762
ROADWAY	MO 164 EB

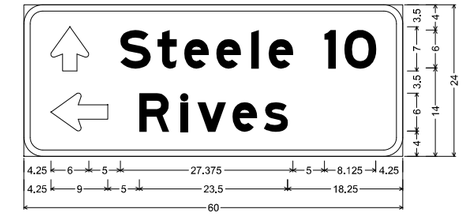

D1-2a ST-STRUCTURAL:
3.000" Radius, 1.000" Border, White on, Green;
Standard Arrow Custom 7.000" X 6.000" 90';
"Steele", E Mod 90% spacing; "10", E Mod 90% spacing;
Standard Arrow Custom 9.000" X 6.000" 180';
"Rives", E Mod 90% spacing;
Table of letter and object lefts

⇧ 4.250	S 15.250	t 21.125	e 25.375	e 30.500	l 36.000	e 38.750	l 47.625	O 50.750
⇦ 4.250	R 18.250	i 24.875	v 27.500	e 33.000	s 38.000			

SIGN NO.	194
LOG MILE	18.935
ROADWAY	MO 164 WB

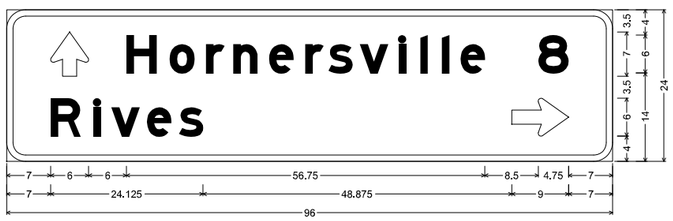

D1-2a ST-STRUCTURAL:
3.000" Radius, 1.000" Border, White on, Green;
Standard Arrow Custom 7.000" X 6.000" 90'; "Hornersville", E Mod; "8", E Mod; "Rives", E Mod;
Standard Arrow Custom 9.000" X 6.000" 0';
Table of letter and object lefts

⇧ 7.000	H 19.000	o 25.875	r 31.625	n 35.875	e 41.625	r 47.250	s 51.000	v 56.000	l 62.125	l 65.500	l 69.000	e 71.875	8 84.250	
R 7.000	i 13.750	v 16.625	e 22.250	s 27.375	⇨ 80.000									

SIGN NO.	200
LOG MILE	21.438
ROADWAY	MO 164 EB

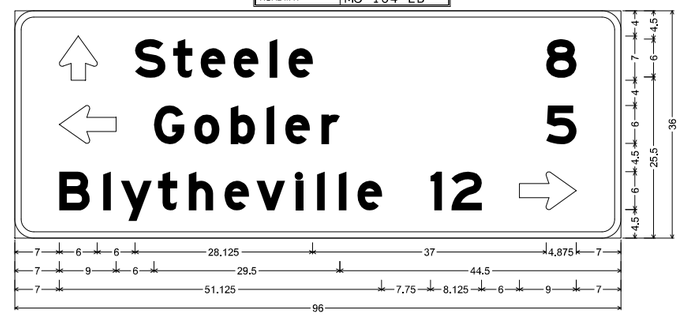

D1-3a ST-STRUCTURAL:
3.000" Radius, 1.000" Border, White on, Green;
Standard Arrow Custom 7.000" X 6.000" 90'; "Steele", E Mod; "8", E Mod;
Standard Arrow Custom 9.000" X 6.000" 180'; "Gobler", E Mod; "5", E Mod; "Blytheville", E Mod; "12", E Mod;
Standard Arrow Custom 9.000" X 6.000" 0';
Table of letter and object lefts

⇧ 7.000	S 19.000	t 25.125	e 29.500	e 34.625	l 40.375	e 43.375	B 84.125										
⇦ 7.000	G 22.000	o 28.375	b 34.250	l 39.875	e 42.875	r 48.500	5 84.125										
B 7.000	l 14.000	y 16.750	t 22.625	h 27.500	e 33.250	v 38.250	l 44.500	l 47.875	l 51.250	e 54.250	l 65.875	2 69.125	⇨ 80.000				

SIGN NO.	204
LOG MILE	21.557
ROADWAY	MO 164 WB

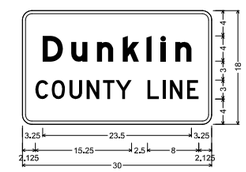

IS-1 SH-FLAT SHEET:
1.500" Radius, 0.500" Border, White on, Green;
"Dunklin", E Mod; "COUNTY LINE", D;
Table of letter and object lefts

D 3.250	u 7.750	n 11.875	k 15.875	l 19.625	l 22.000	n 24.250
C 2.125	O 4.625	U 7.500	N 10.250	T 12.750	Y 14.750	
L 19.875	I 22.250	N 23.375	E 26.125			

SIGN NO.	214
LOG MILE	21.748
ROADWAY	MO 164 WB

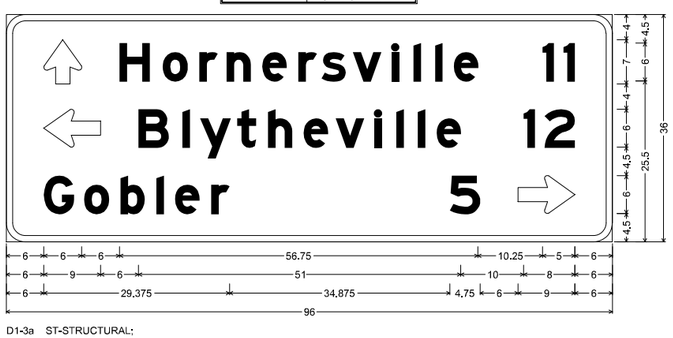

D1-3a ST-STRUCTURAL:
3.000" Radius, 1.000" Border, White on, Green;
Standard Arrow Custom 7.000" X 6.000" 90'; "Hornersville", E Mod; "11", E Mod;
Standard Arrow Custom 9.000" X 6.000" 180'; "Blytheville", E Mod; "12", E Mod; "Gobler", E Mod; "5", E Mod;
Standard Arrow Custom 9.000" X 6.000" 0';
Table of letter and object lefts

⇧ 6.000	H 18.000	o 24.750	r 30.500	n 34.875	e 40.500	r 46.250	s 49.875	v 54.875	l 61.125	l 64.500	l 67.875	e 70.875	l 85.000	l 88.250			
⇦ 6.000	B 21.000	l 27.875	y 30.625	t 36.500	h 41.375	e 47.125	v 52.125	i 58.375	l 61.750	l 65.250	e 68.125	l 82.000	2 85.250				
G 6.000	o 12.375	b 18.125	l 23.750	e 26.750	r 32.375	5 70.250	⇨ 81.000										

SIGN NO.	221
LOG MILE	24.033
ROADWAY	MO 164 EB

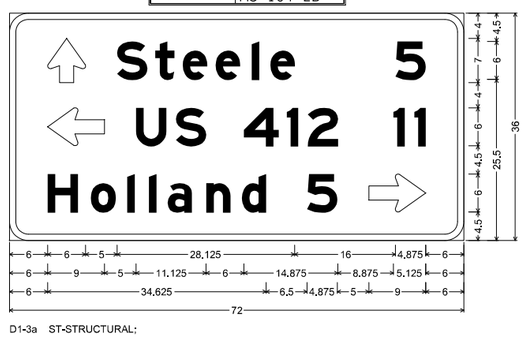

D1-3a ST-STRUCTURAL:
3.000" Radius, 1.000" Border, White on, Green;
Standard Arrow Custom 7.000" X 6.000" 90'; "Steele", E Mod; "5", E Mod;
Standard Arrow Custom 9.000" X 6.000" 180'; "US 412", E Mod; "11", E Mod;
"Holland", E Mod; "5", E Mod; Standard Arrow Custom 9.000" X 6.000" 0';
Table of letter and object lefts

⇧ 6.000	S 17.000	t 23.125	e 27.500	e 32.625	l 38.375	e 41.375	5 61.125	
⇦ 6.000	U 20.000	S 26.375	4 37.125	l 43.875	2 47.250	l 60.875	l 64.125	
H 6.000	o 12.875	l 18.625	l 22.125	a 25.125	n 31.125	d 36.875	5 47.125	⇨ 57.000

SIGN NO.	228
LOG MILE	24.201
ROADWAY	MO 164 WB

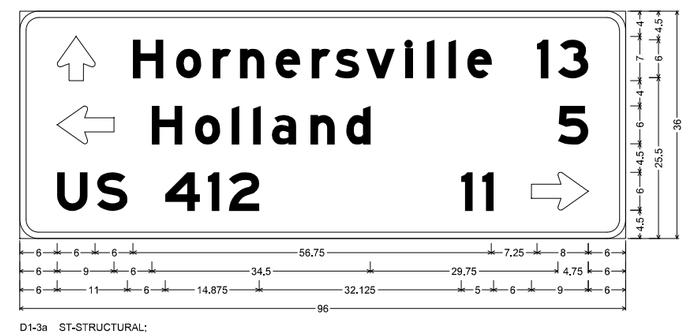

D1-3a ST-STRUCTURAL:
3.000" Radius, 1.000" Border, White on, Green;
Standard Arrow Custom 7.000" X 6.000" 90'; "Hornersville", E Mod; "13", E Mod;
Standard Arrow Custom 9.000" X 6.000" 180'; "Holland", E Mod; "5", E Mod; "US 412", E Mod; "11", E Mod;
Standard Arrow Custom 9.000" X 6.000" 0';
Table of letter and object lefts

⇧ 6.000	H 18.000	o 24.750	r 30.500	n 34.875	e 40.500	r 46.250	s 49.875	v 54.875	l 61.125	l 64.500	l 67.875	e 70.875	l 82.000	3 85.250			
⇦ 6.000	H 21.000	o 27.750	l 33.500	l 37.000	a 40.000	n 46.000	d 51.750	5 85.250									
U 6.000	S 12.250	4 23.000	l 29.875	2 33.125	l 70.000	l 73.250	⇨ 81.000										

STATE OF MISSOURI
DONNA RENE PHILPOT
NUMBER PE-2019000205
PROFESSIONAL ENGINEER
Donna Rene Philpot
DONNA RENE PHILPOT • CIVIL
MO-PE-2019000205

DATE PREPARED	2/27/2025
ROUTE 164	STATE MO
DISTRICT SE	SHEET NO. 23
COUNTY	DUNKLIN/PEMISCOT
JOB NO.	J9S3780
CONTRACT ID.	
PROJECT NO.	
BRIDGE NO.	

DATE	DESCRIPTION

MISSOURI HIGHWAYS AND TRANSPORTATION COMMISSION
105 WEST CAPITOL
JEFFERSON CITY, MO 65102
1-888-ASK-MODOT (1-888-275-6636)

SIGNING
SHEET 12 OF 13

SIGN NO.	231
LOG MILE	25.325
ROADWAY	MO 164 EB

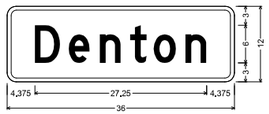

I5-1 SH-FLAT SHEET:
1.500" Radius, 0.625" Border, White on, Green:
"Denton", D:
Table of letter and object lefts

D 4.375	e 9.750	n 14.750	t 19.500	o 23.250	n 28.250

SIGN NO.	232
LOG MILE	25.631
ROADWAY	MO 164 WB

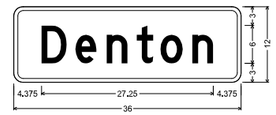

I5-1 SH-FLAT SHEET:
1.500" Radius, 0.625" Border, White on, Green:
"Denton", D:
Table of letter and object lefts

D 4.375	e 9.750	n 14.750	t 19.500	o 23.250	n 28.250

SIGN NO.	233
LOG MILE	27.155
ROADWAY	MO 164 EB

D4-10 SH-FLAT SHEET:
2.250" Radius, 0.750" Border, White on, Green:
"Steele", D: "Municipal", D: "Airport", D:
Standard Arrow Custom 24.000" X 5.000" 180":
Table of letter and object lefts

S 11.875	t 17.000	e 20.750	e 25.250	l 30.250	e 32.750					
M 4.875	u 11.500	n 16.875	i 22.125	c 24.625	i 29.625	p 32.500	a 36.875	l 42.250		
A 9.875	i 16.250	r 19.125	p 22.875	o 27.250	r 32.375	t 35.500				
← 12.000										

SIGN NO.	235
LOG MILE	27.251
ROADWAY	MO 164 EB

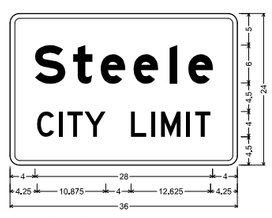

I4-1 SH-FLAT SHEET:
1.500" Radius, 0.750" Border, White on, Green:
"Steele", E Mod: "CITY LIMIT", D:
Table of letter and object lefts

S 4.000	t 10.000	e 14.375	e 19.500	l 25.250	e 28.250
C 4.250	I 7.750	T 9.125	Y 11.750		
L 19.125	I 22.375	M 23.875	I 27.875	T 29.250	

SIGN NO.	236
LOG MILE	27.347
ROADWAY	MO 164 WB

D4-10 SH-FLAT SHEET:
2.250" Radius, 0.750" Border, White on, Green:
"Steele", D: "Municipal", D: "Airport", D:
Standard Arrow Custom 24.000" X 5.000" 0":
Table of letter and object lefts

S 11.875	t 17.000	e 20.750	e 25.250	l 30.250	e 32.750					
M 4.875	u 11.500	n 16.875	i 22.125	c 24.625	i 29.625	p 32.500	a 36.875	l 42.250		
A 9.875	i 16.250	r 19.125	p 22.875	o 27.250	r 32.375	t 35.500				
→ 12.000										

STATE OF MISSOURI
DONNA RENE PHILPOT
NUMBER PE-2019000205
PROFESSIONAL ENGINEER

Donna Rene Philpot
VERIFIED REPORT FOR
DONNA RENE PHILPOT - CIVIL
MO-PE-2019000205

DATE PREPARED	2/27/2025
ROUTE 164	STATE MO
DISTRICT SE	SHEET NO. 24
COUNTY	DUNKLIN/PEMISCOT
JOB NO.	J9S3780
CONTRACT ID.	
PROJECT NO.	
BRIDGE NO.	

DESCRIPTION	DATE

MISSOURI HIGHWAYS AND TRANSPORTATION COMMISSION
105 WEST CAPITOL
JEFFERSON CITY, MO 65102
1-888-ASK-MODOT (1-888-275-6636)

SIGNING
SHEET 13 OF 13

SEC/SUR 22 TWP 17N RGE 9E

U.I.P. & REHABILITATE EXISTING (47'-63'-63'-63'-47') CONTINUOUS COMPOSITE WIDE FLANGE BEAM SPANS (SKEW: 30° L.A.)

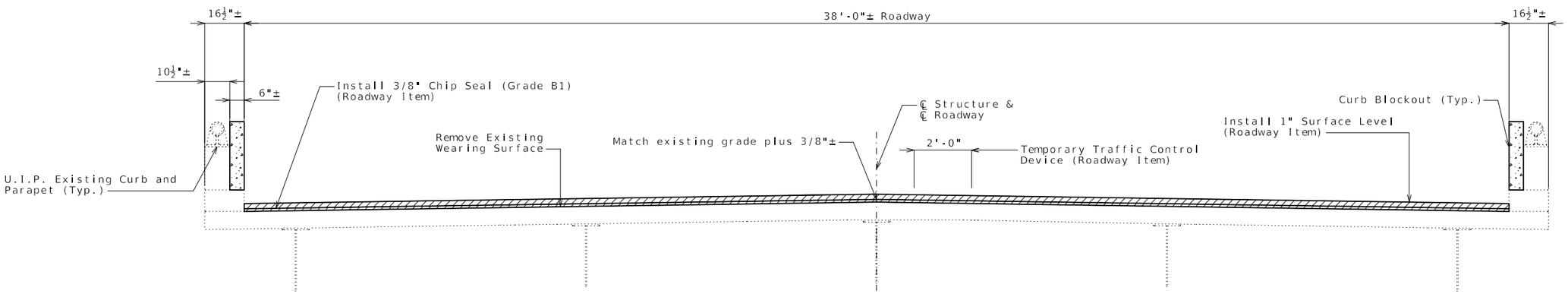

TYPICAL SECTION THRU EXISTING DECK

Note: Any future wearing surface will require milling existing wearing surface

Estimated Quantities		
Item		Total
Curb Blockout	linear foot	612

General Notes:

Design Specifications:

2002 AASHTO LFD (17th Ed.) Standard Specifications
Bridge Deck Rating = 7

Design Loading:

H20-44 (1965), HS20-44 (New Construction)

Design Unit Stresses:

Class B-1 Concrete (Curb Blockout) f'c = 4,000 psi
Reinforcing Steel (Grade 60) fy = 60,000 psi

Miscellaneous:

Roadway surfacing adjacent to bridge ends shall match new bridge wearing surface (roadway item).

Outline of existing work is indicated by light dashed lines. Heavy lines indicate new work.

Contractor shall verify all dimensions in field before finalizing the shop drawings.

In order to maintain grade and a minimum thickness of wearing surface as shown on plans it may be necessary to use additional quantities of wearing surface at various locations throughout the structure. The cost of furnishing and installing the wearing surface will be considered completely covered in the contract unit price, including all additional labor, materials or equipment for variations in thickness of wearing surface.

Traffic Handling:

Traffic to be maintained on structure during construction. See roadway plans for traffic control.

REPAIRS TO BRIDGE: ROUTE 164
OVER DRAINAGE DITCH NO. 81

ROUTE 164 FROM ROUTE Y TO ROUTE TT
ABOUT 0.5 MILE EAST OF ROUTE Y
BEGINNING STATION 25+59.50± (Match Existing)

Detailed Jan. 2025
Checked Jan. 2025

Note: This drawing is not to scale. Follow dimensions.

STATE OF MISSOURI
TED S. KOESTER
NUMBER PE-2013000591
PROFESSIONAL ENGINEER
03/31/2025 1:16:27 PM
TED S. KOESTER • CIVIL
MO•PE•2013000591

DATE PREPARED 3/31/2025
ROUTE 164 STATE MO
DISTRICT BR SHEET NO. 1
COUNTY DUNKLIN
JOB NO. J9S3780
CONTRACT ID.
PROJECT NO.
BRIDGE NO. A23321

DATE	DESCRIPTION

MISSOURI HIGHWAYS AND TRANSPORTATION COMMISSION
105 WEST CAPITOL
JEFFERSON CITY, MO 65102
1-888-ASK-MODOT (1-888-275-6636)

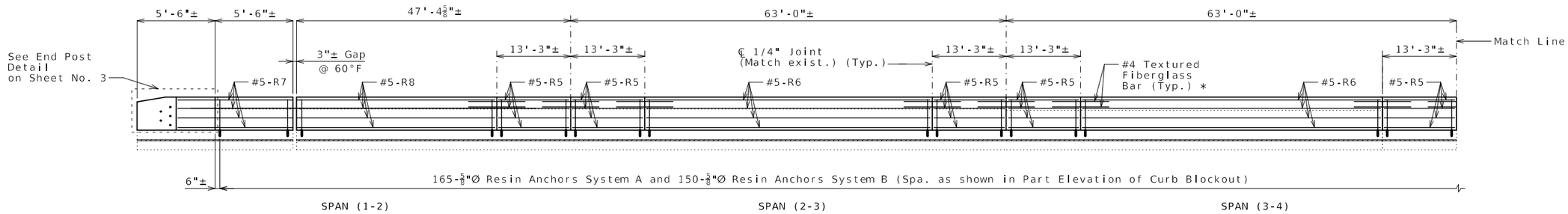

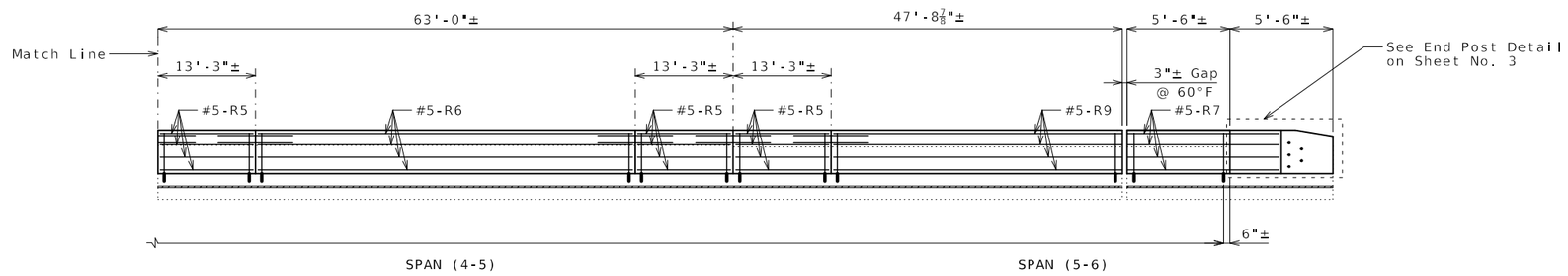

ELEVATION OF LEFT CURB BLOCKOUT

(Right curb blockout similar)

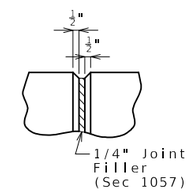

PART ELEVATION AT FORMED JOINT

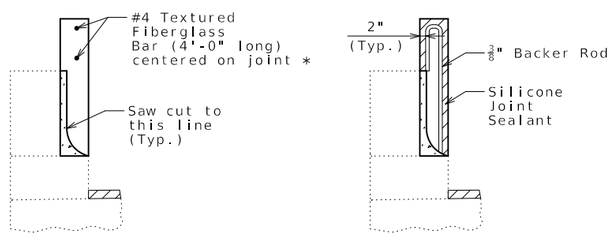

SECTION THRU SAW CUT JOINT

Longitudinal dimensions are along grade and are taken at top outside edge of parapet.

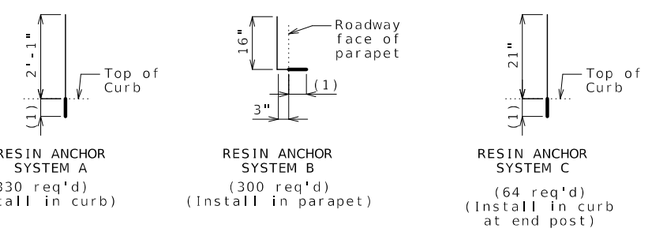

(1) Use manufacturer's embedment length (5" minimum embedment).

DETAILS OF RESIN ANCHORS

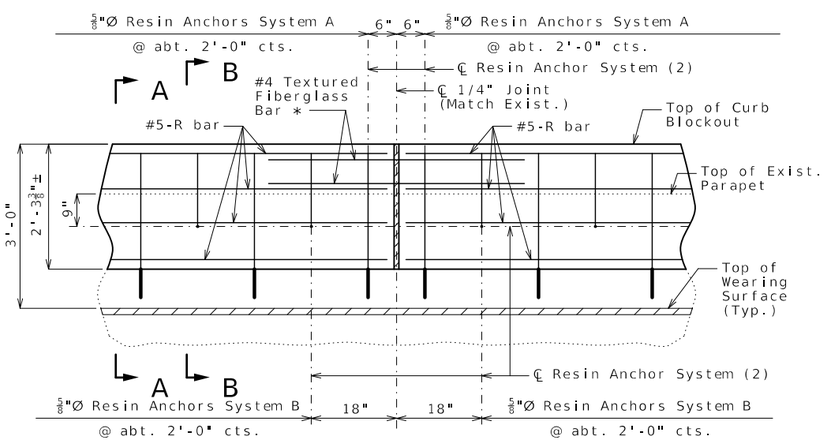

PART ELEVATION OF CURB BLOCKOUT

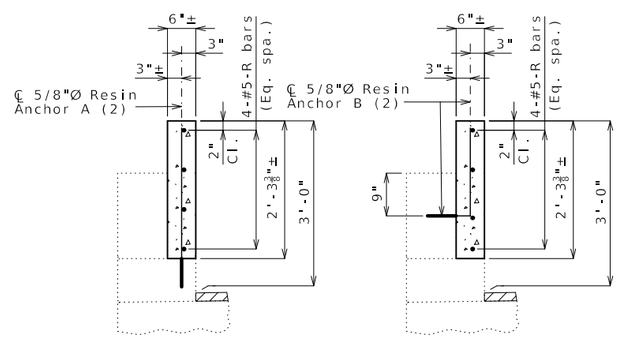

SECTION A-A

SECTION B-B

CURB BLOCKOUT

Notes:

* Slip-formed option only.

Conventional forming or slip forming may be used. Saw cut joints may be used with conventional forming.

Bridge rail not shown for clarity.

Concrete in curb blockout shall be Class B-1.

Measurement of curb blockout is to the nearest linear foot, measured at the top outside edge of parapet. (Match existing curb and parapet)

All exposed edges of curb blockout shall have either a 1/2-inch radius or 3/8-inch bevel, unless otherwise noted.

Payment for concrete, reinforcement, resin anchor systems and any other work incidental to the curb blockout, complete in place, will be considered completely covered by the contract unit price for Curb Blockout per linear foot.

Cost of any concrete curb or parapet repair will be considered completely covered by the contract unit price for Curb Blockout.

All curb blockout reinforcement shall be epoxy coated.

(2) Shift resin anchors where necessary to clear existing anchor bolts for bridge rail, miss curb outlets (if present) and clear existing reinforcement.

Use a minimum lap of 3'-1" for #5 horizontal curb blockout bars.

Concrete traffic barrier delineators shall be placed on top of the curb blockout similarly as shown on Missouri Standard Plans 617.10 and in accordance with Sec 617. Delineators on bridges with two-lane, two-way traffic shall have retroflective sheeting on both sides. Concrete traffic barrier delineators will be considered completely covered by the contract unit price for Curb Blockout.

The contractor shall use one of the qualified resin anchor systems in accordance with Sec 1039.

The minimum embedment depth in concrete with f'c = 4,000 psi for the resin anchor system shall be that required to meet the minimum ultimate pullout strength in accordance with Sec 1039 but shall not be less than 5 inches.

An epoxy coated #5 Grade 60 reinforcing bar shall be substituted for the 5/8"Ø threaded rod.

For slip-formed option, both sides of the curb blockout shall have a vertically broomed finish and the top shall have a transversely broomed finish.

Detailed Jan. 2025
Checked Jan. 2025

Note: This drawing is not to scale. Follow dimensions.

STATE OF MISSOURI
TED S. KOESTER
NUMBER PE-2013000591
PROFESSIONAL ENGINEER
05/31/2025 1:17:03 PM
TED S. KOESTER • CIVIL
MO•PE•2013000591

DATE PREPARED: 3/31/2025

ROUTE	STATE
164	MO
DISTRICT	SHEET NO.
BR	2

COUNTY: DUNKLIN

JOB NO.: J9S3780

CONTRACT ID.

PROJECT NO.

BRIDGE NO.: A23321

DATE	DESCRIPTION

MISSOURI HIGHWAYS AND TRANSPORTATION COMMISSION
105 WEST CAPITOL
JEFFERSON CITY, MO 65102
1-888-ASK-MODOT (1-888-275-6636)

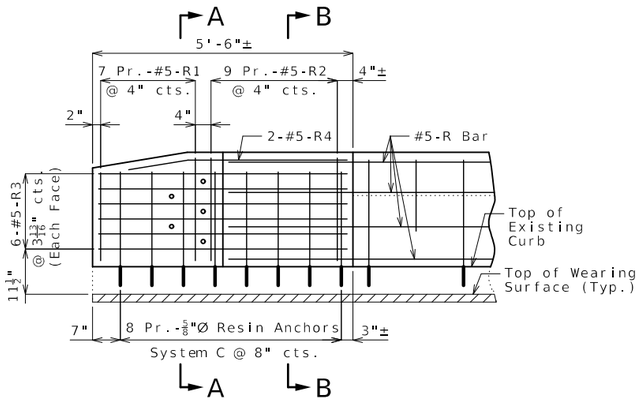

ELEVATION SHOWING REINFORCEMENT

(Right End Post at End Bent No. similar)

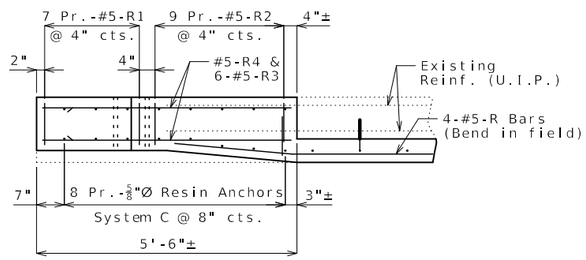

PLAN SHOWING REINFORCEMENT

LEFT END POST AT END BENT NO. 1

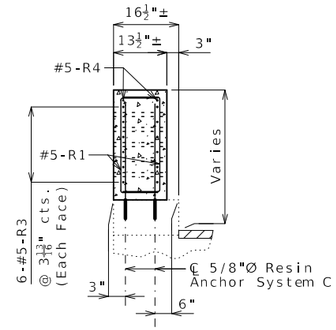

SECTION A-A

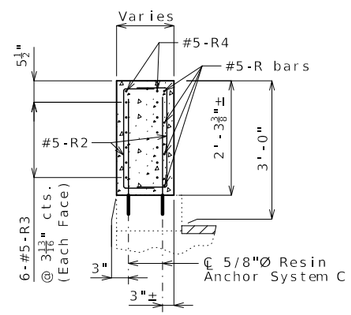

SECTION B-B

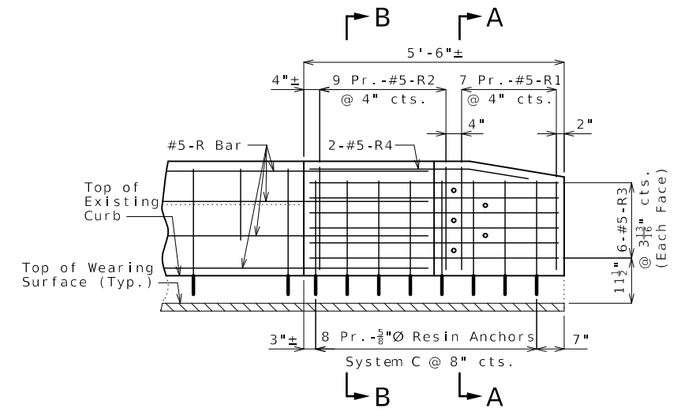

ELEVATION SHOWING REINFORCEMENT

(Right End Post at End Bent No. 1 similar)

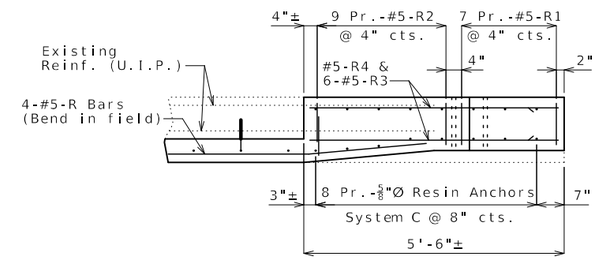

PLAN SHOWING REINFORCEMENT

LEFT END POST AT END BENT NO. 6

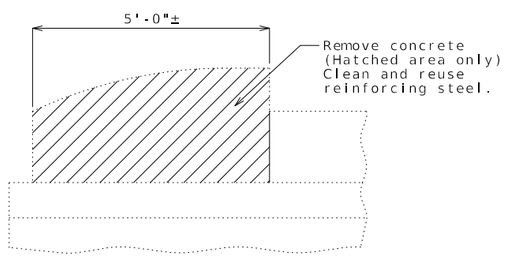

PART ELEVATION SHOWING END POST CONCRETE REMOVAL

Cost of removing existing end posts will be considered completely covered by the contract unit price for Curb Blockout.

Notes:

Work this sheet with Sheet No. 2.

For details of resin anchors, see Sheet No. 2.

Resin anchors shall be shifted or bent in field to clear one-inch diameter holes by at least 1/2 inch.

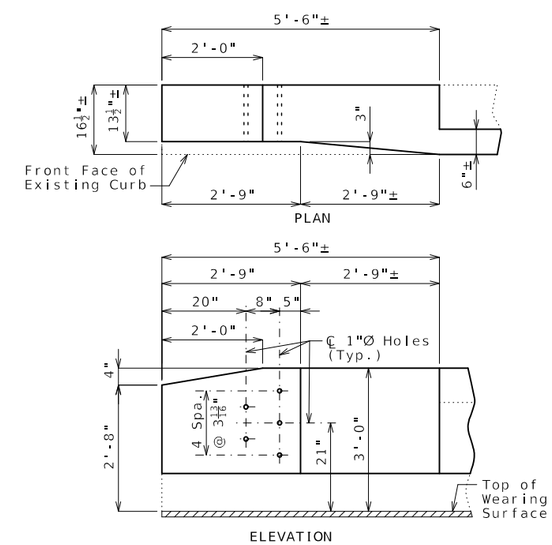

DETAILS OF END POST AND GUARD RAIL ATTACHMENT

CURB BLOCKOUT AT END BENTS

Detailed Jan. 2025
Checked Jan. 2025

Note: This drawing is not to scale. Follow dimensions.

STATE OF MISSOURI
TED S. KOESTER
NUMBER PE-2013000591
PROFESSIONAL ENGINEER
03/31/2025 1:18:08 PM
TED S. KOESTER • CIVIL
MO•PE•2013000591

DATE PREPARED	3/31/2025
ROUTE	164
STATE	MO
DISTRICT	BR
SHEET NO.	3
COUNTY	DUNKLIN
JOB NO.	J9S3780
CONTRACT ID.	
PROJECT NO.	
BRIDGE NO.	A23321

DESCRIPTION

DATE

MISSOURI HIGHWAYS AND TRANSPORTATION COMMISSION

105 WEST CAPITOL
JEFFERSON CITY, MO 65102
1-888-ASK-MODOT (1-888-275-6636)

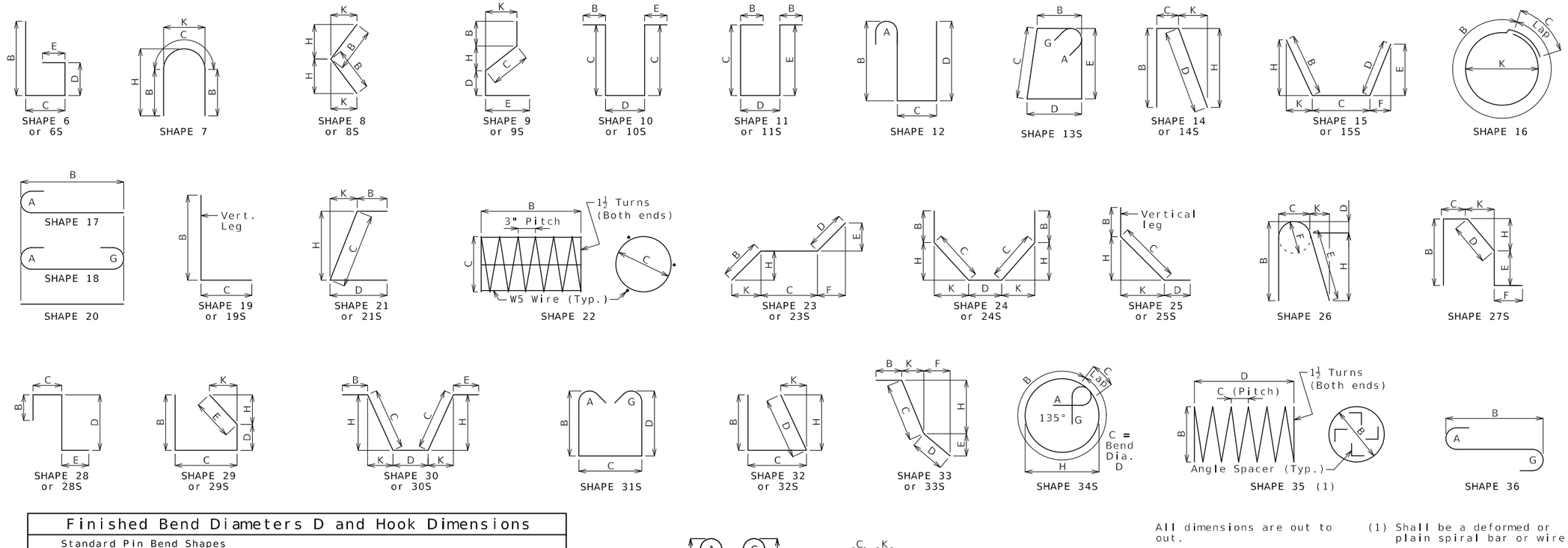

Finished Bend Diameters D and Hook Dimensions

Standard Pin Bend Shapes

Size	Case	D	A or G 90°	A or G 180°	J 180°
#4	1	3"	8"	6"	4"
#5	1	3¾"	10"	7"	5"
#6	1	4½"	12"	8¼"	6"
#7	2	5¼"	14"	9¾"	7"
	3	7"	15"	11½"	8¾"
#8	2	6"	16"	11"	8"
	3	8"	17"	13¼"	10"
#9	1	9½"	19½"	15½"	11¾"
#10	1	10¾"	22"	17½"	13¼"
#11	1	12"	24½"	19½"	14⅞"
#14	1	18¼"	31¼"	27½"	21⅝"
#18	1	24"	41½"	36¾"	28½"

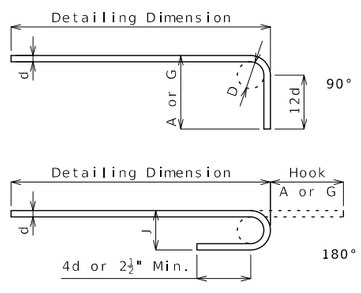

Stirrup Pin Bend Shapes (S)

Size	Case	D	A or G 90°	A or G 135°	A or G 180°	H 135°	J 180°
#4	2	2"	4½"	4½"	5"	2⅝"	3"
	3	3"	5"	5¼"	6"	3"	4"
#5	2	2½"	5¾"	5¾"	5¾"	3⅝"	3¾"
	3	3¾"	6¼"	6½"	7"	3⅞"	5"
#6	1	4½"	12"	7¾"	8¼"	4⅝"	6"

Applicable for all grades of steel.

Case 1 applies to all reinforcement. Case 2 applies to all reinforcement except for galvanized bars. Case 3 applies to galvanized bars only.

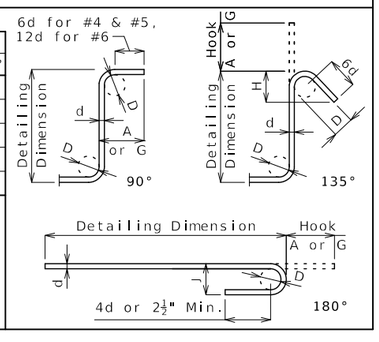

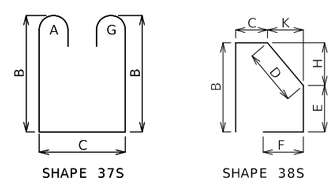

BENDING DIAGRAMS

All dimensions are out to out.

Shapes ending with an S shall be bent in accordance with stirrup pin bend shapes.

Unless otherwise noted, finished bending diameter D is the same for all bends of a shape.

(1) Shall be a deformed or plain spiral bar or wire.

Four angle or channel spacers are required for each column spiral. Spacers are to be placed on inside of spirals. Length and weight of column spirals do not include splices or spacers.

Reinforcing Steel Totals (Pounds)

	Size	Substructure Plain	Substructure Epoxy	Superstructure Slab	Superstructure Barrier	Superstructure Slip Form	Entire Bridge Plain	Entire Bridge Epoxy
By Size	W5	0	0	0	0	0	0	0
	4	0	0	0	0	0	0	0
	5	0	0	0	3,235	0	0	3,235
	6	0	0	0	0	0	0	0
	7	0	0	0	0	0	0	0
	8	0	0	0	0	0	0	0
	9	0	0	0	0	0	0	0
	10	0	0	0	0	0	0	0
	11	0	0	0	0	0	0	0
	14	0	0	0	0	0	0	0
	18	0	0	0	0	0	0	0
By Type		0	0	0	3,235	0	0	3,235

All superstructure reinforcing steel shall be epoxy coated unless otherwise specified.

BENDING DIAGRAMS AND REINFORCING STEEL TOTALS

Detailed Jan. 2025
Checked Feb. 2025

Note: This drawing is not to scale. Follow dimensions.

STATE OF MISSOURI
TED S. KOESTER
NUMBER PE-2013000591
PROFESSIONAL ENGINEER
03/31/2025 1:18:47 PM
TED S. KOESTER • CIVIL
MO•PE•2013000591

DATE PREPARED	3/31/2025
ROUTE	164
STATE	MO
DISTRICT	BR
SHEET NO.	4
COUNTY	DUNKLIN
JOB NO.	J9S3780
CONTRACT ID.	
PROJECT NO.	
BRIDGE NO.	A23321

DESCRIPTION

DATE

MISSOURI HIGHWAYS AND TRANSPORTATION COMMISSION
105 WEST CAPITOL
JEFFERSON CITY, MO 65102
1-888-ASK-MODOT (1-888-275-6636)

Bill of Reinforcing Steel

No. Req.	Size/ Mark	Location	Codes C	Codes SH	Codes V	Dimensions B ft in.	C ft in.	D ft in.	E ft in.	F ft in.	H ft in.	K ft in.	Nom. Length ft in.	Actual Length ft in.	Weight lb
		Curb Blockout													
56	5 R1	CURB BLOCKOUT	E	10S	8		10.50	19.25					3 4	3 2	
		Incr. = 0.625"					10.50	23.25					3 8	3 6	195
72	5 R2	CURB BLOCKOUT	E	10S			10.50	23.25					3 8	3 6	263
48	5 R3	CURB BLOCKOUT	E	20		5 3.00							5 3	5 3	263
8	5 R4	CURB BLOCKOUT	E	15S		15.25	3 4.25				2.50	15.00	4 8	4 6	38
64	5 R5	CURB BLOCKOUT	E	20		13 0.00							13	13	868
24	5 R6	CURB BLOCKOUT	E	20		36 3.00							36 3	36 3	907
16	5 R7	CURB BLOCKOUT	E	20		8 0.00							8	8	134
8	5 R8	CURB BLOCKOUT	E	20		33 10.00							33 10	33 10	282
8	5 R9	CURB BLOCKOUT	E	20		34 2.00							34 2	34 2	285

Bill of Reinforcing Steel

No. Req.	Size/ Mark	Location	Codes C	Codes SH	Codes V	Dimensions B ft in.	C ft in.	D ft in.	E ft in.	F ft in.	H ft in.	K ft in.	Nom. Length ft in.	Actual Length ft in.	Weight lb

Nominal lengths are based on out to out dimensions shown in bending diagrams and are listed to the nearest inch for fabricator's use. Actual lengths are measured along centerline bar to the nearest inch. Weights are based on actual lengths.

For bending diagrams and steel reinforcing totals, see Sheet No. 4.

Detailed Jan. 2025
Checked Feb. 2025

All bars shall be Grade 60.

BILL OF REINFORCING STEEL

Note: This drawing is not to scale. Follow dimensions.

Codes: C = Required coatings, where E = Epoxy Coated and G = Galvanized.

SH = Required shape, see bending diagrams.

V = Sets of varied bars and number of bars of each length. Bar dimensions vary in equal increments between dimensions shown on this line and the following line and the actual length dimension shown on this line and the following line vary by the specified increment.

STATE OF MISSOURI
TED S. KOESTER
NUMBER PE-2013000591
PROFESSIONAL ENGINEER
03/31/2025 1:19:17 PM
TED S. KOESTER • CIVIL
MO•PE•2013000591

DATE PREPARED
3/31/2025

ROUTE	STATE
164	MO
DISTRICT	SHEET NO.
BR	5

COUNTY
DUNKLIN

JOB NO.
J9S3780

CONTRACT ID.

PROJECT NO.

BRIDGE NO.
A23321

DESCRIPTION	DATE

MISSOURI HIGHWAYS AND TRANSPORTATION COMMISSION
105 WEST CAPITOL
JEFFERSON CITY, MO 65102
1-888-ASK-MODOT (1-888-275-6636)

SEC 22 TWP 17N RGE 9E

U.I.P. & REHABILITATE EXISTING (54'-72'-72'-72'-54') CONTINUOUS COMPOSITE WIDE FLANGE BEAM SPANS (SKEW: 30° L.A.)

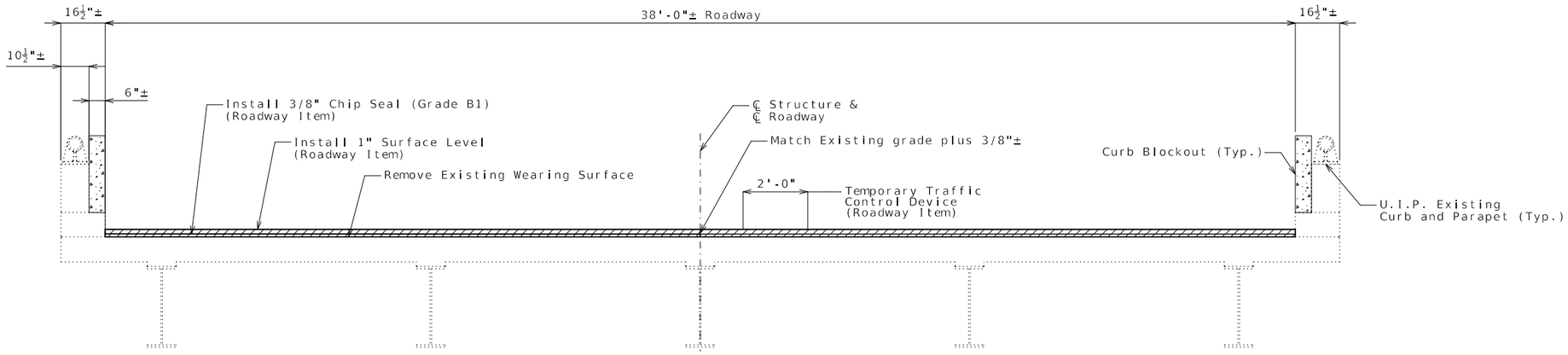

TYPICAL SECTION THRU SLAB

Note: Any future wearing surface will require milling existing wearing surface.

Estimated Quantities		
Item		Total
Curb Blockout	linear foot	695

General Notes:

Design Specifications:

2002 AASHTO LFD (17th Ed.) Standard Specifications
Bridge Deck Rating = 7

Design Loading:

H20-44 (1965), HS20-44 (New Construction)

Design Unit Stresses:

Class B-1 Concrete (Curb Blockout) f'c = 4,000 psi
Reinforcing Steel (Grade 60) fy = 60,000 psi

Miscellaneous:

Outline of existing work is indicated by light dashed lines. Heavy lines indicate new work.

New wearing surface material shall be tapered at barrier drain outlets to keep existing opening from plugging.

Roadway surfacing adjacent to bridge ends shall match new bridge wearing surface (Roadway Item).

Contractor shall verify all dimensions in field before ordering new material.

Traffic Handling:

Traffic to be maintained on structure during construction. See roadway plans for traffic control.

REPAIRS TO BRIDGE: ROUTE 164
OVER DRAINAGE DITCH NO. 1

ROUTE 164 FROM ROUTE Y TO ROUTE TT
ABOUT 0.6 MILE EAST OF ROUTE Y
BEGINNING STATION 29+90.00± (Match Existing)

Detailed Dec. 2024
Checked Dec. 2024

Note: This drawing is not to scale. Follow dimensions.

STATE OF MISSOURI
TED S. KOESTER
NUMBER PE-2013000591
PROFESSIONAL ENGINEER
03/31/2025 1:20:02 PM
TED S. KOESTER • CIVIL
MO•PE•2013000591

DATE PREPARED 3/31/2025

ROUTE	STATE
164	MO
DISTRICT	SHEET NO.
BR	1

COUNTY DUNKLIN
JOB NO. J9S3780
CONTRACT ID.
PROJECT NO.
BRIDGE NO. A23331

DESCRIPTION	DATE

MISSOURI HIGHWAYS AND TRANSPORTATION COMMISSION
105 WEST CAPITOL
JEFFERSON CITY, MO 65102
1-888-ASK-MODOT (1-888-275-6636)

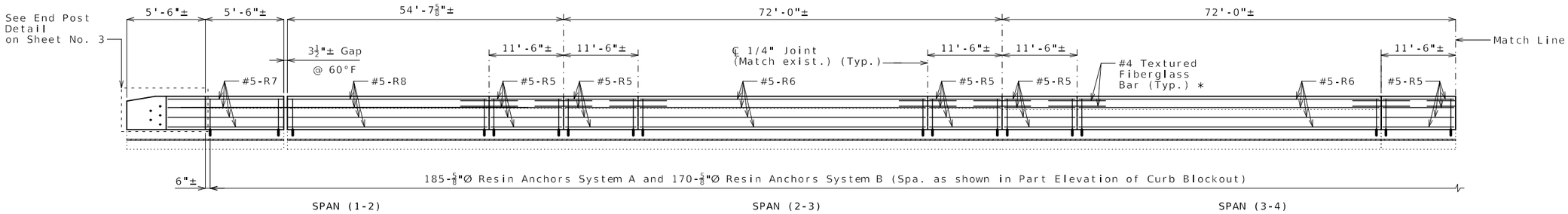

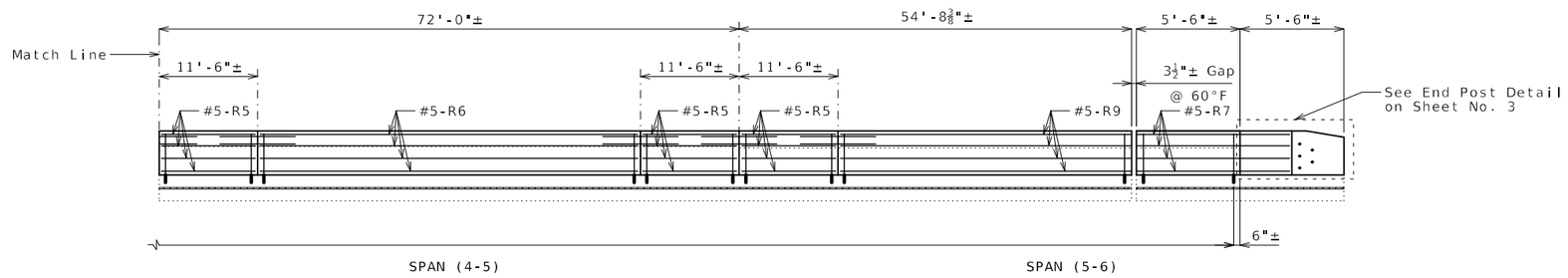

ELEVATION OF LEFT CURB BLOCKOUT

(Right curb blockout similar)

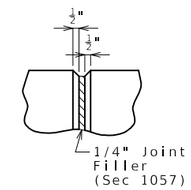

PART ELEVATION AT FORMED JOINT

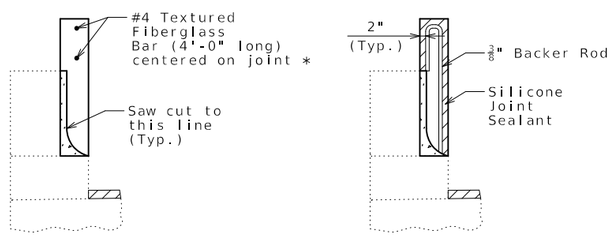

SECTION THRU SAW CUT JOINT

Longitudinal dimensions are along grade and are taken at top outside edge of parapet.

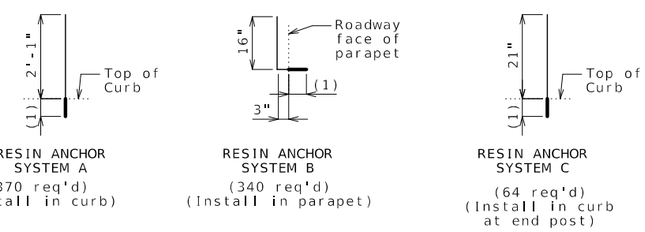

(1) Use manufacturer's embedment length (5" minimum embedment).

DETAILS OF RESIN ANCHORS

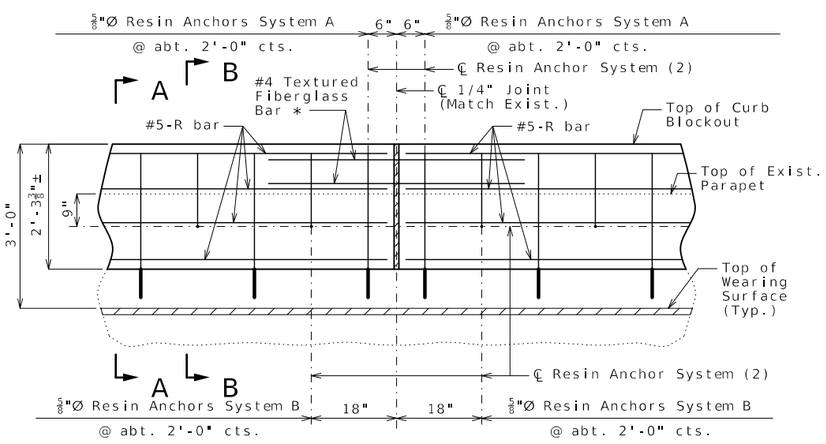

PART ELEVATION OF CURB BLOCKOUT

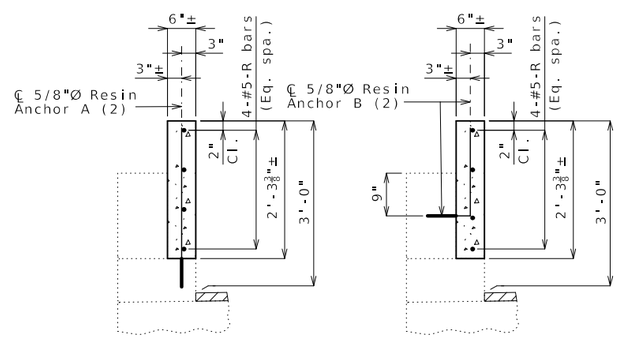

SECTION A-A

SECTION B-B

CURB BLOCKOUT

Notes:

* Slip-formed option only.

Conventional forming or slip forming may be used. Saw cut joints may be used with conventional forming.

Bridge rail not shown for clarity.

Concrete in curb blockout shall be Class B-1.

Measurement of curb blockout is to the nearest linear foot, measured at the top outside edge of parapet. (Match existing curb and parapet)

All exposed edges of curb blockout shall have either a 1/2-inch radius or 3/8-inch bevel, unless otherwise noted.

Payment for concrete, reinforcement, resin anchor systems and any other work incidental to the curb blockout, complete in place, will be considered completely covered by the contract unit price for Curb Blockout per linear foot.

Cost of any concrete curb or parapet repair will be considered completely covered by the contract unit price for Curb Blockout.

All curb blockout reinforcement shall be epoxy coated.

(2) Shift resin anchors where necessary to clear existing anchor bolts for bridge rail, miss curb outlets (if present) and clear existing reinforcement.

Use a minimum lap of 3'-1" for #5 horizontal curb blockout bars.

Concrete traffic barrier delineators shall be placed on top of the curb blockout similarly as shown on Missouri Standard Plans 617.10 and in accordance with Sec 617. Delineators on bridges with two-lane, two-way traffic shall have retroflective sheeting on both sides. Concrete traffic barrier delineators will be considered completely covered by the contract unit price for Curb Blockout.

The contractor shall use one of the qualified resin anchor systems in accordance with Sec 1039.

The minimum embedment depth in concrete with f'c = 4,000 psi for the resin anchor system shall be that required to meet the minimum ultimate pullout strength in accordance with Sec 1039 but shall not be less than 5 inches.

An epoxy coated #5 Grade 60 reinforcing bar shall be substituted for the 5/8"Ø threaded rod.

For slip-formed option, both sides of the curb blockout shall have a vertically broomed finish and the top shall have a transversely broomed finish.

Detailed Jan. 2025
Checked Jan. 2025

Note: This drawing is not to scale. Follow dimensions.

STATE OF MISSOURI
TED S. KOESTER
NUMBER PE-2013000591
PROFESSIONAL ENGINEER
05/31/2025 1:20:27 PM
TED S. KOESTER • CIVIL
MO-PE-2013000591

DATE PREPARED	3/31/2025
ROUTE 164	STATE MO
DISTRICT BR	SHEET NO. 2
COUNTY	DUNKLIN
JOB NO.	J9S3780
CONTRACT ID.	
PROJECT NO.	
BRIDGE NO.	A23331

DESCRIPTION

DATE

MISSOURI HIGHWAYS AND TRANSPORTATION COMMISSION
105 WEST CAPITOL
JEFFERSON CITY, MO 65102
1-888-ASK-MODOT (1-888-275-6636)

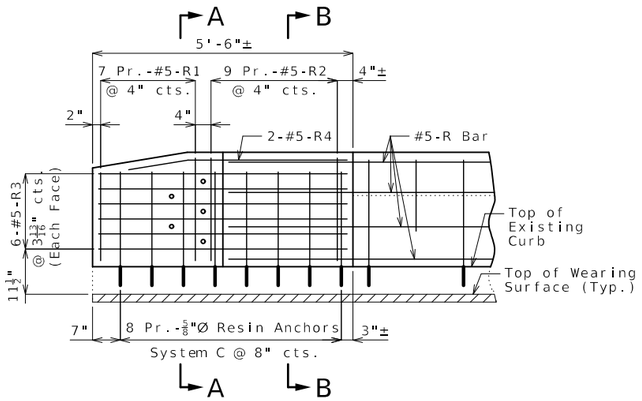

ELEVATION SHOWING REINFORCEMENT

(Right End Post at End Bent No. similar)

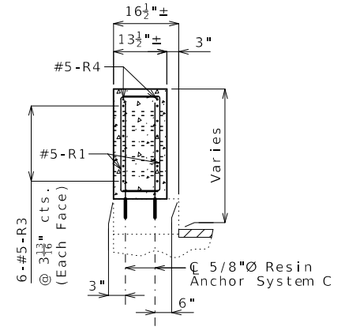

SECTION A-A

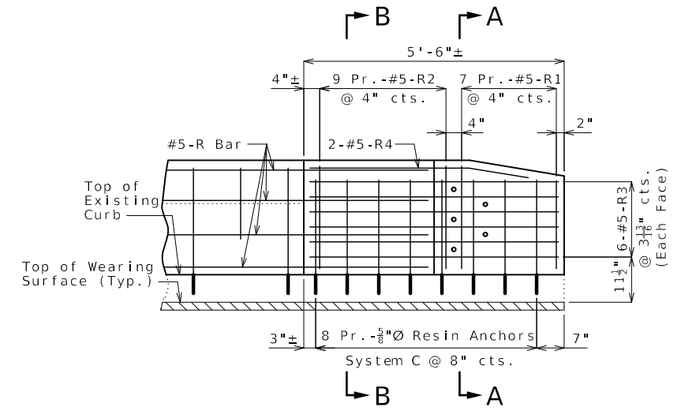

ELEVATION SHOWING REINFORCEMENT

(Right End Post at End Bent No. 1 similar)

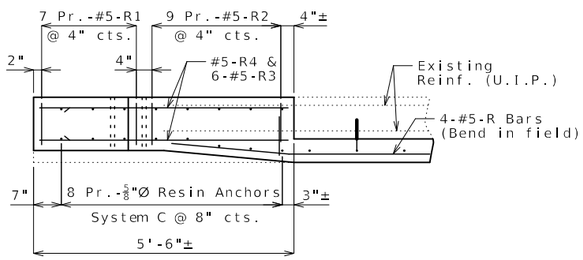

PLAN SHOWING REINFORCEMENT

LEFT END POST AT END BENT NO. 1

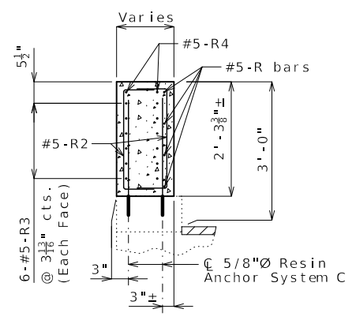

SECTION B-B

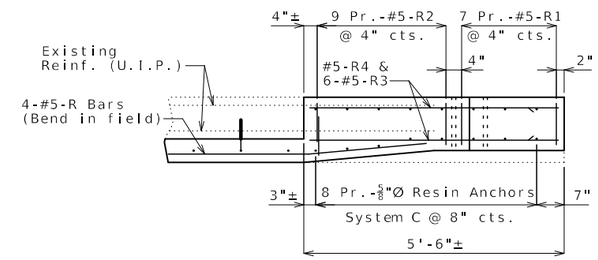

PLAN SHOWING REINFORCEMENT

LEFT END POST AT END BENT NO. 6

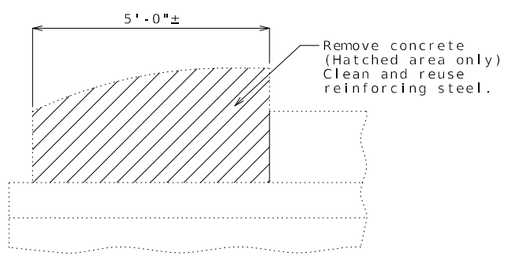

PART ELEVATION SHOWING END POST
CONCRETE REMOVAL

Cost of removing existing end posts will be considered completely covered by the contract unit price for Curb Blockout.

Notes:

Work this sheet with Sheet No. 2.

For details of resin anchors, see Sheet No. 2.

Resin anchors shall be shifted or bent in field to clear one-inch diameter holes by at least 1/2 inch.

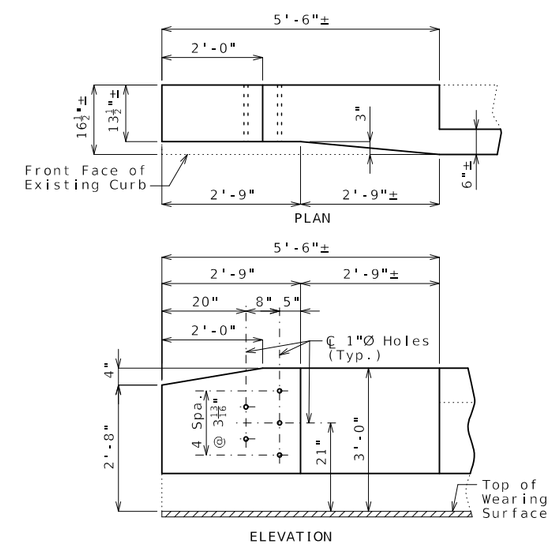

DETAILS OF END POST AND
GUARD RAIL ATTACHMENT

CURB BLOCKOUT AT END BENTS

Detailed Jan. 2025
Checked Jan. 2025

Note: This drawing is not to scale. Follow dimensions.

STATE OF MISSOURI
TED S. KOESTER
NUMBER
PE-2013000591
PROFESSIONAL ENGINEER
03/31/2025 1:20:49 PM
TED S. KOESTER - CIVIL
MO-PE-2013000591

DATE PREPARED	3/31/2025
ROUTE	164
STATE	MO
DISTRICT	BR
SHEET NO.	3
COUNTY	DUNKLIN
JOB NO.	J9S3780
CONTRACT ID.	
PROJECT NO.	
BRIDGE NO.	A23331

DATE	DESCRIPTION

MISSOURI HIGHWAYS AND TRANSPORTATION COMMISSION
105 WEST CAPITOL
JEFFERSON CITY, MO 65102
1-888-ASK-MODOT (1-888-275-6636)

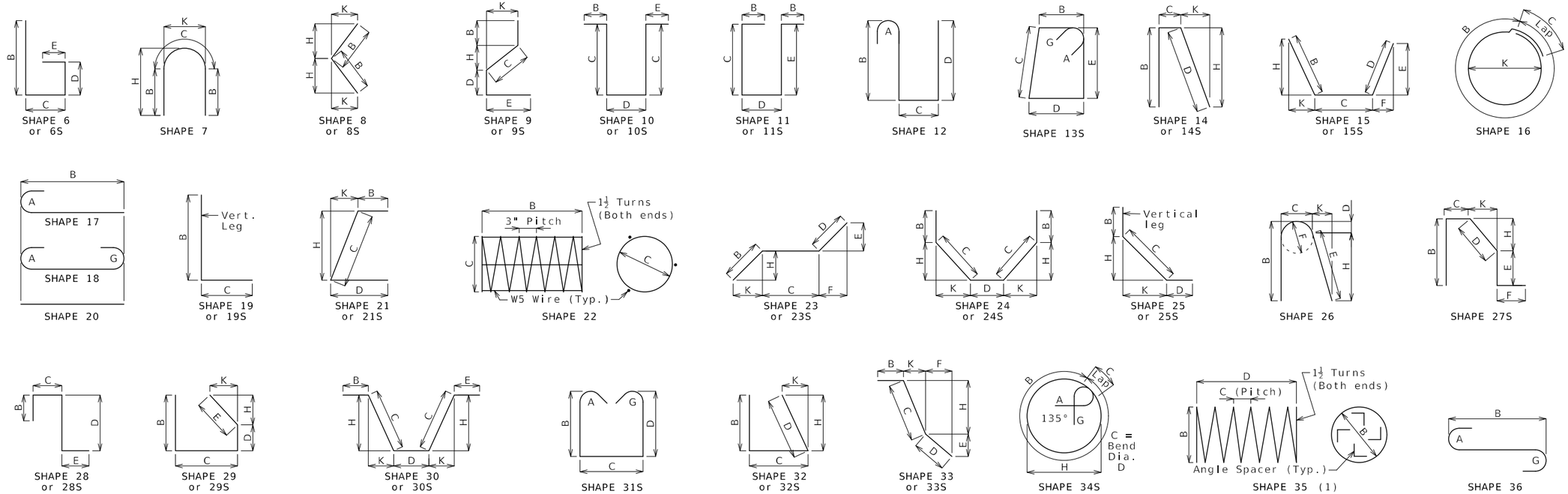

Finished Bend Diameters D and Hook Dimensions

Standard Pin Bend Shapes

Size	Case	D	A or G 90°	A or G 180°	J 180°
#4	1	3"	8"	6"	4"
#5	1	3¾"	10"	7"	5"
#6	1	4½"	12"	8¼"	6"
#7	2	5¼"	14"	9¾"	7"
	3	7"	15"	11½"	8¾"
#8	2	6"	16"	11"	8"
	3	8"	17"	13¼"	10"
#9	1	9½"	19½"	15½"	11¾"
#10	1	10¾"	22"	17½"	13¼"
#11	1	12"	24½"	19½"	14⅞"
#14	1	18¼"	31¼"	27½"	21⅝"
#18	1	24"	41½"	36¾"	28½"

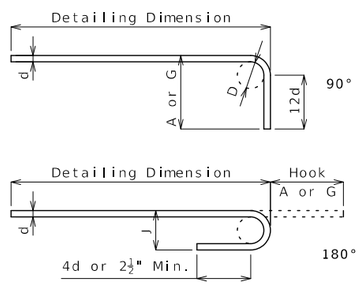

Stirrup Pin Bend Shapes (S)

Size	Case	D	A or G 90°	A or G 135°	A or G 180°	H 135°	J 180°
#4	2	2"	4½"	4½"	5"	2⅝"	3"
	3	3"	5"	5¼"	6"	3"	4"
#5	2	2½"	5¾"	5¾"	5¾"	3⅝"	3¾"
	3	3¾"	6¼"	6½"	7"	3⅞"	5"
#6	1	4½"	12"	7¾"	8¼"	4⅝"	6"

Applicable for all grades of steel.

Case 1 applies to all reinforcement. Case 2 applies to all reinforcement except for galvanized bars. Case 3 applies to galvanized bars only.

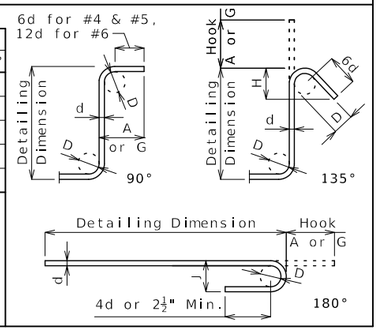

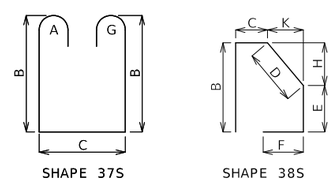

BENDING DIAGRAMS

All dimensions are out to out.

Shapes ending with an S shall be bent in accordance with stirrup pin bend shapes.

Unless otherwise noted, finished bending diameter D is the same for all bends of a shape.

(1) Shall be a deformed or plain spiral bar or wire.

Four angle or channel spacers are required for each column spiral. Spacers are to be placed on inside of spirals. Length and weight of column spirals do not include splices or spacers.

Reinforcing Steel Totals (Pounds)

	Size	Substructure Plain	Substructure Epoxy	Superstructure Slab	Superstructure Barrier	Superstructure Slip Form	Entire Bridge Plain	Entire Bridge Epoxy
By Size	W5	0	0	0	0	0	0	0
	4	0	0	0	0	0	0	0
	5	0	0	0	3,579	0	0	3,579
	6	0	0	0	0	0	0	0
	7	0	0	0	0	0	0	0
	8	0	0	0	0	0	0	0
	9	0	0	0	0	0	0	0
	10	0	0	0	0	0	0	0
	11	0	0	0	0	0	0	0
	14	0	0	0	0	0	0	0
	18	0	0	0	0	0	0	0
By Type		0	0	0	3,579	0	0	3,579

All superstructure reinforcing steel shall be epoxy coated unless otherwise specified.

BENDING DIAGRAMS AND REINFORCING STEEL TOTALS

Detailed Jan. 2025
Checked Feb. 2025

Note: This drawing is not to scale. Follow dimensions.

STATE OF MISSOURI
TED S. KOESTER
NUMBER PE-2013000591
PROFESSIONAL ENGINEER
03/31/2025 1:21:14 PM
TED S. KOESTER • CIVIL
MO-PE-2013000591

DATE PREPARED	3/31/2025
ROUTE	164
STATE	MO
DISTRICT	BR
SHEET NO.	4
COUNTY	DUNKLIN
JOB NO.	J9S3780
CONTRACT ID.	
PROJECT NO.	
BRIDGE NO.	A23331

DESCRIPTION

DATE

MISSOURI HIGHWAYS AND TRANSPORTATION COMMISSION
105 WEST CAPITOL
JEFFERSON CITY, MO 65102
1-888-ASK-MODOT (1-888-275-6636)

Bill of Reinforcing Steel

No. Req.	Size/ Mark	Location	Codes C	Codes SH	Codes V	Dimensions B ft in.	C ft in.	D ft in.	E ft in.	F ft in.	H ft in.	K ft in.	Nom. Length ft in.	Actual Length ft in.	Weight lb
		Curb Blockout													
56	5 R1	CURB BLOCKOUT	E	10S	8		10.50	19.25					3 4	3 2	
		Incr. = 0.625"					10.50	23.25					3 8	3 6	195
72	5 R2	CURB BLOCKOUT	E	10S			10.50	23.25					3 8	3 6	263
48	5 R3	CURB BLOCKOUT	E	20		5 3.00							5 3	5 3	263
8	5 R4	CURB BLOCKOUT	E	15S		15.25	3 4.25				2.50	15.00	4 8	4 6	38
64	5 R5	CURB BLOCKOUT	E	20		11 3.00							11 3	11 3	751
24	5 R6	CURB BLOCKOUT	E	20		48 9.00							48 9	48 9	1,220
16	5 R7	CURB BLOCKOUT	E	20		8 0.00							8 0	8 0	134
8	5 R8	CURB BLOCKOUT	E	20		42 10.00							42 10	42 10	357
8	5 R9	CURB BLOCKOUT	E	20		42 11.00							42 11	42 11	358

Bill of Reinforcing Steel

No. Req.	Size/ Mark	Location	Codes C	Codes SH	Codes V	Dimensions B ft in.	C ft in.	D ft in.	E ft in.	F ft in.	H ft in.	K ft in.	Nom. Length ft in.	Actual Length ft in.	Weight lb

Nominal lengths are based on out to out dimensions shown in bending diagrams and are listed to the nearest inch for fabricator's use. Actual lengths are measured along centerline bar to the nearest inch. Weights are based on actual lengths.

For bending diagrams and steel reinforcing totals, see Sheet No. 4.

All bars shall be Grade 60.

Codes: C = Required coatings, where E = Epoxy Coated and G = Galvanized.

SH = Required shape, see bending diagrams.

V = Sets of varied bars and number of bars of each length. Bar dimensions vary in equal increments between dimensions shown on this line and the following line and the actual length dimension shown on this line and the following line vary by the specified increment.

Detailed Jan. 2025
Checked Feb. 2025

BILL OF REINFORCING STEEL

Note: This drawing is not to scale. Follow dimensions.

STATE OF MISSOURI
TED S. KOESTER
NUMBER PE-2013000591
PROFESSIONAL ENGINEER
03/31/2025 1:21:35 PM
TED S. KOESTER - CIVIL
MO-PE-2013000591

DATE PREPARED 3/31/2025

ROUTE	STATE
164	MO

DISTRICT	SHEET NO.
BR	5

COUNTY DUNKLIN

JOB NO. J9S3780

CONTRACT ID.

PROJECT NO.

BRIDGE NO. A23331

DESCRIPTION	DATE

MISSOURI HIGHWAYS AND TRANSPORTATION COMMISSION
105 WEST CAPITOL
JEFFERSON CITY, MO 65102
1-888-ASK-MODOT (1-888-275-6636)

SEC 22 TWP 17N RGE 9E

U.I.P. & REHABILITATE EXISTING 2(54'-70'-70'-70'-54') CONTINUOUS COMPOSITE WIDE FLANGE BEAM SPANS (SKEW: 30° L.A.)

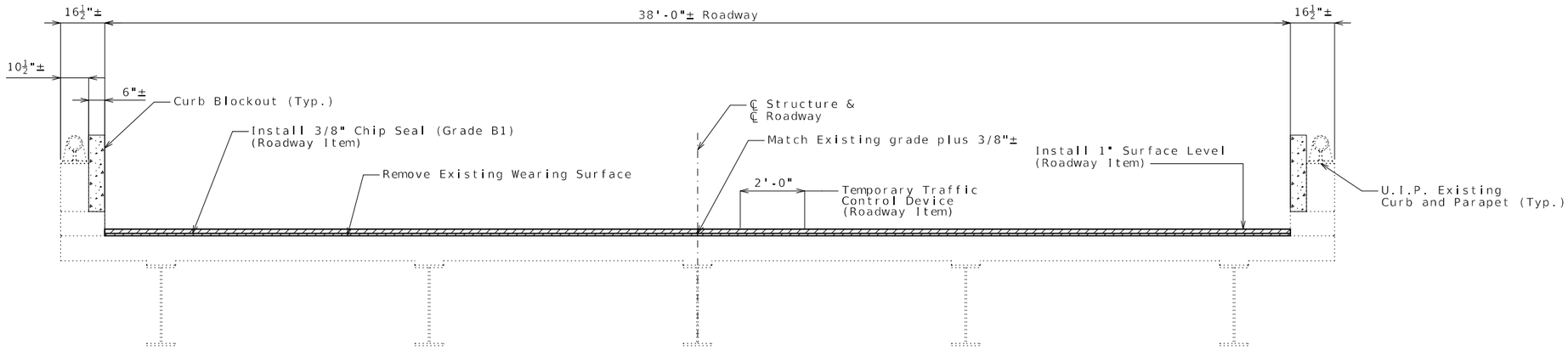

TYPICAL SECTION THRU SLAB

Note: Any future wearing surface will require milling existing wearing surface.

Estimated Quantities		
Item		Total
Curb Blockout	linear foot	1320

General Notes:

Design Specifications:

2002 AASHTO LFD (17th Ed.) Standard Specifications
Bridge Deck Rating = 6

Design Loading:

H20-44 (1965), HS20-44 (New Construction)

Design Unit Stresses:

Class B-1 Concrete (Curb Blockout) f'c = 4,000 psi
Reinforcing Steel (ASTM A615 Grade 60) fy = 60,000 psi

Miscellaneous:

Outline of existing work is indicated by light dashed lines. Heavy lines indicate new work.

New wearing surface material shall be tapered at barrier drain outlets to keep existing opening from plugging.

Roadway surfacing adjacent to bridge ends shall match new bridge wearing surface (Roadway Item).

Contractor shall verify all dimensions in field before ordering new material.

Asbestos (Friability Category II NF) has been detected in the insulation compound between the top of the existing concrete parapet and the base of the existing handrail posts. The contractor has the option to remove the handrail and posts or leave in place. Should the contractor elect to remove the handrail and posts, the contractor will be required to use a licensed abatement contractor during the removal. No direct payment will be made for removal of the handrall and posts, or for asbestos abatement. The described work will be considered completely covered by the contract unit price for other Items In the contract.

Traffic Handling:

Traffic to be maintained on structure during construction. See roadway plans for traffic control.

REPAIRS TO BRIDGE: ROUTE 164
OVER DRAINAGE DITCH NO. 66

ROUTE 164 FROM ROUTE Y TO ROUTE TT
ABOUT 0.7 MILE EAST OF ROUTE Y
BEGINNING STATION 34+19.00± (Match Existing)

Detailed Dec. 2024
Checked Dec. 2024

Note: This drawing is not to scale. Follow dimensions.

STATE OF MISSOURI
TED S. KOESTER
NUMBER
PE-2013000591
PROFESSIONAL ENGINEER
03/31/2025 1:22:10 PM
TED S. KOESTER • CIVIL
MO•PE•2013000591

DATE PREPARED 3/31/2025

ROUTE	STATE
164	MO
DISTRICT	SHEET NO.
BR	1

COUNTY DUNKLIN
JOB NO. J9S3780
CONTRACT ID.
PROJECT NO.
BRIDGE NO. A23341

DATE	DESCRIPTION

MISSOURI HIGHWAYS AND TRANSPORTATION COMMISSION
105 WEST CAPITOL
JEFFERSON CITY, MO 65102
1-888-ASK-MODOT (1-888-275-6636)

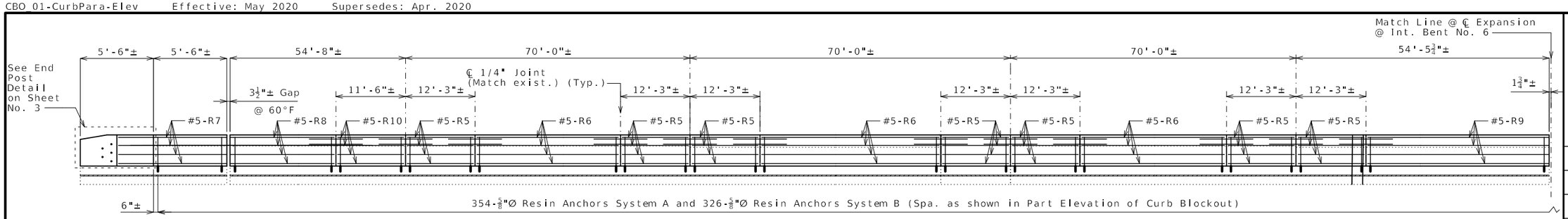

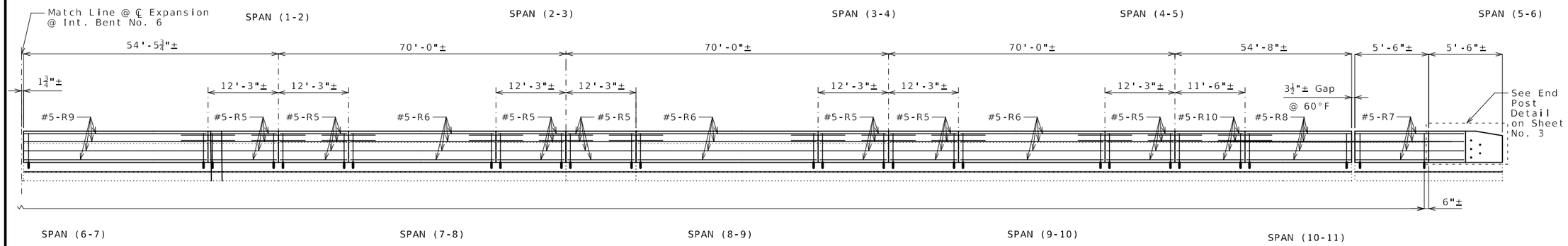

ELEVATION OF LEFT CURB BLOCKOUT

(Right curb blockout similar)

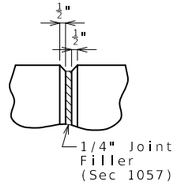

PART ELEVATION AT FORMED JOINT

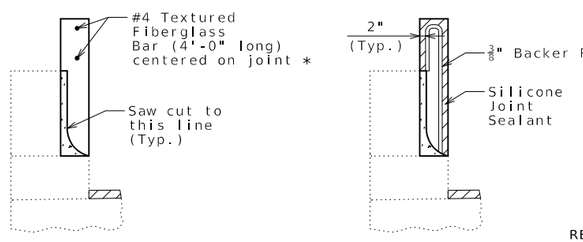

SECTION THRU SAW CUT JOINT

Longitudinal dimensions are along grade and are taken at top outside edge of parapet.

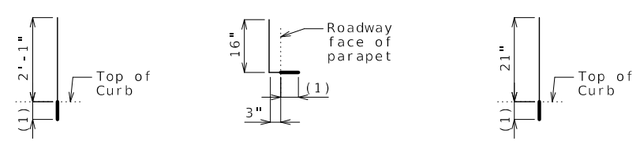

RESIN ANCHOR SYSTEM A
(708 req'd)
(Install in curb)

RESIN ANCHOR SYSTEM B
(652 req'd)
(Install in parapet)

RESIN ANCHOR SYSTEM C
(64 req'd)
(Install in curb at end post)

(1) Use manufacturer's embedment length (5" minimum embedment).

DETAILS OF RESIN ANCHORS

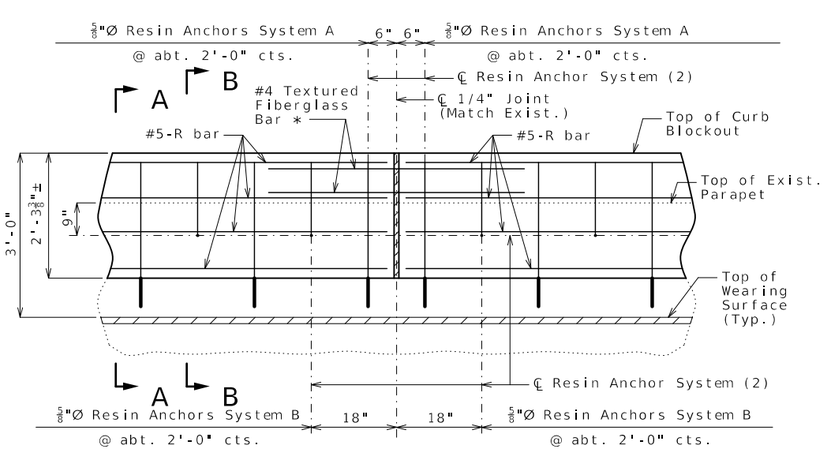

PART ELEVATION OF CURB BLOCKOUT

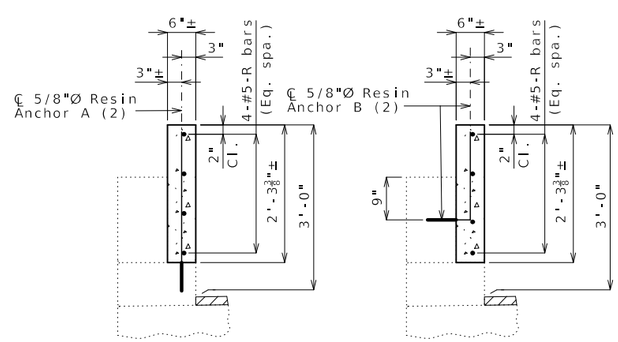

SECTION A-A

SECTION B-B

CURB BLOCKOUT

Notes:

* Slip-formed option only.

Conventional forming or slip forming may be used. Saw cut joints may be used with conventional forming.

Bridge rail not shown for clarity.

Concrete in curb blockout shall be Class B-1.

Measurement of curb blockout is to the nearest linear foot, measured at the top outside edge of parapet. (Match existing curb and parapet)

All exposed edges of curb blockout shall have either a 1/2-inch radius or 3/8-inch bevel, unless otherwise noted.

Payment for concrete, reinforcement, resin anchor systems and any other work incidental to the curb blockout, complete in place, will be considered completely covered by the contract unit price for Curb Blockout per linear foot.

Cost of any concrete curb or parapet repair will be considered completely covered by the contract unit price for Curb Blockout.

All curb blockout reinforcement shall be epoxy coated.

(2) Shift resin anchors where necessary to clear existing anchor bolts for bridge rail, miss curb outlets (if present) and clear existing reinforcement.

Use a minimum lap of 3'-1" for #5 horizontal curb blockout bars.

Concrete traffic barrier delineators shall be placed on top of the curb blockout similarly as shown on Missouri Standard Plans 617.10 and in accordance with Sec 617. Delineators on bridges with two-lane, two-way traffic shall have retroflective sheeting on both sides. Concrete traffic barrier delineators will be considered completely covered by the contract unit price for Curb Blockout.

The contractor shall use one of the qualified resin anchor systems in accordance with Sec 1039.

The minimum embedment depth in concrete with f'c = 4,000 psi for the resin anchor system shall be that required to meet the minimum ultimate pullout strength in accordance with Sec 1039 but shall not be less than 5 inches.

An epoxy coated #5 Grade 60 reinforcing bar shall be substituted for the 5/8"Ø threaded rod.

For slip-formed option, both sides of the curb blockout shall have a vertically broomed finish and the top shall have a transversely broomed finish.

Detailed Jan. 2025
Checked Jan. 2025

Note: This drawing is not to scale. Follow dimensions.

STATE OF MISSOURI
TED S. KOESTER
NUMBER PE-2013000591
PROFESSIONAL ENGINEER
03-31-2025 1:29:40 PM
TED S. KOESTER • CIVIL
MO-PE-2013000591

DATE PREPARED	3/31/2025
ROUTE 164	STATE MO
DISTRICT BR	SHEET NO. 2
COUNTY	DUNKLIN
JOB NO.	J9S3780
CONTRACT ID.	
PROJECT NO.	
BRIDGE NO.	A23341

DESCRIPTION

DATE

MISSOURI HIGHWAYS AND TRANSPORTATION COMMISSION
105 WEST CAPITOL
JEFFERSON CITY, MO 65102
1-888-ASK-MODOT (1-888-275-6636)

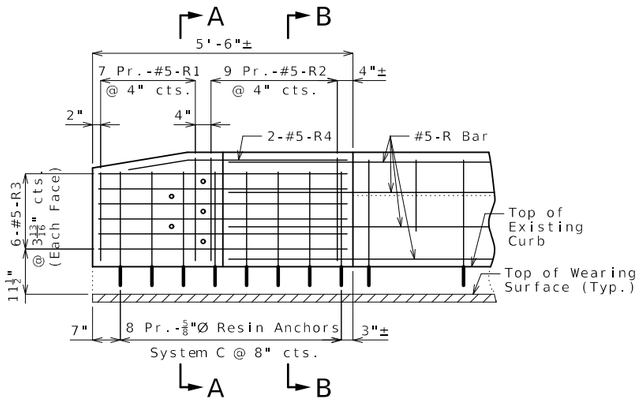

ELEVATION SHOWING REINFORCEMENT

(Right End Post at End Bent No. similar)

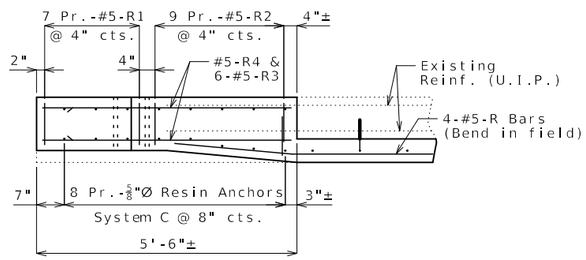

PLAN SHOWING REINFORCEMENT

LEFT END POST AT END BENT NO. 1

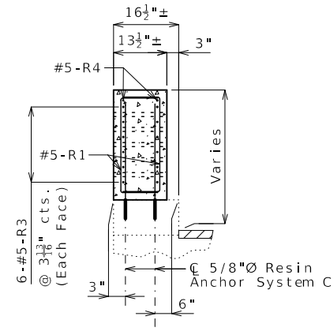

SECTION A-A

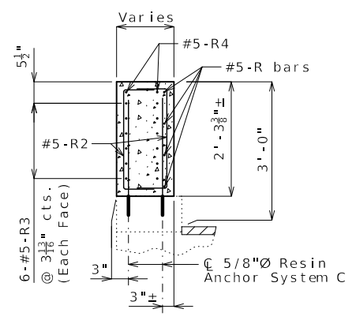

SECTION B-B

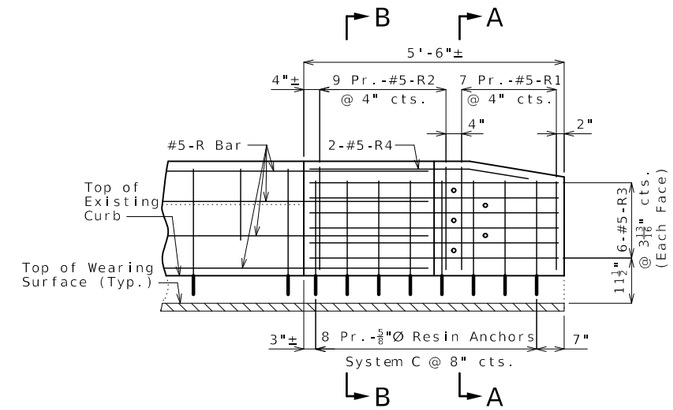

ELEVATION SHOWING REINFORCEMENT

(Right End Post at End Bent No. 1 similar)

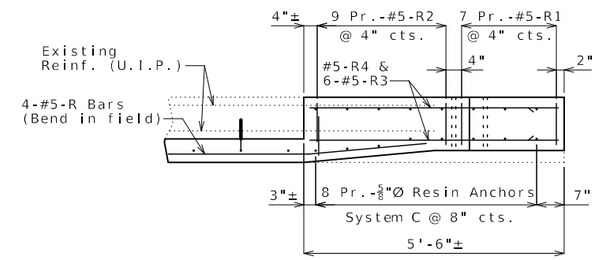

PLAN SHOWING REINFORCEMENT

LEFT END POST AT END BENT NO. 6

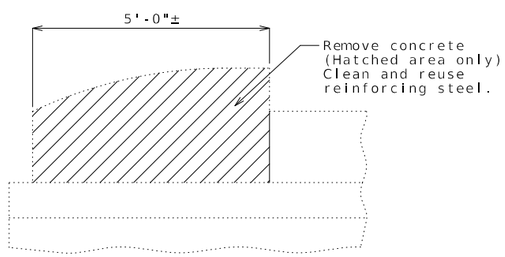

PART ELEVATION SHOWING END POST CONCRETE REMOVAL

Cost of removing existing end posts will be considered completely covered by the contract unit price for Curb Blockout.

Notes:

Work this sheet with Sheet No. 2.

For details of resin anchors, see Sheet No. 2.

Resin anchors shall be shifted or bent in field to clear one-inch diameter holes by at least 1/2 inch.

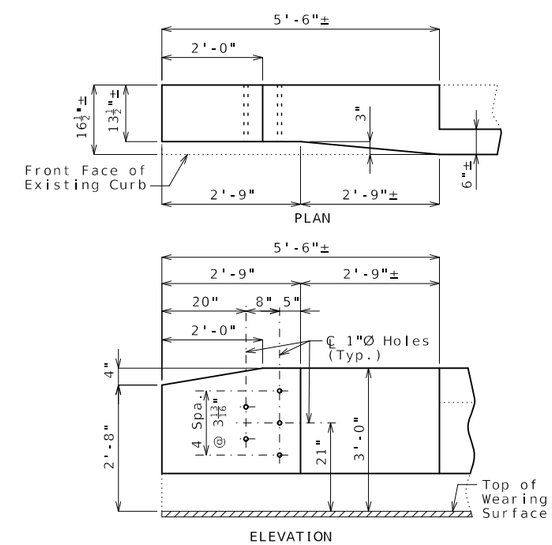

DETAILS OF END POST AND GUARD RAIL ATTACHMENT

CURB BLOCKOUT AT END BENTS

Detailed Jan. 2025
Checked Jan. 2025

Note: This drawing is not to scale. Follow dimensions.

STATE OF MISSOURI
TED S. KOESTER
NUMBER PE-2013000591
PROFESSIONAL ENGINEER
03/31/2025 1:03:07 PM
TED S. KOESTER • CIVIL
MO-PE-2013000591

DATE PREPARED	3/31/2025
ROUTE 164	STATE MO
DISTRICT BR	SHEET NO. 3
COUNTY	DUNKLIN
JOB NO.	J9S3780
CONTRACT ID.	
PROJECT NO.	
BRIDGE NO.	A23341

DESCRIPTION

DATE

MISSOURI HIGHWAYS AND TRANSPORTATION COMMISSION

105 WEST CAPITOL
JEFFERSON CITY, MO 65102
1-888-ASK-MODOT (1-888-275-6636)

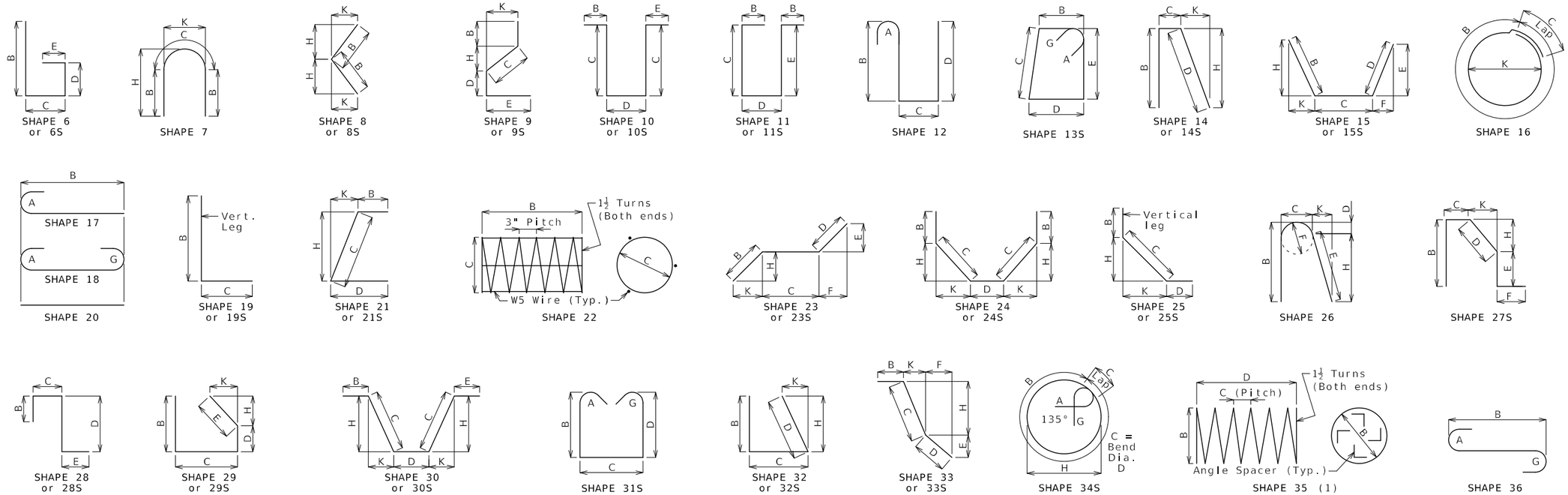

Finished Bend Diameters D and Hook Dimensions

Standard Pin Bend Shapes

Size	Case	D	A or G 90°	A or G 180°	J 180°
#4	1	3"	8"	6"	4"
#5	1	3¾"	10"	7"	5"
#6	1	4½"	12"	8¼"	6"
#7	2	5¼"	14"	9¾"	7"
	3	7"	15"	11½"	8¾"
#8	2	6"	16"	11"	8"
	3	8"	17"	13¼"	10"
#9	1	9½"	19½"	15½"	11¾"
#10	1	10¾"	22"	17½"	13¼"
#11	1	12"	24½"	19½"	14⅞"
#14	1	18¼"	31¼"	27½"	21⅝"
#18	1	24"	41½"	36¼"	28½"

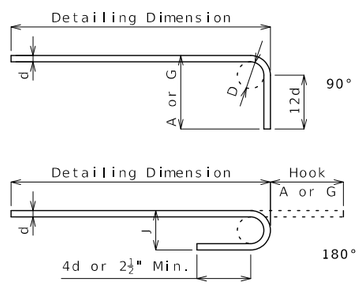

Stirrup Pin Bend Shapes (S)

Size	Case	D	A or G 90°	A or G 135°	A or G 180°	H 135°	J 180°
#4	2	2"	4½"	4½"	5"	2⅝"	3"
	3	3"	5"	5¼"	6"	3"	4"
#5	2	2½"	5¾"	5¾"	5¾"	3⅝"	3¾"
	3	3¾"	6¼"	6½"	7"	3⅞"	5"
#6	1	4½"	12"	7¾"	8¼"	4⅝"	6"

Applicable for all grades of steel.

Case 1 applies to all reinforcement. Case 2 applies to all reinforcement except for galvanized bars. Case 3 applies to galvanized bars only.

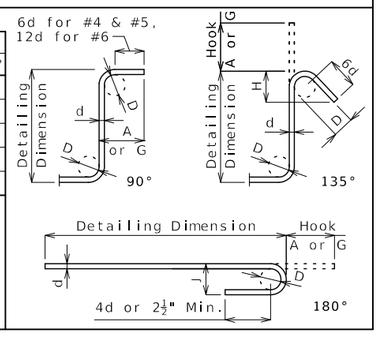

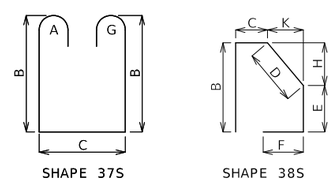

BENDING DIAGRAMS

All dimensions are out to out.

Shapes ending with an S shall be bent in accordance with stirrup pin bend shapes.

Unless otherwise noted, finished bending diameter D is the same for all bends of a shape.

(1) Shall be a deformed or plain spiral bar or wire.

Four angle or channel spacers are required for each column spiral. Spacers are to be placed on inside of spirals. Length and weight of column spirals do not include splices or spacers.

Reinforcing Steel Totals (Pounds)

	Size	Substructure Plain	Substructure Epoxy	Superstructure Slab	Superstructure Barrier	Superstructure Slip Form	Entire Bridge Plain	Entire Bridge Epoxy
By Size	W5	0	0	0	0	0	0	0
	4	0	0	0	0	0	0	0
	5	0	0	0	6,164	0	0	6,164
	6	0	0	0	0	0	0	0
	7	0	0	0	0	0	0	0
	8	0	0	0	0	0	0	0
	9	0	0	0	0	0	0	0
	10	0	0	0	0	0	0	0
	11	0	0	0	0	0	0	0
	14	0	0	0	0	0	0	0
	18	0	0	0	0	0	0	0
By Type		0	0	0	6,164	0	0	6,164

All superstructure reinforcing steel shall be epoxy coated unless otherwise specified.

BENDING DIAGRAMS AND REINFORCING STEEL TOTALS

Detailed Jan. 2025
Checked Feb. 2025

Note: This drawing is not to scale. Follow dimensions.

STATE OF MISSOURI
TED S. KOESTER
NUMBER PE-2013000591
PROFESSIONAL ENGINEER
03/31/2025 1:23:28 PM
TED S. KOESTER - CIVIL
MO-PE-2013000591

DATE PREPARED	3/31/2025
ROUTE 164	STATE MO
DISTRICT BR	SHEET NO. 4
COUNTY	DUNKLIN
JOB NO.	J9S3780
CONTRACT ID.	
PROJECT NO.	
BRIDGE NO.	A23341

DESCRIPTION

DATE

MISSOURI HIGHWAYS AND TRANSPORTATION COMMISSION

105 WEST CAPITOL
JEFFERSON CITY, MO 65102
1-888-ASK-MODOT (1-888-275-6636)

Bill of Reinforcing Steel

No. Req.	Size/ Mark	Location	Codes C	Codes SH	Codes V	Dimensions B ft in.	C ft in.	D ft in.	E ft in.	F ft in.	H ft in.	K ft in.	Nom. Length ft in.	Actual Length ft in.	Weight lb
		Curb Blockout													
56	5 R1	CURB BLOCKOUT	E	10S	8		10.50	19.25					3 4	3 2	
		Incr. = 0.625"					10.50	23.25					3 8	3 6	195
72	5 R2	CURB BLOCKOUT	E	10S			10.50	23.25					3 8	3 6	263
48	5 R3	CURB BLOCKOUT	E	20		5 3.00							5 3	5 3	263
8	5 R4	CURB BLOCKOUT	E	15S		15.25	3 4.25				2.50	15.00	4 8	4 6	38
112	5 R5	CURB BLOCKOUT	E	20		12 0.00							12 0	12 0	1,402
48	5 R6	CURB BLOCKOUT	E	20		45 3.00							45 3	45 3	2,265
16	5 R7	CURB BLOCKOUT	E	20		8 0.00							8 0	8 0	134
16	5 R8	CURB BLOCKOUT	E	20		42 11.00							42 11	42 11	716
16	5 R9	CURB BLOCKOUT	E	20		41 11.00							41 11	41 11	700
16	5 R10	CURB BLOCKOUT	E	20		11 3.00							11 3	11 3	188

Bill of Reinforcing Steel

No. Req.	Size/ Mark	Location	Codes C	Codes SH	Codes V	Dimensions B ft in.	C ft in.	D ft in.	E ft in.	F ft in.	H ft in.	K ft in.	Nom. Length ft in.	Actual Length ft in.	Weight lb

Nominal lengths are based on out to out dimensions shown in bending diagrams and are listed to the nearest inch for fabricator's use. Actual lengths are measured along centerline bar to the nearest inch. Weights are based on actual lengths.

For bending diagrams and steel reinforcing totals, see Sheet No. 4.

Detailed Jan. 2025
Checked Feb. 2025

All bars shall be Grade 60.

Codes: C = Required coatings, where E = Epoxy Coated and G = Galvanized.

SH = Required shape, see bending diagrams.

V = Sets of varied bars and number of bars of each length. Bar dimensions vary in equal increments between dimensions shown on this line and the following line and the actual length dimension shown on this line and the following line vary by the specified increment.

BILL OF REINFORCING STEEL

Note: This drawing is not to scale. Follow dimensions.

STATE OF MISSOURI
TED S. KOESTER
NUMBER PE-2013000591
PROFESSIONAL ENGINEER
03/31/2025 1:23:53 PM
TED S. KOESTER+CIVIL
MO-PE=2013000591

DATE PREPARED
3/31/2025

ROUTE	STATE
164	MO
DISTRICT	SHEET NO.
BR	5

COUNTY
DUNKLIN

JOB NO.
J9S3780

CONTRACT ID.

PROJECT NO.

BRIDGE NO.
A23341

DESCRIPTION	DATE

MISSOURI HIGHWAYS AND TRANSPORTATION COMMISSION
105 WEST CAPITOL
JEFFERSON CITY, MO 65102
1-888-ASK-MODOT (1-888-275-6636)

SEC 22 TWP 17N RGE 9E

U.I.P. & REHABILITATE EXISTING (50'-65'-65'-65'-50') CONTINUOUS COMPOSITE WIDE FLANGE BEAM SPANS (SKEW: 30° L.A.)

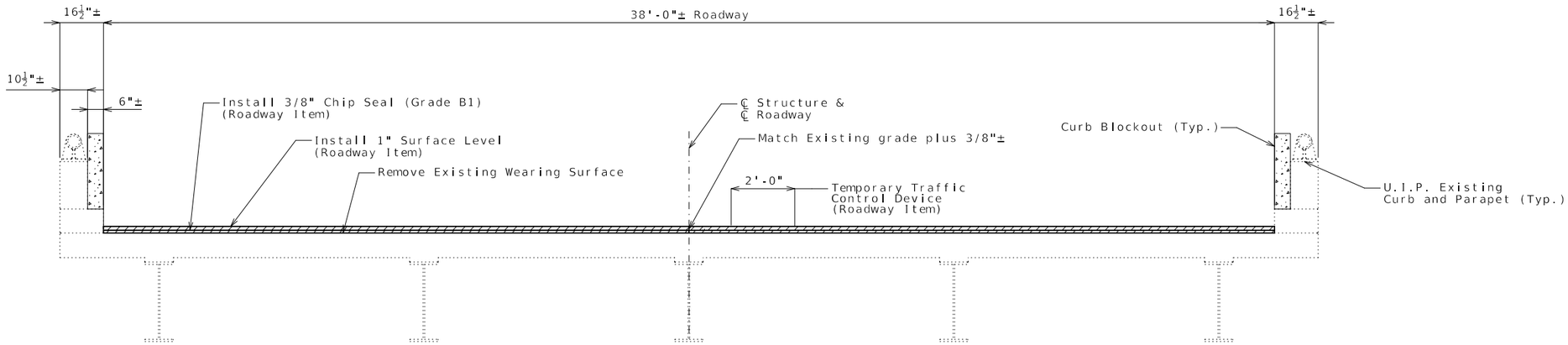

TYPICAL SECTION THRU SLAB

Note: Any future wearing surface will require milling existing wearing surface.

Estimated Quantities		
Item		Total
Curb Blockout	linear foot	636

General Notes:

Design Specifications:

2002 AASHTO LFD (17th Ed.) Standard Specifications
Bridge Deck Rating = 6

Design Loading:

H20-44 (1965), HS20-44 (New Construction)

Design Unit Stresses:

Class B-1 Concrete (Curb Blockout) f'c = 4,000 psi
Reinforcing Steel (ASTM A615 Grade 60) fy = 60,000 psi

Miscellaneous:

Outline of existing work is indicated by light dashed lines. Heavy lines indicate new work.

New wearing surface material shall be tapered at barrier drain outlets to keep existing opening from plugging.

Roadway surfacing adjacent to bridge ends shall match new bridge wearing surface (Roadway Item).

Contractor shall verify all dimensions in field before ordering new material.

Asbestos (Friability Category II NF) has been detected in the insulation compound between the top of the existing concrete parapet and the base of the existing handrail posts. The contractor has the option to remove the handrail and posts or leave in place. Should the contractor elect to remove the handrail and posts, the contractor will be required to use a licensed abatement contractor during the removal. No direct payment will be made for removal of the handrail and posts, or for asbestos abatement. The described work will be considered completely covered by the contract unit price for other items in the contract.

Traffic Handling:

Traffic to be maintained on structure during construction. See roadway plans for traffic control.

REPAIRS TO BRIDGE: ROUTE 164
OVER DRAINAGE DITCH NO. 259

ROUTE 164 FROM ROUTE Y TO ROUTE TT
ABOUT 0.8 MILE EAST OF ROUTE Y
BEGINNING STATION 25+59.50± (Match Existing)

Detailed Dec. 2024
Checked Dec. 2024

Note: This drawing is not to scale. Follow dimensions.

STATE OF MISSOURI
TED S. KOESTER
NUMBER PE-2013000591
PROFESSIONAL ENGINEER
03/31/2025 1:24:38 PM
TED S. KOESTER - CIVIL
MO-PE-2013000591

DATE PREPARED 3/31/2025
ROUTE 164 STATE MO
DISTRICT BR SHEET NO. 1
COUNTY DUNKLIN
JOB NO. J9S3780
CONTRACT ID.
PROJECT NO.
BRIDGE NO. A23361

DESCRIPTION	DATE

MISSOURI HIGHWAYS AND TRANSPORTATION COMMISSION
105 WEST CAPITOL
JEFFERSON CITY, MO 65102
1-888-ASK-MODOT (1-888-275-6636)

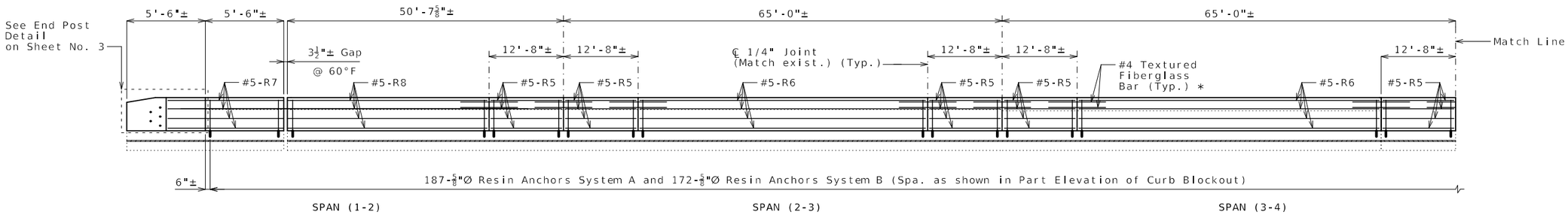

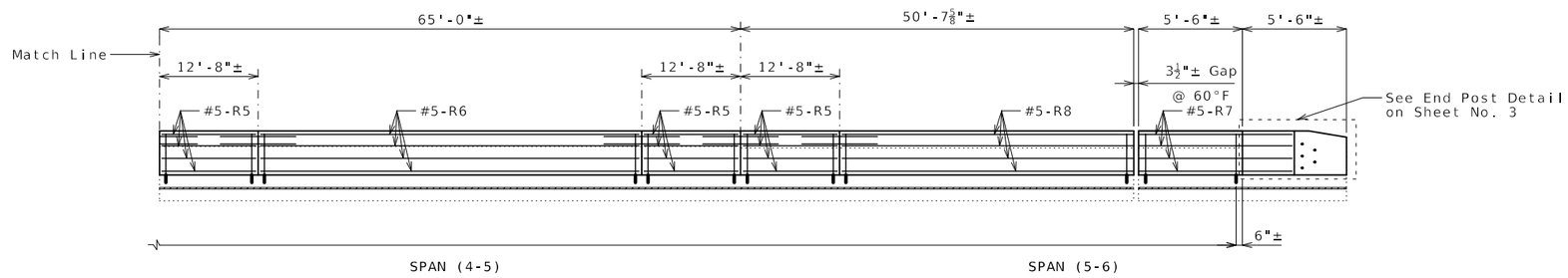

ELEVATION OF LEFT CURB BLOCKOUT

(Right curb blockout similar)

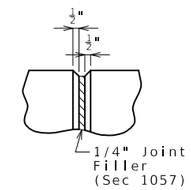

PART ELEVATION AT FORMED JOINT

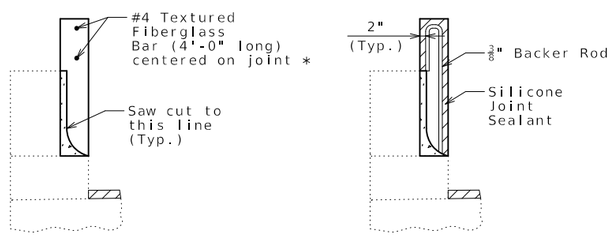

SECTION THRU SAW CUT JOINT

Longitudinal dimensions are along grade and are taken at top outside edge of parapet.

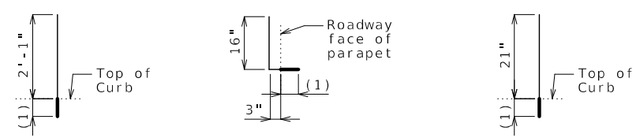

RESIN ANCHOR SYSTEM A (374 req'd) (Install in curb)

RESIN ANCHOR SYSTEM B (344 req'd) (Install in parapet)

RESIN ANCHOR SYSTEM C (64 req'd) (Install in curb at end post)

(1) Use manufacturer's embedment length (5" minimum embedment).

DETAILS OF RESIN ANCHORS

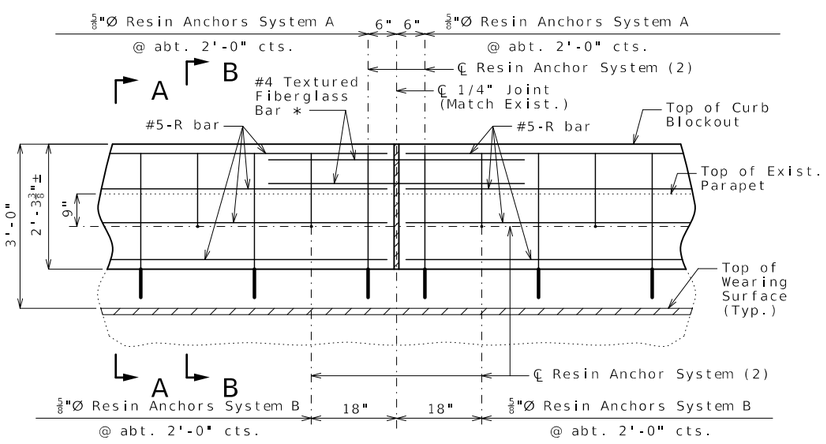

PART ELEVATION OF CURB BLOCKOUT

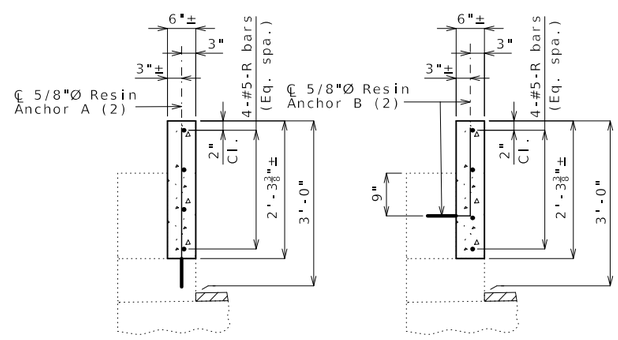

SECTION A-A

SECTION B-B

CURB BLOCKOUT

Notes:

* Slip-formed option only.

Conventional forming or slip forming may be used. Saw cut joints may be used with conventional forming.

Bridge rail not shown for clarity.

Concrete in curb blockout shall be Class B-1.

Measurement of curb blockout is to the nearest linear foot, measured at the top outside edge of parapet. (Match existing curb and parapet)

All exposed edges of curb blockout shall have either a 1/2-inch radius or 3/8-inch bevel, unless otherwise noted.

Payment for concrete, reinforcement, resin anchor systems and any other work incidental to the curb blockout, complete in place, will be considered completely covered by the contract unit price for Curb Blockout per linear foot.

Cost of any concrete curb or parapet repair will be considered completely covered by the contract unit price for Curb Blockout.

All curb blockout reinforcement shall be epoxy coated.

(2) Shift resin anchors where necessary to clear existing anchor bolts for bridge rail, miss curb outlets (if present) and clear existing reinforcement.

Use a minimum lap of 3'-1" for #5 horizontal curb blockout bars.

Concrete traffic barrier delineators shall be placed on top of the curb blockout similarly as shown on Missouri Standard Plans 617.10 and in accordance with Sec 617. Delineators on bridges with two-lane, two-way traffic shall have retroflective sheeting on both sides. Concrete traffic barrier delineators will be considered completely covered by the contract unit price for Curb Blockout.

The contractor shall use one of the qualified resin anchor systems in accordance with Sec 1039.

The minimum embedment depth in concrete with f'c = 4,000 psi for the resin anchor system shall be that required to meet the minimum ultimate pullout strength in accordance with Sec 1039 but shall not be less than 5 inches.

An epoxy coated #5 Grade 60 reinforcing bar shall be substituted for the 5/8"Ø threaded rod.

For slip-formed option, both sides of the curb blockout shall have a vertically broomed finish and the top shall have a transversely broomed finish.

Detailed Jan. 2025
Checked Jan. 2025

Note: This drawing is not to scale. Follow dimensions.

STATE OF MISSOURI
TED S. KOESTER
NUMBER PE-2013000591
PROFESSIONAL ENGINEER
03/31/2025 1:25:00 PM
TED S. KOESTER - CIVIL
MO-PE-2013000591

DATE PREPARED	3/31/2025
ROUTE 164	STATE MO
DISTRICT BR	SHEET NO. 2
COUNTY	DUNKLIN
JOB NO.	J9S3780
CONTRACT ID.	
PROJECT NO.	
BRIDGE NO.	A23361

DESCRIPTION

DATE

MISSOURI HIGHWAYS AND TRANSPORTATION COMMISSION
105 WEST CAPITOL
JEFFERSON CITY, MO 65102
1-888-ASK-MODOT (1-888-275-6636)

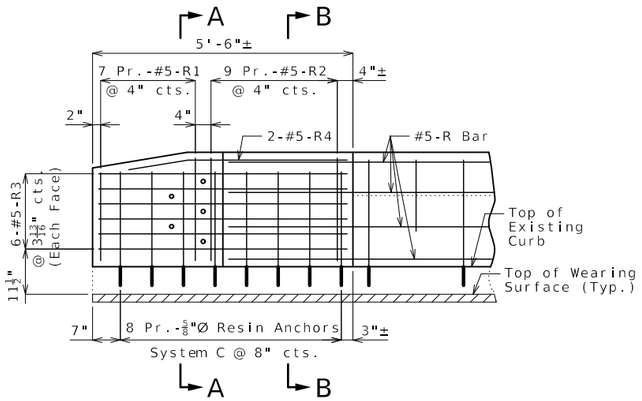

ELEVATION SHOWING REINFORCEMENT

(Right End Post at End Bent No. similar)

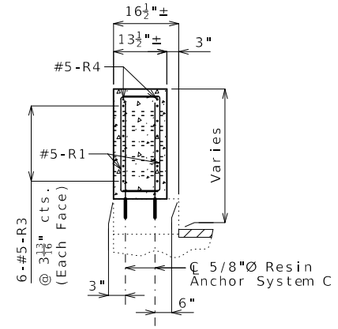

SECTION A-A

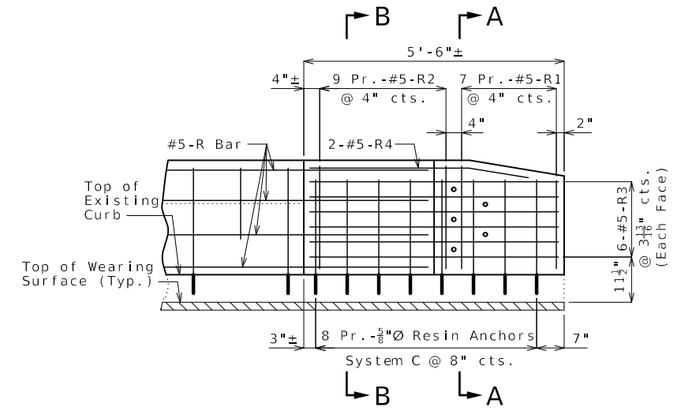

ELEVATION SHOWING REINFORCEMENT

(Right End Post at End Bent No. 1 similar)

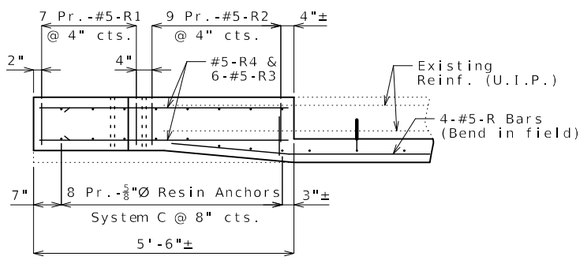

PLAN SHOWING REINFORCEMENT

LEFT END POST AT END BENT NO. 1

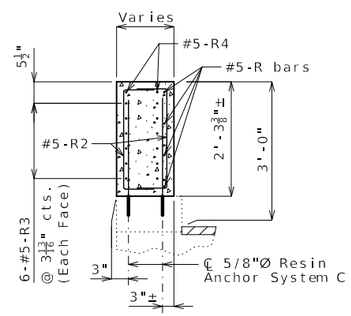

SECTION B-B

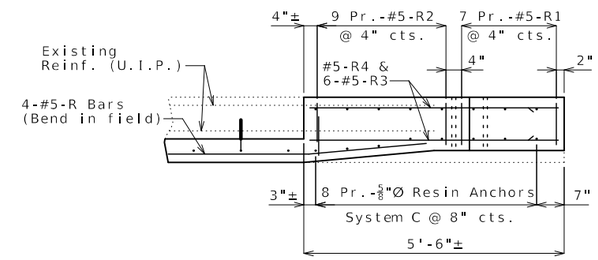

PLAN SHOWING REINFORCEMENT

LEFT END POST AT END BENT NO. 6

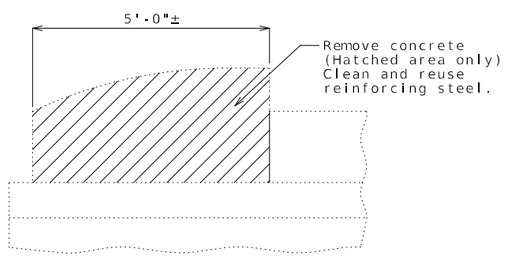

PART ELEVATION SHOWING END POST
CONCRETE REMOVAL

Cost of removing existing end posts will be considered completely covered by the contract unit price for Curb Blockout.

Notes:

Work this sheet with Sheet No. 2.

For details of resin anchors, see Sheet No. 2.

Resin anchors shall be shifted or bent in field to clear one-inch diameter holes by at least 1/2 inch.

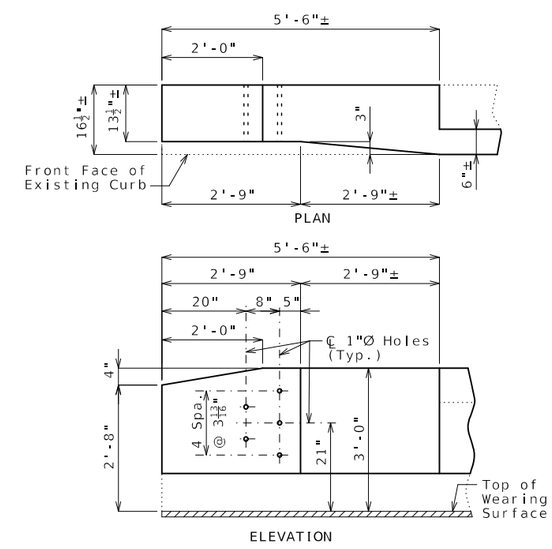

DETAILS OF END POST AND
GUARD RAIL ATTACHMENT

CURB BLOCKOUT AT END BENTS

Detailed Jan. 2025
Checked Jan. 2025

Note: This drawing is not to scale. Follow dimensions.

STATE OF MISSOURI
TED S. KOESTER
NUMBER
PE-2013000591
PROFESSIONAL ENGINEER
03/31/2025 1:25:24 PM
TED S. KOESTER • CIVIL
MO-PE-2013000591

DATE PREPARED	3/31/2025
ROUTE	164
STATE	MO
DISTRICT	BR
SHEET NO.	3
COUNTY	DUNKLIN
JOB NO.	J9S3780
CONTRACT ID.	
PROJECT NO.	
BRIDGE NO.	A23361

DESCRIPTION

DATE

MISSOURI HIGHWAYS AND TRANSPORTATION COMMISSION

105 WEST CAPITOL
JEFFERSON CITY, MO 65102
1-888-ASK-MODOT (1-888-275-6636)

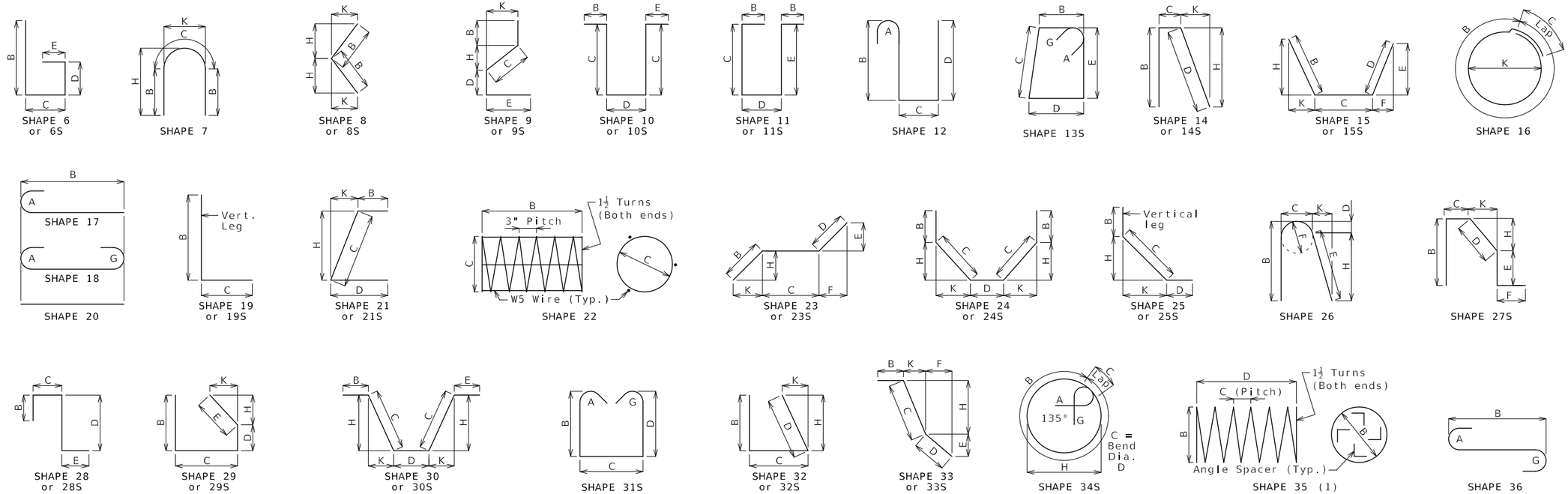

Finished Bend Diameters D and Hook Dimensions

Standard Pin Bend Shapes

Size	Case	D	A or G 90°	A or G 180°	J 180°
#4	1	3"	8"	6"	4"
#5	1	3¾"	10"	7"	5"
#6	1	4½"	12"	8¼"	6"
#7	2	5¼"	14"	9¾"	7"
	3	7"	15"	11½"	8¾"
#8	2	6"	16"	11"	8"
	3	8"	17"	13¼"	10"
#9	1	9½"	19½"	15½"	11¾"
#10	1	10¾"	22"	17½"	13¼"
#11	1	12"	24½"	19½"	14⅞"
#14	1	18¼"	31¼"	27½"	21⅝"
#18	1	24"	41½"	36¼"	28½"

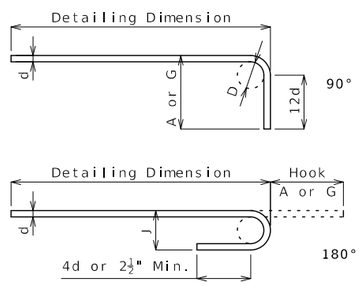

Stirrup Pin Bend Shapes (S)

Size	Case	D	A or G 90°	A or G 135°	A or G 180°	H 135°	J 180°
#4	2	2"	4½"	4½"	5"	2⅝"	3"
	3	3"	5"	5¼"	6"	3"	4"
#5	2	2½"	5¾"	5¾"	5¾"	3⅝"	3¾"
	3	3¾"	6¼"	6½"	7"	3⅞"	5"
#6	1	4½"	12"	7¾"	8¼"	4⅝"	6"

Applicable for all grades of steel.

Case 1 applies to all reinforcement. Case 2 applies to all reinforcement except for galvanized bars. Case 3 applies to galvanized bars only.

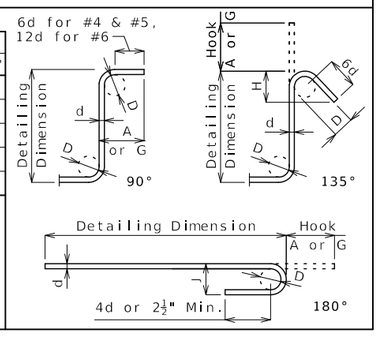

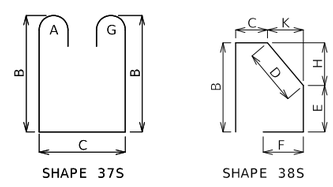

BENDING DIAGRAMS

All dimensions are out to out.

Shapes ending with an S shall be bent in accordance with stirrup pin bend shapes.

Unless otherwise noted, finished bending diameter D is the same for all bends of a shape.

(1) Shall be a deformed or plain spiral bar or wire.

Four angle or channel spacers are required for each column spiral. Spacers are to be placed on inside of spirals. Length and weight of column spirals do not include splices or spacers.

Reinforcing Steel Totals (Pounds)

	Size	Substructure Plain	Substructure Epoxy	Superstructure Slab	Superstructure Barrier	Superstructure Slip Form	Entire Bridge Plain	Entire Bridge Epoxy
By Size	W5	0	0	0	0	0	0	0
	4	0	0	0	0	0	0	0
	5	0	0	0	3,332	0	0	3,332
	6	0	0	0	0	0	0	0
	7	0	0	0	0	0	0	0
	8	0	0	0	0	0	0	0
	9	0	0	0	0	0	0	0
	10	0	0	0	0	0	0	0
	11	0	0	0	0	0	0	0
	14	0	0	0	0	0	0	0
	18	0	0	0	0	0	0	0
By Type		0	0	0	3,332	0	0	3,332

All superstructure reinforcing steel shall be epoxy coated unless otherwise specified.

BENDING DIAGRAMS AND REINFORCING STEEL TOTALS

Detailed Jan. 2025
Checked Feb. 2025

Note: This drawing is not to scale. Follow dimensions.

STATE OF MISSOURI
TED S. KOESTER
NUMBER PE-2013000591
PROFESSIONAL ENGINEER
03/31/2025 1:25:50 PM
TED S. KOESTER - CIVIL
MO-PE-2013000591

DATE PREPARED	3/31/2025
ROUTE	164
STATE	MO
DISTRICT	BR
SHEET NO.	4
COUNTY	DUNKLIN
JOB NO.	J9S3780
CONTRACT ID.	
PROJECT NO.	
BRIDGE NO.	A23361

DESCRIPTION

DATE

MISSOURI HIGHWAYS AND TRANSPORTATION COMMISSION
105 WEST CAPITOL
JEFFERSON CITY, MO 65102
1-888-ASK-MODOT (1-888-275-6636)

Bill of Reinforcing Steel

No. Req.	Size/ Mark	Location	Codes C	Codes SH	Codes V	Dimensions B ft in.	C ft in.	D ft in.	E ft in.	F ft in.	H ft in.	K ft in.	Nom. Length ft in.	Actual Length ft in.	Weight lb
		Curb Blockout													
56	5 R1	CURB BLOCKOUT	E	10S	8		10.50	19.25					3 4	3 2	
		Incr. = 0.625"					10.50	23.25					3 8	3 6	195
72	5 R2	CURB BLOCKOUT	E	10S			10.25	23.25					3 8	3 5	257
48	5 R3	CURB BLOCKOUT	E	20		5 3.00							5 3	5 3	263
8	5 R4	CURB BLOCKOUT	E	15S		15.25	3 4.25				2.50	15.00	4 8	4 6	38
64	5 R5	CURB BLOCKOUT	E	20		12 5.00							12 5	12 5	829
24	5 R6	CURB BLOCKOUT	E	20		39 5.00							39 5	39 5	987
16	5 R7	CURB BLOCKOUT	E	20		8 0.00							8 0	8 0	134
16	5 R8	CURB BLOCKOUT	E	20		37 8.00							37 8	37 8	629

Bill of Reinforcing Steel

No. Req.	Size/ Mark	Location	Codes C	Codes SH	Codes V	Dimensions B ft in.	C ft in.	D ft in.	E ft in.	F ft in.	H ft in.	K ft in.	Nom. Length ft in.	Actual Length ft in.	Weight lb

Nominal lengths are based on out to out dimensions shown in bending diagrams and are listed to the nearest inch for fabricator's use. Actual lengths are measured along centerline bar to the nearest inch. Weights are based on actual lengths.

For bending diagrams and steel reinforcing totals, see Sheet No. 4.

All bars shall be Grade 60.

Codes: C = Required coatings, where E = Epoxy Coated and G = Galvanized.

SH = Required shape, see bending diagrams.

V = Sets of varied bars and number of bars of each length. Bar dimensions vary in equal increments between dimensions shown on this line and the following line and the actual length dimension shown on this line and the following line vary by the specified increment.

BILL OF REINFORCING STEEL

Detailed Jan. 2025
Checked Feb. 2025

Note: This drawing is not to scale. Follow dimensions.

STATE OF MISSOURI
TED S. KOESTER
NUMBER PE-2013000591
PROFESSIONAL ENGINEER
03/31/2025 1:26:16 PM
TED S. KOESTER - CIVIL
MO-PE-2013000591

DATE PREPARED 3/31/2025

ROUTE	STATE
164	MO

DISTRICT	SHEET NO.
BR	5

COUNTY: DUNKLIN

JOB NO. J9S3780

CONTRACT ID.

PROJECT NO.

BRIDGE NO. A23361

DESCRIPTION	DATE

MISSOURI HIGHWAYS AND TRANSPORTATION COMMISSION
105 WEST CAPITOL
JEFFERSON CITY, MO 65102
1-888-ASK-MODOT (1-888-275-6636)

SEC 3 TWP 16N RGE 8E

U.I.P. & REHABILITATE EXISTING (51'-51'-51') CONTINUOUS PRESTRESSED CONCRETE I-GIRDER SPANS (SKEW: 30° L.A.)

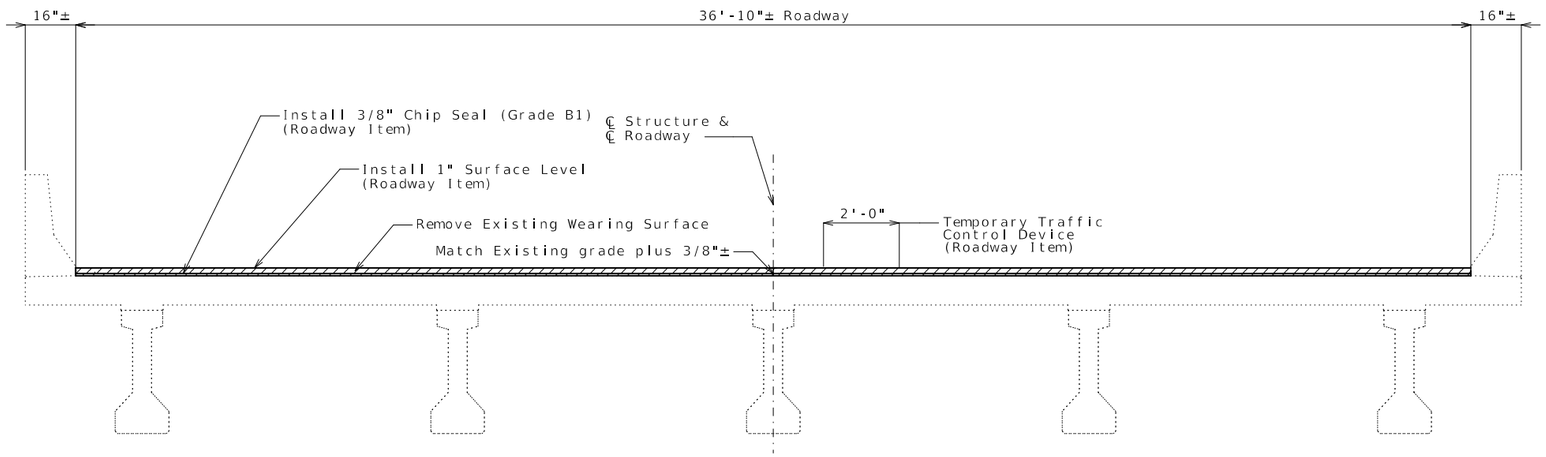

TYPICAL SECTION THRU SLAB

Note: Any future wearing surface will require milling existing wearing surface.

General Notes:

Design Specifications:

2002 AASHTO LFD (17th Ed.) Standard Specifications
Bridge Deck Rating = 7

Design Loading:

HS20-44

Miscellaneous:

Outline of existing work is indicated by light dashed lines. Heavy lines indicate new work.

Roadway surfacing adjacent to bridge ends shall match new bridge wearing surface (Roadway Item).

Contractor shall verify all dimensions in field before ordering new material.

Traffic Handling:

Traffic to be maintained on structure during construction. See roadway plans for traffic control.

REPAIRS TO BRIDGE: ROUTE 164
OVER UPPER BUFFALO CREEK

ROUTE 164 FROM ROUTE K TO ROUTE 108
ABOUT 1.1 MILE WEST OF ROUTE K
BEGINNING STATION 182+22.80± (Match Existing)

Detailed Dec. 2024
Checked Dec. 2024

Note: This drawing is not to scale. Follow dimensions.

STATE OF MISSOURI
TED S. KOESTER
NUMBER
PE-2013000591
PROFESSIONAL ENGINEER
03/31/2025 1:27:02 PM
TED S. KOESTER • CIVIL
MO-PE-2013000591

DATE PREPARED	3/31/2025
ROUTE	164
STATE	MO
DISTRICT	BR
SHEET NO.	1
COUNTY	DUNKLIN
JOB NO.	J9S3780
CONTRACT ID.	
PROJECT NO.	
BRIDGE NO.	A46221

DESCRIPTION

DATE

MISSOURI HIGHWAYS AND TRANSPORTATION COMMISSION

105 WEST CAPITOL
JEFFERSON CITY, MO 65102
1-888-ASK-MODOT (1-888-275-6636)

SEC/SUR 6 TWP 16N RGE 8E

U.I.P. & REHABILITATE EXISTING 2(12' x 8') CONCRETE BOX CULVERT

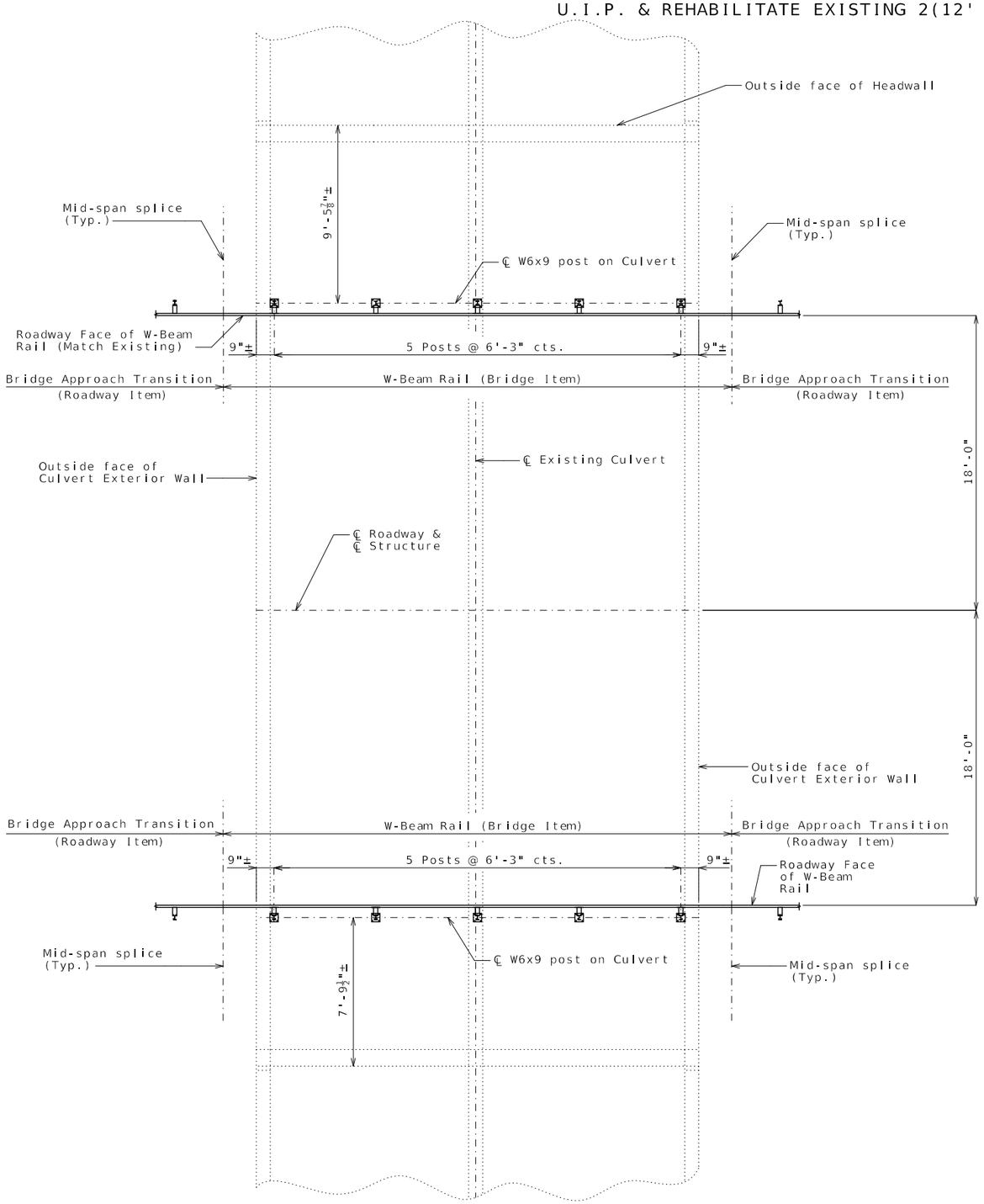

PART PLAN OF EXISTING BOX CULVERT
SHOWING POST LOCATIONS

Estimated Quantities

Item		Total
Bridge Guardrail (W-Beam)	linear foot	63

General Notes:

Design Specifications:

2002 AASHTO LFD (17th Ed.) Standard Specifications

Standard Plans:

606.50

Miscellaneous:

Outline of existing work is indicated by light dashed lines. Heavy lines indicate new work.

Contractor shall verify all dimensions in field before ordering new material.

Existing post and thrie beam removal will be considered completely covered by roadway pay item. Anchor bolts of existing rail posts shall be cut off one inch into the deck concrete and the resulting holes backfilled with an approved qualified special mortar.

Cost of required excavation for the installation of Thrie Beam post and the determination of the post height will be considered completely covered by the contract unit price for Bridge Guardrail (W-Beam).

Traffic Handling:

Traffic to be maintained on structure during construction. See roadway plans for traffic control.

REPAIRS TO BRIDGE: ROUTE 164
OVER DRAINAGE DITCH NO. 1

ROUTE 164 FROM ROUTE 53 TO ROUTE 25
ABOUT 1.9 MILE EAST OF ROUTE 53
BEGINNING STATION 295+92.00± (Match Existing)

Detailed Jan. 2025
Checked Jan. 2025

Note: This drawing is not to scale. Follow dimensions.

STATE OF MISSOURI
TED S. KOESTER
NUMBER PE-2013000591
PROFESSIONAL ENGINEER
03/31/2025 1:27:44 PM
TED S. KOESTER • CIVIL
MO•PE•2013000591

DATE PREPARED 3/31/2025

ROUTE	STATE
164	MO
DISTRICT	SHEET NO.
BR	1

COUNTY DUNKLIN

JOB NO. J9S3780

CONTRACT ID.

PROJECT NO.

BRIDGE NO. A46991

DATE	DESCRIPTION

MISSOURI HIGHWAYS AND TRANSPORTATION COMMISSION
105 WEST CAPITOL
JEFFERSON CITY, MO 65102
1-888-ASK-MODOT (1-888-275-6636)

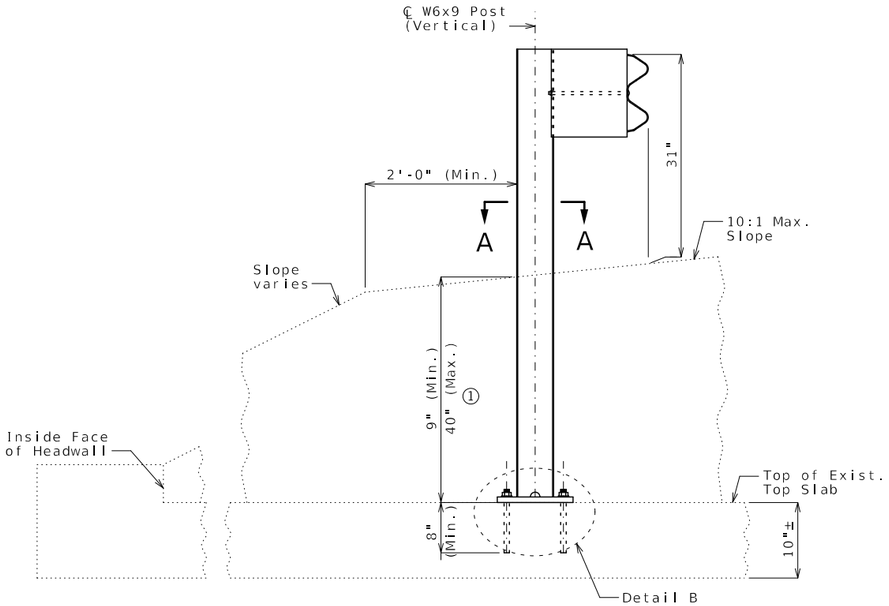

PART SECTION THRU TOP SLAB
SHOWING RAIL POST ATTACHMENT
(Far from headwall)

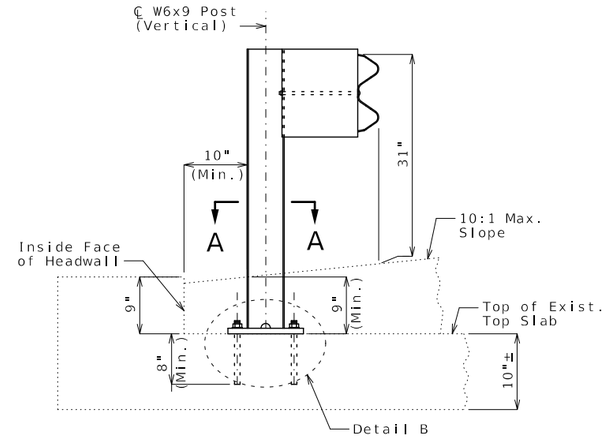

PART SECTION THRU TOP SLAB
SHOWING RAIL POST ATTACHMENT
(Close to headwall)

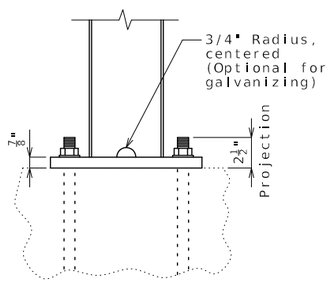

DETAIL B

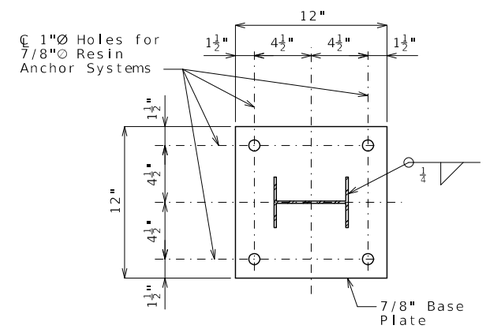

SECTION A-A

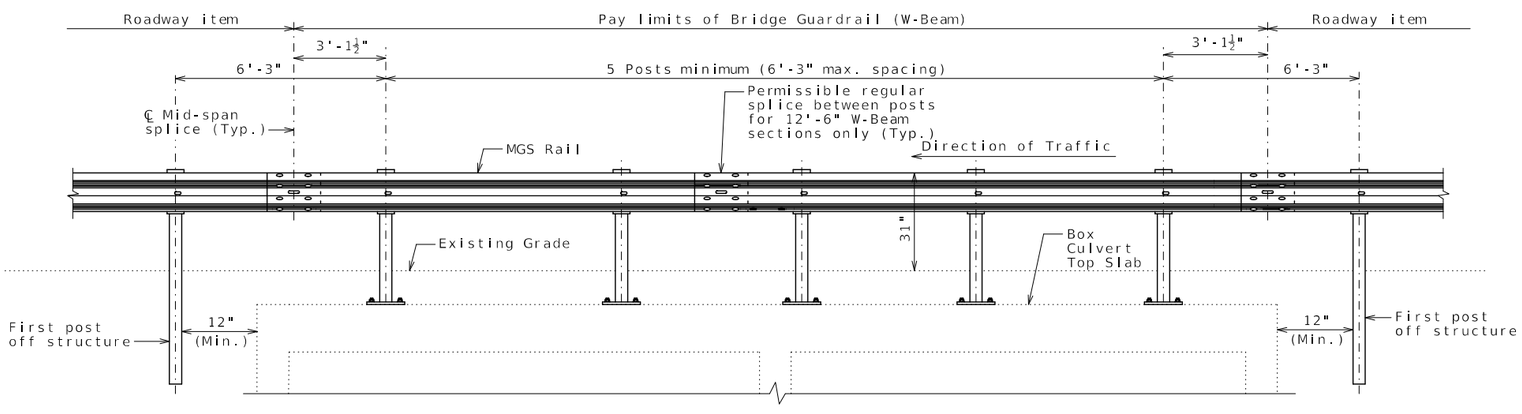

TYPICAL ELEVATION

General Notes:

Furnishing and installing posts and guardrail on culvert as shown on this sheet will be considered completely covered by the contract unit price for Bridge Guardrail (W-Beam).

Furnishing and installing posts and guardrail on culvert shall be in accordance with Sec 606 except as shown.

Rail posts shall be seated on 1/16-inch elastomeric pads having the same dimensions as the post base plate. Such pads may be any elastomeric material, plain or fibered, having hardness (durometer) of 50 or above, as certified by the manufacturer. Additional pads or half pads may be used in shimming for alignment. Post heights shown will increase by the thickness of the pad.

Posts and base plates shall be fabricated from ASTM A709 Grade 36 steel and galvanized.

Fabrication of structural steel shall be in accordance with Sec 1080.

The contractor shall use one of the qualified resin anchor systems in accordance with Sec 1039.

Cost of furnishing and installing the resin anchor systems, complete in place, will be considered completely covered by the contract unit price for Bridge Guardrail (W-beam).

The minimum embedment depth in concrete with f'c = 4,000 psi for the resin anchor systems shall be that required to meet the minimum ultimate pullout strength in accordance with Sec 1039 but shall not be less than 8 inches.

See Missouri Standard Plans drawing 606.50 for details not shown.

STATE OF MISSOURI
TED S. KOESTER
NUMBER
PE-2013000591
PROFESSIONAL ENGINEER
Ted Koester
03/31/2025 1:28:06 PM
TED S. KOESTER - CIVIL
MO-PE-2013000591

DATE PREPARED	
3/31/2025	
ROUTE 164	STATE MO
DISTRICT BR	SHEET NO. 2
COUNTY DUNKLIN	
JOB NO. J9S3780	
CONTRACT ID.	
PROJECT NO.	
BRIDGE NO. A46991	

DESCRIPTION	DATE

MISSOURI HIGHWAYS AND TRANSPORTATION COMMISSION
105 WEST CAPITOL
JEFFERSON CITY, MO 65102
1-888-ASK-MODOT (1-888-275-6636)

MIDWEST GUARDRAIL SYSTEM (MGS) ON BOX CULVERT

Detailed Jan. 2025
Checked Feb. 2025

Note: This drawing is not to scale. Follow dimensions.

SEC/SUR 6 TWP 16N RGE 9E

U.I.P. & REHABILITATE EXISTING 2(12' x 8.5') CONCRETE BOX CULVERT (SKEW: 50° L.A.)

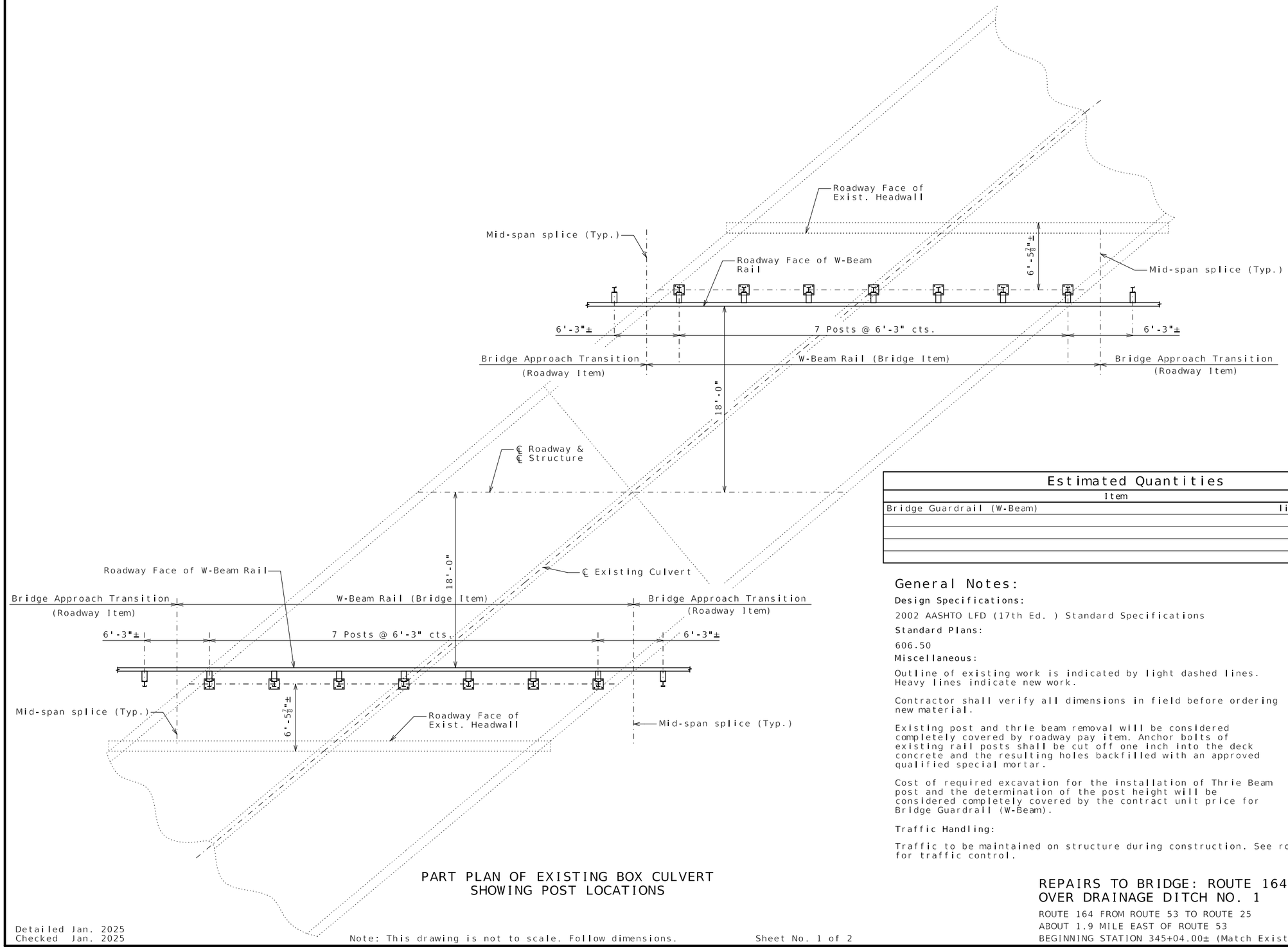

PART PLAN OF EXISTING BOX CULVERT
SHOWING POST LOCATIONS

Estimated Quantities

Item		Total
Bridge Guardrail (W-Beam)	linear foot	88

General Notes:

Design Specifications:

2002 AASHTO LFD (17th Ed.) Standard Specifications

Standard Plans:

606.50

Miscellaneous:

Outline of existing work is indicated by light dashed lines. Heavy lines indicate new work.

Contractor shall verify all dimensions in field before ordering new material.

Existing post and thrie beam removal will be considered completely covered by roadway pay item. Anchor bolts of existing rail posts shall be cut off one inch into the deck concrete and the resulting holes backfilled with an approved qualified special mortar.

Cost of required excavation for the installation of Thrie Beam post and the determination of the post height will be considered completely covered by the contract unit price for Bridge Guardrail (W-Beam).

Traffic Handling:

Traffic to be maintained on structure during construction. See roadway plans for traffic control.

REPAIRS TO BRIDGE: ROUTE 164
OVER DRAINAGE DITCH NO. 1

ROUTE 164 FROM ROUTE 53 TO ROUTE 25
ABOUT 1.9 MILE EAST OF ROUTE 53
BEGINNING STATION 345+04.00± (Match Existing)

Detailed Jan. 2025
Checked Jan. 2025

Note: This drawing is not to scale. Follow dimensions.

STATE OF MISSOURI
TED S. KOESTER
NUMBER PE-2013000591
PROFESSIONAL ENGINEER
03/31/2025 1:28:52 PM
TED S. KOESTER - CIVIL
MO-PE-2013000591

DATE PREPARED	3/31/2025
ROUTE	164
STATE	MO
DISTRICT	BR
SHEET NO.	1
COUNTY	DUNKLIN
JOB NO.	J9S3780
CONTRACT ID.	
PROJECT NO.	
BRIDGE NO.	A47001

DESCRIPTION

DATE

MISSOURI HIGHWAYS AND TRANSPORTATION COMMISSION
105 WEST CAPITOL
JEFFERSON CITY, MO 65102
1-888-ASK-MODOT (1-888-275-6636)

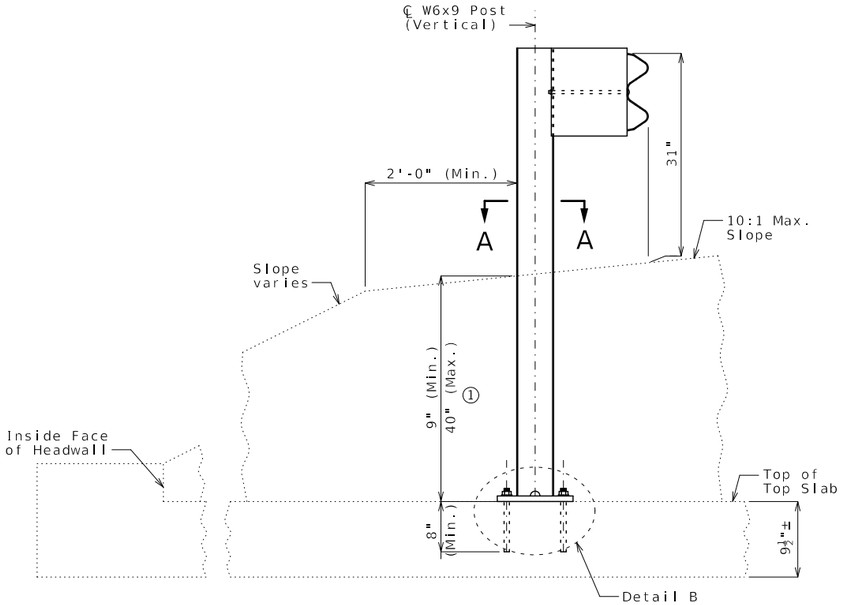

PART SECTION THRU TOP SLAB
SHOWING RAIL POST ATTACHMENT
(Far from headwall)

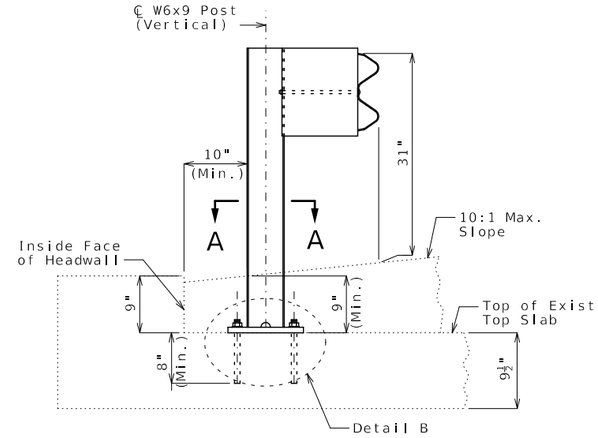

PART SECTION THRU TOP SLAB
SHOWING RAIL POST ATTACHMENT
(Close to headwall)

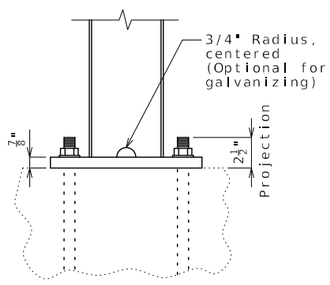

DETAIL B

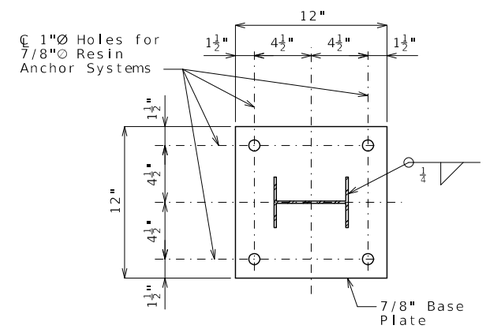

SECTION A-A

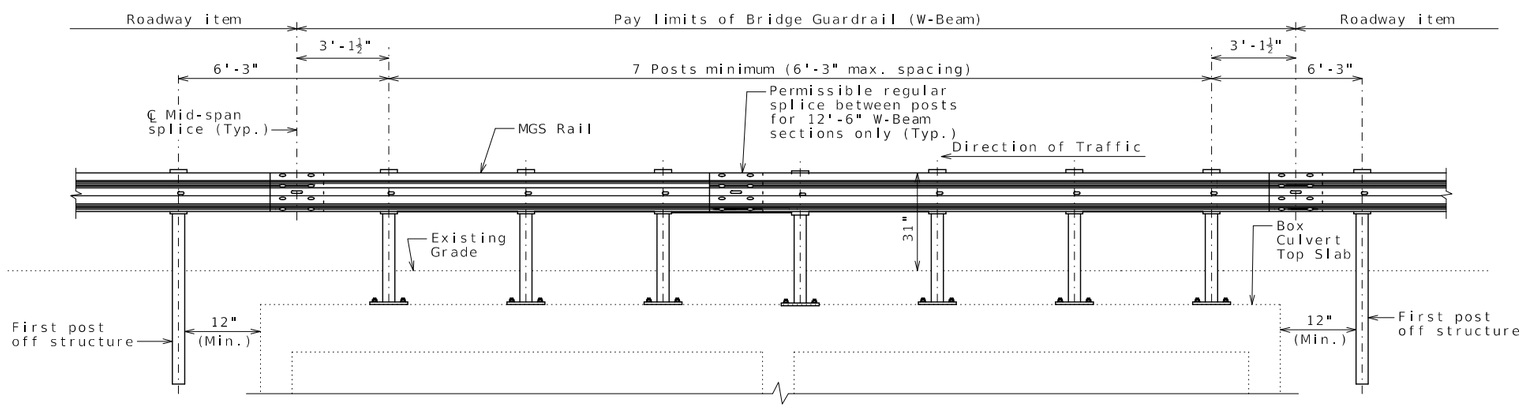

TYPICAL ELEVATION

General Notes:

Furnishing and installing posts and guardrail on culvert as shown on this sheet will be considered completely covered by the contract unit price for Bridge Guardrail (W-Beam).

Furnishing and installing posts and guardrail on culvert shall be in accordance with Sec 606 except as shown.

Rail posts shall be seated on 1/16-inch elastomeric pads having the same dimensions as the post base plate. Such pads may be any elastomeric material, plain or fibered, having hardness (durometer) of 50 or above, as certified by the manufacturer. Additional pads or half pads may be used in shimming for alignment. Post heights shown will increase by the thickness of the pad.

Posts and base plates shall be fabricated from ASTM A709 Grade 36 steel and galvanized.

Fabrication of structural steel shall be in accordance with Sec 1080.

The contractor shall use one of the qualified resin anchor systems in accordance with Sec 1039.

Cost of furnishing and installing the resin anchor systems, complete in place, will be considered completely covered by the contract unit price for Bridge Guardrail (W-beam).

The minimum embedment depth in concrete with f'c = 4,000 psi for the resin anchor systems shall be that required to meet the minimum ultimate pullout strength in accordance with Sec 1039 but shall not be less than 8 inches.

See Missouri Standard Plans drawing 606.50 for details not shown.

STATE OF MISSOURI
TED S. KOESTER
NUMBER PE-2013000591
PROFESSIONAL ENGINEER
03/31/2025 1:29:14 PM
TED S. KOESTER • CIVIL
MO-PE-2013000591

DATE PREPARED	3/31/2025
ROUTE 164	STATE MO
DISTRICT BR	SHEET NO. 2
COUNTY	DUNKLIN
JOB NO.	J9S3780
CONTRACT ID.	
PROJECT NO.	
BRIDGE NO.	A47001

DESCRIPTION | DATE

MISSOURI HIGHWAYS AND TRANSPORTATION COMMISSION
105 WEST CAPITOL
JEFFERSON CITY, MO 65102
1-888-ASK-MODOT (1-888-275-6636)

MIDWEST GUARDRAIL SYSTEM (MGS) ON BOX CULVERT

Detailed Jan. 2025
Checked Feb. 2025

Note: This drawing is not to scale. Follow dimensions.

SEC 2 TWP 16N RGE 7E

U.I.P. & REHABILITATE EXISTING (34.4'-34.4'-34.4') CONTINUOUS CONCRETE SOLID SLAB SPANS (SKEW: 30° R.A.)

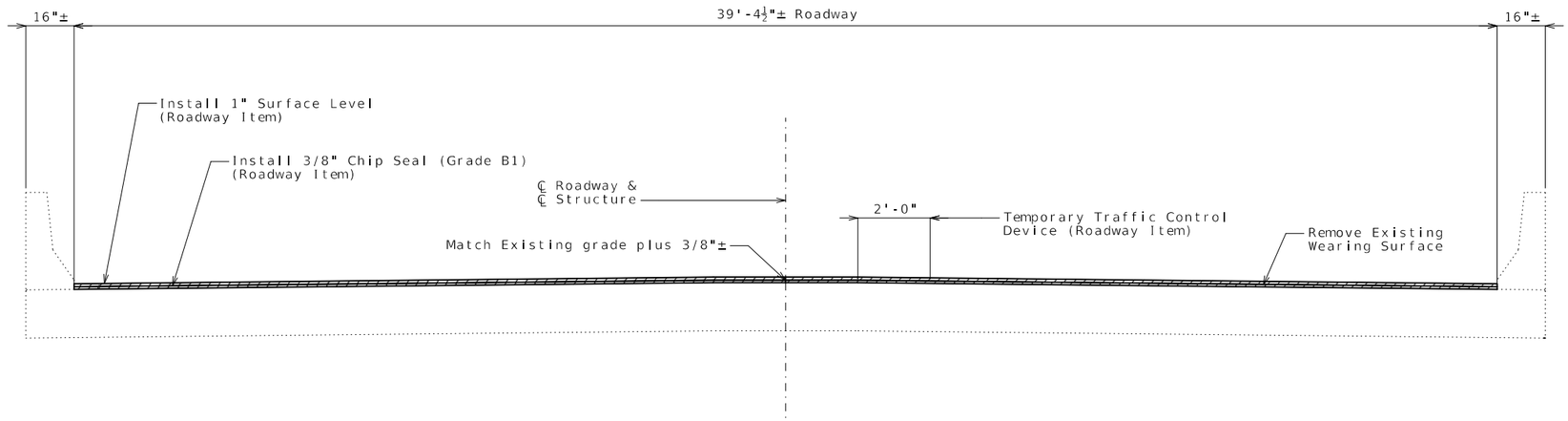

TYPICAL SECTION THRU EXISTING DECK

General Notes:

Design Specifications:

2002 AASHTO LFD (17th Ed.) Standard Specifications
Bridge Deck Rating = 6

Design Loading:

HS20

Miscellaneous:

Outline of existing work is indicated by light dashed lines. Heavy lines indicate new work.

New wearing surface material shall be tapered at barrier drain outlets to keep existing opening from plugging (Typ.).

Roadway surfacing adjacent to bridge ends shall match new bridge wearing surface (Roadway Item).

Contractor shall verify all dimensions in field before ordering new material.

Traffic Handling:

Traffic to be maintained on structure during construction. See roadway plans for traffic control.

REPAIRS TO BRIDGE: ROUTE 164
OVER KINNEMORE DRAINAGE DITCH

ROUTE 164 FROM ROUTE 412 TO ROUTE F
ABOUT 0.1 MILE WEST OF ROUTE 412
BEGINNING STATION 81+52.50± (Match Existing)

Detailed Dec. 2024
Checked Dec. 2024

Note: This drawing is not to scale. Follow dimensions.

STATE OF MISSOURI
TED S. KOESTER
NUMBER
PE-2013000591
PROFESSIONAL ENGINEER
03/31/2025 1:29:54 PM
TED S. KOESTER - CIVIL
MO-PE-2013000591

DATE PREPARED	3/31/2025
ROUTE	164
STATE	MO
DISTRICT	BR
SHEET NO.	1
COUNTY	DUNKLIN
JOB NO.	J9S3780
CONTRACT ID.	
PROJECT NO.	
BRIDGE NO.	A60701

DESCRIPTION

DATE

MISSOURI HIGHWAYS AND TRANSPORTATION COMMISSION
105 WEST CAPITOL
JEFFERSON CITY, MO 65102
1-888-ASK-MODOT (1-888-275-6636)

SEC 4 TWP 16N RGE 8E

U.I.P. & REHABILITATE EXISTING (30',30',30') SIMPLE CONCRETE DECK GIRDER SPANS

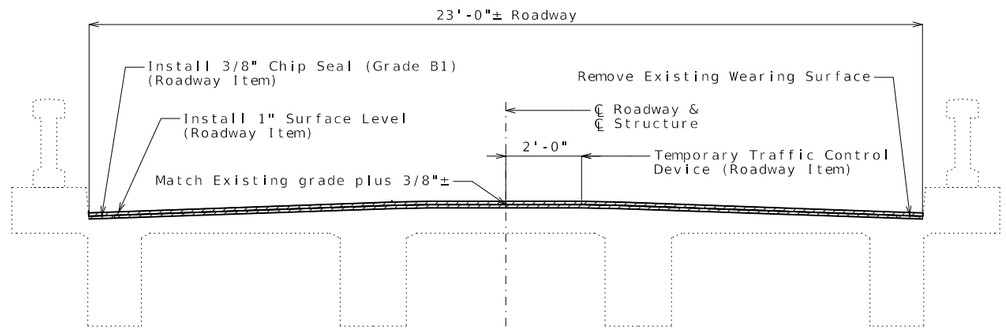

TYPICAL SECTION THRU SLAB

General Notes:

Design Specifications:

2002 AASHTO LFD (17th Ed.) Standard Specifications
Bridge Deck Rating = 6

Design Loading:

H15

Miscellaneous:

Outline of existing work is indicated by light dashed lines. Heavy lines indicate new work.

New wearing surface material shall be tapered at barrier drain outlets to keep existing opening from plugging (Typ.).

Roadway surfacing adjacent to bridge ends shall match new bridge wearing surface (Roadway Item).

Contractor shall verify all dimensions in field before ordering new material.

Traffic Handling:

Traffic to be maintained on structure during construction. See roadway plans for traffic control.

REPAIRS TO BRIDGE: ROUTE 164
OVER HONEY CYPRESS DRAINAGE DITCH

ROUTE 164 FROM ROUTE 108 TO ROUTE K
ABOUT 1.8 MILE EAST OF ROUTE 108
BEGINNING STATION 96+59.00± (Match Existing)

Detailed Dec. 2024
Checked Dec. 2024

Note: This drawing is not to scale. Follow dimensions.

STATE OF MISSOURI
TED S. KOESTER
NUMBER PE-2013000591
PROFESSIONAL ENGINEER
03/31/2025 1:30:35 PM
TED S. KOESTER - CIVIL
MO-PE-2013000591

DATE PREPARED	3/31/2025
ROUTE	164
STATE	MO
DISTRICT	BR
SHEET NO.	1
COUNTY	DUNKLIN
JOB NO.	J9S3780
CONTRACT ID.	
PROJECT NO.	
BRIDGE NO.	J02341

DESCRIPTION | DATE

MISSOURI HIGHWAYS AND TRANSPORTATION COMMISSION
105 WEST CAPITOL
JEFFERSON CITY, MO 65102
1-888-ASK-MODOT (1-888-275-6636)

SEC 23 TWP 17N RGE 9E

U.I.P. & REHABILITATE EXISTING (27',39',27') SIMPLE WIDE FLANGE BEAM SPANS

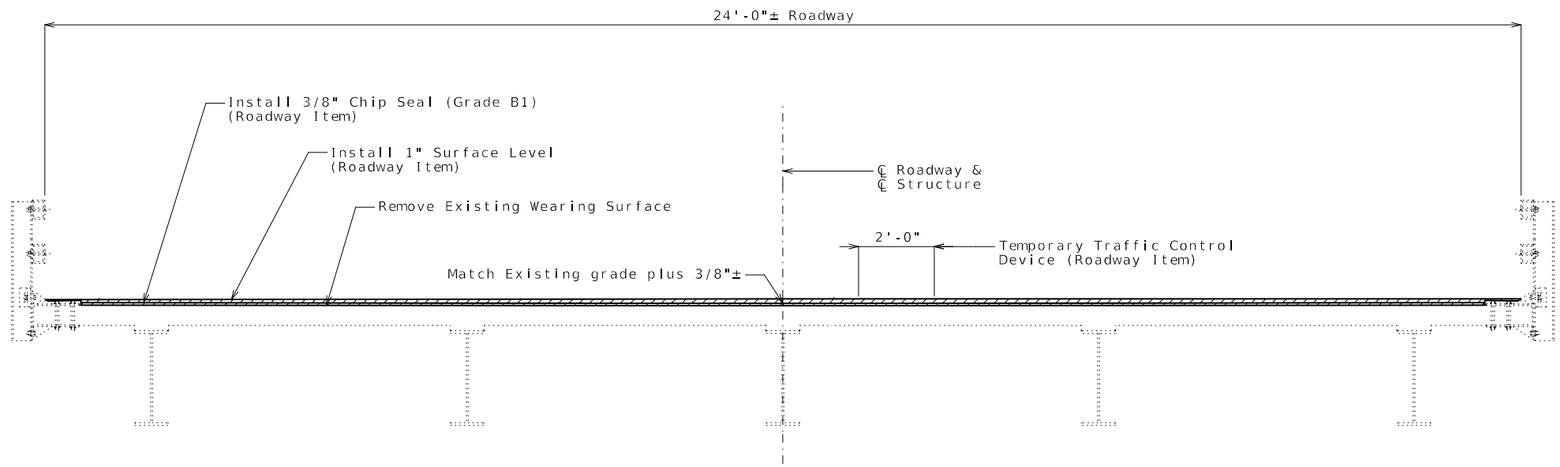

TYPICAL SECTION THRU SLAB

General Notes:

Design Specifications:

2002 AASHTO LFD (17th Ed.) Standard Specifications
Bridge Deck Rating = 6

Design Loading:

H15 (1944)

Miscellaneous:

Outline of existing work is indicated by light dashed lines. Heavy lines indicate new work.

Roadway surfacing adjacent to bridge ends shall match new bridge wearing surface (Roadway Item).

Contractor shall verify all dimensions in field before ordering new material.

Traffic Handling:

Traffic to be maintained on structure during construction. See roadway plans for traffic control.

REPAIRS TO BRIDGE: ROUTE 164
OVER DITCH NO.79 & OLD LITTLE RIVER

ROUTE 164 FROM ROUTE TT TO ROUTE Y
ABOUT 1.2 MILE WEST OF ROUTE TT
BEGINNING STATION 116+24.00± (Match Existing)

Detailed Dec. 2024
Checked Dec. 2024

Note: This drawing is not to scale. Follow dimensions.

STATE OF MISSOURI
TED S. KOESTER
NUMBER
PE-2013000591
PROFESSIONAL ENGINEER
03/31/2025 1:31:11 PM
TED S. KOESTER • CIVIL
MO-PE-2013000591

DATE PREPARED	3/31/2025
ROUTE	164
STATE	MO
DISTRICT	BR
SHEET NO.	1
COUNTY	DUNKLIN
JOB NO.	J9S3780
CONTRACT ID.	
PROJECT NO.	
BRIDGE NO.	L03012

DESCRIPTION

DATE

MISSOURI HIGHWAYS AND TRANSPORTATION COMMISSION
105 WEST CAPITOL
JEFFERSON CITY, MO 65102
1-888-ASK-MODOT (1-888-275-6636)

SEC 23 TWP 17N RGE 9E

U.I.P. & REHABILITATE EXISTING 3@(33') SIMPLE WIDE FLANGE BEAM SPANS

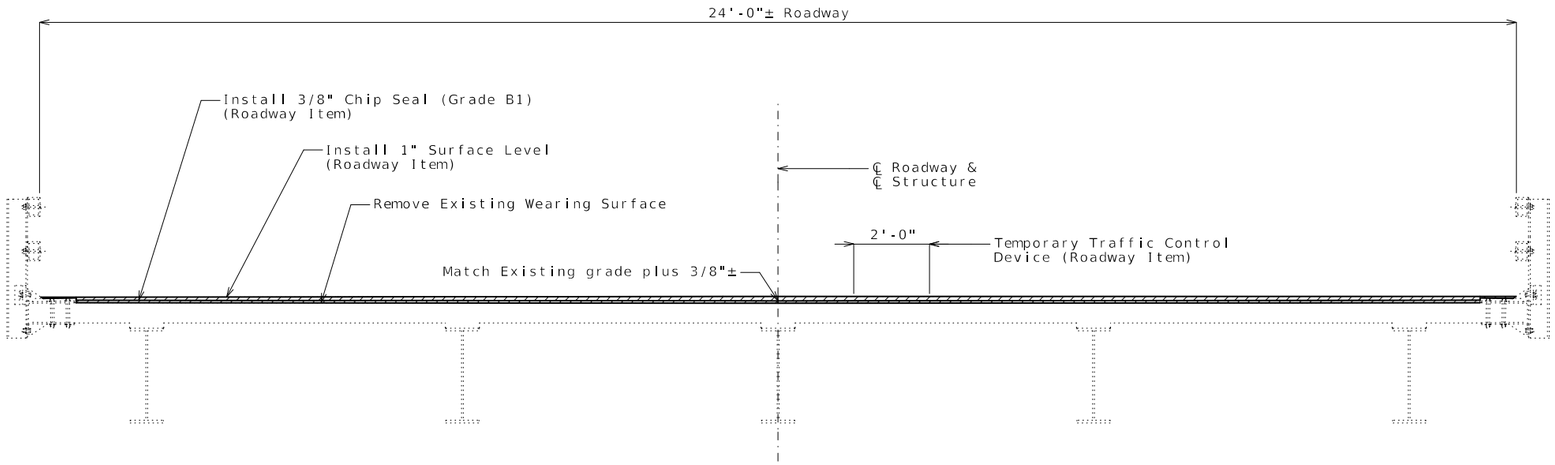

TYPICAL SECTION THRU SLAB

General Notes:

Design Specifications:

2002 AASHTO LFD (17th Ed.) Standard Specifications
Bridge Deck Rating = 5

Design Loading:

H15 (1944)

Miscellaneous:

Outline of existing work is indicated by light dashed lines. Heavy lines indicate new work.

Roadway surfacing adjacent to bridge ends shall match new bridge wearing surface (Roadway Item).

Contractor shall verify all dimensions in field before ordering new material.

Traffic Handling:

Traffic to be maintained on structure during construction. See roadway plans for traffic control.

REPAIRS TO BRIDGE: ROUTE 164
OVER LATERAL DITCH NO. 18

ROUTE 164 FROM ROUTE TT TO ROUTE Y
ABOUT 0.5 MILE WEST OF ROUTE TT
BEGINNING STATION 151+79.00± (Match Existing)

Detailed Dec. 2024
Checked Dec. 2024

Note: This drawing is not to scale. Follow dimensions.

STATE OF MISSOURI
TED S. KOESTER
NUMBER
PE-2013000591
PROFESSIONAL ENGINEER
03/31/2025 1:31:57 PM
TED S. KOESTER • CIVIL
MO-PE-2013000591

DATE PREPARED
3/31/2025

ROUTE	STATE
164	MO
DISTRICT	SHEET NO.
BR	1

COUNTY
DUNKLIN

JOB NO.
J9S3780

CONTRACT ID.

PROJECT NO.

BRIDGE NO.
L03032

DESCRIPTION	DATE

MISSOURI HIGHWAYS AND TRANSPORTATION COMMISSION
105 WEST CAPITOL
JEFFERSON CITY, MO 65102
1-888-ASK-MODOT (1-888-275-6636)

SEC 28 TWP 17N RGE 10E

U.I.P. & REHABILITATE EXISTING 3@(35') SIMPLE WIDE FLANGE BEAM SPANS

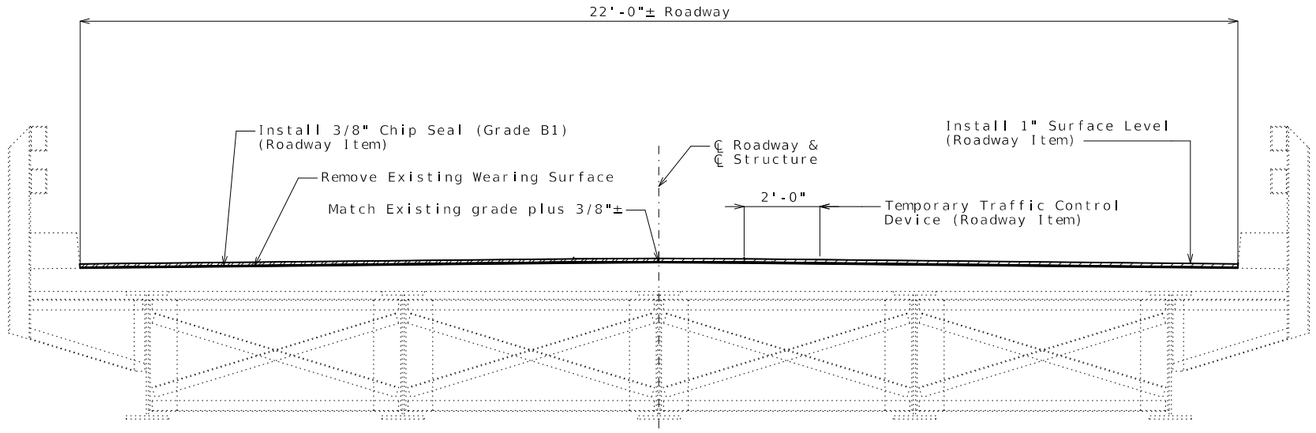

TYPICAL SECTION THRU SLAB

General Notes:

Design Specifications:

2002 AASHTO LFD (17th Ed.) Standard Specifications
Bridge Deck Rating = 5

Design Loading:

H15 (1944)

Miscellaneous:

Outline of existing work is indicated by light dashed lines. Heavy lines indicate new work.

Roadway surfacing adjacent to bridge ends shall match new bridge wearing surface (Roadway Item).

Contractor shall verify all dimensions in field before ordering new material.

Traffic Handling:

Traffic to be maintained on structure during construction. See roadway plans for traffic control.

REPAIRS TO BRIDGE: ROUTE 164
OVER LATERAL DITCH NO. 18

ROUTE 164 FROM ROUTE TT TO ROUTE Y
ABOUT 9.0 MILE WEST OF ROUTE TT
BEGINNING STATION 310+01.00± (Match Existing)

Detailed Dec. 2024
Checked Dec. 2024

Note: This drawing is not to scale. Follow dimensions.

STATE OF MISSOURI
TED S. KOESTER
NUMBER
PE-2013000591
PROFESSIONAL ENGINEER
03/31/2025 1:30:57 PM
TED S. KOESTER - CIVIL
MO-PE-2013000591

DATE PREPARED	3/31/2025
ROUTE	164
STATE	MO
DISTRICT	BR
SHEET NO.	1
COUNTY	DUNKLIN
JOB NO.	J9S3780
CONTRACT ID.	
PROJECT NO.	
BRIDGE NO.	L03061

DESCRIPTION

DATE

MISSOURI HIGHWAYS AND TRANSPORTATION COMMISSION

105 WEST CAPITOL
JEFFERSON CITY, MO 65102
1-888-ASK-MODOT (1-888-275-6636)

MISSOURI HIGHWAYS AND TRANSPORTATION COMMISSION

PLANS FOR PROPOSED STATE HIGHWAY

DUNKLIN COUNTY

DESIGN DESIGNATION

A.A.D.T. - 2025 = 1338
A.A.D.T. - 2035 = 1406
D.H.V. = 10%
T = 8%
V = 45.55 M.P.H.
D = 49%

FUNCTIONAL CLASSIFICATION-MAJOR COLLECTOR

NO NEW R/W

KEY MAP
LOCATION OF DUNKLIN COUNTY

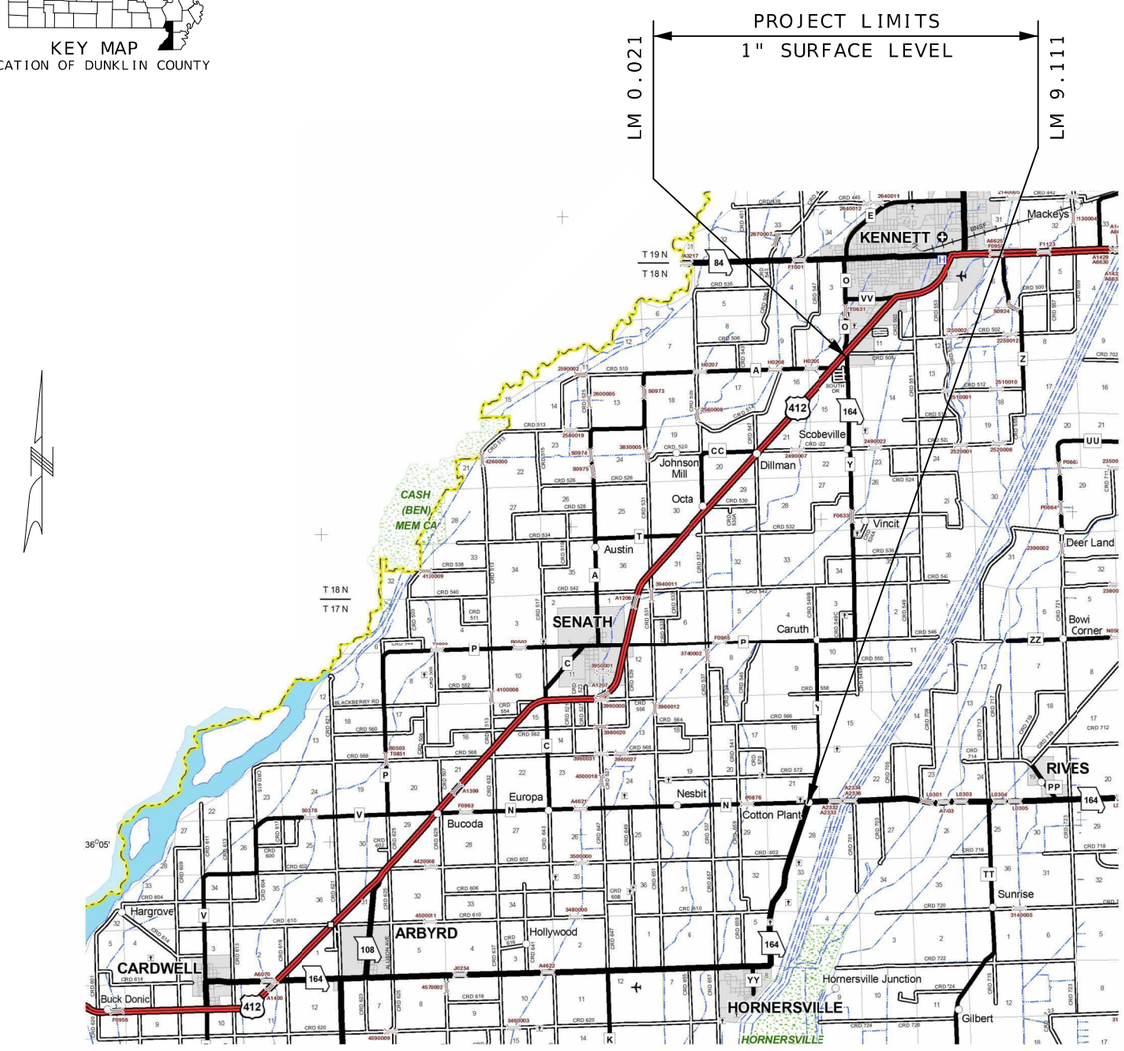

CONVENTIONAL SYMBOLS

(USED IN PLANS)

	EXISTING	NEW
BUILDINGS AND STRUCTURES		
GUARD RAIL		
GUARD CABLE		
CONCRETE RIGHT-OF-WAY MARKER		
STEEL RIGHT-OF-WAY MARKER		
LOCATION SURVEY MARKER		
UTILITIES		
FIBER OPTICS	—FO—	—FO—
OVERHEAD CABLE TV	—OTV—	—OTV—
UNDERGROUND CABLE TV	—UTV—	—UTV—
OVERHEAD TELEPHONE	—OT—	—OT—
UNDERGROUND TELEPHONE	—UT—	—UT—
OVERHEAD POWER	—OE—	—OE—
UNDERGROUND POWER	—UE—	—UE—
SANITARY SEWER	—S—	—S—
STORM SEWER	—SS—	—SS—
GAS	—G—	—G—
WATER	—W—	—W—
MANHOLE	SAN	
FIRE HYDRANT	HYD	
WATER VALVE	WV	
WATER METER	WM	
DROP INLET		
DITCH BLOCK		
GROUND MOUNTED SIGN	SIGN	
LIGHT POLE		
H-FRAME POWER POLE		
TELEPHONE PEDESTAL	PED	
FENCE		
CHAIN LINK	—V—	
WOVEN WIRE	—X—	
GATE POST		
BENCHMARK	BM	

NOTE: DASHED OR OPEN SYMBOLS INDICATE EXISTING FEATURES

INDEX OF SHEETS

LENGTH OF PROJECT

BEGINNING OF PROJECT	LM 0.021
END OF PROJECT	LM 9.111
APPARENT LENGTH	47995.20 FEET
TOTAL CORRECTIONS	0.00 FEET
NET LENGTH OF PROJECT	47995.20 FEET
STATE LENGTH	9.090 MILES
FOR INFORMATION ONLY ESTIMATED DISTURBED ACRES	0.0 ACRES

STATE OF MISSOURI
DONNA RENE PHILPOT
NUMBER PE-2019000205
PROFESSIONAL ENGINEER

Donna Rene Philpot
DONNA RENE PHILPOT - CIVIL
MO-PE-2019000205

DATE PREPARED	1/21/2025
ROUTE	Y
STATE	MO
DISTRICT	SE
SHEET NO.	1
COUNTY	DUNKLIN
JOB NO.	JSE0102
CONTRACT ID.	
PROJECT NO.	
BRIDGE NO.	

DATE	DESCRIPTION

MISSOURI HIGHWAYS AND TRANSPORTATION COMMISSION

105 WEST CAPITOL
JEFFERSON CITY, MO 65102
1-888-ASK-MODOT (1-888-275-6636)

(1) MATCH EXIST CROSS SLOPE
(2) SAFETY EDGE
(3) PERMANENT AGG EDGE TREATMENT

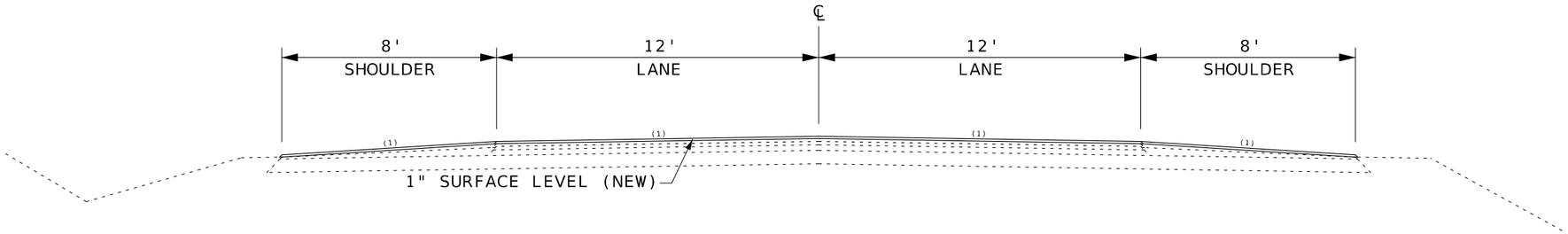

TYPICAL RTE Y
LM 0.021 TO LM 0.101

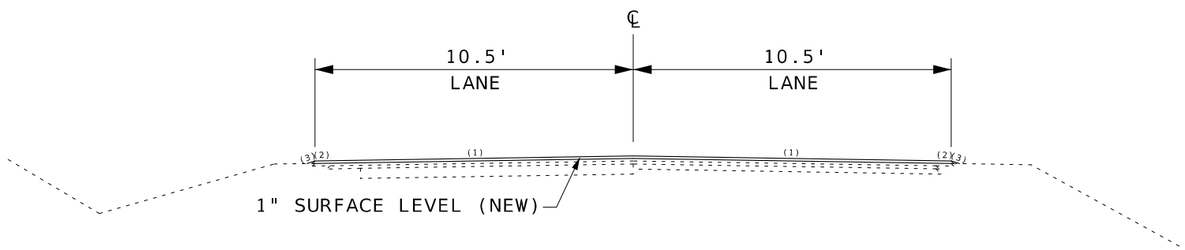

TYPICAL RTE Y
LM 0.101 TO LM 6.072

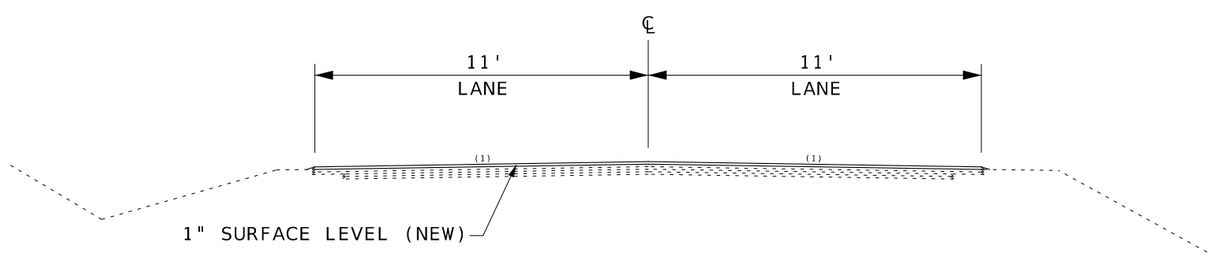

TYPICAL RTE Y
LM 6.072 TO LM 9.111

NOTES:

ANY EXISTING PAVEMENT SHOWN IS FOR INFORMATIONAL PURPOSES ONLY. LAYERS MAY VARY FROM TYPICALS.

REMOVAL OF VEGETATIVE GROWTH OR SOIL FROM EXISTING PAVEMENT & SHOULDER SURFACE SHALL BE COMPLETELY COVERED BY SEC 407.4.1.

DRAWING NOT TO SCALE. FOLLOW DIMENSIONS.

STATE OF MISSOURI
DONNA RENE PHILPOT
NUMBER
PE-2019000205
PROFESSIONAL ENGINEER

Donna Rene Philpot
DONNA RENE PHILPOT • CIVIL
MO-PE-2019000205

DATE PREPARED	
1/21/2025	
ROUTE: Y	STATE: MO
DISTRICT: SE	SHEET NO.: 2
COUNTY: DUNKLIN	
JOB NO.: JSE0102	
CONTRACT ID.	
PROJECT NO.	
BRIDGE NO.	

DATE	DESCRIPTION

MISSOURI HIGHWAYS AND TRANSPORTATION COMMISSION
105 WEST CAPITOL
JEFFERSON CITY, MO 65102
1-888-ASK-MODOT (1-888-275-6636)

TYPICAL SECTIONS
SHEET 1 OF 1

PERMANENT AGGREGATE EDGE TREATMENT

LM	LM	LOC	LENGTH FT	WIDTH FT	DEPTH IN	PERM AGG EDGE TREATMENT 1.7 TON/CY TONS	REMARKS
0.021	9.111	LT	47995.20	2	3	755.48	
0.021	9.111	RT	47995.20	2	3	755.48	
0.021	9.111	LT & RT	VAR	VAR	3	60.00	EXTRA FOR MAILBOX TURNOUTS
					TOTAL	1571.0	
APPLICATION RATE MAY BE ADJUSTED AS APPROVED BY ENGINEER							

COLDMILLING

LM	LM	LOC	LENGTH FT	WIDTH FT	DEPTH IN	COLDMILLING DEPTH TRANSITIONS SY	REMARKS
0.021	0.030	℄	50.00	40.00	1	222.3	BEGIN PROJECT
9.102	9.111	℄	50.00	22.00	1	122.3	END PROJECT
6.078		RT	50.00	21.00	VAR	116.7	RTE P
0.021	9.111	LT & RT	430.00	10.00	1	477.8	COUNTY RD & CITY ST (PAVED)
0.021	9.111	LT & RT	455.00	2.00	1	101.1	PRIVATE & COMM ENTRANCE (PAVED)
ADD QUANTITY		LT & RT	VAR	VAR	VAR	40.0	ENTRANCES AS DIRECTED BY ENGINEER
					TOTAL	1081	

GRAVEL A OR CRUSHED STONE B

ROUTE	LM	LOC	LENGTH FT	WIDTH FT	DEPTH IN	GRAVEL A OR CRUSHED STONE B 1.75 TON/CY TONS	REMARKS
0.021	9.111	LT & RT	3760	2	1	20.3	PRIVATE & COMM ENTRANCE (UNPAVED)
ADD QUANTITY		LT & RT	VAR	VAR	VAR	5.0	ENTRANCES AS DIRECTED BY ENGINEER
					TOTAL	26	

PAVEMENT MARKING

LOC	WATERBORNE PAINT YELLOW 4" SOLID LF	WATERBORNE PAINT YELLOW 4" INTER LF	WATERBORNE PAINT WHITE 4" SOLID LF	PREFORMED THERMOPLASTIC 24" WHITE STOP BAR LF	REMARKS
RTE Y	6653	11654	95990	23	
STATE ROUTES	100		100		
TOTAL	18407		96090	23	
SEE JSP FOR CONTRACTOR'S RESPONSIBILTY TO CREATE A PAVEMENT MARKING LOG PRIOR TO ANY CONSTRUCTION OPERATIONS THAT MAY AFFECT EXISTING PAVEMENT MARKING.					

BITUMINOUS PAVEMENT

LM	LM	LOC	LENGTH FT	WIDTH FT	DEPTH IN	SURFACE LEVEL PG 64-22 2.034 TON/CY CY	SURFACE LEVEL PG 64-22 2.034 TON/CY TON	TACK 0.08 GAL/SY GAL	REMARKS
0.021	0.101	℄	422.40	24.00	1	31.40	63.87	90.7	2 - 12' LANES
0.021	0.101	℄	422.40	16.00	1	20.97	42.65	60.7	8' SHOULDERS
0.101	6.068	℄	31505.76	21.00	1	2050.14	4169.98	5927.8	2 - 10.5' LANES
6.068	6.095	℄	142.57	VAR	1	21.33	43.39	764.4	RTE P INTERSECTION
6.095	9.111	℄	15924.48	22.00	1	1085.39	2207.68	3137.7	2 - 11' LANES
ADD QUANTITY		LT & RT	VAR	VAR	VAR		130.55		2% FOR SAFETY EDGE
6.078		RT	50.00	21.00	1	3.24	6.59	9.3	RTE P
0.021	9.111	LT & RT	430.00	10.00	1	13.27	26.99	38.2	COUNTY RD & CITY ST (PAVED)
0.021	9.111	LT & RT	455.00	2.00	1	2.81	5.72	8.1	PRIVATE & COMM ENTRANCE (PAVED)
0.021	9.111	LT & RT	785.00	10.00	3	72.69	147.85	69.8	COUNTY RD & CITY ST (UNPAVED)
ADD QUANTITY		LT & RT	VAR	VAR	VAR		40.00		ENTRANCES AS DIRECTED BY ENGINEER
ADD QUANTITY		℄	47995.20	VAR	VAR		909.00		100 TON/MI IRREGULARITIES
						TOTAL	7794.3	10107	

MOBILIZATION - LUMP SUM 1

STATE OF MISSOURI
DONNA RENE PHILPOT
NUMBER PE-2019000205
PROFESSIONAL ENGINEER

Donna Rene Philpot
2025.02.04 11:10:17 PM
DONNA RENE PHILPOT • CIVIL
MO-PE-2019000205

DATE PREPARED
2/4/2025

ROUTE	STATE
Y	MO
DISTRICT	SHEET NO.
SE	3

COUNTY
DUNKLIN

JOB NO.
JSE0102

CONTRACT ID.

PROJECT NO.

BRIDGE NO.

DATE	DESCRIPTION

MISSOURI HIGHWAYS AND TRANSPORTATION COMMISSION

105 WEST CAPITOL
JEFFERSON CITY, MO 65102
1-888-ASK-MODOT (1-888-275-6636)

SUMMARY OF QUANTITIES
SHEET 1 OF 2

SIGN	SIZE IN.	AREA SQ.FT.	QTY EACH	TOTAL AREA SQ.FT.	QTY RELOC EACH	TOTAL RELOC SQ.FT.	SIGN NUM.	DESCRIPTION
WARNING SIGNS								
WO1-1L	48X48	16.00						TURN (SYMBOL LEFT)
WO1-1R	48X48	16.00						TURN (SYMBOL RIGHT)
WO1-2L	48X48	16.00						CURVE (SYMBOL LEFT)
WO1-2R	48X48	16.00						CURVE (SYMBOL RIGHT)
WO1-3L	48X48	16.00						REVERSE TURN (SYMBOL LEFT)
WO1-3R	48X48	16.00						REVERSE TURN (SYMBOL RIGHT)
WO1-4L	48X48	16.00						REVERSE CURVE (SYMBOL LEFT)
WO1-4R	48X48	16.00						REVERSE CURVE (SYMBOL RIGHT)
WO1-4bL	48X48	16.00						DOUBLE ARROW REVERSE CURVE (SYMBOL LEFT)
WO1-4bR	48X48	16.00						DOUBLE ARROW REVERSE CURVE (SYMBOL RIGHT)
WO1-4cL	48X48	16.00						TRIPLE ARROW REVERSE CURVE (SYMBOL LEFT)
WO1-4cR	48X48	16.00						TRIPLE ARROW REVERSE CURVE (SYMBOL RIGHT)
WO1-6	60X30	12.50						HORIZONTAL ARROW (SYMBOL)
WO1-6a	72X36	18.00						HORIZ. ARROW (SYMBOL ON PERMANENT BARRICADE)
WO1-7	60X30	12.50						DOUBLE HEAD HORIZONTAL ARROW (SYMBOL)
WO1-7a	72X36	18.00						DOUBLE HEAD HORIZ. ARROW (SYMBOL ON PERM. BARR.)
WO1-8	18X24	3.00						CHEVRON (SYMBOL)
WO1-8a	30X36	7.50						CHEVRON (SYMBOL FOR DIVIDED HIGHWAYS)
WO3-1	48X48	16.00						STOP AHEAD (SYMBOL)
WO3-2	48X48	16.00						YIELD AHEAD (SYMBOL)
WO3-3	48X48	16.00						SIGNAL AHEAD (SYMBOL)
WO3-4	48X48	16.00	11	176.00				BE PREPARED TO STOP
WO3-5	48X48	16.00						SPEED LIMIT AHEAD
WO4-1L	48X48	16.00						MERGE (SYMBOL FROM LEFT)
WO4-1R	48X48	16.00						MERGE (SYMBOL FROM RIGHT)
WO4-1aL	48X48	16.00						MERGE (LEFT)
WO4-1aR	48X48	16.00						MERGE (RIGHT)
WO5-1	48X48	16.00						ROAD/BRIDGE/RAMP NARROWS
WO5-3	48X48	16.00						ONE LANE BRIDGE
WO5-5	48X48	16.00						NARROW LANES
WO6-1	48X48	16.00						DIVIDED HIGHWAY (SYMBOL)
WO6-2	48X48	16.00						DIVIDED HIGHWAY END (SYMBOL)
WO6-3	48X48	16.00						TWO WAY TRAFFIC (SYMBOL)
WO7-3a	30X24	5.00						NEXT XX MILES (PLAQUE)
WO8-1	48X48	16.00						BUMP
WO8-2	48X48	16.00						DIP
WO8-3	48X48	16.00						PAVEMENT ENDS
WO8-4	48X48	16.00						SOFT SHOULDER
WO8-5	48X48	16.00						SLIPPERY WHEN WET (SYMBOL)
WO8-6	48X48	16.00						TRUCK CROSSING
WO8-6c	48X48	16.00						TRUCK ENTRANCE
WO8-7	36X36	9.00						LOOSE GRAVEL
WO8-7a	36X36	9.00						FRESH OIL / LOOSE GRAVEL
WO8-9	48X48	16.00						LOW SHOULDER
WO8-11	48X48	16.00	20	320.00				UNEVEN LANES
WO8-12	48X48	16.00	11	176.00				NO CENTER LINE
WO8-15	48X48	16.00						GROOVED PAVEMENT
WO8-15P	30X24	5.00						MOTORCYCLE (PLAQUE)
WO8-17L	48X48	16.00						SHOULDER DROP-OFF (SYMBOL LEFT)
WO8-17R	48X48	16.00						SHOULDER DROP-OFF (SYMBOL RIGHT)
WO8-17P	30X24	5.00						SHOULDER DROP-OFF (PLAQUE)
W10-1	42RND.	9.62						RAILROAD CROSSING
WO12-1	24X24	4.00						DOUBLE DOWN ARROW (SYMBOL)
WO12-2	48X48	16.00						LOW CLEARANCE (SYMBOL)
WO12-2x	24X18	3.00						LOW CLEARANCE (PLAQUE)
WO12-2a	84X24	14.00						OVERHEAD LOW CLEARANCE (FEET AND INCHES)
WO12-4	120X60	50.00						LOW CLEARANCE XX FT XX IN XX MILES AHEAD
WO12-5	120X60	50.00						WIDTH RESTRICTION XX FT XX IN XX MILES AHEAD
WO13-1	30X30	6.25						ADVISORY SPEED (PLAQUE)
WO16-2	30X24	5.00						XXX FEET (PLAQUE)
WO16-3	30X24	5.00						X MILE (PLAQUE)
WO20-1	48X48	16.00	15	240.00				ROAD/BRIDGE/RAMP WORK AHEAD
WO20-2	48X48	16.00						DETOUR AHEAD
WO20-3	48X48	16.00						ROAD CLOSED AHEAD
WO20-4	48X48	16.00	6	96.00				ONE LANE ROAD AHEAD
WO20-5	48X48	16.00						RIGHT/CENTER/LEFT LANE CLOSED AHEAD
WO20-5a	48X48	16.00						2 RIGHT/CENTER/LEFT LANES CLOSED AHEAD
WO20-6a	48X48	16.00						RIGHT/CENTER/LEFT LANE CLOSED
WO20-7a	48X48	16.00	15	240.00				FLAGGER (SYMBOL)
WO21-2	36X36	9.00						FRESH OIL
WO21-5	48X48	16.00						SHOULDER WORK / SHOULDER WORK AHEAD
WO22-1	48X48	16.00						BLASTING ZONE AHEAD
WO22-2	42X36	10.50						TURN OFF 2-WAY RADIO AND PHONE
WO22-3	42X36	10.50						END BLASTING ZONE
GO22-1	21X15	2.19	4	8.76				WET PAINT (ARROW PIVOTS)

SIGN	SIZE IN.	AREA SQ.FT.	QTY EACH	TOTAL SQ.FT.	QTY RELOC EACH	TOTAL RELOC SQ.FT.	SIGN NUM.	DESCRIPTION
GUIDE SIGNS								
E05-1	36X48	12.00						GORE EXIT
E05-2	48X36	12.00						EXIT OPEN
E05-2a	48X36	12.00						EXIT CLOSED
GO20-1	60X24	10.00	2	20.00				ROAD WORK NEXT XX MILES
GO20-2	48X24	8.00	2	16.00				END ROAD WORK
GO20-4	36X18	4.50	1	4.50				PILOT CAR FOLLOW ME
GO20-4a	42X30	8.75	1	8.75				PILOT CAR IN USE WAIT & FOLLOW
GO20-4a	18X12	1.50	10	15.00				PILOT CAR IN USE WAIT & FOLLOW
GO20-5aP	36X24	6.00						WORK ZONE (PLAQUE)
MO4-8a	24X18	3.00						END DETOUR
MO4-9L	48X36	12.00						DETOUR (LEFT)
MO4-9R	48X36	12.00						DETOUR (RIGHT)
MO4-9P	48X12	4.00						STREET NAME (PLAQUE)
MO4-10L	48X18	6.00						DETOUR ARROW (LEFT)
MO4-10R	48X18	6.00						DETOUR ARROW (RIGHT)
REGULATORY SIGNS								
R1-1	48X48	13.25						STOP
R1-2	48TRI.	6.93						YIELD
R1-2a	36X36	9.00						TO ONCOMING TRAFFIC (PLAQUE)
R1-3P	30X12	2.50						ALL WAY (PLAQUE)
R2-1	36X48	12.00						SPEED LIMIT XX
R3-1	48X48	16.00						NO RIGHT TURN (SYMBOL)
R3-2	48X48	16.00						NO LEFT TURN (SYMBOL)
R3-3	36X36	9.00						NO TURNS
R3-4	48X48	16.00						NO U-TURN (SYMBOL)
R3-7L	30X30	6.25						LEFT LANE MUST TURN LEFT
R3-7R	30X30	6.25						RIGHT LANE MUST TURN RIGHT
R4-1	36X48	12.00						DO NOT PASS
R4-2	36X48	12.00						PASS WITH CARE
R4-7a	36X48	12.00						KEEP RIGHT (HORIZONTAL ARROW)
R4-8a	36X48	12.00						KEEP LEFT (HORIZONTAL ARROW)
R5-1	30X30	6.25						DO NOT ENTER
R5-1a	36X24	6.00						WRONG WAY
R6-1L	54X18	6.75						ONE WAY ARROW (LEFT)
R6-1R	54X18	6.75						ONE WAY ARROW (RIGHT)
R6-2L	24X30	5.00						ONE WAY (LEFT)
R6-2R	24X30	5.00						ONE WAY (RIGHT)
R9-9	24X12	2.00						SIDEWALK CLOSED
R9-11L	24X18	3.00						SIDEWALK CLOSED AHEAD, (ARROW LEFT) CROSS HERE
R9-11R	24X18	3.00						SIDEWALK CLOSED AHEAD, (ARROW RIGHT) CROSS HERE
R10-6	24X36	6.00						STOP HERE ON RED (45^ ARROW)
R11-2	48X30	10.00						ROAD CLOSED
R11-3a	60X30	12.50						ROAD CLOSED XX MILES AHEAD LOCAL TRAFFIC ONLY
R11-4	60X30	12.50						ROAD CLOSED TO THRU TRAFFIC
CONST-3A	60X48	20.00						FINE SIGN
CONST-3X	56X12	4.67						SPEEDING/PASSING (PLATE)
MISCELLANEOUS SIGNS								
CONST-5	48X36	12.00						POINT OF PRESENCE
CONST-5	96X48	32.00						POINT OF PRESENCE
CONST-8	48X36	12.00	2	24.00				WORK ZONE NO PHONE ZONE

616-10.05 CONSTRUCTION SIGNS	TOTAL
	1346

616-10.10 RELOCATED SIGNS	TOTAL
	0

*NO DIRECT PAY FOR RELOCATION OF TEMPORARY TRAFFIC CONTROL SIGNS OR DEVICES.

EFFECTIVE: 07-01-2024

ITEM NUMBER	TOTAL QTY	DESCRIPTION
6122008		IMPACT ATTENUATOR 40 MPH (SAND BARRELS)
6122009		IMPACT ATTENUATOR 45 MPH (SAND BARRELS)
6122010		IMPACT ATTENUATOR 50 MPH (SAND BARRELS)
6122012		IMPACT ATTENUATOR 55 MPH (SAND BARRELS)
6122014		IMPACT ATTENUATOR 60 MPH (SAND BARRELS)
6122017		IMPACT ATTENUATOR 65 MPH (SAND BARRELS)
6122019		IMPACT ATTENUATOR 70 MPH (SAND BARRELS)
6122020		REPLACEMENT SAND BARREL
6122030		IMPACT ATTENUATOR (RELOCATION)
6123001		TRUCK MOUNTED ATTENUATOR (TMA)
6161008		ADVANCED WARNING RAIL SYSTEM
6161012		BUOYS (BOATS KEEP OUT)
6161013		BUOYS (NO WAKE)
6161014		SPECIAL SIGN ASSEMBLY (BOATS KEEP OUT)
6161025	50	CHANNELIZER (TRIM LINE)
6161030		TYPE III MOVEABLE BARRICADE
6161033		DIRECTION INDICATOR BARRICADE
6161040		FLASHING ARROW PANEL
6161047		TYPE III OBJECT MARKER
6161055		SEQUENTIAL FLASHING WARNING LIGHT
6161070		TUBULAR MARKER
6161095		RADAR SPEED ADVISORY SYSTEM
6161096		CHANGEABLE MESSAGE SIGN, COMMISSION FURNISHED/RETAINED
6161098A		CHANGEABLE MESSAGE SIGN WITHOUT COMM. INTERFACE- CONTRACTOR FURNISHED/RETAINED
6161099		CHANGEABLE MESSAGE SIGN WITH COMM. INTERFACE- CONTRACTOR FURNISHED/RETAINED
6162000A		WORK ZONE TRAFFIC SIGNAL SYSTEM
6162002		TEMPORARY LONG-TERM RUMBLE STRIPS
6173600D		TEMPORARY TRAFFIC BARRIER CONTRACTOR FURNISHED/RETAINED
6173602B		TEMPORARY TRAFFIC BARRIER CONTRACTOR FURNISHED/COMMISSION RETAINED
6174000A		TEMP. TRAFFIC BARRIER HEIGHT TRANSITION
6175010A		RELOCATING TEMPORARY TRAFFIC BARRIER
6176000B		TEMPORARY TRAFFIC BARRIER COMMISSION FURNISHED/RETAINED
6177000B		TEMP. TRAFFIC BARRIER HEIGHT TRANSITION COMMISSION FURNISHED/RETAINED
6208064A		TEMPORARY RAISED PAVEMENT MARKER
9029400		TEMPORARY TRAFFIC SIGNALS
9029401		TEMPORARY TRAFFIC SIGNALS AND LIGHTING

NOTE:
SEE MODOT STANDARD PLANS 616.20 FOR SPECIFICATIONS ON TRAFFIC CONTROL RELATED TO THIS OPERATION

STATE OF MISSOURI
DONNA RENE PHILPOT
NUMBER PE-2019000205
PROFESSIONAL ENGINEER
Donna Rene Philpot
DONNA RENE PHILPOT - CIVIL
MO-PE-2019000205

DATE PREPARED: 1/21/2025

ROUTE	STATE
Y	MO
DISTRICT	SHEET NO.
SE	3

COUNTY: DUNKLIN
JOB NO.: JSE0102
CONTRACT ID.
PROJECT NO.
BRIDGE NO.

DESCRIPTION	DATE

MISSOURI HIGHWAYS AND TRANSPORTATION COMMISSION
105 WEST CAPITOL
JEFFERSON CITY, MO 65102
1-888-ASK-MODOT (1-888-275-6636)

SUMMARY OF QUANTITIES
SHEET 2 OF 2

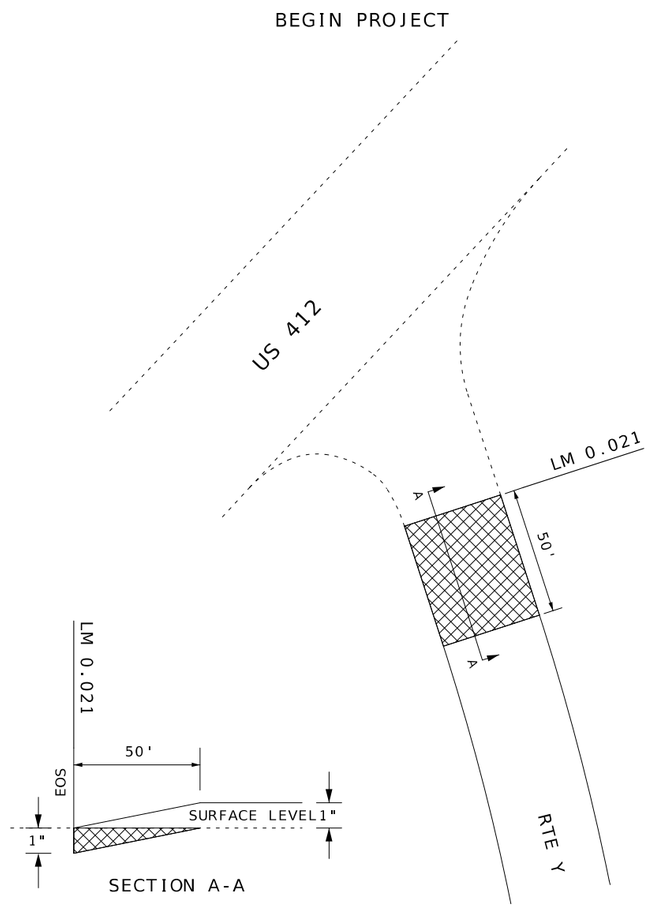

SECTION A-A

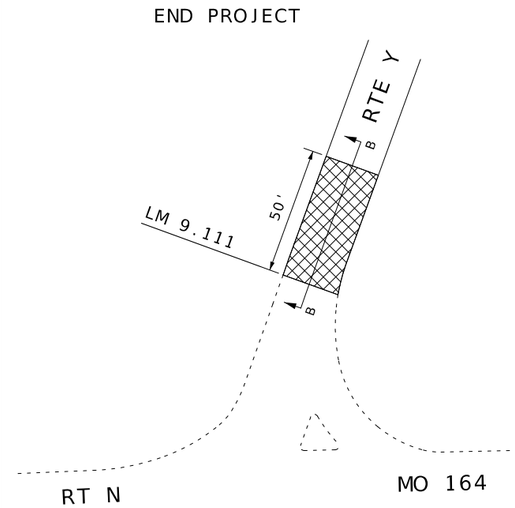

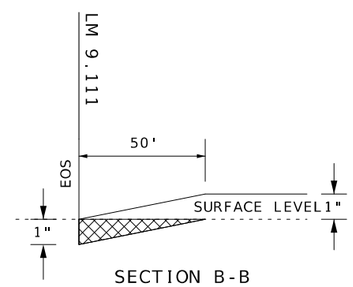

SECTION B-B

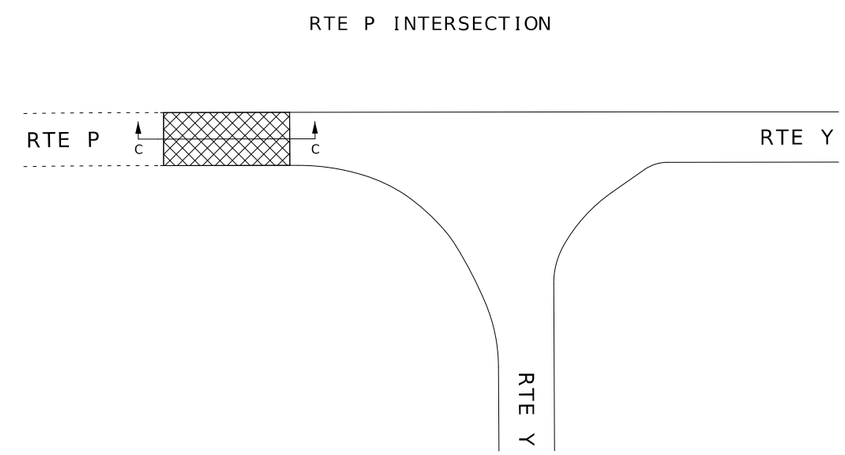

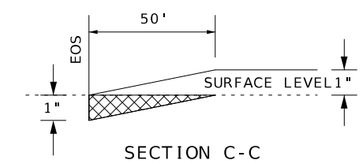

SECTION C-C

COUNTY ROADS & CITY STREETS
(PAVED)

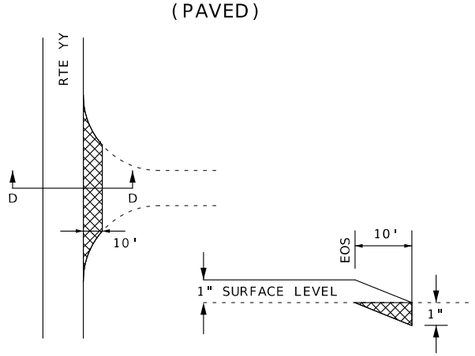

SECTION D-D

COUNTY ROADS & CITY STREETS
(UNPAVED)

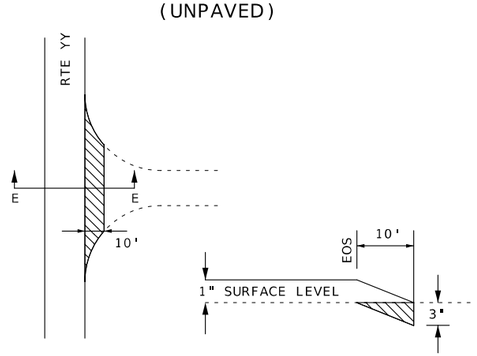

SECTION E-E

PRIVATE & COMMERCIAL ENTRANCES
(PAVED)

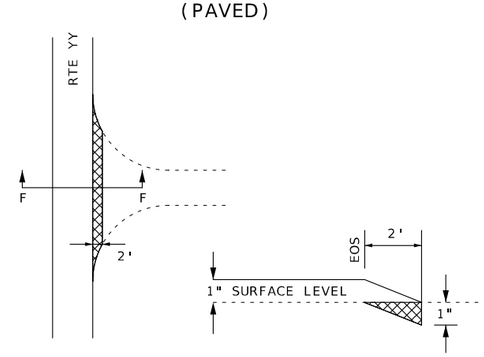

SECTION F-F

PRIVATE & COMMERCIAL ENTRANCES
(UNPAVED)

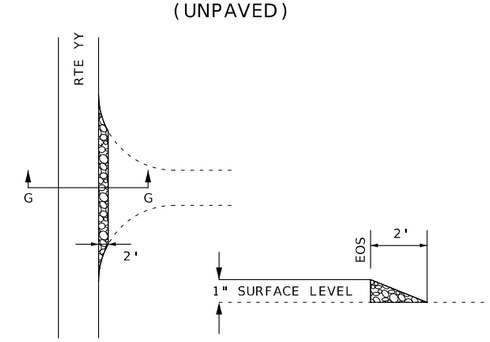

SECTION G-G

GRAVEL A OR CRUSHED STONE B

MODIFIED COLDMILLING (DEPTH TRANSITION)

COLDMILLING≤3"

GRADING

DRAWING NOT TO SCALE. FOLLOW DIMENSIONS.

STATE OF MISSOURI
DONNA RENE PHILPOT
NUMBER
PE-2019000205
PROFESSIONAL ENGINEER

Donna Rene Philpot
DONNA RENE PHILPOT - CIVIL
MO-PE-2019000205

DATE PREPARED	2/18/2025
ROUTE	Y
STATE	MO
DISTRICT	SE
SHEET NO.	4
COUNTY	DUNKLIN
JOB NO.	JSE0102
CONTRACT ID.	
PROJECT NO.	
BRIDGE NO.	

DATE	DESCRIPTION

MISSOURI HIGHWAYS AND TRANSPORTATION COMMISSION
105 WEST CAPITOL
JEFFERSON CITY, MO 65102
1-888-ASK-MODOT (1-888-275-6636)

PAVEMENT DETAIL
SPECIAL SHEET 1 OF 1