MISSOURI HIGHWAYS AND TRANSPORTATION COMMISSION
PLANS FOR PROPOSED
STATE HIGHWAY

CASS/JACKSON COUNTY

DESIGN DESIGNATION

A.A.D.T. - 2025 = 18,000
A.A.D.T. - 2035 = 25,500
D.H.V. = 10%
T = 9%
V = 55 M.P.H.
D = 50%
FUNCTIONAL CLASSIFICATION - PRINCIPAL ARTERIAL

CONTROLLED ACCESS HIGHWAY

CONVENTIONAL SYMBOLS
(USED IN PLANS)

	EXISTING	NEW
BUILDINGS AND STRUCTURES		
GUARD RAIL		
GUARD CABLE		
CONCRETE RIGHT-OF-WAY MARKER		
STEEL RIGHT-OF-WAY MARKER		
LOCATION SURVEY MARKER		
UTILITIES		
FIBER OPTICS	-FO-	-FO-
OVERHEAD CABLE TV	-OTV-	-OTV-
UNDERGROUND CABLE TV	-UTV-	-UTV-
OVERHEAD TELEPHONE	-OT-	-OT-
UNDERGROUND TELEPHONE	-UT-	-UT-
OVERHEAD POWER	-OE-	-OE-
UNDERGROUND POWER	-UE-	-UE-
SANITARY SEWER	-S-	-S-
STORM SEWER	-SS-	-SS-
GAS	-G-	-G-
WATER	-W-	-W-
MANHOLE	SAN	
FIRE HYDRANT	HYD	
WATER VALVE	WV	
WATER METER	WM	
DROP INLET		
DITCH BLOCK		
GROUND MOUNTED SIGN	SIGN	
LIGHT POLE		
H-FRAME POWER POLE		
TELEPHONE PEDESTAL	PED	
FENCE		
CHAIN LINK	-V-	
WOVEN WIRE	-X-	
GATE POST		
BENCHMARK	BM	

NOTE: DASHED OR OPEN SYMBOLS INDICATE EXISTING FEATURES

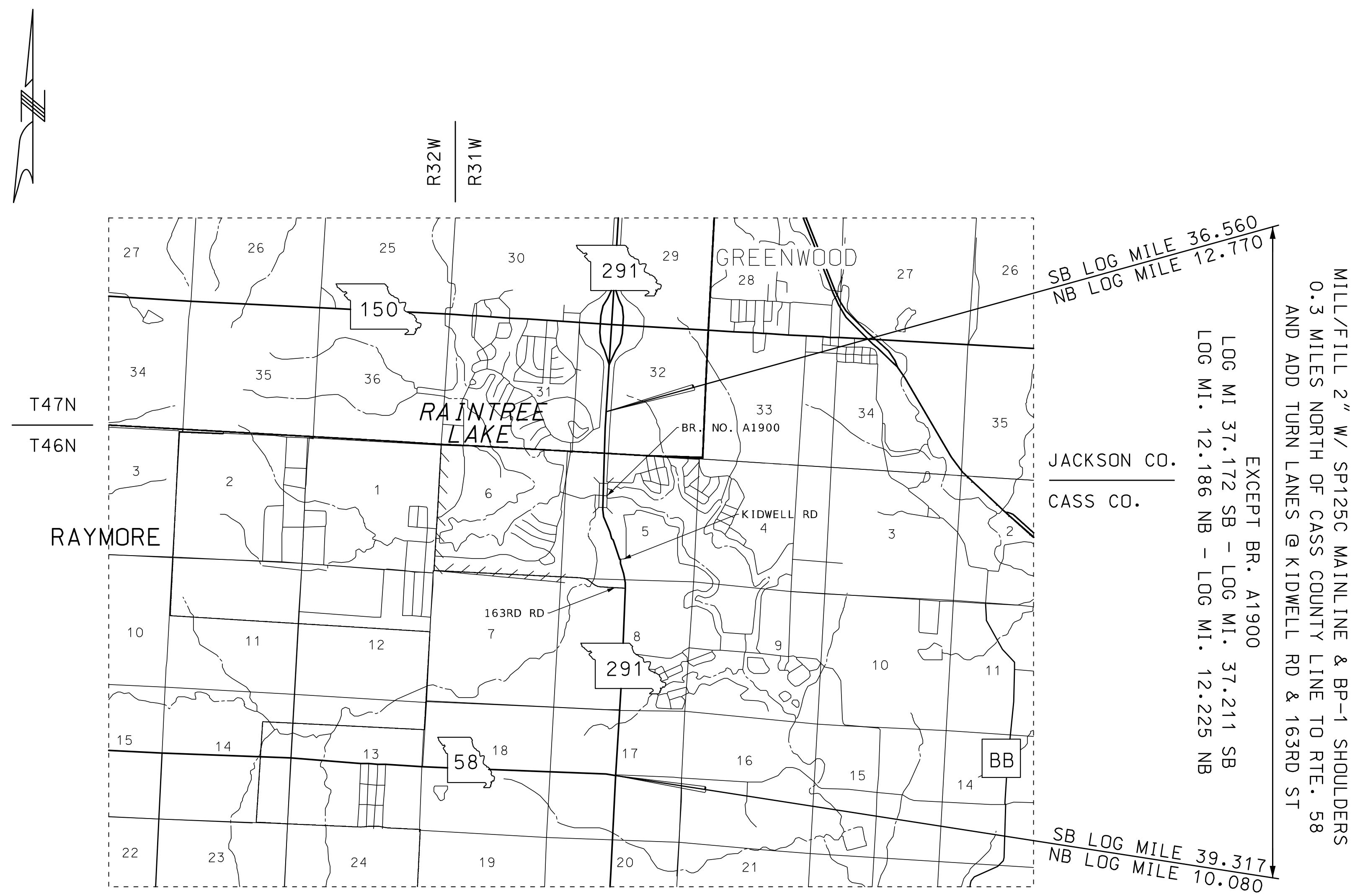

NOT TO SCALE

THE EXISTENCE AND APPROXIMATE LOCATION OF UTILITY FACILITIES KNOWN TO EXIST, AS SHOWN ON THE PLANS, ARE BASED ON THE BEST INFORMATION AVAILABLE TO THE COMMISSION AT THIS TIME. THIS INFORMATION IS PROVIDED BY THE COMMISSION "AS-IS" AND THE COMMISSION EXPRESSLY DISCLAIMS ANY REPRESENTATION OR WARRANTY AS TO THE COMPLETENESS, ACCURACY, OR SUITABILITY OF THE INFORMATION FOR ANY USE. RELIANCE UPON THIS INFORMATION IS DONE AT THE RISK AND PERIL OF THE USER, AND THE COMMISSION SHALL NOT BE LIABLE FOR ANY DAMAGES THAT MAY ARISE FROM ANY ERROR IN THE INFORMATION. IT IS, THEREFORE, THE RESPONSIBILITY OF THE CONTRACTOR TO VERIFY THE EXISTENCE, LOCATION AND STATUS OF ANY FACILITY. SUCH VERIFICATION INCLUDES DIRECT CONTACT WITH THE LISTED UTILITIES.

INDEX OF SHEETS

DESCRIPTION	SHEET NUMBER
TITLE SHEET	1
TYPICAL SECTIONS (TS) (7 SHEETS)	2
QUANTITIES (QU) (4 SHEETS)	3
PLAN-PROFILE (PP)	4-7
REFERENCE POINTS (RP)	8
COORDINATE POINTS (CP)	9
SPECIAL SHEETS (SS)	10
TRAFFIC CONTROL SHEETS (TC)	11-17
PAVEMENT MARKING & SIGNING (PM/SN)	18-23
CULVERT SECTIONS (CS)	24
CROSS SECTIONS (XS)	1-33

LENGTH OF PROJECT

BEGINNING OF PROJECT	LOG MILE 36.560 SB LOG MILE 12.770 NB	
END OF PROJECT	LOG MILE 39.317 SB LOG MILE 10.080 NB	
APPARENT LENGTH	SB 14,557.00 NB 14,203.20	FEET FEET

EQUATIONS AND EXCEPTIONS:

BRIDGE A1900 203 FEET
LOG MI. 37.172 SB - LOG MI. 37.211 SB
LOB MI. 12.186 NB - LOG MI. 12.225 NB

TOTAL CORRECTIONS	203	FEET
NET LENGTH OF PROJECT	SB 14,354.00	FEET
NET LENGTH OF PROJECT	NB 14,000.20	FEET
STATE LENGTH	SB 2.719	MILES
STATE LENGTH	NB 2.652	MILES

FOR INFORMATION ONLY
ESTIMATED DISTURBED ACRES 0.6 ACRES

STATE OF MISSOURI
THANKAM MATHEW
NUMBER PE-2014000056
PROFESSIONAL ENGINEER
THANKAM MATHEW - CIVIL
MO-PE-2014000056

DATE PREPARED	3/26/2025
ROUTE	291
STATE	MO
DISTRICT	KC
SHEET NO.	1
COUNTY	CASS/JACKSON
JOB NO.	JKU0065
CONTRACT ID.	
PROJECT NO.	
BRIDGE NO.	

DESCRIPTION
DATE

MISSOURI HIGHWAYS AND TRANSPORTATION COMMISSION
105 WEST CAPITOL
JEFFERSON CITY, MO 65102
1-888-ASK-MODOT (1-888-275-6636)

ESTIMATE FACTOR	
BIT. PVM'T MIX. PG76-22 (SP125C)	1.974 TON/CY
BIT. PVM'T MIX. PG66-22 (BP-1)	1.998 TON/CY
TACK COAT	0.10 GAL/SY

FOR ESTIMATE PURPOSE ONLY

CROSS SLOPE
M.E. = MATCH EXISTING

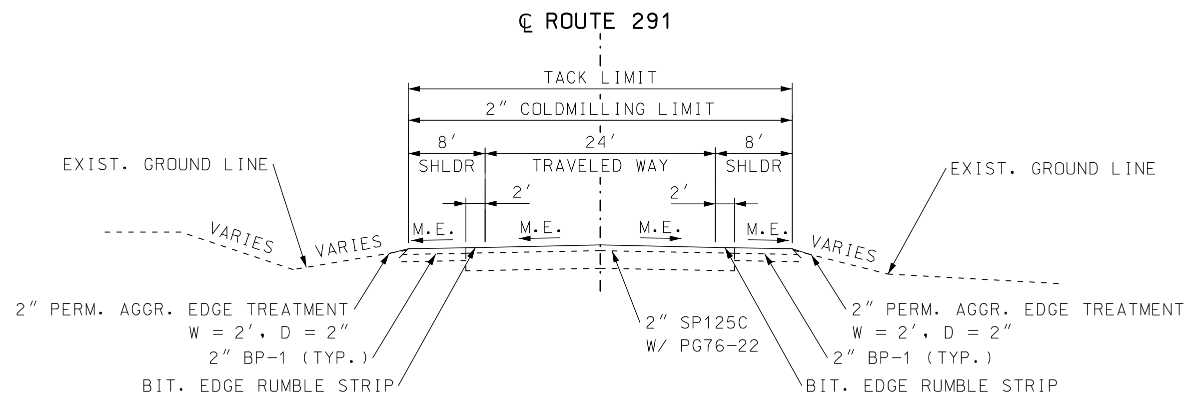

TYPICAL SECTION
ROUTE 291
SB LOG MILE 36.683 TO SB LOG MILE 36.750

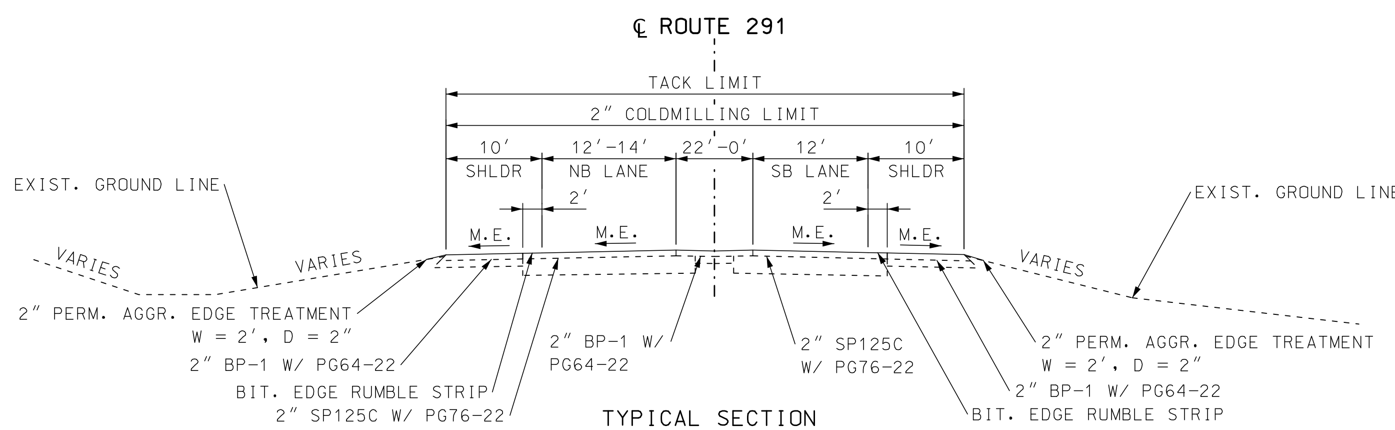

TYPICAL SECTION
ROUTE 291
SB LOG MILE 36.640 TO SB LOG MILE 36.683

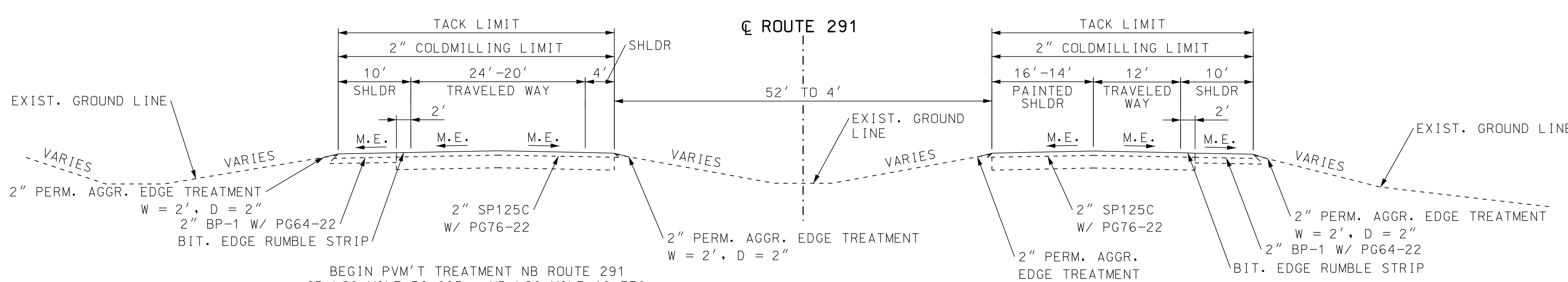

BEGIN PVM'T TREATMENT NB ROUTE 291
SB LOG MILE 36.625 = NB LOG MILE 12.770

TYPICAL SECTION
ROUTE 291
SB LOG MILE 36.560 TO SB LOG MILE 36.640

GENERAL NOTE:
SURFACE PLACEMENT SHALL BE ONE PASS PER LANE
NO S.E. CORRECTION.

NOT TO SCALE

TYPICAL SECTION
SHEET 1 OF 7

STATE OF MISSOURI
THANKAM MATHEW
NUMBER PE-2014000056
PROFESSIONAL ENGINEER
THANKAM MATHEW - CIVIL
MO-PE-2014000056

DATE PREPARED	3/26/2025
ROUTE	291
STATE	MO
DISTRICT	KC
SHEET NO.	2
COUNTY	CASS/JACKSON
JOB NO.	JKU0065
CONTRACT ID.	
PROJECT NO.	
BRIDGE NO.	

DESCRIPTION

DATE

MISSOURI HIGHWAYS AND TRANSPORTATION COMMISSION
105 WEST CAPITOL
JEFFERSON CITY, MO 65102
1-888-ASK-MODOT (1-888-275-6636)

CROSS SLOPE
M.E. = MATCH EXISTING

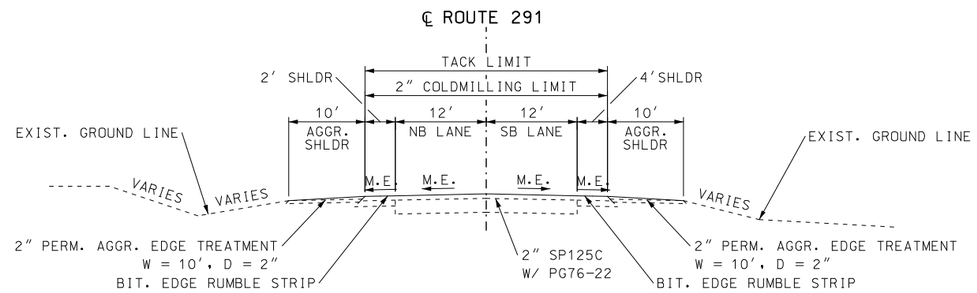

TYPICAL SECTION
ROUTE 291
SB LOG MILE 37.249 TO SB LOG MILE 37.512

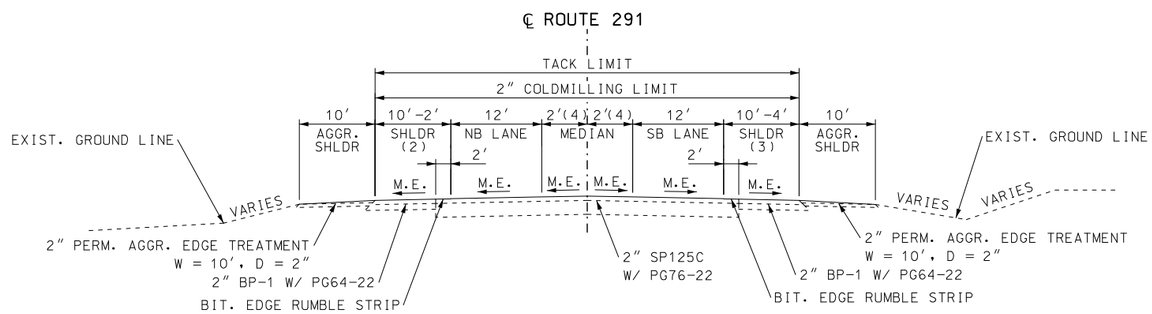

TYPICAL SECTION
ROUTE 291
SB LOG MILE 37.211 TO SB LOG MILE 37.249

NOTES:
(2) SB LOG MILE 37.211 TO SB LOG MILE 37.249
WIDTH TAPERS = 10' TO 2'
(3) SB LOG MILE 37.211 TO SB LOG MILE 37.249
WIDTH TAPERS = 10' TO 4'
(4) SB LOG MILE 37.211 TO SB LOG MILE 37.249
WIDTH TAPERS = 2' TO 0'

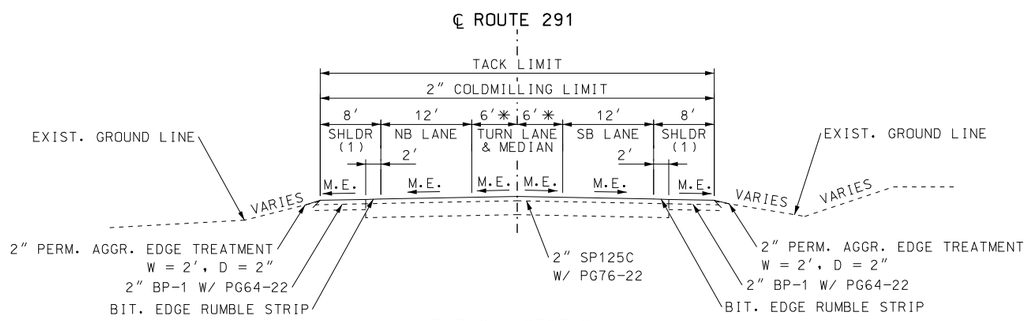

TYPICAL SECTION
ROUTE 291
SB LOG MILE 36.750 TO SB LOG MILE 37.172
EXCEPTION BR. NO. A1900
SB LOG MILE 37.172 TO SB LOG MILE 37.211

NOTES:
✳ SB LOG MILE 36.750 TO SB LOG MILE 36.790
WIDTH = 0' TO 6'
✳ SB LOG MILE 37.131 TO SB LOG MILE 37.172
WIDTH = 6' TO 5'
(1) SB LOG MILE 37.131 TO SB LOG MILE 37.172
WIDTH TAPERS = 8' TO 6'

✳✳ CENTERLINE VARIES FROM THE CENTER OF THE LANES. REFER TO CROSS SECTIONS FOR OFFSETS AT A SPECIFIC LOCATION.

GENERAL NOTE:
SURFACE PLACEMENT SHALL BE ONE PASS PER LANE
NO S.E. CORRECTION.

NOT TO SCALE

TYPICAL SECTION
SHEET 2 OF 7

STATE OF MISSOURI
THANKAM MATHEW
NUMBER PE-2014000056
PROFESSIONAL ENGINEER
03/27/2025 1:40:10 PM
THANKAM MATHEW - CIVIL
MO-PE-2014000056

DATE PREPARED	3/26/2025
ROUTE	291
STATE	MO
DISTRICT	KC
SHEET NO.	2
COUNTY	CASS/JACKSON
JOB NO.	JKU0065
CONTRACT ID.	
PROJECT NO.	
BRIDGE NO.	

DATE	DESCRIPTION

MISSOURI HIGHWAYS AND TRANSPORTATION COMMISSION
105 WEST CAPITOL
JEFFERSON CITY, MO 65102
1-888-ASK-MODOT (1-888-275-6636)

OPTIONAL PAVEMENT - 11" HMA DESIGN
2" SP125C W/ PG 70-22
2" SP125C W/ PG 70-22
7" SP250C W/ PG 64-22
6" TYPE 5 AGGREGATE BASE

OPTIONAL PAVEMENT - 9" JPCP DESIGN
9" JPCP W/ 15-FOOT JOINTS
1-1/4" DOWEL BARS
6" TYPE 5 AGGREGATE BASE

CROSS SLOPE
M.E. = MATCH EXISTING

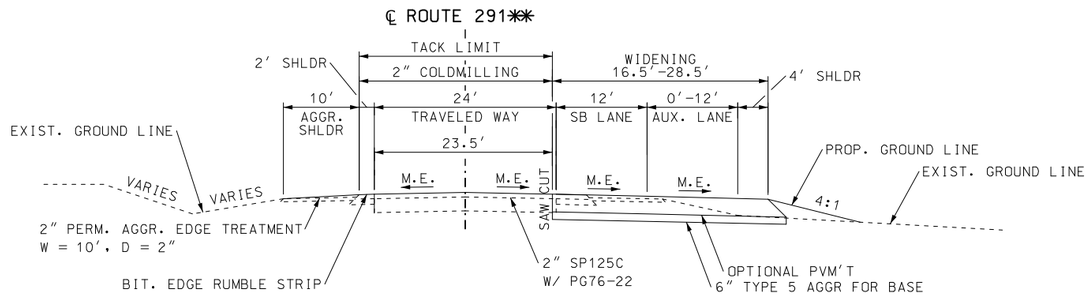

TYPICAL SECTION
ROUTE 291
SB LOG MILE 37.807 TO SB LOG MILE 37.841
STA. 290+60.74 TO STA. 291+40.74

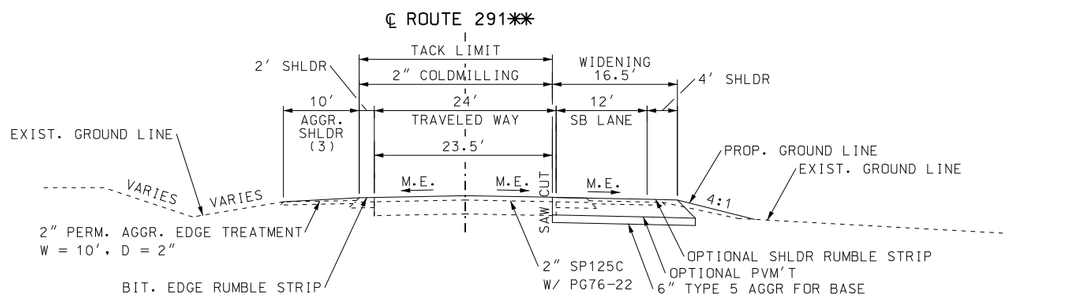

TYPICAL SECTION
ROUTE 291
SB LOG MILE 37.641 TO SB LOG MILE 37.807
STA. 280+85.11 TO STA. 290+60.74

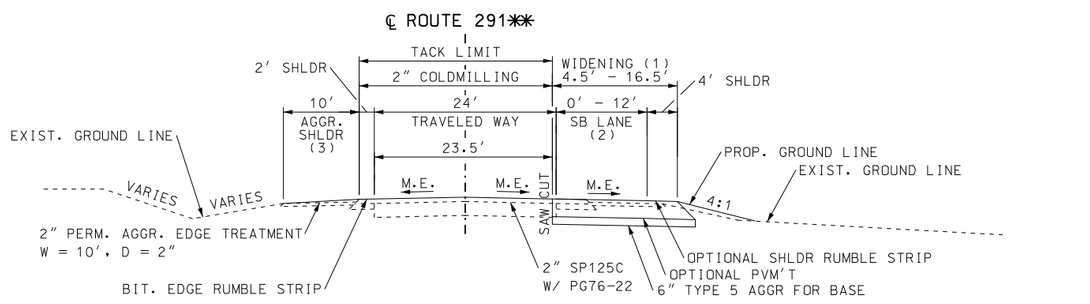

TYPICAL SECTION
ROUTE 291
SB LOG MILE 37.512 TO SB LOG MILE 37.641
STA. 274+05.19 TO STA. 280+85.11

NOTES:
(1) STA. 274+05.19 TO STA. 274+25.19
WIDTH = 4.5'
(2) STA. 274+05.19 TO STA. 274+25.19
WIDTH = 4'
(3) SB LOG MILE 38.060 TO SB LOG MILE 38.079
STA. 303+01.31 TO STA. 304+01.63
EXIST. AGGR SHLDR TAPERS FROM 10' TO 0'

✱✱ CENTERLINE VARIES FROM THE CENTER OF THE LANES. REFER TO CROSS SECTIONS FOR OFFSETS AT A SPECIFIC LOCATION.

GENERAL NOTE:
SURFACE PLACEMENT SHALL BE ONE PASS PER LANE
NO S.E. CORRECTION.

NOT TO SCALE

TYPICAL SECTION
SHEET 3 OF 7

STATE OF MISSOURI
THANKAM MATHEW
NUMBER PE-2014000056
PROFESSIONAL ENGINEER
03/27/2025 4:41:12 PM
THANKAM MATHEW - CIVIL
MO-PE-2014000056

DATE PREPARED	3/26/2025
ROUTE	291
STATE	MO
DISTRICT	KC
SHEET NO.	2
COUNTY	CASS/JACKSON
JOB NO.	JKU0065
CONTRACT ID.	
PROJECT NO.	
BRIDGE NO.	

DATE	DESCRIPTION

MISSOURI HIGHWAYS AND TRANSPORTATION COMMISSION
105 WEST CAPITOL
JEFFERSON CITY, MO 65102
1-888-ASK-MODOT (1-888-275-6636)

CROSS SLOPE
M.E. = MATCH EXISTING

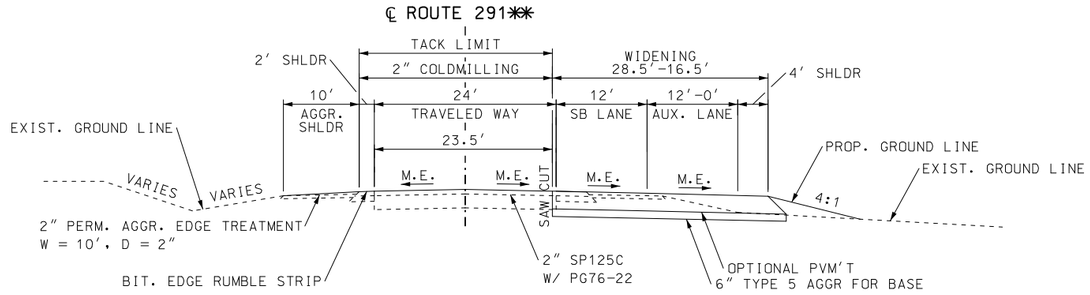

TYPICAL SECTION
ROUTE 291
SB LOG MILE 37.960 TO SB LOG MILE 37.977
STA. 297+67.76 TO STA. 298+56.29

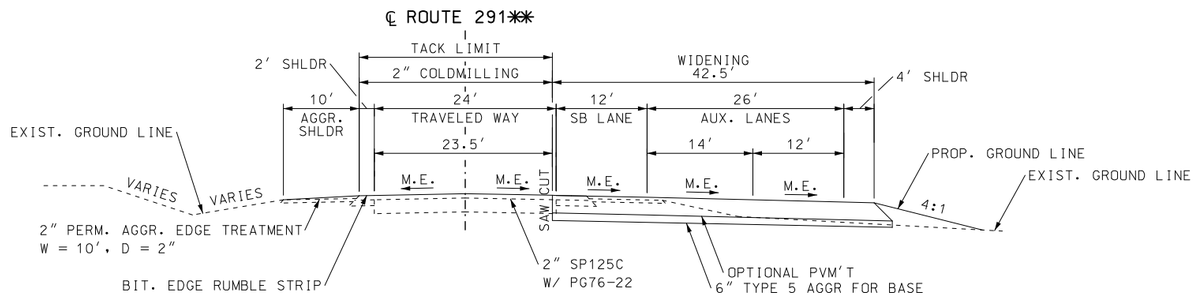

TYPICAL SECTION
ROUTE 291
SB LOG MILE 37.881 TO SB LOG MILE 37.960
STA. 293+50.74 TO STA. 297+67.76

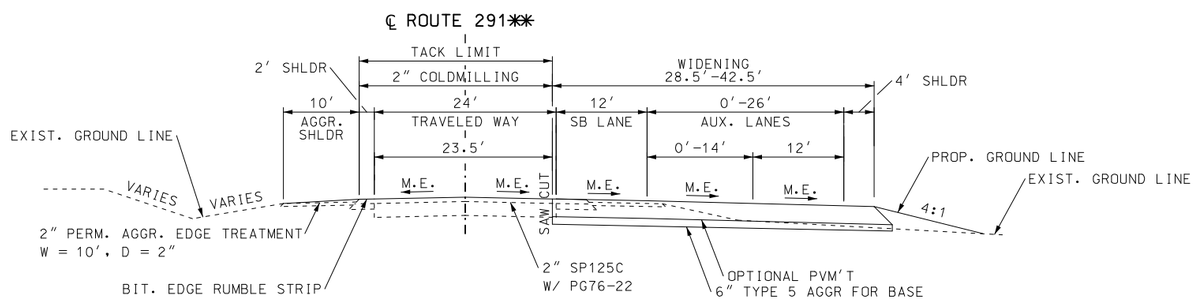

TYPICAL SECTION
ROUTE 291
SB LOG MILE 37.841 TO SB LOG MILE 37.881
STA. 291+40.74 TO STA. 293+50.74

✱✱ CENTERLINE VARIES FROM THE CENTER OF THE LANES. REFER TO CROSS SECTIONS FOR OFFSETS AT A SPECIFIC LOCATION.

GENERAL NOTE:
SURFACE PLACEMENT SHALL BE ONE PASS PER LANE
NO S.E. CORRECTION.

TYPICAL SECTION
SHEET 4 OF 7

STATE OF MISSOURI
THANKAM MATHEW
NUMBER PE-2014000056
PROFESSIONAL ENGINEER
03/27/2025 2:30:36 PM
THANKAM MATHEW - CIVIL
MO-PE-2014000056

DATE PREPARED	3/26/2025
ROUTE	291
STATE	MO
DISTRICT	KC
SHEET NO.	2
COUNTY	CASS/JACKSON
JOB NO.	JKU0065
CONTRACT ID.	
PROJECT NO.	
BRIDGE NO.	

DATE	DESCRIPTION

MISSOURI HIGHWAYS AND TRANSPORTATION COMMISSION
105 WEST CAPITOL
JEFFERSON CITY, MO 65102
1-888-ASK-MODOT (1-888-275-6636)

CROSS SLOPE
M.E. = MATCH EXISTING

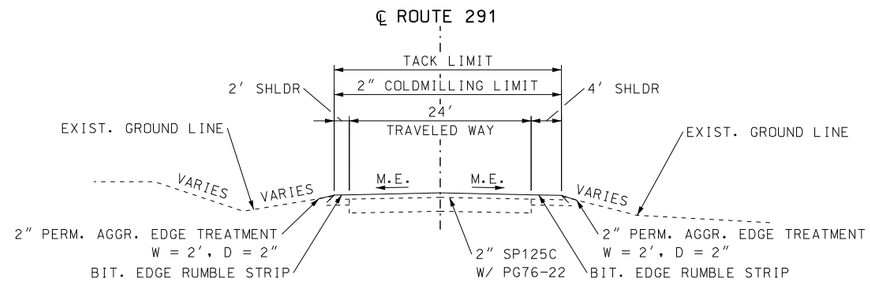

TYPICAL SECTION
ROUTE 291
SB LOG MILE 38.184 TO SB LOG MILE 38.288

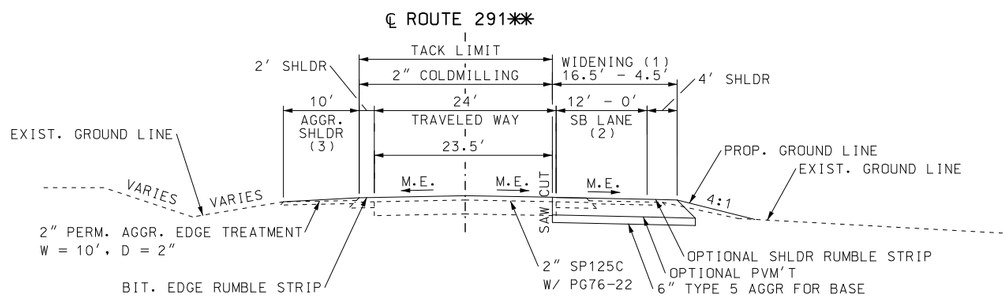

TYPICAL SECTION
ROUTE 291
SB LOG MILE 38.055 TO SB LOG MILE 38.184
STA. 303+35.80 TO STA. 310+15.79

NOTES:
(1) STA. 303+95.82 TO STA. 310+15.79
WIDTH = 4.5'
(2) STA. 303+95.82 TO STA. 310+15.79
WIDTH = 4'
(3) SB LOG MILE 38.060 TO SB LOG MILE 38.079
STA. 303+01.31 TO STA. 304+01.63
EXIST. AGGR SHLDR TAPERS FROM 6' TO 0'

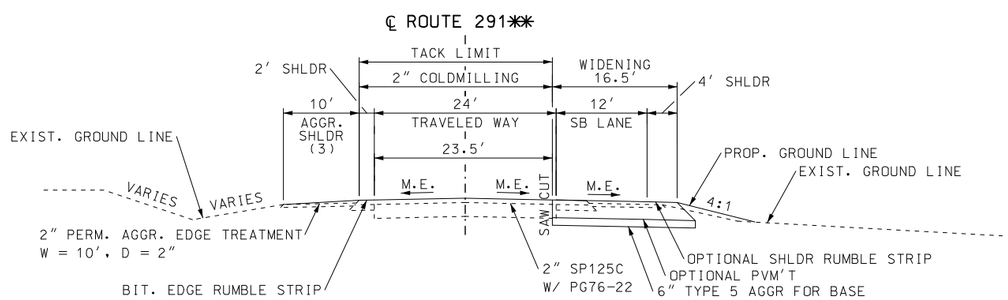

TYPICAL SECTION
ROUTE 291
SB LOG MILE 37.977 TO SB LOG MILE 38.055
STA. 298+56.29 TO STA. 303+35.80

** CENTERLINE VARIES FROM THE CENTER OF THE LANES. REFER TO CROSS SECTIONS FOR OFFSETS AT A SPECIFIC LOCATION.

GENERAL NOTE:
SURFACE PLACEMENT SHALL BE ONE PASS PER LANE
NO S.E. CORRECTION.

NOT TO SCALE

TYPICAL SECTION
SHEET 5 OF 7

STATE OF MISSOURI
THANKAM MATHEW
NUMBER
PE-2014000056
PROFESSIONAL ENGINEER
03/27/2025 2:55:47 PM
THANKAM MATHEW - CIVIL
MO-PE-2014000056

DATE PREPARED	3/26/2025
ROUTE	291
STATE	MO
DISTRICT	KC
SHEET NO.	2
COUNTY	CASS/JACKSON
JOB NO.	JKU0065
CONTRACT ID.	
PROJECT NO.	
BRIDGE NO.	

DESCRIPTION
DATE

MISSOURI HIGHWAYS AND TRANSPORTATION COMMISSION
105 WEST CAPITOL
JEFFERSON CITY, MO 65102
1-888-ASK-MODOT (1-888-275-6636)

CROSS SLOPE
M.E. = MATCH EXISTING

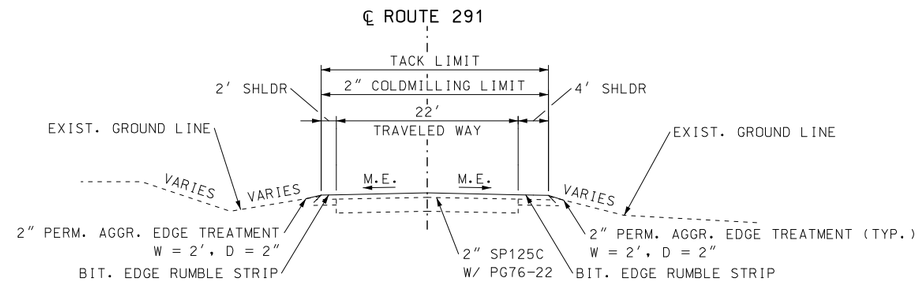

TYPICAL SECTION
ROUTE 291
SB LOG MILE 38.595 TO SB LOG MILE 39.317

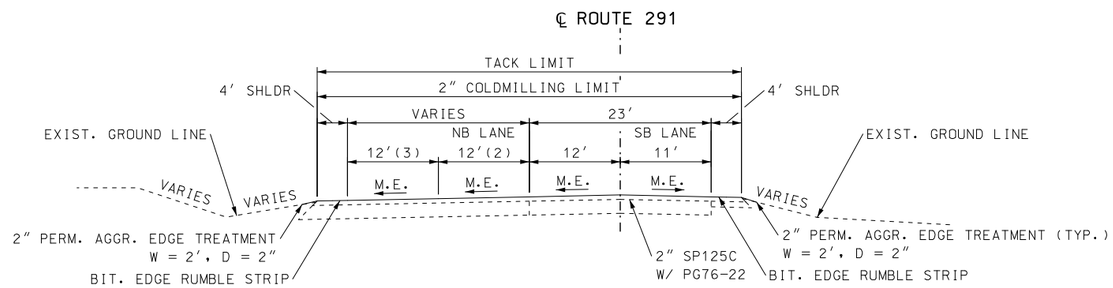

TYPICAL SECTION
ROUTE 291
SB LOG MILE 38.461 TO SB LOG MILE 38.595

NOTES:
(2) SB LOG MILE 38.516 TO SB LOG MILE 38.595
WIDTH TAPERS = 12' TO 0'
(3) SB LOG MILE 38.516 TO SB LOG MILE 38.550
WIDTH TAPERS = 12' TO 0'

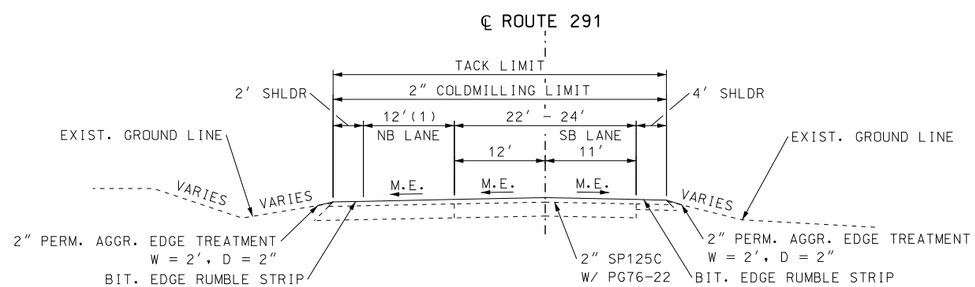

TYPICAL SECTION
ROUTE 291
SB LOG MILE 38.288 TO SB LOG MILE 38.461

NOTE:
(1) SB LOG MILE 38.288 TO SB LOG MILE 38.369
WIDTH TAPERS = 0' TO 12'

GENERAL NOTE:
SURFACE PLACEMENT SHALL BE ONE PASS PER LANE
NO S.E. CORRECTION.

NOT TO SCALE

TYPICAL SECTION
SHEET 6 OF 7

STATE OF MISSOURI
THANKAM MATHEW
NUMBER PE-2014000056
PROFESSIONAL ENGINEER
03/27/2025 2:45:43 PM
THANKAM MATHEW - CIVIL
MO-PE-2014000056

DATE PREPARED	
3/26/2025	
ROUTE 291	STATE MO
DISTRICT KC	SHEET NO. 2
COUNTY CASS/JACKSON	
JOB NO. JKU0065	
CONTRACT ID.	
PROJECT NO.	
BRIDGE NO.	

DATE	DESCRIPTION

MISSOURI HIGHWAYS AND TRANSPORTATION COMMISSION
105 WEST CAPITOL
JEFFERSON CITY, MO 65102
1-888-ASK-MODOT (1-888-275-6636)

CROSS SLOPE
M.E. = MATCH EXISTING

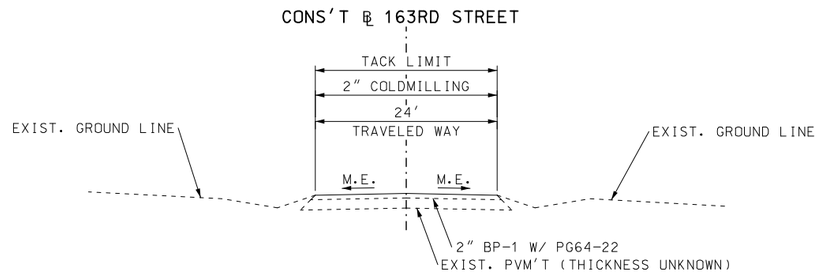

TYPICAL SECTION
163RD STREET
STA. 1+01.29 TO STA. 1+45.85
EB LOG MILE 1.472 TO EB LOG MILE 1.481

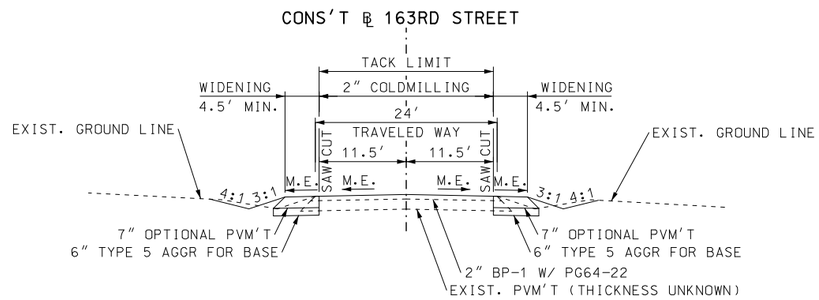

TYPICAL SECTION
163RD STREET
STA. 0+50.58 TO STA. 1+01.29
EB LOG MILE 1.481 TO EB LOG MILE 1.490

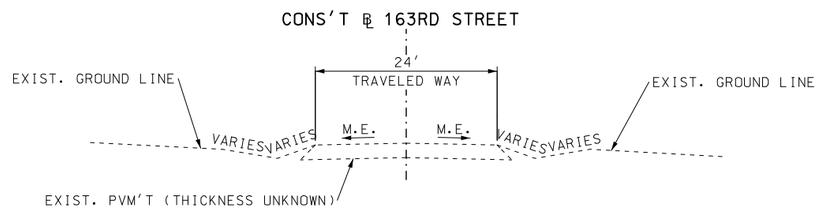

EXISTING TYPICAL SECTION
163RD STREET
STA. 0+11.96 TO STA. 1+45.85
EB LOG MILE 1.472 TO EB LOG MILE 1.497

GENERAL NOTE:
SURFACE PLACEMENT SHALL BE ONE PASS PER LANE
NO S.E. CORRECTION.

NOT TO SCALE

TYPICAL SECTION
SHEET 7 OF 7

STATE OF MISSOURI
THANKAM MATHEW
NUMBER
PE-2014000056
PROFESSIONAL ENGINEER
03/27/2025 1:41:01 PM
THANKAM MATHEW - CIVIL
MO-PE-2014000056

DATE PREPARED	3/26/2025
ROUTE	291
STATE	MO
DISTRICT	KC
SHEET NO.	2
COUNTY	CASS/JACKSON
JOB NO.	JKU0065
CONTRACT ID.	
PROJECT NO.	
BRIDGE NO.	

DATE	DESCRIPTION

MISSOURI HIGHWAYS AND TRANSPORTATION COMMISSION
105 WEST CAPITOL
JEFFERSON CITY, MO 65102
1-888-ASK-MODOT (1-888-275-6636)

PAVEMENT QUANTITIES

ROUTE	SB LOG MILE/ STATION	SB LOG MILE/ STATION	LENGTH FT	AVERAGE MAINLINE WIDTH FT	AVERAGE SHOULDER WIDTH (E) FT	AVERAGE SHOULDER WIDTH (W) FT	AVERAGE SHOULDER SHOULDER WIDTH (AGGREGATE) FT	2" ASPHALTIC CONCRETE MIXTURE PG76-22 (SP125C MIX) TONS	2" BITUMINOUS PAVEMENT MIXTURE PG64-22 (BP-1) TONS	TACK COAT GAL	PERMANENT AGGREGATE EDGE TREATMENT TONS	COLDMILLING SY	REMARKS
291 SB	36.560	36.640	422.4	12	15	10	-	169.9	109.4	173.7	20.9	1736.5	BEGIN PROJECT, SB LANES RTE 291
291 NB	36.625	36.640	79.2	24	10	4	-	34.7	7.8	33.4	3.9	334.4	NB LANES RTE 291
291	36.640	36.683	227	44	10	10	-	166	44.8	161.4	11.2	1614.2	GORE TRANSITION
291	36.683	36.750	353.8	24	8	8	-	155.2	52.4	157.2	17.5	1572.4	
291	36.750	37.172	2228.2	36	8	8	-	1303.2	329.8	1287.4	110	12874	WIDENING
291	37.172	37.211	EXCEPTION BR. NO. A1900										EXCEPTION BR. NO. A1900
291	37.211	37.249	200.6	26	6	7	10	85.6	22.3	86.9	49.5	869.3	EXIST. AGGR SHLDR LT & RT
291	37.249	37.376	670.6	24	2	4	10	245.1		223.5	165.6	2235.3	EXIST. AGGR SHLDR LT & RT
291	37.376	37.512	718.1	24	2	4	10	227.5		239.4	177.3	2393.7	EXIST. AGGR SHLDR LT & RT
291	37.512	38.184	3548.2	23.5	2	0	6	929.6		1005.3	262.8	10053.2	EXIST. AGGR SHLDR LT
291	38.184	38.288	549.1	24	2	4		187.3		183	27.1	1830.3	
291	38.288	38.369	427.7	29.5	2	4		185		168.7	21.1	1687	TAPER
291	38.369	38.461	485.8	35	2	4	-	242.7		221.3	24	2213.1	167TH ST WIDENING
291	38.461	38.516	290.4	47	4	4	-	194.6		177.5	14.3	1774.7	167TH ST WIDENING
291	38.516	38.595	417.1	35	4	4	-	218.5		199.3	20.6	1992.8	167TH ST WIDENING
291	38.595	39.317	3812.2	22	2	4	-	1300.7		1186	188.3	11860.2	
ENTRANCES													
291 E	36.865	-	28	42	-	-	-	-	20.8	18.7	-	187.2	SE MEADOWBROOK
291 W	36.892	-	30	15	-	-	-	-	9.9	8.9	-	89.3	155TH ST W
291	36.889	-	12	25	-	-	-	-	4.8	4.3	-	43.3	PRIVATE RESIDENTIAL ENTRANCE
291 E	37.110	-	85	30	-	-	-	-	67.9	61.2	-	611.8	LAKE WINNEBAGO DR
291 W	37.561	-	40	36	-	-	-	-	-	-	65.8		DAVE AUTO REPAIR ENTRANCE
291 E	37.738	-	50	38	-	-	-	-	46.3	41.7	-	416.7	KIDWELL RD
291 W	37.957	-	120	24	-	-	-	-	38.7	34.9	-	348.5	SW 163RD ST. SEE PAVEMENT WIDENING
291 E	38.084	-	30	12	-	-	-	-	-	-	6.1		FIELD ENTRANCE
291 W	38.238	-	24	14	-	-	-	-	-	-	6.9		PRIVATE RESIDENTIAL ENTRANCE
291 W	38.354	-	24	10	-	-	-	-	4.2	3.8	-	37.8	PRIVATE RESIDENTIAL ENTRANCE
291 E	38.422	-	20	18	-	-	-	-	-	-	8.4		FIELD ENTRANCE
291 E	38.453	-	22	40	-	-	-	-	90.1	81.1	-	811.3	WILD HORSE PKWY
291	38.467	-	40	18	-	-	-	-	-	-	7.1		FIELD ENTRANCE
291	38.661	-	30	14	-	-	-	-	-	-	4.6		FIELD ENTRANCE
291	38.663	-	22	40	-	-	-	-	-	-	20.4		CEMENTECH ENTRANCE
291	38.898	-	28	24	-	-	-	-	10.5	9.5	-	95.0	171ST STREET
291	38.927	-	20	14	-	-	-	-	-	-	6.3		
291	38.927	-	13	26	-	-	-	-	6.8	6.1	-	61.3	
291	38.960	-	28	16	-	-	-	-	-	-	7.8		
291	39.057	-	30	16	-	-	-	-	-	-	14.6		
291	39.104	-	28	12	-	-	-	-	0.5	0.4	-	4.3	
291	39.153	-	14	50	-	-	-	-	11.7	10.5	-	105.1	SCRAP YARD ENTRANCE
291	39.264	-	10	60	-	-	-	-	13.1	11.8	-	117.7	THE PORCH ENTRANCE
							SUBTOTAL	5645.6	891.8	5796.9	1262.1	57970.4	
							PAY TOTAL	5645.6	891.8	5797	1262.1	57970	

REMOVAL OF IMPROVEMENTS = 1 LUMP SUM

SB LOG MILE/ STATION	SB LOG MILE/ STATION	LOCATION	SIDE	DESCRIPTION	UNIT	QUANTITY	REMARKS
37.512		ROUTE 291	RT	SAW CUT	FT	1	
37.512	38.184	ROUTE 291	RT	SAW CUT	FT	3548	
38.184		ROUTE 291	RT	SAW CUT	FT	1	
37.512	38.184	ROUTE 291	RT	ASPHALT PAVEMENT	SY	1284	
0+14.36	0+50.58	CONS'T B 163RD ST	RT & LT	ASPHALT PAVEMENT	SY	99	
0+12.87	1+01.29	CONS'T B 163RD ST	RT	SAW CUT	FT	88	
1+01.29		CONS'T B 163RD ST	RT	SAW CUT	FT	1	
0+11.05	1+01.29	CONS'T B 163RD ST	LT	SAW CUT	FT	90	
1+01.29		CONS'T B 163RD ST	LT	SAW CUT	FT	1	
0+12.87	1+01.29	CONS'T B 163RD ST	RT	ASPHALT PAVEMENT	SY	69	
0+11.05	1+01.29	CONS'T B 163RD ST	LT	ASPHALT PAVEMENT	SY	64	
265+08	265+59	ROUTE 291	LT	GUARDRAIL	FT	51	CRASHWORTHY E. T.
286+00.02		ROUTE 291	RT	SIGN	EACH	1	EXIST. W11-8
297+77.04		ROUTE 291	RT	SIGN. EXIST. AAH	REMOVE BY OTHERS		EXIST. AAH
307+89.11		ROUTE 291	RT	SIGN	EACH	1	EXIST. W11-8

CONTRACTOR SURVEYING AND STAKING

LUMP SUM = 1

MOBILIZATION

1 LUMP SUM

SUMMARY OF QUANTITIES
SHEET 1 OF 4

STATE OF MISSOURI
THANKAM MATHEW
NUMBER PE-2014000056
PROFESSIONAL ENGINEER

THANKAM MATHEW - CIVIL
MO-PE-2014000056

DATE PREPARED
3/26/2025

ROUTE	STATE
291	MO
DISTRICT	SHEET NO.
KC	3

COUNTY
CASS/JACKSON

JOB NO.
JKU0065

CONTRACT ID.

PROJECT NO.

BRIDGE NO.

DESCRIPTION

DATE

MISSOURI HIGHWAYS AND TRANSPORTATION COMMISSION

105 WEST CAPITOL
JEFFERSON CITY, MO 65102
1-888-ASK-MODOT (1-888-275-6636)

FULL DEPTH PAVEMENT REPAIR

LOG MILE SB	ROUTE	WIDTH FT	LENGTH FT	FURNISHING AND PLACING CONCRETE MATERIAL FOR FULL DEPTH PAVEMENT REPAIR SY	SUBGRADE COMPACTION 6 IN DEPTH SY	TYPE 1 OR 5 AGGREGATE FOR BASE SY	FULL DEPTH SAW CUT LF	DOWELS BAR EA	REMARKS
37.065	291	36	10.0	40.00	4.00	4.00	128.0	60.00	
37.54	291	12	6.0	8.00	0.80	0.80	36.0	40.00	
37.61	291	12	6.0	8.00	0.80	0.80	36.0	40.00	
37.96	291	12	6.0	8.00	0.80	0.80	36.0	40.00	
38.265	291	24	6.0	16.00	1.60	1.60	54.0	40.00	
38.811	291	12	6.0	8.00	0.80	0.80	36.0	40.00	
38.822	291	12	6.0	8.00	0.80	0.80	36.0	40.00	
39.18	291	24	6.0	16.00	1.60	1.60	54.0	40.00	
39.402	291	8	15.0	13.33	1.33	1.33	61.0	60.00	
10.584	291	12	6.0	8.00	0.80	0.80	36.0	40.00	
11.038	291	24	6.0	16.00	1.60	1.60	54.0	40.00	
11.127	291	12	6.0	8.00	0.80	0.80	36.0	40.00	
11.204	291	12	6.0	8.00	0.80	0.80	36.0	40.00	
11.313	291	12	6.0	8.00	0.80	0.80	36.0	40.00	
11.765	291	12	6.0	8.00	0.80	0.80	36.0	40.00	
11.896	291	12	6.0	8.00	0.80	0.80	36.0	40.00	
Various	291	2	250.0	55.56	5.56	5.56	166.7	580.00	VAR. CENTERLINE
Various	291	4	400.0	177.78	17.78	17.78	139.3	500.00	VAR. SHOULDER
			SUBTOTAL	422.7	42.3	42.3	1053.0	1760.0	
			20% CONTINGENCY	84.5	8.5	8.5	210.6	352.0	
			PAY TOTAL	507.2	50.8	50.8	1263.6	2112.0	

EARTHWORK

STATION	STATION	LOCATION	CLASS A EXCAVATION CY	COMPACTION EMBANKMENT CY	EXCESS	REMARK
274+00.00	297+56.00	ROUTE 291 RT	1239	640.3	470.6	
297+56.00	310+50.00	ROUTE 291 RT	565.2	145	391.2	
		SUBTOTAL	1804.2	785.3		
		PAY TOTAL	1804	785		

163RD STREET EARTHWORK INCLUDED IN RTE 291 EARTHWORK QUANTITIES.

BITUMINOUS CENTERLINE RUMBLE STRIP

LOG MILE	LOG MILE	ROUTE	LENGTH STA.	REMARKS
37.211	39.307	291	110.7	BEGIN SOUTH OF BRIDGE
37.512	38.184	291	-35.5	EXCEPT WIDENING
		PAY TOTAL	75.2	

PAVEMENT WIDENING

SHEET NO.	SB LOG MILE/ STATION	SB LOG MILE/ STATION	LOCATION	SIDE	TYPE 5 AGGR FOR BASE (6 IN. THICK) SY	OPTIONAL PAVEMENT SY	REMARK
PAVEMENT WIDENING							
4	37.512	37.516	RTE 291	RT			WIDTH 4.5'
	274+05.19	274+25.19	RTE 291	RT	10	10	
4	37.516	37.641	RTE 291	RT			TAPER 4.5' TO 16.5'
	274+25.19	280+85.11	RTE 291	RT	765.3	765.3	
4,5,6	37.641	37.807	RTE 291	RT			WIDTH 16.5'
	280+85.11	289+60.74	RTE 291	RT	1598.2	1598.2	
6	37.807	37.841	RTE 291	RT			TAPERS 16.5' TO 28.5'
	289+60.74	291+40.74	RTE 291	RT	460.4	460.4	
6	37.841	37.881	RTE 291	RT			WIDTH 28.5' TO 42.5'
	291+40.74	293+50.74	RTE 291	RT	846.1	846.1	
6	37.881	37.960	RTE 291	RT			WIDTH 42.5'
	293+50.74	297+67.76	RTE 291	RT	1910.2	1910.2	
6	37.960	37.977	RTE 291	RT			TAPERS 28.5' TO 16.5'
	297+67.76	298+56.29	RTE 291	RT	299.6	299.6	
6	37.977	38.055	RTE 291	RT			WIDTH 16.5'
	298+56.29	303+35.80	RTE 291	RT	757.1	757.1	
6	38.055	38.180	RTE 291	RT			TAPERS 16.5' TO 4.5'
	303+35.80	309+95.82	RTE 291	RT	794.5	794.5	
6,7	38.180	38.184	RTE 291	RT			WIDTH 4.5'
	309+95.82	310+15.79	RTE 291	RT	10	10	
				SUBTOTAL	7451.4	7451.4	
				PAY TOTAL	7451	7451.4	

BITUMINOUS SHOULDER RUMBLE STRIP

LOG MILE	LOG MILE	ROUTE	AVG. ENTRANCE WIDTH FT	EXCEPTION LENGTH FT	LENGTH STA.	REMARKS
36.6	39.317	291			286.92	
	36.865	291 E	42	222	-2.2	SE MEADOWBROOK
	36.892	291 W	15	195	-2.0	155TH ST W
	36.889	291	25	205	-2.1	PRIVATE RESIDENTIAL ENTRANCE
	37.110	291 E	30	210	-2.1	LAKE WINNEBAGO DR
	37.561	291 W	36	216	-2.2	DAVE AUTO REPAIR ENTRANCE
	37.738	291 E	38	218	-2.2	KIDWELL RD
37.512	38.184	291		35.5	-0.4	SB WIDENING
	38.238	291 W	14	194	-1.9	PRIVATE RESIDENTIAL ENTRANCE
	38.354	291 W	10	190	-1.9	PRIVATE RESIDENTIAL ENTRANCE
	38.422	291 E	18	198	-2.0	FIELD ENTRANCE
38.461	38.595	291 E		7.1	-0.1	WILD HORSE PKWY
	38.663	291	40	220	-2.2	CEMENTECH ENTRANCE
	38.898	291	24	204	-2.0	171ST STREET
	38.927	291	14	194	-1.9	
	38.927	291	26	206	-2.1	
	38.960	291	16	196	-2.0	
	39.057	291	16	196	-2.0	
	39.104	291	12	192	-1.9	
	39.153	291	50	230	-2.3	SCRAP YARD ENTRANCE
	39.264	291	60	240	-2.4	THE PORCH ENTRANCE
				PAY TOTAL	249.0	

DRAINAGE STRUCTURES

SHEET NO	STATIONS	LOCATION	CLASS 3 EXCAVATION CY	CULVERT CLEANOUT EA	GROUP A 18" PIPE LF	GROUP A 18" FES EA	PIPE COLLAR TYPE A EA	REMARKS
24	287+23.90	ROUTE 291	1.2	1	1	1	1	
24	295+54.59	ROUTE 291	2.7	1	22.3	1	1	
		SUBTOTAL	3.9	2	23.3	2	2	
		PAY TOTAL	4	2	23	2	2	

OPTIONAL SHOULDER RUMBLE STRIP

STATION	STATION	ROUTE	LENGTH STA.	REMARKS
274+05	289+10	RT RTE 291	15.1	
299+07	310+16	RT RTE 291	11.1	
		SUBTOTAL	26.2	
		PAY TOTAL	26.2	

OPTIONAL SHOULDER RUMBLE STRIP WILL BE PAID FOR AS BID ITEM NO. 626-99.09

SUMMARY OF QUANTITIES
SHEET 2 OF 4

STATE OF MISSOURI
THANKAM MATHEW
NUMBER PE-2014000056
PROFESSIONAL ENGINEER

THANKAM MATHEW - CIVIL
MO-PE-2014000056

DATE PREPARED	
3/26/2025	
ROUTE 291	STATE MO
DISTRICT KC	SHEET NO. 3
COUNTY CASS/JACKSON	
JOB NO. JKU0065	
CONTRACT ID.	
PROJECT NO.	
BRIDGE NO.	

DESCRIPTION

DATE

MISSOURI HIGHWAYS AND TRANSPORTATION COMMISSION
105 WEST CAPITOL
JEFFERSON CITY, MO 65102
1-888-ASK-MODOT (1-888-275-6636)

PAVEMENT MARKINGS

ROUTE	LOG MILE SB	LOG MILE SB	STA	STA	LENGTH	HIGH BUILD WATERBORNE PAVEMENT MARKING PAINT, TYPE L BEADS: 6" WHITE SOLID LF	6" WHITE DOTTED LF	4" YELLOW SOLID LF	4" YELLOW INTERMITTENT LF	PREFORMED THERMOPLASTIC PAVEMENT MARKING: 24" WHITE LF	24" YELLOW LF	LEFT/RIGHT TURN ARROW EACH	REMARKS
RESURFACING													
SB 291	36.560	36.683			649.44	649.4		649.4			196.25		
NB 291	12.717	12.77			279.84	279.8		279.8					
291	36.683	36.75			353.76	707.5		707.5					
291	36.75	36.797			248.16	496.3		992.6			43.25		
291	36.797	37.036			1261.92	2523.8		2523.8	630.96				
291	37.036	37.118			432.96	1013.9		660.0				2	SB LEFT TURN TO WINNEBEGO
291	37.118	37.249			691.68	1353.4		2766.7			80		
291	37.249	37.512			1388.640	2777.3		2777.3					
	37.512	38.184	SEE NEW PAVEMENT TURN LANES										
291	38.184	38.288			549.12	1098.2		120.0	137.28				
291	38.288	38.461			913.44	2016.9		2266.9			28	3	SB LEFT TURN TO 167TH
291	38.461	38.595			707.52	1703.3		2830.1			120	3	NB RIGHT TURN TO 167TH
291	38.595	39.317			3812.16	7624.3		4360.2	816.04				
NEW PAVEMENT TURN LANES													
291	37.512		274+25.34	285+55.43				3981.0			144.3		LEFT TURN TO KIDWELL
291			280+85.26	285+55.43		289.0	56.9					2	LEFT TURN TO KIDWELL
291			286+20.48	297+34.23				4533.3			373.6		CENTER MEDIAN
291			289+60.91	297+36.30		1212.4	59.9			209.9548		3	RIGHT TURN TO 163RD
291			298+00.00	309+95.78				3939.2			151.2		LEFT TURN TO 163RD
291			298+00.00	303+35.78		290.0	57.0					2	LEFT TURN TO 163RD
291			274+05.19	310+15.79		3673.6							NB EDGELINE
291			274+05.19	310+15.79		4924.3							SB EDGELINE
163RD ST		38.184	297+52.91					186.0		12			
					SUBTOTAL	32633.4	173.8	33573.8	1584.28	221.9548	1136.6	15	
					PAY TOTAL	32807		35158		222	1137	15	

RELOCATION OF EXISTING SIGNS

SIGNS: SHEET NO	SIGN NO.	STATION	OFFSET	ROUTE	2 IN. PSST POST: POST NO. 1	TOTAL ITEM NO. 9031270A LF	ANCHOR DRIVEN 12 GA. ITEM NO. 9031271A EA	RELOCATE SIGN ITEM NO. 9039902 EA	REMARK
19	1	0+52.86, LT	27.0	163RD	14.00	14.00	1	1	EXIST. R1-1
19	2	0+45.25, LT	33.0	163RD	10.75	10.75	1	1	EXIST. STREET SIGNS
					SUBTOTAL	24.75	2.0	2.0	
					PAY TOTAL	25.0	2.0	2.0	

GUARDRAIL

SHEET NO.	STATION	STATION	LOCATION	SHAPING SLOPES, CLASS III 100FT	MGS GUARDRAIL LF	TYPE A CRASHWORTHY END TERMINAL (MASH) EACH	REMARK
4	265+08	267+60	LT ROUTE 291	2.5	200	1	EXTEND EXISTING GUARDRAIL
			SUBTOTAL	2.5	200	1	
			TOTAL	3	200	1	

EROSION & SEDIMENT CONTROL

SHEET NO.	STATION	STATION	OFFSET	LOCATION	TEMPORARY SEDIMENT TRAP EXC. CY	TEMPORARY SEDIMENT TRAP ROCK CY	ROCK DITCH CHECK LF	ALT. DITCH CHECK LF	SEDIMENT REMOVAL CY	SILT FENCE LS	SEEDING - COOL SEASON GRASSES AC	TYPE 1B EROSION CONTROL BLANKET SY	REMARK
4	273+60	276+10	RT	ROUTE 291				88	11				11 @ 25' SPACING
5	277+14		75' RT	ROUTE 291			14		1				
5	277+60	286+64	RT	ROUTE 291				310	31				31 @ 30' SPACING
5	286+95		81' RT	ROUTE 291	2.7	1.7			1				
5	287+39	287+85	RT	ROUTE 291				48	4				4 @ 15' SPACING
5	288+60	289+36	RT	ROUTE 291				20	2				2 @ 75' SPACING
6	290+00	295+47	RT	ROUTE 291					5	540			
6	295+53		95' RT	ROUTE 291	4	2			1				
6	295+61	297+22	RT	ROUTE 291					2	178			AT 163RD ST RADIUS
6	279+65	299+23	RT	ROUTE 291				42	7				7 @ 37' SPACING
6	299+98	308+14	RT	ROUTE 291				88	11				11 @ 75' SPACING
7	307+26	310+01	RT	ROUTE 291				20	2				2 @ 75' SPACING
	274+05	297+45	RT	ROUTE 291							0.37	1806.7	N/O 163RD ST.
	297+68	310+16	RT	ROUTE 291							0.21	1004.7	S/O 163RD ST,
				SUBTOTAL	6.7	3.7	14	616	78	718	0.58	2811.4	
				PAY TOTAL	6.7	3.7	14	616	78	718	0.6	2811	

SUMMARY OF QUANTITIES
SHEET 3 OF 4

STATE OF MISSOURI
THANKAM MATHEW
NUMBER PE-2014000056
PROFESSIONAL ENGINEER
THANKAM MATHEW - CIVIL
MO-PE-2014000056

DATE PREPARED	
3/26/2025	
ROUTE	STATE
291	MO
DISTRICT	SHEET NO.
KC	3
COUNTY	
CASS/JACKSON	
JOB NO.	
JKU0065	
CONTRACT ID.	
PROJECT NO.	
BRIDGE NO.	

DESCRIPTION
DATE

MISSOURI HIGHWAYS AND TRANSPORTATION COMMISSION
105 WEST CAPITOL
JEFFERSON CITY, MO 65102
1-888-ASK-MODOT (1-888-275-6636)

SIGN	SIZE IN.	AREA SQ.FT.	QTY EACH	TOTAL AREA SQ.FT.	QTY RELOC EACH	TOTAL RELOC SQ.FT.	SIGN NUM.	DESCRIPTION
WARNING SIGNS								
WO1-1L	48X48	16.00						TURN (SYMBOL LEFT)
WO1-1R	48X48	16.00						TURN (SYMBOL RIGHT)
WO1-2L	48X48	16.00						CURVE (SYMBOL LEFT)
WO1-2R	48X48	16.00						CURVE (SYMBOL RIGHT)
WO1-3L	48X48	16.00						REVERSE TURN (SYMBOL LEFT)
WO1-3R	48X48	16.00						REVERSE TURN (SYMBOL RIGHT)
WO1-4L	48X48	16.00						REVERSE CURVE (SYMBOL LEFT)
WO1-4R	48X48	16.00						REVERSE CURVE (SYMBOL RIGHT)
WO1-4bL	48X48	16.00						DOUBLE ARROW REVERSE CURVE (SYMBOL LEFT)
WO1-4bR	48X48	16.00						DOUBLE ARROW REVERSE CURVE (SYMBOL RIGHT)
WO1-4cL	48X48	16.00						TRIPLE ARROW REVERSE CURVE (SYMBOL LEFT)
WO1-4cR	48X48	16.00						TRIPLE ARROW REVERSE CURVE (SYMBOL RIGHT)
WO1-6	60X30	12.50						HORIZONTAL ARROW (SYMBOL)
WO1-6a	72X36	18.00						HORIZ. ARROW (SYMBOL ON PERMANENT BARRICADE)
WO1-7	60X30	12.50						DOUBLE HEAD HORIZONTAL ARROW (SYMBOL)
WO1-7a	72X36	18.00						DOUBLE HEAD HORIZ. ARROW (SYMBOL ON PERM. BARR.)
WO1-8	18X24	3.00						CHEVRON (SYMBOL)
WO1-8a	30X36	7.50						CHEVRON (SYMBOL FOR DIVIDED HIGHWAYS)
WO3-1	48X48	16.00						STOP AHEAD (SYMBOL)
WO3-2	48X48	16.00						YIELD AHEAD (SYMBOL)
WO3-3	48X48	16.00						SIGNAL AHEAD (SYMBOL)
WO3-4	48X48	16.00						BE PREPARED TO STOP
WO3-5	48X48	16.00						SPEED LIMIT AHEAD
WO4-1L	48X48	16.00						MERGE (SYMBOL FROM LEFT)
WO4-1R	48X48	16.00						MERGE (SYMBOL FROM RIGHT)
WO4-1aL	48X48	16.00						MERGE (LEFT)
WO4-1aR	48X48	16.00						MERGE (RIGHT)
WO5-1	48X48	16.00	2	32.00			43	ROAD/BRIDGE/RAMP NARROWS
WO5-3	48X48	16.00						ONE LANE BRIDGE
WO5-5	48X48	16.00						NARROW LANES
WO6-1	48X48	16.00						DIVIDED HIGHWAY (SYMBOL)
WO6-2	48X48	16.00						DIVIDED HIGHWAY END (SYMBOL)
WO6-3	48X48	16.00						TWO WAY TRAFFIC (SYMBOL)
WO7-3a	30X24	5.00						NEXT XX MILES (PLAQUE)
WO8-1	48X48	16.00						BUMP
WO8-2	48X48	16.00						DIP
WO8-3	48X48	16.00						PAVEMENT ENDS
WO8-4	48X48	16.00						SOFT SHOULDER
WO8-5	48X48	16.00						SLIPPERY WHEN WET (SYMBOL)
WO8-6	48X48	16.00						TRUCK CROSSING
WO8-6c	48X48	16.00						TRUCK ENTRANCE
WO8-7	36X36	9.00						LOOSE GRAVEL
WO8-7a	36X36	9.00						FRESH OIL / LOOSE GRAVEL
WO8-9	48X48	16.00						LOW SHOULDER
WO8-11	48X48	16.00						UNEVEN LANES
WO8-12	48X48	16.00						NO CENTER LINE
WO8-15	48X48	16.00						GROOVED PAVEMENT
WO8-15P	30X24	5.00						MOTORCYCLE (PLAQUE)
WO8-17L	48X48	16.00						SHOULDER DROP-OFF (SYMBOL LEFT)
WO8-17R	48X48	16.00						SHOULDER DROP-OFF (SYMBOL RIGHT)
WO8-17P	30X24	5.00						SHOULDER DROP-OFF (PLAQUE)
W10-1	42RND.	9.62						RAILROAD CROSSING
WO12-1	24X24	4.00						DOUBLE DOWN ARROW (SYMBOL)
WO12-2	48X48	16.00						LOW CLEARANCE (SYMBOL)
WO12-2x	24X18	3.00						LOW CLEARANCE (PLAQUE)
WO12-2a	84X24	14.00						OVERHEAD LOW CLEARANCE (FEET AND INCHES)
WO12-4	120X60	50.00						LOW CLEARANCE XX FT XX IN XX MILES AHEAD
WO12-5	120X60	50.00						WIDTH RESTRICTION XX FT XX IN XX MILES AHEAD
WO13-1	30X30	6.25						ADVISORY SPEED (PLAQUE)
WO16-2	30X24	5.00						XXX FEET (PLAQUE)
WO16-3	30X24	5.00						X MILE (PLAQUE)
WO20-1	48X48	16.00	8	128.00	3	48.00	2	ROAD/BRIDGE/RAMP WORK AHEAD
WO20-2	48X48	16.00	4	64.00			18	DETOUR AHEAD
WO20-3	48X48	16.00	4	64.00			55	ROAD CLOSED AHEAD
WO20-3a	48X49	17.00	2				57	ROAD CLOSED 500 FT
WO20-4	48X48	16.00	8	128.00	3	48.00	7	ONE LANE ROAD AHEAD
WO20-5	48X48	16.00						RIGHT/CENTER/LEFT LANE CLOSED AHEAD
WO20-5a	48X48	16.00						2 RIGHT/CENTER/LEFT LANES CLOSED AHEAD
WO20-6a	48X48	16.00						RIGHT/CENTER/LEFT LANE CLOSED
WO20-7a	48X48	16.00	6	96.00	3	48.00	8	FLAGGER (SYMBOL)
WO21-2	36X36	9.00						FRESH OIL
WO21-5	48X48	16.00	2	32.00			21	SHOULDER WORK / SHOULDER WORK AHEAD
WO22-1	48X48	16.00						BLASTING ZONE AHEAD
WO22-2	42X36	10.50						TURN OFF 2-WAY RADIO AND PHONE
WO22-3	42X36	10.50						END BLASTING ZONE
GO22-1	21X15	2.19	4	8.76				WET PAINT (ARROW PIVOTS)

SIGN	SIZE IN.	AREA SQ.FT.	QTY EACH	TOTAL SQ.FT.	QTY RELOC EACH	TOTAL RELOC SQ.FT.	SIGN NUM.	DESCRIPTION
GUIDE SIGNS								
E05-1	36X48	12.00						GORE EXIT
E05-2	48X36	12.00						EXIT OPEN
E05-2a	48X36	12.00						EXIT CLOSED
GO20-1	60X24	10.00						ROAD WORK NEXT XX MILES
GO20-2	48X24	8.00	2	16.00			26	END ROAD WORK
GO20-4	36X18	4.50	1	4.50			53	PILOT CAR FOLLOW ME
GO20-4a	42X30	8.75	3	26.25	3	26.25	60	PILOT CAR IN USE WAIT & FOLLOW
GO20-4a	18X12	1.50	10	15.00	5	7.50	58	PILOT CAR IN USE WAIT & FOLLOW
GO20-5aP	36X24	6.00	2	12.00			54	WORK ZONE (PLAQUE)
MO4-8a	24X18	3.00	2	6.00			52	END DETOUR
MO4-9L	48X36	12.00						DETOUR (LEFT)
MO4-9R	48X36	12.00						DETOUR (RIGHT)
MO4-9P	48X12	4.00						STREET NAME (PLAQUE)
MO4-10L	48X18	6.00						DETOUR ARROW (LEFT)
MO4-10R	48X18	6.00						DETOUR ARROW (RIGHT)
REGULATORY SIGNS								
R1-1	48X48	13.25						STOP
R1-2	48TRI.	6.93						YIELD
R1-2a	36X36	9.00						TO ONCOMING TRAFFIC (PLAQUE)
R1-3P	30X12	2.50						ALL WAY (PLAQUE)
R2-1	36X48	12.00	2	24.00			4	SPEED LIMIT 45
R2-1	36X49	12.00	2	24.00			25	SPEED LIMIT 55
R3-1	48X48	16.00						NO RIGHT TURN (SYMBOL)
R3-2	48X48	16.00						NO LEFT TURN (SYMBOL)
R3-3	36X36	9.00						NO TURNS
R3-4	48X48	16.00						NO U-TURN (SYMBOL)
R3-7L	30X30	6.25						LEFT LANE MUST TURN LEFT
R3-7R	30X30	6.25						RIGHT LANE MUST TURN RIGHT
R4-1	36X48	12.00						DO NOT PASS
R4-2	36X48	12.00						PASS WITH CARE
R4-7a	36X48	12.00						KEEP RIGHT (HORIZONTAL ARROW)
R4-8a	36X48	12.00						KEEP LEFT (HORIZONTAL ARROW)
R5-1	30X30	6.25						DO NOT ENTER
R5-1a	36X24	6.00						WRONG WAY
R6-1L	54X18	6.75						ONE WAY ARROW (LEFT)
R6-1R	54X18	6.75						ONE WAY ARROW (RIGHT)
R6-2L	24X30	5.00						ONE WAY (LEFT)
R6-2R	24X30	5.00						ONE WAY (RIGHT)
R9-9	24X12	2.00						SIDEWALK CLOSED
R9-11L	24X18	3.00						SIDEWALK CLOSED AHEAD, (ARROW LEFT) CROSS HERE
R9-11R	24X18	3.00						SIDEWALK CLOSED AHEAD, (ARROW RIGHT) CROSS HERE
R10-6	24X36	6.00						STOP HERE ON RED (45^ ARROW)
R11-2	48X30	10.00	2	20.00			29	ROAD CLOSED
R11-3a	60X30	12.50						ROAD CLOSED XX MILES AHEAD LOCAL TRAFFIC ONLY
R11-4	60X30	12.50	3	37.50			58	ROAD CLOSED TO THRU TRAFFIC
CONST-3A	60X48	20.00						FINE SIGN
CONST-3X	56X12	4.67						SPEEDING/PASSING (PLATE)
MISCELLANEOUS SIGNS								
CONST-5	48X36	12.00						POINT OF PRESENCE
CONST-5	96X48	32.00	2	64.00				POINT OF PRESENCE
CONST-8	48X36	12.00	2	24.00				WORK ZONE NO PHONE ZONE
DETOUR-1	36X78	19.50	12	234.00			50A	291 N DETOUR STRAIGHT
DETOUR-2	36X78	19.50	6	117.00			50B	291 N DETOUR ADVANCED RIGHT
DETOUR-3	36X78	19.50	6	117.00			50C	291 N DETOUR RIGHT
DETOUR-4	36X78	19.50	2	39.00			50D	291 N DETOUR ADVANCED LEFT
DETOUR-5	36X78	19.50	2	39.00			50E	291 N DETOUR LEFT
DETOUR-6	36X78	19.50	15	292.50			50F	291 S DETOUR STRAIGHT
DETOUR-7	36X78	19.50	2	39.00			50G	291 S DETOUR ADVANCED RIGHT
DETOUR-8	36X78	19.50	2	39.00			50H	291 S DETOUR RIGHT
DETOUR-9	36X78	19.50	4	78.00			50J	291 S DETOUR ADVANCED LEFT
DETOUR-10	36X78	19.50	5	97.50			50K	291 S DETOUR LEFT
SPECIAL-1	96X48	32.00	1	32.00			56A	291 S CLOSED 3 MILES AHEAD
SPECIAL-2	96X48	32.00	1	32.00			56B	291 N CLOSED 1 MILE AHEAD

	TOTAL
616-10.05 CONSTRUCTION SIGNS	1983
616-10.10 RELOCATED SIGNS	178

EFFECTIVE: 07-01-2024

ITEM NUMBER	TOTAL QTY	DESCRIPTION
6122008		IMPACT ATTENUATOR 40 MPH (SAND BARRELS)
6122009		IMPACT ATTENUATOR 45 MPH (SAND BARRELS)
6122010		IMPACT ATTENUATOR 50 MPH (SAND BARRELS)
6122012		IMPACT ATTENUATOR 55 MPH (SAND BARRELS)
6122014		IMPACT ATTENUATOR 60 MPH (SAND BARRELS)
6122017		IMPACT ATTENUATOR 65 MPH (SAND BARRELS)
6122019		IMPACT ATTENUATOR 70 MPH (SAND BARRELS)
6122020		REPLACEMENT SAND BARREL
6122030		IMPACT ATTENUATOR (RELOCATION)
6123001		TRUCK MOUNTED ATTENUATOR (TMA)
6161008	4	ADVANCED WARNING RAIL SYSTEM
6161012		BUOYS (BOATS KEEP OUT)
6161013		BUOYS (NO WAKE)
6161014		SPECIAL SIGN ASSEMBLY (BOATS KEEP OUT)
6161025	183	CHANNELIZER (TRIM LINE)
6161030	6	TYPE III MOVEABLE BARRICADE
6161033		DIRECTION INDICATOR BARRICADE
6161040		FLASHING ARROW PANEL
6161047		TYPE III OBJECT MARKER
6161055		SEQUENTIAL FLASHING WARNING LIGHT
6161070		TUBULAR MARKER
6161095		RADAR SPEED ADVISORY SYSTEM
6161096		CHANGEABLE MESSAGE SIGN, COMMISSION FURNISHED/RETAINED
6161098A	3	CHANGEABLE MESSAGE SIGN WITHOUT COMM. INTERFACE- CONTRACTOR FURNISHED/RETAINED
6161099		CHANGEABLE MESSAGE SIGN WITH COMM. INTERFACE- CONTRACTOR FURNISHED/RETAINED
6162000A		WORK ZONE TRAFFIC SIGNAL SYSTEM
6162002		TEMPORARY LONG-TERM RUMBLE STRIPS
6173600D		TEMPORARY TRAFFIC BARRIER CONTRACTOR FURNISHED/RETAINED
6173602B		TEMPORARY TRAFFIC BARRIER CONTRACTOR FURNISHED/COMMISSION RETAINED
6174000A		TEMP. TRAFFIC BARRIER HEIGHT TRANSITION
6175010A		RELOCATING TEMPORARY TRAFFIC BARRIER
6176000B		TEMPORARY TRAFFIC BARRIER COMMISSION FURNISHED/RETAINED
6177000B		TEMP. TRAFFIC BARRIER HEIGHT TRANSITION COMMISSION FURNISHED/RETAINED
6208064A		TEMPORARY RAISED PAVEMENT MARKER
9029400		TEMPORARY TRAFFIC SIGNALS
9029401		TEMPORARY TRAFFIC SIGNALS AND LIGHTING

SUMMARY OF QUANTITIES
SHEET 4 OF 4

STATE OF MISSOURI
THANKAM MATHEW
NUMBER PE-2014000056
PROFESSIONAL ENGINEER
03/27/2025 2:15:49 PM
THANKAM MATHEW-CIVIL
MO-PE-2014000056

DATE PREPARED	
3/26/2025	
ROUTE 291	STATE MO
DISTRICT KC	SHEET NO. 3
COUNTY CASS/JACKSON	
JOB NO. JKU0065	
CONTRACT ID.	
PROJECT NO.	
BRIDGE NO.	

DESCRIPTION

DATE

MISSOURI HIGHWAYS AND TRANSPORTATION COMMISSION
105 WEST CAPITOL
JEFFERSON CITY, MO 65102
1-888-ASK-MODOT (1-888-275-6636)

ANY WORK INDICATED ON THE PLANS THAT EXTENDS BEYOND THE PROJECT LIMITS IS CONSIDERED INCIDENTAL TO AND A PART OF THE CONSTRUCTION OF THIS PROJECT.

ALL BEARINGS SHOWN ARE MODIFIED STATE PLANE BEARINGS, WESTERN ZONE.

PROJECT AVERAGE GRID FACTOR =0.99990220

TEMPORARY EROSION CONTROL LEGEND

(A) ALTERNATE DITCH CHECK

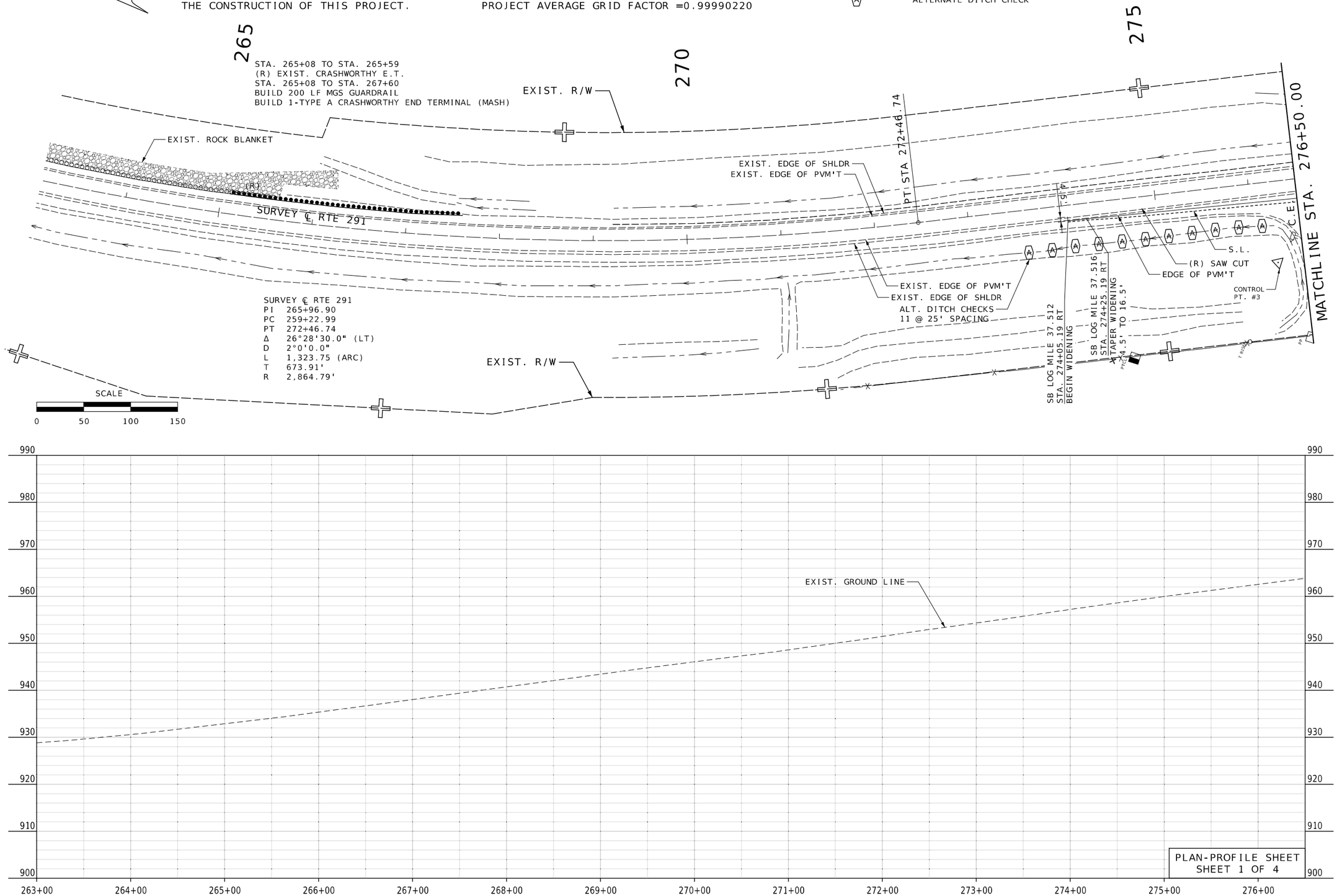

PLAN-PROFILE SHEET
SHEET 1 OF 4

STATE OF MISSOURI
THANKAM MATHEW
NUMBER PE-2014000056
PROFESSIONAL ENGINEER

03/27/2025 2:16 PM
THANKAM MATHEW - CIVIL
MO-PE-2014000056

DATE PREPARED	
3/26/2025	
ROUTE 291	STATE MO
DISTRICT KC	SHEET NO. 4
COUNTY CASS/JACKSON	
JOB NO. JKU0065	
CONTRACT ID.	
PROJECT NO.	
BRIDGE NO.	

DATE	DESCRIPTION

MISSOURI HIGHWAYS AND TRANSPORTATION COMMISSION

105 WEST CAPITOL
JEFFERSON CITY, MO 65102
1-888-ASK-MODOT (1-888-275-6636)

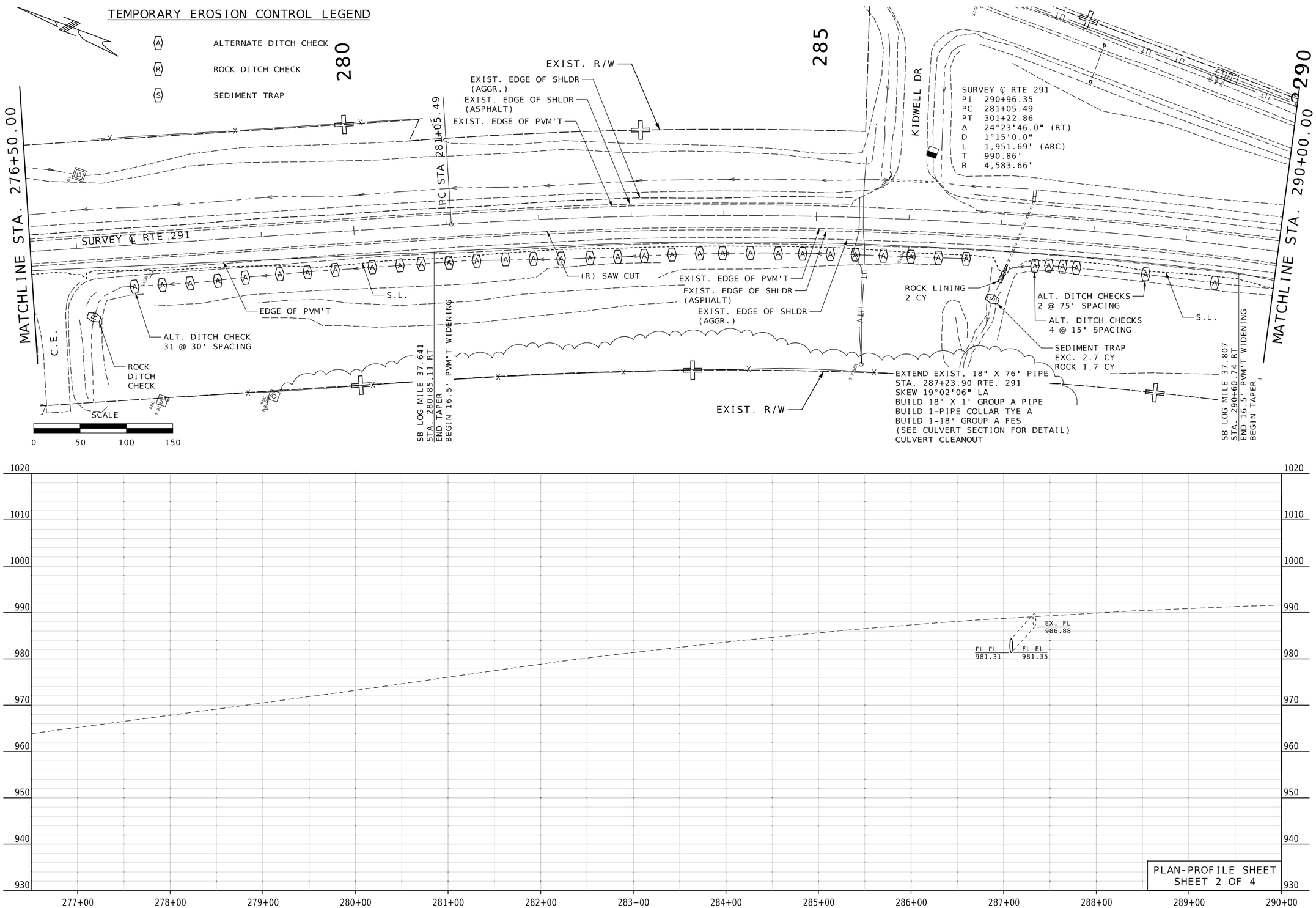

PLAN-PROFILE SHEET
SHEET 2 OF 4

STATE OF MISSOURI
THANKAM MATHEW
NUMBER PE-2014000056
PROFESSIONAL ENGINEER
03/27/2025 2:50:48 PM
THANKAM MATHEW - CIVIL
MO-PE-2014000056

DATE PREPARED	3/26/2025
ROUTE	291
STATE	MO
DISTRICT	KC
SHEET NO.	5
COUNTY	CASS/JACKSON
JOB NO.	JKU0065
CONTRACT ID.	
PROJECT NO.	
BRIDGE NO.	

DATE	DESCRIPTION

MISSOURI HIGHWAYS AND TRANSPORTATION COMMISSION
105 WEST CAPITOL
JEFFERSON CITY, MO 65102
1-888-ASK-MODOT (1-888-275-6636)

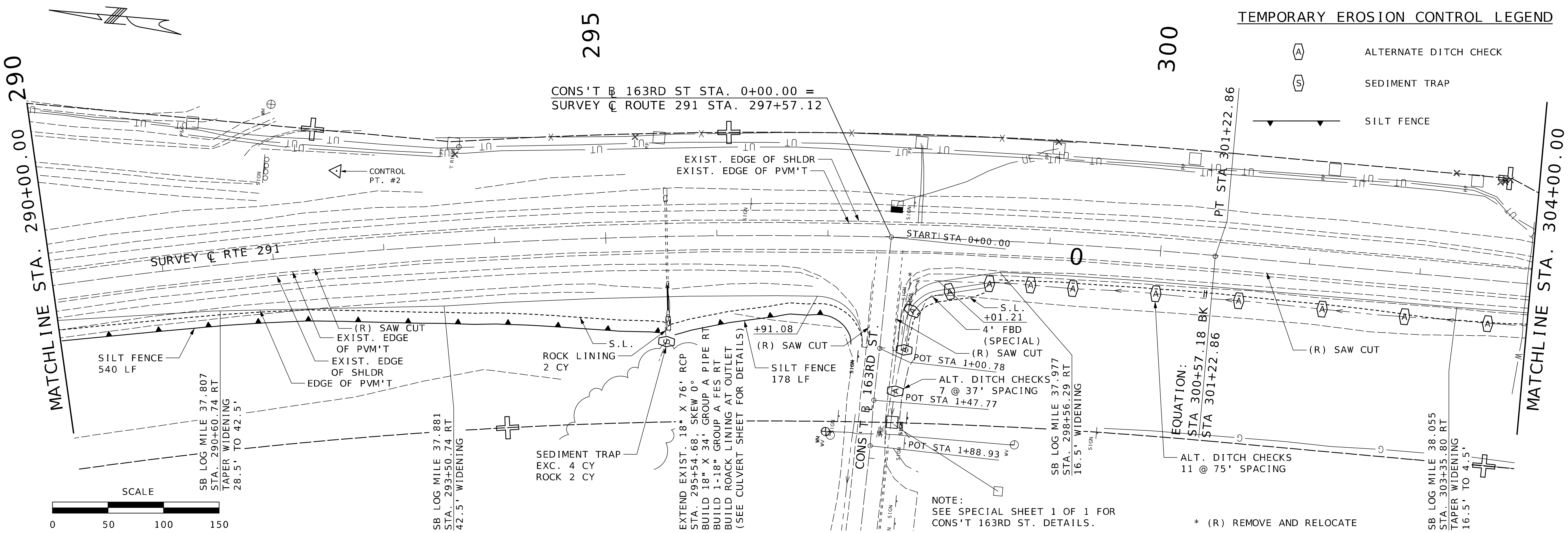

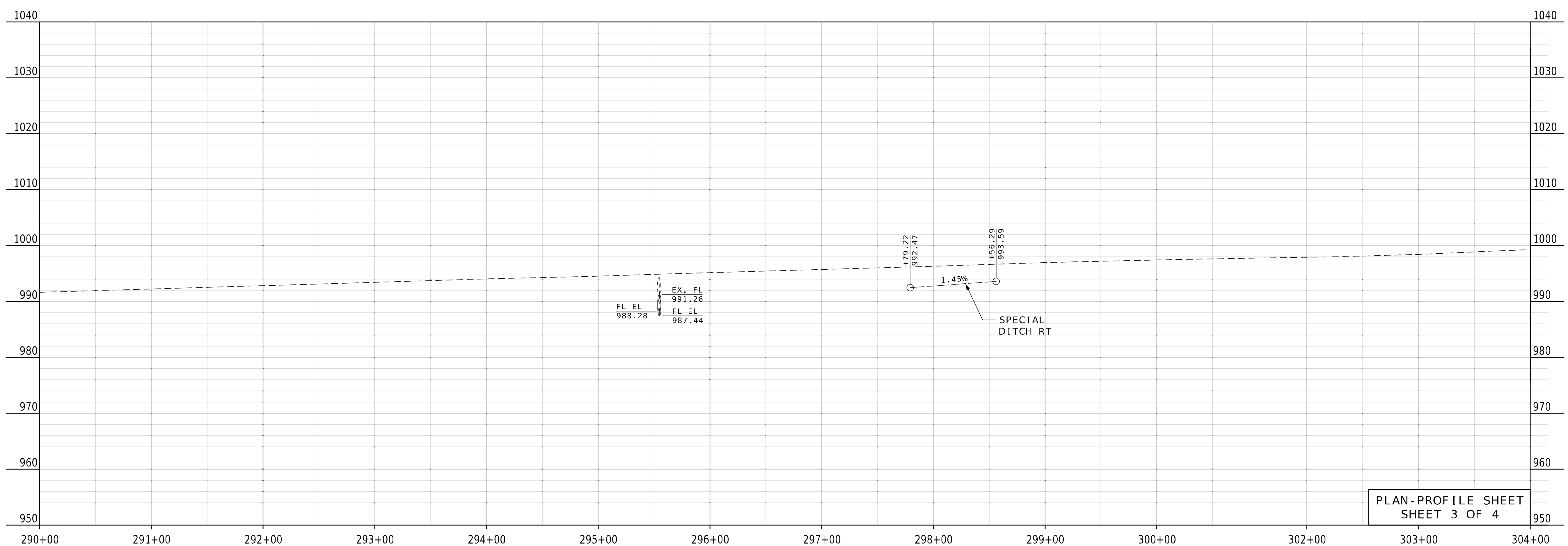

PLAN-PROFILE SHEET
SHEET 3 OF 4

STATE OF MISSOURI
THANKAM MATHEW
NUMBER PE-2014000056
PROFESSIONAL ENGINEER
THANKAM MATHEW - CIVIL
MO-PE-2014000056

DATE PREPARED	3/26/2025
ROUTE	291
STATE	MO
DISTRICT	KC
SHEET NO.	6
COUNTY	CASS/JACKSON
JOB NO.	JKU0065
CONTRACT ID.	
PROJECT NO.	
BRIDGE NO.	

DESCRIPTION

DATE

MISSOURI HIGHWAYS AND TRANSPORTATION COMMISSION

105 WEST CAPITOL
JEFFERSON CITY, MO 65102
1-888-ASK-MODOT (1-888-275-6636)

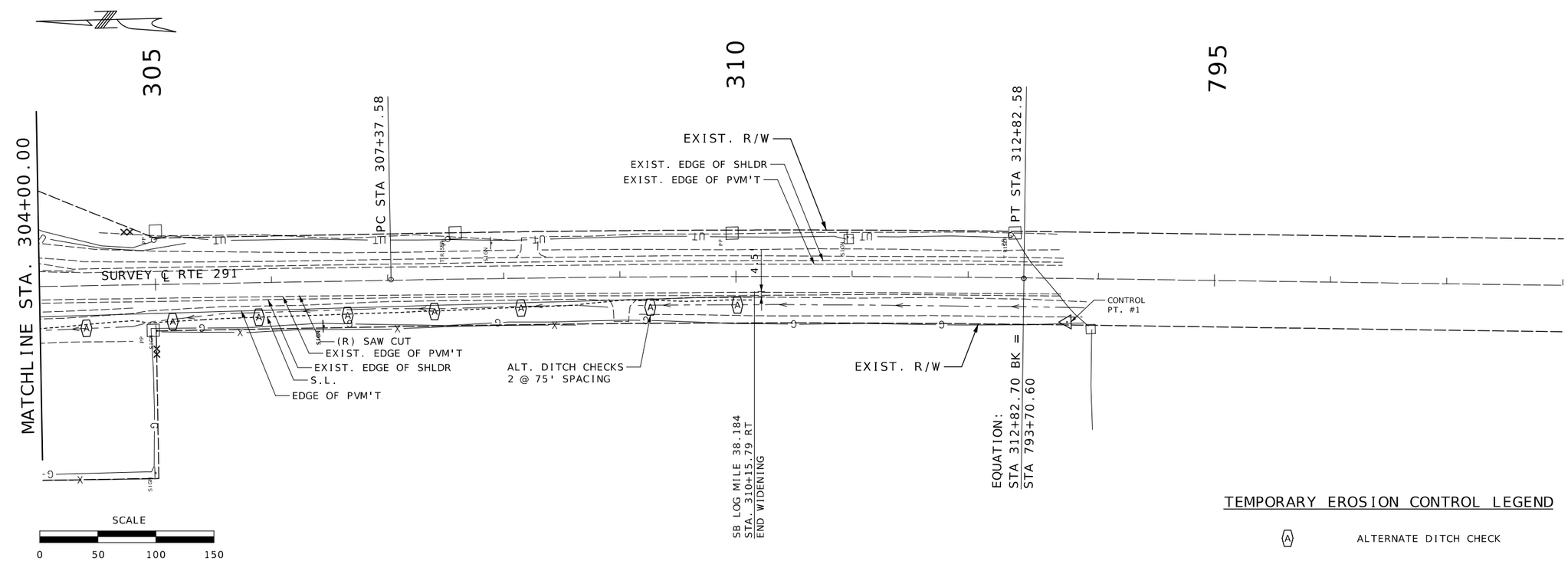

TEMPORARY EROSION CONTROL LEGEND

(A) ALTERNATE DITCH CHECK

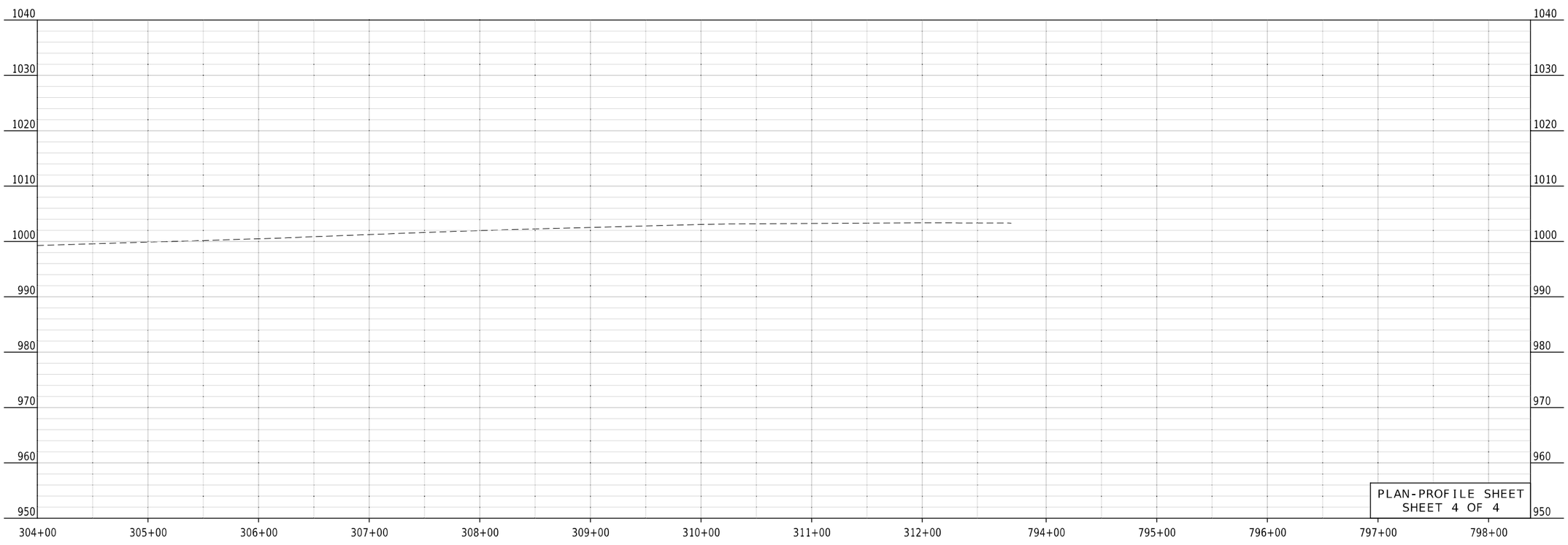

STATE OF MISSOURI
THANKAM MATHEW
NUMBER PE-2014000056
PROFESSIONAL ENGINEER

03/26/2025 10:30:36 AM
THANKAM MATHEW - CIVIL
MO-PE-2014000056

DATE PREPARED	
3/26/2025	
ROUTE 291	STATE MO
DISTRICT KC	SHEET NO. 7
COUNTY CASS/JACKSON	
JOB NO. JKU0065	
CONTRACT ID.	
PROJECT NO.	
BRIDGE NO.	

DATE	DESCRIPTION

MISSOURI HIGHWAYS AND TRANSPORTATION COMMISSION

105 WEST CAPITOL
JEFFERSON CITY, MO 65102
1-888-ASK-MODOT (1-888-275-6636)

CONTROL POINT #1

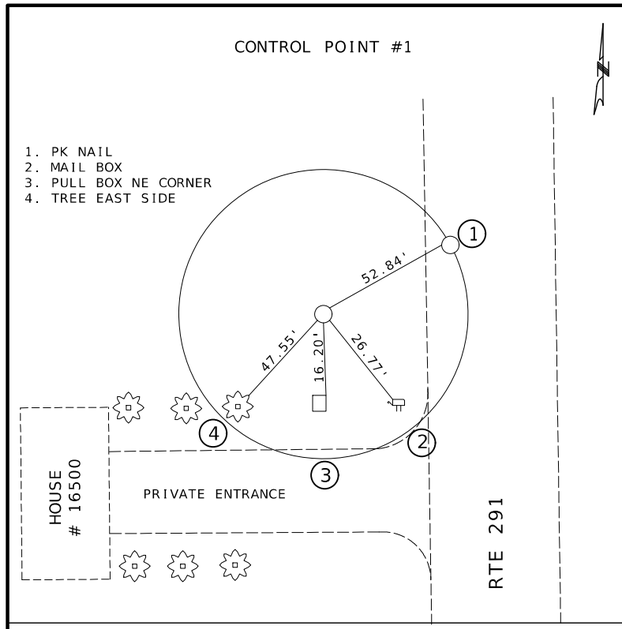

SET WITH 5/8" REBAR AND SET WITH
A PINK MODOT CONTROL CAP 3/10TH
MILE ± S/O SW 163RD ST.

NORTHING: 965,858.465
EASTING: 2,825,168.242
ELEVATION: 1,002.17'

CONTROL POINT #2

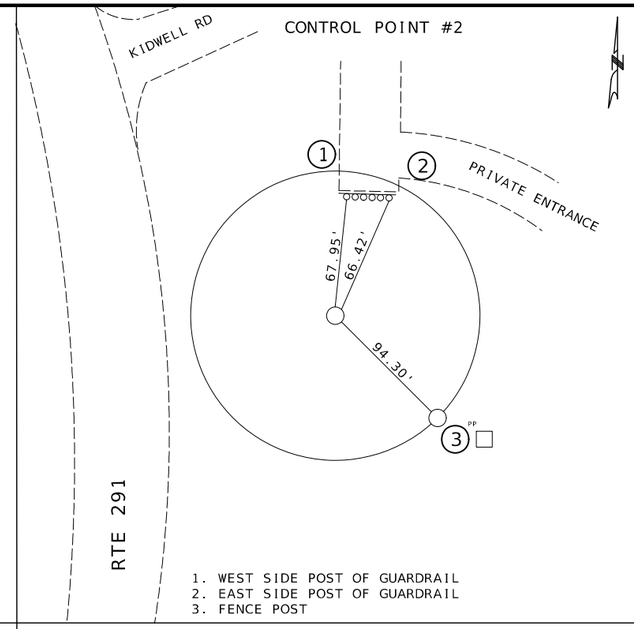

SET WITH 5/8" REBAR AND SET WITH
A PINK MODOT CONTROL CAP
AT RTE 291 AND KIDWELL RD

NORTHING: 967,822.192
EASTING: 2,825,230.969
ELEVATION: 994.02'

CONTROL POINT #3

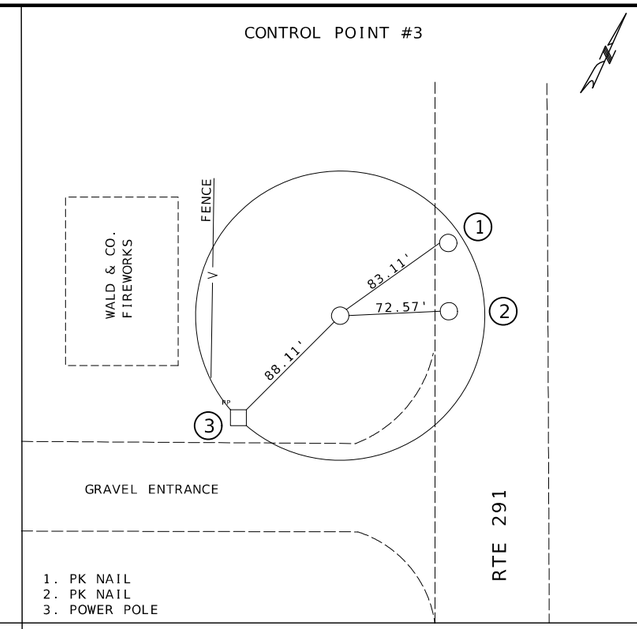

SET WITH 5/8" REBAR AND SET WITH
A PINK MODOT CONTROL CAP 1/4TH
MILE ± N/O KIDWELL RD

NORTHING: 969,321.388
EASTING: 2,825,548.043
ELEVATION: 960.83'

REFERENCE POINT SHEET
SHEET 1 OF 1

STATE OF MISSOURI
THANKAM MATHEW
NUMBER
PE-2014000056
PROFESSIONAL ENGINEER
04/01/2025 9:54:44 AM
THANKAM MATHEW - CIVIL
MO-PE-2014000056

DATE PREPARED	
3/26/2025	
ROUTE 291	STATE MO
DISTRICT KC	SHEET NO. 8
COUNTY CASS/JACKSON	
JOB NO. JKU0065	
CONTRACT ID.	
PROJECT NO.	
BRIDGE NO.	

DATE	DESCRIPTION

MISSOURI HIGHWAYS AND TRANSPORTATION COMMISSION

105 WEST CAPITOL
JEFFERSON CITY, MO 65102
1-888-ASK-MODOT (1-888-275-6636)

ALL PROJECT COORDINATES HAVE BEEN PROJECTED FROM THE MISSOURI STATE PLANE COORDINATE (SPC) SYSTEM OF 1983 USING AN AVERAGE PROJECT PROJECTION (GRID TO GROUND) FACTOR. TO GET BACK TO STATE PLANE COORDINATES, MULTIPY THE PROJECT COORDINATES BY THE AVERAGE GRID FACTOR AS SHOWN IN THE "REFERENCE CONTROL INFORMATION" PORTION OF THIS TABLE.

PROJECT COORDINATE INFORMATION

COORDINATE SYSTEM	MODIFIED STATE PLANE(GROUND)
HORIZONTAL DATUM	NAD83
VERTICAL DATUM	NAVD88
GEOID MODEL	GEOID18
ELEVATIONS DETERMINED BY	GPS OBSERVATION
PROJECT PROJECTION FACTOR	1.00009781

REFERENCE CONTROL INFORMATION

COORDINATE SYSTEM	MO COORDINATE SYSTEM OF 1983
CONTROL STATION	MO GEOGRAPHIC REFERENCE SYSTEM
DESIGNATION	CA-09
CORS_ID	XX
PID	37009
LATITUDE	38?50'05.32673"
LONGITUDE	094?22'35.36856"
NORTHING (M)	296119.6620
EASTING (M)	860723.3190
ZONE	WEST
PROJECT AVERAGE GRID FACTOR	0.99990220

EXAMPLE OF PROJECT COORDINATE TO S.P.C.

PROJECT NORTHING X AVERAGE GRID FACTOR
= STATE PLANE NORTHING
PROJECT EASTING X AVERAGE GRID FACTOR
= STATE PLANE EASTING

EXAMPLE: CONTROL POINT #1
N 965,858.465 X 0.99990220 = N 965,764.004
E 2,825,168.242 X 0.99990220 = E 2,824,891.940

LINEAR UNIT CONVERSION

1 METER = 3.280833333 US SURVEY FEET (USFT)

COORDINATE POINT LISTING

				MODIFIED STATE PLANE (GROUND)				
SHEET NO	STATION	LOCATION	OFFSET (USFT)	NORTHING (US SURVEY FT)	EASTING (US SURVEY FT)	ELEVATION (US SURVEY FT)	DESCRIPTION	GPK POINT ID
PROJECT CONTROL POINTS								
7	793+73.50	SURVEY ℄ RTE 291	37.46 RT	965,858.465	2,825,168.242	1,002.17	CONTROL POINT #1	1
6	292+63.42	SURVEY ℄ RTE 291	74.17 LT	967,822.192	2,825,230.969	994.02	CONTROL POINT #2	2
4	276+22.25	SURVEY ℄ RTE 291	86.47 RT	969,321.388	2,824,548.043	960.83	CONTROL POINT #3	3
ALIGNMENTS								
	247+70.00	SURVEY ℄ RTE 291		972,140.263	2,824,276.834		BEGINNING ℄ RTE 291	
	259+22.99	SURVEY ℄ RTE 291		970,988.309	2,824,227.955		P.C.	
	265+96.90	SURVEY ℄ RTE 291	78.20 RT	970,315.006	2,824,199.385		H.P.I	
4	272+46.74	SURVEY ℄ RTE 291		969,699.577	2,824,473.975		P.T.	
5	281+05.49	SURVEY ℄ RTE 291		968,915.344	2,824,823.880		P.C.	
6	290+96.35	SURVEY ℄ RTE 291	105.88 LT	968,010.468	2,825,227.615		H.P.I	
6	300+57.18	SURVEY ℄ RTE 291		967,019.628	2,825,221.547		EQUATION STA. BK	
6	301+22.86	SURVEY ℄ RTE 291		967,019.628	2,825,221.547		EQUATION STA. AHD	
6	301+22.86	SURVEY ℄ RTE 291		967,019.626	2,825,221.547		P.T.	
7	307+37.58	SURVEY ℄ RTE 291		966,404.920	2,825,217.783		P.C.	
7	310+10.10	SURVEY ℄ RTE 291	2.16 LT	966,132.403	2,825,216.115		H.P.I	
7	312+82.58	SURVEY ℄ RTE 291		965,860.075	2,825,205.808		P.T.	
7	312+82.70	SURVEY ℄ RTE 291		965,859.954	2,825,205.803		EQUATION STA. BK	
7	793+70.60	SURVEY ℄ RTE 291		965,859.954	2,825,205.803		EQUATION STA. AHD	
	809+99.76	SURVEY ℄ RTE 291		964,231.963	2,825,144.187		END ℄ RTE 291	
6	0+00.00	CONS'T BL 163RD		967,319.500	2,525,213.567		BEGINNING CONS'T BL 163RD	
6	1+00.78	CONS'T BL 163RD		967,321.519	2,825,112.808		H.P.I.	
6	1+47.77	CONS'T BL 163RD		967,322.891	2,825,065.837		H.P.I.	
6	1+88.93	CONS'T BL 163RD		967,322.728	2,825,024.677		H.P.I.	
6	2+68.62	CONS'T BL 163RD		967,324.952	2,824,945.020		END CONS'T BL 163RD	

STATE OF MISSOURI
THANKAM MATHEW
NUMBER PE-2014000056
PROFESSIONAL ENGINEER

04/01/[illegible] AM
THANKAM MATHEW - CIVIL
MO-PE-2014000056

DATE PREPARED	3/26/2025
ROUTE	291
STATE	MO
DISTRICT	KC
SHEET NO.	9
COUNTY	CASS/JACKSON
JOB NO.	JKU0065
CONTRACT ID.	
PROJECT NO.	
BRIDGE NO.	

DESCRIPTION

DATE

MISSOURI HIGHWAYS AND TRANSPORTATION COMMISSION

MoDOT

105 WEST CAPITOL
JEFFERSON CITY, MO 65102
1-888-ASK-MODOT (1-888-275-6636)

COORDINATE POINT SHEET
SHEET 1 OF 1

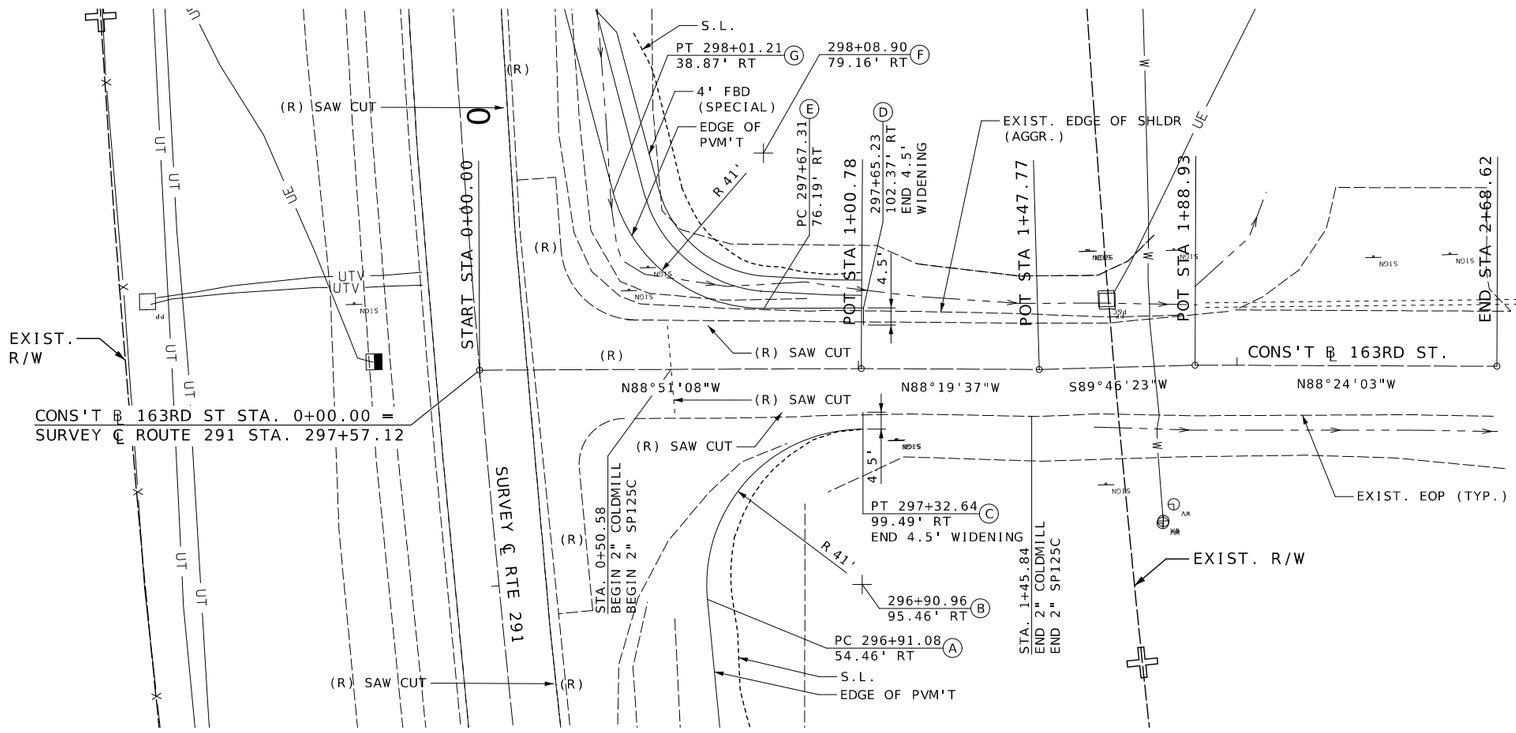

CONS'T ℄ 163RD STA. & OFF.		
(A)	0+59.93	60.72' RT
(B)	0+01.29	57.00' RT
(C)	1+01.29	16.00' RT
(D)	1+01.29	16.00' LT
(E)	0+75.17	16.00' LT
(F)	0+75.17	57.00' LT
(G)	0+35.50	46.65' LT

SCALE

0 20 40 60

SPECIAL SHEET
SHEET 1 OF 1

STATE OF MISSOURI
THANKAM MATHEW
NUMBER
PE-2014000056
PROFESSIONAL ENGINEER

04/01/2025 10:10:06 AM
THANKAM.MATHEW - CIVIL
MO-PE-2014000056

DATE PREPARED	
3/26/2025	
ROUTE 291	STATE MO
DISTRICT KC	SHEET NO. 10
COUNTY CASS/JACKSON	
JOB NO. JKU0065	
CONTRACT ID.	
PROJECT NO.	
BRIDGE NO.	

DATE	DESCRIPTION

MISSOURI HIGHWAYS AND TRANSPORTATION COMMISSION

105 WEST CAPITOL
JEFFERSON CITY, MO 65102
1-888-ASK-MODOT (1-888-275-6636)

Sign Spacing, Device Spacing and Channelizing Taper Lengths

SIGN SPACING (S) FOR ADVANCE SIGN SERIES (1) (2)		
SPEED MPH	UNDIVIDED HIGHWAYS	DIVIDED HIGHWAYS
0-35	200	200
40-45	350	500
50-55	500	1000
60-70	1000	SA-1000 SB-1500 SC-2640

LONGITUDINAL BUFFER SPACE (B)	
SPEED MPH	BUFFER SPACE
0-35	250
40-45	360
50-55	495
60-70	730

TAPER LENGTHS AND SPACING OF CHANNELIZING DEVICES					
SPEED MPH	MINIMUM TAPER LENGTHS (L) FOR LANE WIDTHS (W)			MAXIMUM CHANNELIZER SPACING	
	10 FT	11 FT	12 FT	THROUGH TAPER	THROUGH WORK AREA
0-35	205	225	245	35	40
40-45	450	495	540	40	80
50-55	550	605	660	50	80
60-70	700	770	840	60	120

TAPER LENGTH (L):

L = WS FOR 40 MPH OR MORE

$L = \frac{WS^2}{60}$ FOR 35 MPH OR LESS

FOR SHOULDER TAPER USE L/3

WHERE:

L = TAPER LENGTH IN FEET

W = LATERAL SHIFT IN FEET

S = POSTED SPEED IN MPH

SIGN SPACING NOTES:

DIMENSIONS IN FEET UNLESS OTHERWISE NOTED.

(1) SPACING BETWEEN SIGNS AND SPACING BETWEEN LAST SIGN AND FLAGGER, BEGINNING OF TAPER, OR SIGNED CONDITION

(2) SPACINGS MAY BE ADJUSTED AS NECESSARY TO MEET FIELD CONDITIONS

EPG TABLE 616.12 RECOMMENDED MAXIMUM SPEED REDUCTIONS	
ACTIVITY (I.E. WORKERS, EQUIPMENT OR MATERIAL) LOCATION	RECOMMENDED WORK ZONE SPEED REDUCTION (WHEN APPLICABLE)
10 FT. BEYOND THE EDGE OF TRAVELWAY TO EDGE OF RIGHT OF WAY	NO SPEED REDUCTION
IN TRAFFIC LANE OR WITHIN 10 FT. OF THE TRAFFIC LANE	10 MPH
HEAD-TO-HEAD ON MULTILANE	10 MPH
SPECIAL CIRCUMSTANCES WITHIN A TEMPORARY TRAFFIC CONTROL WORK ZONE MAY WARRANT A LOWER SPEED LIMIT THAN RECOMMENDED ABOVE. ALL SPEED LIMIT REDUCTIONS GREATER THAN 10 MPH SHALL BE DOCUMENTED, SUBMITTED TO AND APPROVED BY THE DISTRICT WORK ZONE COORDINATOR.	

SPEED REDUCTION NOTES:

SPEED LIMIT SIGNS INDICATING THE NORMAL SPEED LIMIT SHOULD BE INSTALLED AT THE END OF THE REDUCED AREA PROVIDED NO OTHER REDUCTION IS IMPOSED WITHIN THE NEXT 1/2 MILE OR NO EXISTING SPEED LIMIIT SIGN IS LOCATED WITH THE NEXT 1/2 MILE.

TEMPORARY SPEED LIMIT SIGNS SHALL BE REMOVED, COVERED OR TURNED WHEN THE CONDITIONS REQUIRING THE REDUCED SPEED NO LONGER EXIST.

TRAFFIC CONTROL DEVICES

GENERAL NOTES:

1. SEE STANDARD PLAN 616.10 FOR DETAILS AND ITEMS NOT SHOWN
2. EXISTING SIGNS SHALL BE COVERED DURING WORKING HOURS ONLY IF IN CONFLICT WITH TRAFFIC CONTROL PLANS.
3. NO DIRECT PAYMENT WILL BE MADE FOR RELOCATING, COVERING, UNCOVERING OR REMOVING SIGNS.
4. CONES ALLOWABLE FOR DAYTIME OPERATIONS ONLY.
6. LOCATE FLASHING ARROW PANEL AT BEGINNING OF TAPER WHEN FEASIBLE, ARROW PANELS ARE ALWAYS LOCATED BEHIND CHANNELIZERS OR CONES.

TRAFFIC CONTROL LEGEND

SIGN (SINGLE SIDED)

SIGN (DOUBLE SIDED)

FLAGGER

DIRECTIONAL INDICATOR BARRICADE

CHANNELIZER

BARRICADE

CHANGEABLE MESSAGE BOARD

TMA TRUCK MOUNTED ATTENUATOR W/ FLASHING ARROW

DEVICE SPACING
TRAFFIC CONTROL SHEET
SHEET 1 OF 7

STATE OF MISSOURI
THANKAM MATHEW
NUMBER PE-2014000056
PROFESSIONAL ENGINEER

04/01/... THANKAM MATHEW - CIVIL MO-PE-2014000056

DATE PREPARED: 3/26/2025

ROUTE: 291 | STATE: MO

DISTRICT: KC | SHEET NO.: 11

COUNTY: CASS/JACKSON

JOB NO.: JKU0065

CONTRACT ID.

PROJECT NO.

BRIDGE NO.

DESCRIPTION

DATE

MISSOURI HIGHWAYS AND TRANSPORTATION COMMISSION

105 WEST CAPITOL
JEFFERSON CITY, MO 65102
1-888-ASK-MODOT (1-888-275-6636)

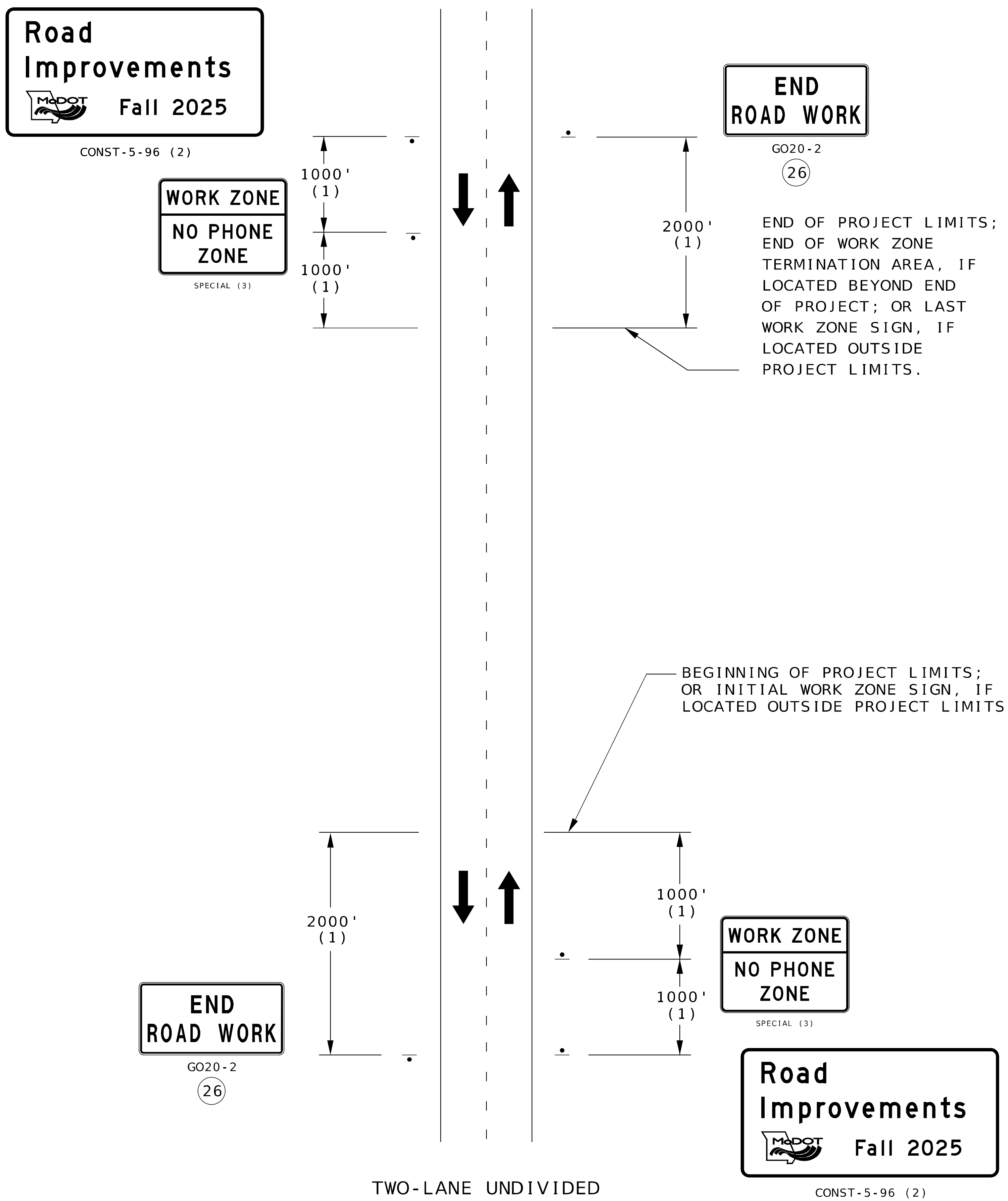

NOTES:

SIGN G020-1 IS REQUIRED PER EPG 616.6.56.

SIGN G020-2 IS USED ON ALL PROJECTS WHERE SIGN G020-1 IS USED.

OTHER SIGNS SUCH AS DETOUR OR ALTERNATE ROUTE SIGNING MAY BE USED OUTSIDE THE PROJECT LIMITS.

ANY EXISTING SIGNING THAT CONFLICTS WITH THE TRAFFIC CONTROL SIGNING SHALL BE COMPLETELY COVERED OR REMOVED.

(1) DISTANCE MAY BE ADJUSTED ACCORDING TO FIELD CONDITIONS. WHERE TRAFFIC BACKUPS ARE EXPECTED BEYOND THE ADVANCE WARNING AREA, ADDITIONAL SIGNING MAY BE NEEDED.

(2) SIGN CONST-5-96 OR CONST-5-48 IS PLACED IN A VISIBLE AREA WITHIN THE PROJECT LIMITS PROVIDED ITS PLACEMENT DOES NOT DISRUPT A SEQUENCE OF SIGNS. IF A VISIBLE LOCATION WITHIN THE PROJECT IS NOT AVAILABLE, THE SIGN MAY BE PLACED 500 FEET BEFORE THE "NO PHONE ZONE" SIGN.

(3) THE "WORK ZONE NO PHONE ZONE" SIGN IS PLACED A MINIMUM OF 500 FEET BEFORE THE ROAD WORK AHEAD SIGN.

BEGIN/END
TRAFFIC CONTROL SHEET
SHEET 2 OF 7

STATE OF MISSOURI
THANKAM MATHEW
NUMBER
PE-2014000056
PROFESSIONAL ENGINEER

THANKAM MATHEW - CIVIL
MO-PE-2014000056

DATE PREPARED	3/26/2025
ROUTE	291
STATE	MO
DISTRICT	KC
SHEET NO.	12
COUNTY	CASS/JACKSON
JOB NO.	JKU0065
CONTRACT ID.	
PROJECT NO.	
BRIDGE NO.	

DESCRIPTION

DATE

MISSOURI HIGHWAYS AND TRANSPORTATION COMMISSION

105 WEST CAPITOL
JEFFERSON CITY, MO 65102
1-888-ASK-MODOT (1-888-275-6636)

NOT TO SCALE

W020-1

2

W020-4

7

W020-7a

8

G020-4

53

SIGN 53, "PILOT CAR FOLLOW ME" SHALL BE THE CONTRACTOR'S RESPONSIBILITY WHEN IN USE DURING OPERATION.

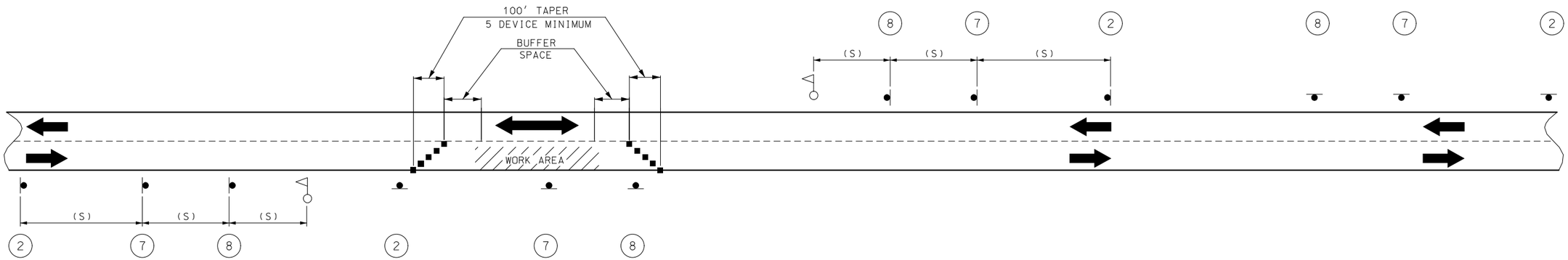

SET 1	SET 2	SET 3	SET 4
ACTIVE	INACTIVE	ACTIVE	INACTIVE

NOTES:

THIS PLAN IS FOR DAYLIGHT FLAGGING OPERATIONS ONLY. WHEN NIGHT WORK IS REQUIRED, OR OTHERWISE ALLOWED BY THE ENGINEER, WORK ZONE LIGHTING SHALL BE PROVIDED IN ACCORDANCE WITH SEC 616.5.2.

CHANNELIZING DEVICES LOCATED DOWNSTREAM OF THE ONE-LANE, TWO-WAY TAPER ARE OPTIONAL. THESE DEVICES SHOULD BE ELIMINATED WHEN THEIR USE WILL REDUCE THE USABLE LANE WIDTH, INCLUDING ANY ACCEPTABLE SHOULDERS, TO LESS THAN 10' OR WILL SIGNIFICANTLY AFFECT THE RESURFACING OPERATION.

SIGN SETS 1 AND 3 ARE ACTIVE AND (I.E., SIGNS FACE ONCOMING TRAFFIC) SIGN SETS 2 AND 4 ARE INACTIVE (I.E., SIGNS DO NOT FACE EITHER DIRECTION OF TRAFFIC) WHEN THE RESURFACING OPERATION IS LOCATED BETWEEN SIGN SETS 1 AND 3.

WHEN SIGN SETS 2 AND 4 ARE ACTIVE, SIGN SETS 1 AND 3 BECOME INACTIVE AND ARE ADVANCED TO BECOME SETS 2 AND 4 WITH SIGN LEGENDS TURNED AWAY FROM BOTH DIRECTIONS OF TRAFFIC. WHEN THE RESURFACING OPERATION ADVANCES TO BETWEEN SIGN SETS 2 AND 4, SIGN SETS 2 AND 4 BECOME ACTIVE (I.E., NEW SIGN SETS 1 AND 3) AND SIGN SETS 1 AND 3 ADVANCED IN THE DIRECTION OF THE OPERATION (I.E., NEW SIGN SETS 2 AND 4).

RESURFACING
TRAFFIC CONTROL SHEET
SHEET 3 OF 7

STATE OF MISSOURI
THANKAM MATHEW
NUMBER
PE-2014000056
PROFESSIONAL ENGINEER

04/01/2025 10:56:26 AM
THANKAM MATHEW - CIVIL
MO-PE-2014000056

DATE PREPARED	
3/26/2025	
ROUTE 291	STATE MO
DISTRICT KC	SHEET NO. 13
COUNTY CASS/JACKSON	
JOB NO. JKU0065	
CONTRACT ID.	
PROJECT NO.	
BRIDGE NO.	

DESCRIPTION	DATE

MISSOURI HIGHWAYS AND TRANSPORTATION COMMISSION

105 WEST CAPITOL
JEFFERSON CITY, MO 65102
1-888-ASK-MODOT (1-888-275-6636)

NOT TO SCALE

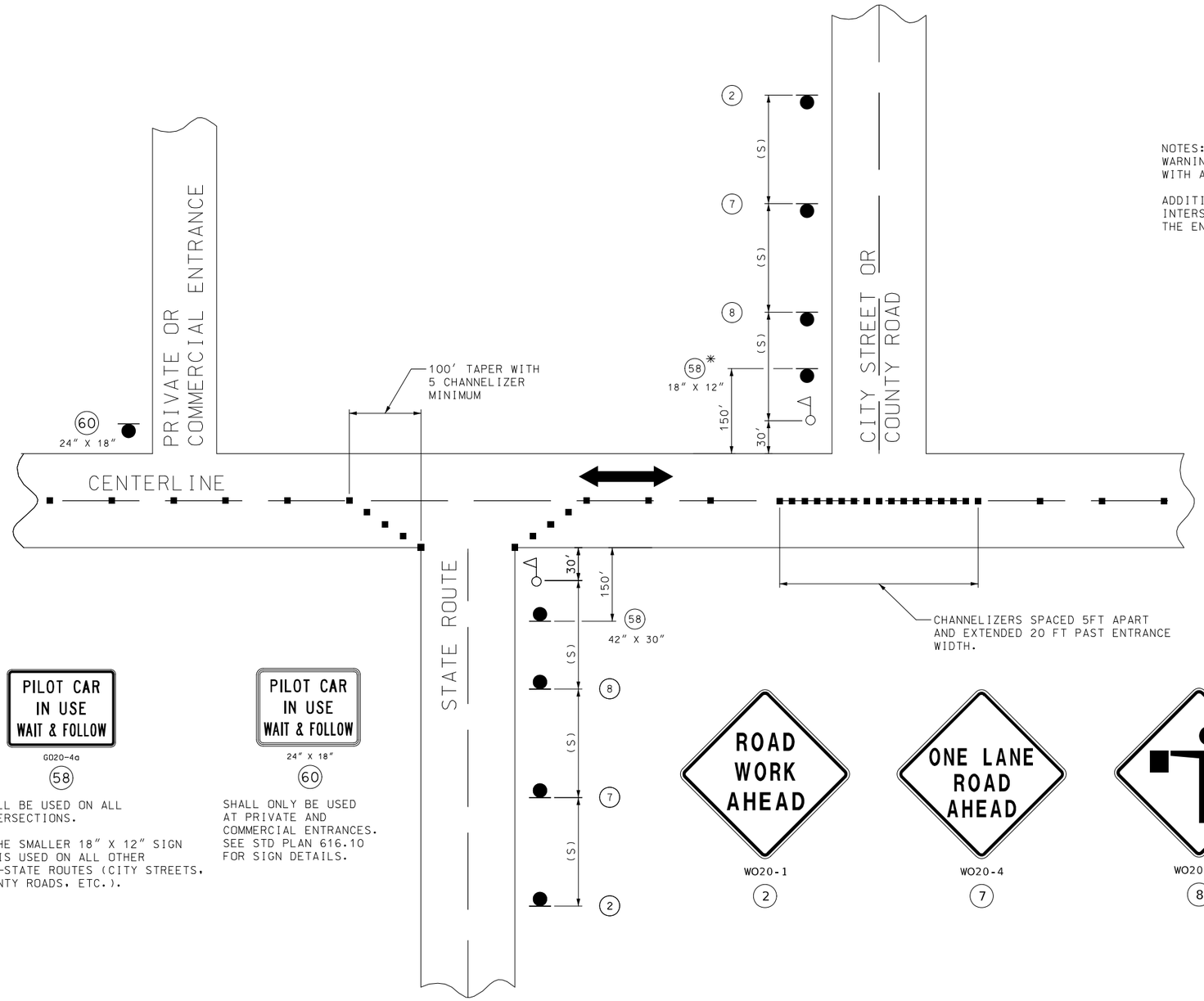

NOTES:
WARNING SIGNS SHALL BE ERECTED AT EACH INTERSECTION WITH ANOTHER STATE HIGHWAY WITHIN THE WORK ZONE.

ADDITIONAL WARNING SIGNS SHALL BE ERECTED AT OTHER INTERSECTIONS WITHIN THE WORK ZONE, AS DIRECTED BY THE ENGINEER.

G020-4a

58

SHALL BE USED ON ALL INTERSECTIONS.

* THE SMALLER 18" X 12" SIGN 58 IS USED ON ALL OTHER NON-STATE ROUTES (CITY STREETS, COUNTY ROADS, ETC.).

24" X 18"

60

SHALL ONLY BE USED AT PRIVATE AND COMMERCIAL ENTRANCES. SEE STD PLAN 616.10 FOR SIGN DETAILS.

WO20-1

2

WO20-4

7

WO20-7a

8

SIDE ROADS ENTERING WORK ZONES

SIDE ROADS
TRAFFIC CONTROL SHEET
SHEET 4 OF 7

STATE OF MISSOURI
THANKAM MATHEW
NUMBER
PE-2014000056
PROFESSIONAL ENGINEER
04/01/2025 10:11:03 AM
THANKAM MATHEW - CIVIL
MO-PE-2014000056

DATE PREPARED	
3/26/2025	
ROUTE 291	STATE MO
DISTRICT KC	SHEET NO. 14
COUNTY CASS/JACKSON	
JOB NO. JKU0065	
CONTRACT ID.	
PROJECT NO.	
BRIDGE NO.	

DATE	DESCRIPTION

MISSOURI HIGHWAYS AND TRANSPORTATION COMMISSION

105 WEST CAPITOL
JEFFERSON CITY, MO 65102
1-888-ASK-MODOT (1-888-275-6636)

NOT TO SCALE

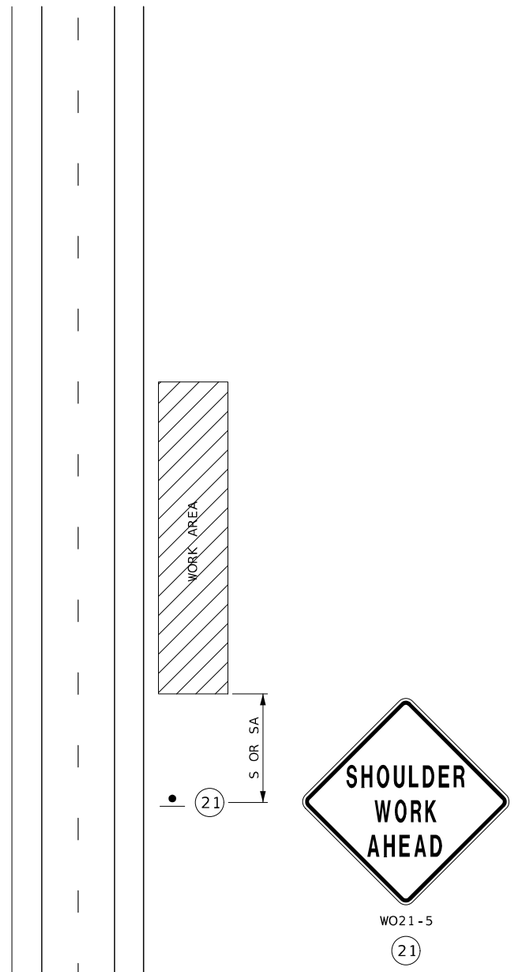

WORK BEYOND THE SHOULDER

(UNDIVIDED OR DIVIDED HIGHWAY)

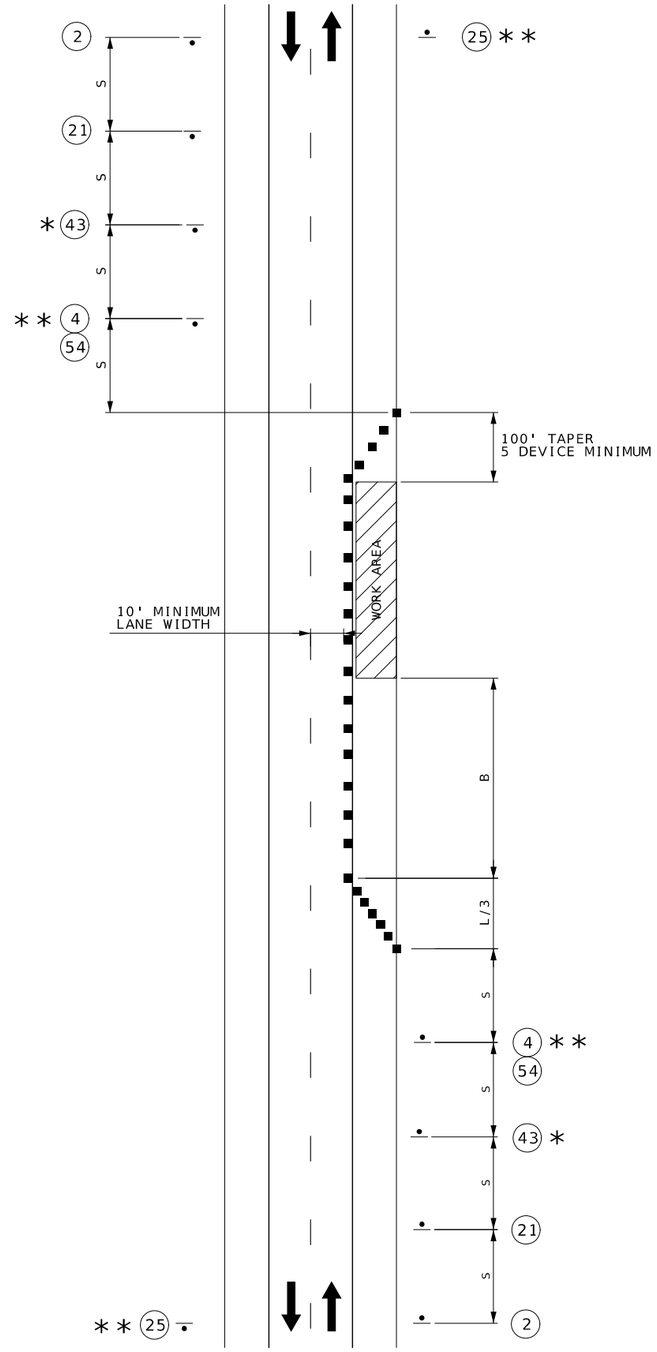

SHOULDER WORK

(UNDIVIDED HIGHWAY)

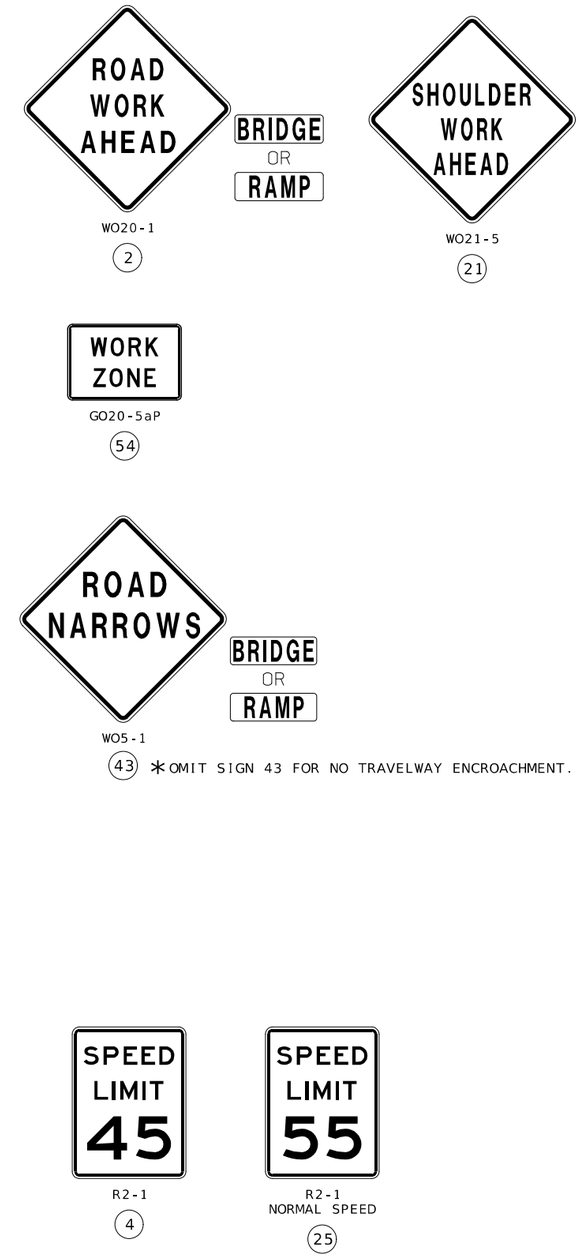

* OMIT SIGN 43 FOR NO TRAVELWAY ENCROACHMENT.

** SIGNS #4 AND #25 APPLICABLE TO ROUTE 291 ONLY.

TRAFFIC CONTROL SHEET
SHEET 5 OF 7

STATE OF MISSOURI
THANKAM MATHEW
NUMBER PE-2014000056
PROFESSIONAL ENGINEER
04/01/2025 12:00:40 AM
THANKAM MATHEW - CIVIL
MO-PE-2014000056

DATE PREPARED	
3/26/2025	
ROUTE 291	STATE MO
DISTRICT KC	SHEET NO. 15
COUNTY CASS/JACKSON	
JOB NO. JKU0065	
CONTRACT ID.	
PROJECT NO.	
BRIDGE NO.	

DATE	DESCRIPTION

MISSOURI HIGHWAYS AND TRANSPORTATION COMMISSION
105 WEST CAPITOL
JEFFERSON CITY, MO 65102
1-888-ASK-MODOT (1-888-275-6636)

NOT TO SCALE

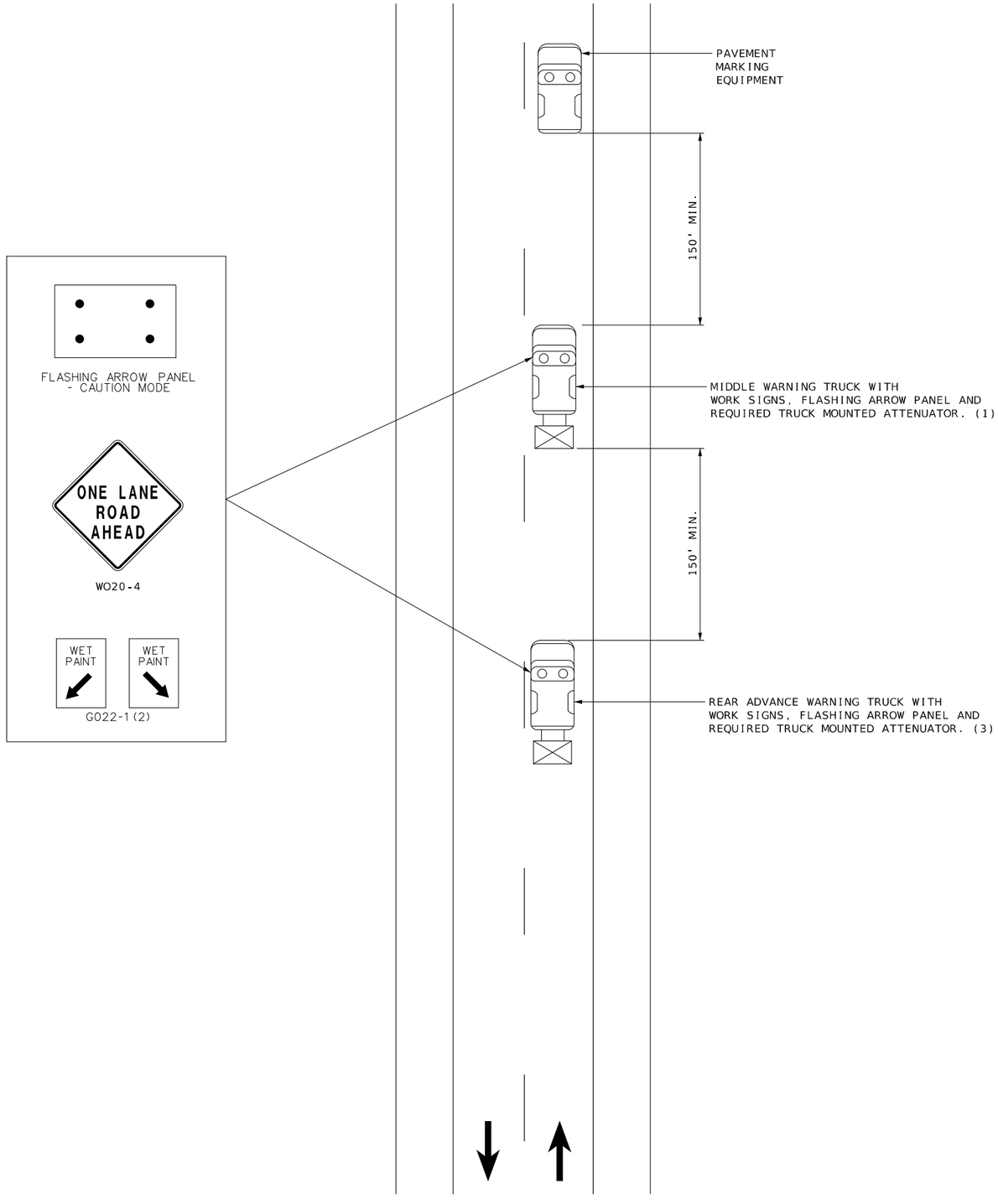

STRIPING ON TWO-LANE HIGHWAY

NOTES:

UPON APPROVAL OF THE ENGINEER, THE CONTRACTOR MAY PROVIDE ADDITIONAL PROTECTIVE TRUCKS EQUIPPED WITH PROPER WARNING DEVICES.

PROTECTIVE TRUCKS AND WORK VEHICLES SHALL DISPLAY HIGH-INTENSITY ROTATING, FLASHING, OSCILLATING, OR STROBE LIGHTS.

VEHICLE HAZARD WARNING SIGNALS SHALL NOT BE USED INSTEAD OF THE VEHICLE'S HIGH-INTENSITY ROTATING, FLASHING, OSCILLATING, OR STROBE LIGHTS.

VEHICLE-MOUNTED SIGNS SHALL BE MOUNTED IN A MANNER SUCH THAT THEY ARE NOT OBSCURED BY EQUIPMENT OR SUPPLIES. SIGN LEGENDS ON VEHICLE-MOUNTED SIGNS SHALL BE COVERED OR TURNED FROM VIEW WHEN WORK IS NOT IN PROGRESS.

FLASHING ARROW PANELS SHALL BE INCIDENTAL TO TRUCK MOUNTED ATTENUATORS, WHEREVER USED. NO ADDITIONAL PAYMENT WILL BE MADE.

(1) TRUCK IS OPTIONAL ON TWO-LANE UNDIVIDED HIGHWAYS IF SIGNING AND ARROW BOARD ARE MOUNTED ON THE PAVEMENT MARKING EQUIPMENT.

(2) WET PAINT SIGNS ARE INSTALLED TO INDICATE THE SIDE IN WHICH THE PAVEMENT MARKING MATERIAL IS BEING APPLIED. AT THE CONTRACTOR'S OPTION, A FRONT FACING WET PAINT SIGN MAY BE INSTALLED ON THE LEFT SIDE OF THE PAVEMENT MARKING EQUIPMENT.

(3) REAR WARNING TRUCK IS POSITIONED AT THE NO TRACK POINT OF THE PAVEMENT MARKING MATERIAL, OR VERTICAL OR HORIZONTAL CURVES THAT RESTRICT SIGHT DISTANCE, OR SPACING SHOWN, WHICHEVER IS GREATER.

TRAFFIC CONTROL SHEET
SHEET 6 OF 7

STATE OF MISSOURI
THANKAM MATHEW
NUMBER PE-2014000056
PROFESSIONAL ENGINEER
04/01/2025 12:04:15 AM
THANKAM MATHEW - CIVIL
MO-PE-2014000056

DATE PREPARED	3/26/2025
ROUTE 291	STATE MO
DISTRICT KC	SHEET NO. 16
COUNTY	CASS/JACKSON
JOB NO.	JKU0065
CONTRACT ID.	
PROJECT NO.	
BRIDGE NO.	

DESCRIPTION	DATE

MISSOURI HIGHWAYS AND TRANSPORTATION COMMISSION
105 WEST CAPITOL
JEFFERSON CITY, MO 65102
1-888-ASK-MODOT (1-888-275-6636)

DETAIL A

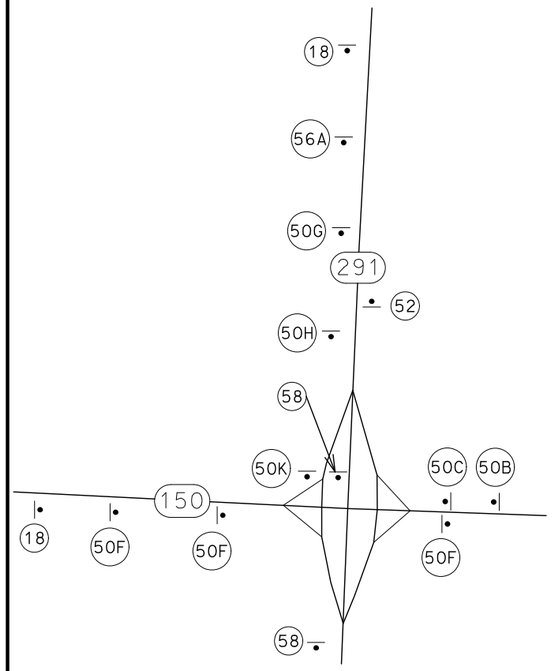

DETAIL B

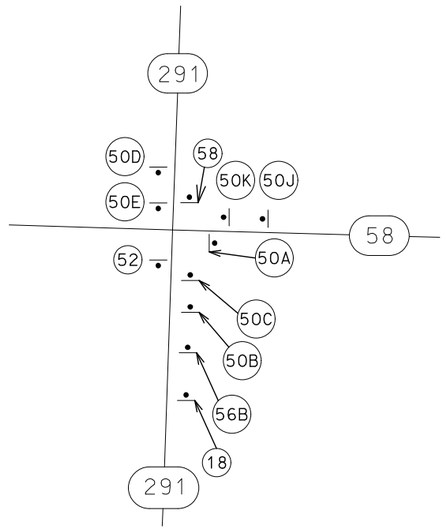

DETAIL C

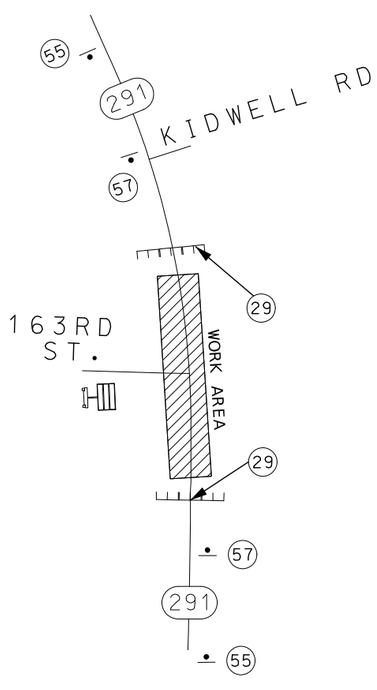

DETAIL D

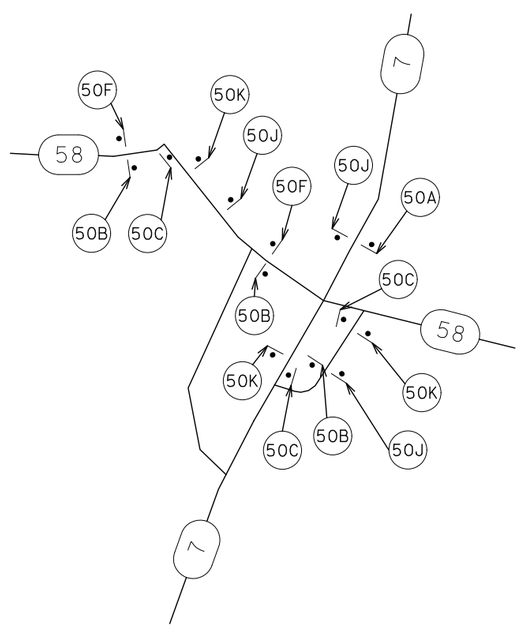

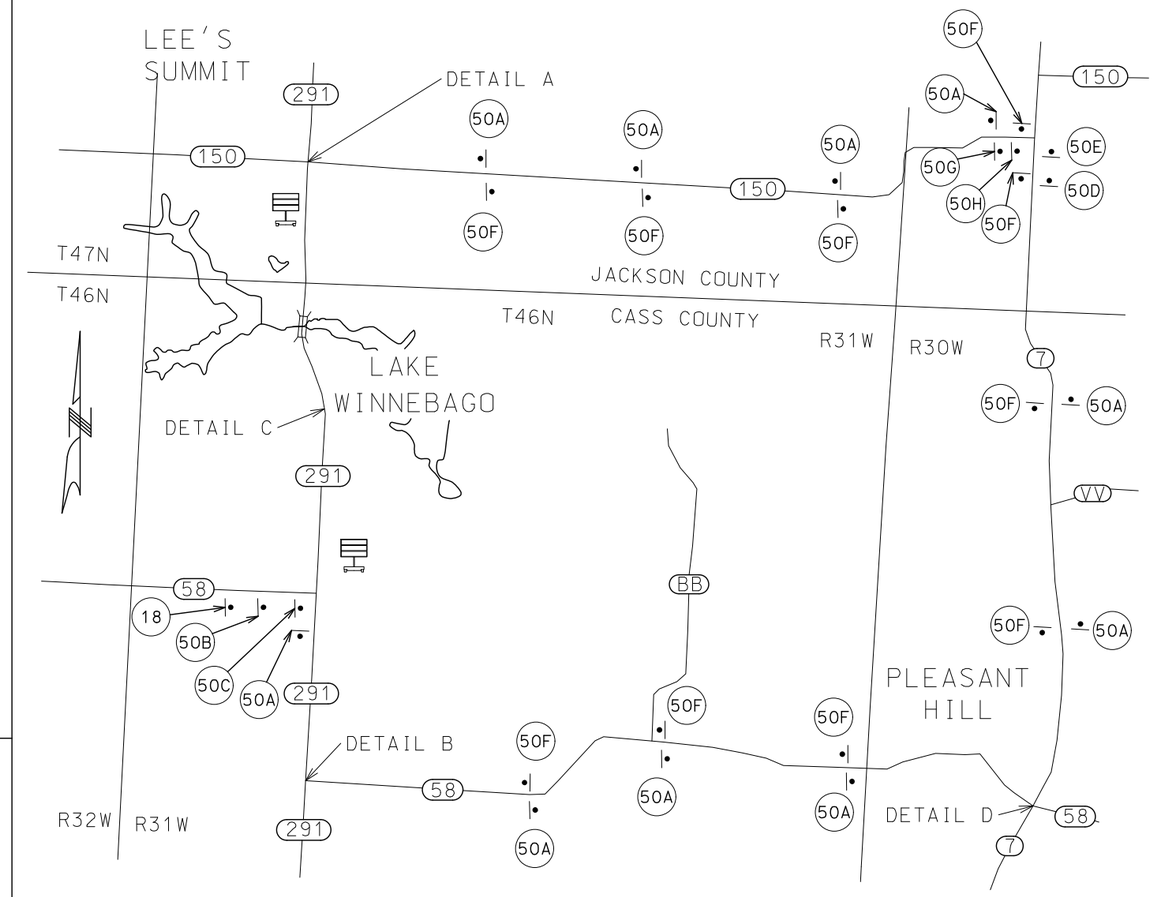

TRAFFIC CONTROL LEGEND

- SIGN (SINGLE SIDED)
- BARRICADE
- CHANGEABLE MESSAGE BOARD

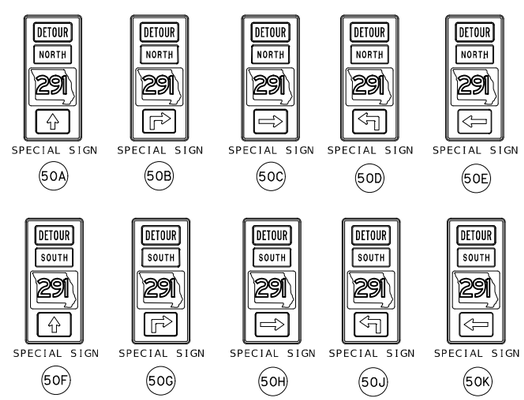

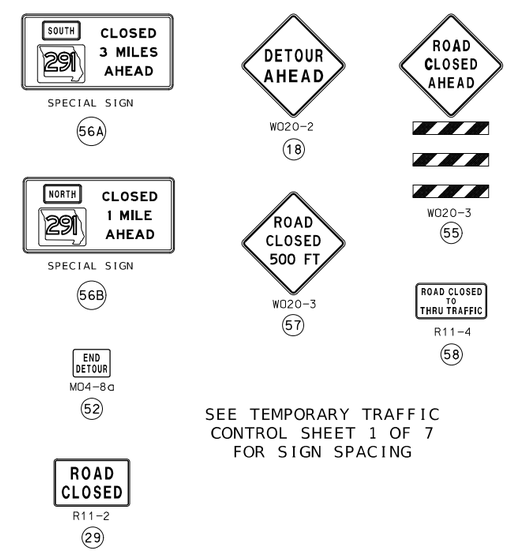

NOT TO SCALE

SEE TEMPORARY TRAFFIC CONTROL SHEET 1 OF 7 FOR SIGN SPACING

TEMPORARY TRAFFIC CONTROL SHEET
SHEET 7 OF 7

STATE OF MISSOURI
THANKAM MATHEW
NUMBER PE-2014000056
PROFESSIONAL ENGINEER
04/01/2025 9:51:52 AM
THANKAM MATHEW - CIVIL
MO-PE-2014000056

DATE PREPARED	3/26/2025
ROUTE	291
STATE	MO
DISTRICT	KC
SHEET NO.	17
COUNTY	CASS/JACKSON
JOB NO.	JKU0065
CONTRACT ID.	
PROJECT NO.	
BRIDGE NO.	

DATE	DESCRIPTION

MISSOURI HIGHWAYS AND TRANSPORTATION COMMISSION
105 WEST CAPITOL
JEFFERSON CITY, MO 65102
1-888-ASK-MODOT (1-888-275-6636)

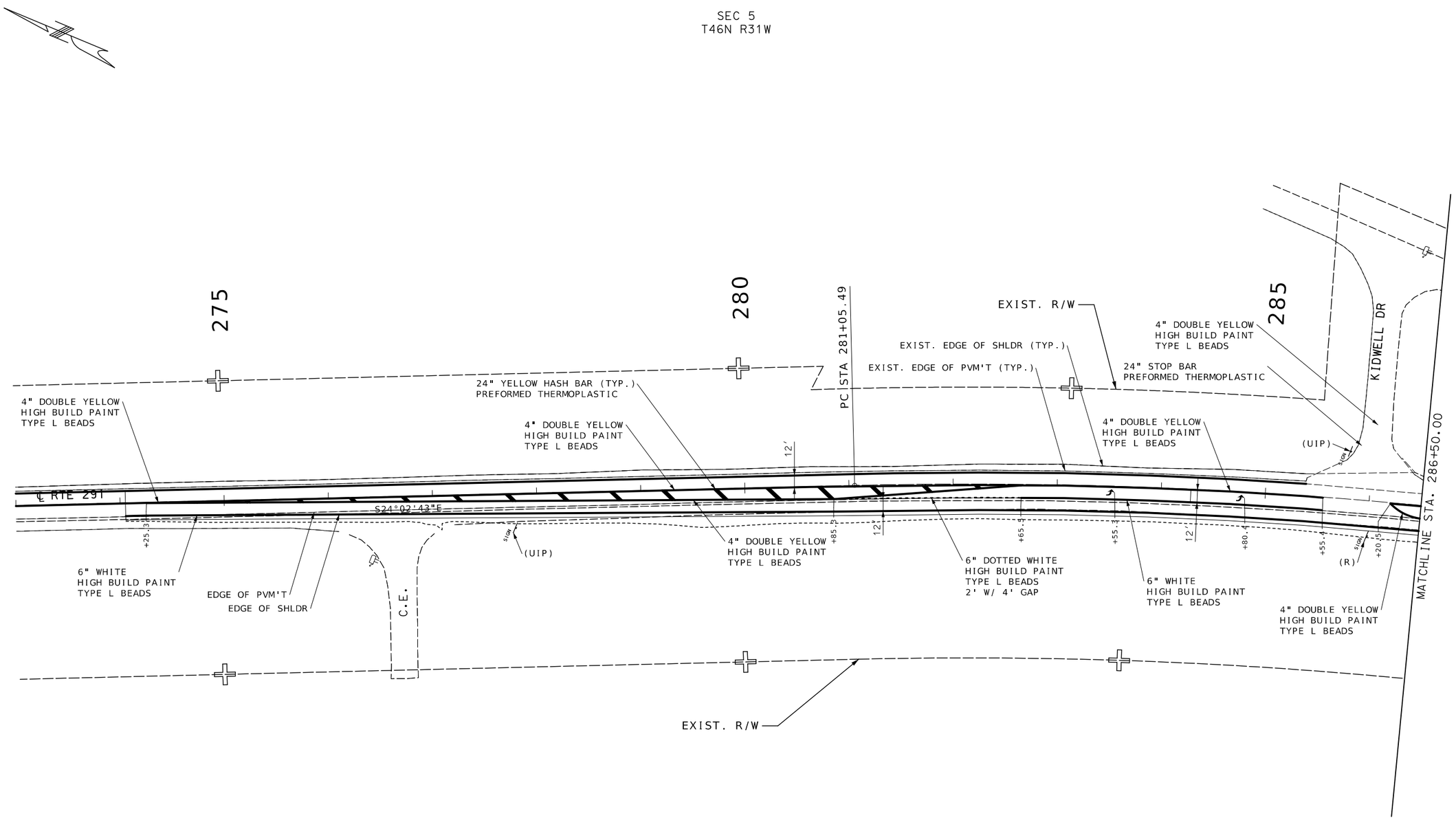

SCALE

0 50 100 150

PAVEMENT MARKING
& SIGNING SHEET
SHEET 1 OF 6

STATE OF MISSOURI
THANKAM MATHEW
NUMBER PE-2014000056
PROFESSIONAL ENGINEER

04-01-2025 10:10:27 AM
THANKAM MATHEW - CIVIL
MO-PE-2014000056

DATE PREPARED	
3/26/2025	
ROUTE	STATE
291	MO
DISTRICT	SHEET NO.
KC	18
COUNTY	
CASS/JACKSON	
JOB NO.	
JKU0065	
CONTRACT ID.	
PROJECT NO.	
BRIDGE NO.	

DESCRIPTION	DATE

MISSOURI HIGHWAYS AND TRANSPORTATION COMMISSION

105 WEST CAPITOL
JEFFERSON CITY, MO 65102
1-888-ASK-MODOT (1-888-275-6636)

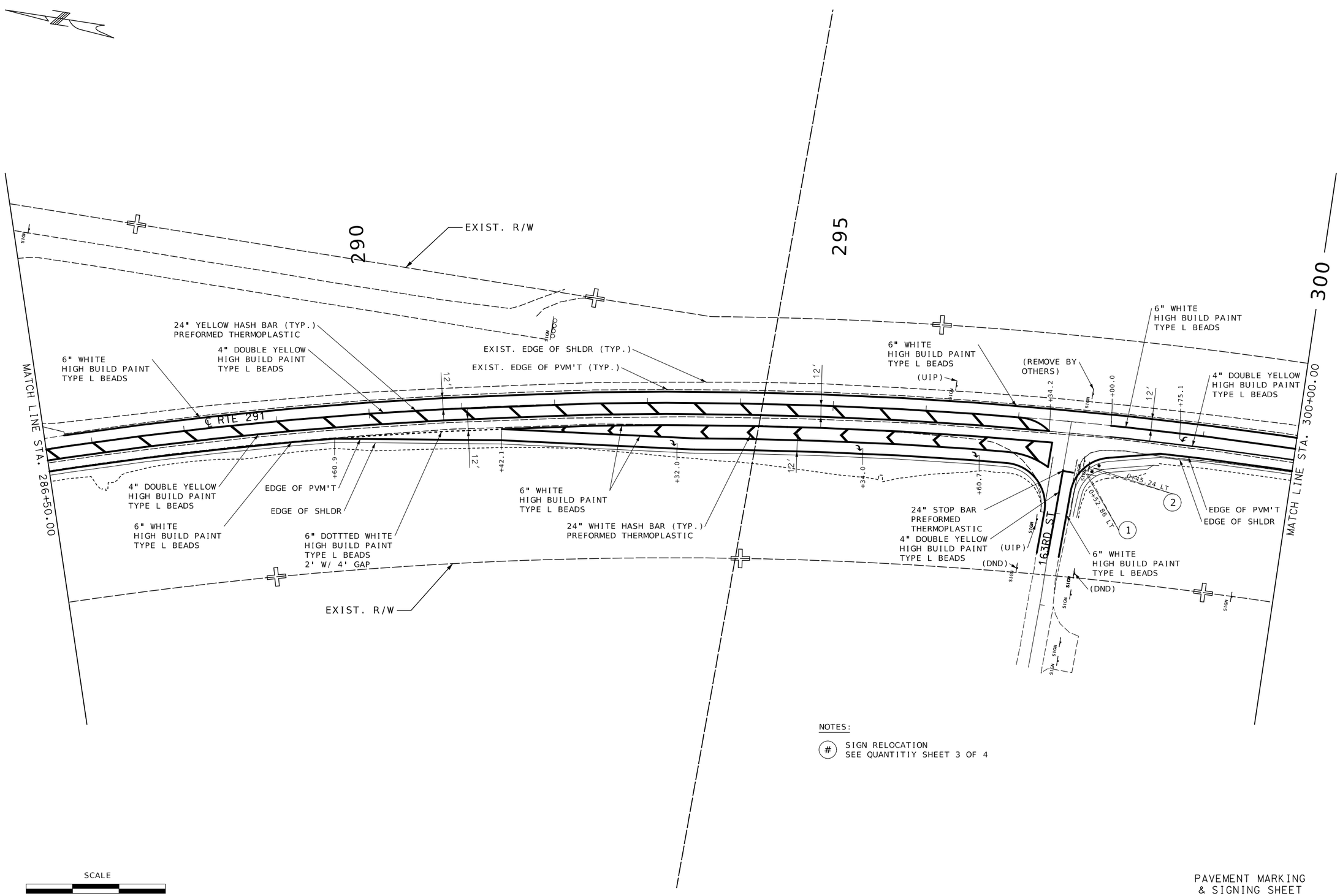

NOTES:

(#) SIGN RELOCATION
SEE QUANTITIY SHEET 3 OF 4

SCALE

0 50 100 150

PAVEMENT MARKING
& SIGNING SHEET
SHEET 2 OF 6

STATE OF MISSOURI
THANKAM MATHEW
NUMBER
PE-2014000056
PROFESSIONAL ENGINEER

04/01/2025 10:00:22 AM
THANKAM.MATHEW - CIVIL
MO-PE-2014000056

DATE PREPARED	
3/26/2025	
ROUTE 291	STATE MO
DISTRICT KC	SHEET NO. 19
COUNTY CASS/JACKSON	
JOB NO. JKU0065	
CONTRACT ID.	
PROJECT NO.	
BRIDGE NO.	

DATE	DESCRIPTION

MISSOURI HIGHWAYS AND TRANSPORTATION COMMISSION

105 WEST CAPITOL
JEFFERSON CITY, MO 65102
1-888-ASK-MODOT (1-888-275-6636)

SEC 8
T46N R31W

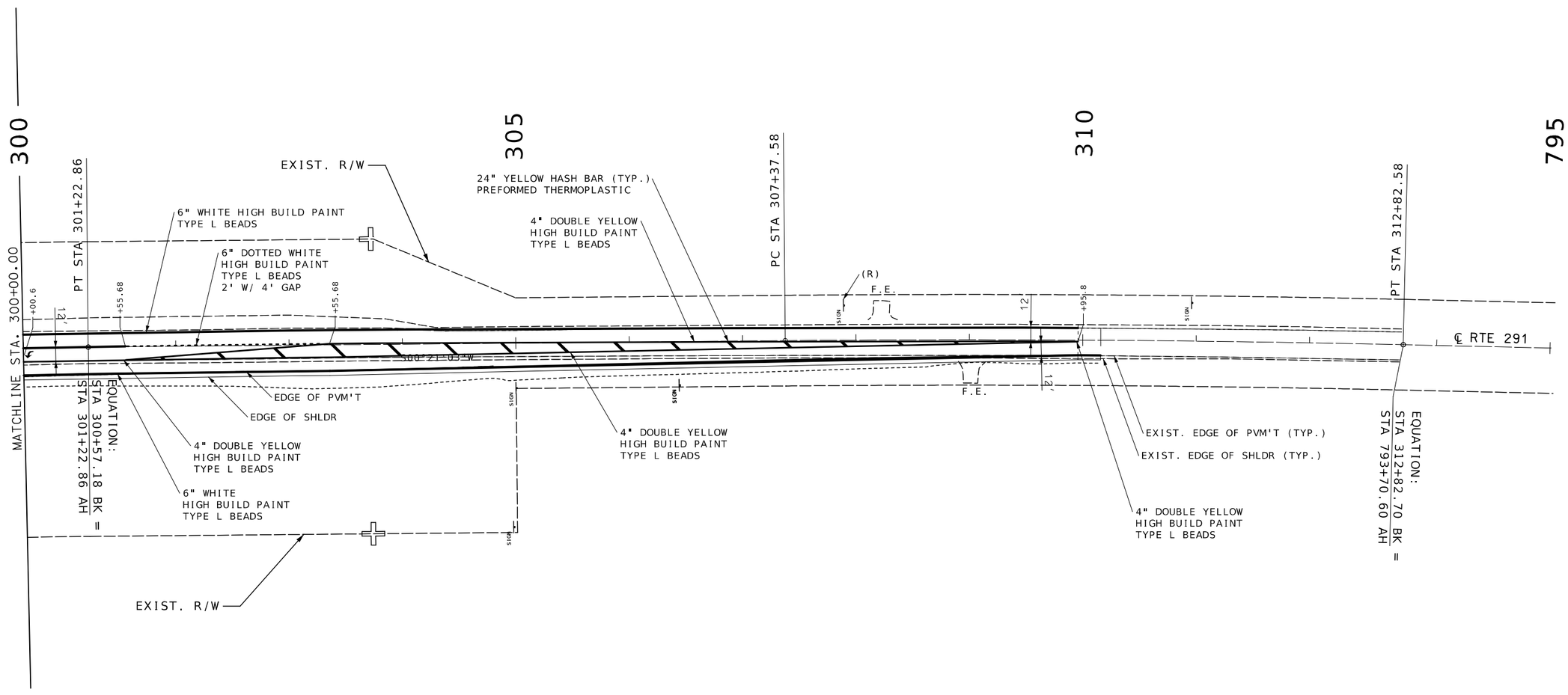

SCALE

0 50 100 150

PAVEMENT MARKING
& SIGNING SHEET
SHEET 3 OF 6

STATE OF MISSOURI
THANKAM MATHEW
NUMBER
PE-2014000056
PROFESSIONAL ENGINEER

04-01-2025 10:10:38 AM
THANKAM MATHEW - CIVIL
MO-PE-2014000056

DATE PREPARED	
3/26/2025	
ROUTE	STATE
291	MO
DISTRICT	SHEET NO.
KC	20
COUNTY	
CASS/JACKSON	
JOB NO.	
JKU0065	
CONTRACT ID.	
PROJECT NO.	
BRIDGE NO.	

DATE	DESCRIPTION

MISSOURI HIGHWAYS AND TRANSPORTATION COMMISSION

105 WEST CAPITOL
JEFFERSON CITY, MO 65102
1-888-ASK-MODOT (1-888-275-6636)

MO4-11-36 SHR4L1:
2.250" Radius, 0.875" Border, 0.625" Indent, Black on Orange;
Table of letter and object lefts.

6.000
6.000
3.000
7.500

SIGN NO.	50A
STATION	
ROADWAY	ROUTE 291

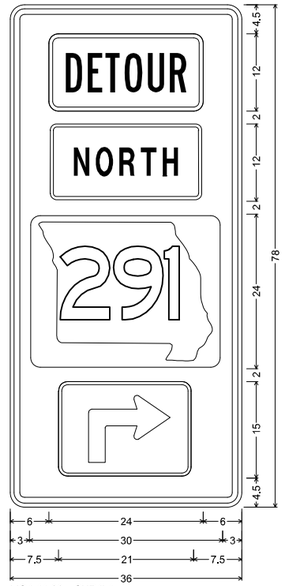

MO4-11-36 SHR4L1:
2.250" Radius, 0.875" Border, 0.625" Indent, Black on Orange;
Table of letter and object lefts.

6.000
6.000
3.000
7.500

SIGN NO.	50B
STATION	
ROADWAY	ROUTE 291

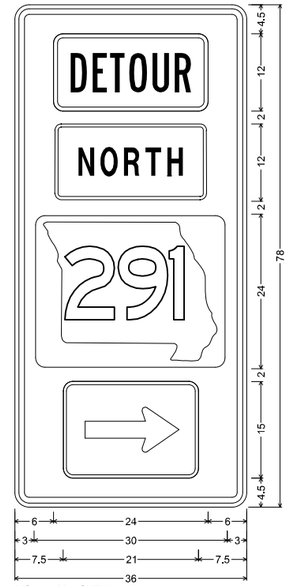

MO4-11-36 SHR4L1:
2.250" Radius, 0.875" Border, 0.625" Indent, Black on Orange;
Table of letter and object lefts.

6.000
6.000
3.000
7.500

SIGN NO.	50C
STATION	
ROADWAY	ROUTE 291

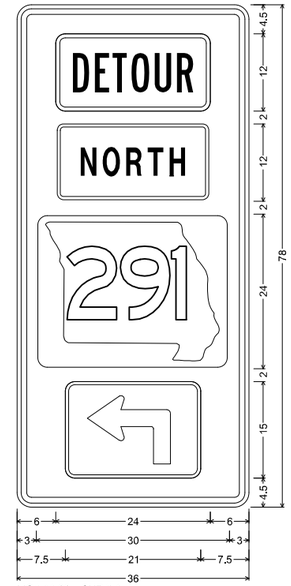

MO4-11-36 SHR4L1:
2.250" Radius, 0.875" Border, 0.625" Indent, Black on Orange;
Table of letter and object lefts.

6.000
6.000
3.000
7.500

SIGN NO.	50D
STATION	
ROADWAY	ROUTE 291

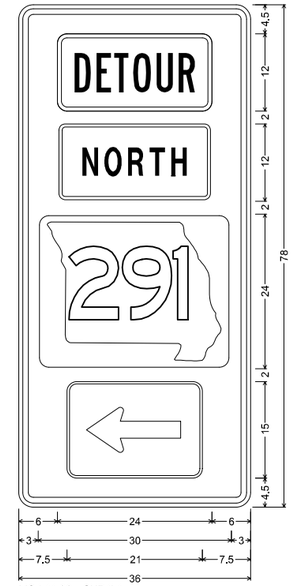

MO4-11-36 SHR4L1:
2.250" Radius, 0.875" Border, 0.625" Indent, Black on Orange;
Table of letter and object lefts.

6.000
6.000
3.000
7.500

SIGN NO.	50E
STATION	
ROADWAY	ROUTE 291

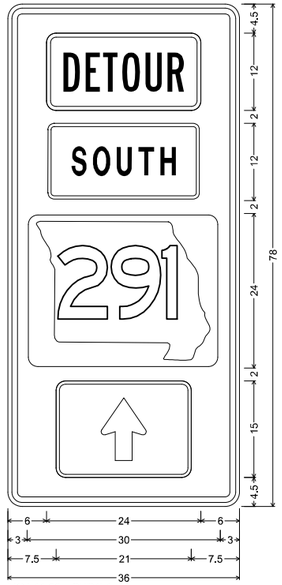

MO4-11-36 SHR4L1:
2.250" Radius, 0.875" Border, 0.625" Indent, Black on Orange;
Table of letter and object lefts.

6.000
6.000
3.000
7.500

SIGN NO.	50F
STATION	
ROADWAY	ROUTE 291

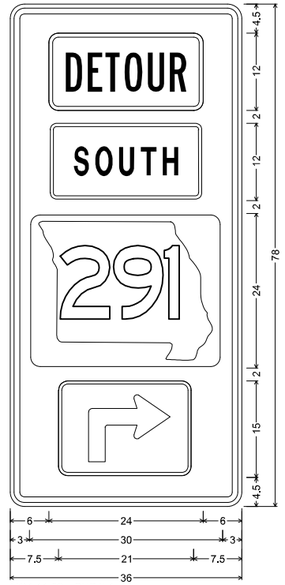

MO4-11-36 SHR4L1:
2.250" Radius, 0.875" Border, 0.625" Indent, Black on Orange;
Table of letter and object lefts.

6.000
6.000
3.000
7.500

SIGN NO.	50G
STATION	
ROADWAY	ROUTE 291

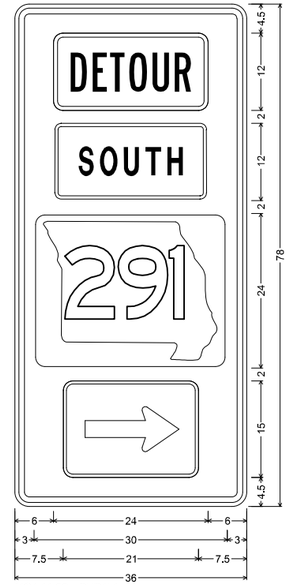

MO4-11-36 SHR4L1:
2.250" Radius, 0.875" Border, 0.625" Indent, Black on Orange;
Table of letter and object lefts.

6.000
6.000
3.000
7.500

SIGN NO.	50H
STATION	
ROADWAY	ROUTE 291

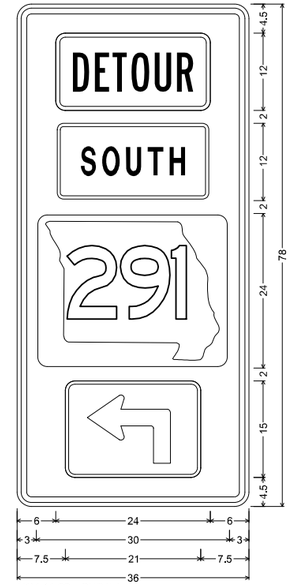

MO4-11-36 SHR4L1:
2.250" Radius, 0.875" Border, 0.625" Indent, Black on Orange;
Table of letter and object lefts.

6.000
6.000
3.000
7.500

SIGN NO.	50J
STATION	
ROADWAY	ROUTE 291

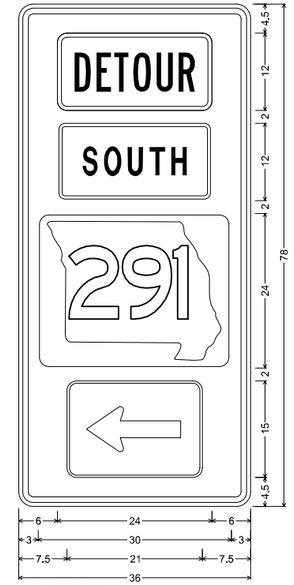

MO4-11-36 SHR4L1:
2.250" Radius, 0.875" Border, 0.625" Indent, Black on Orange;
Table of letter and object lefts.

6.000
6.000
3.000
7.500

SIGN NO.	50K
STATION	
ROADWAY	ROUTE 291

PAVEMENT MARKING
& SIGNING SHEET
SHEET 4 OF 6

D-31

STATE OF MISSOURI
THANKAM MATHEW
NUMBER PE-2014000056
PROFESSIONAL ENGINEER
04/01/2025 12:54:15 AM
THANKAM MATHEW - CIVIL
MO-PE-2014000056

DATE PREPARED	3/26/2025
ROUTE 291	STATE MO
DISTRICT KC	SHEET NO. 21
COUNTY	CASS/JACKSON
JOB NO.	JKU0065
CONTRACT ID.	
PROJECT NO.	
BRIDGE NO.	

DATE	DESCRIPTION

MISSOURI HIGHWAYS AND TRANSPORTATION COMMISSION
105 WEST CAPITOL
JEFFERSON CITY, MO 65102
1-888-ASK-MODOT (1-888-275-6636)

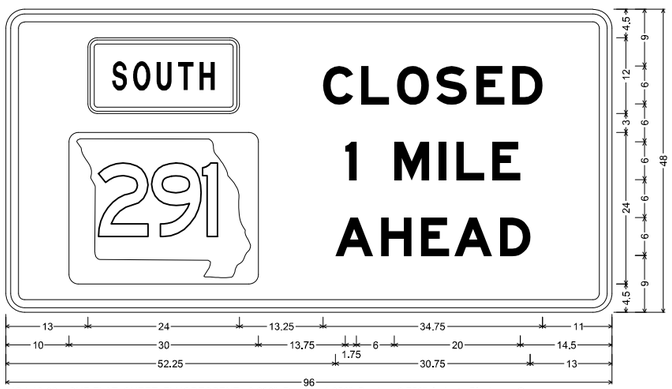

MO4-13-96 SHF-FLAT SHEET FLUORESCENT; 3.000" Radius, 1.250" Border, 0.750" Indent, Black on Orange;
[CLOSED] E Mod; [1 MILE] E Mod; [AHEAD] E Mod;
Table of letter and object lefts.

	C	L	O	S	E	D
13.000	50.250	56.250	62.000	68.250	74.500	80.250
	I	M	I	L	E	
10.000	53.750	61.500	68.625	71.375	77.000	
A	H	E	A	D		
52.250	59.375	65.750	71.000	78.250		

SIGN NO.	56A
STATION	
ROADWAY	ROUTE 291

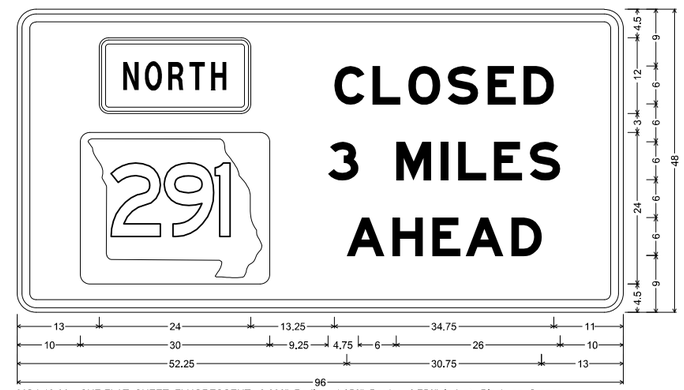

MO4-13-96 SHF-FLAT SHEET FLUORESCENT; 3.000" Radius, 1.250" Border, 0.750" Indent, Black on Orange;
[CLOSED] E Mod; [2 MILES] E Mod; [AHEAD] E Mod;
Table of letter and object lefts.

	C	L	O	S	E	D
13.000	50.250	56.250	62.000	68.250	74.500	80.250
	3	M	I	L	E	S
10.000	49.250	60.000	67.125	69.875	75.500	81.250
A	H	E	A	D		
52.250	59.375	65.750	71.000	78.250		

SIGN NO.	56B
STATION	
ROADWAY	ROUTE 291

NOT TO SCALE

PAVEMENT MARKING
& SIGNING SHEET
SHEET 5 OF 6

STATE OF MISSOURI
THANKAM MATHEW
NUMBER PE-2014000056
PROFESSIONAL ENGINEER
04/01/2025 10:54:48 AM
THANKAM.MATHEW - CIVIL
MO-PE-2014000056

DATE PREPARED	3/26/2025
ROUTE	291
STATE	MO
DISTRICT	KC
SHEET NO.	22
COUNTY	CASS/JACKSON
JOB NO.	JKU0065
CONTRACT ID.	
PROJECT NO.	
BRIDGE NO.	

DATE	DESCRIPTION

MISSOURI HIGHWAYS AND TRANSPORTATION COMMISSION
105 WEST CAPITOL
JEFFERSON CITY, MO 65102
1-888-ASK-MODOT (1-888-275-6636)

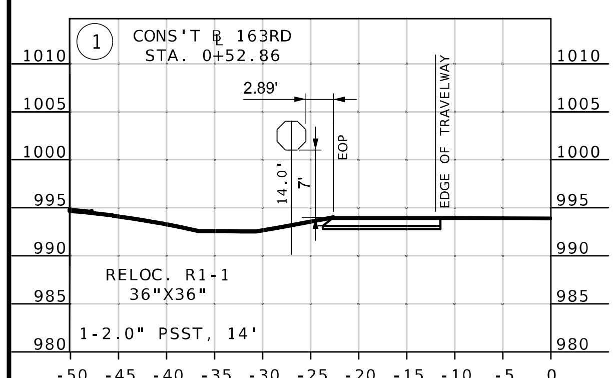

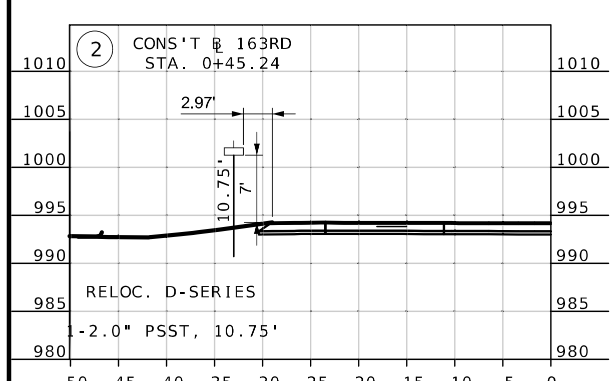

PAVEMENT MARKING
& SIGNING SHEET
SHEET 6 OF 6

STATE OF MISSOURI
THANKAM MATHEW
NUMBER PE-2014000056
PROFESSIONAL ENGINEER
THANKAM MATHEW - CIVIL
MO-PE-2014000056

DATE PREPARED	3/26/2025
ROUTE 291	STATE MO
DISTRICT KC	SHEET NO. 23
COUNTY	CASS/JACKSON
JOB NO.	JKU0065
CONTRACT ID.	
PROJECT NO.	
BRIDGE NO.	

DESCRIPTION

DATE

MISSOURI HIGHWAYS AND TRANSPORTATION COMMISSION

105 WEST CAPITOL
JEFFERSON CITY, MO 65102
1-888-ASK-MODOT (1-888-275-6636)

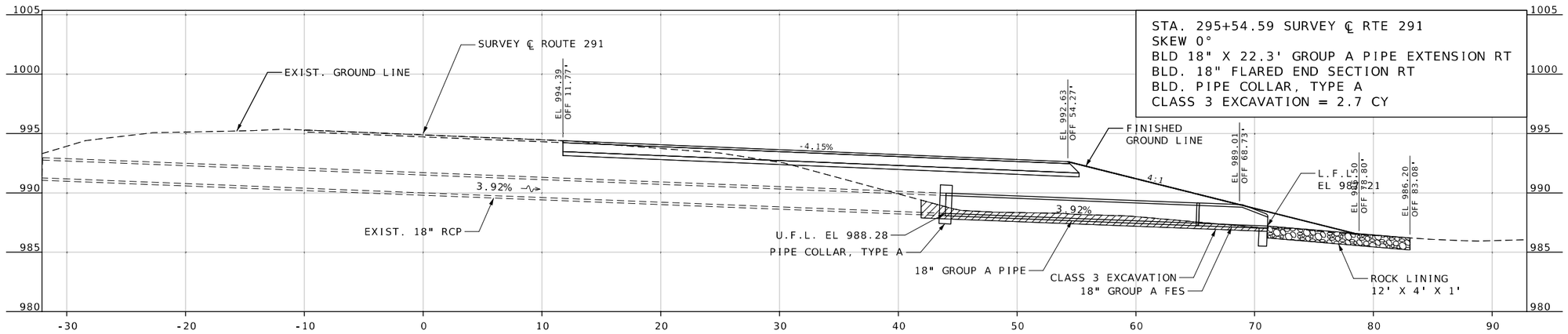

STA 295+54.59

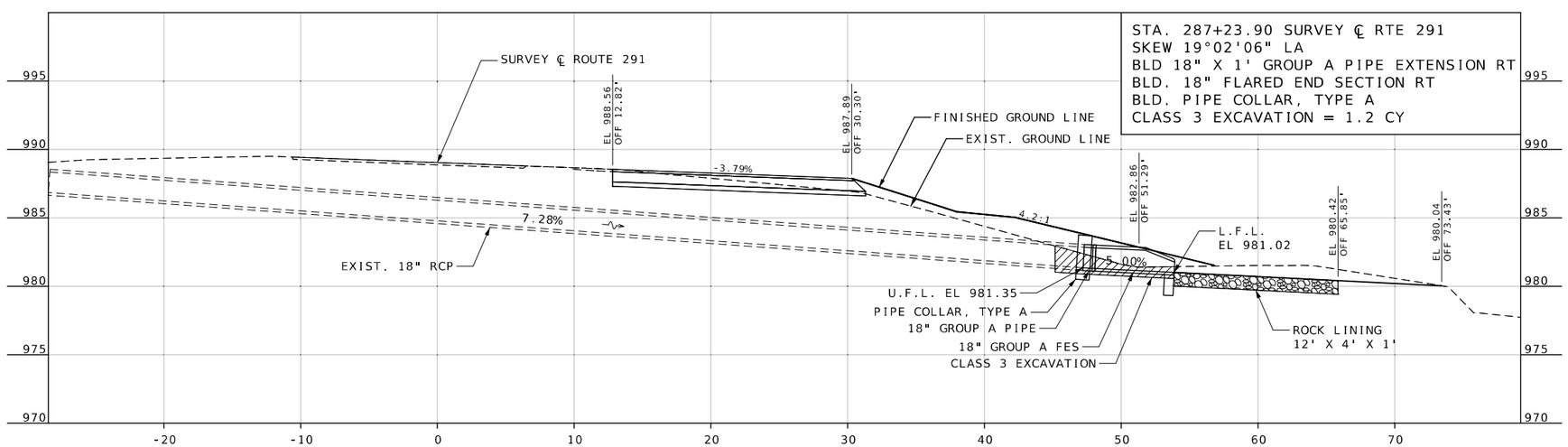

STA 287+23.90

CULVERT SECTION SHEET
SHEET 1 OF 1

STATE OF MISSOURI
THANKAM MATHEW
NUMBER PE-2014000056
PROFESSIONAL ENGINEER

04/01/ 59 AM
THANKAM MATHEW - CIVIL
MO-PE-2014000056

DATE PREPARED	
3/26/2025	
ROUTE 291	STATE MO
DISTRICT KC	SHEET NO. 24
COUNTY CASS/JACKSON	
JOB NO. JKU0065	
CONTRACT ID.	
PROJECT NO.	
BRIDGE NO.	

DATE	DESCRIPTION

MISSOURI HIGHWAYS AND TRANSPORTATION COMMISSION

105 WEST CAPITOL
JEFFERSON CITY, MO 65102
1-888-ASK-MODOT (1-888-275-6636)