MISSOURI HIGHWAYS AND TRANSPORTATION COMMISSION

PLANS FOR PROPOSED STATE HIGHWAY

SCOTT COUNTY

SECTIONS 27, 28, T26N, R14E

DESIGN DESIGNATION

A.A.D.T. - 2023 = 1664
A.A.D.T. - 2043 = 2413
D.H.V. = 7%
T = 4.9%
V = 55 M.P.H.
D = 76% N / 23% S
FUNCTIONAL CLASSIFICATION - MAJOR COLLECTOR

NO RIGHT OF WAY WILL BE ACQUIRED WITH THIS PROJECT.

KEY MAP
LOCATION OF SCOTT COUNTY

BRIDGE #A9692
ROADWAY GRADING,
PAVING, DRAINAGE,
REPLACE EXIST. BRIDGE #R0142
ROUTE AA OVER
US HIGHWAY 60

BEGIN PROJECT LIMITS
STA. 59+25.00

END PROJECT LIMITS
STA. 0+77.98 R2

NOT TO SCALE

DISCLAIMER

THE PROFESSIONAL WHOSE SIGNATURE AND PERSONAL SEAL APPEAR HEREON ASSUMES RESPONSIBILITY ONLY FOR WHAT APPEARS ON THIS PAGE, AND DISCLAIMS (PURSUANT TO SECTION 327.411 RSMO) SPECIFICATION, ESTIMATES, REPORTS, OR OTHER DOCUMENTS OR INSTRUMENTS NOT SEALED BY THE UNDERSIGNED PROFESSIONAL RELATING TO OR INTENDED TO BE USED FOR ANY PART OR PARTS OF THE PROJECT TO WHICH THIS PAGE REFERS.

CONVENTIONAL SYMBOLS

(USED IN PLANS)

	EXISTING	NEW
BUILDINGS AND STRUCTURES		
GUARD RAIL		
GUARD CABLE		
CONCRETE RIGHT-OF-WAY MARKER		
STEEL RIGHT-OF-WAY MARKER		
LOCATION SURVEY MARKER		
UTILITIES		
FIBER OPTICS	—FO—	—FO—
OVERHEAD CABLE TV	—OTV—	—OTV—
UNDERGROUND CABLE TV	—UTV—	—UTV—
OVERHEAD TELEPHONE	—OT—	—OT—
UNDERGROUND TELEPHONE	—UT—	—UT—
OVERHEAD POWER	—OE—	—OE—
UNDERGROUND POWER	—UE—	—UE—
SANITARY SEWER	—S—	—S—
STORM SEWER	—SS—	—SS—
GAS	—G—	—G—
WATER	—W—	—W—
MANHOLE	SAN	
FIRE HYDRANT	HYD	
WATER VALVE	WV	
WATER METER	WM	
DROP INLET		
DITCH BLOCK		
GROUND MOUNTED SIGN	SIGN	
LIGHT POLE		
H-FRAME POWER POLE		
TELEPHONE PEDESTAL	PED	
FENCE		
CHAIN LINK	—V—	
WOVEN WIRE	—X—	
GATE POST		
BENCHMARK	BM	

NOTE: DASHED OR OPEN SYMBOLS INDICATE EXISTING FEATURES

THE EXISTENCE AND APPROXIMATE LOCATION OF UTILITY FACILITIES KNOWN TO EXIST, AS SHOWN ON THE PLANS, ARE BASED ON THE BEST INFORMATION AVAILABLE TO THE COMMISSION AT THIS TIME. THIS INFORMATION IS PROVIDED BY THE COMMISSION "AS-IS" AND THE COMMISSION EXPRESSLY DISCLAIMS ANY REPRESENTATION OR WARRANTY AS TO THE COMPLETENESS, ACCURACY, OR SUITABILITY OF THE INFORMATION FOR ANY USE. RELIANCE UPON THIS INFORMATION IS DONE AT THE RISK AND PERIL OF THE USER, AND THE COMMISSION SHALL NOT BE LIABLE FOR ANY DAMAGES THAT MAY ARISE FROM ANY ERROR IN THE INFORMATION. IT IS, THEREFORE, THE RESPONSIBILITY OF THE CONTRACTOR TO VERIFY THE EXISTENCE, LOCATION AND STATUS OF ANY FACILITY. SUCH VERIFICATION INCLUDES DIRECT CONTACT WITH THE LISTED UTILITIES.

INDEX OF SHEETS

LENGTH OF PROJECT

BEGINNING OF PROJECT STA. 59+25.00
END OF PROJECT STA. 0+77.98 R2

APPARENT LENGTH -5847.02 FEET

EQUATIONS AND EXCEPTIONS:

℄ PR ROUTE AA
STA. 78+93.25 BK = 0+00.00 AH

TOTAL CORRECTIONS	7893.25	FEET
NET LENGTH OF PROJECT	2046.23	FEET
STATE LENGTH	0.388	MILES
FOR INFORMATION ONLY ESTIMATED DISTURBED ACRES	5.5	ACRES

STATE OF MISSOURI
ANDREA S. DAVIS
PE-2018021250
PROFESSIONAL ENGINEER

DATE PREPARED	
3/24/2025	
ROUTE: AA	STATE: MO
DISTRICT: SE	SHEET NO.: 1
COUNTY: SCOTT	
JOB NO.: JSE0248	
CONTRACT ID.	
PROJECT NO.	
BRIDGE NO.	

DATE	DESCRIPTION

IF A SEAL IS PRESENT ON THIS SHEET IT HAS BEEN ELECTRONICALLY SEALED AND DATED.

MISSOURI HIGHWAYS AND TRANSPORTATION COMMISSION
105 WEST CAPITOL
JEFFERSON CITY, MO 65102
1-888-ASK-MODOT (1-888-275-6636)

HR GREEN, INC.
520 MARYVILLE CENTRE DRIVE,
SUITE 100
ST. LOUIS, MISSOURI 63141
PHONE: (636) 519.0990
CORPORATE LICENSE #2002006608
HRGreen

DISCLAIMER
THE PROFESSIONAL WHOSE SIGNATURE AND PERSONAL SEAL APPEAR HEREON ASSUMES RESPONSIBILITY ONLY FOR WHAT APPEARS ON THIS PAGE, AND DISCLAIMS (PURSUANT TO SECTION 327.411 RSMO) SPECIFICATION, ESTIMATES, REPORTS, OR OTHER DOCUMENTS OR INSTRUMENTS NOT SEALED BY THE UNDERSIGNED PROFESSIONAL RELATING TO OR INTENDED TO BE USED FOR ANY PART OR PARTS OF THE PROJECT TO WHICH THIS PAGE REFERS.

ALL STATIONS GIVEN FROM ℄ PR ROUTE AA UNLESS OTHERWISE NOTED.

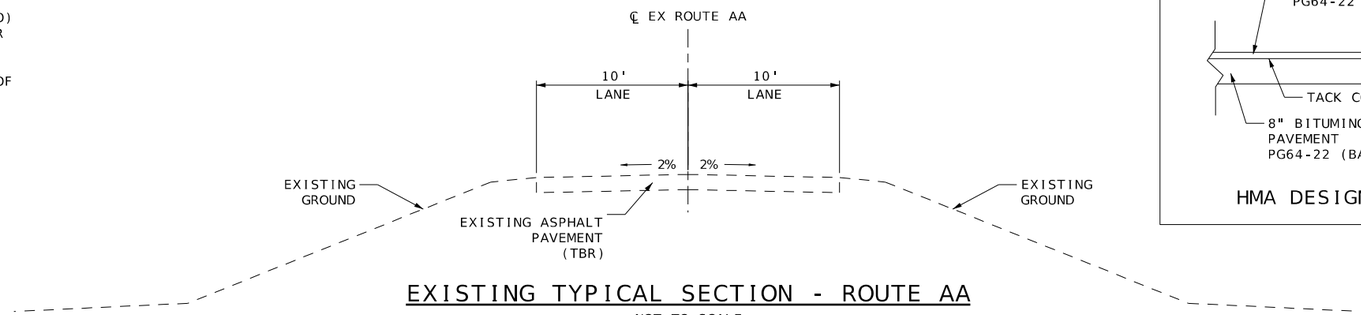

EXISTING TYPICAL SECTION - ROUTE AA

NOT TO SCALE

OPTIONAL PAVEMENT

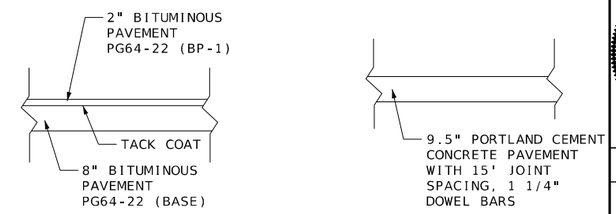

HMA DESIGN

PCC DESIGN

APPLICATION RATES:

PLANT MIX BITUMINOUS BASE COURSE:
PG64-22 (BASE): 1.943 TONS/CY

PLANT MIX BITUMINOUS ASPHALT:
PG64-22 (BP-1): 1.948 TONS/CY

TACK COAT:
0.08 GAL/SY

PAVEMENT HISTORY:
CONSTRUCTED: 1962

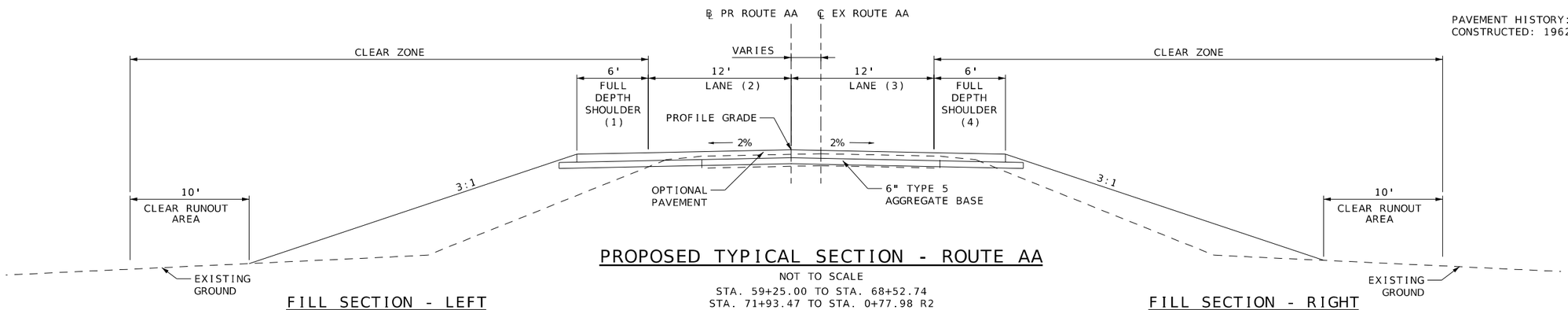

PROPOSED TYPICAL SECTION - ROUTE AA

NOT TO SCALE
STA. 59+25.00 TO STA. 68+52.74
STA. 71+93.47 TO STA. 0+77.98 R2

(1) SHOULDER TAPER LT: 6' AT STA. 00+10.90 R2 TO 0' AT STA. 00+77.98 R2

(2) LANE TAPER LT: MATCH EXISTING AT STA. 59+25.00 TO 12' AT STA. 60+10.39
12' AT STA. 0+10.90 R2 TO MATCH EXISTING AT STA. 0+77.98 R2

(3) LANE TAPER RT: MATCH EXISTING AT STA. 59+25.00 TO 12' AT STA. 60+10.39
12' AT STA. 0+10.90 R2 TO MATCH EXISTING AT STA. 0+77.98 R2

(4) SHOULDER WIDTH TAPER RT: 0' FROM STA. 59+25.00 TO 6' AT STA. 60+10.39

FILL SECTION - LEFT

STA. 68+13.00 TO STA. 68+72.74 LT
STA. 71+73.47 TO STA. 0+77.98 R2 LT

FILL SECTION - RIGHT

STA. 59+90.00 TO STA. 68+72.74 RT
STA. 71+73.47 TO STA. 73+50.00 RT
STA. 78+45.00 TO STA. 0+77.98 R2 RT

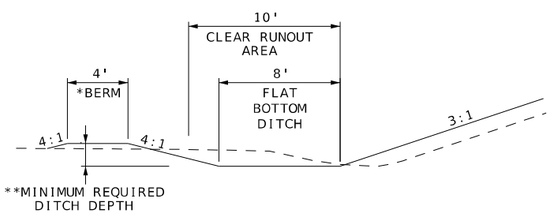

DITCH SECTION - LEFT

NOT TO SCALE
STA. 60+33 TO STA. 68+13 LT

* BERM TO MAINTAIN MINIMUM REQUIRED DITCH DEPTH
STA. 60+33 TO STA. 62+40 LT

** MINIMUM REQUIRED DITCH DEPTH = 2.5'
STA. 60+33 TO STA. 64+01 LT

MINIMUM REQUIRED DITCH DEPTH VARIES FROM 1.5' TO 1'
STA. 64+01 TO STA. 68+13 LT

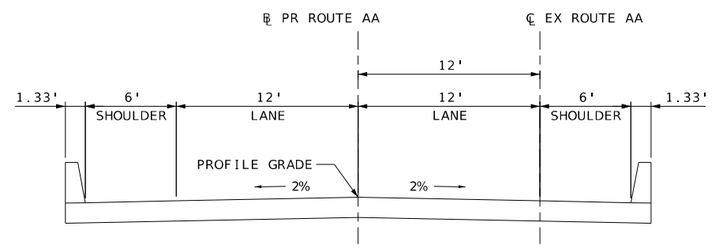

PROPOSED TYPICAL SECTION - ROUTE AA BRIDGE #A9692

NOT TO SCALE

STA. 68+72.74 TO STA. 71+73.47

BRIDGE APPROACH SLAB ROUTE AA:
STA. 68+52.74 TO STA. 68+72.74
STA. 71+73.47 TO STA. 71+93.47

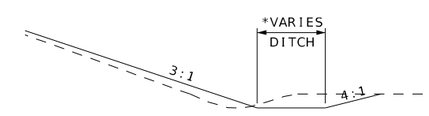

DITCH SECTION - RIGHT

NOT TO SCALE
STA. 73+50 TO STA. 78+45 RT

*DITCH WIDTH = 0' (V-DITCH)
STA. 73+50 TO STA. 74+80 RT

DITCH WIDTH VARIES 0' TO 4'
STA. 74+80 TO STA. 75+60 RT

DITCH WIDTH = 4'
STA. 75+60 TO STA. 77+00 RT

DITCH WIDTH VARIES = 4' TO 8'
STA. 77+00 TO STA. 77+40 RT

DITCH WIDTH VARIES = 8'
STA. 77+40 TO STA. 78+45 RT

TYPICAL SECTIONS
(SHEET 1 OF 2)

STATE OF MISSOURI
ANDREA S. DAVIS
PE-2018021250
PROFESSIONAL ENGINEER

DATE PREPARED	
3/24/2025	
ROUTE	STATE
AA	MO
DISTRICT	SHEET NO.
SE	2
COUNTY	
SCOTT	
JOB NO.	
JSE0248	
CONTRACT ID.	
PROJECT NO.	
BRIDGE NO.	

DESCRIPTION	DATE

IF A SEAL IS PRESENT ON THIS SHEET IT HAS BEEN ELECTRONICALLY SEALED AND DATED.

MISSOURI HIGHWAYS AND TRANSPORTATION COMMISSION
105 WEST CAPITOL
JEFFERSON CITY, MO 65102
1-888-ASK-MODOT (1-888-275-6636)

HR GREEN, INC.
520 MARYVILLE CENTRE DRIVE, SUITE 100
ST. LOUIS, MISSOURI 63141
PHONE: (636) 519.0990
CORPORATE LICENSE #2002006608

HRGreen

DISCLAIMER
THE PROFESSIONAL WHOSE SIGNATURE AND PERSONAL SEAL APPEAR HEREON ASSUMES RESPONSIBILITY ONLY FOR WHAT APPEARS ON THIS PAGE, AND DISCLAIMS (PURSUANT TO SECTION 327.411 RSMO) SPECIFICATION, ESTIMATES, REPORTS, OR OTHER DOCUMENTS OR INSTRUMENTS NOT SEALED BY THE UNDERSIGNED PROFESSIONAL RELATING TO OR INTENDED TO BE USED FOR ANY PART OR PARTS OF THE PROJECT TO WHICH THIS PAGE REFERS.

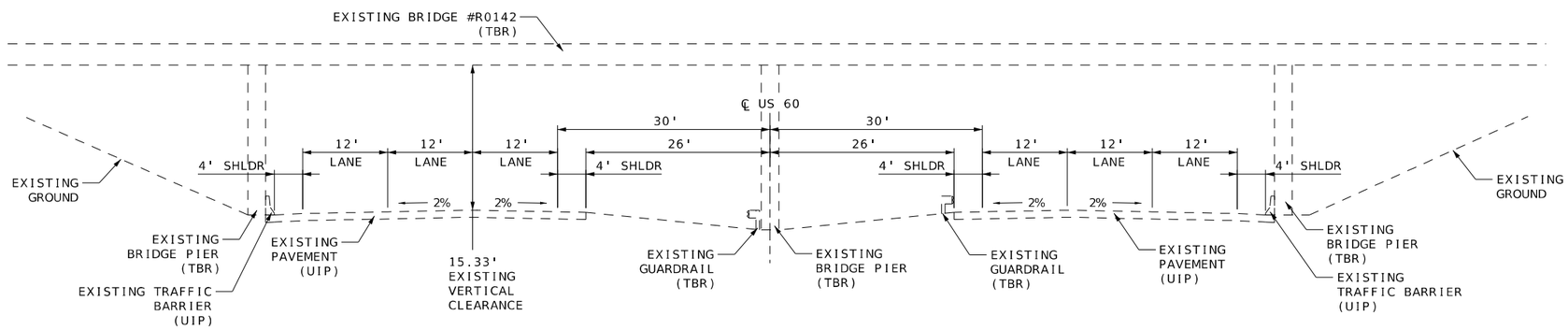

EXISTING TYPICAL SECTION - US HIGHWAY 60

NOT TO SCALE
STA. 21+45.00 TO STA. 21+71.00 (℄ US 60)

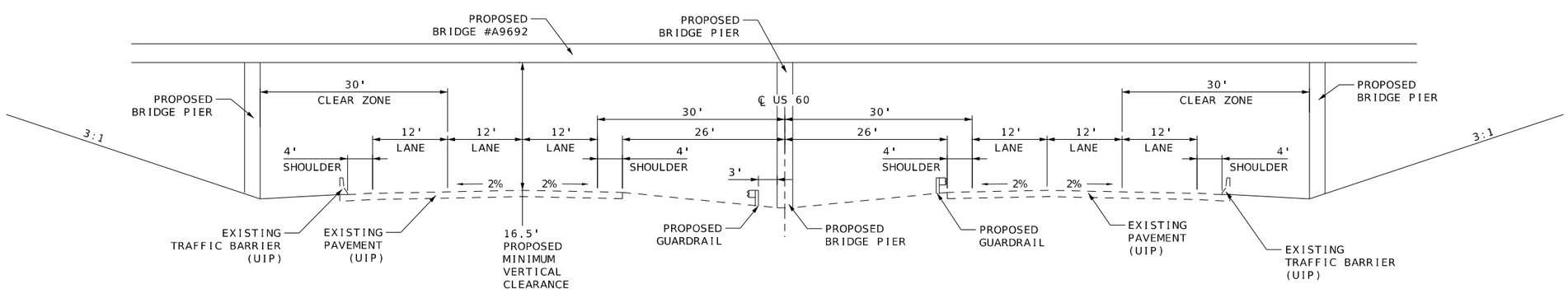

PROPOSED TYPICAL SECTION - US HIGHWAY 60

NOT TO SCALE
STA. 21+50.04 TO STA. 21+92.19 (℄ US 60)
(SEE PLANS FOR PROPOSED GUARDRAIL LIMITS ALONG US HIGHWAY 60)

TYPICAL SECTIONS
(SHEET 2 OF 2)

STATE OF MISSOURI
ANDREA S. DAVIS
PE-2018021250
PROFESSIONAL ENGINEER

DATE PREPARED	3/24/2025
ROUTE	AA
STATE	MO
DISTRICT	SE
SHEET NO.	2
COUNTY	SCOTT
JOB NO.	JSE0248
CONTRACT ID.	
PROJECT NO.	
BRIDGE NO.	

DATE	DESCRIPTION

MISSOURI HIGHWAYS AND TRANSPORTATION COMMISSION
105 WEST CAPITOL
JEFFERSON CITY, MO 65102
1-888-ASK-MODOT (1-888-275-6636)

HR GREEN, INC.
520 MARYVILLE CENTRE DRIVE, SUITE 100
ST. LOUIS, MISSOURI 63141
PHONE: (636) 519.0990
CORPORATE LICENSE #2002006608

HRGreen

IF A SEAL IS PRESENT ON THIS SHEET IT HAS BEEN ELECTRONICALLY SEALED AND DATED.

CLEARING AND GRUBBING

APPROX. STATION FROM	TO	ROUTE	LOCATION	CLEARING AND GRUBBING (ACRE)	REMARKS
67+75.00	68+75.00	ROUTE AA	LT	0.09	
71+20.00	72+20.00	ROUTE AA	LT	0.05	
			SUBTOTAL =	0.14	
			PAY TOTAL =	1	

REMOVAL OF IMPROVEMENTS

APPROX. STATION FROM	TO	ROUTE	LOCATION	AREA (SY)	LENGTH (FT)	QTY (EA)	DESCRIPTION	REMARKS
59+25		ROUTE AA	BOTH		22		SAWCUT	FULL DEPTH SAWCUT ACROSS ROUTE AA
59+25	69+05	ROUTE AA	BOTH	2314			PAVEMENT	ROUTE AA PAVEMENT REMOVAL
28+91	28+48	N. OUTER RD	BOTH	293			PAVEMENT	N. OUTER RD PAVEMENT REMOVAL
59+43		ROUTE AA	RT			1	1 SIGN AND 1 POST	WEIGHT/SPEED RESTRICTION SIGN
59+78	60+34	ROUTE AA	LT		56		CMP	24" CMP - MODOT ENT.
28+52		N. OUTER RD	BOTH		36		SAWCUT	FULL DEPTH SAWCUT ACROSS N. OUTER RD
64+00		ROUTE AA	BOTH		74		CMP	24" CMP - ROUTE AA CULVERT
67+06	69+06	ROUTE AA	RT		200		GUARDRAIL	GUARDRAIL, END TERMINAL, & BRIDGE APPR. SECTION
67+72	68+96	ROUTE AA	LT		124		GUARDRAIL	GUARDRAIL, END TERMINAL, & BRIDGE APPR. SECTION
68+31	68+65	ROUTE AA	LT		65		FENCE	48" WIRE FENCE
20+99		US 60	RT			1	3 SIGNS AND 1 POST	SOUTH, I-55, AND ARROW SIGNS
21+06	22+70	US 60	CTR		165		GUARDRAIL	WB-US 60 GUARDRAIL, END TERMINAL, & END ANCHOR
20+58	22+23	US 60	RT		165		GUARDRAIL	EB-US 60 GUARDRAIL & END ANCHOR
71+13	71+25	ROUTE AA	RT		12		CMP	8" CMP - BRIDGE CULVERT
71+50	0+78	ROUTE AA	BOTH	1897			PAVEMENT	ROUTE AA PAVEMENT REMOVAL
71+51	73+49	ROUTE AA	CTR		198		GUARDRAIL	GUARDRAIL, END TERMINAL, & BRIDGE APPR. SECTION
71+62	72+84	ROUTE AA	RT		122		GUARDRAIL	GUARDRAIL, END TERMINAL, & BRIDGE APPR. SECTION
78+73		ROUTE AA	BOTH		49		CMP	15" CMP - ROUTE AA CULVERT
0+13	0+81	LYNUAL ST	BOTH	193			PAVEMENT	LYNUAL ST PAVEMENT REMOVAL
0+60	0+75	LYNUAL ST	RT		15		CMP	15" CMP - LYNUAL ST FIELD ENT.
0+80		LYNUAL ST	BOTH		22		SAWCUT	FULL DEPTH SAWCUT ACROSS LYNUAL ST
0+25		ROUTE AA	RT			1	1 SIGN AND 1 POST	STOP SIGN
0+54		ROUTE AA	RT			1	1 SIGN AND 1 POST	ADOPT-A-HIGHWAY SIGN
0+78		ROUTE AA	BOTH		21		SAWCUT	FULL DEPTH SAWCUT ACROSS ROUTE AA
2+11		ROUTE AA	LT			1	1 SIGN AND 1 POST	WEIGHT/SPEED RESTRICTION SIGN
			PAY TOTAL =		1 LUMP SUM			

EARTHWORK

APPROX. STATION FROM	TO	ROUTE	CLASS A EXCAVATION (CY) *	EMBANKMENT IN PLACE (CY)	REMARKS
59+25.00	68+50.00	ROUTE AA	1694	10648	NORTH OF BRIDGE
68+50.00	69+60.00	ROUTE AA	800	800	NORTH BRIDGE GRADING
70+80.00	72+00.00	ROUTE AA	505	1345	SOUTH BRIDGE GRADING
72+00.00	00+77.75	ROUTE AA	831	8915	SOUTH OF BRIDGE
00+50.16	00+80.84	LYNUAL ST	34	1	
		SUBTOTAL =	3864	21709	
		PAY TOTAL =	3864	21709	

* INCLUDES REMOVAL AND DISPOSITION OF EXISTING ASPHALT

AGGREGATE FOR BASE

APPROX. STATION FROM	TO	ROUTE	AREA (SF)	TYPE 5 AGGREGATE FOR BASE (6 IN. THICK) (SY)	REMARKS
59+25.00	68+80.55	ROUTE AA	31807.12	3534.12	ROUTE AA NORTH OF BRIDGE
28+48.40	28+91.66	N. OUTER RD	2851.40	316.82	N. OUTER RD
71+65.66	00+77.98	ROUTE AA	27664.83	3073.87	ROUTE AA SOUTH OF BRIDGE
00+11.44	00+80.92	LYNUAL ST	2833.90	314.88	LYNUAL ST
			SUBTOTAL =	7239.69	
			PAY TOTAL =	7240	

SUMMARY OF QUANTITIES
(SHEET 1 OF 5)

STATE OF MISSOURI
ANDREA S. DAVIS
PE-2018021250
PROFESSIONAL ENGINEER

DATE PREPARED 3/24/2025
ROUTE AA | STATE MO
DISTRICT SE | SHEET NO. 3
COUNTY SCOTT
JOB NO. JSE0248
CONTRACT ID.
PROJECT NO.
BRIDGE NO.

DATE	DESCRIPTION

IF A SEAL IS PRESENT ON THIS SHEET IT HAS BEEN ELECTRONICALLY SEALED AND DATED.

MISSOURI HIGHWAYS AND TRANSPORTATION COMMISSION
105 WEST CAPITOL
JEFFERSON CITY, MO 65102
1-888-ASK-MODOT (1-888-275-6636)

HR GREEN, INC.
520 MARYVILLE CENTRE DRIVE,
SUITE 100
ST. LOUIS, MISSOURI 63141
PHONE: (636) 519.0990
CORPORATE LICENSE #2002006608
HRGreen

GRAVEL OR CRUSHED STONE

APPROX. STATION	ROUTE	AREA (SF)	GRAVEL (A) OR CRUSHED STONE (B) (3 IN. THICK) (TONS)	REMARKS
60+03.73		1777.24	23.04	MODOT ENTRANCE
00+01.40	ROUTE AA	126.00	1.63	FIELD ENTRANCE LT.
00+67.82	LYNUAL ST	188.00	2.44	FIELD ENTRANCE LT.
		SUBTOTAL =	27.11	
		PAY TOTAL =	28	

NOTE: ESTIMATE FACTOR IS 1.40 TONS/CY OF LOOSE AGGREGATE.

OPTIONAL PAVEMENT - 10" HMA VS. 9.5" PCC

APPROX. STATION FROM	TO	ROUTE	AREA (SF)	OPTIONAL PAVEMENT (SY)	REMARKS
59+25.00	68+80.55	ROUTE AA	31807.12	3534.12	ROUTE AA NORTH OF BRIDGE
28+48.40	28+91.66	ROUTE AA	2851.40	316.82	N. OUTER RD
71+65.66	00+77.98	ROUTE AA	27664.83	3073.87	ROUTE AA SOUTH OF BRIDGE
00+11.44	00+80.92	LYNUAL ST	2833.90	314.88	LYNUAL ST
			SUBTOTAL =	7239.69	
			PAY TOTAL =	7239.7	

GUARDRAIL

APPROX. STATION FROM	TO	ROUTE	LOCATION	MGS GUARDRAIL (LF)	MGS END ANCHOR (EA)	MGS BRIDGE APPROACH TRANSITION SECTION (REGULAR/NO CURB) (EA)	TYPE A CRASHWORTHY END TERMINAL (MASH) (EA)	REMARKS
67+04.17	68+67.00	ROUTE AA	RT	75.0		1	1	
67+63.89	68+51.39	ROUTE AA	LT			1	1	
71+79.21	73+41.38	ROUTE AA	LT	75.0		1	1	
71+94.82	72+82.32	ROUTE AA	RT			1	1	
20+58.49	22+04.27	US 60	RT	137.5	1			
21+39.35	23+11.25	US 60	LT	112.5	1		1	
			SUBTOTAL =	400.0	2	4	5	
			PAY TOTAL =	400	2	4	5	

TEMPORARY TRAFFIC CONTROL ITEMS

APPROX. STATION FROM	TO	ROUTE	LOCATION	TEMPORARY PAVEMENT (SY)	WORK ZONE CRASH CUSHION (NARROW) (EA)	TEMPORARY TRAFFIC BARRIER CONTRACTOR FURNISHED/RETAINED (LF)	TEMPORARY REMOVABLE MARKING TAPE 4 IN., YELLOW (1) (LF)	TEMPORARY REMOVABLE MARKING TAPE 24 IN., WHITE (1) (LF)	REMARKS
50+50.00	55+50.00	ROUTE AA	RT				1000		DOUBLE SOLID YELLOW
55+50.00		ROUTE AA	RT					11	STOP BAR, PHASE 1 & 2
63+25.00		ROUTE AA	LT					11	STOP BAR, PHASE 2
25+00.00		N OUTER RD	RT					11	STOP BAR, PHASE 1 & 2
20+36.00	27+36.00	US 60	LT			700			
27+36.00		US 60	LT		1				
75+03.00		ROUTE AA	RT					11	STOP BAR, PHASE 3
00+11.38	00+36.77	LYNUAL ST	LT	35.0					USE DURING PHASE 1 & 2
02+55.00		LYNUAL ST	LT					11	STOP BAR, PHASE 1
04+53.00	09+53.00	ROUTE AA	LT				1000		DOUBLE SOLID YELLOW
04+53.00		ROUTE AA	LT					11	STOP BAR, PHASE 1
04+53.00		ROUTE AA	LT					11	STOP BAR, PHASE 3
			SUBTOTAL =	35.0	1	700	2000	77	
			PAY TOTAL =	(2)	(2)	(2)	(2)	(2)	

(1) NO DIRECT PAY WILL BE MADE FOR REMOVAL OF TEMPORARY REMOVABLE MARKING TAPE.
(2) SEE 2BS SHEET FOR TEMPORARY TRAFFIC CONTROL ITEMS PAY TOTAL.

SUMMARY OF QUANTITIES
(SHEET 2 OF 5)

STATE OF MISSOURI
ANDREA S. DAVIS
PE-2018021250
PROFESSIONAL ENGINEER

DATE PREPARED 3/24/2025
ROUTE AA | STATE MO
DISTRICT SE | SHEET NO. 3
COUNTY SCOTT
JOB NO. JSE0248
CONTRACT ID.
PROJECT NO.
BRIDGE NO.

DATE	DESCRIPTION

IF A SEAL IS PRESENT ON THIS SHEET IT HAS BEEN ELECTRONICALLY SEALED AND DATED.

MISSOURI HIGHWAYS AND TRANSPORTATION COMMISSION
105 WEST CAPITOL
JEFFERSON CITY, MO 65102
1-888-ASK-MODOT (1-888-275-6636)

HR GREEN, INC.
520 MARYVILLE CENTRE DRIVE, SUITE 100
ST. LOUIS, MISSOURI 63141
PHONE: (636) 519.0990
CORPORATE LICENSE #2002006608
HRGreen

MOBILIZATION
1 LUMP SUM

PERMANENT PAVEMENT MARKING						
APPROX. STATION FROM	TO	ROUTE	4 IN. WHITE STANDARD WATERBORNE PAVEMENT MARKING PAINT, TYPE P BEADS (LF)	4 IN. YELLOW STANDARD WATERBORNE PAVEMENT MARKING PAINT, TYPE P BEADS (LF)	PAVEMENT MARKING REMOVAL (LF)	REMARKS
55+50.00	59+25.00	ROUTE AA			94	REMOVE INTERMITTENT CENTERLINE FOR TRAF. CTRL
55+50.00	59+25.00	ROUTE AA		94		INTERMITTENT CENTERLINE
59+25.00	00+77.98	ROUTE AA	4093			EDGE LINES
59+25.00	65+75.00	ROUTE AA		813		INTERMITTENT LT, SOLID RT CENTERLINE
25+00.00	28+51.22	N OUTER RD			676	REMOVE DOUBLE YELLOW FOR TRAF. CTRL
25+00.00	28+51.22	N OUTER RD		676		DOUBLE SOLID CENTERLINE
65+75.00	75+80.00	ROUTE AA		2010		DOUBLE SOLID CENTERLINE
75+80.00	02+45.00	ROUTE AA		698		SOLID LT, INTERMITTENT RT CENTERLINE
00+77.98	02+45.00	ROUTE AA			209	REMOVE SOLID/DASHED CENTERLINE FOR TRAF. CTRL
02+45.00	04+53.00	ROUTE AA			13	REMOVE INTERMITTENT CENTERLINE FOR TRAF. CTRL
02+45.00	04+53.00	ROUTE AA		52		INTERMITTENT CENTERLINE
		SUBTOTAL =	4093	4343	992	
		PAY TOTAL =	4093	4343	992	

RUMBLE STRIP				
APPROX. STATION FROM	TO	ROUTE	OPTIONAL SHOULDER RUMBLE STRIP (STA)	REMARKS
61+86.81	68+47.32	ROUTE AA	6.6	LEFT SHOULDER
62+08.31	68+58.16	ROUTE AA	6.5	RIGHT SHOULDER
71+88.05	78+35.00	ROUTE AA	6.5	LEFT SHOULDER
71+98.89	77+16.22	ROUTE AA	5.1	RIGHT SHOULDER
		SUBTOTAL =	24.7	
		PAY TOTAL =	24.7	

CONTRACTOR FURNISHED SURVEYING AND STAKING
1 LUMP SUM

DRAINAGE STRUCTURES													
APPROX. STATION FROM	TO	ROUTE	LOCATION	CLASS 3 EXCAVATION (CY)	24 IN. PIPE GROUP B (LF)	48 IN. PIPE GROUP B (LF)	18 IN. PIPE GROUP C (LF)	24 IN. PIPE GROUP C (LF)	24 IN. GROUP B FLARED END SECTION (EA)	48 IN. GROUP B FLARED END SECTION (EA)	18 IN. GROUP C FLARED END SECTION (EA)	24 IN. GROUP C FLARED END SECTION (EA)	REMARKS
59+76.24	60+50.04	ROUTE AA	LT	5				74				2	MODOT ENT. CULVERT
64+01.06		ROUTE AA	BOTH	244		80				2			ROUTE AA CULVERT
78+71.40		ROUTE AA	BOTH	43	49				2				ROUTE AA CULVERT
00+62.67	00+73.18	LYNUAL ST	RT	2			11				2		LYNUAL ST FIELD ENT. CULVERT
			SUBTOTAL =	294	49	80	11	74	2	2	2	2	
			PAY TOTAL =	294	49	80	11	74	2	2	2	2	

SUMMARY OF QUANTITIES
(SHEET 3 OF 5)

STATE OF MISSOURI
ANDREA S. DAVIS
PE-2018021250
PROFESSIONAL ENGINEER

DATE PREPARED 3/24/2025
ROUTE AA | STATE MO
DISTRICT SE | SHEET NO. 3
COUNTY SCOTT
JOB NO. JSE0248
CONTRACT ID.
PROJECT NO.
BRIDGE NO.

DESCRIPTION	DATE

IF A SEAL IS PRESENT ON THIS SHEET IT HAS BEEN ELECTRONICALLY SEALED AND DATED.

MISSOURI HIGHWAYS AND TRANSPORTATION COMMISSION
105 WEST CAPITOL
JEFFERSON CITY, MO 65102
1-888-ASK-MODOT (1-888-275-6636)

HR GREEN, INC.
520 MARYVILLE CENTRE DRIVE,
SUITE 100
ST. LOUIS, MISSOURI 63141
PHONE: (636) 519.0990
CORPORATE LICENSE #2002006608

HRGreen

MULCHING AND SEEDING

APPROX. STATION FROM	TO	ROUTE	MULCHING (ACRE)	SEEDING-COOL SEASON GRASSES (ACRE)	REMARKS
59+25.00	69+71.00	ROUTE AA	2.09	2.09	NORTH OF US 60
70+72.30	00+77.98	ROUTE AA	1.84	1.84	SOUTH OF US 60
		SUBTOTAL =	3.93	3.93	
		PAY TOTAL =	4	4	

ROCK

APPROX. STATION FROM	TO	ROUTE	LOCATION	FURNISHING TYPE 2 ROCK BLANKET (CY)	PLACING TYPE 2 ROCK BLANKET (CY)	PERMANENT EROSION CONTROL GEOTEXTILE (SY)	REMARKS
68+13.95	69+50.00	ROUTE AA	BOTH	799	799	1198	
71+00.00	72+35.00	ROUTE AA	BOTH	770	770	1154	
			SUBTOTAL =	1569	1569	2352	
			PAY TOTAL =	1569	1569	2352	

EROSION CONTROL

APPROX. STATION FROM	TO	ROUTE	LOCATION	SEDIMENT TRAP EXCAVATION (CY) *	SEDIMENT TRAP ROCK (CY) *	ROCK DITCH CHECKS (LF)	SEDIMENT REMOVAL (CY) **	SILT FENCE (FT)	TYPE 2C EROSION CONTROL BLANKET (SY)	REMARKS
60+55.22	62+37.14	ROUTE AA	LT				1.8	181		
60+62.00		ROUTE AA	RT	2.3	2.3		10.0			5' WIDE
61+20.02	63+90.31	ROUTE AA	RT				2.8	281		
62+50.00	68+44.94	ROUTE AA	LT						3185	
62+50.00	68+87.35	ROUTE AA	RT						3548	
63+87.35		ROUTE AA	LT			20	1.0			
64+00.68		ROUTE AA	RT	9.0	9.0		10.0			20' WIDE
64+11.04	69+37.35	ROUTE AA	RT				5.3	533		
64+11.59		ROUTE AA	LT			20	1.0			
67+64.79	68+82.09	ROUTE AA	LT				1.2	124		
68+13.95	69+50.00	ROUTE AA	BOTH							
69+00.20		ROUTE AA	LT	6.8	6.8		10.0			15' WIDE
69+53.83		ROUTE AA	RT	6.8	6.8		10.0			15' WIDE
20+43.09		US 60	BOTH	6.8	6.8		10.3	34		15' WIDE
23+00.00		US 60	BOTH	6.8	6.8		10.4	37		15' WIDE
70+87.66		ROUTE AA	LT	6.8	6.8		10.0			15' WIDE
71+00.00	72+35.00	ROUTE AA	BOTH							
71+10.19	78+62.52	ROUTE AA	LT				7.6	764		
71+70.58		ROUTE AA	RT	6.8	6.8		10.0			15' WIDE
71+61.60	77+50.00	ROUTE AA	LT						3225	
71+78.71	73+47.58	ROUTE AA	RT				1.7	168		
72+01.27	77+50.00	ROUTE AA	RT						3194	
78+49.53		ROUTE AA	RT			8	1.0			
78+71.80		ROUTE AA	LT	4.5	4.5		10.0			10' WIDE
00+07.70	00+82.21	ROUTE AA	LT				0.8	76		
00+18.10	00+33.74	ROUTE AA	RT				0.6	55		
00+88.40		ROUTE AA	RT	2.3	2.3		10.0			5' WIDE
			SUBTOTAL =	58.9	58.9	48	125.5	2253	13152	
			PAY TOTAL =	58.9	58.9	48	126	2704	13152	

* ESTIMATED AT 0.45 CY/LF. SEE REMARKS.

** ESTIMATED AT 1 CY PER DITCH CHECK, 1 CY PER 100 LF OF SILT FENCE, AND 10 CY PER SEDIMENT TRAP

NOTE: 20% CONTINGENCY ADDED TO SILT FENCE.

CABLE - CONDUIT

SHEET	CIRCUIT	FROM	TO	CABLE - CONDUIT, 1 IN., 2 CONDUCTORS AND 1 BARE NEUTRAL, 4 AWG* LF	TRENCHING TYPE I LF	REMARKS
LT-1	C4	EX L1	EX POLE 1	311	300	SOUTH OF US 60
LT-1	C6	EX L2	EX L3	357	345	NORTH OF US 60
			SUBTOTAL =	668	645	
			PAY TOTAL =	710	650	

* QUANTITY INCLUDES 5% FOR SNAKING

SUMMARY OF QUANTITIES
(SHEET 4 OF 5)

STATE OF MISSOURI
ANDREA S. DAVIS
PE-2018021250
PROFESSIONAL ENGINEER

DATE PREPARED 3/24/2025
ROUTE AA | STATE MO
DISTRICT SE | SHEET NO. 3
COUNTY SCOTT
JOB NO. JSE0248
CONTRACT ID.
PROJECT NO.
BRIDGE NO.

DATE	DESCRIPTION

IF A SEAL IS PRESENT ON THIS SHEET IT HAS BEEN ELECTRONICALLY SEALED AND DATED.

MISSOURI HIGHWAYS AND TRANSPORTATION COMMISSION
105 WEST CAPITOL
JEFFERSON CITY, MO 65102
1-888-ASK-MODOT (1-888-275-6636)

HR GREEN, INC.
520 MARYVILLE CENTRE DRIVE,
SUITE 100
ST. LOUIS, MISSOURI 63141
PHONE: (636) 519.0990
CORPORATE LICENSE #2002006608

HRGreen

SIGN	SIZE IN.	AREA SQ.FT.	QTY EACH	TOTAL AREA SQ.FT.	QTY RELOC EACH	TOTAL RELOC SQ.FT.	SIGN NUM.	DESCRIPTION
WARNING SIGNS								
WO1-1L	48X48	16.00						TURN (SYMBOL LEFT)
WO1-1R	48X48	16.00						TURN (SYMBOL RIGHT)
WO1-2L	48X48	16.00						CURVE (SYMBOL LEFT)
WO1-2R	48X48	16.00						CURVE (SYMBOL RIGHT)
WO1-3L	48X48	16.00						REVERSE TURN (SYMBOL LEFT)
WO1-3R	48X48	16.00						REVERSE TURN (SYMBOL RIGHT)
WO1-4L	48X48	16.00						REVERSE CURVE (SYMBOL LEFT)
WO1-4R	48X48	16.00						REVERSE CURVE (SYMBOL RIGHT)
WO1-4bL	48X48	16.00						DOUBLE ARROW REVERSE CURVE (SYMBOL LEFT)
WO1-4bR	48X48	16.00						DOUBLE ARROW REVERSE CURVE (SYMBOL RIGHT)
WO1-4cL	48X48	16.00						TRIPLE ARROW REVERSE CURVE (SYMBOL LEFT)
WO1-4cR	48X48	16.00						TRIPLE ARROW REVERSE CURVE (SYMBOL RIGHT)
WO1-6	60X30	12.50	4	50.00	2	25.00	16R/L	HORIZONTAL ARROW (SYMBOL)
WO1-6a	72X36	18.00						HORIZ. ARROW (SYMBOL ON PERMANENT BARRICADE)
WO1-7	60X30	12.50	1	12.50			60	DOUBLE HEAD HORIZONTAL ARROW (SYMBOL)
WO1-7a	72X36	18.00						DOUBLE HEAD HORIZ. ARROW (SYMBOL ON PERM. BARR.)
WO1-8	18X24	3.00						CHEVRON (SYMBOL)
WO1-8a	30X36	7.50						CHEVRON (SYMBOL FOR DIVIDED HIGHWAYS)
WO3-1	48X48	16.00						STOP AHEAD (SYMBOL)
WO3-2	48X48	16.00						YIELD AHEAD (SYMBOL)
WO3-3	48X48	16.00	4	64.00	3	48.00	12	SIGNAL AHEAD (SYMBOL)
WO3-4	48X48	16.00						BE PREPARED TO STOP
WO3-5	48X48	16.00						SPEED LIMIT AHEAD
W4-2L	48X48	16.00	2	32.00	6	96.00	67L	LANE ENDS (LEFT)
W4-2R	48X48	16.00	2	32.00			67R	LANE ENDS (RIGHT)
WO4-1aL	48X48	16.00						MERGE (LEFT)
WO4-1aR	48X48	16.00						MERGE (RIGHT)
WO5-1	48X48	16.00						ROAD/BRIDGE/RAMP NARROWS
WO5-3	48X48	16.00						ONE LANE BRIDGE
WO5-5	48X48	16.00						NARROW LANES
WO6-1	48X48	16.00						DIVIDED HIGHWAY (SYMBOL)
WO6-2	48X48	16.00						DIVIDED HIGHWAY END (SYMBOL)
WO6-3	48X48	16.00						TWO WAY TRAFFIC (SYMBOL)
WO7-3a	30X24	5.00	3	15.00			44A	NEXT 1 MILES (PLAQUE)
WO8-1	48X48	16.00						BUMP
WO8-2	48X48	16.00						DIP
WO8-3	48X48	16.00						PAVEMENT ENDS
WO8-4	48X48	16.00						SOFT SHOULDER
WO8-5	48X48	16.00						SLIPPERY WHEN WET (SYMBOL)
WO8-6	48X48	16.00						TRUCK CROSSING
WO8-6c	48X48	16.00						TRUCK ENTRANCE
WO8-7	36X36	9.00						LOOSE GRAVEL
WO8-7a	36X36	9.00						FRESH OIL / LOOSE GRAVEL
WO8-9	48X48	16.00						LOW SHOULDER
WO8-11	48X48	16.00						UNEVEN LANES
WO8-12	48X48	16.00						NO CENTER LINE
WO8-15	48X48	16.00						GROOVED PAVEMENT
WO8-15P	30X24	5.00						MOTORCYCLE (PLAQUE)
WO8-17L	48X48	16.00						SHOULDER DROP-OFF (SYMBOL LEFT)
WO8-17R	48X48	16.00						SHOULDER DROP-OFF (SYMBOL RIGHT)
WO8-17P	30X24	5.00						SHOULDER DROP-OFF (PLAQUE)
W10-1	42RND.	9.62						RAILROAD CROSSING
WO12-1	24X24	4.00						DOUBLE DOWN ARROW (SYMBOL)
WO12-2	48X48	16.00						LOW CLEARANCE (SYMBOL)
WO12-2x	24X18	3.00						LOW CLEARANCE (PLAQUE)
WO12-2a	84X24	14.00						OVERHEAD LOW CLEARANCE (FEET AND INCHES)
WO12-4	120X60	50.00						LOW CLEARANCE XX FT XX IN XX MILES AHEAD
WO12-5	120X60	50.00						WIDTH RESTRICTION XX FT XX IN XX MILES AHEAD
WO13-1	30X30	6.25						ADVISORY SPEED (PLAQUE)
WO16-2	30X24	5.00	4	20.00			61X	XXX FEET (PLAQUE)
WO16-3	30X24	5.00						X MILE (PLAQUE)
WO20-1	48X48	16.00	6	96.00	19	304.00	2	ROAD WORK AHEAD
WO20-2	48X48	16.00	3	48.00	2	32.00	18	DETOUR AHEAD
WO20-3	48X48	16.00	5	80.00			20X	ROAD CLOSED AHEAD
WO20-4	48X48	16.00	4	64.00	5	80.00	7	ONE LANE ROAD AHEAD
WO20-5	48X48	16.00	8	128.00	8	128.00	5	LEFT/RIGHT/CENTER LANE CLOSED AHEAD
WO20-5a	48X48	16.00						2 RIGHT/CENTER/LEFT LANES CLOSED AHEAD
WO20-6a	48X48	16.00	4	64.00			6	RIGHT/CENTER LANE CLOSED
WO20-7a	48X48	16.00						FLAGGER (SYMBOL)
WO21-2	36X36	9.00						FRESH OIL
WO21-5	48X48	16.00	5	80.00			21X	SHOULDER WORK / SHOULDER WORK AHEAD
WO22-1	48X48	16.00						BLASTING ZONE AHEAD
WO22-2	42X36	10.50						TURN OFF 2-WAY RADIO AND PHONE
WO22-3	42X36	10.50						END BLASTING ZONE
GO22-1	21X15	2.19	4	8.76				WET PAINT (ARROW PIVOTS)

SIGN	SIZE IN.	AREA SQ.FT.	QTY EACH	TOTAL SQ.FT.	QTY RELOC EACH	TOTAL RELOC SQ.FT.	SIGN NUM.	DESCRIPTION
GUIDE SIGNS								
E05-1	36X48	12.00	1	12.00	1	12.00	49	GORE EXIT
E05-2	48X36	12.00	1	12.00			69	EXIT OPEN
E05-2a	48X36	12.00						EXIT CLOSED
GO20-1	60X24	10.00						ROAD WORK NEXT XX MILES
GO20-2	48X24	8.00	2	16.00			26	END ROAD WORK
GO20-4	36X18	4.50						PILOT CAR FOLLOW ME
GO20-4a	42X30	8.75						PILOT CAR IN USE WAIT & FOLLOW
GO20-4a	18X12	1.50						PILOT CAR IN USE WAIT & FOLLOW
GO20-5aP	36X24	6.00	2	12.00			54	WORK ZONE (PLAQUE)
MO4-8a	24X18	3.00	1	3.00	1	3.00	52	END DETOUR
MO4-9L	48X36	12.00						DETOUR (LEFT)
MO4-9R	48X36	12.00						DETOUR (RIGHT)
MO4-9P	48X12	4.00						STREET NAME (PLAQUE)
MO4-10L	48X18	6.00						DETOUR ARROW (LEFT)
MO4-10R	48X18	6.00						DETOUR ARROW (RIGHT)
REGULATORY SIGNS								
R1-1	48X48	13.25						STOP
R1-2	48TRI.	6.93						YIELD
R1-2a	36X36	9.00						TO ONCOMING TRAFFIC (PLAQUE)
R1-3P	30X12	2.50						ALL WAY (PLAQUE)
R2-1	36X48	12.00	2	24.00			4	SPEED LIMIT 60
R3-1	48X48	16.00	1	16.00			62	NO RIGHT TURN (SYMBOL)
R3-2	48X48	16.00	1	16.00			63	NO LEFT TURN (SYMBOL)
R3-3	36X36	9.00						NO TURNS
R3-4	48X48	16.00						NO U-TURN (SYMBOL)
R3-7L	30X30	6.25						LEFT LANE MUST TURN LEFT
R3-7R	30X30	6.25						RIGHT LANE MUST TURN RIGHT
R4-1	36X48	12.00						DO NOT PASS
R4-2	36X48	12.00						PASS WITH CARE
R4-7a	36X48	12.00						KEEP RIGHT (HORIZONTAL ARROW)
R4-8a	36X48	12.00						KEEP LEFT (HORIZONTAL ARROW)
R5-1	30X30	6.25						DO NOT ENTER
R5-1a	36X24	6.00						WRONG WAY
R6-1L	54X18	6.75	1	6.75			64	ONE WAY ARROW (LEFT)
R6-1R	54X18	6.75	1	6.75			65	ONE WAY ARROW (RIGHT)
R6-2L	24X30	5.00						ONE WAY (LEFT)
R6-2R	24X30	5.00						ONE WAY (RIGHT)
R9-9	24X12	2.00						SIDEWALK CLOSED
R9-11L	24X18	3.00						SIDEWALK CLOSED AHEAD, (ARROW LEFT) CROSS HERE
R9-11R	24X18	3.00						SIDEWALK CLOSED AHEAD, (ARROW RIGHT) CROSS HERE
R10-6L	24X36	6.00	4	24.00	3	18.00	47	STOP HERE ON RED (45^ ARROW)
R11-2	48X30	10.00	5	50.00	3	30.00	29	ROAD CLOSED
R11-3a	60X30	12.50						ROAD CLOSED XX MILES AHEAD LOCAL TRAFFIC ONLY
R11-4	60X30	12.50						ROAD CLOSED TO THRU TRAFFIC
CONST-3A	60X48	20.00						FINE SIGN
CONST-3X	56X12	4.67						SPEEDING/PASSING (PLATE)
MISCELLANEOUS SIGNS								
CONST-5	48X36	12.00						POINT OF PRESENCE
CONST-5	96X48	32.00						POINT OF PRESENCE
CONST-8	48X36	12.00	2	24.00			55	WORK ZONE NO PHONE ZONE
SPECIAL	36X78	19.50	24	468.00			50X	DETOUR ROUTE ASSEMBLIES
SPECIAL	96X48	32.00	4	128.00			50X	US 60 CLOSED 1 MILES AHEAD
E05-3	48X36	12.00	1	12.00			68	EXIT ONLY
R5-2b	24X30	5.00	3	15.00			66	NO THRU TRUCKS
W4-3R	48X48	16.00	1	16.00	1	16.00	71	ADDED LANE RIGHT
W13-2	36X48	12.00	1	12.00			70	ADVISORY EXIT SPEED 40 MPH

	TOTAL
616-10.05 CONSTRUCTION SIGNS	1668
616-10.10 RELOCATED SIGNS	792

NOTES:

1. DETOUR ROUTE ASSEMBLIES QUANTITY CONSISTS OF 3-50A SIGNS, 1-50L SIGN, 2-50B SIGNS, 2-50C SIGNS, 1-50D SIGN, 1-50E SIGN, 3-50F SIGNS, 3-50M SIGNS, 3-50N SIGNS, 2-50J SIGNS, AND 3-50K SIGNS.

2. US 60 CLOSED 1 MILES AHEAD QUANTITY CONSISTS OF 1-50P SIGN AND 3-50Q SIGNS.

NOTES CONTINUED:

3. WO16-2 QUANTITY CONSISTS OF 2-"2000 FEET" SIGNS (#61A) AND 2-"2500 FEET" SIGNS (#61B).

4. WO20-6a QUANTITY CONSISTS OF 2-"RIGHT LANE CLOSED" SIGNS AND 2-"CENTER LANE CLOSED" SIGNS.

5. WO20-3 QUANTITY CONSISTS OF 2-"ROAD CLOSED AHEAD" SIGNS (#20A), 1-"ROAD CLOSED 300 FT" SIGN (#20B), AND 2-"ROAD CLOSED 1000 FT" SIGNS (#20C).

EFFECTIVE: 07-01-2024

ITEM NUMBER	TOTAL QTY	DESCRIPTION
4019905	35.0	TEMPORARY PAVEMENT (SY)
6122008		IMPACT ATTENUATOR 40 MPH (SAND BARRELS)
6122009		IMPACT ATTENUATOR 45 MPH (SAND BARRELS)
6122010		IMPACT ATTENUATOR 50 MPH (SAND BARRELS)
6122012		IMPACT ATTENUATOR 55 MPH (SAND BARRELS)
6122014		IMPACT ATTENUATOR 60 MPH (SAND BARRELS)
6122017		IMPACT ATTENUATOR 65 MPH (SAND BARRELS)
6122019		IMPACT ATTENUATOR 70 MPH (SAND BARRELS)
6122020		REPLACEMENT SAND BARREL
6122030		IMPACT ATTENUATOR (RELOCATION)
6122040	1	WORK ZONE CRASH CUSHION (NARROW)
6123001	1	TRUCK MOUNTED ATTENUATOR (TMA)
6161008	8	ADVANCED WARNING RAIL SYSTEM
6161012		BUOYS (BOATS KEEP OUT)
6161013		BUOYS (NO WAKE)
6161014		SPECIAL SIGN ASSEMBLY (BOATS KEEP OUT)
6161025	150	CHANNELIZER (TRIM LINE)
6161030	35	TYPE III MOVEABLE BARRICADE
6161033		DIRECTION INDICATOR BARRICADE
6161040	2	FLASHING ARROW PANEL
6161047		TYPE III OBJECT MARKER
6161055		SEQUENTIAL FLASHING WARNING LIGHT
6161070		TUBULAR MARKER
6161095		RADAR SPEED ADVISORY SYSTEM
6161096		CHANGEABLE MESSAGE SIGN, COMMISSION FURNISHED/RETAINED
6161098A	4	CHANGEABLE MESSAGE SIGN WITHOUT COMM. INTERFACE- CONTRACTOR FURNISHED/RETAINED
6161099		CHANGEABLE MESSAGE SIGN WITH COMM. INTERFACE- CONTRACTOR FURNISHED/RETAINED
6162000A	2	WORK ZONE TRAFFIC SIGNAL SYSTEM
6162002		TEMPORARY LONG-TERM RUMBLE STRIPS
6173600D	700	TEMPORARY TRAFFIC BARRIER CONTRACTOR FURNISHED/RETAINED (LF)
6173602B		TEMPORARY TRAFFIC BARRIER CONTRACTOR FURNISHED/COMMISSION RETAINED
6174000A		TEMP. TRAFFIC BARRIER HEIGHT TRANSITION
6175010A		RELOCATING TEMPORARY TRAFFIC BARRIER
6176000B		TEMPORARY TRAFFIC BARRIER COMMISSION FURNISHED/RETAINED
6177000B		TEMP. TRAFFIC BARRIER HEIGHT TRANSITION COMMISSION FURNISHED/RETAINED
6205303B	2000	TEMPORARY REMOVABLE MARKING TAPE 4 IN., YELLOW (LF)
6205309	77	TEMPORARY REMOVABLE MARKING TAPE, 24 IN., WHITE (LF)
6208064A		TEMPORARY RAISED PAVEMENT MARKER
9029400		TEMPORARY TRAFFIC SIGNALS (LS)
9029401		TEMPORARY TRAFFIC SIGNALS AND LIGHTING

NOTES CONTINUED:

6. WO20-5 QUANTITY CONSISTS OF 2-"LEFT LANE CLOSED AHEAD" SIGNS (RELOC. QTY. = 6), 4-"RIGHT LANE CLOSED AHEAD" SIGNS (RELOC. QTY. = 2), AND 2-"CENTER LANE CLOSED AHEAD" SIGNS.

7. WO21-5 QUANTITY CONSISTS OF 3-"LEFT SHOULDER CLOSED" SIGNS (#21A), AND 2-" LEFT SHOULDER CLOSED AHEAD" SIGNS (#21B).

8. SEE PREVIOUS QUANTITY SHEETS FOR LOCATION INFORMATION FOR LF AND SY TRAFFIC CONTROL ITEMS.

9. SIGN AND DEVICE LOCATIONS WILL BE FIELD VERIFIED AND APPROVED BY THE ENGINEER.

10. THESE QUANTITIES ARE ONLY AN ESTIMATE AND ARE SUBJECT TO CHANGE BASED UPON FIELD CONDITIONS.

11. NO DIRECT PAY WILL BE MADE FOR RELOCATION OF WORK ZONE TRAFFIC SIGNAL SYSTEM.

SUMMARY OF QUANTITIES
(SHEET 5 OF 5)

STATE OF MISSOURI
ANDREA S. DAVIS
PE-2018021250
PROFESSIONAL ENGINEER

DATE PREPARED 3/28/2025
ROUTE AA | STATE MO
DISTRICT SE | SHEET NO. 3
COUNTY SCOTT
JOB NO. JSE0248
CONTRACT ID.
PROJECT NO.
BRIDGE NO.

DATE	DESCRIPTION

IF A SEAL IS PRESENT ON THIS SHEET IT HAS BEEN ELECTRONICALLY SEALED AND DATED.

MISSOURI HIGHWAYS AND TRANSPORTATION COMMISSION
105 WEST CAPITOL
JEFFERSON CITY, MO 65102
1-888-ASK-MODOT (1-888-275-6636)

HR GREEN, INC.
520 MARYVILLE CENTRE DRIVE,
SUITE 100
ST. LOUIS, MISSOURI 63141
PHONE: (636) 519.0990
CORPORATE LICENSE #2002006608

HRGreen

\\hrgreen.com\hrg\Data\2024\2404289\CAD\Roadway\Plan_Sheets\003_QU_01-05_SE0248_I1.dgn 2:35:50 PM 3/28/2025

DISCLAIMER
THE PROFESSIONAL WHOSE SIGNATURE AND PERSONAL SEAL APPEAR HEREON ASSUMES RESPONSIBILITY ONLY FOR WHAT APPEARS ON THIS PAGE, AND DISCLAIMS (PURSUANT TO SECTION 327.411 RSMO) SPECIFICATION, ESTIMATES, REPORTS, OR OTHER DOCUMENTS OR INSTRUMENTS NOT SEALED BY THE UNDERSIGNED PROFESSIONAL RELATING TO OR INTENDED TO BE USED FOR ANY PART OR PARTS OF THE PROJECT TO WHICH THIS PAGE REFERS.

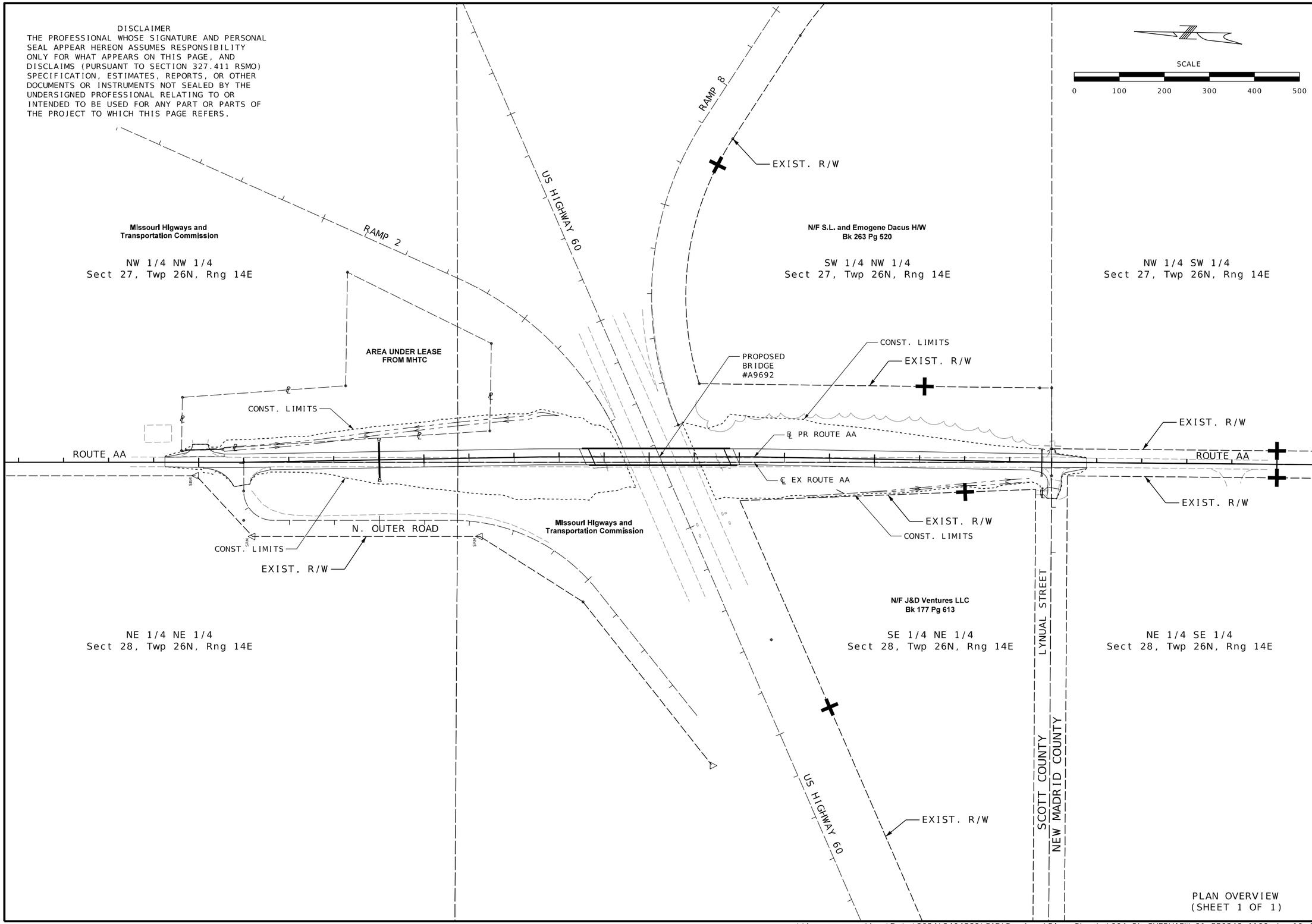

PLAN OVERVIEW
(SHEET 1 OF 1)

STATE OF MISSOURI
ANDREA S. DAVIS
PE-2018021250
PROFESSIONAL ENGINEER

DATE PREPARED	3/24/2025
ROUTE	AA
STATE	MO
DISTRICT	SE
SHEET NO.	4
COUNTY	SCOTT
JOB NO.	JSE0248
CONTRACT ID.	
PROJECT NO.	
BRIDGE NO.	

DESCRIPTION	DATE

IF A SEAL IS PRESENT ON THIS SHEET IT HAS BEEN ELECTRONICALLY SEALED AND DATED.

MISSOURI HIGHWAYS AND TRANSPORTATION COMMISSION
105 WEST CAPITOL
JEFFERSON CITY, MO 65102
1-888-ASK-MODOT (1-888-275-6636)

HR GREEN, INC.
520 MARYVILLE CENTRE DRIVE,
SUITE 100
ST. LOUIS, MISSOURI 63141
PHONE: (636) 519.0990
CORPORATE LICENSE #2002006608
HRGreen

\\hrgreen.com\hrg\Data\2024\2404289\CAD\Roadway\Plan_Sheets\004_PL-OVERVIEW_01_SE0248_I100.dgn 10:42:20 AM 3/24/2025

DISCLAIMER
THE PROFESSIONAL WHOSE SIGNATURE AND PERSONAL SEAL APPEAR HEREON ASSUMES RESPONSIBILITY ONLY FOR WHAT APPEARS ON THIS PAGE, AND DISCLAIMS (PURSUANT TO SECTION 327.411 RSMO) SPECIFICATION, ESTIMATES, REPORTS, OR OTHER DOCUMENTS OR INSTRUMENTS NOT SEALED BY THE UNDERSIGNED PROFESSIONAL RELATING TO OR INTENDED TO BE USED FOR ANY PART OR PARTS OF THE PROJECT TO WHICH THIS PAGE REFERS.

NW 1/4 NW 1/4
Sect 27, Twp 26N, Rng 14E

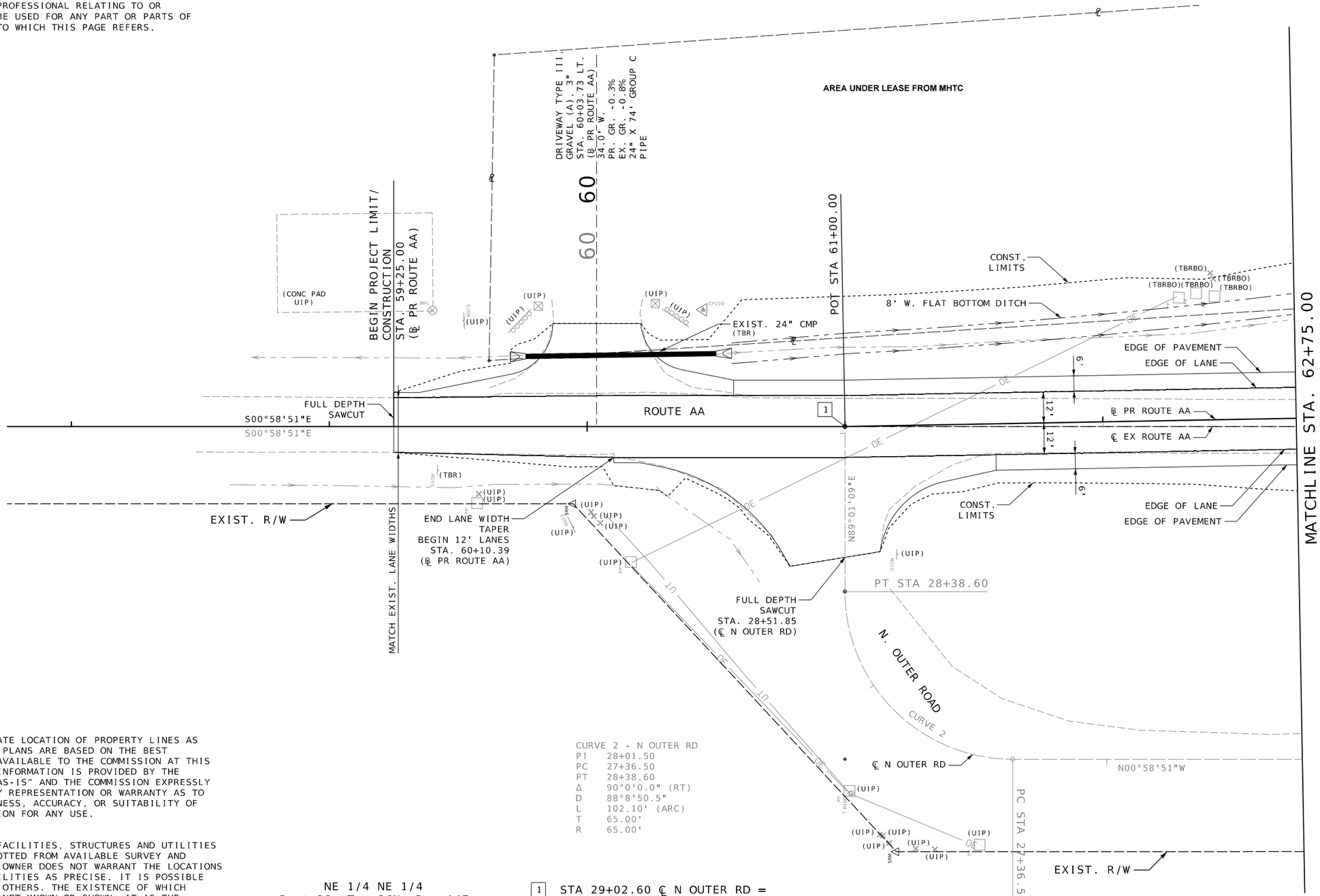

CURVE 2 - N OUTER RD

PI	28+01.50
PC	27+36.50
PT	28+38.60
Δ	90°0'0.0" (RT)
D	88°8'50.5"
L	102.10' (ARC)
T	65.00'
R	65.00'

THE APPROXIMATE LOCATION OF PROPERTY LINES AS SHOWN ON THE PLANS ARE BASED ON THE BEST INFORMATION AVAILABLE TO THE COMMISSION AT THIS TIME. THIS INFORMATION IS PROVIDED BY THE COMMISSION "AS-IS" AND THE COMMISSION EXPRESSLY DISCLAIMS ANY REPRESENTATION OR WARRANTY AS TO THE COMPLETENESS, ACCURACY, OR SUITABILITY OF THE INFORMATION FOR ANY USE.

UNDERGROUND FACILITIES, STRUCTURES AND UTILITIES HAVE BEEN PLOTTED FROM AVAILABLE SURVEY AND RECORDS. THE OWNER DOES NOT WARRANT THE LOCATIONS OF THESE FACILITIES AS PRECISE. IT IS POSSIBLE THERE MAY BE OTHERS. THE EXISTENCE OF WHICH IS PRESENTLY NOT KNOWN OR SHOWN. IT IS THE CONTRACTOR'S RESPONSIBILITY TO DETERMINE THE EXISTENCE AND PRECISE LOCATION OF ALL FACILITIES AND AVOID DAMAGE.

NE 1/4 NE 1/4
Sect 28, Twp 26N, Rng 14E

1 STA 29+02.60 ℄ N OUTER RD = STA 61+00.00 ℄ PR ROUTE AA

PLAN SHEETS
(SHEET 1 OF 5)

STATE OF MISSOURI
ANDREA S. DAVIS
PE-2018021250
PROFESSIONAL ENGINEER

DATE PREPARED	
3/24/2025	
ROUTE	STATE
AA	MO
DISTRICT	SHEET NO.
SE	5
COUNTY	
SCOTT	
JOB NO.	
JSE0248	
CONTRACT ID.	
PROJECT NO.	
BRIDGE NO.	

DATE	DESCRIPTION

IF A SEAL IS PRESENT ON THIS SHEET IT HAS BEEN ELECTRONICALLY SEALED AND DATED.

MISSOURI HIGHWAYS AND TRANSPORTATION COMMISSION
105 WEST CAPITOL
JEFFERSON CITY, MO 65102
1-888-ASK-MODOT (1-888-275-6636)

HR GREEN, INC.
520 MARYVILLE CENTRE DRIVE, SUITE 100
ST. LOUIS, MISSOURI 63141
PHONE: (636) 519.0990
CORPORATE LICENSE #2002006608

HRGreen

\\hrgreen.com\hrg\Data\2024\2404289\CAD\Roadway\Plan_Sheets\005_PL_01_SE0248_I20.dgn 10:42:25 AM 3/24/2025

DISCLAIMER
THE PROFESSIONAL WHOSE SIGNATURE AND PERSONAL SEAL APPEAR HEREON ASSUMES RESPONSIBILITY ONLY FOR WHAT APPEARS ON THIS PAGE, AND DISCLAIMS (PURSUANT TO SECTION 327.411 RSMO) SPECIFICATION, ESTIMATES, REPORTS, OR OTHER DOCUMENTS OR INSTRUMENTS NOT SEALED BY THE UNDERSIGNED PROFESSIONAL RELATING TO OR INTENDED TO BE USED FOR ANY PART OR PARTS OF THE PROJECT TO WHICH THIS PAGE REFERS.

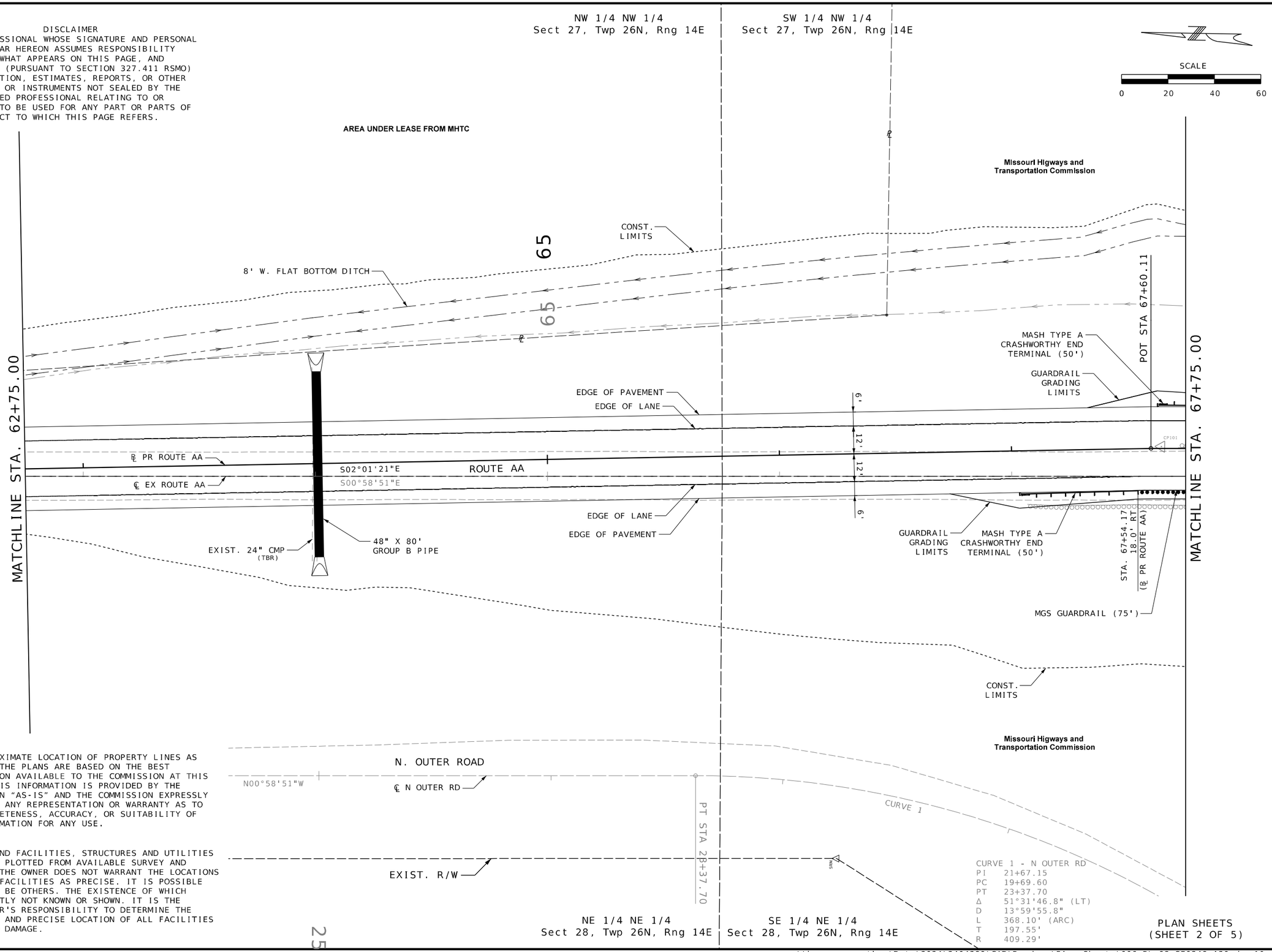

THE APPROXIMATE LOCATION OF PROPERTY LINES AS SHOWN ON THE PLANS ARE BASED ON THE BEST INFORMATION AVAILABLE TO THE COMMISSION AT THIS TIME. THIS INFORMATION IS PROVIDED BY THE COMMISSION "AS-IS" AND THE COMMISSION EXPRESSLY DISCLAIMS ANY REPRESENTATION OR WARRANTY AS TO THE COMPLETENESS, ACCURACY, OR SUITABILITY OF THE INFORMATION FOR ANY USE.

UNDERGROUND FACILITIES, STRUCTURES AND UTILITIES HAVE BEEN PLOTTED FROM AVAILABLE SURVEY AND RECORDS. THE OWNER DOES NOT WARRANT THE LOCATIONS OF THESE FACILITIES AS PRECISE. IT IS POSSIBLE THERE MAY BE OTHERS. THE EXISTENCE OF WHICH IS PRESENTLY NOT KNOWN OR SHOWN. IT IS THE CONTRACTOR'S RESPONSIBILITY TO DETERMINE THE EXISTENCE AND PRECISE LOCATION OF ALL FACILITIES AND AVOID DAMAGE.

PLAN SHEETS
(SHEET 2 OF 5)

STATE OF MISSOURI
ANDREA S. DAVIS
PE-2018021250
PROFESSIONAL ENGINEER

DATE PREPARED	3/24/2025
ROUTE	AA
STATE	MO
DISTRICT	SE
SHEET NO.	6
COUNTY	SCOTT
JOB NO.	JSE0248
CONTRACT ID.	
PROJECT NO.	
BRIDGE NO.	

DESCRIPTION
DATE

IF A SEAL IS PRESENT ON THIS SHEET IT HAS BEEN ELECTRONICALLY SEALED AND DATED.

MISSOURI HIGHWAYS AND TRANSPORTATION COMMISSION
105 WEST CAPITOL
JEFFERSON CITY, MO 65102
1-888-ASK-MODOT (1-888-275-6636)

HR GREEN, INC.
520 MARYVILLE CENTRE DRIVE, SUITE 100
ST. LOUIS, MISSOURI 63141
PHONE: (636) 519.0990
CORPORATE LICENSE #2002006608
HRGreen

\\hrgreen.com\hrg\Data\2024\2404289\CAD\Roadway\Plan_Sheets\006_PL_02_SE0248_I20.dgn 10:42:26 AM 3/24/2025

DISCLAIMER
THE PROFESSIONAL WHOSE SIGNATURE AND PERSONAL SEAL APPEAR HEREON ASSUMES RESPONSIBILITY ONLY FOR WHAT APPEARS ON THIS PAGE, AND DISCLAIMS (PURSUANT TO SECTION 327.411 RSMO) SPECIFICATION, ESTIMATES, REPORTS, OR OTHER DOCUMENTS OR INSTRUMENTS NOT SEALED BY THE UNDERSIGNED PROFESSIONAL RELATING TO OR INTENDED TO BE USED FOR ANY PART OR PARTS OF THE PROJECT TO WHICH THIS PAGE REFERS.

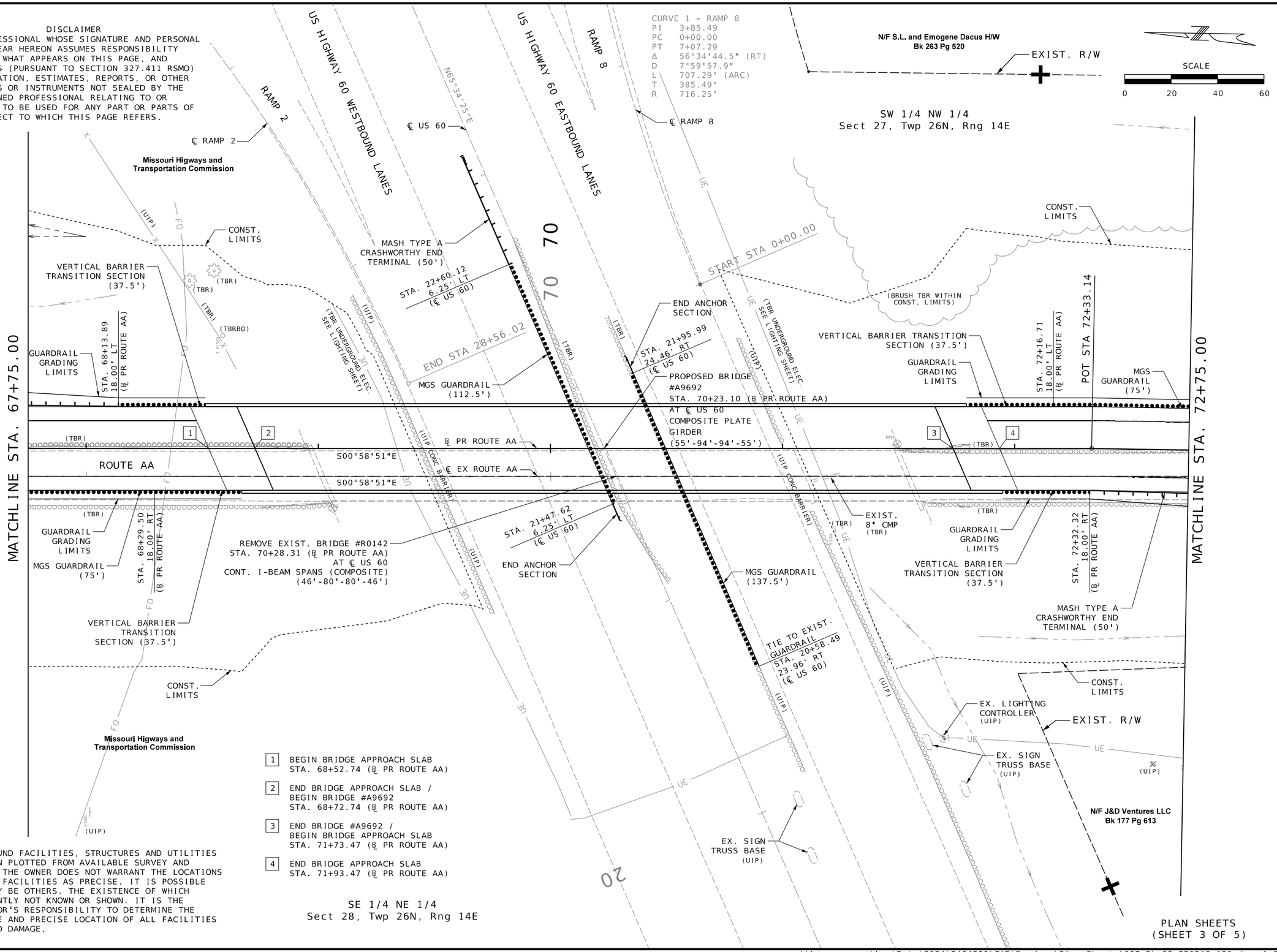

1 BEGIN BRIDGE APPROACH SLAB
STA. 68+52.74 (℄ PR ROUTE AA)

2 END BRIDGE APPROACH SLAB / BEGIN BRIDGE #A9692
STA. 68+72.74 (℄ PR ROUTE AA)

3 END BRIDGE #A9692 / BEGIN BRIDGE APPROACH SLAB
STA. 71+73.47 (℄ PR ROUTE AA)

4 END BRIDGE APPROACH SLAB
STA. 71+93.47 (℄ PR ROUTE AA)

SE 1/4 NE 1/4
Sect 28, Twp 26N, Rng 14E

UNDERGROUND FACILITIES, STRUCTURES AND UTILITIES HAVE BEEN PLOTTED FROM AVAILABLE SURVEY AND RECORDS. THE OWNER DOES NOT WARRANT THE LOCATIONS OF THESE FACILITIES AS PRECISE. IT IS POSSIBLE THERE MAY BE OTHERS. THE EXISTENCE OF WHICH IS PRESENTLY NOT KNOWN OR SHOWN. IT IS THE CONTRACTOR'S RESPONSIBILITY TO DETERMINE THE EXISTENCE AND PRECISE LOCATION OF ALL FACILITIES AND AVOID DAMAGE.

PLAN SHEETS
(SHEET 3 OF 5)

STATE OF MISSOURI
ANDREA S. DAVIS
PE-2018021250
PROFESSIONAL ENGINEER

DATE PREPARED	
4/4/2025	
ROUTE	STATE
AA	MO
DISTRICT	SHEET NO.
SE	7
COUNTY	
SCOTT	
JOB NO.	
JSE0248	
CONTRACT ID.	
PROJECT NO.	
BRIDGE NO.	

DATE	DESCRIPTION

IF A SEAL IS PRESENT ON THIS SHEET IT HAS BEEN ELECTRONICALLY SEALED AND DATED.

MISSOURI HIGHWAYS AND TRANSPORTATION COMMISSION
105 WEST CAPITOL
JEFFERSON CITY, MO 65102
1-888-ASK-MODOT (1-888-275-6636)

HR GREEN, INC.
520 MARYVILLE CENTRE DRIVE, SUITE 100
ST. LOUIS, MISSOURI 63141
PHONE: (636) 519.0990
CORPORATE LICENSE #2002006608
HRGreen

\\hrgreen.com\hrg\Data\2024\2404289\CAD\Roadway\Plan_Sheets\007_PL_03_SE0248_I20.dgn 1:58:19 PM 4/4/2025

DISCLAIMER
THE PROFESSIONAL WHOSE SIGNATURE AND PERSONAL SEAL APPEAR HEREON ASSUMES RESPONSIBILITY ONLY FOR WHAT APPEARS ON THIS PAGE, AND DISCLAIMS (PURSUANT TO SECTION 327.411 RSMO) SPECIFICATION, ESTIMATES, REPORTS, OR OTHER DOCUMENTS OR INSTRUMENTS NOT SEALED BY THE UNDERSIGNED PROFESSIONAL RELATING TO OR INTENDED TO BE USED FOR ANY PART OR PARTS OF THE PROJECT TO WHICH THIS PAGE REFERS.

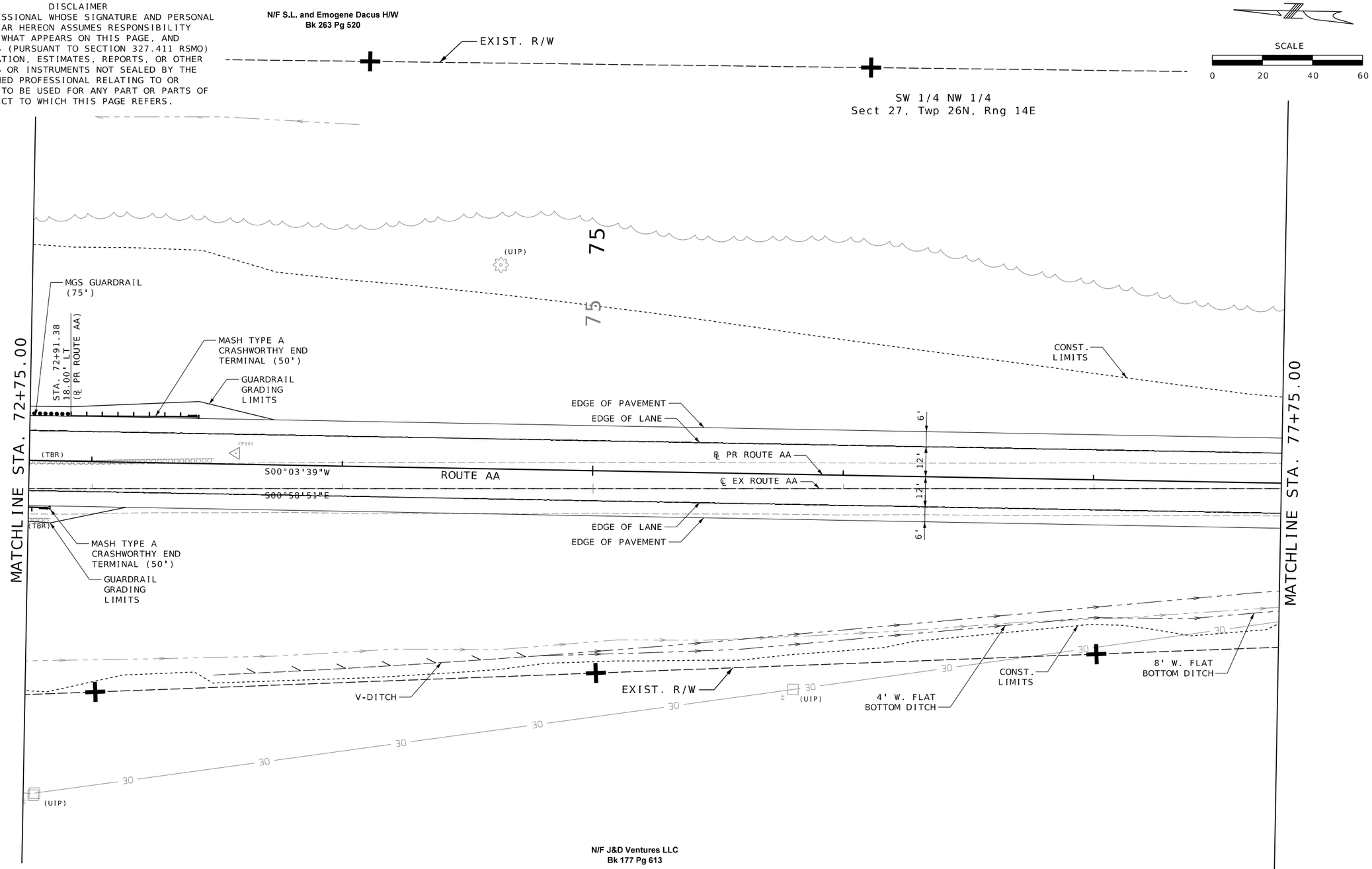

UNDERGROUND FACILITIES, STRUCTURES AND UTILITIES HAVE BEEN PLOTTED FROM AVAILABLE SURVEY AND RECORDS. THE OWNER DOES NOT WARRANT THE LOCATIONS OF THESE FACILITIES AS PRECISE. IT IS POSSIBLE THERE MAY BE OTHERS. THE EXISTENCE OF WHICH IS PRESENTLY NOT KNOWN OR SHOWN. IT IS THE CONTRACTOR'S RESPONSIBILITY TO DETERMINE THE EXISTENCE AND PRECISE LOCATION OF ALL FACILITIES AND AVOID DAMAGE.

SE 1/4 NE 1/4
Sect 28, Twp 26N, Rng 14E

PLAN SHEETS
(SHEET 4 OF 5)

STATE OF MISSOURI
ANDREA S. DAVIS
PE-2018021250
PROFESSIONAL ENGINEER

DATE PREPARED	3/24/2025
ROUTE	AA
STATE	MO
DISTRICT	SE
SHEET NO.	8
COUNTY	SCOTT
JOB NO.	JSE0248
CONTRACT ID.	
PROJECT NO.	
BRIDGE NO.	

DATE	DESCRIPTION

MISSOURI HIGHWAYS AND TRANSPORTATION COMMISSION
105 WEST CAPITOL
JEFFERSON CITY, MO 65102
1-888-ASK-MODOT (1-888-275-6636)

HR GREEN, INC.
520 MARYVILLE CENTRE DRIVE, SUITE 100
ST. LOUIS, MISSOURI 63141
PHONE: (636) 519.0990
CORPORATE LICENSE #2002006608
HRGreen

IF A SEAL IS PRESENT ON THIS SHEET IT HAS BEEN ELECTRONICALLY SEALED AND DATED.

\\hrgreen.com\hrg\Data\2024\2404289\CAD\Roadway\Plan_Sheets\008_PL_04_SE0248_I20.dgn 10:42:29 AM 3/24/2025

DISCLAIMER
THE PROFESSIONAL WHOSE SIGNATURE AND PERSONAL SEAL APPEAR HEREON ASSUMES RESPONSIBILITY ONLY FOR WHAT APPEARS ON THIS PAGE, AND DISCLAIMS (PURSUANT TO SECTION 327.411 RSMO) SPECIFICATION, ESTIMATES, REPORTS, OR OTHER DOCUMENTS OR INSTRUMENTS NOT SEALED BY THE UNDERSIGNED PROFESSIONAL RELATING TO OR INTENDED TO BE USED FOR ANY PART OR PARTS OF THE PROJECT TO WHICH THIS PAGE REFERS.

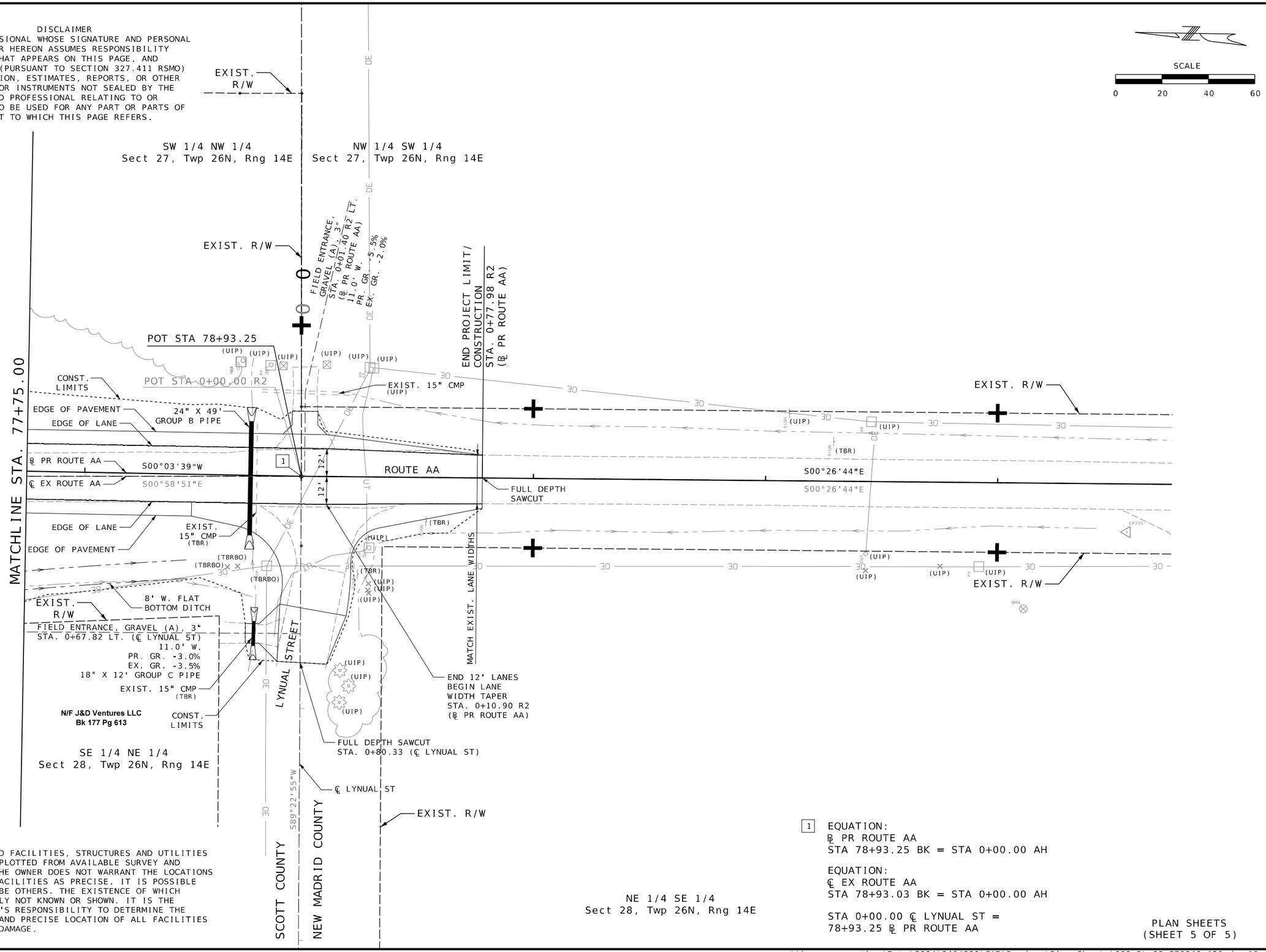

UNDERGROUND FACILITIES, STRUCTURES AND UTILITIES HAVE BEEN PLOTTED FROM AVAILABLE SURVEY AND RECORDS. THE OWNER DOES NOT WARRANT THE LOCATIONS OF THESE FACILITIES AS PRECISE. IT IS POSSIBLE THERE MAY BE OTHERS. THE EXISTENCE OF WHICH IS PRESENTLY NOT KNOWN OR SHOWN. IT IS THE CONTRACTOR'S RESPONSIBILITY TO DETERMINE THE EXISTENCE AND PRECISE LOCATION OF ALL FACILITIES AND AVOID DAMAGE.

1 EQUATION:
℄ PR ROUTE AA
STA 78+93.25 BK = STA 0+00.00 AH

EQUATION:
℄ EX ROUTE AA
STA 78+93.03 BK = STA 0+00.00 AH

STA 0+00.00 ℄ LYNUAL ST =
78+93.25 ℄ PR ROUTE AA

PLAN SHEETS
(SHEET 5 OF 5)

STATE OF MISSOURI
ANDREA S. DAVIS
PE-2018021250
PROFESSIONAL ENGINEER

DATE PREPARED	3/24/2025
ROUTE	AA
STATE	MO
DISTRICT	SE
SHEET NO.	9
COUNTY	SCOTT
JOB NO.	JSE0248
CONTRACT ID.	
PROJECT NO.	
BRIDGE NO.	

DATE	DESCRIPTION

IF A SEAL IS PRESENT ON THIS SHEET IT HAS BEEN ELECTRONICALLY SEALED AND DATED.

MISSOURI HIGHWAYS AND TRANSPORTATION COMMISSION
105 WEST CAPITOL
JEFFERSON CITY, MO 65102
1-888-ASK-MODOT (1-888-275-6636)

HR GREEN, INC.
520 MARYVILLE CENTRE DRIVE, SUITE 100
ST. LOUIS, MISSOURI 63141
PHONE: (636) 519.0990
CORPORATE LICENSE #2002006608

HRGreen

\\hrgreen.com\hrg\Data\2024\2404289\CAD\Roadway\Plan_Sheets\009_PL_05_SE0248_120.dgn 10:42:30 AM 3/24/2025

DISCLAIMER
THE PROFESSIONAL WHOSE SIGNATURE AND PERSONAL SEAL APPEAR HEREON ASSUMES RESPONSIBILITY ONLY FOR WHAT APPEARS ON THIS PAGE, AND DISCLAIMS (PURSUANT TO SECTION 327.411 RSMO) SPECIFICATION, ESTIMATES, REPORTS, OR OTHER DOCUMENTS OR INSTRUMENTS NOT SEALED BY THE UNDERSIGNED PROFESSIONAL RELATING TO OR INTENDED TO BE USED FOR ANY PART OR PARTS OF THE PROJECT TO WHICH THIS PAGE REFERS.

PROFILE - ℄ PR ROUTE AA

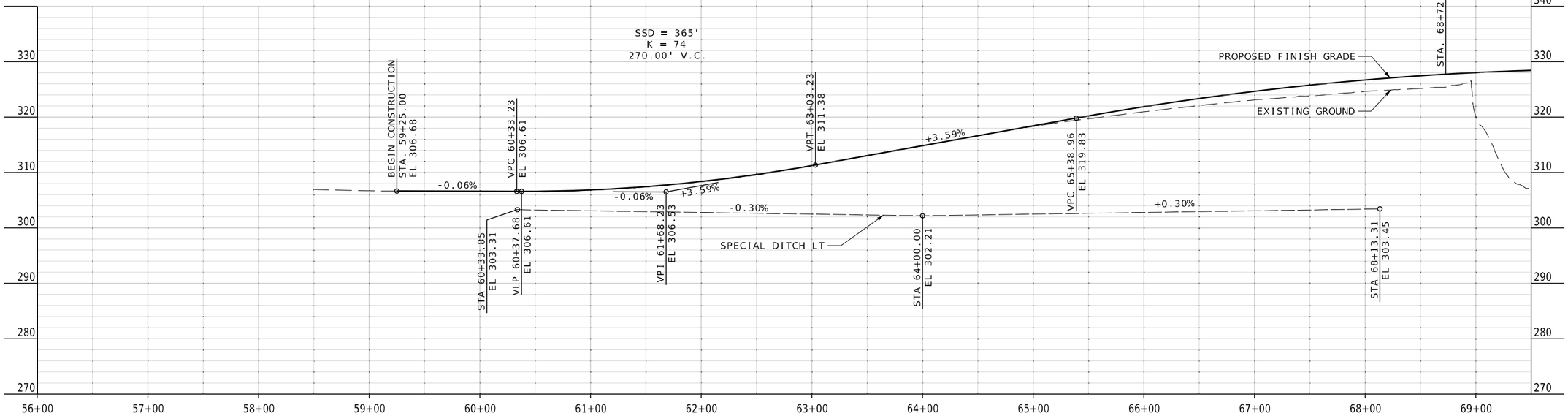

PROFILE - ℄ PR ROUTE AA

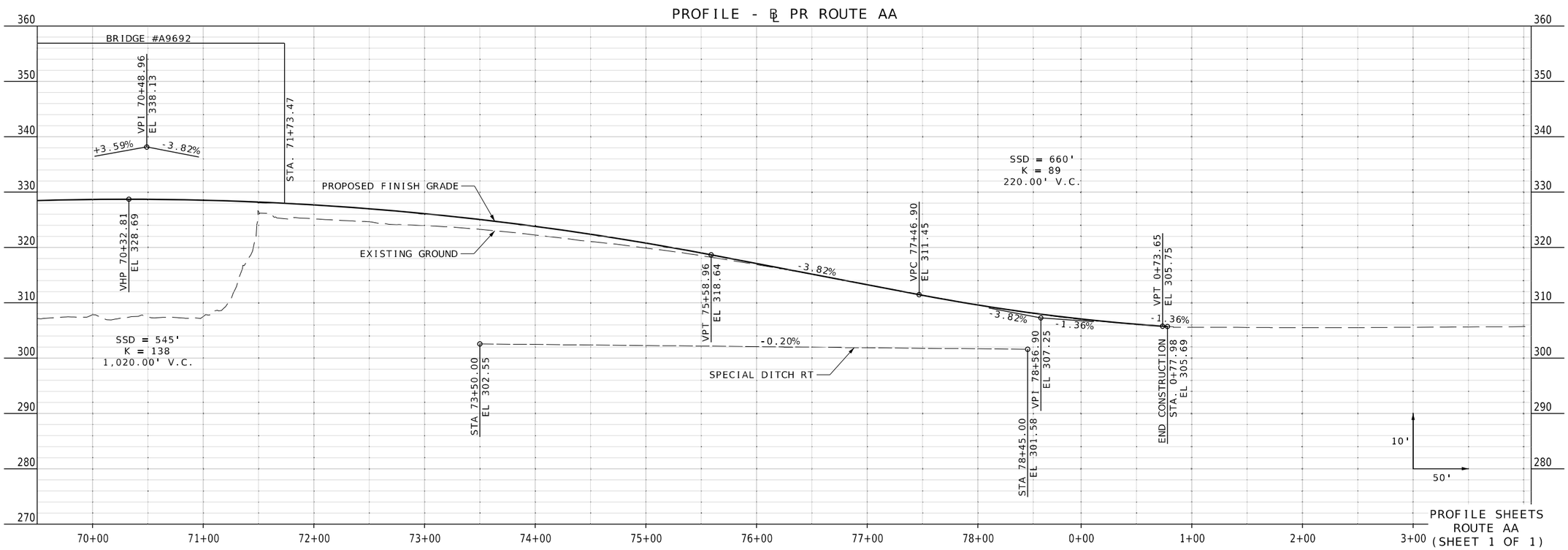

PROFILE SHEETS
ROUTE AA
(SHEET 1 OF 1)

STATE OF MISSOURI
ANDREA S. DAVIS
PE-2018021250
PROFESSIONAL ENGINEER

DATE PREPARED	
3/24/2025	
ROUTE	STATE
AA	MO
DISTRICT	SHEET NO.
SE	10
COUNTY	
SCOTT	
JOB NO.	
JSE0248	
CONTRACT ID.	
PROJECT NO.	
BRIDGE NO.	

DESCRIPTION	DATE

MISSOURI HIGHWAYS AND TRANSPORTATION COMMISSION
105 WEST CAPITOL
JEFFERSON CITY, MO 65102
1-888-ASK-MODOT (1-888-275-6636)

HR GREEN, INC.
520 MARYVILLE CENTRE DRIVE,
SUITE 100
ST. LOUIS, MISSOURI 63141
PHONE: (636) 519.0990
CORPORATE LICENSE #2002006608

IF A SEAL IS PRESENT ON THIS SHEET IT HAS BEEN ELECTRONICALLY SEALED AND DATED.

\\hrgreen.com\hrg\Data\2024\2404289\CAD\Roadway\Plan_Sheets\010_PR_01_SE0248_I50.dgn 10:42:32 AM 3/24/2025

COORDINATE POINT LISTING

SHEET NO	STATION	LOCATION	OFFSET (USFT)	MODIFIED STATE PLANE (GROUND) NORTHING (US SURVEY FT)	EASTING (US SURVEY FT)	ELEVATION (US SURVEY FT)	DESCRIPTION	GPK POINT ID
PROJECT CONTROL POINTS								
5	60+45.04 R1	℄ PR ROUTE AA	45.22' LT	380,473.5596	1,101,701.8796	305.0910	Set 5/8" Rebar w/ Plastic Control Point Cap on South Side of South Entrance of Rte. AA Stockpile Lot	CP100
6	67+64.56 R1	℄ PR ROUTE AA	0.77' LT	379,753.6900	1,101,681.7480	323.7600	Set 5/8" Rebar w/ Plastic Control Point Cap on East Shoulder of Rte. AA 130' North of R0142 Overpass	CP101
8	73+57.52 R1	℄ PR ROUTE AA	4.37' LT	379,160.7870	1,101,693.2430	322.5300	Set 5/8" Rebar w/ Plastic Control Point Cap in East Shoulder of Rte. AA 200' South of R0142 Overpass	CP102
9	3+55.89 R2	℄ PR ROUTE AA	20.75' RT	378,269.0210	1,101,670.3220	304.4500	Set 5/8" Rebar w/ Plastic Control Point Cap in West R/W of Rte. AA	CP103
BENCHMARKS								
5	59+40.08 R1	℄ PR ROUTE AA	45.00' LT	380,578.4930	1,101,699.8630	305.6700		BM1
7	69+06.18 R1	℄ PR ROUTE AA	25.78' RT	379,611.6370	1,101,657.6260	326.6600		BM2
7	71+49.44 R1	℄ PR ROUTE AA	1.93' LT	379,368.8910	1,101,689.5030	326.6500		BM3
9	3+11.53 R2	℄ PR ROUTE AA	54.29' RT	378,313.1140	1,101,636.4380	305.5400		BM4

ALL PROJECT COORDINATES HAVE BEEN PROJECTED FROM THE MISSOURI STATE PLANE COORDINATE (SPC) SYSTEM OF 1983 USING AN AVERAGE PROJECT PROJECTION (GRID TO GROUND) FACTOR. TO GET BACK TO STATE PLANE COORDINATES MULTIPY THE PROJECT COORDINATES BY THE AVERAGE GRID FACTOR AS SHOWN IN THE "REFERENCE CONTROL INFORMATION" PORTION OF THIS TABLE.

PROJECT COORDINATE INFORMATION

COORDINATE SYSTEM	MO SPC
HORIZONTAL DATUM	NAD83(2011)
VERTICAL DATUM	NAVD88
GEOID MODEL	2018
ELEVATIONS DETERMINED BY	DIFFERENTIAL LEVELING
PROJECT PROJECTION FACTOR	1.00000000

REFERENCE CONTROL INFORMATION

COORDINATE SYSTEM	MO SPC
CONTROL STATION	MOCH
DESIGNATION	MODOT CHARLESTON CORS ARP
CORS_ID	MOCH
PID	DM4118
LATITUDE	36° 55' 05.22474" (N)
LONGITUDE	89° 19' 07.58631" (W)
NORTHING (M)	121017.9250
EASTING (M)	355250.6190
ZONE	EAST
PROJECT AVERAGE GRID FACTOR	1.00000000

EXAMPLE OF PROJECT COORDINATE TO S.P.C.

PROJECT NORTHING X AVERAGE GRID FACTOR
= STATE PLANE NORTHING
PROJECT EASTING X AVERAGE GRID FACTOR
= STATE PLANE EASTING

LINEAR UNIT CONVERSION

1 METER = 3.280833333 US SURVEY FEET (USFT)

DISCLAIMER
THE PROFESSIONAL WHOSE SIGNATURE AND PERSONAL SEAL APPEAR HEREON ASSUMES RESPONSIBILITY ONLY FOR WHAT APPEARS ON THIS PAGE, AND DISCLAIMS (PURSUANT TO SECTION 327.411 RSMO) SPECIFICATION, ESTIMATES, REPORTS, OR OTHER DOCUMENTS OR INSTRUMENTS NOT SEALED BY THE UNDERSIGNED PROFESSIONAL RELATING TO OR INTENDED TO BE USED FOR ANY PART OR PARTS OF THE PROJECT TO WHICH THIS PAGE REFERS.

ALIGNMENT INFORMATION

ELEMENT	POINT TYPE	STATION	MODIFIED STATE PLANE (GROUND) NORTHING (US SURVEY FT)	EASTING (US SURVEY FT)	DELTA	RADIUS	TANGENT	LENGTH
℄ PR ROUTE AA								
TANGENT	POB	52+57.53 R1	381,260.1759	1,101,643.1889				
TANGENT	PI	61+00.00 R1	380,417.8297	1,101,657.6092				
TANGENT	PI	67+60.11 R1	379,758.1314	1,101,680.9045				
TANGENT	PI	72+33.14 R1	379,285.1707	1,101,689.0012				
TANGENT	PI	-0+00.00 R2	378,625.0618	1,101,688.3000				
TANGENT	POE	39+76.54 R2	374,648.6435	1,101,719.2325				
℄ EX ROUTE AA								
TANGENT	POB	52+57.53 R1	381,260.1759	1,101,643.1889				
TANGENT	PI	0+00.00 R2	378,625.0618	1,101,688.3000				
TANGENT	POE	39+76.54 R2	374,648.6435	1,101,719.2325				
℄ N. OUTER RD								
TANGENT	POB	16+13.21 R1	379,402.3849	1,101,112.2131				
TANGENT	PC	19+69.60 R1	379,628.8436	1,101,387.4076				
ARC	PC	19+69.60 R1	379,628.8436	1,101,387.4076				
ARC	PI	21+67.15 R1	379,754.3699	1,101,539.9482	409.2900	368.1000	51° 31' 47"	LEFT
ARC	PT	23+37.70 R1	379,951.8896	1,101,536.5668				
TANGENT	PT	23+37.70 R1	379,951.8896	1,101,536.5668				
TANGENT	PC	27+36.50 R1	380,350.6312	1,101,529.7407				
ARC	PC	27+36.50 R1	380,350.6312	1,101,529.7407				
ARC	PI	28+01.50 R1	380,415.6217	1,101,528.6281	65.0000	102.1018	90° 00' 00"	RIGHT
ARC	PT	28+38.60 R1	380,416.7342	1,101,593.6186				
TANGENT	PT	28+38.60 R1	380,416.7342	1,101,593.6186				
TANGENT	END	29+02.60 R1	380,417.8297	1,101,657.6092				
℄ US 60								
TANGENT	POB	0+00.00	378,617.8873	1,101,688.3558				
TANGENT	POE	36+53.70	380,108.2546	1,103,035.2870				
℄ LYNUAL ST (PROPOSED)								
TANGENT	POB	0+00.00	378,617.8873	1,101,688.3558				
TANGENT	PC	0+38.54	378,617.5875	1,101,649.8180				
ARC	PC	0+38.54	378,617.5875	1,101,649.8180				
ARC	PI	0+48.76	378,617.5080	1,101,639.5995	115.0000	20.3840	10° 09' 21"	RIGHT
ARC	PT	0+58.92	378,619.2316	1,101,629.5272				
TANGENT	PT	0+58.92	378,619.2316	1,101,629.5272				
TANGENT	POE	1+10.19	378,627.8781	1,101,578.9962				
℄ LYNUAL ST (EXISTING)								
TANGENT	POB	0+00.00	378,625.0618	1,101,688.3000				
TANGENT	POE	6+65.85	378,617.8800	1,101,022.4918				

COORDINATE POINTS
(SHEET 1 OF 1)

STATE OF MISSOURI
ANDREA S. DAVIS
PE-2018021250
PROFESSIONAL ENGINEER

DATE PREPARED 3/24/2025
ROUTE AA | STATE MO
DISTRICT SE | SHEET NO. 11
COUNTY SCOTT
JOB NO. JSE0248
CONTRACT ID.
PROJECT NO.
BRIDGE NO.

DATE	DESCRIPTION

IF A SEAL IS PRESENT ON THIS SHEET IT HAS BEEN ELECTRONICALLY SEALED AND DATED.

MISSOURI HIGHWAYS AND TRANSPORTATION COMMISSION
105 WEST CAPITOL
JEFFERSON CITY, MO 65102
1-888-ASK-MODOT (1-888-275-6636)

HR GREEN, INC.
520 MARYVILLE CENTRE DRIVE, SUITE 100
ST. LOUIS, MISSOURI 63141
PHONE: (636) 519.0990
CORPORATE LICENSE #2002006608
HRGreen

DISCLAIMER
THE PROFESSIONAL WHOSE SIGNATURE AND PERSONAL SEAL APPEAR HEREON ASSUMES RESPONSIBILITY ONLY FOR WHAT APPEARS ON THIS PAGE, AND DISCLAIMS (PURSUANT TO SECTION 327.411 RSMO) SPECIFICATION, ESTIMATES, REPORTS, OR OTHER DOCUMENTS OR INSTRUMENTS NOT SEALED BY THE UNDERSIGNED PROFESSIONAL RELATING TO OR INTENDED TO BE USED FOR ANY PART OR PARTS OF THE PROJECT TO WHICH THIS PAGE REFERS.

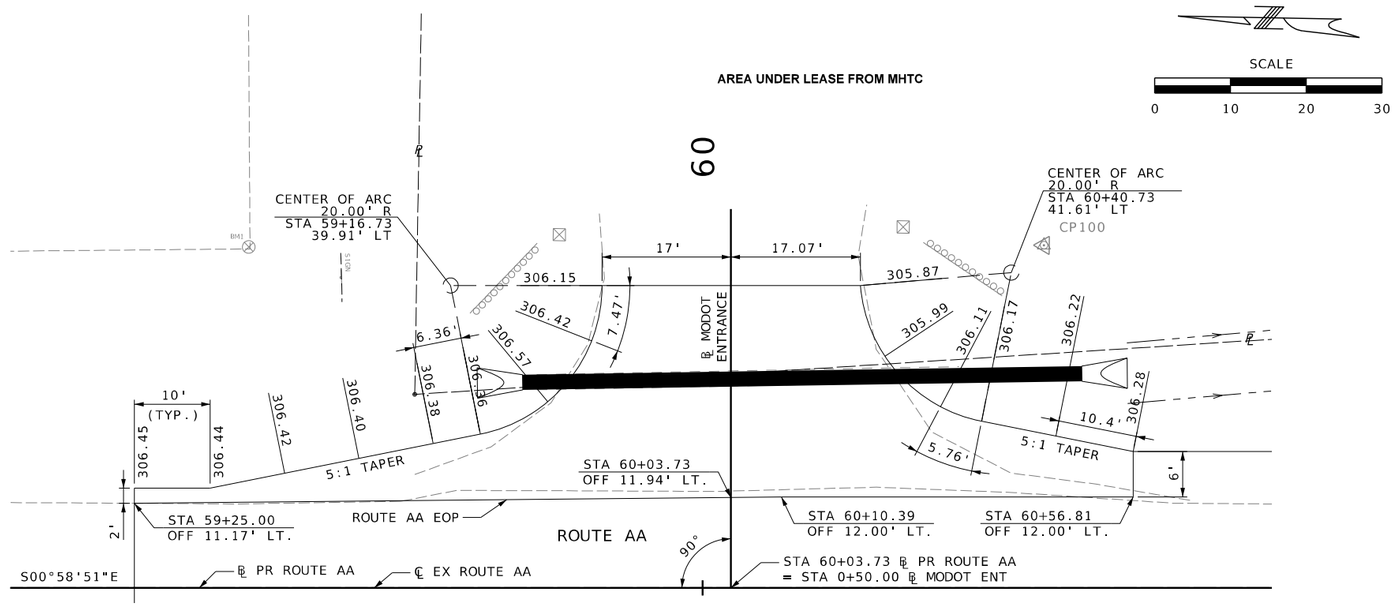

PLAN - MODOT ENTRANCE

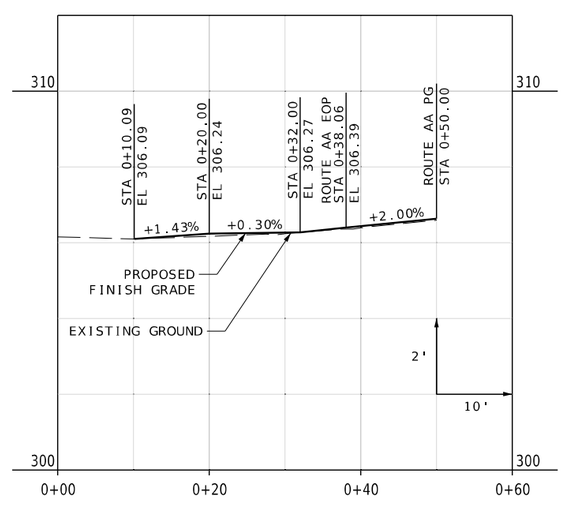

PROFILE - ℄ MODOT ENTRANCE

NOTES:

1. PLAN VIEW STATIONS, ELEVATIONS, AND RADII ARE AT THE EDGE OF PAVEMENT (EOP) UNLESS OTHERWISE NOTED.
2. PLAN VIEW ELEVATIONS PROVIDED EVERY 10 FEET UNLESS OTHERWISE NOTED.
3. PLAN VIEW STATIONS AND OFFSETS GIVEN FROM ℄ PR ROUTE AA ALIGNMENT UNLESS OTHERWISE NOTED.
4. UNDERGROUND FACILITIES, STRUCTURES AND UTILITIES HAVE BEEN PLOTTED FROM AVAILABLE SURVEY AND RECORDS. THE OWNER DOES NOT WARRANT THE LOCATIONS OF THESE FACILITIES AS PRECISE. IT IS POSSIBLE THERE MAY BE OTHERS. THE EXISTENCE OF WHICH IS PRESENTLY NOT KNOWN OR SHOWN. IT IS THE CONTRACTOR'S RESPONSIBILITY TO DETERMINE THE EXISTENCE AND PRECISE LOCATION OF ALL FACILITIES AND AVOID DAMAGE.
5. THE APPROXIMATE LOCATION OF PROPERTY LINES AS SHOWN ON THE PLANS ARE BASED ON THE BEST INFORMATION AVAILABLE TO THE COMMISSION AT THIS TIME. THIS INFORMATION IS PROVIDED BY THE COMMISSION "AS-IS" AND THE COMMISSION EXPRESSLY DISCLAIMS ANY REPRESENTATION OR WARRANTY AS TO THE COMPLETENESS, ACCURACY, OR SUITABILITY OF THE INFORMATION FOR ANY USE.

SPECIAL SHEETS
ENTRANCE DETAILS
(SHEET 1 OF 3)

STATE OF MISSOURI
ANDREA S. DAVIS
PE-2018021250
PROFESSIONAL ENGINEER

DATE PREPARED	3/24/2025
ROUTE	AA
STATE	MO
DISTRICT	SE
SHEET NO.	12
COUNTY	SCOTT
JOB NO.	JSE0248
CONTRACT ID.	
PROJECT NO.	
BRIDGE NO.	

DATE	DESCRIPTION

IF A SEAL IS PRESENT ON THIS SHEET IT HAS BEEN ELECTRONICALLY SEALED AND DATED.

MISSOURI HIGHWAYS AND TRANSPORTATION COMMISSION
105 WEST CAPITOL
JEFFERSON CITY, MO 65102
1-888-ASK-MODOT (1-888-275-6636)

HR GREEN, INC.
520 MARYVILLE CENTRE DRIVE,
SUITE 100
ST. LOUIS, MISSOURI 63141
PHONE: (636) 519.0990
CORPORATE LICENSE #2002006608
HRGreen

\\hrgreen.com\hrg\Data\2024\2404289\CAD\Roadway\Plan_Sheets\012_SS_01_SE0248_I10.dgn 10:42:38 AM 3/24/2025

DISCLAIMER
THE PROFESSIONAL WHOSE SIGNATURE AND PERSONAL SEAL APPEAR HEREON ASSUMES RESPONSIBILITY ONLY FOR WHAT APPEARS ON THIS PAGE, AND DISCLAIMS (PURSUANT TO SECTION 327.411 RSMO) SPECIFICATION, ESTIMATES, REPORTS, OR OTHER DOCUMENTS OR INSTRUMENTS NOT SEALED BY THE UNDERSIGNED PROFESSIONAL RELATING TO OR INTENDED TO BE USED FOR ANY PART OR PARTS OF THE PROJECT TO WHICH THIS PAGE REFERS.

SCALE
0 10 20 30

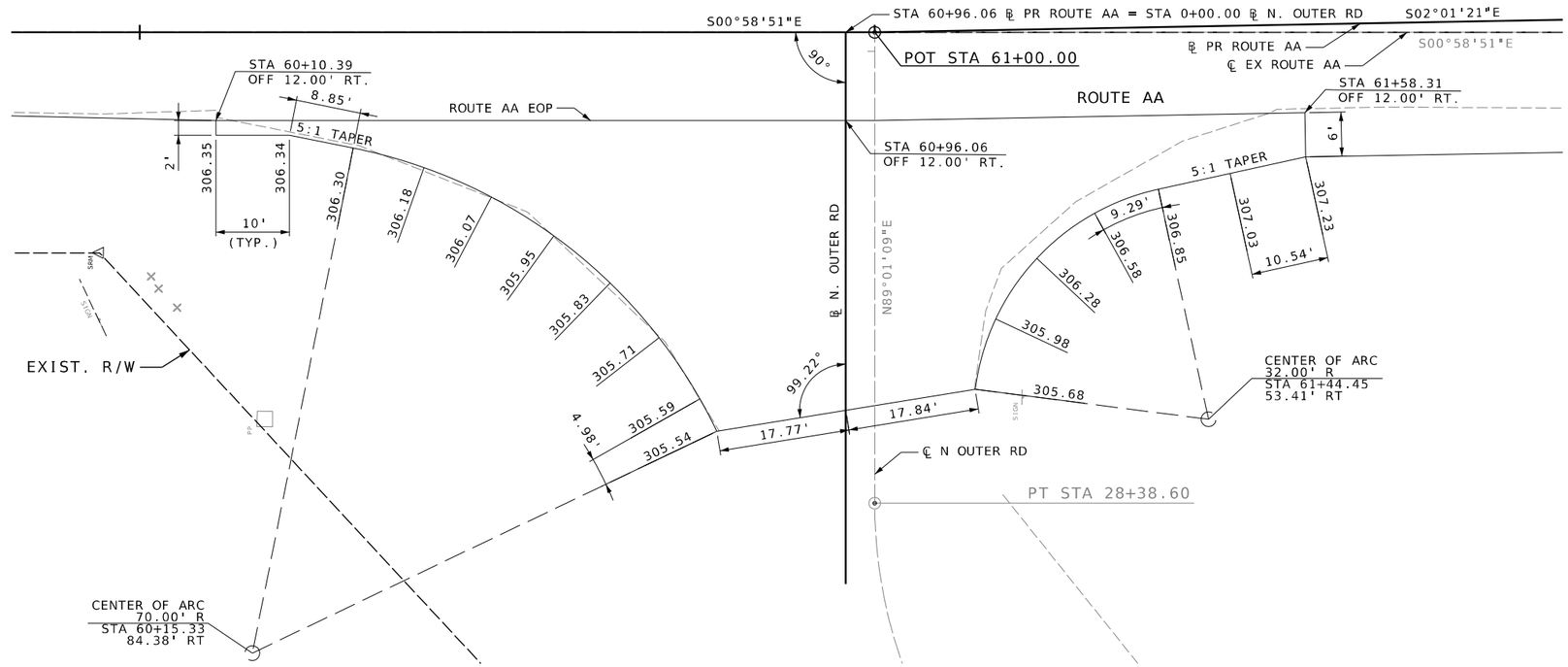

PLAN - N. OUTER RD

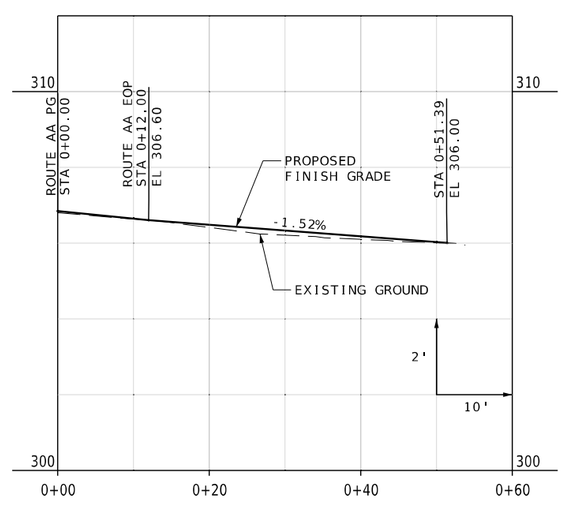

PROFILE - ℄ N. OUTER RD

NOTES:

1. PLAN VIEW STATIONS, ELEVATIONS, AND RADII ARE AT THE EDGE OF PAVEMENT (EOP) UNLESS OTHERWISE NOTED.
2. PLAN VIEW ELEVATIONS PROVIDED EVERY 10 FEET UNLESS OTHERWISE NOTED.
3. PLAN VIEW STATIONS AND OFFSETS GIVEN FROM ℄ PR ROUTE AA ALIGNMENT UNLESS OTHERWISE NOTED.
4. UNDERGROUND FACILITIES, STRUCTURES AND UTILITIES HAVE BEEN PLOTTED FROM AVAILABLE SURVEY AND RECORDS. THE OWNER DOES NOT WARRANT THE LOCATIONS OF THESE FACILITIES AS PRECISE. IT IS POSSIBLE THERE MAY BE OTHERS. THE EXISTENCE OF WHICH IS PRESENTLY NOT KNOWN OR SHOWN, IT IS THE CONTRACTOR'S RESPONSIBILITY TO DETERMINE THE EXISTENCE AND PRECISE LOCATION OF ALL FACILITIES AND AVOID DAMAGE.

SPECIAL SHEETS
ENTRANCE DETAILS
(SHEET 2 OF 3)

STATE OF MISSOURI
ANDREA S. DAVIS
PE-2018021250
PROFESSIONAL ENGINEER

DATE PREPARED	
3/24/2025	
ROUTE	STATE
AA	MO
DISTRICT	SHEET NO.
SE	13
COUNTY	
SCOTT	
JOB NO.	
JSE0248	
CONTRACT ID.	
PROJECT NO.	
BRIDGE NO.	

DATE	DESCRIPTION

IF A SEAL IS PRESENT ON THIS SHEET IT HAS BEEN ELECTRONICALLY SEALED AND DATED.

MISSOURI HIGHWAYS AND TRANSPORTATION COMMISSION
105 WEST CAPITOL
JEFFERSON CITY, MO 65102
1-888-ASK-MODOT (1-888-275-6636)

HR GREEN, INC.
520 MARYVILLE CENTRE DRIVE,
SUITE 100
ST. LOUIS, MISSOURI 63141
PHONE: (636) 519.0990
CORPORATE LICENSE #2002006608
HRGreen

\\hrgreen.com\hrg\Data\2024\2404289\CAD\Roadway\Plan_Sheets\013_SS_02_SE0248_I10.dgn 10:42:43 AM 3/24/2025

DISCLAIMER
THE PROFESSIONAL WHOSE SIGNATURE AND PERSONAL SEAL APPEAR HEREON ASSUMES RESPONSIBILITY ONLY FOR WHAT APPEARS ON THIS PAGE, AND DISCLAIMS (PURSUANT TO SECTION 327.411 RSMO) SPECIFICATION, ESTIMATES, REPORTS, OR OTHER DOCUMENTS OR INSTRUMENTS NOT SEALED BY THE UNDERSIGNED PROFESSIONAL RELATING TO OR INTENDED TO BE USED FOR ANY PART OR PARTS OF THE PROJECT TO WHICH THIS PAGE REFERS.

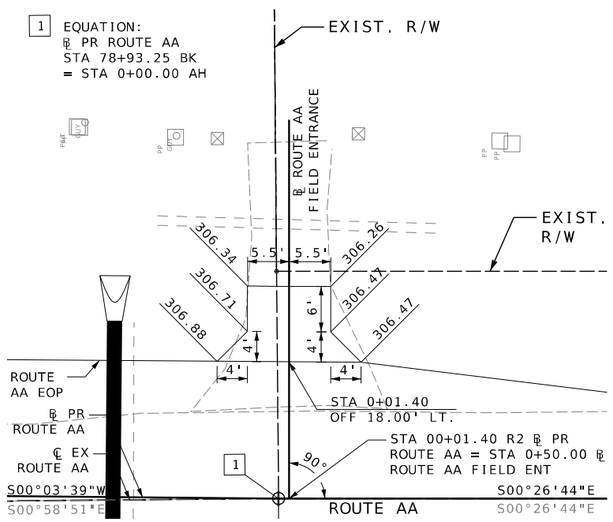

PLAN - ROUTE AA FIELD ENTRANCE

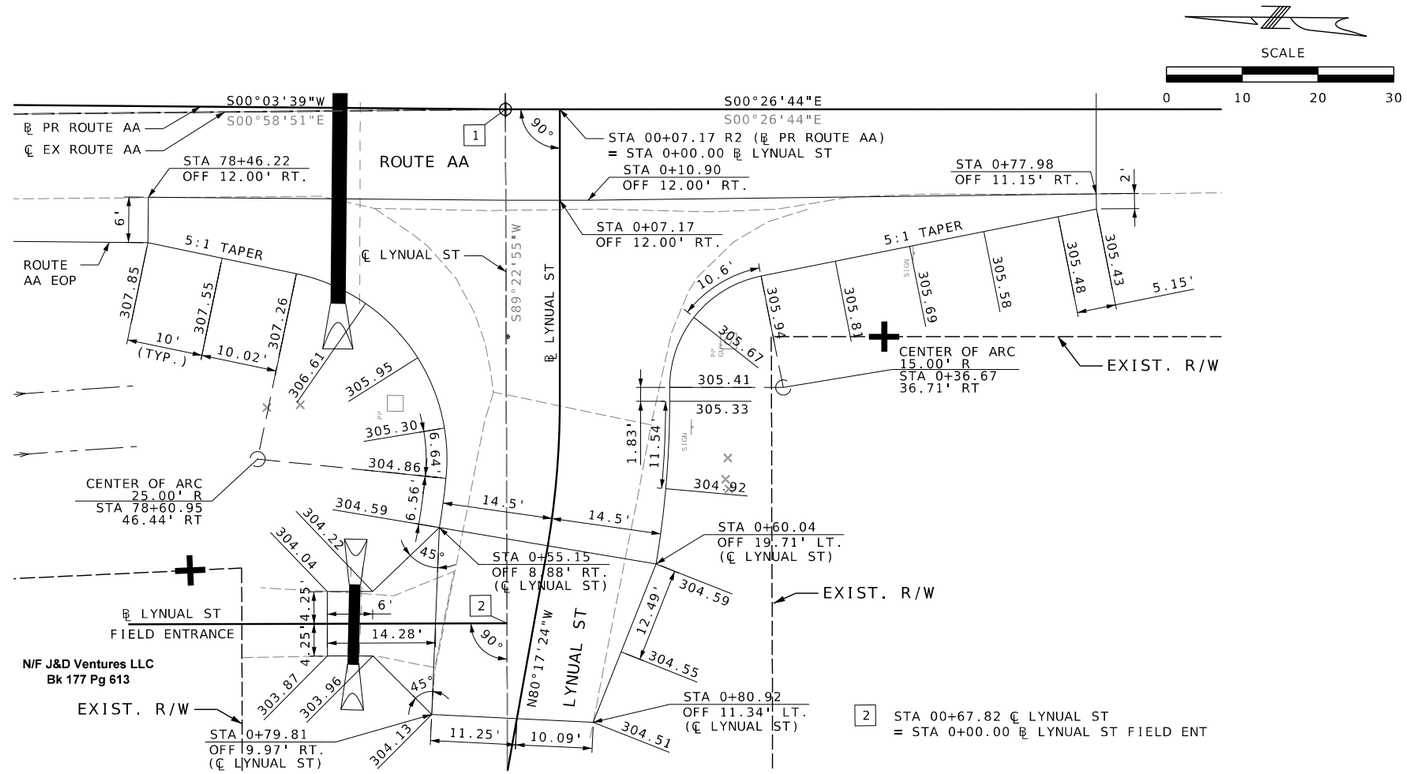

PLAN - LYNUAL ST & LYNUAL ST FIELD ENTRANCE

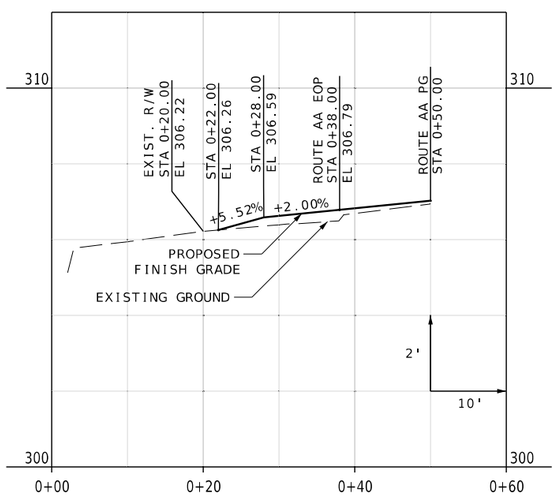

PROFILE - ℄ ROUTE AA FIELD ENTRANCE

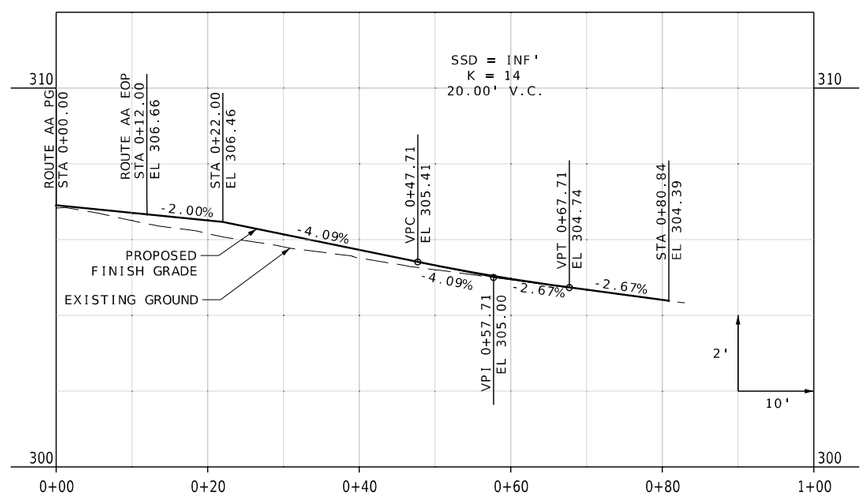

PROFILE - ℄ LYNUAL ST

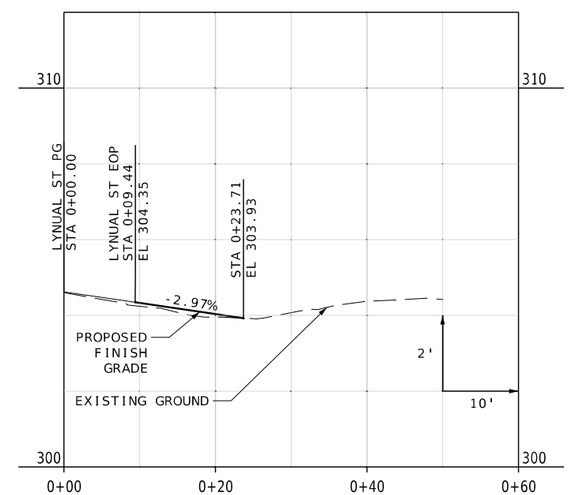

PROFILE - ℄ LYNUAL ST FIELD ENTRANCE

NOTES:

1. PLAN VIEW STATIONS, ELEVATIONS, AND RADII ARE AT THE EDGE OF PAVEMENT (EOP) UNLESS OTHERWISE NOTED.
2. PLAN VIEW ELEVATIONS PROVIDED EVERY 10 FEET UNLESS OTHERWISE NOTED.
3. PLAN VIEW STATIONS AND OFFSETS GIVEN FROM ℄ PR ROUTE AA ALIGNMENT UNLESS OTHERWISE NOTED.
4. UNDERGROUND FACILITIES, STRUCTURES AND UTILITIES HAVE BEEN PLOTTED FROM AVAILABLE SURVEY AND RECORDS. THE OWNER DOES NOT WARRANT THE LOCATIONS OF THESE FACILITIES AS PRECISE. IT IS POSSIBLE THERE MAY BE OTHERS. THE EXISTENCE OF WHICH IS PRESENTLY NOT KNOWN OR SHOWN. IT IS THE CONTRACTOR'S RESPONSIBILITY TO DETERMINE THE EXISTENCE AND PRECISE LOCATION OF ALL FACILITIES AND AVOID DAMAGE.

SPECIAL SHEETS
ENTRANCE DETAILS
(SHEET 3 OF 3)

STATE OF MISSOURI
ANDREA S. DAVIS
PE-2018021250
PROFESSIONAL ENGINEER

DATE PREPARED	
3/24/2025	
ROUTE	STATE
AA	MO
DISTRICT	SHEET NO.
SE	14
COUNTY	
SCOTT	
JOB NO.	
JSE0248	
CONTRACT ID.	
PROJECT NO.	
BRIDGE NO.	

DATE	DESCRIPTION

IF A SEAL IS PRESENT ON THIS SHEET IT HAS BEEN ELECTRONICALLY SEALED AND DATED.

MISSOURI HIGHWAYS AND TRANSPORTATION COMMISSION
105 WEST CAPITOL
JEFFERSON CITY, MO 65102
1-888-ASK-MODOT (1-888-275-6636)

HR GREEN, INC.
520 MARYVILLE CENTRE DRIVE, SUITE 100
ST. LOUIS, MISSOURI 63141
PHONE: (636) 519.0990
CORPORATE LICENSE #2002006608

HRGreen

\\hrgreen.com\hrg\Data\2024\2404289\CAD\Roadway\Plan_Sheets\014_SS_03_SE0248_I10.dgn 10:42:46 AM 3/24/2025

GENERAL TRAFFIC CONTROL NOTES AND DETAILS:

THE TRAFFIC CONTROL PLAN FOR THIS PROJECT INCLUDES THREE MAJOR PHASES OF WORK. THE CONTRACTOR HAS THE OPTION OF DEVELOPING AN ALTERNATE TRAFFIC CONTROL PLAN AND SUBMITTING IT TO THE ENGINEER FOR REVIEW AND APPROVAL (AT LEAST FOUR WEEKS PRIOR TO PROPOSED IMPLEMENTATION).

THIS TRAFFIC CONTROL PLAN WILL COVER A MAJOR PORTION OF THE WORK INVOLVED ON THIS PROJECT. WORK SITUATIONS NOT SPECIFICALLY COVERED BY THE TRAFFIC CONTROL PLANS (E.G., STRIPING OPERATIONS OR THE INSTALLATION OF TEMPORARY TRAFFIC CONTROL DEVICES) SHALL BE HANDLED IN ACCORDANCE WITH THE TYPICAL TRAFFIC CONTROL LAYOUTS SHOWN IN THESE TRAFFIC CONTROL SHEETS, OR IN THE STANDARD PLANS, AND AS DIRECTED BY THE ENGINEER. THE CONTRACTOR SHALL REVIEW ALL PROPOSED TRAFFIC CONTROL LAYOUTS WITH THE ENGINEER IN CHARGE OF CONSTRUCTION PRIOR TO IMPLEMENTATION.

ALL SIGNS, BARRICADES, BARRIERS, CHANNELIZERS, MARKINGS AND OTHER TRAFFIC CONTROL DEVICES SHALL CONFORM TO THE MANUAL ON UNIFORM TRAFFIC CONTROL DEVICES (MUTCD), LATEST EDITION, AS WELL AS SPECIFICATIONS OF THE MISSOURI DEPARTMENT OF TRANSPORTATION (MODOT). FOR DEVICE DETAILS AND DIMENSIONS, SEE MODOT STANDARD SHEETS 616.10, 616.20, AND 617.20.

THE CONTRACTOR SHALL BE RESPONSIBLE FOR MAINTAINING, POSITIONING, CLEANING AND/OR REPLACING ALL TRAFFIC CONTROL DEVICES ON AN AROUND-THE-CLOCK BASIS, WHETHER OR NOT WORK IS ACTIVELY BEING PURSUED. ANY DEFICIENCIES NOTED SHALL BE CORRECTED BY THE CONTRACTOR IMMEDIATELY.

ALL PAVEMENT MARKINGS (EXISTING AND/OR TEMPORARY) THAT CONFLICT WITH ANY TRAFFIC CONTROL OPERATION SHALL BE REMOVED AS SHOWN ON THESE PLANS, AS DIRECTED BY THE ENGINEER, OR AS SUMMARIZED ON THE SUMMARY OF QUANTITY SHEETS. DEPENDING ON CONDITIONS, TEMPORARY PAVEMENT MARKINGS MAY REMAIN IN PLACE DURING SUCCEEDING WORK PHASES (SEE TRAFFIC CONTROL SHEETS AND SUMMARY OF QUANTITY SHEETS).

UNLESS OTHERWISE NOTED ON THE TRAFFIC CONTROL PLANS, TEMPORARY PAVEMENT MARKINGS SHALL BE REMOVABLE PAVEMENT MARKING TAPE. THE CONTRACTOR SHALL MAINTAIN ALL TEMPORARY PAVEMENT MARKINGS THROUGHOUT THEIR INTENDED SERVICE LIVES. NO ADDITIONAL PAYMENT WILL BE MADE FOR MAINTAINING TEMPORARY PAVEMENT MARKINGS.

AS WORK IS COMPLETED, THE CONTRACTOR SHALL INSTALL PERMANENT SIGNS AND MARKINGS AS SHOWN IN THESE PLANS OR AS DIRECTED BY THE ENGINEER.

TYPE III (MOVEABLE) BARRICADES SHOWN FOR ROADWAY CLOSURES SHALL BE USED TO COMPLETELY CLOSE ACCESS TO THE ROADWAY AND SHOULDERS AT THESE POINTS. THE CONTRACTOR SHALL SECURE THE BARRICADES IN SUCH A MANNER THAT THESE DEVICES CANNOT BE EASILY MOVED BY THE PUBLIC.

TRAFFIC CONTROL DEVICES NOT IN USE OR NOT APPLICABLE SHALL EITHER BE COVERED OR REMOVED FROM THE WORK AREA.

WORK VEHICLES AND EQUIPMENT SHALL BE LOCATED WITH ADEQUATE CLEARANCE FROM THE TRAVELWAY SO THAT SIGHT DISTANCES ARE NOT RESTRICTED FOR DRIVERS OR PEDESTRIANS.

THE CONTRACTOR SHALL BE RESPONSIBLE FOR KEEPING ALL TRAFFIC LANES FREE OF MUD AND OTHER CONSTRUCTION DEBRIS.

ANY EXISTING WARNING OR REGULATORY SIGNS (NOT SHOWN) THAT INTERFERE WITH THE TRAFFIC CONTROL SIGNING SHALL BE COMPLETELY COVERED OR REMOVED, NO DIRECT PAY.

ALL TRAFFIC CONTROL SIGNS ARE TO BE NON-PORTABLE UNLESS OTHERWISE NOTED.

SEE STANDARD PLANS 616.10, 903.01 AND 909.03 FOR ADDITIONAL DETAILS REGARDING TRAFFIC CONTROL HIGHWAY SIGNING.

TEMPORARY TRAFFIC CONTROL SIGN AND DEVICE LOCATIONS MAY BE ADJUSTED UPON APPROVAL OF THE ENGINEER. WHERE TRAFFIC BACKUPS ARE EXPECTED BEYOND THE ADVANCED WARNING AREA, ADDITIONAL SIGNING MAY BE NEEDED AS DIRECTED BY THE ENGINEER.

ANY RELOCATION OF SIGNS AND DEVICES FOR TRAFFIC CONTROL DEVICES OR SIGNS SHALL BE CONSIDERED INCIDENTAL. NO DIRECT PAY.

R11-2 SIGN ASSOCIATED WITH THE TYPE 3 MOVEABLE BARRICADES SHALL BE MOUNTED ON POST 7-10 FEET BEHIND THE BARRICADE.

ALL WARNING SIGNS SHALL HAVE FLUORESCENT SHEETING.

REDUCED SPEED LIMIT SIGNING SHALL BE REMOVED, COVERED, OR TURNED FROM TRAFFIC WHEN CONDITIONS REQUIRING THE REDUCED SPEED NO LONGER EXIST.

TEMPORARY TRAFFIC BARRIER, SHALL COMPLY WITH THE PROVISIONS IN EPG 616.6.85 TEMPORARY TRAFFIC BARRIER.

FOR ADVANCE WARNING RAIL SYSTEM (AWRS), REFER TO STANDARD PLANS 616.10 ADVANCE WARNING RAIL SYSTEM.

REVIEW STANDARD PLANS 616.10 CHANNELIZING DEVICES FOR DIFFERENT TYPES AND GUIDELINES FOR THE DEVICES.

UPON APPROVAL OF THE ENGINEER, THE CONTRACTOR MAY PROVIDE ADDITIONAL PROTECTIVE TRUCKS EQUIPPED WITH PROPER WARNING DEVICES.

PROTECTIVE TRUCK AND WORK VEHICLES SHALL DISPLAY HIGH-INTENSITY ROTATING, FLASHING, OSCILLATING, OR STROBE LIGHTS.

VEHICLE HAZARD WARNING SIGNALS SHALL NOT BE USED INSTEAD OF THE VEHICLE'S HIGH-INTENSITY ROTATING, FLASHING, OSCILLATING, OR STROBE LIGHTS.

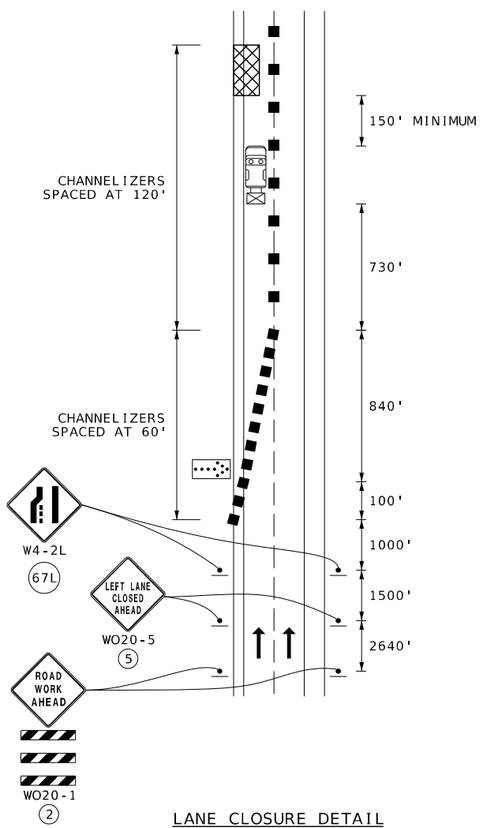

LANE CLOSURE DETAIL

(LEFT LANE CLOSURE SHOWN)

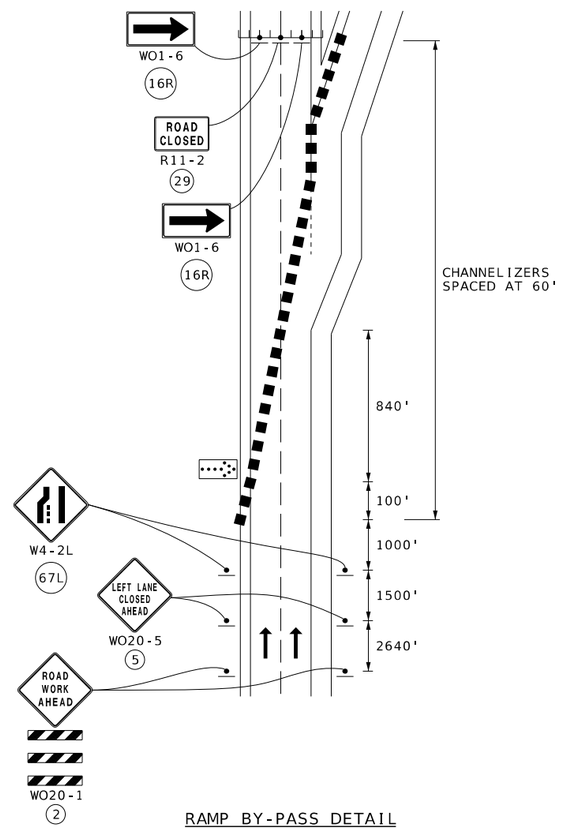

RAMP BY-PASS DETAIL

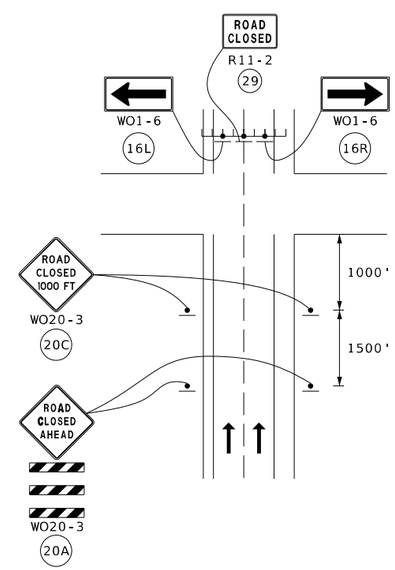

ROAD CLOSURE DETAIL

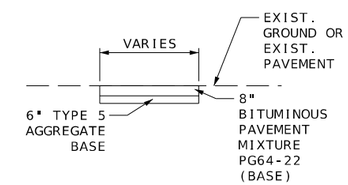

TYPICAL SECTION
TEMPORARY PAVEMENT

LEGEND:

- WORK AREA
- SIGN
- CHANNELIZER (TRIM-LINE)
- PROTECTIVE VEHICLE EQUIPPED WITH FLASHING ARROW PANEL AND TRUCK OR TRAILER MOUNTED ATTENUATOR
- FLASHING ARROW PANEL
- TYPE III MOVEABLE BARRICADE

TRAFFIC CONTROL
GENERAL NOTES & DETAILS
(SHEET 1 OF 14)

STATE OF MISSOURI
ANDREA S. DAVIS
PE-2018021250
PROFESSIONAL ENGINEER

DATE PREPARED	
3/24/2025	
ROUTE: AA	STATE: MO
DISTRICT: SE	SHEET NO.: 15
COUNTY: SCOTT	
JOB NO.: JSE0248	
CONTRACT ID.	
PROJECT NO.	
BRIDGE NO.	

DATE	DESCRIPTION

IF A SEAL IS PRESENT ON THIS SHEET IT HAS BEEN ELECTRONICALLY SEALED AND DATED.

MISSOURI HIGHWAYS AND TRANSPORTATION COMMISSION
105 WEST CAPITOL
JEFFERSON CITY, MO 65102
1-888-ASK-MODOT (1-888-275-6636)

HR GREEN, INC.
520 MARYVILLE CENTRE DRIVE, SUITE 100
ST. LOUIS, MISSOURI 63141
PHONE: (636) 519.0990
CORPORATE LICENSE #2002006608

HRGreen

GENERAL TRAFFIC CONTROL NOTES AND DETAILS (CONTINUED):

LEGEND:

- WORK AREA
- SIGN
- CHANNELIZER (TRIM-LINE)
- PROTECTIVE VEHICLE EQUIPPED WITH FLASHING ARROW PANEL AND TRUCK OR TRAILER MOUNTED ATTENUATOR
- FLASHING ARROW PANEL
- TYPE III MOVEABLE BARRICADE

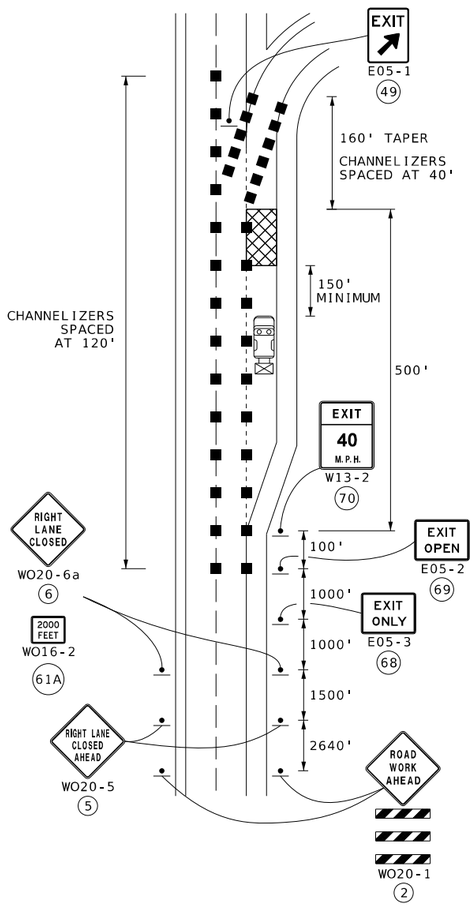

EXIT LANE CLOSURE DETAIL

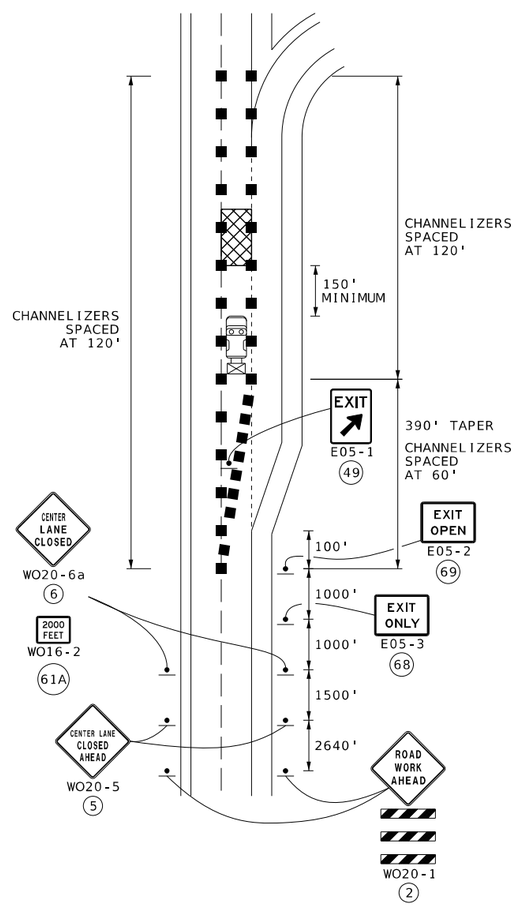

RIGHT-THROUGH LANE CLOSURE
NEAR EXIT RAMP DETAIL

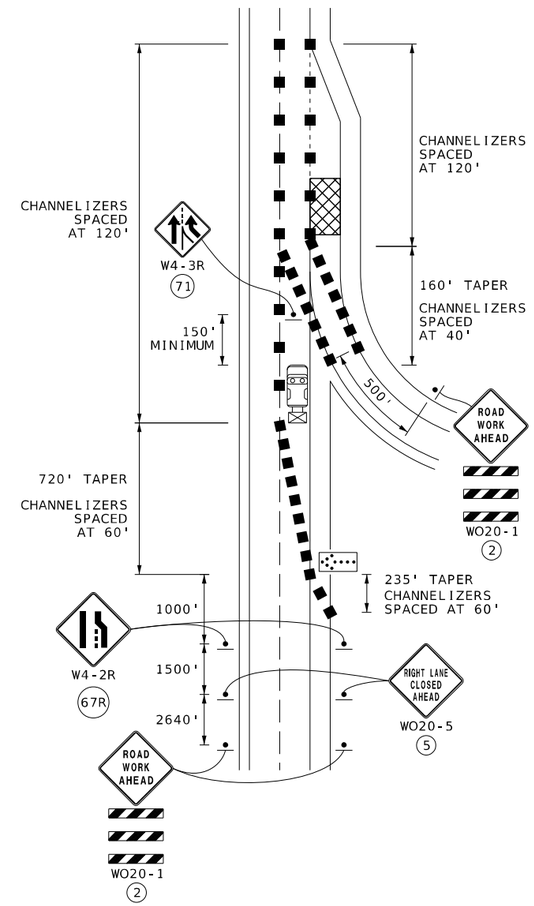

ENTRANCE LANE CLOSURE DETAIL

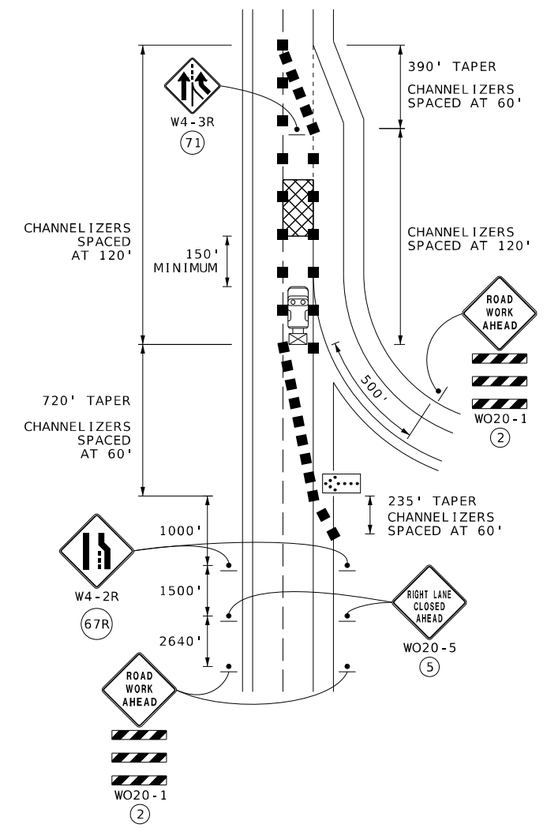

RIGHT-THROUGH LANE CLOSURE
NEAR ENTRANCE RAMP DETAIL

TRAFFIC CONTROL
GENERAL NOTES & DETAILS
(SHEET 2 OF 14)

STATE OF MISSOURI
ANDREA S. DAVIS
PE-2018021250
PROFESSIONAL ENGINEER

DATE PREPARED	
3/24/2025	
ROUTE	STATE
AA	MO
DISTRICT	SHEET NO.
SE	16
COUNTY	
SCOTT	
JOB NO.	
JSE0248	
CONTRACT ID.	
PROJECT NO.	
BRIDGE NO.	

DATE	DESCRIPTION

IF A SEAL IS PRESENT ON THIS SHEET IT HAS BEEN ELECTRONICALLY SEALED AND DATED.

MISSOURI HIGHWAYS AND TRANSPORTATION COMMISSION
105 WEST CAPITOL
JEFFERSON CITY, MO 65102
1-888-ASK-MODOT (1-888-275-6636)

HR GREEN, INC.
520 MARYVILLE CENTRE DRIVE, SUITE 100
ST. LOUIS, MISSOURI 63141
PHONE: (636) 519.0990
CORPORATE LICENSE #2002006608

HRGreen

DISCLAIMER
THE PROFESSIONAL WHOSE SIGNATURE AND PERSONAL SEAL APPEAR HEREON ASSUMES RESPONSIBILITY ONLY FOR WHAT APPEARS ON THIS PAGE, AND DISCLAIMS (PURSUANT TO SECTION 327.411 RSMO) SPECIFICATION, ESTIMATES, REPORTS, OR OTHER DOCUMENTS OR INSTRUMENTS NOT SEALED BY THE UNDERSIGNED PROFESSIONAL RELATING TO OR INTENDED TO BE USED FOR ANY PART OR PARTS OF THE PROJECT TO WHICH THIS PAGE REFERS.

DETOUR SIGN LEGEND:

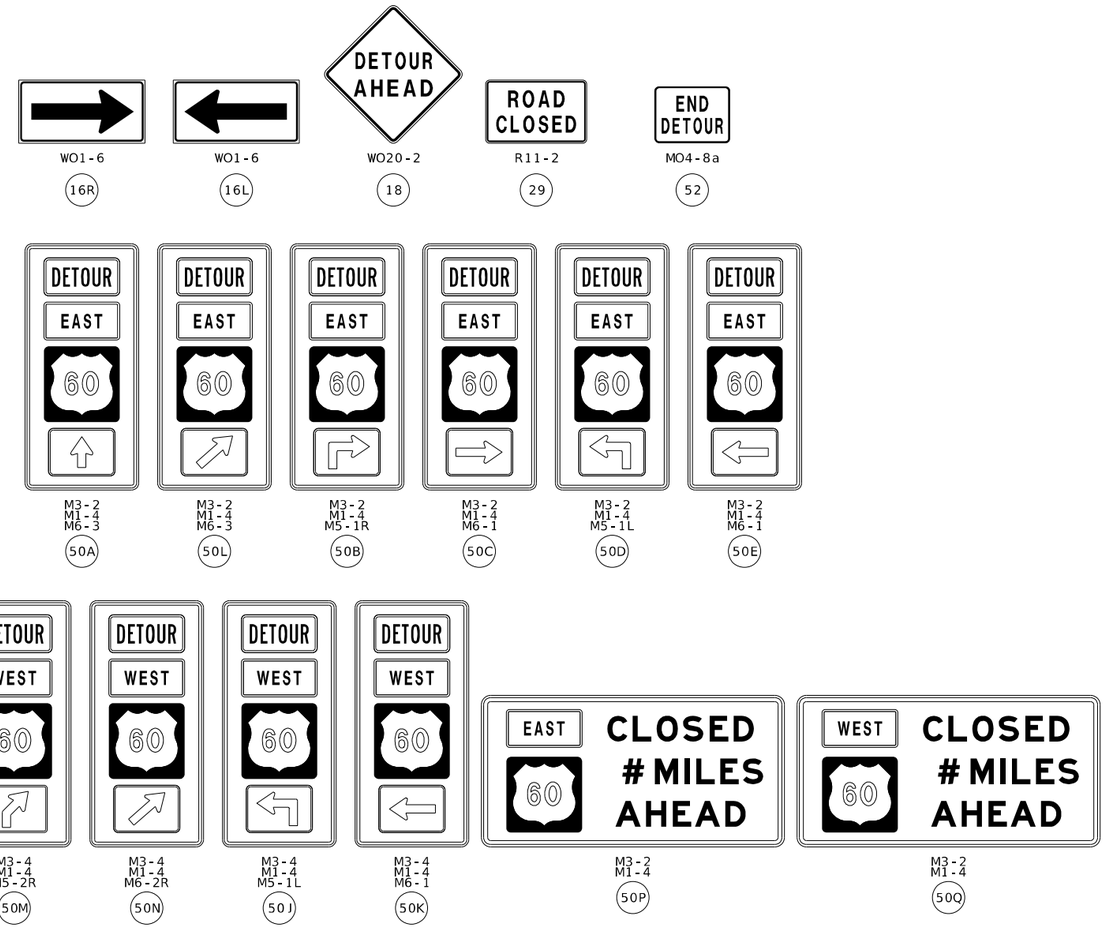

WO1-6 (16R) | WO1-6 (16L) | WO20-2 (18) | R11-2 (29) | MO4-8a (52)

M3-2 M1-4 M6-3 (50A) | M3-2 M1-4 M6-3 (50L) | M3-2 M1-4 M5-1R (50B) | M3-2 M1-4 M6-1 (50C) | M3-2 M1-4 M5-1L (50D) | M3-2 M1-4 M6-1 (50E)

M3-4 M1-4 M6-3 (50F) | M3-4 M1-4 M5-2R (50M) | M3-4 M1-4 M6-2R (50N) | M3-4 M1-4 M5-1L (50J) | M3-4 M1-4 M6-1 (50K)

M3-2 M1-4 (50P) | M3-2 M1-4 (50Q)

PROJECT SIGNS:

NOTE: PROJECT SIGNS TO BE INSTALLED PER THE DIRECTION OF THE ENGINEER.

CONST-8
(55)

TRAFFIC CONTROL
DETOUR & PROJECT SIGNS
(SHEET 3 OF 14)

STATE OF MISSOURI
ANDREA S. DAVIS
PE-2018021250
PROFESSIONAL ENGINEER

DATE PREPARED	
3/24/2025	
ROUTE: AA	STATE: MO
DISTRICT: SE	SHEET NO.: 17
COUNTY: SCOTT	
JOB NO.: JSE0248	
CONTRACT ID.	
PROJECT NO.	
BRIDGE NO.	

DATE	DESCRIPTION

IF A SEAL IS PRESENT ON THIS SHEET IT HAS BEEN ELECTRONICALLY SEALED AND DATED.

MISSOURI HIGHWAYS AND TRANSPORTATION COMMISSION
105 WEST CAPITOL
JEFFERSON CITY, MO 65102
1-888-ASK-MODOT (1-888-275-6636)

HR GREEN, INC.
520 MARYVILLE CENTRE DRIVE, SUITE 100
ST. LOUIS, MISSOURI 63141
PHONE: (636) 519.0990
CORPORATE LICENSE #2002006608

HRGreen

DISCLAIMER

THE PROFESSIONAL WHOSE SIGNATURE AND PERSONAL SEAL APPEAR HEREON ASSUMES RESPONSIBILITY ONLY FOR WHAT APPEARS ON THIS PAGE, AND DISCLAIMS (PURSUANT TO SECTION 327.411 RSMO) SPECIFICATION, ESTIMATES, REPORTS, OR OTHER DOCUMENTS OR INSTRUMENTS NOT SEALED BY THE UNDERSIGNED PROFESSIONAL RELATING TO OR INTENDED TO BE USED FOR ANY PART OR PARTS OF THE PROJECT TO WHICH THIS PAGE REFERS.

NOTES:

US-60 TO BE CLOSED IN EASTBOUND DIRECTION FOR GIRDER PLACEMENT ON BRIDGE #A9692.

WESTBOUND DIRECTION OF US-60 TO REMAIN OPEN TO TRAFFIC DURING THIS PHASE.

SPEED	SIGN SPACING (FT.)	TAPER LENGTH (FT.)		RECOMMENDED	CHANNELIZER SPACING (FT.)	
PERMANENT POSTED (MPH)	DIVIDED (S)	SHOULDER (1) (T1)	LANE (2) (T2)	BUFFER LENGTH (FT.) (B)	TAPERS	BUFFER/ WORK AREAS
0-35	200	70	245	250	35	40
40-45	500	150	540	360	40	80
50-55	1000	185	660	495	50	80
60-70	SA - 1000 SB - 1500 SC - 2640	235	840	730	60	120

1. SHOULDER TAPER LENGTH BASED ON 10 FT. (STANDARD SHOULDER WIDTH) OFFSET.
2. LANE TAPER LENGTH BASED ON 12 FT. (STANDARD LANE WIDTH) OFFSET.

NOT TO SCALE

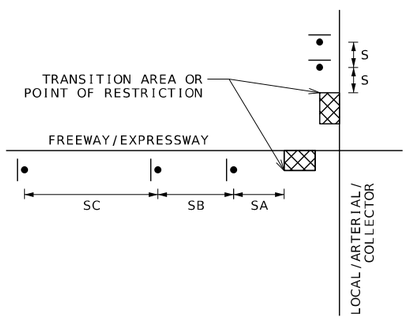

SIGN SPACING - SEE TABLE

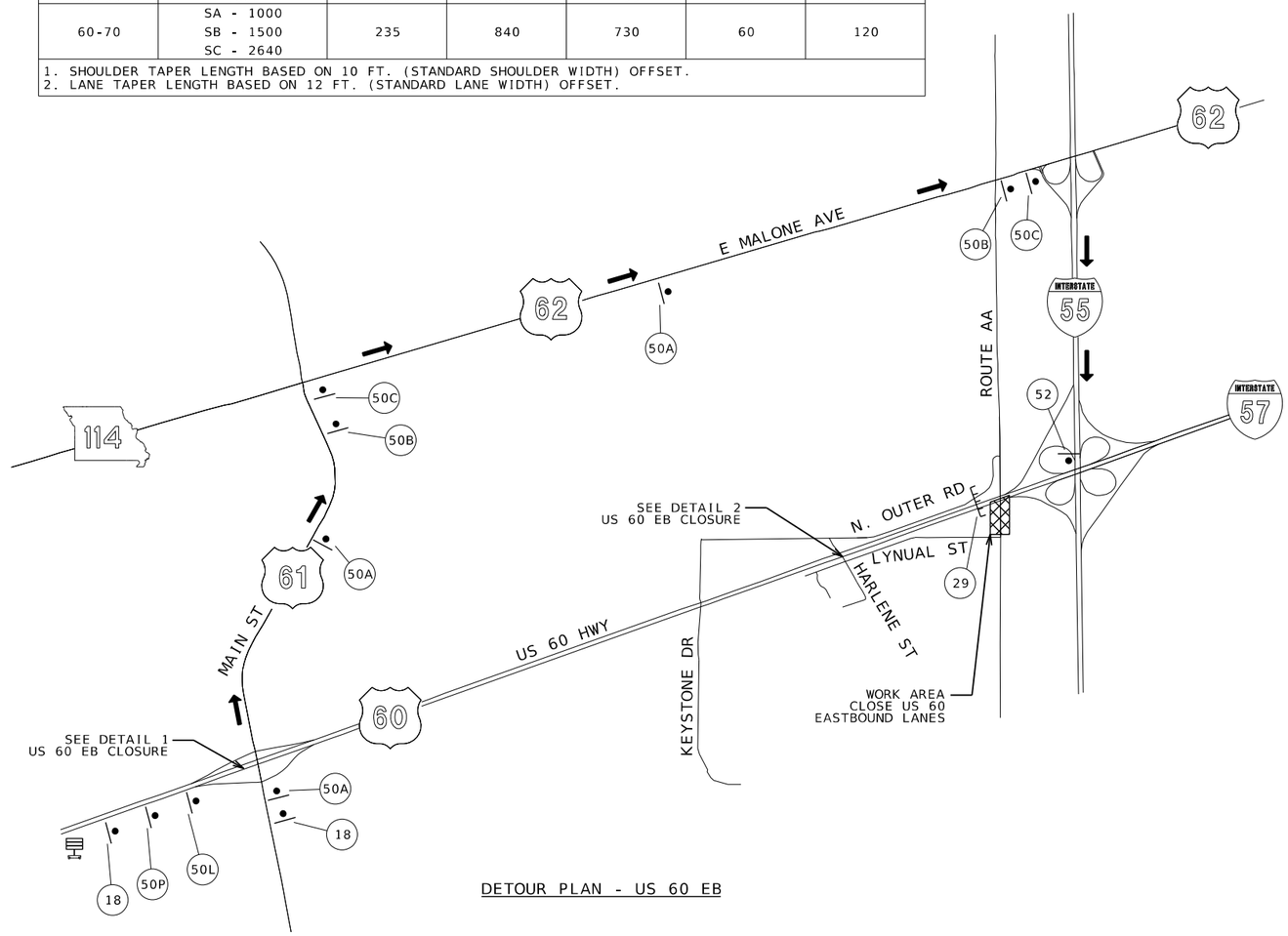

DETOUR PLAN - US 60 EB

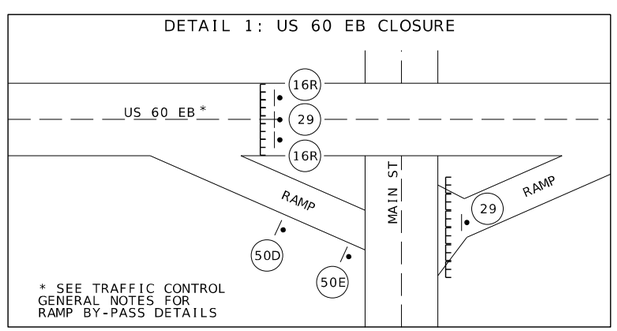

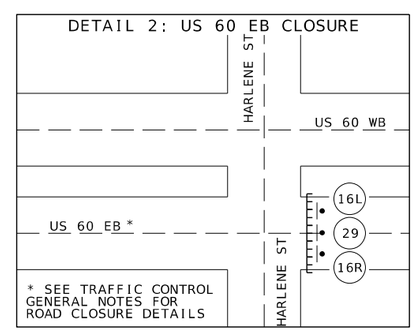

LEGEND:

- DETOUR ROUTE
- SIGN
- TYPE III MOVEABLE BARRICADE
- ROAD CLOSURE (TYPE III BARRICADES EXTENDING FULL ROADWAY WIDTH)
- CHANGEABLE MESSAGE BOARD

TRAFFIC CONTROL
US 60 EB DETOUR
(SHEET 4 OF 14)

STATE OF MISSOURI
ANDREA S. DAVIS
PE-2018021250
PROFESSIONAL ENGINEER

DATE PREPARED 3/24/2025
ROUTE AA | STATE MO
DISTRICT SE | SHEET NO. 18
COUNTY SCOTT
JOB NO. JSE0248
CONTRACT ID.
PROJECT NO.
BRIDGE NO.

DATE	DESCRIPTION

IF A SEAL IS PRESENT ON THIS SHEET IT HAS BEEN ELECTRONICALLY SEALED AND DATED.

MISSOURI HIGHWAYS AND TRANSPORTATION COMMISSION
105 WEST CAPITOL
JEFFERSON CITY, MO 65102
1-888-ASK-MODOT (1-888-275-6636)

HR GREEN, INC.
520 MARYVILLE CENTRE DRIVE, SUITE 100
ST. LOUIS, MISSOURI 63141
PHONE: (636) 519.0990
CORPORATE LICENSE #2002006608

DISCLAIMER

THE PROFESSIONAL WHOSE SIGNATURE AND PERSONAL SEAL APPEAR HEREON ASSUMES RESPONSIBILITY ONLY FOR WHAT APPEARS ON THIS PAGE, AND DISCLAIMS (PURSUANT TO SECTION 327.411 RSMO) SPECIFICATION, ESTIMATES, REPORTS, OR OTHER DOCUMENTS OR INSTRUMENTS NOT SEALED BY THE UNDERSIGNED PROFESSIONAL RELATING TO OR INTENDED TO BE USED FOR ANY PART OR PARTS OF THE PROJECT TO WHICH THIS PAGE REFERS.

NOTES:

US-60 TO BE CLOSED IN WESTBOUND DIRECTION FOR GIRDER PLACEMENT ON BRIDGE #A9692.

EASTBOUND DIRECTION OF US-60 TO REMAIN OPEN TO TRAFFIC DURING THIS PHASE.

SPEED	SIGN SPACING (FT.)	TAPER LENGTH (FT.)		RECOMMENDED	CHANNELIZER SPACING (FT.)	
PERMANENT POSTED (MPH)	DIVIDED (S)	SHOULDER (1) (T1)	LANE (2) (T2)	BUFFER LENGTH (FT.) (B)	TAPERS	BUFFER/ WORK AREAS
0-35	200	70	245	250	35	40
40-45	500	150	540	360	40	80
50-55	1000	185	660	495	50	80
60-70	SA - 1000 SB - 1500 SC - 2640	235	840	730	60	120

1. SHOULDER TAPER LENGTH BASED ON 10 FT. (STANDARD SHOULDER WIDTH) OFFSET.
2. LANE TAPER LENGTH BASED ON 12 FT. (STANDARD LANE WIDTH) OFFSET.

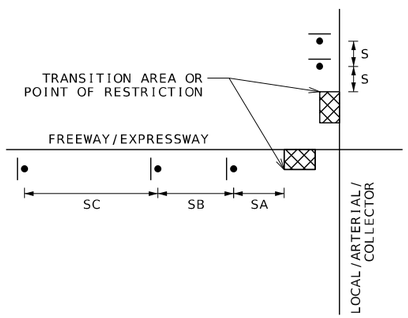

SIGN SPACING - SEE TABLE

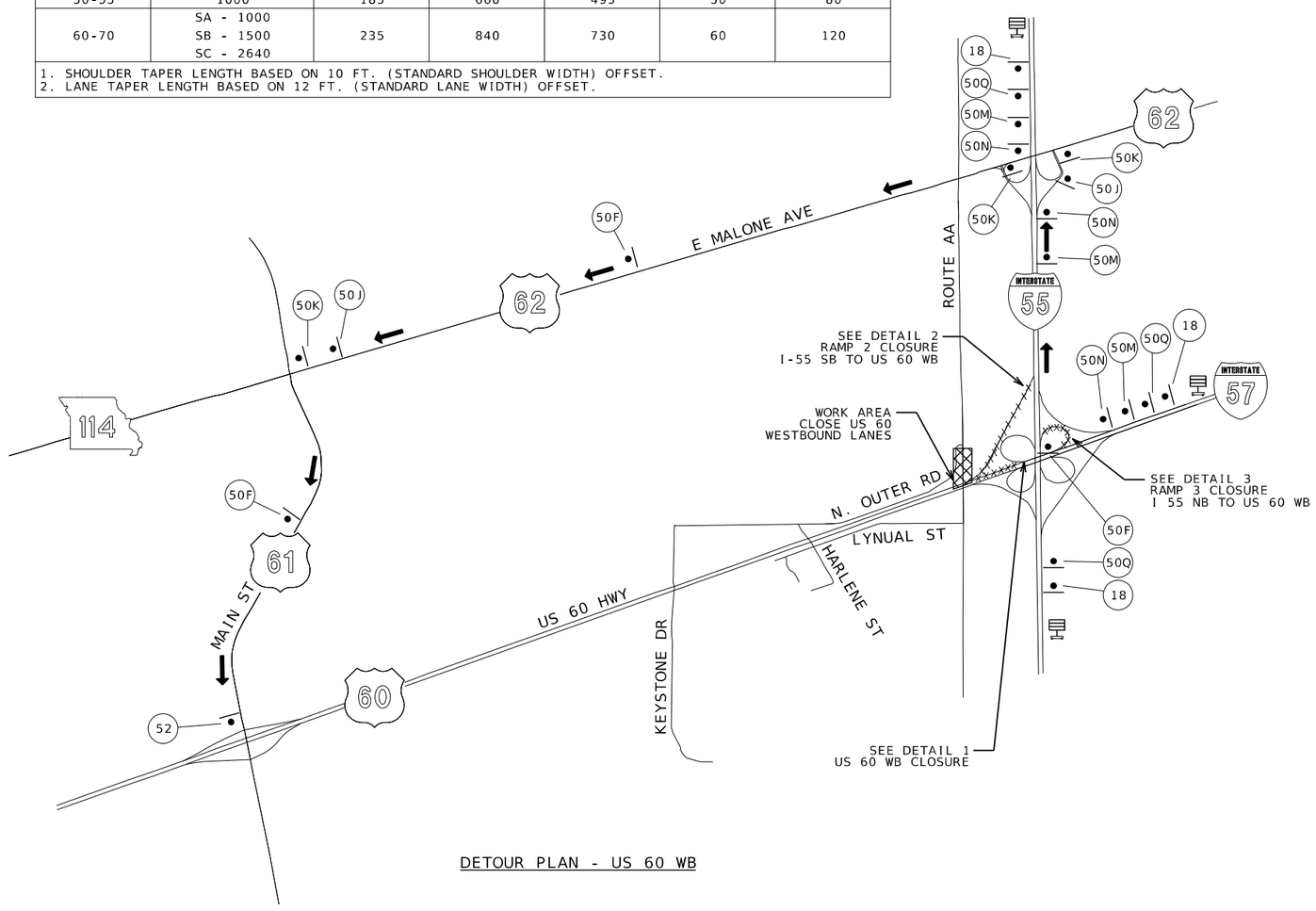

DETOUR PLAN - US 60 WB

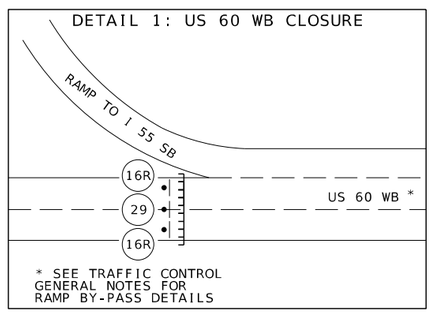

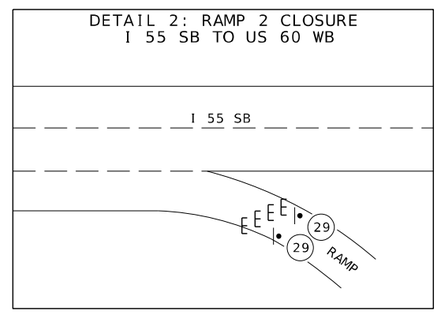

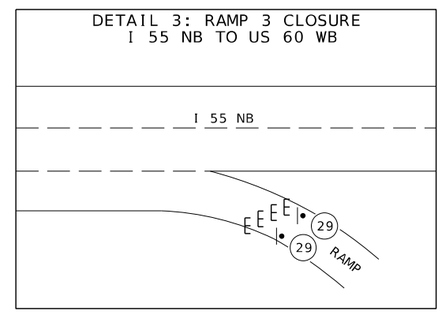

LEGEND:

- DETOUR ROUTE
- SIGN
- TYPE III MOVEABLE BARRICADE
- ROAD CLOSURE (TYPE III BARRICADES EXTENDING FULL ROADWAY WIDTH)
- CHANGEABLE MESSAGE BOARD

NOT TO SCALE

TRAFFIC CONTROL
US 60 WB DETOUR
(SHEET 5 OF 14)

STATE OF MISSOURI
ANDREA S. DAVIS
PE-2018021250
PROFESSIONAL ENGINEER

DATE PREPARED 3/24/2025
ROUTE AA | STATE MO
DISTRICT SE | SHEET NO. 19
COUNTY SCOTT
JOB NO. JSE0248
CONTRACT ID.
PROJECT NO.
BRIDGE NO.

DATE	DESCRIPTION

IF A SEAL IS PRESENT ON THIS SHEET IT HAS BEEN ELECTRONICALLY SEALED AND DATED.

MISSOURI HIGHWAYS AND TRANSPORTATION COMMISSION
105 WEST CAPITOL
JEFFERSON CITY, MO 65102
1-888-ASK-MODOT (1-888-275-6636)

HR GREEN, INC.
520 MARYVILLE CENTRE DRIVE, SUITE 100
ST. LOUIS, MISSOURI 63141
PHONE: (636) 519.0990
CORPORATE LICENSE #2002006608

DISCLAIMER
THE PROFESSIONAL WHOSE SIGNATURE AND PERSONAL SEAL APPEAR HEREON ASSUMES RESPONSIBILITY ONLY FOR WHAT APPEARS ON THIS PAGE, AND DISCLAIMS (PURSUANT TO SECTION 327.411 RSMO) SPECIFICATION, ESTIMATES, REPORTS, OR OTHER DOCUMENTS OR INSTRUMENTS NOT SEALED BY THE UNDERSIGNED PROFESSIONAL RELATING TO OR INTENDED TO BE USED FOR ANY PART OR PARTS OF THE PROJECT TO WHICH THIS PAGE REFERS.

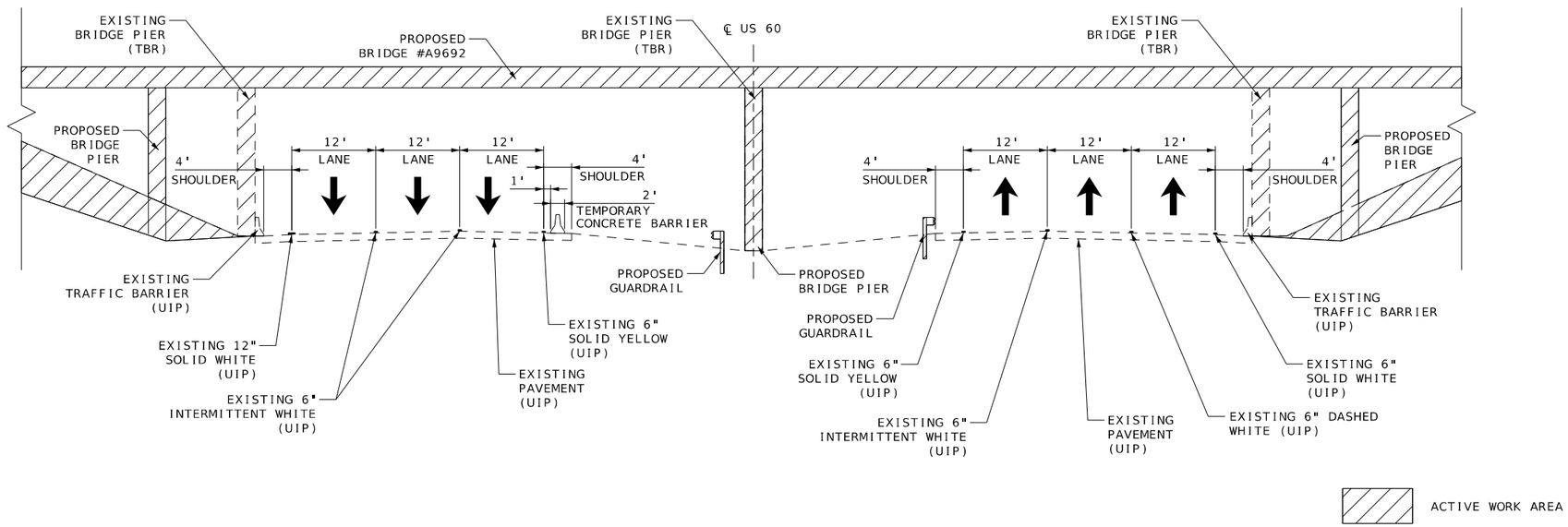

TRAFFIC CONTROL TYPICAL SECTION - BRIDGE CONSTRUCTION - US HIGHWAY 60

NOT TO SCALE

TRAFFIC CONTROL
US 60 TYPICAL SECTION
(SHEET 6 OF 14)

STATE OF MISSOURI
ANDREA S. DAVIS
PE-2018021250
PROFESSIONAL ENGINEER

DATE PREPARED	
3/24/2025	
ROUTE: AA	STATE: MO
DISTRICT: SE	SHEET NO.: 20
COUNTY: SCOTT	
JOB NO.: JSE0248	
CONTRACT ID.	
PROJECT NO.	
BRIDGE NO.	

DATE	DESCRIPTION

MISSOURI HIGHWAYS AND TRANSPORTATION COMMISSION
105 WEST CAPITOL
JEFFERSON CITY, MO 65102
1-888-ASK-MODOT (1-888-275-6636)

HR GREEN, INC.
520 MARYVILLE CENTRE DRIVE, SUITE 100
ST. LOUIS, MISSOURI 63141
PHONE: (636) 519.0990
CORPORATE LICENSE #2002006608

IF A SEAL IS PRESENT ON THIS SHEET IT HAS BEEN ELECTRONICALLY SEALED AND DATED.

DISCLAIMER
THE PROFESSIONAL WHOSE SIGNATURE AND PERSONAL SEAL APPEAR HEREON ASSUMES RESPONSIBILITY ONLY FOR WHAT APPEARS ON THIS PAGE, AND DISCLAIMS (PURSUANT TO SECTION 327.411 RSMO) SPECIFICATION, ESTIMATES, REPORTS, OR OTHER DOCUMENTS OR INSTRUMENTS NOT SEALED BY THE UNDERSIGNED PROFESSIONAL RELATING TO OR INTENDED TO BE USED FOR ANY PART OR PARTS OF THE PROJECT TO WHICH THIS PAGE REFERS.

TEMPORARY TRAFFIC CONTROL NOTES - BRIDGE CONSTRUCTION;

REMOVE EXISTING BRIDGE #R0142 AND CONSTRUCT NEW BRIDGE #A9692.

FOLLOW DETOUR DETAILS IN PREVIOUS SHEETS DURING GIRDER PLACEMENT.

PLACE TEMPORARY CONCRETE BARRIER TO PROTECT THE WORK AREA ALONG WB US 60.

USE TEMPORARY SINGLE LANE CLOSURES ON US 60 AS NEEDED TO PLACE TEMPORARY CONCRETE BARRIER, CONSTRUCT STAY-IN-PLACE CORRUGATED STEEL FORMS FOR BRIDGE #A9692, AND CONSTRUCT EB US 60 GUARDRAIL.

TRAFFIC CONTROL LEGEND

- ACTIVE WORK AREA
- TEMPORARY PAVEMENT
- SIGN (SINGLE SIDED)
- CHANNELIZER (TRIM-LINE)
- TYPE III MOVEABLE BARRICADE
- PORTABLE TRAFFIC SIGNAL
- ADVANCED WARNING RAIL SYSTEM (AWRS)

SCALE
0 50 100 150

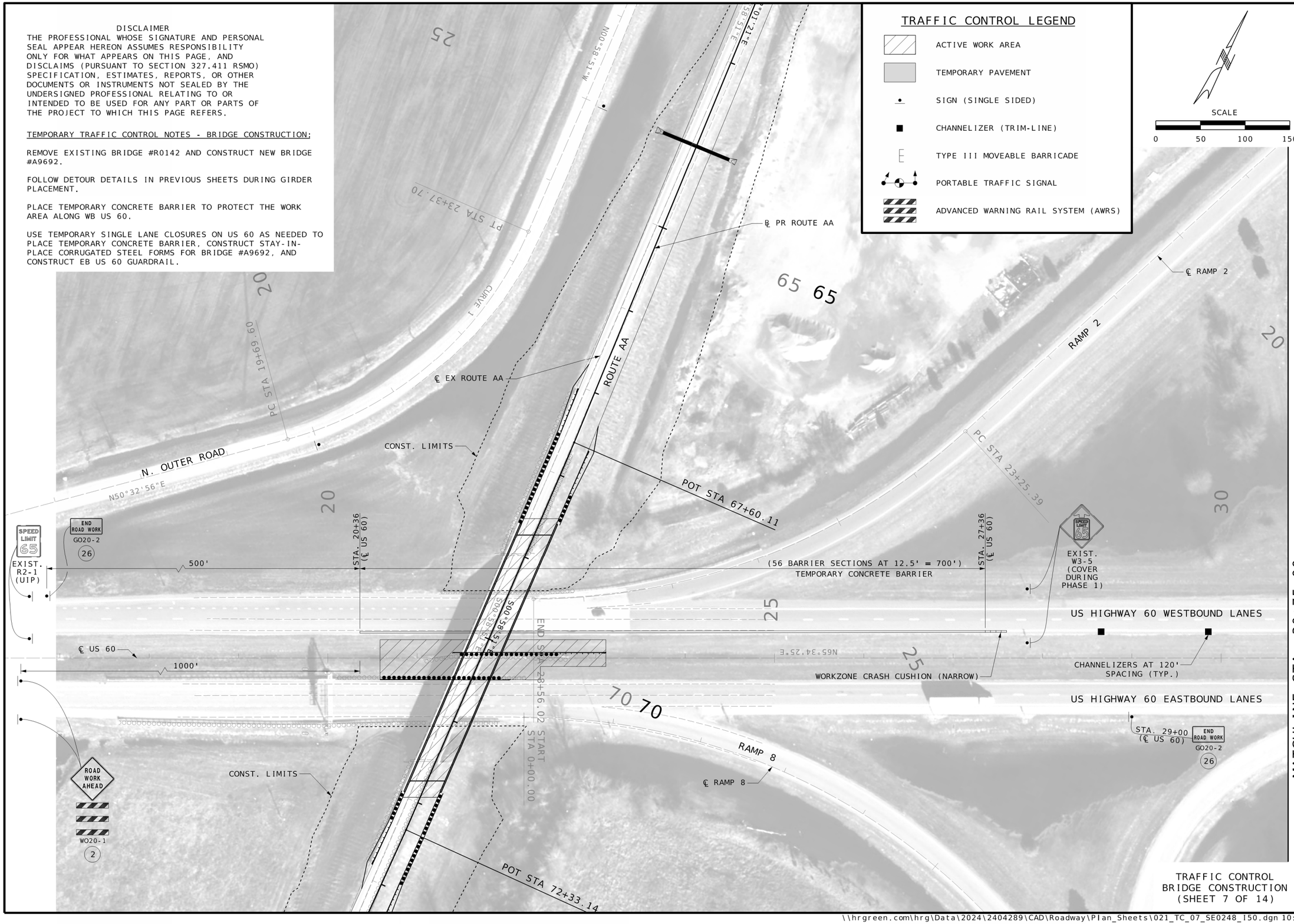

MATCHLINE STA. 30+75.00

TRAFFIC CONTROL
BRIDGE CONSTRUCTION
(SHEET 7 OF 14)

STATE OF MISSOURI
ANDREA S. DAVIS
PE-2018021250
PROFESSIONAL ENGINEER

DATE PREPARED	
3/24/2025	
ROUTE	STATE
AA	MO
DISTRICT	SHEET NO.
SE	21
COUNTY	
SCOTT	
JOB NO.	
JSE0248	
CONTRACT ID.	
PROJECT NO.	
BRIDGE NO.	

DATE	DESCRIPTION

IF A SEAL IS PRESENT ON THIS SHEET IT HAS BEEN ELECTRONICALLY SEALED AND DATED.

MISSOURI HIGHWAYS AND TRANSPORTATION COMMISSION
105 WEST CAPITOL
JEFFERSON CITY, MO 65102
1-888-ASK-MODOT (1-888-275-6636)

HR GREEN, INC.
520 MARYVILLE CENTRE DRIVE, SUITE 100
ST. LOUIS, MISSOURI 63141
PHONE: (636) 519.0990
CORPORATE LICENSE #2002006608

\\hrgreen.com\hrg\Data\2024\2404289\CAD\Roadway\Plan_Sheets\021_TC_07_SE0248_I50.dgn 10:43:13 AM 3/24/2025

DISCLAIMER
THE PROFESSIONAL WHOSE SIGNATURE AND PERSONAL SEAL APPEAR HEREON ASSUMES RESPONSIBILITY ONLY FOR WHAT APPEARS ON THIS PAGE, AND DISCLAIMS (PURSUANT TO SECTION 327.411 RSMO) SPECIFICATION, ESTIMATES, REPORTS, OR OTHER DOCUMENTS OR INSTRUMENTS NOT SEALED BY THE UNDERSIGNED PROFESSIONAL RELATING TO OR INTENDED TO BE USED FOR ANY PART OR PARTS OF THE PROJECT TO WHICH THIS PAGE REFERS.

TRAFFIC CONTROL LEGEND

- ACTIVE WORK AREA
- TEMPORARY PAVEMENT
- SIGN (SINGLE SIDED)
- CHANNELIZER (TRIM-LINE)
- TYPE III MOVEABLE BARRICADE
- PORTABLE TRAFFIC SIGNAL
- ADVANCED WARNING RAIL SYSTEM (AWRS)

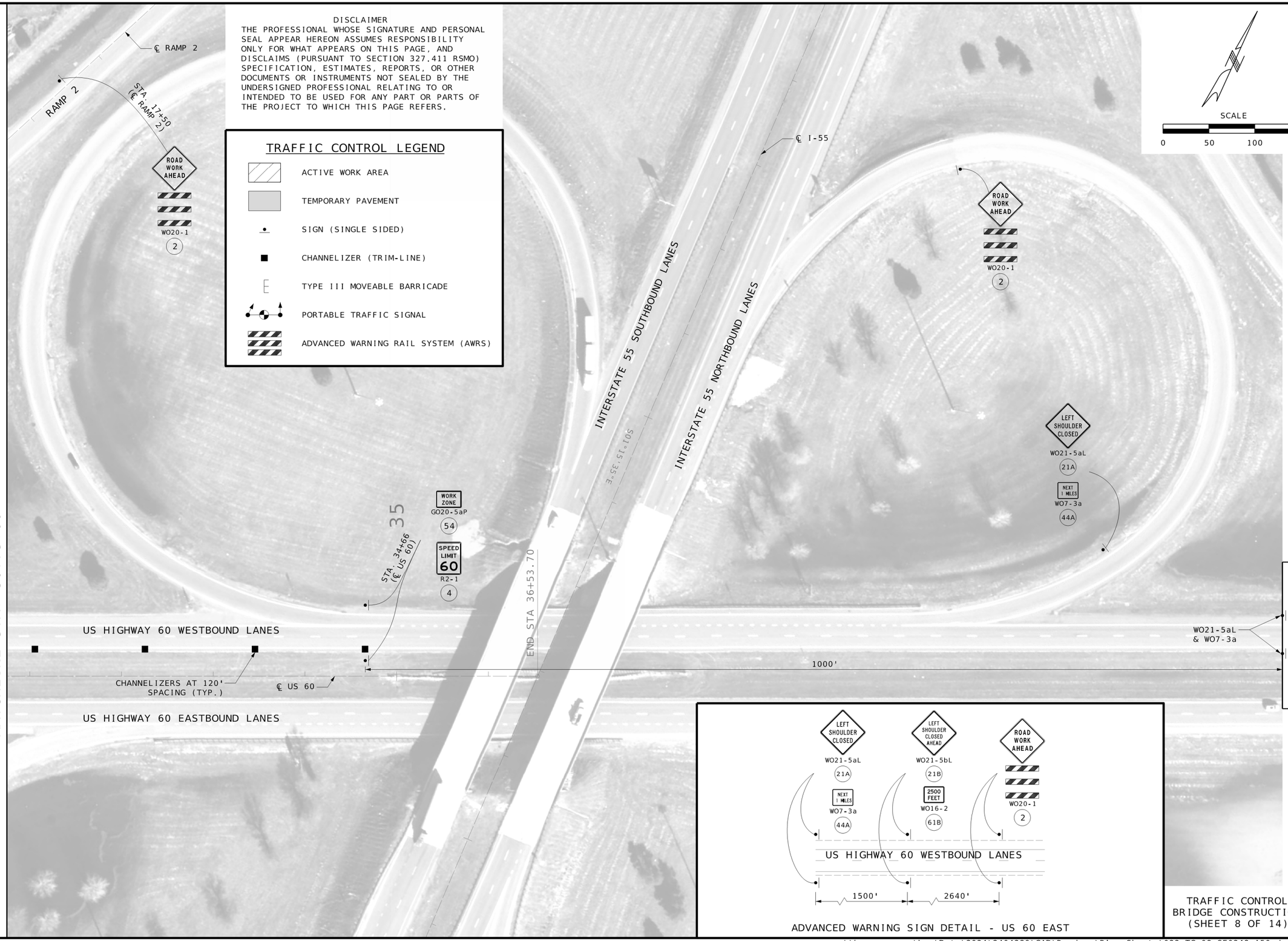

ADVANCED WARNING SIGN DETAIL - US 60 EAST

TRAFFIC CONTROL
BRIDGE CONSTRUCTION
(SHEET 8 OF 14)

STATE OF MISSOURI
ANDREA S. DAVIS
PE-2018021250
PROFESSIONAL ENGINEER

DATE PREPARED	3/24/2025
ROUTE	AA
STATE	MO
DISTRICT	SE
SHEET NO.	22
COUNTY	SCOTT
JOB NO.	JSE0248
CONTRACT ID.	
PROJECT NO.	
BRIDGE NO.	

DATE	DESCRIPTION

IF A SEAL IS PRESENT ON THIS SHEET IT HAS BEEN ELECTRONICALLY SEALED AND DATED.

MISSOURI HIGHWAYS AND TRANSPORTATION COMMISSION
105 WEST CAPITOL
JEFFERSON CITY, MO 65102
1-888-ASK-MODOT (1-888-275-6636)

HR GREEN, INC.
520 MARYVILLE CENTRE DRIVE,
SUITE 100
ST. LOUIS, MISSOURI 63141
PHONE: (636) 519.0990
CORPORATE LICENSE #2002006608

HRGreen

\\hrgreen.com\hrg\Data\2024\2404289\CAD\Roadway\Plan_Sheets\022_TC_08_SE0248_I50.dgn 10:43:23 AM 3/24/2025

DISCLAIMER
THE PROFESSIONAL WHOSE SIGNATURE AND PERSONAL SEAL APPEAR HEREON ASSUMES RESPONSIBILITY ONLY FOR WHAT APPEARS ON THIS PAGE, AND DISCLAIMS (PURSUANT TO SECTION 327.411 RSMO) SPECIFICATION, ESTIMATES, REPORTS, OR OTHER DOCUMENTS OR INSTRUMENTS NOT SEALED BY THE UNDERSIGNED PROFESSIONAL RELATING TO OR INTENDED TO BE USED FOR ANY PART OR PARTS OF THE PROJECT TO WHICH THIS PAGE REFERS.

TRAFFIC CONTROL LEGEND

- PHASE 1A WORK AREA
- PHASE 1B WORK AREA
- TEMPORARY PAVEMENT
- SIGN (SINGLE SIDED)
- CHANNELIZER (TRIM-LINE)
- TYPE III MOVEABLE BARRICADE
- PORTABLE TRAFFIC SIGNAL
- ADVANCED WARNING RAIL SYSTEM (AWRS)

ADVANCED WARNING SIGN DETAIL - ROUTE AA NORTH

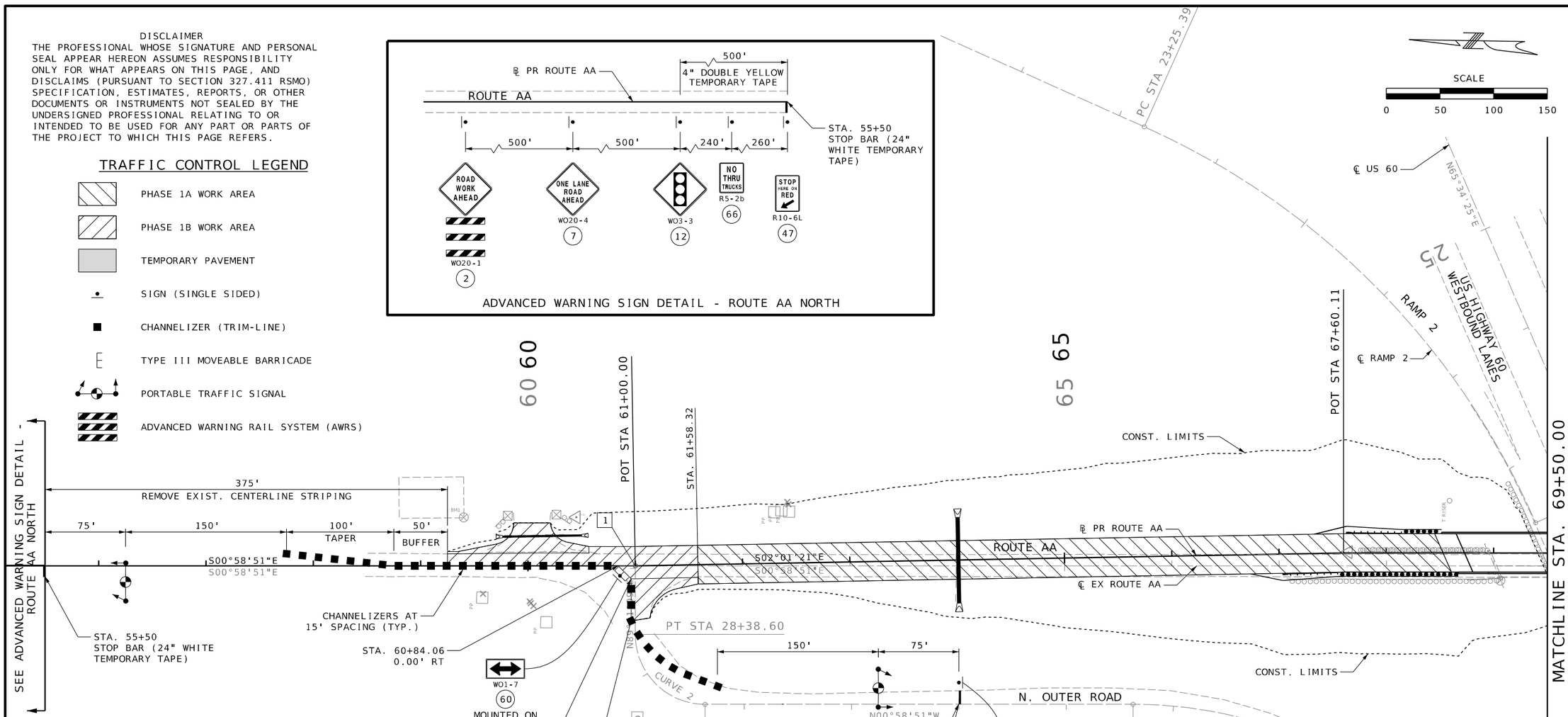

TEMPORARY TRAFFIC CONTROL NOTES - PHASE 1 ROUTE AA:

CONSTRUCT HATCHED AREA PHASE 1A OF ROUTE AA UNDER CURRENT TRAFFIC CONDITIONS. ROUTE AA IS CLOSED TO TRAFFIC. ACCESS TO N. OUTER RD AND MODOT ENTRANCE PROVIDED.

SETUP TEMPORARY TRAFFIC CONTROL FOR PHASE 1B AS SHOWN ON THIS SHEET.

DURING PHASE 1B, N. OUTER RD INTERSECTION LIMITED TO ONE-LANE, TWO-WAY TRAFFIC, CONTROLLED WITH WORK ZONE TRAFFIC SIGNAL SYSTEM.

STAGE CONSTRUCTION OF MODOT ENTRANCE AS NEEDED TO MINIMIZE ENTRANCE CLOSURE TIME.

WORK ZONE TRAFFIC SIGNAL SYSTEM SHALL BE ACTUATED.

SEE PREVIOUS TRAFFIC CONTROL SHEETS FOR TRAFFIC CONTROL ALONG US 60 DURING BRIDGE CONSTRUCTION.

STATIONING GIVEN FROM ℄ PR ROUTE AA UNLESS OTHERWISE NOTED.

UNDERGROUND FACILITIES, STRUCTURES AND UTILITIES HAVE BEEN PLOTTED FROM AVAILABLE SURVEY AND RECORDS. THE OWNER DOES NOT WARRANT THE LOCATIONS OF THESE FACILITIES AS PRECISE. IT IS POSSIBLE THERE MAY BE OTHERS. THE EXISTENCE OF WHICH IS PRESENTLY NOT KNOWN OR SHOWN. IT IS THE CONTRACTOR'S RESPONSIBILITY TO DETERMINE THE EXISTENCE AND PRECISE LOCATION OF ALL FACILITIES AND AVOID DAMAGE.

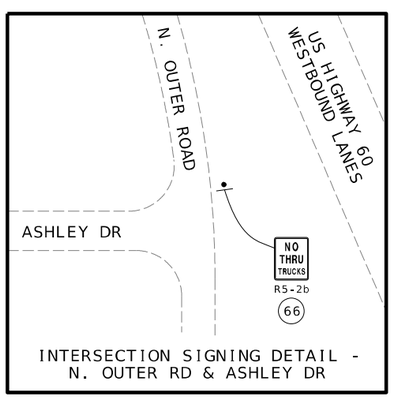

INTERSECTION SIGNING DETAIL - N. OUTER RD & ASHLEY DR

CURVE 2 - N OUTER RD	
PI	28+01.50
PC	27+36.50
PT	28+38.60
Δ	90°0'0.0" (RT)
D	88°8'50.5"
L	102.10' (ARC)
T	65.00'
R	65.00'

CURVE 1 - N OUTER RD	
PI	21+67.15
PC	19+69.60
PT	23+37.70
Δ	51°31'46.8" (LT)
D	13°59'55.8"
L	368.10' (ARC)
T	197.55'
R	409.29'

1 STA 29+02.60 ℄ N OUTER RD = STA 61+00.00 ℄ PR ROUTE AA

TRAFFIC CONTROL PHASE 1 - ROUTE AA (SHEET 9 OF 14)

STATE OF MISSOURI
ANDREA S. DAVIS
PE-2018021250
PROFESSIONAL ENGINEER

DATE PREPARED	3/24/2025
ROUTE	AA
STATE	MO
DISTRICT	SE
SHEET NO.	23
COUNTY	SCOTT
JOB NO.	JSE0248
CONTRACT ID.	
PROJECT NO.	
BRIDGE NO.	

DATE	DESCRIPTION

IF A SEAL IS PRESENT ON THIS SHEET IT HAS BEEN ELECTRONICALLY SEALED AND DATED.

MISSOURI HIGHWAYS AND TRANSPORTATION COMMISSION
105 WEST CAPITOL
JEFFERSON CITY, MO 65102
1-888-ASK-MODOT (1-888-275-6636)

HR GREEN, INC.
520 MARYVILLE CENTRE DRIVE, SUITE 100
ST. LOUIS, MISSOURI 63141
PHONE: (636) 519.0990
CORPORATE LICENSE #2002006608

DISCLAIMER
THE PROFESSIONAL WHOSE SIGNATURE AND PERSONAL SEAL APPEAR HEREON ASSUMES RESPONSIBILITY ONLY FOR WHAT APPEARS ON THIS PAGE, AND DISCLAIMS (PURSUANT TO SECTION 327.411 RSMO) SPECIFICATION, ESTIMATES, REPORTS, OR OTHER DOCUMENTS OR INSTRUMENTS NOT SEALED BY THE UNDERSIGNED PROFESSIONAL RELATING TO OR INTENDED TO BE USED FOR ANY PART OR PARTS OF THE PROJECT TO WHICH THIS PAGE REFERS.

TRAFFIC CONTROL LEGEND

- PHASE 1A WORK AREA
- PHASE 1C WORK AREA
- TEMPORARY PAVEMENT
- SIGN (SINGLE SIDED)
- CHANNELIZER (TRIM-LINE)
- TYPE III MOVEABLE BARRICADE
- PORTABLE TRAFFIC SIGNAL
- ADVANCED WARNING RAIL SYSTEM (AWRS)

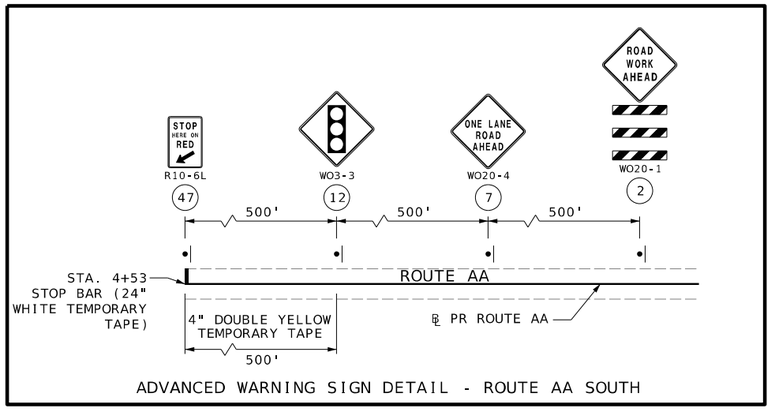

ADVANCED WARNING SIGN DETAIL - ROUTE AA SOUTH

SCALE
0 50 100 150

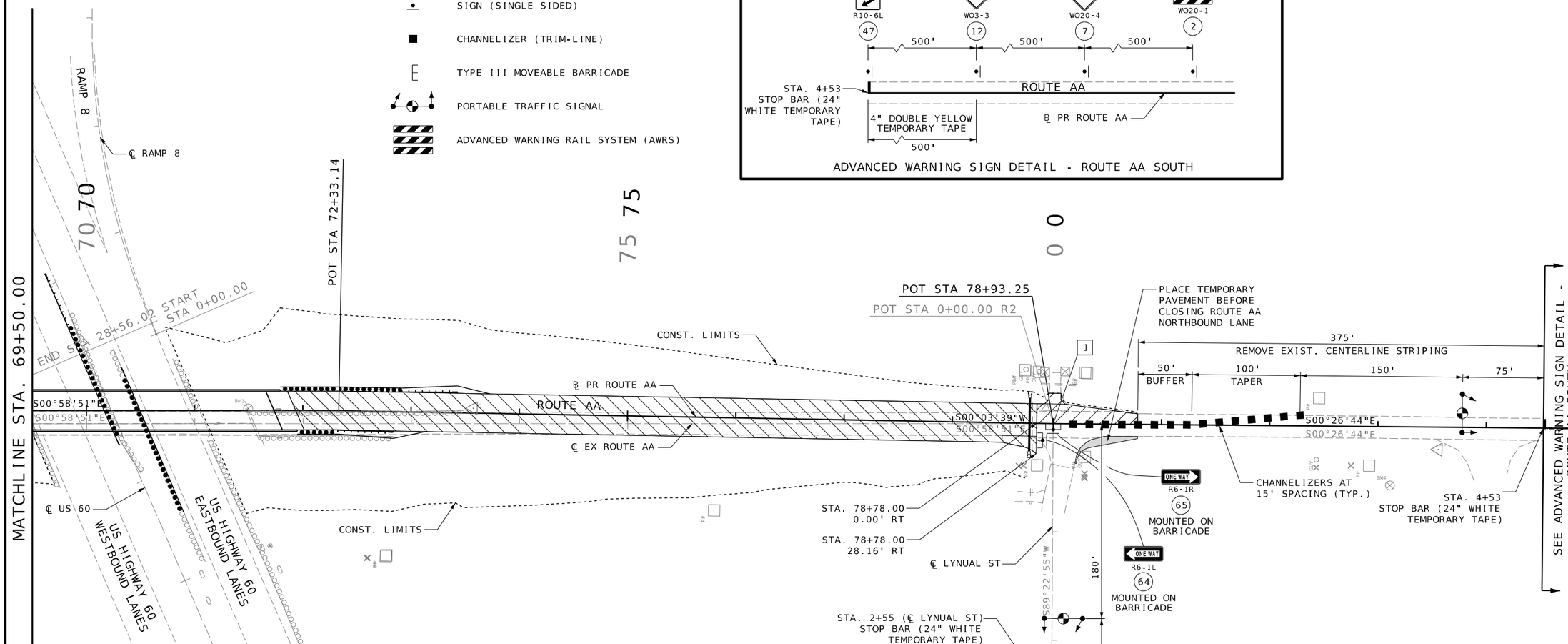

TEMPORARY TRAFFIC CONTROL NOTES - PHASE 1 ROUTE AA:

CONSTRUCT HATCHED AREA PHASE 1A OF ROUTE AA UNDER CURRENT TRAFFIC CONDITIONS. ROUTE AA IS CLOSED TO TRAFFIC. ACCESS TO LYNUAL ST AND FIELD ENTRANCES PROVIDED.

SETUP TEMPORARY TRAFFIC CONTROL FOR PHASE 1C AS SHOWN ON THIS SHEET.

DURING PHASE 1C, LYNUAL ST INTERSECTION LIMITED TO ONE-LANE, TWO-WAY TRAFFIC, CONTROLLED WITH WORK ZONE TRAFFIC SIGNAL SYSTEM.

WORK ZONE TRAFFIC SIGNAL SYSTEM SHALL BE ACTUATED.

SEE PREVIOUS TRAFFIC CONTROL SHEETS FOR TRAFFIC CONTROL ALONG US 60 DURING BRIDGE CONSTRUCTION.

STATIONING GIVEN FROM ℄ PR ROUTE AA UNLESS OTHERWISE NOTED.

UNDERGROUND FACILITIES, STRUCTURES AND UTILITIES HAVE BEEN PLOTTED FROM AVAILABLE SURVEY AND RECORDS. THE OWNER DOES NOT WARRANT THE LOCATIONS OF THESE FACILITIES AS PRECISE. IT IS POSSIBLE THERE MAY BE OTHERS. THE EXISTENCE OF WHICH IS PRESENTLY NOT KNOWN OR SHOWN. IT IS THE CONTRACTOR'S RESPONSIBILITY TO DETERMINE THE EXISTENCE AND PRECISE LOCATION OF ALL FACILITIES AND AVOID DAMAGE.

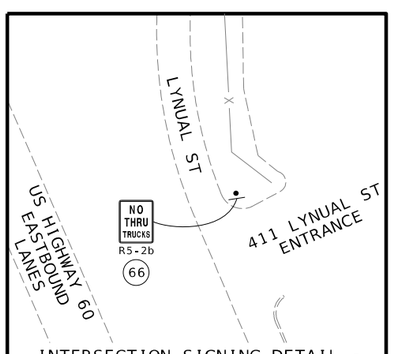

INTERSECTION SIGNING DETAIL - LYNUAL ST & 411 LYNUAL ST

1 EQUATION:
℄ PR ROUTE AA
STA 78+93.25 BK =
STA 0+00.00 AH

EQUATION:
℄ EX ROUTE AA
STA 78+93.03 BK =
STA 0+00.00 AH

STA 0+00.00 ℄ LYNUAL ST =
78+93.25 ℄ PR ROUTE AA

TRAFFIC CONTROL
PHASE 1 - ROUTE AA
(SHEET 10 OF 14)

STATE OF MISSOURI
ANDREA S. DAVIS
PE-2018021250
PROFESSIONAL ENGINEER

DATE PREPARED	
3/24/2025	
ROUTE	STATE
AA	MO
DISTRICT	SHEET NO.
SE	24
COUNTY	
SCOTT	
JOB NO.	
JSE0248	
CONTRACT ID.	
PROJECT NO.	
BRIDGE NO.	

DATE	DESCRIPTION

IF A SEAL IS PRESENT ON THIS SHEET IT HAS BEEN ELECTRONICALLY SEALED AND DATED.

MISSOURI HIGHWAYS AND TRANSPORTATION COMMISSION
105 WEST CAPITOL
JEFFERSON CITY, MO 65102
1-888-ASK-MODOT (1-888-275-6636)

HR GREEN, INC.
520 MARYVILLE CENTRE DRIVE, SUITE 100
ST. LOUIS, MISSOURI 63141
PHONE: (636) 519.0990
CORPORATE LICENSE #2002006608

DISCLAIMER
THE PROFESSIONAL WHOSE SIGNATURE AND PERSONAL SEAL APPEAR HEREON ASSUMES RESPONSIBILITY ONLY FOR WHAT APPEARS ON THIS PAGE, AND DISCLAIMS (PURSUANT TO SECTION 327.411 RSMO) SPECIFICATION, ESTIMATES, REPORTS, OR OTHER DOCUMENTS OR INSTRUMENTS NOT SEALED BY THE UNDERSIGNED PROFESSIONAL RELATING TO OR INTENDED TO BE USED FOR ANY PART OR PARTS OF THE PROJECT TO WHICH THIS PAGE REFERS.

TRAFFIC CONTROL LEGEND

- ACTIVE WORK AREA
- TEMPORARY PAVEMENT
- SIGN (SINGLE SIDED)
- CHANNELIZER (TRIM-LINE)
- TYPE III MOVEABLE BARRICADE
- PORTABLE TRAFFIC SIGNAL
- ADVANCED WARNING RAIL SYSTEM (AWRS)

ADVANCED WARNING SIGN DETAIL - ROUTE AA NORTH

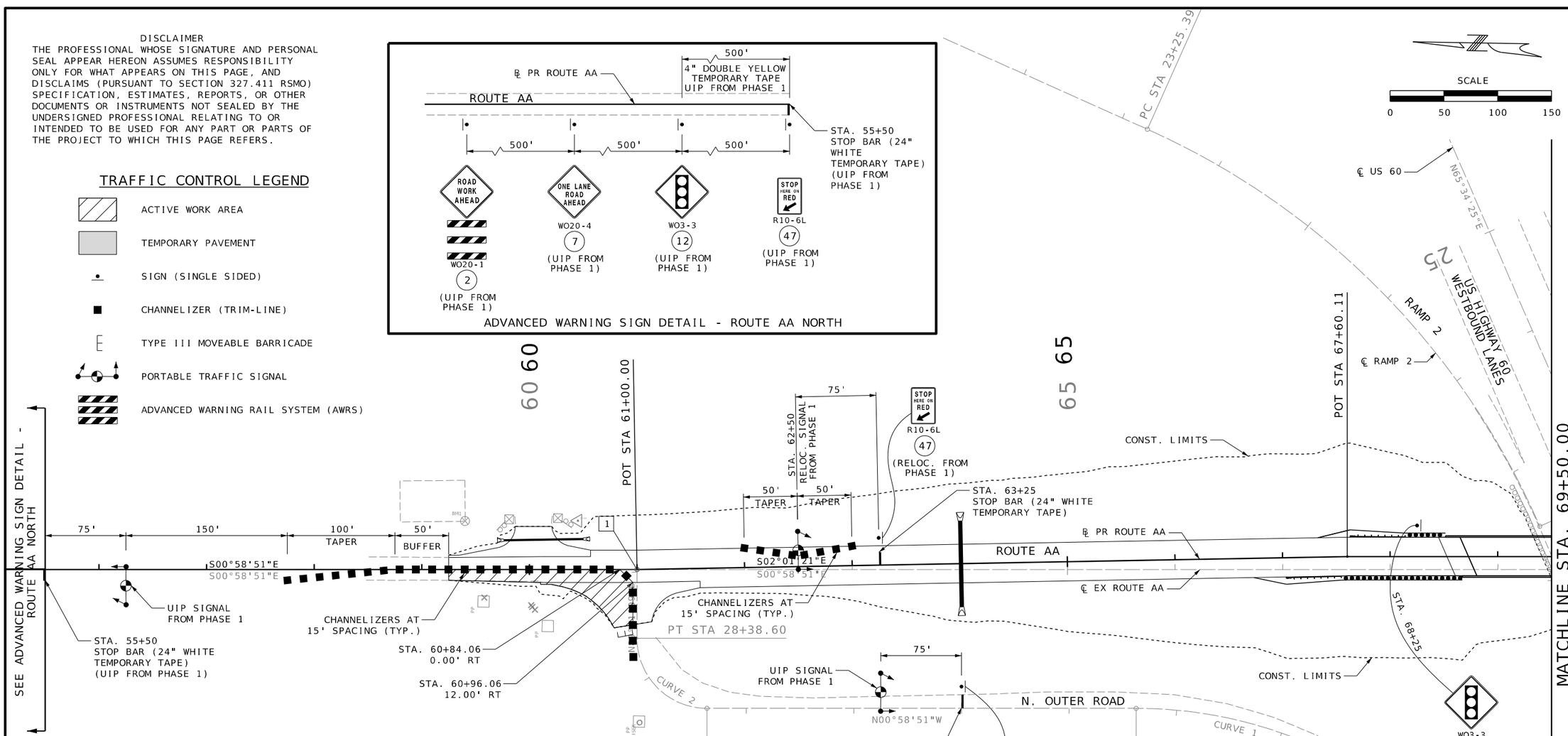

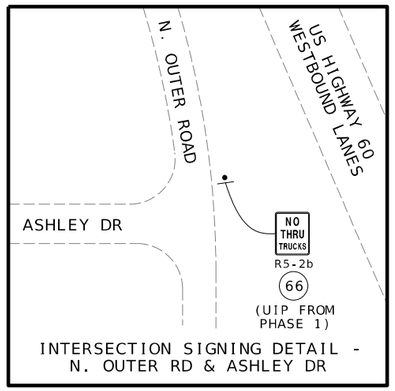

INTERSECTION SIGNING DETAIL - N. OUTER RD & ASHLEY DR

TEMPORARY TRAFFIC CONTROL NOTES - PHASE 2 ROUTE AA:

DURING PHASE 2, N. OUTER RD INTERSECTION LIMITED TO ONE-LANE, TWO-WAY TRAFFIC, CONTROLLED WITH WORK ZONE TRAFFIC SIGNAL SYSTEM.

WORK ZONE TRAFFIC SIGNAL SYSTEM SHALL BE ACTUATED.

STATIONING GIVEN FROM ℄ PR ROUTE AA UNLESS OTHERWISE NOTED.

UNDERGROUND FACILITIES, STRUCTURES AND UTILITIES HAVE BEEN PLOTTED FROM AVAILABLE SURVEY AND RECORDS. THE OWNER DOES NOT WARRANT THE LOCATIONS OF THESE FACILITIES AS PRECISE. IT IS POSSIBLE THERE MAY BE OTHERS. THE EXISTENCE OF WHICH IS PRESENTLY NOT KNOWN OR SHOWN. IT IS THE CONTRACTOR'S RESPONSIBILITY TO DETERMINE THE EXISTENCE AND PRECISE LOCATION OF ALL FACILITIES AND AVOID DAMAGE.

CURVE 2 - N OUTER RD	
PI	28+01.50
PC	27+36.50
PT	28+38.60
Δ	90°0'0.0" (RT)
D	88°8'50.5"
L	102.10' (ARC)
T	65.00'
R	65.00'

CURVE 1 - N OUTER RD	
PI	21+67.15
PC	19+69.60
PT	23+37.70
Δ	51°31'46.8" (LT)
D	13°59'55.8"
L	368.10' (ARC)
T	197.55'
R	409.29'

1 STA 29+02.60 ℄ N OUTER RD = STA 61+00.00 ℄ PR ROUTE AA

TRAFFIC CONTROL PHASE 2 - ROUTE AA (SHEET 11 OF 14)

STATE OF MISSOURI
ANDREA S. DAVIS
PE-2018021250
PROFESSIONAL ENGINEER

DATE PREPARED	
3/24/2025	
ROUTE AA	STATE MO
DISTRICT SE	SHEET NO. 25
COUNTY SCOTT	
JOB NO. JSE0248	
CONTRACT ID.	
PROJECT NO.	
BRIDGE NO.	

DATE	DESCRIPTION

MISSOURI HIGHWAYS AND TRANSPORTATION COMMISSION
105 WEST CAPITOL
JEFFERSON CITY, MO 65102
1-888-ASK-MODOT (1-888-275-6636)

HR GREEN, INC.
520 MARYVILLE CENTRE DRIVE, SUITE 100
ST. LOUIS, MISSOURI 63141
PHONE: (636) 519.0990
CORPORATE LICENSE #2002006608

IF A SEAL IS PRESENT ON THIS SHEET IT HAS BEEN ELECTRONICALLY SEALED AND DATED.

DISCLAIMER
THE PROFESSIONAL WHOSE SIGNATURE AND PERSONAL SEAL APPEAR HEREON ASSUMES RESPONSIBILITY ONLY FOR WHAT APPEARS ON THIS PAGE, AND DISCLAIMS (PURSUANT TO SECTION 327.411 RSMO) SPECIFICATION, ESTIMATES, REPORTS, OR OTHER DOCUMENTS OR INSTRUMENTS NOT SEALED BY THE UNDERSIGNED PROFESSIONAL RELATING TO OR INTENDED TO BE USED FOR ANY PART OR PARTS OF THE PROJECT TO WHICH THIS PAGE REFERS.

TRAFFIC CONTROL LEGEND

- ACTIVE WORK AREA
- TEMPORARY PAVEMENT
- SIGN (SINGLE SIDED)
- CHANNELIZER (TRIM-LINE)
- TYPE III MOVEABLE BARRICADE
- PORTABLE TRAFFIC SIGNAL
- ADVANCED WARNING RAIL SYSTEM (AWRS)

SCALE
0 50 100 150

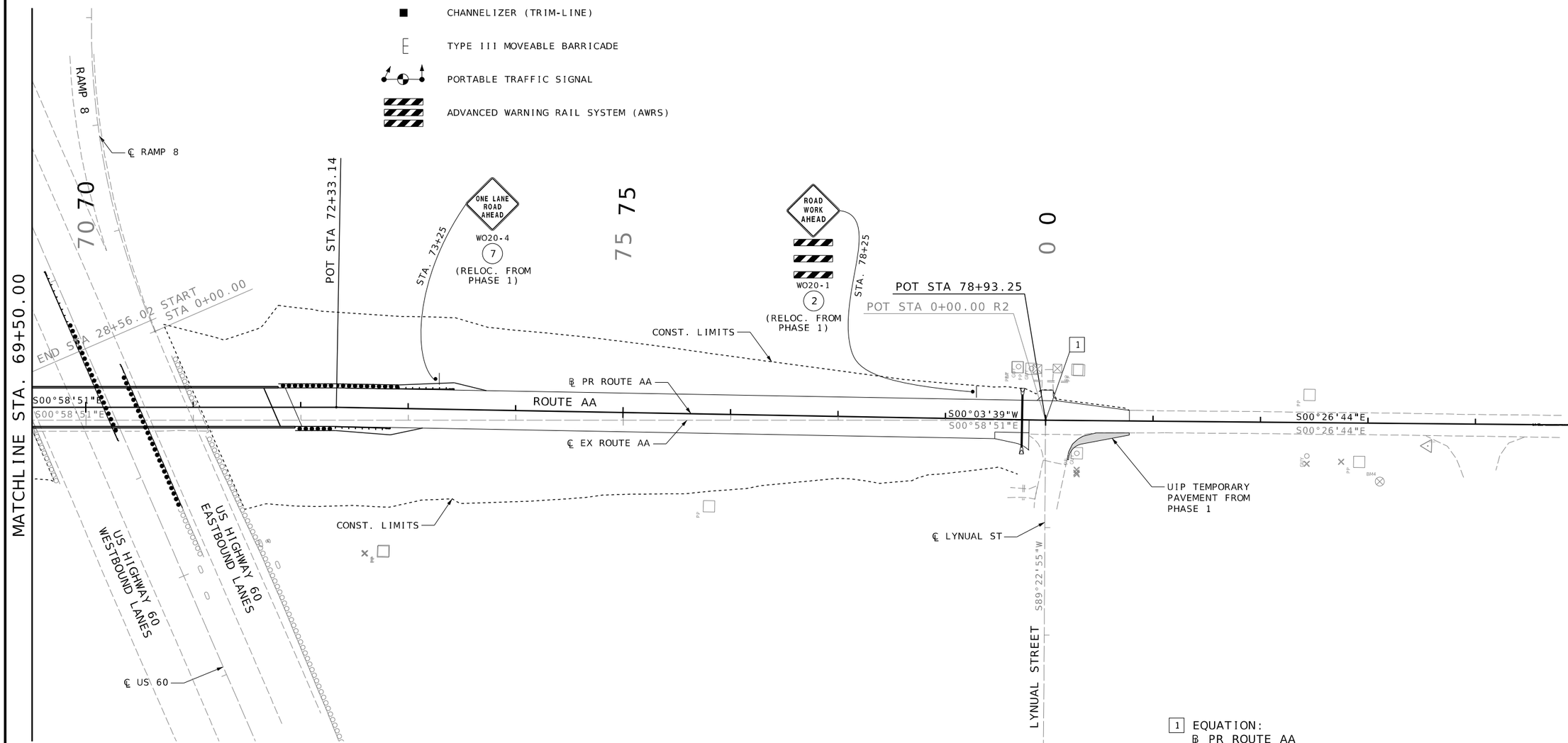

TEMPORARY TRAFFIC CONTROL NOTES - PHASE 2 ROUTE AA:

DURING PHASE 2, RE-OPEN LYNUAL ST INTERSECTION TO TWO-LANE, TWO-WAY TRAFFIC.

STATIONING GIVEN FROM ℞ PR ROUTE AA UNLESS OTHERWISE NOTED.

UNDERGROUND FACILITIES, STRUCTURES AND UTILITIES HAVE BEEN PLOTTED FROM AVAILABLE SURVEY AND RECORDS. THE OWNER DOES NOT WARRANT THE LOCATIONS OF THESE FACILITIES AS PRECISE. IT IS POSSIBLE THERE MAY BE OTHERS. THE EXISTENCE OF WHICH IS PRESENTLY NOT KNOWN OR SHOWN. IT IS THE CONTRACTOR'S RESPONSIBILITY TO DETERMINE THE EXISTENCE AND PRECISE LOCATION OF ALL FACILITIES AND AVOID DAMAGE.

1 EQUATION:
℞ PR ROUTE AA
STA 78+93.25 BK =
STA 0+00.00 AH

EQUATION:
℄ EX ROUTE AA
STA 78+93.03 BK =
STA 0+00.00 AH

STA 0+00.00 ℄ LYNUAL ST =
78+93.25 ℞ PR ROUTE AA

TRAFFIC CONTROL
PHASE 2 - ROUTE AA
(SHEET 12 OF 14)

STATE OF MISSOURI
ANDREA S. DAVIS
PE-2018021250
PROFESSIONAL ENGINEER

DATE PREPARED	
3/24/2025	
ROUTE	STATE
AA	MO
DISTRICT	SHEET NO.
SE	26
COUNTY	
SCOTT	
JOB NO.	
JSE0248	
CONTRACT ID.	
PROJECT NO.	
BRIDGE NO.	

DATE	DESCRIPTION

IF A SEAL IS PRESENT ON THIS SHEET IT HAS BEEN ELECTRONICALLY SEALED AND DATED.

MISSOURI HIGHWAYS AND TRANSPORTATION COMMISSION
105 WEST CAPITOL
JEFFERSON CITY, MO 65102
1-888-ASK-MODOT (1-888-275-6636)

HR GREEN, INC.
520 MARYVILLE CENTRE DRIVE, SUITE 100
ST. LOUIS, MISSOURI 63141
PHONE: (636) 519.0990
CORPORATE LICENSE #2002006608

HRGreen

\\hrgreen.com\hrg\Data\2024\2404289\CAD\Roadway\Plan_Sheets\026_TC_12_SE0248_I50.dgn 10:43:29 AM 3/24/2025

DISCLAIMER
THE PROFESSIONAL WHOSE SIGNATURE AND PERSONAL SEAL APPEAR HEREON ASSUMES RESPONSIBILITY ONLY FOR WHAT APPEARS ON THIS PAGE, AND DISCLAIMS (PURSUANT TO SECTION 327.411 RSMO) SPECIFICATION, ESTIMATES, REPORTS, OR OTHER DOCUMENTS OR INSTRUMENTS NOT SEALED BY THE UNDERSIGNED PROFESSIONAL RELATING TO OR INTENDED TO BE USED FOR ANY PART OR PARTS OF THE PROJECT TO WHICH THIS PAGE REFERS.

TRAFFIC CONTROL LEGEND

- ACTIVE WORK AREA
- TEMPORARY PAVEMENT
- SIGN (SINGLE SIDED)
- CHANNELIZER (TRIM-LINE)
- TYPE III MOVEABLE BARRICADE
- PORTABLE TRAFFIC SIGNAL
- ADVANCED WARNING RAIL SYSTEM (AWRS)

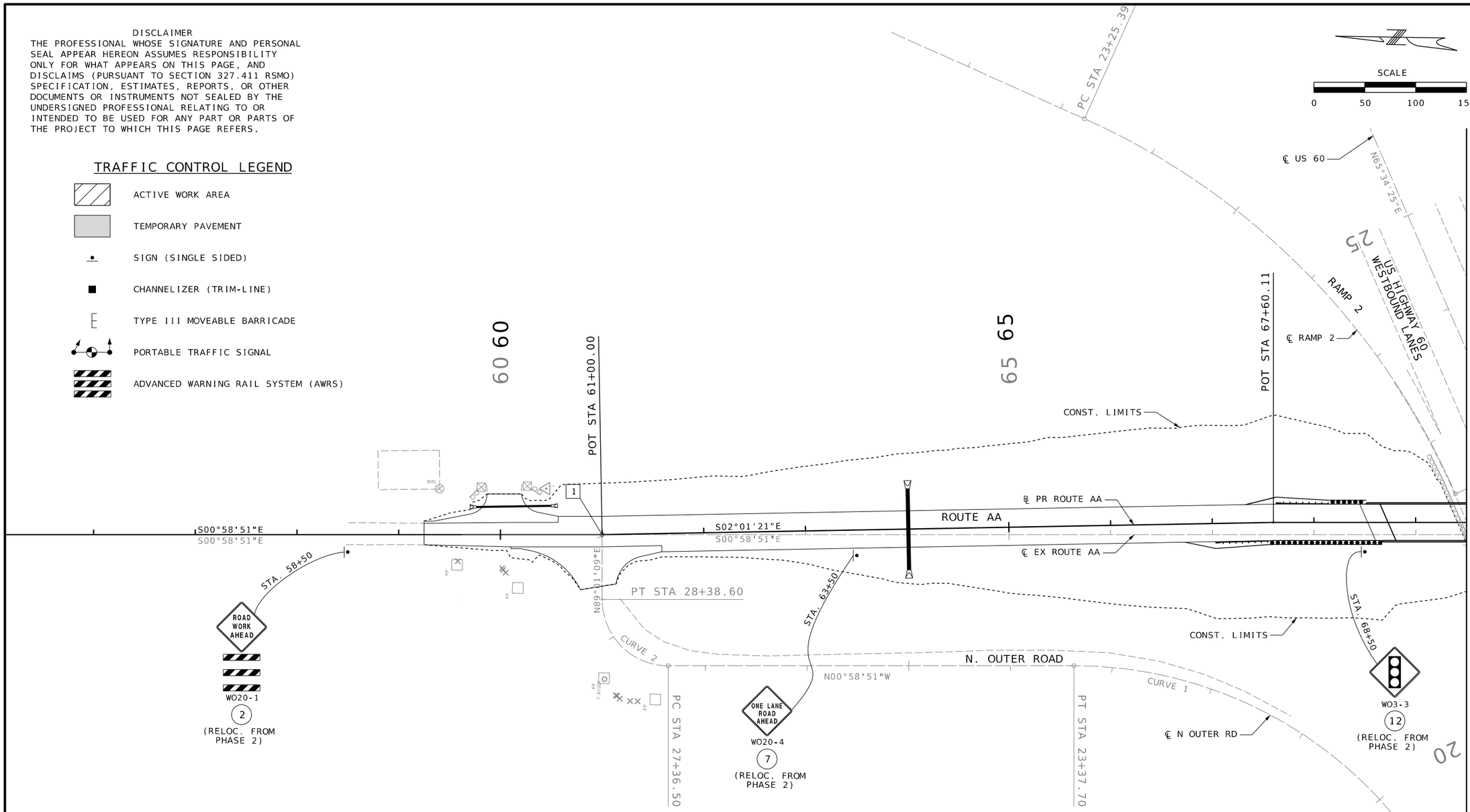

TEMPORARY TRAFFIC CONTROL NOTES - PHASE 3 ROUTE AA:

DURING PHASE 3, RE-OPEN N. OUTER RD INTERSECTION TO TWO-LANE, TWO-WAY TRAFFIC.

STATIONING GIVEN FROM ℞ PR ROUTE AA UNLESS OTHERWISE NOTED.

UNDERGROUND FACILITIES, STRUCTURES AND UTILITIES HAVE BEEN PLOTTED FROM AVAILABLE SURVEY AND RECORDS. THE OWNER DOES NOT WARRANT THE LOCATIONS OF THESE FACILITIES AS PRECISE. IT IS POSSIBLE THERE MAY BE OTHERS. THE EXISTENCE OF WHICH IS PRESENTLY NOT KNOWN OR SHOWN. IT IS THE CONTRACTOR'S RESPONSIBILITY TO DETERMINE THE EXISTENCE AND PRECISE LOCATION OF ALL FACILITIES AND AVOID DAMAGE.

CURVE 2 - N OUTER RD	
PI	28+01.50
PC	27+36.50
PT	28+38.60
Δ	90°0'0.0" (RT)
D	88°8'50.5"
L	102.10' (ARC)
T	65.00'
R	65.00'

CURVE 1 - N OUTER RD	
PI	21+67.15
PC	19+69.60
PT	23+37.70
Δ	51°31'46.8" (LT)
D	13°59'55.8"
L	368.10' (ARC)
T	197.55'
R	409.29'

1 STA 29+02.60 ℄ N OUTER RD = STA 61+00.00 ℞ PR ROUTE AA

TRAFFIC CONTROL
PHASE 3 - ROUTE AA
(SHEET 13 OF 14)

STATE OF MISSOURI
ANDREA S. DAVIS
PE-2018021250
PROFESSIONAL ENGINEER

DATE PREPARED	
3/24/2025	
ROUTE: AA	STATE: MO
DISTRICT: SE	SHEET NO.: 27
COUNTY: SCOTT	
JOB NO.: JSE0248	
CONTRACT ID.	
PROJECT NO.	
BRIDGE NO.	

DATE	DESCRIPTION

IF A SEAL IS PRESENT ON THIS SHEET IT HAS BEEN ELECTRONICALLY SEALED AND DATED.

MISSOURI HIGHWAYS AND TRANSPORTATION COMMISSION
105 WEST CAPITOL
JEFFERSON CITY, MO 65102
1-888-ASK-MODOT (1-888-275-6636)

HR GREEN, INC.
520 MARYVILLE CENTRE DRIVE, SUITE 100
ST. LOUIS, MISSOURI 63141
PHONE: (636) 519.0990
CORPORATE LICENSE #2002006608

DISCLAIMER
THE PROFESSIONAL WHOSE SIGNATURE AND PERSONAL SEAL APPEAR HEREON ASSUMES RESPONSIBILITY ONLY FOR WHAT APPEARS ON THIS PAGE, AND DISCLAIMS (PURSUANT TO SECTION 327.411 RSMO) SPECIFICATION, ESTIMATES, REPORTS, OR OTHER DOCUMENTS OR INSTRUMENTS NOT SEALED BY THE UNDERSIGNED PROFESSIONAL RELATING TO OR INTENDED TO BE USED FOR ANY PART OR PARTS OF THE PROJECT TO WHICH THIS PAGE REFERS.

TRAFFIC CONTROL LEGEND

- ACTIVE WORK AREA
- TEMPORARY PAVEMENT
- SIGN (SINGLE SIDED)
- CHANNELIZER (TRIM-LINE)
- TYPE III MOVEABLE BARRICADE
- PORTABLE TRAFFIC SIGNAL
- ADVANCED WARNING RAIL SYSTEM (AWRS)

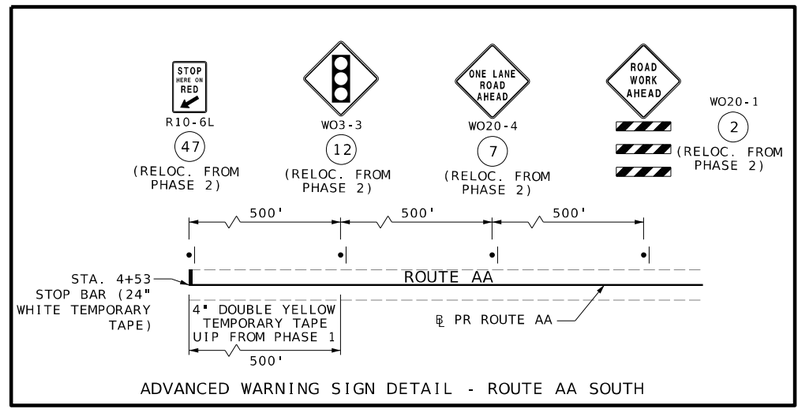

ADVANCED WARNING SIGN DETAIL - ROUTE AA SOUTH

SCALE
0 50 100 150

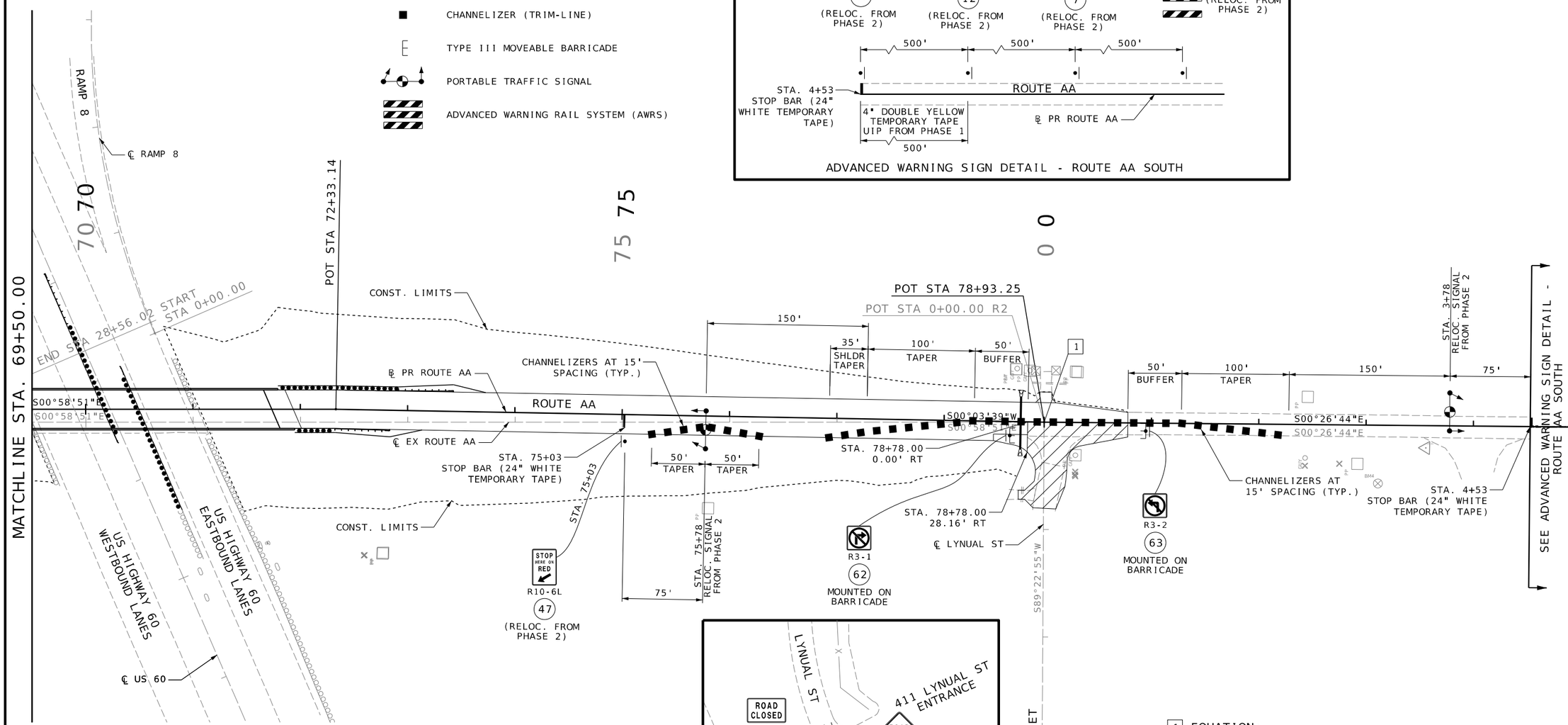

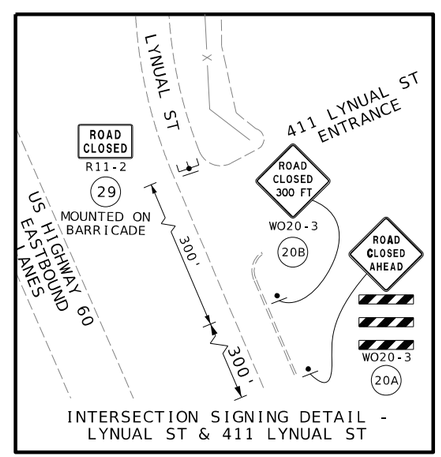

INTERSECTION SIGNING DETAIL - LYNUAL ST & 411 LYNUAL ST

TEMPORARY TRAFFIC CONTROL NOTES - PHASE 3 ROUTE AA:

DURING PHASE 3, CLOSE LYNUAL ST. LIMIT ROUTE AA TO ONE-LANE, TWO-WAY TRAFFIC, CONTROLLED WITH WORK ZONE TRAFFIC SIGNAL SYSTEM.

WORK ZONE TRAFFIC SIGNAL SYSTEM SHALL BE ACTUATED.

STATIONING GIVEN FROM ℄ PR ROUTE AA UNLESS OTHERWISE NOTED.

UNDERGROUND FACILITIES, STRUCTURES AND UTILITIES HAVE BEEN PLOTTED FROM AVAILABLE SURVEY AND RECORDS. THE OWNER DOES NOT WARRANT THE LOCATIONS OF THESE FACILITIES AS PRECISE. IT IS POSSIBLE THERE MAY BE OTHERS. THE EXISTENCE OF WHICH IS PRESENTLY NOT KNOWN OR SHOWN. IT IS THE CONTRACTOR'S RESPONSIBILITY TO DETERMINE THE EXISTENCE AND PRECISE LOCATION OF ALL FACILITIES AND AVOID DAMAGE.

1 EQUATION:
℄ PR ROUTE AA
STA 78+93.25 BK =
STA 0+00.00 AH

EQUATION:
℄ EX ROUTE AA
STA 78+93.03 BK =
STA 0+00.00 AH

STA 0+00.00 ℄ LYNUAL ST =
78+93.25 ℄ PR ROUTE AA

TRAFFIC CONTROL
PHASE 3 - ROUTE AA
(SHEET 14 OF 14)

STATE OF MISSOURI
ANDREA S. DAVIS
PE-2018021250
PROFESSIONAL ENGINEER

DATE PREPARED	
3/24/2025	
ROUTE	STATE
AA	MO
DISTRICT	SHEET NO.
SE	28
COUNTY	
SCOTT	
JOB NO.	
JSE0248	
CONTRACT ID.	
PROJECT NO.	
BRIDGE NO.	

DATE	DESCRIPTION

IF A SEAL IS PRESENT ON THIS SHEET IT HAS BEEN ELECTRONICALLY SEALED AND DATED.

MISSOURI HIGHWAYS AND TRANSPORTATION COMMISSION
105 WEST CAPITOL
JEFFERSON CITY, MO 65102
1-888-ASK-MODOT (1-888-275-6636)

HR GREEN, INC.
520 MARYVILLE CENTRE DRIVE, SUITE 100
ST. LOUIS, MISSOURI 63141
PHONE: (636) 519.0990
CORPORATE LICENSE #2002006608

\\hrgreen.com\hrg\Data\2024\2404289\CAD\Roadway\Plan_Sheets\028_TC_14_SE0248_I50.dgn 10:43:32 AM 3/24/2025

DISCLAIMER
THE PROFESSIONAL WHOSE SIGNATURE AND PERSONAL SEAL APPEAR HEREON ASSUMES RESPONSIBILITY ONLY FOR WHAT APPEARS ON THIS PAGE, AND DISCLAIMS (PURSUANT TO SECTION 327.411 RSMO) SPECIFICATION, ESTIMATES, REPORTS, OR OTHER DOCUMENTS OR INSTRUMENTS NOT SEALED BY THE UNDERSIGNED PROFESSIONAL RELATING TO OR INTENDED TO BE USED FOR ANY PART OR PARTS OF THE PROJECT TO WHICH THIS PAGE REFERS.

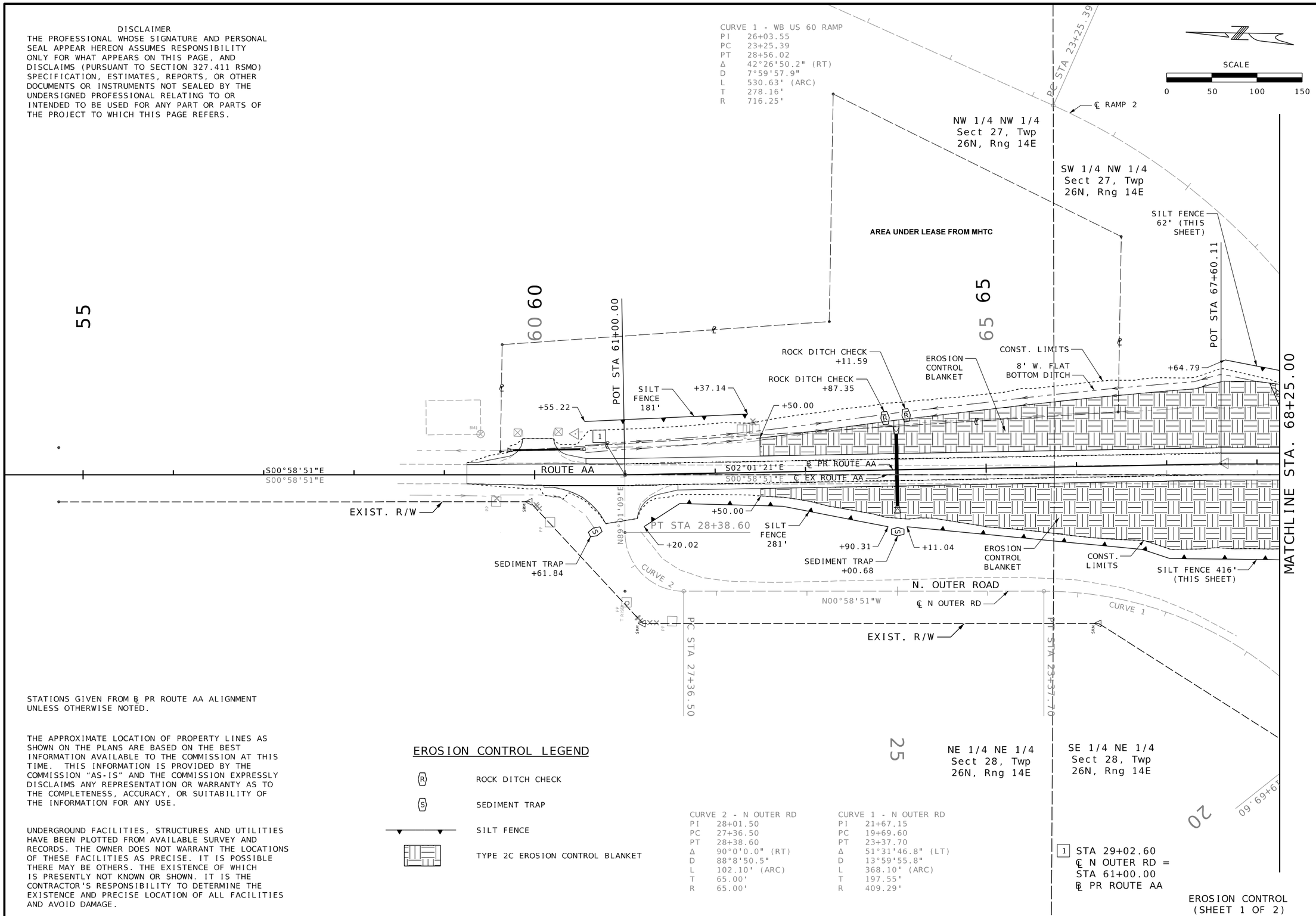

STATIONS GIVEN FROM ℄ PR ROUTE AA ALIGNMENT UNLESS OTHERWISE NOTED.

THE APPROXIMATE LOCATION OF PROPERTY LINES AS SHOWN ON THE PLANS ARE BASED ON THE BEST INFORMATION AVAILABLE TO THE COMMISSION AT THIS TIME. THIS INFORMATION IS PROVIDED BY THE COMMISSION "AS-IS" AND THE COMMISSION EXPRESSLY DISCLAIMS ANY REPRESENTATION OR WARRANTY AS TO THE COMPLETENESS, ACCURACY, OR SUITABILITY OF THE INFORMATION FOR ANY USE.

UNDERGROUND FACILITIES, STRUCTURES AND UTILITIES HAVE BEEN PLOTTED FROM AVAILABLE SURVEY AND RECORDS. THE OWNER DOES NOT WARRANT THE LOCATIONS OF THESE FACILITIES AS PRECISE. IT IS POSSIBLE THERE MAY BE OTHERS. THE EXISTENCE OF WHICH IS PRESENTLY NOT KNOWN OR SHOWN. IT IS THE CONTRACTOR'S RESPONSIBILITY TO DETERMINE THE EXISTENCE AND PRECISE LOCATION OF ALL FACILITIES AND AVOID DAMAGE.

EROSION CONTROL LEGEND

(R)	ROCK DITCH CHECK
(S)	SEDIMENT TRAP
	SILT FENCE
	TYPE 2C EROSION CONTROL BLANKET

CURVE 2 - N OUTER RD
PI 28+01.50
PC 27+36.50
PT 28+38.60
Δ 90°0'0.0" (RT)
D 88°8'50.5"
L 102.10' (ARC)
T 65.00'
R 65.00'

CURVE 1 - N OUTER RD
PI 21+67.15
PC 19+69.60
PT 23+37.70
Δ 51°31'46.8" (LT)
D 13°59'55.8"
L 368.10' (ARC)
T 197.55'
R 409.29'

1 STA 29+02.60
℄ N OUTER RD =
STA 61+00.00
℄ PR ROUTE AA

EROSION CONTROL
(SHEET 1 OF 2)

STATE OF MISSOURI
ANDREA S. DAVIS
PE-2018021250
PROFESSIONAL ENGINEER

DATE PREPARED	3/24/2025
ROUTE	AA
STATE	MO
DISTRICT	SE
SHEET NO.	29
COUNTY	SCOTT
JOB NO.	JSE0248
CONTRACT ID.	
PROJECT NO.	
BRIDGE NO.	

DESCRIPTION
DATE

IF A SEAL IS PRESENT ON THIS SHEET IT HAS BEEN ELECTRONICALLY SEALED AND DATED.

MISSOURI HIGHWAYS AND TRANSPORTATION COMMISSION
105 WEST CAPITOL
JEFFERSON CITY, MO 65102
1-888-ASK-MODOT (1-888-275-6636)

HR GREEN, INC.
520 MARYVILLE CENTRE DRIVE,
SUITE 100
ST. LOUIS, MISSOURI 63141
PHONE: (636) 519.0990
CORPORATE LICENSE #2002006608
HRGreen

\\hrgreen.com\hrg\Data\2024\2404289\CAD\Roadway\Plan_Sheets\029_EC_01_SE0248_150.dgn 10:43:36 AM 3/24/2025

DISCLAIMER
THE PROFESSIONAL WHOSE SIGNATURE AND PERSONAL SEAL APPEAR HEREON ASSUMES RESPONSIBILITY ONLY FOR WHAT APPEARS ON THIS PAGE, AND DISCLAIMS (PURSUANT TO SECTION 327.411 RSMO) SPECIFICATION, ESTIMATES, REPORTS, OR OTHER DOCUMENTS OR INSTRUMENTS NOT SEALED BY THE UNDERSIGNED PROFESSIONAL RELATING TO OR INTENDED TO BE USED FOR ANY PART OR PARTS OF THE PROJECT TO WHICH THIS PAGE REFERS.

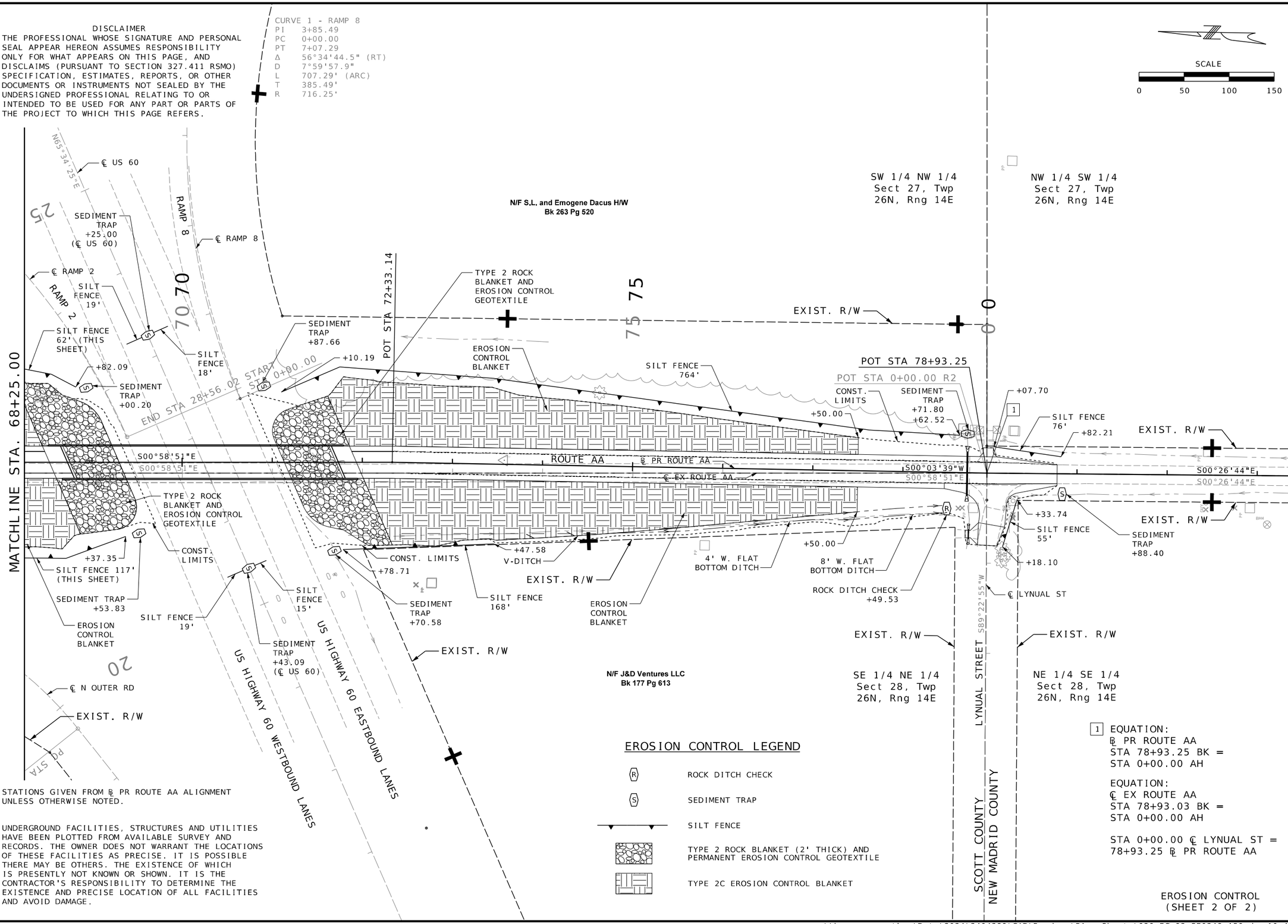

STATIONS GIVEN FROM ℄ PR ROUTE AA ALIGNMENT UNLESS OTHERWISE NOTED.

UNDERGROUND FACILITIES, STRUCTURES AND UTILITIES HAVE BEEN PLOTTED FROM AVAILABLE SURVEY AND RECORDS. THE OWNER DOES NOT WARRANT THE LOCATIONS OF THESE FACILITIES AS PRECISE. IT IS POSSIBLE THERE MAY BE OTHERS. THE EXISTENCE OF WHICH IS PRESENTLY NOT KNOWN OR SHOWN. IT IS THE CONTRACTOR'S RESPONSIBILITY TO DETERMINE THE EXISTENCE AND PRECISE LOCATION OF ALL FACILITIES AND AVOID DAMAGE.

EROSION CONTROL
(SHEET 2 OF 2)

STATE OF MISSOURI
ANDREA S. DAVIS
PE-2018021250
PROFESSIONAL ENGINEER

DATE PREPARED	3/24/2025
ROUTE	AA
STATE	MO
DISTRICT	SE
SHEET NO.	30
COUNTY	SCOTT
JOB NO.	JSE0248
CONTRACT ID.	
PROJECT NO.	
BRIDGE NO.	

DESCRIPTION
DATE

IF A SEAL IS PRESENT ON THIS SHEET IT HAS BEEN ELECTRONICALLY SEALED AND DATED.

MISSOURI HIGHWAYS AND TRANSPORTATION COMMISSION
105 WEST CAPITOL
JEFFERSON CITY, MO 65102
1-888-ASK-MODOT (1-888-275-6636)

HR GREEN, INC.
520 MARYVILLE CENTRE DRIVE, SUITE 100
ST. LOUIS, MISSOURI 63141
PHONE: (636) 519.0990
CORPORATE LICENSE #2002006608

HRGreen

\\hrgreen.com\hrg\Data\2024\2404289\CAD\Roadway\Plan_Sheets\030_EC_02_SE0248_I50.dgn 10:43:38 AM 3/24/2025

DISCLAIMER
THE PROFESSIONAL WHOSE SIGNATURE AND PERSONAL SEAL APPEAR HEREON ASSUMES RESPONSIBILITY ONLY FOR WHAT APPEARS ON THIS PAGE, AND DISCLAIMS (PURSUANT TO SECTION 327.411 RSMO) SPECIFICATION, ESTIMATES, REPORTS, OR OTHER DOCUMENTS OR INSTRUMENTS NOT SEALED BY THE UNDERSIGNED PROFESSIONAL RELATING TO OR INTENDED TO BE USED FOR ANY PART OR PARTS OF THE PROJECT TO WHICH THIS PAGE REFERS.

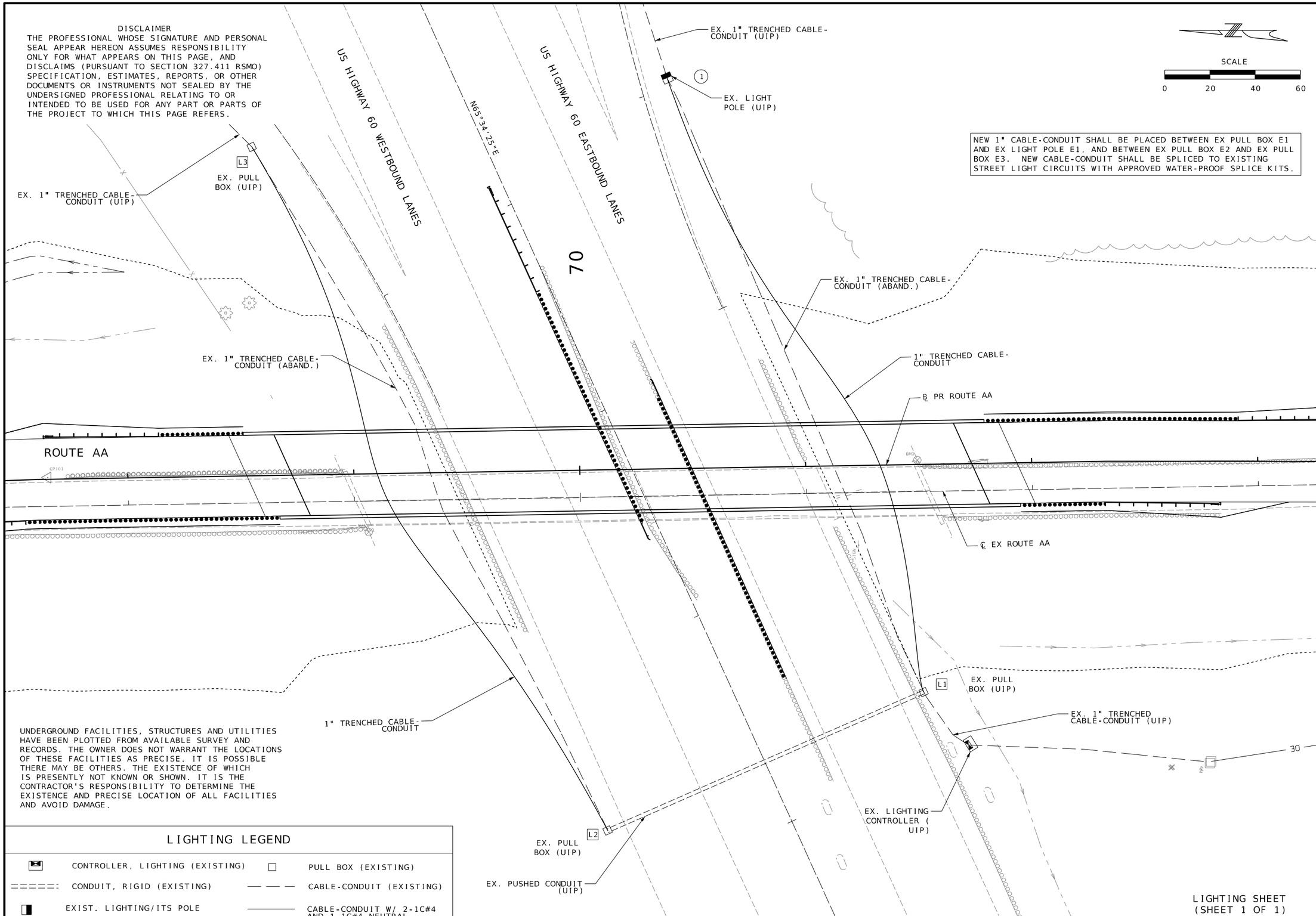

SCALE
0 20 40 60

NEW 1" CABLE-CONDUIT SHALL BE PLACED BETWEEN EX PULL BOX E1 AND EX LIGHT POLE E1, AND BETWEEN EX PULL BOX E2 AND EX PULL BOX E3. NEW CABLE-CONDUIT SHALL BE SPLICED TO EXISTING STREET LIGHT CIRCUITS WITH APPROVED WATER-PROOF SPLICE KITS.

UNDERGROUND FACILITIES, STRUCTURES AND UTILITIES HAVE BEEN PLOTTED FROM AVAILABLE SURVEY AND RECORDS. THE OWNER DOES NOT WARRANT THE LOCATIONS OF THESE FACILITIES AS PRECISE. IT IS POSSIBLE THERE MAY BE OTHERS. THE EXISTENCE OF WHICH IS PRESENTLY NOT KNOWN OR SHOWN. IT IS THE CONTRACTOR'S RESPONSIBILITY TO DETERMINE THE EXISTENCE AND PRECISE LOCATION OF ALL FACILITIES AND AVOID DAMAGE.

LIGHTING LEGEND

	CONTROLLER, LIGHTING (EXISTING)		PULL BOX (EXISTING)
	CONDUIT, RIGID (EXISTING)		CABLE-CONDUIT (EXISTING)
	EXIST. LIGHTING/ITS POLE		CABLE-CONDUIT W/ 2-1C#4 AND 1-1C#4 NEUTRAL

LIGHTING SHEET
(SHEET 1 OF 1)

STATE OF MISSOURI
ANDREA S. DAVIS
PE-2018021250
PROFESSIONAL ENGINEER

DATE PREPARED	
3/24/2025	
ROUTE	STATE
AA	MO
DISTRICT	SHEET NO.
SE	31
COUNTY	
SCOTT	
JOB NO.	
JSE0248	
CONTRACT ID.	
PROJECT NO.	
BRIDGE NO.	

DESCRIPTION	DATE

IF A SEAL IS PRESENT ON THIS SHEET IT HAS BEEN ELECTRONICALLY SEALED AND DATED.

MISSOURI HIGHWAYS AND TRANSPORTATION COMMISSION
105 WEST CAPITOL
JEFFERSON CITY, MO 65102
1-888-ASK-MODOT (1-888-275-6636)

HR GREEN, INC.
520 MARYVILLE CENTRE DRIVE, SUITE 100
ST. LOUIS, MISSOURI 63141
PHONE: (636) 519.0990
CORPORATE LICENSE #2002006608
HRGreen

\\hrgreen.com\hrg\Data\2024\2404289\CAD\Roadway\Plan_Sheets\031_LT_01_SE0248_I20.dgn 10:44:13 AM 3/24/2025

DISCLAIMER
THE PROFESSIONAL WHOSE SIGNATURE AND PERSONAL SEAL APPEAR HEREON ASSUMES RESPONSIBILITY ONLY FOR WHAT APPEARS ON THIS PAGE, AND DISCLAIMS (PURSUANT TO SECTION 327.411 RSMO) SPECIFICATION, ESTIMATES, REPORTS, OR OTHER DOCUMENTS OR INSTRUMENTS NOT SEALED BY THE UNDERSIGNED PROFESSIONAL RELATING TO OR INTENDED TO BE USED FOR ANY PART OR PARTS OF THE PROJECT TO WHICH THIS PAGE REFERS.

CURVE 1 - WB US 60 RAMP
PI 26+03.55
PC 23+25.39
PT 28+56.02
Δ 42°26'50.2" (RT)
D 7°59'57.9"
L 530.63' (ARC)
T 278.16'
R 716.25'

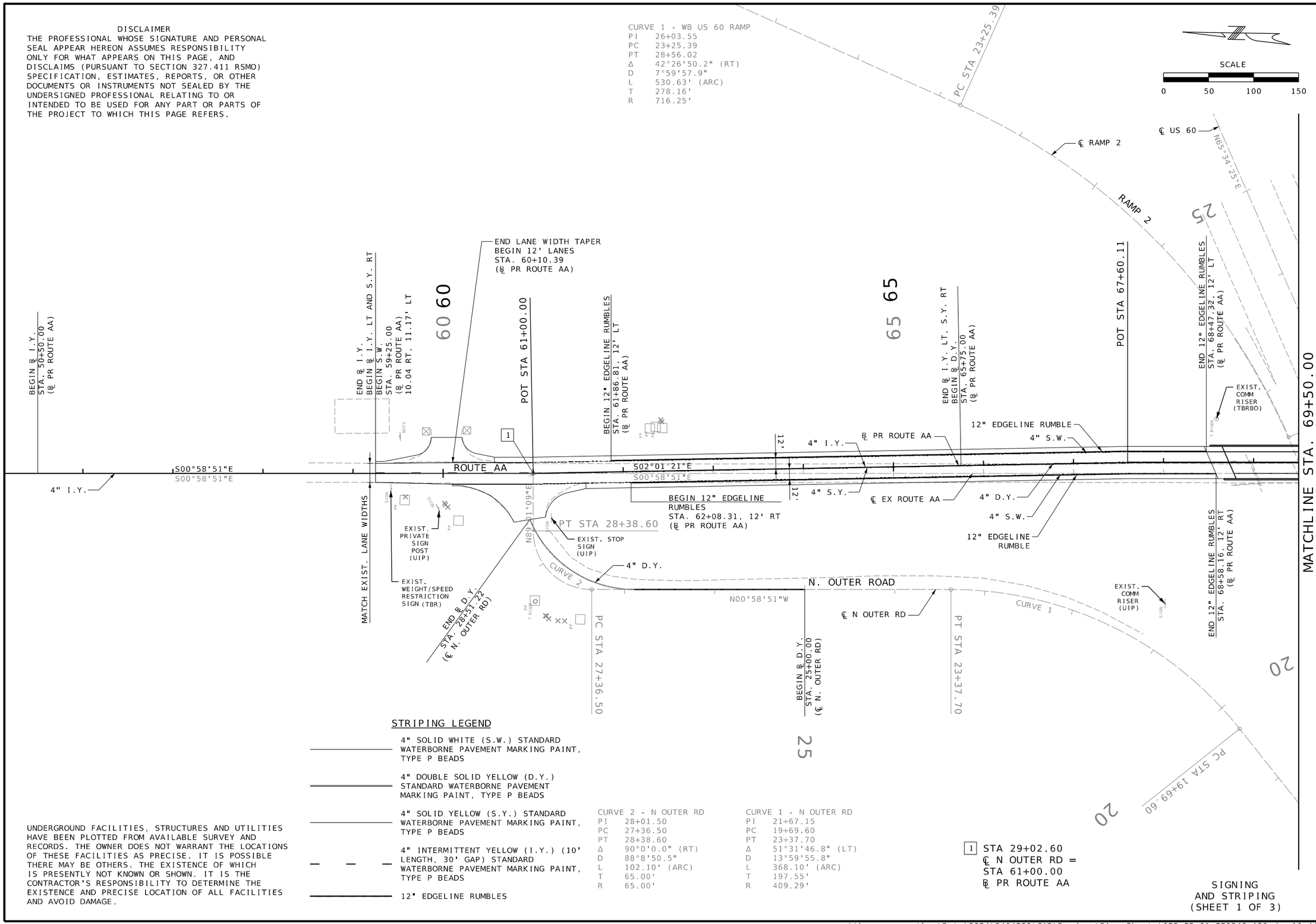

STRIPING LEGEND

- 4" SOLID WHITE (S.W.) STANDARD WATERBORNE PAVEMENT MARKING PAINT, TYPE P BEADS
- 4" DOUBLE SOLID YELLOW (D.Y.) STANDARD WATERBORNE PAVEMENT MARKING PAINT, TYPE P BEADS
- 4" SOLID YELLOW (S.Y.) STANDARD WATERBORNE PAVEMENT MARKING PAINT, TYPE P BEADS
- 4" INTERMITTENT YELLOW (I.Y.) (10' LENGTH, 30' GAP) STANDARD WATERBORNE PAVEMENT MARKING PAINT, TYPE P BEADS
- 12" EDGELINE RUMBLES

CURVE 2 - N OUTER RD
PI 28+01.50
PC 27+36.50
PT 28+38.60
Δ 90°0'0.0" (RT)
D 88°8'50.5"
L 102.10' (ARC)
T 65.00'
R 65.00'

CURVE 1 - N OUTER RD
PI 21+67.15
PC 19+69.60
PT 23+37.70
Δ 51°31'46.8" (LT)
D 13°59'55.8"
L 368.10' (ARC)
T 197.55'
R 409.29'

1 STA 29+02.60
℄ N OUTER RD =
STA 61+00.00
℄ PR ROUTE AA

UNDERGROUND FACILITIES, STRUCTURES AND UTILITIES HAVE BEEN PLOTTED FROM AVAILABLE SURVEY AND RECORDS. THE OWNER DOES NOT WARRANT THE LOCATIONS OF THESE FACILITIES AS PRECISE. IT IS POSSIBLE THERE MAY BE OTHERS. THE EXISTENCE OF WHICH IS PRESENTLY NOT KNOWN OR SHOWN. IT IS THE CONTRACTOR'S RESPONSIBILITY TO DETERMINE THE EXISTENCE AND PRECISE LOCATION OF ALL FACILITIES AND AVOID DAMAGE.

SIGNING AND STRIPING (SHEET 1 OF 3)

STATE OF MISSOURI
ANDREA S. DAVIS
PE-2018021250
PROFESSIONAL ENGINEER

DATE PREPARED	
3/24/2025	
ROUTE	STATE
AA	MO
DISTRICT	SHEET NO.
SE	32
COUNTY	
SCOTT	
JOB NO.	
JSE0248	
CONTRACT ID.	
PROJECT NO.	
BRIDGE NO.	

DATE	DESCRIPTION

MISSOURI HIGHWAYS AND TRANSPORTATION COMMISSION
105 WEST CAPITOL
JEFFERSON CITY, MO 65102
1-888-ASK-MODOT (1-888-275-6636)

HR GREEN, INC.
520 MARYVILLE CENTRE DRIVE, SUITE 100
ST. LOUIS, MISSOURI 63141
PHONE: (636) 519.0990
CORPORATE LICENSE #2002006608

IF A SEAL IS PRESENT ON THIS SHEET IT HAS BEEN ELECTRONICALLY SEALED AND DATED.

DISCLAIMER
THE PROFESSIONAL WHOSE SIGNATURE AND PERSONAL SEAL APPEAR HEREON ASSUMES RESPONSIBILITY ONLY FOR WHAT APPEARS ON THIS PAGE, AND DISCLAIMS (PURSUANT TO SECTION 327.411 RSMO) SPECIFICATION, ESTIMATES, REPORTS, OR OTHER DOCUMENTS OR INSTRUMENTS NOT SEALED BY THE UNDERSIGNED PROFESSIONAL RELATING TO OR INTENDED TO BE USED FOR ANY PART OR PARTS OF THE PROJECT TO WHICH THIS PAGE REFERS.

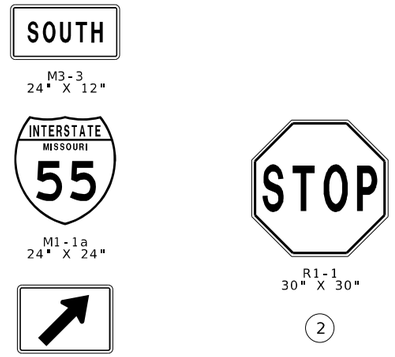

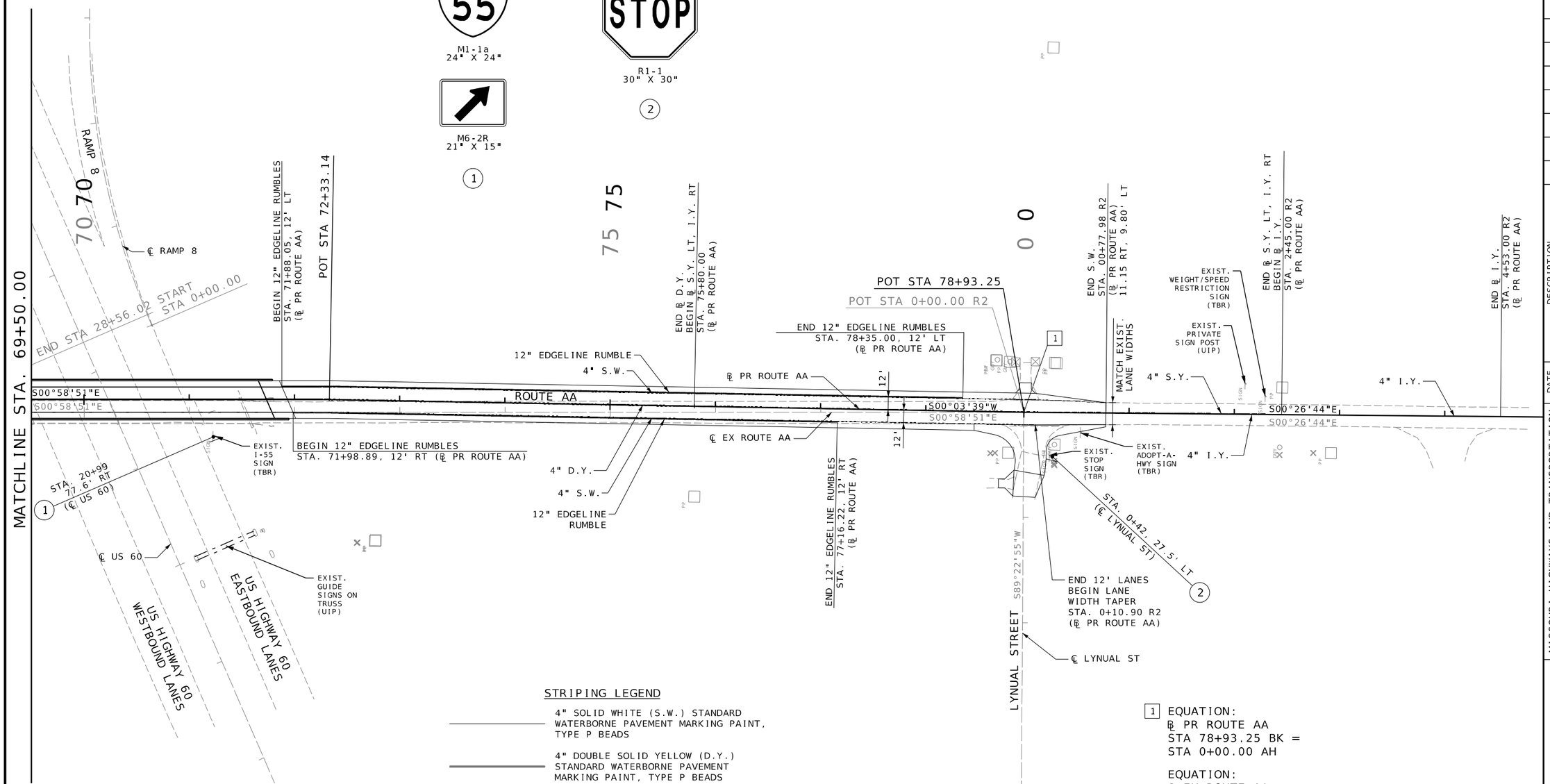

ALL SIGNAGE TO BE PLACED ACCORDING TO MISSOURI STANDARD PLANS FOR HIGHWAY CONSTRUCTION.

UNDERGROUND FACILITIES, STRUCTURES AND UTILITIES HAVE BEEN PLOTTED FROM AVAILABLE SURVEY AND RECORDS. THE OWNER DOES NOT WARRANT THE LOCATIONS OF THESE FACILITIES AS PRECISE. IT IS POSSIBLE THERE MAY BE OTHERS. THE EXISTENCE OF WHICH IS PRESENTLY NOT KNOWN OR SHOWN. IT IS THE CONTRACTOR'S RESPONSIBILITY TO DETERMINE THE EXISTENCE AND PRECISE LOCATION OF ALL FACILITIES AND AVOID DAMAGE.

STRIPING LEGEND

- 4" SOLID WHITE (S.W.) STANDARD WATERBORNE PAVEMENT MARKING PAINT, TYPE P BEADS
- 4" DOUBLE SOLID YELLOW (D.Y.) STANDARD WATERBORNE PAVEMENT MARKING PAINT, TYPE P BEADS
- 4" SOLID YELLOW (S.Y.) STANDARD WATERBORNE PAVEMENT MARKING PAINT, TYPE P BEADS
- 4" INTERMITTENT YELLOW (I.Y.) (10' LENGTH, 30' GAP) STANDARD WATERBORNE PAVEMENT MARKING PAINT, TYPE P BEADS
- 12" EDGELINE RUMBLES

1 EQUATION:
℄ PR ROUTE AA
STA 78+93.25 BK =
STA 0+00.00 AH

EQUATION:
℄ EX ROUTE AA
STA 78+93.03 BK =
STA 0+00.00 AH

STA 0+00.00 ℄ LYNUAL ST =
78+93.25 ℄ PR ROUTE AA

SIGNING AND STRIPING (SHEET 2 OF 3)

STATE OF MISSOURI
ANDREA S. DAVIS
PE-2018021250
PROFESSIONAL ENGINEER

DATE PREPARED	
3/24/2025	
ROUTE	STATE
AA	MO
DISTRICT	SHEET NO.
SE	33
COUNTY	
SCOTT	
JOB NO.	
JSE0248	
CONTRACT ID.	
PROJECT NO.	
BRIDGE NO.	

DATE	DESCRIPTION

IF A SEAL IS PRESENT ON THIS SHEET IT HAS BEEN ELECTRONICALLY SEALED AND DATED.

MISSOURI HIGHWAYS AND TRANSPORTATION COMMISSION
105 WEST CAPITOL
JEFFERSON CITY, MO 65102
1-888-ASK-MODOT (1-888-275-6636)

HR GREEN, INC.
520 MARYVILLE CENTRE DRIVE, SUITE 100
ST. LOUIS, MISSOURI 63141
PHONE: (636) 519.0990
CORPORATE LICENSE #2002006608

\\hrgreen.com\hrg\Data\2024\2404289\CAD\Roadway\Plan_Sheets\033_SP_02_SE0248_I50.dgn 10:44:19 AM 3/24/2025

DISCLAIMER
THE PROFESSIONAL WHOSE SIGNATURE AND PERSONAL SEAL APPEAR HEREON ASSUMES RESPONSIBILITY ONLY FOR WHAT APPEARS ON THIS PAGE, AND DISCLAIMS (PURSUANT TO SECTION 327.411 RSMO) SPECIFICATION, ESTIMATES, REPORTS, OR OTHER DOCUMENTS OR INSTRUMENTS NOT SEALED BY THE UNDERSIGNED PROFESSIONAL RELATING TO OR INTENDED TO BE USED FOR ANY PART OR PARTS OF THE PROJECT TO WHICH THIS PAGE REFERS.

EFFECTIVE: 07-01-2024

SIGNS (902 SIGNAL SIGNS TABULATED ON D-37A SHEET)						CONCRETE FOOTINGS EMBEDDED	STRUCTURAL STEEL POSTS*						PIPE POSTS*					BACKING BARS**				U-CHANNEL POST	PERFORATED SQUARE STEEL TUBE													REMARKS AND OTHER REQUIRED ITEMS
																							2-INCH POST						2.5-INCH POST							
																									TOTAL	ANCHORS					TOTAL	2.25" INSERT (6 FT)	ANCHORS			BREAK-AWAY ASSEMBLY	
SIGN NO.	SIGN SIZE	STATION OR LOG MILE	HORIZ CLEAR IF NOT STD	LOCATION	SIGN DTL SHT NO.	ITEM NO. 9031010	POST DES NO.	POST NO.1	POST NO.2	POST NO.3	LBS PER FT	TOTAL ITEM NO. 9031210	PIPE SIZE	POST NO.1	POST NO.2	LBS PER FT	TOTAL ITEM NO. 9031220	2" X 3/8" BARS AT 2.55 LBS/FT NO.	LGTH	TOTAL	TOTAL	ITEM NO. 9031250A	POST NO.1	POST NO.2	ITEM NO. 903127OA	DRIVEN 12 GA. ITEM NO. 9031271A	DRIVEN 7 GA. ITEM NO. 9031273A	CONCRETE 7 GA. ITEM NO. 9031274	POST NO.1	POST NO.2	ITEM NO. 9031280	INSERT (6 FT) ITEM NO. 9031272A	DRIVEN 7 GA. ITEM NO. 9031281A	CONCRETE 7 GA. ITEM NO. 9031285	ITEM NO. 9031241	
						CY		LF	LF	LF		LBS	IN	LF	LF		LBS	EACH	IN.	LF	LBS	LF	LF	LF	LF	EACH	EACH	EACH	LF	LF	LF	EACH	EACH	EACH	EACH	
1	ASSY	20+99		RIGHT		0.13							2.5	14.3		5.79	82.80																			STANDARD MOUNTING HEIGHT
2	30"x30"	0+42		RIGHT																			8.5		8.5	1										STANDARD MOUNTING HEIGHT
				SUBTOTAL		0.13											82.8								8.5	1										
				TOTAL		0.2											90				**				9	1										

*BREAKAWAY ASSEMBLY IS INCIDENTAL FOR STRUCTURAL STEEL AND PIPE POSTS.
**BACKING BARS ARE TOTALED WITH STRUCTURAL STEEL OR PIPE POSTS.

ROUND PIPE POST AND FOOTING DATA TABLE

NOM.SIZE	WEIGHT		STUB LENGTH	FOOTING		CONCRETE
(IN.)	LBS/FT	LBS/IN		DIA.	DEPTH	C.Y.
2½	5.79	0.48	4'- 3½"	12"	4~6"	0.13
4	10.79	0.90	5'- 3½"	18"	5~6"	0.36

STRUCTURAL STEEL POST AND FOOTING DATA TABLE

POST					FOOTING									
POST DES. NO.	NOM. SIZE	WEIGHT		STUB LENGTH	DIA.	LEVEL GROUND		6:1 GRADE		4:1 GRADE		3:1 OR 2:1 GRADE	
		LBS/FT	LBS/IN			DEPTH	C.Y.	DEPTH	C.Y.	DEPTH	C.Y.	DEPTH	C.Y.
1	W6	9.0	0.75	3'-0"	15"	3'-0"	0.14	3'-2"	0.15	3'-3"	0.16	3'-6"	0.17
2	W6	15.0	1.25	4'-0"	24"	4'-0"	0.47	4'-2"	0.50	4'-3"	0.51	4'-6"	0.54
3	W8	18.0	1.50	4'-6"	28"	4'-6"	0.71	4'-8"	0.73	4'-9"	0.74	5'-0"	0.78
4	W10	22.0	1.83	5'-0"	36"	5'-0"	1.31	5'-2"	1.36	5'-3"	1.39	5'-6"	1.45
5	W10	26.0	2.17	5'-0"	36"	5'-0"	1.31	5'-3"	1.37	5'-5"	1.43	5'-9"	1.52
6	W12	35.0	2.92	5'-6"	36"	5'-6"	1.44	5'-9"	1.52	5'-11"	1.56	6'-3"	1.65

STANDARD SIGN ASSEMBLIES

SIGN NO.	STATION OR LOG MILE	LOCATION	SIGN, TYPE, DESIGNATION, SIZE & NUMBER OF EACH																		
			55	SOUTH		STOP															
			SH M1-1a 24 x 24	SH M3-3 24 x 12	SH M6-2R 21 x 15	SH R1-1 30 x 30															
1	20+99	US 60 RIGHT	1	1	1																
2	0+42	LYNUAL ST LEFT				1															
		TOTALS	1	1	1	1															

SIGN SUMMARY

EFFECTIVE: 10-01-2016

STANDARD OR SPECIAL SIGN DESIGNATION	SIGN DTL. SHT. NO.	NO. EACH	SIGN SIZE	TYPE & SQUARE FEET: FLAT SHEET SH ITEM NO. 9035004A	FLAT SHEET FLUORESCENT SHF* ITEM NO. 9035069A	STRUCTURAL ST ITEM NO. 9035011A	STRUCTURAL FLUORESCENT STF* ITEM NO. 9035071A
M1-1a (MISSOURI, 55)		1	24 x 24	4.00			
M3-3 (SOUTH)		1	24 x 12	2.00			
M6-2R (45 DEG. RIGHT)		1	21 x 15	2.19			
R1-1 (STOP)		1	30 x 30	6.25			
			TOTALS	15			

*ORANGE, YELLOW AND YELLOW-GREEN

SIGNING AND STRIPING (SHEET 3 OF 3)

D-29 / D-30

STATE OF MISSOURI
ANDREA S. DAVIS
PE-2018021250
PROFESSIONAL ENGINEER

DATE PREPARED 3/24/2025
ROUTE AA | STATE MO
DISTRICT SE | SHEET NO. 34
COUNTY SCOTT
JOB NO. JSE0248
CONTRACT ID.
PROJECT NO.
BRIDGE NO.

DESCRIPTION | DATE

IF A SEAL IS PRESENT ON THIS SHEET IT HAS BEEN ELECTRONICALLY SEALED AND DATED.

MISSOURI HIGHWAYS AND TRANSPORTATION COMMISSION
105 WEST CAPITOL
JEFFERSON CITY, MO 65102
1-888-ASK-MODOT (1-888-275-6636)

HR GREEN, INC.
520 MARYVILLE CENTRE DRIVE, SUITE 100
ST. LOUIS, MISSOURI 63141
PHONE: (636) 519.0990
CORPORATE LICENSE #2002006608
HRGreen

DISCLAIMER
THE PROFESSIONAL WHOSE SIGNATURE AND PERSONAL SEAL APPEAR HEREON ASSUMES RESPONSIBILITY ONLY FOR WHAT APPEARS ON THIS PAGE, AND DISCLAIMS (PURSUANT TO SECTION 327.411 RSMO) SPECIFICATION, ESTIMATES, REPORTS, OR OTHER DOCUMENTS OR INSTRUMENTS NOT SEALED BY THE UNDERSIGNED PROFESSIONAL RELATING TO OR INTENDED TO BE USED FOR ANY PART OR PARTS OF THE PROJECT TO WHICH THIS PAGE REFERS.

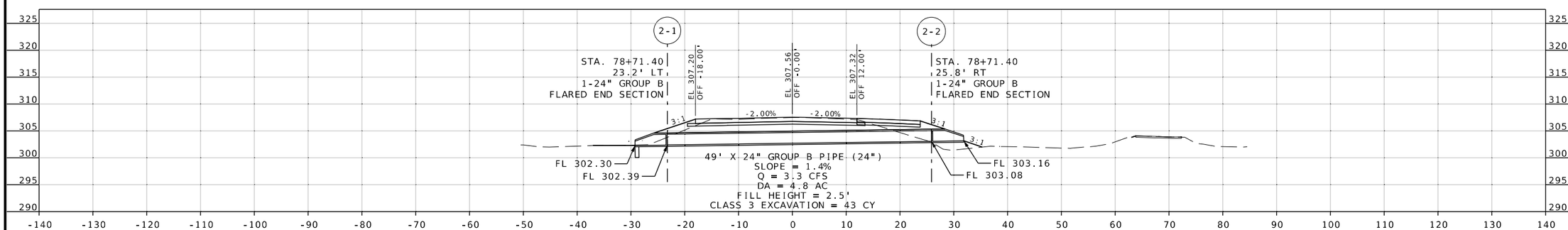

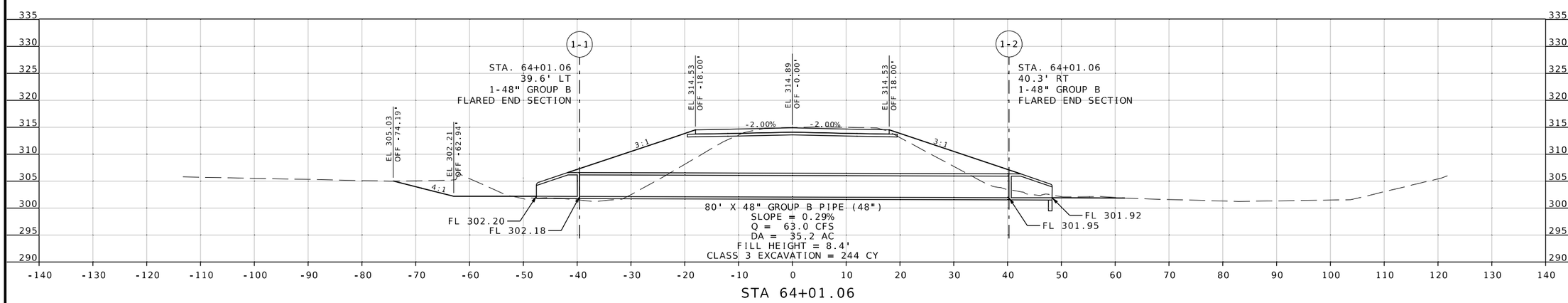

CULVERT SECTIONS
(SHEET 1 OF 1)

STATE OF MISSOURI
ANDREA S. DAVIS
PE-2018021250
PROFESSIONAL ENGINEER

DATE PREPARED	3/24/2025
ROUTE	AA
STATE	MO
DISTRICT	SE
SHEET NO.	35
COUNTY	SCOTT
JOB NO.	JSE0248
CONTRACT ID.	
PROJECT NO.	
BRIDGE NO.	

DESCRIPTION
DATE

IF A SEAL IS PRESENT ON THIS SHEET IT HAS BEEN ELECTRONICALLY SEALED AND DATED.

MISSOURI HIGHWAYS AND TRANSPORTATION COMMISSION
105 WEST CAPITOL
JEFFERSON CITY, MO 65102
1-888-ASK-MODOT (1-888-275-6636)

HR GREEN, INC.
520 MARYVILLE CENTRE DRIVE,
SUITE 100
ST. LOUIS, MISSOURI 63141
PHONE: (636) 519.0990
CORPORATE LICENSE #2002006608
HRGreen

\\hrgreen.com\hrg\Data\2024\2404289\CAD\Roadway\Plan_Sheets\035_CS_01_SE0248_I10.dgn 10:44:22 AM 3/24/2025

SEC/SUR 27 TWP 26N RGE 14E

(55'-94'-94'-55') CONTINUOUS COMPOSITE PLATE GIRDER SPANS

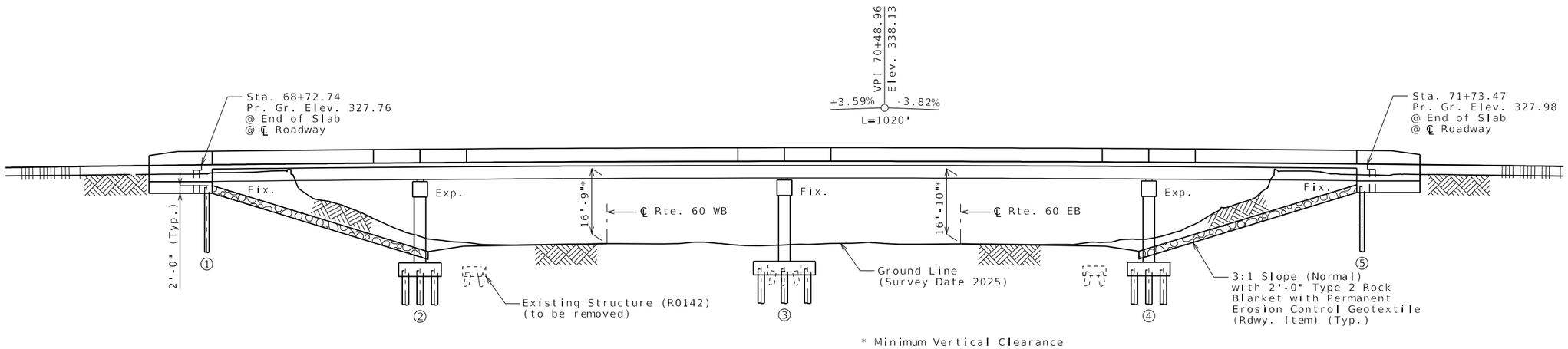

GENERAL ELEVATION

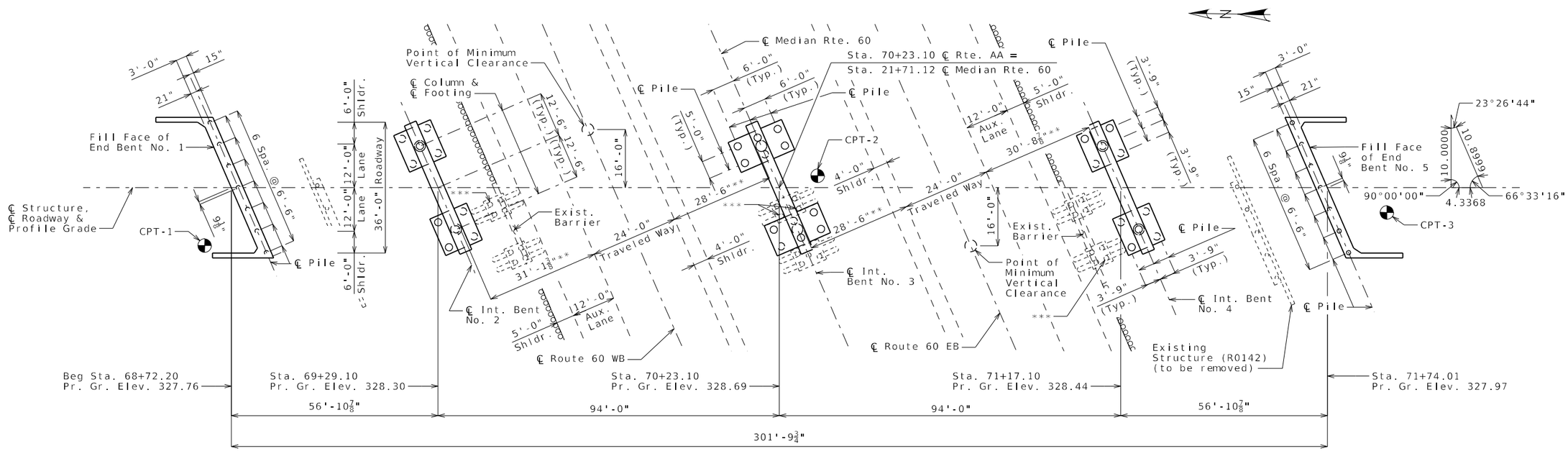

PLAN

** Minimum Horizontal Clearance is measured based upon MoDOT D-sheet D-61. Actual minimum horizontal clearance may vary slightly.

*** Extract existing pile to avoid risk of conflict with proposed pile. The contractor shall provide a pile extraction plan that is approved by the engineer.

Indicates location of borings

Notice and Disclaimer Regarding Boring Log Data
The locations of all subsurface borings for this structure are shown on the plan sheet for this structure. The boring data for all locations indicated, as well as any other boring logs or other factual records of subsurface data and investigations performed by the department for the design of the project, are shown on Sheets No. 32, 33 & 34 and may be included in the Electronic Bridge Deliverables. They will also be available from the Project Contact upon written request. No greater significance or weight should be given to the boring data depicted on the plan sheets than is given to the subsurface data available from the district or elsewhere.

The Commission does not represent or warrant that any such boring data accurately depicts the conditions to be encountered in constructing this project. A contractor assumes all risks it may encounter in basing its bid prices, time or schedule of performance on the boring data depicted here or those available from the district, or on any other documentation not expressly warranted, which the contractor may obtain from the Commission.

B.M. 1 = ELEV. 305.67 SET IN SOUTHWEST CORNER OF CONCRETE PAD AT STA. 59+40.08, 45.00' LT.

BRIDGE: ROUTE AA OVER ROUTE 60

ROUTE AA FROM ROUTE 62 TO ROUTE 80
ABOUT 1.3 MILES SOUTH OF ROUTE 62
BEG STA. 68+72.20

Designer Mar. 2025
Detailed Mar. 2025
Checked Mar. 2025

Note: This drawing is not to scale. Follow dimensions.

STATE OF MISSOURI
CHRISTOPHER T. HERSINGER
NUMBER PE-2012018080
PROFESSIONAL ENGINEER

THIS SHEET HAS BEEN SIGNED, SEALED AND DATED ELECTRONICALLY.

DATE PREPARED	
3/24/2025	
ROUTE AA	STATE MO
DISTRICT BR	SHEET NO. 1
COUNTY SCOTT	
JOB NO. JSE0248	
CONTRACT ID.	
PROJECT NO.	
BRIDGE NO. A9692	

DATE	DESCRIPTION

MISSOURI HIGHWAYS AND TRANSPORTATION COMMISSION
105 WEST CAPITOL
JEFFERSON CITY, MO 65102
1-888-ASK-MODOT (1-888-275-6636)

HR GREEN, INC.
520 MARYVILLE CENTRE DRIVE, SUITE 100
ST. LOUIS, MISSOURI 63141
PHONE: (636) 519.0990
CORPORATE LICENSE #2002006608

Estimated Quantities

Item		Substr.	Superstr.	Total
Class 1 Excavation	cu. yard	315		315
Removal of Bridges (R0142)	lump sum			1
Bridge Approach Slab (Minor)	sq. yard			162
Galvanized Cast-In-Place Concrete Piles (14 in.)	linear foot	700		700
Galvanized Cast-In-Place Concrete Piles (24 in.)	linear foot	1502		1502
Dynamic Pile Testing	each	5		5
Class B Concrete (Substructure)	cu. yard	218.9		218.9
Slab on Steel	sq. yard		1,292	1,292
Type D Barrier	linear foot		656	656
Reinforcing Steel (Bridges)	pound	29,440		29,440
Reinforcing Steel (Epoxy Coated)	pound	14,900		14,900
Temporary Coating - Concrete Bents and Piers (Weathering Steel)	lump sum	1		1
Fabricated Structural Low Alloy Steel (Plate Girder) A709, Grade 50W	pound		245,340	245,340
Slab Drain	each		16	16
Vertical Drain at End Bents	each	2		2
Plain Neoprene Bearing Pad	each		8	8
Laminated Neoprene Bearing Pad Assembly	each		12	12

All concrete above the lower construction joint in the end bents is included in the Estimated Quantities for Slab on Steel.

All reinforcement in the end bents and all reinforcement in cast-in-place pile at end bents is included in the Estimated Quantities for Slab on Steel.

All reinforcement in cast-in-place pile at intermediate bents is included in the substructure quantities.

Estimated Quantities for Slab on Steel

Item		Total
Class B-2 Concrete	cu. yard	352
Reinforcing Steel (Epoxy Coated)	pound	125,570

The table of Estimated Quantities for Slab on Steel represents the quantities used by the State in preparing the cost estimate for concrete slabs. The area of the concrete slab will be measured to the nearest square yard longitudinally from end of slab to end of slab and transversely from out to out of bridge slab (or with the horizontal dimensions as shown on the plan of slab). Payment for stay-in-place corrugated steel forms, conventional forms, all concrete and epoxy coated reinforcing steel will be considered completely covered by the contract unit price for the slab. Variations may be encountered in the estimated quantities but the variations cannot be used for an adjustment in the contract unit price.

Method of forming the slab shall be as shown on the plans and in accordance with Sec 703. All hardware for forming the slab to be left in place as a permanent part of the structure shall be coated in accordance with ASTM A123 or ASTM B633 with a thickness class SC 4 and a finish type I, II or III.

Slab shall be cast-in-place with conventional forms or stay-in-place corrugated steel forms. Precast prestressed panels will not be permitted.

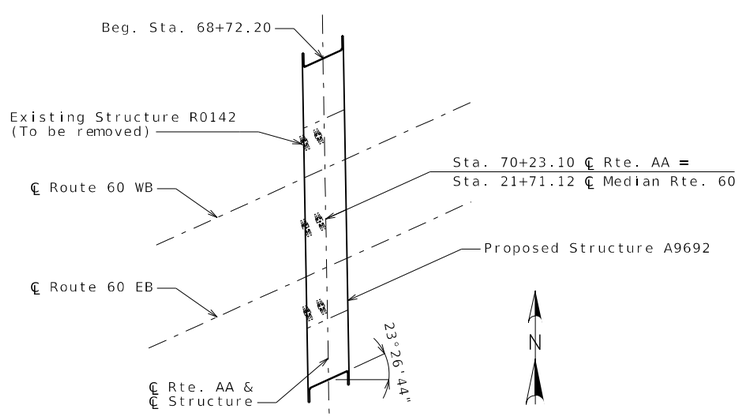

LOCATION SKETCH

General Notes:

Design Specifications:

2020 AASHTO LRFD Bridge Design Specifications (9th Ed.)
2023 AASHTO Guide Specifications for LRFD Seismic Bridge Design (3rd Ed.)
Seismic Design Category = D (Seismic Details)
Design earthquake response spectral acceleration coefficient at 1.0 second period, SD1 = 0.72
Acceleration Coefficient (effective peak ground acceleration coefficient), As = 0.75

Design Loading:

Vehicular = HL-93
Future Wearing Surface = 35 lb/sf
Earth = 120 lb/cf
Equivalent Fluid Pressure = 45 lb/cf (Min.)

Design Unit Stresses:

Class B Concrete (Substructure)	f'c = 3,000 psi
Class B-1 Concrete (Barrier)	f'c = 4,000 psi
Class B-2 Concrete (Superstructure, except Barrier)	f'c = 4,000 psi
Reinforcing Steel (ASTM A706 Grade 60)	fy = 60,000 psi
Structural Steel (ASTM A709 Grade 50W)	fy = 50,000 psi
Welded or Seamless steel shell (pipe) for CIP pile (ASTM A252 Modified Grade 3)	fy = 50,000 psi

Neoprene Pads:

Neoprene bearing pads shall be 60 durometer and shall be in accordance with Sec 716.

Fabricated Steel Connections:

Field connections shall be made with 3/4-inch diameter ASTM F3125 Grade A325 Type 3 bolts and 13/16-inch diameter holes, except as noted.

Joint Filler:

All joint filler shall be in accordance with Sec 1057 for preformed sponge rubber expansion and partition joint filler, except as noted.

Reinforcing Steel:

Minimum clearance to reinforcing steel shall be 1 1/2", unless otherwise shown.

Minimum clearance between galvanized piles and uncoated (plain) reinforcing steel including bar supports shall be 1 1/2". Nylon, PVC, or polyethylene spacers shall be used to maintain clearance. Nylon cable ties shall be used to bind the spacers to the reinforcement.

Traffic Handling:

Vertical clearance for Route 60 traffic during construction shall be 15'-6" minimum over a 36'-0" wide horizontal opening of the roadway in each direction.

Structure to be closed during construction. Traffic to be maintained on other routes during construction. See roadway plans for traffic control.

Concrete Protective Coatings:

Temporary coating for concrete bents and piers (weathering steel) shall be applied on all concrete surfaces above the ground line elevation on all abutments and intermediate bents in accordance with Sec 711.

Miscellaneous:

High strength bolts, nuts and washers will be sampled for quality assurance as specified in Sec 106.

Foundation Data

Type	Design Data		Bent Number 1	2	3	4	5
Load Bearing Pile	Pile Type and Size		CECIP 14"	CECIP 24"	CECIP 24"	CECIP 24"	CECIP 14"
	Number	ea	7	10	12	10	7
	Approximate Length Per Each	ft	50	47	46	48	50
	Pile Point Reinforcement	ea	None	None	None	None	None
	Min. Galvanized Penetration (Elev.)	ft	Full Length	Full Length	Full Length	Full Length	Full Length
	Minimum Tip Penetration (Elev.)	ft	272	255	255	255	272
	Criteria for Min. Tip Penetration		Min. Embed.	Min. Embed.	Min. Embed.	Min. Embed.	Min. Embed.
	Pile Driving Verification Method		DT	DT	DT	DT	DT
	Resistance Factor		0.65	0.65	0.65	0.65	0.65
	Minimum Nominal Axial Compressive Resistance	kip	194	343	329	343	194

CECIP = Closed Ended Cast-In-Place concrete pile
DT = Dynamic Testing
Minimum Nominal Axial Compressive Resistance = $\frac{\text{Maximum Factored Loads}}{\text{Resistance Factor}}$

STATE OF MISSOURI
CHRISTOPHER T. HERSINGER
NUMBER PE-2012018080
PROFESSIONAL ENGINEER

THIS SHEET HAS BEEN SIGNED, SEALED AND DATED ELECTRONICALLY.

DATE PREPARED 3/24/2025
ROUTE AA | STATE MO
DISTRICT BR | SHEET NO. 2
COUNTY SCOTT
JOB NO. JSE0248
CONTRACT ID.
PROJECT NO.
BRIDGE NO. A9692

DESCRIPTION	DATE

MISSOURI HIGHWAYS AND TRANSPORTATION COMMISSION
105 WEST CAPITOL
JEFFERSON CITY, MO 65102
1-888-ASK-MODOT (1-888-275-6636)

HR GREEN, INC.
520 MARYVILLE CENTRE DRIVE, SUITE 100
ST. LOUIS, MISSOURI 63141
PHONE: (636) 519.0990
CORPORATE LICENSE #2002006608
HRGreen

Detailed Mar. 2025
Checked Mar. 2025

Note: This drawing is not to scale. Follow dimensions.

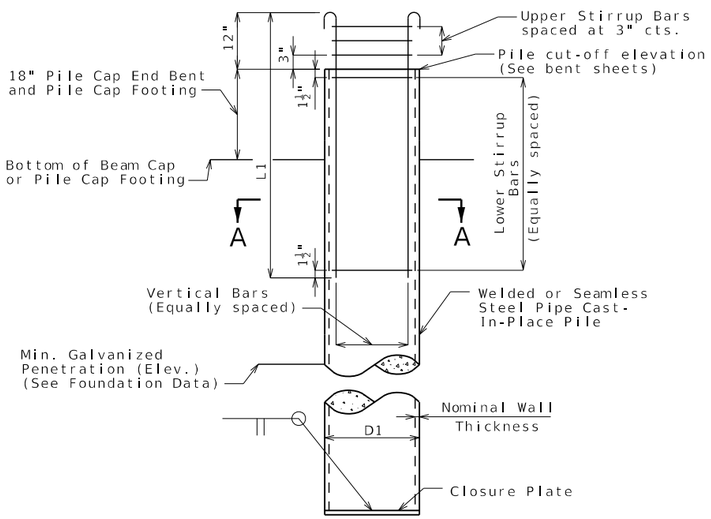

GALVANIZED CLOSED ENDED CAST-IN-PLACE (CECIP) CONCRETE PILE WITHOUT PILE POINT REINFORCEMENT

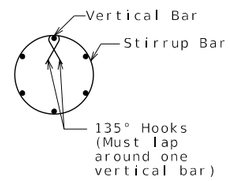

DETAIL OF 14" SEISMIC STIRRUP BAR

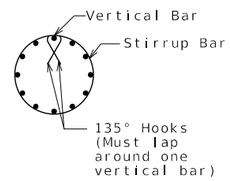

DETAIL OF 24" SEISMIC STIRRUP BAR

Galvanized Closed Ended Cast-In-Place (CECIP) Concrete Pile Data					
Bent Number	1	2	3	4	5
D1, CECIP Pile (O.D.)	14"	24"	24"	24"	14"
Min. Nominal Wall Thickness	0.5	0.5	0.5	0.5	0.5
Closure Plate Thickness	3/4"	3/4"	3/4"	3/4"	3/4"
Pile Point Reinforcement	None	None	None	None	None
Vertical Bars	6-#5-V106	12-#6-V200	12-#6-V300	12-#6-V400	6-#5-V506
L1, Length of Vertical Bars	6'-6"	7'-3"	7'-3"	7'-3"	6'-6"
Upper Stirrup Bars	3-#4-P100	3-#4-P200	3-#4-P300	3-#4-P400	3-#4-P500
Lower Stirrup Bars	17-#4-P100	19-#4-P200	19-#4-P300	19-#4-P400	17-#4-P500

Notes:

Welded or seamless steel shell (pipe) shall be ASTM A252 Modified Grade 3 (fy = 50,000 psi) with physical and chemical requirements that meet ASTM A572 Grade 50. Pipe certification and source material certification shall be required.

Concrete for cast-in-place pile shall be Class B-1.

Steel for closure plate shall be ASTM A709 Grade 50.

The minimum wall thickness of any spot or local area of any type shall not be more than 12.5% under the specified nominal wall thickness.

The contractor shall determine the pile wall thickness required to avoid damage from all driving activities, but wall thickness shall not be less than the minimum specified. No additional payment will be made for furnishing a thicker pile wall than specified on the plans.

Closure plate shall not project beyond the outside diameter of the pipe pile. Satisfactory weldments may be made by beveling tip end of pipe or by use of inside backing rings. In either case, proper gaps shall be used to obtain weld penetration full thickness of pipe. Payment for furnishing and installing closure plate will be considered completely covered by the contract unit price for Galvanized Cast-In-Place Concrete Piles.

Splices of pipe for cast-in-place concrete pile shall be made watertight and to the full strength of the pipe above and below the splice to permit hard driving without damage. Pipe damaged during driving shall be replaced without cost to the state. Pipe sections used for splicing shall be at least 5 feet in length.

The hooks of vertical bars embedded in the beam cap should not be turned outward, away from the pile core.

The hooks of vertical bars embedded in the pile cap footing should be oriented outward for all seismic categories.

Closure plate need not be galvanized.

Reinforcing steel for cast-in-place piles is included in the Bill of Reinforcing Steel.

All reinforcement for cast-in-place pile is included in the estimated quantities for bents.

For Foundation Data table, see Sheet No. 2.

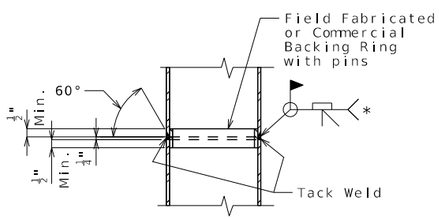

STEEL PIPE PILE SPLICE

* Galvanizing material shall be omitted or removed one inch clear of weld locations in accordance with Sec 702.

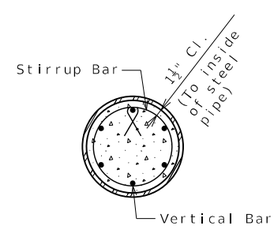

SECTION A-A

(14" pile shown, 24" pile similar)

GALVANIZED CLOSED ENDED CAST-IN-PLACE (CECIP) CONCRETE PILE

Note: This drawing is not to scale. Follow dimensions.

Detailed Mar. 2025
Checked Mar. 2025

STATE OF MISSOURI
CHRISTOPHER T. HERSINGER
NUMBER PE-2012018080
PROFESSIONAL ENGINEER
THIS SHEET HAS BEEN SIGNED, SEALED AND DATED ELECTRONICALLY.

DATE PREPARED 3/24/2025
ROUTE AA | STATE MO
DISTRICT BR | SHEET NO. 3
COUNTY SCOTT
JOB NO. JSE0248
CONTRACT ID.
PROJECT NO.
BRIDGE NO. A9692

DATE	DESCRIPTION

MISSOURI HIGHWAYS AND TRANSPORTATION COMMISSION
105 WEST CAPITOL
JEFFERSON CITY, MO 65102
1-888-ASK-MODOT (1-888-275-6636)

HR GREEN, INC.
520 MARYVILLE CENTRE DRIVE, SUITE 100
ST. LOUIS, MISSOURI 63141
PHONE: (636) 519.0990
CORPORATE LICENSE #2002006608
HRGreen

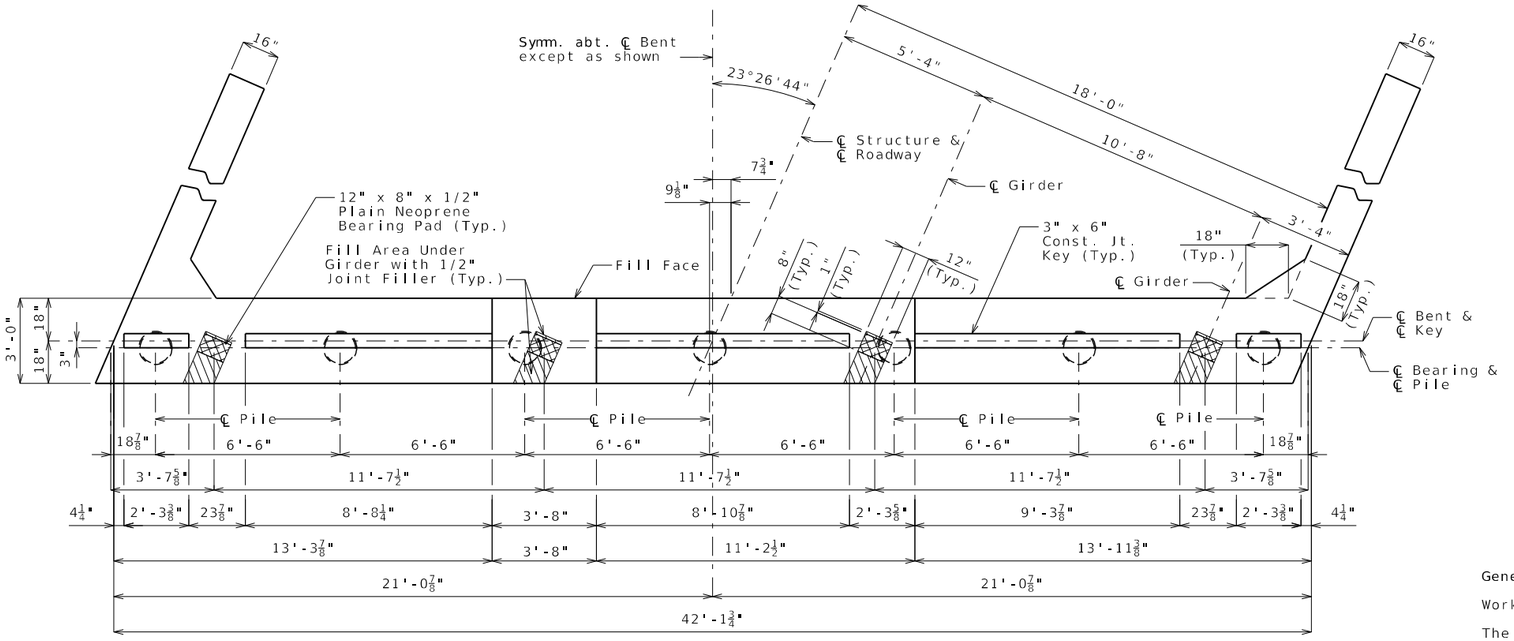

PLAN OF BEAM

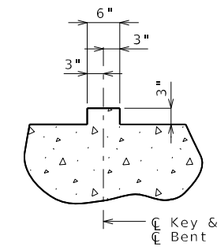

SECTION THRU KEY

General Notes:

Work this sheet with Sheets No. 5 & 6.

The U bars and pairs of V bars shall be placed parallel to centerline of roadway.

Reinforcing steel shall be shifted to clear piles. U bars shall clear piles by at least 1 1/2 inches.

Substructure Quantity Table For Bent No. 1		
Item		Quantity
Class 1 Excavation	cu. yard	45
Galvanized Cast-In-Place Concrete Piles (14 in.)	linear foot	350
Dynamic Pile Testing	each	1
Class B Concrete (Substructure)	cu. yard	18.9

These quantities are included in the Estimated Quantities table on Sheet No. 2.

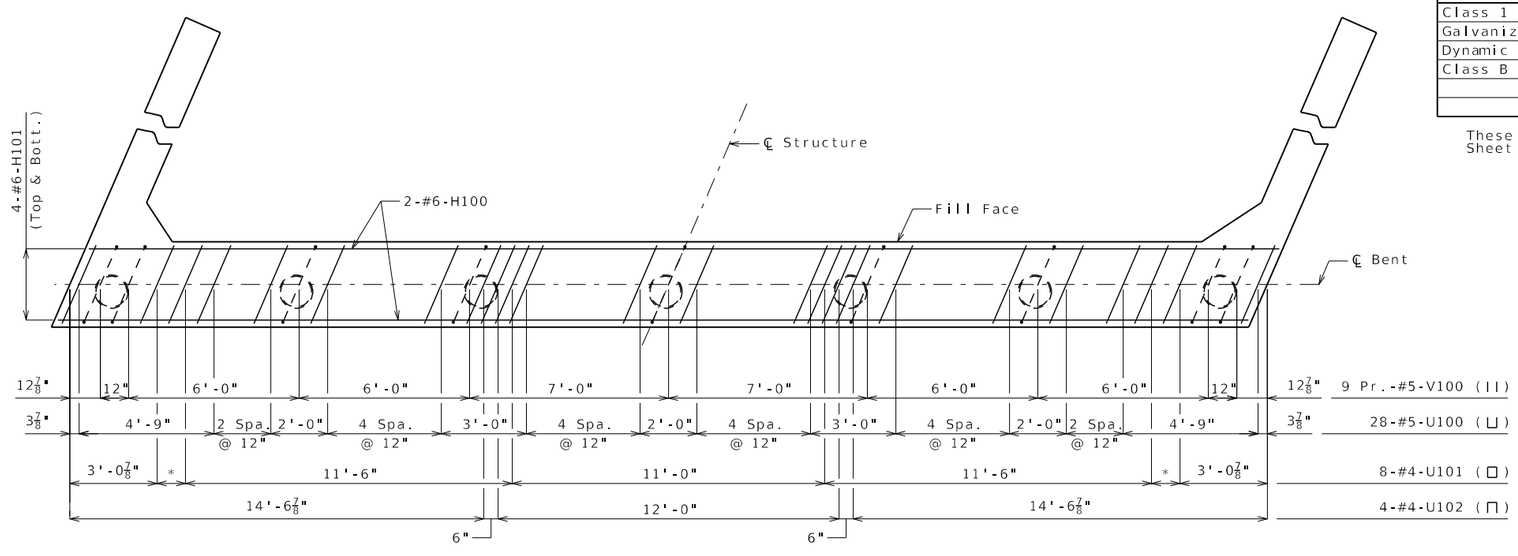

* 2 Spaces @ 6"

PLAN OF BEAM SHOWING REINFORCEMENT
Keys not shown for clarity.

DETAILS OF END BENT NO. 1

STATE OF MISSOURI
CHRISTOPHER T. HERSINGER
NUMBER PE-2012018080
PROFESSIONAL ENGINEER

THIS SHEET HAS BEEN SIGNED, SEALED AND DATED ELECTRONICALLY.

DATE PREPARED	
3/24/2025	
ROUTE: AA	STATE: MO
DISTRICT: BR	SHEET NO.: 4
COUNTY: SCOTT	
JOB NO.: JSE0248	
CONTRACT ID.	
PROJECT NO.	
BRIDGE NO.: A9692	

DESCRIPTION

DATE

MISSOURI HIGHWAYS AND TRANSPORTATION COMMISSION
105 WEST CAPITOL
JEFFERSON CITY, MO 65102
1-888-ASK-MODOT (1-888-275-6636)

HR GREEN, INC.
520 MARYVILLE CENTRE DRIVE, SUITE 100
ST. LOUIS, MISSOURI 63141
PHONE: (636) 519.0990
CORPORATE LICENSE #2002006608

HRGreen

Detailed Mar. 2025
Checked Mar. 2025

Note: This drawing is not to scale. Follow dimensions.

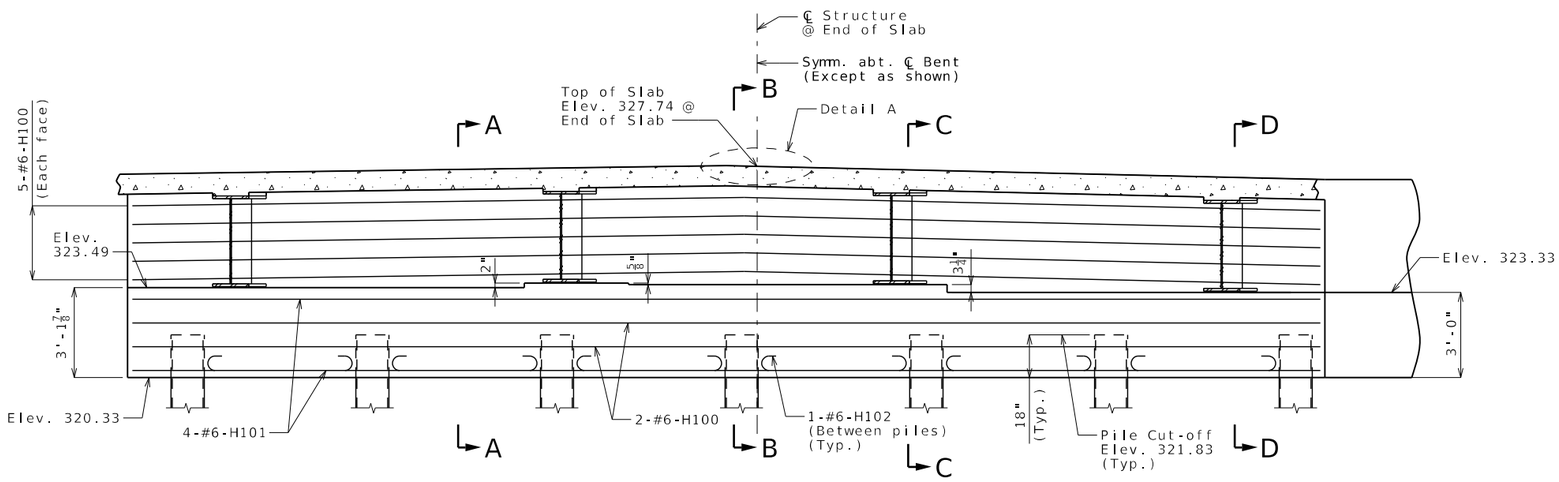

SECTION NEAR END BENT

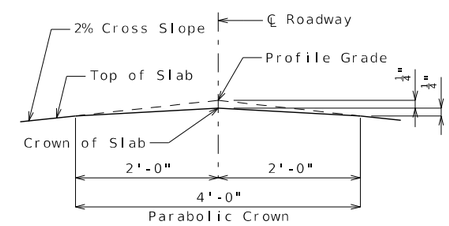

DETAIL A

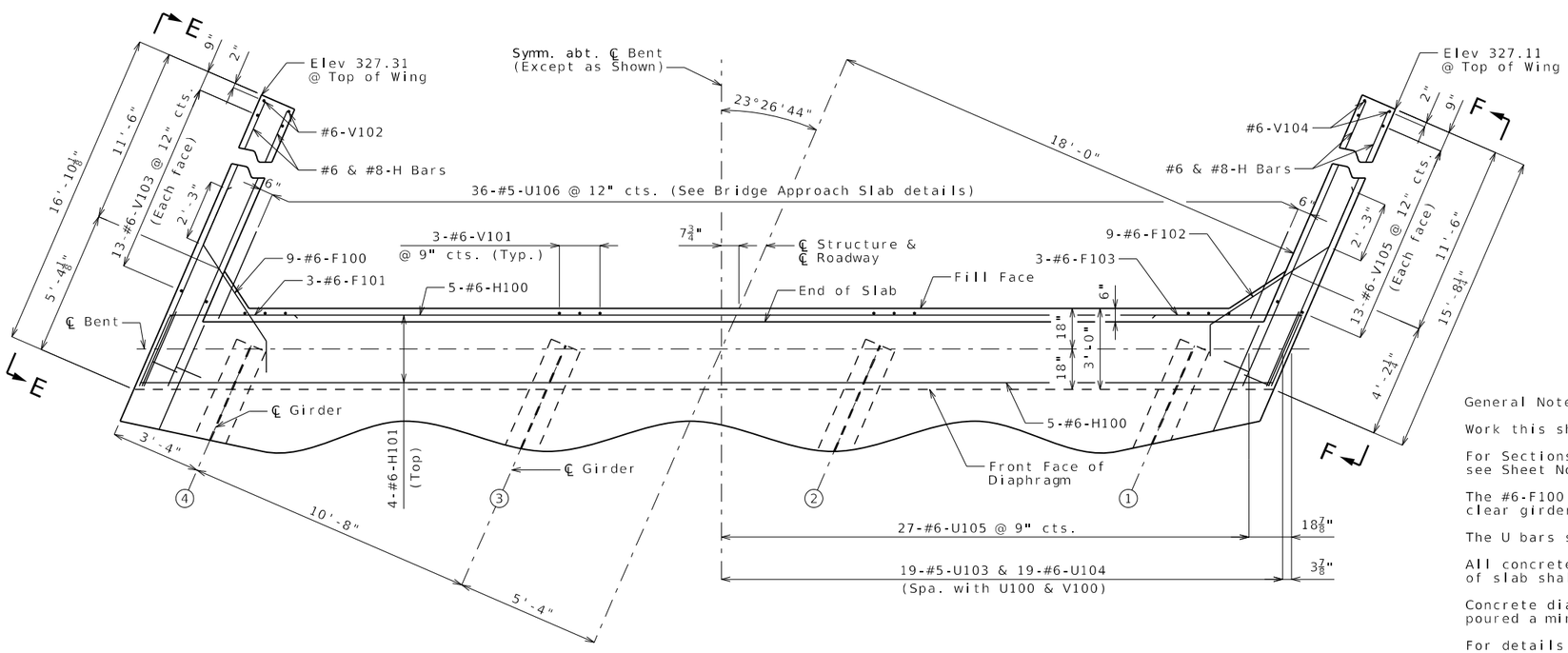

PART PLAN

DETAILS OF END BENT NO. 1

General Notes:

Work this sheet with Sheets No. 4 & 6.

For Sections A-A, B-B, C-C & D-D and Elevations E-E & F-F, see Sheet No. 6.

The #6-F100 & #6-F102 bars shall be bent in the field to clear girders.

The U bars shall be placed parallel to centerline of roadway.

All concrete in the end bent above top of beam and below top of slab shall be Class B-2.

Concrete diaphragms at the integral end bents shall be poured a minimum of 12 hours before the slab is poured.

For details of cast-in-place concrete piles, see Sheet No. 3.

For details of vertical drain at end bents, see Sheet No. 7.

For details of bridge approach slab, see Sheet No. 27.

STATE OF MISSOURI
CHRISTOPHER T. HERSINGER
NUMBER PE-2012018080
PROFESSIONAL ENGINEER

THIS SHEET HAS BEEN SIGNED, SEALED AND DATED ELECTRONICALLY.

DATE PREPARED	
3/24/2025	
ROUTE	STATE
AA	MO
DISTRICT	SHEET NO.
BR	5
COUNTY	
SCOTT	
JOB NO.	
JSE0248	
CONTRACT ID.	
PROJECT NO.	
BRIDGE NO.	
A9692	

DESCRIPTION	DATE

MISSOURI HIGHWAYS AND TRANSPORTATION COMMISSION
105 WEST CAPITOL
JEFFERSON CITY, MO 65102
1-888-ASK-MODOT (1-888-275-6636)

HR GREEN, INC.
520 MARYVILLE CENTRE DRIVE, SUITE 100
ST. LOUIS, MISSOURI 63141
PHONE: (636) 519.0990
CORPORATE LICENSE #2002006608

Detailed Mar. 2025
Checked Mar. 2025

Note: This drawing is not to scale. Follow dimensions.

\\hrgreen.com\hrg\Data\2024\2404289\CAD\Bridge\Plan_Sheets\B_A9692_005_JSE0248_EndBent1Dtls.dgn 5:13:49 PM 3/24/2025

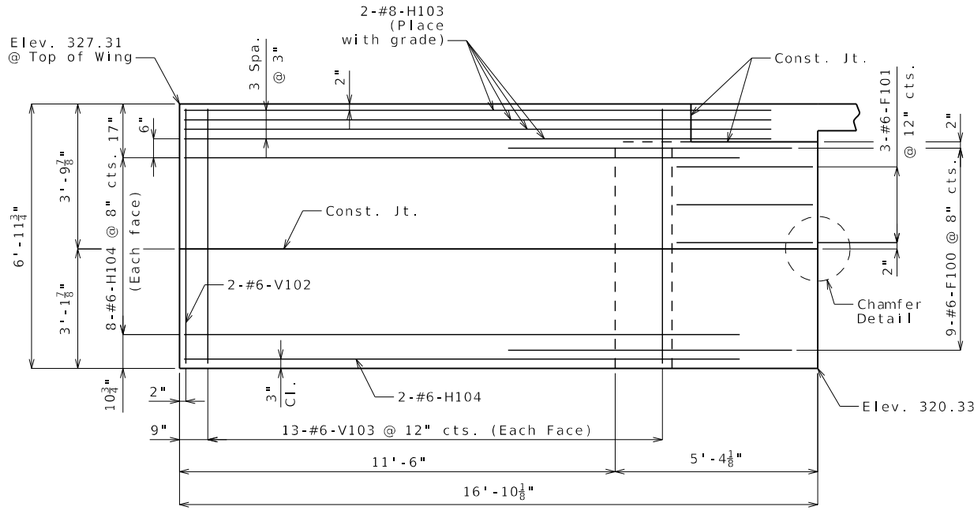

SECTION E-E

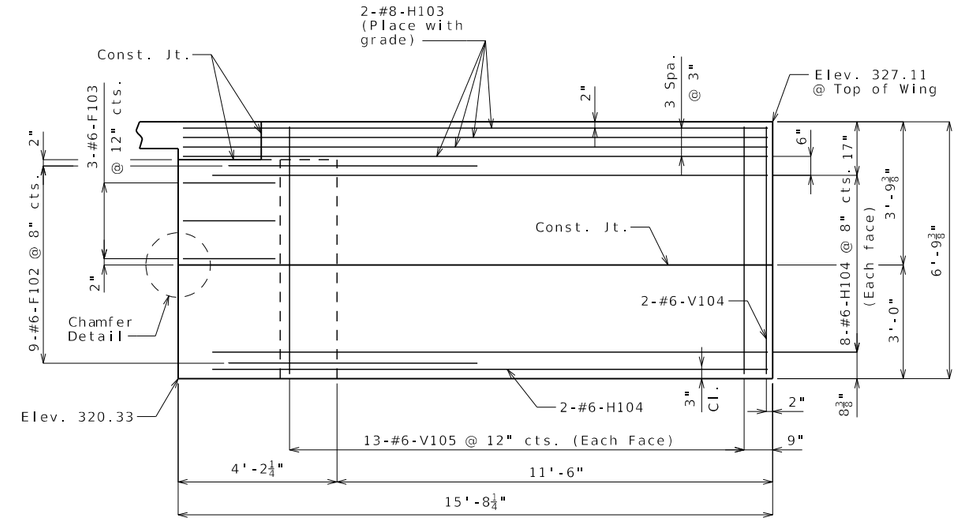

SECTION F-F

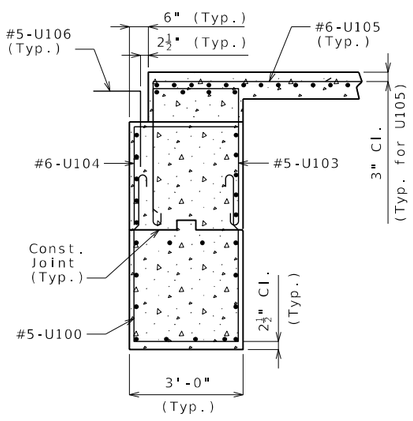

SECTION A-A

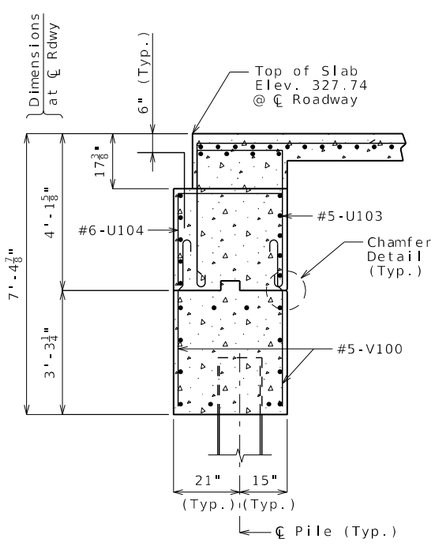

SECTION B-B

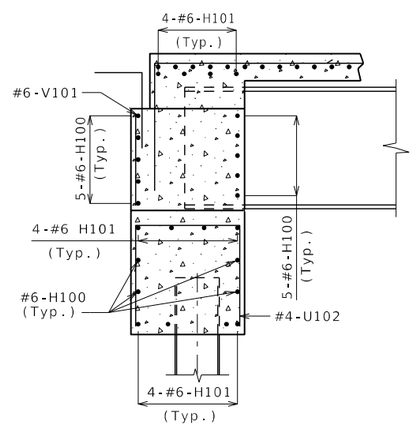

SECTION C-C

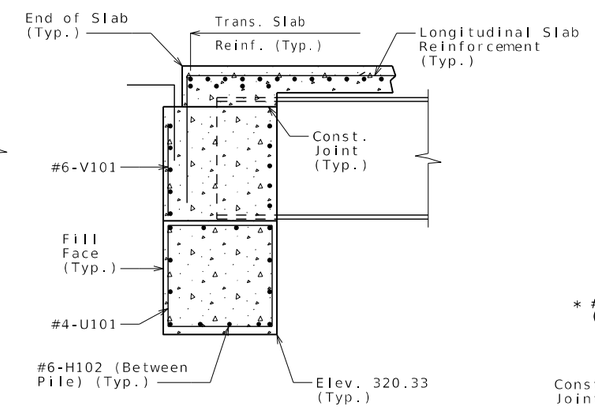

SECTION D-D

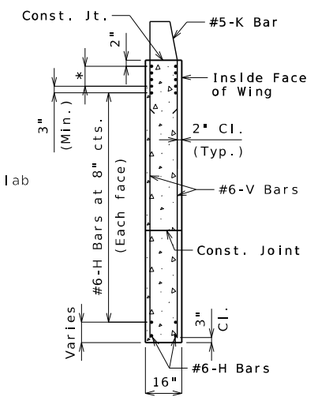

TYPICAL SECTION
THRU WING

* #8-H Bars at 3" cts.
(Each face)(Place with grade)

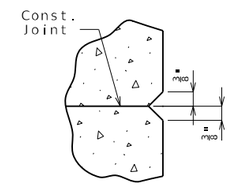

CHAMFER DETAIL

General Notes:

Work this sheet with Sheets No. 4 & 5.

For reinforcement of the barrier, see Sheet No. 26.

DETAILS OF END BENT NO. 1

Detailed Mar. 2025
Checked Mar. 2025

Note: This drawing is not to scale. Follow dimensions.

STATE OF MISSOURI
CHRISTOPHER T. HERSINGER
NUMBER PE-2012018080
PROFESSIONAL ENGINEER

THIS SHEET HAS BEEN SIGNED, SEALED AND DATED ELECTRONICALLY.

DATE PREPARED	
3/24/2025	
ROUTE	STATE
AA	MO
DISTRICT	SHEET NO.
BR	6
COUNTY	
SCOTT	
JOB NO.	
JSE0248	
CONTRACT ID.	
PROJECT NO.	
BRIDGE NO.	
A9692	

DESCRIPTION

DATE

MISSOURI HIGHWAYS AND TRANSPORTATION COMMISSION

105 WEST CAPITOL
JEFFERSON CITY, MO 65102
1-888-ASK-MODOT (1-888-275-6636)

HR GREEN, INC.
520 MARYVILLE CENTRE DRIVE,
SUITE 100
ST. LOUIS, MISSOURI 63141
PHONE: (636) 519.0990
CORPORATE LICENSE #2002006608

HRGreen

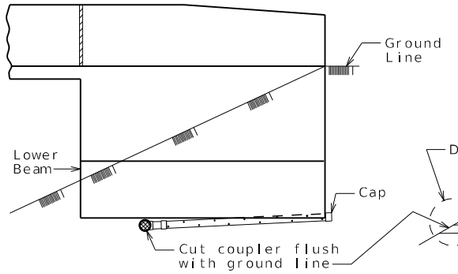

ELEVATION OF WING

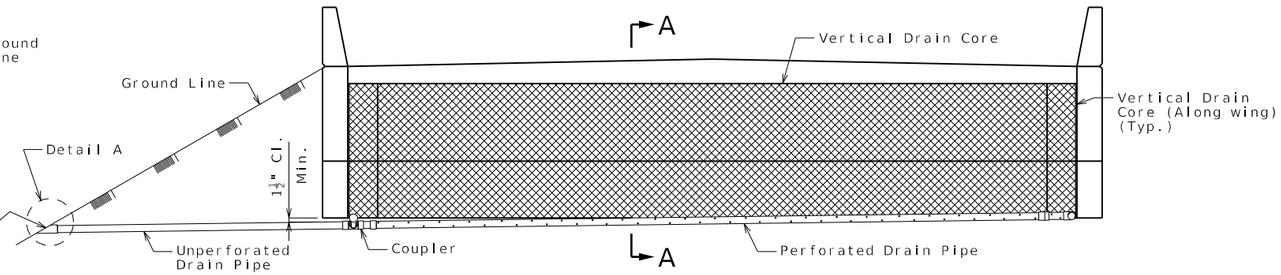

ELEVATION OF END BENT

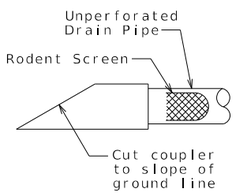

DETAIL A

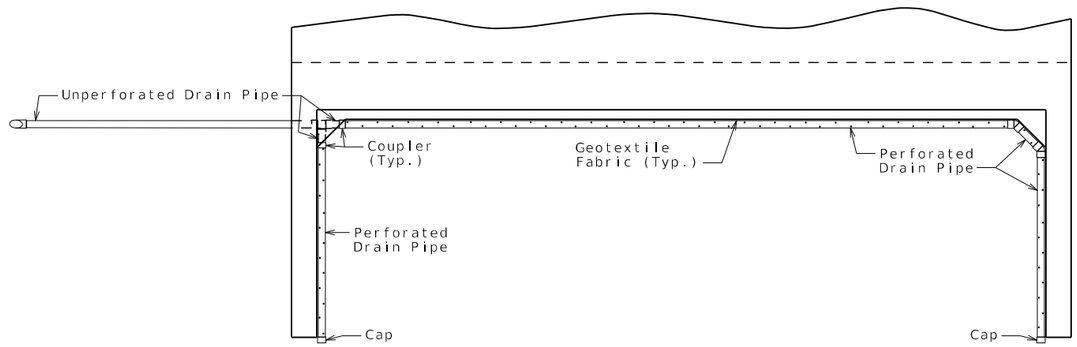

PLAN OF END BENT

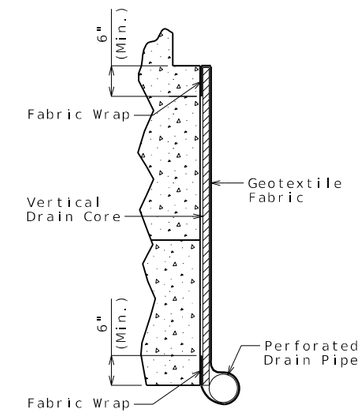

PART SECTION A-A
(Section thru wing similar)

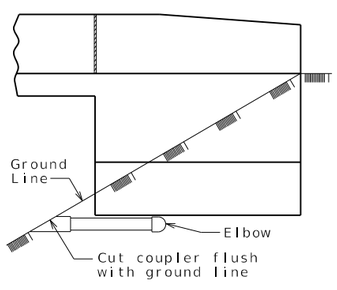

ELEVATION OF WING

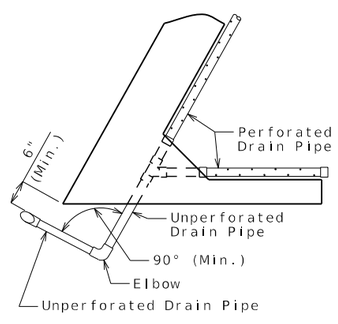

PART PLAN

OPTIONAL TURNED DRAIN
(Use only when straight drain is not practical.)

General Notes:

All drain pipe shall be sloped 1 to 2 percent.

Drain pipe may be either 6-inch diameter corrugated metallic-coated steel pipe underdrain, 4-inch diameter corrugated polyvinyl chloride (PVC) drain pipe, or 4-inch diameter corrugated polyethylene (PE) drain pipe.

Drain pipe shall be placed at fill face of end bent and inside face of wings. The pipe shall slope to lowest grade of ground line, also missing the lower beam of end bent by a minimum of 1 1/2 inches.

Perforated pipe shall be placed at fill face side and inside face of wings at the bottom of end bent and plain pipe shall be used where the vertical drain ends to the exit at ground line.

VERTICAL DRAIN AT END BENTS

(Squared end bent shown, skewed end bent similar)

Detailed Mar. 2025
Checked Mar. 2025

Note: This drawing is not to scale. Follow dimensions.

STATE OF MISSOURI
CHRISTOPHER T. HERSINGER
NUMBER PE-2012018080
PROFESSIONAL ENGINEER

THIS SHEET HAS BEEN SIGNED, SEALED AND DATED ELECTRONICALLY.

DATE PREPARED	3/24/2025
ROUTE	AA
STATE	MO
DISTRICT	BR
SHEET NO.	7
COUNTY	SCOTT
JOB NO.	JSE0248
CONTRACT ID.	
PROJECT NO.	
BRIDGE NO.	A9692

DATE	DESCRIPTION

MISSOURI HIGHWAYS AND TRANSPORTATION COMMISSION
105 WEST CAPITOL
JEFFERSON CITY, MO 65102
1-888-ASK-MODOT (1-888-275-6636)

HR GREEN, INC.
520 MARYVILLE CENTRE DRIVE, SUITE 100
ST. LOUIS, MISSOURI 63141
PHONE: (636) 519.0990
CORPORATE LICENSE #2002006608
HRGreen

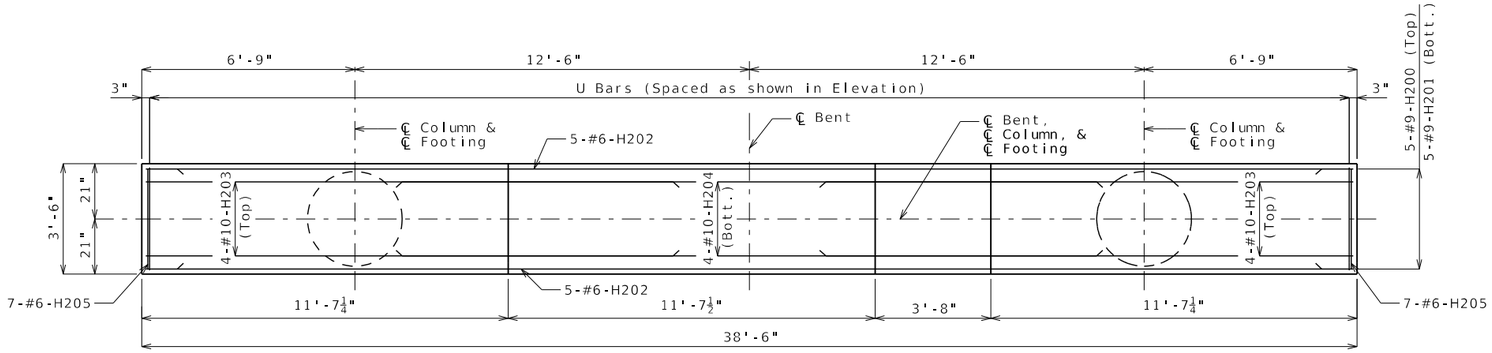

PLAN SHOWING REINFORCEMENT
(Footings not shown for clarity)

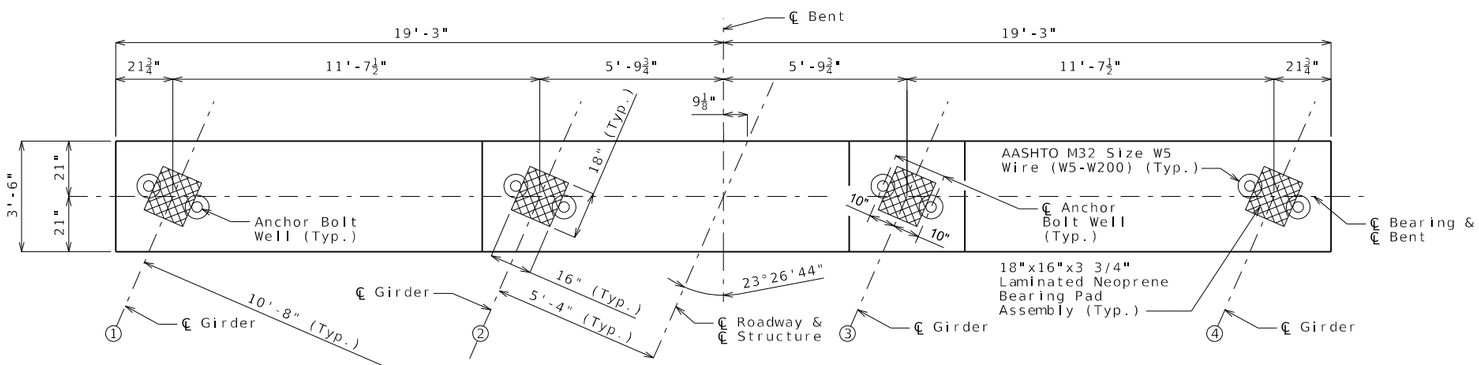

PLAN OF BEAM

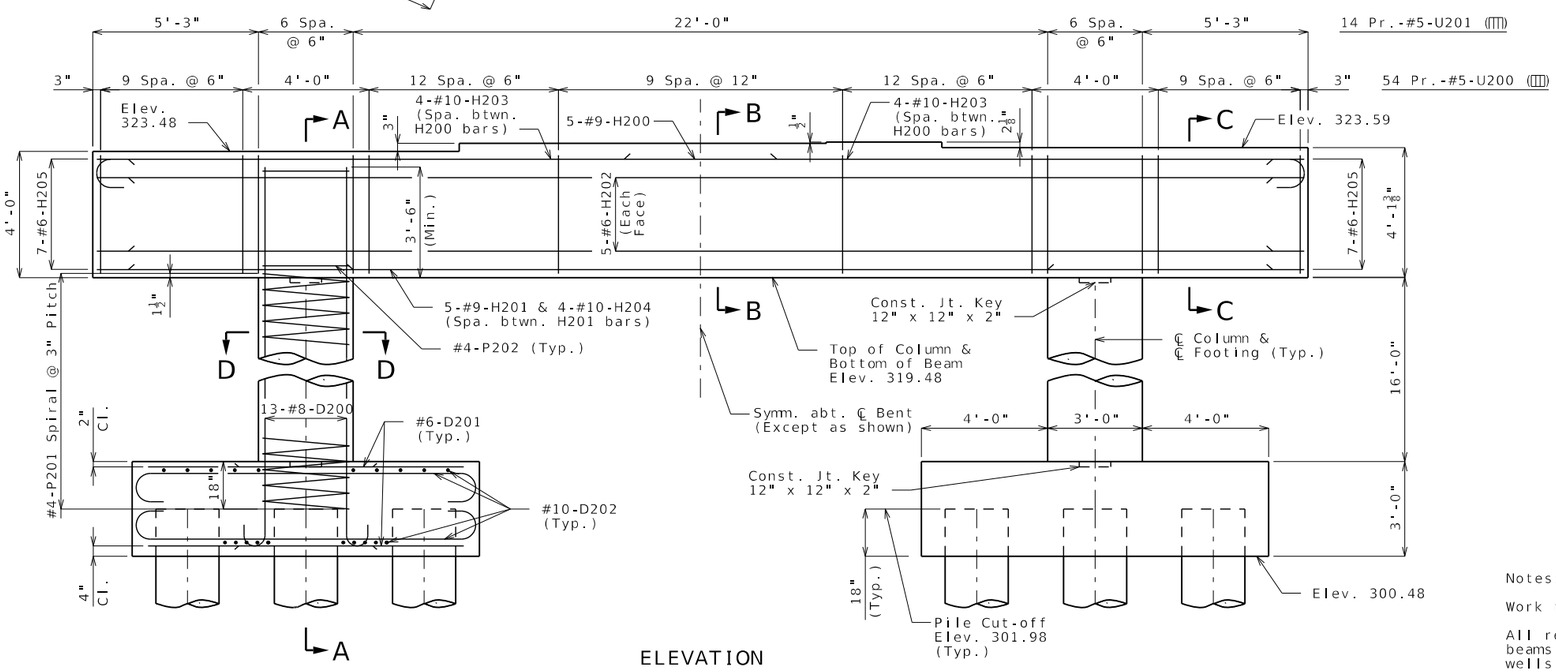

ELEVATION

DETAILS OF INTERMEDIATE BENT NO. 2

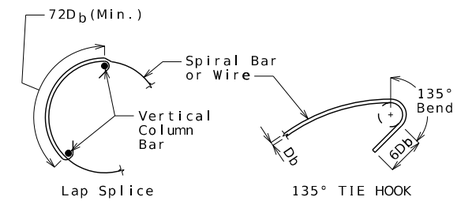

INTERMEDIATE SPLICE OF SPIRALS

Standard 135-degree tie hooks that engage vertical column reinforcing bars shall be provided at each end of splice.

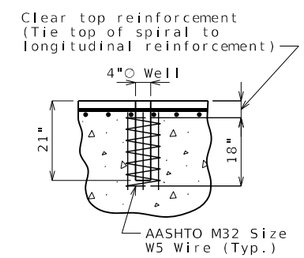

ANCHOR BOLT WELLS

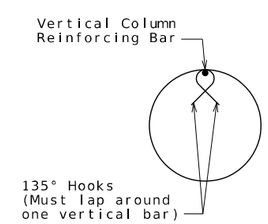

SEISMIC STIRRUP BAR

Notes:

Work this sheet with Sheet No. 9.

All reinforcing bars in the top of substructure beams or caps shall be spaced to clear anchor bolt wells for bearings by at least 1/2".

For bearing details, see Sheet No. 17.

Detailed Mar. 2025
Checked Mar. 2025

Note: This drawing is not to scale. Follow dimensions.

STATE OF MISSOURI
CHRISTOPHER T. HERSINGER
NUMBER PE-2012018080
PROFESSIONAL ENGINEER

THIS SHEET HAS BEEN SIGNED, SEALED AND DATED ELECTRONICALLY.

DATE PREPARED	
3/24/2025	
ROUTE AA	STATE MO
DISTRICT BR	SHEET NO. 8
COUNTY SCOTT	
JOB NO. JSE0248	
CONTRACT ID.	
PROJECT NO.	
BRIDGE NO. A9692	

DATE	DESCRIPTION

MISSOURI HIGHWAYS AND TRANSPORTATION COMMISSION
105 WEST CAPITOL
JEFFERSON CITY, MO 65102
1-888-ASK-MODOT (1-888-275-6636)

HR GREEN, INC.
520 MARYVILLE CENTRE DRIVE, SUITE 100
ST. LOUIS, MISSOURI 63141
PHONE: (636) 519.0990
CORPORATE LICENSE #2002006608
HRGreen

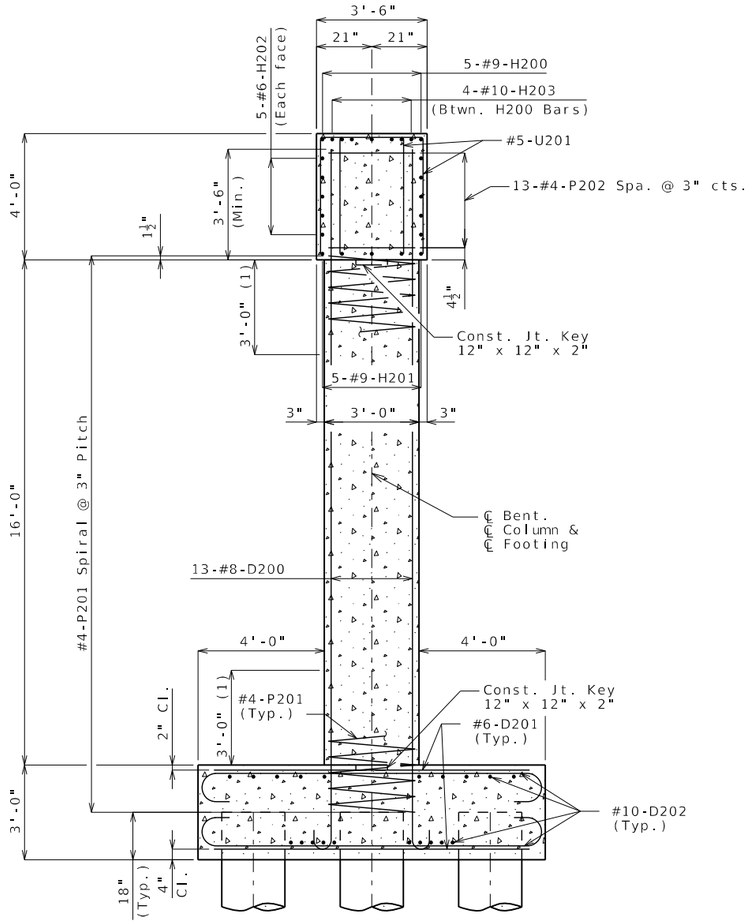

SECTION A-A

(1) Lapping of spiral reinforcement in this region is not permitted.

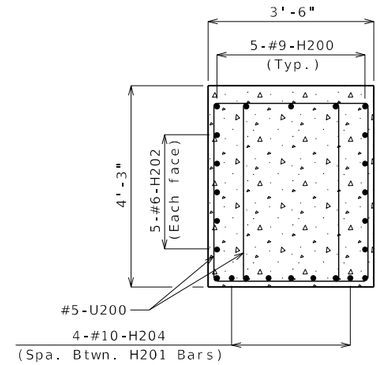

SECTION B-B

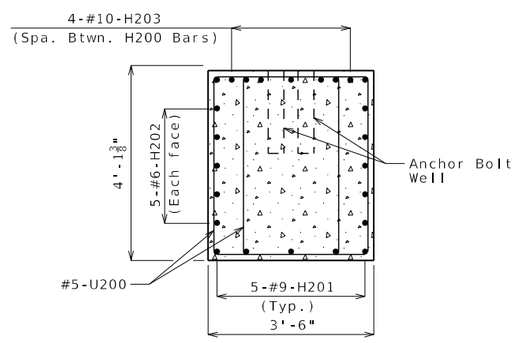

SECTION C-C

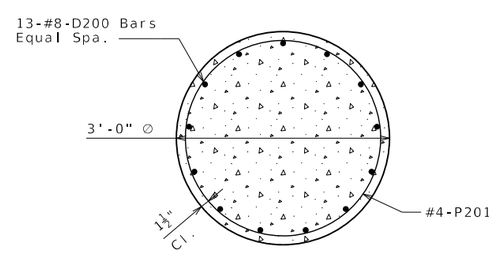

SECTION D-D

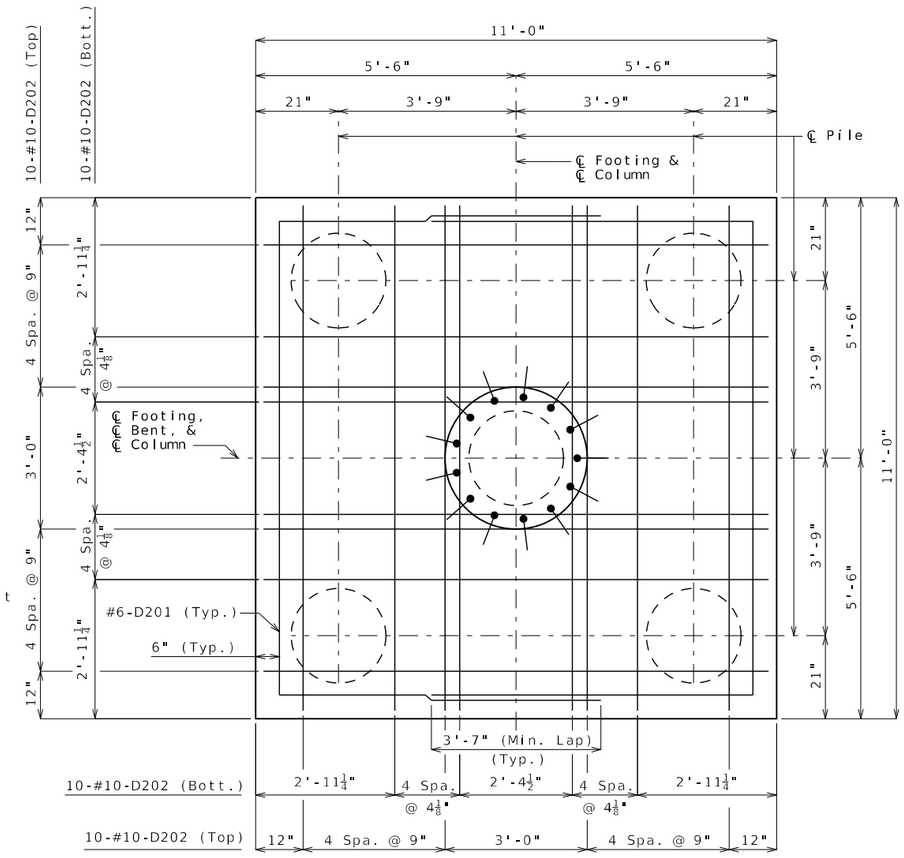

PLAN OF FOOTING

Substructure Quantity Table for Bent No. 2

Item		Quantity
Class 1 Excavation	cu. yard	75
Galvanized Cast-in-Place Concrete Piles (24 in.)	linear foot	470
Dynamic Pile Testing	each	1
Class B Concrete (Substructure)	cu. yard	55.9
Reinforcing Steel (Bridges)	pound	7,300
Reinforcing Steel (Epoxy Coated)	pound	7,450

These quantities are included in the estimated quantities on Sheet No. 2.

Notes:

Work this sheet with Sheet No. 8.

DETAILS OF INTERMEDIATE BENT NO. 2

Detailed Mar. 2025
Checked Mar. 2025

Note: This drawing is not to scale. Follow dimensions.

STATE OF MISSOURI
CHRISTOPHER T. HERSINGER
NUMBER PE-2012018080
PROFESSIONAL ENGINEER

THIS SHEET HAS BEEN SIGNED, SEALED AND DATED ELECTRONICALLY.

DATE PREPARED	
3/24/2025	
ROUTE: AA	STATE: MO
DISTRICT: BR	SHEET NO.: 9
COUNTY: SCOTT	
JOB NO.: JSE0248	
CONTRACT ID.	
PROJECT NO.	
BRIDGE NO.: A9692	

DATE	DESCRIPTION

MISSOURI HIGHWAYS AND TRANSPORTATION COMMISSION
105 WEST CAPITOL
JEFFERSON CITY, MO 65102
1-888-ASK-MODOT (1-888-275-6636)

HR GREEN, INC.
520 MARYVILLE CENTRE DRIVE, SUITE 100
ST. LOUIS, MISSOURI 63141
PHONE: (636) 519.0990
CORPORATE LICENSE #2002006608
HRGreen

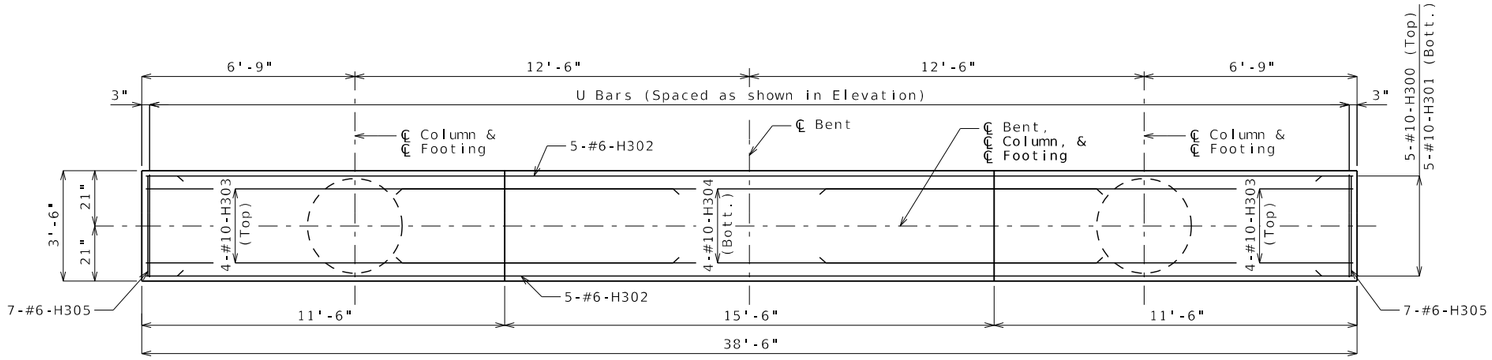

PLAN SHOWING REINFORCEMENT
(Footings not shown for clarity)

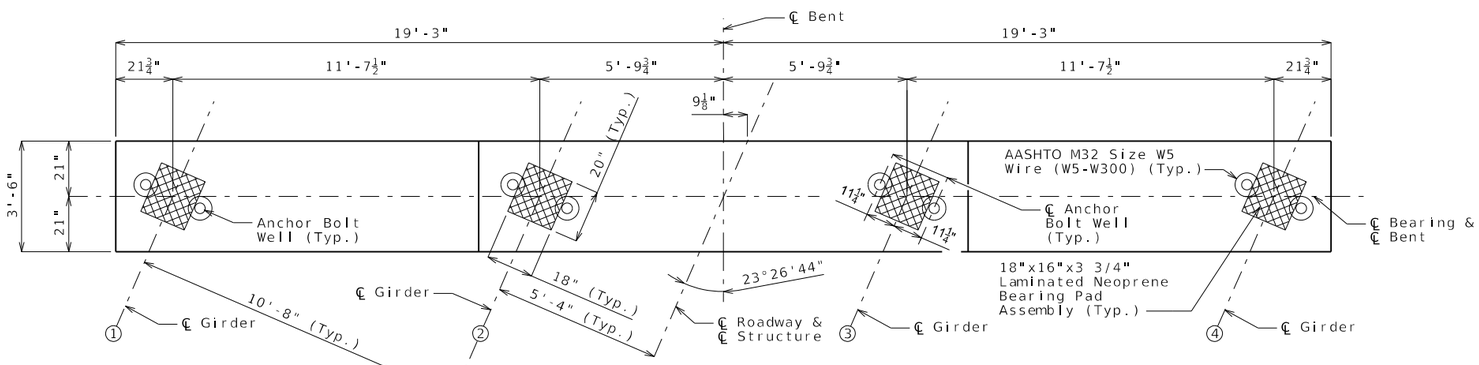

PLAN OF BEAM

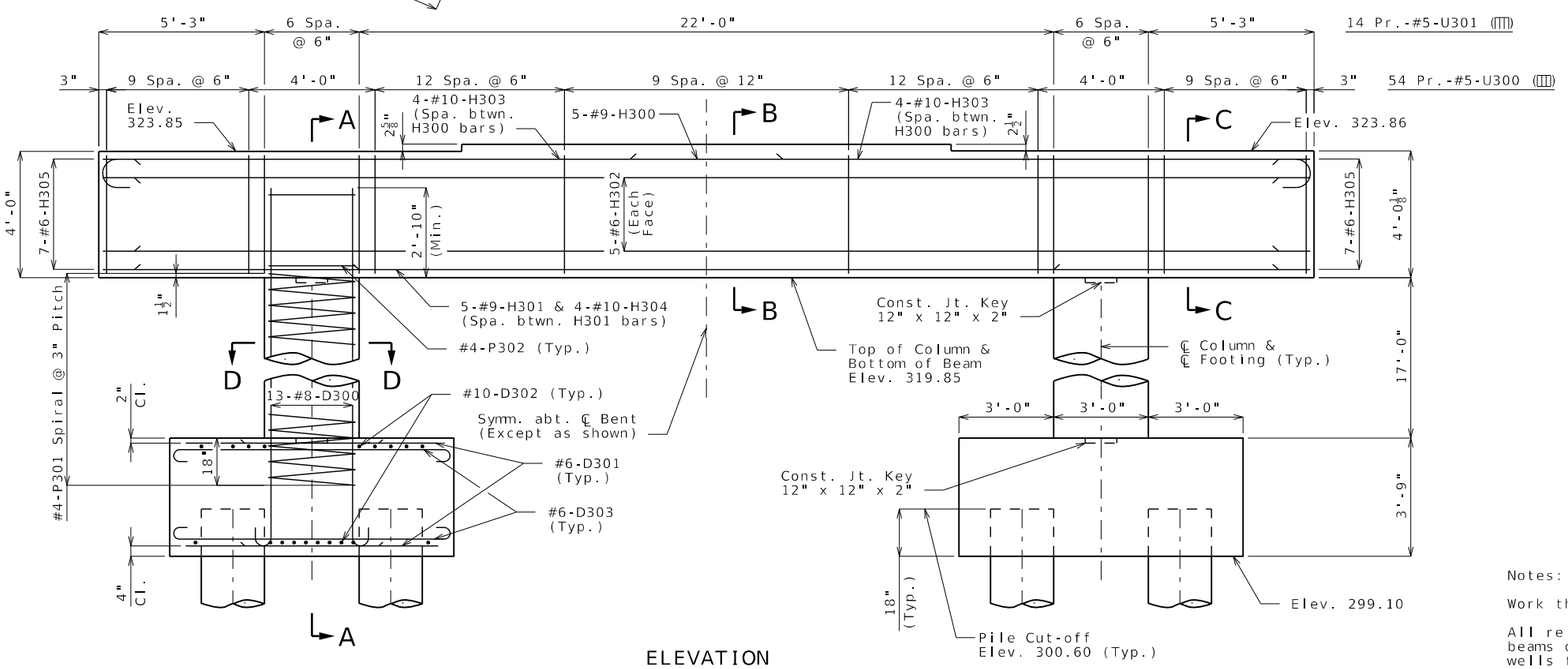

ELEVATION

DETAILS OF INTERMEDIATE BENT NO. 3

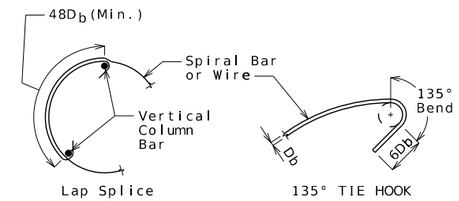

INTERMEDIATE SPLICE OF SPIRALS

Standard 135-degree tie hooks that engage vertical column reinforcing bars shall be provided at each end of splice.

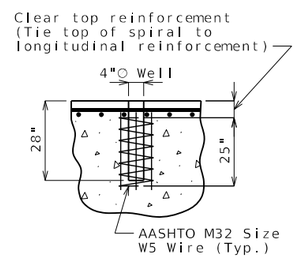

ANCHOR BOLT WELLS

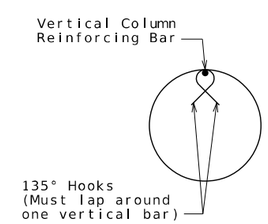

SEISMIC STIRRUP BAR

Notes:

Work this sheet with Sheet No. 11.

All reinforcing bars in the tops of substructure beams or caps shall be spaced to clear anchor bolt wells for bearings by at least 1/2".

For bearing details, see Sheet No. 17.

STATE OF MISSOURI
CHRISTOPHER T. HERSINGER
NUMBER PE-2012018080
PROFESSIONAL ENGINEER

THIS SHEET HAS BEEN SIGNED, SEALED AND DATED ELECTRONICALLY.

DATE PREPARED	
3/24/2025	
ROUTE AA	STATE MO
DISTRICT BR	SHEET NO. 10
COUNTY SCOTT	
JOB NO. JSE0248	
CONTRACT ID.	
PROJECT NO.	
BRIDGE NO. A9692	

DESCRIPTION

DATE

MISSOURI HIGHWAYS AND TRANSPORTATION COMMISSION
105 WEST CAPITOL
JEFFERSON CITY, MO 65102
1-888-ASK-MODOT (1-888-275-6636)

HR GREEN, INC.
520 MARYVILLE CENTRE DRIVE, SUITE 100
ST. LOUIS, MISSOURI 63141
PHONE: (636) 519.0990
CORPORATE LICENSE #2002006608

HRGreen

Detailed Mar. 2025
Checked Mar. 2025

Note: This drawing is not to scale. Follow dimensions.

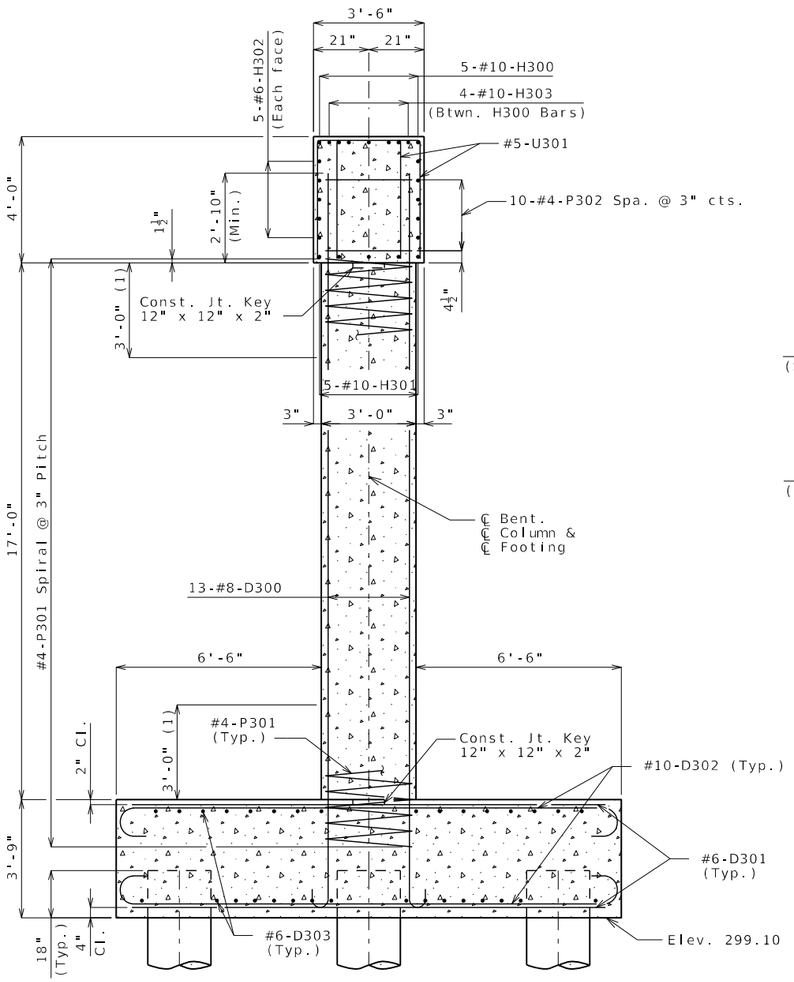

SECTION A-A

(1) Lapping of spiral reinforcement in this region is not permitted.

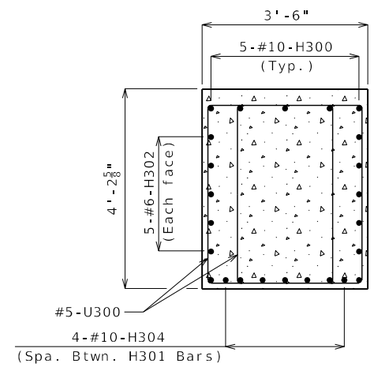

SECTION B-B

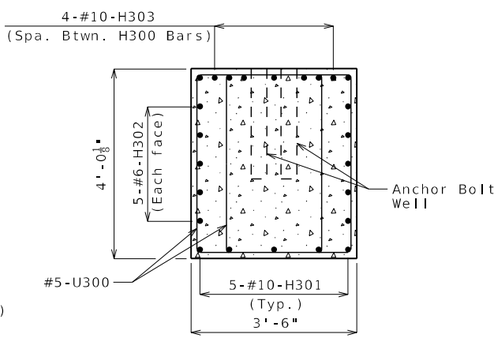

SECTION C-C

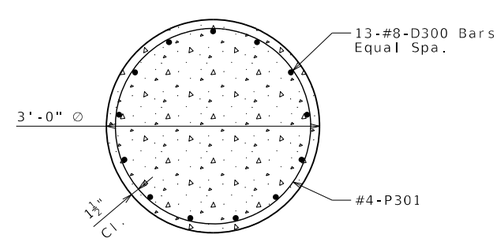

SECTION D-D

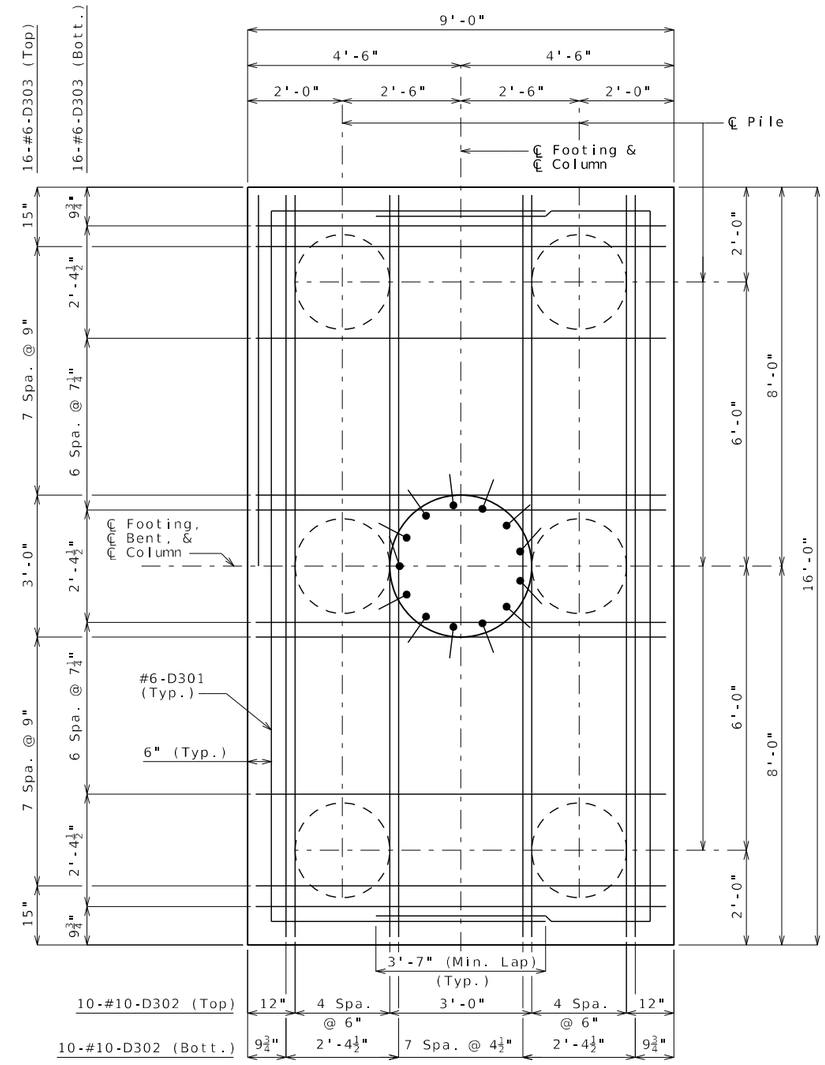

PLAN OF FOOTING

Substructure Quantity Table for Bent No. 3		
Item		Quantity
Class 1 Excavation	cu. yard	75
Galvanized Cast-in-Place Concrete Piles (24 in.)	linear foot	552
Dynamic Pile Testing	each	1
Class B Concrete (Substructure)	cu. yard	69.3
Reinforcing Steel (Bridges)	pound	14,840

These quantities are included in the estimated quantities on Sheet No. 2.

Notes:

Work this sheet with Sheet No. 10.

DETAILS OF INTERMEDIATE BENT NO. 3

Detailed Mar. 2025
Checked Mar. 2025

Note: This drawing is not to scale. Follow dimensions.

STATE OF MISSOURI
CHRISTOPHER T. HERSINGER
NUMBER PE-2012018080
PROFESSIONAL ENGINEER

THIS SHEET HAS BEEN SIGNED, SEALED AND DATED ELECTRONICALLY.

DATE PREPARED	
3/24/2025	
ROUTE: AA	STATE: MO
DISTRICT: BR	SHEET NO.: 11
COUNTY: SCOTT	
JOB NO.: JSE0248	
CONTRACT ID.	
PROJECT NO.	
BRIDGE NO.: A9692	

DESCRIPTION

DATE

MISSOURI HIGHWAYS AND TRANSPORTATION COMMISSION
105 WEST CAPITOL
JEFFERSON CITY, MO 65102
1-888-ASK-MODOT (1-888-275-6636)

HR GREEN, INC.
520 MARYVILLE CENTRE DRIVE, SUITE 100
ST. LOUIS, MISSOURI 63141
PHONE: (636) 519.0990
CORPORATE LICENSE #2002006608

HRGreen

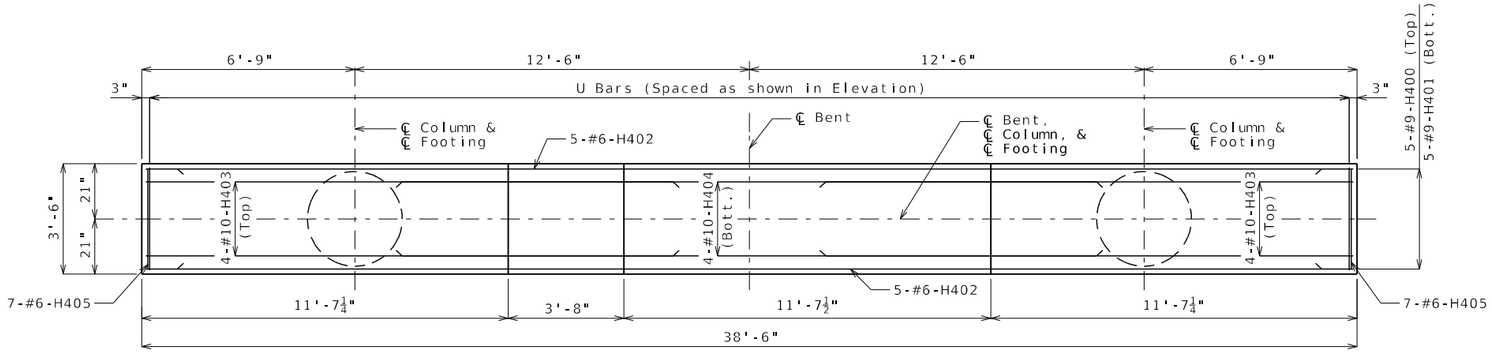

PLAN SHOWING REINFORCEMENT
(Footings not shown for clarity)

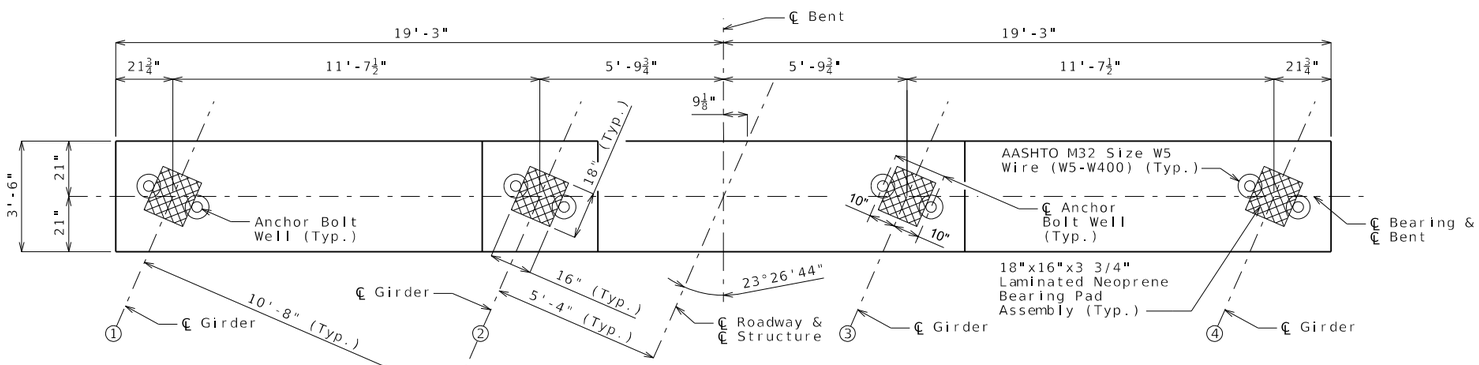

PLAN OF BEAM

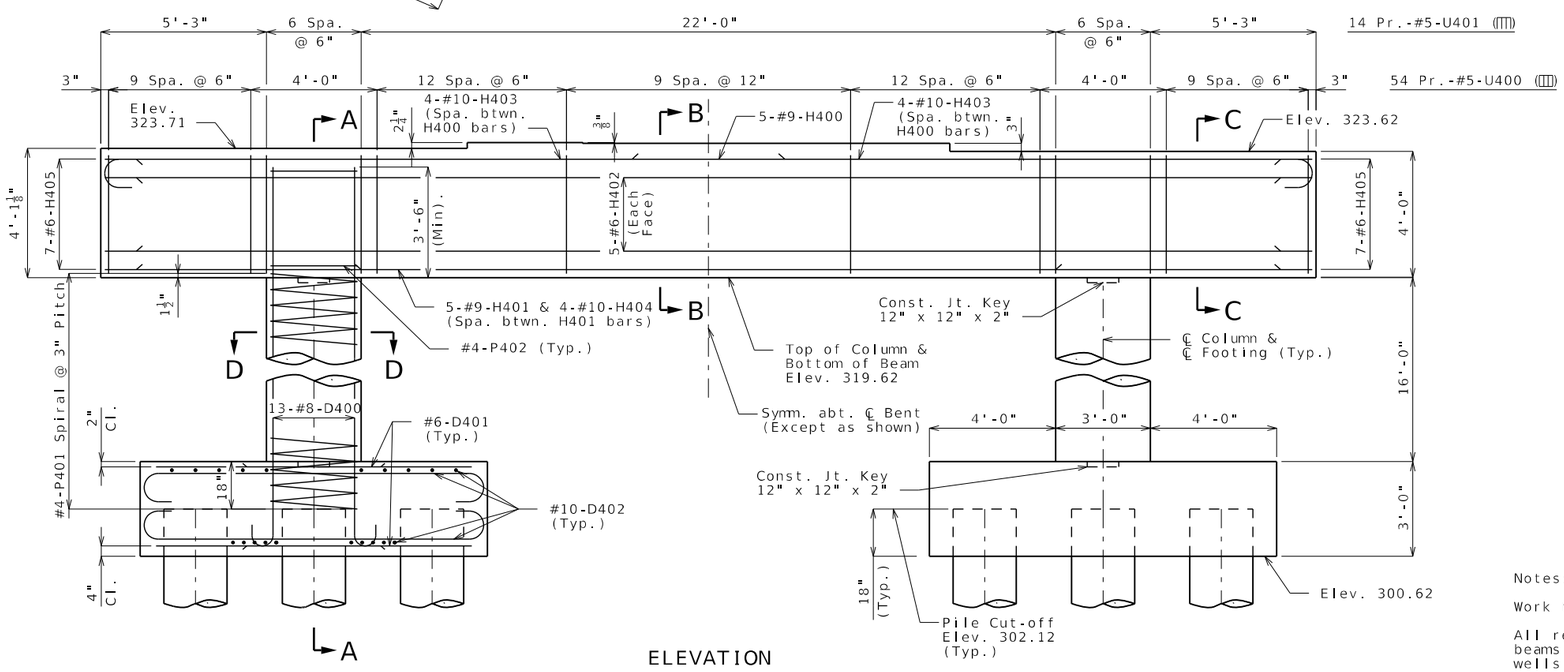

ELEVATION

DETAILS OF INTERMEDIATE BENT NO. 4

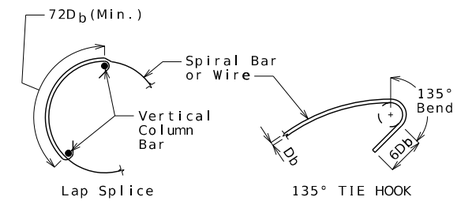

INTERMEDIATE SPLICE OF SPIRALS

Standard 135-degree tie hooks that engage vertical column reinforcing bars shall be provided at each end of splice.

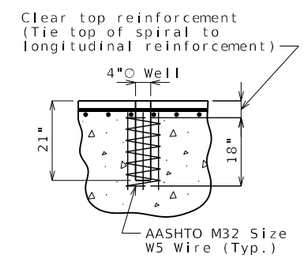

ANCHOR BOLT WELLS

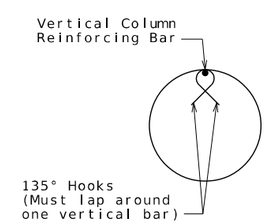

SEISMIC STIRRUP BAR

Notes:

Work this sheet with Sheet No. 13.

All reinforcing bars in the top of substructure beams or caps shall be spaced to clear anchor bolt wells for bearings by at least 1/2".

For bearing details, see Sheet No. 17.

STATE OF MISSOURI
CHRISTOPHER T. HERSINGER
NUMBER PE-2012018080
PROFESSIONAL ENGINEER

THIS SHEET HAS BEEN SIGNED, SEALED AND DATED ELECTRONICALLY.

DATE PREPARED	
3/24/2025	
ROUTE: AA	STATE: MO
DISTRICT: BR	SHEET NO.: 12
COUNTY: SCOTT	
JOB NO.: JSE0248	
CONTRACT ID.	
PROJECT NO.	
BRIDGE NO.: A9692	

DESCRIPTION

DATE

MISSOURI HIGHWAYS AND TRANSPORTATION COMMISSION
105 WEST CAPITOL
JEFFERSON CITY, MO 65102
1-888-ASK-MODOT (1-888-275-6636)

HR GREEN, INC.
520 MARYVILLE CENTRE DRIVE, SUITE 100
ST. LOUIS, MISSOURI 63141
PHONE: (636) 519.0990
CORPORATE LICENSE #2002006608

HRGreen

Detailed Mar. 2025
Checked Mar. 2025

Note: This drawing is not to scale. Follow dimensions.

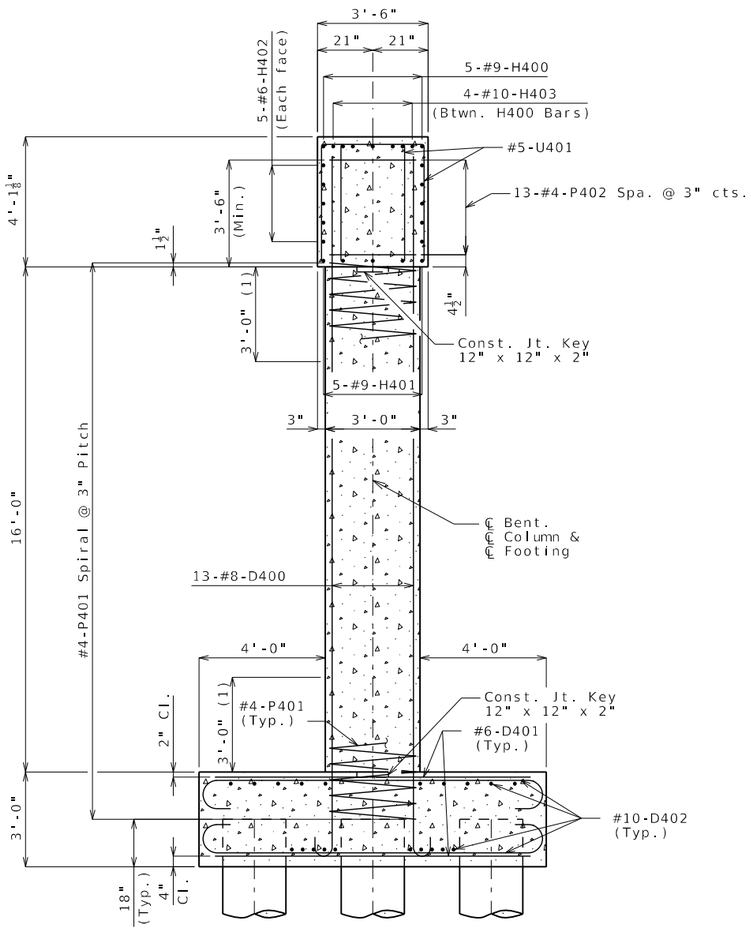

SECTION A-A

(1) Lapping of spiral reinforcement in this region is not permitted.

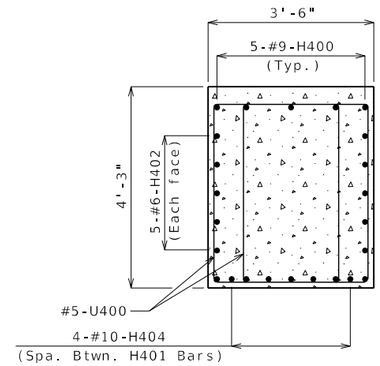

SECTION B-B

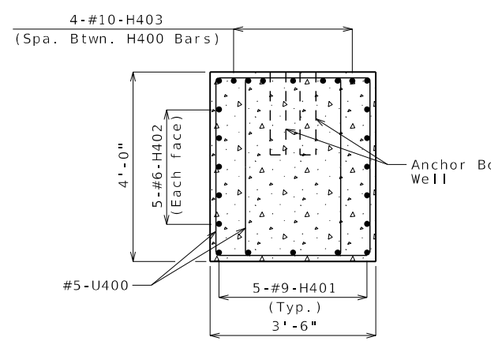

SECTION C-C

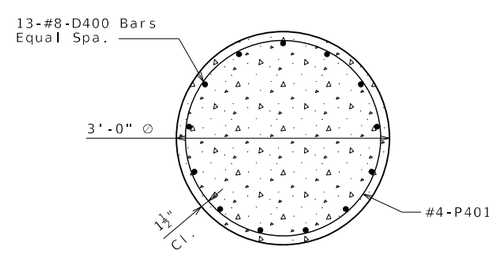

SECTION D-D

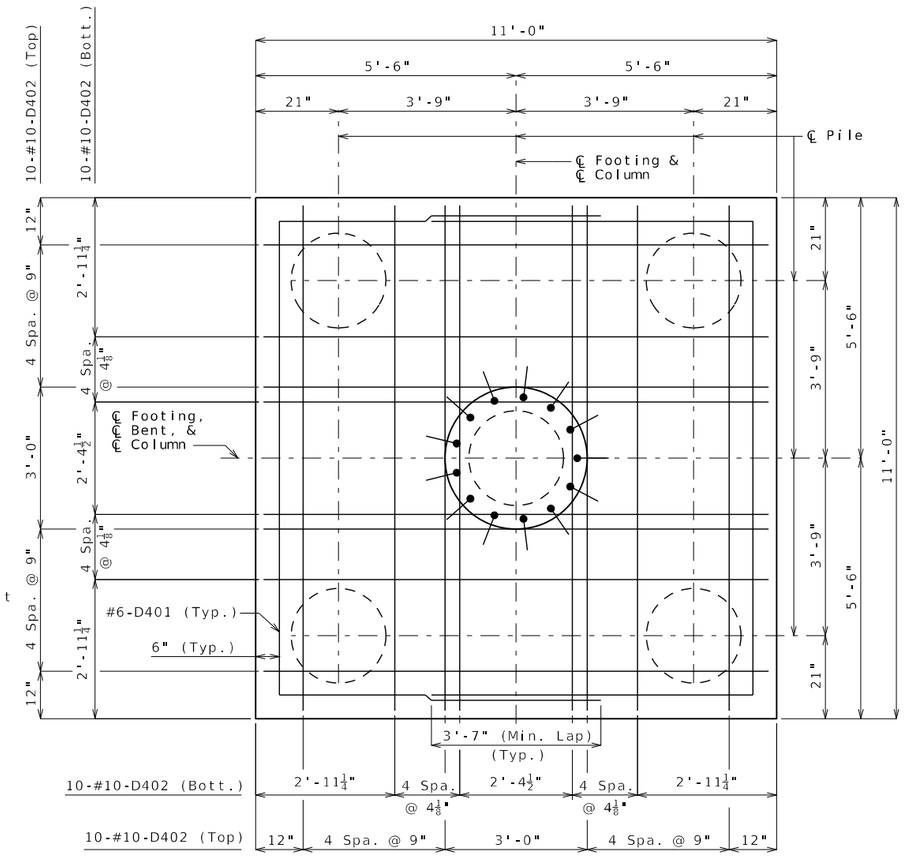

PLAN OF FOOTING

Substructure Quantity Table for Bent No. 4		
Item		Quantity
Class 1 Excavation	cu. yard	75
Galvanized Cast-in-Place Concrete Piles (24 in.)	linear foot	480
Dynamic Pile Testing	each	1
Class B Concrete (Substructure)	cu. yard	55.9
Reinforcing Steel (Bridges)	pound	7,300
Reinforcing Steel (Epoxy Coated)	pound	7,450

These quantities are included in the estimated quantities on Sheet No. 2.

Notes:

Work this sheet with Sheet No. 12.

DETAILS OF INTERMEDIATE BENT NO. 4

Detailed Mar. 2025
Checked Mar. 2025

Note: This drawing is not to scale. Follow dimensions.

STATE OF MISSOURI
CHRISTOPHER T. HERSINGER
NUMBER PE-2012018080
PROFESSIONAL ENGINEER

THIS SHEET HAS BEEN SIGNED, SEALED AND DATED ELECTRONICALLY.

DATE PREPARED	
3/24/2025	
ROUTE	STATE
AA	MO
DISTRICT	SHEET NO.
BR	13
COUNTY	
SCOTT	
JOB NO.	
JSE0248	
CONTRACT ID.	
PROJECT NO.	
BRIDGE NO.	
A9692	

DESCRIPTION	DATE

MISSOURI HIGHWAYS AND TRANSPORTATION COMMISSION
105 WEST CAPITOL
JEFFERSON CITY, MO 65102
1-888-ASK-MODOT (1-888-275-6636)

HR GREEN, INC.
520 MARYVILLE CENTRE DRIVE,
SUITE 100
ST. LOUIS, MISSOURI 63141
PHONE: (636) 519.0990
CORPORATE LICENSE #2002006608
HRGreen

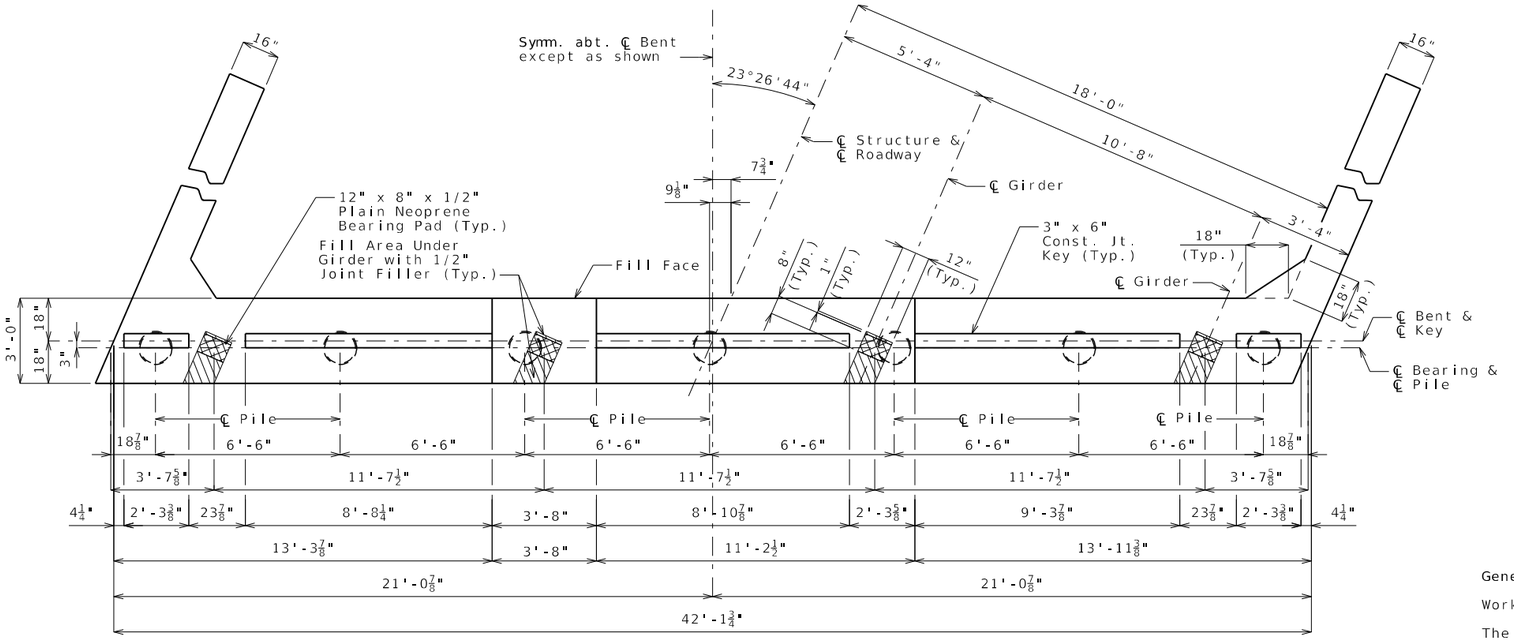

PLAN OF BEAM

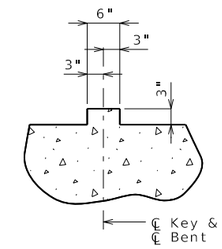

SECTION THRU KEY

General Notes:

Work this sheet with Sheets No. 15 & 16.

The U bars and pairs of V bars shall be placed parallel to centerline of roadway.

Reinforcing steel shall be shifted to clear piles. U bars shall clear piles by at least 1 1/2 inches.

Substructure Quantity Table For Bent No. 5		
Item		Quantity
Class 1 Excavation	cu. yard	45
Galvanized Cast-In-Place Concrete Piles (14 in.)	linear foot	350
Dynamic Pile Testing	each	1
Class B Concrete (Substructure)	cu. yard	18.9

These quantities are included in the Estimated Quantities table on Sheet No. 2.

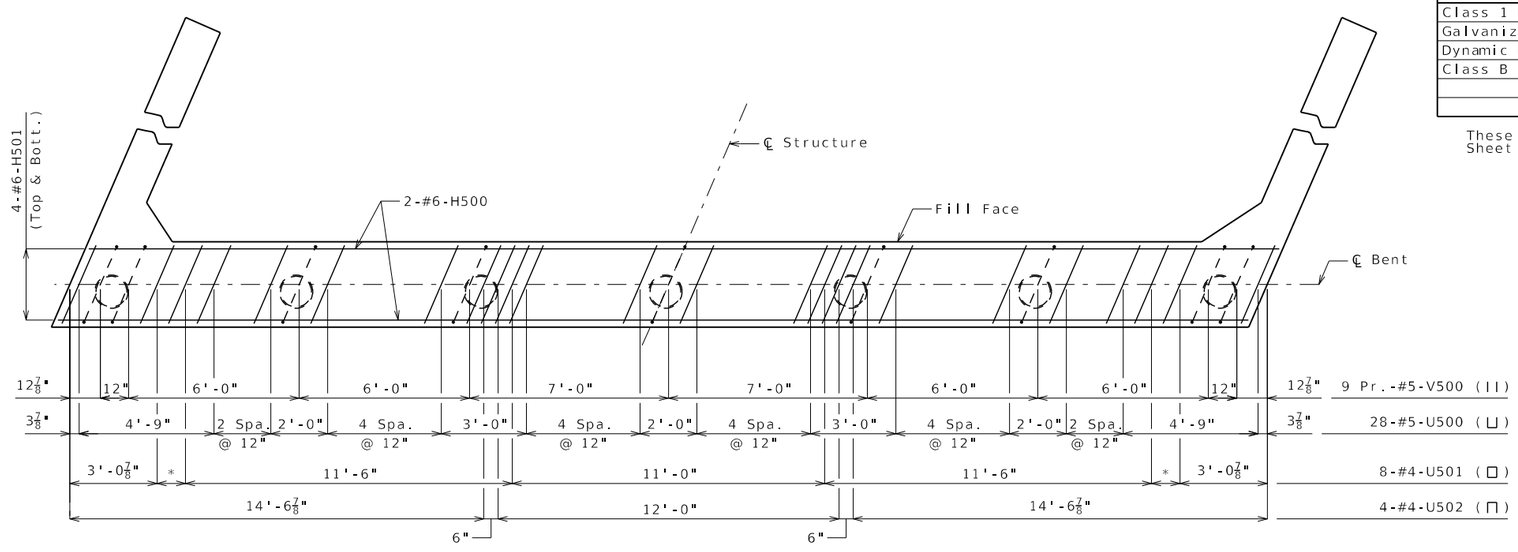

* 2 Spaces @ 6"

PLAN OF BEAM SHOWING REINFORCEMENT
Keys not shown for clarity.

DETAILS OF END BENT NO. 5

Detailed Mar. 2025
Checked Mar. 2025

Note: This drawing is not to scale. Follow dimensions.

STATE OF MISSOURI
CHRISTOPHER T. HERSINGER
NUMBER PE-2012018080
PROFESSIONAL ENGINEER

THIS SHEET HAS BEEN SIGNED, SEALED AND DATED ELECTRONICALLY.

DATE PREPARED	
3/24/2025	
ROUTE: AA	STATE: MO
DISTRICT: BR	SHEET NO.: 14
COUNTY: SCOTT	
JOB NO.: JSE0248	
CONTRACT ID.	
PROJECT NO.	
BRIDGE NO.: A9692	

DATE	DESCRIPTION

MISSOURI HIGHWAYS AND TRANSPORTATION COMMISSION
105 WEST CAPITOL
JEFFERSON CITY, MO 65102
1-888-ASK-MODOT (1-888-275-6636)

HR GREEN, INC.
520 MARYVILLE CENTRE DRIVE, SUITE 100
ST. LOUIS, MISSOURI 63141
PHONE: (636) 519.0990
CORPORATE LICENSE #2002006608

HRGreen

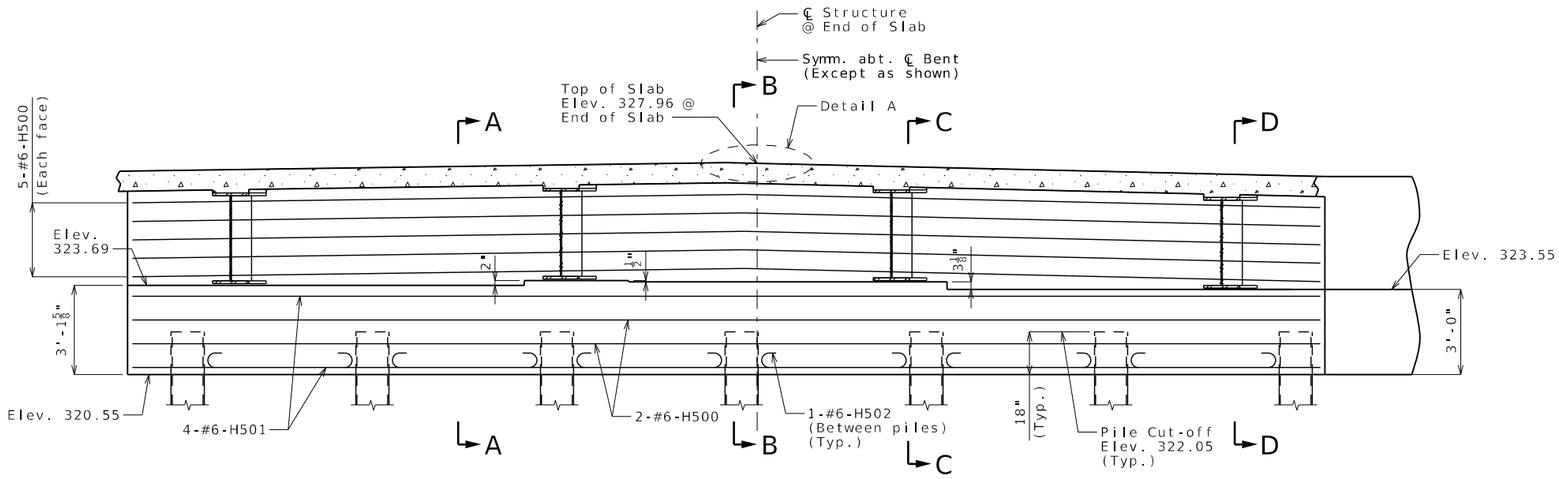

SECTION NEAR END BENT

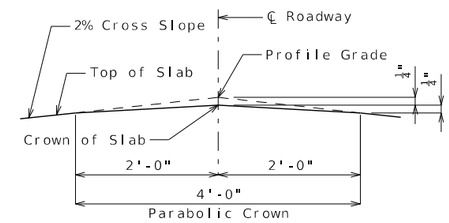

DETAIL A

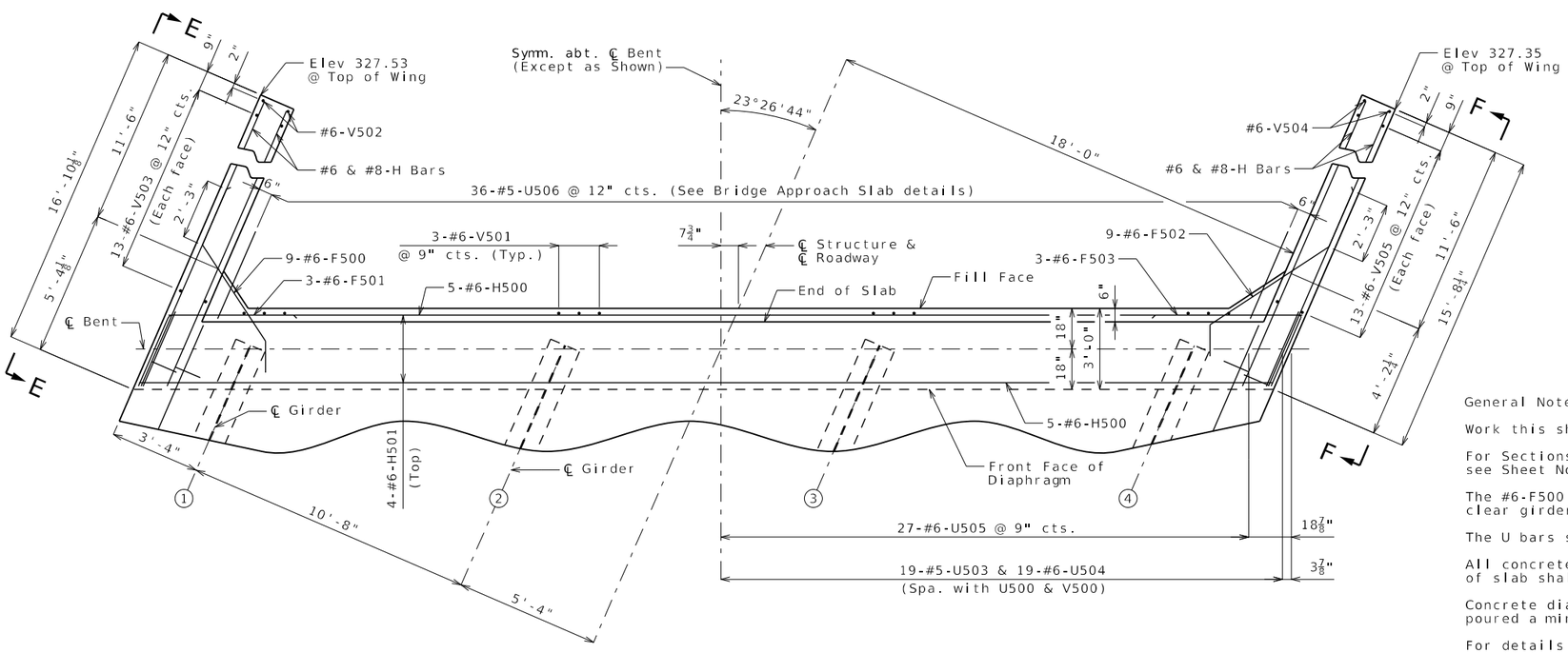

PART PLAN

DETAILS OF END BENT NO. 5

General Notes:

Work this sheet with Sheets No. 14 & 16.

For Sections A-A, B-B, C-C & D-D and Elevations E-E & F-F, see Sheet No. 16.

The #6-F500 & #6-F502 bars shall be bent in the field to clear girders.

The U bars shall be placed parallel to centerline of roadway.

All concrete in the end bent above top of beam and below top of slab shall be Class B-2.

Concrete diaphragms at the integral end bents shall be poured a minimum of 12 hours before the slab is poured.

For details of cast-in-place concrete piles, see Sheet No. 3.

For details of vertical drain at end bents, see Sheet No. 7.

For details of bridge approach slab, see Sheet No. 27.

Detailed Mar. 2025
Checked Mar. 2025

Note: This drawing is not to scale. Follow dimensions.

\\hrgreen.com\hrg\Data\2024\2404289\CAD\Bridge\Plan_Sheets\B_A9692_015_JSE0248_EndBent5Dtls.dgn 5:14:03 PM 3/24/2025

STATE OF MISSOURI
CHRISTOPHER T. HERSINGER
NUMBER PE-2012018080
PROFESSIONAL ENGINEER

THIS SHEET HAS BEEN SIGNED, SEALED AND DATED ELECTRONICALLY.

DATE PREPARED	3/24/2025
ROUTE	AA
STATE	MO
DISTRICT	BR
SHEET NO.	15
COUNTY	SCOTT
JOB NO.	JSE0248
CONTRACT ID.	
PROJECT NO.	
BRIDGE NO.	A9692

DATE	DESCRIPTION

MISSOURI HIGHWAYS AND TRANSPORTATION COMMISSION
105 WEST CAPITOL
JEFFERSON CITY, MO 65102
1-888-ASK-MODOT (1-888-275-6636)

HR GREEN, INC.
520 MARYVILLE CENTRE DRIVE, SUITE 100
ST. LOUIS, MISSOURI 63141
PHONE: (636) 519.0990
CORPORATE LICENSE #2002006608
HRGreen

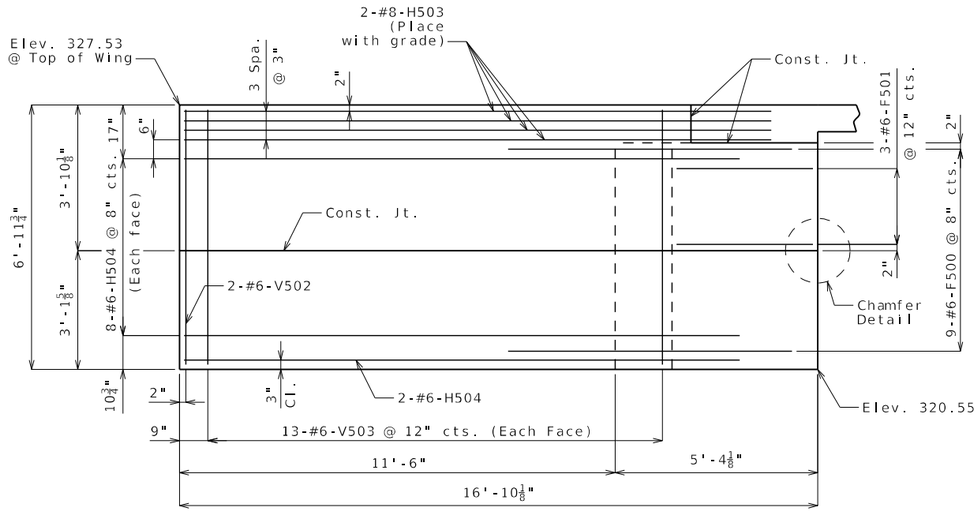

SECTION E-E

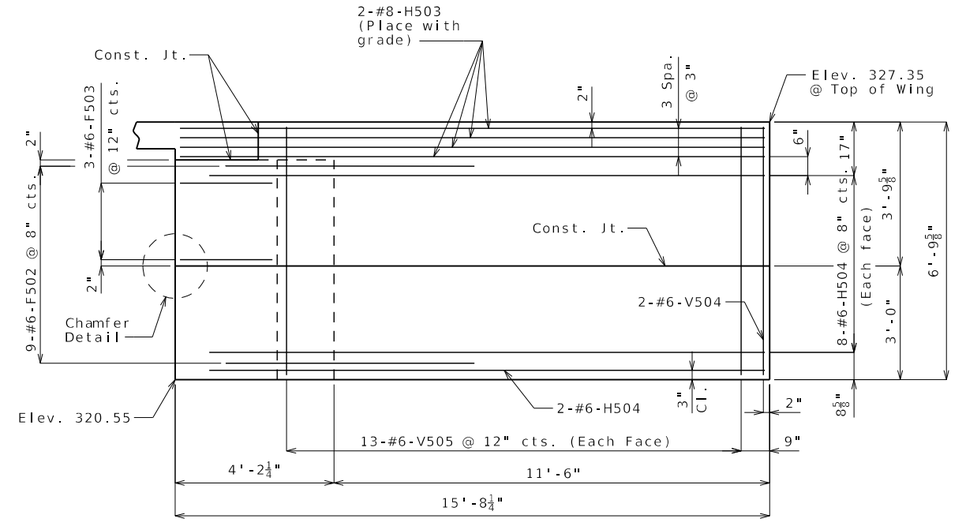

SECTION F-F

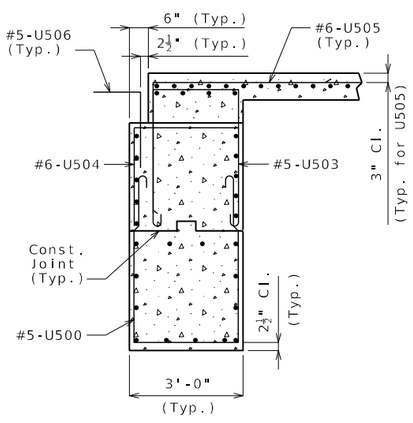

SECTION A-A

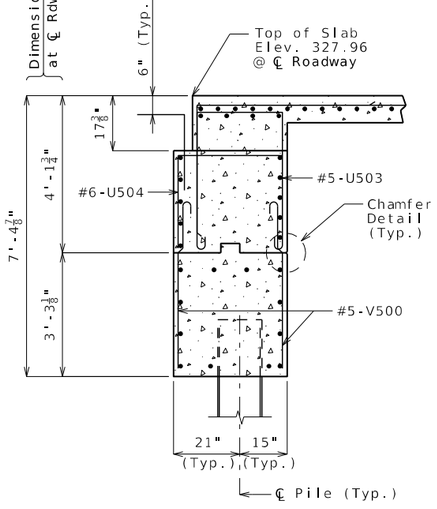

SECTION B-B

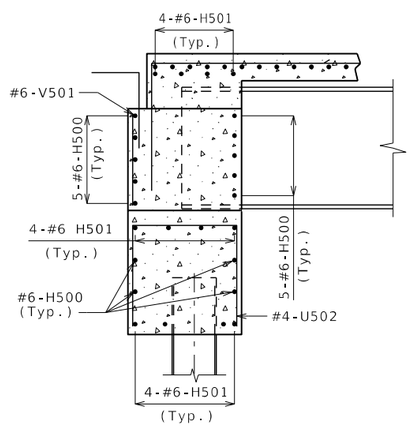

SECTION C-C

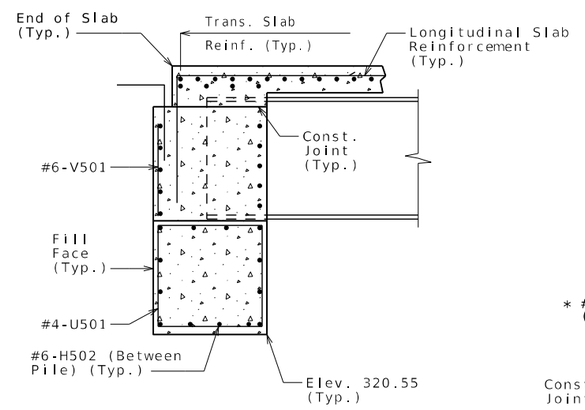

SECTION D-D

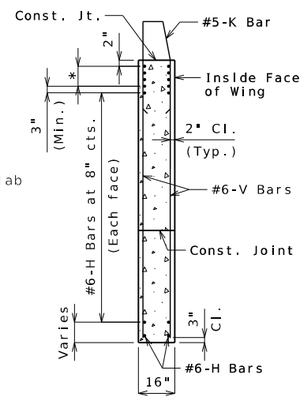

TYPICAL SECTION
THRU WING

* #8-H Bars at 3" cts.
(Each face)(Place with grade)

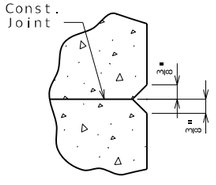

CHAMFER DETAIL

General Notes:

Work this sheet with Sheets No. 14 & 15.

For reinforcement of the barrier, see Sheet No. 26.

DETAILS OF END BENT NO. 5

Detailed Mar. 2025
Checked Mar. 2025

Note: This drawing is not to scale. Follow dimensions.

STATE OF MISSOURI
CHRISTOPHER T. HERSINGER
NUMBER PE-2012018080
PROFESSIONAL ENGINEER

THIS SHEET HAS BEEN SIGNED, SEALED AND DATED ELECTRONICALLY.

DATE PREPARED	
3/24/2025	
ROUTE	STATE
AA	MO
DISTRICT	SHEET NO.
BR	16
COUNTY	
SCOTT	
JOB NO.	
JSE0248	
CONTRACT ID.	
PROJECT NO.	
BRIDGE NO.	
A9692	

DESCRIPTION

DATE

MISSOURI HIGHWAYS AND TRANSPORTATION COMMISSION

105 WEST CAPITOL
JEFFERSON CITY, MO 65102
1-888-ASK-MODOT (1-888-275-6636)

HR GREEN, INC.
520 MARYVILLE CENTRE DRIVE,
SUITE 100
ST. LOUIS, MISSOURI 63141
PHONE: (636) 519.0990
CORPORATE LICENSE #2002006608

HRGreen

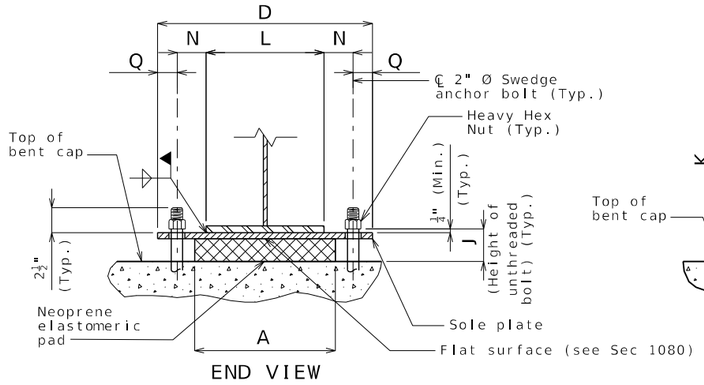

END VIEW

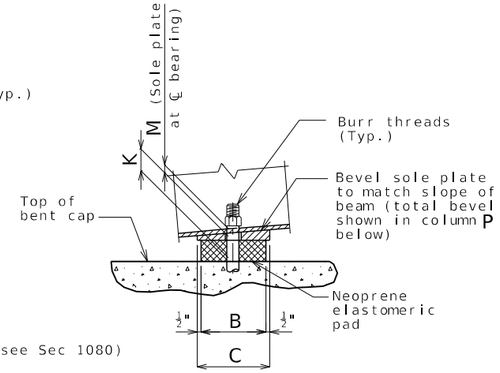

SIDE VIEW

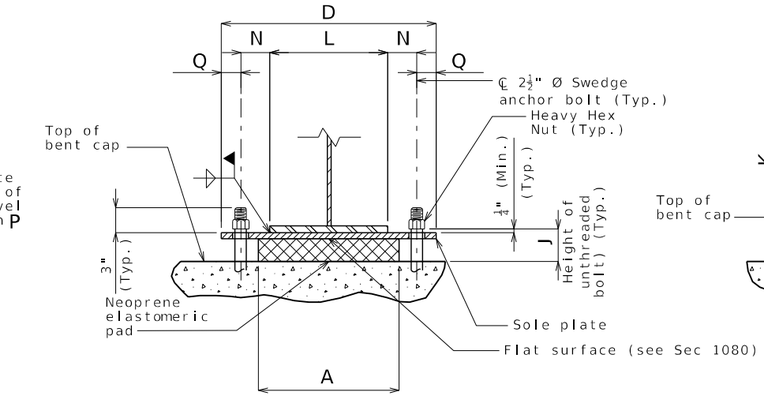

END VIEW

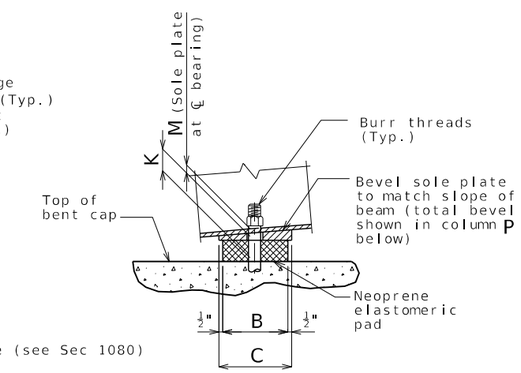

SIDE VIEW

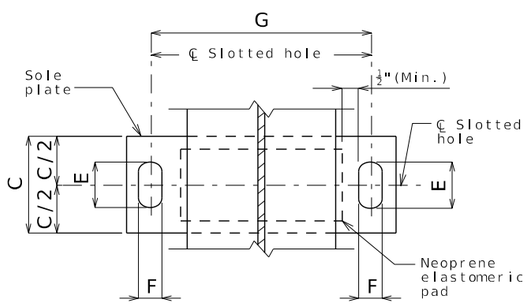

PART PLAN

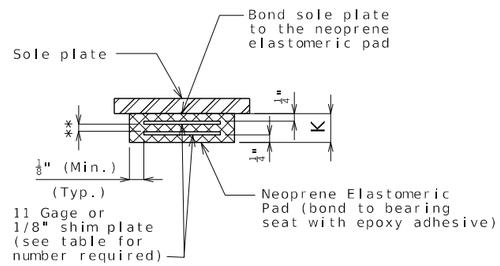

** Layers of 1/2" elastomer alternating with 11 gage or 1/8" shim plate

NEOPRENE ELASTOMERIC PAD

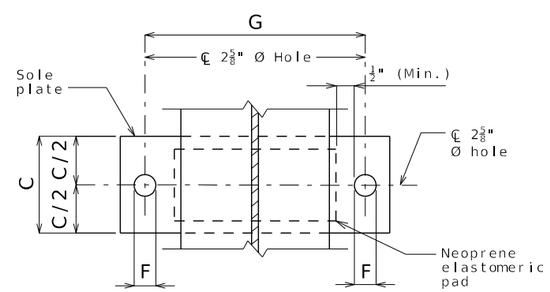

PART PLAN

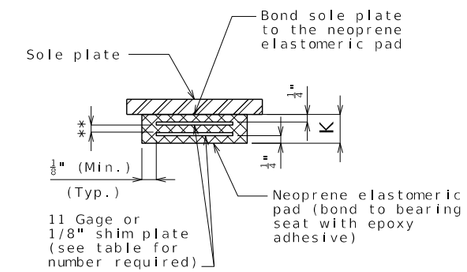

** Layers of 1/2" elastomer alternating with 11 gage or 1/8" shim plate

NEOPRENE ELASTOMERIC PAD

EXPANSION BEARINGS																	
BENT NO.	A	B	C	D	E	F	G	J	K	L	M	N	P	Q	R	NUMBER OF SHIM PLATES *	NUMBER REQUIRED
2	16"	18"	19"	26"	5"	2 1/8"	20"	5 1/2"	3 3/4"	14"	1 1/2"	3"	1/8"	3"	3/4"	6	4
4	16"	18"	19"	26"	5"	2 1/8"	20"	5 1/2"	3 3/4"	14"	1 1/2"	3"	1/8"	3"	3/4"	6	4
																TOTAL BEARINGS	8

* The required shim plate shall be placed between layers of elastomer and molded together to form an integral unit.

FIXED BEARINGS																
BENT NO.	A	B	C	D	F	G	J	K	L	M	N	P	Q	NUMBER OF SHIM PLATES *	NUMBER REQUIRED
3	18"	20"	21"	30"	2 5/8"	22 1/2"	5 1/2"	3 3/4"	16"	1 1/2"	3 1/4"	0"	3 3/4"	6	4
														TOTAL BEARINGS	4

* The required shim plate shall be placed between layers of elastomer and molded together to form an integral unit.

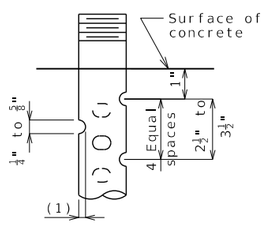

DETAIL OF 3/4"Ø THRU 2 1/2"Ø ANCHOR BOLTS

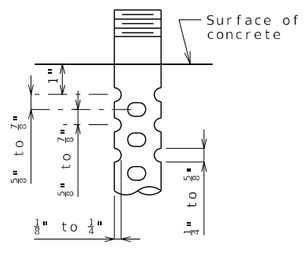

OPTIONAL DETAIL OF 1 3/8"Ø THRU 2 1/2"Ø ANCHOR BOLTS

SWEDGE ANCHOR BOLT DETAILS

(1) 1/8" for 3/4"Ø thru 1 1/4"Ø anchor bolts

1/8" to 1/4" for 1 3/8"Ø thru 2 1/2"Ø anchor bolts

GENERAL NOTES:

Anchor bolts shall be ASTM F1554 Grade 55 swedged bolts with ASTM A563 Grade A Heavy Hex nuts. The 2" dia. anchor bolts at Int. Bents No. 2 and 4 shall extend 18" into the concrete and the 2 1/2" dia. anchor bolts at Int. Bent No. 3 shall extend 25" into the concrete. Actual manufacturer's certified mill test reports (chemical and mechanical) shall be provided. Swedging shall be 1" less than extension into the concrete.

Anchor bolt shall be at the centerline of slotted hole at 60°F. Bearing position shall be adjusted R for each 10° fall or rise in temperature at installation.

Anchor bolts and heavy hex nuts shall be coated with a minimum of two coats of inorganic zinc primer to provide a total dry film thickness of 4 mils minimum, 6 mils maximum, or galvanized in accordance with Sec 1081.

Neoprene Elastomeric Pads shall be 60 Durometer.

Structural steel for sole plate shall be ASTM A709 Grade 50W. The welds shall have corrosion resistance and weathering characteristics compatible with the base material.

Laminated Neoprene Bearing Pad Assembly shall be in accordance with Sec 716.

LAMINATED NEOPRENE BEARING PAD ASSEMBLY

Detailed Mar. 2025
Checked Mar. 2025

Note: This drawing is not to scale. Follow dimensions.

STATE OF MISSOURI
CHRISTOPHER T. HERSINGER
NUMBER PE-2012018080
PROFESSIONAL ENGINEER

THIS SHEET HAS BEEN SIGNED, SEALED AND DATED ELECTRONICALLY.

DATE PREPARED	
3/24/2025	
ROUTE: AA	STATE: MO
DISTRICT: BR	SHEET NO.: 17
COUNTY: SCOTT	
JOB NO.: JSE0248	
CONTRACT ID.	
PROJECT NO.	
BRIDGE NO.: A9692	

DATE	DESCRIPTION

MISSOURI HIGHWAYS AND TRANSPORTATION COMMISSION
105 WEST CAPITOL
JEFFERSON CITY, MO 65102
1-888-ASK-MODOT (1-888-275-6636)

HR GREEN, INC.
520 MARYVILLE CENTRE DRIVE, SUITE 100
ST. LOUIS, MISSOURI 63141
PHONE: (636) 519.0990
CORPORATE LICENSE #2002006608
HRGreen

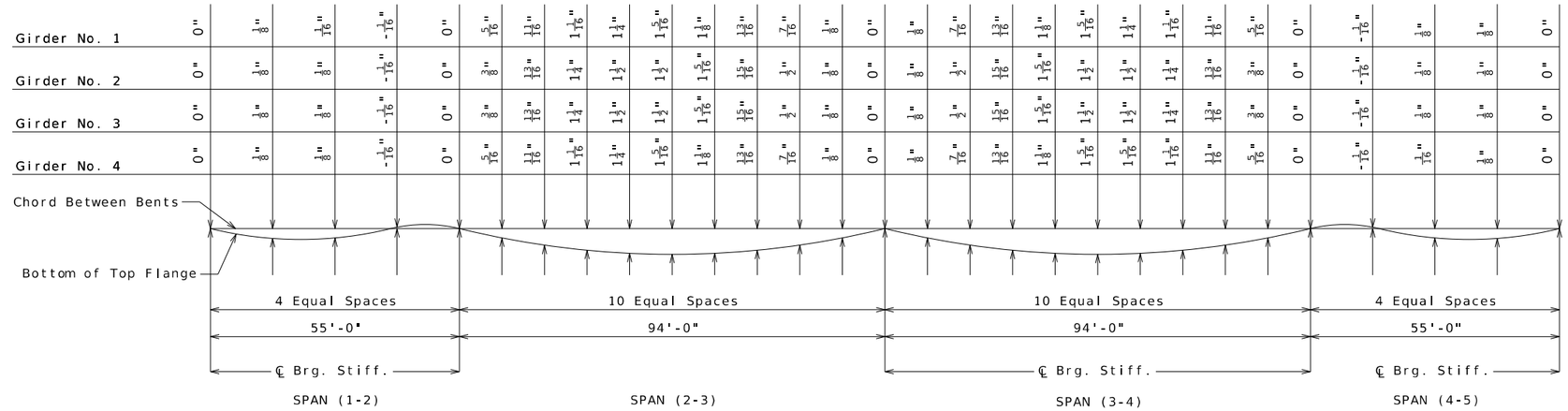

DEAD LOAD DEFLECTION

14.6% of dead load deflection is due to the weight of structural steel.

Dead load deflection includes weight of structural steel, concrete slab, and barrier.

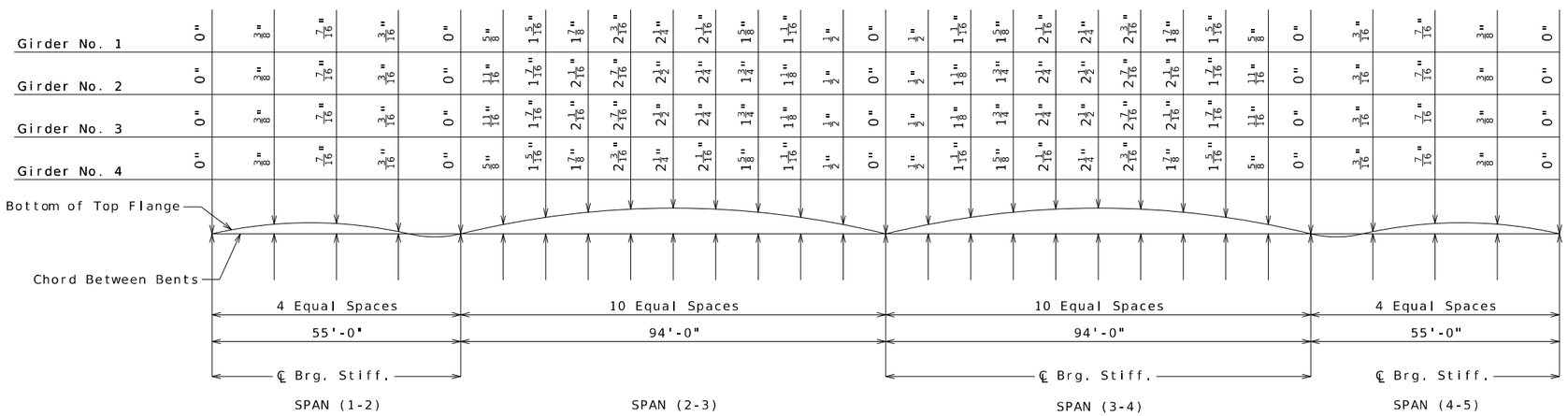

PLATE GIRDER CAMBER DIAGRAM

Camber includes allowance for vertical curve and dead load deflection due to concrete slab, barrier curb and structural steel.

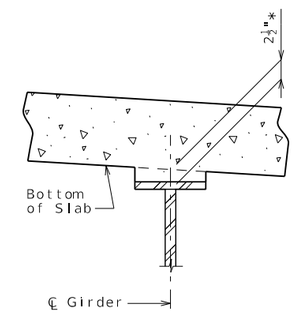

THEORETICAL SLAB HAUNCH

* Dimension (bottom of slab to top of web) may vary if girder camber after erection differs from plan camber by more than the % of Dead Load Deflection due to weight of structural steel. No payment will be made for any adjustment in forming or additional concrete required for variation in haunching.

Theoretical Bottom of Slab Elevations at Centerline of Girder (Prior to Forming for Slab) **

Girder Number	Span (1-2) (55'-0" ℄ Brg. - ℄ Brg.)					Span (2-3) (94'-0" ℄ Brg. - ℄ Brg.)										
	℄ Brg.	.25	.50	.75	℄ Brg.	℄ Brg.	.10	.20	.30	.40	.50	.60	.70	.80	.90	℄ Brg.
1	326.67	326.84	326.98	327.10	327.22	327.22	327.31	327.41	327.49	327.56	327.61	327.64	327.65	327.65	327.65	327.66
2	326.94	327.10	327.24	327.35	327.47	327.47	327.56	327.66	327.75	327.82	327.86	327.88	327.89	327.88	327.87	327.87
3	326.99	327.15	327.28	327.39	327.51	327.51	327.60	327.69	327.77	327.84	327.88	327.90	327.90	327.89	327.88	327.88
4	326.83	326.98	327.11	327.22	327.33	327.33	327.41	327.49	327.57	327.63	327.67	327.69	327.69	327.68	327.67	327.67

Girder Number	Span (3-4) (94'-0" ℄ Brg. - ℄ Brg.)											Span (4-5) (55'-0" ℄ Brg. - ℄ Brg.)				
	℄ Brg.	.10	.20	.30	.40	.50	.60	.70	.80	.90	℄ Brg.	℄ Brg.	.25	.50	.75	℄ Brg.
1	327.66	327.67	327.70	327.72	327.73	327.72	327.70	327.65	327.59	327.52	327.45	327.45	327.36	327.27	327.16	327.03
2	327.87	327.89	327.91	327.94	327.95	327.94	327.92	327.86	327.79	327.71	327.63	327.63	327.54	327.45	327.34	327.20
3	327.88	327.89	327.91	327.93	327.94	327.93	327.90	327.84	327.77	327.69	327.61	327.61	327.51	327.41	327.30	327.15
4	327.67	327.67	327.69	327.70	327.70	327.69	327.65	327.60	327.53	327.44	327.36	327.36	327.26	327.16	327.04	326.89

** Elevations are based on a constant slab thickness of 8 1/2" and include allowance for theoretical dead load deflections due to weight of slab and barrier.

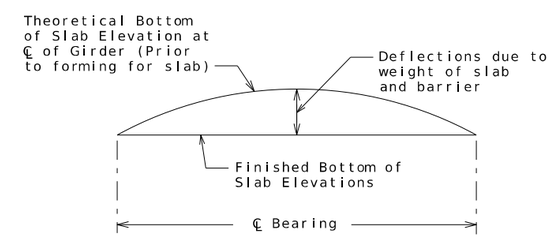

TYPICAL SLAB ELEVATIONS DIAGRAM

STATE OF MISSOURI
CHRISTOPHER T. HERSINGER
NUMBER PE-2012018080
PROFESSIONAL ENGINEER

THIS SHEET HAS BEEN SIGNED, SEALED AND DATED ELECTRONICALLY.

DATE PREPARED: 3/24/2025

ROUTE	STATE
AA	MO
DISTRICT	SHEET NO.
BR	18

COUNTY: SCOTT

JOB NO.: JSE0248

CONTRACT ID.

PROJECT NO.

BRIDGE NO.: A9692

DATE	DESCRIPTION

MISSOURI HIGHWAYS AND TRANSPORTATION COMMISSION
105 WEST CAPITOL
JEFFERSON CITY, MO 65102
1-888-ASK-MODOT (1-888-275-6636)

HR GREEN, INC.
520 MARYVILLE CENTRE DRIVE, SUITE 100
ST. LOUIS, MISSOURI 63141
PHONE: (636) 519.0990
CORPORATE LICENSE #2002006608

Detailed Mar. 2025
Checked Mar. 2025

Note: This drawing is not to scale. Follow dimensions.

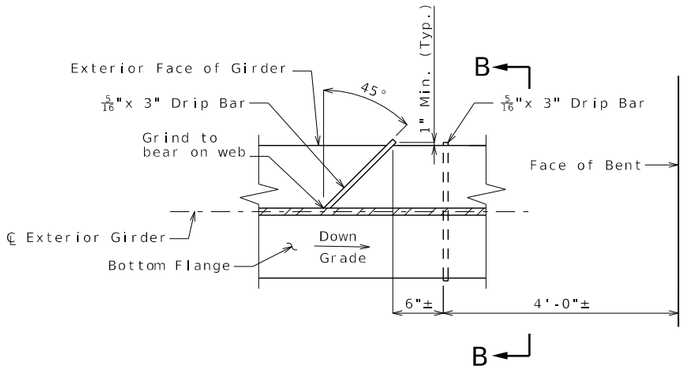

DRIP BAR DETAIL NEAR BENTS

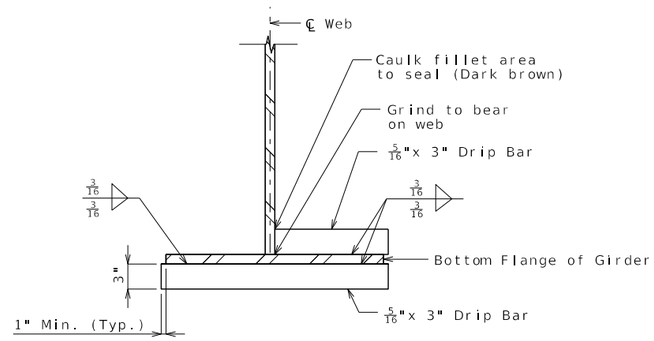

SECTION B-B

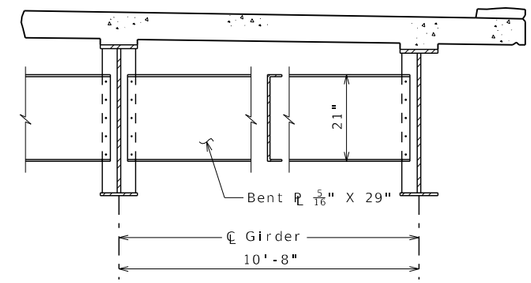

TYPICAL PART SECTION SHOWING INTERMEDIATE DIAPHRAGMS

At the contractor's option, holes in the diaphragm plate of non slab bearing diaphragms may be made 3/16" larger than the nominal diameter of the bolt. A hardened washer shall be used under the bolt head and nut when this option is used. Holes in the girder diaphragm connection plate or transverse web stiffener shall be standard size.

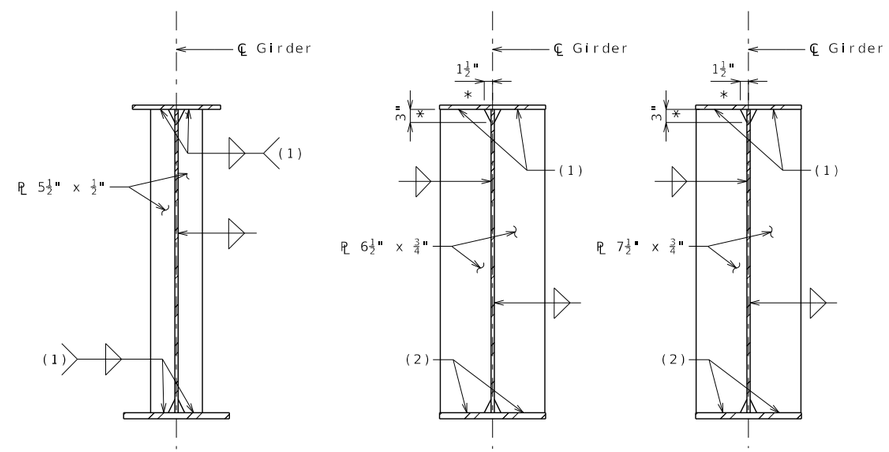

INTERMEDIATE DIAPHRAGM CONNECTION PLATE

BENT 1,2,4, AND 5 BEARING STIFFENER (NO ATTACHMENTS)

BENT 3 BEARING STIFFENER (NO ATTACHMENTS)

WELDING DETAILS

(1) Tight fit

(2) Grind or mill to bear.

* Typical for all intermediate diaphragm connection plates and bearing stiffeners.

STEEL DIAPHRAGMS

Detailed Mar. 2025
Checked Mar. 2025

Note: This drawing is not to scale. Follow dimensions.

STATE OF MISSOURI
CHRISTOPHER T. HERSINGER
NUMBER PE-2012018080
PROFESSIONAL ENGINEER

THIS SHEET HAS BEEN SIGNED, SEALED AND DATED ELECTRONICALLY.

DATE PREPARED	
3/24/2025	
ROUTE: AA	STATE: MO
DISTRICT: BR	SHEET NO.: 19
COUNTY: SCOTT	
JOB NO.: JSE0248	
CONTRACT ID.	
PROJECT NO.	
BRIDGE NO.: A9692	

DESCRIPTION	DATE

MISSOURI HIGHWAYS AND TRANSPORTATION COMMISSION
105 WEST CAPITOL
JEFFERSON CITY, MO 65102
1-888-ASK-MODOT (1-888-275-6636)

HR GREEN, INC.
520 MARYVILLE CENTRE DRIVE, SUITE 100
ST. LOUIS, MISSOURI 63141
PHONE: (636) 519.0990
CORPORATE LICENSE #2002006608
HRGreen

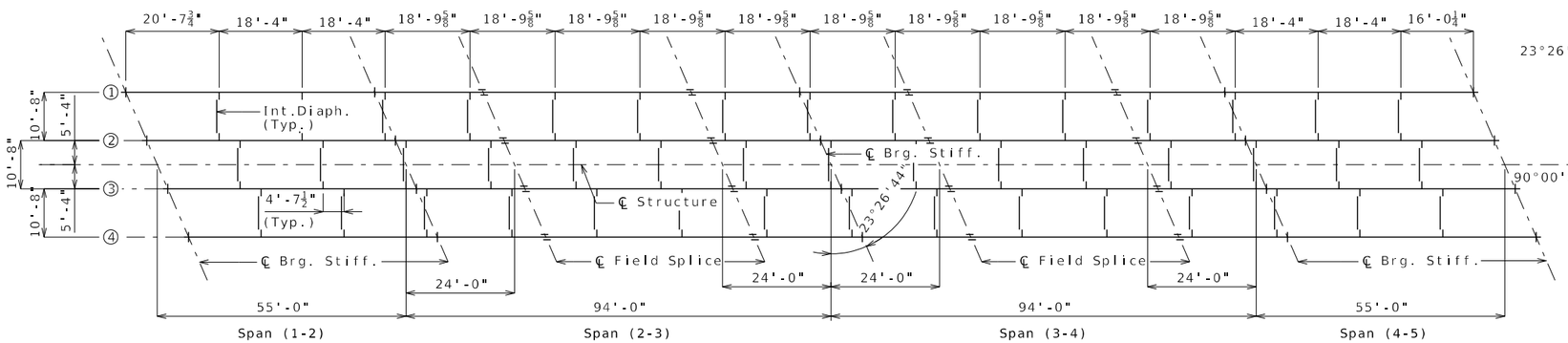

PLAN OF STRUCTURAL STEEL

Longitudinal dimensions are horizontal

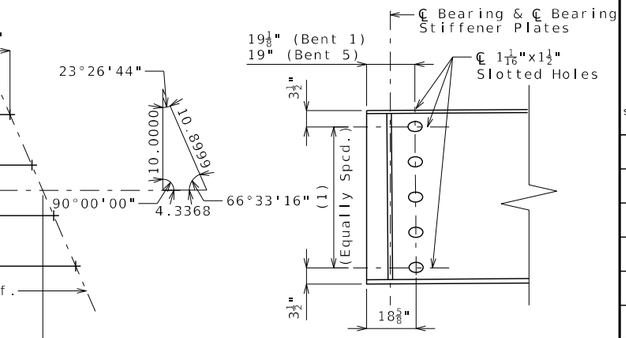

DETAIL OF WEB HOLES AT END BENTS

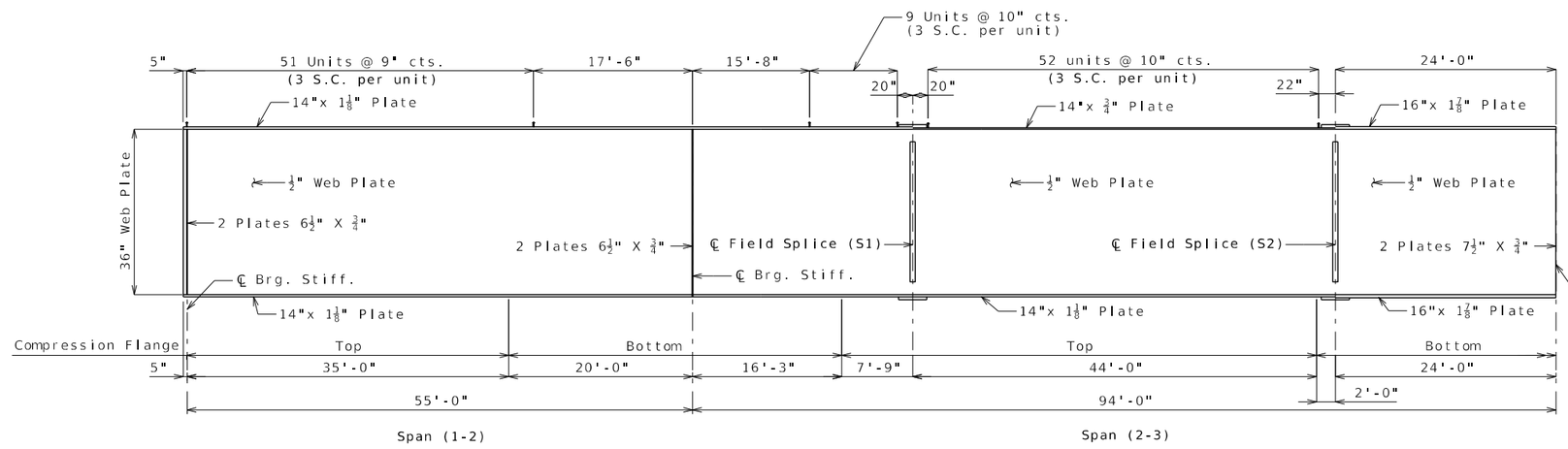

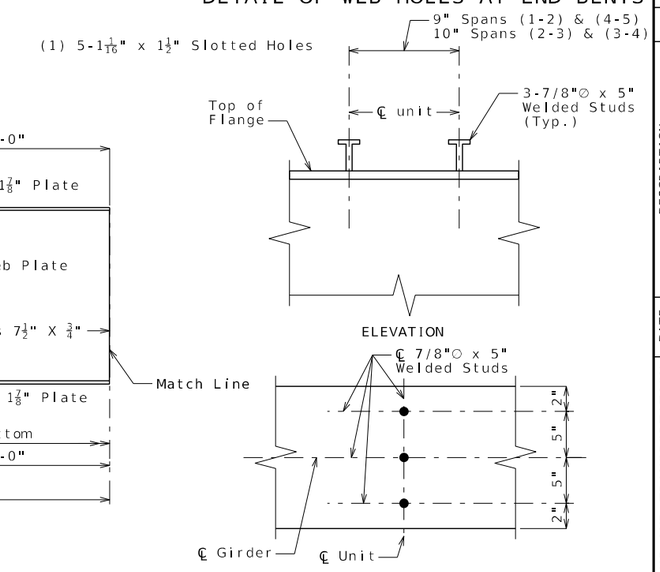

DETAILS OF SHEAR CONNECTOR UNITS

(3 STUDS PER UNIT)

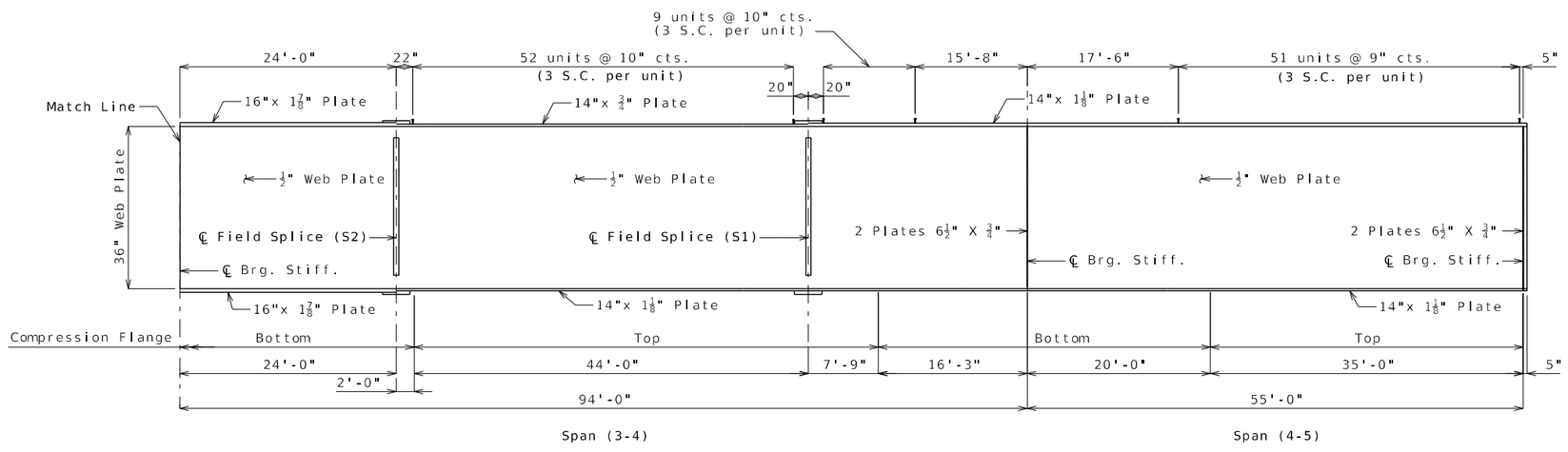

ELEVATION OF GIRDER

Notes:

* Indicates flange plate subject to notch toughness requirements. All web plates shall be subject to notch toughness requirements.

Weight of 2640 pounds of shear connectors is included in the weight of Fabricated Structural Low Alloy Steel (Plate Girder) A709, Grade 50W.

Shear connectors shall be in accordance with Sec 712, 1037 & 1080.

Plate girders shall be fabricated in accordance with the camber diagram shown on Sheet No. 18.

For details of bolted field splices and Part Longitudinal Section, see Sheet No. 21.

For details of intermediate diaphragms, bearing stiffeners, and intermediate diaphram connection plates, see Sheet No. 19.

For location of slab drain attachment holes, see Slab Drain Details Sheet.

Fabricated structural steel shall be ASTM A709, Grade 50W.

Longitudinal dimensions are horizontal from ℄ bearing to ℄ bearing. See Part-Longitudinal Sections on Sheet No. 21.

Detailed Mar. 2025
Checked Mar. 2025

Note: This drawing is not to scale. Follow dimensions.

STEEL PLATE GIRDER DETAILS

STATE OF MISSOURI
CHRISTOPHER T. HERSINGER
NUMBER PE-2012018080
PROFESSIONAL ENGINEER

THIS SHEET HAS BEEN SIGNED, SEALED AND DATED ELECTRONICALLY.

DATE PREPARED	
3/24/2025	
ROUTE	STATE
AA	MO
DISTRICT	SHEET NO.
BR	20
COUNTY	
SCOTT	
JOB NO.	
JSE0248	
CONTRACT ID.	
PROJECT NO.	
BRIDGE NO.	
A9692	

DATE	DESCRIPTION

MISSOURI HIGHWAYS AND TRANSPORTATION COMMISSION
105 WEST CAPITOL
JEFFERSON CITY, MO 65102
1-888-ASK-MODOT (1-888-275-6636)

HR GREEN, INC.
520 MARYVILLE CENTRE DRIVE, SUITE 100
ST. LOUIS, MISSOURI 63141
PHONE: (636) 519.0990
CORPORATE LICENSE #2002006608
HRGreen

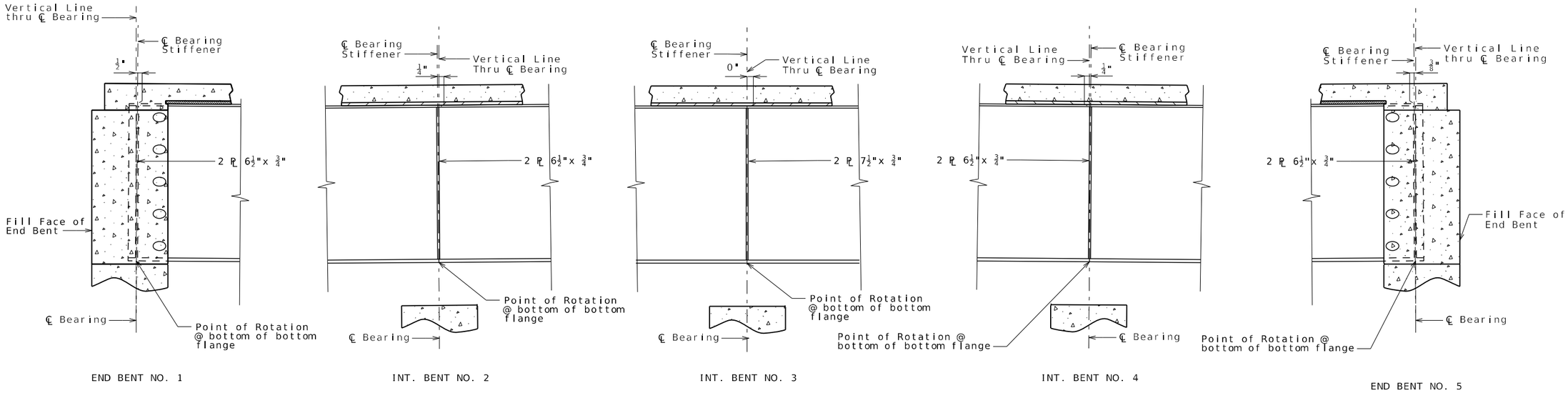

PART LONGITUDINAL SECTION

For location of field splices, see Elevation of Girder on Sheet No. 20.

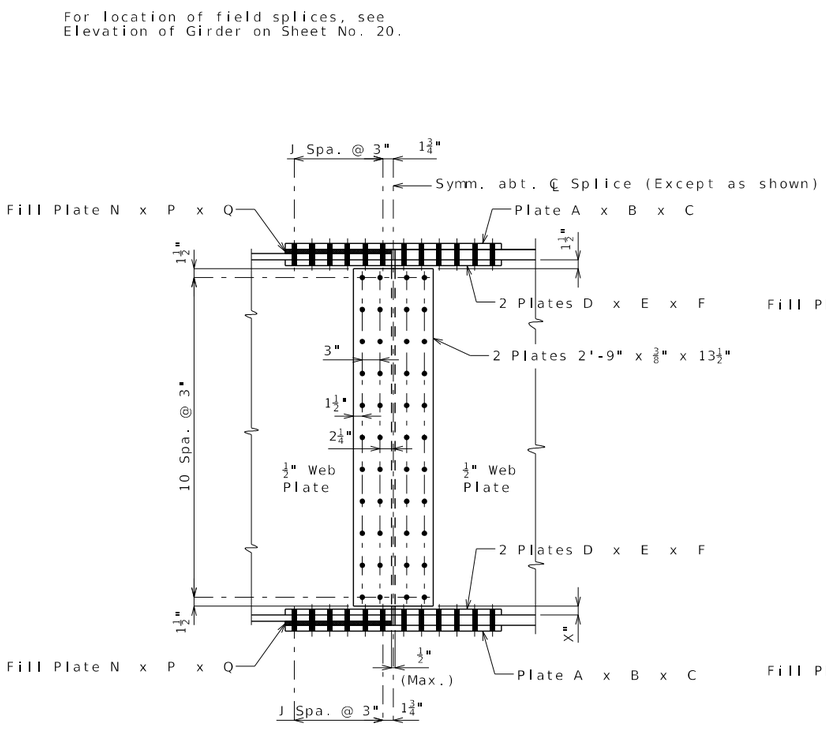

DETAIL OF BOLTED FIELD SPLICE

Bolts shall be 7/8-inch diameter ASTM F3125 Grade A325 Type 3 in 15/16-inch diameter holes.

Contact surfaces shall be in accordance with Sec 1081 for surface preparation.

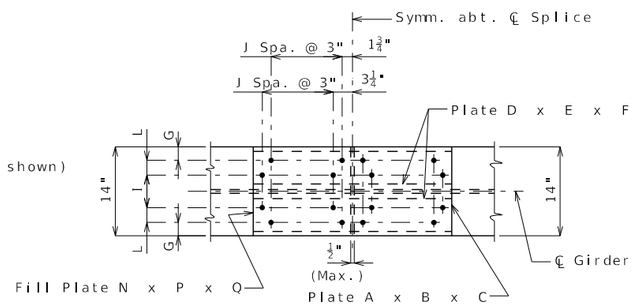

PLAN OF FLANGE S1 (TOP)

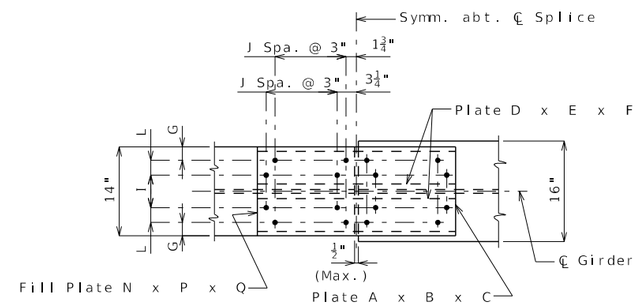

PLAN OF FLANGE S2 (TOP)

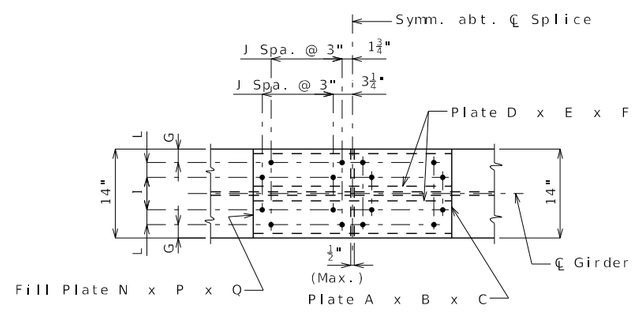

PLAN OF FLANGE S1 (BOTTOM)

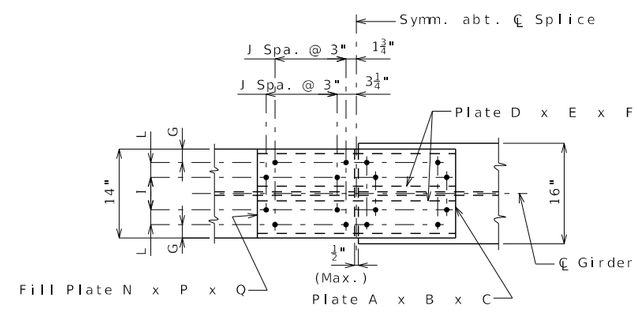

PLAN OF FLANGE S2 (BOTTOM)

TABLE OF DIMENSIONS - FIELD SPLICE

LOCATION	A	B	C	D	E	F	G	I	J	L	N	P	Q
S1 (Top)	14"	1/2"	2'-9 1/2"	5 1/2"	5/8"	2'-9 1/2"	2"	5"	4	2 1/2"	14"	3/8"	16 1/2"
S1 (Bottom)	14"	3/4"	3'-3 1/2"	5 1/2"	3/4"	3'-3 1/2"	2"	5"	5	2 1/2"	-	-	-
S2 (Top)	14"	1/2"	2'-9 1/2"	5 1/2"	5/8"	2'-9 1/2"	2"	5"	4	2 1/2"	14"	1 1/8"	16 1/2"
S2 (Bottom)	14"	3/4"	3'-3 1/2"	5 1/2"	3/4"	3'-3 1/2"	2"	5"	5	2 1/2"	14"	3/4"	19 1/2"

STEEL PLATE GIRDER DETAILS

Detailed Mar. 2025
Checked Mar. 2025

Note: This drawing is not to scale. Follow dimensions.

STATE OF MISSOURI
CHRISTOPHER T. HERSINGER
NUMBER PE-2012018080
PROFESSIONAL ENGINEER

THIS SHEET HAS BEEN SIGNED, SEALED AND DATED ELECTRONICALLY.

DATE PREPARED	
3/24/2025	
ROUTE: AA	STATE: MO
DISTRICT: BR	SHEET NO.: 21
COUNTY: SCOTT	
JOB NO.: JSE0248	
CONTRACT ID.	
PROJECT NO.	
BRIDGE NO.: A9692	

DATE	DESCRIPTION

MISSOURI HIGHWAYS AND TRANSPORTATION COMMISSION
105 WEST CAPITOL
JEFFERSON CITY, MO 65102
1-888-ASK-MODOT (1-888-275-6636)

HR GREEN, INC.
520 MARYVILLE CENTRE DRIVE, SUITE 100
ST. LOUIS, MISSOURI 63141
PHONE: (636) 519.0990
CORPORATE LICENSE #2002006608
HRGreen

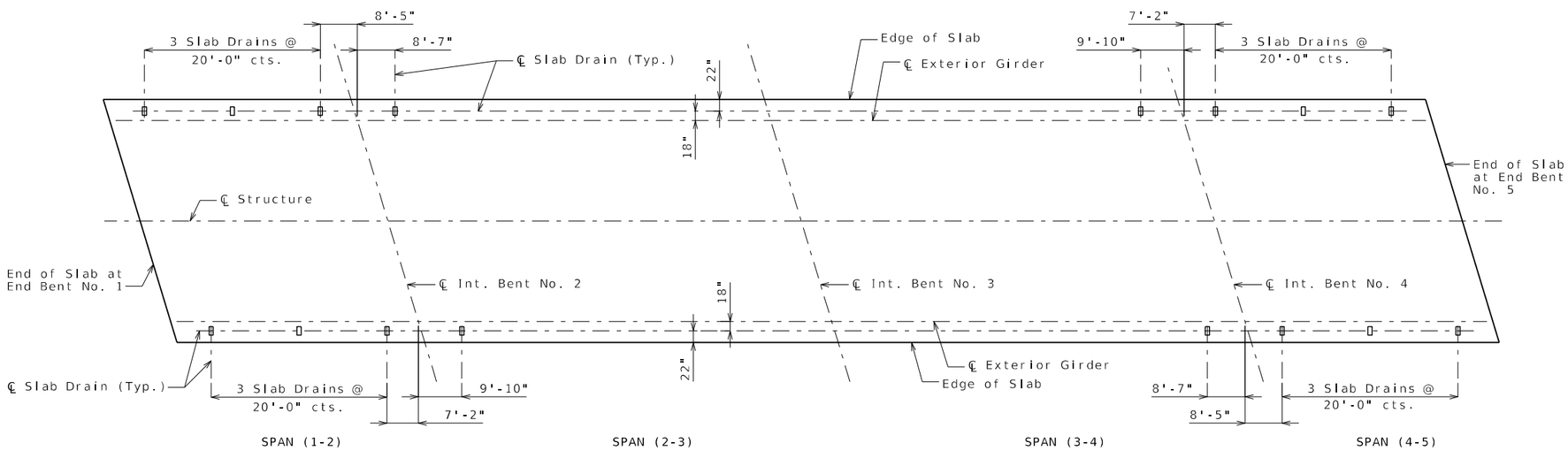

PLAN OF SLAB SHOWING SLAB DRAIN LOCATIONS

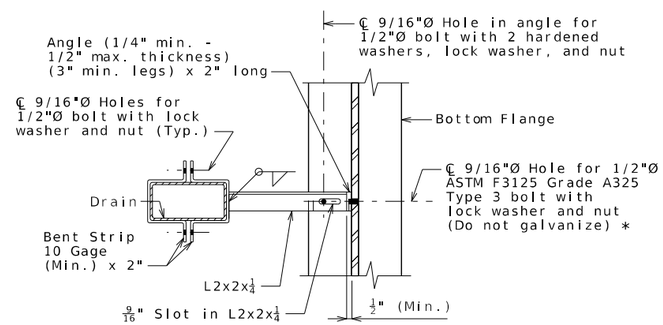

PART SECTION SHOWING BRACKET ASSEMBLY

* See Sec 1080.4

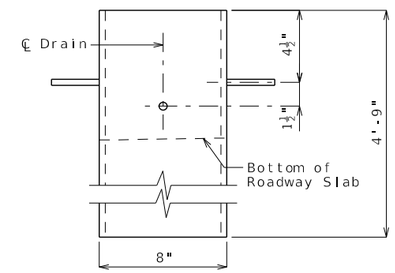

ELEVATION OF DRAIN

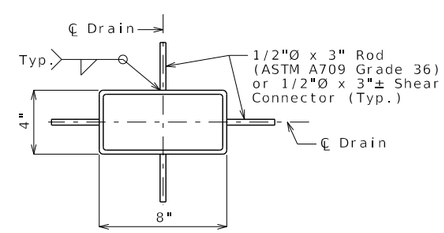

PLAN OF STEEL DRAIN OPTION

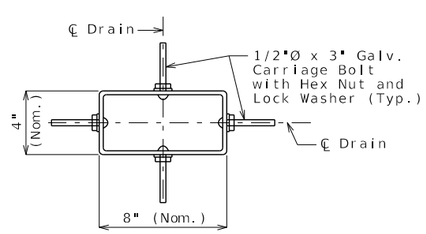

PLAN OF FRP DRAIN OPTION

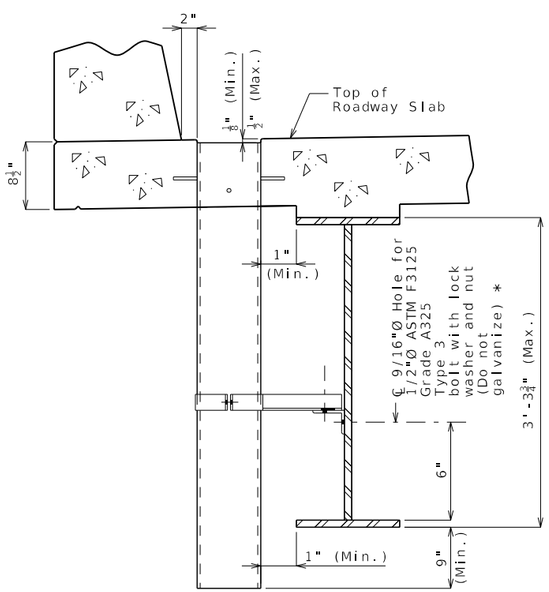

PART SECTION NEAR DRAIN

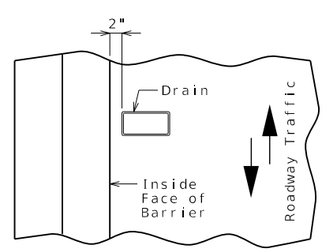

PART PLAN OF SLAB AT DRAIN

SLAB DRAINS

General Notes:

Contractor shall have the option to construct either steel or FRP slab drains. All drains shall be of same type.

Slab drain bracket assembly shall be ASTM A709 Grade 36 steel.

Locate drains in slab by dimensions shown in Part Section Near Drain.

Reinforcing steel shall be shifted to clear drains.

The bracket assembly shall be galvanized in accordance with ASTM A123.

All bolts, hardened washers, lock washers and nuts shall be galvanized in accordance with AASHTO M 232 (ASTM A153), Class C, except as shown.

All 1/2-inch diameter bolts shall be ASTM A307, except as shown.

Shop drawings will not be required for the slab drains and the bracket assembly.

The bolt hole for the bracket assembly attachment shall be located on the plate girder shop drawings.

The galvanized surfaces of drain support brackets shall be prepared according to the coating manufacturer's recommendation and field coated with a gray epoxy-mastic primer (non-aluminum) within a distance of 6 inches from the point of connection to the weathering steel structure.

Notes for Steel Drain:

Slab drains may be fabricated of either 1/4-inch welded sheets of ASTM A709 Grade 36 steel or from 1/4-inch structural steel tubing ASTM A500 or A501.

Outside dimensions of drains are 8" x 4".

The drains shall be galvanized in accordance with ASTM A123.

Notes for FRP Drain:

Drains shall be machine filament-wound thermosetting resin tubing meeting the requirements of ASTM D2996 with the following exceptions:

Shape of drains shall be rectangular with outside nominal dimensions of 8" x 4".

Minimum reinforced wall thickness shall be 1/4 inch.

The resin used shall be ultraviolet (UV) resistant and/or have UV inhibitors mixed throughout. Drains may have an exterior coating for additional UV resistance.

The color of the slab drain shall be gray (Federal Standard #26373). The color shall be uniform throughout the resin and any coating used.

The combination of materials used in the manufacture of the drains shall be tested for UV resistance in accordance with ASTM D4329 Cycle A. The representative material shall withstand at least 500 hours of testing with only minor discoloration and without any physical deterioration. The contractor shall furnish the results of the required ultraviolet testing prior to acceptance of the slab drains.

At the contractor's option, drains may be field cut. The method of cutting FRP slab drain shall be as recommended by the manufacturer to ensure a smooth, chip free cut.

STATE OF MISSOURI
CHRISTOPHER T. HERSINGER
NUMBER PE-2012018080
PROFESSIONAL ENGINEER

THIS SHEET HAS BEEN SIGNED, SEALED AND DATED ELECTRONICALLY.

DATE PREPARED	
3/24/2025	
ROUTE: AA	STATE: MO
DISTRICT: BR	SHEET NO.: 22
COUNTY: SCOTT	
JOB NO.: JSE0248	
CONTRACT ID.	
PROJECT NO.	
BRIDGE NO.: A9692	

DATE	DESCRIPTION

MISSOURI HIGHWAYS AND TRANSPORTATION COMMISSION
105 WEST CAPITOL
JEFFERSON CITY, MO 65102
1-888-ASK-MODOT (1-888-275-6636)

HR GREEN, INC.
520 MARYVILLE CENTRE DRIVE, SUITE 100
ST. LOUIS, MISSOURI 63141
PHONE: (636) 519.0990
CORPORATE LICENSE #2002006608

HRGreen

Detailed Mar. 2025
Checked Mar. 2025

Note: This drawing is not to scale. Follow dimensions.

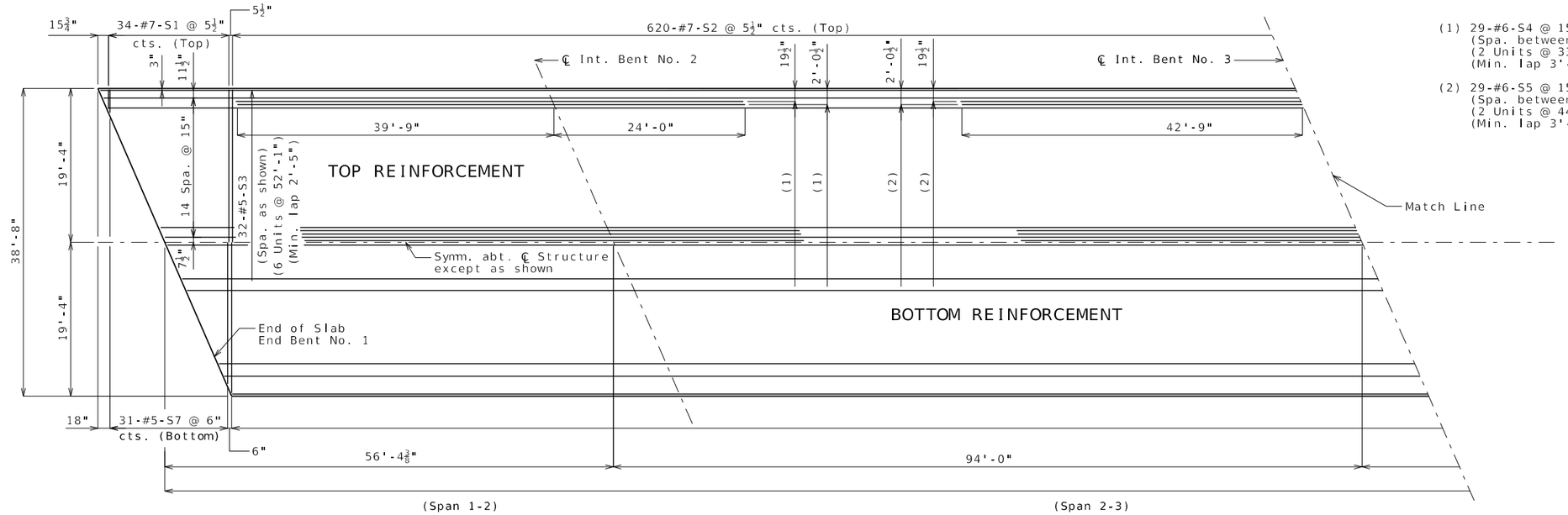

(1) 29-#6-S4 @ 15" cts.
(Spa. between S3 bars)
(2 Units @ 33'-8")
(Min. lap 3'-7")

(2) 29-#6-S5 @ 15" cts.
(Spa. between S3 bars)
(2 Units @ 44'-7")
(Min. lap 3'-7")

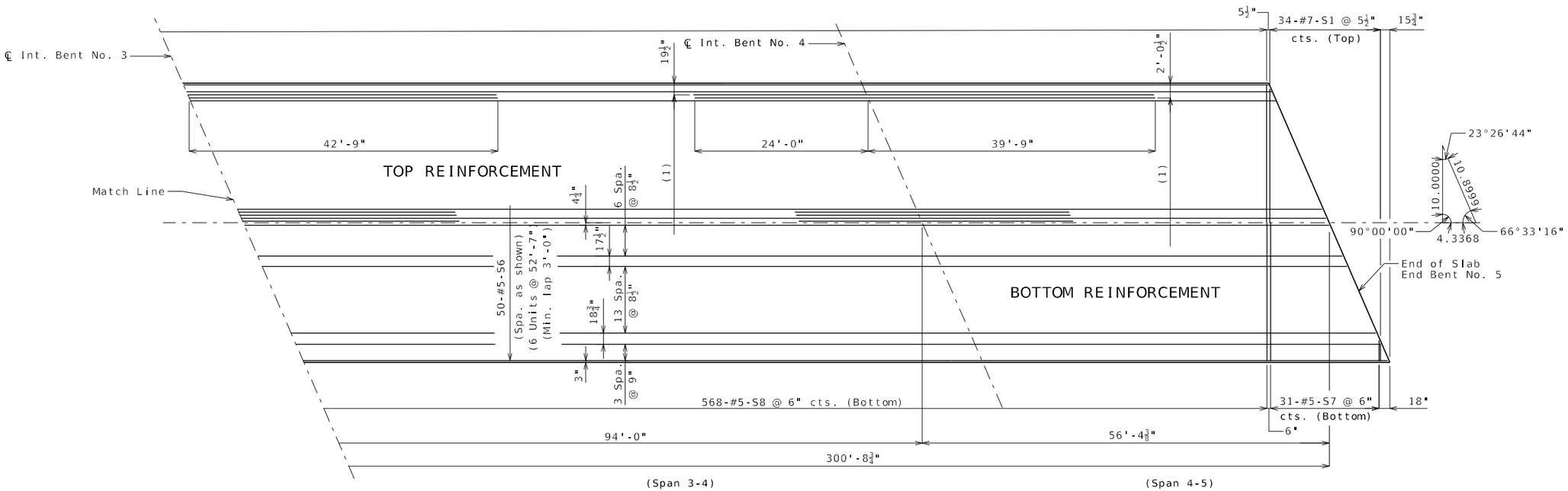

Notes:

Longitudinal slab dimensions are measured horizontally.

For details and reinforcment of barrier not shown, see Sheets No. 25 & 26.

For Theoretical Bottom of Slab Elevation, Girder Camber Diagram and Theoretical Slab Haunching Diagram, see Sheet No. 18.

For Section Thru Slab and Slab Pouring Sequence, see Sheet No. 24.

PLAN OF SLAB SHOWING REINFORCEMENT

Detailed Mar. 2025
Checked Mar. 2025

Note: This drawing is not to scale. Follow dimensions.

STATE OF MISSOURI
CHRISTOPHER T. HERSINGER
NUMBER PE-2012018080
PROFESSIONAL ENGINEER

THIS SHEET HAS BEEN SIGNED, SEALED AND DATED ELECTRONICALLY.

DATE PREPARED	
3/24/2025	
ROUTE	STATE
AA	MO
DISTRICT	SHEET NO.
BR	23
COUNTY	
SCOTT	
JOB NO.	
JSE0248	
CONTRACT ID.	
PROJECT NO.	
BRIDGE NO.	
A9692	

DESCRIPTION

DATE

MISSOURI HIGHWAYS AND TRANSPORTATION COMMISSION
105 WEST CAPITOL
JEFFERSON CITY, MO 65102
1-888-ASK-MODOT (1-888-275-6636)

HR GREEN, INC.
520 MARYVILLE CENTRE DRIVE,
SUITE 100
ST. LOUIS, MISSOURI 63141
PHONE: (636) 519.0990
CORPORATE LICENSE #2002006608
HRGreen

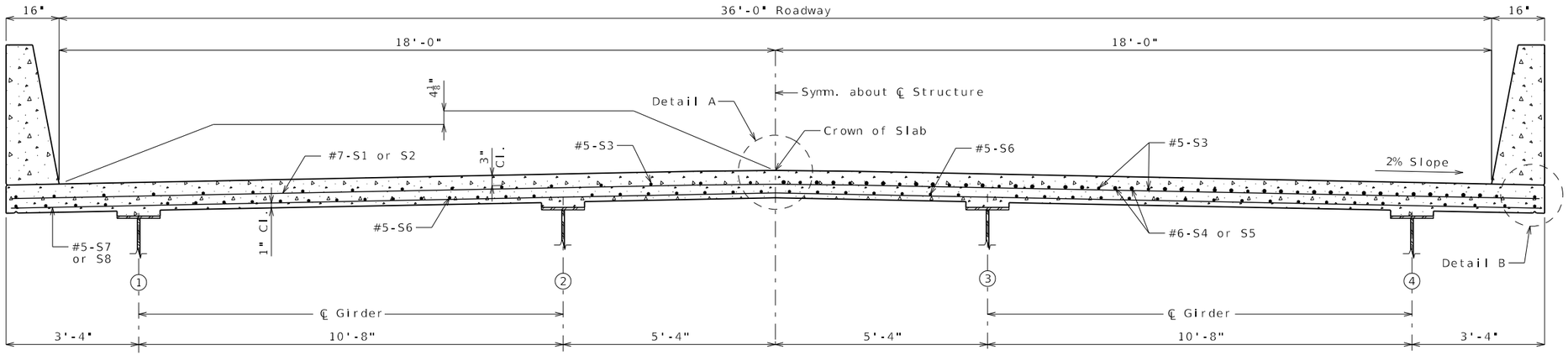

HALF SECTION NEAR MIDSPAN

HALF SECTION NEAR INTERMEDIATE BENT

SECTION THRU SLAB

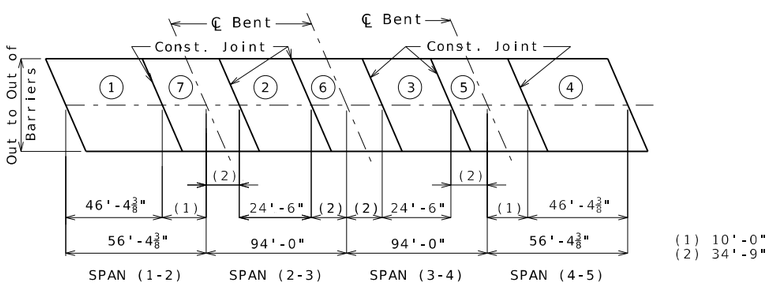

	Sequence of Pours							Min. Rate of Pour Cu. Yds./Hr.	
	Direction							With Retarder	No Retarder
Basic Sequence	1	2	3	4	5	6	7	25	36
	Either Direction								
Alternate pours to the basic skip sequence are subject to the approval of the engineer in accordance with Sec 703.									
Alternate A Pours	1		7 + 2		6 + 3		5 + 4	29	48
	End to 7		1 to 6		2 to 5		3 to End		
Alternate B Pours	1 + 7 + 2			6 + 3			5 + 4	29	48
	End to 6			2 to 5			3 to End		
Alternate C Pours	1 + 7 + 2				6 + 3 + 5 + 4			29	48
	End to 6				2 to End				
Alternate D Pours	1 + 7 + 2 + 6 + 3 + 5 + 4							29	48
	End to End								

The contractor shall pour and satisfactorily finish the slab pours at the rate given. Retarder, if used, shall be an approved type and retard the set of concrete to 2.5 hours.

SLAB POURING SEQUENCE

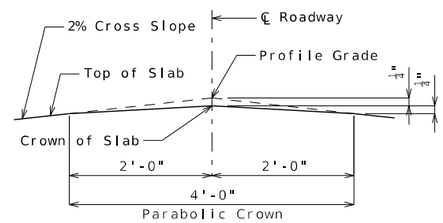

DETAIL A

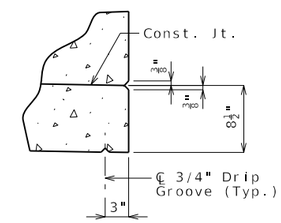

DETAIL B

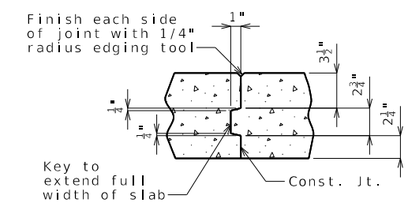

SLAB CONSTRUCTION JOINT

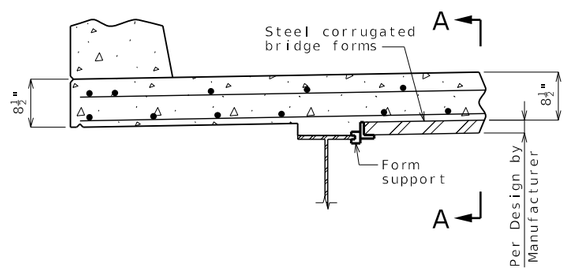

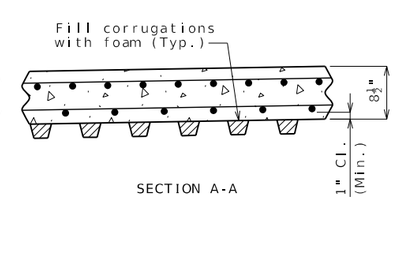

SECTION A-A

OPTIONAL STAY-IN-PLACE FORM DETAILS

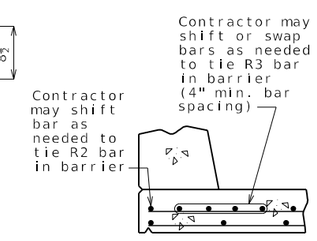

OPTIONAL SHIFTING TOP BARS AT BARRIER

Notes:

For reinforcement of barrier not shown, see Sheet No. 25.

For Theoretical Bottom of Slab Elevations, Girder Camber Diagram and Theoretical Slab Haunching Diagram, see Sheet No. 18.

For Plan of Slab Showing Reinforcement, see Sheet No. 23.

Stay-In-Place Corrugated Steel Forms:

Corrugated steel forms, supports, closure elements and accessories shall be in accordance with grade requirement and coating designation G165 of ASTM A653. Complete shop drawings of the permanent steel deck forms shall be required in accordance with Sec 1080.

Corrugations of stay-in-place forms shall be filled with an expanded polystyrene material. The polystyrene material shall be placed in the forms with an adhesive in accordance with the manufacturer's recommendations.

Form sheets shall not rest directly on the top of girder flanges. Sheets shall be securely fastened to form supports with a minimum bearing length of one inch on each end. Form supports shall be placed in direct contact with the flange. Welding on or drilling holes in the girder flanges will not be permitted. All steel fabrication and construction shall be in accordance with Sec 1080 and 712. Certified field welders will not be required for welding of the form supports.

The design of stay-in-place corrugated steel forms is per manufacturer which shall be in accordance with Sec 703 for false work and forms. Maximum actual weight of corrugated steel forms allowed shall be 4 psf assumed for girder loading.

The contractor shall provide a method of preventing the direct contact of the stay-in-place forms and connection components with uncoated weathering steel members that is approved by the engineer.

SLAB DETAILS

Detailed Mar. 2025
Checked Mar. 2025

Note: This drawing is not to scale. Follow dimensions.

STATE OF MISSOURI
CHRISTOPHER T. HERSINGER
NUMBER PE-2012018080
PROFESSIONAL ENGINEER

THIS SHEET HAS BEEN SIGNED, SEALED AND DATED ELECTRONICALLY.

DATE PREPARED	3/24/2025
ROUTE	AA
STATE	MO
DISTRICT	BR
SHEET NO.	24
COUNTY	SCOTT
JOB NO.	JSE0248
CONTRACT ID.	
PROJECT NO.	
BRIDGE NO.	A9692

DESCRIPTION

DATE

MISSOURI HIGHWAYS AND TRANSPORTATION COMMISSION

105 WEST CAPITOL
JEFFERSON CITY, MO 65102
1-888-ASK-MODOT (1-888-275-6636)

HR GREEN, INC.
520 MARYVILLE CENTRE DRIVE,
SUITE 100
ST. LOUIS, MISSOURI 63141
PHONE: (636) 519.0990
CORPORATE LICENSE #2002006608

HRGreen

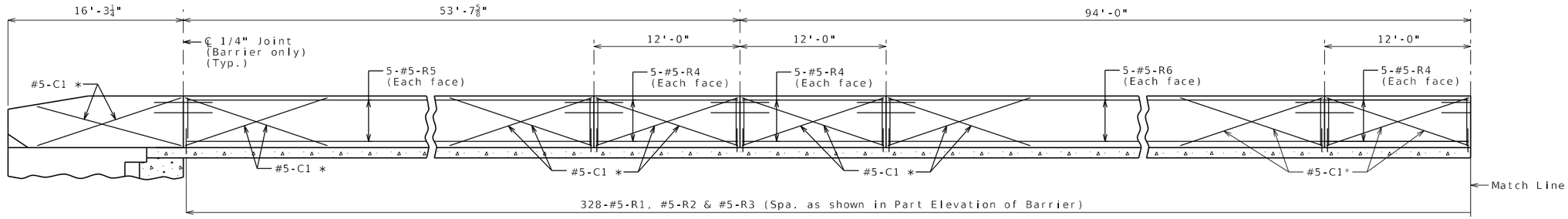

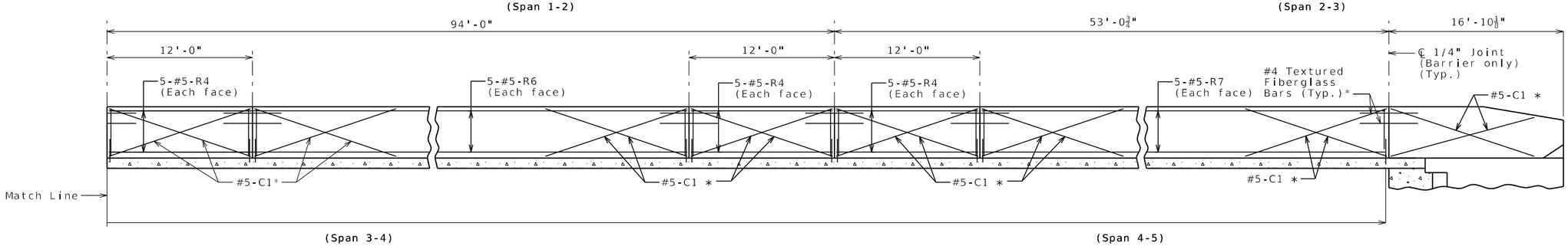

ELEVATION OF BARRIER

(Left barrier shown, right barrier similar)

Longitudinal dimensions are horizontal.

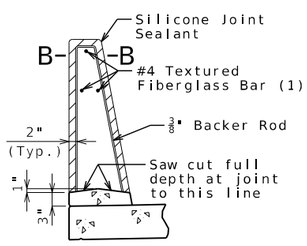

SECTION THRU SAW CUT JOINT

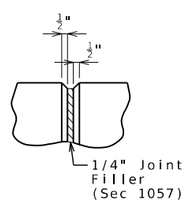

PART ELEVATION AT FORMED JOINT

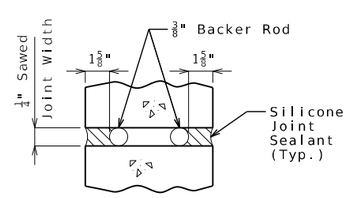

SECTION B-B

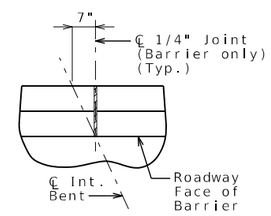

PART PLAN SHOWING JOINT LOCATION

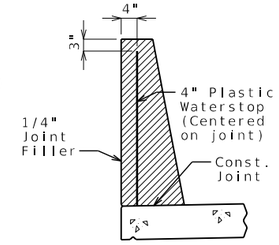

WATERSTOP DETAIL

Plastic waterstop shall be placed in all formed joints, except structures with superelevation, use on lower joints only.

Cost of plastic waterstop, complete in place, will be considered completely covered by the contract unit price for Type D Barrier.

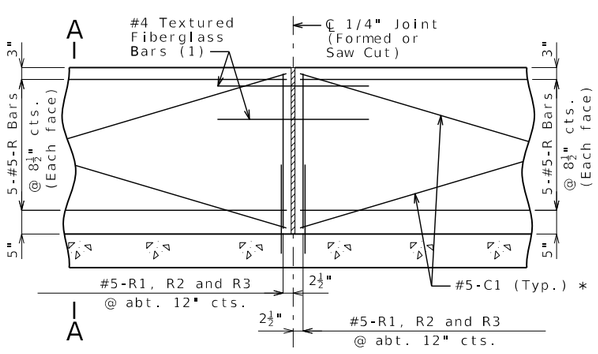

PART ELEVATION OF BARRIER

(1) Four feet long, centered on joint, slip-formed option only

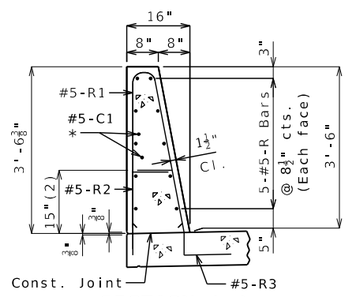

SECTION A-A

Use a minimum lap of 3'-1" for #5 horizontal barrier bars.

The cross-sectional area above the slab is 3.52 square feet.

(2) To top of bar

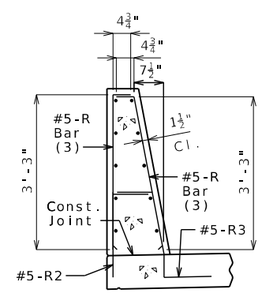

R-BAR PERMISSIBLE ALTERNATE SHAPE

(3) The R1 bar may be separated into two bars as shown, at the contractor's option, only when slip forming is not used. (All dimensions are out to out.)

General Notes:

* Slip-formed option only.

Conventional forming or slip forming may be used. Saw cut joints may be used with conventional forming.

Top of barrier shall be built parallel to grade and barrier joints (except at end bents) normal to grade.

All exposed edges of barrier shall have either a 1/2-inch radius or a 3/8-inch bevel, unless otherwise noted.

Payment for all concrete and reinforcement, complete in place, will be considered completely covered by the contract unit price for Type D Barrier per linear foot.

Concrete in barrier shall be Class B-1.

Measurement of barrier is to the nearest linear foot for each structure, measured along the outside top of slab from end of wing to end of wing.

Concrete traffic barrier delineators shall be placed on top of the barrier as shown on Missouri Standard Plan 617.10 and in accordance with Sec 617. Delineators on bridges with two-lane, two-way traffic shall have retroreflective sheeting on both sides. Concrete traffic barrier delineators will be considered completely covered by the contract unit price for Type D Barrier.

Joint sealant and backer rods shall be in accordance with Sec 717 for silicone joint sealant for saw cut and formed joints.

For slip-formed option, both sides of barrier shall have a vertically broomed finish and the top shall have a transversely broomed finish.

Plastic waterstop shall not be used with saw cut joints.

Detailed Mar. 2025
Checked Mar. 2025

Note: This drawing is not to scale. Follow dimensions.

TYPE D BARRIER

STATE OF MISSOURI — CHRISTOPHER T. HERSINGER — NUMBER PE-2012018080 — PROFESSIONAL ENGINEER

THIS SHEET HAS BEEN SIGNED, SEALED AND DATED ELECTRONICALLY.

DATE PREPARED	
3/24/2025	
ROUTE: AA	STATE: MO
DISTRICT: BR	SHEET NO.: 25
COUNTY: SCOTT	
JOB NO.: JSE0248	
CONTRACT ID.	
PROJECT NO.	
BRIDGE NO.: A9692	

DATE	DESCRIPTION

MISSOURI HIGHWAYS AND TRANSPORTATION COMMISSION
105 WEST CAPITOL
JEFFERSON CITY, MO 65102
1-888-ASK-MODOT (1-888-275-6636)

HR GREEN, INC.
520 MARYVILLE CENTRE DRIVE, SUITE 100
ST. LOUIS, MISSOURI 63141
PHONE: (636) 519.0990
CORPORATE LICENSE #2002006608
HRGreen

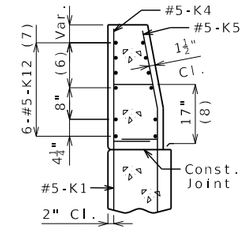

SECTION A-A

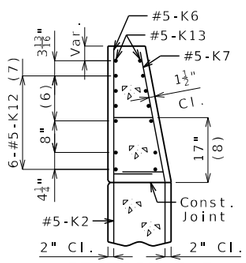

SECTION B-B

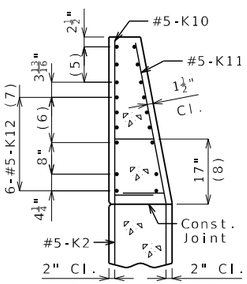

SECTION C-C

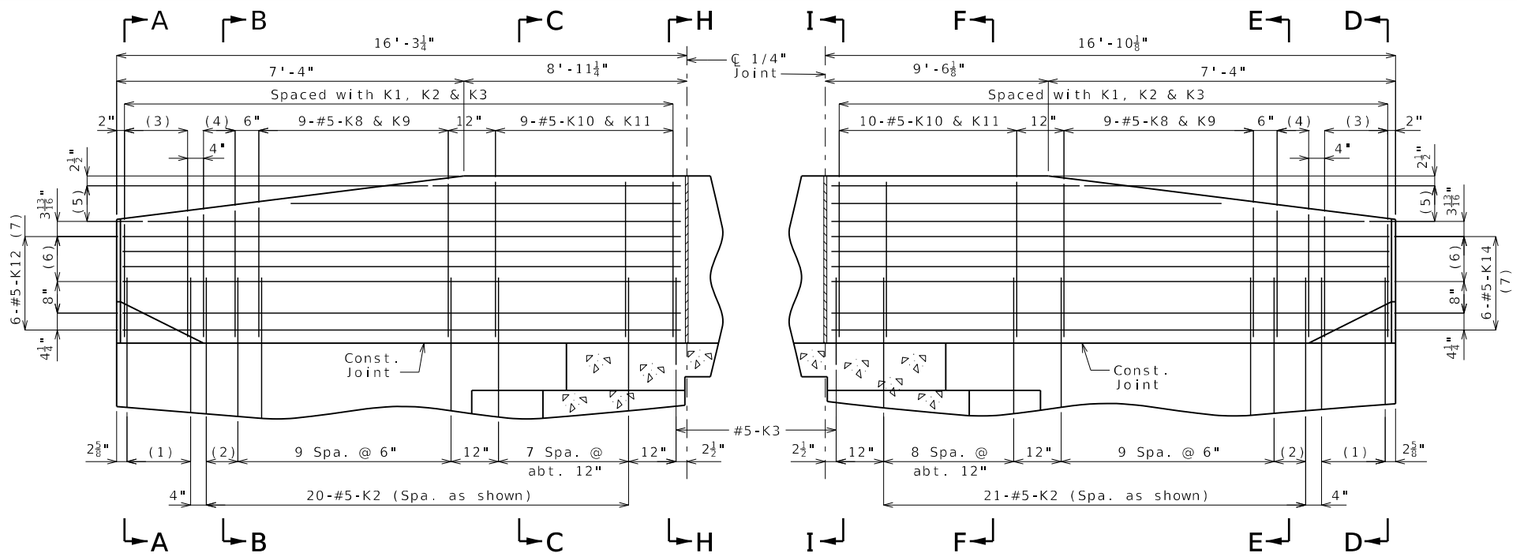

PART ELEVATION

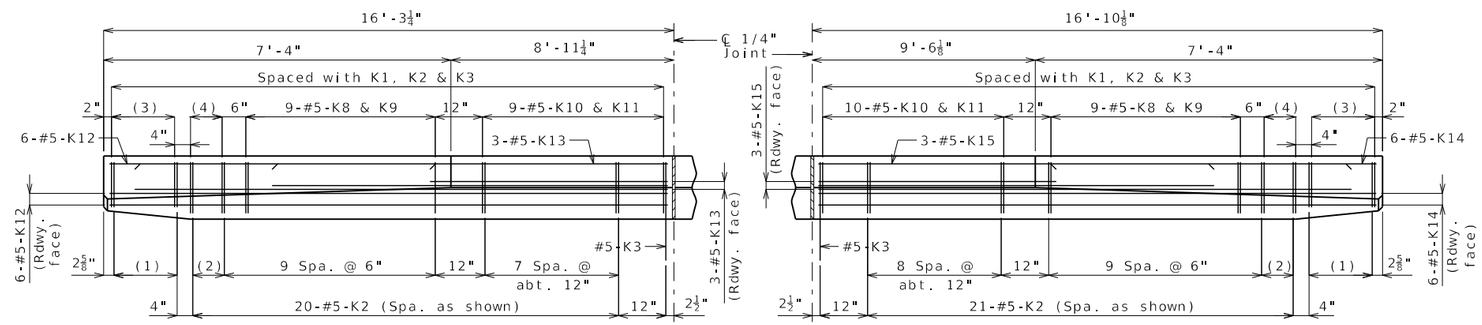

PART PLAN

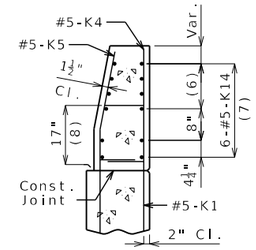

SECTION D-D

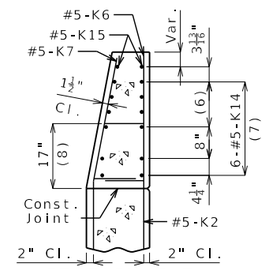

SECTION E-E

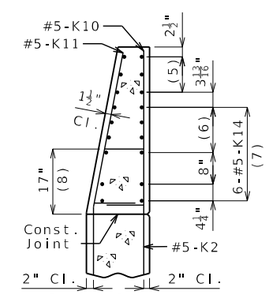

SECTION F-F

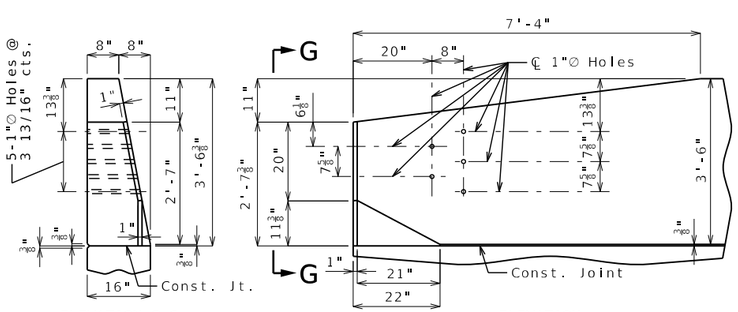

ELEVATION G-G

ELEVATION

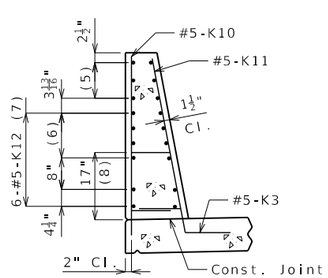

SECTION H-H

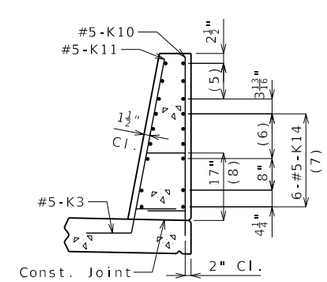

SECTION I-I

(1) 5-#5-K1 @ 4" cts.

(2) 2 spaces @ 4"

(3) 5-#5-K4 & K5

(4) 3-#5-K6 & K7

(5) 3-#5-K13 or K15 @ 4½" cts., each face

(6) 3 spaces @ 3 13/16"

(7) Spaced as shown, each face

(8) To top of bar

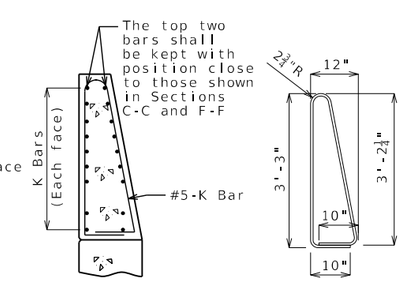

K10-K11 BAR PERMISSIBLE ALTERNATE SHAPE

(Other K bars not shown for clarity)

* Transition to zero at Type A curb for gutter lines to match.

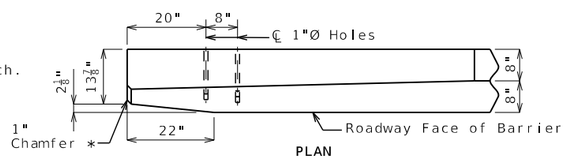

PLAN

DETAILS OF GUARD RAIL ATTACHMENT

General Notes:

Concrete traffic barrier delineators shall be placed on top of the barrier as shown on Missouri Standard Plan 617.10 and in accordance with Sec 617. Delineators on bridges with two-lane, two-way traffic shall have retroreflective sheeting on both sides. Concrete traffic barrier delineators will be considered completely covered by the contract unit price for Type D Barrier.

Reinforcing Steel:
Minimum clearance to reinforcing steel shall be 1 1/2" except as shown for bars embedded into end bent.

The K10-K11 bar combination may be furnished as one bar as shown, at the contractor's option.

All dimensions are out to out.

TYPE D BARRIER AT END BENTS

(Left barrier shown, right barrier similar)

Detailed Mar. 2025
Checked Mar. 2025

Note: This drawing is not to scale. Follow dimensions.

STATE OF MISSOURI
CHRISTOPHER T. HERSINGER
NUMBER PE-2012018080
PROFESSIONAL ENGINEER

THIS SHEET HAS BEEN SIGNED, SEALED AND DATED ELECTRONICALLY.

DATE PREPARED	
3/24/2025	
ROUTE	STATE
AA	MO
DISTRICT	SHEET NO.
BR	26
COUNTY	
SCOTT	
JOB NO.	
JSE0248	
CONTRACT ID.	
PROJECT NO.	
BRIDGE NO.	
A9692	

DATE	DESCRIPTION

MISSOURI HIGHWAYS AND TRANSPORTATION COMMISSION
105 WEST CAPITOL
JEFFERSON CITY, MO 65102
1-888-ASK-MODOT (1-888-275-6636)

HR GREEN, INC.
520 MARYVILLE CENTRE DRIVE, SUITE 100
ST. LOUIS, MISSOURI 63141
PHONE: (636) 519.0990
CORPORATE LICENSE #2002006608

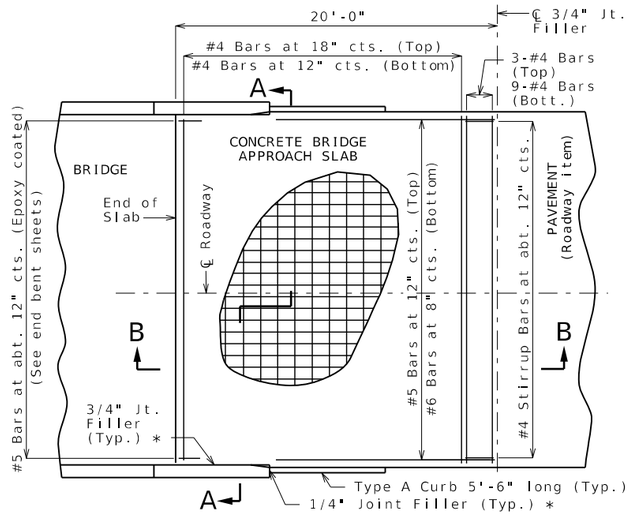

PART PLAN OF SQUARED STRUCTURE
(Skewed structure similar)

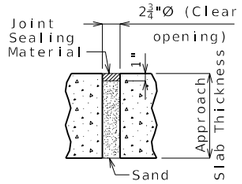

UNDERSEAL ACCESS HOLE DETAIL
(If required)

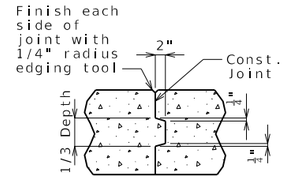

CONSTRUCTION JOINT DETAIL

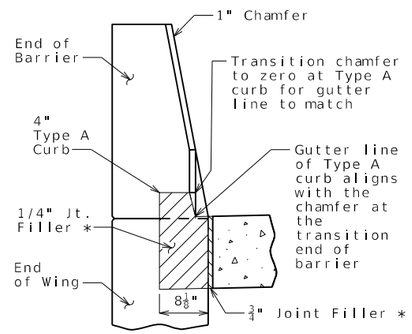

SECTION BETWEEN CURB AND BARRIER

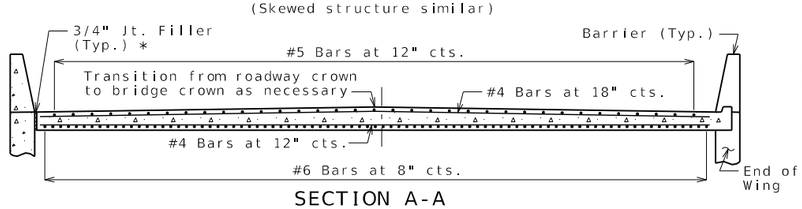

SECTION A-A

With the approval of the engineer, the contractor may crown the bottom of the approach slab to match the crown of the roadway surface.

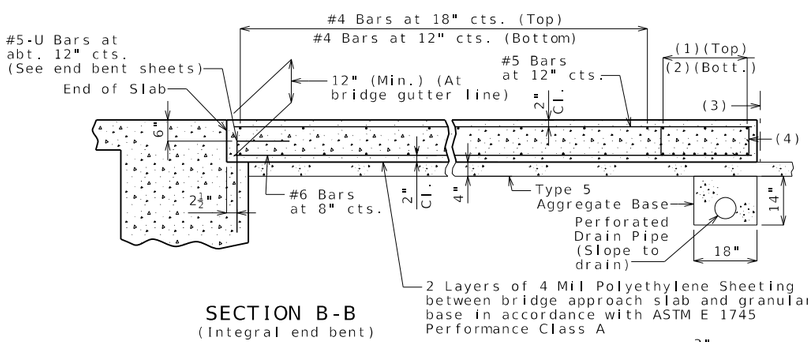

(1) 3-#4 Bars

(2) 9-#4 Bars

(3) ℄ 3/4" Jt. Filler

(4) #4 Stirrup Bars at abt. 12" cts.; 2'-0"x 8" (Min.) out to out; Actual length = 5'-10" (Min.); 90° stirrup hook at bottom; Stirrup height (8") and actual length vary due to crown.

SECTION B-B
(Integral end bent)

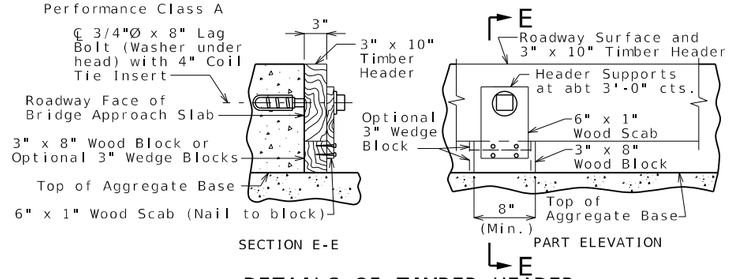

SECTION E-E

PART ELEVATION

DETAILS OF TIMBER HEADER
Remove timber header when concrete pavement is placed.

OPTIONAL CONCRETE SLAB

Notes For Concrete Slab Only:

All concrete for the bridge approach slab shall be in accordance with Sec 503 (f'c = 4,000 psi).

The reinforcing steel in the bridge approach slab shall be epoxy coated Grade 60 with fy = 60,000 psi.

Longitudinal construction joints in bridge approach slab shall be aligned with longitudinal construction joints in bridge slab.

Minimum clearance to reinforcing steel shall be 1 1/2", unless otherwise shown.

The reinforcing steel in the bridge approach slab shall be continuous. The transverse reinforcing steel may be made continuous by providing a minimum lap splice of 23 inches for #4 bars, or by mechanical bar splice.

Mechanical bar splices shall be in accordance with Sec 710.

All joint filler shall be in accordance with Sec 1057 for preformed fiber expansion joint filler except as noted.

Payment for furnishing all materials, labor and excavation necessary to construct the concrete bridge approach slab, including the timber header, underdrain, Type 5 aggregate base, joint filler, and all other appurtenances and incidental work as shown on this sheet, complete in place, will be considered completely covered by the contract unit price for Bridge Approach Slab (Minor) per square yard.

See Missouri Standard Plan 609.00 for details of Type A curb.

Drain pipe may be either 6" diameter corrugated metallic-coated pipe underdrain, 4" diameter corrugated polyvinyl chloride (PVC) drain pipe, or 4" diameter corrugated polyethylene (PE) drain pipe.

* Seal joint between vertical face of approach slab and wing with sealant in accordance with Sec 717 for silicone joint sealant for saw cut and formed joints.

General Notes:

Contractor shall have the option to construct either slab except as noted.

The contractor shall pour and satisfactorily finish the bridge slab before placing the bridge approach slab.

MoDOT Construction personnel will indicate the bridge approach slab used for this structure:

☐ Concrete Bridge Approach Slab

☐ Asphalt Bridge Approach Slab

Notes For Asphalt Slab Only:

Payment for furnishing all materials, labor and excavation necessary to construct the asphalt bridge approach slab, including tack, curb, and Type 5 aggregate base within the pay limits shown, complete in place, will be considered completely covered by the contract unit price for Bridge Approach Slab (Minor) per square yard.

Application of tack is required between lifts per Sec 403.

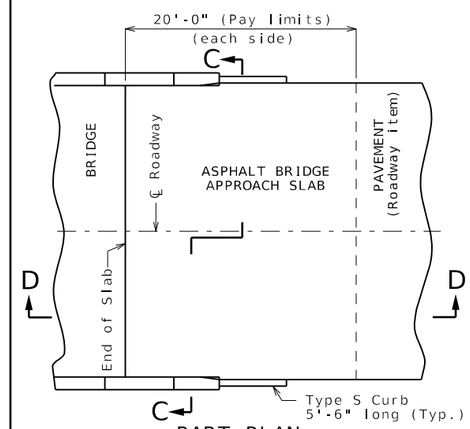

PART PLAN
(Squared structure shown, skewed structure similar)

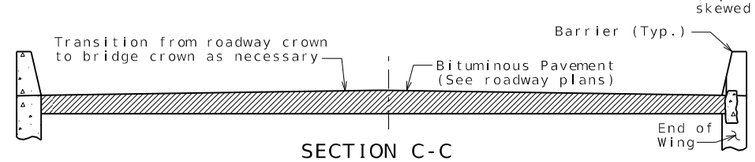

SECTION C-C

With the approval of the engineer, the contractor may crown the bottom of the approach slab to match the crown of the roadway surface.

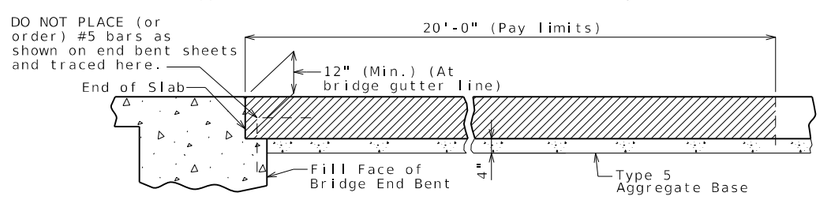

SECTION D-D

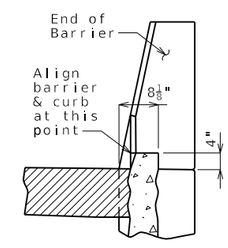

4" TYPE S CURB
See Missouri Standard Plan 609.00 for details of Type S curb.

OPTIONAL ASPHALT SLAB (NOT ALLOWED WITH CONCRETE PAVEMENT)

BRIDGE APPROACH SLAB (MINOR)

Integral end bents shown, non-integral end bent similar.

Detailed Mar. 2025
Checked Mar. 2025

Note: This drawing is not to scale. Follow dimensions.

STATE OF MISSOURI
CHRISTOPHER T. HERSINGER
NUMBER PE-2012018080
PROFESSIONAL ENGINEER

THIS SHEET HAS BEEN SIGNED, SEALED AND DATED ELECTRONICALLY.

DATE PREPARED	
3/24/2025	
ROUTE AA	STATE MO
DISTRICT BR	SHEET NO. 27
COUNTY SCOTT	
JOB NO. JSE0248	
CONTRACT ID.	
PROJECT NO.	
BRIDGE NO. A9692	

DATE	DESCRIPTION

MISSOURI HIGHWAYS AND TRANSPORTATION COMMISSION
105 WEST CAPITOL
JEFFERSON CITY, MO 65102
1-888-ASK-MODOT (1-888-275-6636)

HR GREEN, INC.
520 MARYVILLE CENTRE DRIVE, SUITE 100
ST. LOUIS, MISSOURI 63141
PHONE: (636) 519.0990
CORPORATE LICENSE #2002006608

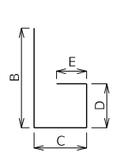

SHAPE 6
or 6S

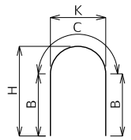

SHAPE 7

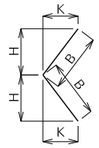

SHAPE 8
or 8S

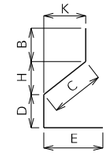

SHAPE 9
or 9S

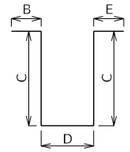

SHAPE 10
or 10S

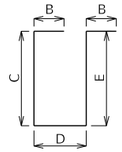

SHAPE 11
or 11S

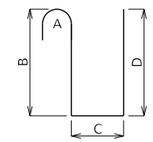

SHAPE 12

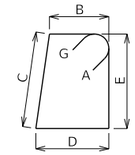

SHAPE 13S

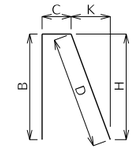

SHAPE 14
or 14S

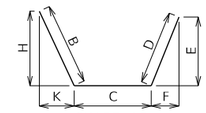

SHAPE 15
or 15S

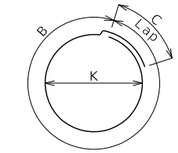

SHAPE 16

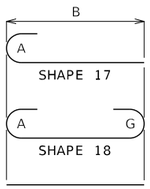

SHAPE 17
SHAPE 18
SHAPE 20

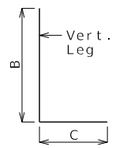

SHAPE 19
or 19S

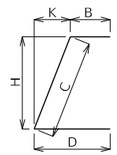

SHAPE 21
or 21S

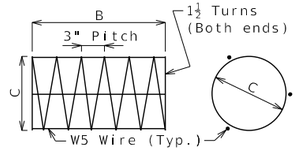

SHAPE 22

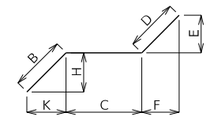

SHAPE 23
or 23S

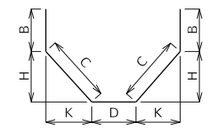

SHAPE 24
or 24S

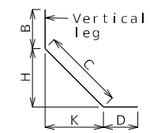

SHAPE 25
or 25S

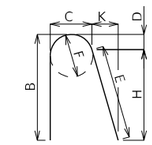

SHAPE 26

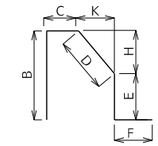

SHAPE 27S

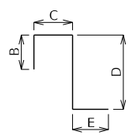

SHAPE 28
or 28S

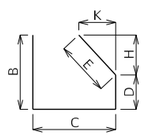

SHAPE 29
or 29S

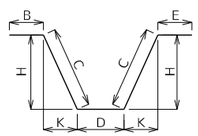

SHAPE 30
or 30S

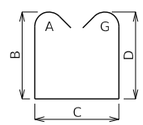

SHAPE 31S

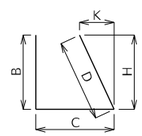

SHAPE 32
or 32S

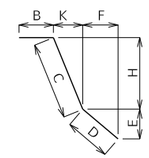

SHAPE 33
or 33S

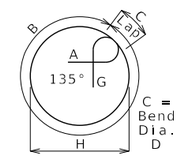

SHAPE 34S

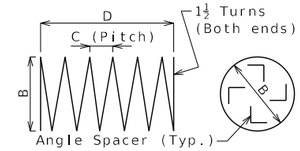

SHAPE 35 (1)

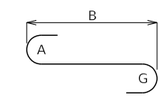

SHAPE 36

Finished Bend Diameters D and Hook Dimensions

Standard Pin Bend Shapes

Size	Case	D	A or G 90°	A or G 180°	J 180°
#4	1	3"	8"	6"	4"
#5	1	3¾"	10"	7"	5"
#6	1	4½"	12"	8¼"	6"
#7	2	5¼"	14"	9¾"	7"
	3	7"	15"	11½"	8¾"
#8	2	6"	16"	11"	8"
	3	8"	17"	13¼"	10"
#9	1	9½"	19½"	15½"	11¾"
#10	1	10¾"	22"	17½"	13¼"
#11	1	12"	24½"	19½"	14⅞"
#14	1	18¼"	31¼"	27½"	21⅝"
#18	1	24"	41½"	36¼"	28½"

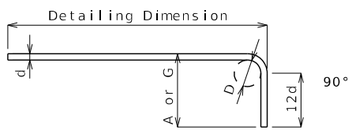

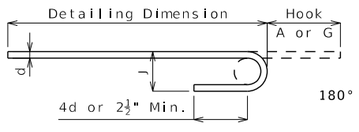

Stirrup Pin Bend Shapes (S)

Size	Case	D	A or G 90°	A or G 135°	A or G 180°	H 135°	J 180°
#4	2	2"	4½"	4½"	5"	2⅝"	3"
	3	3"	5"	5¼"	6"	3"	4"
#5	2	2½"	5¾"	5¾"	5¾"	3⅝"	3¾"
	3	3¾"	6¼"	6½"	7"	3⅞"	5"
#6	1	4½"	12"	7¾"	8¼"	4⅝"	6"

Applicable for all grades of steel.

Case 1 applies to all reinforcement. Case 2 applies to all reinforcement except for galvanized bars. Case 3 applies to galvanized bars only.

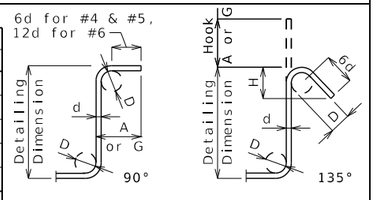

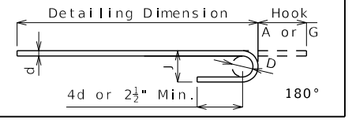

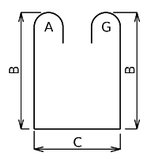

SHAPE 37S

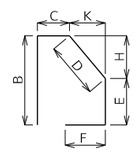

SHAPE 38S

BENDING DIAGRAMS

All dimensions are out to out.

Shapes ending with an S shall be bent in accordance with stirrup pin bend shapes.

Unless otherwise noted, finished bending diameter D is the same for all bends of a shape.

(1) Shall be a deformed or plain spiral bar or wire.

Four angle or channel spacers are required for each column spiral. Spacers are to be placed on inside of spirals. Length and weight of column spirals do not include splices or spacers.

Reinforcing Steel Totals (Pounds)

	Size	Substructure Plain	Substructure Epoxy	Superstructure Slab Epoxy	Superstructure Barrier	Superstructure Slip Form	Entire Bridge Plain	Entire Bridge Epoxy
By Size	W5	115	0	0	0	0	115	0
	4	3,833	2,006	810	0	0	3,833	2,816
	5	1,824	3,648	53,523	14,483	801	1,824	72,455
	6	7,086	1,350	18,472	0	0	7,086	19,822
	7	0	0	51,341	0	0	0	51,341
	8	1,678	3,204	1,424	0	0	1,678	4,628
	9	1,342	2,684	0	0	0	1,342	2,684
	10	13,555	2,008	0	0	0	13,555	2,008
By Type		29,433	14,900	125,570	14,483	801	29,433	155,754

All superstructure reinforcing steel shall be epoxy coated unless otherwise specified.

BENDING DIAGRAMS AND REINFORCING STEEL TOTALS

Detailed Mar. 2025
Checked Mar. 2025

Note: This drawing is not to scale. Follow dimensions.

STATE OF MISSOURI
CHRISTOPHER T. HERSINGER
NUMBER PE-2012018080
PROFESSIONAL ENGINEER

THIS SHEET HAS BEEN SIGNED, SEALED AND DATED ELECTRONICALLY.

DATE PREPARED	
3/24/2025	
ROUTE AA	STATE MO
DISTRICT BR	SHEET NO. 28
COUNTY SCOTT	
JOB NO. JSE0248	
CONTRACT ID.	
PROJECT NO.	
BRIDGE NO. A9692	

DATE	DESCRIPTION

MISSOURI HIGHWAYS AND TRANSPORTATION COMMISSION
105 WEST CAPITOL
JEFFERSON CITY, MO 65102
1-888-ASK-MODOT (1-888-275-6636)

HR GREEN, INC.
520 MARYVILLE CENTRE DRIVE,
SUITE 100
ST. LOUIS, MISSOURI 63141
PHONE: (636) 519.0990
CORPORATE LICENSE #2002006608
HRGreen

Bill of Reinforcing Steel

No. Req.	Size/ Mark	Location	Codes C	SH	V	Dimensions B ft in.	C ft in.	D ft in.	E ft in.	F ft in.	H ft in.	K ft in.	Nom. Length ft in.	Actual Length ft in.	Weight lb
		Substructure													
		Int Bent 2													
26	8 D200	COLUMN	E	17		22 2.00							23 1	23 1	1,602
8	6 D201	FOOTING		10			6 10.00	10 0.00					23 8	23 4	280
80	10 D202	FOOTING		18		10 8.00							13 7	13 7	4,676
5	9 H200	BEAM	E	18		38 2.00							40 9	40 9	693
5	9 H201	BEAM	E	20		38 2.00							38 2	38 2	649
10	6 H202	BEAM	E	20		38 2.00							38 2	38 2	573
8	10 H203	BEAM	E	17		16 8.00							18 2	18 2	625
4	10 H204	BEAM	E	20		22 0.00							22 0	22 0	379
14	6 H205	BEAM	E	10			12.00	3 1.75					5 2	4 10	102
220	4 P200	CIP PILE		34S		5 1.25	2.00				20.00		6 0	6 0	882
2	4 P201	COLUMN	E	35		2 9.00	3.00	17 7.50					627 11	627 11	839
26	4 P202	BEAM	E	34S		8 6.00	2.00				2 9.00		9 5	9 5	164
108	5 U200	BEAM	E	13S		2 8.50	3 9.00	2 8.50	3 9.00				13 11	13 7	1,530
28	5 U201	BEAM	E	10S			3 9.00	2 8.50					10 3	10 1	294
120	6 V200	CIP PILE		17		7 3.00							7 11	7 11	1,427
8	W5 W200	BEAM		22		18.00	9.00						25 11	25 11	35
		Int Bent 3													
26	8 D300	COLUMN		17		23 3.00							24 2	24 2	1,678
8	6 D301	FOOTING		10			5 10.00	15 0.00					26 8	26 4	316
40	10 D302	FOOTING		18		15 8.00							18 7	18 7	3,199
64	6 D303	FOOTING		18		8 8.00							10 1	10 1	969
5	9 H300	BEAM		18		38 2.00							40 9	40 9	693
5	9 H301	BEAM		20		38 2.00							38 2	38 2	649
10	6 H302	BEAM		20		38 2.00							38 2	38 2	573
8	10 H303	BEAM		17		16 8.00							18 2	18 2	625
4	10 H304	BEAM		20		22 0.00							22 0	22 0	379
14	6 H305	BEAM		10			12.00	3 1.75					5 2	4 10	102
264	4 P300	CIP PILE		34S		5 1.25	2.00				20.00		6 0	6 0	1,058
2	4 P301	COLUMN		35		2 9.00	3.00	18 7.50					662 1	662 1	885
20	4 P302	BEAM		34S		8 6.00	2.00				2 9.00		9 5	9 5	126
108	5 U300	BEAM		13S		2 8.50	3 9.00	2 8.50	3 9.00				13 11	13 7	1,530
28	5 U301	BEAM		10S			3 9.00	2 8.50					10 3	10 1	294
144	6 V300	CIP PILE		17		7 3.00							7 11	7 11	1,712
8	W5 W300	BEAM		22		2 1.00	9.00						33 4	33 4	45
		Int Bent 4													
26	8 D400	COLUMN	E	17		22 2.00							23 1	23 1	1,602
8	6 D401	FOOTING		10			6 10.00	10 0.00					23 8	23 4	280
80	10 D402	FOOTING		18		10 8.00							13 7	13 7	4,676
5	9 H400	BEAM	E	18		38 2.00							40 9	40 9	693
5	9 H401	BEAM	E	20		38 2.00							38 2	38 2	649
10	6 H402	BEAM	E	20		38 2.00							38 2	38 2	573
8	10 H403	BEAM	E	17		16 8.00							18 2	18 2	625
4	10 H404	BEAM	E	20		22 0.00							22 0	22 0	379
14	6 H405	BEAM	E	10			12.00	3 1.75					5 2	4 10	102
220	4 P400	CIP PILE		34S		5 1.25	2.00				20.00		6 0	6 0	882
2	4 P401	COLUMN	E	35		2 9.00	3.00	17 7.50					627 11	627 11	839
26	4 P402	BEAM	E	34S		8 6.00	2.00				2 9.00		9 5	9 5	164
108	5 U400	BEAM	E	13S		2 8.50	3 9.00	2 8.50	3 9.00				13 11	13 7	1,530
28	5 U401	BEAM	E	10S			3 9.00	2 8.50					10 3	10 1	294
120	6 V400	CIP PILE		17		7 3.00							7 11	7 11	1,427
8	W5 W400	BEAM		22		18.00	9.00						25 11	25 11	35

Bill of Reinforcing Steel

No. Req.	Size/ Mark	Location	Codes C	SH	V	Dimensions B ft in.	C ft in.	D ft in.	E ft in.	F ft in.	H ft in.	K ft in.	Nom. Length ft in.	Actual Length ft in.	Weight lb
		Superstructure													
		End Bent 1													
9	6 F100	WING BRACE	E	23S		2 3.00	4 3.00	14.00	7.75	11.75	22.50	14.75	7 8	7 7	103
3	6 F101	DIAPHRAGM	E	15S		4 7.00	2 10.00				4 2.50	21.75	7 5	7 4	33
9	6 F102	WING BRACE	E	23S		2 3.00	5 3.00	14.00	11.75	7.75	14.75	22.50	8 8	8 7	116
3	6 F103	DIAPHRAGM	E	21S			2 10.00	5 7.00			2 7.75	13.75	8 5	8 0	36
14	6 H100	BM & DIAPH	E	20		41 10.00							41 10	41 10	880
12	6 H101	BM & DIAPH	E	20		41 10.00							41 10	41 10	754
6	6 H102	BEAM	E	18		5 1.00							6 6	6 6	59
16	8 H103	WING	E	19		15 6.00	16.00						16 10	16 8	712
36	6 H104	WING	E	19		14 8.00	12.00						15 8	15 6	838
140	4 P100	CIP PILE	E	34S		2 5.75	2.00				10.00		3 5	3 5	320
28	5 U100	BEAM	E	37S		4 8.00	3 0.00						13 4	13 2	385
8	4 U101	BEAM	E	13S		3 0.00	2 8.00	3 0.00	2 8.00				12 1	11 10	63
4	4 U102	BEAM	E	10S			2 8.00	3 0.00					8 4	8 2	22
37	5 U103	DIAPHRAGM	E	37S		3 6.00	2 5.00						10 5	10 3	396
37	6 U104	DIAPHRAGM	E	19S		2 4.00	3 0.00						5 4	5 2	287
53	6 U105	DIAPHRAGM	E	19S		3 8.00	4 10.00						8 6	8 4	663
36	5 U106	DIAPHRAGM	E	19S		2 0.00	15.00						3 3	3 2	119
18	5 V100	BEAM	E	17		4 8.00							5 3	5 3	99
12	6 V101	DIAPHRAGM	E	20		2 4.00							2 4	2 4	42
2	6 V102	WING	E	20		6 8.00							6 8	6 8	20
26	6 V103	WING	E	20		6 8.00							6 8	6 8	260
2	6 V104	WING	E	20		6 5.00							6 5	6 5	19
26	6 V105	WING	E	20		6 5.00							6 5	6 5	251
42	5 V106	CIP PILE	E	17		6 6.00							7 1	7 1	310
		End Bent 5													
9	6 F500	WING BRACE	E	23S		2 3.00	4 3.00	14.00	7.75	11.75	22.50	14.75	7 8	7 7	103
3	6 F501	DIAPHRAGM	E	15S		4 7.00	2 10.00				4 2.50	21.75	7 5	7 4	33
9	6 F502	WING BRACE	E	23S		2 3.00	5 3.00	14.00	11.75	7.75	14.75	22.50	8 8	8 7	116
3	6 F503	DIAPHRAGM	E	21S			2 10.00	5 7.00			2 7.75	13.75	8 5	8 0	36
14	6 H500	BM & DIAPH	E	20		41 10.00							41 10	41 10	880
12	6 H501	BM & DIAPH	E	20		41 10.00							41 10	41 10	754
6	6 H502	BEAM	E	18		5 1.00							6 6	6 6	59
16	8 H503	WING	E	19		15 6.00	16.00						16 10	16 8	712
36	6 H504	WING	E	19		14 8.00	12.00						15 8	15 6	838
140	4 P500	CIP PILE	E	34S		2 5.75	2.00				10.00		3 5	3 5	320
28	5 U500	BEAM	E	37S		4 8.00	3 0.00						13 4	13 2	385
8	4 U501	BEAM	E	13S		3 0.00	2 8.00	3 0.00	2 8.00				12 1	11 10	63
4	4 U502	BEAM	E	10S			2 8.00	3 0.00					8 4	8 2	22
37	5 U503	DIAPHRAGM	E	37S		3 6.00	2 5.00						10 5	10 3	396
37	6 U504	DIAPHRAGM	E	19S		2 4.00	3 0.00						5 4	5 2	287
53	6 U505	DIAPHRAGM	E	19S		3 8.00	4 10.00						8 6	8 4	663
36	5 U506	DIAPHRAGM	E	19S		2 0.00	15.00						3 3	3 2	119
18	5 V500	BEAM	E	17		4 8.00							5 3	5 3	99
12	6 V501	DIAPHRAGM	E	20		2 4.00							2 4	2 4	42
2	6 V502	WING	E	20		6 8.00							6 8	6 8	20
26	6 V503	WING	E	20		6 8.00							6 8	6 8	260
2	6 V504	WING	E	20		6 5.00							6 5	6 5	19
26	6 V505	WING	E	20		6 5.00							6 5	6 5	251
42	5 V506	CIP PILE	E	17		6 6.00							7 1	7 1	310
		Slab													
68	7 S1	SLAB	E	20	2	2 5.25							2 5	2 5	
		INCREMENT =				37 3.75							37 4	37 4	2,762
		12.682 INCH													
620	7 S2	SLAB	E	20		38 4.00							38 4	38 4	48,579
192	5 S3	SLAB	E	20		52 1.00							52 1	52 1	10,430
116	6 S4	SLAB	E	20		33 8.00							33 8	33 8	5,866
58	6 S5	SLAB	E	20		44 7.00							44 7	44 7	3,884
300	5 S6	SLAB	E	20		52 7.00							52 7	52 7	16,453
62	5 S7	SLAB	E	20	2	2 11.75							3 0	3 0	
		INCREMENT =				37 6.88							37 7	37 7	1,312
		13.838 INCH													
568	5 S8	SLAB	E	20		38 4.00							38 4	38 4	22,710

Nominal lengths are based on out to out dimensions shown in bending diagrams and are listed to the nearest inch for fabricator's use. Actual lengths are measured along centerline bar to the nearest inch. Weights are based on actual lengths.

For bending diagrams and steel reinforcing totals, see Sheet No. 28.

All bars shall be Grade 60.

Codes: C = Required coatings, where E = Epoxy Coated and G = Galvanized.

SH = Required shape, see bending diagrams.

V = Sets of varied bars and number of bars of each length. Bar dimensions vary in equal increments between dimensions shown on this line and the following line and the actual length dimension shown on this line and the following line vary by the specified increment.

Detailed Mar. 2025
Checked Mar. 2025

Note: This drawing is not to scale. Follow dimensions.

BILL OF REINFORCING STEEL

STATE OF MISSOURI
CHRISTOPHER T. HERSINGER
NUMBER PE-2012018080
PROFESSIONAL ENGINEER

THIS SHEET HAS BEEN SIGNED, SEALED AND DATED ELECTRONICALLY.

DATE PREPARED 3/24/2025

ROUTE	STATE
AA	MO
DISTRICT	SHEET NO.
BR	29

COUNTY: SCOTT

JOB NO. JSE0248

CONTRACT ID.

PROJECT NO.

BRIDGE NO. A9692

DATE	DESCRIPTION

MISSOURI HIGHWAYS AND TRANSPORTATION COMMISSION
105 WEST CAPITOL
JEFFERSON CITY, MO 65102
1-888-ASK-MODOT (1-888-275-6636)

HR GREEN, INC.
520 MARYVILLE CENTRE DRIVE,
SUITE 100
ST. LOUIS, MISSOURI 63141
PHONE: (636) 519.0990
CORPORATE LICENSE #2002006608
HRGreen

Bill of Reinforcing Steel

No. Req.	Size/ Mark	Location	Codes C	Codes SH	Codes V	Dimensions B ft in.	C ft in.	D ft in.	E ft in.	F ft in.	H ft in.	K ft in.	Nom. Length ft in.	Actual Length ft in.	Weight lb
		Barrier													
		Type D													
20	5 K1	BARRIER	E	27S		3 8.00	9.25	5.25	3 2.75		5.25	1.00	8 1	7 11	165
82	5 K2	BARRIER	E	27S		3 8.00	9.25	14.50	2 5.75		14.25	2.75	8 2	8 0	684
4	5 K3	BARRIER	E	27S		22.50	9.25	14.50	7.75	12.00	14.25	2.75	5 6	5 3	22
20	5 K4	BARRIER	E	19S	4	2 4.25	10.00						3 2	3 1	
		INCREMENT =				2 6.25	10.00						3 4	3 3	66
		0.500 INCH													
20	5 K5	BARRIER	E	38S	4			18.50	9.50	8.25	18.00	4.00	3 0	2 10	
		INCREMENT =						20.50	9.50	8.25	20.00	4.50	3 2	3 0	61
		0.500 INCH													
12	5 K6	BARRIER	E	19S		2 6.75	10.00						3 5	3 4	42
12	5 K7	BARRIER	E	21S			2 6.50	10.00			2 6.00	6.25	3 5	3 3	41
36	5 K8	BARRIER	E	19S	4	2 8.50	10.00						3 7	3 6	
		INCREMENT =				3 2.50	10.00						4 1	4 0	141
		0.750 INCH													
36	5 K9	BARRIER	E	21S	4		2 8.50	10.00			2 7.75	6.75	3 7	3 5	
		INCREMENT =					3 2.50	10.00			3 1.75	7.75	4 1	3 11	138
		0.750 INCH													
38	5 K10	BARRIER	E	19S		3 3.00	10.00						4 1	4 0	159
38	5 K11	BARRIER	E	21S			3 3.00	10.00			3 2.25	7.75	4 1	3 11	155
24	5 K12	BARRIER	E	20		15 11.00							15 11	15 11	398
12	5 K13	BARRIER	E	20	4	9 2.00							9 2	9 2	
		INCREMENT =				15 2.00							15 2	15 2	152
		36.000 INCH													
24	5 K14	BARRIER	E	20		16 6.00							16 6	16 6	413
12	5 K15	BARRIER	E	20	4	9 9.00							9 9	9 9	
		INCREMENT =				15 9.00							15 9	15 9	160
		36.000 INCH													
656	5 R1	BARRIER	E	26		3 3.00	5.50	2.25	3 1.25	5.50	3 0.75	6.75	6 11	6 10	4,675
656	5 R2	BARRIER	E	19S		20.50	9.50						2 6	2 5	1,654
656	5 R3	BARRIER	E	27S			9.50	15.25	5.00	12.00	15.00	3.00	3 6	3 4	2,281
120	5 R4	BARRIER	E	20		11 8.00							11 8	11 8	1,460
10	5 R5	BARRIER	E	20		41 4.00							41 4	41 4	431
20	5 R6	BARRIER	E	20		36 5.00							36 5	36 5	760
10	5 R7	BARRIER	E	20		40 9.00							40 9	40 9	425
		Slip Form													
64	5 C1	SLIP FORM	E	20		12 0.00							12 0	12 0	801

Bill of Reinforcing Steel

No. Req.	Size/ Mark	Location	Codes C	Codes SH	Codes V	Dimensions B ft in.	C ft in.	D ft in.	E ft in.	F ft in.	H ft in.	K ft in.	Nom. Length ft in.	Actual Length ft in.	Weight lb

Nominal lengths are based on out to out dimensions shown in bending diagrams and are listed to the nearest inch for fabricator's use. Actual lengths are measured along centerline bar to the nearest inch. Weights are based on actual lengths.

For bending diagrams and steel reinforcing totals, see Sheet No. 28.

All bars shall be Grade 60.

Codes: C = Required coatings, where E = Epoxy Coated and G = Galvanized.

SH = Required shape, see bending diagrams.

V = Sets of varied bars and number of bars of each length. Bar dimensions vary in equal increments between dimensions shown on this line and the following line and the actual length dimension shown on this line and the following line vary by the specified increment.

Detailed Mar. 2025
Checked Mar. 2025

BILL OF REINFORCING STEEL

Note: This drawing is not to scale. Follow dimensions.

STATE OF MISSOURI
CHRISTOPHER T. HERSINGER
NUMBER PE-2012018080
PROFESSIONAL ENGINEER

THIS SHEET HAS BEEN SIGNED, SEALED AND DATED ELECTRONICALLY.

DATE PREPARED 3/24/2025

ROUTE AA | STATE MO
DISTRICT BR | SHEET NO. 30
COUNTY SCOTT
JOB NO. JSE0248
CONTRACT ID.
PROJECT NO.
BRIDGE NO. A9692

DESCRIPTION | DATE

MISSOURI HIGHWAYS AND TRANSPORTATION COMMISSION
105 WEST CAPITOL
JEFFERSON CITY, MO 65102
1-888-ASK-MODOT (1-888-275-6636)

HR GREEN, INC.
520 MARYVILLE CENTRE DRIVE, SUITE 100
ST. LOUIS, MISSOURI 63141
PHONE: (636) 519.0990
CORPORATE LICENSE #2002006608

HRGreen

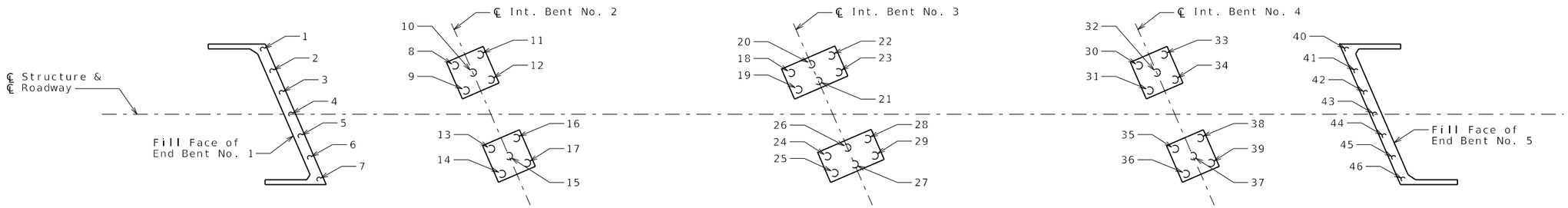

PART PLAN SHOWING PILE NUMBERING FOR RECORDING AS-BUILT PILE DATA

As-Built Pile Data

Pile No.	Length in Place (ft)	PDA Nom. Axial Compressive Resistance (kips)	PDA End of Drive Blow Count (blows/in.)	Actual End of Drive Blow Count (blows/in.)	Remarks
					End Bent No. 1
1					
2					
3					
4					
5					
6					
7					
					Intermediate Bent No. 2
8					
9					
10					
11					
12					
13					
14					
15					
16					
17					

As-Built Pile Data

Pile No.	Length in Place (ft)	PDA Nom. Axial Compressive Resistance (kips)	PDA End of Drive Blow Count (blows/in.)	Actual End of Drive Blow Count (blows/in.)	Remarks
					Intermediate Bent No. 3
18					
19					
20					
21					
22					
23					
24					
25					
26					
27					
28					
29					
					Intermediate Bent No. 4
30					
31					
32					
33					
34					

As-Built Pile Data

Pile No.	Length in Place (ft)	PDA Nom. Axial Compressive Resistance (kips)	PDA End of Drive Blow Count (blows/in.)	Actual End of Drive Blow Count (blows/in.)	Remarks
35					
36					
37					
38					
39					
					End Bent No. 5
40					
41					
42					
43					
44					
45					
46					

Note:
Indicate in remarks column:
A. Pile type and grade
B. Batter
C. Driven to practical refusal
D. PDA test pile
E. Minimum tip elevation controlled
(Use when actual blow count is less than PDA blow count due to minimum tip elevation requirement. A plus sign (+) shall be placed after the PDA nominal axial compressive resistance value indicating actual value is higher than PDA value.)

This sheet to be completed by MoDOT construction personnel.

STATE OF MISSOURI
CHRISTOPHER T. HERSINGER
NUMBER PE-2012018080
PROFESSIONAL ENGINEER

THIS SHEET HAS BEEN SIGNED, SEALED AND DATED ELECTRONICALLY.

DATE PREPARED 3/24/2025

ROUTE	STATE
AA	MO
DISTRICT	SHEET NO.
BR	31

COUNTY SCOTT
JOB NO. JSE0248
CONTRACT ID.
PROJECT NO.
BRIDGE NO. A9692

DESCRIPTION	DATE

MISSOURI HIGHWAYS AND TRANSPORTATION COMMISSION
105 WEST CAPITOL
JEFFERSON CITY, MO 65102
1-888-ASK-MODOT (1-888-275-6636)

HR GREEN, INC.
520 MARYVILLE CENTRE DRIVE, SUITE 100
ST. LOUIS, MISSOURI 63141
PHONE: (636) 519.0990
CORPORATE LICENSE #2002006608
HRGreen

Detailed Mar. 2025
Checked Mar. 2025

Note: This drawing is not to scale. Follow dimensions.

CPT-1

Total depth: 119.43 ft
Est. GWL: 35.00 ft
Cone Type: 15cm2
Cone Operator: DWJ

UES
Project: Route AA over US 60, MODOT Bridge No. T0142
Location: Scott County, Missouri

Depth (ft) Elevation: 325 (ft)

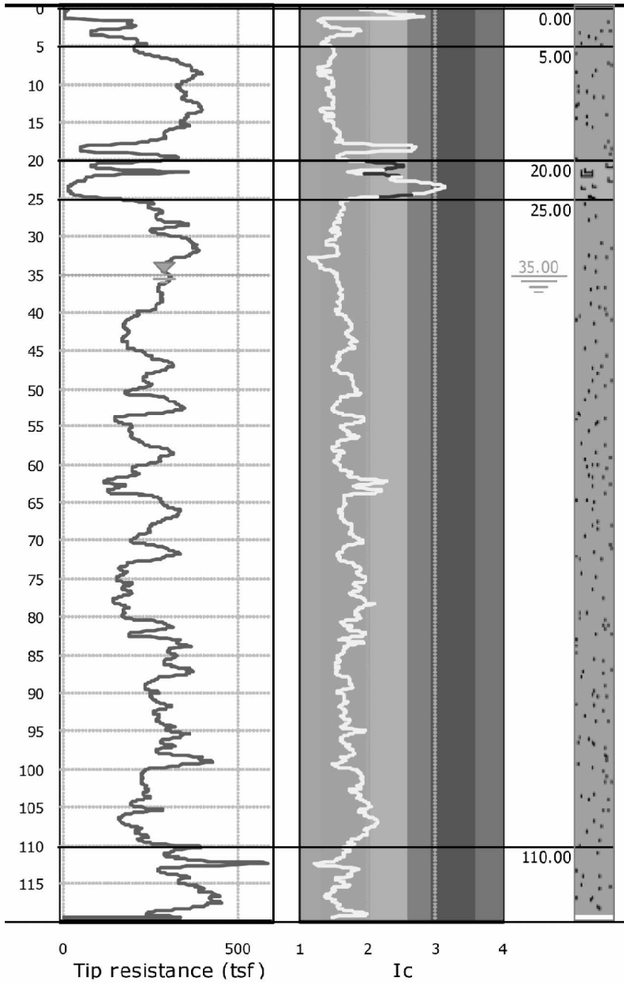

Description	qt (tsf)	Ksbt (ft/s)	N60	Es (tsf)	Dr	Phi (°)	M (tsf)	Go (tsf)	Su (tsf)	Su ratio	OCR	Gamma (pcf)
Sand & silty sand	119.3	1.00E-3	22.5	652.7	89.9	44.1	694.1	751.9	-	-	-	119.2
Sand & silty sand	304.9	1.11E-3	56.5	1483.0	95.6	45.4	1792.0	2026.3	-	-	-	131.3
Silty sand & sandy silt	100.4	3.21E-5	27.1	1645.8	75.9	41.3	895.2	1403.8	-	-	-	122.4
Sand & silty sand	253.0	3.78E-4	53.4	1527.7	59.2	38.0	1788.7	2022.9	-	-	-	125.2
Sand & silty sand	361.0	6.61E-4	71.5	1921.3	59.3	38.1	2357.1	2564.6	-	-	-	126.5

CPeT-IT v.3.9.5.5 - CPTU data presentation & interpretation software - Report created on: 1/22/2025, 2:29:41 PM
Project file: S:\Projects\A25130\A25130.00017.000 - Route AA over US-60 - MoDOT SE248\Data\CPT Data\Route AA over Route 60 CPT data.cpt

BORING DATA

Note: For locations of borings, see Sheet No. 1.

Detailed Mar. 2025
Checked Mar. 2025

Note: This drawing is not to scale. Follow dimensions.

STATE OF MISSOURI
CHRISTOPHER T. HERSINGER
NUMBER PE-2012018080
PROFESSIONAL ENGINEER

THIS SHEET HAS BEEN SIGNED, SEALED AND DATED ELECTRONICALLY.

DATE PREPARED 3/24/2025
ROUTE AA | STATE MO
DISTRICT BR | SHEET NO. 32
COUNTY SCOTT
JOB NO. JSE0248
CONTRACT ID.
PROJECT NO.
BRIDGE NO. A9692

DESCRIPTION
DATE

MISSOURI HIGHWAYS AND TRANSPORTATION COMMISSION
105 WEST CAPITOL
JEFFERSON CITY, MO 65102
1-888-ASK-MODOT (1-888-275-6636)

HR GREEN, INC.
520 MARYVILLE CENTRE DRIVE, SUITE 100
ST. LOUIS, MISSOURI 63141
PHONE: (636) 519.0990
CORPORATE LICENSE #2002006608

HRGreen

CPT-2

Total depth: 119.03 ft
Est. GWL: 15.00 ft
Cone Type: 15cm2
Cone Operator: DWJ

UES
Project: Route AA over US 60, MODOT Bridge No. T0142
Location: Scott County, Missouri

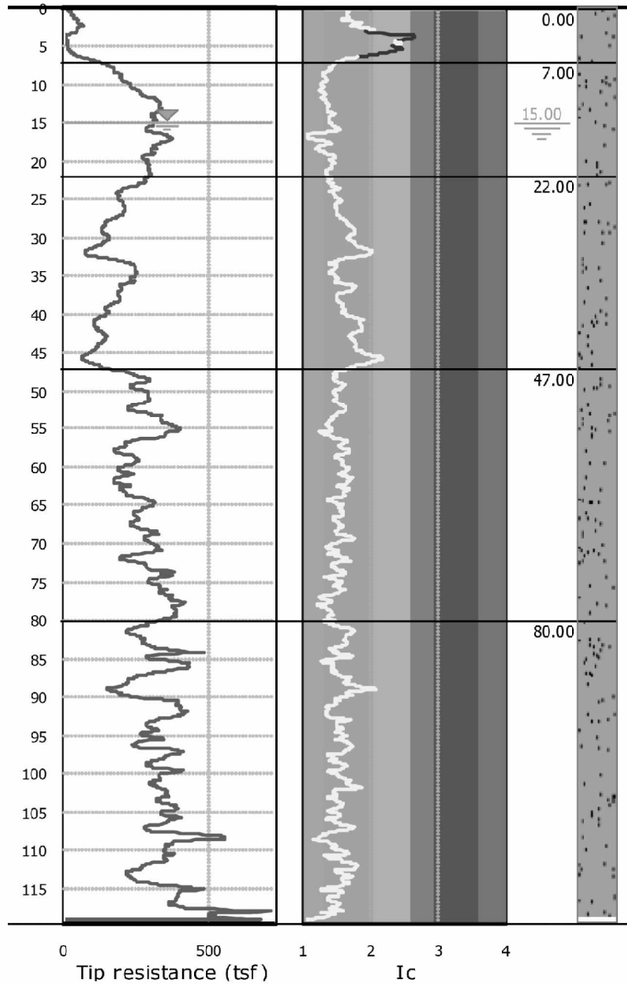

Description	qt (tsf)	Ksbt (ft/s)	N60	Es (tsf)	Dr	Phi (°)	M (tsf)	Go (tsf)	Su (tsf)	Su ratio	OCR	Gamma (pcf)
Sand & silty sand	46.7	1.92E-4	10.3	315.6	66.0	39.6	357.5	380.0	-	-	-	112.0
Sand & silty sand	282.4	3.00E-3	47.9	1123.2	91.5	44.2	1407.7	1500.9	-	-	-	126.1
Sand & silty sand	168.1	4.92E-4	33.8	932.9	62.1	38.6	1114.9	1192.5	-	-	-	120.8
Sand & silty sand	283.7	9.83E-4	53.0	1348.5	69.7	40.4	1689.7	1785.3	-	-	-	125.2
Sand & silty sand	335.9	9.65E-4	63.4	1632.4	65.9	39.6	2031.6	2176.5	-	-	-	126.0

CPeT-IT v.3.9.5.5 - CPTU data presentation & interpretation software - Report created on: 1/22/2025, 2:29:42 PM

Project file: S:\Projects\A25130\A25130.00017.000 - Route AA over US-60 - MoDOT SE248\Data\CPT Data\Route AA over Route 60 CPT data.cpt

BORING DATA

Note: For locations of borings, see Sheet No. 1.

Detailed Mar. 2025
Checked Mar. 2025

Note: This drawing is not to scale. Follow dimensions.

STATE OF MISSOURI
CHRISTOPHER T. HERSINGER
NUMBER PE-2012018080
PROFESSIONAL ENGINEER

THIS SHEET HAS BEEN SIGNED, SEALED AND DATED ELECTRONICALLY.

DATE PREPARED	
3/24/2025	
ROUTE: AA	STATE: MO
DISTRICT: BR	SHEET NO.: 33
COUNTY: SCOTT	
JOB NO.: JSE0248	
CONTRACT ID.	
PROJECT NO.	
BRIDGE NO.: A9692	

DESCRIPTION	DATE

MISSOURI HIGHWAYS AND TRANSPORTATION COMMISSION
105 WEST CAPITOL
JEFFERSON CITY, MO 65102
1-888-ASK-MODOT (1-888-275-6636)

HR GREEN, INC.
520 MARYVILLE CENTRE DRIVE, SUITE 100
ST. LOUIS, MISSOURI 63141
PHONE: (636) 519.0990
CORPORATE LICENSE #2002006608

HRGreen

CPT-3

Total depth: 119.82 ft
Est. GWL: 20.00 ft
Cone Type: 15cm2
Cone Operator: DWJ

UES
Project: Route AA over US 60, MODOT Bridge No. T0142
Location: Scott County, Missouri

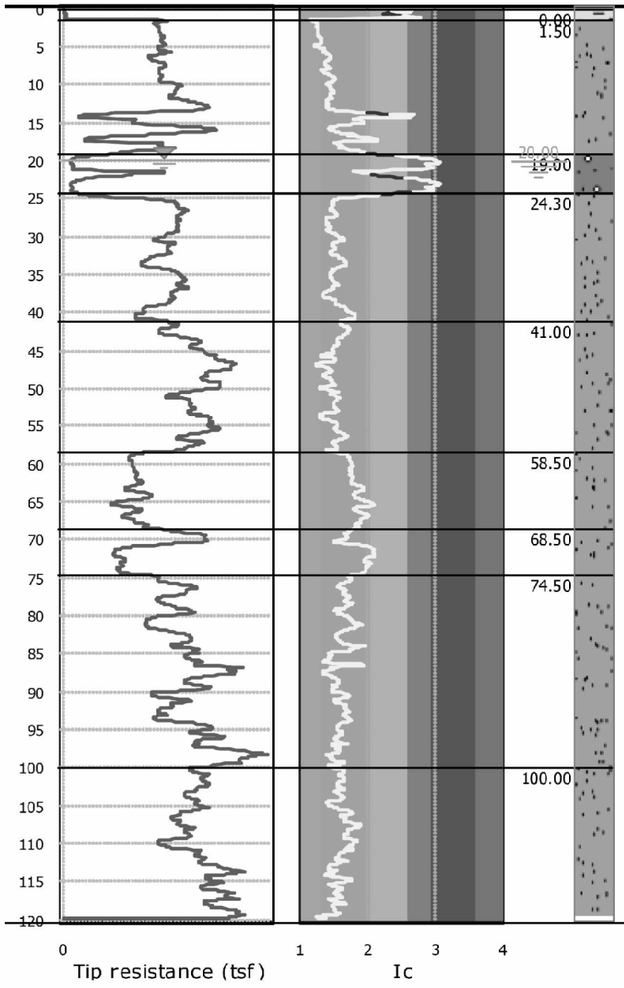

Depth (ft)	Description	qt (tsf)	Ksbt (ft/s)	N60	Es (tsf)	Dr	Phi (°)	M (tsf)	Go (tsf)	Su (tsf)	Su ratio	OCR	Gamma (pcf)
0.00	Very stiff fine grained	10.5	3.00E-5	3.0	-	-	-	109.1	143.1	0.3	5.6	40.3	106.4
1.50	Sand & silty sand	225.4	1.73E-3	41.1	1055.4	89.6	43.9	1272.8	1406.0	-	-	-	126.4
19.00	Clay & silty clay	46.5	6.21E-6	15.9	-	-	-	483.5	972.7	1.5	1.2	6.9	119.6
24.30	Sand & silty sand	239.2	8.27E-4	45.3	1177.5	71.9	40.8	1461.8	1548.4	-	-	-	124.9
41.00	Sand & silty sand	310.2	1.07E-3	57.9	1479.4	75.3	41.5	1853.8	1993.6	-	-	-	127.7
58.50	Sand & silty sand	166.3	9.86E-5	38.6	1194.5	52.8	36.6	1291.3	1541.8	-	-	-	122.3
68.50	Sand & silty sand	193.6	1.24E-4	44.8	1396.3	54.0	36.7	1447.4	1841.9	-	-	-	124.4
74.50	Sand & silty sand	289.4	5.40E-4	57.4	1541.9	61.6	38.7	1904.3	2042.6	-	-	-	125.3
100.00	Sand & silty sand	317.3	5.19E-4	63.2	1698.6	59.5	38.2	2099.8	2251.2	-	-	-	125.5

CPeT-IT v.3.9.5.5 - CPTU data presentation & interpretation software - Report created on: 1/22/2025, 2:29:40 PM 1
Project file: S:\Projects\A25130\A25130.00017.000 - Route AA over US-60 - MoDOT SE248\Data\CPT Data\Route AA over Route 60 CPT data.cpt

STATE OF MISSOURI
CHRISTOPHER T. HERSINGER
NUMBER PE-2012018080
PROFESSIONAL ENGINEER

THIS SHEET HAS BEEN SIGNED, SEALED AND DATED ELECTRONICALLY.

DATE PREPARED 3/24/2025
ROUTE AA | STATE MO
DISTRICT BR | SHEET NO. 34
COUNTY SCOTT
JOB NO. JSE0248
CONTRACT ID.
PROJECT NO.
BRIDGE NO. A9692

DESCRIPTION
DATE

MISSOURI HIGHWAYS AND TRANSPORTATION COMMISSION
105 WEST CAPITOL
JEFFERSON CITY, MO 65102
1-888-ASK-MODOT (1-888-275-6636)

HR GREEN, INC.
520 MARYVILLE CENTRE DRIVE, SUITE 100
ST. LOUIS, MISSOURI 63141
PHONE: (636) 519.0990
CORPORATE LICENSE #2002006608
HRGreen

BORING DATA

Note: For locations of borings, see Sheet No. 1.

Detailed Mar. 2025
Checked Mar. 2025

Note: This drawing is not to scale. Follow dimensions.