MISSOURI HIGHWAYS AND TRANSPORTATION COMMISSION
PLANS FOR PROPOSED
STATE HIGHWAY
JACKSON COUNTY
SEC. 8 & 9, T47N, R31W

DESIGN DESIGNATION
ROUTE 50

A.A.D.T. - 2022 = 53,100
A.A.D.T. - 2042 = 81,850
D.H.V. = 10%
T = 8%
V = 60 M.P.H.
D = EB 39% WB 61%

FUNCTIONAL CLASSIFICATION-FREEWAY

FULLY CONTROLLED ACCESS HIGHWAY

THIS SHALL BE A FULLY CONTROLLED ACCESS HIGHWAY BETWEEN STA. 720+95.64 AND STA. 735+28.37. NO ABUTTING OWNER SHALL HAVE THE RIGHT OF DIRECT ACCESS TO SAID HIGHWAY OR ITS RIGHT-OF-WAY EXCEPT THAT ACCESS WILL BE PERMITTED TO ANY ADJACENT OUTER ROADWAY OR SERVICE ROAD TO WHICH ACCESS IS NOT SPECIFICALLY PROHIBITED BY THE SPECIAL SYMBOL DENOTING "NO RIGHT OF ACCESS" AS SHOWN ON THE PLANS. NO ACCESS WILL BE PERMITTED FROM OUTER ROADWAYS AND SERVICE ROADS TO THROUGHWAYS EXCEPT ALONG ROUTES CONSTRUCTED FOR THAT PURPOSE. OUTER ROADWAYS AND SERVICE ROADS, AS THE CASE MAY BE, ARE SO DESIGNATED ON THE PLANS.

- BEGINNING AND ENDING OF CONTROLLED ACCESS
- CONTROLLED ACCESS
- NO RIGHT OF ACCESS OR CROSSING OF LINES BEARING THIS SYMBOL WILL BE PERMITTED UNDER ANY CIRCUMSTANCES.
- TEMPORARY ACCESS THROUGH FUTURE NO RIGHT OF ACCESS

CONVENTIONAL SYMBOLS
(USED IN PLANS)

	EXISTING	NEW
BUILDINGS AND STRUCTURES		
GUARD RAIL		
GUARD CABLE		
CONCRETE RIGHT-OF-WAY MARKER		
STEEL RIGHT-OF-WAY MARKER		
LOCATION SURVEY MARKER		
UTILITIES		
FIBER OPTICS	-FO-	FO
OVERHEAD CABLE TV	-OTV-	OTV
UNDERGROUND CABLE TV	-UTV-	UTV
OVERHEAD TELEPHONE	-OT-	OT
UNDERGROUND TELEPHONE	-UT-	UT
OVERHEAD POWER	-OE-	OE
UNDERGROUND POWER	-UE-	UE
SANITARY SEWER	-S-	S
STORM SEWER	-SS-	SS
GAS	-G-	G
WATER	-W-	W
MANHOLE	SAN	
FIRE HYDRANT	HYD	
WATER VALVE	WV	
WATER METER	WM	
DROP INLET	D	
DITCH BLOCK		
GROUND MOUNTED SIGN	SIGN	
LIGHT POLE		
H-FRAME POWER POLE	PED	
TELEPHONE PEDESTAL		
FENCE		
CHAIN LINK	-V-	
WOVEN WIRE	-X-	
GATE POST		
BENCHMARK	BM	

NOTE: DASHED OR OPEN SYMBOLS INDICATE EXISTING FEATURES

DESIGN DESIGNATION
ROUTE 291

A.A.D.T. - 2022 = 25,200
A.A.D.T. - 2042 = 30,900
D.H.V. = 10%
T = 3%
V = 45 M.P.H.
D = NB 50% SB 50%

FUNCTIONAL CLASSIFICATION-PRINCIPAL ARTERIAL

DESIGN DESIGNATION
BLUE PARKWAY

A.A.D.T. - 2022 = 6,900
A.A.D.T. - 2042 = 8,600
D.H.V. = 10%
T = 2%
V = 35 M.P.H.
D = EB 55% WB 45%

FUNCTIONAL CLASSIFICATION-COMMERCIAL COLLECTOR

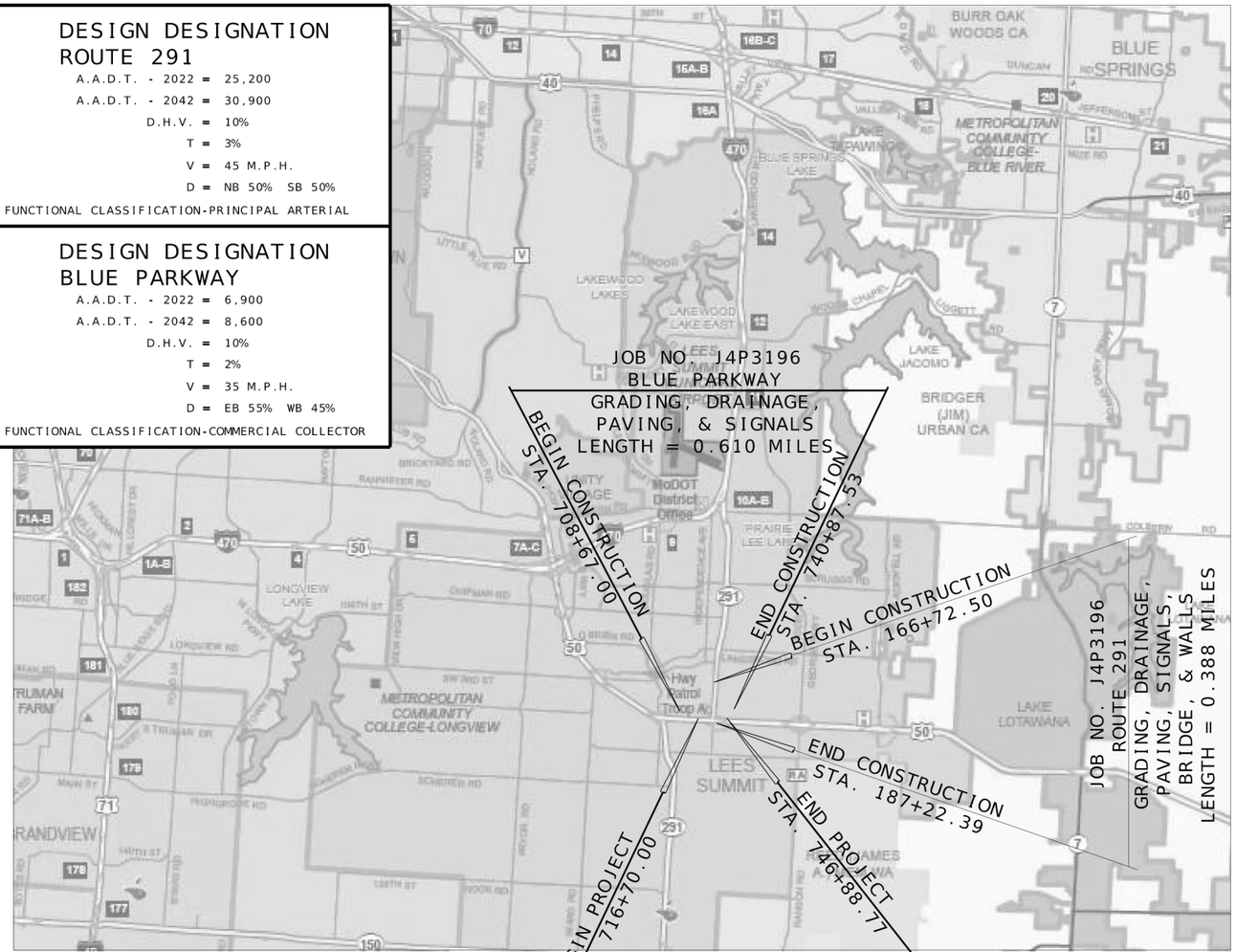

NOT TO SCALE

THE EXISTENCE AND APPROXIMATE LOCATION OF UTILITY FACILITIES KNOWN TO EXIST, AS SHOWN ON THE PLANS, ARE BASED ON THE BEST INFORMATION AVAILABLE TO THE COMMISSION AT THIS TIME. THIS INFORMATION IS PROVIDED BY THE COMMISSION "AS-IS" AND THE COMMISSION EXPRESSLY DISCLAIMS ANY REPRESENTATION OR WARRANTY AS TO THE COMPLETENESS, ACCURACY, OR SUITABILITY OF THE INFORMATION FOR ANY USE. RELIANCE UPON THIS INFORMATION IS DONE AT THE RISK AND PERIL OF THE USER, AND THE COMMISSION SHALL NOT BE LIABLE FOR ANY DAMAGES THAT MAY ARISE FROM ANY ERROR IN THE INFORMATION. IT IS, THEREFORE, THE RESPONSIBILITY OF THE CONTRACTOR TO VERIFY THE EXISTENCE, LOCATION AND STATUS OF ANY FACILITY. SUCH VERIFICATION INCLUDES DIRECT CONTACT WITH THE LISTED UTILITIES.

INDEX OF SHEETS

DESCRIPTION	SHEET NUMBER
TITLE SHEET	1
TYPICAL SECTIONS (TS) (19 SHEETS)	2
QUANTITIES (QU) (18 SHEETS)	3
PLAN-PROFILE (PP)	4 - 19
RIGHT OF WAY (RW)	20 - 26
COORDINATE POINTS (CP)	27 - 29
SPECIAL SHEETS (SS)	30 -103
TRAFFIC CONTROL SHEETS (TC)	104-167
EROSION CONTROL SHEETS (EC)	168-182
LIGHTING (LT)	183-189
CITY LIGHTING (LT)	190-197
SIGNALS (SG)	198-217
FIBER (ITS)	218-225
SIGNING (SN)	226-247
PAVEMENT MARKING (PM)	248-256
CULVERT SECTIONS (CS)	257-277
WATER RELOCATION SHEETS (WR)	278-286
SEWER RELOCATION SHEETS (SR)	287-288
WATER & SEWER QUANTITY SHEET (WS)	289
BRIDGE DRAWINGS (B)	
A9328	1-46
A9329	1-8
A9330	1-8
KC-0123	1-3
KC-0124	1-3
CROSS SECTIONS (XS)	1-152

LENGTH OF PROJECT

ROUTE 50

BEGIN CONSTRUCTION	STA.	716+70.00
END CONSTRUCTION	STA.	746+88.77
APPARENT LENGTH		3018.77 FEET

ROUTE 291

BEGIN CONSTRUCTION	STA.	166+72.50
END CONSTRUCTION	STA.	187+22.39
APPARENT LENGTH		2049.89 FEET

BLUE PARKWAY

BEGIN CONSTRUCTION	STA.	708+67.00
END CONSTRUCTION	STA.	740+87.53
APPARENT LENGTH		3220.53 FEET

EQUATIONS AND EXCEPTIONS:

STA. 730+69.98 BK.=
STA. 730+72.47 AH.

TOTAL CORRECTIONS	2.49 FEET
NET LENGTH OF PROJECT	8289.19 FEET

FOR INFORMATION ONLY
ESTIMATED DISTURBED ACRES 38 ACRES

Reid Catt
2025.04.08 19:11:10-05'00'

REID BRENNEN CATT-ENGINEER
MO# PE-2010019516

DATE PREPARED
4/8/2025

ROUTE	STATE
50/291	MO
DISTRICT	SHEET NO.
KC	1

COUNTY
JACKSON

JOB NO.
J4P3196

FEDERAL PROJECT NO.
STB-3001(009)

PROJECT NO.

BRIDGE NO.

DESCRIPTION	DATE

IF A SEAL IS PRESENT ON THIS SHEET IT HAS BEEN ELECTRONICALLY SEALED AND DATED.

MISSOURI HIGHWAYS AND TRANSPORTATION COMMISSION
105 WEST CAPITOL
JEFFERSON CITY, MO 65102
1-888-ASK-MODOT (1-888-275-6636)

LEE'S SUMMIT MISSOURI

olsson
1301 BURLINGTON ST., STE. 100
NORTH KANSAS CITY, MO 64116
PHONE: 816.361.1177
CERT. OF AUTHORITY NO. 001592

NOTE:
CROSS SECTIONS AND EARTHWORK IN THIS PROJECT ARE BASED ON THE CONCRETE ALTERNATE. CONTRACTOR IS RESPONSIBLE FOR MAKING ANY ADJUSTMENTS WITH NO EXTRA PAY IF ASPHALT ALTERNATE IS USED.

SUBGRADE PROFILE AND CROSS SECTIONS ARE DESIGNED FOR THE THINNER PAVEMENT DESIGN. THE CONTRACTOR WILL BE RESPONSIBLE FOR MAINTAINING THE PROFILE GRADE FOR EITHER PAVEMENT DESIGN WITH NO DIRECT PAY. CROSSROAD STRUCTURES ARE DESIGNED TO ACCOMMODATE A MINIMUM COVER BASED ON THE THICKER PAVEMENT DESIGN.

ALL CONCRETE PAVEMENT, CURBS, CURB & GUTTER, AND RAISED MEDIANS ON CITY RIGHT OF WAY SHALL BE CONSTRUCTED OF KCMMB 4K CONCRETE.

SEE TYPICAL SECTION SHEET 19 OF 19 FOR ALTERNATE PAVEMENT DETAILS

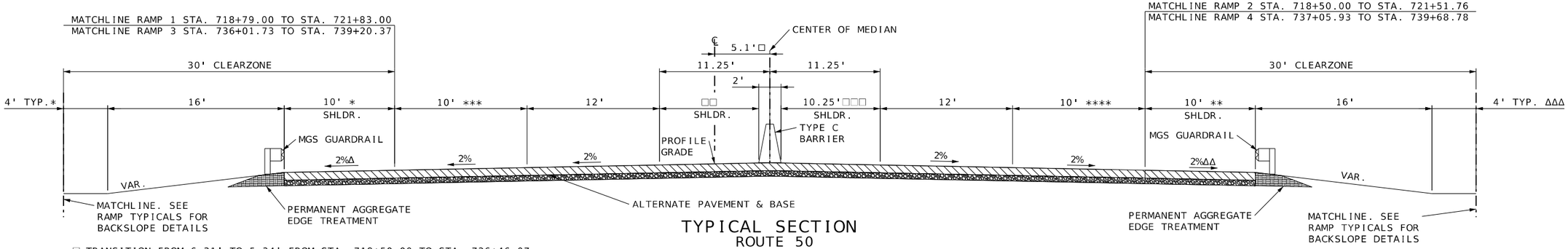

TYPICAL SECTION
ROUTE 50
STA. 717+70.34 TO STA. 727+01.00 RT.
STA. 718+79.00 TO STA. 727+01.00 LT.
STA. 729+73.06 TO STA. 740+02.47

□ TRANSITION FROM 6.31' TO 5.34' FROM STA. 718+50.00 TO STA. 726+46.07
TRANSITION FROM 5.10' TO 6.60' FROM STA. 736+97.50 TO STA. 738+47.51
TRANSITION FROM 3.60' TO 5.85' FROM STA. 738+52.49 TO STA. 740+02.47

□□ TRANSITION FROM 10.25' TO 12.50' FROM STA. 726+46.08 TO STA. 727+81.09
8.00' WIDTH FROM STA. 727+81.08 TO STA. 728+93.09
TRANSITION FROM 8.00' TO 10.25' FROM STA. 728+93.06 TO STA. 730+28.06
TRANSITION FROM 10.25' TO 11.75' FROM STA. 736+97.50 TO STA. 738+47.50
8.75' WIDTH FROM STA. 738+47.50 TO STA. 738+52.50
TRANSITION FROM 8.75' TO 8.62' FROM STA. 738+52.50 TO STA. 740+02.47

□□□ TRANSITION FROM 10.25' TO 8.00' FROM STA. 726+46.08 TO STA. 727+81.09
8.00' WIDE FROM STA. 727+81.09 TO STA. 728+93.06
TRANSITION FROM 12.50' TO 10.25' FROM STA. 728+93.06 TO STA. 730+28.06
TRANSITION FROM 10.25' TO 8.72' FROM STA. 736+97.50 TO STA. 738+52.50
TRANSITION FROM 11.72' TO 7.90' FROM STA. 738+52.50 TO STA. 740+02.50

* TRANSITION FROM 10.00' TO 16.46' FROM STA. 734+10.71 TO STA. 736+01.73
** TRANSITION FROM 16.21' TO 10.00' FROM STA. 722+05.70 TO STA. 724+51.74
*** TRANSITION FROM 12.00' TO 28.03' FROM STA. 718+79.00 TO STA. 721+83.00
TRANSITION FROM 34.51' TO 12.52' FROM STA. 736+01.73 TO STA. 739+20.37
TRANSITION FROM 12.52' TO 13.77' FROM STA. 739+20.37 TO STA. 740+02.47
**** TRANSITION FROM 12.00' TO 28.01' FROM STA. 718+50.00 TO STA. 721+51.76
TRANSITION FROM 24.00' TO 12.78' FROM STA. 737+05.93 TO STA. 739+68.78
TRANSITION FROM 12.78' TO 13.09' FROM STA. 739+68.78 TO STA. 740+02.47

Δ TRANSITION 2.0% TO 2.5% STA. 721+83.01 TO STA. 721+33.01
2.5% STA. 722+33.01 TO STA. 733+50.00
TRANSITION 2.5% TO 2.0% STA. 733+50.00 TO STA. 736+01.73

ΔΔ TRANSITION 2.0% TO 2.5% STA. 722+05.70 TO STA. 722+55.70
2.5% STA. 722+55.70 TO STA. 736+55.93
TRANSITION 2.5% TO 2.0% STA. 736+55.93 TO STA. 737+05.93

ΔΔΔ SEE PLANS AND CROSS SECTIONS FOR TRANSTION LOCATIONS

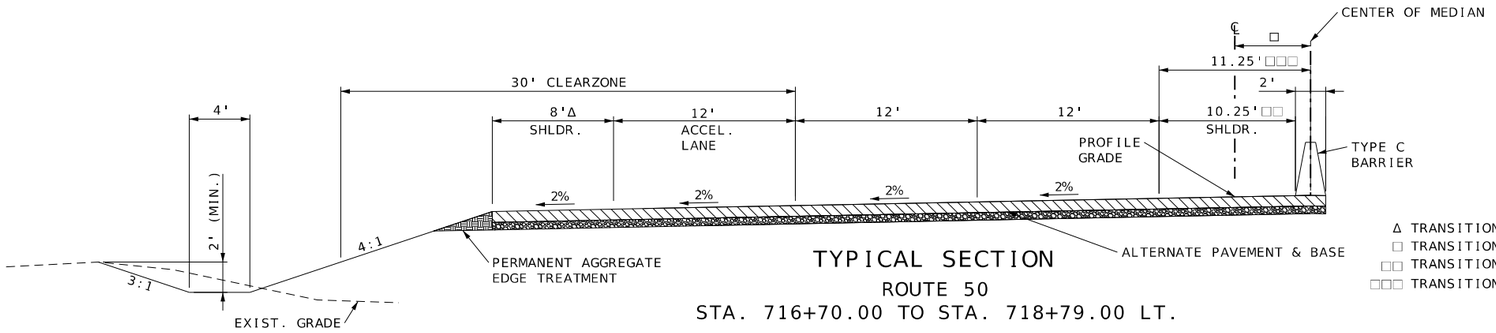

TYPICAL SECTION
ROUTE 50
STA. 716+70.00 TO STA. 718+79.00 LT.

Δ TRANSITION FROM 4.00' TO 8.00' FROM STA. 717+70.34 TO STA. 718+50.00
□ TRANSITION FROM 4.96' TO 6.31' FROM STA. 716+70.00 TO STA. 718+50.00
□□ TRANSITION FROM 6.98' TO 10.25' FROM STA. 716+70.00 TO STA. 718+50.00
□□□ TRANSITION FROM 8.02' TO 11.25' FROM STA. 716+70.00 TO STA. 718+50.00

□ TRANSITION FROM 4.96' TO 6.31' FROM STA. 716+70.00 TO STA. 718+50.00
□□ TRANSITION FROM 8.15' TO 10.25' FROM STA. 716+70.00 TO STA. 718+50.00
□□□ TRANSITION FROM 9.20' TO 11.25' FROM STA. 716+70.00 TO STA. 718+50.00

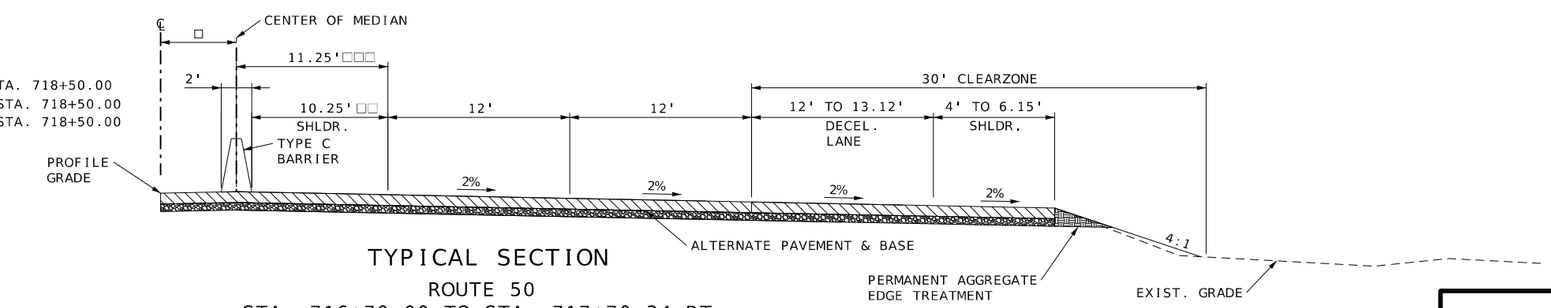

TYPICAL SECTION
ROUTE 50
STA. 716+70.00 TO STA. 717+70.34 RT.

PERMANENT AGGREGATE EDGE TREATMENT
ALTERNATE PAVEMENT
MAINLINE BASE
SHOULDERS

NOT TO SCALE

TYPICAL SHEET
1 OF 19

Reid Catt
2025.03.01 21:19:58-06'00'

REID BRENNEN CATT-ENGINEER
MO# PE-2010019516

DATE PREPARED
2/28/2025

ROUTE	STATE
50/291	MO
DISTRICT	SHEET NO.
KC	2

COUNTY
JACKSON

JOB NO.
J4P3196

FEDERAL PROJECT NO.
STB-3001(009)

PROJECT NO.

BRIDGE NO.

DESCRIPTION | DATE

IF A SEAL IS PRESENT ON THIS SHEET IT HAS BEEN ELECTRONICALLY SEALED AND DATED.

MISSOURI HIGHWAYS AND TRANSPORTATION COMMISSION
105 WEST CAPITOL
JEFFERSON CITY, MO 65102
1-888-ASK-MODOT (1-888-275-6636)

LEE'S SUMMIT MISSOURI

olsson
1301 BURLINGTON ST., STE. 100
NORTH KANSAS CITY, MO 64116
PHONE: 816.361.1177
CERT. OF AUTHORITY NO. 001592

F:\2021\04501-05000\021-04786\40-Design\Microstation\J4P3196\plan_sheets\2 Typicals\002_TS_01_J4P3196_I5.dgn 12:49:42 PM 2/28/2025

NOTE:
CROSS SECTIONS AND EARTHWORK IN THIS PROJECT ARE BASED ON THE CONCRETE ALTERNATE. CONTRACTOR IS RESPONSIBLE FOR MAKING ANY ADJUSTMENTS WITH NO EXTRA PAY IF ASPHALT ALTERNATE IS USED.

SUBGRADE PROFILE AND CROSS SECTIONS ARE DESIGNED FOR THE THINNER PAVEMENT DESIGN. THE CONTRACTOR WILL BE RESPONSIBLE FOR MAINTAINING THE PROFILE GRADE FOR EITHER PAVEMENT DESIGN WITH NO DIRECT PAY. CROSSROAD STRUCTURES ARE DESIGNED TO ACCOMMODATE A MINIMUM COVER BASED ON THE THICKER PAVEMENT DESIGN.

ALL CONCRETE PAVEMENT, CURBS, CURB & GUTTER, AND RAISED MEDIANS ON CITY RIGHT OF WAY SHALL BE CONSTRUCTED OF KCMMB 4K CONCRETE.

SEE TYPICAL SECTION SHEET 19 OF 19 FOR ALTERNATE PAVEMENT DETAILS

SEE STANDARD PLANS 609.15 FOR PAVED DITCH DETAILS

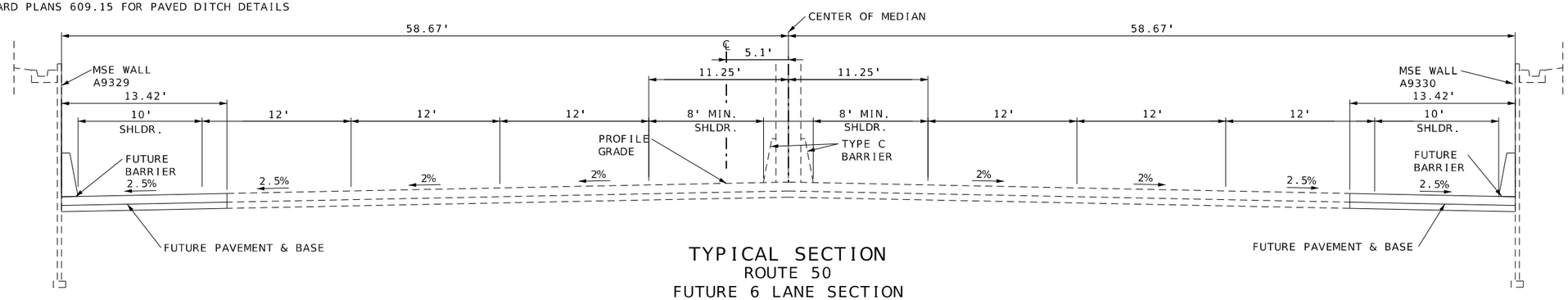

TYPICAL SECTION
ROUTE 50
FUTURE 6 LANE SECTION

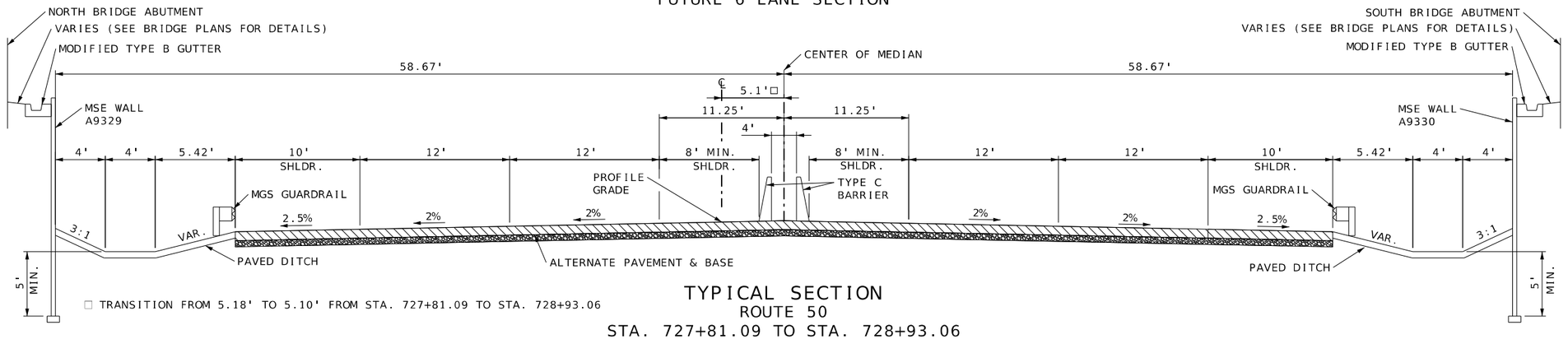

□ TRANSITION FROM 5.18' TO 5.10' FROM STA. 727+81.09 TO STA. 728+93.06

TYPICAL SECTION
ROUTE 50
STA. 727+81.09 TO STA. 728+93.06

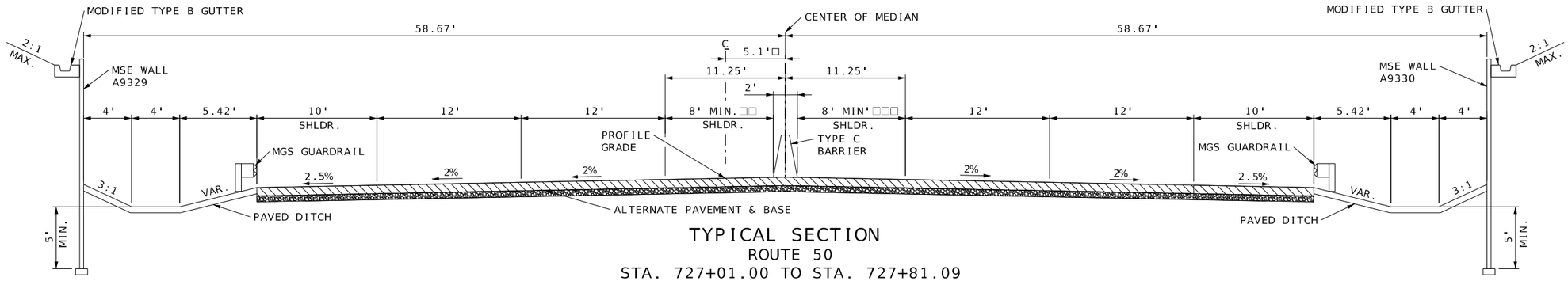

TYPICAL SECTION
ROUTE 50
STA. 727+01.00 TO STA. 727+81.09
STA. 728+93.06 TO STA. 729+73.06

PERMANENT AGGREGATE EDGE TREATMENT
ALTERNATE PAVEMENT
MAINLINE BASE
SHOULDERS

NOT TO SCALE

□ TRANSITION FROM 5.34' TO 7.43' FROM STA. 726+46.08 TO STA. 727+81.09
TRANSITION FROM 2.85' TO 5.10' FROM STA. 728+93.06 TO STA. 730+28.06

□□ TRANSITION FROM 10.25' TO 12.50' FROM STA. 726+46.08 TO STA. 727+81.09
8.00' WIDTH FROM STA. 727+81.09 TO STA. 728+93.06

□□□ TRANSITION FROM 10.25' TO 8.00' FROM STA. 726+46.08 TO STA. 727+81.09
8.00' WIDTH FROM STA. 727+81.09 TO STA. 728+93.06
TRANSITION FROM 12.50' TO 10.25' FROM STA. 728+93.03 TO STA. 730+28.06

ROUTE 50 EXISTING CL
PI STA 728+42.95
DELTA ANGLE 00°04'12" LT.

TYPICAL SHEET
2 OF 19

Reid Catt
2025.03.01 21:19:10-06'00'

REID BRENNEN CATT NUMBER PE-2010019516

REID BRENNEN CATT-ENGINEER
MO# PE-2010019516

DATE PREPARED
2/28/2025

ROUTE	STATE
50/291	MO
DISTRICT	SHEET NO.
KC	2

COUNTY
JACKSON

JOB NO.
J4P3196

FEDERAL PROJECT NO.
STB-3001(009)

PROJECT NO.

BRIDGE NO.

DESCRIPTION	DATE

IF A SEAL IS PRESENT ON THIS SHEET IT HAS BEEN ELECTRONICALLY SEALED AND DATED.

MISSOURI HIGHWAYS AND TRANSPORTATION COMMISSION
105 WEST CAPITOL
JEFFERSON CITY, MO 65102
1-888-ASK-MODOT (1-888-275-6636)

LEE'S SUMMIT MISSOURI

olsson
1301 BURLINGTON ST., STE. 100
NORTH KANSAS CITY, MO 64116
PHONE: 816.361.1177
CERT. OF AUTHORITY NO. 001592

NOTE:
CROSS SECTIONS AND EARTHWORK IN THIS PROJECT ARE BASED ON THE CONCRETE ALTERNATE. CONTRACTOR IS RESPONSIBLE FOR MAKING ANY ADJUSTMENTS WITH NO EXTRA PAY IF ASPHALT ALTERNATE IS USED.

SUBGRADE PROFILE AND CROSS SECTIONS ARE DESIGNED FOR THE THINNER PAVEMENT DESIGN. THE CONTRACTOR WILL BE RESPONSIBLE FOR MAINTAINING THE PROFILE GRADE FOR EITHER PAVEMENT DESIGN WITH NO DIRECT PAY. CROSSROAD STRUCTURES ARE DESIGNED TO ACCOMMODATE A MINIMUM COVER BASED ON THE THICKER PAVEMENT DESIGN.

ALL CONCRETE PAVEMENT, CURBS, CURB & GUTTER, AND RAISED MEDIANS ON CITY RIGHT OF WAY SHALL BE CONSTRUCTED OF KCMMB 4K CONCRETE.

SEE TYPICAL SECTION SHEET 19 OF 19 FOR ALTERNATE PAVEMENT DETAILS

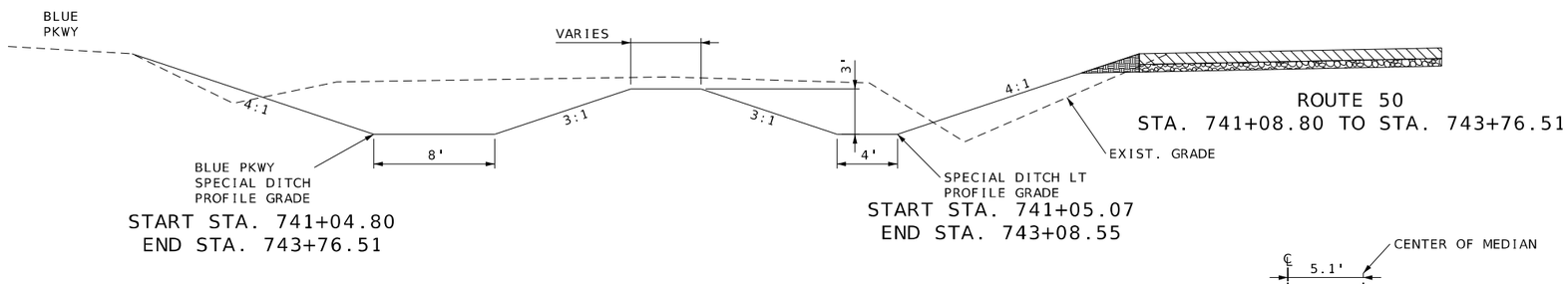

START STA. 741+04.80
END STA. 743+76.51

START STA. 741+05.07
END STA. 743+08.55

ROUTE 50
STA. 741+08.80 TO STA. 743+76.51

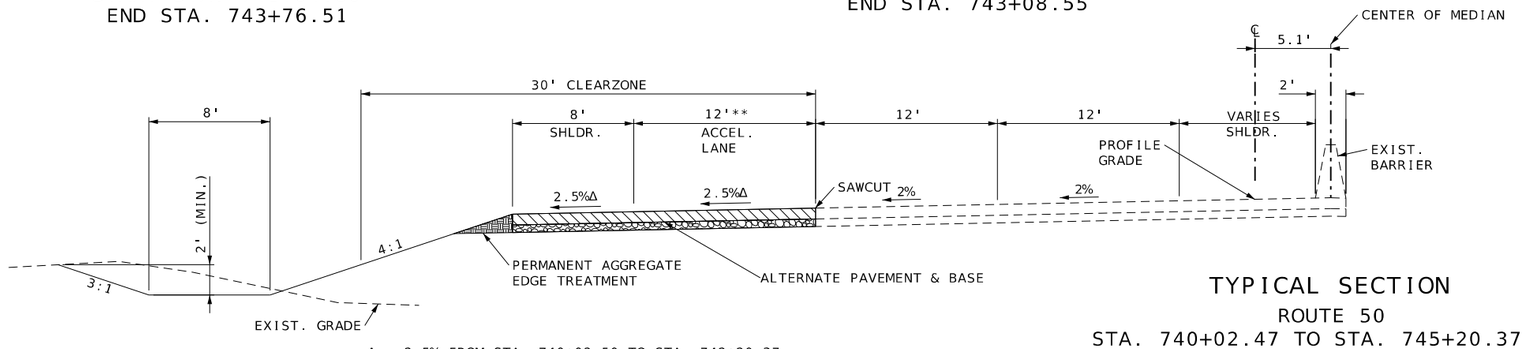

TYPICAL SECTION
ROUTE 50
STA. 740+02.47 TO STA. 745+20.37 LT.

Δ 2.5% FROM STA. 740+02.50 TO STA. 742+20.37
TRANSITION 2.5% TO 2.0% FROM STA. 742+20.37 TO STA. 745+20.37

** TRANSITION 12.00' TO 0.00' FROM STA. 742+20.37 TO STA. 745+20.37 LT.

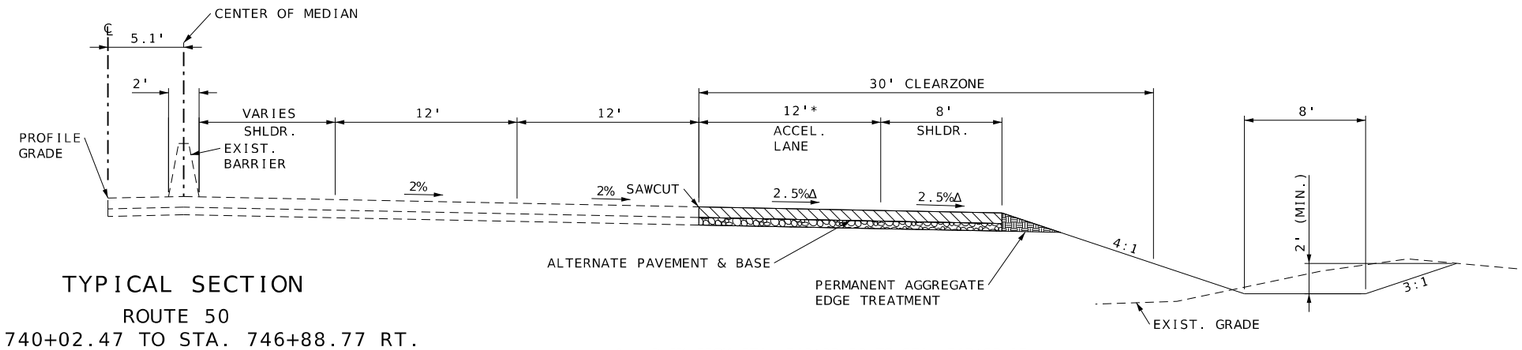

TYPICAL SECTION
ROUTE 50
STA. 740+02.47 TO STA. 746+88.77 RT.

* TRANSITION 12.00' TO 0.00' FROM STA. 743+88.17 TO STA. 746+88.77 RT.

Δ 2.5% FROM STA. 740+02.50 TO STA. 743+88.17
TRANSITION 2.5% TO 2.0% FROM STA. 743+88.17 TO STA. 746+88.77

PERMANENT AGGREGATE EDGE TREATMENT
ALTERNATE PAVEMENT
MAINLINE BASE
SHOULDERS

NOT TO SCALE

TYPICAL SHEET
3 OF 19

Reid Catt
2025.03.01 21:20:17-06'00'

REID BRENNEN CATT-ENGINEER
MO# PE-2010019516

DATE PREPARED
2/28/2025

ROUTE	STATE
50/291	MO
DISTRICT	SHEET NO.
KC	2

COUNTY
JACKSON

JOB NO.
J4P3196

FEDERAL PROJECT NO.
STB-3001(009)

PROJECT NO.

BRIDGE NO.

DESCRIPTION | DATE

IF A SEAL IS PRESENT ON THIS SHEET IT HAS BEEN ELECTRONICALLY SEALED AND DATED.

MISSOURI HIGHWAYS AND TRANSPORTATION COMMISSION
105 WEST CAPITOL
JEFFERSON CITY, MO 65102
1-888-ASK-MODOT (1-888-275-6636)

LEE'S SUMMIT MISSOURI

olsson
1301 BURLINGTON ST., STE. 100
NORTH KANSAS CITY, MO 64116
PHONE: 816.361.1177
CERT. OF AUTHORITY NO. 001592

NOTE:
CROSS SECTIONS AND EARTHWORK IN THIS PROJECT ARE BASED ON THE CONCRETE ALTERNATE. CONTRACTOR IS RESPONSIBLE FOR MAKING ANY ADJUSTMENTS WITH NO EXTRA PAY IF ASPHALT ALTERNATE IS USED.

SUBGRADE PROFILE AND CROSS SECTIONS ARE DESIGNED FOR THE THINNER PAVEMENT DESIGN. THE CONTRACTOR WILL BE RESPONSIBLE FOR MAINTAINING THE PROFILE GRADE FOR EITHER PAVEMENT DESIGN WITH NO DIRECT PAY. CROSSROAD STRUCTURES ARE DESIGNED TO ACCOMMODATE A MINIMUM COVER BASED ON THE THICKER PAVEMENT DESIGN.

ALL CONCRETE PAVEMENT, CURBS, CURB & GUTTER, AND RAISED MEDIANS ON CITY RIGHT OF WAY SHALL BE CONSTRUCTED OF KCMMB 4K CONCRETE.

SEE TYPICAL SECTION SHEET 19 OF 19 FOR ALTERNATE PAVEMENT DETAILS

RAMP 1 SUPERELEVATION		
LT	STA.	RT
-2.0%	0+00.00	-2.0%
-6.2%	1+11.80	-6.2%
-6.2%	3+51.00	-6.2%
-2.0%	4+62.80	-2.0%
0.0%	5+16.00	0.0%
2.0%	5+57.40	2.0%
5.6%	6+32.00	5.6%
5.6%	7+99.00	5.6%
2.0%	8+73.60	2.0%
0.43%	9+15.00	0.43%

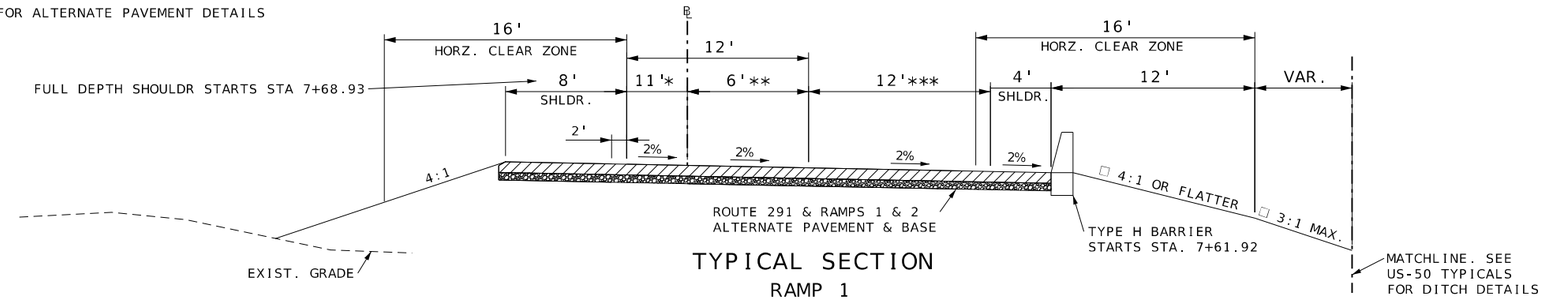

TYPICAL SECTION
RAMP 1
STA. 7+61.90 TO STA. 9+16.62

* TRANSITION 11.00' TO 121.76' FROM STA. 7+63.10 TO STA. 9+06.12
** 6.00' FROM STA. 8+80.08 TO STA. 9+05.62
*** TRANSITION 12.00' TO 55.84'FROM STA. 7+61.90 TO STA. 9+16.52
□ STRAIGHTLINE SLOPE BETWEEN RAMP EOS AND US-50 DITCH BACK SLOPE WHERE ELEVATIONS BETWEEN POINTS RESULT IN 4:1 OR FLATTER SLOPES. SEE CROSS SECTIONS FOR DETAILS

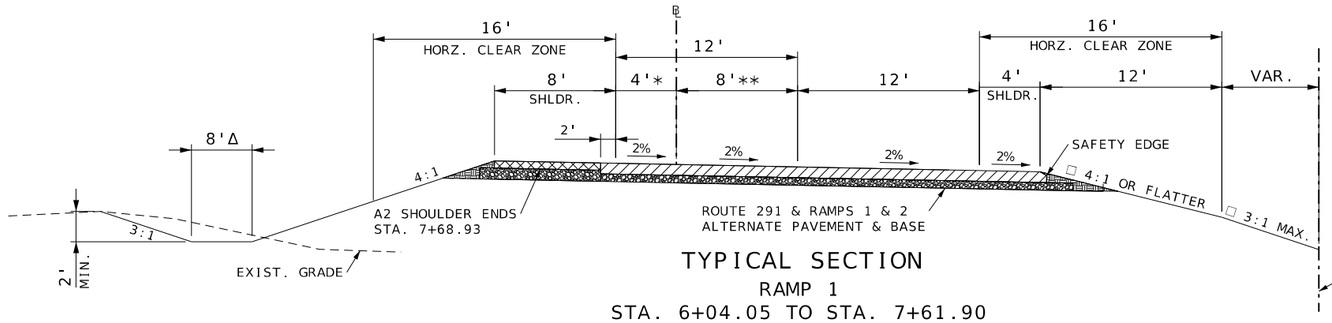

TYPICAL SECTION
RAMP 1
STA. 6+04.05 TO STA. 7+61.90

* TRANSITION 4.00' TO 11.00' FROM STA. 6+04.91 TO STA. 7+63.10
** TRANSITION 8.00' TO 6.00' FROM STA. 5+98.04 TO STA. 8+80.08
□ STRAIGHTLINE SLOPE BETWEEN RAMP EOS AND US-50 DITCH BACK SLOPE WHERE ELEVATIONS BETWEEN POINTS RESULT IN 4:1 OR FLATTER SLOPES. SEE CROSS SECTIONS FOR DETAILS

Δ 8.00' FROM STA. 5+52.57 TO STA. 6+69.12
TRANSITION 8.00 TO 0.00' FROM STA. 6+69.12 TO STA. 7+19.12

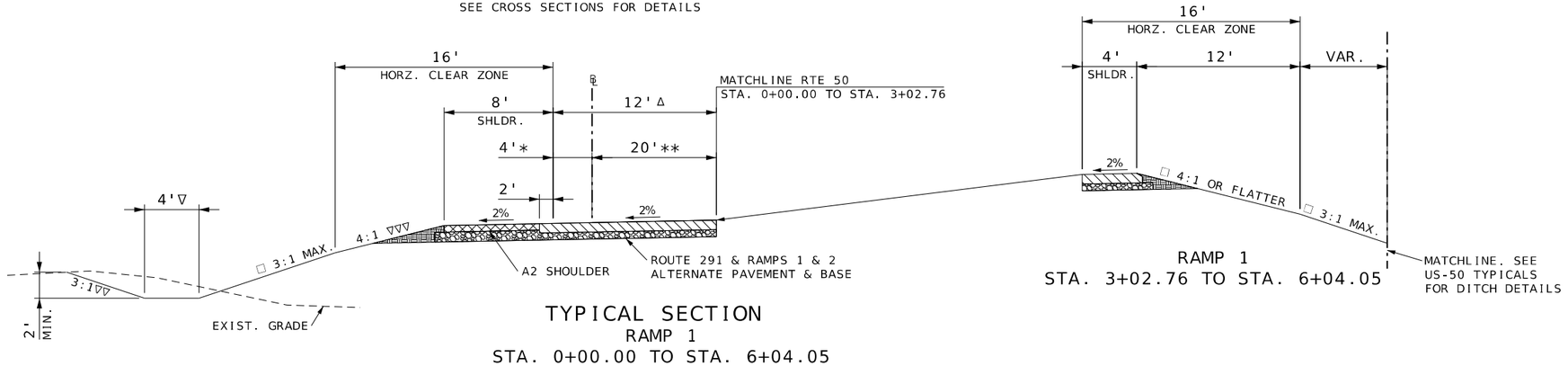

TYPICAL SECTION
RAMP 1
STA. 0+00.00 TO STA. 6+04.05

RAMP 1
STA. 3+02.76 TO STA. 6+04.05

PERMANENT AGGREGATE EDGE TREATMENT
ALTERNATE PAVEMENT
MAINLINE BASE
SHOULDERS

* TRANSITION 0.00' TO 4.00' FROM STA. 0+00.00 TO STA. 6+04.91
** TRANSITION 12.00' TO 20.00' FROM STA. 0+00.00 TO STA. 5+90.65
TRANSITION 20.00' TO 6.00' FROM STA. 5+98.04 TO STA. 9+05.62
∇ DITCH WIDTH 0.00' FROM STA. 0+00.00 TO STA. 1+84.52
TRANSITION 0.00' TO 4.00' FROM STA. 1+84.52 TO STA. 2+34.25
DETENTION BASIN GRADING FROM STA. 4+01.91 TO STA. 5+48.05
∇∇ BACKSLOPE VARIES FROM STA. 0+00.00 TO STA. 3+17.58
∇∇∇ 6:1 FORESLOPE FROM STA. 0+00.00 TO STA. 1+55.44
TRANSITION 6:1 TO 4:1 FROM STA. 1+55.44 TO STA. 2+41.80
□ STRAIGHTLINE SLOPE BETWEEN RAMP EOS AND US-50 DITCH BACK SLOPE WHERE ELEVATIONS BETWEEN POINTS RESULT IN 4:1 OR FLATTER SLOPES. SEE CROSS SECTIONS FOR DETAILS
Δ 12.00' FROM STA. 0+00.00 TO STA. 0+32.07
TRANSITION 12.00' TO 16.08' FROM STA. 0+32.07 TO STA. 3+02.76

NOT TO SCALE

TYPICAL SHEET
4 OF 19

Reid Catt
2025.03.01 21:20:09-06'00'
REID BRENNEN CATT
NUMBER
PE-2010019516
REID BRENNEN CATT-ENGINEER
MO# PE-2010019516

DATE PREPARED
2/28/2025

ROUTE	STATE
50/291	MO
DISTRICT	SHEET NO.
KC	2

COUNTY
JACKSON

JOB NO.
J4P3196

FEDERAL PROJECT NO.
STB-3001(009)

PROJECT NO.

BRIDGE NO.

DESCRIPTION	DATE

IF A SEAL IS PRESENT ON THIS SHEET IT HAS BEEN ELECTRONICALLY SEALED AND DATED.

MISSOURI HIGHWAYS AND TRANSPORTATION COMMISSION
105 WEST CAPITOL
JEFFERSON CITY, MO 65102
1-888-ASK-MODOT (1-888-275-6636)
LEE'S SUMMIT MISSOURI
olsson
1301 BURLINGTON ST., STE. 100
NORTH KANSAS CITY, MO 64116
PHONE: 816.361.1177
CERT. OF AUTHORITY NO. 001592

NOTE:
CROSS SECTIONS AND EARTHWORK IN THIS PROJECT ARE BASED ON THE CONCRETE ALTERNATE. CONTRACTOR IS RESPONSIBLE FOR MAKING ANY ADJUSTMENTS WITH NO EXTRA PAY IF ASPHALT ALTERNATE IS USED.

SUBGRADE PROFILE AND CROSS SECTIONS ARE DESIGNED FOR THE THINNER PAVEMENT DESIGN. THE CONTRACTOR WILL BE RESPONSIBLE FOR MAINTAINING THE PROFILE GRADE FOR EITHER PAVEMENT DESIGN WITH NO DIRECT PAY. CROSSROAD STRUCTURES ARE DESIGNED TO ACCOMMODATE A MINIMUM COVER BASED ON THE THICKER PAVEMENT DESIGN.

ALL CONCRETE PAVEMENT, CURBS, CURB & GUTTER, AND RAISED MEDIANS ON CITY RIGHT OF WAY SHALL BE CONSTRUCTED OF KCMMB 4K CONCRETE.

SEE TYPICAL SECTION SHEET 19 OF 19 FOR ALTERNATE PAVEMENT DETAILS

RAMP 2 SUPERELEVATION		
LT	STA.	RT
-2.0%	0+00.00	-2.0%
-5.2%	0+84.90	-5.2%
-5.2%	3+93.07	-5.2%
-2.0%	4+77.97	-2.0%
0.0%	6+45.75	0.0%
2.0%	8+13.52	2.0%
5.6%	8+88.18	5.6%
5.6%	9+00.40	5.6%
2.0%	9+75.00	2.0%
0.0%	10+15.00	0.0%
-0.43%	10+25.00	-0.43%

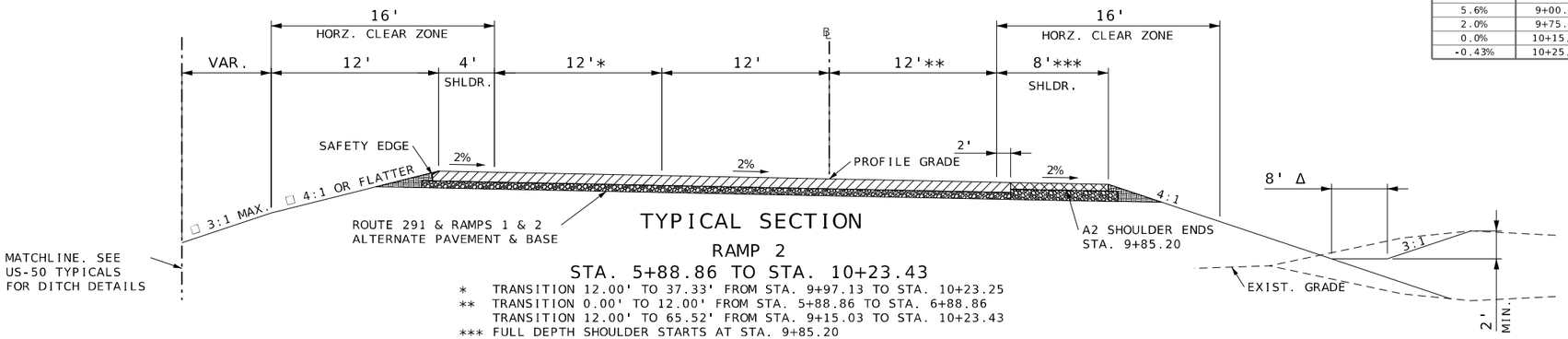

TYPICAL SECTION

RAMP 2

STA. 5+88.86 TO STA. 10+23.43

* TRANSITION 12.00' TO 37.33' FROM STA. 9+97.13 TO STA. 10+23.25
** TRANSITION 0.00' TO 12.00' FROM STA. 5+88.86 TO STA. 6+88.86
TRANSITION 12.00' TO 65.52' FROM STA. 9+15.03 TO STA. 10+23.43
*** FULL DEPTH SHOULDER STARTS AT STA. 9+85.20
□ STRAIGHTLINE SLOPE BETWEEN RAMP EOS AND US-50 DITCH BACK SLOPE WHERE ELEVATIONS BETWEEN POINTS RESULT IN 4:1 OR FLATTER SLOPES. SEE CROSS SECTIONS FOR DETAILS
Δ TRANSITION 8' TO 0' FROM STA. 7+90.00 TO STA. 8+25.49

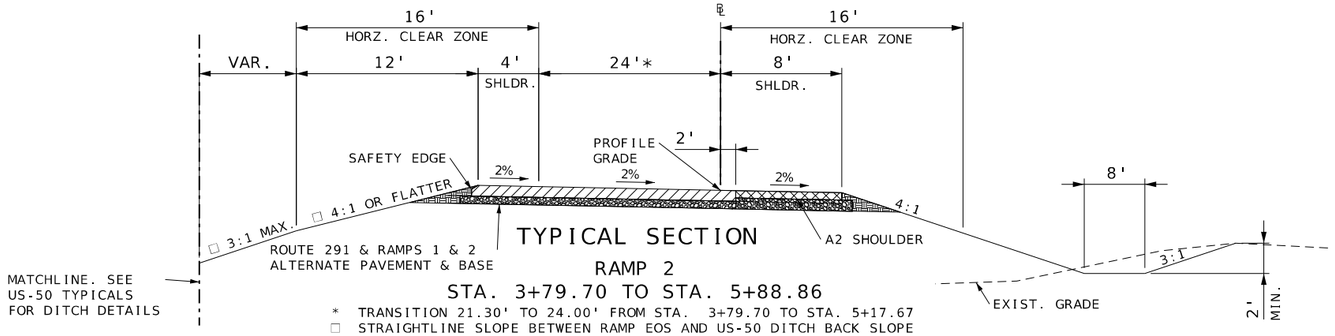

TYPICAL SECTION

RAMP 2

STA. 3+79.70 TO STA. 5+88.86

* TRANSITION 21.30' TO 24.00' FROM STA. 3+79.70 TO STA. 5+17.67
□ STRAIGHTLINE SLOPE BETWEEN RAMP EOS AND US-50 DITCH BACK SLOPE WHERE ELEVATIONS BETWEEN POINTS RESULT IN 4:1 OR FLATTER SLOPES. SEE CROSS SECTIONS FOR DETAILS

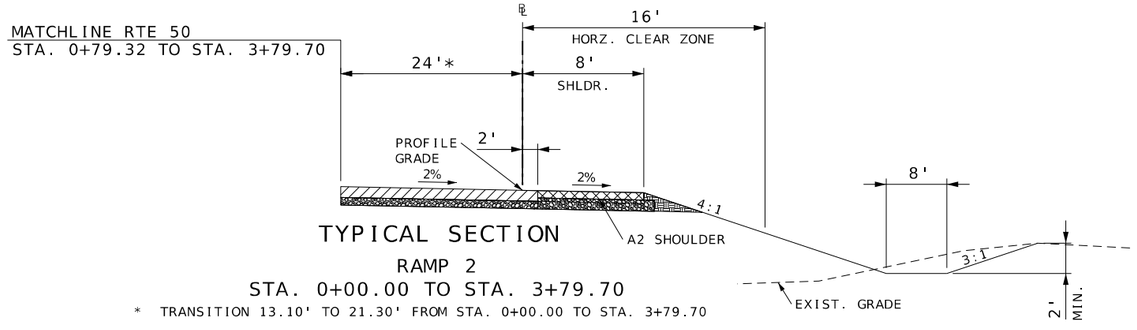

TYPICAL SECTION

RAMP 2

STA. 0+00.00 TO STA. 3+79.70

* TRANSITION 13.10' TO 21.30' FROM STA. 0+00.00 TO STA. 3+79.70

PERMANENT AGGREGATE EDGE TREATMENT
ALTERNATE PAVEMENT
MAINLINE BASE
SHOULDERS

NOT TO SCALE

TYPICAL SHEET
5 OF 19

Reid Catt
2025.03.01 21:19:43-06'00'

REID BRENNEN CATT-ENGINEER
MO# PE-2010019516

DATE PREPARED
2/28/2025

ROUTE 50/291 | STATE MO
DISTRICT KC | SHEET NO. 2
COUNTY JACKSON
JOB NO. J4P3196
FEDERAL PROJECT NO. STB-3001(009)
PROJECT NO.
BRIDGE NO.

DESCRIPTION | DATE

IF A SEAL IS PRESENT ON THIS SHEET IT HAS BEEN ELECTRONICALLY SEALED AND DATED.

MISSOURI HIGHWAYS AND TRANSPORTATION COMMISSION
105 WEST CAPITOL
JEFFERSON CITY, MO 65102
1-888-ASK-MODOT (1-888-275-6636)

LEE'S SUMMIT MISSOURI

olsson
1301 BURLINGTON ST., STE. 100
NORTH KANSAS CITY, MO 64116
PHONE: 816.361.1177
CERT. OF AUTHORITY NO. 001592

F:\2021\04501-05000\021-04786\40-Design\Microstation\J4P3196\plan_sheets\2 Typicals\002_TS_05_J4P3196_I5.dgn 12:50:20 PM 2/28/2025

NOTE:
CROSS SECTIONS AND EARTHWORK IN THIS PROJECT ARE BASED ON THE CONCRETE ALTERNATE. CONTRACTOR IS RESPONSIBLE FOR MAKING ANY ADJUSTMENTS WITH NO EXTRA PAY IF ASPHALT ALTERNATE IS USED.

SUBGRADE PROFILE AND CROSS SECTIONS ARE DESIGNED FOR THE THINNER PAVEMENT DESIGN. THE CONTRACTOR WILL BE RESPONSIBLE FOR MAINTAINING THE PROFILE GRADE FOR EITHER PAVEMENT DESIGN WITH NO DIRECT PAY. CROSSROAD STRUCTURES ARE DESIGNED TO ACCOMMODATE A MINIMUM COVER BASED ON THE THICKER PAVEMENT DESIGN.

ALL CONCRETE PAVEMENT, CURBS, CURB & GUTTER, AND RAISED MEDIANS ON CITY RIGHT OF WAY SHALL BE CONSTRUCTED OF KCMMB 4K CONCRETE.

SEE TYPICAL SECTION SHEET 19 OF 19 FOR ALTERNATE PAVEMENT DETAILS

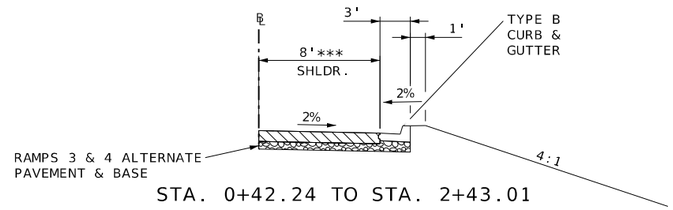

STA. 0+42.24 TO STA. 2+43.01

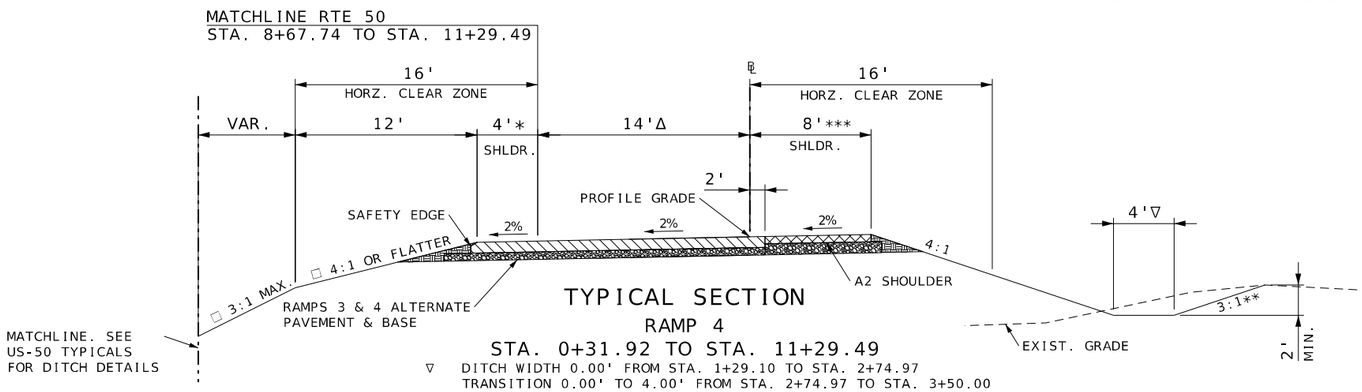

TYPICAL SECTION
RAMP 4
STA. 0+31.92 TO STA. 11+29.49

▽ DITCH WIDTH 0.00' FROM STA. 1+29.10 TO STA. 2+74.97
TRANSITION 0.00' TO 4.00' FROM STA. 2+74.97 TO STA. 3+50.00
TRANSITION 4.00' TO 8.00' FROM STA. 7+43.75 TO STA. 8+67.75
DITCH WIDTH 8.00' FROM STA. 8+67.75 TO STA. 11+29.49
Δ TRANSITION 14.00' TO 12.00' FROM STA. 10+42.39 TO STA. 11+29.49
* TRANSITION 6.00' TO 4.00' FROM STA. 0+31.92 TO STA. 0+81.26
** TRANSITION 3:1 TO 4:1 FROM STA. 7+00.00 TO STA. 8+67.74
4:1 FROM STA. 8+67.74 TO STA. 11+29.49
□ STRAIGHTLINE SLOPE BETWEEN RAMP EOS AND US-50 DITCH BACK SLOPE WHERE ELEVATIONS BETWEEN POINTS RESULT IN 4:1 OR FLATTER SLOPES. SEE CROSS SECTIONS FOR DETAILS
*** TRANSITION 0.00' TO 11.75' TO 8.00' FROM STA. 0+56.70 TO STA. 1+29.10
FULL DEPTH SHOULDER ENDS AT STA. 1+73.77

RAMP 4 SUPERELEVATION		
LT	STA.	RT
-0.43%	0+45.00	-0.43%
0.0%	0+77.42	0.0%
2.0%	1+18.72	2.0%
4.8%	1+76.42	4.8%
4.8%	2+44.11	4.8%
2.0%	3+01.81	2.0%
2.0%	3+65.53	2.0%
0.0%	5+46.53	0.0%
-2.0%	6+45.53	-2.0%
-2.0%	7+91.24	-2.0%
-6.8%	9+19.04	-6.8%
-6.8%	10+01.68	-6.8%
-2.5%	11+29.48	-2.5%

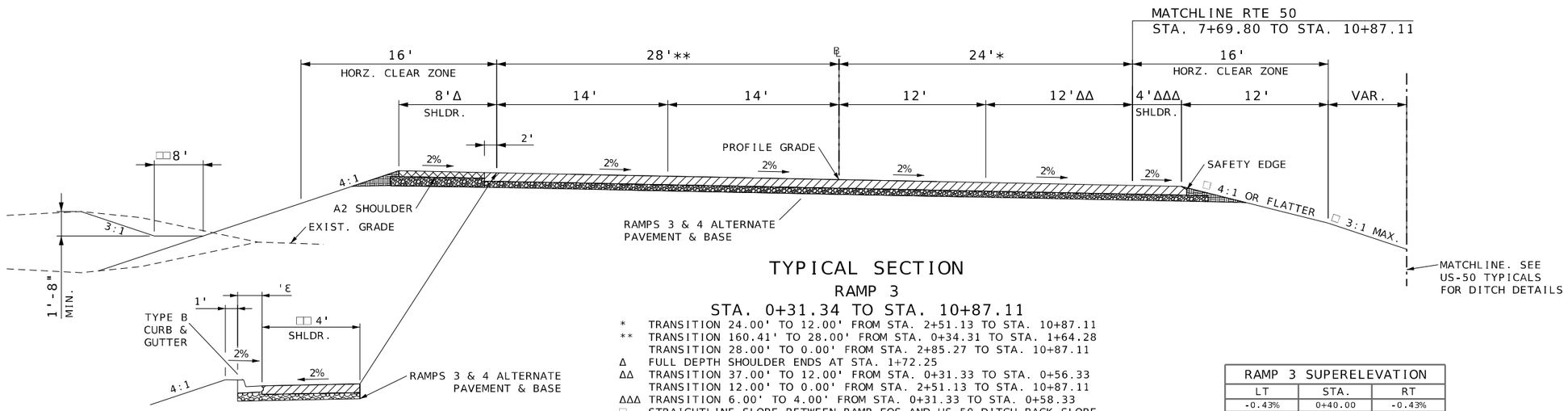

STA. 0+31.31 TO STA. 1+72.25

TYPICAL SECTION
RAMP 3
STA. 0+31.34 TO STA. 10+87.11

* TRANSITION 24.00' TO 12.00' FROM STA. 2+51.13 TO STA. 10+87.11
** TRANSITION 160.41' TO 28.00' FROM STA. 0+34.31 TO STA. 1+64.28
TRANSITION 28.00' TO 0.00' FROM STA. 2+85.27 TO STA. 10+87.11
Δ FULL DEPTH SHOULDER ENDS AT STA. 1+72.25
ΔΔ TRANSITION 37.00' TO 12.00' FROM STA. 0+31.33 TO STA. 0+56.33
TRANSITION 12.00' TO 0.00' FROM STA. 2+51.13 TO STA. 10+87.11
ΔΔΔ TRANSITION 6.00' TO 4.00' FROM STA. 0+31.33 TO STA. 0+58.33
□ STRAIGHTLINE SLOPE BETWEEN RAMP EOS AND US-50 DITCH BACK SLOPE WHERE ELEVATIONS BETWEEN POINTS RESULT IN 4:1 OR FLATTER SLOPES. SEE CROSS SECTIONS FOR DETAILS
□□ 4' FBC FROM STA. 1+72.10 TO STA. 5+00.86
TRANSITION 4.00' TO 8.00' FROM STA. 5+00.86 TO STA. 5+50.00
DETENTION BASIN GRADING FROM STA. 7+04.77 TO STA. 10+87.11

RAMP 3 SUPERELEVATION		
LT	STA.	RT
-0.43%	0+40.00	-0.43%
-2.0%	1+60.78	-2.0%
-2.0%	2+02.08	-2.0%
-4.8%	2+59.78	-4.8%
-4.8%	5+01.73	-4.8%
-2.0%	5+59.43	-2.0%
0.0%	6+00.73	0.0%
2.0%	6+54.03	2.0%
7.2%	7+92.73	7.2%
7.2%	9+48.11	7.2%
2.5%	10+87.11	2.5%

PERMANENT AGGREGATE EDGE TREATMENT
ALTERNATE PAVEMENT
MAINLINE BASE
SHOULDERS

NOT TO SCALE

TYPICAL SHEET 6 OF 19

Reid Catt
2025.03.01 21:20:44-06'00'

REID BRENNEN CATT NUMBER PE-2010019516
REID BRENNEN CATT-ENGINEER
MO# PE-2010019516

DATE PREPARED
2/28/2025

ROUTE	STATE
50/291	MO
DISTRICT	SHEET NO.
KC	2

COUNTY
JACKSON

JOB NO.
J4P3196

FEDERAL PROJECT NO.
STB-3001(009)

PROJECT NO.

BRIDGE NO.

DATE	DESCRIPTION

IF A SEAL IS PRESENT ON THIS SHEET IT HAS BEEN ELECTRONICALLY SEALED AND DATED.

MISSOURI HIGHWAYS AND TRANSPORTATION COMMISSION
105 WEST CAPITOL
JEFFERSON CITY, MO 65102
1-888-ASK-MODOT (1-888-275-6636)

LEE'S SUMMIT MISSOURI

olsson
1301 BURLINGTON ST., STE. 100
NORTH KANSAS CITY, MO 64116
PHONE: 816.361.1177
CERT. OF AUTHORITY NO. 001592

F:\2021\04501-05000\021-04786\40-Design\Microstation\J4P3196\plan_sheets\2 Typicals\002_TS_06_J4P3196_I5.dgn 12:50:24 PM 2/28/2025

NOTE:
CROSS SECTIONS AND EARTHWORK IN THIS PROJECT ARE BASED ON THE CONCRETE ALTERNATE. CONTRACTOR IS RESPONSIBLE FOR MAKING ANY ADJUSTMENTS WITH NO EXTRA PAY IF ASPHALT ALTERNATE IS USED.

SUBGRADE PROFILE AND CROSS SECTIONS ARE DESIGNED FOR THE THINNER PAVEMENT DESIGN. THE CONTRACTOR WILL BE RESPONSIBLE FOR MAINTAINING THE PROFILE GRADE FOR EITHER PAVEMENT DESIGN WITH NO DIRECT PAY. CROSSROAD STRUCTURES ARE DESIGNED TO ACCOMMODATE A MINIMUM COVER BASED ON THE THICKER PAVEMENT DESIGN.

ALL CONCRETE PAVEMENT, CURBS, CURB & GUTTER, AND RAISED MEDIANS ON CITY RIGHT OF WAY SHALL BE CONSTRUCTED OF KCMMB 4K CONCRETE.

SEE TYPICAL SECTION SHEET 19 OF 19 FOR ALTERNATE PAVEMENT DETAILS

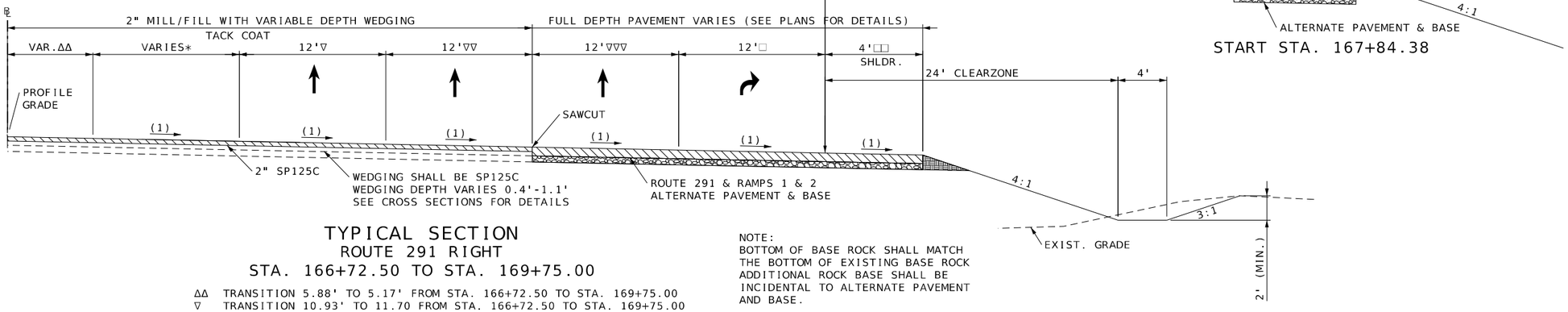

TYPICAL SECTION
ROUTE 291 RIGHT
STA. 166+72.50 TO STA. 169+75.00

ΔΔ TRANSITION 5.88' TO 5.17' FROM STA. 166+72.50 TO STA. 169+75.00
▽ TRANSITION 10.93' TO 11.70 FROM STA. 166+72.50 TO STA. 169+75.00
▽▽ TRANSITION 10.22' TO 12.00' FROM STA. 166+72.50 TO STA. 174+51.36
▽▽▽ TRANSITION 0.00' TO 9.42' FROM STA. 169+45.74 TO STA. 170+96.33
□ TRANSITION 0.00' TO 12.00' FROM STA. 169+45.74 TO STA. 170+95.81
□□ TRANSITION 8.78' TO 4.00' FROM STA. 166+72.50 TO STA. 169+45.37
CURB & GUTTER FROM STA. 167+84.38 TO STA. 172+97.91
* TRANSITION 0.00' TO 6.00' FROM STA. 166+72.50 TO STA. 169+75.82

NOTE:
BOTTOM OF BASE ROCK SHALL MATCH THE BOTTOM OF EXISTING BASE ROCK ADDITIONAL ROCK BASE SHALL BE INCIDENTAL TO ALTERNATE PAVEMENT AND BASE.

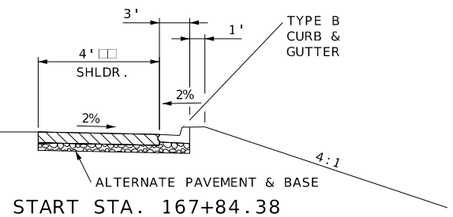

START STA. 167+84.38

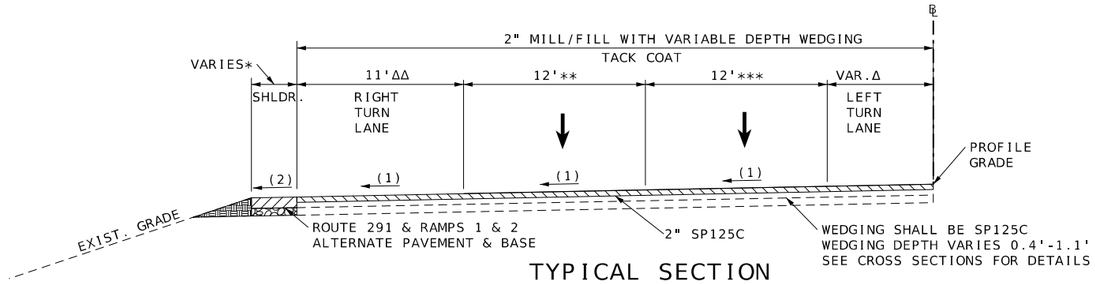

TYPICAL SECTION
ROUTE 291 LEFT
STA. 166+72.50 TO STA. 169+75.00

NOTE:
BOTTOM OF BASE ROCK SHALL MATCH THE BOTTOM OF EXISTING BASE ROCK ADDITIONAL ROCK BASE SHALL BE INCIDENTAL TO ALTERNATE PAVEMENT AND BASE.

* 3.00' WIDTH FROM STA. 166+72.50 TO STA. 168+20.13
TRANSITION 3.00' TO 6.74' FROM STA. 168+20.13 TO STA. 168+53.23
TRANSITION 6.74' TO 7.98' FROM STA. 168+53.23 TO STA. 173+59.54
** TRANSITION 11.00' TO 12.00' FROM STA. 166+72.50 TO STA. 174+51.36
*** TRANSITION 11.00' TO 12.00' FROM STA. 166+72.50 TO STA. 174+51.36
Δ TRANSITION 5.14' TO 6.44' FROM STA. 166+72.50 TO STA. 169+75.00
ΔΔ TRANSITION 11.00' TO 0.00' FROM STA. 167+53.23 TO STA. 168+53.23

(1) PAVEMENT CROSS SLOPE

LEFT	STATION	RIGHT
-2.00%	166+72.50	-2.00%
-2.00%	172+00.00	-2.00%
-3.00%	172+21.00	-2.00%
-3.00%	172+95.56	-2.00%
-2.00%	173+59.50	-1.00%
-1.00%	175+60.67	-1.00%
-2.00%	175+80.67	-2.00%

(2) PAVEMENT CROSS SLOPE

LEFT	STATION
-2.00%	166+72.50
-4.00%	171+32.81
-4.00%	172+95.56
-2.00%	173+59.49

PERMANENT AGGREGATE EDGE TREATMENT
ALTERNATE PAVEMENT
MAINLINE BASE
SHOULDERS

NOT TO SCALE

TYPICAL SHEET
7 OF 19

Reid Catt
2025.03.01 21:19:25-06'00'

REID BRENNEN CATT
NUMBER
PE-2010019516

REID BRENNEN CATT-ENGINEER
MO# PE-2010019516

DATE PREPARED
2/28/2025

ROUTE	STATE
50/291	MO
DISTRICT	SHEET NO.
KC	2

COUNTY
JACKSON

JOB NO.
J4P3196

FEDERAL PROJECT NO.
STB-3001(009)

PROJECT NO.

BRIDGE NO.

DESCRIPTION | DATE

IF A SEAL IS PRESENT ON THIS SHEET IT HAS BEEN ELECTRONICALLY SEALED AND DATED.

MISSOURI HIGHWAYS AND TRANSPORTATION COMMISSION
105 WEST CAPITOL
JEFFERSON CITY, MO 65102
1-888-ASK-MODOT (1-888-275-6636)

LEE'S SUMMIT MISSOURI

olsson
1301 BURLINGTON ST., STE. 100
NORTH KANSAS CITY, MO 64116
PHONE: 816.361.1177
CERT. OF AUTHORITY NO. 001592

NOTE:
CROSS SECTIONS AND EARTHWORK IN THIS PROJECT ARE BASED ON THE CONCRETE ALTERNATE. CONTRACTOR IS RESPONSIBLE FOR MAKING ANY ADJUSTMENTS WITH NO EXTRA PAY IF ASPHALT ALTERNATE IS USED.

SUBGRADE PROFILE AND CROSS SECTIONS ARE DESIGNED FOR THE THINNER PAVEMENT DESIGN. THE CONTRACTOR WILL BE RESPONSIBLE FOR MAINTAINING THE PROFILE GRADE FOR EITHER PAVEMENT DESIGN WITH NO DIRECT PAY. CROSSROAD STRUCTURES ARE DESIGNED TO ACCOMMODATE A MINIMUM COVER BASED ON THE THICKER PAVEMENT DESIGN.

ALL CONCRETE PAVEMENT, CURBS, CURB & GUTTER, AND RAISED MEDIANS ON CITY RIGHT OF WAY SHALL BE CONSTRUCTED OF KCMMB 4K CONCRETE.

SEE TYPICAL SECTION SHEET 19 OF 19 FOR ALTERNATE PAVEMENT DETAILS

(1) PAVEMENT CROSS SLOPE

LEFT	STATION	RIGHT
-2.00%	166+72.50	-2.00%
-2.00%	171+32.81	-2.00%
-3.00%	172+32.81	-2.00%
-3.00%	172+69.73	-2.00%
-2.00%	173+59.50	-1.00%
-1.00%	175+60.67	-1.00%
-2.00%	175+80.67	-2.00%

(2) SHOULDER CROSS SLOPE

LEFT	STATION
-2.00%	166+72.50
-4.00%	171+32.81
-6.00%	172+32.81
-6.00%	172+69.73
-2.00%	173+59.50
-1.00%	175+60.67
-2.00%	175+80.67

(3) CROWN SHIFT
TRANSITION 0.00' TO 3.00' FROM STA. 170+28.52 TO STA. 170+59.81
3.00' FROM STA. 170+59.81 TO STA. 173+87.18
TRANSITION 3.00' TO 0.00' FROM STA. 173+87.18 TO STA. 174+43.59

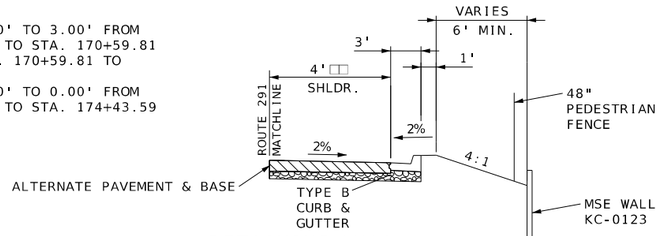

RETAINING WALL
STA. 170+35.00 TO STA. 172+20.50

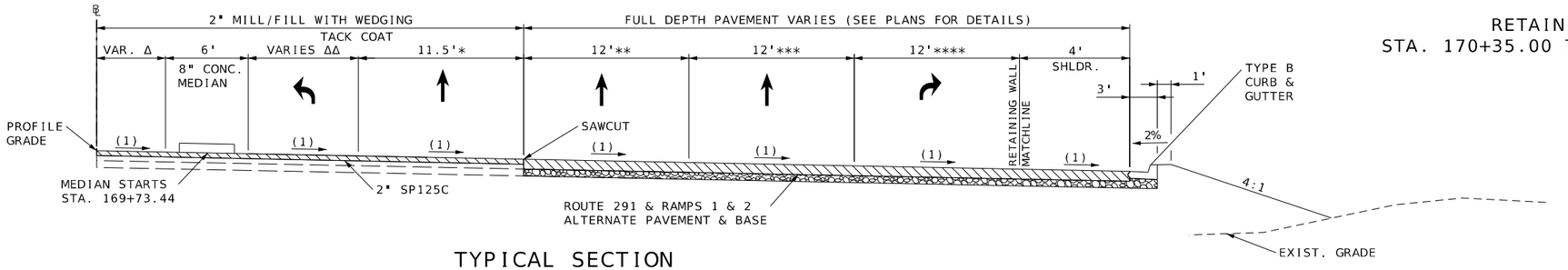

TYPICAL SECTION
ROUTE 291 RIGHT
STA. 169+75.00 TO STA. 170+75.00

Δ TRANSITION 5.17' TO 0.00' FROM STA. 169+75.00 TO STA. 170+18.00
ΔΔ TRANSITION 0.00' TO 13.15' FROM STA. 169+75.00 TO STA. 170+75.08
* TRANSITION 11.70' TO 12.51' FROM STA. 169+75.00 TO STA. 170+75.08
** TRANSITION 10.22' TO 12.00' FROM STA. 169+72.50 TO STA. 174+51.36
*** TRANSITION 0.00' TO 9.42' FROM STA. 169+45.74 TO STA. 170+96.33
**** TRANSITION 0.00' TO 12.00' FROM STA. 169+45.74 TO STA. 170+95.81

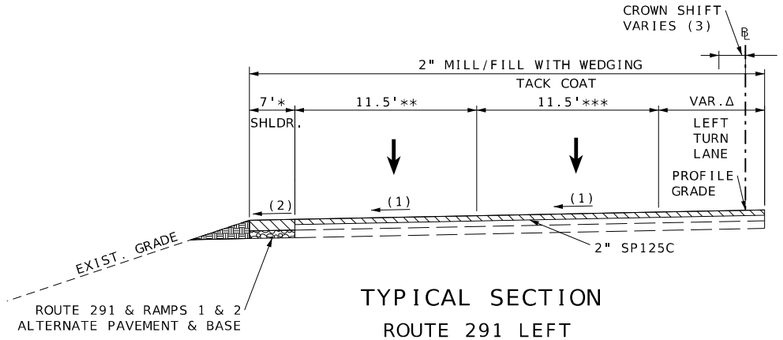

TYPICAL SECTION
ROUTE 291 LEFT
STA. 169+75.00 TO STA. 170+75.00

* TRANSITION 6.72' TO 7.98' FROM STA. 168+53.23 TO STA. 173+59.54
** TRANSITION 11.00' TO 12.00' FROM STA. 166+72.50 TO STA. 174+51.36
*** TRANSITION 11.00' TO 12.00' FROM STA. 166+72.50 TO STA. 174+51.36
Δ TRANSITION 11.62' TO 0.00' FROM STA. 169+75.00 TO STA. 170+75.00
ΔΔ TRANSITION

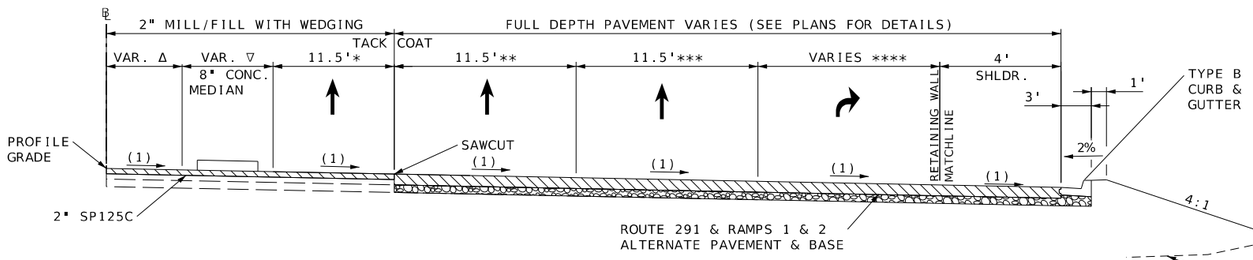

TYPICAL SECTION
ROUTE 291 RIGHT
STA. 170+75.00 TO STA. 174+51.36

Δ TRANSITION 12.28' TO 10.03' FROM STA. 170+75.00 TO STA. 173+58.76
TRANSITION 10.03' TO 9.98' FROM STA. 173+58.76 TO STA. 174+16.41
∇ TRANSITION 0.00' TO 8.98' FROM STA. 170+75.08 TO STA. 173+58.67
STRIPED MEDIAN ONLY
TRANSITION 8.89' TO 10.33' FROM STA. 173+58.67 TO STA. 174+16.41
8" CONCRETE MEDIAN
* TRANSITION 11.34' TO 11.56' FROM STA. 170+75.08 TO STA. 174+51.36
** TRANSITION 10.22' TO 11.34' FROM STA. 166+72.50 TO STA. 174+51.36
*** TRANSITION 0.00' TO 9.42' FROM STA. 169+45.74 TO STA. 170+96.33
TRANSITION 9.42' TO 12.00' FROM STA. 170+96.33 TO STA. 174+51.36
**** TRANSITION 0.00' TO 12.00' FROM STA. 169+45.74 TO STA. 170+95.81
12.00' FROM STA. 170+95.81 TO STA. 172+95.67
ΔΔ TRANSITION 9.50' TO 12.00' FROM STA. 170+75.00 TO STA. 172+95.67
SEE PLAN SHEETS FOR INTERSECTION DETAILS

PERMANENT AGGREGATE EDGE TREATMENT
ALTERNATE PAVEMENT
MAINLINE BASE
SHOULDERS

NOT TO SCALE

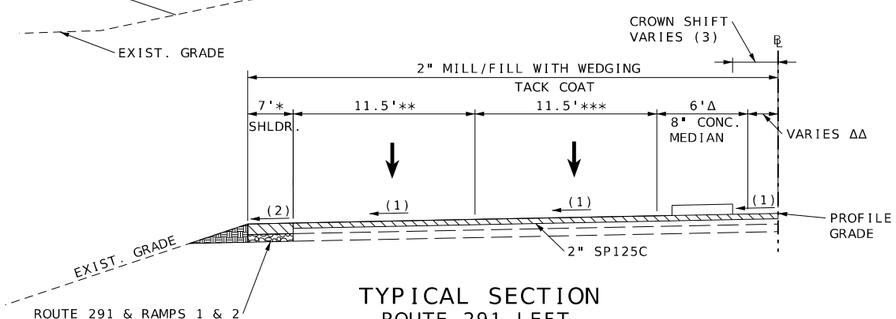

TYPICAL SECTION
ROUTE 291 LEFT
STA. 170+75.00 TO STA. 174+51.35

* TRANSITION 6.74' TO 7.98' FROM STA. 168+53.23 TO STA. 173+59.54
** TRANSITION 11.00' TO 12.00' FROM STA. 166+72.50 TO STA. 174+51.36
*** TRANSITION 11.00' TO 12.00' FROM STA. 166+72.50 TO STA. 174+51.36
Δ 6.00' FROM STA. 170+75.00 TO STA. 173+87.18
TRANSITION 6.00' TO 0.00' FROM STA. 173+87.18 TO STA. 173+89.17
ΔΔ TRANSITION 0.82' TO 2.00' FROM STA. 170+75.00 TO STA. 173+87.17
SEE PLAN SHEETS FOR INTERSECTION DETAILS

TYPICAL SHEET
8 OF 19

Reid Catt
2025.03.01 21:19:18-06'00'

REID BRENNEN CATT NUMBER PE-2010019516
REID BRENNEN CATT-ENGINEER
MO# PE-2010019516

DATE PREPARED
2/28/2025

ROUTE	STATE
50/291	MO

DISTRICT	SHEET NO.
KC	2

COUNTY
JACKSON

JOB NO.
J4P3196

FEDERAL PROJECT NO.
STB-3001(009)

PROJECT NO.

BRIDGE NO.

DESCRIPTION | DATE

IF A SEAL IS PRESENT ON THIS SHEET IT HAS BEEN ELECTRONICALLY SEALED AND DATED.

MISSOURI HIGHWAYS AND TRANSPORTATION COMMISSION
105 WEST CAPITOL
JEFFERSON CITY, MO 65102
1-888-ASK-MODOT (1-888-275-6636)

LEE'S SUMMIT MISSOURI

olsson
1301 BURLINGTON ST., STE. 100
NORTH KANSAS CITY, MO 64116
PHONE: 816.361.1177
CERT. OF AUTHORITY NO. 001592

NOTE:
CROSS SECTIONS AND EARTHWORK IN THIS PROJECT ARE BASED ON THE CONCRETE ALTERNATE. CONTRACTOR IS RESPONSIBLE FOR MAKING ANY ADJUSTMENTS WITH NO EXTRA PAY IF ASPHALT ALTERNATE IS USED.

SUBGRADE PROFILE AND CROSS SECTIONS ARE DESIGNED FOR THE THINNER PAVEMENT DESIGN. THE CONTRACTOR WILL BE RESPONSIBLE FOR MAINTAINING THE PROFILE GRADE FOR EITHER PAVEMENT DESIGN WITH NO DIRECT PAY. CROSSROAD STRUCTURES ARE DESIGNED TO ACCOMMODATE A MINIMUM COVER BASED ON THE THICKER PAVEMENT DESIGN.

ALL CONCRETE PAVEMENT, CURBS, CURB & GUTTER, AND RAISED MEDIANS ON CITY RIGHT OF WAY SHALL BE CONSTRUCTED OF KCMMB 4K CONCRETE.

SEE TYPICAL SECTION SHEET 19 OF 19 FOR ALTERNATE PAVEMENT DETAILS

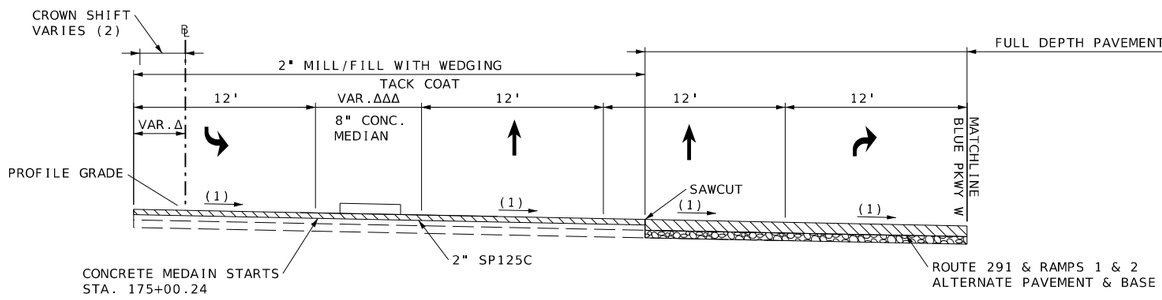

TYPICAL SECTION
ROUTE 291 RIGHT
STA. 174+51.36 TO STA. 175+00.00

ΔΔ SEE PLANS FOR DETAILS
ΔΔΔ SEE PLANS FOR DETAILS

(1) PAVEMENT CROSS SLOPE

LEFT	STATION	RIGHT
-2.00%	166+72.50	-2.00%
-2.00%	173+39.50	-2.00%
-1.00%	173+59.50	-1.00%
-1.00%	175+60.67	-1.00%
-2.00%	175+80.67	-2.00%

(2) CROWN SHIFT
TRANSITION 0.00' TO 12.00'
FROM STA. 174+43.59 TO STA. 175+00.00
12.00' FROM STA. 175+00.00 TO STA. 178+66.16
TRANSITION 12.00' TO 19.66'
FROM STA. 178+66.16 TO STA. 179+66.16

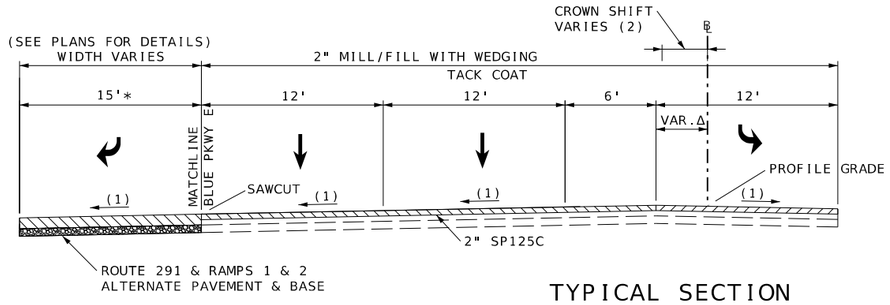

TYPICAL SECTION
ROUTE 291 LEFT
STA. 174+51.36 TO STA. 175+00.00

Δ SEE PLANS FOR DETAILS

PERMANENT AGGREGATE EDGE TREATMENT
ALTERNATE PAVEMENT
MAINLINE BASE
SHOULDERS

NOT TO SCALE

TYPICAL SHEET
9 OF 19

reid Catt
2025.03.01 21:20:24-06'00'

REID BRENNEN CATT
NUMBER
PE-2010019516

REID BRENNEN CATT-ENGINEER
MO# PE-2010019516

DATE PREPARED
2/28/2025

ROUTE	STATE
50/291	MO
DISTRICT	SHEET NO.
KC	2

COUNTY
JACKSON

JOB NO.
J4P3196

FEDERAL PROJECT NO.
STB-3001(009)

PROJECT NO.

BRIDGE NO.

DESCRIPTION | DATE

IF A SEAL IS PRESENT ON THIS SHEET IT HAS BEEN ELECTRONICALLY SEALED AND DATED.

MISSOURI HIGHWAYS AND TRANSPORTATION COMMISSION
105 WEST CAPITOL
JEFFERSON CITY, MO 65102
1-888-ASK-MODOT (1-888-275-6636)

LEE'S SUMMIT MISSOURI

olsson
1301 BURLINGTON ST., STE. 100
NORTH KANSAS CITY, MO 64116
PHONE: 816.361.1177
CERT. OF AUTHORITY NO. 001592

NOTE:
CROSS SECTIONS AND EARTHWORK IN THIS PROJECT ARE BASED ON THE CONCRETE ALTERNATE. CONTRACTOR IS RESPONSIBLE FOR MAKING ANY ADJUSTMENTS WITH NO EXTRA PAY IF ASPHALT ALTERNATE IS USED.

SUBGRADE PROFILE AND CROSS SECTIONS ARE DESIGNED FOR THE THINNER PAVEMENT DESIGN. THE CONTRACTOR WILL BE RESPONSIBLE FOR MAINTAINING THE PROFILE GRADE FOR EITHER PAVEMENT DESIGN WITH NO DIRECT PAY. CROSSROAD STRUCTURES ARE DESIGNED TO ACCOMMODATE A MINIMUM COVER BASED ON THE THICKER PAVEMENT DESIGN.

ALL CONCRETE PAVEMENT, CURBS, CURB & GUTTER, AND RAISED MEDIANS ON CITY RIGHT OF WAY SHALL BE CONSTRUCTED OF KCMMB 4K CONCRETE.

SEE TYPICAL SECTION SHEET 19 OF 19 FOR ALTERNATE PAVEMENT DETAILS

(2) CROWN SHIFT
TRANSITION 0.00' TO 12.00' FROM STA. 174+43.59 TO STA. 175+00.00
12.00' WIDTH FROM STA. 175+00.00 TO STA. 178+66.16
TRANSITION 12.00' TO 19.66' FROM STA. 178+66.15 TO STA. 179+66.16
19.66' WIDTH FROM STA. 179+66.16 TO STA. 181+65.22
TRANSITION 19.66' TO 20.00' FROM STA. 181+66.90 TO STA. 182+26.91

TRANSITION -2% TO 0% FROM STA. 178+66.15 TO STA. 179+16.15
TRANSITION 0% TO 2% FROM STA. 179+16.15 TO STA. 179+66.15
2% CROSS SLOPE FROM STA. 179+66.15 TO STA. 181+65.22
TRANSITION 2% TO 0% FROM STA. 181+65.22 TO STA. 182+15.22
TRANSITION 0% TO -2% FROM STA. 182+15.22 TO STA. 182+65.22

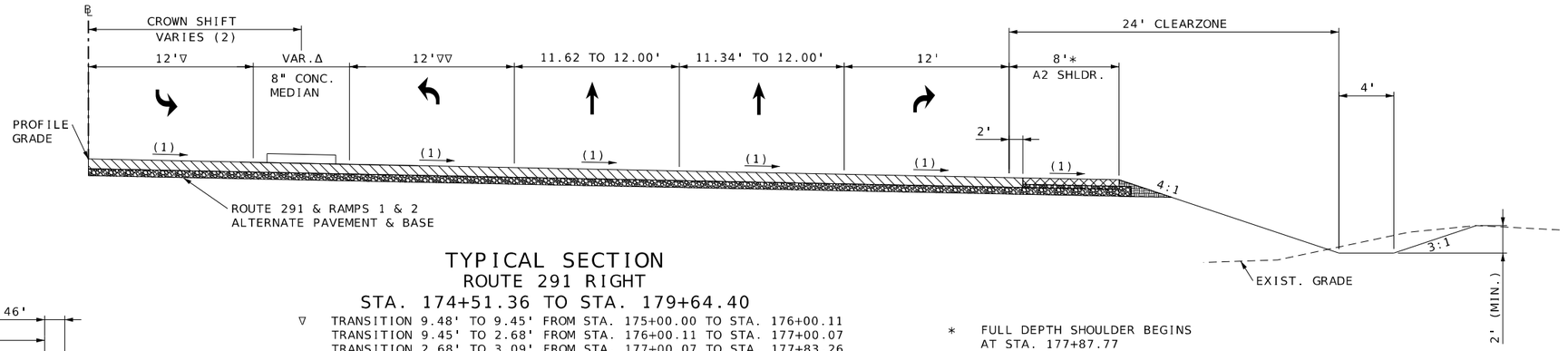

TYPICAL SECTION
ROUTE 291 RIGHT
STA. 174+51.36 TO STA. 179+64.40

▽ TRANSITION 9.48' TO 9.45' FROM STA. 175+00.00 TO STA. 176+00.11
TRANSITION 9.45' TO 2.68' FROM STA. 176+00.11 TO STA. 177+00.07
TRANSITION 2.68' TO 3.09' FROM STA. 177+00.07 TO STA. 177+83.26
TRANSITION 3.09' TO 0.00' FROM STA. 177+83.26 TO STA. 178+02.55
Δ SEE PLANS FOR DETAILS
▽▽ TRANSITION 0.00' TO 12.00' FROM STA. 175+33.18 TO STA. 176+33.19
12.00' FROM STA. 176+33.19 TO STA. 178+89.48

* FULL DEPTH SHOULDER BEGINS AT STA. 177+87.77

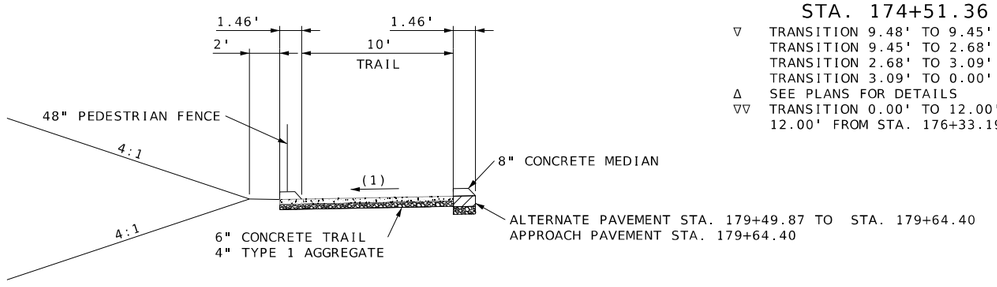

STA. 179+38.35 TO STA. 179+79.40

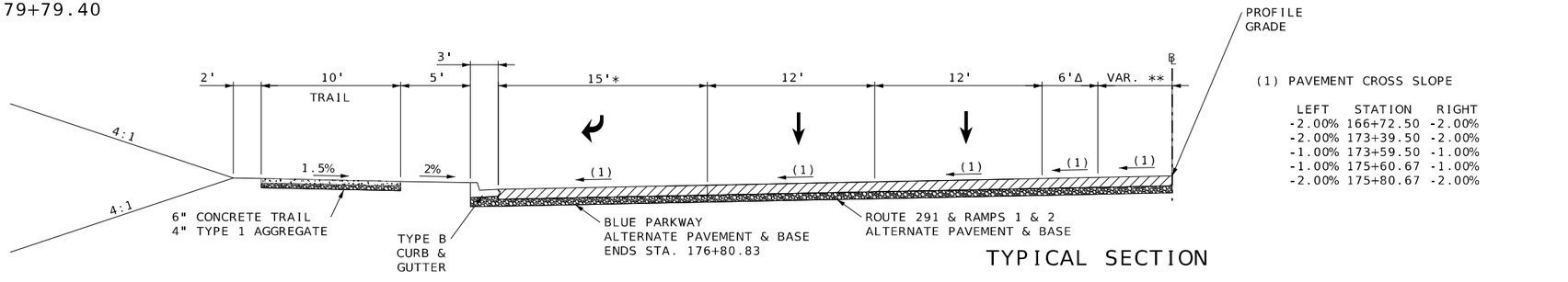

(1) PAVEMENT CROSS SLOPE

LEFT	STATION	RIGHT
-2.00%	166+72.50	-2.00%
-2.00%	173+39.50	-2.00%
-1.00%	173+59.50	-1.00%
-1.00%	175+60.67	-1.00%
-2.00%	175+80.67	-2.00%

TYPICAL SECTION
ROUTE 291 LEFT
STA. 175+51.36 TO STA. 179+64.40

* TRANSITION 15.00' TO 0.00' FROM STA. 176+47.70 TO STA. 177+47.70
Δ 6.00' FROM STA. 175+00.00 TO STA. 176+00.13
TRANSITION 6.00' TO 0.00' FROM STA. 176+00.13 TO STA. 176+99.30
** TRANSITION 2.52' TO 2.55' FROM STA. 175+00.00 TO STA. 176+00.13
TRANSITION 2.55' TO 8.29' FROM STA. 176+00.13 TO STA. 176+99.30
TRANSITION 8.29' TO 7.91' FROM STA. 176+99.30 TO STA. 177+83.31
NB LEFT TURN LANE ENDS STA. 178+50.00, RAISED MEDIAN STRIPING EXTENDS
TRANSITION 0.00' TO 7.59' FROM STA. 178+02.55 TO STA. 178+49.93
TRANSITION 7.59' TO 7.33' FROM STA. 178+49.93 TO STA. 179+08.49

PERMANENT AGGREGATE EDGE TREATMENT
ALTERNATE PAVEMENT
MAINLINE BASE
SHOULDERS

NOT TO SCALE

TYPICAL SHEET
10 OF 19

Reid Catt
2025.03.01 21:19:02-06'00'

REID BRENNEN CATT-ENGINEER
MO# PE-2010019516

DATE PREPARED
2/28/2025

ROUTE	STATE
50/291	MO
DISTRICT	SHEET NO.
KC	2

COUNTY
JACKSON

JOB NO.
J4P3196

FEDERAL PROJECT NO.
STB-3001(009)

PROJECT NO.

BRIDGE NO.

DESCRIPTION | DATE

IF A SEAL IS PRESENT ON THIS SHEET IT HAS BEEN ELECTRONICALLY SEALED AND DATED.

MISSOURI HIGHWAYS AND TRANSPORTATION COMMISSION
105 WEST CAPITOL
JEFFERSON CITY, MO 65102
1-888-ASK-MODOT (1-888-275-6636)

LEE'S SUMMIT MISSOURI

olsson
1301 BURLINGTON ST., STE. 100
NORTH KANSAS CITY, MO 64116
PHONE: 816.361.1177
CERT. OF AUTHORITY NO. 001592

F:\2021\04501-05000\021-04786\40-Design\Microstation\J4P3196\plan_sheets\2 Typicals\002_TS_10_J4P3196_I5.dgn 12:50:33 PM 2/28/2025

NOTE:
CROSS SECTIONS AND EARTHWORK IN THIS PROJECT ARE BASED ON THE CONCRETE ALTERNATE. CONTRACTOR IS RESPONSIBLE FOR MAKING ANY ADJUSTMENTS WITH NO EXTRA PAY IF ASPHALT ALTERNATE IS USED.

SUBGRADE PROFILE AND CROSS SECTIONS ARE DESIGNED FOR THE THINNER PAVEMENT DESIGN. THE CONTRACTOR WILL BE RESPONSIBLE FOR MAINTAINING THE PROFILE GRADE FOR EITHER PAVEMENT DESIGN WITH NO DIRECT PAY. CROSSROAD STRUCTURES ARE DESIGNED TO ACCOMMODATE A MINIMUM COVER BASED ON THE THICKER PAVEMENT DESIGN.

ALL CONCRETE PAVEMENT, CURBS, CURB & GUTTER, AND RAISED MEDIANS ON CITY RIGHT OF WAY SHALL BE CONSTRUCTED OF KCMMB 4K CONCRETE.

SEE TYPICAL SECTION SHEET 19 OF 19 FOR ALTERNATE PAVEMENT DETAILS

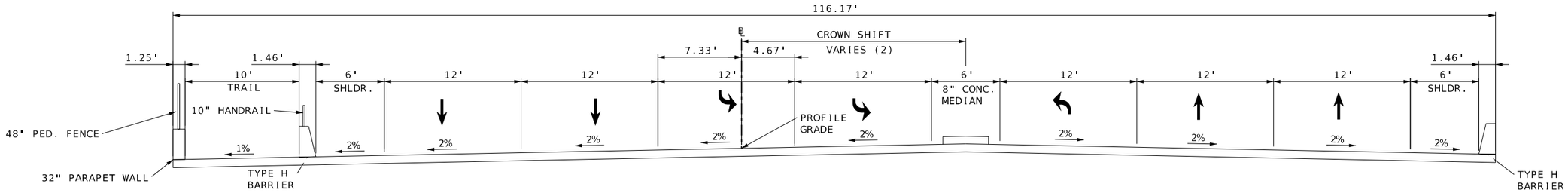

TYPICAL SECTION
ROUTE 291 (BRIDGE)
STA. 179+99.40 TO STA. 181+31.90

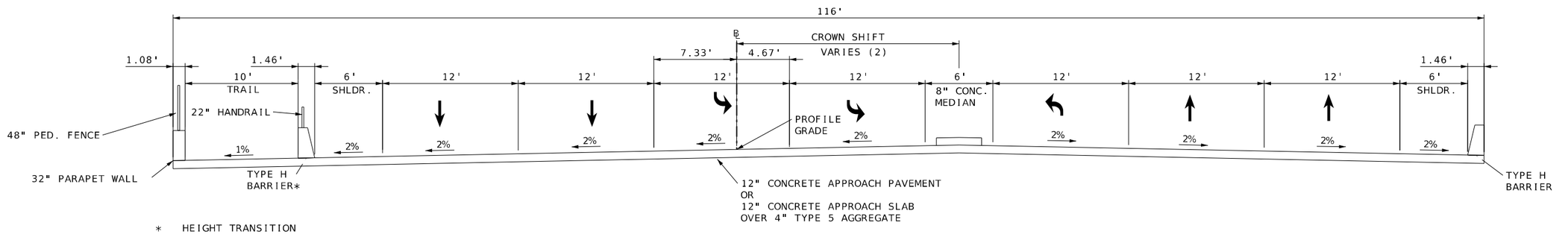

* HEIGHT TRANSITION
8" TO 32" FROM STA. 179+79.40 TO STA. 179+99.40
32" TO 8" FROM STA. 181+31.90 TO STA. 181+51.90

TYPICAL SECTION
ROUTE 291 (APPROACH PAVEMENT)
STA. 179+64.40 TO STA. 179+79.40
STA. 181+51.90 TO STA. 181+66.90
ROUTE 291 (APPROACH SLAB-MAJOR)
STA. 179+79.40 TO STA. 179+99.40
STA. 181+31.90 TO STA. 181+51.90

(2) CROWN SHIFT
TRANSITION 20.00' TO 19.66' FROM STA. 178+66.15 TO STA. 179+66.16
19.66' WIDTH FROM STA. 179+66.16 TO STA. 181+65.22
TRANSITION 19.66' TO 20.00' FROM STA. 181+66.90 TO STA. 182+26.91

TRANSITION -2% TO 0% FROM STA. 178+66.15 TO STA. 179+16.15
TRANSITION 0% TO 2% FROM STA. 179+16.15 TO STA. 179+66.15
2% CROSS SLOPE FROM STA. 179+66.15 TO STA. 181+65.22
TRANSITION 2% TO 0% FROM STA. 181+65.22 TO STA. 182+15.22
TRANSITION 0% TO -2% FROM STA. 182+15.22 TO STA. 182+65.22

PERMANENT AGGREGATE EDGE TREATMENT
ALTERNATE PAVEMENT
MAINLINE BASE
SHOULDERS

NOT TO SCALE

TYPICAL SHEET
11 OF 19

Reid Catt
2025.03.01 21:20:32-06'00'

REID BRENNEN CATT-ENGINEER
MO# PE-2010019516

DATE PREPARED
2/28/2025

ROUTE	STATE
50/291	MO
DISTRICT	SHEET NO.
KC	2

COUNTY
JACKSON

JOB NO.
J4P3196

FEDERAL PROJECT NO.
STB-3001(009)

PROJECT NO.

BRIDGE NO.

DESCRIPTION	DATE

IF A SEAL IS PRESENT ON THIS SHEET IT HAS BEEN ELECTRONICALLY SEALED AND DATED.

MISSOURI HIGHWAYS AND TRANSPORTATION COMMISSION
105 WEST CAPITOL
JEFFERSON CITY, MO 65102
1-888-ASK-MODOT (1-888-275-6636)

LEE'S SUMMIT MISSOURI

olsson
1301 BURLINGTON ST., STE. 100
NORTH KANSAS CITY, MO 64116
PHONE: 816.361.1177
CERT. OF AUTHORITY NO. 001592

F:\2021\04501-05000\021-04786\40-Design\Microstation\J4P3196\plan_sheets\2 Typicals\002_TS_11_J4P3196_I5.dgn 12:50:35 PM 2/28/2025

NOTE:
CROSS SECTIONS AND EARTHWORK IN THIS PROJECT ARE BASED ON THE CONCRETE ALTERNATE. CONTRACTOR IS RESPONSIBLE FOR MAKING ANY ADJUSTMENTS WITH NO EXTRA PAY IF ASPHALT ALTERNATE IS USED.

SUBGRADE PROFILE AND CROSS SECTIONS ARE DESIGNED FOR THE THINNER PAVEMENT DESIGN. THE CONTRACTOR WILL BE RESPONSIBLE FOR MAINTAINING THE PROFILE GRADE FOR EITHER PAVEMENT DESIGN WITH NO DIRECT PAY. CROSSROAD STRUCTURES ARE DESIGNED TO ACCOMMODATE A MINIMUM COVER BASED ON THE THICKER PAVEMENT DESIGN.

ALL CONCRETE PAVEMENT, CURBS, CURB & GUTTER, AND RAISED MEDIANS ON CITY RIGHT OF WAY SHALL BE CONSTRUCTED OF KCMMB 4K CONCRETE.

SEE TYPICAL SECTION SHEET 19 OF 19 FOR ALTERNATE PAVEMENT DETAILS

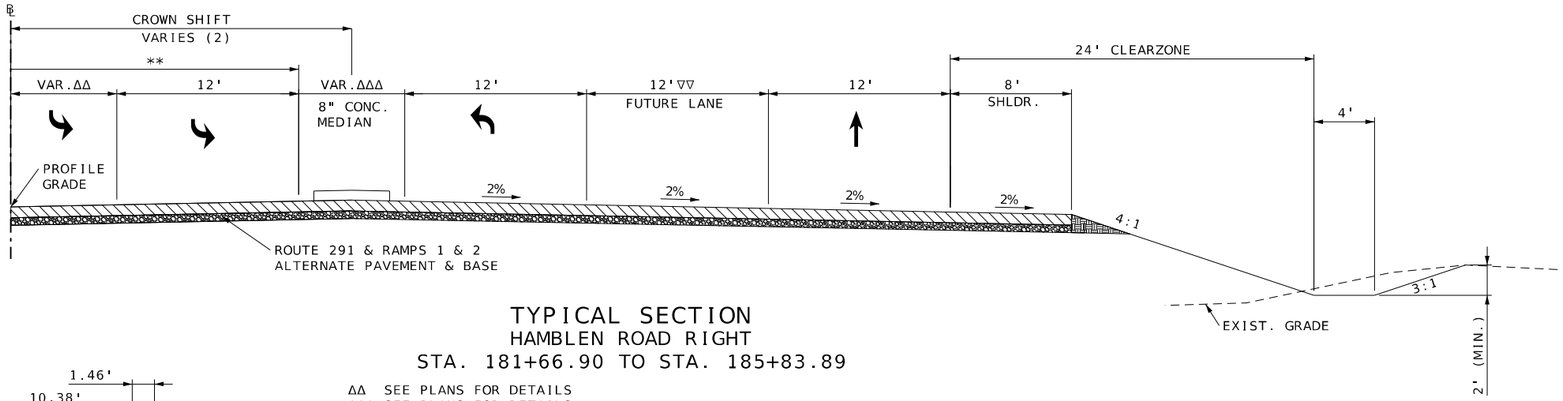

TYPICAL SECTION
HAMBLEN ROAD RIGHT
STA. 181+66.90 TO STA. 185+83.89

ΔΔ SEE PLANS FOR DETAILS
ΔΔΔ SEE PLANS FOR DETAILS
▽▽ TRANSITION 0.00' TO 12.00' FROM STA. 184+73.14 TO STA. 185+82.39
** TRANSITION 24.00' TO 0.00' FROM STA. 184+90.41 TO STA. 186+29.89

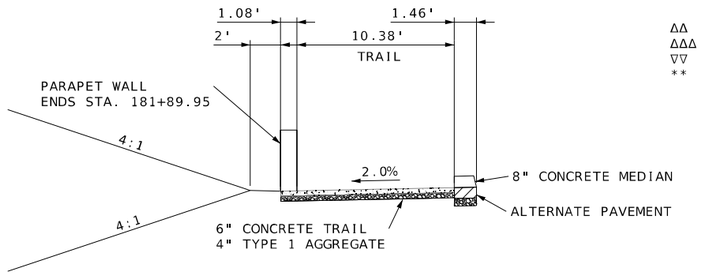

STA. 181+51.90 TO STA. 181+94.52

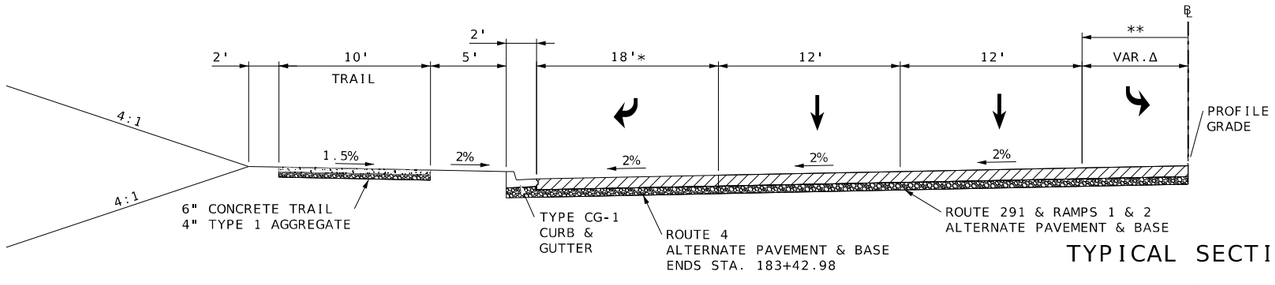

TYPICAL SECTION
HAMBLEN ROAD LEFT
STA. 181+66.90 TO STA. 185+83.89

* TRANSITION 18.00' TO 12.00' FROM STA. 182+99.07 TO STA. 183+42.98
12.00' FROM STA. 183+42.98 TO STA. 185+63.85
TRANSITION 12.00' TO 0.00' FROM STA. 185+63.85 TO STA. 186+63.85
** TRANSITION 24.00' TO 0.00' FROM STA. 184+90.41 TO STA. 186+29.89
Δ SEE PLANS FOR DETAILS

(2) CROWN SHIFT
TRANSITION 20.00' TO 19.66' FROM STA. 178+66.15 TO STA. 179+66.16
19.66' WIDTH FROM STA. 179+66.16 TO STA. 181+65.22
TRANSITION 19.66' TO 20.00' FROM STA. 181+66.90 TO STA. 182+26.91
TRANSITION 20.00' TO 18.00' FROM STA. 182+26.91 TO STA. 184+90.00
TRANSITION 18.00' TO 0.00' FROM STA. 184+90.00 TO STA. 185+83.89

TRANSITION -2% TO 0% FROM STA. 178+66.15 TO STA. 179+16.15
TRANSITION 0% TO 2% FROM STA. 179+16.15 TO STA. 179+66.15
2% CROSS SLOPE FROM STA. 179+66.15 TO STA. 181+65.22
TRANSITION 2% TO 0% FROM STA. 181+65.22 TO STA. 182+15.22
TRANSITION 0% TO -2% FROM STA. 182+15.22 TO STA. 182+65.22
2% CROSS SLOPE FROM STA. 182+65.22 TO STA. 185+83.89

PERMANENT AGGREGATE EDGE TREATMENT
ALTERNATE PAVEMENT
MAINLINE BASE
SHOULDERS

NOT TO SCALE

TYPICAL SHEET
12 OF 19

Reid Catt
2025.03.01 21:19:33-06'00'

REID BRENNEN CATT-ENGINEER
MO# PE-2010019516

DATE PREPARED
2/28/2025

ROUTE	STATE
50/291	MO
DISTRICT	SHEET NO.
KC	2

COUNTY
JACKSON

JOB NO.
J4P3196

FEDERAL PROJECT NO.
STB-3001(009)

PROJECT NO.

BRIDGE NO.

DESCRIPTION | DATE

IF A SEAL IS PRESENT ON THIS SHEET IT HAS BEEN ELECTRONICALLY SEALED AND DATED.

MISSOURI HIGHWAYS AND TRANSPORTATION COMMISSION
105 WEST CAPITOL
JEFFERSON CITY, MO 65102
1-888-ASK-MODOT (1-888-275-6636)

LEE'S SUMMIT MISSOURI

olsson
1301 BURLINGTON ST., STE. 100
NORTH KANSAS CITY, MO 64116
PHONE: 816.361.1177
CERT. OF AUTHORITY NO. 001592

NOTE:
CROSS SECTIONS AND EARTHWORK IN THIS PROJECT ARE BASED ON THE CONCRETE ALTERNATE. CONTRACTOR IS RESPONSIBLE FOR MAKING ANY ADJUSTMENTS WITH NO EXTRA PAY IF ASPHALT ALTERNATE IS USED.

SUBGRADE PROFILE AND CROSS SECTIONS ARE DESIGNED FOR THE THINNER PAVEMENT DESIGN. THE CONTRACTOR WILL BE RESPONSIBLE FOR MAINTAINING THE PROFILE GRADE FOR EITHER PAVEMENT DESIGN WITH NO DIRECT PAY. CROSSROAD STRUCTURES ARE DESIGNED TO ACCOMMODATE A MINIMUM COVER BASED ON THE THICKER PAVEMENT DESIGN.

ALL CONCRETE PAVEMENT, CURBS, CURB & GUTTER, AND RAISED MEDIANS ON CITY RIGHT OF WAY SHALL BE CONSTRUCTED OF KCMMB 4K CONCRETE.

SEE TYPICAL SECTION SHEET 19 OF 19 FOR ALTERNATE PAVEMENT DETAILS

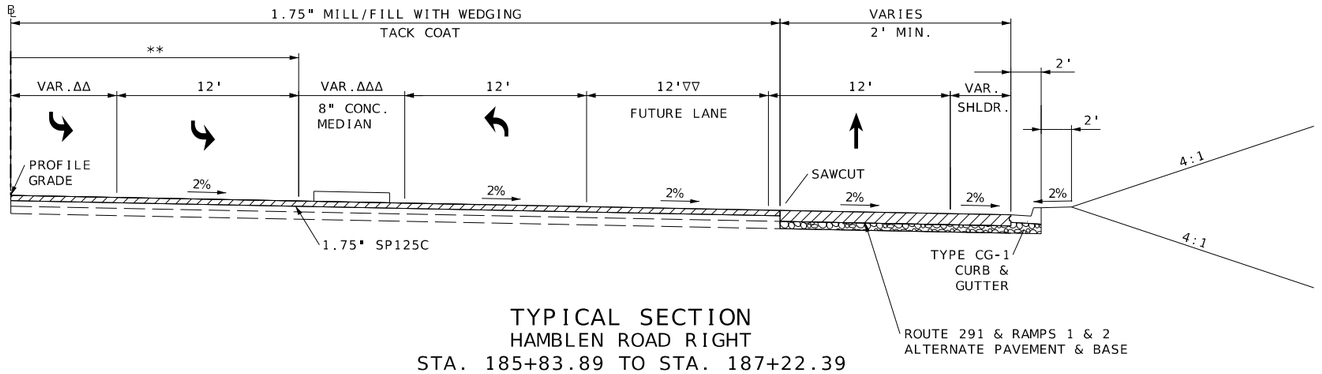

TYPICAL SECTION
HAMBLEN ROAD RIGHT
STA. 185+83.89 TO STA. 187+22.39

ΔΔ SEE PLANS FOR DETAILS
ΔΔΔ SEE PLANS FOR DETAILS
▽▽ TRANSITION 0.00' TO 12.00' FROM STA. 184+73.14 TO STA. 185+82.39
** TRANSITION 24.00' TO 0.00' FROM STA. 184+90.41 TO STA. 186+29.89

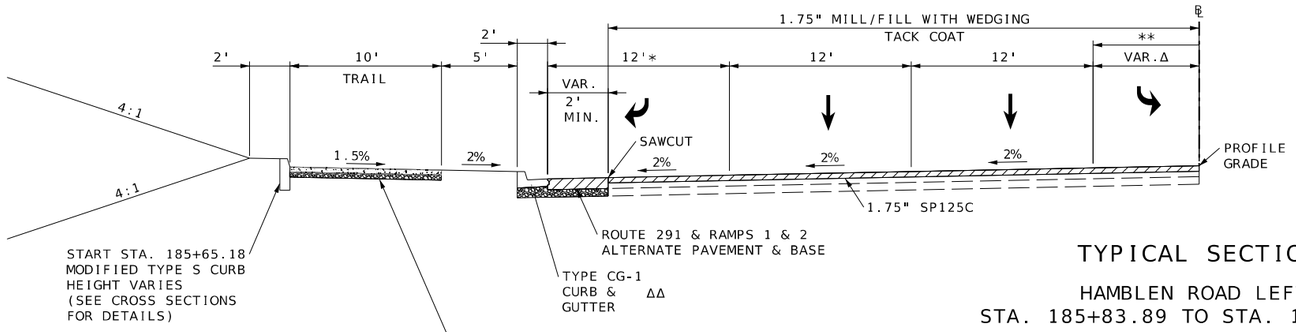

TYPICAL SECTION
HAMBLEN ROAD LEFT
STA. 185+83.89 TO STA. 187+22.39

* TRANSITION 12.00' TO 0.00' FROM STA. 185+63.85 TO STA. 186+63.62
** TRANSITION 24.00' TO 0.00' FROM STA. 184+90.41 TO STA. 186+29.89
Δ SEE PLANS FOR DETAILS
ΔΔ EXISTING CURB & GUTTER USED IN PLACE FROM 186+89.09 TO 187+22.39

NOT TO SCALE

TYPICAL SHEET
13 OF 19

Reid Catt
2025.03.01 21:19:50-06'00'

REID BRENNEN CATT-ENGINEER
MO# PE-2010019516

DATE PREPARED
2/28/2025

ROUTE	STATE
50/291	MO
DISTRICT	SHEET NO.
KC	2

COUNTY
JACKSON

JOB NO.
J4P3196

FEDERAL PROJECT NO.
STB-3001(009)

PROJECT NO.

BRIDGE NO.

DESCRIPTION	DATE

IF A SEAL IS PRESENT ON THIS SHEET IT HAS BEEN ELECTRONICALLY SEALED AND DATED.

MISSOURI HIGHWAYS AND TRANSPORTATION COMMISSION
105 WEST CAPITOL
JEFFERSON CITY, MO 65102
1-888-ASK-MODOT (1-888-275-6636)

LEE'S SUMMIT MISSOURI

olsson
1301 BURLINGTON ST., STE. 100
NORTH KANSAS CITY, MO 64116
PHONE: 816.361.1177
CERT. OF AUTHORITY NO. 001592

F:\2021\04501-05000\021-04786\40-Design\Microstation\J4P3196\plan_sheets\2 Typicals\002_TS_13_J4P3196_I5.dgn 12:50:39 PM 2/28/2025

NOTE:
CROSS SECTIONS AND EARTHWORK IN THIS PROJECT ARE BASED ON THE CONCRETE ALTERNATE. CONTRACTOR IS RESPONSIBLE FOR MAKING ANY ADJUSTMENTS WITH NO EXTRA PAY IF ASPHALT ALTERNATE IS USED.

SUBGRADE PROFILE AND CROSS SECTIONS ARE DESIGNED FOR THE THINNER PAVEMENT DESIGN. THE CONTRACTOR WILL BE RESPONSIBLE FOR MAINTAINING THE PROFILE GRADE FOR EITHER PAVEMENT DESIGN WITH NO DIRECT PAY. CROSSROAD STRUCTURES ARE DESIGNED TO ACCOMMODATE A MINIMUM COVER BASED ON THE THICKER PAVEMENT DESIGN.

ALL CONCRETE PAVEMENT, CURBS, CURB & GUTTER, AND RAISED MEDIANS ON CITY RIGHT OF WAY SHALL BE CONSTRUCTED OF KCMMB 4K CONCRETE.

SEE TYPICAL SECTION SHEET 19 OF 19 FOR ALTERNATE PAVEMENT DETAILS

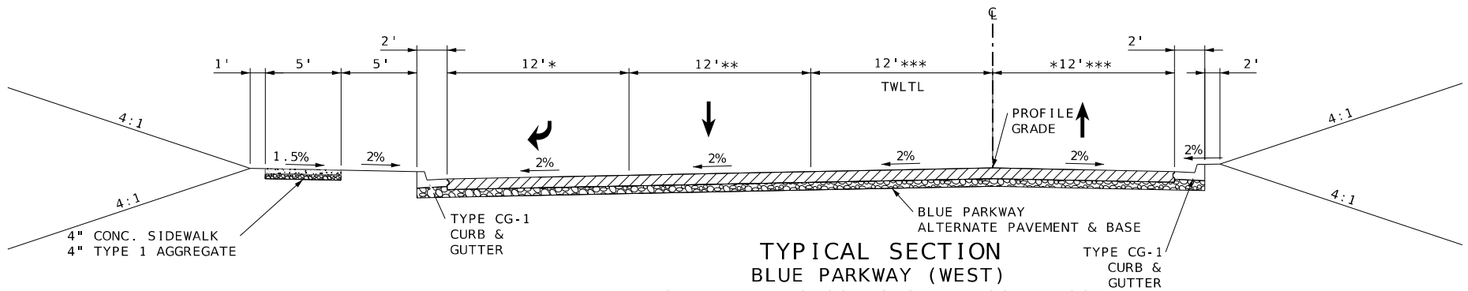

TYPICAL SECTION
BLUE PARKWAY (WEST)
STA. 715+50.00 TO STA. 720+44.20

* TRANSITION 12.00' TO 0.00' FROM STA. 718+74.62 TO STA. 719+74.69
TRANSITION 0.00' TO 12.00' FROM STA. 715+43.76 TO STA. 716+73.02
** TRANSITION 12.00' TO 14.00' FROM STA. 715+43.76 TO STA. 720+48.93
*** TRANSITION 12.00' TO 14.00' FROM STA. 715+88.73 TO STA. 724+90.14
**** TRANSITION 12.00' TO 14.00' FROM STA. 715+98.76 TO STA. 720+44.20

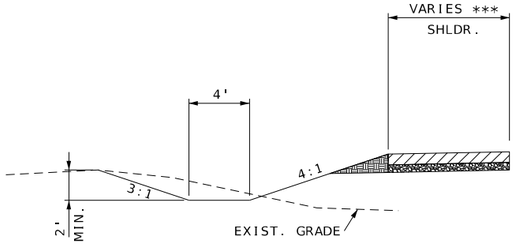

STA.711+10.58 TO STA. 712+29.02

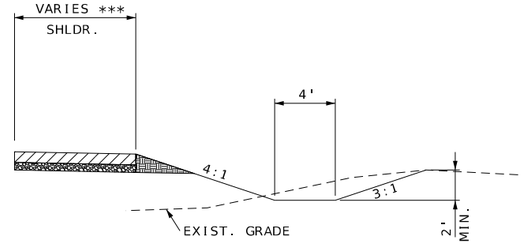

STA.711+10.75 TO STA. 715+00.11
*** SEE PLANS FOR DETAILS

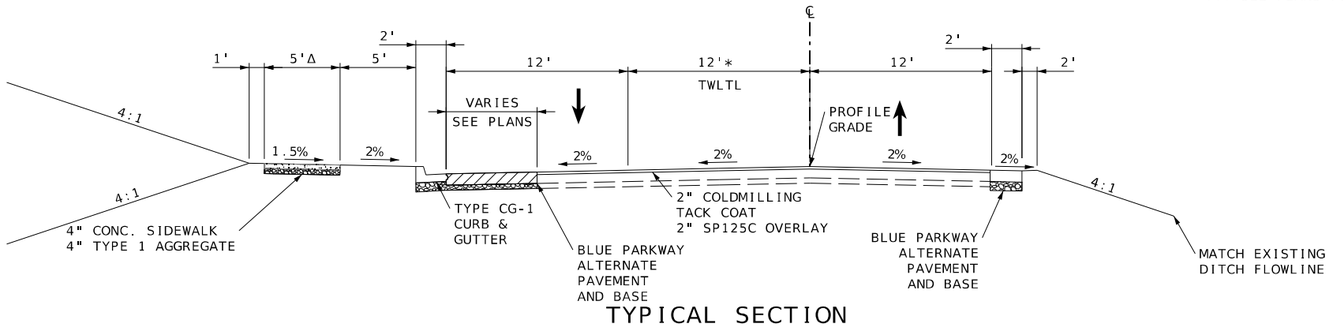

TYPICAL SECTION
BLUE PARKWAY (WEST)
STA. 708+67.00 TO STA. 715+50.00

* TRANSITION 0.00' TO 12' FROM STA. 709+10.00 TO STA. 714+00.00
Δ SIDEWALK STARTS AT STA. 710+99.88

PERMANENT AGGREGATE EDGE TREATMENT
ALTERNATE PAVEMENT
MAINLINE BASE
SHOULDERS

NOT TO SCALE

TYPICAL SHEET
14 OF 19

Reid Catt
2025.03.01 21:21:26-06'00'

REID BRENNEN CATT-ENGINEER
MO# PE-2010019516

DATE PREPARED
2/28/2025

ROUTE	STATE
50/291	MO
DISTRICT	SHEET NO.
KC	2

COUNTY
JACKSON

JOB NO.
J4P3196

FEDERAL PROJECT NO.
STB-3001(009)

PROJECT NO.

BRIDGE NO.

DESCRIPTION

DATE

IF A SEAL IS PRESENT ON THIS SHEET IT HAS BEEN ELECTRONICALLY SEALED AND DATED.

MISSOURI HIGHWAYS AND TRANSPORTATION COMMISSION
105 WEST CAPITOL
JEFFERSON CITY, MO 65102
1-888-ASK-MODOT (1-888-275-6636)

LEE'S SUMMIT MISSOURI

olsson
1301 BURLINGTON ST., STE. 100
NORTH KANSAS CITY, MO 64116
PHONE: 816.361.1177
CERT. OF AUTHORITY NO. 001592

F:\2021\04501-05000\021-04786\40-Design\Microstation\J4P3196\plan_sheets\2 Typicals\002_TS_14_J4P3196_15.dgn 12:50:41 PM 2/28/2025

NOTE:
CROSS SECTIONS AND EARTHWORK IN THIS PROJECT ARE BASED ON THE CONCRETE ALTERNATE. CONTRACTOR IS RESPONSIBLE FOR MAKING ANY ADJUSTMENTS WITH NO EXTRA PAY IF ASPHALT ALTERNATE IS USED.

SUBGRADE PROFILE AND CROSS SECTIONS ARE DESIGNED FOR THE THINNER PAVEMENT DESIGN. THE CONTRACTOR WILL BE RESPONSIBLE FOR MAINTAINING THE PROFILE GRADE FOR EITHER PAVEMENT DESIGN WITH NO DIRECT PAY. CROSSROAD STRUCTURES ARE DESIGNED TO ACCOMMODATE A MINIMUM COVER BASED ON THE THICKER PAVEMENT DESIGN.

ALL CONCRETE PAVEMENT, CURBS, CURB & GUTTER, AND RAISED MEDIANS ON CITY RIGHT OF WAY SHALL BE CONSTRUCTED OF KCMMB 4K CONCRETE.

SEE TYPICAL SECTION SHEET 19 OF 19 FOR ALTERNATE PAVEMENT DETAILS

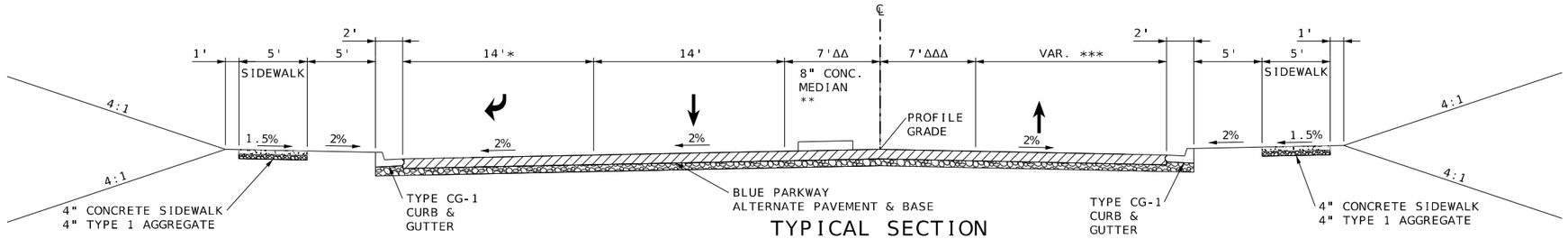

TYPICAL SECTION
BLUE PARKWAY (WEST)
STA. 726+18.07 TO STA. 730+14.34

* START LANE AT STA. 727+13.15
* TRANSITION 14.00' TO 0.00' FROM STA. 728+23.05 TO STA. 728+92.52
** CONCRETE MEDIAN STARTS AT STA. 727+29.46
*** WIDTH VARIES SEE PLANS FOR DETAILS
ΔΔ TRANSITION 9.18' TO 10.00' FROM STA. 726+18.07 TO STA. 727+13.15
ΔΔΔ TRANSITION 9.57' TO 10.00' FROM STA. 726+18.07 TO STA. 727+13.15

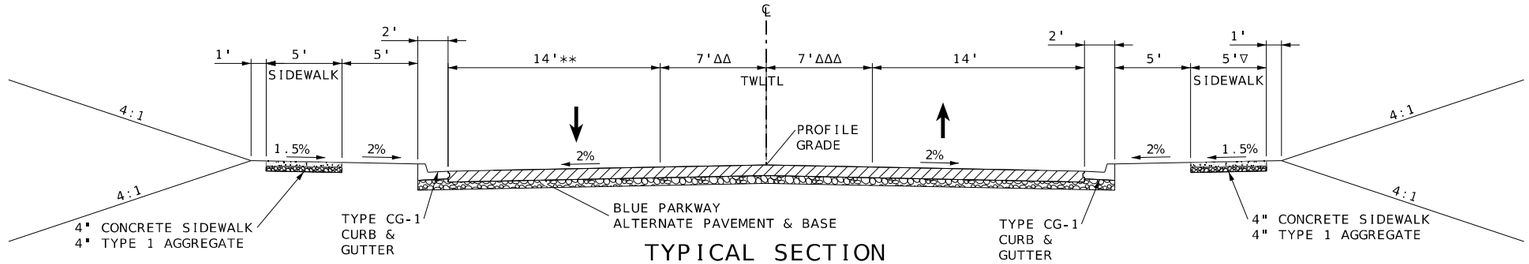

TYPICAL SECTION
BLUE PARKWAY (WEST)
STA. 720+44.20 TO STA. 726+18.07

** TRANSITION 12.00' TO 14.00' FROM STA. 715+43.76 TO STA. 720+48.93
ΔΔ TRANSITION 14.00' TO 9.48' FROM STA. 720+42.85 TO STA. 726+18.07
ΔΔΔ TRANSITION 0.00' TO 9.57' FROM STA. 720+42.85 TO STA. 726+18.07
▽ SIDEWALK STARTS AT STA. 724+18.28

PERMANENT AGGREGATE EDGE TREATMENT
ALTERNATE PAVEMENT
MAINLINE BASE
SHOULDER

NOT TO SCALE

TYPICAL SHEET
15 OF 19

Reid Catt
2025.03.01 21:21:34-06'00'

REID BRENNEN CATT
NUMBER
PE-2010019516

REID BRENNEN CATT-ENGINEER
MO# PE-2010019516

DATE PREPARED
2/28/2025

ROUTE	STATE
50/291	MO
DISTRICT	SHEET NO.
KC	2

COUNTY
JACKSON

JOB NO.
J4P3196

FEDERAL PROJECT NO.
STB-3001(009)

PROJECT NO.

BRIDGE NO.

DESCRIPTION	DATE

IF A SEAL IS PRESENT ON THIS SHEET IT HAS BEEN ELECTRONICALLY SEALED AND DATED.

MISSOURI HIGHWAYS AND TRANSPORTATION COMMISSION
105 WEST CAPITOL
JEFFERSON CITY, MO 65102
1-888-ASK-MODOT (1-888-275-6636)

LEE'S SUMMIT MISSOURI

olsson
1301 BURLINGTON ST., STE. 100
NORTH KANSAS CITY, MO 64116
PHONE: 816.361.1177
CERT. OF AUTHORITY NO. 001592

F:\2021\04501-05000\021-04786\40-Design\Microstation\J4P3196\plan_sheets\2 Typicals\002_TS_15_J4P3196_15.dgn 12:50:43 PM 2/28/2025

NOTE:
CROSS SECTIONS AND EARTHWORK IN THIS PROJECT ARE BASED ON THE CONCRETE ALTERNATE. CONTRACTOR IS RESPONSIBLE FOR MAKING ANY ADJUSTMENTS WITH NO EXTRA PAY IF ASPHALT ALTERNATE IS USED.

SUBGRADE PROFILE AND CROSS SECTIONS ARE DESIGNED FOR THE THINNER PAVEMENT DESIGN. THE CONTRACTOR WILL BE RESPONSIBLE FOR MAINTAINING THE PROFILE GRADE FOR EITHER PAVEMENT DESIGN WITH NO DIRECT PAY. CROSSROAD STRUCTURES ARE DESIGNED TO ACCOMMODATE A MINIMUM COVER BASED ON THE THICKER PAVEMENT DESIGN.

ALL CONCRETE PAVEMENT, CURBS, CURB & GUTTER, AND RAISED MEDIANS ON CITY RIGHT OF WAY SHALL BE CONSTRUCTED OF KCMMB 4K CONCRETE.

SEE TYPICAL SECTION SHEET 19 OF 19 FOR ALTERNATE PAVEMENT DETAILS

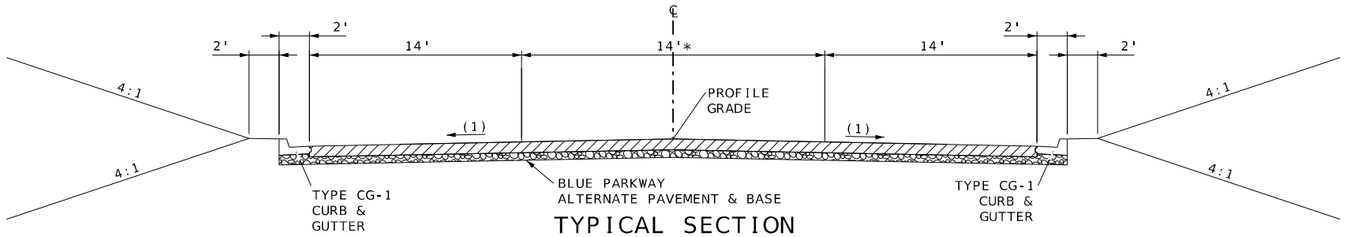

TYPICAL SECTION
BLUE PARKWAY (EAST)
STA. 734+89.82 TO STA. 738+91.90

* TRANSITION 20.00' TO 14.00' FROM STA. 734+89.82 TO STA. 736+99.94

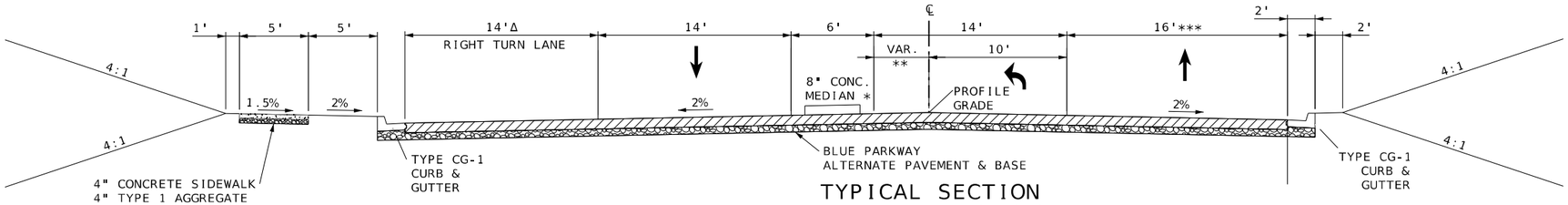

TYPICAL SECTION
BLUE PARKWAY (EAST)
STA. 733+82.43 TO STA. 734+89.82

* CONCRETE MEDIAN ENDS AT STA. 734+14.97
** TRANSITION 0.00' TO 4.00' FROM STA. 733+97.27 TO STA. 734+14.10
*** TRANSITION 16.00' TO 14.00' FROM STA. 734+45.86 TO STA. 734+87.14
Δ TRANSITION 14.00' TO 0.00' FROM STA. 733+10.28 TO STA. 734+11.69

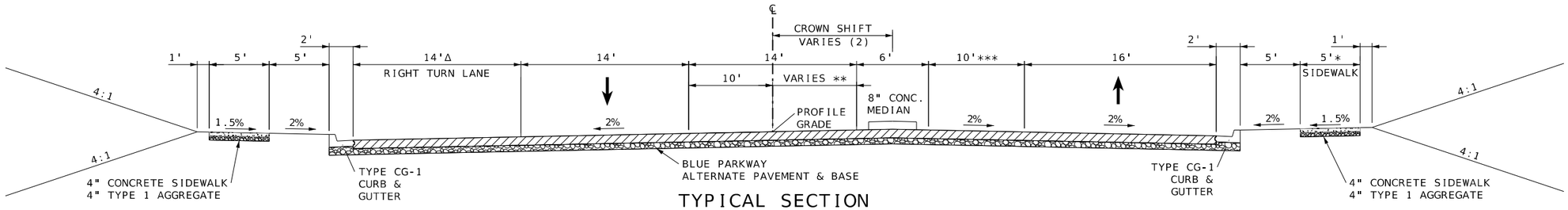

TYPICAL SECTION
BLUE PARKWAY (EAST)
STA. 731+04.49 TO STA. 733+82.43

* SIDEWALK ENDS AT STA. 732+17.23
** TRANSITION 4.00' TO 0.00' FROM STA. 733+07.48 TO STA. 733+64.10
*** TRANSITION 0.00' TO 10.00' FROM STA. 733+07.86 TO STA. 734+14.97
Δ TRANSITION 14.00' TO 0.00' FROM STA. 733+10.28 TO STA. 734+11.69

(2) CROWN SHIFT
TRANSITION 0.00' TO 7.00' FROM STA. 731+04.82 TO STA. 731+45.39
7.00' WIDTH FROM STA. 731+45.39 TO STA. 733+07.48
TRANSITION 7.00' TO 0.00' FROM STA. 733+07.48 TO STA. 733+82.43

TRANSITION -2% TO 2% FROM STA. 731+04.82 TO STA. 731+45.39
2% CROSS SLOPE FROM STA. 731+45.39 TO STA. 733+07.48
TRANSITION 2% TO 0% FROM STA. 733+07.48 TO STA. 733+57.48
TRANSITION 0% TO -2% FROM STA. 733+57.48 TO STA. 733+82.43

PERMANENT AGGREGATE EDGE TREATMENT
ALTERNATE PAVEMENT
MAINLINE BASE
SHOULDERS

NOT TO SCALE

TYPICAL SHEET
16 OF 19

Reid Catt
2025.03.01 21:21:42-06'00'

REID BRENNEN CATT-ENGINEER
MO# PE-2010019516

DATE PREPARED
2/28/2025

ROUTE	STATE
50/291	MO
DISTRICT	SHEET NO.
KC	2

COUNTY
JACKSON

JOB NO.
J4P3196

FEDERAL PROJECT NO.
STB-3001(009)

PROJECT NO.

BRIDGE NO.

DESCRIPTION | DATE

IF A SEAL IS PRESENT ON THIS SHEET IT HAS BEEN ELECTRONICALLY SEALED AND DATED.

MISSOURI HIGHWAYS AND TRANSPORTATION COMMISSION
105 WEST CAPITOL
JEFFERSON CITY, MO 65102
1-888-ASK-MODOT (1-888-275-6636)

LEE'S SUMMIT MISSOURI

olsson
1301 BURLINGTON ST., STE. 100
NORTH KANSAS CITY, MO 64116
PHONE: 816.361.1177
CERT. OF AUTHORITY NO. 001592

NOTE:
CROSS SECTIONS AND EARTHWORK IN THIS PROJECT ARE BASED ON THE CONCRETE ALTERNATE. CONTRACTOR IS RESPONSIBLE FOR MAKING ANY ADJUSTMENTS WITH NO EXTRA PAY IF ASPHALT ALTERNATE IS USED.

SUBGRADE PROFILE AND CROSS SECTIONS ARE DESIGNED FOR THE THINNER PAVEMENT DESIGN. THE CONTRACTOR WILL BE RESPONSIBLE FOR MAINTAINING THE PROFILE GRADE FOR EITHER PAVEMENT DESIGN WITH NO DIRECT PAY. CROSSROAD STRUCTURES ARE DESIGNED TO ACCOMMODATE A MINIMUM COVER BASED ON THE THICKER PAVEMENT DESIGN.

ALL CONCRETE PAVEMENT, CURBS, CURB & GUTTER, AND RAISED MEDIANS ON CITY RIGHT OF WAY SHALL BE CONSTRUCTED OF KCMMB 4K CONCRETE.

SEE TYPICAL SECTION SHEET 19 OF 19 FOR ALTERNATE PAVEMENT DETAILS

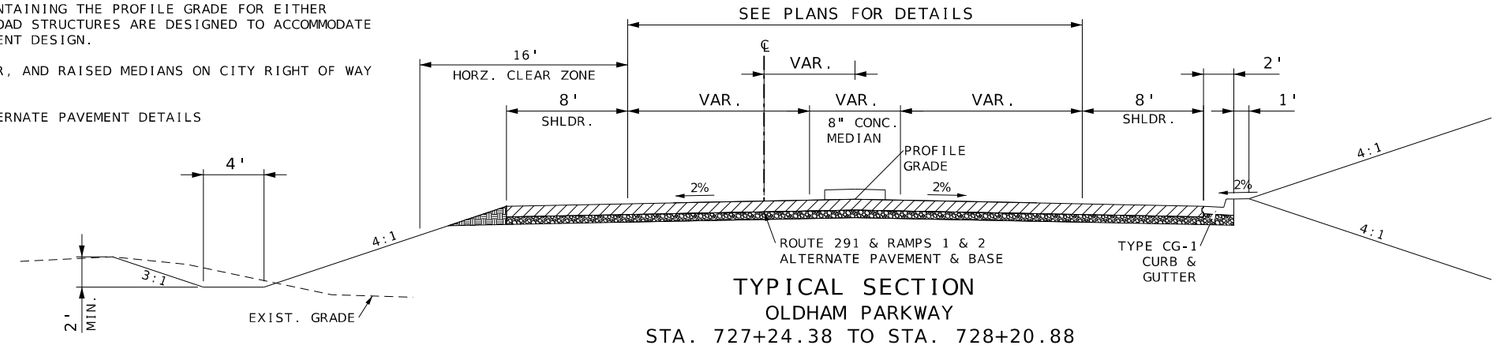

TYPICAL SECTION
OLDHAM PARKWAY
STA. 727+24.38 TO STA. 728+20.88

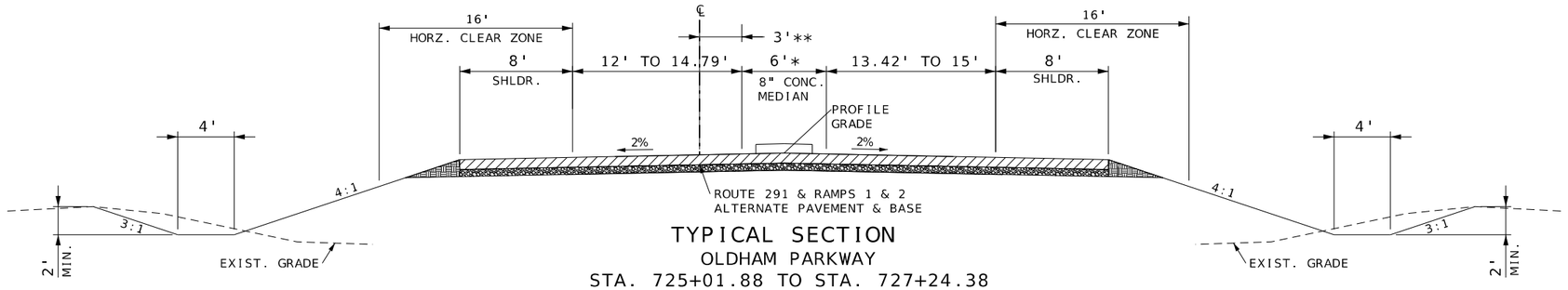

TYPICAL SECTION
OLDHAM PARKWAY
STA. 725+01.88 TO STA. 727+24.38

* TRANSITION 0.00' TO 6.00' FROM STA. 725+00.00 TO STA. 727+24.38
** TRANSITION 0.00' TO 3.00' FROM STA. 725+00.00 TO STA. 727+24.38

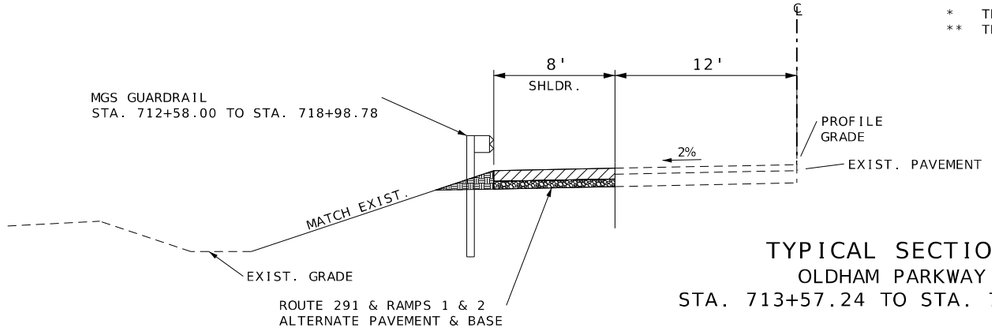

TYPICAL SECTION
OLDHAM PARKWAY
STA. 713+57.24 TO STA. 717+10.99

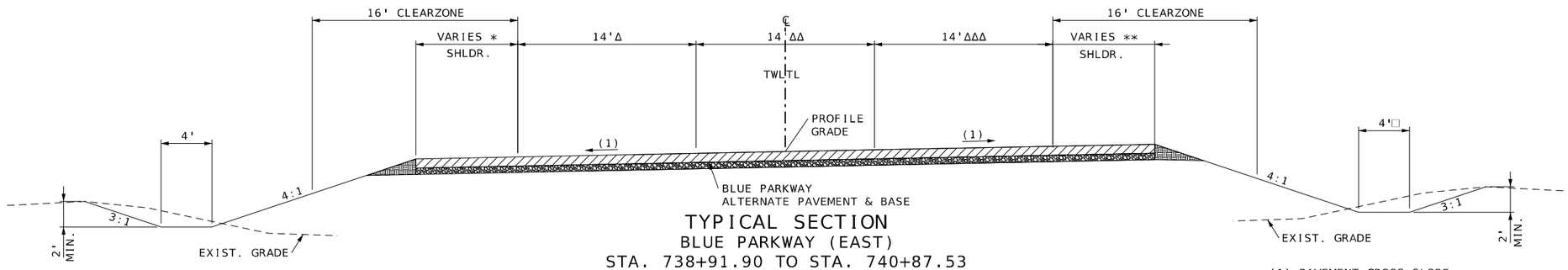

TYPICAL SECTION
BLUE PARKWAY (EAST)
STA. 738+91.90 TO STA. 740+87.53

* TRANSITION 2.00' TO 7.46' FROM STA. 738+91.90 TO STA. 740+87.53
** TRANSITION 2.00' TO 9.88' FROM STA. 738+91.90 TO STA. 740+87.53
Δ TRANSITION 14.00' TO 13.08' FROM STA. 738+91.90 TO STA. 740+87.53
ΔΔ TRANSITION 14.00' TO 0.00' FROM STA. 738+91.90 TO STA. 740+87.53
ΔΔΔ TRANSITION 14.00' TO 10.62' FROM STA. 738+91.90 TO STA. 740+87.53
□ DETENTION BASIN GRADING FROM STA. 739+31.06 TO STA. 740+87.53

(1) PAVEMENT CROSS SLOPE

LEFT	STATION	RIGHT
-2.00%	736+45.00	-2.00%
-2.00%	736+85.00	0.00%
-2.00%	737+25.00	2.00%
-2.00%	740+22.73	2.00%
-3.93%	740+87.53	2.00%

PERMANENT AGGREGATE EDGE TREATMENT
ALTERNATE PAVEMENT
MAINLINE BASE
SHOULDERS

NOT TO SCALE

TYPICAL SHEET
17 OF 19

Reid Catt
2025.03.01 21:22:01-06'00'

REID BRENNEN CATT-ENGINEER
MO# PE-2010019516

DATE PREPARED
2/28/2025

ROUTE	STATE
50/291	MO
DISTRICT	SHEET NO.
KC	2

COUNTY
JACKSON

JOB NO.
J4P3196

FEDERAL PROJECT NO.
STB-3001(009)

PROJECT NO.

BRIDGE NO.

DESCRIPTION | DATE

IF A SEAL IS PRESENT ON THIS SHEET IT HAS BEEN ELECTRONICALLY SEALED AND DATED.

MISSOURI HIGHWAYS AND TRANSPORTATION COMMISSION
105 WEST CAPITOL
JEFFERSON CITY, MO 65102
1-888-ASK-MODOT (1-888-275-6636)

LEE'S SUMMIT MISSOURI

olsson
1301 BURLINGTON ST., STE. 100
NORTH KANSAS CITY, MO 64116
PHONE: 816.361.1177
CERT. OF AUTHORITY NO. 001592

NOTE:
CROSS SECTIONS AND EARTHWORK IN THIS PROJECT ARE BASED ON THE CONCRETE ALTERNATE. CONTRACTOR IS RESPONSIBLE FOR MAKING ANY ADJUSTMENTS WITH NO EXTRA PAY IF ASPHALT ALTERNATE IS USED.

SUBGRADE PROFILE AND CROSS SECTIONS ARE DESIGNED FOR THE THINNER PAVEMENT DESIGN. THE CONTRACTOR WILL BE RESPONSIBLE FOR MAINTAINING THE PROFILE GRADE FOR EITHER PAVEMENT DESIGN WITH NO DIRECT PAY. CROSSROAD STRUCTURES ARE DESIGNED TO ACCOMMODATE A MINIMUM COVER BASED ON THE THICKER PAVEMENT DESIGN.

ALL CONCRETE PAVEMENT, CURBS, CURB & GUTTER, AND RAISED MEDIANS ON CITY RIGHT OF WAY SHALL BE CONSTRUCTED OF KCMMB 4K CONCRETE.

SEE TYPICAL SECTION SHEET 19 OF 19 FOR ALTERNATE PAVEMENT DETAILS

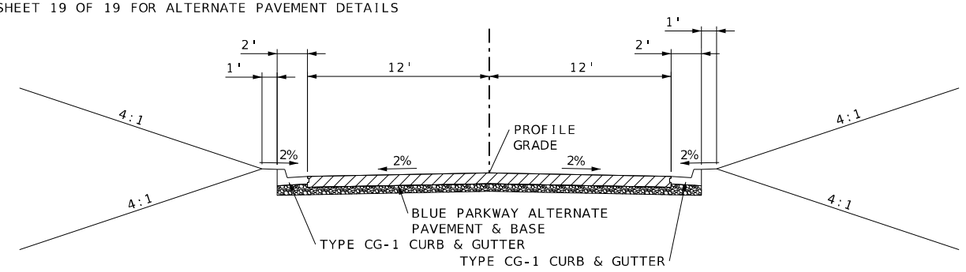

TYPICAL SECTION
7TH CONNECTION
STA. 3+98.01 TO STA. 4+89.00

OPTIONAL PAVEMENT
TEMPORARY WIDENING ALONG ROUTE 50 & RAMPS

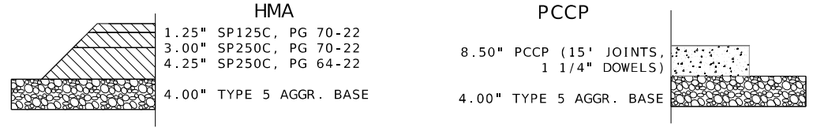

OPTIONAL PAVEMENT
TEMPORARY WIDENING ALONG BLUE PARKWAY & CITY STREETS

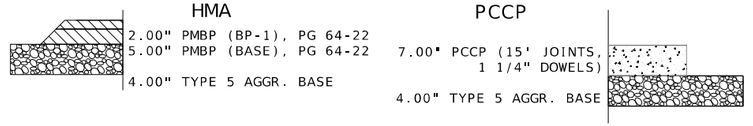

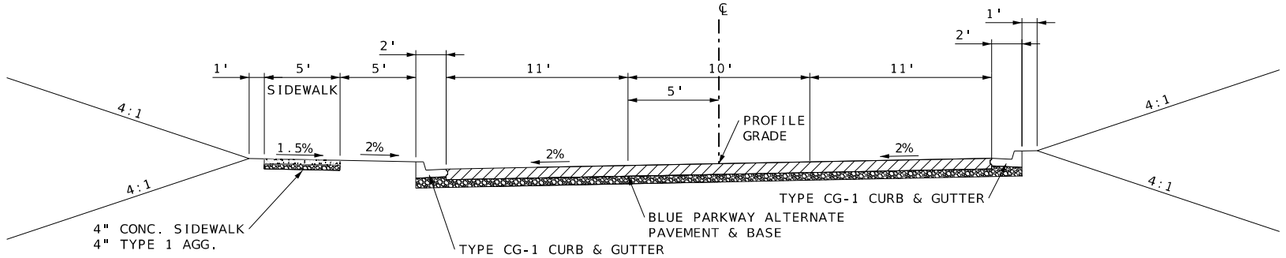

TYPICAL SECTION
SCHOOL DRIVE
STA. 10+23.62 TO STA. 12+09.17

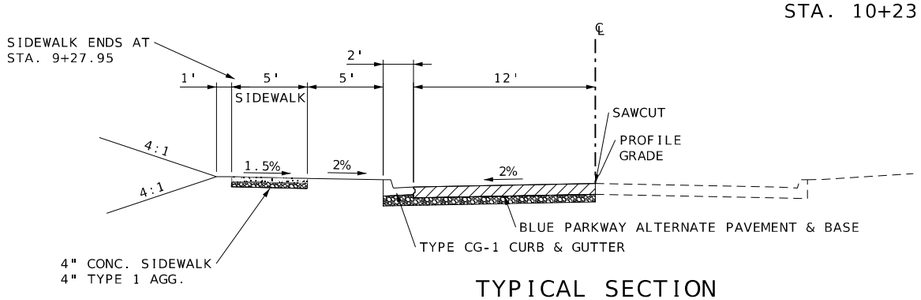

TYPICAL SECTION
7TH TERRACE
STA. 8+29.31 TO STA. 9+66.52

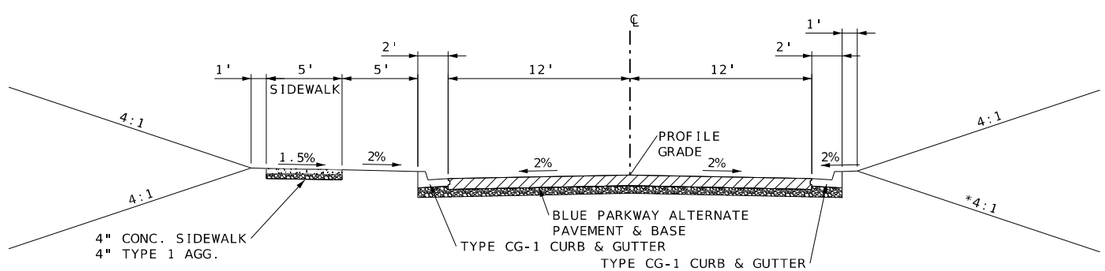

TYPICAL SECTION
7TH TERRACE
STA. 5+62.77 TO STA. 8+29.31

* DETENTION BASIN GRADING FROM STA. 5+62.77 TO STA. 7+02.38, SEE CROSS SECTIONS FOR DETAILS

PERMANENT AGGREGATE EDGE TREATMENT
ALTERNATE PAVEMENT
MAINLINE BASE
SHOULDERS

NOT TO SCALE

TYPICAL SHEET
18 OF 19

Reid Catt
2025.03.01 21:22:08-06'00'

REID BRENNEN CATT-ENGINEER
MO# PE-2010019516

DATE PREPARED
2/28/2025

ROUTE	STATE
50/291	MO
DISTRICT	SHEET NO.
KC	2

COUNTY
JACKSON

JOB NO.
J4P3196

FEDERAL PROJECT NO.
STB-3001(009)

PROJECT NO.

BRIDGE NO.

DESCRIPTION	DATE

IF A SEAL IS PRESENT ON THIS SHEET IT HAS BEEN ELECTRONICALLY SEALED AND DATED.

MISSOURI HIGHWAYS AND TRANSPORTATION COMMISSION
105 WEST CAPITOL
JEFFERSON CITY, MO 65102
1-888-ASK-MODOT (1-888-275-6636)

LEE'S SUMMIT MISSOURI

olsson
1301 BURLINGTON ST., STE. 100
NORTH KANSAS CITY, MO 64116
PHONE: 816.361.1177
CERT. OF AUTHORITY NO. 001592

ROUTE 50 ALTERNATE PAVEMENT DESIGN

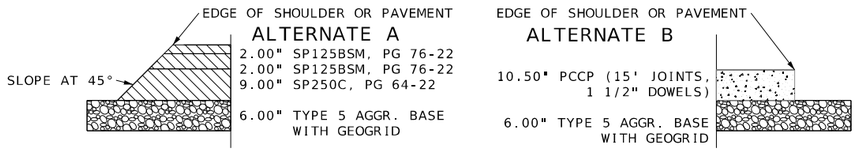

ROUTE 291 AND RAMPS 1 & 2 ALTERNATE PAVEMENT DESIGN

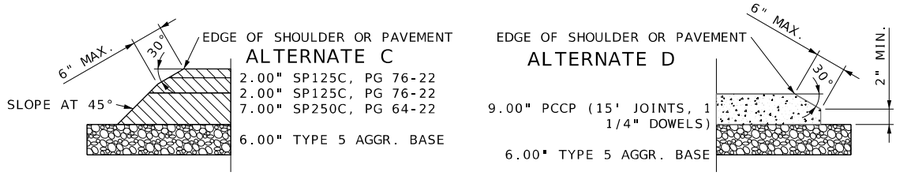

RAMPS 3 & 4 ALTERNATE PAVEMENT DESIGN

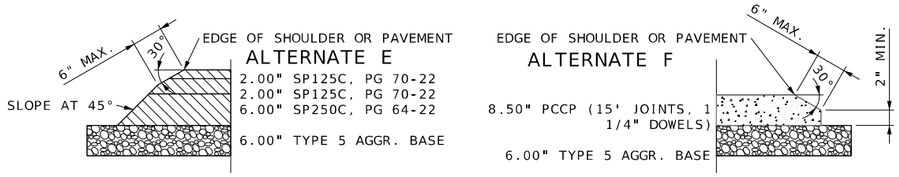

BLUE PARKWAY ALTERNATE PAVEMENT DESIGN (NO CHEMICAL STABILIZATION)

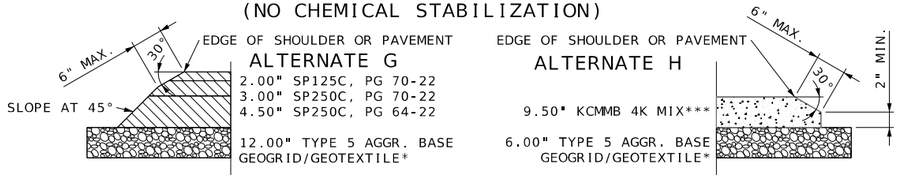

NOTE:
CROSS SECTIONS AND EARTHWORK IN THIS PROJECT ARE BASED ON THE CONCRETE ALTERNATE WITH TYPE 5 AGGR. BASE. CONTRACTOR IS RESPONSIBLE FOR MAKING ANY ADJUSTMENTS WITH NO EXTRA PAY IF ASPHALT ALTERNATE OR ROCK BASE IS USED.

SUBGRADE PROFILE AND CROSS SECTIONS SHOULD BE DESIGNED FOR THE THINNER PAVEMENT DESIGN. THE CONTRACTOR WILL BE RESPONSIBLE FOR MAINTAINING THE PROFILE GRADE FOR EITHER PAVEMENT DESIGN WITH NO DIRECT PAY. CROSSROAD STRUCTURES SHOULD BE DESIGNED TO ACCOMMODATE A MINIMUM COVER BASED ON THE THICKER PAVEMENT DESIGN.

* GEOGRID SHALL BE POLYPROPYLENE MATERIAL AND GEOTEXTILE SHALL BE WOVEN POLYPROPYLENE
*** 15' TRANSVERSE JOINT SPACING WITH 18" LONG, 1 1/4" DIAMETER DOWELS SPACED AT 12" CENTERS. RATIO BETWEEN TRANSVERSE AND LONGITUDINAL JOINT SPACING SHOULD NOT EXCEED 1.25. SEE STANDARD PLAN 502.05 AND 502.10 FOR DETAILS. ALL TIE BARS AND DOWEL BARS SHALL BE EPOXY COATED.

ASPHALT FACTORS	
MATERIAL	TONS/CY
SP125BSM, PG76-22	1.965
SP125C, PG 76-22	1.927
SP125C, PG 70-22	1.927
SP125B, PG 76-22	1.927
SP125C, PG 64-22	1.927
SP250C, PG 64-22	1.946

TACK COAT APPLICATION RATE
0.10 GAL/YD² (UNDILUTED)
PRIME COAT APPLICATION RATE
0.25 GAL/YD² (UNDILUTED)
PERMANENT AGGREGATE EDGE TREATMENT FACTOR
1.40 TONS/CY

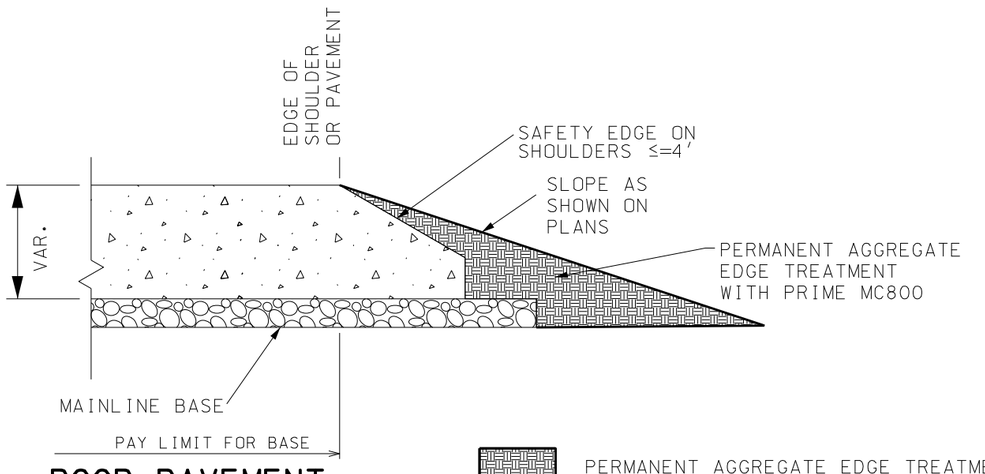

PCCP PAVEMENT

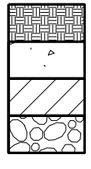

PERMANENT AGGREGATE EDGE TREATMENT
PCC (PORTLAND CEMENT CONCRETE)
HMA (HOT MIX ASPHALT)
MAINLINE BASE

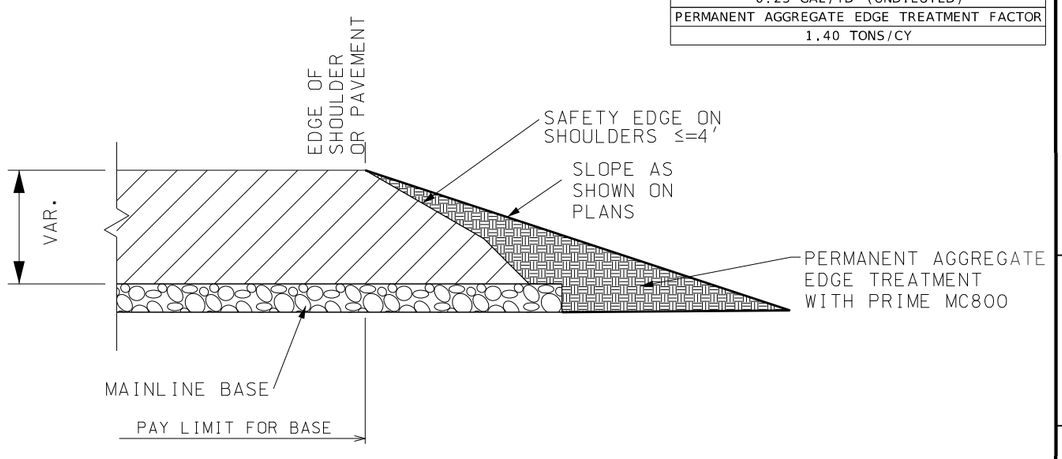

HMA PAVEMENT

GENERAL NOTE:

1. PERMANENT AGGREGATE EDGE TREATMENT WILL BE PAID FOR UNDER PAY ITEM 3049910 PER TON AND PRIME MC800 WILL BE PAID FOR UNDER PAY ITEM 4081018 PER GAL.
2. SEE STANDARD PLAN 401.00C FOR SAFETY EDGE DETAILS.

NOT TO SCALE

PERMANENT AGGREGATE EDGE TREATMENT

TYPICAL SHEET 19 OF 19

Reid Catt
2025.03.31 11:17:42-05'00'

REID BRENNEN CATT-ENGINEER
MO# PE-2010019516

DATE PREPARED
3/21/2025

ROUTE	STATE
50/291	MO
DISTRICT	SHEET NO.
KC	2

COUNTY
JACKSON

JOB NO.
J4P3196

FEDERAL PROJECT NO.
STB-3001(009)

PROJECT NO.

BRIDGE NO.

DESCRIPTION	DATE

IF A SEAL IS PRESENT ON THIS SHEET IT HAS BEEN ELECTRONICALLY SEALED AND DATED.

MISSOURI HIGHWAYS AND TRANSPORTATION COMMISSION
105 WEST CAPITOL
JEFFERSON CITY, MO 65102
1-888-ASK-MODOT (1-888-275-6636)

LEE'S SUMMIT MISSOURI

olsson
1301 BURLINGTON ST., STE. 100
NORTH KANSAS CITY, MO 64116
PHONE: 816.361.1177
CERT. OF AUTHORITY NO. 001592

F:\2021\04501-05000\021-04786\40-Design\Microstation\J4P3196\plan_sheets\2 Typicals\002_TS_19_J4P3196_I5.dgn 1:20:41 PM 3/21/2025

REMOVAL OF IMPROVEMENTS

SHEET	STA.	STA.	LOCATION	DESCRIPTION
4	711+76.75		ROUTE 50 RT	1 SIGN, 2 POST & BASES
4	712+08.58		ROUTE 50 RT	1 SIGN, 1 POST & BASE
4	714+32.15		ROUTE 50 LT	1 SIGN, 1 POST & BASE
4	716+70.00		ROUTE 50	99' SAWCUT
4-6	716+70.00	740+02.47	ROUTE 50	2332' CONCRETE BARRIER
4-6	716+70.00	740+02.47	ROUTE 50	19081 SY PAVEMENT
4	717+01.02	718+79.00	ROUTE 50 LT	178' CURB
4	718+51.51		ROUTE 50 RT	1 SIGN, 3 POST & BASES
4	720+73.29	720+87.26	ROUTE 50 RT	15' CURB
4-6	720+73.29	738+20.12	ROUTE 50 RT	1747' CURB
4	721+07.43		ROUTE 50 RT	1 SIGN, 2 POST & BASES
4	722+43.52		ROUTE 50 RT	1 SIGN, 1 POST & BASE
4-5	720+72.91	735+98.61	ROUTE 50 LT	1526' CURB
4	723+35.81		ROUTE 50 RT	EXIST. INLET
4	723+35.81	723+38.12	ROUTE 50 RT	15' PIPE
4	723+37.83		ROUTE 50 LT	EXIST. INLET
4	723+37.83	723+75.43	ROUTE 50 LT	38' PIPE
4	723+37.84		ROUTE 50	70' PIPE
4	723+38.12		ROUTE 50 RT	EXIST. INLET
4	723+75.43		ROUTE 50 LT	EXIST. INLET
5	725+74.22		ROUTE 50 RT	EXIST. INLET
5	725+74.22		ROUTE 50	68' PIPE
5	725+74.74		ROUTE 50 LT	EXIST. INLET
5	725+74.74	727+69.45	ROUTE 50 LT	195' PIPE
5	726+41.40	729+17.34	ROUTE 50 RT	276' GUARDRAIL
5	727+69.45		ROUTE 50 LT	EXIST. INLET
5	727+69.45	730+27.20	ROUTE 50 LT	258' PIPE
5	727+69.48		ROUTE 50	70' PIPE
5	727+69.48		ROUTE 50 RT	EXIST. INLET
5	727+72.92	731+49.35	ROUTE 50 LT	376' GUARDRAIL
5	730+20.56		ROUTE 50 RT	EXIST. INLET
5	730+20.56	730+27.20	ROUTE 50	70' PIPE
5	730+27.20		ROUTE 50 LT	EXIST. INLET
5	730+27.20	733+24.25	ROUTE 50 LT	297' PIPE
5	731+69.52		ROUTE 50 RT	1 SIGN, 1 POST & BASE
5	733+24.16		ROUTE 50 RT	EXIST. INLET
5	733+24.16		ROUTE 50	70' PIPE
5	733+24.25		ROUTE 50 LT	EXIST. INLET
5	733+24.25	734+99.49	ROUTE 50 LT	175' PIPE
5	734+50.35		ROUTE 50 LT	1 SIGN, 1 POST & BASE
5	734+52.76		ROUTE 50 RT	1 SIGN, 1 POST & BASE
5	734+99.49		ROUTE 50 LT	2 EXIST. INLETS
5	734+99.49		ROUTE 50 LT	17' PIPE
5	734+99.47		ROUTE 50 RT	EXIST. INLET
5	734+99.47		ROUTE 50	70' PIPE
5	735+14.57		ROUTE 50 LT	1 SIGN, 1 POST & BASE
5	735+91.92		ROUTE 50 LT	1 SIGN, 2 POST & BASES
5	737+22.35	737+73.21	ROUTE 50 RT	51' CURB
5	737+50.00		ROUTE 50 RT	1 SIGN TRUSS BASE
6	740+02.47		ROUTE 50	71' SAWCUT
6	740+02.47	745+20.37	ROUTE 50 LT	518' SAWCUT
6	740+02.47	745+20.37	ROUTE 50 LT	522 SY PAVEMENT
6	740+02.47	746+88.77	ROUTE 50 RT	686' SAWCUT
6	740+02.47	746+88.77	ROUTE 50 RT	1049 SY PAVEMENT
6	741+59.27		ROUTE 50 RT	1 SIGN, 3 POST & BASES
6	745+20.37		ROUTE 50 LT	9' SAWCUT
6	746+88.77		ROUTE 50 RT	10' SAWCUT
4-5	0+00.00	9+31.68	RAMP 1 LT	972' CURB
4-5	0+00.00	9+33.43	RAMP 1	2559 SY PAVEMENT
4	3+86.89		RAMP 1 LT	EXIST. INLET
4	3+86.89	4+69.64	RAMP 1 LT	93' PIPE
4	4+50.93	4+62.34	RAMP 1	57' PIPE
4	4+62.34		RAMP 1 LT	EXIST. INLET
4	4+62.34	4+98.95	RAMP 1 LT	67' PIPE
4	4+98.95		RAMP 1 LT	EXIST. INLET
4-5	4+98.95	5+52.95	RAMP 1 LT	52' PIPE
5	5+52.95		RAMP 1 LT	EXIST. INLET
5	6+58.36		RAMP 1 RT	CONCRETE HEADWALL
5	6+76.71		RAMP 1	60' PIPE
5	6+89.08		RAMP 1 LT	CONCRETE HEADWALL
5	7+09.07		RAMP 1 LT	1 SIGN, 1 POST & BASE
5	8+66.22	9+37.98	RAMP 1 RT	121' GUARDRAIL
5	9+06.60		RAMP 1 LT	1 SIGN, 1 POST & BASE
5	9+19.08		RAMP 1 RT	PULLBOX
1 LUMP SUM				

REMOVAL OF IMPROVEMENTS

SHEET	STA.	STA.	LOCATION	DESCRIPTION
5	9+23.93		RAMP 1 LT	1 SIGN, 1 POST & BASE
5	9+24.68		RAMP 1 RT	1 SIGNAL POST, MAST ARMS, & BASE
4-5	0+00.00	10+42.14	RAMP 2	3435 SY PAVEMENT
4	2+34.36		RAMP 2 RT	1 SIGN, 2 POST & BASES
4	3+28.20		RAMP 2 RT	1 SIGN, 2 POST & BASES
4	5+29.35		RAMP 2 RT	1 SIGN, 2 POST & BASES
4	5+62.02		RAMP 2	68' PIPE & HEADWALL
5	6+30.52		RAMP 2 RT	1 SIGN, 2 POST & BASES
5	7+35.11		RAMP 2 RT	1 SIGN, 2 POST & BASES
5	7+67.65		RAMP 2 RT	1 SIGN, 1 POST & BASE
5	7+67.77		RAMP 2 LT	1 SIGN, 1 POST & BASE
5	7+77.59		RAMP 2 RT	PULLBOX
5	9+75.96		RAMP 2 LT	1 SIGN, 2 POST & BASES
5	9+76.01		RAMP 2 RT	1 SIGN, 2 POST & BASES
5	9+96.70		RAMP 2 RT	1 SIGN, 2 POST & BASES
5	10+17.30		RAMP 2 LT	1 SIGN, 1 POST & BASE
5	10+22.94		RAMP 2 RT	PULLBOX
5	10+23.97		RAMP 2 LT	SIGNAL POST, MASTARM, & BASE
5	10+26.93		RAMP 2 RT	SIGNAL POST, MASTARM, & BASE
5	10+33.88		RAMP 2 LT	1 SIGN, 2 POST & BASES
5	0+33.81		RAMP 3 LT	1 SIGN, 1 POST & BASE
5	0+35.56	10+87.11	RAMP 3	3704 SY PAVEMENT
5	0+36.87		RAMP 3 LT	SIGNAL POST, MASTARM, & BASE
5	0+47.99		RAMP 3 RT	PULLBOX
5	0+54.90		RAMP 3 RT	1 SIGN, 2 POST & BASES
5	0+80.10		RAMP 3 RT	1 SIGN, 2 POST & BASES
5	0+32.18	0+58.40	RAMP 3 LT	47 SY CONCRETE ISLAND
5	0+43.05		RAMP 3 LT	PULLBOX
5	0+61.84		RAMP 3 LT	1 SIGN, 1 POST & BASE
5	0+90.94		RAMP 3 LT	1 SIGN, 2 POST & BASES
5	1+53.83		RAMP 3 LT	1 SIGN, 1 POST & BASE
5	2+57.29		RAMP 3 LT	1 SIGN, 1 POST & BASE
5	2+92.43		RAMP 3 LT	1 SIGN, 1 POST & BASE
5	2+95.24		RAMP 3 RT	1 SIGN, 1 POST & BASE
5	3+80.56		RAMP 3 LT	1 SIGN, 2 POST & BASES
5	4+84.83		RAMP 3 LT	1 SIGN, 2 POST & BASES
5	5+45.93		RAMP 3 LT	1 SIGN, 2 POST & BASES
5	5+45.90		RAMP 3 RT	1 SIGN, 1 POST & BASE
5	5+81.92		RAMP 3 LT	1 SIGN, 2 POST & BASES
5	6+69.83	7+54.16	RAMP 3	97' PIPE
5	7+81.37		RAMP 3 LT	1 SIGN, 2 POST & BASES
5-6	9+18.20	10+87.11	RAMP 3 LT	174' GUARDRAIL
5	9+36.35		RAMP 3 LT	1 SIGN, 2 POST & BASES
5	0+32.82	1+15.49	RAMP 4 LT	114' GUARDRAIL
5-6	0+35.96	11+29.49	RAMP 4	3562 SY PAVEMENT
5	0+36.95		RAMP 4 LT	PULLBOX
5	0+41.62		RAMP 4 LT	SIGNAL POST, MASTARM, & BASE
5	0+47.85		RAMP 4 LT	PULLBOX
5	0+53.08		RAMP 4 RT	SIGNAL POST, MASTARM, & BASE
5	0+56.83		RAMP 4 RT	PULLBOX
5	0+87.21		RAMP 4 LT	FIBER OPTIC VAULT
5	1+12.77		RAMP 4 LT	ITS CAMERA, POLE, & BASE
5	1+23.89		RAMP 4 LT	PULLBOX
5	1+86.07		RAMP 4 RT	1 SIGN, 1 POST & BASE
5	2+47.55	2+71.42	RAMP 4 RT	5 PIPE POST
5	4+80.70		RAMP 4	51' PIPE & CONCRETE HEADWALLS
10	166+72.50		ROUTE 291	77' SAWCUT
10	166+72.50	175+00.00	ROUTE 291 LT	828' SAWCUT
10	166+72.50	175+00.00	ROUTE 291 RT	828' SAWCUT
10	166+72.50	175+00.00	ROUTE 291 LT	654 SY PAVEMENT
10	166+72.50	175+00.00	ROUTE 291 RT	773 SY PAVEMENT
10	167+94.54		ROUTE 291 RT	1 SIGN, 1 POST & BASE
10	168+36.26		ROUTE 291 RT	PULLBOX
10	168+37.41		ROUTE 291 LT	PULLBOX
10	169+05.77		ROUTE 291 LT	1 SIGN, 1 POST & BASE
10	171+30.63		ROUTE 291 RT	1 SIGN, 1 POST & BASE
10	171+38.54		ROUTE 291 LT	PULLBOX
10	171+52.18		ROUTE 291 LT	1 SIGN, 1 POST & BASE
10	172+27.63	172+68.38	ROUTE 291 LT	194 SY PAVEMENT, INCLUDING CURBS
10	173+51.31		ROUTE 291 LT	1 SIGN, 1 POST & BASE
10	173+55.74		ROUTE 291 RT	1 SIGN, 1 POST & BASE
10	173+72.54		ROUTE 291	56' SAWCUT
10	173+78.54		ROUTE 291	56' SAWCUT
10	174+00.83		ROUTE 291 LT	1 SIGN, 1 POST & BASE
1 LUMP SUM				

SUMMARY OF QUANTITIES
SHEET 1 OF 18

IF A SEAL IS PRESENT ON THIS SHEET IT HAS BEEN ELECTRONICALLY SEALED AND DATED.

Reid Catt
2025.03.01 21:22:21-06'00'

REID BRENNEN CATT
NUMBER
PE-2010019516

REID BRENNEN CATT-ENGINEER
MO# PE-2010019516

DATE PREPARED
2/28/2025

ROUTE	STATE
50/291	MO
DISTRICT	SHEET NO.
KC	3

COUNTY
JACKSON

JOB NO.
J4P3196

FEDERAL PROJECT NO.
STB-3001(009)

PROJECT NO.

BRIDGE NO.

DATE	DESCRIPTION

MISSOURI HIGHWAYS AND TRANSPORTATION COMMISSION

105 WEST CAPITOL
JEFFERSON CITY, MO 65102
1-888-ASK-MODOT (1-888-275-6636)

LEE'S SUMMIT MISSOURI

olsson
1301 BURLINGTON ST., STE. 100
NORTH KANSAS CITY, MO 64116
PHONE: 816.361.1177
CERT. OF AUTHORITY NO. 001592

REMOVAL OF IMPROVEMENTS

SHEET	STA.	STA.	LOCATION	DESCRIPTION
10	174+45.98		ROUTE 291 LT	1 SIGN, 1 POST & BASE
10	175+00.00		ROUTE 291	60' SAWCUT
10	174+49.15	175+40.38	ROUTE 291 LT	121' PIPE
10	174+50.63	176+66.14	ROUTE 291 LT	216' CURB & GUTTER
10	174+91.66		ROUTE 291 LT	PULLBOX
10-11	175+00.00	179+89.43	ROUTE 291	4124 SY PAVEMENT
10	175+40.38		ROUTE 291 LT	EXIST. INLET
10	175+40.38	175+85.58	ROUTE 291 LT	39' PIPE
10	175+50.10		ROUTE 291 LT	1 SIGN, 1 POST & BASE
10	175+71.28	175+79.16	ROUTE 291 RT	44' PIPE
10	175+85.58		ROUTE 291 LT	EXIST. INLET
10	176+67.32		ROUTE 291 LT	PULLBOX
10	176+69.99		ROUTE 291 LT	PULLBOX
10	176+07.88		ROUTE 291 RT	PULLBOX
10	176+16.40	176+25.50	ROUTE 291 RT	57' PIPE
10	176+71.03		ROUTE 291 LT	SIGNAL POLE, MAST ARM, & BASE
10	176+71.93		ROUTE 291 LT	PULLBOX
10	176+72.79		ROUTE 291 RT	SIGNAL POLE, MAST ARM, & BASE
10	176+77.64		ROUTE 291 RT	PULLBOX
10	176+78.87		ROUTE 291 LT	1 SIGN, 1 POST & BASE
10	177+37.96		ROUTE 291 LT	PULLBOX
10	177+40.76		ROUTE 291 LT	SIGNAL POLE, MAST ARM, & BASE
10	177+60.82		ROUTE 291 RT	PULLBOX
10	177+63.40		ROUTE 291 RT	SIGNAL POLE, MAST ARM, & BASE
11	177+77.47		ROUTE 291 LT	1 SIGN, 1 POST & BASE
11	179+28.20	179+89.24	ROUTE 291 RT	103' CURB
11	179+39.60	179+89.61	ROUTE 291 LT	84' CURB
11	179+77.11		ROUTE 291 LT	1 SIGN, 2 POST & BASES
11	180+22.86		ROUTE 291 RT	1 SIGN, 1 POST & BASE
11	181+41.81	181+86.2	ROUTE 291 RT	73' CURB
11	181+41.85	184+75.00	ROUTE 291	2876 SY PAVEMENT
11	181+41.87	181+98.23	ROUTE 291 LT	86' CURB
11	181+50.32		ROUTE 291 LT	1 SIGN, 1 POST & BASE
11	181+53.32		ROUTE 291 RT	1 SIGN, 1 POST & BASE
11	181+53.73		ROUTE 291 RT	1 SIGN, 2 POST & BASES
11	184+25.72	475+17.90	ROUTE 291	143 SY CONCRETE MEDIAN
11	184+75.00		ROUTE 291	71' SAWCUT
11	184+75.00	186+89.09	ROUTE 291 LT	214' SAWCUT
11	184+75.00	187+02.95	ROUTE 291 RT	228' SAWCUT
11	184+75.86		ROUTE 291 LT	1 SIGN, 1 POST & BASE
11	184+53.20	185+08.41	ROUTE 291 LT	55' PIPE
11	185+08.41		ROUTE 291 LT	EXIST. INLET
11	185+08.41	187+03.30	ROUTE 291 LT	195' PIPE
11	184+36.66	184+63.64	ROUTE 291 LT	46' CURB
11	184+36.66	184+45.15	ROUTE 291 LT	30' SAWCUT
11	184+44.54	184+64.80	ROUTE 291 LT	45' CURB
11	184+62.80	184+91.51	ROUTE 291 LT	29' SAWCUT
11	184+89.51	186+89.09	ROUTE 291 LT	296' CURB
11	184+53.14	185+18.24	ROUTE 291 LT	413 SY PAVEMENT
11	184+60.80	186+09.45	ROUTE 291 RT	155' CURB
11	186+09.45	187+02.95	ROUTE 291 RT	178 SY PAVEMENT
11	183+65.52		ROUTE 291 LT	PULLBOX
11	186+33.34	186+77.18	ROUTE 291 RT	44' SAWCUT
11	186+89.09		ROUTE 291 LT	2' SAWCUT
11	475+30.30	475+40.84	ROUTE 291 LT	17' CURB
11	475+32.53	475+41.87	ROUTE 291 LT	18 SY SIDEWALK
11	475+25.54		ROUTE 291 LT	PEDESTRIAN PUSH BUTTON, POST, & BASE
11	475+30.30		ROUTE 291 LT	2' SAWCUT
11	475+30.30	475+40.84	ROUTE 291 LT	18' SAWCUT
11	475+36.19	475+41.87	ROUTE 291 LT	6' SAWCUT
11	475+40.84		ROUTE 291 LT	2' SAWCUT
11	475+99.45		ROUTE 291 LT	2' SAWCUT
11	475+99.45	476+05.78	ROUTE 291 LT	17' CURB
11	475+99.45	476+05.78	ROUTE 291 LT	17' SAWCUT
11	475+99.57	476+23.53	ROUTE 291 LT	36 SY SIDEWALK
11	476+05.78		ROUTE 291 LT	2' SAWCUT
11	476+18.52	476+23.53	ROUTE 291 LT	5' SAWCUT
18	710+06.11	718+98.78	OLDHAM PARKWAY LT	895' SAWCUT
18	710+06.11		OLDHAM PARKWAY LT	20' SAWCUT
18	710+06.11	718+98.78	OLDHAM PARKWAY LT	1994 SY PAVEMENT
18	710+06.11	718+98.78	OLDHAM PARKWAY LT	893' GUARDRAIL
18	718+98.78		OLDHAM PARKWAY LT	20' SAWCUT
19	725+01.88		OLDHAM PARKWAY	41' SAWCUT
19	725+01.88	728+37.66	OLDHAM PARKWAY	2055 SY PAVEMENT
1 LUMP SUM				

REMOVAL OF IMPROVEMENTS

SHEET	STA.	STA.	LOCATION	DESCRIPTION
19	725+38.15		OLDHAM PARKWAY RT	1 SIGN, 1 POST & BASE
19	726+59.63	726+79.50	OLDHAM PARKWAY RT	46' CURB
19	726+59.63	727+32.11	OLDHAM PARKWAY RT	161 SY PAVEMENT
19	726+77.63	727+12.46	OLDHAM PARKWAY RT	37' SAWCUT
19	726+83.74		OLDHAM PARKWAY LT	1 SIGN, 1 POST & BASE
19	727+10.59	727+32.64	OLDHAM PARKWAY RT	46' CURB
19	728+07.29		OLDHAM PARKWAY LT	1 SIGN, 1 POST & BASE
19	728+18.43		OLDHAM PARKWAY RT	1 SIGN, 1 POST & BASE
13	709+15.69	709+61.56	BLUE PARKWAY LT	48' SAWCUT
13	709+14.70	709+58.24	BLUE PARKWAY LT	48' SAWCUT
13	709+14.70	709+61.56	BLUE PARKWAY LT	21 SY PAVEMENT
13	709+30.65		BLUE PARKWAY LT	2' SAWCUT
13	709+30.65	709+99.91	BLUE PARKWAY LT	109' SAWCUT
13	709+30.65	717+00.00	BLUE PARKWAY LT	886 SY PAVEMENT
13	709+99.91	717+00.00	BLUE PARKWAY LT	700' SAWCUT
13	717+00.00		BLUE PARKWAY	23' SAWCUT
13	709+62.64		BLUE PARKWAY LT	EXIST. INLET
13	709+62.64	711+08.41	BLUE PARKWAY LT	164' PIPE
13	711+08.41		BLUE PARKWAY LT	EXIST. INLET
13	711+08.41		BLUE PARKWAY	55' PIPE WITH CONCRETE HEADWALL
13	711+06.29		BLUE PARKWAY	25' SAWCUT
13	711+10.54		BLUE PARKWAY	25' SAWCUT
13	711+06.29	711+10.54	BLUE PARKWAY	12 SY PAVEMENT
13	710+43.85	711+31.27	BLUE PARKWAY LT	87' SAWCUT
13	710+24.84	710+99.08	BLUE PARKWAY LT	292 SY PAVEMENT
13	711+25.73		BLUE PARKWAY	25' SAWCUT
13	711+30.98		BLUE PARKWAY	25' SAWCUT
13	711+25.73	711+30.98	BLUE PARKWAY	12 SY PAVEMENT
13	711+68.42		BLUE PARKWAY LT	99' SAWCUT
13	711+68.42	711+72.42	BLUE PARKWAY LT	4' SAWCUT
13	711+68.42	711+72.42	BLUE PARKWAY LT	44 SY PAVEMENT
13	711+72.42		BLUE PARKWAY LT	99' SAWCUT
13	711+95.83	712+88.98	BLUE PARKWAY LT	93' SAWCUT
13	711+95.83	713+22.50	BLUE PARKWAY LT	330 SY PAVEMENT
13	711+96.99		BLUE PARKWAY LT	1 SIGN, 1 POST & BASE
13	712+53.81	713+26.97	BLUE PARKWAY LT	73' PIPE
13	713+29.53	713+76.32	BLUE PARKWAY LT	47' PIPE
13	713+31.60	714+19.73	BLUE PARKWAY LT	245 SY PAVEMENT
13	713+32.41		BLUE PARKWAY LT	1 SIGN, 1 POST & BASE
13	713+41.59	714+19.73	BLUE PARKWAY LT	79' SAWCUT
13	713+79.59		BLUE PARKWAY LT	1 LIGHT POST, BRACKET ARM & BASE
13	715+27.05		BLUE PARKWAY LT	PULLBOX
13	715+35.56		BLUE PARKWAY LT	PULLBOX
13	715+48.20	716+05.20	BLUE PARKWAY LT	56' PIPE
13	715+53.15	716+50.76	BLUE PARKWAY LT	111' SAWCUT
13	715+54.90	716+65.19	BLUE PARKWAY LT	631 SY PAVEMENT INCLUDING CURB & GUTTER
13	715+63.62		BLUE PARKWAY LT	1 LIGHT POST, BRACKET ARM & BASE
13	715+64.77		BLUE PARKWAY LT	1 SIGN, 1 POST & BASE
13	715+65.17		BLUE PARKWAY LT	PIPE POST
13	715+97.89	716+13.03	BLUE PARKWAY LT	84 SY CONCRETE MEDIAN INCLUDING CURB
13	716+00.71		BLUE PARKWAY LT	PIPE POST
13	716+00.76		BLUE PARKWAY LT	1 SIGN, 1 POST & BASE
13	716+05.20		BLUE PARKWAY LT	EXIST. INLET
13	716+05.20	716+72.42	BLUE PARKWAY LT	65' PIPE
13	716+46.19		BLUE PARKWAY LT	PIPE POST
13	716+47.64		BLUE PARKWAY LT	1 SIGN, 1 POST & BASE
13	716+48.38		BLUE PARKWAY LT	1 SIGN, 1 POST & BASE
13	716+53.51		BLUE PARKWAY LT	1 SIGN, 1 POST & BASE
13-14	717+00.00	730+34.27	BLUE PARKWAY RT	4765 SY PAVEMENT
13-14	717+01.10	724+29.85	BLUE PARKWAY RT	882' CURB
14	720+53.73	721+78.61	BLUE PARKWAY LT	314 SY PAVEMENT
14	720+70.65	721+68.49	BLUE PARKWAY LT	98' PIPE WITH FLARED END SECTIONS
14	721+08.13		BLUE PARKWAY LT	1 SIGN, 1 POST & BASE
14	722+42.54	723+58.78	BLUE PARKWAY RT	403 SY PAVEMENT INCLUDING CURB & GUTTER
14	722+45.72		BLUE PARKWAY RT	EXIST. INLET
14	722+45.72	722+54.69	BLUE PARKWAY RT	9' PIPE
14	722+59.40		BLUE PARKWAY RT	1 SIGN, 1 POST & BASE
14	722+89.62	724+30.67	BLUE PARKWAY RT	229' CURB
14	723+04.78		BLUE PARKWAY RT	1 SIGN, 1 POST & BASE
14	724+90.54	729+84.63	BLUE PARKWAY	35 BOLLARDS
14	724+90.54	729+84.63	BLUE PARKWAY	8 LIGHT POLES, BRACKET ARMS, & BASES
14	725+03.63	726+09.48	BLUE PARKWAY	3764 SF BUILDING & FOUNDATION
14	725+17.08	725+80.33	BLUE PARKWAY RT	68 SY SIDEWALK
14	725+51.95	730+33.70	BLUE PARKWAY	8763 SY PAVEMENT INCLUDING CURB
1 LUMP SUM				

SUMMARY OF QUANTITIES
SHEET 2 OF 18

IF A SEAL IS PRESENT ON THIS SHEET IT HAS BEEN ELECTRONICALLY SEALED AND DATED.

Reid Catt
2025.03.01 21:22:36-06'00'

REID BRENNEN CATT
NUMBER
PE-2010019516

REID BRENNEN CATT-ENGINEER
MO# PE-2010019516

DATE PREPARED
2/28/2025

ROUTE	STATE
50/291	MO
DISTRICT	SHEET NO.
KC	3

COUNTY
JACKSON

JOB NO.
J4P3196

FEDERAL PROJECT NO.
STB-3001(009)

PROJECT NO.

BRIDGE NO.

DATE	DESCRIPTION

MISSOURI HIGHWAYS AND TRANSPORTATION COMMISSION

105 WEST CAPITOL
JEFFERSON CITY, MO 65102
1-888-ASK-MODOT (1-888-275-6636)

LEE'S SUMMIT MISSOURI

olsson
1301 BURLINGTON ST., STE. 100
NORTH KANSAS CITY, MO 64116
PHONE: 816.361.1177
CERT. OF AUTHORITY NO. 001592

REMOVAL OF IMPROVEMENTS

SHEET	STA.	STA.	LOCATION	DESCRIPTION
14	725+91.84	726+27.13	BLUE PARKWAY LT	50 SY SIDEWALK
14	726+58.47	728+74.50	BLUE PARKWAY RT	11162 SF BUILDING
14	727+10.02	728+64.81	BLUE PARKWAY LT	628 LF FENCE
14	728+26.37		BLUE PARKWAY RT	FLAG POLE AND BASE
14	726+50.02	727+01.76	BLUE PARKWAY LT	81 SY PAVED SURFACE & SIDEWALK
14	726+92.97		BLUE PARKWAY LT	1 SIGN, 1 POST & BASE
14	729+98.70		BLUE PARKWAY LT	2 SIGNS, 2 POST & BASES
15	731+00.46	733+54.34	BLUE PARKWAY LT	921 SY PAVEMENT
15	731+06.65	740+87.53	BLUE PARKWAY RT	3999 SY PAVEMENT
15	731+13.06	731+94.90	BLUE PARKWAY RT	121' PIPE
15	731+80.98		BLUE PARKWAY LT	1 SIGN, 1 POST & BASE
15	731+94.90		BLUE PARKWAY LT	EXIST. INLET
15	731+94.90	732+74.92	BLUE PARKWAY LT	78' PIPE
15	732+06.89	734+26.55	BLUE PARKWAY RT	303 SY PAVEMENT INCLUDING CURB
15	732+21.45	732+57.86	BLUE PARKWAY LT	39 SY PAVEMENT INCLUDING CURB
15	732+74.92		BLUE PARKWAY LT	EXIST. INLET
15	732+74.92	733+56.50	BLUE PARKWAY	98' PIPE WITH FLARED END SECTION
15	733+44.20	733+54.34	BLUE PARKWAY LT	96' SAWCUT
15	733+77.51		BLUE PARKWAY LT	1 SIGN, 1 POST & BASE
15	734+25.52	737+26.81	BLUE PARKWAY	4346 SY PAVEMENT INCLUDING CURB
15	734+28.71	734+43.59	BLUE PARKWAY LT	27' PIPE
15	734+35.57		BLUE PARKWAY RT	1 SIGN, 1 POST & BASE
15	735+30.19		BLUE PARKWAY RT	1 SIGN, 1 POST & BASE
15	736+61.88	737+12.75	BLUE PARKWAY RT	60' PIPE
15	737+08.17	737+51.96	BLUE PARKWAY LT	39' SAWCUT
15	737+23.61	737+63.62	BLUE PARKWAY LT	41' PIPE
15	737+26.81	737+73.22	BLUE PARKWAY LT	270 SY PAVEMENT INCLUDING CURB
15	737+52.53		BLUE PARKWAY RT	1 SIGN, 1 POST & BASE
16	6+45.15		7TH TERRACE LT	EXIST. INLET
16	6+45.15	6+83.73	7TH TERRACE LT	55' PIPE
16	6+45.33	9+66.52	7TH TERRACE	888 SY PAVEMENT INCLUDING CURBS
16	6+85.79	7+23.82	7TH TERRACE	41' PIPE
16	7+06.08	7+85.61	7TH TERRACE LT	107' SAWCUT
16	7+14.04	7+88.85	7TH TERRACE RT	133 SY PAVEMENT INCLUDING CURBS
16	8+29.31	9+66.52	7TH TERRACE	151' SAWCUT
16	9+66.52		7TH TERRACE	14' SAWCUT
16	7+21.86	7+59.48	7TH TERRACE LT	87' CURB
16	7+24.06	7+61.04	7TH TERRACE LT	28 SY SIDEWALK
16	7+59.48	7+79.44	7TH TERRACE LT	62 SY PAVEMENT
16	7+61.07	7+83.99	7TH TERRACE LT	28' SAWCUT
16	7+36.33	7+56.55	7TH TERRACE LT	24 SY SIDEWALK
16	7+80.76	8+40.55	7TH TERRACE LT	28 SY SIDEWALK
16	7+83.29		7TH TERRACE LT	PULLBOX
16	8+40.55	8+64.55	7TH TERRACE LT	25' SAWCUT
16	8+35.97	8+74.02	7TH TERRACE LT	32 SY PAVEMENT
16	8+64.55	9+27.84	7TH TERRACE LT	27 SY SIDEWALK
16	9+22.04	9+52.92	7TH TERRACE LT	34 SY PAVEMENT
16	9+27.95	9+53.95	7TH TERRACE LT	27' SAWCUT
16	9+52.81	9+60.41	7TH TERRACE LT	3 SY SIDEWALK
16	9+60.41		7TH TERRACE LT	4' SAWCUT
16	4+32.45		7TH CONN LT	4' SAWCUT
16	4+32.45	4+42.76	7TH CONN LT	6 SY SIDEWALK
16	3+98.01		7TH CONN	28' SAWCUT
16	4+41.03	4+67.45	7TH CONN LT	76 SY PAVEMENT
1 LUMP SUM				

LINEAR GRADING

SHEET NO.	STA.	STA.	LOCATION	LINEAR GRADING CLASS 2 (STA)	REMARKS
	739+32.28	740+09.91	BLUE PARKWAY LT	3.9	TEMPORARY ACCESS ROAD
			TOTAL	3.9	
USE MoDOT SPEC					

CONTRACTOR FURNISHED SURVEYING & STAKING
1 LUMP SUM

MOBILIZATION
1 LUMP SUM

ADDITIONAL MOBILIZATION FOR SEEDING
6 EACH

EARTHWORK

STA	STA	LOCATION	SPEC	PHASE	CLASS A EXCAVATION (CY)	COMPACTING EMBANKMENT (CY)	CLASS 1 EXCAVATION (CY)	REMARKS
713+06.25	718+79.00	ROUTE 50 LT	MO	PHASE 1D	669	13		
713+72.69	721+42.79	ROUTE 50 RT	MO	PHASE 1D	273	4		
739+20.37	747+00.00	ROUTE 50 LT	MO	PHASE 1D	1633	781		
739+68.78	743+27.83	ROUTE 50 RT	MO	PHASE 1D	86	202		133 CY OBTAINED FROM EXCESS MATERIAL
0+00.00	8+87.73	RAMP 1 LT	MO	PHASE 1D	1853	0		
0+00.00	4+31.38	RAMP 2 RT	MO	PHASE 1D	252	21		
6+82.48	10+37.24	RAMP 2 RT	MO	PHASE 1D	138	18		
0+00.00	10+87.11	RAMP 3 LT	MO	PHASE 1D	3332	493		
7+65.24	11+29.49	RAMP 4 RT	MO	PHASE 1D	71	178		121 CY OBTAINED FROM EXCESS MATERIAL
711+85.20	720+02.49	BLUE PARKWAY RT	MO	PHASE 1A	541	3		
738+47.46	741+81.21	BLUE PARKWAY RT	MO	PHASE 1A	148	76		
709+84.64	712+17.73	OLDHAM PARKWAY	MO	PHASE 4	66	66		
716+70.00	746+88.50	ROUTE 50	MO		29775	393		
727+00.99	729+73.06	ROUTE 50 LT	MO				13548	WALL A9329
727+01.14	729+73.06	ROUTE 50 RT	MO				13416	WALL A9330
0+00.00	9+00.00	RAMP 1	MO		11015	997		
0+00.00	10+14.08	RAMP 2	MO		10394	1426		
0+42.55	10+87.11	RAMP 3	MO		12287	1699		
0+27.68	11+29.49	RAMP 4	MO		11272	1206		
166+72.50	179+99.50	ROUTE 291	MO		920	5771		5035 CY OBTAINED FROM EXCESS MATERIAL
181+31.90	187+21.65	ROUTE 291	MO		685	2726		2178 CY OBTAINED FROM EXCESS MATERIAL
170+28.50	172+20.50	ROUTE 291 RT	MO				766	WALL KC-0123
709+10.00	729+44.09	BLUE PARKWAY	MO		25415	289		
709+10.00	729+44.09	BLUE PARKWAY	MO					
731+04.61	740+87.43	BLUE PARKWAY	MO		1531	5242		4017 CY OBTAINED FROM EXCESS MATERIAL
734+17.49	735+10.30	BLUE PARKWAY LT	MO				1206	WALL KC-0124
725+02.00	728+20.16	OLDHAM PARKWAY	MO		563	628		178 CY OBTAINED FROM EXCESS MATERIAL
10+22.62	12+09.17	SCHOOL DRIVE	MO		2269	1		
5+22.78	9+72.56	7TH TERRACE	MO		510	319		
3+98.00	4+89.00	7TH CONNECTION	MO		111	54		
716+70.00	746+88.50	ROUTE 50	MO		8373			TEMPORARY PAVEMENT REMOVAL
		TOTAL			124182	22606	28936	

ROCK LINING

SHEET	STA.	STA.	LOCATION	LENGTH (FT)	WIDTH (FT)	DEPTH (FT)	ROCK LINING (CY)	REMARKS
5	726+97.99	727+00.99	ROUTE 50 LT	6.8	3	1	0.7	
5	726+98.14	727+01.14	ROUTE 50 RT	6.8	3	1	0.7	
5	729+73.06	729+76.06	ROUTE 50 LT	6.8	3	1	0.7	
5	729+73.06	729+76.06	ROUTE 50 RT	6.8	3	1	0.7	
5	729+89.60	730+02.25	ROUTE 50 LT	12	4	1	2.0	INCLUDES TOEWALL
5	729+89.39	730+02.46	ROUTE 50 RT	13.7	4	1	2.0	INCLUDES TOEWALL
6	741+01.45	741+22.71	ROUTE 50 LT	21.5	9	1.5	9.0	INCLUDES TOEWALL
10	167+79.87	167+88.49	ROUTE 291 RT	14	6	1	2.0	INCLUDES TOEWALL
4	3+89.29	3+95.39	RAMP 1 LT	14	6	1	3.0	
5	7+22.91	7+28.45	RAMP 1 RT	40	6	1	9.0	INCLUDES TOEWALL
4	5+48.52	5+59.33	RAMP 2 RT	15.4	6	1	3.0	INCLUDES TOEWALL
5	1+72.11	1+86.91	RAMP 3 LT	15.2	4	1	2.0	INCLUDES TOEWALL
5	6+97.57	7+17.42	RAMP 3 LT	18	9.2	1	9.0	INCLUDES TOEWALL
5	8+42.28	8+46.48	RAMP 4 RT	12	4	1	2.0	INCLUDES TOEWALL
14	723+50.69	723+59.64	BLUE PARKWAY RT	16	7	1	4.0	INCLUDES TOEWALL
15	734+72.40	734+77.60	BLUE PARKWAY LT	14	6	1	3.0	INCLUDES TOEWALL
15	738+93.50	739+06.09	BLUE PARKWAY LT	12	4	1	2.0	INCLUDES TOEWALL
15	739+31.11	739+45.70	BLUE PARKWAY RT	14	6	1	3.0	INCLUDES TOEWALL
						TOTALS	57.8	
USE MoDOT SPEC								

PAVED DITCH

SHEET NO.	STA.	STA.	LOCATION	VERTICAL HEIGHT (FT.)	DITCH WIDTH (FT.)	FORESLOPE X : 1	BACKSLOPE X : 1	PAVED DITCH (SY)
4	727+01.00	729+73.06	ROUTE 50 LT	1	4	VARIES	3	405.6
4	727+01.00	729+73.06	ROUTE 50 RT	1	4	VARIES	3	405.5
TOTALS								811.1
SEE STANDARD PLAN 609.15 FOR DETAILS								
USE MoDOT SPEC								

SUMMARY OF QUANTITIES

Reid Catt
2025.04.08 19:11:33-05'00'
REID BRENNEN CATT-ENGINEER
MO# PE-2010019516
DATE PREPARED 4/8/2025
ROUTE 50/291 STATE MO
DISTRICT KC SHEET NO. 3
COUNTY JACKSON
JOB NO. J4P3196
FEDERAL PROJECT NO. STB-3001(009)
PROJECT NO.
BRIDGE NO.
DESCRIPTION
DATE
MISSOURI HIGHWAYS AND TRANSPORTATION COMMISSION
105 WEST CAPITOL
JEFFERSON CITY, MO 65102
1-888-ASK-MODOT (1-888-275-6636)
LEE'S SUMMIT MISSOURI
olsson
1301 BURLINGTON ST., STE. 100
NORTH KANSAS CITY, MO 64116
PHONE: 816.361.1177
CERT. OF AUTHORITY NO. 001592

IF A SEAL IS PRESENT ON THIS SHEET IT HAS BEEN ELECTRONICALLY SEALED AND DATED.

CONCRETE SIDEWALK & TRAIL

SHEET	STA.	STA.	LOCATION	SPEC	SIDEWALK		TRAIL		CURB RAMPS		4" TYPE 1 AGGREGATE BASE (SY)	TRUNCATED DOMES (SF)	REMARKS
					MODOT 4" (SY)	LS 4" (SY)	MODOT 6" (SY)	LS 6" (SY)	MODOT 8" (SY)	LS 8" (SY)			
10	173+77.91	173+95.24	ROUTE 291 RT	MO					14.5		14.5		
10	173+78.	173+91.6	ROUTE 291 LT	MO					18.9		18.9		
10	173+82.08	173+88.33	ROUTE 291 RT	MO								12	
10	173+83.88	173+91.41	ROUTE 291 LT	MO								20.6	
10	173+93.91	174+00.16	ROUTE 291 RT	MO								12	MEDIAN
10	174+04.77	174+11.41	ROUTE 291 RT	MO								12.3	MEDIAN
10	174+04.77	174+10.76	ROUTE 291 RT	MO								12	MEDIAN
10	174+04.77	174+10.76	ROUTE 291 RT	MO								12	MEDIAN
10	174+11.65	174+16.91	ROUTE 291 LT	MO								20	MEDIAN
10	174+15.77	174+22.43	ROUTE 291 LT	MO								12.4	MEDIAN
10	174+23.83	174+25.83	ROUTE 291 RT	MO								12	MEDIAN
10	174+24.7	174+26.7	ROUTE 291 LT	MO								20	MEDIAN
10	174+75.74	174+77.73	ROUTE 291 RT	MO								12	MEDIAN
10	174+76.76	174+78.77	ROUTE 291 LT	MO								20	MEDIAN
10	174+95.55	174+99.33	ROUTE 291 RT	MO								12	MEDIAN
10	175+03.73	175+14.69	ROUTE 291 LT	MO								20.6	MEDIAN
10	175+08.55	175+39.44	ROUTE 291 LT	MO					35.5		35.5		
10	175+15.13	175+25.4	ROUTE 291 LT	MO								20.2	
10	175+17.17	175+29.3	ROUTE 291 RT	MO					15.3		15.3		
10	175+17.32	175+21.1	ROUTE 291 RT	MO								12	
10-11	175+39.3	177+74.11	ROUTE 291 LT	MO			265				265		
11	177+73.43	178+06.16	ROUTE 291 LT	MO					28.3		28.3		
11	177+82.34	178+05.4	ROUTE 291 LT	MO								41	
11	178+71.06	178+82.12	ROUTE 291 LT	MO								25	MEDIAN
11	179+05.02	179+07.02	ROUTE 291 LT	MO								20	MEDIAN
11	179+38.85	179+62.87	ROUTE 291 LT	MO					22.8		22.8		
11	179+38.85	179+57.56	ROUTE 291 LT	MO								35.4	
11	179+62.87	179+79.4	ROUTE 291 LT	MO			18.4				18.4		
11	181+51.9	181+83.94	ROUTE 291 LT	MO			34				34		
11	181+78.39	182+00.36	ROUTE 291 LT	MO					24.3		24.3		
11	181+92.64	182+00.11	ROUTE 291 LT	MO								20.3	
11	182+22.57	182+24.11	ROUTE 291 LT	MO								22.1	MEDIAN
11	182+50.07	182+65.04	ROUTE 291 LT	MO								30.1	MEDIAN
11	182+62.37	182+87.42	ROUTE 291 LT	MO					30.7		30.7		
11	182+62.8	182+72.31	ROUTE 291 LT	MO								20.4	
11	182+84.2	184+61.3	ROUTE 291 LT	MO			191.5				191.5		
11	184+93.7	185+83.92	ROUTE 291 LT	MO			96.8				96.8		
11	185+83.92	475+19.25	ROUTE 291 LT	LS				157.4			157.4		
11	475+19.29	475+40.84	ROUTE 291 LT	LS					32.2		32.2		
11	475+29.43	475+39.35	ROUTE 291 LT	LS								25	
11	475+34.91	475+42.01	ROUTE 291 LT	LS	7.1						7.1		
11	475+99.45	476+12.38	ROUTE 291 LT	LS					13.3		13.3		
			SUBTOTAL 1		7.1	0	605.7	157.4	235.8	0	1006.0	481.4	

CONCRETE APPROACH PAVEMENT

SHEET	STA.	STA.	LOCATION	CONCRETE APPROACH PAVEMENT (SY)
11	179+64.4	179+79.4	RTE 291	172.5
11	181+51.9	181+66.9	RTE 291	172.6
			TOTAL	345.1
USE MoDOT SPEC				

CONCRETE SLOPE PROTECTION

SHEET	STA.	STA.	LOCATION	SLOPE PROTECTION (SY)
11	179+79.4	180+04.23	RTE 291	52.2
11	181+27.06	181+51.9	RTE 291	52.2
			TOTAL	104.4
USE MoDOT SPEC				

COLDMILLING

SHEET	STA	STA	LOCATION	< 3" COLDMILLING BIT. PAVEMENT (SY)
10	166+72.50	175+00.00	ROUTE 291	5386.7
11	185+83.93	475+17.90	ROUTE 291	963.9
13	708+67.00	715+50.00	BLUE PARKWAY	2357.1
			TOTAL	8707.7
USE MoDOT SPEC				

ASPHALT PAVEMENT

SHEET	STA	STA	LOCATION	TACK COAT (GAL)	ASPHALTIC CONCRETE MIXTURE PG 64-22 (SP125C MIX) (TON)	PLANT MIX BITUMIMOUS PAVEMENT (BP-1) (TON)	PLANT MIX BITUMINOUS PAVEMENT (BASE) (TON)	REMARKS
15	740+97.20	741+11.48	ROUTE 50 LT	6.2		6.8	25.2	PARKING LOT REPAIR
15	741+14.69	741+44.35	ROUTE 50 LT	1.4		1.6	5.8	PARKING LOT REPAIR
10	166+72.50	173+72.50	ROUTE 291	456.2	488.2			
10	173+78.50	175+00.00	ROUTE 291	82.5	88.2			
10	173+50.00	175+00.00	ROUTE 291		500.5			WEDGING
11	185+83.93	475+17.90	ROUTE 291	96.4	103.2			
10	170+10.48	172+13.00	ROUTE 291 RT	6.6		7.2	26.9	PARKING LOT REPAIR
13	708+67.00	715+50.00	BLUE PARKWAY	235.7	252.2			
13	709+14.7	709+61.56	BLUE PARKWAY LT	2.1		2.3	8.6	STREET REPAIR
13	711+06.29	711+10.54	BLUE PARKWAY	1.2		1.3	4.8	STREET REPAIR
13	711+25.73	711+30.98	BLUE PARKWAY	1.5		1.6	5.9	STREET REPAIR
13	711+68.42	711+72.42	BLUE PARKWAY LT	4.4		4.8	17.8	PARKING LOT REPAIR
15	733+44.20	733+54.34	BLUE PARKWAY LT	2.4		2.6	9.6	PARKING LOT REPAIR
			TOTAL	897	1432.3	28.2	104.6	
USE MoDOT SPEC								

SUMMARY OF QUANTITIES

Reid Catt
2025.03.01 21:22:29-06'00'

REID BRENNEN CATT-ENGINEER
MO# PE-2010019516

DATE PREPARED
2/28/2025

ROUTE 50/291 | STATE MO
DISTRICT KC | SHEET NO. 3
COUNTY JACKSON
JOB NO. J4P3196
FEDERAL PROJECT NO. STB-3001(009)
PROJECT NO.
BRIDGE NO.

DESCRIPTION | DATE

MISSOURI HIGHWAYS AND TRANSPORTATION COMMISSION
105 WEST CAPITOL
JEFFERSON CITY, MO 65102
1-888-ASK-MODOT (1-888-275-6636)

LEE'S SUMMIT MISSOURI

olsson
1301 BURLINGTON ST., STE. 100
NORTH KANSAS CITY, MO 64116
PHONE: 816.361.1177
CERT. OF AUTHORITY NO. 001592

IF A SEAL IS PRESENT ON THIS SHEET IT HAS BEEN ELECTRONICALLY SEALED AND DATED.

CONCRETE SIDEWALK & TRAIL

SHEET	STA.	STA.	LOCATION	SPEC	SIDEWALK		TRAIL		CURB RAMPS		4" TYPE 1 AGGREGATE BASE	TRUNCATED DOMES	REMARKS
					MODOT 4" (SY)	LS 4" (SY)	MODOT 6" (SY)	LS 6" (SY)	MODOT 8" (SY)	LS 8" (SY)	(SY)	(SF)	
11	476+03.7	476+05.7	ROUTE 291 LT	LS								19.9	
11	476+11.8	476+17.6	ROUTE 291 LT	LS				5.8			5.8		
11	476+17.04	476+23.47	ROUTE 291 LT	LS		36.4					36.4		
13	710+99.88	713+19.91	BLUE PARKWAY LT	LS		121.1					121.1		
13	713+19.91	713+37.9	BLUE PARKWAY LT	LS						10.3	10.3		
13	713+29.41	713+37.56	BLUE PARKWAY LT	LS								14.4	
13	713+73.75	713+99.73	BLUE PARKWAY LT	LS						15.7	15.7		
13	713+74.08	713+82.24	BLUE PARKWAY LT	LS								14.4	
13	713+99.73	715+51.28	BLUE PARKWAY LT	LS		84.5					84.5		
13	715+49.94	715+66.75	BLUE PARKWAY LT	LS						10.8	10.8		
13	715+63.88	715+66.73	BLUE PARKWAY LT	LS								10.2	
13	715+96.76	716+16.95	BLUE PARKWAY LT	LS		11.1					11.1		
13	715+98.76	716+00.98	BLUE PARKWAY LT	LS								10	
13	716+12.71	716+14.93	BLUE PARKWAY LT	LS								10	
13	716+51.28	716+74.52	BLUE PARKWAY LT	LS						13.7	13.7		
13	716+51.62	716+59.92	BLUE PARKWAY LT	LS								14.4	
13-14	716+74.52	726+45.12	BLUE PARKWAY LT	LS		527.5					527.5		
14	724+28.08	729+52.94	BLUE PARKWAY RT	LS		270.9					270.9		
14	726+48.94	726+50.67	BLUE PARKWAY LT	LS								10	
14	726+82.94	726+86.52	BLUE PARKWAY LT	LS								10.6	
14	726+93.47	729+61.08	BLUE PARKWAY LT	LS		167.7					167.7		
15	731+44.68	735+18.97	BLUE PARKWAY LT	LS		282.8					282.8		
15	731+60.85	732+18.1	BLUE PARKWAY RT	LS		31.3					31.3		
16	6+47.8	6+65.65	7TH TERRACE LT	LS						10.3	10.3		
16	6+58.80	6+60.8	7TH TERRACE LT	LS								10	
16	6+97.35	7+13.51	7TH TERRACE LT	LS						10.3	10.3		
16	7+01.57	7+03.41	7TH TERRACE LT	LS								10	
16	7+13.51	7+56.78	7TH TERRACE LT	LS		26					26		
16	7+81.74	8+40.55	7TH TERRACE LT	LS		35.1					35.1		
16	8+64.55	9+27.95	7TH TERRACE LT	LS		27.9					27.9		
16	9+53.95	9+60.41	7TH TERRACE LT	LS		2.9					2.9		
16	4+32.45	4+42.76	7TH CONN LT	LS		6.4					6.4		
16	4+62.34	4+87.71	7TH CONN LT	LS		26.6					26.6		
17	10+51.66	10+72.72	SCHOOL DR LT	LS						16.6	16.6		
17	10+52.98	10+65.22	SCHOOL DR RT	LS						11.1	11.1		
17	10+72.72	12+09.17	SCHOOL DR LT	LS		81.1					81.1		
SUBTOTAL 2					0	1739.3	0	5.8	0	98.8	1843.9	133.9	
SUBTOTAL 1					7.1	0	605.7	157.4	235.8	235.8	1006.0	481.4	
TOTAL					7.1	1739.3	605.7	163.2	235.8	334.6	2850	615.3	

ALTERNATE PAVEMENT

SHEET	STA.	STA.	LOCATION	SPEC	A OR B ROUTE 50 (SY)	C OR D ROUTE 291 & (SY)	C OR D RAMPS 1 & 2 (SY)	E OR F RAMPS 3 & 4 (SY)	G* OR H* BLUE PARKWAY (SY)	I OR J A2 SHOULDER (SY)	6" TYPE 5 AGGREGATE (SY)	RIGID GEOGRID (SY)	SEPARATION GEOTEXTILE (SY)
4	713+57.24	717+11.	OLDHAM PKWY LT	MO		316.6					317		
4-6	716+70.	740+02.5	ROUTE 50	MO	26031.0						26031	26031	26031
6	740+02.5	745+20.37	ROUTE 50 LT	MO	994.3						994	994	994
6	740+02.5	746+88.7	ROUTE 50 RT	MO	1375.6						1376	1376	1376
4-5	0+00.00	7+68.93	RAMP 1 LT	MO						512.7	513		
4-5	3+02.13	9+10.27	RAMP 1	MO			2610				2610		
4-5	0+00.00	9+85.20	RAMP 2 RT	MO						648.8	649		
4-5	4+33.03	10+23.33	RAMP 2	MO			2680.1				2680		
5-6	0+31.34	7+71.19	RAMP 3	MO				4724.1			4724		
5-6	1+72.25	10+87.11	RAMP 3 LT	MO						608.4	608		
5-6	0+31.33	8+68.29	RAMP 4	MO				2402.1			2402		
5-6	1+73.77	11+29.47	RAMP 4 RT	MO						636.9	637		
10	166+72.5	173+63.84	ROUTE 291 LT	MO		484.2					484		
10	166+72.5	175+00.05	ROUTE 291 RT	MO		2162.1					2162		
10-11	175+00.05	179+64.4	ROUTE 291	MO		5194.4					5194		
10-11	175+61.03	177+87.74	ROUTE 291 RT	MO						151.6	152		
11	181+66.9	185+83.93	ROUTE 291	MO		4271.6					4272		
11	185+83.93	186+89.02	ROUTE 291 LT	MO		61.9					62		
11	185+83.93	475+50.1	ROUTE 291 RT	MO		109.5					110		
19	725+01.88	728+21.09	OLDHAM PARKWAY	MO		2325.3					2325		
13-14	708+67.	730+13.93	BLUE PARKWAY	LS					9837.7			9838	9838
15	731+05.59	740+87.4	BLUE PARKWAY	LS					6214.5			6215	6215
16	5+23.58	9+66.52	7TH TERRACE	LS					1070.1			1070	1070
16	3+98.01	4+88.	7TH CONNECTION	LS					269			269	269
17	10+23.62	12+09.17	SCHOOL DRIVE	LS					696			696	696
TOTAL					28400.9	14925.6	5290.1	7126.2	18087.3	2558.4	58302	46489	46489

*AGGREGATE BASE IS INCLUDED IN THE ALTERNATE PAVEMENT PAY ITEMS FOR BLUE PARKWAY ALTERNATE PAVEMENTS G & H

COMPACTING IN CUT

SHEET NO.	STA.	STA.	SPEC	LOCATION	COMPACTING IN CUT (STA)
4-6	716+70.	746+88.77	MO	ROUTE 50	30.2
10	169+45.74	175+00.	MO	ROUTE 291	5.5
11	184+25.	187+21.38	MO	ROUTE 291	3
4-5	0+00.00	9+16.62	MO	RAMP 1	9.2
4-5	0+00.00	10+23.25	MO	RAMP 2	10.2
5-6	0+31.33	10+87.11	MO	RAMP 3	10.6
5-6	0+31.33	11+29.48	MO	RAMP 4	11
13-14	709+99.91	730+10.42	MO	BLUE PARKWAY	20.1
15	731+03.58	739+59.28	MO	BLUE PARKWAY	8.6
17	10+20.07	12+09.17	MO	SCHOOL DR	1.9
16	5+22.78	9+66.52	MO	7TH TERRACE	4.4
16	3+98.01	4+90.75	MO	7TH CONN	0.9
18	713+57.24	717+10.99	MO	OLDHAM PARKWAY	3.5
19	725+01.88	728+20.71	MO	OLDHAM PARKWAY	3.2
				TOTAL	35.7

MODIFIED TYPE S CURB

SHEET	STA.	STA.	LOCATION	CURB (LF)
12	185+65.25	475+19.21	RTE 291 LT	160
			TOTAL	160

PIPE AGGREGATE PAVEMENT CROSS DRAIN

SHEET	STA	LOCATION	CROSS DRAIN (LF)
5	726+99.50	ROUTE 50	101
5	729+74.56	ROUTE 50	101
5	734+50.00	ROUTE 50	122
		TOTAL	324

SUMMARY OF QUANTITIES
SHEET 5 OF 18

Reid Catt
2025.03.31 11:18:08-05'00'

REID BRENNEN CATT-ENGINEER
MO# PE-2010019516

DATE PREPARED
3/24/2025

ROUTE 50/291 | STATE MO
DISTRICT KC | SHEET NO. 3
COUNTY JACKSON
JOB NO. J4P3196
FEDERAL PROJECT NO. STB-3001(009)
PROJECT NO.
BRIDGE NO.

DESCRIPTION | DATE

IF A SEAL IS PRESENT ON THIS SHEET IT HAS BEEN ELECTRONICALLY SEALED AND DATED.

MISSOURI HIGHWAYS AND TRANSPORTATION COMMISSION
105 WEST CAPITOL
JEFFERSON CITY, MO 65102
1-888-ASK-MODOT (1-888-275-6636)

LEE'S SUMMIT MISSOURI

olsson
1301 BURLINGTON ST., STE. 100
NORTH KANSAS CITY, MO 64116
PHONE: 816.361.1177
CERT. OF AUTHORITY NO. 001592

CURB AND GUTTER

SHEET	STA.	STA.	LOCATION	SPEC	TYPE B C & G (LF)	LEE'S SUMMIT TYPE CG-1 C & G* (LF)	MODIFIED TYPE B GUTTER (LF)	TYPE A GUTTER (LF)	6" TYPE 5 AGGREGATE (SY)
5	727+00.99	729+73.06	ROUTE 50 LT	MO			272.1		
5	727+01.14	729+73.06	ROUTE 50 RT	MO			271.9		
10	167+84.38	173+82.95	ROUTE 291 RT	MO	606.1				202.0
10-11	175+24.87	177+86.06	ROUTE 291 LT	MO	264.7				88.2
11	182+71.69	184+38.12	ROUTE 291 LT	LS		167.6			37.2
11	185+16.28	186+89.09	ROUTE 291 LT	LS		173.8			38.6
11	475+18.24	475+50.32	ROUTE 291 RT	LS		32.1			7.1
5	7+32.13	7+61.92	RAMP 1 RT	MO				41.1	
5	+59.51	1+46.86	RAMP 3 LT	MO	110.7				36.9
5	1+46.87	1+72.25	RAMP 3 LT	MO				27.6	
5	+68.26	2+43.01	RAMP 4 RT	MO	186.1				62.0
13	711+18.85	713+18.59	BLUE PARKWAY LT	LS		199.7			44.4
13	713+93.05	715+43.76	BLUE PARKWAY LT	LS		150.7			33.5
13	716+70.9	726+18.22	BLUE PARKWAY LT	LS		923.5			205.2
13-14	717+00.	723+80.07	BLUE PARKWAY RT	LS		696.6			154.8
14	724+46.45	729+67.71	BLUE PARKWAY RT	LS		492.2			109.4
14	726+84.83	729+70.66	BLUE PARKWAY LT	LS		331.7			73.7
15	731+32.86	734+89.82	BLUE PARKWAY LT	LS		386.0			85.8
15	731+50.28	732+52.28	BLUE PARKWAY RT	LS		106.7			23.7
15	733+36.81	733+88.79	BLUE PARKWAY LT	LS		74.0			16.4
15	733+46.95	736+95.96	BLUE PARKWAY RT	LS		338.4			75.2
15	735+89.32	736+87.72	BLUE PARKWAY LT	LS		98.4			21.9
15	737+68.12	738+92.08	BLUE PARKWAY RT	LS		131.1			29.1
15	737+71.24	738+68.55	BLUE PARKWAY LT	LS		91.7			20.4
15	738+68.55	738+91.92	BLUE PARKWAY LT	LS				25.8	
17	10+22.08	12+09.17	SCHOOL DR LT	LS		210.9			46.9
17	10+36.86	12+09.17	SCHOOL DR RT	LS		183.2			40.7
16	5+24.78	7+26.34	7TH TERRACE RT	LS		218.6			48.6
16	5+25.22	6+46.48	7TH TERRACE LT	LS		140.7			31.3
16	7+14.25	7+48.48	7TH TERRACE LT	LS		36.5			8.1
16	7+34.03	7+60.53	7TH TERRACE LT	LS		35.5			7.9
16	7+88.31	8+29.31	7TH TERRACE RT	LS		38.3			8.5
16	7+88.75	8+30.55	7TH TERRACE LT	LS		44.4			9.9
16	8+74.55	9+17.95	7TH TERRACE LT	LS		43.4			9.6
16	9+52.95	9+66.52	7TH TERRACE LT	LS		13.6			3.0
16	9+64.04	10+26.52	7TH TERRACE RT	LS		62.5			13.9
16	3+98.01	4+88.76	7TH CONN RT	LS		81.9			18.2
16	3+98.01	4+36.	7TH CONN LT	LS		43.3			9.6
16	4+72.79	4+88.12	7TH CONN LT	LS		27.6			6.1
19	727+34.18	728+30.15	OLDHAM PARKWAY RT	MO		202.5			45.0
			TOTAL		1167.6	5777.1	544.0	94.5	1672.8

* SHALL BE CONSTRUCTED WITH KCMMB 4K CONCRETE

PERMANENT AGGREGATE EDGE TREATMENT

SHEET	STA.	STA.	LOCATION	WIDTH (FT)	DEPTH (IN)	QUANTITY (TON)	PRIME - LIQUID ASPHALT MC 800 (GAL)
4	716+70.	718+78.99	RTE 50 LT	5.5	16.5	41.20	31.9
4	716+70.	717+70.35	RTE 50 RT	5.5	16.5	19.8	15.3
5	721+83.	727+01.01	RTE 50 LT	5.5	16.5	166.8	79.1
5	722+05.7	727+01.03	RTE 50 RT	5.5	16.5	159.6	75.7
5	729+73.06	736+01.73	RTE 50 LT	5.5	16.5	202.6	96.1
5	729+73.06	737+05.93	RTE 50 RT	5.5	16.5	236	112
6	739+20.51	745+20.37	RTE 50 LT	5.5	16.5	118.2	91.7
6	739+68.78	746+88.77	RTE 50 RT	5.5	16.5	141.9	110
4-5	0+00.00	8+97.78	RAMP 1 LT	5	15	154.2	131.9
4-5	3+02.23	7+32.13	RAMP 1 RT	5	15	69.7	59.7
4-5	4+33.03	10+16.98	RAMP 2 LT	5	15	96.1	82.2
4-5	0+00.00	10+15.86	RAMP 2 RT	5	15	168.6	144.2
5-6	1+72.24	10+87.11	RAMP 3 LT	4.8	14.5	138	122.4
5-6	+49.29	7+70.44	RAMP 3 RT	4.8	14.5	107.5	95.3
5-6	+62.68	8+68.29	RAMP 4 LT	4.8	14.5	120.9	107.2
5-6	2+67.76	11+29.48	RAMP 4 RT	4.8	14.5	129.4	114.8
10	166+72.5	172+32.81	RTE 291 LT	5	15	91	77.9
10	172+69.73	173+87.61	RTE 291 LT	5	15	19.6	16.8
10	166+72.5	167+84.38	RTE 291 RT	5	15	18.2	15.5
10-11	175+17.71	178+00.14	RTE 291 RT	5	15	47.5	40.6
11	182+90.51	183+08.06	RTE 291 RT	5	15	2.8	2.4
19	713+57.24	717+10.99	OLDHAM PARKWAY LT	5	15	57.9	49.6
19	725+01.88	728+12.71	OLDHAM PARKWAY LT	5	15	58.1	49.7
19	725+01.88	726+56.81	OLDHAM PARKWAY RT	5	15	25.8	22.1
			TOTAL			2391.4	1744.1

USE MoDOT SPEC

MEDIANS

SHEET	STA.	STA.	LOCATION	SPEC	8" CONCRETE MEDIAN (SY)	TINTED STAMPED CONC. MEDIAN STRIP, 8" (SY)	REMARKS
10	169+73.44	173+89.18	ROUTE 291	MO	184.5		MEDIAN A
10	173+58.67	174+05.24	ROUTE 291 RT	MO	38		MEDIAN B
10	174+10.76	174+20.57	ROUTE 291 RT	MO	8.1		MEDIAN C
10	173+57.28	174+04.77	ROUTE 291 RT	MO	57.8		MEDIAN D
10	174+10.76	174+25.85	ROUTE 291 RT	MO	8.6		MEDIAN E
10	173+99.29	174+25.78	ROUTE 291 RT	MO	49.1		MEDIAN F
10	174+09.11	174+17.52	ROUTE 291 LT	MO	6.3		MEDIAN G
10	174+21.95	174+26.66	ROUTE 291 LT	MO	3		MEDIAN H
10	174+15.02	174+26.79	ROUTE 291 LT	MO	21.6		MEDIAN I
10	174+76.87	175+04.75	ROUTE 291 LT	MO	34.8		MEDIAN J
10-11	174+76.76	175+82.56	ROUTE 291 LT	MO	134.3		MEDIAN K
10	174+75.74	175+08.11	ROUTE 291 RT	MO	43.6		MEDIAN L
10	174+75.68	174+97.45	ROUTE 291 RT	MO	102		MEDIAN M
10-11	175+00.24	178+95.56	ROUTE 291	MO	692		MEDIAN N
11	178+48.80	178+90.89	ROUTE 291 RT	MO	65.6		MEDIAN O
11	178+65.68	179+07.02	ROUTE 291 LT	MO	29.5		MEDIAN P
11	178+79.7	179+06.88	ROUTE 291 LT	MO	57.2		MEDIAN Q
11	179+51.08	179+79.4	ROUTE 291 LT	MO	4.2		MEDIAN R
11	181+51.9	181+94.26	ROUTE 291 LT	MO	7.5		MEDIAN S
11	182+22.57	182+50.53	ROUTE 291 LT	MO	16.8		MEDIAN T
11	182+22.57	182+83.92	ROUTE 291 LT	MO	37.3		MEDIAN U
11	182+26.91	187+16.95	ROUTE 291	MO	496		MEDIAN V
11	182+26.01	182+41.05	ROUTE 291 RT.	MO	49.3		MEDIAN W
14	727+29.46	729+86.56	BLUE PARKWAY LT	LS		115.9	MEDIAN X
15	731+45.39	734+15.04	BLUE PARKWAY RT	LS		118.9	MEDIAN Y
19	727+22.39	728+21.41	OLDHAM PARKWAY	MO	160.2		MEDIAN Z
			TOTAL		2307.3	234.8	

GUARDRAIL

SHEET	STA.	STA.	LOCATION	MGS GUARDRAIL (LF)	MGS GUARDRAIL 8 FT. POST (LF)	MGS END ANCHOR (EA)	TYPE A CRASHWORTHY END TERMINAL (MASH) (EA)
4	710+04.21	718+98.78	OLDHAM PKWY LT	800.0			2
4	717+12.74	718+65.64	ROUTE 50 RT		87.5	1	1
5	724+64.41	730+03.81	ROUTE 50 RT		475.0	1	1
5	726+70.32	732+09.78	ROUTE 50 LT		475.0	1	1
5	2+36.51	3+41.65	RAMP 3 RT	37.5		1	1
			TOTAL	837.5	1037.5	4	6

USE MoDOT SPEC

OPTIONAL PAVEMENT

STA	STA	LOCATION	SPEC	TEMPORARY OPTIONAL PAVEMENT		4" TYPE 5 AGGREGATE BASE (SY)	REMARKS
				BLUE PARKWAY (SY)	ROUTE 50 & RAMPS (SY)		
713+06.25	727+58.58	ROUTE 50 LT	MO		2416.7	2417	PHASE 1D
713+72.69	721+99.48	ROUTE 50 RT	MO		1294.0	1294	PHASE 1D
728+77.24	729+03.48	ROUTE 50 LT	MO		46.7	47	PHASE 1D
729+00.80	749+17.48	ROUTE 50 LT	MO		4903.1	4903	PHASE 1D
736+06.03	743+27.87	ROUTE 50 RT	MO		1149.5	1150	PHASE 1D
6+82.48	10+42.23	RAMP 2 RT	MO		470.8	471	PHASE 1D
711+85.20	720+02.49	BLUE PARKWAY RT	MO	1002.6		1003	PHASE 1B
731+47.27	733+01.94	BLUE PARKWAY RT	MO	356.3		356	PHASE 1C
738+25.55	741+81.29	BLUE PARKWAY RT	MO	631.5		632	PHASE 1A
738+27.46	741+81.32	BLUE PARKWAY RT	MO	255.6		256	PHASE 1C
739+01.76	740+28.80	BLUE PARKWAY LT	MO	988.0		988	PHASE 1A
		TOTAL		3234.0	10280.8	13517	

SEE TYPICAL SECTION SHEET 18 OF 19 FOR TEMPORARY OPTIONAL PAVEMENT DESIGNS

SUMMARY OF QUANTITIES
SHEET 6 OF 18

Reid Catt
2025.04.08 19:11:23-05'00'

REID BRENNEN CATT-ENGINEER
MO# PE-2010019516

DATE PREPARED
4/8/2025

ROUTE 50/291 | STATE MO
DISTRICT KC | SHEET NO. 3
COUNTY JACKSON
JOB NO. J4P3196
FEDERAL PROJECT NO. STB-3001(009)
PROJECT NO.
BRIDGE NO.

IF A SEAL IS PRESENT ON THIS SHEET IT HAS BEEN ELECTRONICALLY SEALED AND DATED.

DESCRIPTION | DATE

MISSOURI HIGHWAYS AND TRANSPORTATION COMMISSION
105 WEST CAPITOL
JEFFERSON CITY, MO 65102
1-888-ASK-MODOT (1-888-275-6636)

LEE'S SUMMIT MISSOURI

olsson
1301 BURLINGTON ST., STE. 100
NORTH KANSAS CITY, MO 64116
PHONE: 816.361.1177
CERT. OF AUTHORITY NO. 001592

SEEDING AND MULCH

SHEET NO.	STA.	STA.	LOCATION	COOL SEESON GRASS SEEDING (AC)	TEMP. SEEDING (AC)	MULCHING (AC)	TURF TYPE TALL FESCUE SODDING (SY)
178	709+85.00	725+84.00	ROUTE 50 RT	0.2	0.1	0.3	
178	709+85.00	725+48.00	ROUTE 50 RT	0.5	0.1	0.6	
178	709+85.00	727+79.00	ROUTE 50 RT	0.6	0.2	0.8	
178	710+82.00	727+67.00	ROUTE 50 LT	1.5	0.4	1.9	
178	710+84.00	725+84.00	ROUTE 50 LT	0.3	0.1	0.4	
178	721+83.00	736+02.00	ROUTE 50 LT	0.1	0.0	0.1	
178	721+83.00	727+79.00	ROUTE 5O LT	0.5	0.1	0.6	
178	721+83.00	736+02.00	ROUTE 50 LT	0.4	0.1	0.5	
178	722+06.00	727+06.00	ROUTE 50 RT	0.1	0.0	0.1	
178	722+06.00	727+80.00	ROUTE 50 RT	0.4	0.1	0.5	
178	722+06.00	737+06.00	ROUTE 50 RT	0.4	0.1	0.5	
178	728+94.00	736+02.00	ROUTE 50 LT	0.7	0.2	0.9	
178	728+94.00	737+06.00	ROUTE 50 RT	0.7	0.2	0.9	
178	729+00.00	746+89.00	ROUTE 50 RT	1.2	0.3	1.5	
178	729+05.00	745+20.00	ROUTE 50 LT	1.7	0.4	2.1	
178	730+32.00	740+72.00	ROUTE 50 LT	0.5	0.1	0.6	
178	731+34.00	743+41.00	ROUTE 50 RT	0.2	0.1	0.3	
180	166+73.00	175+08.00	ROUTE 291 RT				4565
180	166+73.00	172+38.00	ROUTE 291 LT				1921.3
180	175+00.00	178+37.00	ROUTE 291 LT				251.9
180	175+25.00	177+86.00	ROUTE 291 LT				135.1
180	179+37.00	179+79.00	ROUTE 291 LT				23.2
180	181+52.00	182+02.00	ROUTE 291 LT				32.7
180	182+58.00	184+61.00	ROUTE 291 LT				403.5
180	182+72.00	184+53.00	ROUTE 291 LT				93.6
180	184+92.00	475+36.00	ROUTE 291 LT				191.2
180	185+02.00	475+32.00	ROUTE 291 LT				136.5
180	186+77.00	187+10.00	ROUTE 291 RT				21.4
180	475+38.00	475+42.00	ROUTE 291 LT				2.8
180	476+00.00	476+19.00	ROUTE 291 LT				74.1
180	476+05.00	476+29.00	ROUTE 291 LT				57.3
181	709+14.00	710+44.00	BLUE PARKWAY LT	0.2	0.1	0.3	
181	710+94.00	712+97.00	BLUE PARKWAY LT	0.1		0.1	
181	710+97.00	713+42.00	BLUE PARKWAY LT				147.3
181	711+05.00	713+32.00	BLUE PARKWAY LT				115.2
181	713+70.00	715+67.00	BLUE PARKWAY LT				213.4
181	713+79.00	715+66.00	BLUE PARKWAY LT				111.1
181	715+99.00	716+15.00	BLUE PARKWAY LT				64.5
181	716+47.00	721+21.00	BLUE PARKWAY LT				709.9
181	716+57.00	726+51.00	BLUEPARKWAY LT				524.5
181	721+47.00	726+57.00	BLUE PARKWAY LT				2116.3
181	724+24.00	729+81.00	BLUE PARKWAY RT				293.3
182	731+12.00	735+14.00	BLUE PARKWAY LT				1904.4
182	731+33.00	735+24.00	BLUE PARKWAY LT				284.3
182	731+50.00	732+76.00	BLUE PARKWAY RT				89
182	733+19.00	736+47.00	BLUE PARKWAY RT	0.1	0.0	0.1	
182	734+20.00	734+97.00	BLUE PARKWAY LT	0.1	0.0	0.1	
182	735+52.00	737+13.00	BLUE PARKWAY LT	0.1	0.0	0.1	
182	738+90.00	740+88.00	BLUE PARKWAY LT	0.1	0.0	0.1	
182	724+33.00	729+67.00	BLUE PARKWAY RT				259.9
182	726+85.00	729+70.00	BLUE PARKWAY LT				165.5
180	725+02.00	726+78.00	OLDHAM PARKWAY RT				413.9
180	727+12.00	728+30.00	OLDHAM PARKWAY RT				982.1
181	10+65.00	12+09.00	SCHOOL DRIVE LT				83.8
182	6+95.00	7+62.00	7TH TERRACE LT				221.4
182	7+74.00	8+29.00	7TH TERRACE RT				34.8
182	7+82.00	8+41.00	7TH TERRACE LT				72.6
182	8+64.00	9+28.00	7TH TERRACE LT				73.1
182	9+53.00	9+67.00	7TH TERRACE LT				15.9
182	3+98.00	4+43.00	7TH CONN LT				68.5
			TOTALS	10.7	2.7	13.4	16874.3

ENTRANCES

SHEET	STA.	LOCATION	SPEC	WIDTH (FT)	RADIUS (FT)	PAVED APPROACH MODOT 8" (SY)	PAVED APPROACH LS 8" (SY)	4" TYPE 1 AGGREGATE (SY)	REMARKS
11	184+77.16	RTE 291 LT	MO	24	25	432.6		432.6	
11	186+55.26	RTE 291 RT	LS	40	23		177.3	177.3	
13	710+68.85	BLUE PARKWAY LT	LS	50	25		246.5	246.5	
13	713+55.79	BLUE PARKWAY LT	LS	24	25		194.1	194.1	
13	716+06.91	BLUE PARKWAY LT	LS	76	25		509.1	509.1	
14	724+12.91	BLUE PARKWAY RT	LS	24	25		105.8	105.8	
14	726+61.86	BLUE PARKWAY RT	LS	24	25		138.5	138.5	
15	733+00.79	BLUE PARKWAY RT	LS	27	25		150.9	150.9	
15	737+32.03	BLUE PARKWAY RT	LS	30	25		127.3	127.3	
15	737+25.99	BLUE PARKWAY LT	LS	24	25		197.3	197.3	
16	7+58.27	7TH TERRACE RT	LS	24	25		80.7	80.7	
16	7+72.45	7TH TERRACE LT	LS	23	10		82.8	82.8	
16	8+52.55	7TH TERRACE LT	LS	24	10		31.4	31.4	
16	9+40.95	7TH TERRACE LT	LS	26	10		33.6	33.6	
16	4+53.68	7TH CONN LT	LS	24	10		134.8	134.8	
19	726+95.04	OLDHAM PARKWAY RT	MO	33	25	177.8		177.8	
				TOTAL		610.4	2210.1	2820.5	
				USE		610.4	2210.1	2821	

CONCRETE BARRIER

SHEET	STA.	STA.	LOCATION	TYPE C (LF)	TYPE H (LF)	PARAPET WALL (LF)
4-5	716+70.	728+93.06	ROUTE 50	1223.1		
5-6	727+81.06	738+52.5	ROUTE 50	1071.4		
6	738+47.5	740+02.5	ROUTE 50	155.0		
11	181+51.9	181+89.95	ROUTE 291 LT			43.9
5	7+61.92	9+09.16	RAMP 1 RT		165.1	
			TOTAL	2449.5	165.1	43.9
USE MoDOT SPEC						

FENCE

SHEET	STA.	STA.	LOCATION	48" DECORATIVE PEDESTRIAN FENCE (LF)
5	727+01.	727+78.87	ROUTE 50 LT	77.9
5	727+01.14	727+79.02	ROUTE 50 RT	77.9
5	728+95.1	729+73.06	ROUTE 50 LT	78.0
5	728+95.1	729+73.06	ROUTE 50 RT	78.0
10	170+35.	172+20.5	ROUTE 291 RT	185.5
11	179+57.87	179+79.4	ROUTE 291 LT	21.5
12	181+51.9	181+89.21	ROUTE 291 LT	44.0
15	734+17.49	735+10.3	BLUE PARKWAY LT	164.6
			TOTAL	727.4
USE MoDOT SPEC				

Reid Catt
2025.03.01 21:24:00-06'00'

REID BRENNEN CATT NUMBER PE-2010019516

REID BRENNEN CATT-ENGINEER
MO# PE-2010019516

DATE PREPARED
2/28/2025

ROUTE 50/291 | STATE MO
DISTRICT KC | SHEET NO. 3
COUNTY JACKSON
JOB NO. J4P3196
FEDERAL PROJECT NO. STB-3001(009)
PROJECT NO.
BRIDGE NO.

DESCRIPTION | DATE

IF A SEAL IS PRESENT ON THIS SHEET IT HAS BEEN ELECTRONICALLY SEALED AND DATED.

MISSOURI HIGHWAYS AND TRANSPORTATION COMMISSION
105 WEST CAPITOL
JEFFERSON CITY, MO 65102
1-888-ASK-MODOT (1-888-275-6636)

LEE'S SUMMIT MISSOURI

olsson
1301 BURLINGTON ST., STE. 100
NORTH KANSAS CITY, MO 64116
PHONE: 816.361.1177
CERT. OF AUTHORITY NO. 001592

SUMMARY OF QUANTITIES

PRECAST DROP INLET

PLAN SHEET NO.	CULVERT SECTION SHEET NO.	STRUC-TURE NO.	LOCATION	STATION	OFFSET	SPEC	TYPE S-1 DROP INLET (3'X3') (LF)	TYPE S-1 DROP INLET (5'X3') (LF)	TYPE S-2 DROP INLET (5'X3') (LF)	TYPE T DROP INLET (5'X3') (LF)	LEE'S SUMMIT CURB INLET (4'X4') (EACH)	LEE'S SUMMIT CURB INLET (6'X4') (EACH)	LEE'S SUMMIT CURB INLET (8'X4') (EACH)	LEE'S SUMMIT CURB INLET (8'X5') (EACH)	LEE'S SUMMIT FIELD INLET (5'X5') (EACH)	TRENCH DRAIN (2'X10') (EACH)	TRENCH DRAIN (2'X12') (EACH)	PRECAST MANHOLE 48" (LF)	PRECAST MANHOLE 72" (LF)	DRAIN BASIN (4'X2') (EACH)	PIPE OPENINGS (#-SIZE)	CL. 3 EXC. (CY)
5	257	726S1R	ROUTE 50 RT	726+47.00	68.54	MO			3.48												1-24"	13
5	259	726S2L	ROUTE 50 LT	726+47.00	57.92	MO			3.37												1-24"	12
5	259	727S2L	ROUTE 50 LT	726+97.99	47.67	MO			3.47												2-24"	13
5	257	726S2R	ROUTE 50 RT	726+98.12	58.21	MO			3.47												2-24"	13
5	258	729S2R	ROUTE 50 RT	729+73.06	58.03	MO			3.48												2-24"	13
5	259	729S2L	ROUTE 50 LT	729+73.06	47.88	MO			3.48												2-24"	13
5	258	731S2R	ROUTE 50 RT	731+48.50	68.35	MO			3.74												2-24"	13
5	260	731S2L	ROUTE 50 LT	731+48.50	58.15	MO			3.72												2-24"	13
5	258	734S1R	ROUTE 50 RT	734+48.50	68.35	MO		4.29													2-24"	15
5	260	734S1L	ROUTE 50 LT	734+48.50	58.15	MO		3.68													2-24"	13
5	259	735M1	ROUTE 50 RT	735+30.00	59.00	MO													4.70		1-24",1-36"	27
5	260	735M2	ROUTE 50 LT	735+30.00	56.00	MO													5.78		2-24",2-36"	31
5	261	736S1	ROUTE 50 RT	736+81.91	51.68	MO		3.35													1-18"	11
253	276	T466S1	RAMP 1 LT	4+66.57	23.52	MO	3.19														1-24"	9
10	263	167T1	ROUTE 291 RT	167+90.00	39.25	MO	v			5.64											2-18"	13
10	262	169T1	ROUTE 291 RT	169+25.00	39.76	MO				6.24											2-18"	15
10	262	170T1	ROUTE 291 RT	170+60.24	58.72	MO				5.65											2-18"	6
10	262	171T1	ROUTE 291 RT	171+55.00	67.04	MO				5.24											1-15",1-18"	4
10	262	172T1	ROUTE 291 RT	172+40.00	70.11	MO				4.91											2-15"	8
10	262	173T1	ROUTE 291 RT	173+00.00	71.41	MO				4.34											2-15"	10
10	262	173T2	ROUTE 291 RT	173+50.00	82.50	MO				4.31											1-15"	10
10	263	175T1	ROUTE 291 LT	175+85.75	55.83	MO				5.96											2-15"	13
10	263	176T1	ROUTE 291 LT	176+50.82	47.09	MO				5.67											2-15"	10
10	263	177T1	ROUTE 291 LT	177+05.00	43.26	MO				5.74											1-15"	4
11	271	179DB	ROUTE 291 LT	179+70.82	33.33	MO														1	1-15"	4
11	264	181S1	ROUTE 291 LT	181+60.35	50.56	MO	5.03														2-15"	8
11	264	181TD	ROUTE 291 LT	181+60.48	38.81	MO										1					1-15"	0
11	264	181DB1	ROUTE 291 LT	181+60.48	33.33	MO														1	1-12", 2-15"	9
11	264	181DB2	ROUTE 291 RT	181+60.48	60.67	MO														1	1-15"	4
11	264	184LS1	ROUTE 291 LT	184+00.00	50.44	MO					1										1-15"	11
11	264	185LS1	ROUTE 291 LT	185+29.82	48.59	MO						1									2-15"	18
13	266	709S1	BLUE PARKWAY LT	709+62.52	110.81	LS									1						2-30"	27
13	266	710M1	BLUE PARKWAY LT	710+24.53	52.66	LS													7.65		2-30"	38
13	266	711S1	BLUE PARKWAY RT	711+28.34	27.59	LS								1							1-15", 1-24", 1-30"	28
13	266	711S2	BLUE PARKWAY RT	711+28.36	22.61	LS			2.79												1-15"	14
13	265	714LS1	BLUE PARKWAY LT	714+10.00	27.59	LS							1								1-18", 1-24"	18
13	265	715LS1	BLUE PARKWAY LT	715+29.26	27.59	LS							1								1-18"	10
14	267	720LS1	BLUE PARKWAY LT	720+82.40	30.30	LS						1									1-15"	19
14	267	722LS1	BLUE PARKWAY LT	722+35.62	28.59	LS						1									2-15",1-24"	28
14	267	722LS2	BLUE PARKWAY RT	722+35.60	19.95	LS					1										2-24"	21
14	267	723LS1	BLUE PARKWAY RT	723+61.72	22.11	LS					1										2-24",1-30"	26
14	269	724LS2	BLUE PARKWAY RT	724+86.65	24.40	LS						1									1-15",1-18",1-24"	26
14	269	724LS1	BLUE PARKWAY LT	724+87.47	24.58	LS						1									1-15"	22
14	269	725LS2	BLUE PARKWAY RT	725+64.00	26.23	LS							1								2-18"	26
14	269	725LS1	BLUE PARKWAY LT	725+64.05	22.83	LS							1								1-18"	20
14	270	727LS2	BLUE PARKWAY RT	727+15.00	29.50	LS							1								1-15"	22
14	270	727LS1	BLUE PARKWAY LT	727+25.00	41.45	LS							1								1-15",1-18"	33
14	270	728LS1	BLUE PARKWAY LT	728+10.00	41.50	LS						1									2-18"	34
14	270	728LS2	BLUE PARKWAY LT	728+69.75	30.99	LS						1									2-18"	47
10	263	731T1	BLUE PARKWAY RT	731+64.17	42.17	LS				9.53											1-15",1-18"	20
15	277	731M1	BLUE PARKWAY LT	732+11.68	42.44	LS												8.96			2-18"	15
253A	277	T731M1	BLUE PARKWAY RT	731+84.98	9.87	LS												9.87			1-15", 2-18"	17
253A	277	T732TD	BLUE PARKWAY RT	732+47.32	31.69	LS											1				1-18"	16
15	272	733LS1	BLUE PARKWAY LT	733+01.16	41.50	LS						1									2-18"	5
15	272	734LS1	BLUE PARKWAY LT	734+75.69	27.50	LS						1									1-18", 2-24"	8
15	273	734LS2	BLUE PARKWAY RT	734+75.12	28.50	LS						1									1-18", 1-24"	2
15	273	736LS1	BLUE PARKWAY LT	736+50.00	25.26	LS						1									1-18"	12
15	273	736LS2	BLUE PARKWAY RT	736+50.00	25.28	LS						1									2-18"	20
15	274	737M1	BLUE PARKWAY RT	737+80.89	26.33	LS												6.11			1-18", 1-24"	20
16	274	4LS2	7TH CONN RT	4+54.86	15.69	LS					1										2-18"	17
16	274	4LS1	7TH CONN LT	4+56.32	35.52	LS					1										2-18"	16
16	274	7M1	7TH CONN LT	7+35.82	31.03	LS												5.19			3-18"	16
16	274	8LS1	7TH TERRACE LT	8+10.00	15.60	LS					1										2-18"	16
16	274	7LS1	7TH TERRACE RT	7+18.55	16.03	LS					1										1-18"	16
					SUBTOTALS		8.2	11.3	31.0	63.2	7	12	6	1	1	1	1	30.1	18.1	3		1031
					TOTALS		8	11	31	63	7	12	6	1	1	1	1	30	18	3		1031

SUMMARY OF QUANTITIES
SHEET 8 OF 18

Reid Catt
2025.03.01 21:24:08-06'00'

REID BRENNEN CATT-ENGINEER
MO# PE-2010019516

DATE PREPARED
2/28/2025

ROUTE 50/291 | STATE MO
DISTRICT KC | SHEET NO. 3
COUNTY JACKSON
JOB NO. J4P3196
FEDERAL PROJECT NO. STB-3001(009)
PROJECT NO.
BRIDGE NO.

DESCRIPTION | DATE

IF A SEAL IS PRESENT ON THIS SHEET IT HAS BEEN ELECTRONICALLY SEALED AND DATED.

MISSOURI HIGHWAYS AND TRANSPORTATION COMMISSION
105 WEST CAPITOL
JEFFERSON CITY, MO 65102
1-888-ASK-MODOT (1-888-275-6636)

LEE'S SUMMIT MISSOURI

olsson
1301 BURLINGTON ST., STE. 100
NORTH KANSAS CITY, MO 64116
PHONE: 816.361.1177
CERT. OF AUTHORITY NO. 001592

PIPE CULVERTS

PLAN SHEET NO.	CULVERT SECTION SHEET NO.	FROM STRUC-TURE NO.	STA.	LOCATION	TO STRUC-TURE NO.	STA.	LOCATION	SPEC	GROUP A PIPE 15 IN. (LF)	GROUP A PIPE 18 IN. (LF)	GROUP A PIPE 24 IN. (LF)	GROUP A PIPE 30 IN. (LF)	GROUP A PIPE 36 IN. (LF)	TYPE A PIPE COLLAR (EACH)	GROUP A F.E.S. 15 IN. (EACH)	GROUP A F.E.S. 18 IN. (EACH)	GROUP A F.E.S. 24 IN. (EACH)	GROUP A F.E.S. 30 IN. (EACH)	GROUP A F.E.S. 36 IN. (EACH)	CLASS 3 EXC. (CY.)	REMARKS
4	257	722F1	722+64.61	ROUTE 50 LT	723F1	723+12.40	ROUTE 50 RT	MO			234						2			305	
5	257	726S1R	726+47.00	ROUTE 50 RT	726S2R	726+98.12	ROUTE 50 RT	MO			49									33	
5	257	726S2R	726+98.12	ROUTE 50 RT	729S2R	729+73.06	ROUTE 50 RT	MO			272									194	
5	258	729S2R	729+73.06	ROUTE 50 RT	731S2R	731+48.50	ROUTE 50 RT	MO			173									133	
5	258	731S2R	731+48.50	ROUTE 50 RT	734S1R	734+48.50	ROUTE 50 RT	MO			297									250	
5	258	734S1R	734+48.50	ROUTE 50 RT	735M1	735+30.00	ROUTE 50 RT	MO			76									64	
5	259	726S2L	726+47.00	ROUTE 50 LT	727S2L	726+97.99	ROUTE 50 LT	MO			49									32	
5	259	727S2L	726+97.99	ROUTE 50 LT	729S2L	729+73.06	ROUTE 50 LT	MO			272									194	
5	259	729S2L	729+73.06	ROUTE 50 LT	731S2L	731+48.50	ROUTE 50 LT	MO			173									132	
5	260	731S2L	731+48.50	ROUTE 50 LT	734S1L	734+48.50	ROUTE 50 LT	MO			297									232	
5	260	734S1L	734+48.50	ROUTE 50 LT	735M2	735+30.00	ROUTE 50 LT	MO			76									64	
6	260	740F1	740+77.67	ROUTE 50 LT	740F2	740+95.95	ROUTE 50 LT	MO					16						2	31	
5	261	735M1	735+30.00	ROUTE 50 RT	735M2	735+30.00	ROUTE 50 LT	MO					109							138	
5	261	735M2	735+30.00	ROUTE 50 LT	7F1	7+00.25	RAMP 3 LT	MO					55						1	67	
5	261	736S1	736+81.91	ROUTE 50 RT	8F1	8+44.48	RAMP 4 RT	MO		35						1				16	
10	262	173T2	173+50.00	ROUTE 291 RT	173T1	173+00.00	ROUTE 291 RT	MO	46											19	
10	262	173T1	173+00.00	ROUTE 291 RT	172T1	172+40.00	ROUTE 291 RT	MO	55											19	
10	262	172T1	172+40.00	ROUTE 291 RT	171T1	171+55.00	ROUTE 291 RT	MO	80											18	
10	262	171T1	171+55.00	ROUTE 291 RT	170T1	170+60.24	ROUTE 291 RT	MO		90										12	
10	262	170T1	170+60.24	ROUTE 291 RT	169T1	169+25.00	ROUTE 291 RT	MO		131										68	
10	262	169T1	169+25.00	ROUTE 291 RT	167T1	167+90.00	ROUTE 291 RT	MO		130										98	
10	263	167T1	167+90.00	ROUTE 291 RT	167F1	167+86.71	ROUTE 291 RT	MO		19						1				10	
11	263	177T1	177+05.00	ROUTE 291 LT	176T1	176+50.82	ROUTE 291 LT	MO	49											10	
11	263	176T1	176+50.82	ROUTE 291 LT	175T1	175+85.75	ROUTE 291 LT	MO	61											29	
10	263	175T1	175+85.75	ROUTE 291 LT	731T1	731+64.17	BLUE PARKWAY RT	MO	88											31	
11	264	184LS1	184+00.00	ROUTE 291 LT	185LS1	185+29.82	ROUTE 291 LT	MO	108											54	
11	264	185LS1	185+29.82	ROUTE 291 LT	EX. INLET	187+00.06	ROUTE 291 LT	MO	180											137	
5	264	729F1	729+84.45	ROUTE 50 RT	181S1	181+60.35	ROUTE 291 LT	MO	95						1					91	*
11	264	181S1	181+60.35	ROUTE 291 LT	181DB1	181+60.48	ROUTE 291 LT	MO	14											4	
11	264	181TD	181+60.48	ROUTE 291 LT	181DB1	181+60.48	ROUTE 291 LT	MO	3											0	
11	264	181DB1	181+60.48	ROUTE 291 LT	181DB2	181+60.48	ROUTE 291 RT	MO	94											40	
13	265	711LS1L	711+28.34	BLUE PARKWAY LT	714LS1	714+10.00	BLUE PARKWAY LT	LS			274									243	
13	266	711LS1L	711+28.34	BLUE PARKWAY LT	710M1	710+24.53	BLUE PARKWAY LT	LS				100								124	
13	266	710M1	710+24.53	BLUE PARKWAY LT	709S1	709+62.52	BLUE PARKWAY LT	LS				82								130	
13	266	711LS1L	711+28.34	BLUE PARKWAY LT	711S2	711+28.36	BLUE PARKWAY RT	LS	49											36	
13	266	709S1	709+62.52	BLUE PARKWAY LT	EX. RCB	709+46.92	BLUE PARKWAY LT	LS				13								18	
13	265	714LS1	714+10.00	BLUE PARKWAY LT	715LS1	715+29.26	BLUE PARKWAY LT	LS		112										50	
14	267	720LS1	720+82.40	BLUE PARKWAY LT	722LS1	722+35.62	BLUE PARKWAY LT	LS	134											91	
14	268	EX. INLET	722+51.79	BLUE PARKWAY RT	722LS1	722+35.62	BLUE PARKWAY LT	LS	32											24	
14	268	722LS1	722+35.62	BLUE PARKWAY LT	722LS2	722+35.60	BLUE PARKWAY RT	LS			48									39	
14	267	722LS2	722+35.60	BLUE PARKWAY RT	723LS1	723+61.72	BLUE PARKWAY RT	LS			129									152	
14	267	723LS1	723+61.72	BLUE PARKWAY RT	724LS2	724+86.65	BLUE PARKWAY RT	LS			127									140	
14	269	724LS2	724+86.65	BLUE PARKWAY RT	725LS2	725+64.00	BLUE PARKWAY RT	LS		66										58	
14	269	723LS1	723+61.72	BLUE PARKWAY RT	723F2	723+57.78	BLUE PARKWAY RT	LS				18						1		20	
14	269	724LS1	724+87.47	BLUE PARKWAY LT	724LS2	724+86.65	BLUE PARKWAY RT	LS	48											25	
14	269	725LS1	725+64.05	BLUE PARKWAY LT	725LS2	725+64.00	BLUE PARKWAY RT	LS		52										24	
14	270	727LS1	727+25.00	BLUE PARKWAY LT	728LS1	728+10.00	BLUE PARKWAY LT	LS		87										103	
14	270	728LS1	728+10.00	BLUE PARKWAY LT	728LS2	728+69.75	BLUE PARKWAY LT	LS		61										85	
14	270	727LS1	727+25.00	BLUE PARKWAY LT	727LS2	727+15.00	BLUE PARKWAY RT	LS	72											34	
14	271	EX. INLET	728+71.97	BLUE PARKWAY LT	728LS2	728+69.75	BLUE PARKWAY LT	LS		128										185	
11	271	179DB	179+70.82	ROUTE 291 LT	729F2	729+84.43	ROUTE 50 LT	MO	110						1					40	*
15	272	731M1	732+11.68	BLUE PARKWAY LT	733LS1	733+01.16	BLUE PARKWAY LT	LS		94										48	
15	272	733LS1	733+01.16	BLUE PARKWAY LT	734LS1	734+75.69	BLUE PARKWAY LT	LS		183										17	
15	272	734F1	734+75.00	BLUE PARKWAY LT	734LS1	734+75.69	BLUE PARKWAY LT	LS			29						1			11	
15	273	734LS1	734+75.69	BLUE PARKWAY LT	734LS2	734+75.12	BLUE PARKWAY RT	LS			55									3	
15	273	734LS2	734+75.12	BLUE PARKWAY RT	734F2	734+76.09	BLUE PARKWAY RT	LS		15						1				0	
15	273	736LS1	736+50.00	BLUE PARKWAY LT	736LS2	736+50.00	BLUE PARKWAY RT	LS		50										27	
15	273	731T1	731+64.17	BLUE PARKWAY RT	731M1	731+11.68	BLUE PARKWAY LT	LS			99			1						105	
15	274	736LS2	736+50.00	BLUE PARKWAY RT	737M1	737+80.89	BLUE PARKWAY RT	LS		131										118	
15	274	737M1	737+80.89	BLUE PARKWAY RT	739F1	739+26.38	BLUE PARKWAY RT	LS			155						1			170	
16	274	POND	4+39.70	7TH CONN RT	4LS2	4+54.86	7TH CONN RT	LS		19										12	
16	274	4LS2	4+54.86	7TH CONN RT	4LS1	4+56.32	7TH CONN LT	LS		41										23	
16	274	4LS1	4+56.32	7TH CONN LT	7M1	7+35.82	7TH CONN LT	LS		37										24	
16	274	7M1	7+35.82	7TH TERRACE LT	8LS1	8+10.00	7TH TERRACE LT	LS		63										44	
16	274	8LS1	8+10.00	7TH TERRACE LT	EX. INLET	9+57.18	7TH TERRACE LT	LS		143										127	
16	274	7M1	7+35.82	7TH TERRACE LT	7LS1	7+18.55	7TH TERRACE RT	LS		48										28	
253	276	EX. INLET	734+99.49	ROUTE 50 LT	T735M2	735+30.00	ROUTE 50 LT	MO			27									23	TEMPORARY PIPE
253	276	T466S1	4+66.57	RAMP 1 LT	EX. PIPE			MO			21			1						20	TEMPORARY PIPE
253A	277	T731M1	731+84.98	BLUE PARKWAY RT	731M1	732+11.68	BLUE PARKWAY LT	LS		55										49	
253A	277	T732TD	732+47.32	BLUE PARKWAY RT	T731M1	731+84.98	BLUE PARKWAY RT	LS		60										44	
						739+97.40	BLUE PARKWAY LT	LS	48						2						TEMPORARY PIPE
							TOTALS		1366	1850	2932	213	180	2	4	3	4	1	3	5039	

* NO DIRECT PAY FOR PIPE BENDS

SUMMARY OF QUANTITIES
SHEET 9 OF 18

Reid Catt
2025.03.31 11:18:35-05'00'

REID BRENNEN CATT-ENGINEER
MO# PE-2010019516

DATE PREPARED
3/24/2025

ROUTE 50/291 | STATE MO
DISTRICT KC | SHEET NO. 3
COUNTY JACKSON
JOB NO. J4P3196
FEDERAL PROJECT NO. STB-3001(009)
PROJECT NO.
BRIDGE NO.

DESCRIPTION | DATE

IF A SEAL IS PRESENT ON THIS SHEET IT HAS BEEN ELECTRONICALLY SEALED AND DATED.

MISSOURI HIGHWAYS AND TRANSPORTATION COMMISSION
105 WEST CAPITOL
JEFFERSON CITY, MO 65102
1-888-ASK-MODOT (1-888-275-6636)

LEE'S SUMMIT MISSOURI

olsson
1301 BURLINGTON ST., STE. 100
NORTH KANSAS CITY, MO 64116
PHONE: 816.361.1177
CERT. OF AUTHORITY NO. 001592

TEMPORARY EROSION CONTROL

SHEET NO.	STA.	STA.	LOCATION	PHASE	SEDIMENT TRAP EXCAVATION (CY)	SEDIMENT TRAP ROCK (CY)	ALTERNATE DITCH CHECK (FT)	ROCK DITCH CHECK (FT)	CURB INLET CHECK (EACH)	SILT FENCE (FT)	TURF REINFORCEMENT MAT TYPE 3 (SY)	EROSION CONTROL BLANKET TYPE 3B (SY)	SEDIMENT REMOVAL (CY)	REMARKS
168	710+15.00		ROUTE 50 LT	INITIAL	5.0	5.0								
168	710+15.00		ROUTE 50 RT	INITIAL	5.0	5.0								
168	711+18.00		ROUTE 50 LT	INITIAL	5.0	5.0								
169	743+80.00		ROUTE 50 LT	INITIAL	5.0	5.0								
169	744+95.00		ROUTE 50 RT	INITIAL	5.0	5.0								
169	746+42.00		ROUTE 50 LT	INITIAL	5.0	5.0								
169	748+46.00		ROUTE 50 RT	INITIAL	5.0	5.0								
168	5+65.00		RAMP 2 RT	INITIAL	5.0	5.0								
168	7+61.00		RAMP 3 LT	INITIAL	5.0	5.0								
171	711+18.00		BLUE PARKWAY LT	INITIAL	5.0	5.0								
170	724+80.00		OLDHAM PARKWAY RT	INITIAL	5.0	5.0								
173	710+80.00	719+46.00	ROUTE 50 LT	CONSTRUCTION			100						10	100' SPACING
173	711+12.00	716+12.00	ROUTE 50 RT	CONSTRUCTION			60						6	100' SPACING
173	724+40.00	735+42.00	ROUTE 50 LT	CONSTRUCTION			130						13	100' SPACING
173	724+40.00	736+73.00	ROUTE 50 RT	CONSTRUCTION			150						15	100' SPACING
173	740+47.00	743+42.00	ROUTE 50 RT	CONSTRUCTION				70					7	55' SPACING
173	740+62.00	743+08.00	ROUTE 50 LT	CONSTRUCTION				50					5	50' SPACING
174	746+46.00	747+47.00	ROUTE 50 RT	CONSTRUCTION				20					2	
173	2+23.00	4+05.00	RAMP 1 LT	CONSTRUCTION				60					6	37' SPACING
173	6+04.00		RAMP 1 LT	CONSTRUCTION				10					1	
173	0+31.00	5+30.00	RAMP 2 RT	CONSTRUCTION				160					16	33' SPACING
173	5+75.00	8+25.00	RAMP 2 RT	CONSTRUCTION				110					11	25' SPACING
173	7+37.00	8+29.00	RAMP 2 RT	CONSTRUCTION						526			5	
173	1+90.00	6+90.00	RAMP 3 LT	CONSTRUCTION				340					34	15' SPACING
173	1+43.00		RAMP 4 RT	CONSTRUCTION				10					1	
173	1+93.00	4+02.00	RAMP 4 RT	CONSTRUCTION				120					12	19' SPACING
173	4+21.00	4+94.00	RAMP 4 RT	CONSTRUCTION				90					9	9' SPACING
173	5+10.00	7+31.00	RAMP 4 RT	CONSTRUCTION				140					14	17' SPACING
173	7+87.00	11+23.00	RAMP 4 RT	CONSTRUCTION				70					7	55' SPACING
175	166+72.00	172+25.00	ROUTE 291 LT	CONSTRUCTION						597			6	
175	166+72.00	174+05.00	ROUTE 291 RT	CONSTRUCTION						1116			11	
175	167+90.00		ROUTE 291 RT	CONSTRUCTION					1					
175	169+25.00		ROUTE 291 RT	CONSTRUCTION					1					
175	170+61.00		ROUTE 291 RT	CONSTRUCTION					1					
175	171+55.00		ROUTE 291 RT	CONSTRUCTION					1					
175	172+40.00		ROUTE 291 RT	CONSTRUCTION					1					
175	173+00.00		ROUTE 291 RT	CONSTRUCTION					1					
175	173+52.00		ROUTE 291 RT	CONSTRUCTION					1					
175	172+77.00	174+05.00	ROUTE 291 LT	CONSTRUCTION						360			4	
175	174+93.00		ROUTE 291 LT	CONSTRUCTION					1					
175	175+86.00		ROUTE 291 LT	CONSTRUCTION					1					
175	176+51.00		ROUTE 291 LT	CONSTRUCTION					1					
175	177+05.00		ROUTE 291 LT	CONSTRUCTION					1					
175	175+16.00	178+50.00	ROUTE 291 LT	CONSTRUCTION						464			5	
175	177+47.00		ROUTE 291 RT	CONSTRUCTION				10					1	
175	179+71.00		ROUTE 291 LT	CONSTRUCTION					1					
175	181+61.00		ROUTE 291 RT	CONSTRUCTION					1					
175	181+61.00		ROUTE 291 LT	CONSTRUCTION					1					
175	181+52.00	181+65.00	ROUTE 291 LT	CONSTRUCTION				20					2	
175	182+39.00	184+37.00	ROUTE 291 LT	CONSTRUCTION						221			2	
175	184+00.00		ROUTE 291 LT	CONSTRUCTION					1					
175	185+30.00		ROUTE 291 LT	CONSTRUCTION					1					
175	184+95.00	185+79.00	ROUTE 291 LT	CONSTRUCTION						84			1	
175	187+03.00		ROUTE 291 LT	CONSTRUCTION					1					
175	187+13.00		ROUTE 291 RT	CONSTRUCTION					1					
175	186+82.00	187+10.00	ROUTE 291 RT	CONSTRUCTION						44			1	
175	476+00.00	476+18.00	ROUTE 291 LT	CONSTRUCTION						18			1	
175	476+25.00	476+29.00	ROUTE 291 LT	CONSTRUCTION						72			1	
173	724+29.00	724+52.00	OLDHAM PARKWAY LT	CONSTRUCTION				20					2	
173	724+76.00	726+77.00	OLDHAM PARKWAY RT	CONSTRUCTION						220			2	
175	725+55.00		OLDHAM PARKWAY LT	CONSTRUCTION				10					1	
175	727+13.00	728+06.00	OLDHAM PARKWAY RT	CONSTRUCTION						243			3	
176	709+61.00		BLUE PARKWAY LT	CONSTRUCTION			10						1	
176	709+26.00	710+38.00	BLUE PARKWAY LT	CONSTRUCTION						136			1	
176	711+28.00		BLUE PARKWAY LT	CONSTRUCTION					1					
176	711+33.00	711+94.00	BLUE PARKWAY LT	CONSTRUCTION						62			1	
176	712+89.00	713+42.00	BLUE PARKWAY LT	CONSTRUCTION						52			1	
				SUBTOTAL 1	55	55	450	1310	19	4215	0	0	221	

SUMMARY OF QUANTITIES
SHEET 10 OF 18

Reid Catt
2025.03.01 21:24:36-06'00'

REID BRENNEN CATT-ENGINEER
MO# PE-2010019516

DATE PREPARED
2/28/2025

ROUTE 50/291 | STATE MO
DISTRICT KC | SHEET NO. 3
COUNTY JACKSON
JOB NO. J4P3196
FEDERAL PROJECT NO. STB-3001(009)
PROJECT NO.
BRIDGE NO.

DESCRIPTION | DATE

MISSOURI HIGHWAYS AND TRANSPORTATION COMMISSION
105 WEST CAPITOL
JEFFERSON CITY, MO 65102
1-888-ASK-MODOT (1-888-275-6636)

LEE'S SUMMIT MISSOURI

olsson
1301 BURLINGTON ST., STE. 100
NORTH KANSAS CITY, MO 64116
PHONE: 816.361.1177
CERT. OF AUTHORITY NO. 001592

IF A SEAL IS PRESENT ON THIS SHEET IT HAS BEEN ELECTRONICALLY SEALED AND DATED.

TEMPORARY EROSION CONTROL

SHEET NO.	STA.	STA.	LOCATION	PHASE	SEDIMENT TRAP		ALTERNATE DITCH CHECK	ROCK DITCH CHECK	CURB INLET CHECK	SILT FENCE	TURF REINFORCEMENT MAT TYPE 3	EROSION CONTROL BLANKET TYPE 3B	SEDIMENT REMOVAL	REMARKS
					EXCAVATION (CY)	ROCK (CY)	(FT)	(FT)	(EACH)	(FT)	(SY)	(SY)	(CY)	
176	713+70.00	715+53.00	BLUE PARKWAY LT	CONSTRUCTION						184			2	
176	714+10.00		BLUE PARKWAY LT	CONSTRUCTION					1					
176	715+29.00		BLUE PARKWAY LT	CONSTRUCTION					1					
176	720+82.00		BLUE PARKWAY LT	CONSTRUCTION					1					
176	722+36.00		BLUE PARKWAY LT	CONSTRUCTION					1					
176	722+36.00		BLUE PARKWAY RT	CONSTRUCTION					1					
176	723+62.00		BLUE PARKWAY RT	CONSTRUCTION					1					
176	724+87.00		BLUE PARKWAY RT	CONSTRUCTION					1					
176	724+87.00		BLUE PARKWAY LT	CONSTRUCTION					1					
176	725+64.00		BLUE PARKWAY LT	CONSTRUCTION					1					
176	725+64.00		BLUE PARKWAY RT	CONSTRUCTION					1					
176	727+15.00		BLUE PARKWAY RT	CONSTRUCTION					1					
176	727+25.00		BLUE PARKWAY LT	CONSTRUCTION					1					
176	728+10.00		BLUE PARKWAY LT	CONSTRUCTION					1					
176	728+70.00		BLUE PARKWAY LT	CONSTRUCTION					1					
177	733+01.00		BLUE PARKWAY LT	CONSTRUCTION					1					
177	733+89.00	734+71.00	BLUE PARKWAY LT	CONSTRUCTION						127			1	
177	734+75.00		BLUE PARKWAY LT	CONSTRUCTION					1					
177	734+75.00		BLUE PARKWAY RT	CONSTRUCTION					1					
177	736+50.00		BLUE PARKWAY LT	CONSTRUCTION					1					
177	736+50.00		BLUE PARKWAY RT	CONSTRUCTION					1					
177	737+57.00	739+01.00	BLUE PARKWAY LT	CONSTRUCTION						152			2	
177	739+89.00	740+97.00	BLUE PARKWAY LT	CONSTRUCTION				20					2	
177	5+41.00	7+36.00	7TH TERRACE RT	CONSTRUCTION						337			3	
177	6+38.00		7TH TERRACE LT	CONSTRUCTION				10					1	
177	7+19.00		7TH TERRACE RT	CONSTRUCTION					1					
177	7+78.00	8+32.00	7TH TERRACE RT	CONSTRUCTION						54			1	
177	7+88.00	8+41.00	7TH TERRACE LT	CONSTRUCTION						71			1	
177	8+10.00		7TH TERRACE LT	CONSTRUCTION					1					
177	8+64.00	9+28.00	7TH TERRACE LT	CONSTRUCTION						64			1	
177	9+57.00		7TH TERRACE LT	CONSTRUCTION					1					
177	9+57.00		7TH TERRACE RT	CONSTRUCTION					1					
177	4+55.00		7TH CONN RT	CONSTRUCTION					1					
177	4+65.00		7TH CONN LT	CONSTRUCTION					1					
178	709+85.00	725+84.00	ROUTE 50 RT	FINAL							959.9			
178	709+85.00	725+48.00	ROUTE 50 RT	FINAL								2540.4		
178	709+85.00	727+79.00	ROUTE 50 RT	FINAL								2866.1		
178	711+10.00	727+81.00	ROUTE 50 LT	FINAL								17953.8		
178	710+84.00	725+66.00	ROUTE 50 LT	FINAL							1265.1			
178	721+83.00	736+02.00	ROUTE 50 LT	FINAL							414.3			
178	721+83.00	727+79.00	ROUTE 5O LT	FINAL								2378.4		
178	721+83.00	736+02.00	ROUTE 50 LT	FINAL								1744.1		
178	722+06.00	737+06.00	ROUTE 50 RT	FINAL							432.8			
178	722+06.00	727+80.00	ROUTE 50 RT	FINAL								2169.7		
178	722+06.00	737+06.00	ROUTE 50 RT	FINAL								1848.6		
178	727+01.00	729+73.00	ROUTE 50 LT	FINAL								120.8		
178	727+01.00	729+73.00	ROUTE 50 RT	FINAL								120.9		
178	728+94.00	736+02.00	ROUTE 50 LT	FINAL								3534.2		
178	728+94.00	737+06.00	ROUTE 50 RT	FINAL								3506.3		
178	729+00.00	746+89.00	ROUTE 50 RT	FINAL								5453.2		
178	729+05.00	745+20.00	ROUTE 50 LT	FINAL								9167.2		
178	730+32.00	740+72.00	ROUTE 50 LT	FINAL							2498.2			
178	731+22.00	743+41.00	ROUTE 50 RT	FINAL							833.1			
179	741+23.00	743+77.00	ROUTE 50 LT	FINAL							216.4			
180	175+27.00	177+50.00	ROUTE 291 RT	FINAL							194.9			
180	725+02.00	726+78.00	OLDHAM PARKWAY RT	FINAL								401.4		
181	709+32.00	710+44.00	BLUE PARKWAY LT	FINAL								512.7		
181	710+94.00	712+97.00	BLUE PARKWAY LT	FINAL								612.3		
182	733+19.00	736+47.00	BLUE PARKWAY RT	FINAL								460.2		
				SUBTOTAL 2	0	0	0	30	23	805	6814.7	55390.3	12	

SUMMARY OF QUANTITIES
SHEET 11 OF 18

Reid Catt
2025.03.01 21:24:31-06'00'

REID BRENNEN CATT-ENGINEER
MO# PE-2010019516

DATE PREPARED
2/28/2025

ROUTE	STATE
50/291	MO
DISTRICT	SHEET NO.
KC	3

COUNTY
JACKSON

JOB NO.
J4P3196

FEDERAL PROJECT NO.
STB-3001(009)

PROJECT NO.

BRIDGE NO.

DESCRIPTION	DATE

IF A SEAL IS PRESENT ON THIS SHEET IT HAS BEEN ELECTRONICALLY SEALED AND DATED.

MISSOURI HIGHWAYS AND TRANSPORTATION COMMISSION

105 WEST CAPITOL
JEFFERSON CITY, MO 65102
1-888-ASK-MODOT (1-888-275-6636)

LEE'S SUMMIT MISSOURI

olsson
1301 BURLINGTON ST., STE. 100
NORTH KANSAS CITY, MO 64116
PHONE: 816.361.1177
CERT. OF AUTHORITY NO. 001592

TEMPORARY EROSION CONTROL

SHEET NO.	STA.	STA.	LOCATION	PHASE	SEDIMENT TRAP EXCAVATION (CY)	SEDIMENT TRAP ROCK (CY)	ALTERNATE DITCH CHECK (FT)	ROCK DITCH CHECK (FT)	CURB INLET CHECK (EACH)	SILT FENCE (FT)	TURF REINFORCEMENT MAT TYPE 3 (SY)	EROSION CONTROL BLANKET TYPE 3B (SY)	SEDIMENT REMOVAL (CY)	REMARKS
182	734+20.00	734+97.00	BLUE PARKWAY LT	FINAL							428.5			
182	735+52.00	737+13.00	BLUE PARKWAY LT	FINAL								312.9		
182	736+51.00	737+17.00	BLUE PARKWAY RT	FINAL								71.3		
182	737+45.00	739+00.00	BLUE PARKWAY LT	FINAL								212.5		
182	738+90.00	740+88.00	BLUE PARKWAY LT	FINAL								438.7		
182	7+14.00	7+41.00	7TH TERRACE RT	FINAL								33.6		
				SUBTOTAL 3	0	0	0	0	0	0	428.5	1069.0	0	
				SUBTOTAL 2	0	0	0	30	23	805	6814.7	55390.3	12	
				SUBTOTAL 1	55	55	450	1310	19	4215	0.0	0.0	221	
				TOTAL	55	55	450	1340	42	5020	7243.2	56459.3	233	

GRATES, BEARING PLATES & MANHOLE COVERS

PLAN SHEET NO.	CULVERT SECTION SHEET NO.	STRUC-TURE NO.	LOCATION	STATION	OFFSET	SPEC	GRATE & BEARING PLATES (3'X3') (EACH)	GRATE & BEARING PLATES (5'X3') (EACH)	GRATE & BEARING PLATES (5'-1"X3'-1") (EACH)	MANHOLE FRAME & COVER TYPE 3 (EACH)	MANHOLE FRAME & COVER TYPE 4 (EACH)
5	276	T735M2	ROUTE 50 LT	735+30.00	56.00	MO					1
5	257	726S1R	ROUTE 50 RT	726+47.00	68.54	MO			1		
5	257	726S2R	ROUTE 50 RT	726+98.12	58.21	MO			1		
5	258	729S2R	ROUTE 50 RT	729+73.06	58.03	MO			1		
5	258	731S2R	ROUTE 50 RT	731+48.50	68.35	MO			1		
5	258	734S1R	ROUTE 50 RT	734+48.50	68.35	MO		1			
5	259	735M1	ROUTE 50 RT	735+30.00	59.00	MO					1
5	259	726S2L	ROUTE 50 LT	726+47.00	57.92	MO			1		
5	259	727S2L	ROUTE 50 LT	726+97.99	47.67	MO			1		
5	259	729S2L	ROUTE 50 LT	729+73.06	47.88	MO			1		
5	260	731S2L	ROUTE 50 LT	731+48.50	58.15	MO			1		
5	260	734S1L	ROUTE 50 LT	734+48.50	58.15	MO		1			
5	260	735M2	ROUTE 50 LT	735+30.00	56.00	MO					1
5	261	736S1	ROUTE 50 RT	736+81.91	51.68	MO		1			
4	276	T466S1	RAMP 1 LT	4+66.57	23.52	MO	1				
10	263	167T1	ROUTE 291 RT	167+90.00	39.25	MO				1	
10	262	169T1	ROUTE 291 RT	169+25.00	39.76	MO				1	
10	262	170T1	ROUTE 291 RT	170+60.24	58.72	MO				1	
10	264	171T1	ROUTE 291 RT	171+55.00	67.04	MO				1	
10	262	172T1	ROUTE 291 RT	172+40.00	70.11	MO				1	
10	262	173T1	ROUTE 291 RT	173+00.00	71.41	MO				1	
10	262	173T2	ROUTE 291 RT	173+50.00	82.50	MO				1	
10	263	175T1	ROUTE 291 LT	175+85.75	55.83	MO				1	
10	263	176T1	ROUTE 291 LT	176+50.82	47.09	MO				1	
10	263	177T1	ROUTE 291 LT	177+05.00	43.26	MO				1	
11	264	181S1	ROUTE 291 LT	181+60.35	50.56	MO	1				
13	266	710M1	BLUE PARKWAY LT	710+24.53	52.66	LS					1
	266	711S2	BLUE PARKWAY RT	711+28.36	22.61	MO			1		
15	263	731T1	BLUE PARKWAY RT	731+64.17	42.17	MO				1	
15	272	731M1	BLUE PARKWAY LT	732+11.68	42.44	LS					1
15	258	T731M1	BLUE PARKWAY RT	731+84.98	9.87	LS					1
15	274	737M1	BLUE PARKWAY RT	737+80.89	26.33	LS					1
16	275	7M1	7TH TERRACE LT	7+35.82	31.03	LS					1
				TOTALS			2	3	9	11	8

SUMMARY OF QUANTITIES
SHEET 12 OF 18

Reid Catt
2025.03.01 21:24:21-06'00'

REID BRENNEN CATT-ENGINEER
MO# PE-2010019516

DATE PREPARED
2/28/2025

ROUTE 50/291 | STATE MO
DISTRICT KC | SHEET NO. 3
COUNTY JACKSON
JOB NO. J4P3196
FEDERAL PROJECT NO. STB-3001(009)
PROJECT NO.
BRIDGE NO.

IF A SEAL IS PRESENT ON THIS SHEET IT HAS BEEN ELECTRONICALLY SEALED AND DATED.

DESCRIPTION | DATE

MISSOURI HIGHWAYS AND TRANSPORTATION COMMISSION
105 WEST CAPITOL
JEFFERSON CITY, MO 65102
1-888-ASK-MODOT (1-888-275-6636)

LEE'S SUMMIT MISSOURI

olsson
1301 BURLINGTON ST., STE. 100
NORTH KANSAS CITY, MO 64116
PHONE: 816.361.1177
CERT. OF AUTHORITY NO. 001592

PAVEMENT MARKING

STA.	STA.	LOCATION	HIGH BUILD PAINT, CITY OF LS SPEC, SEC 3000		HIGH BUILD PAINT, TYPE L BEADS					REMARKS
			4" WHITE 6209903 (L.F.)	4" YELLOW 6209903 (L.F.)	6" WHITE (L.F.)	6" YELLOW (L.F.)	12" DOTTED WHITE (L.F.)	12" WHITE (L.F.)	12" YELLOW (L.F.)	
166+72.50	167+53.23	Route 291			81					LANE LINE
166+72.50	171+85.00	Route 291			128					INTERMITTENT LANE LINE
166+72.50	169+75.00	Route 291			302					LANE LINE
166+72.50	171+85.00	Route 291				513				EDGE LINE
166+72.50	171+85.00	Route 291				513				EDGE LINE
166+72.50	171+85.00	Route 291			128					INTERMITTENT LANE LINE
166+72.50	171+85.00	Route 291			514					EDGE LINE
168+19.50	171+85.00	Route 291			365					EDGE LINE
170+75.08	171+85.00	Route 291			110					LANE LINE
170+75.08	171+85.00	Route 291			110					LANE LINE
170+96.53	171+85.00	Route 291					22.25			DOTTED LANE LINE
170+96.53	171+85.00	Route 291			89					LANE LINE
171+85.00	731+74.38	Route 291/Blue Parkway			269					EDGE LINE
171+85.00	173+87.10	Route 291			50.5					INTERMITTENT LANE LINE
171+85.00	173+87.17	Route 291				202				EDGE LINE
171+85.00	173+86.18	Route 291				202				EDGE LINE
171+85.00	174+16.41	Route 291			231					LANE LINE
171+85.00	174+16.39	Route 291			231					LANE LINE
171+85.00	173+97.33	Route 291			53.25					INTERMITTENT LANE LINE
171+85.00	173+97.33	Route 291					53.25			DOTTED LANE LINE
171+85.00	173+45.63	Route 291			161					LANE LINE
171+85.00	729+71.89	Route 291/Blue Parkway			218					EDGE LINE
173+45.63	174+26.88	Route 291			81					LANE LINE
173+45.63	729+77.11	Route 291/Blue Parkway			90					LANE LINE
174+26.88	729+77.11	Route 291/Blue Parkway			38					LANE LINE
174+06.84	174+27.63	Route 291			21					EDGE LINE
174+06.84	731+63.80	Route 291/Blue Parkway			63					EDGE LINE
174+27.63	731+74.38	Route 291/Blue Parkway			70					LANE LINE
174+41.86	731+74.38	Route 291/Blue Parkway			46					LANE LINE
174+54.86	731+74.38	Route 291/Blue Parkway				26				EDGE LINE
731+47.39	731+74.38	Blue Parkway				27				EDGE LINE
729+71.89	729+84.58	Blue Parkway				13				EDGE LINE
729+71.89	729+84.58	Blue Parkway				13				EDGE LINE
729+71.89	729+97.30	Blue Parkway			26					LANE LINE
729+71.89	174+74.79	Blue Parkway/Route 291			41					LANE LINE
729+71.89	175+10.17	Blue Parkway/Route 291			41					LANE LINE
174+74.79	175+10.17	Route 291			35					LANE LINE
174+75.68	174+76.04	Route 291			35					EDGE LINE
174+75.68	176+01.36	Route 291			125					EDGE LINE
174+76.04	176+01.36	Route 291			130					EDGE LINE
731+74.38	731+42.57	Blue Parkway/Route 291			60					EDGE LINE
0+34.31	1+01.10	Route 291			67					EDGE LINE
174+99.35	178+88.51	Route 291				394				EDGE LINE
174+99.35	179+08.29	Route 291				411				EDGE LINE
175+03.25	179+08.29	Route 291			100.75					INTERMITTENT LANE LINE
175+03.25	178+83.31	Route 291			279					LANE LINE
175+03.25	178+99.30	Route 291			196					LANE LINE
175+08.55	178+88.51	Route 291			95.25					INTERMITTENT LANE LINE
175+05.74	177+73.99	Route 291					67			DOTTED LANE LINE
729+71.89	8+76.38	Blue Parkway/Ramp 1			385					EDGE LINE
177+73.99	178+91.82	Route 291			118					LANE LINE
176+33.10	178+88.51	Route 291			256					LANE LINE
177+68.94	178+14.84	Route 291					11.5			DOTTED LANE LINE
178+14.84	178+37.81	Route 291			26					LANE LINE
0+58.04	1+01.10	Ramp 3			53					LANE LINE
178+60.87	0+97.43	Route 291/Ramp 3			81					EDGE LINE
178+60.87	179+08.13	Route 291			47					EDGE LINE
179+08.13	1+01.10	Route 291/ Ramp 3			70					EDGE LINE
178+38.08	8+88.85	Route 291/Ramp 1			61					EDGE LINE
8+88.85	178+91.82	Ramp 1/Route 291			28					EDGE LINE
SUB TOTAL (1):			0	0	5806	2314	154	0	0	

SUMMARY OF QUANTITIES
SHEET 13 OF 18

STATE OF MISSOURI
JEREMY SCOTT STRETZ
NUMBER PE-2011022559
PROFESSIONAL ENGINEER

Jeremy Stretz 2025.02.28 22:45:38-06'00'

DATE PREPARED
2/28/2025

ROUTE 50/291 | STATE MO
DISTRICT KC | SHEET NO. 3
COUNTY JACKSON
JOB NO. J4P3196
FEDERAL PROJECT NO. STB-3001(009)
PROJECT NO.
BRIDGE NO.

DESCRIPTION | DATE

MISSOURI HIGHWAYS AND TRANSPORTATION COMMISSION
105 WEST CAPITOL
JEFFERSON CITY, MO 65102
1-888-ASK-MODOT (1-888-275-6636)

LEE'S SUMMIT MISSOURI

olsson
1301 BURLINGTON ST., STE. 100
NORTH KANSAS CITY, MO 64116
PHONE: 816.361.1177
CERT. OF AUTHORITY NO. 001592

IF A SEAL IS PRESENT ON THIS SHEET IT HAS BEEN ELECTRONICALLY SEALED AND DATED.

PAVEMENT MARKING

STA.	STA.	LOCATION	HIGH BUILD PAINT, CITY OF LS SPEC, SEC 3000		HIGH BUILD PAINT, TYPE L BEADS					REMARKS
			4" WHITE 6209903 (L.F.)	4" YELLOW 6209903 (L.F.)	6" WHITE (L.F.)	6" YELLOW (L.F.)	12" DOTTED WHITE (L.F.)	12" WHITE (L.F.)	12" YELLOW (L.F.)	
8+76.38	8+98.99	Ramp 1			23					LANE LINE
8+98.99	179+54.56	Ramp 1/Route 291					23.5			DOTTED LANE LINE
0+53.79	1+01.10	Ramp 3			46					LANE LINE
1+01.10	179+70.00	Ramp 3/Route 291			95					EDGE LINE
179+59.29	179+70.00	Route 291			3					INTERMITTENT LANE LINE
179+59.29	179+70.00	Route 291			12					LANE LINE
8+76.38	179+70.00	Ramp 1/Route 291			59					EDGE LINE
179+70.00	0+96.04	Route 291/Ramp 4			283					EDGE LINE
179+70.00	181+68.15	Route 291			49					INTERMITTENT LANE LINE
179+71.99	181+72.17	Route 291			202					LANE LINE
179+71.99	181+72.17	Route 291			200					LANE LINE
179+71.99	181+40.65	Route 291				170				EDGE LINE
179+79.40	181+40.65	Route 291				161				EDGE LINE
179+79.40	181+71.17	Route 291			193					LANE LINE
179+79.40	181+71.17	Route 291			48.25					INTERMITTENT LANE LINE
179+70.00	9+78.03	Route 291/Ramp 2			262					EDGE LINE
181+68.15	181+88.79	Route 291					27			DOTTED LANE LINE
9+78.03	181+88.79	Ramp 2			39					LANE LINE
9+78.03	182+24.73	Ramp 2/Route 291			45					EDGE LINE
9+78.03	182+44.50	Ramp 2/Route 291			47					EDGE LINE
182+24.73	182+44.50	Route 291			20					EDGE LINE
182+22.57	0+59.55	Route 291/Ramp 4			28					EDGE LINE
0+59.55	182+99.07	Ramp 4/Route 291			83					EDGE LINE
182+22.57	185+63.63	Route 291			341					LANE LINE
0+96.04	182+96.46	Ramp 4/Route 291			88					EDGE LINE
182+27.24	187+17.90	Route 291			123.5					INTERMITTENT LANE LINE
182+27.24	184+90.84	Route 291			265					LANE LINE
182+27.24	184+90.84	Route 291			262					LANE LINE
182+27.24	187+17.90	Route 291				497				EDGE LINE
182+27.24	187+17.90	Route 291			496	496				EDGE LINE
182+27.24	184+73.14	Route 291					61.5			DOTTED LANE LINE
183+86.65	184+47.98	Route 291			62					EDGE LINE
183+86.65	Oldham	Route 291/Oldham Parkway			333					LANE LINE
Oldham	184+47.98	Route 291/Oldham Parkway			324					LANE LINE
Oldham	186+16.4	Oldham Parkway/Route 291			466					EDGE LINE
9+47.03	Oldham	Ramp 2/Oldham Parkway			459					EDGE LINE
184+73.14	187+17.90	Route 291			251					LANE LINE
184+73.14	187+17.90	Route 291			250					LANE LINE
716+70.00	723+90.47	Route 50/Ramp 1			725					EDGE LINE
716+70.00	718+95.69	Route 50					57			DOTTED LANE LINE
716+70.00	723+90.47	Route 50			180					INTERMITTENT LANE LINE
716+70.00	723+90.47	Route 50				720				EDGE LINE
716+70.00	723+90.47	Route 50				720				EDGE LINE
716+70.00	723+90.47	Route 50			180					INTERMITTENT LANE LINE
716+70.00	718+50.01	Route 50					45			DOTTED LANE LINE
716+70.00	723+90.47	Route 50/ Ramp 2			725					EDGE LINE
718+50.01	722+05.74	Route 50						355		GORE LINE
718+50.01	722+05.75	Route 50							356	GORE LINE
718+98.69	721+82.25	Route 50						287		GORE LINE
718+98.69	721+83.01	Route 50							287	GORE LINE
721+82.25	723+90.47	Route 50/Ramp 1				211				EDGE LINE
721+83.01	723+90.47	Route 50			207					EDGE LINE
722+05.74	723+90.47	Route 50			184					EDGE LINE
722+05.75	723+90.47	Route 50/ Ramp 2				186				EDGE LINE
723+57.62	723+90.47	Route 50/ Ramp 2			33					LANE LINE
723+90.47	8+76.38	Route 50/Ramp 1			369					EDGE LINE
723+90.47	8+76.38	Route 50/Ramp 1				362				EDGE LINE
723+90.47	732+00.47	Route 50			810					EDGE LINE
723+90.47	732+00.47	Route 50			202.5					INTERMITTENT LANE LINE
723+90.47	732+00.47	Route 50				810				EDGE LINE
723+90.47	732+00.47	Route 50				810				EDGE LINE
SUB TOTAL (2):			0	0	9073	5143	214	642	643	

SUMMARY OF QUANTITIES
SHEET 14 OF 18

STATE OF MISSOURI
JEREMY SCOTT STRETZ
NUMBER PE-2011024888
PROFESSIONAL ENGINEER
Jeremy Stretz 2025.02.28 22:48:08-06'00'

DATE PREPARED 2/28/2025
ROUTE 50/291 | STATE MO
DISTRICT KC | SHEET NO. 3
COUNTY JACKSON
JOB NO. J4P3196
FEDERAL PROJECT NO. STB-3001(009)
PROJECT NO.
BRIDGE NO.

DESCRIPTION | DATE

MISSOURI HIGHWAYS AND TRANSPORTATION COMMISSION
105 WEST CAPITOL
JEFFERSON CITY, MO 65102
1-888-ASK-MODOT (1-888-275-6636)
LEE'S SUMMIT MISSOURI
olsson
1301 BURLINGTON ST., STE. 100
NORTH KANSAS CITY, MO 64116
PHONE: 816.361.1177
CERT. OF AUTHORITY NO. 001592

IF A SEAL IS PRESENT ON THIS SHEET IT HAS BEEN ELECTRONICALLY SEALED AND DATED.

PAVEMENT MARKING

STA.	STA.	LOCATION	HIGH BUILD PAINT, CITY OF LS SPEC, SEC 3000		HIGH BUILD PAINT, TYPE L BEADS					REMARKS
			4" WHITE 6209903 (L.F.)	4" YELLOW 6209903 (L.F.)	6" WHITE (L.F.)	6" YELLOW (L.F.)	12" DOTTED WHITE (L.F.)	12" WHITE (L.F.)	12" YELLOW (L.F.)	
723+90.47	732+00.47	Route 50			203					INTERMITTENT LANE LINE
723+90.47	732+00.47	Route 50			810					EDGE LINE
723+90.47	9+78.03	Ramp 2				355				EDGE LINE
723+90.47	9+78.03	Ramp 2			354					LANE LINE
723+90.47	9+78.03	Ramp 2			357					EDGE LINE
6+04.05	8+76.38	Ramp 1			270					LANE LINE
6+88.86	9+78.03	Ramp 2			289					LANE LINE
9+44.35	9+78.03	Ramp 2			35					EDGE LINE
1+01.10	732+00.47	Ramp 3/Route 50			256					EDGE LINE
1+01.10	2+85.27	Ramp 3/Route 50			185					LANE LINE
1+01.10	732+00.47	Ramp 3/Route 50			254					LANE LINE
1+01.10	2+50.69	Ramp 3/Route 50			150					LANE LINE
1+01.10	732+00.47	Ramp 3/Route 50				255				EDGE LINE
0+96.04	732+00.47	Ramp 4/Route 50				260				EDGE LINE
0+96.04	732+00.47	Ramp 4/Route 50			261					EDGE LINE
732+00.47	740+10.47	Route 50			824					EDGE LINE
732+00.47	5+40.08	Route 50/Ramp 3			184					LANE LINE
732+00.47	736+01.79	Route 50				408				EDGE LINE
732+00.47	736+01.73	Route 50			402					EDGE LINE
732+00.47	740+10.47	Route 50			203					INTERMITTENT LANE LINE
732+00.47	740+10.47	Route 50				810				EDGE LINE
732+00.47	740+10.47	Route 50				810				EDGE LINE
732+00.47	740+10.47	Route 50			203					INTERMITTENT LANE LINE
732+00.47	737+05.93	Route 50			505					EDGE LINE
732+00.47	737+05.93	Route 50				509				EDGE LINE
732+00.47	740+10.47	Route 50			814					EDGE LINE
736+01.79	738+11.08	Route 50							210	GORE LINE
736+01.73	738+11.08	Route 50						210		GORE LINE
737+05.93	737+81.07	Route 50						232		GORE LINE
737+05.93	738+38.58	Route 50							177	GORE LINE
738+11.08	740+10.47	Route 50					50			DOTTED LANE LINE
738+38.58	740+10.47	Route 50					18			DOTTED LANE LINE
740+10.47	745+20.37	Route 50			510					EDGE LINE
740+10.47	742+20.37	Route 50					52			DOTTED LANE LINE
740+10.47	740+30.00	Route 50				21				EDGE LINE
740+10.47	740+30.00	Route 50				21				EDGE LINE
740+10.47	743+88.77	Route 50					94			DOTTED LANE LINE
740+10.47	746+88.77	Route 50			679					EDGE LINE
709+10.00	713+43.59	Blue Parkway		433						EDGE LINE
709+10.00	714+95.01	Blue Parkway		586						EDGE LINE
713+68.05	714+95.01	Blue Parkway		127						EDGE LINE
709+21.41	709+45.41	Blue Parkway		46						CENTER LINE
710+46.12	714+00.00	Blue Parkway	353							EDGE LINE
714+95.01	715+63.49	Blue Parkway		68						EDGE LINE
716+65.22	722+95.01	Blue Parkway		621						LANE LINE
716+65.22	722+95.01	Blue Parkway		155						BROKEN LANE LINE
716+65.22	722+95.01	Blue Parkway		158						BROKEN LANE LINE
716+65.22	722+95.01	Blue Parkway		630						LANE LINE
716+73.02	718+74.70	Blue Parkway	200							LANE LINE
722+95.01	726+18.29	Blue Parkway		322						LANE LINE
722+95.01	726+18.29	Blue Parkway		81						BROKEN LANE LINE
722+95.01	726+18.29	Blue Parkway		81						BROKEN LANE LINE
722+95.01	726+18.29	Blue Parkway		322						LANE LINE
727+13.15	728+23.05	Blue Parkway			116					LANE LINE
727+13.15	729+71.89	Blue Parkway				265				EDGE LINE
727+13.15	729+71.89	Blue Parkway				261				EDGE LINE
727+13.15	729+71.89	Blue Parkway			250					LANE LINE
729+14.90	729+71.89	Blue Parkway			53					EDGE LINE
729+14.90	729+71.89	Blue Parkway			57					EDGE LINE
731+74.38	732+01.78	Blue Parkway	28							EDGE LINE
731+74.38	733+10.28	Blue Parkway	143							LANE LINE
731+74.38	733+07.48	Blue Parkway	138							LANE LINE
731+74.38	734+89.82	Blue Parkway		317						EDGE LINE
731+74.38	734+14.10	Blue Parkway		236						EDGE LINE
731+74.38	732+84.13	Blue Parkway	104							EDGE LINE
734+14.97	734+89.82	Blue Parkway	73							LANE LINE
735+89.80	739+37.32	Blue Parkway		344						EDGE LINE
735+89.80	739+37.32	Blue Parkway		86						BROKEN LANE LINE
735+89.80	739+37.32	Blue Parkway		88						BROKEN LANE LINE
735+89.80	739+37.32	Blue Parkway		351						EDGE LINE
739+37.32	740+87.53	Blue Parkway	150							EDGE LINE
739+37.32	740+87.53	Blue Parkway		150						EDGE LINE
739+37.32	740+87.53	Blue Parkway		150						EDGE LINE
739+37.32	740+87.53	Blue Parkway	150							EDGE LINE
SUB TOTAL (3):			1339	5352	8224	3975	214	442	387	
SUB TOTAL (1):			0	0	5806	2314	154	0	0	
SUB TOTAL (2)			0	0	9073	5143	214	642	643	
TOTAL:			1339	5352	23103	11432	582	1084	1030	

SUMMARY OF QUANTITIES
SHEET 15 OF 18

STATE OF MISSOURI
JEREMY SCOTT STRETZ
NUMBER PE-2011022559
PROFESSIONAL ENGINEER

Jeremy Stretz 2025.02.28 22:46:02-06'00'

DATE PREPARED
2/28/2025

ROUTE	STATE
50/291	MO
DISTRICT	SHEET NO.
KC	3

COUNTY
JACKSON

JOB NO.
J4P3196

FEDERAL PROJECT NO.
STB-3001(009)

PROJECT NO.

BRIDGE NO.

DATE	DESCRIPTION

IF A SEAL IS PRESENT ON THIS SHEET IT HAS BEEN ELECTRONICALLY SEALED AND DATED.

MISSOURI HIGHWAYS AND TRANSPORTATION COMMISSION
105 WEST CAPITOL
JEFFERSON CITY, MO 65102
1-888-ASK-MODOT (1-888-275-6636)

LEE'S SUMMIT MISSOURI

olsson
1301 BURLINGTON ST., STE. 100
NORTH KANSAS CITY, MO 64116
PHONE: 816.361.1177
CERT. OF AUTHORITY NO. 001592

PAVEMENT MARKING

STA.	STA.	LOCATION	PREFORMED THERMOPLASTIC				REMARKS
			24" WHITE (L.F.)	24" YELLOW (L.F.)	30" WHITE MIDBLOCKS (EA.)	LEFT/RIGHT ARROW (EA.)	
167+44.06	-	Route 291				1	RIGHT ARROW
167+80.56	-	Route 291				1	LEFT TURN ARROW
169+63.98	-	Route 291				1	LEFT TURN ARROW
172+87.31	-	Route 291				1	LEFT TURN ARROW
173+12.28	-	Route 291				1	LEFT TURN ARROW
173+44.63	-	Route 291				1	RIGHT ARROW
173+86.18	-	Route 291	12				STOP BAR
173+97.33	-	Route 291	35				STOP BAR
729+87.98	729+96.16	Blue Parkway			4		6' CROSSWALK
174+07.77	-	Blue Parkway			7		6' CROSSWALK
174+08.87	174+18.62	Route 291			8		6' CROSSWALK
174+12.39	-	Route 291			4		10' CROSSWALK
174+12.63	174+75.68	Route 291			11		10' CROSSWALK
174+26.88	174+74.79	Route 291			9		6' CROSSWALK
174+27.63	174+41.86	route 291	14				STOP BAR
174+41.86	174+54.86	Route 291	14				STOP BAR
729+83.53	-	Blue Parkway	14				STOP BAR
729+97.30	-	Blue Parkway	14				STOP BAR
174+99.33	175+16.37	Route 291			4		STOP BAR
175+09.65	175+17.66	Route 291			4		10' CROSSWALK
175+03.25	-	Route 291	12				STOP BAR
175+03.25	-	Route 291	24				STOP BAR
175+70.48	-	Route 291				1	LEFT TURN ARROW
176+96.47	-	Route 291				1	LEFT TURN ARROW
175+68.57	-	Route 291				1	RIGHT ARROW
176+89.50	-	Route 291				1	LEFT TURN ARROW
176+90.28	-	Route 291				1	RIGHT ARROW
178+14.65	-	Route 291				1	LEFT TURN ARROW
178+17.28	-	Route 291				1	RIGHT ARROW
0+46.74	-	Ramp 3			17		10' CROSSWALK
0+71.51	0+58.04	Ramp 3	19				STOP BAR
0+69.75	0+54.41	Ramp 3	24				STOP BAR
178+88.51	-	Route 291	36				STOP BAR
0+53.79	-	Ramp 3	24				STOP BAR
179+59.29	-	Route 291	24				STOP BAR
179+71.99	-	Route 291	24				STOP BAR
180+48.26	-	Route 291				2	LEFT TURN ARROW
180+63.25	-	Route 291				1	LEFT TURN ARROW
181+40.65	-	Route 291	12				STOP BAR
181+71.17	-	Route 291	24				STOP BAR
181+88.79	182+24.73	Ramp 2	34				STOP BAR
0+53.89	0+46.13	Ramp 4				4	10' CROSSWALK
182+45.13	-	Route 291				3	10' CROSSWALK
182+27.24	-	Route 291	47				STOP BAR
182+98.56	-	Route 291				1	RIGHT ARROW
183+01.24	-	Route 291				1	LEFT TURN ARROW
183+01.29	-	Route 291				1	LEFT TURN ARROW
183+86.53	-	Route 291				1	RIGHT ARROW
184+39.60	-	Route 291				1	RIGHT ARROW
184+10.98	-	Route 291				1	RIGHT ARROW
184+12.97	-	Route 291				1	LEFT TURN ARROW
184+13.03	-	Route 291				1	LEFT TURN ARROW
185+15.39	-	Route 291				1	LEFT TURN ARROW
186+40.56	-	Route 291				1	LEFT TURN ARROW
6+98.23	-	Ramp 2				3	LEFT/RIGHT TURN ARROWS
8+14.68	-	Ramp 2				3	LEFT/RIGHT TURN ARROWS
9+41.43	-	Ramp 2				3	LEFT/RIGHT TURN ARROWS
1+26.31	-	Ramp 3				4	LEFT/RIGHT TURN ARROWS
2+39.62	-	Ramp 3				2	RIGHT ARROW
2+42.12	-	Ramp 3				2	LEFT TURN ARROW
SUB TOTAL (1):			407	0	68	50	

PAVEMENT MARKING

STA.	STA.	LOCATION	PREFORMED THERMOPLASTIC				REMARKS
			24" WHITE (L.F.)	24" YELLOW (L.F.)	30" WHITE MIDBLOCKS (EA.)	LEFT/RIGHT ARROW (EA.)	
710+00.00	714+95.01	Blue Parkway		84			24" CROSSHATCH
715+37.88	-	Blue Parkway				1	LEFT TURN ARROW
715+76.45	-	Blue Parkway				1	RIGHT ARROW
715+90.24	-	Blue Parkway				1	LEFT TURN ARROW
716+89.69	-	Blue Parkway				1	LEFT TURN ARROW
716+91.21	-	Blue Parkway				1	LEFT TURN ARROW
717+22.89	-	Blue Parkway				1	RIGHT ARROW
722+21.09	-	Blue Parkway				1	LEFT TURN ARROW
722+22.64	-	Blue Parkway				1	LEFT TURN ARROW
725+65.32	-	Blue Parkway				1	LEFT TURN ARROW
725+63.80	-	Blue Parkway				1	LEFT TURN ARROW
726+53.34	726+62.15	Blue Parkway	16				STOP BAR
727+50.87	-	Blue Parkway				1	RIGHT ARROW
727+76.12	-	Blue Parkway				1	LEFT TURN ARROW
729+06.57	-	Blue Parkway				1	LEFT TURN ARROW
729+03.45	-	Blue Parkway				1	RIGHT ARROW
732+23.00	-	Blue Parkway				1	RIGHT ARROW
732+24.50	-	Blue Parkway				1	LEFT TURN ARROW
734+63.83	-	Blue Parkway				1	LEFT TURN ARROW
-	-	7th Street	16				STOP BAR
735+23.50	735+37.97	Blue Parkway	14				STOP BAR
736+06.42	-	Blue Parkway				1	LEFT TURN ARROW
736+24.24	-	Blue Parkway				1	LEFT TURN ARROW
738+22.81	-	Blue Parkway				1	LEFT TURN ARROW
738+40.58	-	Blue Parkway				1	LEFT TURN ARROW
738+95.00	739+37.32	Blue Parkway		19			24" CROSSHATCH
739+37.32	740+87.53	Blue Parkway		29			24" CROSSHATCH
SUB TOTAL (2)			46	132	0	21	
SUB TOTAL (1)			407	0	68	50	
TOTAL			453	132	68	71	

SUMMARY OF QUANTITIES

STATE OF MISSOURI
JEREMY SCOTT STRETZ
NUMBER PE-2011022550
PROFESSIONAL ENGINEER
Jeremy Stretz 2025.02.28 22:47:19-06'00'

DATE PREPARED 2/28/2025

ROUTE	STATE
50/291	MO
DISTRICT	SHEET NO.
KC	3

COUNTY JACKSON

JOB NO. J4P3196

FEDERAL PROJECT NO. STB-3001(009)

PROJECT NO.

BRIDGE NO.

DESCRIPTION	DATE

IF A SEAL IS PRESENT ON THIS SHEET IT HAS BEEN ELECTRONICALLY SEALED AND DATED.

MISSOURI HIGHWAYS AND TRANSPORTATION COMMISSION
105 WEST CAPITOL
JEFFERSON CITY, MO 65102
1-888-ASK-MODOT (1-888-275-6636)
LEE'S SUMMIT MISSOURI
olsson
1301 BURLINGTON ST., STE. 100
NORTH KANSAS CITY, MO 64116
PHONE: 816.361.1177
CERT. OF AUTHORITY NO. 001592

TEMPORARY PAVEMENT MARKING

SHEET	PHASE	LOCATION	ACRYLIC WATERBORNE PAINT			PAVEMENT MARKING REMOVAL (L.F.)	TYPE 2 PREFORMED MARKING TAPE		REMARKS
			4" SOLID WHITE (L.F.)	4" SOLID YELLOW (L.F.)	4" DOUBLE YELLOW (L.F.)		24" SOLID WHITE (L.F.)	LEFT/RIGHT ARROW (EACH)	
6	1A	RAMP 2	65						
6	1A	ROUTE 291	3100		1900	2320			TEMPORARY STRIPING ALONG ROUTE 291
7	1A	ROUTE 291	600		1500				TEMPORARY STRIPING ALONG ROUTE 291
8	1A	ROUTE 291	600		1500				TEMPORARY STRIPING ALONG ROUTE 291
14	1C	W BLUE PARKWAY	3000		1500	3375			DOUGLAS ST / BLUE PARKWAY TEMPORARY STRIPING
15 - 16	1C	E BLUE PARKWAY	1360		680	1530	24		BLUE PARKWAY TEMPORARY STRIPING
18 - 20	1D	W BLUE PARKWAY	4535		2080		24		DOUGLAS ST / BLUE PARKWAY TEMPORARY STRIPING
18 - 19	1D	OLDHAM PARKWAY	2600		1300		60		OLDHAM PARKWAY TEMPORARY STRIPING
19 - 20	1D	E BLUE PARKWAY	2020		1010		36		BLUE PARKWAY TEMPORARY STRIPING
19	1D	ROUTE 291	3500		930				TEMPORARY STRIPING ALONG ROUTE 291
28 - 32	2	US-50 EB	8150	3700		7400		2	US-50 EB Temp Striping
28 - 32	2	US-50 WB	10150	4700		9400		2	US-50 WB Temp Striping
29 - 30	2	ROUTE 291	1250	435	820	870		5	TEMPORARY STRIPING ALONG ROUTE 291
37 - 41	3	US-50 EB	5575	4400					US-50 EB Temp Striping
37 - 41	3	US-50 WB	5750	5400					US-50 WB Temp Striping
45 - 49	4	US-50 EB	2800	900					US-50 EB Temp Striping
45 - 49	4	US-50 WB	3000	1700					US-50 WB Temp Striping
45 - 46	4	OLDHAM PARKWAY	2450	1650	400			1	OLDHAM PARKWAY TEMPORARY STRIPING
51 - 52	4	ROUTE 291	1360	780	860			2	TEMPORARY STRIPING ALONG ROUTE 291
52 - 53	4	HAMBLEN RD	300	810				1	HAMBLEN ROAD TEMPORARY STRIPING
51 - 52	4	BLUE PARKWAY	1950		800			2	BLUE PARKWAY TEMPORARY STRIPING
56 - 58	5	US-50 EB	1050	350				2	US-50 EB Temp Striping
56 - 58	5	US-50 WB	700	350					US-50 WB Temp Striping
59 - 61	5	ROUTE 291	1660		1160			10	TEMPORARY STRIPING ALONG ROUTE 291
61 - 62	5	HAMBLEN RD	570		450			2	HAMBLEN ROAD TEMPORARY STRIPING
TOTAL:			68095	25175	16890	24895	144	29	

SUMMARY OF QUANTITIES

STATE OF MISSOURI
JEREMY SCOTT STRETZ
NUMBER PE-2017023888
PROFESSIONAL ENGINEER

Jeremy Stretz 2025.02.28 22:45:07-06'00'

DATE PREPARED 2/28/2025

ROUTE 50/291 | STATE MO

DISTRICT KC | SHEET NO. 3

COUNTY JACKSON

JOB NO. J4P3196

FEDERAL PROJECT NO. STB-3001(009)

PROJECT NO.

BRIDGE NO.

DESCRIPTION

DATE

IF A SEAL IS PRESENT ON THIS SHEET IT HAS BEEN ELECTRONICALLY SEALED AND DATED.

MISSOURI HIGHWAYS AND TRANSPORTATION COMMISSION

MoDOT

105 WEST CAPITOL
JEFFERSON CITY, MO 65102
1-888-ASK-MODOT (1-888-275-6636)

LEE'S SUMMIT MISSOURI

olsson

1301 BURLINGTON ST., STE. 100
NORTH KANSAS CITY, MO 64116
PHONE: 816.361.1177
CERT. OF AUTHORITY NO. 001592

EFFECTIVE: 07-01-2024

SIGN	SIZE IN.	AREA SQ.FT.	QTY EACH	TOTAL AREA SQ.FT.	QTY RELOC EACH	TOTAL RELOC SQ.FT.	SIGN NUM.	DESCRIPTION
WARNING SIGNS								
W01-1L	48X48	16.00						TURN (SYMBOL LEFT ARROW)
W01-1R	48X48	16.00	2	32				TURN (SYMBOL RIGHT ARROW)
W01-2L	48X48	16.00						CURVE (SYMBOL LEFT ARROW)
W01-2R	48X48	16.00	2	32				CURVE (SYMBOL RIGHT ARROW)
W01-3L	48X48	16.00						REVERSE TURN (SYMBOL LEFT ARROW)
W01-3R	48X48	16.00						REVERSE TURN (SYMBOL RIGHT ARROW)
W01-4L	48X48	16.00	3	48				REVERSE CURVE (SYMBOL LEFT ARROW)
W01-4R	48X48	16.00	2	32				REVERSE CURVE (SYMBOL RIGHT ARROW)
W01-4bL	48X48	16.00	2	32				DOUBLE ARROW REVERSE CURVE (SYMBOL LT ARROWS)
W01-4bR	48X48	16.00	2	32				DOUBLE ARROW REVERSE CURVE (SYMBOL RT ARROWS)
W01-4cL	48X48	16.00						TRIPLE ARROW REVERSE CURVE (SYMBOL LT ARROWS)
W01-4cR	48X48	16.00						TRIPLE ARROW REVERSE CURVE (SYMBOL RT ARROWS)
W01-6	60X30	12.50						HORIZONTAL ARROW (SYMBOL)
W01-6a	72X36	18.00						HORIZ. ARROW (SYMBOL ON PERMANENT BARRICADE)
W01-7	60X30	12.50						DOUBLE HEAD HORIZONTAL ARROW (SYMBOL)
W01-7a	72X36	18.00						DOUBLE HEAD HORIZ. ARROW (SYMBOL ON PERM. BARR.)
W01-8	18X24	3.00						CHEVRON (SYMBOL)
W01-8a	30X36	7.50						CHEVRON (SYMBOL FOR DIVIDED HIGHWAYS)
W03-1	48X48	16.00						STOP AHEAD (SYMBOL)
W03-2	48X48	16.00	2	32				YIELD AHEAD (SYMBOL)
W03-3	48X48	16.00						SIGNAL AHEAD (SYMBOL)
W03-4	48X48	16.00						BE PREPARED TO STOP
W03-5	48X48	16.00	12	192				SPEED LIMIT AHEAD
W04-1L	48X48	16.00	2	32				MERGE (SYMBOL FROM LEFT)
W04-1R	48X48	16.00	2	32				MERGE (SYMBOL FROM RIGHT)
W04-1aL	48X48	16.00						MERGE (ARROW SYMBOL)
W04-1aR	48X48	16.00	2	32				MERGE (ARROW SYMBOL)
W05-1	48X48	16.00						ROAD/BRIDGE/RAMP NARROWS
W05-3	48X48	16.00						ONE LANE BRIDGE
W05-5	48X48	16.00						NARROW LANES
W06-1	48X48	16.00						DIVIDED HIGHWAY (SYMBOL)
W06-2	48X48	16.00						DIVIDED HIGHWAY END (SYMBOL)
W06-3	48X48	16.00						TWO WAY TRAFFIC (SYMBOL)
W07-3a	30X24	5.00						NEXT XX MILES (PLAQUE)
W08-1	48X48	16.00						BUMP
W08-2	48X48	16.00						DIP
W08-3	48X48	16.00						PAVEMENT ENDS
W08-4	48X48	16.00						SOFT SHOULDER
W08-5	48X48	16.00						SLIPPERY WHEN WET (SYMBOL)
W08-6	48X48	16.00						TRUCK CROSSING (WITH FLAGS)
W08-6c	48X48	16.00						TRUCK ENTRANCE
W08-7	36X36	9.00						LOOSE GRAVEL
W08-7a	36X36	9.00						FRESH OIL/LOOSE GRAVEL
W08-9	48X48	16.00						LOW SHOULDER
W08-11	48X48	16.00						UNEVEN LANES
W08-12	48X48	16.00						NO CENTER LINE
W08-15	48X48	16.00						GROOVED PAVEMENT
W08-15P	30X24	5.00						MOTORCYCLE (PLAQUE)
W08-17	48X48	16.00	2	32				SHOULDER DROP-OFF (SYMBOL)
W08-17P	30X24	5.00	2	10				SHOULDER DROP-OFF (PLAQUE)
W10-1	42RND.	9.62						RAILROAD CROSSING
W012-1	24X24	4.00	3	12				DOUBLE DOWN ARROW (SYMBOL)
W012-2	48X48	16.00						LOW CLEARANCE (SYMBOL)
W012-2X	24X18	3.00						LOW CLEARANCE (PLAQUE)
W012-2a	84X24	14.00						OVERHEAD LOW CLEARANCE (FEET AND INCHES)
W012-4	120X60	50.00						LOW CLEARANCE XX FT XX IN XX MILES AHEAD
W012-5	120X60	50.00						WIDTH RESTRICTION XX FT XX IN XX MILES AHEAD
W013-1	30X30	6.25						ADVISORY SPEED (PLAQUE)
W016-2	30X24	5.00						XXX FEET (PLAQUE)
W016-3	30X24	5.00						X MILE (PLAQUE)
W020-1	48X48	16.00	16	256				ROAD/BRIDGE/RAMP WORK AHEAD
W020-2	48X48	16.00	8	128				DETOUR AHEAD
W020-3	48X48	16.00	8	128				ROAD CLOSED AHEAD
W020-4	48X48	16.00						ONE LANE ROAD AHEAD
W020-5	48X48	16.00	4	64				RIGHT/CENTER/LEFT LANE CLOSED AHEAD
W020-5a	48X48	16.00						2 RIGHT/CENTER/LEFT LANES CLOSED AHEAD
W020-6a	48X48	16.00	4	64				RIGHT/CENTER/LEFT LANE CLOSED
W020-7a	48X48	16.00						FLAGGER (SYMBOL, WITH FLAGS)
W021-2	36X36	9.00	2	18				FRESH OIL
W021-5	48X48	16.00	6	96				SHOULDER WORK AHEAD & 5a/b (__ SHOULDER CLOSED AHEAD)
W022-1	48X48	16.00						BLASTING ZONE AHEAD
W022-2	42X36	10.50						TURN OFF 2-WAY RADIO AND PHONE
W022-3	42X36	10.50						END BLASTING ZONE
G022-1	21X15	2.19						WET PAINT (ARROW PIVOTS)

SIGN	SIZE IN.	AREA SQ.FT.	QTY EACH	TOTAL SQ.FT.	QTY RELOC EACH	TOTAL RELOC SQ.FT.	SIGN NUM.	DESCRIPTION
GUIDE SIGNS								
E05-1	36X48	12.00						GORE EXIT
E05-2	48X36	12.00						EXIT OPEN
E05-2a	48X36	12.00						EXIT CLOSED
G020-1	60X24	10.00						ROAD WORK NEXT XX MILES
G020-2	48X24	8.00	4	32				END ROAD WORK
G020-4	36X18	4.50						PILOT CAR FOLLOW ME
G020-4a	42X30	8.75						PILOT CAR IN USE WAIT & FOLLOW
G020-4a	18X12	1.50						PILOT CAR IN USE WAIT & FOLLOW
G020-5aP	36X24	6.00	12	72				WORK ZONE (PLAQUE)
M04-8a	24X18	3.00	8	24				END DETOUR
M04-9L	48X36	12.00						DETOUR (LEFT ARROW)
M04-9R	48X36	12.00						DETOUR (RIGHT ARROW)
M04-9P	48X12	4.00	4	16				STREET NAME (PLAQUE)
M04-10L	48X18	6.00	4	24				DETOUR (ARROW LEFT)
M04-10R	48X18	6.00	4	24				DETOUR (ARROW RIGHT)
REGULATORY SIGNS								
R1-1	48X48	13.25	3	39.75				STOP
R1-2	48TRI.	6.93						YIELD
R1-2a	36X36	9.00						TO ONCOMING TRAFFIC (PLAQUE)
R1-3P	30X12	2.50						ALL WAY (PLAQUE)
R2-1	36X48	12.00	12	144				SPEED LIMIT XX
R3-1	48X48	16.00	4	64				NO RIGHT TURN (SYMBOL)
R3-2	48X48	16.00	4	64				NO LEFT TURN (SYMBOL)
R3-3	36X36	9.00						NO TURNS
R3-4	48X48	16.00						NO U-TURN (SYMBOL)
R3-7L	30X30	6.25	4	25				LEFT LANE MUST TURN LEFT
R3-7R	30X30	6.25	4	25				RIGHT LANE MUST TURN RIGHT
R4-1	48X30	10.00	1	10				ADVANCED INTERSECTION LANE CTRL
R4-1	36X48	12.00						DO NOT PASS
R4-2	36X48	12.00						PASS WITH CARE
R4-8a	36X48	12.00						KEEP LEFT (HORIZONTAL ARROW)
R4-7a	36X48	12.00						KEEP RIGHT (HORIZONTAL ARROW)
R5-1	30X30	6.25	8	50				DO NOT ENTER
R5-1a	36X24	6.00	4	24				WRONG WAY
R6-1L	54X18	6.75	4	27				ONE WAY ARROW (LEFT)
R6-1R	54X18	6.75	4	27				ONE WAY ARROW (RIGHT)
R6-2L	24X30	5.00						ONE WAY (LEFT)
R6-2R	24X30	5.00						ONE WAY (RIGHT)
R9-9	24X12	2.00	12	24				SIDEWALK CLOSED
R9-11L	24X18	3.00						SIDEWALK CLOSED AHEAD, (ARROW LEFT) CROSS HERE
R9-11R	24X18	3.00						SIDEWALK CLOSED AHEAD, (ARROW RIGHT) CROSS HERE
R10-6	24X36	6.00						STOP HERE ON RED (45^ ARROW)
R11-2	48X30	10.00	14	140				ROAD CLOSED
			14	0				ROAD CLOSED XX MILES AHEAD
R11-3a	60X30	12.50						LOCAL TRAFFIC ONLY
R11-4	60X30	12.50	3	37.5				ROAD CLOSED TO THRU TRAFFIC
CONST-3A	60X48	20.00						FINE SIGN
CONST-3X	56X12	4.67						SPEEDING/PASSING (PLATE)
MISCELLANEOUS SIGNS								
CONST-5	48X36	12.00						POINT OF PRESENCE
CONST-5	96X48	32.00						POINT OF PRESENCE
CONST-7	48X24	8.00						RATE OUR WORK ZONE
CONST-7	72X36	18.00						RATE OUR WORK ZONE
CONST-8	48X36	12.00	8	96				WORK ZONE NO PHONE ZONE
M04-11 50A-G	36X78	19.50	12	234				N291 DETOUR
M04-11 50H-N	36X78	19.50	9	175.5				S291 DETOUR
M04-11 51A-G	36X60	15.00	12	180				US-50 DETOUR
D13-1	60X30	15.00	2	30				HAMBLEN RD

616-10.05 CONSTRUCTION SIGNS	TOTAL
	2945

616-10.10 RELOCATED SIGNS	TOTAL
	0

ITEM NUMBER	TOTAL QTY	DESCRIPTION
6122008		IMPACT ATTENUATOR 40 MPH (SAND BARRELS)
6122009		IMPACT ATTENUATOR 45 MPH (SAND BARRELS)
6122010		IMPACT ATTENUATOR 50 MPH (SAND BARRELS)
6122012		IMPACT ATTENUATOR 55 MPH (SAND BARRELS)
6122014		IMPACT ATTENUATOR 60 MPH (SAND BARRELS)
6122017	4	IMPACT ATTENUATOR 65 MPH (SAND BARRELS)
6122019		IMPACT ATTENUATOR 70 MPH (SAND BARRELS)
6122020	6	REPLACEMENT SAND BARREL
6122030	4	IMPACT ATTENUATOR (RELOCATION)
61230001	1	TRUCK OR TRAILER MOUNTED ATTENUATOR (TMA)
6161008	10	ADVANCED WARNING RAIL SYSTEM
6161012		BUOYS (BOATS KEEP OUT)
6161013		BUOYS (NO WAKE)
6161014		SPECIAL SIGN ASSEMBLY (BOATS KEEP OUT)
6161025	400	CHANNELIZER (TRIM LINE)
6161030	48	TYPE III MOVEABLE BARRICADE
6161033		DIRECTION INDICATOR BARRICADE
6161040	2	FLASHING ARROW PANEL
6161047		TYPE III OBJECT MARKER
6161055		SEQUENTIAL FLASHING WARNING LIGHT
6161070		TUBULAR MARKER
6161095		RADAR SPEED ADVISORY SYSTEM
6161096		CHANGEABLE MESSAGE SIGN, COMMISSION FURNISHED/RETAINED
		CHANGEABLE MESSAGE SIGN W/O COMM.
6161098A		INTERFACE - CONTRACTOR FURNISHED/RETAINED
	4	CHANGEABLE MESSAGE SIGN WITH COMM.
6161099		INTERFACE - CONTRACTOR FURNISHED/RETAINED
6162000A		WORK ZONE TRAFFIC SIGNAL SYSTEM
6162002	4	TEMPORARY LONG-TERM RUMBLE STRIPS
	6200	TEMPORARY TRAFFIC BARRIER
6173600D		CONTRACTOR FURNISHED/RETAINED
		TEMPORARY TRAFFIC BARRIER
6173602B		CONTRACTOR FURNISHED/COMMISSION RETAINED
		TEMP. TRAFFIC BARRIER HEIGHT TRANSITION
6177000B		COMMISSION FURNISHED/RETAINED
6208064A		TEMPORARY RAISED PAVEMENT MARKER
9029400	1	TEMPORARY TRAFFIC SIGNALS
9029401		TEMPORARY TRAFFIC SIGNALS AND LIGHTING

SUMMARY OF QUANTITIES
SHEET 18 OF 18

STATE OF MISSOURI
JEREMY SCOTT STRETZ
NUMBER PE-2011022259
PROFESSIONAL ENGINEER
Jeremy Stretz 2025.02.28 22:46:43-06'00'

DATE PREPARED 2/28/2025
ROUTE 50/291 | STATE MO
DISTRICT KC | SHEET NO. 3
COUNTY JACKSON
JOB NO. J4P3196
FEDERAL PROJECT NO. STB-3001(009)
PROJECT NO.
BRIDGE NO.

DESCRIPTION | DATE

MISSOURI HIGHWAYS AND TRANSPORTATION COMMISSION
105 WEST CAPITOL
JEFFERSON CITY, MO 65102
1-888-ASK-MODOT (1-888-275-6636)

LEE'S SUMMIT MISSOURI

olsson
1301 BURLINGTON ST., STE. 100
NORTH KANSAS CITY, MO 64116
PHONE: 816.361.1177
CERT. OF AUTHORITY NO. 001592

IF A SEAL IS PRESENT ON THIS SHEET IT HAS BEEN ELECTRONICALLY SEALED AND DATED.

SEE SHEETS 20-26 FOR
RIGHT-OF-WAY SHEETS

SE 1/4, NW 1/4
8-47N-31W

℄ BLUE_PKWY_W
PI 718+20.85
PC 715+98.76
PT 720+42.58
Δ 5°39'3.2" (LT)
D 1°16'23.7"
L 443.82' (ARC)
T 222.09'
R 4,500.00'

℄ BLUE_PKWY_W
PI 722+93.05
PC 720+42.58
PT 724+90.14
Δ 64°6'27.5" (LT)
D 14°19'26.2"
L 447.56' (ARC)
T 250.47'
R 400.00'

℄ BLUE_PKWY_W
PI 727+74.83
PC 724+90.14
PT 729+84.98
Δ 70°52'52.0" (RT)
D 14°19'26.2"
L 494.84' (ARC)
T 284.69'
R 400.00'

STA. 717+12.77 ℄ ROUTE 50 RT. TO
STA. 0+95.66 ℄ RAMP_2 RT.
BUILD 87.5' MGS GUARDRAIL, 1 TYPE A CRASHWORTHY
END TERMINAL (MASH), 1 MGS END ANCHOR

(01)
LEES SUMMIT SCHOOL
DIST R-7
SEE SHEET 25

STA. 722+85.63, ℄ ROUTE_50
SKEWED 11°29'08" R.A.
24"X234' GROUP A PIPE (24")
2-24" GROUP A F.E.S.

℄ RAMP_1
PI 2+80.10
PC 0+00.00
PT 5+57.44
Δ 13°56'9.3" (LT)
D 2°30'0.0"
L 557.44' (ARC)
T 280.10'
R 2,291.83'

SW 1/4, NE 1/4
8-47N-31W

LAND SURVEY MAG NAIL AND WASHER
OVER 30"COPPER WELD PLATE
AT THE NORTH QUARTER CORNER OF SECTION 8-T47N-R31W
DOCUMENT NO. 600-105606, 2729.59' N00°55'05"E
TO BEGINNING OF PROJECT

PROJECT BEGINS AT A POINT APPROX.
2729.24' SOUTH AND 43.73' EAST OF THE
NORTH QUARTER CORNER SEC. 8-T47N-R31W

BARTEK GROUP
905 LLC

DILL KEVIN S
& DIANA L-
TRUSTEES

DILL FAMILY
TRUST

(11)
WAGGONER JAMES GILBERT
SR & DARLENE TRTE
SEE SHEET 24

BROWNING STREET

GRACE COVENANT
CHURCH

1/4 SECTION LINE

SEE SHEETS 13AND 14 FOR
BLUE PKWY W IMPROVEMENTS

710 715 720 725

EXIST. MODOT R/W
EXIST. UTILITY ESM'T
TEMP. CONST. ESM'T
TEMP. WATERLINE ESM'T
TEMP. CONST. ESM'T
S.L.
(R) ENTRANCE
(R) TREES
NEW R/W
PERM. DRAINAGE ESM'T
DETENTION BASIN
PC STA 715+98.76
PCC STA 720+42.58
PRC STA 724+90.14
S87°46'17"E
(U.I.P.)
(R)
1/4 SECTION LINE
STA 0+00.00 ℄ RAMP 1=
STA 718+79.00, OFF 40.98' LT.
℄ ROUTE 50
+70.00 43.94'
+49.99 48.94'
+62.47 48.96'
R 2287.83'
+70.00 201.07'
SPECIAL DITCH LT
FES 722F1
FES 722F1
PERM. DRAINAGE ESM'T
EX EOS
EX C&G
EOP
EOS
R 2311.83'
R 2315.83'
BEGIN PROJECT
STA 716+70.00
℄ ROUTE_50
S88°21'19"E
SAWCUT
EX EOS
℄ RAMP_1
℄ RAMP_2
R 2856.79'
R 2864.79'
R 2888.79'
R 2892.79'
+05.70 57.33'
+91.65 50.90'
+83.35 39.35'
+39.07 8.00'
+17.67 28.00'
+17.57 8.00'
+88.86 8.00'
SP. DITCH RT.
(R&R) BY OTHERS
S.L.
PT STA. 4+39.07
FES 723F1
ROCK LINING
S79°38'37"E
MATCHLINE STA. 724+00.00

SEE SHEETS 18-19 FOR
OLDHAM PKWY IMPROVEMENTS

EXIST. MODOT R/W

DEROUSEE
EVERETT
& MARLENE
- TRUSTEES

WELKER
VENTURES LLC

LEE NICHOLAS
A & LAMISON
AMANDA M

THE DAVID BRIAN
ARNETT REV LVG
TRUST

NE 1/4, SW 1/4
8-47N-31W

MSE PROPERTY
HOLDINGS
GROUP, LLC

KGP
PROPERTIES
LLC

ASSOCIATED
HOLDINGS LLC

PREMIER
INDUSTRIES INC

NW 1/4, SE 1/4
8-47N-31W

NEW TKG-
STORAGEMART
PARTNERS
PORTFLCC

KGP PROPERTIES
501 LLC

VENTURE INDUSTRIAL
PRODUCTS INC

THE BLUE ADVERTISING SIGNS
(GAS, FOOD, LODGING)
WILL BE REMOVED AND INSTALLED
BY OTHERS (TYP.)

℄ OLDHAM_PKWY
PI 717+35.05
PC 712+58.00
PT 721+98.67
Δ 23°31'0.0" (RT)
D 2°30'0.0"
L 940.67' (ARC)
T 477.05'
R 2,291.84'

℄ RAMP_2
PI 2+19.96
PC 0+00.00
PT 4+39.07
Δ 8°46'52.7" (RT)
D 2°0'0.0"
L 439.07' (ARC)
T 219.96'
R 2,864.79'
SE 5.20%

PT STA 721+98.67
℄ OLDHAM_PKWY
S69°14'59"E
EXIST. MODOT R/W

STA 0+00.00 ℄ RAMP 2=
STA 717+70.34, OFF 53.65' RT.
℄ ROUTE 50
+70.00 55.25'

SCALE
0 50 100 150

GENERAL NOTE:
THE APPROXIMATE LOCATION OF PROPERTY LINES AS SHOWN ON THE PLANS ARE BASED ON THE BEST INFORMATION AVAILABLE TO THE COMMISSION AT THIS TIME. THIS INFORMATION IS PROVIDED BY THE COMISSION "AS-IS" AND THE COMMISSION EXPRESSLY DISCLAIMS ANY REPRESENTATION OR WARRANTY AS TO THE COMPLETENESS, ACCURACY, OR SUITABILITY OF THE INFORMATION FOR ANY USE.

RIGHT OF WAY LIMITS FOR THIS PROJECT EXTEND FROM STA. 172+01.54 TO STA. 186+57.30, ROUTE 291, A DISTANCE OF 0.28 MILES, AND FROM STA. 721+07.45 TO STA. 738+29.31, BLUE PARKWAY, A DISTANCE OF 0.33 MILES.

PERMANENT EASEMENT LIMITS FOR THIS PROJECT EXTEND FROM STA. 169+70.36 TO STA. 184+62.75, ROUTE 291, A DISTANCE 0F 0.28 MILES, AND FROM STA. 720+41.12 TO STA. 745+13.17, BLUE PARKWAY, A DISTANCE OF 0.47 MILES.

TEMPORARY EASEMENT LIMITS FOR THIS PROJECT EXTEND FROM STA. 172+17.85 TO STA. 186+87.20, ROUTE 291, A DISTANCE OF 0.28 MILES, AND FROM STA. 7711+64.31 TO STA. 745+18.22, BLUE PARKWAY, A DISTANCEE OF 0.64 MILES.

ANY WORK INDICATED ON THE PLANS THAT EXTENDS BEYOND THE PROJECT LIMITS IS CONSIDERED INCIDENTAL TO AND A PART OF THE CONSTRUCTION OF THIS PROJECT.

ALL BEARINGS ARE BASED ON STATE PLANE BEARINGS, WEST ZONE.

PLAN SHEET
SHEET 1 OF 16

Reid Catt
2025.03.01 21:25:30-06'00'

REID BRENNEN CATT-ENGINEER
MO# PE-2010019516

DATE PREPARED
2/28/2025

ROUTE	STATE
50/291	MO
DISTRICT	SHEET NO.
KC	4

COUNTY
JACKSON

JOB NO.
J4P3196

FEDERAL PROJECT NO.
STB-3001(009)

PROJECT NO.

BRIDGE NO.

DESCRIPTION	DATE

IF A SEAL IS PRESENT ON THIS SHEET IT HAS BEEN ELECTRONICALLY SEALED AND DATED.

MISSOURI HIGHWAYS AND TRANSPORTATION COMMISSION
105 WEST CAPITOL
JEFFERSON CITY, MO 65102
1-888-ASK-MODOT (1-888-275-6636)

LEE'S SUMMIT MISSOURI

olsson
1301 BURLINGTON ST., STE. 100
NORTH KANSAS CITY, MO 64116
PHONE: 816.361.1177
CERT. OF AUTHORITY NO. 001592

F:\2021\04501-05000\021-04786\40-Design\Microstation\J4P3196\plan_sheets\4 Plan Profile\004_PP_01_J4P3196_I50_RTE50.dgn 3:48:47 PM 2/28/2025

STA. 2+36.50 TO STA. 3+41.63 ℄ RAMP_3 RT
BUILD 37.5' MGS GUARDRAIL, 1 TYPE A CRASHWORTHY
END TERMINAL (MASH), 1 MGS END ANCHOR

STA. 724+64.41 TO STA. 730+03.81 ℄ ROUTE_50 RT
BUILD 475' MGS GUARDRAIL, (8 FT. POSTS) 1 TYPE A CRASHWORTHY
END TERMINAL (MASH), 1 MGS END ANCHOR

STA. 726+70.32 TO STA. 732+09.78 ℄ ROUTE_50 LT
BUILD 475' MGS GUARDRAIL, (8 FT. POSTS) 1 TYPE A CRASHWORTHY
END TERMINAL (MASH), 1 MGS END ANCHOR

℄ 291_NORTH	
PI	464+42.04
PC	463+70.00
PT	465+14.07
Δ	0°14'24.4" (LT)
D	0°10'0.0"
L	144.07' (ARC)
T	72.04'
R	34,377.47'

℄ RAMP_3	
PI	3+84.05
PC	2+26.78
PT	5+40.08
Δ	12°31'55.1" (RT)
D	4°0'0.0"
L	313.30' (ARC)
T	157.28'
R	1,432.39'

℄ RAMP_3	
PI	8+99.93
PC	7+11.37
PT	10+87.11
Δ	11°57'36.3" (LT)
D	3°10'59.2"
L	375.74' (ARC)
T	188.55'
R	1,800.00'

INLET 726S2L, ℄ ROUTE_50
STA. 726+47.00, 57.92' LT
1-5X3 TYPE S2 INLET
1-24" PIPE OPENING

INLET 727S2L, ℄ ROUTE_50
STA. 726+97.99, 47.67' LT
1-5X3 TYPE S2 INLET
2-24" PIPE OPENINGS

INLET 729S2L, ℄ ROUTE_50
STA. 729+73.06, 47.88' LT
1-5X3 TYPE S2 INLET
2-24" PIPE OPENINGS

INLET 731S2L, ℄ ROUTE_50
STA. 731+48.50, 58.15' LT
1-5X3 TYPE S2 INLET
2-24" PIPE OPENINGS

INLET 734S1L, ℄ ROUTE_50
STA. 734+48.50, 58.15' LT
1-5X3 TYPE S1 INLET
2-24" PIPE OPENINGS

MH 735M2, ℄ ROUTE_50
STA. 735+30.00, 56.00' LT.
1-72" DIA. MANHOLE
1-21",1-24", 2-36" PIPE OPENINGS

FES 7F1, ℔ RAMP_3
STA. 7+00.25, 33.64' LT.
1-36" GROUP A F.E.S.

℄ ROUTE_50	
PI	735+51.00
PC	734+01.25
PT	737+00.75
Δ	0°29'57.0" (RT)
D	0°10'0.0"
L	299.50' (ARC)
T	149.75'
R	34,377.47'

SW 1/4, NE 1/4
8-47N-31W

EXIST. MODOT R/W

02
OFFICE OF ADMINISTRATION
STATE OF MISSOURI
SEE SHEET 25

℄ RTE_291_BL
(SEE SHEETS 10 TO 12 FOR DETAILS)

1/4 1/4 SECTION LINE

S02°22'19"W

PT STA A 465+14.07

STA. 179+08.56 ℔ RTE_291_BL =
STA. 467+04.16 ℄ 291_NORTH
STA. 0+00.00 ℔ RAMP_3
STA. 9+75.28 ℔ RAMP_1

PC STA 2+26.78

SE 1/4, NE 1/4
8-47N-31W

PT STA. 5+57.44
PC STA. 5+93.33
PT STA 8+72.08

EXISTING MODOT R/W

℄ BLUE_PKWY_E
(SEE SHEET 15 FOR DETAILS)

CROSS DEVELOPMENT CC

NEW R/W

SP. DITCH LT.

PT STA 5+40.08

S.L.

℔ RAMP_1

S88°25'30"E

℔ RAMP_3

S75°53'35"E

N77°38'21"E

FENCE
INLET 179A2
8" CONC. MEDIAN

TYPE H BARRIER
INLET 726S2L
MSE WALL A9329

INLET 727S2L
INLET 729S2L
INLET 731S2L
INLET 734S1L

1/4 SECTION LINE

FES 180F1

SP. DITCH LT.

FES 7F1

PC STA 7+11.37
ROCK LINING

DETENTION BASIN

MH 735M2

MATCHLINE STA. 724+00.00

MATCHLINE STA. 738+00.00

+99.50 PVMT. CROSS DRAIN

PT STA 728+42.95

STA. 728+45.06 ℄ ROUTE_50=
STA. 180+60.65 ℔ RTE 291 BL

℄ ROUTE_50

PC STA 734+01.25

+50.00 PVMT. CROSS DRAIN

ROUTE 50

PT STA 737+00.75

S88°21'19"E

S87°51'11"E

STA. 728+42.95 ℄ ROUTE 50 =
STA. 468+56.16 ℄ 291_NORTH
STA. 468+56.16 ℄ HAMBLEN_ROAD

+74.56 PVMT. CROSS DRAIN ℄ 291_NORTH

24" LONG X 3" TALL BLOCKOUT IN THE BASE OF THE PARAPET WALL. FIELD CUT REINFORCING TO PROVIDE 1 1/2" MIN. CLEARANCE TO FORMED BLOCKOUT.

INLET 726S1R
INLET 726S2R
INLET 729S2R
INLET 734S1R
INLET 736S1

MSE WALL A9330
INLET 181A2
INLET 181A1
INLET 181S1
FES 729F1

PT STA 10+25.13

PC STA 0+88.34

PT STA 2+77.11

SP. DITCH RT.

℄ HAMBLEN_ROAD

℔ ROUTE 291_BL

℔ RAMP_4

OVERHEAD SIGN TRUSS (R)

S79°38'37"E

N84°01'27"E

℔ RAMP_2

S88°25'30"E

8" CONC. MEDIAN

FES 8F1

S.L.

SP. DITCH RT.

EXISTING MODOT R/W

PC STA. 8+49.51

PC STA 8+58.71

STA. 182+22.57 ℔ RTE_291_BL =
STA. 10+82.00 ℔ RAMP_2
STA. 0+00.00 ℔ RAMP_4
STA. 184+24.49 ℔ RTE_291_BL =
STA. 472+20.00 ℄ HAMBLEN_ROAD
STA. 728+73.59 ℄ OLDHAM_PKWY

EXIST. WATERLINE & UTILITY ESM'T

TRIDENT LEE'S SUMMIT LLC

EXIST. WATERLINE EASEMENT

EXIST. PHONE EASEMENT

PERM. WATERLINE ESM'T

EXIST. UTILITY ESM'T

MH 735M1, ℄ ROUTE_50
STA. 735+30.00, 59.00' RT.
1-72" DIA. MANHOLE
1-24", 1-36" PIPE OPENINGS

INLET 736S1, ℄ ROUTE_50
STA. 736+82.00, 53.18' RT.
1-5X3 TYPE S1 INLET
1-18" PIPE OPENING

FES 8F1, ℔ RAMP_4
STA. 8+44.48, 14.30' RT.
1-18" GROUP A F.E.S.

NE 1/4, SE 1/4
8-47N-31W

TRIDENT LEE'S SUMMIT LLC

PC STA 725+02.10

PT STA 728+08.20

℄ OLDHAM_PKWY

S69°14'59"E

S87°36'59"E

℄ OLDHAM_PKWY	
PI	726+56.47
PC	725+02.10
PT	728+08.20
Δ	18°22'0.0" (LT)
D	6°0'0.8"
L	306.10' (ARC)
T	154.37'
R	954.89'

℔ RAMP_4	
PI	1+82.86
PC	0+88.34
PT	2+77.11
Δ	7°33'3.0" (LT)
D	4°0'0.0"
L	188.77' (ARC)
T	94.52'
R	1,432.39'
SE	4.80%

℔ RAMP_4	
PI	9+94.33
PC	8+58.71
PT	11+29.49
Δ	8°7'21.8" (RT)
D	2°59'59.2"
L	270.78' (ARC)
T	135.62'
R	1,910.00'
SE	6.80%

SCALE
0 50 100 150

03
WRIGHT DONALD K & BARBARA G-TRUSTEES
SEE SHEET 21

INLET 729S2R, ℄ ROUTE_50
STA. 729+73.06, 58.03' RT
1-5X3 TYPE S2 INLET
2-24" PIPE OPENINGS

INLET 731S2R, ℄ ROUTE_50
STA. 731+48.50, 68.35' RT
1-5X3 TYPE S2 INLET
2-24" PIPE OPENINGS

DUTT KRUPA HOTEL LLC & DEVOM HOTEL LLC

NE 1/4, SE 1/4
8-47N-31W

℔ RAMP_2	
PI	9+37.49
PC	8+49.51
PT	10+25.13
Δ	8°46'52.7" (LT)
D	4°59'59.9"
L	175.63' (ARC)
T	87.99'
R	1,145.92'
SE	5.60%

INLET 734S1R, ℄ ROUTE_50
STA. 734+48.50, 68.35' RT.
1-5X3 TYPE S1 INLET
2-24" PIPE OPENINGS

INLET 726S1R, ℄ ROUTE_50
STA. 726+47.00, 68.54' RT
1-5X3 TYPE S2 INLET
1-24" PIPE OPENING

INLET 726S2R, ℄ ROUTE_50
STA. 726+98.12, 58.21' RT
1-5X3 TYPE S2 INLET
2-24" PIPE OPENINGS

EXISTING MODOT R/W

SEE SHEETS 18-19 FOR OLDHAM PKWY IMPROVEMENTS

NW 1/4, SE 1/4
8-47N-31W

SEE SHEETS 20-26 FOR RIGHT-OF-WAY SHEETS

PLAN SHEET
SHEET 2 OF 16

Reid Catt
2025.03.31 11:18:50-05'00'

REID BRENNEN CATT-ENGINEER
MO# PE-2010019516

DATE PREPARED
3/24/2025
ROUTE: 50/291 — STATE: MO
DISTRICT: KC — SHEET NO.: 5
COUNTY: JACKSON
JOB NO.: J4P3196
FEDERAL PROJECT NO.: STB-3001(009)
PROJECT NO.
BRIDGE NO.

NO.	DESCRIPTION	DATE

IF A SEAL IS PRESENT ON THIS SHEET IT HAS BEEN ELECTRONICALLY SEALED AND DATED.

MISSOURI HIGHWAYS AND TRANSPORTATION COMMISSION
105 WEST CAPITOL
JEFFERSON CITY, MO 65102
1-888-ASK-MODOT (1-888-275-6636)

LEE'S SUMMIT MISSOURI

olsson
1301 BURLINGTON ST., STE. 100
NORTH KANSAS CITY, MO 64116
PHONE: 816.361.1177
CERT. OF AUTHORITY NO. 001592

F:\2021\04501-05000\021-04786\40-Design\Microstation\J4P3196\plan_sheets\4 Plan Profile\005_PP_02_J4P3196_I50_RTE50.dgn 1:30:38 PM 3/24/2025

℄ RAMP_3
PI 8+99.93
PC 7+11.37
PT 10+87.11
Δ 11°57'36.3" (LT)
D 3°10'59.2"
L 375.74' (ARC)
T 188.55'
R 1,800.00'

SE 1/4, NE 1/4
8-47N-31W

14
BAKER ANGLER PROPERTIES LLC
SEE SHEET 21

CROSS DEVELOPMENT CC

TEMPORARY EASEMENT (CONST.)

PERMANENT WATERLINE EASEMENT

℄ BLUE_PKWY_E
(SEE SHEET 15 FOR DETAILS)

FES 740F1, ℄ ROUTE_50 STA. 740+77.67, 105.48' LT.,
TO FES 740F2, ℄ ROUTE_50 STA. 740+95.96, 113.58' LT.,
36"X20' GROUP A PIPE (36")
2-36" GROUP A F.E.S.

CRB INSUSTRIES LLC

L TRES LLC

MIDWEST COMMERCIAL INVEST LLC

WEBER PROPERTIES LLC

EXISTING MODOT R/W

BLUE PARKWAY

740

745

750

END STA 743+75.11

PT STA 10+87.11 ℄ RAMP 3=
STA 739+20.37, OFF 42.15' LT.
℄ ROUTE 50

FES 740F2

DETENTION POND

FES 740F1

SAWCUT

+20.51
50.15'

20.54
50.15'

+20.37
38.36'

(R&R) BY OTHERS

U.I.P.

1/4 SECTION LINE

END STA 751+91.06

END PROJECT
STA 749+17.06

END FULL DEPTH PAVEMENT
STA. 740+02.47

℄ ROUTE 50

S87°51'11"E

N90°00'00"E

MATCHLINE STA. 738+00.00

℄ RAMP_3

℄ RAMP_4

EX C&G
EX EOP
EOS
EOP
SAWCUT

+68.78
60.35'

+20.00
60.35'

+88.77
60.35'

+88.77
49.65'

SP. DITCH RT.

S.L.

PT STA 11+29.48 ℄ RAMP 4=
STA 739+68.77, OFF 52.35' RT.
℄ ROUTE 50

OLDHAM PARKWAY

EXISTING MODOT R/W

NE 1/4, SE 1/4
8-47N-31W

10

TRIDENT LEE'S SUMMIT LLC

WRL INVESTMENTS LP

℄ RAMP_4
PI 9+94.33
PC 8+58.71
PT 11+29.49
Δ 8°7'21.8" (RT)
D 2°59'59.2"
L 270.78' (ARC)
T 135.62'
R 1,910.00'

SEE SHEETS 20-26 FOR
RIGHT-OF-WAY SHEETS

SCALE
0 50 100 150

PLAN SHEET
SHEET 3 OF 16

Reid Catt
2025.03.01 21:25:52-06'00'

REID BRENNEN CATT
NUMBER
PE-2010019516

REID BRENNEN CATT-ENGINEER
MO# PE-2010019516

DATE PREPARED
2/28/2025

ROUTE	STATE
50/291	MO
DISTRICT	SHEET NO.
KC	6

COUNTY
JACKSON

JOB NO.
J4P3196

FEDERAL PROJECT NO.
STB-3001(009)

PROJECT NO.

BRIDGE NO.

DESCRIPTION

DATE

I.F. A SEAL IS PRESENT ON THIS SHEET, IT HAS BEEN ELECTRONICALLY SEALED AND DATED.

MISSOURI HIGHWAYS AND TRANSPORTATION COMMISSION
105 WEST CAPITOL
JEFFERSON CITY, MO 65102
1-888-ASK-MODOT (1-888-275-6636)

LEE'S SUMMIT MISSOURI

olsson
1301 BURLINGTON ST., STE. 100
NORTH KANSAS CITY, MO 64116
PHONE: 816.361.1177
CERT. OF AUTHORITY NO. 001592

F:\2021\04501-05000\021-04786\40-Design\Microstation\J4P3196\plan_sheets\4 Plan Profile\006_PP_03_J4P3196_I50_RTE50.dgn 4:23:45 PM 2/28/2025

Reid Catt
2025.03.01 21:26:00-06'00'

REID BRENNEN CATT
NUMBER
PE-2010019516

REID BRENNEN CATT-ENGINEER
MO# PE-2010019516

DATE PREPARED
2/28/2025

ROUTE	STATE
50/291	MO
DISTRICT	SHEET NO.
KC	7

COUNTY
JACKSON

JOB NO.
J4P3196

FEDERAL PROJECT NO.
STB-3001(009)

PROJECT NO.

BRIDGE NO.

IF A SEAL IS PRESENT ON THIS SHEET IT HAS BEEN ELECTRONICALLY SEALED AND DATED.

DESCRIPTION

DATE

MISSOURI HIGHWAYS AND TRANSPORTATION COMMISSION

105 WEST CAPITOL
JEFFERSON CITY, MO 65102
1-888-ASK-MODOT (1-888-275-6636)

LEE'S SUMMIT MISSOURI

olsson
1301 BURLINGTON ST., STE. 100
NORTH KANSAS CITY, MO 64116
PHONE: 816.361.1177
CERT. OF AUTHORITY NO. 001592

PROFILE SHEET
SHEET 4 OF 16

F:\2021\04501-05000\021-04786\40-Design\Microstation\J4P3196\plan_sheets\4 Plan Profile\007_PP_04_J4P3196_I50_RTE50.dgn 3:49:55 PM 2/28/2025

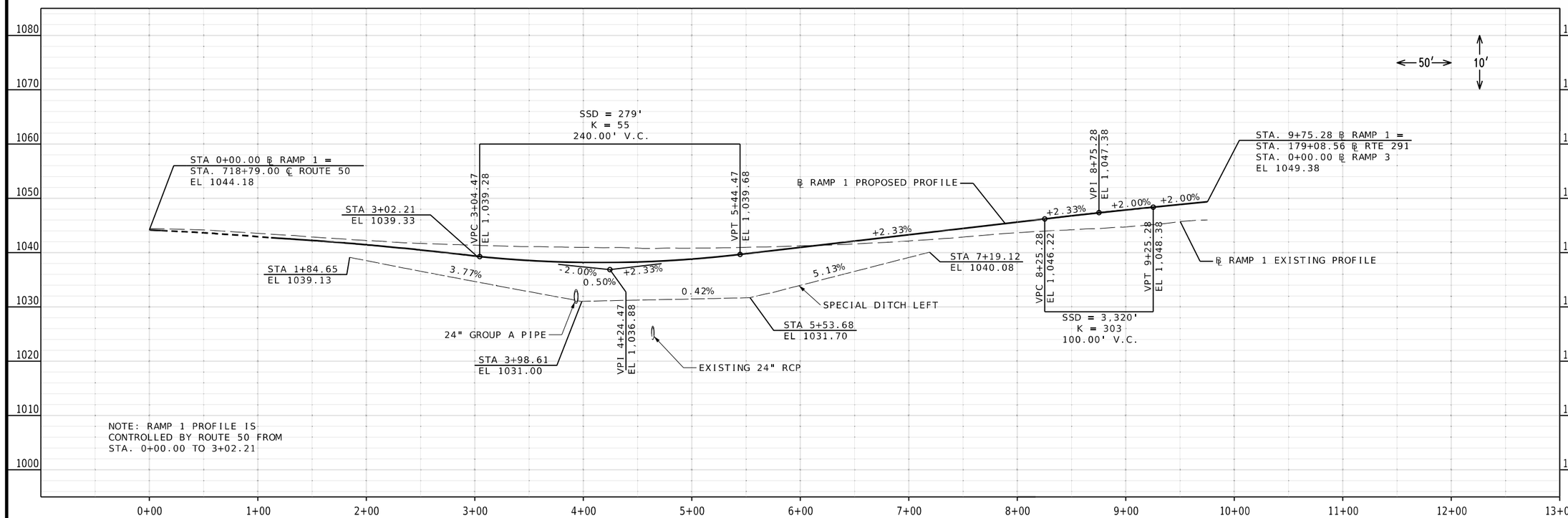

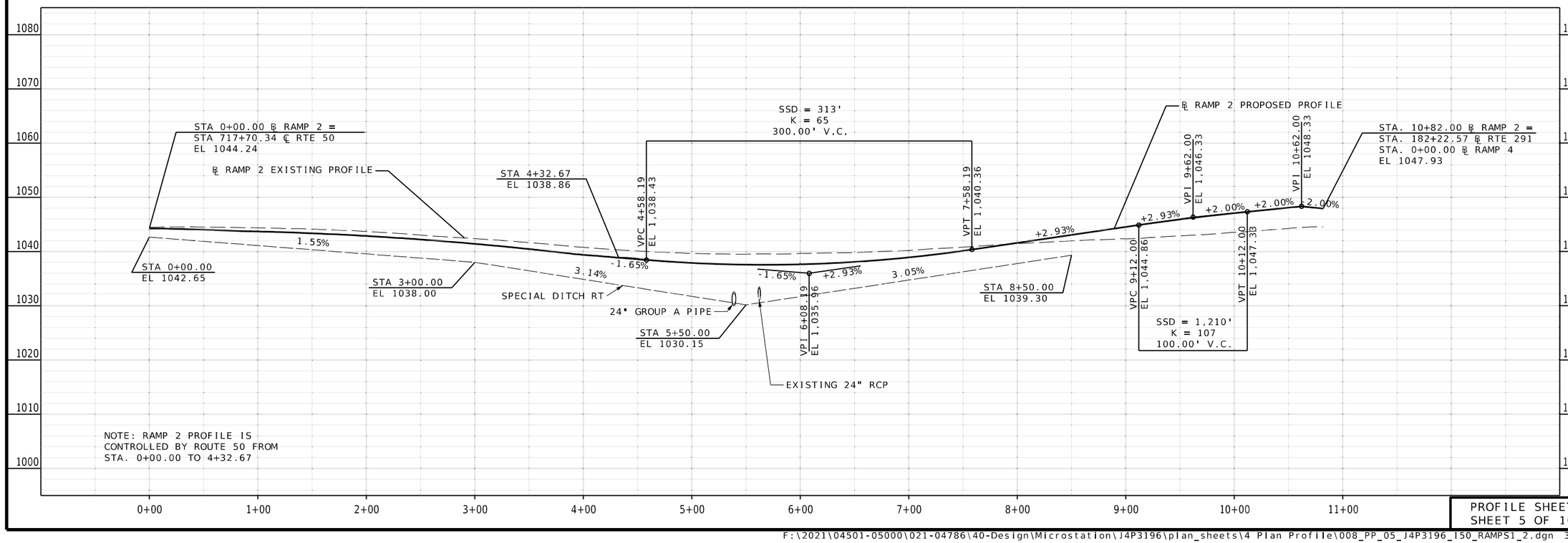

PROFILE SHEET
SHEET 5 OF 16

Reid Catt
2025.03.01 21:26:06-06'00'

REID BRENNEN CATT-ENGINEER
MO# PE-2010019516

DATE PREPARED
2/28/2025

ROUTE	STATE
50/291	MO
DISTRICT	SHEET NO.
KC	8

COUNTY
JACKSON

JOB NO.
J4P3196

FEDERAL PROJECT NO.
STB-3001(009)

PROJECT NO.

BRIDGE NO.

DESCRIPTION	DATE

IF A SEAL IS PRESENT ON THIS SHEET IT HAS BEEN ELECTRONICALLY SEALED AND DATED.

MISSOURI HIGHWAYS AND TRANSPORTATION COMMISSION
105 WEST CAPITOL
JEFFERSON CITY, MO 65102
1-888-ASK-MODOT (1-888-275-6636)

LEE'S SUMMIT MISSOURI

olsson
1301 BURLINGTON ST., STE. 100
NORTH KANSAS CITY, MO 64116
PHONE: 816.361.1177
CERT. OF AUTHORITY NO. 001592

F:\2021\04501-05000\021-04786\40-Design\Microstation\J4P3196\plan_sheets\4 Plan Profile\008_PP_05_J4P3196_I50_RAMPS1_2.dgn 3:50:25 PM 2/28/2025

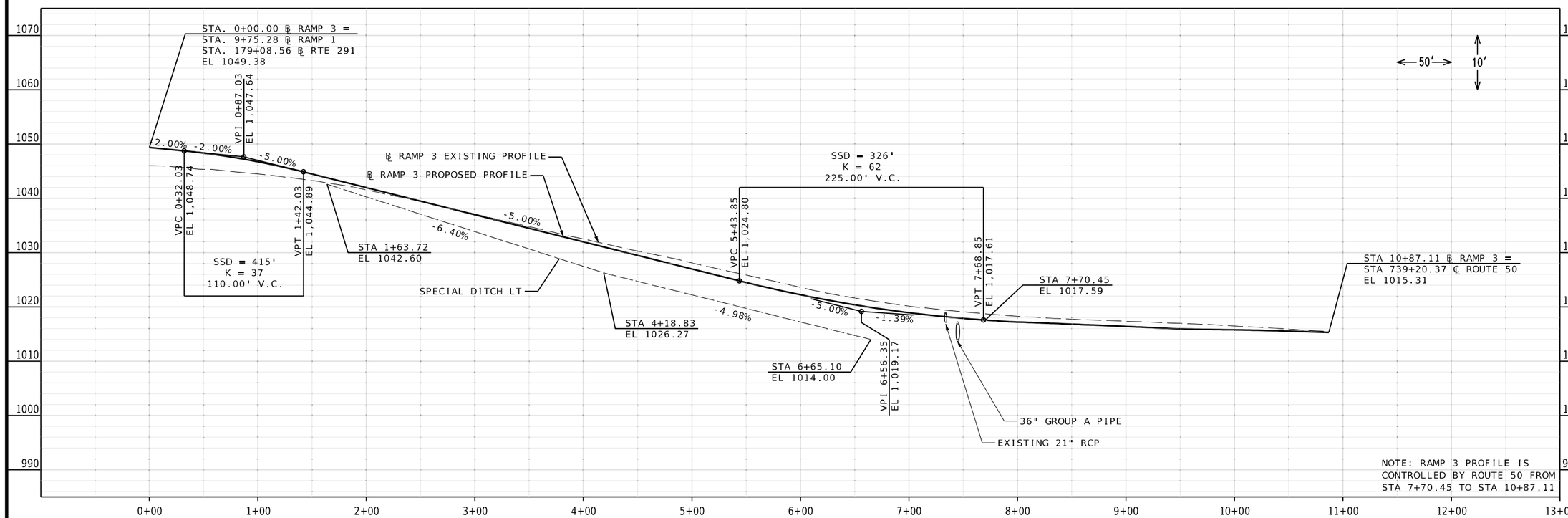

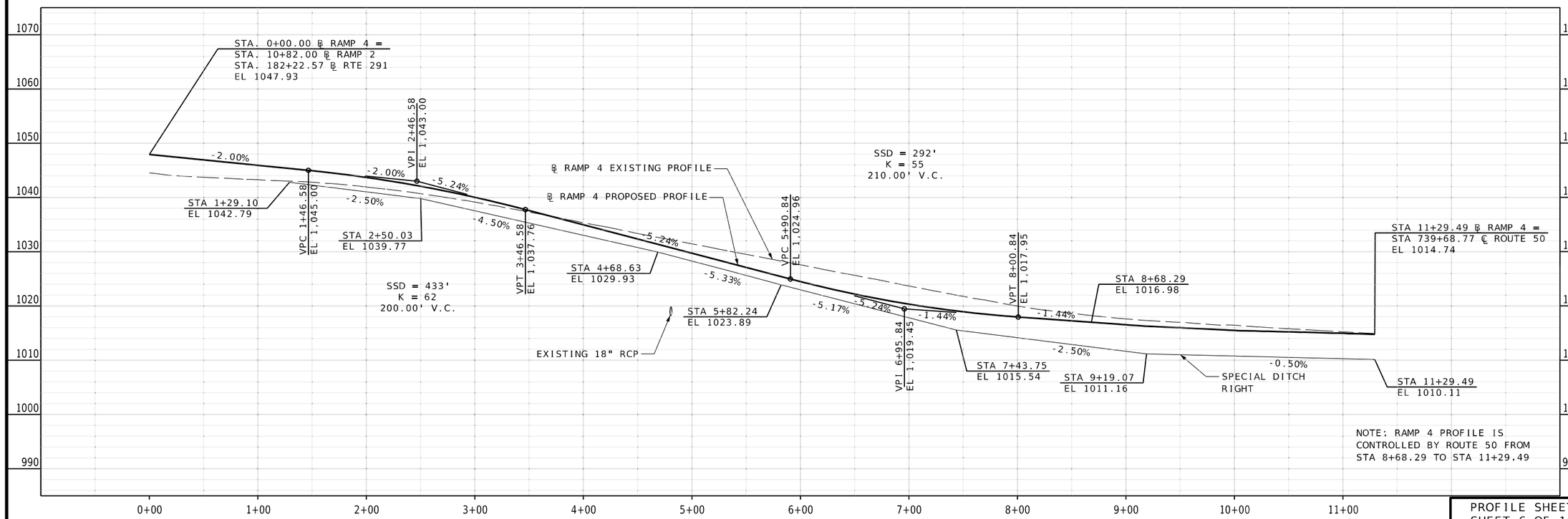

Reid Catt
2025.03.01 21:26:35-06'00'

REID BRENNEN CATT
NUMBER
PE-2010019516

REID BRENNEN CATT-ENGINEER
MO# PE-2010019516

DATE PREPARED
2/28/2025

ROUTE	STATE
50/291	MO
DISTRICT	SHEET NO.
KC	9

COUNTY
JACKSON

JOB NO.
J4P3196

FEDERAL PROJECT NO.
STB-3001(009)

PROJECT NO.

BRIDGE NO.

DESCRIPTION	DATE

IF A SEAL IS PRESENT ON THIS SHEET IT HAS BEEN ELECTRONICALLY SEALED AND DATED.

MISSOURI HIGHWAYS AND TRANSPORTATION COMMISSION

105 WEST CAPITOL
JEFFERSON CITY, MO 65102
1-888-ASK-MODOT (1-888-275-6636)

LEE'S SUMMIT MISSOURI

olsson
1301 BURLINGTON ST., STE. 100
NORTH KANSAS CITY, MO 64116
PHONE: 816.361.1177
CERT. OF AUTHORITY NO. 001592

PROFILE SHEET
SHEET 6 OF 16

F:\2021\04501-05000\021-04786\40-Design\Microstation\J4P3196\plan_sheets\4 Plan Profile\009_PP_06_J4P3196_I50_RAMPS3_4.dgn 3:50:45 PM 2/28/2025

INLET 175T1, ℄ RTE_291
STA. 175+85.75, 55.83' LT.
1-5X3 TYPE T INLET
2-15" PIPE OPENINGS

INLET 176T1, ℄ RTE_291
STA. 176+50.82, 47.09' LT.
1-5X3 TYPE T INLET
2-15" PIPE OPENINGS

INLET 177T1, ℄ RTE_291
STA. 177+05.00, 43.26' LT.
1-5X3 TYPE T INLET
1-15" PIPE OPENING

INLET 731T1, ℄ BLUE_PKWY_E
STA. 731+64.17, 42.17' RT.
1-5X3 TYPE T INLET
1-15", 1-24" PIPE OPENING

NE 1/4, NE 1/4
8-47N-31W

℄ 291_NORTH		℄ RTE_291_BL	
PI	464+42.04	℄ 291_NORTH	
PC	463+70.00	PI	174+97.13
PT	465+14.07	PC	172+75.78
Δ	0°14'24.4" (LT)	PT	177+18.47
D	0°10'0.0"	Δ	0°44'16.2" (LT)
L	144.07' (ARC)	D	0°10'0.0"
T	72.04'	L	442.69' (ARC)
R	34,377.47'	T	221.35'
		R	34,377.47'

BLUE PARKWAY EAST
BLUE PARKWAY WEST
ROUTE 291 NORTH
ROUTE 291 SOUTH
TRAFFIC FLOW DIAGRAM
ESTIMATED • 2045
TRAFFIC VOLUME

LAND SURVEY 3.25" DNR MONUMENT AT THE EAST QUARTER CORNER SEC. 8-T47N-R31W DOCUMENT NO. 600-105613, 1854.41' N42°23'03"W TO BEGINNING OF PROJECT

PROJECT BEGINS AT A POINT APPROX. 1369.74 NORTH & 1250.06 WEST OF THE EAST QUARTER CORNER SEC. 8-T47N-R31W

℄ BLUE_PKWY_E
(SEE SHEET 15 FOR DETAILS)

PREFERRED BANK

701 MELODY LANE OWNER LLC
NO ACQUISITION

CALIFORNIA TIGERS LLC
NO ACQUISITION

CALIFORNIA TIGERS LLC
NO ACQUISITION

QUARTER KING LLC
NO ACQUISITION

06 MAX RE PRE OWNED OF LEES SUMMIT, LLC
SEE SHEET 22

07 QUIKTRIP CORPORATION
SEE SHEET 22

165 SE BAYBERRY LANE

170

175

465

VERITASI SHANE

SE 1/4, NE 1/4
8-47N-31W

ROUTE 291
172+53.40 LT
28.7' WIDTH
NO ENTRANCE PIPE
MATCH EXIST. GRADE

EXIST. INGRESS/EGRESS EASEMENT

EXIST. INGRESS/ EGRESS EASEMENT

EXIST. CITY R/W

SE MELODY LANE

EXIST. MODOT R/W

EXIST. CITY R/W

EXIST. MODOT R/W

BLUE PKWY EAST

EXIST. ℄ BLUE PKWY EAST

EXIST. ELECTRIC EASEMENT

(R) BY OTHERS

EXIST. UTILITY EASEMENT

NEW R/W

TYPE CG-1 C&G

EX C&G

TYPE B C&G

CP #3

CP #4

BEGIN CONSTRUCTION
STA 166+72.50 ℄ RTE_291_BL =
STA 166+72.50 ℄ 291_NORTH

℄ RTE_291_BL ℄ 291_NORTH

PC STA 172+75.78

PCC STA 463+70.00

EQUATION:
STA. 175+74.40 PK =
STA. 463+70.00 AH

MATCHLINE STA. 177+75.00

1/4 1/4 SECTION LINE

S03°06'35"W

S02°22'19"W

INLET 167T1
INLET 169T1
INLET 170T1
INLET 171T1
INLET 172T1
INLET 173T1
INLET 173T2
INLET 175T1
INLET 176T1
INLET 177T1

SAWCUT

END MILL/FILL & WEDGING
STA. 175+00.00

EXISTING MODOT R/W

ROCK LINING

FES 167F1

PERM. RETAINING WALL MAINTENANCE EASEMENT

PERM. WATERLINE ESM'T

MSE WALL KC-0123

174+51.36 ℄ RTE 291 BL =
730+72.47 ℄ BLUE_PKWY_E
730+69.98 ℄ BLUE_PKWY_W

PERM. DRAINAGE ESM'T

PERM. SEWER ESM'T

TEMPORARY EASEMENT (CONST.)

℄ BLUE_PKWY_W
(SEE SHEETS 13 & 14 FOR DETAILS)

01 LEES SUMMIT SCHOOL DIST R-7
SEE SHEET 25

16 MISSOURI DEPARTMENT OF TRANSPORTATION
SEE SHEET 25

02 OFFICE OF ADMINISTRATION STATE OF MISSOURI
SEE SHEET 25

NW 1/4, NE 1/4
8-47N-31W

SW 1/4, NE 1/4
8-47N-31W

1/4 1/4 LINE

INLET 167T1, ℄ RTE_291	FES 167F1, ℄ RTE_291	INLET 169T1, ℄ RTE_291	INLET 170T1, ℄ RTE_291
STA. 167+90.00, 39.25' RT.	STA. 167+86.71, 59.80' RT.	STA. 169+25.00, 39.76' RT.	STA. 170+60.24, 58.72' RT.
1-5X3 TYPE T INLET	1-18" GROUP A F.E.S.	1- 5X3 TYPE T INLET	1-5X3 TYPE T INLET
2-18" PIPE OPENINGS		2-18" PIPE OPENINGS	2-18" PIPE OPENINGS

INLET 171T1, ℄ RTE_291	INLET 172T1, ℄ RTE_291	INLET 173T1, ℄ RTE_291	INLET 173T2, ℄ RTE_291
STA. 171+55.00, 67.04' RT.	STA. 172+40.00, 70.11' RT.	STA. 173+00.00, 71.41' RT.	STA. 173+50.00, 82.57' RT.
1-5X3 TYPE T INLET	1-5X3 TYPE T INLET	1-5X3 TYPE T INLET	1-5X3 TYPE T INLET
1-18", 1-15" PIPE OPENING	2-15" PIPE OPENINGS	2-15" PIPE OPENINGS	1-15" PIPE OPENING

℄ BLUE_PKWY_W	
PI	727+74.83
PC	724+90.14
PT	729+84.98
Δ	70°52'52.0" (RT)
D	14°19'26.2"
L	494.84' (ARC)
T	284.69'
R	400.00'

℄ BLUE_PKWY_E	
PI	733+62.47
PC	731+92.47
PT	735+13.97
Δ	46°3'5.1" (RT)
D	14°19'26.2"
L	321.50' (ARC)
T	170.00'
R	400.00'

SCALE
0 50 100 150

SEE SHEETS 20-26 FOR RIGHT-OF-WAY SHEETS

PLAN SHEET
SHEET 7 OF 16

Reid Catt
2025.03.01 21:26:18-06'00'

REID BRENNEN CATT-ENGINEER
MO# PE-2010019516

DATE PREPARED
2/28/2025

ROUTE	STATE
50/291	MO
DISTRICT	SHEET NO.
KC	10

COUNTY
JACKSON

JOB NO.
J4P3196

FEDERAL PROJECT NO.
STB-3001(009)

PROJECT NO.

BRIDGE NO.

DESCRIPTION

DATE

IF A SEAL IS PRESENT ON THIS SHEET IT HAS BEEN ELECTRONICALLY SEALED AND DATED.

MISSOURI HIGHWAYS AND TRANSPORTATION COMMISSION
105 WEST CAPITOL
JEFFERSON CITY, MO 65102
1-888-ASK-MODOT (1-888-275-6636)

LEE'S SUMMIT MISSOURI

olsson
1301 BURLINGTON ST., STE. 100
NORTH KANSAS CITY, MO 64116
PHONE: 816.361.1177
CERT. OF AUTHORITY NO. 001592

SE¼ NE¼ 8-47N-31W

℄ RAMP 3

SEE SHEETS 5, 6, AND 9 FOR RAMP 3 DETAILS

EXIST. WATERLINE AND UTILITY EASEMENT

FES 729F1, ℄ ROUTE_50
STA. 729+84.45, 68.21' RT.
1-15" GROUP A FES

FES 729F2, ℄ ROUTE_50
STA. 729+84.43, 58.01' LT.
1-15" GROUP A FES

INLET 179DB, ℄ RTE_291_BL
STA. 179+70.82, 33.33' LT.
1-4X2 TYPE A DRAIN BASIN
1-15" PIPE OPENING

INLET 181DB1, ℄ RTE_291_BL
STA. 181+60.48, 33.33' LT.
1-4X2 TYPE A DRAIN BASIN
1-12" PIPE OPENING
2-15" PIPE OPENINGS

INLET 181S1, ℄ RTE_291_BL
STA. 181+60.35, 50.56' LT.
1-3X3 TYPE S-1 INLET
2-15" PIPE OPENINGS

INLET 181DB2, ℄ RTE_291_BL
STA. 181+60.48, 60.67' RT.
1-4X2 TYPE A DRAIN BASIN
1-15" PIPE OPENING

INLET 181TD, ℄ RTE_291_BL
STA. 181+60.48, 38.81' LT.
1-2X10 TRENCH DRAIN
1-12" PIPE OPENING

PAVED APPROACH
STA. 184+77.62 LT
24.2' WIDTH
NO ENTRANCE PIPE
3.36% GRADE
CONCRETE SURFACE

SEE SHEETS 5, 6, AND 9 FOR RAMP 4 DETAILS

INLET 184LS1, ℄ RTE_291_BL
STA. 184+00.00, 50.44' LT.
1-4X4 TYPE LS CURB INLET
1-15" PIPE OPENING

INLET 185LS1, ℄ RTE_291_BL
STA. 185+29.82, 48.59' LT.
1-6X4 TYPE LS CURB INLET
2-15" PIPE OPENINGS

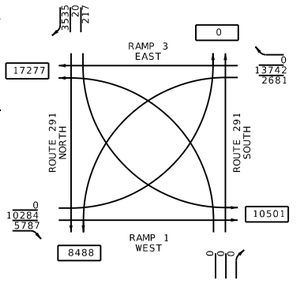

TRAFFIC FLOW DIAGRAM
ESTIMATED - 2045
TRAFFIC VOLUME

EXIST. MODOT R/W

EXIST. ELECTRIC LINE EASEMENT

(03) WRIGHT DONALD K & BARBARA G-TRUSTEES
SEE SHEET 21

EXIST. WATERLINE EASEMENT

EXIST. UTILITY EASEMENT

(09) ALDI INC.
SEE SHEET 23

NE¼ SE¼ 8-47N-31W

EXIST. UTILITY EASEMENT

EXIST. CITY R/W

HD DEVELOPMENT OF MARYLAND INC

NEW R/W

TYPE A GUTTER S.L.

TYPE B C&G

730

180

470

℄ RAMP 4

185

475

℄ OLDHAM PKWY

FES 729F2

FES 729F1

MSE WALL A9329

MSE WALL A9330

PC STA 2+26.78

PT STA 2+77.11

PC STA 0+88.34

POT STA 184+24.49

TEMPORARY EASEMENT (CONST.)

EXIST. INGRESS/EGRESS EASEMENT

EXIST. WATERLINE EASEMENT

PRUNE TREES (NO DIRECT PAY)

EXIST. SAN. SEWER EASEMENT

NEW R/W

POT STA 182+22.57

PERM. WATERLINE EASEMENT S.L.

INLET 185LS1

INLET 181S1

INLET 179DB

INLET 181DB1

INLET 181TD

INLET 184LS1

TYPE CG-1 C&G

EXIST. WATERLINE EASEMENT

POT STA 179+08.56

℄ 291 NORTH

S02°22'19"W

S01°34'30"W

S03°41'33"W ℄ RTE 291_BL

℄ HAMBLEN ROAD

EOP

EOS

SAWCUT

(R)(U.I.P.)

(D.N.D.)

SAWCUT
END CONSTRUCTION
STA 475+17.90 ℄ RTE_291_BL
STA 475+17.90 ℄ HAMBLEN ROAD

S02°25'01"W

¼¼ SECTION LINE

EXIST. CITY R/W

EXIST. SEWER EASEMENT

HAMBLEN ROAD
STA. 186+55.26 RT
40.0' WIDTH
NO ENTRANCE PIPE
4.31% GRADE
8" CONC. PAVED APP.
COMMERCIAL DRIVE

EXIST. UTILITY EASEMENT

EQUATION:
STA 475+17.90 = STA 187+22.39 BK

(08)

PT STA 10+26.13

PT STA 728+08.20

PT STA 8+72.08

BRIDGE A9328

STA. 179+08.56 ℄ RTE_291_BL =
STA. 467+04.16 ℄ 291_NORTH =
STA. 0+00.00 ℄ RAMP_3
STA. 9+75.28 ℄ RAMP_1

STA. 180+60.55 ℄ RTE_291_BL =
STA. 728+45.06 ℄ ROUTE_50

STA. 182+22.57 ℄ RTE_291_BL =
STA. 0+00.00 ℄ RAMP_4
STA. 10+82.00 ℄ RAMP_2

STA. 184+24.49 ℄ RTE_291_BL =
STA. 728+73.59 ℄ OLDHAM_PKWY =
STA. 472+20.00 ℄ HAMBLEN_ROAD

TEMPORARY EASEMENT (CONST.)

(10) ANNEX PROPERTIES LLC
SEE SHEET 23

EXIST. INGRESS/EGRESS EASEMENT

EXIST. UTILITY EASEMENT

EXIST. MODOT R/W

EXIST. UTILITY EASEMENT

SEE SHEET 18 - 19 FOR OLDHAM PKWY DETAILS

NW¼ SE¼ 8-47N-31W

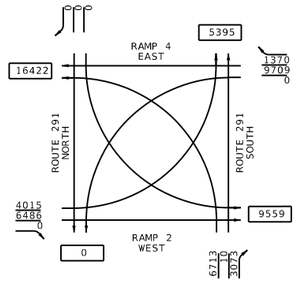

TRAFFIC FLOW DIAGRAM
ESTIMATED - 2045
TRAFFIC VOLUME

SCALE
0 50 100 150

SW¼ NE¼ 8-47N-31W

SEE SHEETS 4, 5, AND 8 FOR RAMP 1 DETAILS

725

℄ ROUTE 50

℄ RAMP 1

℄ RAMP 2

¼ SECTION LINE

EXIST. MODOT R/W

PC STA 9+93.38

PT STA 5+57.44

PC STA 725+02.10

PT STA 8+49.51

SEE SHEETS 4, 5, AND 8 FOR RAMP 2 DETAILS

SEE SHEETS 4 - 7 FOR ROUTE 50 DETAILS

SEE SHEETS 20-26 FOR RIGHT-OF-WAY SHEETS

EXIST BRIDGE NO. A1748
STA. 180+66.09 ℄ RTE_291
CONTINUOUS HOLLOW SLAB
SPANS (31'-44'-44'-31')
(REMOVE)

BRIDGE NO. A9328
STA. 179+98.90 ℄ RTE_291_BL
PRESTRESSED CONCRETE
SPREAD BOX BEAMS SPANS (65'-65')
98'-0" ROADWAY WITH TYPE H BARRIER CURB LT. & RT.
10'-0" TRAIL WITH PEDESTRIAN FENCE

(08) KORNIS ANASTASIA & GEORGE A
SEE SHEET 23

MATCHLINE STA. 177+75.00

Reid Catt
2025.03.01 21:26:42-06'00'

REID BRENNEN CATT-ENGINEER
MO# PE-2010019516

DATE PREPARED
2/28/2025

ROUTE	STATE
50/291	MO
DISTRICT	SHEET NO.
KC	11

COUNTY
JACKSON

JOB NO.
J4P3196

FEDERAL PROJECT NO.
STB-3001(009)

PROJECT NO.

BRIDGE NO.

DESCRIPTION

DATE

IF A SEAL IS PRESENT ON THIS SHEET IT HAS BEEN ELECTRONICALLY SEALED AND DATED.

MISSOURI HIGHWAYS AND TRANSPORTATION COMMISSION
105 WEST CAPITOL
JEFFERSON CITY, MO 65102
1-888-ASK-MODOT (1-888-275-6636)

LEE'S SUMMIT MISSOURI

olsson
1301 BURLINGTON ST., STE. 100
NORTH KANSAS CITY, MO 64116
PHONE: 816.361.1177
CERT. OF AUTHORITY NO. 001592

PLAN SHEET
SHEET 8 OF 16

F:\2021\04501-05000\021-04786\40-Design\Microstation\J4P3196\plan_sheets\4 Plan Profile\011_PP_08_J4P3196_I50_RTE291.dgn 3:51:31 PM 2/28/2025

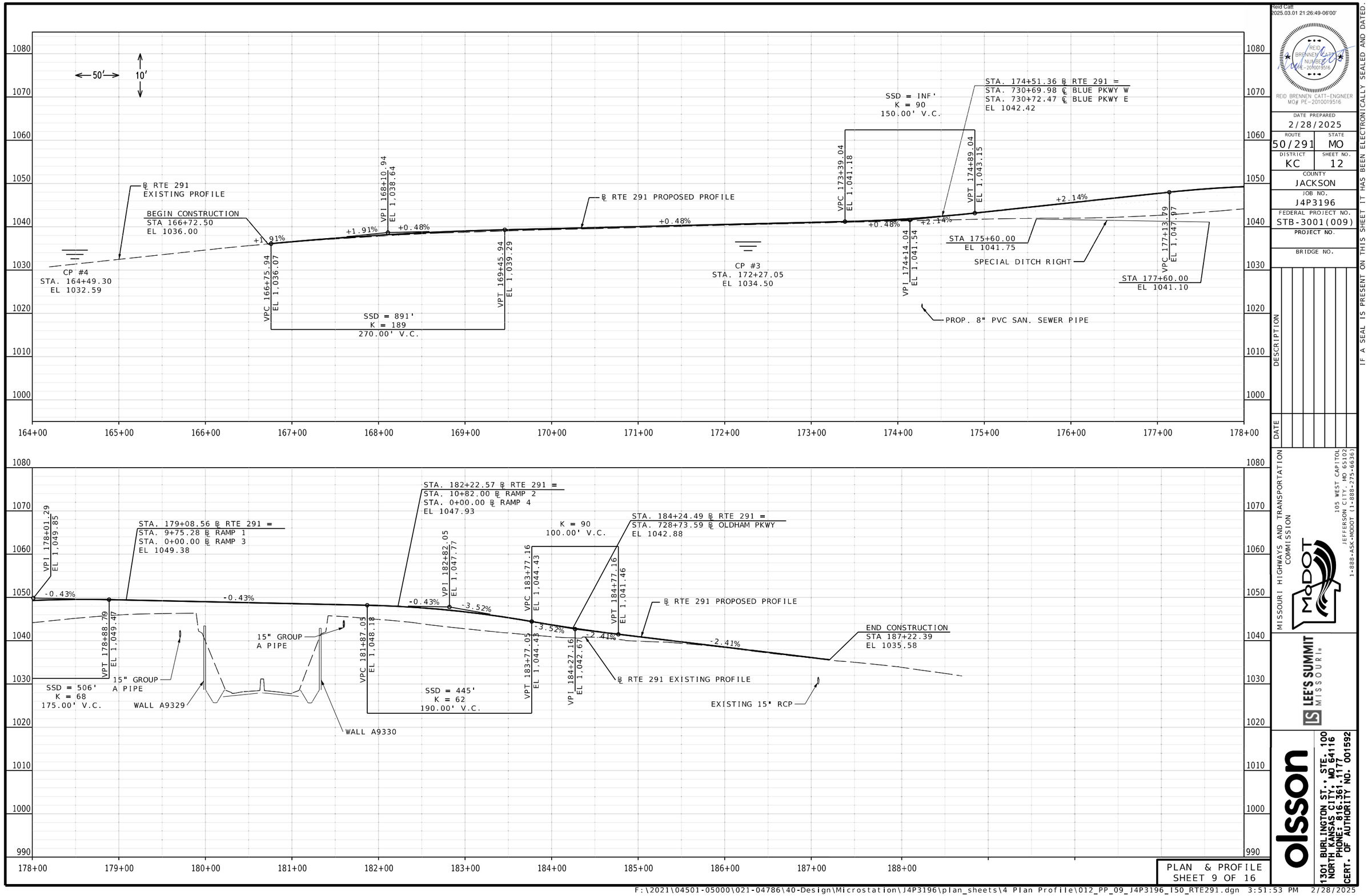

Reid Catt
2025.03.01 21:26:49-06'00'

REID BRENNEN CATT-ENGINEER
MO# PE-2010019516

DATE PREPARED
2/28/2025

ROUTE	STATE
50/291	MO
DISTRICT	SHEET NO.
KC	12

COUNTY
JACKSON

JOB NO.
J4P3196

FEDERAL PROJECT NO.
STB-3001(009)

PROJECT NO.

BRIDGE NO.

DESCRIPTION	DATE

IF A SEAL IS PRESENT ON THIS SHEET IT HAS BEEN ELECTRONICALLY SEALED AND DATED.

MISSOURI HIGHWAYS AND TRANSPORTATION COMMISSION
105 WEST CAPITOL
JEFFERSON CITY, MO 65102
1-888-ASK-MODOT (1-888-275-6636)

LEE'S SUMMIT MISSOURI

olsson
1301 BURLINGTON ST., STE. 100
NORTH KANSAS CITY, MO 64116
PHONE: 816.361.1177
CERT. OF AUTHORITY NO. 001592

PLAN & PROFILE
SHEET 9 OF 16

F:\2021\04501-05000\021-04786\40-Design\Microstation\J4P3196\plan_sheets\4 Plan Profile\012_PP_09_J4P3196_I50_RTE291.dgn 3:51:53 PM 2/28/2025

SE 1/4, NW 1/4
8-47N-31W

INLET 709S1, ℄ BLUE_PKWY_W
STA. 709+62.52, 110.81' LT.
1-5'X5' LEE'S SUMMIT FIELD INLET
(WITH W & S SIDES OPEN)
2-30" PIPE OPENINGS

MANHOLE 710M1, ℄ BLUE_PKWY_W
STA. 710+24.53, 52.66' LT.
1-72" MANHOLE
2-30" PIPE OPENINGS

INLET 711LS1, ℄ BLUE_PKWY_W
STA. 711+28.34, 27.59' LT.
1-8X5' TYPE LS CURB INLET
1-15", 1-24", 1-30" PIPE OPENINGS

INLET 711S2, ℄ BLUE_PKWY_W
STA. 711+28.38, 26.91' RT.
1-5X3 TYPE S2 INLET
1-15" PIPE OPENING

INLET 714LS1, ℄ BLUE_PKWY_W
STA. 714+10.00, 27.59' LT.
1-8X4 TYPE LS CURB INLET
1-18", 1-24" PIPE OPENINGS

INLET 715LS1, ℄ BLUE_PKWY_W
STA. 715+29.26, 27.59' LT.
1-8X4 TYPE LS CURB INLET
1-18" PIPE OPENING

BLUE PARKWAY
STA. 710+70.00 LT
50.0' WIDTH
1.93% GRADE
8" CONC. PAVED APP.
COMMERCIAL DRIVE

BLUE PARKWAY
STA. 715+82.76 LT
28.0' WIDTH
0.42% GRADE
8" CONC. PAVED APP.
COMMERCIAL DRIVE

BLUE PARKWAY
STA. 716+30.76 LT
28.0' WIDTH
1.44% GRADE
8" CONC. PAVED APP.
COMMERCIAL DRIVE

℄ BLUE_PKWY_W
PI 718+20.85
PC 715+98.76
PT 720+42.58
Δ 5°39'3.2" (LT)
D 1°16'23.7"
L 443.82' (ARC)
T 222.09'
R 4,500.00'

DOUGLAS STREET
EXIST. CITY R/W
9TH STREET
SAWCUT
EXIST. DRAINAGE EASEMENT
EXIST. DRIVEWAY EASEMENT
EXIST. POWER POLE EASEMENT
EXIST. UTILITY EASEMENT
EXIST. INGRESS/EGRESS EASEMENT
EXIST. PRIVATE SEWER EASEMENT
EXIST. MODOT R/W
710
715
BROWNING STREET
¼ SECTION LINE

D & K REAL ESTATE & INVESTMENTS LLC
BARTEK GROUP 905 LLC
DILL KEVIN S & DIANA L - TRUSTEES
GRACE COVENANT CHURCH
DILL FAMILY TRUST
(11) WAGGONER JAMES GILBERT SR & DARLENE TRTE
SEE SHEET 24
(01) LEES SUMMIT SCHOOL DIST R-7
SEE SHEET 25

INLET 709S1
MANHOLE 710M1
INLET 711LS1 (R&R)
INLET 715LS1
INLET 714LS1
INLET 711S2
TEMPORARY WATERLINE EASEMENT
TEMPORARY EASEMENT (CONST.)
BEGIN CONSTRUCTION STA 708+67.00
BEGIN FULL DEPTH PAVEMENT STA 717+00.00
BEGIN TYPE CG-1 C&G STA. 717+00.00 RT
TYPE CG-1 C&G
EOP
EOS
S.L.
℄ BLUE PKWY W
PC STA 715+98.76
MATCHLINE STA. 720+00.00
S87°46'17"E (R)
PLUG PIPE (NO DIRECT PAY)
SEE SHEETS 20-26 FOR RIGHT-OF-WAY SHEETS
NE¼ NW ¼ 8-47N-31W
NW¼ SE¼ 8-47N-31W
SW¼ NE¼ 8-47N-31W

SCALE
0 50 100 150

10′ ← 50′ →

SSD = 389'
K = 79
280.00' V.C.

SSD = 527'
K = 129
560.00' V.C.

CP #1
STA. 708+72.63
EL 1027.79

VPC 708+80.50
EL 1,027.04

VLP 709+07.39
EL 1,026.99

VPI 710+20.50
EL 1,026.56

VPT 711+60.50
EL 1,031.04

VPC 713+95.27
EL 1,038.56

VPI 716+75.27
EL 1,047.52

VPI 718+06.87
EL 1,045.14

VPT 719+55.27
EL 1,044.29

-0.34%
+3.20%
-1.15%

℄ BLUE PKWY W PROPOSED PROFILE
℄ BLUE PKWY W EXISTING PROFILE
EXISTING 7'X4' RCB
EXISTING 15" RCP

1080 1070 1060 1050 1040 1030 1020 1010 1000 990

706+00 707+00 708+00 709+00 710+00 711+00 712+00 713+00 714+00 715+00 716+00 717+00 718+00

PLAN & PROFILE
SHEET 10 OF 16

F:\2021\04501-05000\021-04786\40-Design\Microstation\J4P3196\plan_sheets\4 Plan Profile\013_PP_010_J4P3196_I50_BLUE_PKWY_W.dgn 4:03:47 PM 2/28/2025

Reid Catt
2025.03.01 21:26:59-06'00'

REID BRENNEN CATT-ENGINEER
MO# PE-2010019516

DATE PREPARED
2/28/2025

ROUTE	STATE
50/291	MO
DISTRICT	SHEET NO.
KC	13

COUNTY
JACKSON

JOB NO.
J4P3196

FEDERAL PROJECT NO.
STB-3001(009)

PROJECT NO.

BRIDGE NO.

DESCRIPTION
DATE

IF A SEAL IS PRESENT ON THIS SHEET IT HAS BEEN ELECTRONICALLY SEALED AND DATED.

MISSOURI HIGHWAYS AND TRANSPORTATION COMMISSION
105 WEST CAPITOL
JEFFERSON CITY, MO 65102
1-888-ASK-MODOT (1-888-275-6636)

LEE'S SUMMIT MISSOURI

olsson
1301 BURLINGTON ST., STE. 100
NORTH KANSAS CITY, MO 64116
PHONE: 816.361.1177
CERT. OF AUTHORITY NO. 001592

INLET 720LS1, ℄ BLUE_PKWY_W
STA. 720+82.40, 30.30' LT.
1-6X4 TYPE LS CURB INLET
1-15" PIPE OPENING

INLET 722LS2, ℄ BLUE_PKWY_W
STA. 722+35.60, 19.95' RT.
1-4X4 TYPE LS CURB INLET
2-24" PIPE OPENING

FES 723F2, ℄ BLUE_PKWY_W
STA. 723+57.78, 44.27' RT
1-30" GROUP A F.E.S.

INLET 728LS2, ℄ BLUE_PKWY_W
STA. 728+69.75, 30.99' LT
1-6X4 TYPE LS CURB INLET
2-18" PIPE OPENINGS

INLET 722LS1, ℄ BLUE_PKWY_W
STA. 722+35.62, 28.59' LT.
1-6X4 TYPE LS CURB INLET
2-15", 1-24" PIPE OPENING

INLET 723LS1, ℄ BLUE_PKWY_W
STA. 723+61.72, 22.11' RT
1-4X4 TYPE LS CURB INLET
2-24", 1-30" PIPE OPENINGS

INLET 728LS1, ℄ BLUE_PKWY_W
STA. 728+10.00, 41.50' LT
1-6X4 TYPE LS CURB INLET
2-18" PIPE OPENINGS

SW¼, SW¼
8-47N-31W

PLUG EXISTING SEWER LINE FROM SOUTHEAST (NO DIRECT PAY)

EXIST. UTILITY ESM'T

REMOVAL BY OTHERS

EOP

R 181'

℄ SCHOOL DR

R 149'

PARKING LOT IMPROVEMENTS BY OTHERS

PERM. DRAINAGE ESM'T

TYPE CG-1 C&G

NEW R/W

PERM. WATERLINE ESM'T

PT STA 729+84.98

(R&R)

(U.I.P.)

S03°06'35"W

S86°38'56"E

(01)
LEES SUMMIT SCHOOL DIST R-7
SEE SHEET 25

PC STA 10+47.42

REMOVAL BY OTHERS

S.L.

R 410'

R 440'

R 438'

R 425'

R 400'

R 374'

R 175'

R 379'

R 45'

R 40'

INLET 727LS1

INLET 728LS1

INLET 728LS2

INLET 727LS2

INLET 724LS1

INLET 725LS1

INLET 725LS2

INLET 724LS2

TYPE CG-1 C&G

TEMPORARY EASEMENT (CONST.)

PERM. WATERLINE ESM'T

PERM. SEWER ESM'T

REMOVAL BY OTHERS

PCC STA 720+42.58

(R) ENTRANCE

MATCHLINE STA. 720+00.00

INLET 720LS1
℄ BLUE_PKWY_W

INLET 722LS2

EXIST. UTILITY ESM'T

STA. 726+66.33 ℄ BLUE_PKWY_W =
STA. 10+00.00 ℄ SCHOOL_DR

STA. 730+69.98 ℄ BLUE_PKWY_W =
STA. 33498+89.01 ℄ BLUE_PKWY_E
STA. 174+51.36 ℄ RTE_291_BL

(R) BY OTHERS
PRC STA 724+90.14

(02)
OFFICE OF ADMINISTRATION
STATE OF MISSOURI
SEE SHEET 25

BLUE PARKWAY
STA. 726+61.99 RT
24' WIDTH
NO ENTRANCE PIPE
5.21% GRADE
8" CONC. PAVED APP.
COMMERCIAL DRIVE

BLUE PARKWAY
STA. 724+02.12 RT
24' WIDTH
NO ENTRANCE PIPE
4.78% GRADE
8" CONC. PAVED APP.
COMMERCIAL DRIVE

INLET 723LS1
FES 723F2

PERM. DRAINAGE ESM'T - CITY

DETENTION BASIN

EXIST. MODOT R/W

PERM. DRAINAGE ESM'T - MODOT

S.L.

NEW R/W

N77°38'21"E ℄ RAMP_1

TREES

S.L.

RTE 291 BL

INLET 724LS1, ℄ BLUE_PKWY_W
STA. 724+87.47, 24.58' LT
1-6X4 TYPE LS CURB INLET
1-15" PIPE OPENING

INLET 724LS2, ℄ BLUE_PKWY_W
STA. 724+86.65, 24.40' RT
1-6X4 TYPE LS CURB INLET
1-15", 1-18", 1-24" PIPE OPENINGS

INLET 725LS1, ℄ BLUE_PKWY_W
STA. 725+64.05, 25.83' LT
1-8X4 TYPE LS CURB INLET
1-18" PIPE OPENING

INLET 725LS2, ℄ BLUE_PKWY_W
STA. 725+64.00, 26.23' RT
1-8X4 TYPE LS CURB INLET
2-18" PIPE OPENINGS

INLET 727LS1, ℄ BLUE_PKWY_W
STA. 727+25.00, 41.45' LT
1-8X4 TYPE LS CURB INLET
1-15", 1-18" PIPE OPENINGS

INLET 727LS2, ℄ BLUE_PKWY_W
STA. 727+15.00, 29.50' RT
1-8X4 TYPE LS CURB INLET
1-15" PIPE OPENING

BLUE PKWY E
SEE SHEET 15
FOR DETAILS

SEE SHEETS 20- 26 FOR RIGHT-OF-WAY SHEETS

RTE 291
SEE SHEET 10 - 12
FOR DETAILS

SCALE
0 50 100 150

℄ BLUE_PKWY_W		℄ BLUE_PKWY_W		℄ BLUE_PKWY_W	
PI	718+20.85	PI	722+93.05	PI	727+74.83
PC	715+98.76	PC	720+42.58	PC	724+90.14
PT	720+42.58	PT	724+90.14	PT	729+84.98
Δ	5°39'3.2" (LT)	Δ	64°6'27.5" (LT)	Δ	70°52'52.0" (RT)
D	1°16'23.7"	D	14°19'26.2"	D	14°19'26.2"
L	443.82' (ARC)	L	447.56' (ARC)	L	494.84' (ARC)
T	222.09'	T	250.47'	T	284.69'
R	4,500.00'	R	400.00'	R	400.00'

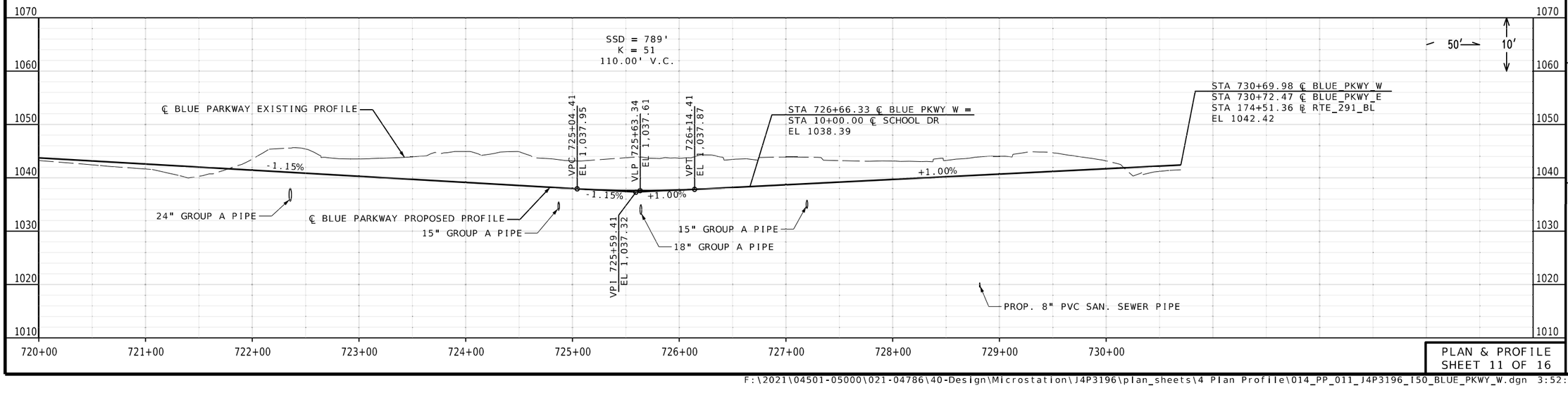

PLAN & PROFILE
SHEET 11 OF 16

Reid Catt
2025.03.01 21:26:29-06'00'

REID BRENNEN CATT-ENGINEER
MO# PE-2010019516

DATE PREPARED
2/28/2025

ROUTE	STATE
50/291	MO
DISTRICT	SHEET NO.
KC	14

COUNTY
JACKSON

JOB NO.
J4P3196

FEDERAL PROJECT NO.
STB-3001(009)

PROJECT NO.

BRIDGE NO.

DESCRIPTION | DATE

MISSOURI HIGHWAYS AND TRANSPORTATION COMMISSION
105 WEST CAPITOL
JEFFERSON CITY, MO 65102
1-888-ASK-MODOT (1-888-275-6636)

IF A SEAL IS PRESENT ON THIS SHEET IT HAS BEEN ELECTRONICALLY SEALED AND DATED.

LEE'S SUMMIT MISSOURI

olsson
1301 BURLINGTON ST., STE. 100
NORTH KANSAS CITY, MO 64116
PHONE: 816.361.1177
CERT. OF AUTHORITY NO. 001592

F:\2021\04501-05000\021-04786\40-Design\Microstation\J4P3196\plan_sheets\4 Plan Profile\014_PP_011_J4P3196_I50_BLUE_PKWY_W.dgn 3:52:38 PM 2/28/2025

SE¼, NE¼
8-47N-31W

06
MAX RE PRE OWNED OF LEES SUMMIT, LLC
SEE SHEET 22

PC STA 3+98.01
EXIST. CITY R/W
PT STA 4+87.95
TEMPORARY EASEMENT (CONST.)
TYPE CG-1 C&G
NEW R/W
MANHOLE 731M1
(D.N.D.)
S.L.
INLET 733LS1
DETENTION BASIN
FES 734F1
INLET 734LS1
℄ 7TH_CONN1
S86°38'56"E
STA. 6+84.06 ℄ 7TH_TERRACE =
STA. 5+00.00 ℄ 7TH_CONN1
7TH TERRACE AND 7TH CONNECTOR SEE SHEET 16 FOR DETAILS
PC STA 6+64.40
PT STA 735+13.97
℄ 7TH TERRACE
N49°24'09"E
EXIST. UTILITY ESM'T
TEMP. SEWER LINE
EOP
R&R
TYPE CG-1 C&G
INLET 734LS2
TEMPORARY EASEMENT (CONST.)
NEW R/W
℄ BLUE PKWY E
S40°35'51"E
BLUE PARKWAY
STA. 732+91.03 RT
35.0' WIDTH
4.00% GRADE
8" CONC. PAVED APP
COMMERCIAL DRIVE
PERMANENT UTILITY EASEMENT
INLET 731T1
LS FES 734F2
EXIST. ELECTRIC ESM'T
EXIST. UTILITY ESM'T
EXIST. MODOT R/W
STA. 730+72.47 ℄ BLUE_PKWY_E =
STA. 730+69.98 ℄ BLUE_PKWY_W
STA. 174+51.36 ℄ RTE_291_BL
STA. 735+37.97 ℄ BLUE_PKWY_E =
STA. 5+00.00 ℄ 7TH_TERRACE
S.L.
ROUTE 291
SEE SHEETS 10- 12
FOR DETAILS

07
QUIKTRIP CORPORATION
SEE SHEET 26

℄ BLUE_PKWY_E
PI 733+62.47
PC 731+92.47
PT 735+13.97
Δ 46°3'5.1" (RT)
D 14°19'26.2"
L 321.50' (ARC)
T 170.00'
R 400.00'

FES 734F2 ℄ BLUE PKWY E
STA. 734+76.09, 47.23' RT
1-18" GROUP A FES
FES 734F1 ℄ BLUE_PKWY_E
STA. 734+75.00, 54.98' LT
1-24" GROUP A FES
INLET 734LS1, ℄ BLUE_PKWY_E
STA. 734+75.69, 27.50' LT.
1-6X4 TYPE LS CURB INLET
1-18", 2-24" PIPE OPENINGS

LS FES 734F2, ℄ BLUE_PKWY_E
STA. 734.76.09, 47.23' RT
1-18" GROUP LS FES
MANHOLE 731M1, ℄ BLUE_PKWY_E
STA. 731+11.68, 42.44' LT.
1-48" MANHOLE
2-18" PIPE OPENINGS
INLET 734LS2, ℄ BLUE_PKWY_E
STA. 734+75.12, 28.50' RT.
1-6X4 TYPE LS CURB INLET
1-18" PIPE OPENING
1-24" PIPE OPENING
INLET 736LS2, ℄ BLUE_PKWY_E
STA. 736+50.00, 25.28' RT.
1-6X4 TYPE LS CURB INLET
2-18" PIPE OPENINGS
INLET 733LS1, ℄ BLUE_PKWY_E
STA. 733+01.16, 41.50' LT.
1-6X4 TYPE LS CURB INLET
2-18" PIPE OPENINGS
INLET 736LS1, ℄ BLUE_PKWY_E
STA. 736+50.00, 25.26' LT.
1-6X4 TYPE LS CURB INLET
1-18" PIPE OPENING
MANHOLE 737M1, ℄ BLUE_PKWY_E
STA. 737+80.89, 26.33' RT
1-48" MANHOLE
1-18" PIPE OPENING
1-24" PIPE OPENING
FES 739F1, ℄ BLUE_PKWY_E
STA. 739+26.38, 51.19' RT
1-24" GROUP A FES

04
KRAFT THOMAS ANTHONY-TRUSTEE
KRAFT MARY KATHLEEN-TRUSTEE
SEE SHEET 21
BLUE PARKWAY
STA. 737+29.11 LT
24.0' WIDTH
4.71% GRADE
8" CONC. PAVED APP
COMMERCIAL DRIVE
PC STA 738+91.90
TEMPORARY EASEMENT (CONST.)
END CONSTRUCTION
STA 740+87.53
CROSS DEVELOPMENT
CC LEE'S SUMMIT LLC
EXIST. MODOT R/W
U.I.P.
SAWCUT
EOP
TYPE A GUTTER
FES 739F1
DETENTION BASIN
MANHOLE 737M1
TYPE CG-1 DRY C&G

15
BAKER ANGLER PROPERTIES LLC
SEE SHEET 21
NEW WATER LINE
TEMPORARY EASEMENT (CONST.)
SAWCUT

℄ BLUE_PKWY_E
PI 741+35.82
PC 738+91.90
PT 743+75.11
Δ 19°19'41.7" (LT)
D 4°0'0.0"
L 483.21' (ARC)
T 243.92'
R 1,432.39'

℄ BLUE_PKWY_E
PI 737+94.78
PC 736+93.49
PT 738+91.90
Δ 28°25'15.8" (LT)
D 14°19'26.2"
L 198.42' (ARC)
T 101.29'
R 400.00'

SEE SHEETS 19-25 FOR RIGHT-OF-WAY SHEETS
SCALE
0 50 100 150

1070 1060 1050 1040 1030 1020 1010 1000 990 980

STA 730+72.47 ℄ BLUE PKWY E
STA 730+69.98 ℄ BLUE PKWY W
STA 174+51.36 ℄ RTE 291
EL 1042.42
VPI 731+72.47 EL 1,041.42
VPT 732+09.97 EL 1,040.20
VPC 731+34.97 EL 1,041.80
-1.00% 1.00% -3.25%
SSD = 517' K = 33 75.00' V.C.
EXISTING 18" CMP
PROP. 8" SANITARY SEWER PIPE
18" GROUP A PIPE
EXIST. 15" CMP
STA 735+37.97 ℄ BLUE PKWY E =
STA 5+00.00 ℄ 7TH TERRACE
EL 1029.54
15" GROUP A PIPE
℄ BLUE PKWY E PROPOSED PROFILE
℄ BLUE PKWY E EXISTING PROFILE
VPC 735+63.75 EL 1,028.70
SSD = 594' K = 44 100.00' V.C.
VPI 736+13.75 EL 1,027.00
VPT 736+63.75 EL 1,026.59
VPC 737+15.74 EL 1,026.09
SSD = 515' K = 43 100.00' V.C.
VPI 737+65.74 EL 1,025.60
VPT 738+15.74 EL 1,023.96
VPC 738+34.12 EL 1,023.35
SSD = 515' K = 72 190.00' V.C.
VPI 739+29.12 EL 1,020.23
VPT 740+24.12 EL 1,019.59
-3.25% -0.97% -0.97% -3.29% -0.67%
STA 738+91.92 EL 1018.65
STA 739+77.80 EL 1017.70
SPECIAL DITCH LEFT
STA 740+51.31 EL 1016.88
END CONSTRUCTION STA 740+87.53 EL 1019.17
STA 740+87.53 EL 1016.52
STA 740+77.96 EL 1016.82
CP #2 STA. 743+14.27 EL 1011.45
50′ 10′
731+00 732+00 733+00 734+00 735+00 736+00 737+00 738+00 739+00 740+00 741+00 742+00 743+00 744+00

PLAN & PROFILE
SHEET 12 OF 16

F:\2021\04501-05000\021-04786\40-Design\Microstation\J4P3196\plan_sheets\4 Plan Profile\015_PP_012_J4P3196_I50_BLUE_PKWY_E.dgn 3:53:00 PM 2/28/2025

Reid Catt
2025.03.01 21:26:12-06'00'
REID BRENNEN CATT-ENGINEER
MO# PE-2010019516

DATE PREPARED 2/28/2025
ROUTE 50/291
STATE MO
DISTRICT KC
SHEET NO. 15
COUNTY JACKSON
JOB NO. J4P3196
FEDERAL PROJECT NO. STB-3001(009)
PROJECT NO.
BRIDGE NO.

DESCRIPTION
DATE

IF A SEAL IS PRESENT ON THIS SHEET IT HAS BEEN ELECTRONICALLY SEALED AND DATED.

MISSOURI HIGHWAYS AND TRANSPORTATION COMMISSION
105 WEST CAPITOL
JEFFERSON CITY, MO 65102
1-888-ASK-MODOT (1-888-275-6636)

LEE'S SUMMIT MISSOURI

olsson
1301 BURLINGTON ST., STE. 100
NORTH KANSAS CITY, MO 64116
PHONE: 816.361.1177
CERT. OF AUTHORITY NO. 001592

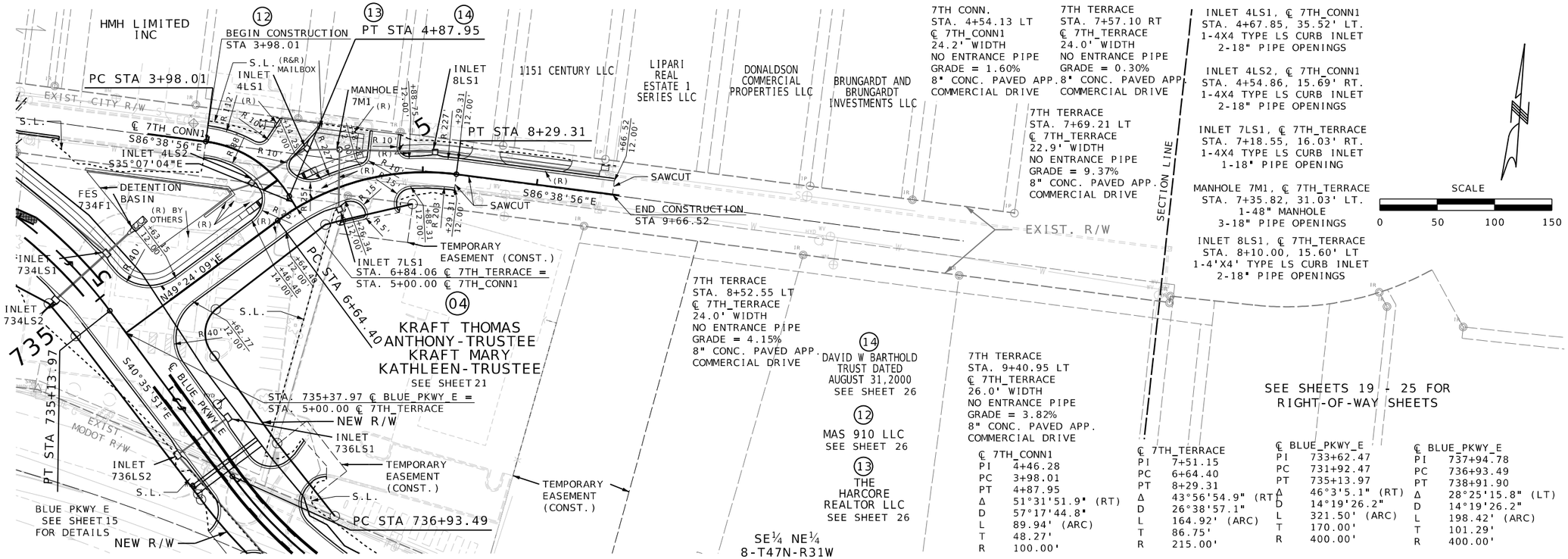

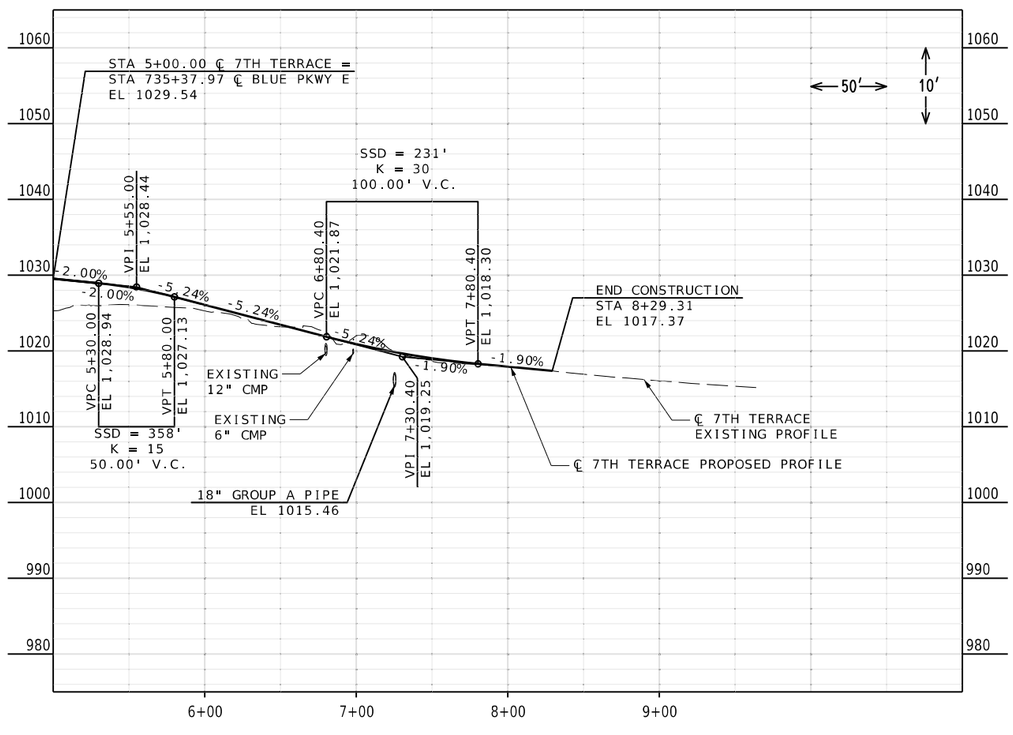

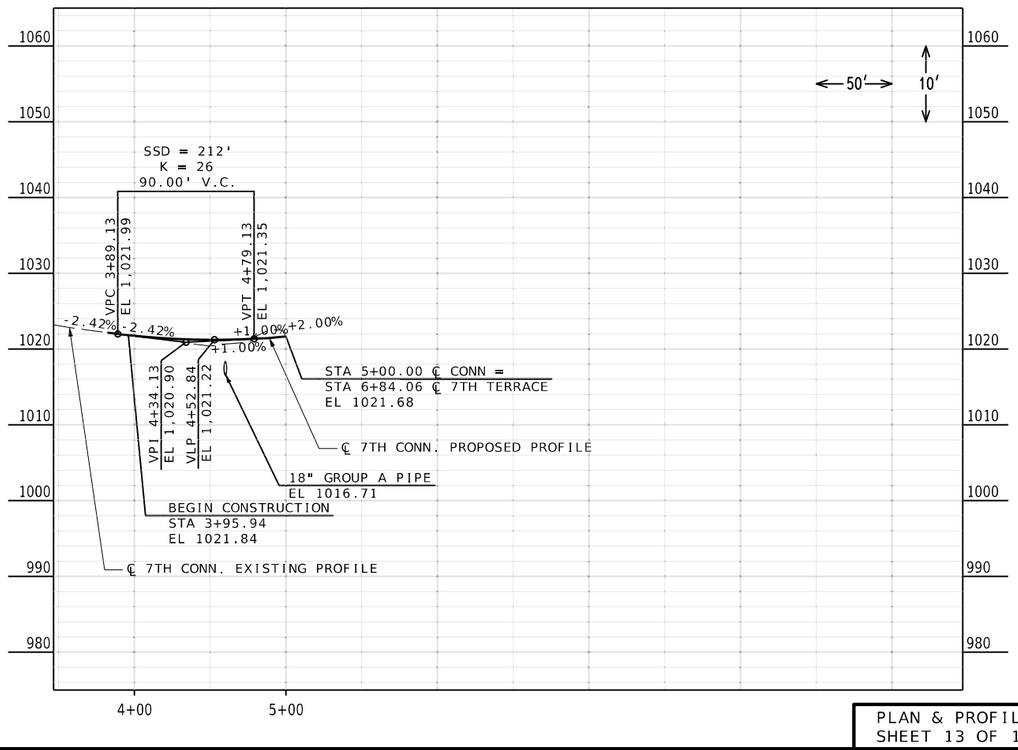

Reid Catt
2025.03.01 21:25:22-06'00'

REID BRENNEN CATT-ENGINEER NUMBER PE-2010019516
REID BRENNEN CATT-ENGINEER MO# PE-2010019516

DATE PREPARED 2/28/2025
ROUTE 50/291
STATE MO
DISTRICT KC
SHEET NO. 16
COUNTY JACKSON
JOB NO. J4P3196
FEDERAL PROJECT NO. STB-3001(009)
PROJECT NO.
BRIDGE NO.

DESCRIPTION | DATE

IF A SEAL IS PRESENT ON THIS SHEET IT HAS BEEN ELECTRONICALLY SEALED AND DATED.

MISSOURI HIGHWAYS AND TRANSPORTATION COMMISSION
105 WEST CAPITOL
JEFFERSON CITY, MO 65102
1-888-ASK-MODOT (1-888-275-6636)

LEE'S SUMMIT MISSOURI

olsson
1301 BURLINGTON ST., STE. 100
NORTH KANSAS CITY, MO 64116
PHONE: 816.361.1177
CERT. OF AUTHORITY NO. 001592

PLAN & PROFILE
SHEET 13 OF 16

F:\2021\04501-05000\021-04786\40-Design\Microstation\J4P3196\plan_sheets\4 Plan Profile\016_PP_013_J4P3196_I50_7TH_TERRACE.dgn 3:53:23 PM 2/28/2025

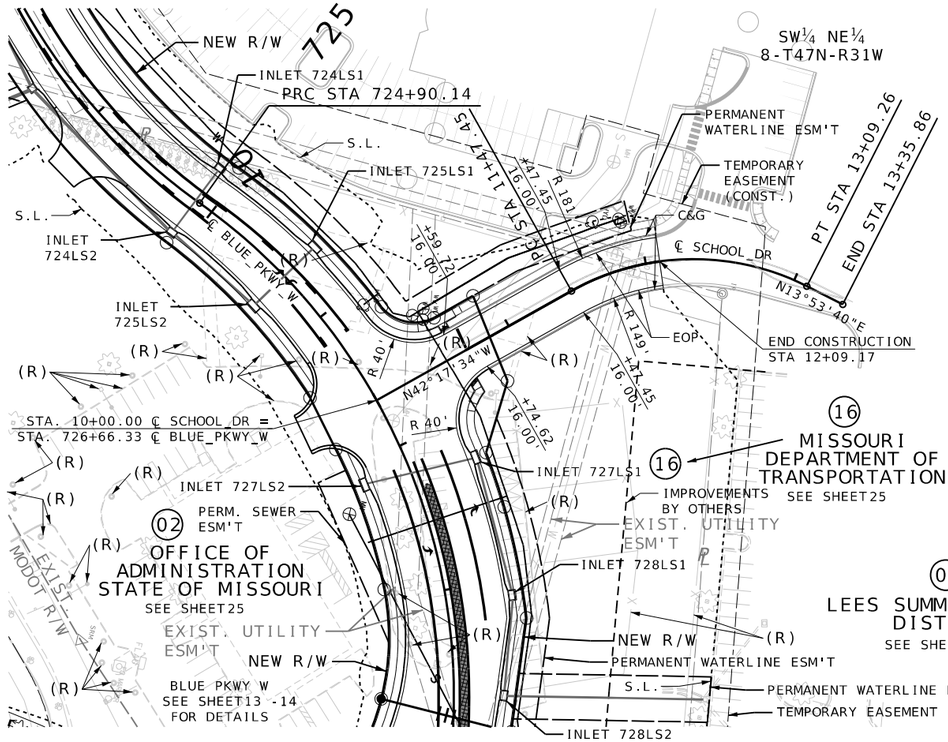

SCALE

0 50 100 150

℄ SCHOOL_DR		℄ BLUE_PKWY_W		℄ BLUE_PKWY_W	
PI	12+35.53	PI	722+93.05	PI	727+74.83
PC	11+47.45	PC	720+42.58	PC	724+90.14
PT	13+09.26	PT	724+90.14	PT	729+84.98
Δ	56°11'13.6" (RT)	Δ	64°6'27.5" (LT)	Δ	70°52'52.0" (RT)
D	34°43'28.9"	D	14°19'26.2"	D	14°19'26.2"
L	161.81' (ARC)	L	447.56' (ARC)	L	494.84' (ARC)
T	88.08'	T	250.47'	T	284.69'
R	165.00'	R	400.00'	R	400.00'

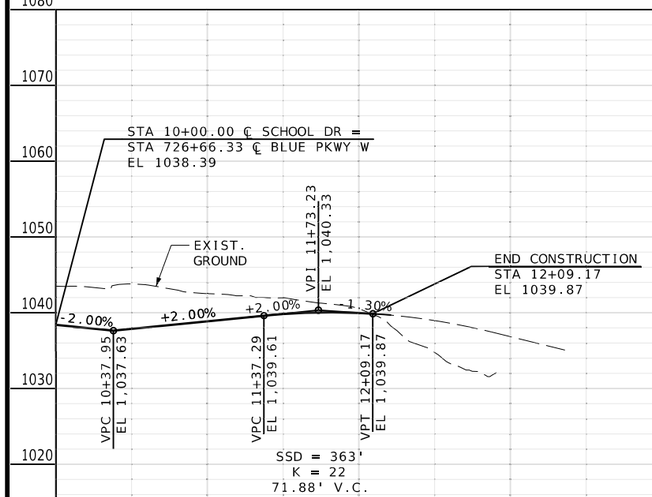

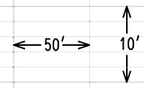

PLAN & PROFILE
SHEET 14 OF 16

Reid Catt
2025.03.01 21:28:37-06'00'

REID BRENNEN CATT-ENGINEER
MO# PE-2010019516

DATE PREPARED
2/28/2025

ROUTE	STATE
50/291	MO
DISTRICT	SHEET NO.
KC	17

COUNTY
JACKSON

JOB NO.
J4P3196

FEDERAL PROJECT NO.
STB-3001(009)

PROJECT NO.

BRIDGE NO.

DATE	DESCRIPTION

IF A SEAL IS PRESENT ON THIS SHEET IT HAS BEEN ELECTRONICALLY SEALED AND DATED.

MISSOURI HIGHWAYS AND TRANSPORTATION COMMISSION
105 WEST CAPITOL
JEFFERSON CITY, MO 65102
1-888-ASK-MODOT (1-888-275-6636)

LEE'S SUMMIT MISSOURI

olsson
1301 BURLINGTON ST., STE. 100
NORTH KANSAS CITY, MO 64116
PHONE: 816.361.1177
CERT. OF AUTHORITY NO. 001592

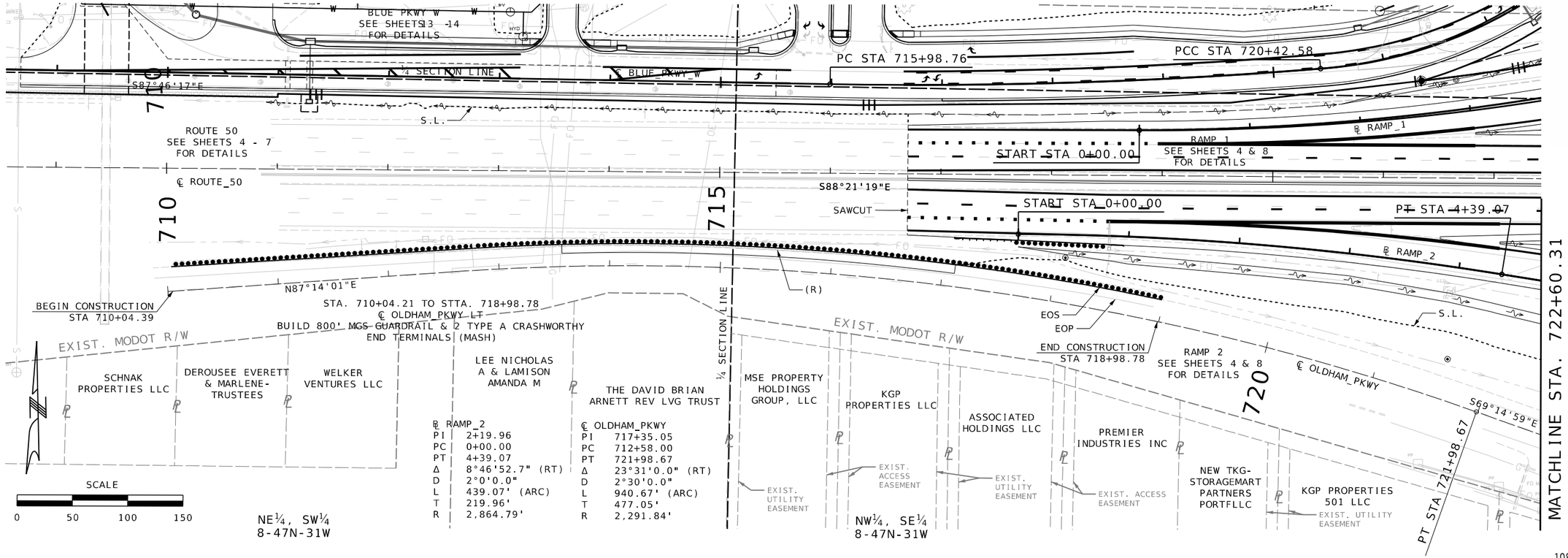

Reid Catt
2025.03.01 21:29:27-06'00'

REID BRENNEN CATT-ENGINEER
MO# PE-2010019516

DATE PREPARED
2/28/2025

ROUTE	STATE
50/291	MO
DISTRICT	SHEET NO.
KC	18

COUNTY
JACKSON

JOB NO.
J4P3196

FEDERAL PROJECT NO.
STB-3001(009)

PROJECT NO.

BRIDGE NO.

IF A SEAL IS PRESENT ON THIS SHEET IT HAS BEEN ELECTRONICALLY SEALED AND DATED.

DESCRIPTION	DATE

MISSOURI HIGHWAYS AND TRANSPORTATION COMMISSION

105 WEST CAPITOL
JEFFERSON CITY, MO 65102
1-888-ASK-MODOT (1-888-275-6636)

LEE'S SUMMIT MISSOURI

olsson
1301 BURLINGTON ST., STE. 100
NORTH KANSAS CITY, MO 64116
PHONE: 816.361.1177
CERT. OF AUTHORITY NO. 001592

PLAN & PROFILE
SHEET 15 OF 16

F:\2021\04501-05000\021-04786\40-Design\Microstation\J4P3196\plan_sheets\4 Plan Profile\018_PP_015_J4P3196_I50_OLDHAM_PKWY.dgn 3:53:50 PM 2/28/2025

MATCHLINE STA. 722+60.31

PC STA 8+49.51

PT STA 10+25.13

PT STA 2+77.11

PC STA 0+88.34

S79°38'37"E

℄ RAMP_2

RAMP 2
SEE SHEETS 4& 8
FOR DETAILS

S69°14'59"E ℄ OLDHAM_PKWY

EXIST. MODOT R/W

BEGIN CONSTRUCTION
STA 725+01.88

SAWCUT

S.L.

EOS

EOP

725

STA. 470+18.20 ℄ HAMBLEN_ROAD =
STA. 10+77.50 ℄ RAMP_2
STA. 0+00.00 ℄ RAMP_4

STA. 182+22.57 ℄ RTE 291_BL =
STA. 10+82.00 ℄ RAMP_2
STA. 0+00.00 ℄ RAMP_4

PC STA 725+02.10

PT STA 728+08.20

+01.88
20.00'

+08.92
20.00'

R 942.89'

R 934.89'

R 100

R 92'

R 25'

+01.88
20.90'

+56.89
28.68'

+79.50
53.30'

+79.50
66.27'

+10.59
65.73'

+10.59
56.69'

+34.78
32.00'

+39.53
32.00'

R 90'

R 100

R 92'

470

S88°29'30"E

N84°01'27"E

℄ RAMP 4

RAMP 4
SEE SHEETS 5& 9
FOR DETAILS

NEW R/W

POT STA 182+22.57

℄ HAMBLEN_ROAD

EXIST. WATERLINE ESM'T

PERMANENT WATERLINE ESM'T

TEMPORARY EASEMENT (CONST.)

S.L.

EXIST. MODOT R/W

S03°41'33"W

1/4 1/4 SECTION LINE

91°18'27"

S87°36'59"E

89°57'59"

INLET 184LS1

POT STA 184+24.49

TEMPORARY EASEMENT (CONST.)

EXIST. INGRESS/EGRESS ESM'T

TEMPORARY EASEMENT (CONST.)

185

STA. 728+73.59 ℄ OLDHAM_PKWY =
STA. 184+24.49 ℄ RTE_291_BL =
STA. 472+20.00 ℄ HAMBLEN_ROAD

INLET 185LS1

S.L.

ROUTE 291
SEE SHEETS 10 THRU 12
FOR DETAILS

EXIST. MODOT R/W

NEW R/W

TYPE CG-1 C&G

DUTT KRUPA
HOTEL LLC
& DEVOM
HOTEL LLC

TRIDENT LEE'S
SUMMIT LLC

03
WRIGHT DONALD K &
BARBARA G-TRUSTEES
SEE SHEET21

09
ALDI INC
SEE SHEET23

SEE SHEETS 20 - 26 FOR
RIGHT-OF-WAY SHEETS

NE¼ SE¼
8-T47N-R31W

SCALE
0 50 100 150

VENTURE INDUSTRIAL
PRODUCTS INC

℄ OLDHAM_PKWY
PI 726+56.47
PC 725+02.10
PT 728+08.20
Δ 18°22'0.0" (LT)
D 6°0'0.8"
L 306.10' (ARC)
T 154.37'
R 954.89'

EXIST.
UTILITY
ESM'T

OLDHAM PARKWAY
STA. 726+95.04 RT
33.2' WIDTH
NO ENTRANCE PIPE
GRADE = 5.97%
8" CONC. PAVED APP.
COMMERCIAL DRIVE

TEMPORARY EASEMENT (CONST.)

KORNIS G
MICHAEL

NW¼ SE¼
8-T47N-R31W

12
ANNEX
PROPERTIES
LLC
SEE SHEET23

10
KORNIS
ANASTASIA
& GEORGE A
SEE SHEET23

EXIST. UTILITY ESM'T

EXIST. INGRESS/
EGRESS ESM'T

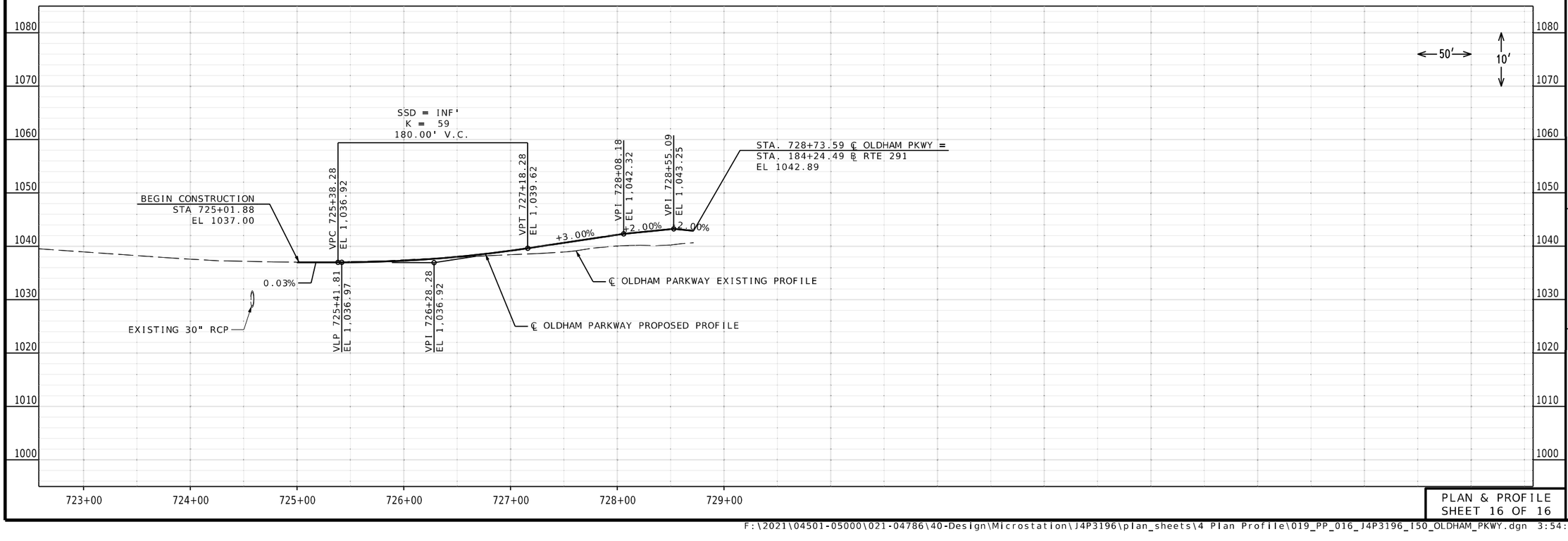

PLAN & PROFILE
SHEET 16 OF 16

Reid Catt
2025.03.01 21:28:43-06'00'

REID BRENNEN CATT-ENGINEER
MO# PE-2010019516

DATE PREPARED
2/28/2025

ROUTE	STATE
50/291	MO
DISTRICT	SHEET NO.
KC	19

COUNTY
JACKSON

JOB NO.
J4P3196

FEDERAL PROJECT NO.
STB-3001(009)

PROJECT NO.

BRIDGE NO.

DATE	DESCRIPTION

IF A SEAL IS PRESENT ON THIS SHEET IT HAS BEEN ELECTRONICALLY SEALED AND DATED.

MISSOURI HIGHWAYS AND TRANSPORTATION COMMISSION
105 WEST CAPITOL
JEFFERSON CITY, MO 65102
1-888-ASK-MODOT (1-888-275-6636)

LEE'S SUMMIT MISSOURI

olsson
1301 BURLINGTON ST., STE. 100
NORTH KANSAS CITY, MO 64116
PHONE: 816.361.1177
CERT. OF AUTHORITY NO. 001592

F:\2021\04501-05000\021-04786\40-Design\Microstation\J4P3196\plan_sheets\4 Plan Profile\019_PP_016_J4P3196_I50_OLDHAM_PKWY.dgn 3:54:08 PM 2/28/2025

SCALE
0 50 100 150

℄ BLUE_PKWY_W
PI 718+20.85
PC 715+98.76
PT 720+42.58
Δ 5°39'3.2" (LT)
D 1°16'23.7"
L 443.82' (ARC)
T 222.09'
R 4,500.00'

℄ BLUE_PKWY_W
PI 722+93.05
PC 720+42.58
PT 724+90.14
Δ 64°6'27.5" (LT)
D 14°19'26.2"
L 447.56' (ARC)
T 250.47'
R 400.00'

℄ BLUE_PKWY_W
PI 727+74.83
PC 724+90.14
PT 729+84.98
Δ 70°52'52.0" (RT)
D 14°19'26.2"
L 494.84' (ARC)
T 284.69'
R 400.00'

SW 1/4 NE 1/4
8-47N-31W

SE 1/4 NE 1/4
8-47N-31W

℄ RAMP_1
PI 2+80.10
PC 0+00.00
PT 5+57.44
Δ 13°56'9.3" (LT)
D 2°30'0.0"
L 557.44' (ARC)
T 280.10'
R 2,291.83'

℄ RAMP_1
PI 7+33.39
PC 5+93.33
PT 8+72.08
Δ 13°56'9.3" (RT)
D 4°59'58.1"
L 278.75' (ARC)
T 140.07'
R 1,146.04'

℄ RTE_291_BL
℄ 291_NORTH
PI 174+97.13
PC 172+75.78
PT 177+18.47
Δ 0°44'16.2" (LT)
D 0°10'0.0"
L 442.69' (ARC)
T 221.35'
R 34,377.47'

01 LEES SUMMIT SCHOOL DIST R-7
SEE SHEET 25

02 OFFICE OF ADMINISTRATION STATE OF MISSOURI
SEE SHEET 25

PERM. DRAINAGE ESM'T - CITY

NEW R/W

℄ BLUE PARKWAY (EXIST.)

NEW FULLY CONTROLLED ACCESS R/W

EXIST. MODOT R/W

℄ BLUE_PARKWAY_EAST (EXIST.)

PRC STA 724+90.14

PT STA 177+18.47

PT STA 5+57.44

PC STA 5+93.33

PT STA 8+72.08

LAND SURVEY MAG NAIL AND WASHER OVER 30"COPPER WELD PLATE AT THE NORTH QUARTER CORNER OF SECTION 8-T47N-R31W DOCUMENT NO. 600-105606, 2729.59' N00°55'05"E TO BEGINNING OF PROJECT

PROJECT BEGINS AT A POINT APPROX. 2729.24' SOUTH AND 43.73' EAST OF THE NORTH QUARTER CORNER SEC. 8-T47N-R31W.

TEMP. CONST. EASEMENT

TEMP. CONST. EASEMENT

PERM. WATERLINE EASEMENT

PERM. DRAINAGE ESM'T - MODOT

PCC STA 720+42.58

℄ BLUE_PKWY_E

SECTION LINE

BEGIN PROJECT
STA 716+70.00
S88°21'19"E

STA 0+00.00 ℞ RAMP 1=
STA 718+79.00, OFF 40.98' LT.
℄ ROUTE_50

STA 0+00.00 ℞ RAMP 2=
STA 717+70.34, OFF 53.65' RT.
℄ ROUTE_50

℞ RAMP_1 (EXIST.)

℄ ROUTE_50

℄ 291_NORTH

MSE WALL A9329

MSE WALL A9330

BRIDGE A9328

PT STA 4+39.07

PC STA 8+49.51

PT STA 10+25.13

℞ RAMP_2

S79°38'37"E

S88°25'30"E

℞ RAMP_4

POT STA 182+22.57

℞ RAMP_2 (EXIST.)

℄ HAMBLEN_ROAD

PT STA 721+98.67

PC STA 725+02.10

PT STA 728+08.20

S87°36'59"E

POT STA 184+24.49

℄ OLDHAM_PKWY

S69°14'59"E

NW 1/4 SE 1/4
8-47N-31W

NE 1/4 SE 1/4
8-47N-31W

EXISTING MODOT R/W

KGP PROPERTIES LLC
NO ACQUISITION

ASSOCIATED HOLDINGS LLC
NO ACQUISITION

PREMIER INDUSTRIES INC
NO ACQUISITION

NEW TKG-STORAGEMART PARTNERS PORTFLCC
NO ACQUISITION

℞ RAMP_2
PI 2+19.96
PC 0+00.00
PT 4+39.07
Δ 8°46'52.7" (RT)
D 2°0'0.0"
L 439.07' (ARC)
T 219.96'
R 2,864.79'

℞ RAMP_2
PI 9+37.49
PC 8+49.51
PT 10+25.13
Δ 8°46'52.7" (LT)
D 4°59'59.9"
L 175.63' (ARC)
T 87.99'
R 1,145.92'

℄ OLDHAM_PKWY
PI 717+35.05
PC 712+58.00
PT 721+98.67
Δ 23°31'0.0" (RT)
D 2°30'0.0"
L 940.67' (ARC)
T 477.05'
R 2,291.84'

℄ OLDHAM_PKWY
PI 726+56.47
PC 725+02.10
PT 728+08.20
Δ 18°22'0.0" (LT)
D 6°0'0.8"
L 306.10' (ARC)
T 154.37'
R 954.89'

STA. 179+08.56 ℞ RTE_291_BL =
STA. 467+04.16 ℄ 291_NORTH =
STA. 32755+54.20 ℞ RAMP_3
STA. 9+75.28 ℞ RAMP_1

STA. 468+56.16 ℄ 291_NORTH =
STA. 468+56.16 ℄ HAMBLEN_ROAD =
STA. 728+42.95 ℄ ROUTE_50

STA. 728+45.06 ℄ ROUTE_50 =
STA. 180+60.55 ℞ RTE_291_BL

STA. 470+18.20 ℄ HAMBLEN_ROAD =
STA. 10+77.50 ℞ RAMP_2
STA. 32750+99.17 ℞ RAMP_4

STA. 182+22.57 ℞ RTE_291_BL =
STA. 10+82.00 ℞ RAMP_2
STA. 0+00.00 ℞ RAMP_4

STA. 472+20.00 ℄ HAMBLEN_ROAD =
STA. 184+24.49 ℞ RTE_291_BL =
STA. 728+73.59 ℄ OLDHAM_PKWY

POT STA 179+08.56

POT STA 728+42.95

S88°25'30"E

S01°34'30"W

S03°41'33"W

S02°25'01"W

S02°22'19"W

R 2257.33'

R 1191.41'

R 120'

R 70'

N77°38'21"E

+45.91 228.84'
+44.00 226.52'
+45.86 224.09'
+37.04 218.34'
+45.66 207.06'
+45.19 166.62'
+58.92 189.72'
+67.25 196.11'
+61.98 152.40'
+33.83 87.61'
+75.00 102.17'
+49.98 125.18'
+71.02 129.01'
+75.00 109.41'
+06.55 138.08'
+15.22 165.08'
+82.26 193.97'
+45.57 274.49'
+32.63 223.50'

SEE SHEET 4 FOR ROADWAY DETAILS

GENERAL NOTE:
THE APPROXIMATE LOCATION OF PROPERTY LINES AS SHOWN ON THE PLANS ARE BASED ON THE BEST INFORMATION AVAILABLE TO THE COMMISSION AT THIS TIME. THIS INFORMATION IS PROVIDED BY THE COMISSION "AS-IS" AND THE COMMISSION EXPRESSLY DISCLAIMS ANY REPRESENTATION OR WARRANTY AS TO THE COMPLETENESS, ACCURACY, OR SUITABILITY OF THE INFORMATION FOR ANY USE.

RIGHT OF WAY LIMITS FOR THIS PROJECT EXTEND FROM STA. 172+01.54 TO STA. 186+57.30, ROUTE 291, A DISTANCE OF 0.28 MILES, AND FROM STA. 721+07.45 TO STA. 737+84.79, BLUE PARKWAY, A DISTANCE OF 0.32 MILES.

PERMANENT EASEMENT LIMITS FOR THIS PROJECT EXTEND FROM STA. 169+70.36 TO STA. 184+62.79, ROUTE 291, A DISTANCE OF 0.28 MILES, AND FROM STA. 720+41.12 TO STA. 745+13.17, BLUE PARKWAY, A DISTANCE OF 0.47 MILES.

TEMPORARY EASEMENT LIMITS FOR THIS PROJECT EXTEND FROM STA. 172+17.85 TO STA. 186+87.20, ROUTE 291, A DISTANCE OF 0.28 MILES, AND FROM STA. 711+64.31 TO STA. 745+18.22, BLUE PARKWAY, A DISTANCE OF 0.64 MILES.

ALL BEARINGS ARE BASED ON STATE PLANE BEARINGS, WEST ZONE.

Reid Catt
2025.03.01 21:29:45-06'00'

REID BRENNEN CATT-ENGINEER
MO# PE-2010019516

DATE PREPARED
2/28/2025

ROUTE	STATE
50/291	MO
DISTRICT	SHEET NO.
KC	20

COUNTY
JACKSON

JOB NO.
J4P3196

FEDERAL PROJECT NO.
STB-3001(009)

PROJECT NO.

BRIDGE NO.

IF A SEAL IS PRESENT ON THIS SHEET IT HAS BEEN ELECTRONICALLY SEALED AND DATED.

DESCRIPTION | DATE

MISSOURI HIGHWAYS AND TRANSPORTATION COMMISSION
105 WEST CAPITOL
JEFFERSON CITY, MO 65102
1-888-ASK-MODOT (1-888-275-6636)

LEE'S SUMMIT MISSOURI

olsson
1301 BURLINGTON ST., STE. 100
NORTH KANSAS CITY, MO 64116
PHONE: 816.361.1177
CERT. OF AUTHORITY NO. 001592

RIGHT OF WAY PLAN
SHEET 1 OF 7

F:\2021\04501-05000\021-04786\40-Design\Microstation\J4P3196\plan_sheets\5 Right of Way\020_RW_01_J4P3196_I50_RTE50.dgn 1:13:06 PM 2/28/2025

PT STA 735+13.97

℄ BLUE_PKWY_E
PI 737+94.78
PC 736+93.49
PT 738+91.90
Δ 28°25'15.8" (LT)
D 14°19'26.2"
L 198.42' (ARC)
T 101.29'
R 400.00'

SE¼ NE¼
8-47N-31W

℄ BLUE_PKWY_E
PI 741+35.82
PC 738+91.90
PT 743+75.11
Δ 19°19'41.7" (LT)
D 4°0'0.0"
L 483.21' (ARC)
T 243.92'
R 1,432.39'

(15)
BAKER ANGLER PROPERTIES LLC
4867 SF TEMP. ESM'T
671 SF PERM. ESM'T.
2.0 AC REMAINING

(04)
KRAFT THOMAS ANTHONY-TRUSTEE
SEE SHEET 26

MISSOURI HIGHWAY AND TRANSPORTATION COMMISSION
SEE SHEET26

EXISTING MODOT R/W

NEW FULLY CONTROLLED ACCESS R/W

TEMPORARY CONST. ESM'T

CROSS DEVELOPMENT CC
NO ACQUISITION

EXIST. INGRESS/ EGRESS ESM'T

EXIST. 16' UTILITY ESM'T

EXIST. 10' UTILITY ESM'T

EXIST. 3' ELECTRIC ESM'T

EXIST. 10' ELECTRIC ESM'T

EXIST. UTILITY ESM'T

PERM. WATERLINE ESM'T

PC STA 2+26.78

PT STA 5+40.08

PC STA 7+11.37

PC STA 734+01.25

PT STA. 10+87.11, ℞ RAMP_3=
STA. 739+20.37, OFF 42.15' LT
℄ ROUTE_50

PT STA. 11+29.48, ℞ RAMP_4=
STA. 739+68.77, OFF 52.35' RT
℄ ROUTE_50

PT STA 2+77.11

PC STA 8+58.71

℄ BLUE_PKWY_E

℞ RAMP_3

℞ RAMP_4

℄ ROUTE_50

¼ SECTION LINE

SECTION LINE

S40°35'51"E
S88°25'30"E
S75°53'35"E
N84°01'27"E
N90°00'00"E

+31.61
91.42'
+27.62
35.08'
+66.46
227.93'
+99.60
244.00'
+69.56
211.06'
+99.09
191.85'
+43.71
185.25'
+71.84
224.02'
+02.58
223.64'
+93.82
333.38'
+24.49
333.38'
+93.82
199.00'
+24.48
223.14'
+30.50
218.68'
+55.47
199.00'
+06.49
199.00'
+24.25
218.15'
+50.92
199.01'

730
735
740
5
10

(03)
WRIGHT DONALD K & BARBARA G-TRUSTEES
SEE SHEET 23

DUTT KRUPA HOTEL LLC & DEVOM HOTEL LLC
NO ACQUISITION

TRIDENT LEE'S SUMMIT LLC
NO ACQUISITION

EXIST. WATERLINE ESM'T
EXIST. PHONE ESM'T
EXIST. UTILITY ESM'T
EXIST. ELECTRIC LINE ESM'T
EXIST. CITY R/W

NE¼ SE¼
8-47N-31W

℞ RAMP_4
PI 1+82.86
PC 0+88.34
PT 2+77.11
Δ 7°33'3.0" (LT)
D 4°0'0.0"
L 188.77' (ARC)
T 94.52'
R 1,432.39'

℞ RAMP_4
PI 9+94.33
PC 8+58.71
PT 11+29.49
Δ 8°7'21.8" (RT)
D 2°59'59.2"
L 270.78' (ARC)
T 135.62'
R 1,910.00'

℞ RAMP_3
PI 3+84.05
PC 2+26.78
PT 5+40.08
Δ 12°31'55.1" (RT)
D 4°0'0.0"
L 313.30' (ARC)
T 157.28'
R 1,432.39'

℄ ROUTE_50
PI 735+51.00
PC 734+01.25
PT 737+00.75
Δ 0°29'57.0" (RT)
D 0°10'0.0"
L 299.50' (ARC)
T 149.75'
R 34,377.47'

℞ RAMP_3
PI 8+99.93
PC 7+11.37
PT 10+87.11
Δ 11°57'36.3" (LT)
D 3°10'59.2"
L 375.74' (ARC)
T 188.55'
R 1,800.00'

SCALE
0 50 100 150

RIGHT OF WAY PLAN
SHEET 2 OF 7

Reid Catt
2025.03.01 21:28:56-06'00'

REID BRENNEN CATT-ENGINEER
MO# PE-2010019516

DATE PREPARED
2/28/2025

ROUTE	STATE
50/291	MO
DISTRICT	SHEET NO.
KC	21

COUNTY
JACKSON

JOB NO.
J4P3196

FEDERAL PROJECT NO.
STB-3001(009)

PROJECT NO.

BRIDGE NO.

DESCRIPTION

DATE

IF A SEAL IS PRESENT ON THIS SHEET IT HAS BEEN ELECTRONICALLY SEALED AND DATED.

MISSOURI HIGHWAYS AND TRANSPORTATION COMMISSION
105 WEST CAPITOL
JEFFERSON CITY, MO 65102
1-888-ASK-MODOT (1-888-275-6636)

LEE'S SUMMIT MISSOURI

olsson
1301 BURLINGTON ST., STE. 100
NORTH KANSAS CITY, MO 64116
PHONE: 816.361.1177
CERT. OF AUTHORITY NO. 001592

F:\2021\04501-05000\021-04786\40-Design\Microstation\J4P3196\plan_sheets\5 Right of Way\021_RW_02_J4P3196_I50_RTE50.dgn 1:13:13 PM 2/28/2025

NE¼ NE¼
8-47N-31W

SE¼ NE¼
8-47N-31W

SW¼ NE¼
8-47N-31W

NW¼ NE¼
8-47N-31W

℄ RTE_291_BL
PI 174+97.13
PC 172+75.78
PT 177+18.47
Δ 0°44'16.2" (LT)
D 0°10'0.0"
L 442.69' (ARC)
T 221.35'
R 34,377.47'

℄ 291_NORTH
PI 464+42.04
PC 463+70.00
PT 465+14.07
Δ 0°14'24.4" (LT)
D 0°10'0.0"
L 144.07' (ARC)
T 72.04'
R 34,377.47'

℄ 291_NORTH
PI 174+25.09
PC 172+75.78
PT 463+70.00
Δ 0°29'51.7" (LT)
D 0°10'0.0"
L 298.62' (ARC)
T 149.31'
R 34,377.47'

℄ BLUE_PKWY_E
PI 733+62.47
PC 731+92.47
PT 735+13.97
Δ 46°3'5.1" (RT)
D 14°19'26.2"
L 321.50' (ARC)
T 170.00'
R 400.00'

℄ SCHOOL_DR
PI 12+35.53
PC 11+47.45
PT 13+09.26
Δ 56°11'13.6" (RT)
D 34°43'28.9"
L 161.81' (ARC)
T 88.08'
R 165.00'

℄ BLUE_PKWY_W
PI 722+93.05
PC 720+42.58
PT 724+90.14
Δ 64°6'27.5" (LT)
D 14°19'26.2"
L 447.56' (ARC)
T 250.47'
R 400.00'

℄ BLUE_PKWY_W
PI 727+74.83
PC 724+90.14
PT 729+84.98
Δ 70°52'52.0" (RT)
D 14°19'26.2"
L 494.84' (ARC)
T 284.69'
R 400.00'

EXIST. CITY R/W

SE BAYBERRY LANE

165

701 MELODY LANE OWNER LLC
NO ACQUISITION

PREFERRED BANK
NO ACQUISITION

CALIFORNIA TIGERS LLC
NO ACQUISITION

CALIFORNIA TIGERS LLC
NO ACQUISITION

QUARTER KING LLC
NO ACQUISITION

EXIST. CITY R/W

SE MELODY LANE

EXIST. INGRESS/ EGRESS EASEMENT

LAND SURVEY 3.25" DNR MONUMENT AT THE EAST QUARTER CORNER SEC. 8-T47N-R31W
DOCUMENT NO. 600-105613, 1854.41' N42°23'03"W TO BEGINNING OF PROJECT

PROJECT BEGINS AT A POINT APPROX. 1369.74' NORTH & 1250.06' WEST OF THE EAST QUARTER CORNER SEC. 8-T47N-R31W

170

EXIST. INGRESS/ EGRESS EASEMENT

EXISTING MODOT R/W

VERITASI SHANE
NO ACQUISITION

BEGIN CONSTRUCTION
STA. 166+72.50 ℬ =
STA. 166+72.50 EXIST. ℄
OFFSET = 0'

℄ 291_NORTH

ℬ RTE_291_BL

¼¼ SECTION LINE

S03°06'35"W

STA. 174+51.36 ℬ RTE_291_BL =
STA. 730+72.47 ℄ BLUE_PKWY_E
STA. 730+69.98 ℄ BLUE_PKWY_W

-PC STA 172+75.78

EXISTING CITY R/W

06
MAX RE PRE OWNED OF LEES SUMMIT, LLC
831 SF NEW FULLY CONTROLLED ACCESS R/W
576 SF NEW R/W
0.6 AC REMAINING

NEW R/W

PC STA 731+92.47

+32.44 66.33'
+88.10 99.18'
+48.27 99.32'
+92.47 75.74'
+70.93 81.17'
+45.51 87.59'
+31.77 87.26'

NEW FULLY CONTROLLED ACCESS R/W

℄ BLUE_PKWY_E

175

CITY R/W
MODOT R/W

EXIST. ELECTRIC EASEMENT

PCC STA A 463+70.00

PT STA 735+13.97

N49°24'09"E

S40°35'51"E

STA. 735+87.97 ℄ BLUE_PKWY_E =
STA. 5+00.00 ℄ 7TH_TERRACE

PERM. UTILITY ESM'T

+13.97 36.95'
+72.44 37.19'
+09.06 67.19'
+31.50 79.22'
+33.88 47.77'
+09.82 52.38'

EXISTING MODOT R/W

NEW R/W

07
QUIKTRIP CORPORATION
SEE SHEET26

NEW FULLY CONTROLLED ACCESS R/W

+68.99 53.58'
+29.53 111.19'
+92.47 76.79'
+72.67 81.87'
+44.42 99.33'
+34.39 99.04'
+56.87 111.83'
+14.07 98.64'

465

PT STA 177+18.47
PT STA A 465+14.07

EXISTING CITY R/W

EXISTING MODOT R/W

EXIST. ELECTRIC EASEMENT

¼¼ SECTION LINE

S86°38'56"E

730

NEW FULLY CONTROLLED ACCESS R/W

+70.36 85.04'
+01.54 85.00'
+75.78 84.99'
+83.41 84.99'
+21.80 106.39'
+26.06 85.02'

MSE WALL KC-0123

PERM. WATERLINE ESM'T

PERM. RETAINING WALL MAINTENANCE ESM'T

+70.37 105.04'
+00.00 85.03'
+00.00 105.03'
+57.89 84.99'
+87.77 105.98'

PERM. RETAINING WALL MAINTENANCE ESM'T

+52.56 71.98'
+37.26 51.00'
+39.74 84.83'
+21.98 61.62'
+88.88 22.51'
+91.87 38.45'
+91.16 53.57'
+83.99 39.25'

EQUATION:
STA 175+74.40 BK =
STA 463+70.00
℄ 291_NORTH

+80.27 88.23'
+38.55 89.00'
+77.56 92.24'
+14.07 99.17'

NEW FULLY CONTROLLED ACCESS R/W

PT STA 729+84.98

02
OFFICE OF ADMINISTRATION STATE OF MISSOURI
SEE SHEET25

R 162'
+72.32 47.99'

MODOT R/W
CITY R/W
R 162'

EXISTING MODOT R/W

PERM. SEWER ESM'T

+00.00 39.09'
+00.00 49.00'
+91.76 39.00'
R 361'
+00.00 39.00'
+00.00 59.00'
+83.14 39.00'

01
LEES SUMMIT SCHOOL DIST R-7
SEE SHEET25

+82.67 155.95'
+82.57 167.47'

PERM. STORM SEWER ESM'T

+61.49 169.95'
+61.15 158.14'

TEMPORARY CONST. ESM'T

+88.88 22.51'
+56.85 43.32'
+24.53 51.00'
+26.16 66.00'

R 451'

NEW R/W

EXIST. EASEMENT

STA. 726+66.33 ℄ BLUE_PKWY_W =
STA. 10+00.00 ℄ SCHOOL_DR

R 387'

NEW R/W

+58.09 51.00'
R 437'
+24.60 50.95'
+08.38 63.89'
+92.18 82.64'

N42°17'34"E

+41.15 36.76'

℄ BLUE_PKWY_W

+87.69 33.92'
R 434'

PERM. WATERLINE ESM'T

16
MISSOURI DEPARTMENT OF TRANSPORTATION
SEE SHEET25

EXIST. UTILITY EASEMENT

+18.29 36.13'

EXIST. ELECTRIC EASEMENT

¼¼ SECTION LINE

SCALE
0 50 100 150

Reid Catt
2025.03.01 21:29:04-06'00'

REID BRENNEN CATT-ENGINEER
MO# PE-2010019516

DATE PREPARED
2/28/2025

ROUTE	STATE
50/291	MO
DISTRICT	SHEET NO.
KC	22

COUNTY
JACKSON

JOB NO.
J4P3196

CONTRACT ID.
STB-3001(009)

PROJECT NO.

BRIDGE NO.

DATE	DESCRIPTION

IF A SEAL IS PRESENT ON THIS SHEET IT HAS BEEN ELECTRONICALLY SEALED AND DATED.

MISSOURI HIGHWAYS AND TRANSPORTATION COMMISSION

105 WEST CAPITOL
JEFFERSON CITY, MO 65102
1-888-ASK-MODOT (1-888-275-6636)

LEE'S SUMMIT MISSOURI

olsson
1301 BURLINGTON ST., STE. 100
NORTH KANSAS CITY, MO 64116
PHONE: 816.361.1177
CERT. OF AUTHORITY NO. 001592

RIGHT OF WAY PLAN
SHEET 3 OF 7

F:\2021\04501-05000\021-04786\40-Design\Microstation\J4P3196\plan_sheets\5 Right of Way\022_RW_03_J4P3196_I50_RTE291.dgn 1:13:23 PM 2/28/2025

Reid Catt
2025.03.01 21:29:10-06'00'

REID BRENNEN CATT-ENGINEER
MO# PE-2010019516

DATE PREPARED
2/28/2025

ROUTE	STATE
50/291	MO
DISTRICT	SHEET NO.
KC	23

COUNTY
JACKSON

JOB NO.
J4P3196

FEDERAL PROJECT NO.
STB-3001(009)

PROJECT NO.

BRIDGE NO.

DATE	DESCRIPTION

IF A SEAL IS PRESENT ON THIS SHEET IT HAS BEEN ELECTRONICALLY SEALED AND DATED.

MISSOURI HIGHWAYS AND TRANSPORTATION COMMISSION
105 WEST CAPITOL
JEFFERSON CITY, MO 65102
1-888-ASK-MODOT (1-888-275-6636)

LEE'S SUMMIT MISSOURI

olsson
1301 BURLINGTON ST., STE. 100
NORTH KANSAS CITY, MO 64116
PHONE: 816.361.1177
CERT. OF AUTHORITY NO. 001592

RIGHT OF WAY PLAN
SHEET 4 OF 7

F:\2021\04501-05000\021-04786\40-Design\Microstation\J4P3196\plan_sheets\5 Right of Way\023_RW_04_J4P3196_I50_RTE291.dgn 1:13:30 PM 2/28/2025

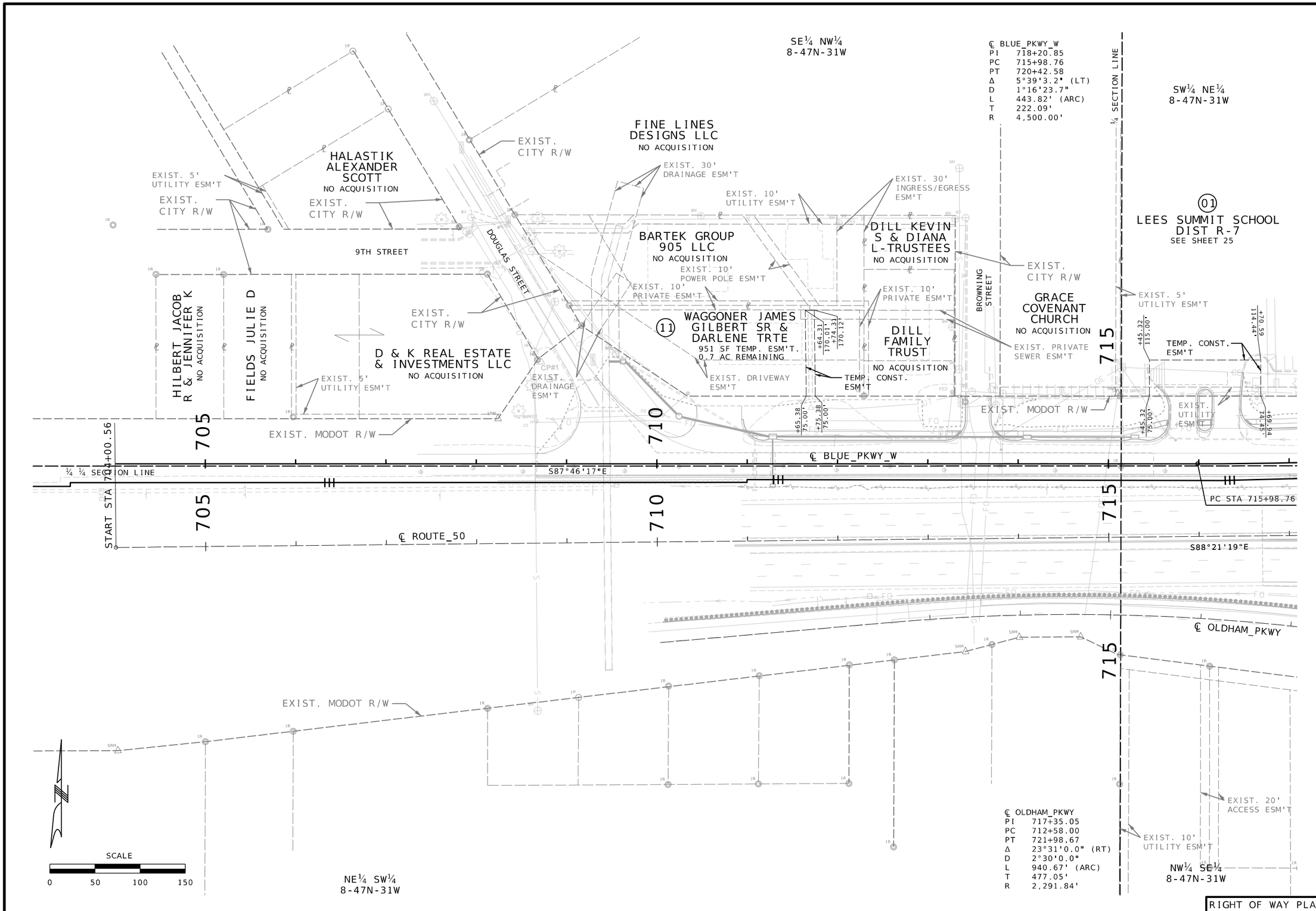

RIGHT OF WAY PLAN
SHEET 5 OF 7

Reid Catt
2025.03.01 21:28:50-06'00'

REID BRENNEN CATT-ENGINEER
MO# PE-2010019516

DATE PREPARED	2/28/2025
ROUTE	50/291
STATE	MO
DISTRICT	KC
SHEET NO.	24
COUNTY	JACKSON
JOB NO.	J4P3196
FEDERAL PROJECT NO.	STB-3001(009)
PROJECT NO.	
BRIDGE NO.	

DESCRIPTION

DATE

IF A SEAL IS PRESENT ON THIS SHEET IT HAS BEEN ELECTRONICALLY SEALED AND DATED.

MISSOURI HIGHWAYS AND TRANSPORTATION COMMISSION

MoDOT

105 WEST CAPITOL
JEFFERSON CITY, MO 65102
1-888-ASK-MODOT (1-888-275-6636)

LEE'S SUMMIT MISSOURI

olsson

1301 BURLINGTON ST., STE. 100
NORTH KANSAS CITY, MO 64116
PHONE: 816.361.1177
CERT. OF AUTHORITY NO. 001592

F:\2021\04501-05000\021-04786\40-Design\Microstation\J4P3196\plan_sheets\5 Right of Way\024_RW_05_J4P3196_I50_BLUE_PKWY_W.dgn 1:13:34 PM 2/28/2025

SCALE
0 50 100 150

℄ BLUE_PKWY_W
PI 718+20.85
PC 715+98.76
PT 720+42.58
Δ 5°39'3.2" (LT)
D 1°16'23.7"
L 443.82' (ARC)
T 222.09'
R 4,500.00'

℄ BLUE_PKWY_W
PI 722+93.05
PC 720+42.58
PT 724+90.14
Δ 64°6'27.5" (LT)
D 14°19'26.2"
L 447.56' (ARC)
T 250.47'
R 400.00'

℄ BLUE_PWKY_W
PI 727+74.83
PC 724+90.14
PT 729+84.98
Δ 70°52'52.0" (RT)
D 14°19'26.2"
L 494.84' (ARC)
T 284.69'
R 400.00'

℄ SCHOOL_DR
PI 12+35.53
PC 11+47.45
PT 13+09.26
Δ 56°11'13.6" (RT)
D 34°43'28.9"
L 161.81' (ARC)
T 88.08'
R 165.00'

℄ RTE_291_BL
PI 174+97.13
PC 172+75.78
PT 177+18.47
Δ 0°44'16.2" (LT)
D 0°10'0.0"
L 442.69' (ARC)
T 221.35'
R 34,377.47'

℄ RAMP_1
PI 2+80.10
PC 0+00.00
PT 5+57.44
Δ 13°56'9.3" (LT)
D 2°30'0.0"
L 557.44' (ARC)
T 280.10'
R 2,291.83'

℄ RAMP_1
PI 7+33.39
PC 5+93.33
PT 8+72.08
Δ 13°56'9.3" (RT)
D 4°59'58.1"
L 278.75' (ARC)
T 140.07'
R 1,146.04'

℄ RAMP_2
PI 2+19.96
PC 0+00.00
PT 4+39.07
Δ 8°46'52.7" (RT)
D 2°0'0.0"
L 439.07' (ARC)
T 219.96'
R 2,864.79'

℄ 291_NORTH
PI 174+25.09
PC 172+75.78
PT 463+70.00
Δ 0°29'51.7" (LT)
D 0°10'0.0"
L 298.62' (ARC)
T 149.31'
R 34,377.47'

℄ 291_NORTH
PI 464+42.04
PC 463+70.00
PT 465+14.07
Δ 0°14'24.4" (LT)
D 0°10'0.0"
L 144.07' (ARC)
T 72.04'
R 34,377.47'

℄ OLDHAM_PKWY
PI 717+35.05
PC 712+58.00
PT 721+98.67
Δ 23°31'0.0" (RT)
D 2°30'0.0"
L 940.67' (ARC)
T 477.05'
R 2,291.84'

PT STA 13+09.26
℄ SCHOOL_DR
N13°53'40"E
+81.44 280.38'
+97.97 235.54'
+59.89 201.74'
+43.22 207.89'
+45.00 221.14'
+8.44 251.26'
+20.09 188.88'
+03.93 220.57'
+21.05 136.76'
+50.04 159.97'
PC STA 11+47.45
EXIST. 10' UTILITY ESM'T
+42.63 90.15'
+28.43 123.67'
N42°17'34"W
+24.12 51.20'
+18.29 36.13'
+41.13 60.65'
R 28'
PRC STA 724+90.14
NEW R/W
TEMP. CONST. ESM'T
+86.89 49.04'
+20.33 49.53'
+97.16 34.04'
+34.09 68.84'
R 423'
R 438'
R 200'
R 366'
R 351'
R 387'
+87.69 33.92'
+21.68 99.95'
+07.45 43.00'
+24.41 54.31'
+75.00 77.72'
+75.00 66.01'
+35.62 31.99'
+60.03 110.11'
PCC STA 720+42.58
+42.62 68.46'
+41.12 53.53'
+50.00 52.11'
+27.49 27.85'
+68.30 28.37'
+68.25 31.58'
+11.63 31.58'
+64.79 34.55'
+56.45 52.25'
+39.02 29.81'
+64.69 43.50'
R 434'
+55.43 31.40'
PERM. DRAINAGE ESM'T - CITY
PT STA 5+57.44
EXIST. MODOT R/W
+57.61 68.82'
+48.63 69.13'
+52.26 45.26'
PC STA 5+93.33
+33.83 87.61'
+75.00 102.17'
+49.98 125.18'
+71.02 129.01'
+75.00 109.41'
R 2257.83'
+06.55 138.08'
PERM. DRAINAGE ESM'T - MODOT
N77°38'21"E
+15.22 165.08'
R 1191.41'
PT STA 4+39.07
S88°21'19"E
PT STA 721+98.67
S79°38'37"E
S69°14'59"E
℄ EXIST. MODOT R/W
SW¼ NE¼ 8-47N-31W
NW¼ SE¼ 8-47N-31W
720
725
730

(01)
LEES SUMMIT SCHOOL DIST R-7
598 SF NEW FULLY CONTROLLED ACCESS R/W
14776 SF NEW R/W
19339 SF PERM. ESM'T
51038 SF TEMP. ESM'T.
2224 SF EXCESS REMNANT RT. W/ 90 SF PERM. ESM'T
43.3 AC REMAINING

(16)
MISSOURI DEPARTMENT OF TRANSPORTATION
7562 SF NEW FULLY CONTROLLED ACCESS R/W
896 SF NEW R/W
8396 SF PERM. ESM'T
1.0 AC REMAINING

TEMP. CONST. ESM'T
PERM. DRAINAGE ESM'T
PERM. WATERLINE ESM'T
PERM. RETAINING WALL MAINTENANCE ESM'T
+61.15 158.14'
+61.49 169.95'
+82.57 167.47'
+82.67 155.95'
+84.16 175.22'
+62.21 105.69'
+84.14 193.10'
EXIST. MODOT R/W
+83.41 84.99'
+68.09 129.43'
+84.25 124.81'
+92.18 82.64'
+65.89 50.38'
+24.60 66.00'
+58.09 51.00'
+82.92 R 496'
+24.53 51.00'
+26.16 66.00'
+56.85 43.32'
+57.54 58.40'
+83.78 54.35'
+91.16 53.57'
+21.98 61.62'
+37.26 51.06'
+39.74 84.83'
+83.99 39.25'
+91.87 38.45'
+88.88 22.51'
R 437'
R 452'
R 451'
R 361'
R 162'
PT STA 729+84.98
+52.56 74.98'
730
S86°38'56"E
+80.27 88.23'
+72.32 47.99'
+38.55 89.60'
+00.00 59.00'
+00.00 39.00'
+91.76 49.00'
+00.00 41.13'
+13.01 36.76'
+41.15 39.00'
+83.14 39.00'
PERM. SEWER ESM'T
STA. 726+66.33 ℄ BLUE_PKWY_W =
STA. 10+00.00 ℄ SCHOOL_DR
EQUATION:
STA 175+74.40 BK =
STA 463+70.00 AH +77.56 92.24'
NEW FULLY CONTROLLED ACCESS R/W
+29.70 95.19'
+14.07 99.17'
PT STA 177+18.47
PT STA 465+14.07
EXIST. MODOT R/W
+14.07 98.64'
+81.47 98.21'
+29.10 139.47'
N07°22'19"W
SE¼ NE¼ 8-47N-31W
S88°25'30"E
POT STA 179+08.56 ℄ RAMP_3
+28.42 95.10'
N01°34'30"W
PCC STA 463+70.00
℄ 291_NORTH
℄ RTE_291_BL
¼ SECTION LINE

(02)
OFFICE OF ADMINISTRATION STATE OF MISSOURI
11,222 SF FULLY CONTROLLED ACCESS R/W
39,428 SF NEW R/W
7334 SF PERM. ESM'T
2.4 AC REMAINING

MISSOURI HIGHWAY AND TRANSPORTATION COMMISSION
38,843 SF EXCESS R/W
1763 SF PERM. ESM'T

NEW R/W
+64.24 163.13'
+34.08 113.15'
R 3647.77'
R 1191.41'
R 120'
R 70'
+82.92 100.85'
+82.26 193.97'
+32.63 223.50'
+15.22 165.08'
℄ RAMP_1
℄ RAMP_2
℄ OLDHAM_PKWY
℄ ROUTE_50
℄ BLUE_PKWY_W
¼ SECTION LINE

STA. 174+51.36 ℄ RTE_291_BL =
STA. 730+69.98 ℄ BLUE_PKWY_W
STA. 730+72.47 ℄ BLUE_PKWY_E
STA. 179+08.56 ℄ RTE_291_BL =
STA. 467+04.16 ℄ 291_NORTH =
STA. 9+75.28 ℄ RAMP_1
STA. 0+00.00 ℄ RAMP_3

RIGHT OF WAY PLAN
SHEET 6 OF 7

Reid Catt
2025.03.01 21:29:35-06'00'
REID BRENNEN CATT-ENGINEER
MO# PE-2010019516

DATE PREPARED
2/28/2025
ROUTE 50/291
STATE MO
DISTRICT KC
SHEET NO. 25
COUNTY JACKSON
JOB NO. J4P3196
FEDERAL PROJECT NO. STB-3001(009)
PROJECT NO.
BRIDGE NO.

DESCRIPTION
DATE

IF A SEAL IS PRESENT ON THIS SHEET IT HAS BEEN ELECTRONICALLY SEALED AND DATED.

MISSOURI HIGHWAYS AND TRANSPORTATION COMMISSION
MoDOT
105 WEST CAPITOL
JEFFERSON CITY, MO 65102
1-888-ASK-MODOT (1-888-275-6636)

LEE'S SUMMIT MISSOURI

olsson
1301 BURLINGTON ST., STE. 100
NORTH KANSAS CITY, MO 64116
PHONE: 816.361.1177
CERT. OF AUTHORITY NO. 001592

F:\2021\04501-05000\021-04786\40-Design\Microstation\J4P3196\plan_sheets\5 Right of Way\025_RW_06_J4P3196_I50_BLUE_PKWY_W.dgn 1:13:46 PM 2/28/2025

℄ BLUE_PKWY_E
PI 733+62.47
PC 731+92.47
PT 735+13.97
Δ 46°3'5.1" (RT)
D 14°19'26.2"
L 321.50' (ARC)
T 170.00'
R 400.00'

℄ BLUE_PKWY_E
PI 741+35.82
PC 738+91.90
PT 743+75.11
Δ 19°19'41.7" (LT)
D 4°0'0.0"
L 483.21' (ARC)
T 243.92'
R 1,432.39'

℄ BLUE_PKWY_E
PI 737+94.78
PC 736+93.49
PT 738+91.90
Δ 28°25'15.8" (LT)
D 14°19'26.2"
L 198.42' (ARC)
T 101.29'
R 400.00'

℄ 7TH_CONN1
PI 4+46.28
PC 3+98.01
PT 4+87.95
Δ 51°31'51.9" (RT)
D 57°17'44.8"
L 89.94' (ARC)
T 48.27'
R 100.00'

℄ 7TH_TERR
PI 7+51.15
PC 6+64.40
PT 8+29.31
Δ 43°56'54.9" (RT)
D 26°38'57.1"
L 164.92' (ARC)
T 86.75'
R 215.00'

05 QUARTER KING LLC
SEE SHEET 22

06 MAX RE PRE OWNED OF LEES SUMMIT, LLC
SEE SHEET 22

07 QUIKTRIP CORPORATION
7038 SF NEW FULLY CONTROLLED ACCESS R/W
61657 SF NEW R/W
567 SF PERM. ESM'T
10133 SF EXCESS REMNANT LT
0.9 AC REMAINING

12 MAS 910 LLC
NO ACQUISITION

13 THE HARDCORE REALTOR LLC
NO ACQUISITION

14 DAVID W BARTHOLD TRUST
NO ACQUISITION

1151 CENTURY LLC
NO ACQUISITION

HMH LIMITED INC
NO ACQUISITION

04 KRAFT THOMAS ANTHONY-TRUSTEE
1926 SF NEW R/W
36787 SF TEMP. ESM'T
2.9 AC REMAINING

CROSS DEVELOPMENT CC LEE'S SUMMIT LLC
NO ACQUISITION

15 BAKER ANGLER PROPERTIES LLC
SEE SHEET 21

MISSOURI HIGHWAY AND TRANSPORTATION COMMISSION
77,312 SF EXCESS R/W

EXIST. 7.5' UTILITY ESM'T
EXIST. PRIVATE SEWER ESM'T
EXIST. 24' INGRESS EGRESS ESM'T
EXIST. 5' UTILITY ESM'T
EXIST. 16' UTILITY ESM'T
EXIST. 15' UTILITY ESM'T
EXIST. CITY R/W
SECTION LINE
SE¼ NE¼ 8-47N-31W
TEMP. CONST. ESM'T
EXIST. INGRESS EGRESS ESM'T
EXIST. 10' ELECTRIC ESM'T
PERM. WATERLINE ESM'T
EXIST. 10' UTILITY ESM'T
EXIST. MODOT R/W
EXIST. 3' ELECTRIC ESM'T
PERM. UTILITY ESM'T
NEW FULLY CONTROLLED ACCESS R/W
NEW R/W
EXIST. MODOT R/W
EXIST. 7.5' UTILITY ESM'T
¼ SECTION LINE

℄ 7TH_CONN1 S86°38'56"E
℄ 7TH_TERR S86°38'56"E
℄ BLUE_PKWY_E
℄ ROUTE_50 N90°00'00"E
S75°53'35"E
N49°24'09"E
S40°35'51"E
S88°25'30"E
S02°22'16"W
℄ RTE 291 BL NORTH

PT STA 8+29.31
PT STA 4+87.95
PC STA 6+64.40
PC STA 731+92.47
PC STA 736+93.49
PCC STA 738+91.90
PT STA 735+13.97
PT STA 7+11.37
PT STA 5+40.08
PC STA 734+01.25
PC STA 2+26.78
POT STA 179+08.56
PT STA 8+72.08

STA. 735+37.97 ℄ BLUE_PKWY_E = STA. 5+00.00 ℄ 7TH_TERRACE
STA. 6+84.06 ℄ 7TH_TERRACE = STA. 5+00.00 ℄ 7TH_CONN1
STA. 174+51.36 ℄ RTE 291 BL = STA. 174+51.36 ℄ 291 NORTH
STA. 730+69.98 ℄ BLUE_PKWY_E
EQUATION: STA 175+74.40 BK = STA 463+70.00 PCC STA 463+70.00 ℄ 291 NORTH
PT STA 465+14.07
PT STA 177+18.47
STA. 467+04.16 ℄ (291 NORTH)=
STA. 9+75.28 ℄ (RAMP_1)
STA. 32755+54.20 ℄ (RAMP_3)

℄ RAMP_3
PI 3+84.05
PC 2+26.78
PT 5+40.08
Δ 12°31'55.1" (RT)
D 4°0'0.0"
L 313.30' (ARC)
T 157.28'
R 1,432.39'

℄ RAMP_3
PI 8+99.93
PC 7+11.37
PT 10+87.11
Δ 11°57'36.3" (LT)
D 3°10'59.2"
L 375.74' (ARC)
T 188.55'
R 1,800.00'

℄ ROUTE_50
PI 735+51.00
PC 734+01.25
PT 737+00.75
Δ 0°29'57.0" (RT)
D 0°10'0.0"
L 299.50' (ARC)
T 149.75'
R 34,377.47'

SCALE
0 50 100 150

RIGHT OF WAY PLAN
SHEET 7 OF 7

F:\2021\04501-05000\021-04786\40-Design\Microstation\J4P3196\plan_sheets\5 Right of Way\026_RW_07_J4P3196_I50_BLUE_PKWY_E.dgn 1:13:55 PM 2/28/2025

Reid Catt
2025.03.01 21:28:30-06'00'
REID BRENNEN CATT NUMBER PE-2010019516
REID BRENNEN CATT-ENGINEER
MO# PE-2010019516

DATE PREPARED 2/28/2025
ROUTE 50/291
STATE MO
DISTRICT KC
SHEET NO. 26
COUNTY JACKSON
JOB NO. J4P3196
FEDERAL PROJECT NO. STB-3001(009)
PROJECT NO.
BRIDGE NO.

DESCRIPTION
DATE

IF A SEAL IS PRESENT ON THIS SHEET IT HAS BEEN ELECTRONICALLY SEALED AND DATED.

MISSOURI HIGHWAYS AND TRANSPORTATION COMMISSION
105 WEST CAPITOL
JEFFERSON CITY, MO 65102
1-888-ASK-MODOT (1-888-275-6636)

LEE'S SUMMIT MISSOURI

olsson
1301 BURLINGTON ST., STE. 100
NORTH KANSAS CITY, MO 64116
PHONE: 816.361.1177
CERT. OF AUTHORITY NO. 001592

ALL PROJECT COORDINATES HAVE BEEN PROJECTED FROM THE MISSOURI STATE PLANE COORDINATE (SPC) SYSTEM OF 1983 USING AN AVERAGE PROJECT PROJECTION (GRID TO GROUND) FACTOR. TO GET BACK TO STATE PLANE COORDINATES MULTIPY THE PROJECT COORDINATES BY THE AVERAGE GRID FACTOR AS SHOWN IN THE "REFERENCE CONTROL INFORMATION" PORTION OF THIS TABLE.

PROJECT COORDINATE INFORMATION

COORDINATE SYSTEM	STATE PLANE, MISSOURI WEST
HORIZONTAL DATUM	NAD 1983
VERTICAL DATUM	NAVD 1983
GEOID MODEL	JACKSON COUNTY
ELEVATIONS DETERMINED BY	GPS OBSERVATIONS
PROJECT PROJECTION FACTOR	1.00010281

REFERENCE CONTROL INFORMATION

COORDINATE SYSTEM	NAD 1983
CONTROL STATION	JA-25
DESIGNATION	JA-25
CORS_ID	
PID	95025
LATITUDE	38°54'09.40032"
LONGITUDE	94°22'25.51836"
NORTHING (M)	303646.0300
EASTING (M)	860950.4750
ZONE	WEST
PROJECT AVERAGE GRID FACTOR	0.99989720

EXAMPLE OF PROJECT COORDINATE TO S.P.C.

PROJECT NORTHING X AVERAGE GRID FACTOR
= STATE PLANE NORTHING
PROJECT EASTING X AVERAGE GRID FACTOR
= STATE PLANE EASTING

EXAMPLE: CONTROL POINT # GPS#1
N 996649.66 X 0.99989720 = N 996547.20
E 2826001.12 X 0.99989720 = E 2825710.61

LINEAR UNIT CONVERSION

1 METER = 3.280833333 US SURVEY FEET (USFT)

COORDINATE POINT LISTING

SHEET NO	STATION	LOCATION	OFFSET (USFT)	MODIFIED STATE PLANE (GROUND) NORTHING (US SURVEY FT)	EASTING (US SURVEY FT)	ELEVATION (US SURVEY FT)	DESCRIPTION	GPK POINT ID
PROJECT CONTROL POINTS								
13	708+72.63	BLUE PKWY	201.18 LT.	996649.66	2826001.12	1027.79	CP #1 - 1/2" REBAR W/ CONTROL POINT CAP	
6	743+14.27	BLUE PKWY	197.32 LT.	996540.95	2829442.76	1011.45	CP #2 - 1/2" REBAR W/ CONTROL POINT CAP	
10	172+27.05	RTE. 291	81.27 LT.	997220.24	2828083.97	1034.50	CP #3 - 1/2" REBAR W/ CONTROL POINT CAP	
10	164+49.30	RTE. 291	75.66 LT.	997997.15	2828120.56	1032.59	CP #4 - 1/2" REBAR W/ CONTROL POINT CAP	
ALIGNMENTS								
℄ RTE 50								
-	704+00.56	℄		996462.1104	2825523.4684		BEGIN ALIGNMENT ℄ ROUTE 50	
4	728+42.95	℄		996392.0111	2827964.8497		PI POINT	
5	734+01.25	℄		996376.6656	2828522.9388		PC POINT	
5	735+51.00	LT.	0.33	996372.3595	2828672.6278		PI POINT	
5				962013.4132	2827534.4197		CENTER OF CURVE	
5,6	737+00.75	℄		996366.7495	2828822.2737		PT POINT	
6	744+00.00	℄		996340.5541	2829521.0328		PI POINT	
6	751+91.06	℄		996310.9192	2830311.5408		END ALIGNMENT ℄ ROUTE 50	
℔ RTE 291								
-	161+98.85	℔		998251.3343	2828058.5961		BEGIN ALIGNMENT ℔ ROUTE 291	
10	172+75.78	℔		997175.9912	2828000.1751		PC POINT	
10	174+97.13	RT.	0.71	996954.9666	2827988.1674		PI POINT	
10				995311.0904	2862327.0245		CENTER OF CURVE	
10	177+18.47	℔		996733.8058	2827979.0067		PT POINT	
11	179+08.56	℔		996543.8810	2827971.1399		PI POINT	
11	182+22.57	℔		996229.9925	2827962.5091		PI POINT	
11	184+24.49	℔		996028.4948	2827949.5050		PI POINT	
11	187+22.39	℔		995730.8552	2827936.9413		EQ. 187+22.39 BK.= 475+17.90 AH.	
11	478+69.69	℔		995379.3823	2827922.1053		END ALIGNMENT ℔ ROUTE 291	
℔ RAMP 1								
4	0+00.00	℔		996460.6389	2827002.4792		BEGIN ALIGNMENT ℔ RAMP 1	
4	2+80.10	RT.	17.05	996452.9400	2827282.4739		PI POINT	
				998751.6043	2827065.4729		CENTER OF CURVE	
4	5+57.44	℔		996512.9007	2827556.0814		PT POINT	
4	5+93.33	℔		996520.5840	2827591.1413		PC POINT	
4	7+33.39	LT.	8.53	996550.5676	2827727.9598		PI POINT	
4	8+72.08	℔		996546.7177	2827867.9722		PT POINT	
4	9+75.28	℔		996543.8810	2827971.1399		END ALIGNMENT ℔ RAMP 1	
℔ RAMP 2								
4	0+00.00	℔		996369.1645	2826891.1477		BEGIN ALIGNMENT ℔ RAMP 2	
4	2+19.96	LT.	8.43	996363.1185	2827111.0280		PI POINT	
				993505.4568	2826812.4055		CENTER OF CURVE	
4	4+39.07	℔		996323.5758	2827327.4079		PT POINT	
4	8+49.51	℔		996249.7911	2827731.1612		PC POINT	
4	9+37.49	RT.	3.37	996233.9739	2827817.7135		PI POINT	
4	10+25.13	℔		996231.5555	2827905.6660		PT POINT	
4	10+82.00	℔		996229.9925	2827962.5091		END ALIGNMENT ℔ RAMP 2	
℔ RAMP 3								
5	0+00.00	℔		996543.8810	2827971.1399		BEGIN ALIGNMENT ℔ RAMP 3	
5	2+26.78	℔		996537.6478	2828197.8303		PC POINT	
5	3+84.05	LT.	8.61	996533.3248	2828355.0480		PI POINT	
				995105.7952	2828158.5821		CENTER OF CURVE	
5	5+40.08	℔		996494.9910	2828507.5821		PT POINT	
5	7+11.37	℔		996453.2402	2828673.7131		PC POINT	
5	8+99.93	RT.	9.85	996407.7061	2828854.8979		PI POINT	
5	10+87.11	℔		996400.6425	2829043.3195		END ALIGNMENT ℔ RAMP 3	

Reid Catt
2025.03.01 21:30:39-06'00'

REID BRENNEN CATT
NUMBER PE-2010019516

REID BRENNEN CATT-ENGINEER
MO# PE-2010019516

DATE PREPARED
2/28/2025

ROUTE	STATE
50/291	MO
DISTRICT	SHEET NO.
KC	27

COUNTY
JACKSON

JOB NO.
J4P3196

FEDERAL PROJECT NO.
STB-3001(009)

PROJECT NO.

BRIDGE NO.

DESCRIPTION | DATE

IF A SEAL IS PRESENT ON THIS SHEET IT HAS BEEN ELECTRONICALLY SEALED AND DATED.

MISSOURI HIGHWAYS AND TRANSPORTATION COMMISSION
105 WEST CAPITOL
JEFFERSON CITY, MO 65102
1-888-ASK-MODOT (1-888-275-6636)

LEE'S SUMMIT MISSOURI

olsson
1301 BURLINGTON ST., STE. 100
NORTH KANSAS CITY, MO 64116
PHONE: 816.361.1177
CERT. OF AUTHORITY NO. 001592

ALL PROJECT COORDINATES HAVE BEEN PROJECTED FROM THE MISSOURI STATE PLANE COORDINATE (SPC) SYSTEM OF 1983 USING AN AVERAGE PROJECT PROJECTION (GRID TO GROUND) FACTOR. TO GET BACK TO STATE PLANE COORDINATES MULTIPY THE PROJECT COORDINATES BY THE AVERAGE GRID FACTOR AS SHOWN IN THE "REFERENCE CONTROL INFORMATION" PORTION OF THIS TABLE.

PROJECT COORDINATE INFORMATION

COORDINATE SYSTEM	STATE PLANE, MISSOURI WEST
HORIZONTAL DATUM	NAD 1983
VERTICAL DATUM	NAVD 1983
GEOID MODEL	JACKSON COUNTY
ELEVATIONS DETERMINED BY	GPS OBSERVATIONS
PROJECT PROJECTION FACTOR	1.00010281

REFERENCE CONTROL INFORMATION

COORDINATE SYSTEM	NAD 1983
CONTROL STATION	JA-25
DESIGNATION	JA-25
CORS_ID	
PID	95025
LATITUDE	38°54'09.40032"
LONGITUDE	94°22'25.51836"
NORTHING (M)	303646.0300
EASTING (M)	860950.4750
ZONE	WEST
PROJECT AVERAGE GRID FACTOR	0.99989720

EXAMPLE OF PROJECT COORDINATE TO S.P.C.

PROJECT NORTHING X AVERAGE GRID FACTOR
= STATE PLANE NORTHING
PROJECT EASTING X AVERAGE GRID FACTOR
= STATE PLANE EASTING

EXAMPLE: CONTROL POINT # GPS#1
N 996649.66 X 0.99989720 = N 996547.20
E 2826001.12 X 0.99989720 = E 2825710.61

LINEAR UNIT CONVERSION

1 METER = 3.280833333 US SURVEY FEET (USFT)

COORDINATE POINT LISTING

SHEET NO	STATION	LOCATION	OFFSET (USFT)	MODIFIED STATE PLANE (GROUND) NORTHING (US SURVEY FT)	EASTING (US SURVEY FT)	ELEVATION (US SURVEY FT)	DESCRIPTION	GPK POINT ID
ALIGNMENTS								
℄ RAMP 4								
5	0+00.00	℄		996229.9925	2827962.5091		BEGIN ALIGNMENT ℄ RAMP 4	
5	0+88.34			996227.5645	2828050.8124		PC POINT	
5	1+82.86	RT.	3.12	996224.9664	2828145.2990		PI POINT	
5				997659.4171	2828090.1835		CENTER OF CURVE	
5	2+77.11	℄		996234.8070	2828239.3076		PT POINT	
5	8+58.71	℄		996295.3571	2828817.7533		PC POINT	
5	9+94.33	LT.	4.81	996309.4758	2828952.6323		PI POINT	
5,6	11+29.49	℄		996304.3953	2829088.1530		END ALIGNMENT ℄ RAMP 4	
BLUE PARKWAY (WEST)								
13	704+00.51	℄		996554.7533	2825526.5134		BEGIN ALIGNMENT ℄ BLUE PARKWAY (WEST)	
13	715+98.76	℄		996508.1561	2826723.8588		PC POINT	
14	718+20.85	RT.	5.48	996499.5195	2826945.7811		PI POINT	
14				1001004.7522	2826898.8536		CENTER OF CURVE	
14	720+42.58	℄		996512.7769	2827167.4753		PCC POINT	
14	722+93.05	RT.	71.95	996527.7284	2827417.4991		PI POINT	
14				996912.0636	2827143.5978		CENTER OF CURVE	
14	724+90.14	℄		996759.1829	2827513.2294		PRC POINT	
14	727+74.83	LT.	90.97	997022.2603	2827622.0389		PI POINT	
14				996606.3023	2827882.8610		CENTER OF CURVE	
14	729+84.98	℄		997005.6183	2827906.2436		PT POINT	
14	730+69.98	℄		997000.6495	2827991.0982		END ALIGNMENT ℄ BLUE PARKWAY WEST	
BLUE PARKWAY (EAST)								
15	730+72.47	℄		997000.6495	2827991.0982		BEGIN ALIGNMENT ℄ BLUE PARKWAY (EAST)	
15	731+92.47	℄		996993.6347	2828110.8930		PC POINT	
15	733+62.47	LT.	34.63	996983.6970	2828280.6041		PI POINT	
15				996594.3187	2828087.5104		CENTER OF CURVE	
15	735+13.97	℄		996854.6144	2828391.2309		PRC POINT	
15	736+93.49	℄		996718.3081	2828508.0487		PC POINT	
15	737+94.78	RT.	12.63	996641.3955	2828573.9645		PI POINT	
15	738+91.90	℄		996605.1255	2828668.5421		PCC POINT	
15	741+35.82	RT.	20.62	996517.7853	2828896.2899		PI POINT	
15				997942.5459	2829181.4363		CENTER OF CURVE	
15	743+75.11	℄		996510.7478	2829140.1092		END ALIGNMENT ℄ BLUE PARKWAY EAST	
SCHOOL DRIVE								
17	10+00.00	℄		996902.1889	2827613.6936		BEGIN ALIGNMENT ℄ SCHOOL DRIVE	
17	11+47.45	℄		997011.2585	2827514.4732		PC POINT	
17	12+35.53	RT.	19.44	997076.4113	2827455.2039		PI POINT	
17				997122.2901	2827636.5265		CENTER OF CURVE	
17	13+09.26	℄		997161.9122	2827476.3543		PT POINT	
17	13+35.86	℄		997187.7392	2827482.7432		END ALIGNMENT ℄ SCHOOL DRIVE	
7TH TERRACE								
16	5+00.00	℄		996836.3889	2828406.8506		BEGIN ALIGNMENT ℄ 7TH TERRACE	
16	6+64.40	℄		996943.3694	2828531.6784		PC POINT	
16	7+51.15	LT.	16.84	996999.8233	2828597.5505		PI POINT	
16				996780.1196	2828671.5874		CENTER OF CURVE	
16	8+29.31	℄		996994.7519	2828684.1555		PT POINT	
16	9+72.56	℄		996986.3783	2828827.1571		END ALIGNMENT ℄ 7TH TERRACE	
7TH TERRACE CONNECTION								
16	3+46.67	℄		997010.9277	2828413.0383		BEGIN ALIGNMENT ℄ 7TH CONN	
16	3+98.01	℄		997007.6266	2828464.2888		PC POINT	
16	4+46.28	LT.	11.04	997004.8051	2828512.4740		PI POINT	
16				996907.7976	2828458.4431		CENTER OF CURVE	
16	4+87.95	℄		996965.3234	2828540.2403		PT POINT	
16	5+00.00	℄		996955.4653	2828547.1732		END ALIGNMENT ℄ 7TH CONN	
OLDHAM PARKWAY								
18	725+02.10	℄		996092.3484	2827585.5736		PC POINT	
18	726+56.47	RT	12.40	996037.6344	2827729.9341		PI POINT	
18				996985.2830	2827923.8880		CENTER OF CURVE	
18	728+08.20	℄		996031.2142	2827884.1747		PT POINT	
18	728+73.59	℄		996028.4948	2827949.5050		END ALIGNMENT ℄ OLDHAM PARKWAY	

Reid Catt
2025.03.01 21:30:45-06'00'

REID BRENNEN CATT NUMBER PE-2010019516

REID BRENNEN CATT-ENGINEER
MO# PE-2010019516

DATE PREPARED
2/28/2025

ROUTE	STATE
50/291	MO

DISTRICT	SHEET NO.
KC	28

COUNTY
JACKSON

JOB NO.
J4P3196

FEDERAL PROJECT NO.
STB-3001(009)

PROJECT NO.

BRIDGE NO.

DESCRIPTION	DATE

IF A SEAL IS PRESENT ON THIS SHEET IT HAS BEEN ELECTRONICALLY SEALED AND DATED.

MISSOURI HIGHWAYS AND TRANSPORTATION COMMISSION
105 WEST CAPITOL
JEFFERSON CITY, MO 65102
1-888-ASK-MODOT (1-888-275-6636)

LEE'S SUMMIT MISSOURI

olsson
1301 BURLINGTON ST., STE. 100
NORTH KANSAS CITY, MO 64116
PHONE: 816.361.1177
CERT. OF AUTHORITY NO. 001592

ALL PROJECT COORDINATES HAVE BEEN PROJECTED FROM THE MISSOURI STATE PLANE COORDINATE (SPC) SYSTEM OF 1983 USING AN AVERAGE PROJECT PROJECTION (GRID TO GROUND) FACTOR. TO GET BACK TO STATE PLANE COORDINATES MULTIPY THE PROJECT COORDINATES BY THE AVERAGE GRID FACTOR AS SHOWN IN THE "REFERENCE CONTROL INFORMATION" PORTION OF THIS TABLE.

PROJECT COORDINATE INFORMATION

COORDINATE SYSTEM	STATE PLANE, MISSOURI WEST
HORIZONTAL DATUM	NAD 1983
VERTICAL DATUM	NAVD 1983
GEOID MODEL	JACKSON COUNTY
ELEVATIONS DETERMINED BY	GPS OBSERVATIONS
PROJECT PROJECTION FACTOR	1.00010281

REFERENCE CONTROL INFORMATION

COORDINATE SYSTEM	NAD 1983
CONTROL STATION	JA-25
DESIGNATION	JA-25
CORS_ID	
PID	95025
LATITUDE	38°54'09.40032"
LONGITUDE	94°22'25.51836"
NORTHING (M)	303646.0300
EASTING (M)	860950.4750
ZONE	WEST
PROJECT AVERAGE GRID FACTOR	0.99989720

EXAMPLE OF PROJECT COORDINATE TO S.P.C.

PROJECT NORTHING X AVERAGE GRID FACTOR
= STATE PLANE NORTHING
PROJECT EASTING X AVERAGE GRID FACTOR
= STATE PLANE EASTING

EXAMPLE: CONTROL POINT # GPS#1
N 996649.66 X 0.99989720 = N 996547.20
E 2826001.12 X 0.99989720 = E 2825710.61

LINEAR UNIT CONVERSION

1 METER = 3.280833333 US SURVEY FEET (USFT)

COORDINATE POINT LISTING

SHEET NO	STATION	LOCATION	OFFSET (USFT)	MODIFIED STATE PLANE (GROUND) NORTHING (US SURVEY FT)	EASTING (US SURVEY FT)	ELEVATION (US SURVEY FT)	DESCRIPTION	GPK POINT ID
ALIGNMENTS								
ENT 291 184+65								
	0+00.00	℄		995971.9772	2828039.5178		BEGIN ALIGNMENT	
	0+46.43	℄		996018.3168	2828042.3334		END ALIGNMENT	
ENT 291 184+77								
	0+00.00	℄		995975.8687	2827947.2836		BEGIN ALIGNMENT	
	1+50.88	℄		995969.5055	2828098.0298		END ALIGNMENT	
ENT 291 186+55								
	0+00.00	℄		995797.7743	2827939.7661		BEGIN ALIGNMENT	
	0+76.30	℄		995801.1648	2827863.5372		END ALIGNMENT	
ENT OLDHAM 726+95								
	0+00.00	℄		996042.6007	2827771.6562		BEGIN ALIGNMENT	
	0+75.86	℄		995967.6950	2827759.6543		END ALIGNMENT	
ENT BP W 710+68								
	0+00.00	℄		996528.7631	2826194.3478		BEGIN ALIGNMENT	
	0+74.10	℄		996602.8111	2826197.2296		END ALIGNMENT	
ENT BP W 713+55								
	0+00.00	℄		996517.6046	2826481.0730		BEGIN ALIGNMENT	
	0+84.13	℄		996601.6673	2826484.3445		END ALIGNMENT	
ENT BP W 715+82								
	0+00.00	℄		996508.7785	2826707.8651		BEGIN ALIGNMENT	
	0+97.62	℄		996606.3218	2826711.6612		END ALIGNMENT	
ENT BP W 716+30								
	0+00.00	℄		996507.0255	2826755.8332		BEGIN ALIGNMENT	
	0+97.50	℄		996604.4552	2826759.6249		END ALIGNMENT	
ENT BP W 724+12								
	0+00.00	℄		996691.0972	2827477.0252		BEGIN ALIGNMENT	
	0+55.71	℄		996660.3194	2827523.4675		END ALIGNMENT	
ENT BP W 726+61								
	0+00.00	℄		996899.1661	2827610.4077		BEGIN ALIGNMENT	
	0+63.27	℄		996852.8409	2827653.5044		END ALIGNMENT	
ENT BP E 732+98								
	0+00.00	℄		996973.5175	2828214.8221		BEGIN ALIGNMENT	
	0+65.26	℄		996911.6466	2828194.0497		END ALIGNMENT	
ENT BP E 737+29								
	0+00.00	℄		996692.3937	2828532.3344		BEGIN ALIGNMENT	
	0+79.01	℄		996748.9303	2828587.5325		END ALIGNMENT	
ENT BP E 737+32								
	0+00.00	℄		996690.2938	2828534.5015		BEGIN ALIGNMENT	
	0+56.45	℄		996649.6044	2828495.3704		END ALIGNMENT	
ENT 7TH TERR 7+55								
	0+00.00	℄		996986.5797	2828611.5939		BEGIN ALIGNMENT	
	0+44.31	℄		996944.0300	2828623.9581		END ALIGNMENT	
ENT 7TH TERR 7+69								
	0+00.00	℄		996989.8883	2828624.4485		BEGIN ALIGNMENT	
	0+24.00	℄		997013.3048	2828619.1883		PI POINT	
	0+47.13	℄		997036.3984	2828620.4851		END ALIGNMENT	
ENT 7TH TERR 8+52								
	0+00.00	℄		996993.3935	2828707.3552		BEGIN ALIGNMENT	
	0+33.98	℄		997027.3182	2828709.3418		END ALIGNMENT	
ENT 7TH TERR 9+40								
	0+00.00	℄		996988.2262	2828795.5982		BEGIN ALIGNMENT	
	0+34.98	℄		997023.1493	2828797.6432		END ALIGNMENT	
ENT 7TH CONN 4+55								
	0+00.00	℄		996988.3696	2828517.6728		BEGIN ALIGNMENT	
	0+60.43	℄		997039.9099	2828549.2246		END ALIGNMENT	

Reid Catt
2025.03.01 21:30:52-06'00'

REID BRENNEN CATT NUMBER PE-2010019516

REID BRENNEN CATT-ENGINEER
MO# PE-2010019516

DATE PREPARED
2/28/2025

ROUTE	STATE
50/291	MO

DISTRICT	SHEET NO.
KC	29

COUNTY
JACKSON

JOB NO.
J4P3196

FEDERAL PROJECT NO.
STB-3001(009)

PROJECT NO.

BRIDGE NO.

DESCRIPTION	DATE

IF A SEAL IS PRESENT ON THIS SHEET IT HAS BEEN ELECTRONICALLY SEALED AND DATED.

MISSOURI HIGHWAYS AND TRANSPORTATION COMMISSION

105 WEST CAPITOL
JEFFERSON CITY, MO 65102
1-888-ASK-MODOT (1-888-275-6636)

LEE'S SUMMIT MISSOURI

olsson
1301 BURLINGTON ST., STE. 100
NORTH KANSAS CITY, MO 64116
PHONE: 816.361.1177
CERT. OF AUTHORITY NO. 001592

COORDINATE POINTS
SHEET 3 OF 3

1. CONCRETE SIDEWALK, CURB RAMP AND DETECTABLE WARNING DEVICE (TRUNCATED DOMES) DETAILS SHALL CONFORM TO ADA REQUIREMENTS UNLESS NOTED OTHERWISE IN THESE PLANS. FOR SIDEWALK JOINT AND CURB DETAILS, SEE STANDARD PLAN 609.00.
2. TINTED CONCRETE SHALL NOT BE USED. TRUNCATED DOMES SHALL BE OF A COLOR CONTRASTING WITH UNTINTED CONCRETE AND APPROVED BY THE ENGINEER. TRUNCATED DOMES ARE REQ'D. AT STREET INTERSECTIONS AND COMMERCIAL ENTRANCES WITH TRAFFIC CONTROL ONLY. (STOP/YIELD SIGNS OR SIGNALS)
3. CONCRETE SHALL BE IN ACCORDANCE WITH SEC. 608 & SEC. 609. CURING COMPOUND SHALL BE TRANSPARENT.
4. ALL CONCRETE SIDEWALK AND CURB RAMP/TRANSITION/LANDING AREAS SHALL BE 4" THICK, WITH THE EXCEPTION OF THE BOTTOM TRANSITION WHICH TIES INTO THE EXISTING PAVED APPROACH AND ROADWAY. THIS TRANSITION, OR LANDING AREA, MUST BE 8" THICK IF IT FALLS WITHIN THE RADIUS OF THE APPROACH AND SITS AT THE BACK OF CURB OF THE ROADWAY. ALL CONCRETE SIDEWALK AND CURB RAMP/TRANSITION/LANDING AREAS SHALL BE ON 4" TYPE 1 AGGREGATE BASE.
5. AGGREGATE BASE DENSITY - CONTRACTOR SHALL EXERCISE GOOD COMPACTIVE EFFORT AS APPROVED BY THE ENGINEER. DENSITY REQUIREMENTS BY NUCLEAR METHOD WILL NOT BE REQUIRED DUE TO WORK AREA CONSTRAINTS.
6. CONCRETE CURB RAMP - WIDTH = 5' MIN. LENGTH = 5' MIN. TO 15' PREFERRED MAX. (16' MAX.)
   RUNNING SLOPE = >5% (MIN.) TO 8.33% (MAX.) UNIFORMLY DOWN THE LENGTH OF THE RAMP.

   CONCRETE LANDING - WIDTH = TO MATCH PROPOSED CURB RAMP AND SIDEWALK WIDTH LENGTH = 5' MIN.
   SLOPE IN ALL DIRECTIONS = 1% PREFERRED (2% MAX.) UNLESS TIED TO ROADWAY EXCEPTION.
7. ALL EXISTING UTILITIES SHALL BE USED IN PLACE UNLESS OTHERWISE NOTED. ALL MANHOLE OR VALVE COVER, ETC. ELEVATIONS SHALL BE ADJUSTED AS REQUIRED IF THEY ARE LOCATED WITHIN THE IMPROVEMENT AREA.
8. "PREFORMED FIBER JOINT" SHALL BE IN ACCORDANCE WITH SEC. 1057 FOR PREFORMED FIBER JOINT EXPANSION JOINT FILLER.
9. REINFORCING STEEL TIE BARS SHALL BE IN ACCORDANCE WITH SECTION 706. ALL REINFORCING STEEL, TIE BARS, AND DOWEL BARS SHALL BE EPOXY COATED AND USED AS APPROVED BY THE ENGINEER. WHERE TIE BARS ARE USED, THE CONCRETE SHALL BE 8" THICK (NO DIRECT PAY).
10. CONSTRUCTION AND LENGTH OF EACH CURB RAMP INCLUDING LANDINGS AND TRANSITION AREAS SHALL BE AS SHOWN ON THE PLANS UNLESS DIFFERING FIELD CONDITIONS ARE FOUND OR AS APPROVED BY THE ENGINEER. CURB RAMP CROSS SLOPES SHALL BE 1% PREFERRED (2% MAX.) TOWARD THE STREET. CURB RAMPS ARE TO BE FORMED UP AND HAVE A TRUE AND STRAIGHT LINE.
11. SIDEWALK AND CONCRETE CURB SHALL BE POURED MONOLITHICALLY. THE CONTRACTOR SHALL MATCH EXISTING GROUND SLOPES ADJACENT TO THE CURB RAMPS OR USE AN ALTERNATE METHOD APPROVED BY THE ENGINEER.
12. S-CURB 12"-30" HIGH (MODIFIED S-CURB) WILL REQUIRE #4 REINFORC. BARS ON MAX. 12" CENTERS - SEE DETAIL (NO DIRECT PAY)
13. SODDED SLOPES AT EDGES OF SIDEWALK OR S-CURB SHOULD BE GRADED TO BE 6:1 MIN.

NOT TO SCALE

* EXIST. DITOP OR MANHOLE MUST BE 2% MAX.

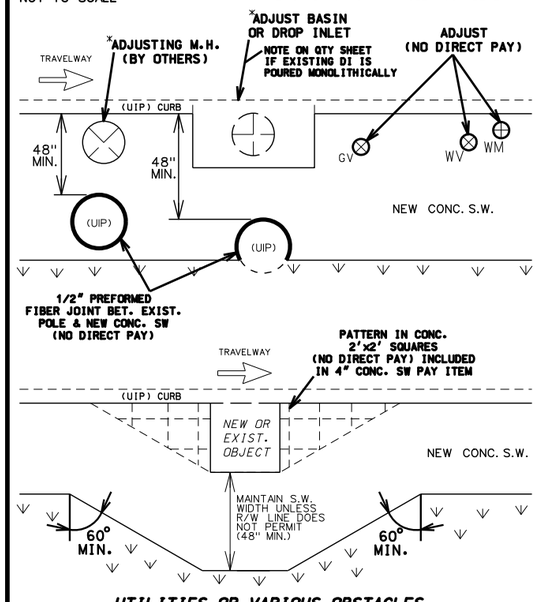

UTILITIES OR VARIOUS OBSTACLES

NO UTILITY POLES ARE ALLOWED IN THE RAMP LIMITS, BUT ARE PERMITTED IN THE LANDING AREAS AND SIDEWALK WITH A MINIMUM OF 4' CLEARANCE AROUND THE POLE

NOT TO SCALE

REVISED: 2024-01-22

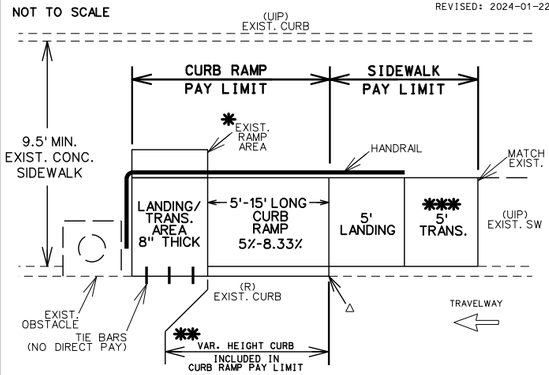

△ MATCH EXIST CURB

* FILL IN WHERE EXIST. RAMP WAS. SIZE WILL VARY. (SEE TYPICAL SHEET)

** VAR. HEIGHT CURB ALONG ROADSIDE MAY BE CONSTRUCTED MONOLITHIC OR SEPERATE DEPENDING ON CONST. OPERATIONS.

*** TO BLEND CROSS SLOPE DISCREPENCY

▬ HANDRAIL 2' OFF E.O.P (SEE HANDRAIL STANDARDS)

CURB RAMP - IN EXISTING 9.5'+ WIDE SW

PAY LIMITS

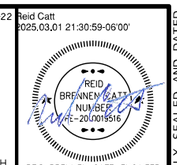

DATE PREPARED: 2/28/2025

ROUTE	STATE
50/291	MO
DISTRICT	SHEET NO.
KC	30

COUNTY: JACKSON

JOB NO.: J4P3196

FEDERAL PROJECT NO.: STB-3001(009)

PROJECT NO.:

BRIDGE NO.:

IF A SEAL IS PRESENT ON THIS SHEET IT HAS BEEN ELECTRONICALLY SEALED AND DATED.

DESCRIPTION | DATE

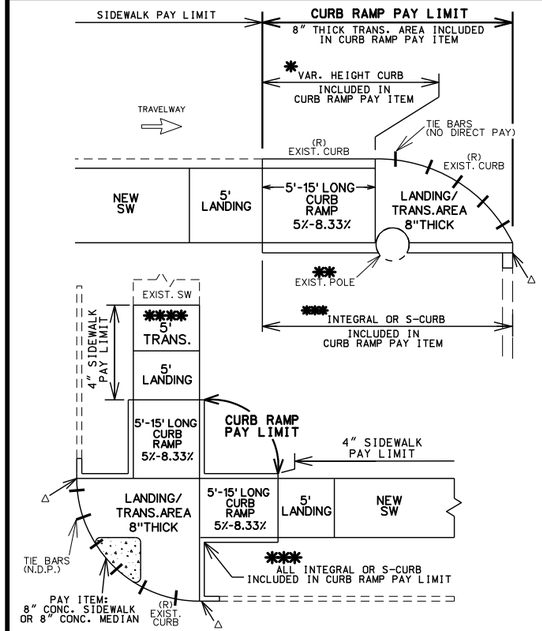

△ MATCH EXIST CURB HEIGHT, OPTIONAL 1' TIE-IN TO EXIST CURB

* VAR. HEIGHT CURB ALONG ROADSIDE MAY BE CONST. MONOLITHIC OR SEP. DEPENDING ON CONST. OPERATIONS.

** NO UTILITY POLES ARE ALLOWED IN THE RAMP LIMITS, BUT ARE PERMITTED IN THE LANDING AND TRANSITION AREAS.

*** TYPE OF CURB WILL DEPEND ON FIELD CONDITIONS.

**** TO BLEND CROSS SLOPE DISCREPENCY

CURB RAMP

PAY LIMITS

WHEN RAMP AREA IS LONGER THEN 5' AND BET. 5%-8.33% GRADE, IT IS CONSIDERED A CURB RAMP

NOT TO SCALE

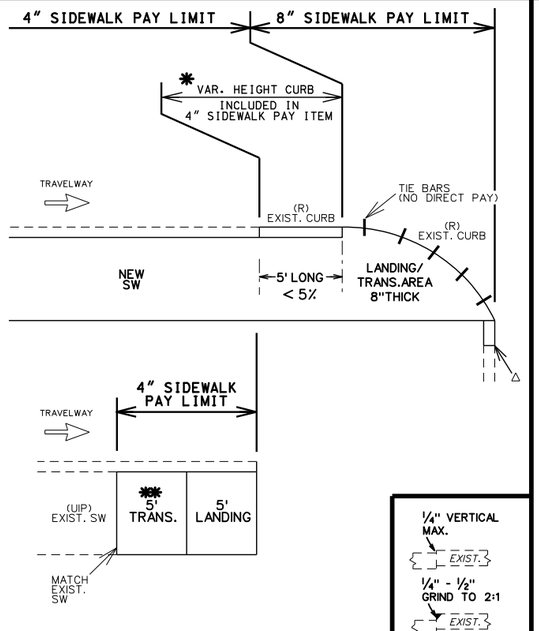

△ MATCH EXIST CURB HEIGHT (1' TAPER FROM SIDEWALK UP TO EXIST CURB HEIGHT)

* VAR. HEIGHT CURB ALONG ROADSIDE MAY BE CONSTRUCTED MONOLITHIC OR SEPERATE DEPENDING ON CONST. OPERATIONS. DOWEL TO EXIST. GUTTER/PAVEMENT (NO DIRECT PAY).

** TO BLEND CROSS SLOPE DISCREPENCY

SIDEWALK

PAY LIMITS

WHEN RAMP AREA IS 5'LONG AND LESS THEN 5% GRADE, IT IS CONSIDERED SIDEWALK

NOT TO SCALE

JOINT GRINDING

TRIP HAZARDS 622-99.03

NOT TO SCALE

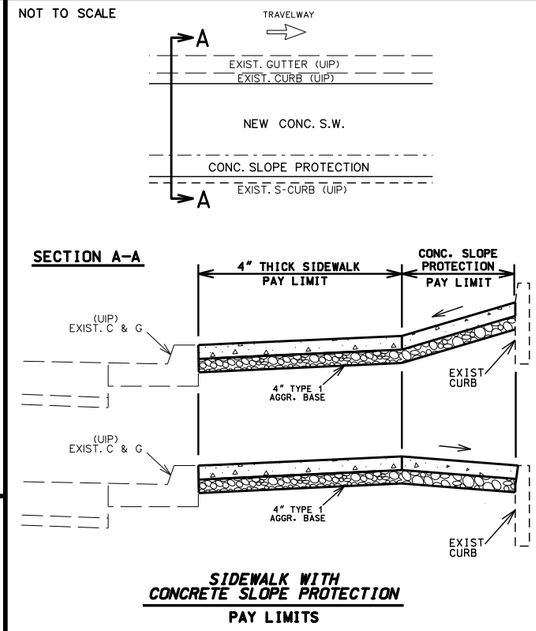

SIDEWALK WITH CONCRETE SLOPE PROTECTION

PAY LIMITS

INTEGRAL CURB RADIUS

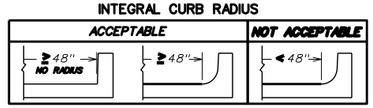

NOT TO SCALE

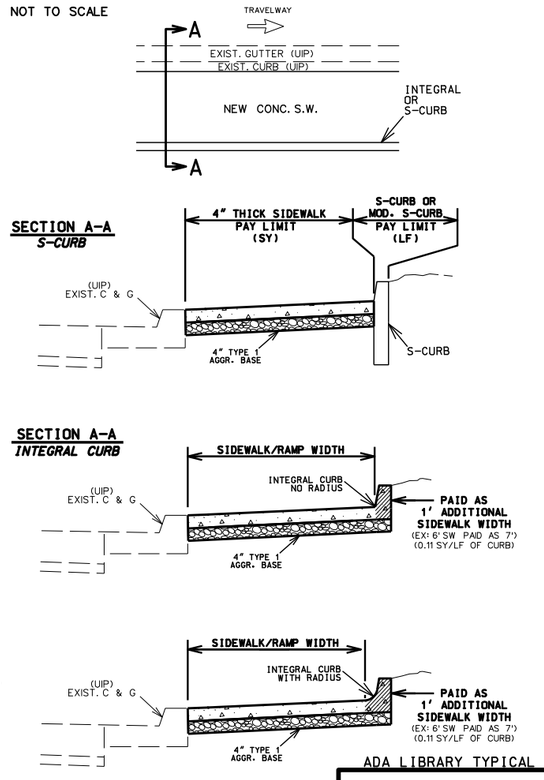

SECTION A-A
INTEGRAL CURB WITH RADIUS

ADA LIBRARY TYPICAL

SIDEWALK & RAMP WITH CURB

PAY LIMITS

SPECIAL SHEET 1 OF 74

MISSOURI HIGHWAYS AND TRANSPORTATION COMMISSION
105 WEST CAPITOL
JEFFERSON CITY, MO 65102
1-888-ASK-MODOT (1-888-275-6636)

LEE'S SUMMIT MISSOURI

olsson
1301 BURLINGTON ST., STE. 100
NORTH KANSAS CITY, MO 64116
PHONE: 816.361.1177
CERT. OF AUTHORITY NO. 001592

F:\2021\04501-05000\021-04786\40-Design\Microstation\J4P3196\plan_sheets\8 Special Sheets\030_SS_01_J4P3196_I5.dgn 2:12:27 PM 2/28/2025

PERPENDICULAR – TYPE 1

TYPE 1–A

LENGTH (LF)		8			12			16			REMARKS
WIDTH (LF)		4	5	6	4	5	6	4	5	6	
TRUNCATED DOMES	SF	–	10.0	12.0	–	10.0	12.0	–	10.0	12.0	
CURB RAMP	SY	–	8.2	12.8	–	10.8	12.7	–	13.5	15.8	
CONC. SIDEWALK	SY	–	5.6	6.4	–	5.6	6.4	–	4.9	6.4	
TYPE 1 AGGREGATE	SY	–	13.8	16.0	–	16.4	19.1	–	18.3	22.2	
ADA LINEAR GRADING	LF	–	22.0	22.0	–	27.5	27.5	–	30.0	30.5	
SODDING	SY	–	5.8	5.7	–	6.8	6.9	–	7.5	7.9	

TYPE 1–B

LENGTH (LF)		8			12			16			REMARKS
WIDTH (LF)		4	5	6	4	5	6	4	5	6	
TRUNCATED DOMES	SF	–	22.0	24.0	–	22.0	24.0	–	22.0	24.0	
CURB RAMP	SY	–	10.9	13.1	–	13.6	16.3	–	16.2	19.3	
CONC. SIDEWALK	SY	–	5.6	6.3	–	5.6	6.4	–	4.9	5.7	
TYPE 1 AGGREGATE	SY	–	16.5	19.4	–	19.2	22.7	–	21.1	25.0	
ADA LINEAR GRADING	LF	–	28.0	28.0	–	34.5	34.5	–	38.0	38.0	
SODDING	SY	–	7.4	7.8	–	8.4	8.7	–	9.1	9.5	

TYPE 1–C

LENGTH (LF)		8			12			16			REMARKS
WIDTH (LF)		4	5	6	4	5	6	4	5	6	
TRUNCATED DOMES	SF	–	10.0	12.0	–	10.0	12.0	–	10.0	12.0	
CURB RAMP	SY	–	8.8	10.3	–	11.5	13.4	–	14.1	16.5	
CONC. SIDEWALK	SY	–	5.6	6.4	–	5.6	6.4	–	4.9	5.7	
TYPE 1 AGGREGATE	SY	–	14.4	16.7	–	17.1	19.8	–	19.0	22.1	
ADA LINEAR GRADING	LF	–	22.0	22.0	–	26.5	26.5	–	30.0	30.0	
SODDING	SY	–	11.5	11.7	–	13.5	13.5	–	15.0	15.2	

TYPE 1–D

LENGTH (LF)		8			12			16			REMARKS
WIDTH (LF)		4	5	6	4	5	6	4	5	6	
TRUNCATED DOMES	SF	–	18.0	24.0	–	18.0	24.0	–	18.0	24.0	
CURB RAMP	SY	–	18.6	22.8	–	24.0	29.0	–	29.3	35.3	
CONC. SIDEWALK	SY	–	11.2	12.8	–	11.2	12.8	–	9.8	11.4	
TYPE 1 AGGREGATE	SY	–	29.8	35.6	–	35.2	41.8	–	39.1	46.7	
ADA LINEAR GRADING	LF	–	42.0	50.0	–	57.0	61.0	–	67.0	72.0	
SODDING	SY	–	11.0	11.3	–	13.0	13.3	–	14.5	14.9	

TYPE 1–E

LENGTH (LF)		8			12			16			REMARKS
WIDTH (LF)		4	5	6	4	5	6	4	5	6	
TRUNCATED DOMES	SF	–	18.0	24.0	–	18.0	24.0	–	18.0	24.0	
CURB RAMP	SY	–	14.8	19.0	–	20.1	25.2	–	25.5	31.4	
CONC. SIDEWALK	SY	–	11.2	12.8	–	11.2	12.8	–	9.8	11.4	
TYPE 1 AGGREGATE	SY	–	26.0	31.8	–	31.3	38.0	–	35.3	42.8	
ADA LINEAR GRADING	LF	–	43.0	46.0	–	52.0	55.0	–	59.0	62.0	
SODDING	SY	–	13.3	13.6	–	16.0	16.9	–	18.6	19.3	

TYPE 1–F

LENGTH (LF)		8			12			16			REMARKS
WIDTH (LF)		4	5	6	4	5	6	4	5	6	
TRUNCATED DOMES	SF	–	14.0	16.0	–	14.0	16.0	–	14.0	16.0	
CURB RAMP	SY	–	15.5	19.0	–	20.8	25.2	–	26.2	31.4	
CONC. SIDEWALK	SY	–	11.2	12.8	–	11.2	12.8	–	9.8	11.4	
TYPE 1 AGGREGATE	SY	–	26.7	31.8	–	32.0	38.0	–	36.0	42.8	
ADA LINEAR GRADING	LF	–	43.0	46.0	–	52.0	55.0	–	59.0	62.0	
SODDING	SY	–	18.4	18.8	–	22.4	22.8	–	25.6	25.9	

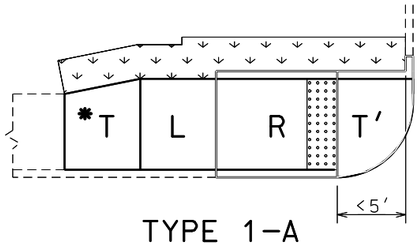

TYPE 1–A

T'– IS TO BE 8" THICK AT ALL PAVED APPROACHES AND STREETS IF WITHIN THE RADIUS. PAID FOR AS CONCRETE CURB RAMP

T – TRANSITION TO EXISTING SW OR PAVED APPROACH (LANDING PREFERED AT PAVED APPROACH IF CONDITIONS ALLOW)

* – T IS STILL NEEDED EVEN IF THE EXISTING SIDEWALK IS THE SAME WIDTH AS THE NEW SIDEWALK.(IT WILL BLEND THE EXIST XSLOPE INTO THE NEW LANDING XSLOPE)

L – LANDING

R – RAMP

– CURB RAMP PAY LIMITS

– SOD SLOPE 6:1 MIN.

– TRUNCATED DOME LOCATION IF DIST. IS <5' OR >5'

TRUNCATED DOMES ARE USED ONLY AT STREETS & ENTRANCES UTILIZING YIELD / STOP SIGNS OR SIGNALS

NOTE:
QUANTITIES ARE CALCULATED BY AREA AND MAY NOT MATCH EXACT FIELD CONDITIONS.

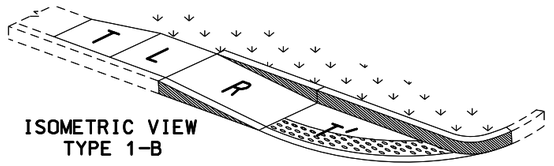

ISOMETRIC VIEW
TYPE 1–B

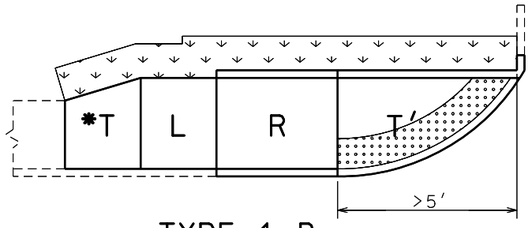

TYPE 1–B

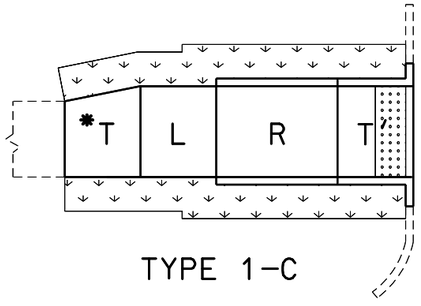

TYPE 1–C

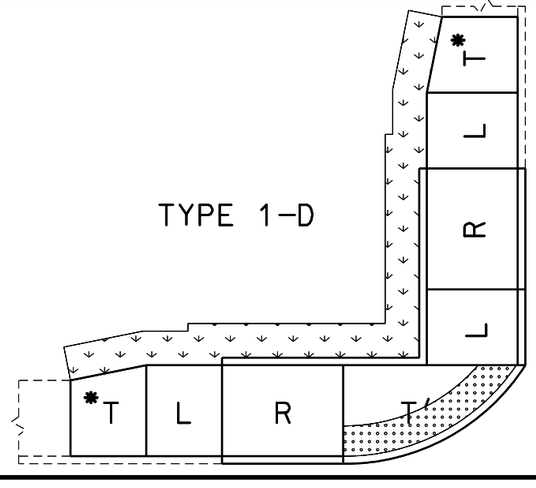

TYPE 1–D

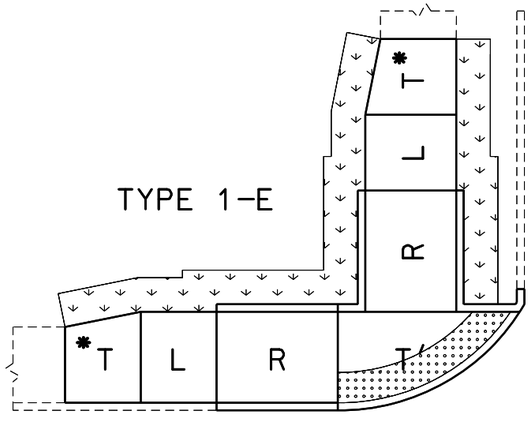

TYPE 1–E

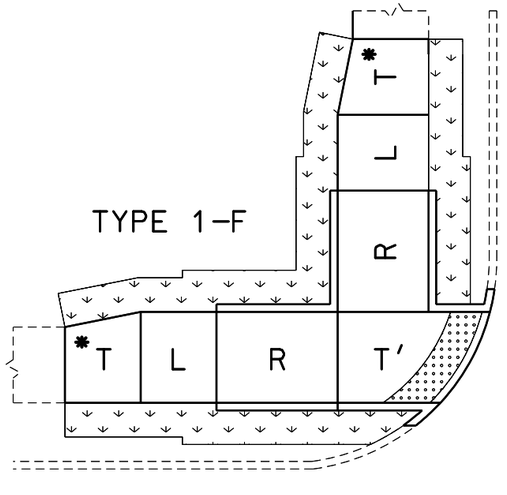

TYPE 1–F

ADA LIBRARY TYPICAL

TYPE 1

PERPENDICULAR CURB RAMPS

SPECIAL SHEET 2 OF 74

REVISED: 2022-05-18

Reid Catt
2025.03.01 21:31:06-06'00'

REID BRENNEN CATT
NUMBER
PE-2010019516

REID BRENNEN CATT–ENGINEER
MO# PE-2010019516

DATE PREPARED
2/28/2025

ROUTE	STATE
50/291	MO
DISTRICT	SHEET NO.
KC	31

COUNTY
JACKSON

JOB NO.
J4P3196

FEDERAL PROJECT NO.
STB-3001(009)

PROJECT NO.

BRIDGE NO.

DESCRIPTION	DATE

IF A SEAL IS PRESENT ON THIS SHEET IT HAS BEEN ELECTRONICALLY SEALED AND DATED.

MISSOURI HIGHWAYS AND TRANSPORTATION COMMISSION

105 WEST CAPITOL
JEFFERSON CITY, MO 65102
1-888-ASK-MODOT (1-888-275-6636)

LEE'S SUMMIT MISSOURI

olsson
1301 BURLINGTON ST., STE. 100
NORTH KANSAS CITY, MO 64116
PHONE: 816.361.1177
CERT. OF AUTHORITY NO. 001592

PARALLEL – TYPE 2

TYPE 2-A

LENGTH (LF)	8			12			16			REMARKS
WIDTH (LF)	4	5	6	4	5	6	4	5	6	
TRUNCATED DOMES SF	–	10.0	10.0	–	10.0	10.0	–	10.0	10.0	
CURB RAMP SY	–	9.1	10.6	–	11.8	13.7	–	14.4	16.8	
CONC. SIDEWALK SY	–	5.6	6.4	–	4.9	5.7	–	4.9	5.7	
TYPE 1 AGGREGATE SY	–	14.7	17.0	–	16.7	19.4	–	19.3	22.5	
ADA LINEAR GRADING LF	–	26.0	26.0	–	29.0	29.0	–	33.0	33.0	
SODDING SY	–	8.0	8.3	–	8.6	8.8	–	9.6	9.8	

TYPE 2-B

LENGTH (LF)	8			12			16			REMARKS
WIDTH (LF)	4	5	6	4	5	6	4	5	6	
TRUNCATED DOMES SF	–	10.0	10.0	–	10.0	10.0	–	10.0	10.0	
CURB RAMP SY	–	11.8	13.3	–	14.5	16.4	–	17.2	19.5	
CONC. SIDEWALK SY	–	5.6	6.4	–	4.9	5.7	–	4.9	5.7	
TYPE 1 AGGREGATE SY	–	17.4	19.7	–	19.4	22.1	–	22.1	25.2	
ADA LINEAR GRADING LF	–	26.0	26.0	–	29.0	29.0	–	33.0	33.0	
SODDING SY	–	13.8	14.1	–	15.1	15.5	–	17.1	17.5	

TYPE 2-C

LENGTH (LF)	8			12			16			REMARKS
WIDTH (LF)	4	5	6	4	5	6	4	5	6	
TRUNCATED DOMES SF	–	10.0	10.0	–	10.0	10.0	–	10.0	10.0	
CURB RAMP SY	–	16.4	18.7	–	21.7	24.9	–	27.0	31.2	
CONC. SIDEWALK SY	–	11.2	12.8	–	9.8	11.4	–	9.8	11.4	
TYPE 1 AGGREGATE SY	–	27.6	31.5	–	31.5	36.3	–	36.8	42.6	
ADA LINEAR GRADING LF	–	41.0	41.0	–	47.0	47.0	–	55.0	55.0	
SODDING SY	–	12.3	12.5	–	13.6	13.9	–	15.6	15.9	

TYPE 2-D

LENGTH (LF)	8			12			16			REMARKS
WIDTH (LF)	4	5	6	4	5	6	4	5	6	
TRUNCATED DOMES SF	–	10.0	10.0	–	10.0	10.0	–	10.0	10.0	
CURB RAMP SY	–	16.8	19.2	–	22.2	25.4	–	27.5	31.6	
CONC. SIDEWALK SY	–	11.2	12.8	–	9.8	11.4	–	9.8	11.4	
TYPE 1 AGGREGATE SY	–	28.0	32.0	–	32.0	36.8	–	37.3	43.0	
ADA LINEAR GRADING LF	–	41.0	41.0	–	47.0	47.0	–	55.0	55.0	
SODDING SY	–	20.2	20.3	–	22.4	23.2	–	26.4	27.2	

TYPE 2-E

LENGTH (LF)	8			12			16			REMARKS
WIDTH (LF)	4	5	6	4	5	6	4	5	6	
TRUNCATED DOMES SF	–	10.0	10.0	–	10.0	10.0	–	10.0	10.0	
CURB RAMP SY	–	10.8	11.5	–	13.2	14.4	–	15.7	17.3	
CONC. SIDEWALK SY	–	5.6	6.7	–	5.0	6.0	–	5.0	6.0	
TYPE 1 AGGREGATE SY	–	16.4	18.2	–	18.2	20.4	–	20.7	23.3	
ADA LINEAR GRADING LF	–	22.5	22.5	–	26.5	26.5	–	30.5	30.5	
SODDING SY	–	–	–	–	–	–	–	–	–	
HANDRAIL LF	–	–	–	–	–	–	–	–	–	SEE STANDARDS FOR LENGTH

TYPE 2-F

LENGTH (LF)	8			12			16			REMARKS
WIDTH (LF)	4	5	6	4	5	6	4	5	6	
TRUNCATED DOMES SF	–	10.0	10.0	–	10.0	10.0	–	10.0	10.0	
CURB RAMP SY	–	15.5	17.1	–	20.4	23.1	–	25.5	28.9	
CONC. SIDEWALK SY	–	11.2	13.4	–	10.0	12.0	–	10.0	12.0	
TYPE 1 AGGREGATE SY	–	26.7	30.5	–	30.4	35.1	–	35.5	40.9	
ADA LINEAR GRADING LF	–	39.0	39.0	–	47.0	47.0	–	55.0	55.0	
SODDING SY	–	–	–	–	–	–	–	–	–	
HANDRAIL LF	–	–	–	–	–	–	–	–	–	SEE STANDARDS FOR LENGTH

NOTE:
QUANTITIES ARE CALCULATED BY AREA AND MAY NOT MATCH EXACT FIELD CONDITIONS.

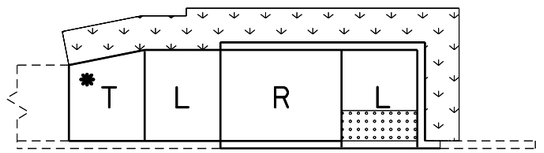

TYPE 2-A

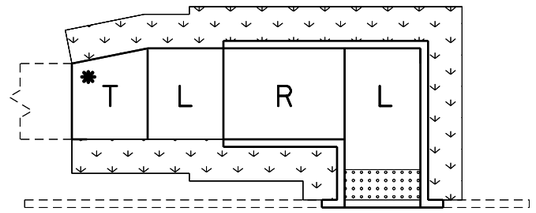

TYPE 2-B

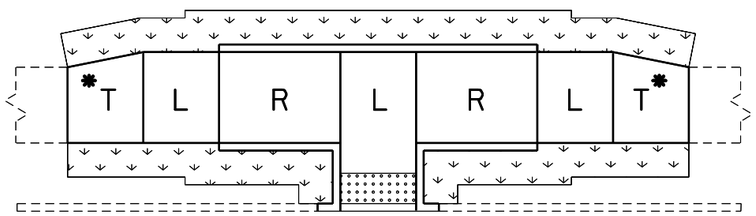

TYPE 2-D

** 3.5' LANDING EXTENSION REQ'D. FOR INSTALLATION OF FUTURE OR NEW PED. PUSH BUTTON

NOTE: SEE STANDARDS FOR ALL PED. PUSH BUTTON LOCATIONS

– TRUNCATED DOMES

TRUNCATED DOMES ARE USED ONLY AT STREETS & ENTRANCES UTILIZING YIELD / STOP SIGNS OR SIGNALS

T – TRANSITION TO EXISTING SW

* – T IS STILL NEEDED EVEN IF THE EXISTING SIDEWALK IS THE SAME WIDTH AS THE NEW SIDEWALK. (IT WILL BLEND THE EXIST XSLOPE INTO THE NEW LANDING XSLOPE)

L – LANDING

R – RAMP

– SOD SLOPE 6:1 MIN.

– CURB RAMP PAY LIMITS

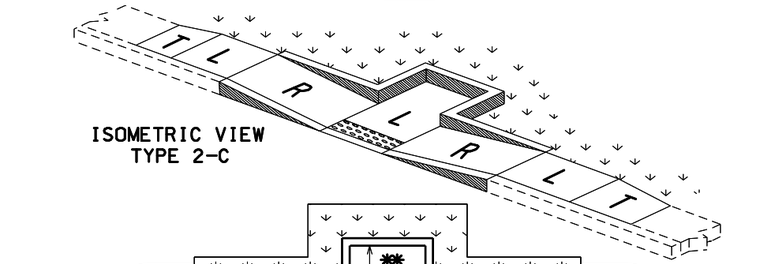

ISOMETRIC VIEW
TYPE 2-C

TYPE 2-C

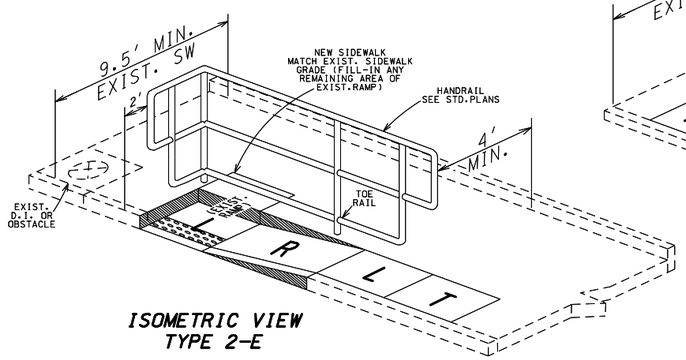

ISOMETRIC VIEW
TYPE 2-E

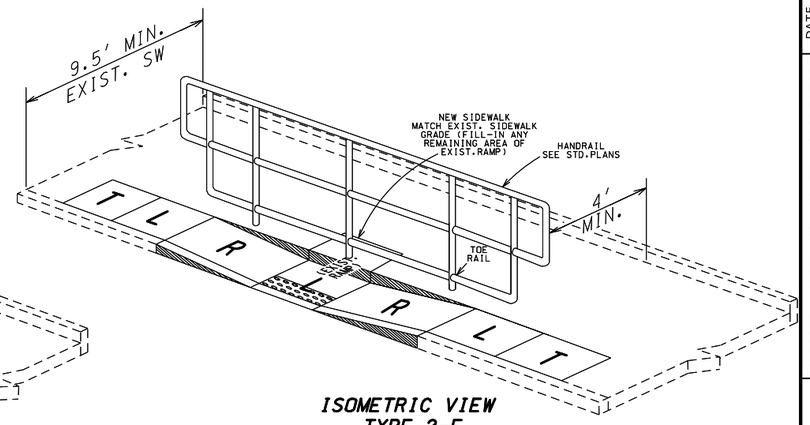

ISOMETRIC VIEW
TYPE 2-F

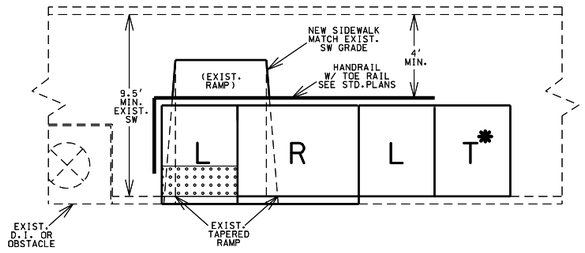

TYPE 2-E

USE ONLY WHEN TYPE 2-F IS UNABLE TO BE CONSTRUCTED DUE TO AN EXIST. D.I. OR OTHER OBSTACLE

SEE STANDARDS FOR HANDRAIL SPECS

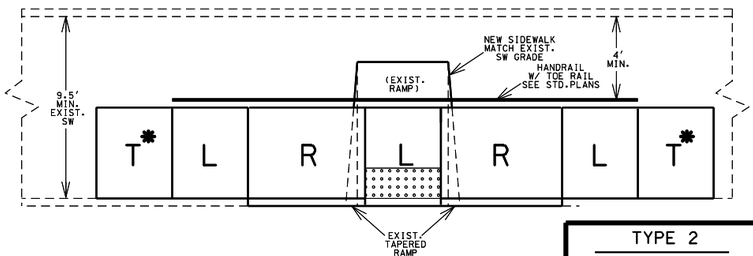

TYPE 2-F

SEE STANDARDS FOR HANDRAIL SPECS

REVISED: 2022-05-18

Reid Catt
2025.03.01 21:31:15-06'00'

REID BRENNEN CATT NUMBER PE-2010019516

REID BRENNEN CATT-ENGINEER
MO# PE-2010019516

DATE PREPARED
2/28/2025

ROUTE	STATE
50/291	MO
DISTRICT	SHEET NO.
KC	32

COUNTY
JACKSON

JOB NO.
J4P3196

FEDERAL PROJECT NO.
STB-3001(009)

PROJECT NO.

BRIDGE NO.

DESCRIPTION

DATE

IF A SEAL IS PRESENT ON THIS SHEET IT HAS BEEN ELECTRONICALLY SEALED AND DATED.

MISSOURI HIGHWAYS AND TRANSPORTATION COMMISSION

105 WEST CAPITOL
JEFFERSON CITY, MO 65102
1-888-ASK-MODOT (1-888-275-6636)

LEE'S SUMMIT MISSOURI

olsson
1301 BURLINGTON ST., STE. 100
NORTH KANSAS CITY, MO 64116
PHONE: 816.361.1177
CERT. OF AUTHORITY NO. 001592

TYPE 2
PARALLEL
CURB RAMPS

SPECIAL SHEET
3 OF 74

PARALLEL – TYPE 2 (cont'd.)

TYPE 2-G

LENGTH (LF)	8			12			16			REMARKS
WIDTH (LF)	4	5	6	4	5	6	4	5	6	
TRUNCATED DOMES SF	–	12.0	12.0	–	10.0	10.0	–	10.0	10.0	
CURB RAMP SY	–	15.7	18.0	–	20.8	23.7	–	25.8	30.2	
CONC. SIDEWALK SY	–	21.4	25.0	–	17.6	20.3	–	15.2	17.5	
TYPE 1 AGGREGATE SY	–	37.1	43.0	–	38.4	44.0	–	41.0	47.7	
ADA LINEAR GRADING LF	–	52.0	52.0	–	54.0	54.0	–	58.0	58.0	
SODDING SY	–	13.6	13.6	–	13.7	13.5	–	14.5	14.9	

TYPE 2-H

LENGTH (LF)	8			12			16			REMARKS
WIDTH (LF)	4	5	6	4	5	6	4	5	6	
TRUNCATED DOMES SF	–	12.0	12.0	–	10.0	10.0	–	10.0	10.0	
CURB RAMP SY	–	15.7	18.0	–	21.0	24.5	–	26.9	31.4	
CONC. SIDEWALK SY	–	13.2	16.0	–	12.0	14.2	–	12.0	14.4	
TYPE 1 AGGREGATE SY	–	28.9	34.0	–	33.0	38.6	–	38.9	45.8	
ADA LINEAR GRADING LF	–	42.0	42.0	–	49.0	49.0	–	55.0	55.0	
SODDING SY	–	11.1	11.2	–	12.5	12.5	–	14.5	14.9	

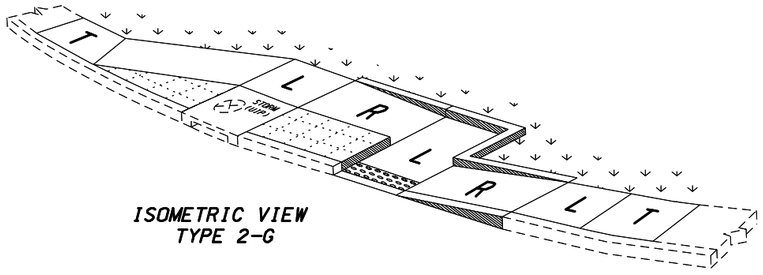

ISOMETRIC VIEW
TYPE 2-G

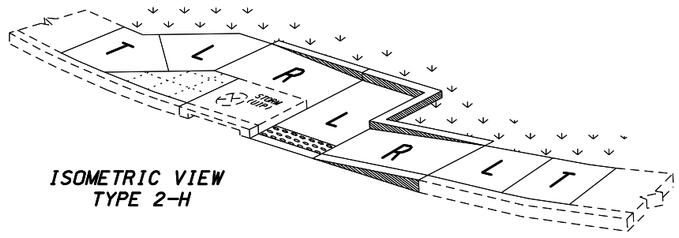

ISOMETRIC VIEW
TYPE 2-H

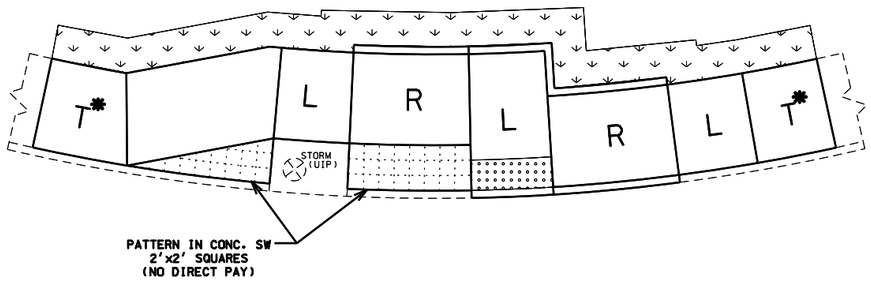

TYPE 2-G

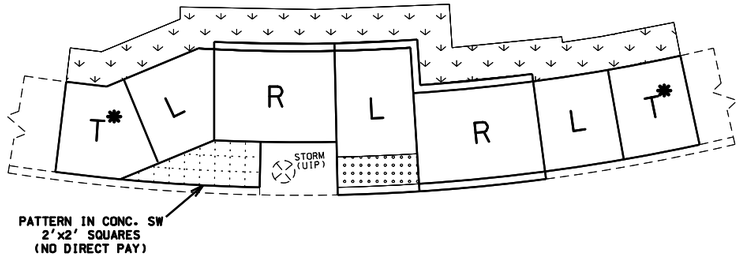

TYPE 2-H

T* – IS STILL NEEDED EVEN IF THE EXISTING SIDEWALK IS THE SAME WIDTH AS THE NEW SIDEWALK.(IT WILL BLEND THE EXIST XSLOPE INTO THE NEW LANDING XSLOPE)

REVISED: 2022-05-18

T – TRANSITION TO EXISTING SW

L – LANDING

R – RAMP

– SOD SLOPE 6:1 MIN.

– TRUNCATED DOME LOCATION, IF DIST. IS <5' OR > 5'

TRUNCATED DOMES ARE USED ONLY AT STREETS & ENTRANCES UTILIZING YIELD / STOP SIGNS OR SIGNALS

– CURB RAMP PAY LIMITS

– INCLUDED IN 4" CONC. SIDEWALK PAY LIMIT

NOTE:
QUANTITIES ARE CALCULATED BY AREA AND MAY NOT MATCH EXACT FIELD CONDITIONS.

Reid Catt
2025.03.01 21:31:24-06'00'

REID BRENNEN CATT-ENGINEER
MO# PE-2010019516

DATE PREPARED
2/28/2025

ROUTE	STATE
50/291	MO
DISTRICT	SHEET NO.
KC	33

COUNTY
JACKSON

JOB NO.
J4P3196

FEDERAL PROJECT NO.
STB-3001(009)

PROJECT NO.

BRIDGE NO.

DESCRIPTION	DATE

IF A SEAL IS PRESENT ON THIS SHEET IT HAS BEEN ELECTRONICALLY SEALED AND DATED.

MISSOURI HIGHWAYS AND TRANSPORTATION COMMISSION

105 WEST CAPITOL
JEFFERSON CITY, MO 65102
1-888-ASK-MODOT (1-888-275-6636)

LEE'S SUMMIT MISSOURI

olsson
1301 BURLINGTON ST., STE. 100
NORTH KANSAS CITY, MO 64116
PHONE: 816.361.1177
CERT. OF AUTHORITY NO. 001592

TYPE 2
PARALLEL
CURB RAMPS

SPECIAL SHEET
4 OF 74

DIAGONAL – TYPE 3

TYPE 3-A

LENGTH (LF)	8			12			16			REMARKS
WIDTH (LF)	4	5	6	4	5	6	4	5	6	
TRUNCATED DOMES SF	–	24.0	28.0	–	20.6	25.0	–	20.6	25.0	
CURB RAMP SY	–	24.4	27.0	–	26.9	31.2	–	32.2	37.4	
CONC. SIDEWALK SY	–	11.2	12.8	–	9.8	11.4	–	9.8	11.4	
TYPE 1 AGGREGATE SY	–	35.6	39.8	–	36.7	42.6	–	42.0	48.8	
ADA LINEAR GRADING LF	–	51.0	51.0	–	59.0	59.0	–	67.0	67.0	
SODDING SY	–	11.6	11.4	–	12.9	12.9	–	14.9	14.9	
8"SW OR MED STRIP SY	–	3.0	2.2	–	3.0	2.2	–	3.0	2.2	

TYPE 3-B

LENGTH (LF)	8			12			16			REMARKS
WIDTH (LF)	4	5	6	4	5	6	4	5	6	
TRUNCATED DOMES SF	–	24.0	28.0	–	20.6	25.0	–	20.6	25.0	
CURB RAMP SY	–	22.0	26.3	–	25.9	31.2	–	31.2	37.4	
CONC. SIDEWALK SY	–	11.2	12.8	–	9.8	11.4	–	9.8	11.4	
TYPE 1 AGGREGATE SY	–	33.2	39.1	–	35.7	42.6	–	41.0	48.8	
ADA LINEAR GRADING LF	–	51.0	51.0	–	59.0	59.0	–	67.0	67.0	
SODDING SY	–	15.2	15.3	–	17.1	17.5	–	20.1	20.5	
8"SW OR MED STRIP SY	–	1.5	1.5	–	1.5	1.5	–	1.5	1.5	

TYPE 3-C

LENGTH (LF)	8			12			16			REMARKS
WIDTH (LF)	4	5	6	4	5	6	4	5	6	
TRUNCATED DOMES SF	–	20.0	24.0	–	20.0	24.0	–	20.0	24.0	
CURB RAMP SY	–	20.7	26.8	–	25.1	31.5	–	30.4	37.7	
CONC. SIDEWALK SY	–	11.2	12.8	–	9.8	11.4	–	9.8	11.4	
TYPE 1 AGGREGATE SY	–	31.9	39.6	–	34.9	42.9	–	40.2	49.1	
ADA LINEAR GRADING LF	–	51.0	51.0	–	58.0	58.0	–	67.0	67.0	
SODDING SY	–	18.8	19.3	–	21.3	22.1	–	25.3	26.1	
8"SW OR MED STRIP SY	–	1.0	1.6	–	1.0	1.6	–	1.0	1.6	

TYPE 3-D

LENGTH (LF)	8			12			16			REMARKS
WIDTH (LF)	4	5	6	4	5	6	4	5	6	
TRUNCATED DOMES SF	–	24.0	28.0	–	22.4	26.5	–	22.4	26.5	
CURB RAMP SY	–	15.9	19.1	–	17.7	21.4	–	20.4	24.5	
CONC. SIDEWALK SY	–	5.6	6.4	–	4.9	5.7	–	4.9	5.7	
TYPE 1 AGGREGATE SY	–	21.5	25.5	–	22.6	27.1	–	25.3	30.2	
ADA LINEAR GRADING LF	–	31.0	31.0	–	34.0	34.0	–	38.0	38.0	
SODDING SY	–	12.6	12.9	–	13.5	14.0	–	15.5	16.0	
8"SW OR MED STRIP SY	–	1.0	0.8	–	1.0	0.8	–	1.0	0.8	

TYPE 3-E

LENGTH (LF)	8			12			16			REMARKS
WIDTH (LF)	4	5	6	4	5	6	4	5	6	
TRUNCATED DOMES SF	–	20.0	24.0	–	20.0	24.0	–	20.0	24.0	
CURB RAMP SY	–	17.2	19.8	–	17.7	21.4	–	20.4	24.5	
CONC. SIDEWALK SY	–	8.4	10.7	–	7.3	9.4	–	7.3	9.4	
TYPE 1 AGGREGATE SY	–	25.6	30.5	–	25.0	30.8	–	27.7	33.9	
ADA LINEAR GRADING LF	–	30.0	30.0	–	35.5	35.5	–	39.5	39.5	
SODDING SY	–	12.4	12.4	–	12.9	13.3	–	14.9	15.3	
8"SW OR MED STRIP SY	–	1.6	1.6	–	1.6	1.6	–	1.6	1.6	

– DETAIL – 8" SIDEWALK OR 8" MEDIAN STRIP

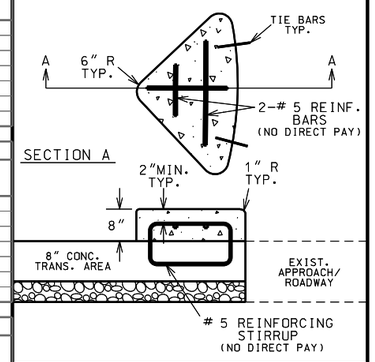

T′ – IS TO BE 8" THICK AT ALL PAVED APPROACHES AND STREETS IF WITHIN THE RADIUS. PAID FOR AS CONCRETE CURB RAMP

NOTE:
QUANTITIES ARE CALCULATED BY AREA AND MAY NOT MATCH EXACT FIELD CONDITIONS.

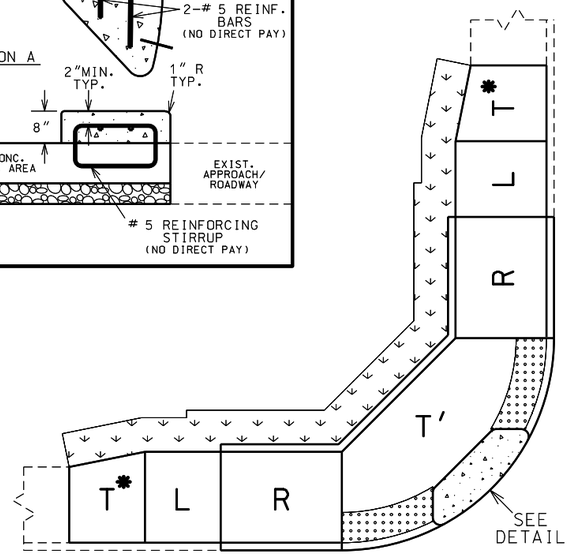

TYPE 3-A

T – TRANSITION TO EXISTING SW OR PAVED APPROACH (LANDING PREFERED IF CONDITIONS ALLOW)

T* – IS STILL NEEDED EVEN IF THE EXISTING SIDEWALK IS THE SAME WIDTH AS THE NEW SIDEWALK.(IT WILL BLEND THE EXIST XSLOPE WITH THE NEW LANDING XSLOPE)

L – LANDING

R – RAMP

– CURB RAMP PAY LIMITS

– SOD SLOPE 6:1 MIN.

– TRUNCATED DOME LOCATION, IF DIST. IS <5' OR >5'

TRUNCATED DOMES ARE USED ONLY AT STREETS & ENTRANCES UTILIZING YIELD / STOP SIGNS OR SIGNALS

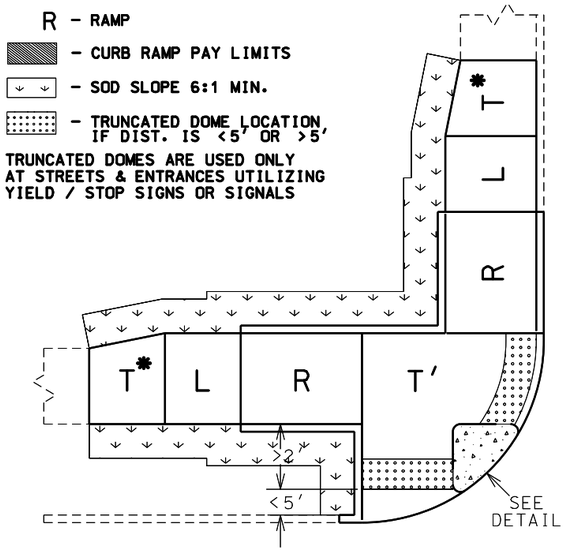

TYPE 3-B

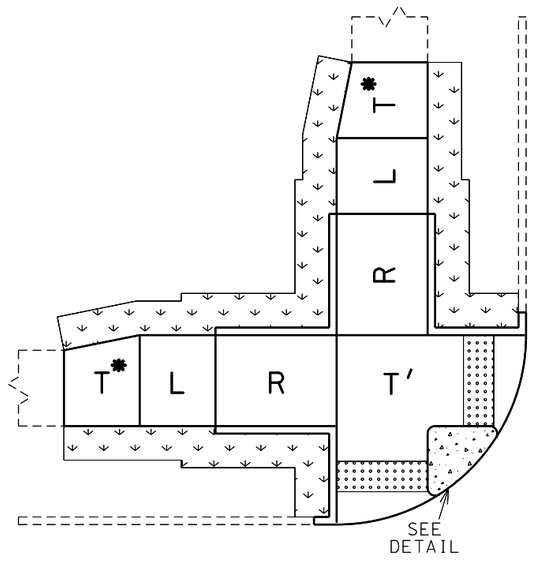

TYPE 3-C

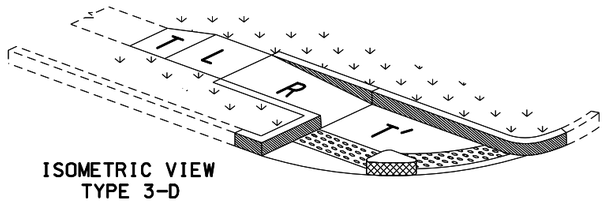

ISOMETRIC VIEW TYPE 3-D

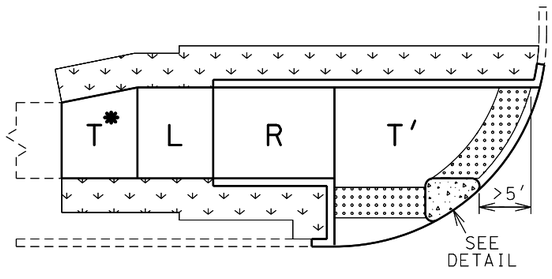

TYPE 3-D

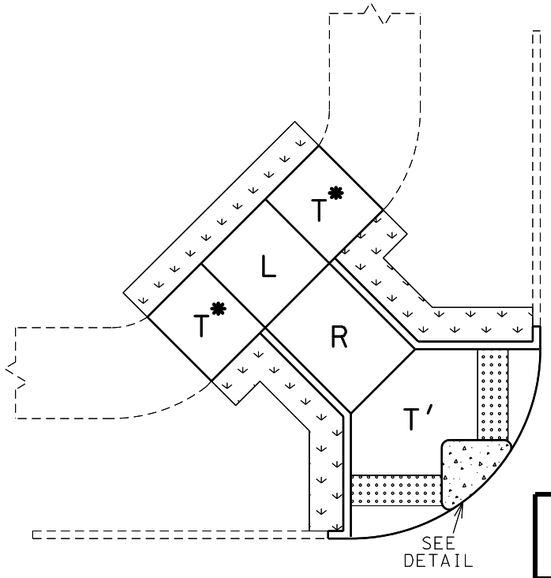

TYPE 3-E

REVISED: 2022-05-18

Reid Catt
2025.03.01 21:31:37-06'00'

REID BRENNEN CATT-ENGINEER
MO# PE-2010019516

DATE PREPARED
2/28/2025

ROUTE	STATE
50/291	MO
DISTRICT	SHEET NO.
KC	34

COUNTY
JACKSON

JOB NO.
J4P3196

FEDERAL PROJECT NO.
STB-3001(009)

PROJECT NO.

BRIDGE NO.

DESCRIPTION

DATE

IF A SEAL IS PRESENT ON THIS SHEET IT HAS BEEN ELECTRONICALLY SEALED AND DATED.

MISSOURI HIGHWAYS AND TRANSPORTATION COMMISSION

105 WEST CAPITOL
JEFFERSON CITY, MO 65102
1-888-ASK-MODOT (1-888-275-6636)

LEE'S SUMMIT MISSOURI

olsson
1301 BURLINGTON ST., STE. 100
NORTH KANSAS CITY, MO 64116
PHONE: 816.361.1177
CERT. OF AUTHORITY NO. 001592

TYPE 3
DIAGONAL CURB RAMPS

SPECIAL SHEET
5 OF 74

REVISED: 2022-05-16

NOTES FOR MODIFIED SIDEWALK:

1. REMOVE EXIST. CURB & RAISED ISLAND WITHIN LIMITS SHOWN.
2. AREA INSIDE FINAL CURB TO BE REPAIRED OR REPLACED WITH EXISTING SURFACE MATERIAL. GRADE TO DRAIN.
3. CONSTRUCT 8" THICK CONC. SIDEWALK FLUSH WITH EXIST. CONC. PAVED APPROACH.
4. CONSTRUCT CURB ADJACENT TO MODIFIED SIDEWALK.
5. MODIFIED SIDEWALK PAID FOR AS 8" SIDEWALK.
6. 6' MINIMUM WIDTH.
7. NO DIRECT PAY FOR SAW CUTS AND TIE BARS (ON 12" CENTERS MAX.)
8. TRUNCATED DOMES ARE USED ONLY AT STREETS & ENTRANCES UTILIZING STOP SIGNS OR SIGNALS.
9. X-SLOPE 1% PREFERRED (2% MAX.)
10. USE S-CURB IF CONSTRUCTING CURB ON R/W LINE.

✱ INTEGRAL CURB IS PAID FOR WITH THE 8" CONC. SIDEWALK PAY ITEM.
INTEGRAL CURB IS PAID AS 1' ADDITIONAL SIDEWALK WIDTH (EX. 6'SIDEWALK PAID AS 7')
(0.11 SY/LF OF CURB)

SECTION A-A
WITH S-CURB OR MODIFIED S-CURB

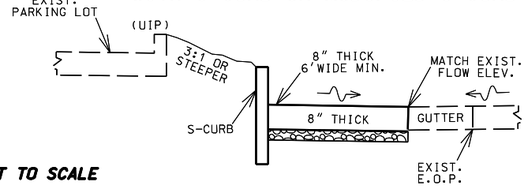

SECTION A-A
WITH INTEGRAL CURB

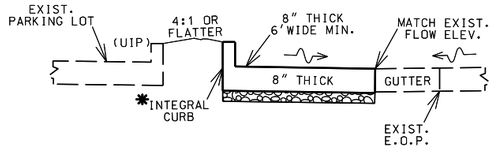

NOT TO SCALE

TYPICAL MODIFIED SIDEWALK
8" THICK

✱✱ TRUNCATED DOMES ARE USED ONLY AT STREETS & ENTRANCES UTILIZING STOP/YIELD SIGNS OR SIGNALS.

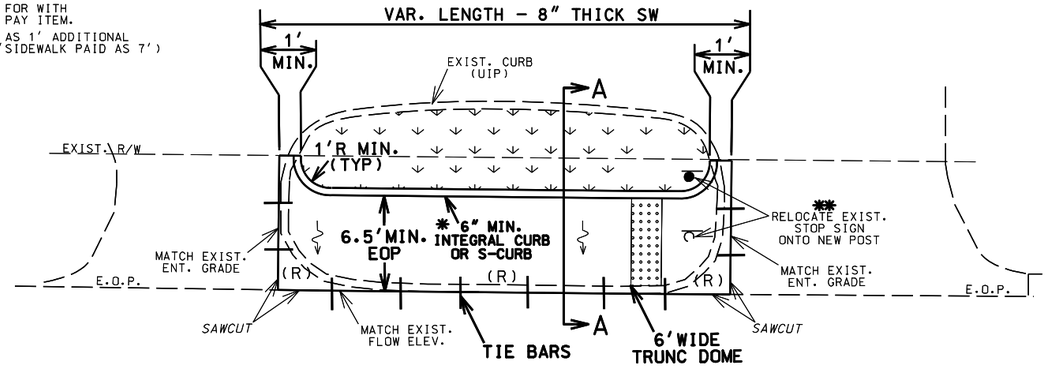

NOTES FOR CUT-THRU SIDEWALK:

1. REMOVE EXIST. CURB & RAISED ISLAND WITHIN LIMITS SHOWN.
2. AREA INSIDE FINAL CURB TO BE REPAIRED OR REPLACED WITH EXISTING SURFACE MATERIAL. GRADE TO DRAIN.
3. CONSTRUCT 4" THICK CONC. SIDEWALK FLUSH WITH EXIST. CONC. PAVED APPROACH.
4. CONSTRUCT CURB ON BOTH SIDES ADJACENT TO SIDEWALK.
5. CUT-THRU SIDEWALK PAID FOR AS 4" SIDEWALK.
6. 6' PREFERRED WIDTH (5' MIN.)
7. SAW CUTS (NO DIRECT PAY).
8. TRUNCATED DOMES ARE USED ONLY AT STREETS & ENTRANCES UTILIZING STOP SIGNS OR SIGNALS.
9. X-SLOPE 1% PREFERRED (2% MAX.)
10. USE S-CURB IF CONSTRUCTING CURB ON R/W LINE.

TYPICAL CUT-THRU SIDEWALK

✱ INTEGRAL CURB IS PAID FOR AS 4" CONC. SIDEWALK PAY ITEM. S-CURB IS PAID FOR AS ITS OWN PAY ITEM.
(ALWAYS USE S-CURB IF AT R/W LINE.)
INTEGRAL CURB IS PAID AS 1' ADDITIONAL SIDEWALK WIDTH (EX. 6'SIDEWALK PAID AS 7')
(0.11 SY/LF OF CURB)

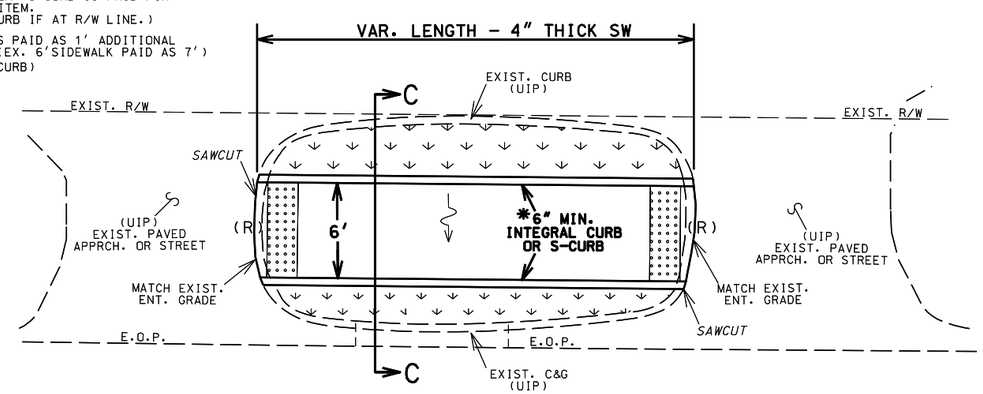

SECTION C-C
WITH S-CURB OR INTEGRAL

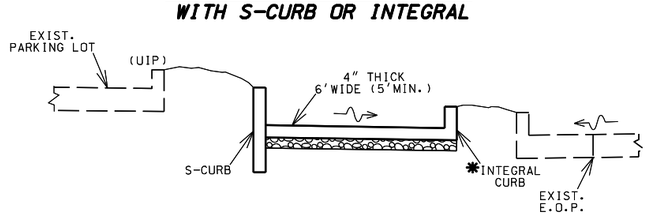

NOT TO SCALE

NOT TO SCALE

TYPICAL ISLAND CUT-THRU SIDEWALK
X-SLOPE 2% MAX. CONSTRUCT TO DRAIN

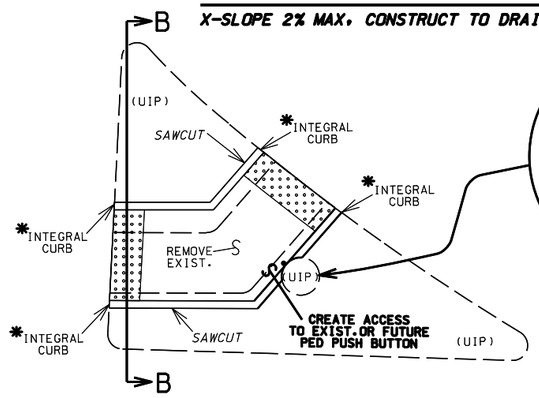

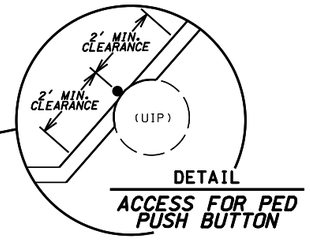

DETAIL
ACCESS FOR PED PUSH BUTTON

SECTION B-B
ISLAND CUT-THRU SIDEWALK FOR EXISTING 'PINNED-ON' ISLAND

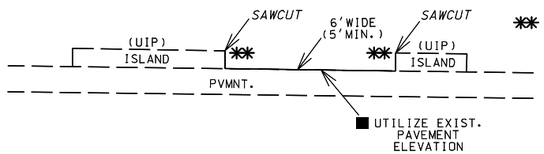

■ SMALL QTY. HAS BEEN INCLUDED FOR 8" THICK SIDEWALK TO ADDRESS ANY UNFORSEEN PVMNT. REPAIRS OR DIFFERENCES IN ELEVATION. (UNDERRUN IF FIELD CONDITIONS DO NOT WARRANT)

✱✱ NO INTEGRAL CURB. AGGR. OR LIN. GRADING REQUIRED IF THE ISLAND IS 'PINNED-ON'

SECTION B-B
ISLAND CUT-THRU SIDEWALK

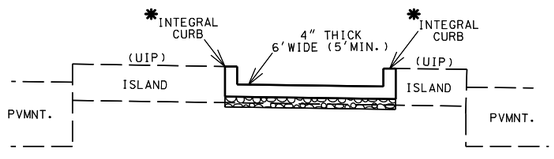

✱ INTEGRAL CURB IS PAID FOR WITH THE 4" CONC. SIDEWALK PAY ITEM.
INTEGRAL CURB IS PAID AS 1' ADDITIONAL SIDEWALK WIDTH (EX. 6'SIDEWALK PAID AS 7')
(0.11 SY/LF OF CURB)

MODIFIED SIDEWALK AND SIDEWALK CUT-THRUs

SPECIAL SHEET
6 OF 74

Reid Catt
2025.03.01 21:31:51-06'00'

REID BRENNEN CATT-ENGINEER
MO# PE-2010019516

DATE PREPARED
2/28/2025

ROUTE	STATE
50/291	MO
DISTRICT	SHEET NO.
KC	35

COUNTY
JACKSON

JOB NO.
J4P3196

FEDERAL PROJECT NO.
STB-3001(009)

PROJECT NO.

BRIDGE NO.

DESCRIPTION | DATE

IF A SEAL IS PRESENT ON THIS SHEET IT HAS BEEN ELECTRONICALLY SEALED AND DATED.

MISSOURI HIGHWAYS AND TRANSPORTATION COMMISSION
105 WEST CAPITOL
JEFFERSON CITY, MO 65102
1-888-ASK-MODOT (1-888-275-6636)

LEE'S SUMMIT MISSOURI

olsson
1301 BURLINGTON ST., STE. 100
NORTH KANSAS CITY, MO 64116
PHONE: 816.361.1177
CERT. OF AUTHORITY NO. 001592

F:\2021\04501-05000\021-04786\40-Design\Microstation\J4P3196\plan_sheets\8 Special Sheets\035_SS_06_J4P3196_I5.dgn 2:12:36 PM 2/28/2025

REVISED: 2024-01-18

NOTES:

1. PASSING AREA REQUIRED EVERY 200' ON SIDEWALK THAT IS LESS THAN 5' WIDE.
2. * CURB MAY OR MAY NOT BE NEEDED DEPENDING ON FIELD CONDITIONS. IF CURB IS NEEDED, THE CURB HEIGHT WILL VARY DEPENDING ON FIELD CONDITIONS. (INTEGRAL CURB, S-CURB OR MOD. S-CURB).
3. S-CURB OVER 12" TALL IS PAID FOR AS 'MODIFIED S-CURB' AND REQUIRES REINFORCEMENT (NO DIRECT PAY). SEE DETAIL THIS SHEET.
4. ** INTEGRAL CURB IS PAID FOR IN THE 4" CONC. SIDEWALK PAY ITEM. PAID AS 1' ADDITIONAL SIDEWALK WIDTH. (EX. 6' SW PAID AS 7') (0.11 SY/LF OF CURB)

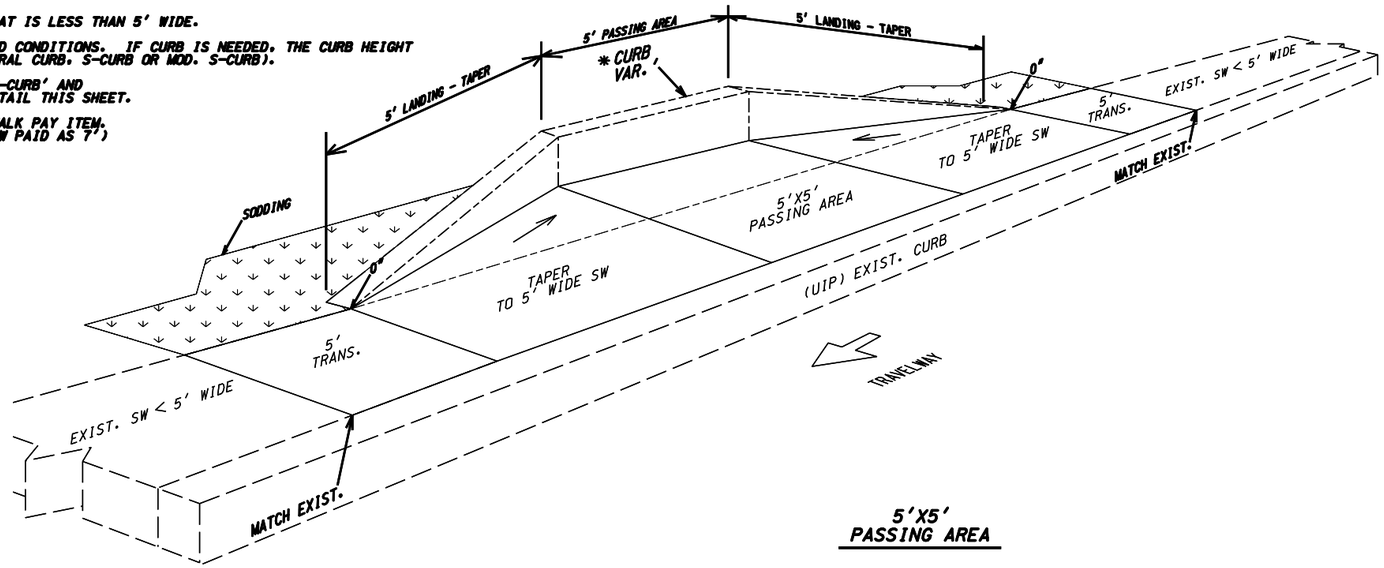

5'X5' PASSING AREA

NOT TO SCALE

QUANTITIES FOR PASSING AREAS				
EXISTING SW WIDTH			4'	4.5'
4" CONC. SIDEWALK (TAPER)		SY	1.3	0.7
TYPE 1 AGGREGATE		SY	1.3	0.7
4" CONC. SIDEWALK		SY	10.4	11.7
TYPE 1 AGGREGATE		SY	10.4	11.7
INTEGRAL CURB	**	SY	2.0	2.0
TYPE 1 AGGREGATE		SY	1.0	1.0
S-CURB		LF	17.2	16.0
MODIFIFED S-CURB		LF	17.2	16.0
SODDING		SY	53.0	53.0
LINEAR GRADING		LF	25.0	25.0

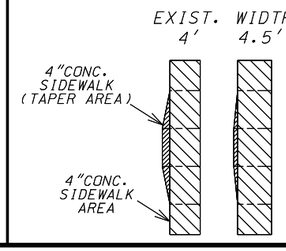

BUS STOP WITH BENCH

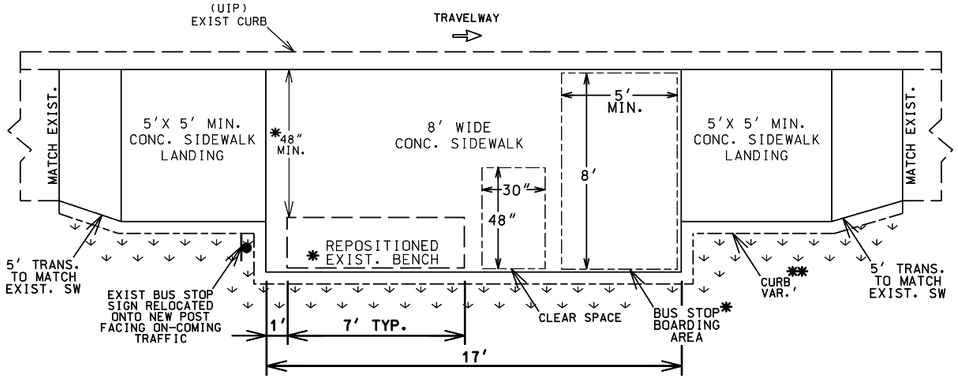

NOTES:

* 1. THE REPOSITIONED BENCH SHALL NOT BE PLACED ON THE 5'X8' BUS STOP BOARDING AREA. PLACE THE BACK OF THE BENCH AT THE BACK EDGE OF THE CONC. PAD TO PROVIDE MAX.CLEARANCE.
** 2. CURB USAGE DEPENDS ON FIELD CONDITIONS. IF CURB IS NEEDED DUE TO CUT, THE CURB HEIGHT WILL VARY DEPENDING ON FIELD CONDITIONS. (INTEGRAL CURB, S-CURB OR MOD. S-CURB).
3. S-CURB OVER 12" TALL IS PAID FOR AS 'MODIFIED S-CURB' AND REQUIRES REINFORCEMENT (NO DIRECT PAY). SEE DETAIL THIS SHEET.
*** 4. INTEGRAL CURB IS PAID FOR IN THE 4" CONC. SIDEWALK PAY ITEM. INTEGRAL CURB PAID AS 1' ADDITIONAL SIDEWALK WIDTH. (EX. 6'SW PAID AS 7') (0.11 SY/LF OF CURB)

BUS STOP WITHOUT BENCH

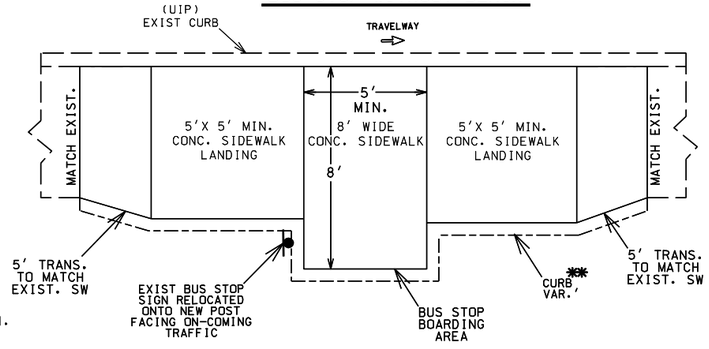

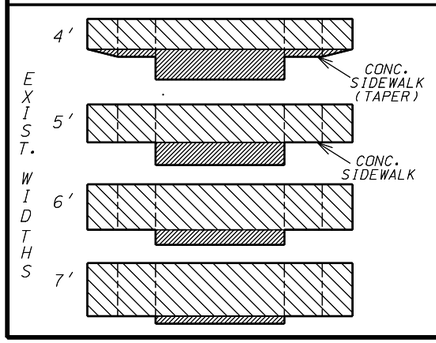

QUANTITIES FOR BUS STOPS WITH BENCH					
EXISTING SW WIDTH		4'	5'	6'	7'
4" CONC. SIDEWALK (TAPER)	SY	9.3	5.8	3.9	1.9
TYPE 1 AGGREGATE	SY	9.3	5.8	3.9	1.9
4" CONC. SIDEWALK	SY	16.5	20.4	24.3	28.2
TYPE 1 AGGREGATE	SY	16.5	20.4	24.3	28.2
INTEGRAL CURB ***	SY	5.4	3.4	3.2	2.9
TYPE 1 AGGREGATE	SY	2.7	1.7	1.6	1.5
S-CURB	LF	43.5	27.0	25.0	23.0
MODIFIFED S-CURB	LF	43.5	27.0	25.0	23.0
SODDING	SY	10.6	10.4	9.8	9.4
LINEAR GRADING	LF	37.0	37.0	37.0	37.0

NOT TO SCALE

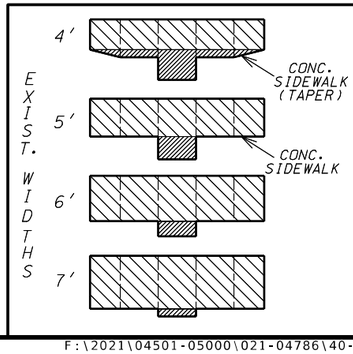

QUANTITIES FOR BUS STOPS – NO BENCH					
EXISTING SW WIDTH		4'	5'	6'	7'
4" CONC. SIDEWALK (TAPER)	SY	3.9	1.8	1.3	0.7
TYPE 1 AGGREGATE	SY	3.9	1.8	1.3	0.7
4" CONC. SIDEWALK	SY	10.4	12.9	15.5	18.0
TYPE 1 AGGREGATE	SY	10.4	12.9	15.5	18.0
INTEGRAL CURB ***	SY	3.8	2.0	1.8	1.6
TYPE 1 AGGREGATE	SY	1.9	1.0	0.9	0.8
S-CURB	LF	31.0	15.0	13.0	11.0
MODIFIFED S-CURB	LF	31.0	15.0	13.0	11.0
SODDING	SY	7.6	7.4	6.8	6.4
LINEAR GRADING	LF	25.0	25.0	25.0	25.0

NOT TO SCALE

PASSING AREAS AND BUS STOPS

SPECIAL SHEET 7 OF 74

Reid Catt
2025.03.01 21:31:31-06'00'

REID BRENNEN CATT-ENGINEER
MO# PE-2010019516

DATE PREPARED
2/28/2025

ROUTE	STATE
50/291	MO
DISTRICT	SHEET NO.
KC	36

COUNTY
JACKSON

JOB NO.
J4P3196

FEDERAL PROJECT NO.
STB-3001(009)

PROJECT NO.

BRIDGE NO.

DESCRIPTION	DATE

IF A SEAL IS PRESENT ON THIS SHEET IT HAS BEEN ELECTRONICALLY SEALED AND DATED.

MISSOURI HIGHWAYS AND TRANSPORTATION COMMISSION
105 WEST CAPITOL
JEFFERSON CITY, MO 65102
1-888-ASK-MODOT (1-888-275-6636)

LEE'S SUMMIT MISSOURI

olsson
1301 BURLINGTON ST., STE. 100
NORTH KANSAS CITY, MO 64116
PHONE: 816.361.1177
CERT. OF AUTHORITY NO. 001592

F:\2021\04501-05000\021-04786\40-Design\Microstation\J4P3196\plan_sheets\8 Special Sheets\036_SS_07_J4P3196_I5.dgn 2:12:38 PM 2/28/2025

CREATED: 2023-11-16
REVISED: 2024-02-13

Reid Catt
2025.03.01 21:31:58-06'00'

* ROUND TO 3/4" RADIUS
** ROUND TO 1/4" RADIUS
H = 2'-6" MAX. (30")
D = BURY DEPTH (FORMING NOT REQUIRED)
THIS SHALL BE 18 INCHES OR "H" WHICHEVER IS GREATER.
VERTICAL REINFORCING LENGTHS VARY AS NEEDED.
DEPTH MAY BE REDUCED IF KEYED 6" IN ROCK

MODIFIED S-CURB
> 12" TALL (2'-6" MAX.)

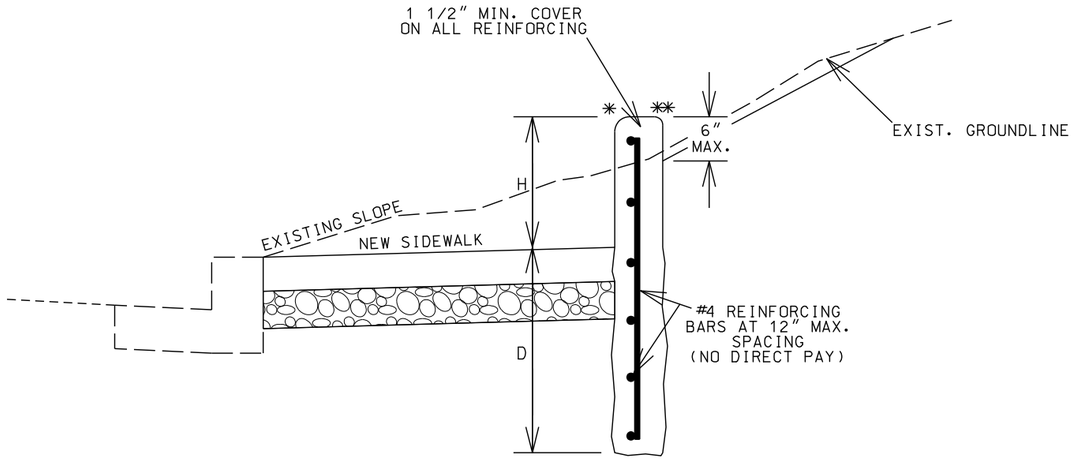

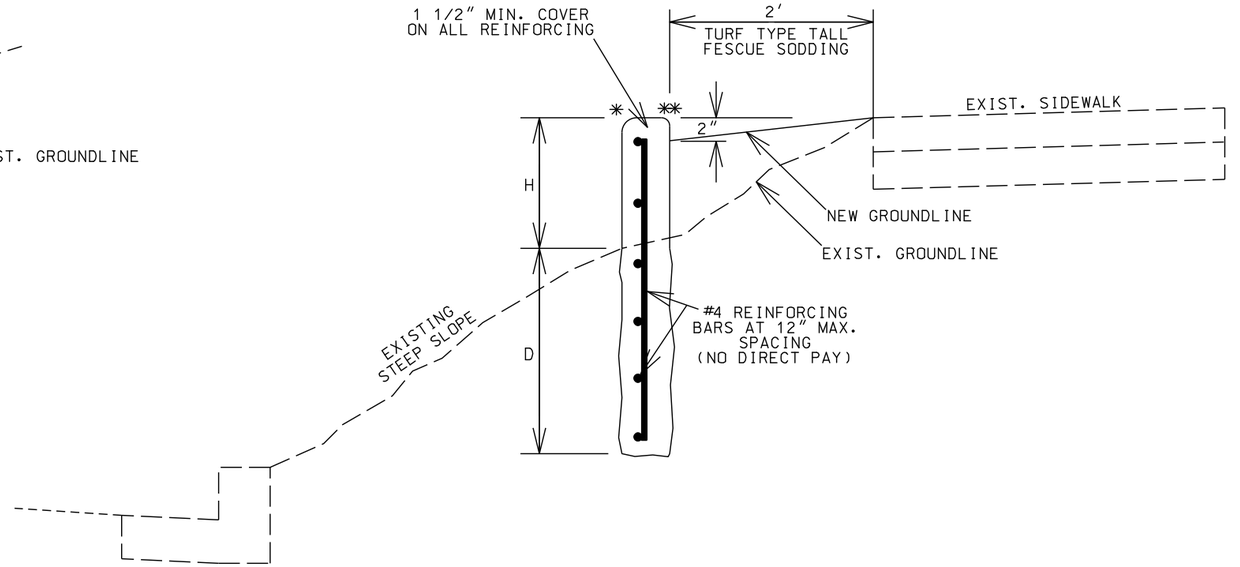

NOT TO SCALE

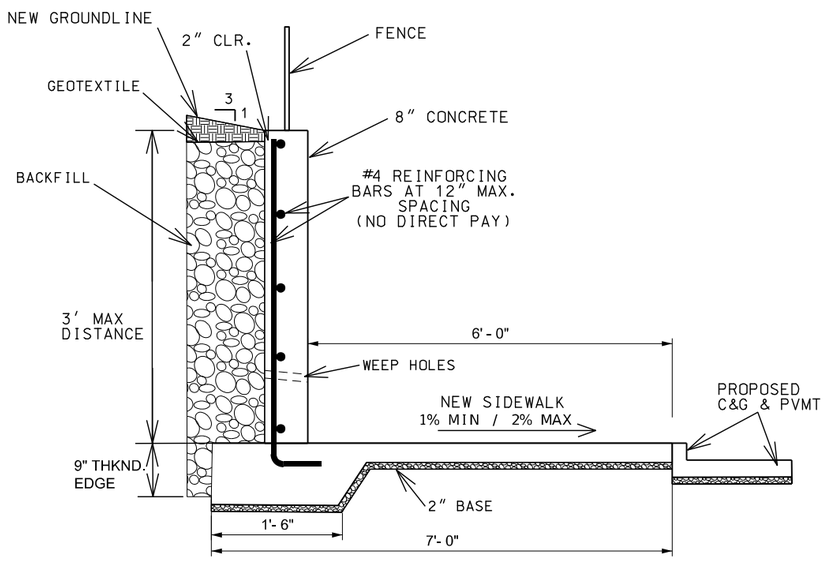

MODIFIED S-CURB
> 12" TALL (3'-0" MAX.)
POURED CONCRETE SIDEWALK WALL

NOT TO SCALE

IF A SEAL IS PRESENT ON THIS SHEET IT HAS BEEN ELECTRONICALLY SEALED AND DATED.

REID BRENNEN CATT-ENGINEER
MO# PE-2010019516

DATE PREPARED: 2/28/2025
ROUTE: 50/291
STATE: MO
DISTRICT: KC
SHEET NO.: 37
COUNTY: JACKSON
JOB NO.: J4P3196
FEDERAL PROJECT NO.: STB-3001(009)
PROJECT NO.:
BRIDGE NO.:

DESCRIPTION	DATE

MISSOURI HIGHWAYS AND TRANSPORTATION COMMISSION
105 WEST CAPITOL
JEFFERSON CITY, MO 65102
1-888-ASK-MODOT (1-888-275-6636)

LEE'S SUMMIT MISSOURI

olsson
1301 BURLINGTON ST., STE. 100
NORTH KANSAS CITY, MO 64116
PHONE: 816.361.1177
CERT. OF AUTHORITY NO. 001592

MODIFIED S-CURB

SPECIAL SHEET
8 OF 74

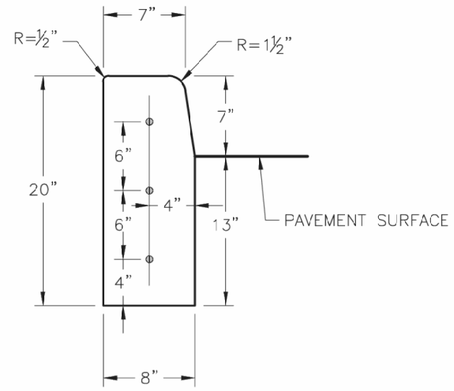

STRAIGHT CURB
(TYPE C-1)

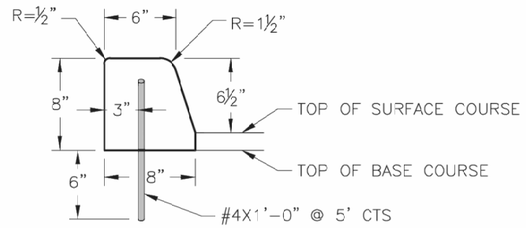

DOWELLED CURB
(TYPE DC)

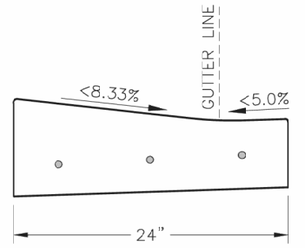

CURB & GUTTER DETAIL AT RAMP
(ADA SLOPE REQUIREMENTS)

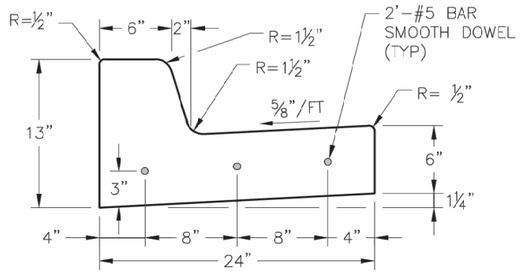

STRAIGHT BACK CURB &
GUTTER
(TYPE CG-1)

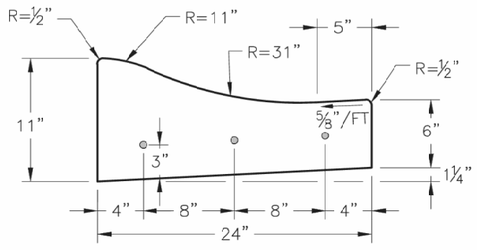

ROLL BACK CURB &
GUTTER
(TYPE CG-2)

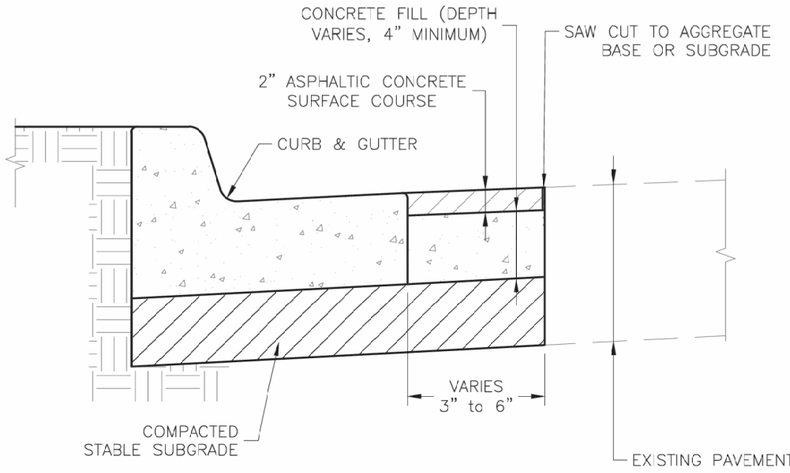

CURB REPLACEMENT DETAIL

GENERAL NOTES

1. ¾" ISOLATION JOINTS WITH 3 (2'-#5 BAR) SMOOTH DOWELS SHALL BE PLACED AT RADIUS POINTS AND AT 150' INTERVALS. THESE DOWEL BARS SHALL BE GREASED AND WRAPPED ON ONE END WITH EXPANSION TUBES.
2. 3" DEEP CONTRACTION JOINTS SHALL BE INSTALLED AT APPROXIMATELY 10' INTERVALS. THESE JOINTS SHALL PASS ACROSS THE ENTIRE CURB SECTION.
3. CONCRETE FILL SHALL HAVE UNIFORM AND SMCOTH FINISH
4. KCMMB 4K CONCRETE SHALL BE USED FOR ALL CURB.
5. ASPHALTIC CONCRETE SURFACE COURSE SHALL CONFORM TO STANDARD SPECIFICATIONS SECTION 2205.2.
6. CURBS FOR NEW STREETS SHALL BE BUILT ON ASPHALT OR AGGREGATE BASE AS SHOWN IN TYPICAL SECTION DETAIL.
7. WHITE CURING COMPOUND MUST BE APPLIED UNIFORMLY TO THE CONCRETE SURFACE IMMEDIATELY AFTER FINAL FINISHING.
8. ALL DOWELS & TIE BARS SHALL BE EPOXY COATED.

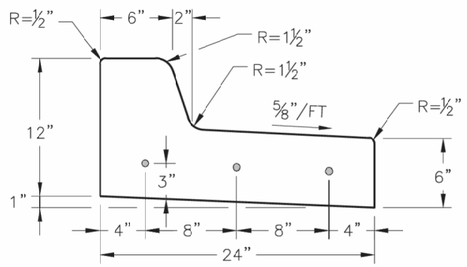

STRAIGHT BACK DRY CURB &
GUTTER
(TYPE CG-1 DRY)

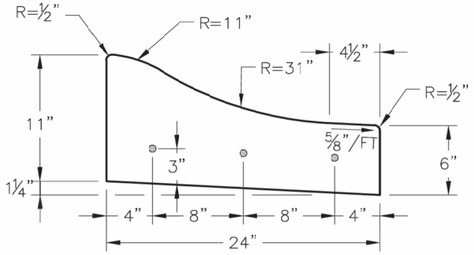

ROLL BACK DRY CURB &
GUTTER
(TYPE CG-2 DRY)

SPECIAL SHEET
LS STANDARD CURB & GUTTER DETAILS
SHEET 9 OF 74

Reid Catt
2025.03.01 21:31:44-06'00'

REID BRENNEN CATT-ENGINEER
MO# PE-2010019516

DATE PREPARED
2/28/2025

ROUTE	STATE
50/291	MO
DISTRICT	SHEET NO.
KC	38

COUNTY
JACKSON

JOB NO.
J4P3196

FEDERAL PROJECT NO.
STB-3001(009)

PROJECT NO.

BRIDGE NO.

DESCRIPTION	DATE

IF A SEAL IS PRESENT ON THIS SHEET IT HAS BEEN ELECTRONICALLY SEALED AND DATED.

MISSOURI HIGHWAYS AND TRANSPORTATION COMMISSION
105 WEST CAPITOL
JEFFERSON CITY, MO 65102
1-888-ASK-MODOT (1-888-275-6636)

LEE'S SUMMIT MISSOURI

olsson
1301 BURLINGTON ST., STE. 100
NORTH KANSAS CITY, MO 64116
PHONE: 816.361.1177
CERT. OF AUTHORITY NO. 001592

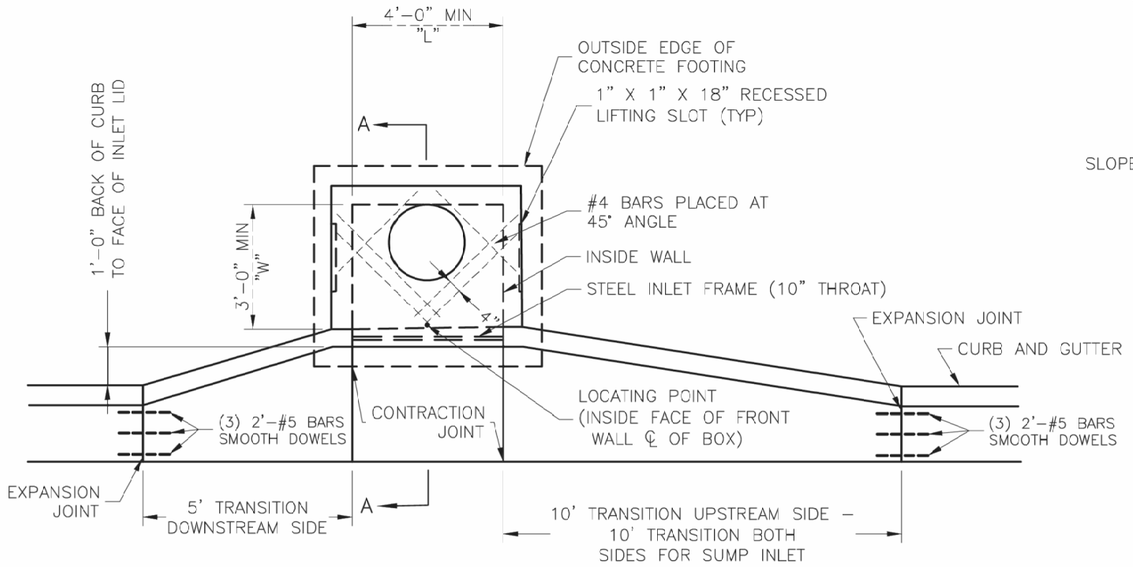

PLAN VIEW

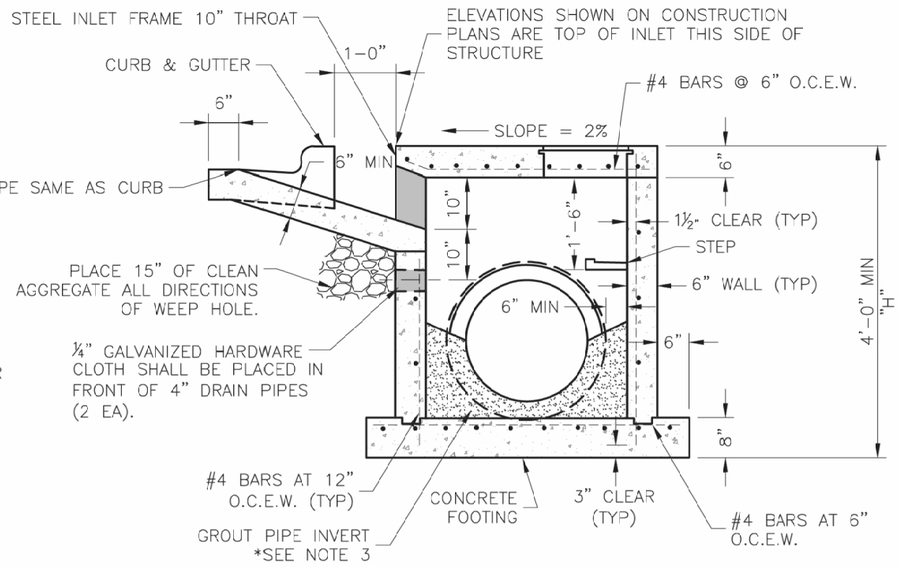

SECTION A–A

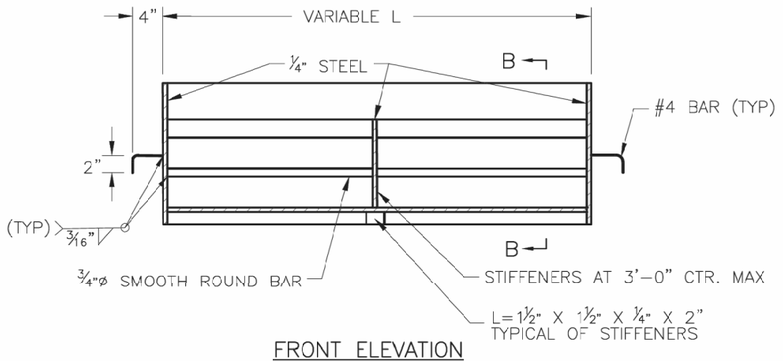

FRONT ELEVATION

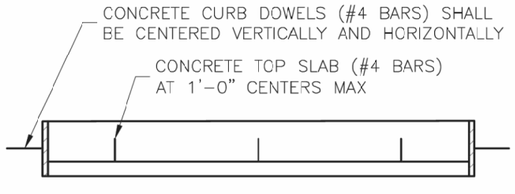

PLAN VIEW

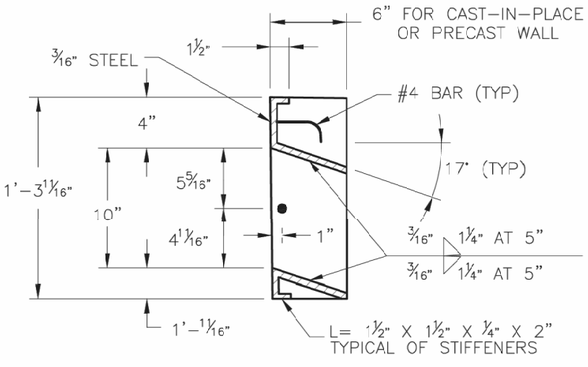

SECTION B–B

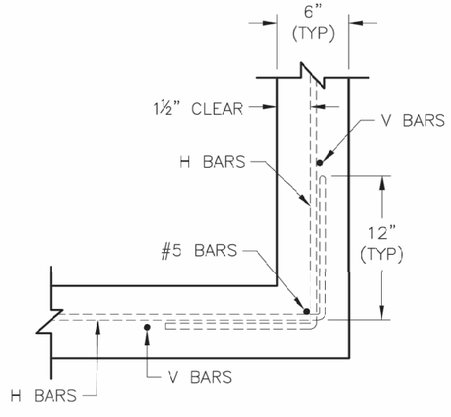

WALL CORNER DETAIL

STEEL FRAME NOTES:

1. ALL WELDS SHALL BE PERFORMED IN ACCORDANCE WITH APPROPRIATE AWS SPECIFICATIONS AND PROCEDURES.
2. ALL WELDS ON EXPOSED SURFACES SHALL BE DRESSED SO AS TO PROVIDE A PLEASING FINISHED APPEARANCE.
3. THE ENTIRE FRAME SHALL BE PAINTED A SINGLE COAT OF CHEM–PRIME #37H–78 PRIMER (GRAY) OR EQUAL.

GENERAL NOTES:

1. THE FIRST DIMENSION LISTED IN THE CONSTRUCTION NOTES IS THE "L" DIMENSION. THE SECOND DIMENSION IS THE "W" DIMENSION.
2. FLOW LINES LISTED ON THE PROJECT PLANS ARE LISTED AT THE INSIDE FACE OF THE WALL.
3. FLOOR OF INLET GROUTED AND SHAPED TO MATCH PIPE INVERT TO PROVIDE SMOOTH FLOW.
4. LOCATE MH RING AND COVER ON BLANK WALL IF POSSIBLE.
5. STEPS SHALL BE SPACED AT 1'–4" C.C. VERTICALLY ON BLANK WALL IF POSSIBLE.
6. BEVEL ALL EXPOSED EDGES WITH ¾"CHAMFER OR ½" TOOLED EDGE.
7. ON–GRADE INLETS SHALL CONFORM TO THE STREET GRADE AND SUMP INLETS SHALL BE LEVEL.
8. PRECAST LIDS SHALL BE PINNED, SEALED WITH NON–SHRINKABLE GROUT AND REMOVABLE FOR FUTURE MAINTENANCE.
9. LIFTING RINGS SHALL BE REMOVED AND SEALED WITH NON–SHRINKABLE GROUT
10. FOR RING AND COVER SEE THE STORMWATER APPROVED PRODUCT LIST.

SPECIAL SHEET
LS CURB INLET DETAIL
SHEET 10 OF 74

Reid Catt
2025.03.01 21:30:32-06'00'

REID BRENNEN CATT-ENGINEER
MO# PE-2010019516

DATE PREPARED
2/28/2025

ROUTE	STATE
50/291	MO
DISTRICT	SHEET NO.
KC	39

COUNTY
JACKSON

JOB NO.
J4P3196

FEDERAL PROJECT NO.
STB-3001(009)

PROJECT NO.

BRIDGE NO.

DESCRIPTION	DATE

IF A SEAL IS PRESENT ON THIS SHEET IT HAS BEEN ELECTRONICALLY SEALED AND DATED.

MISSOURI HIGHWAYS AND TRANSPORTATION COMMISSION
105 WEST CAPITOL
JEFFERSON CITY, MO 65102
1-888-ASK-MODOT (1-888-275-6636)

LEE'S SUMMIT MISSOURI

olsson
1301 BURLINGTON ST., STE. 100
NORTH KANSAS CITY, MO 64116
PHONE: 816.361.1177
CERT. OF AUTHORITY NO. 001592

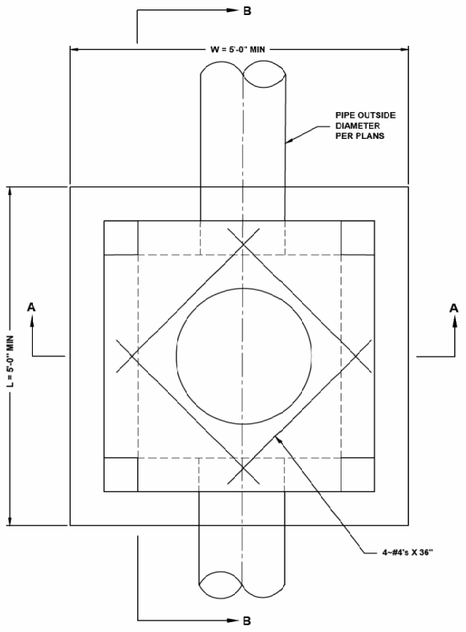

PLAN VIEW

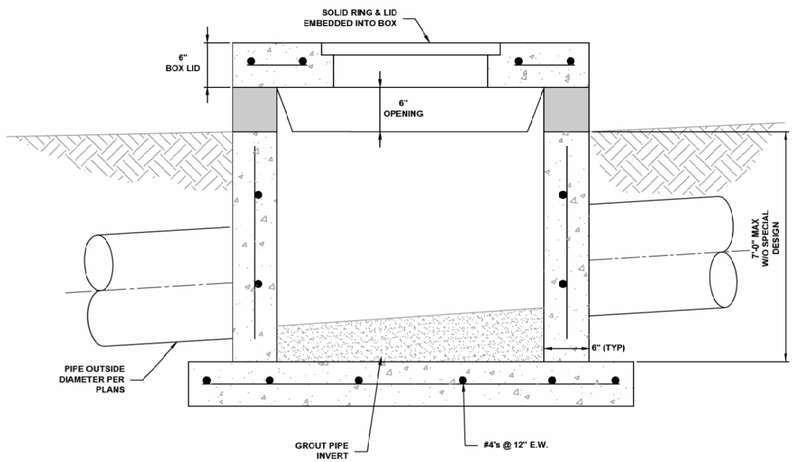

SECTION B-B

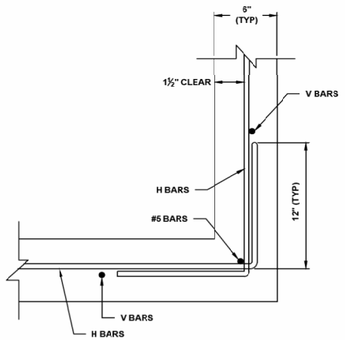

WALL CORNER DETAIL

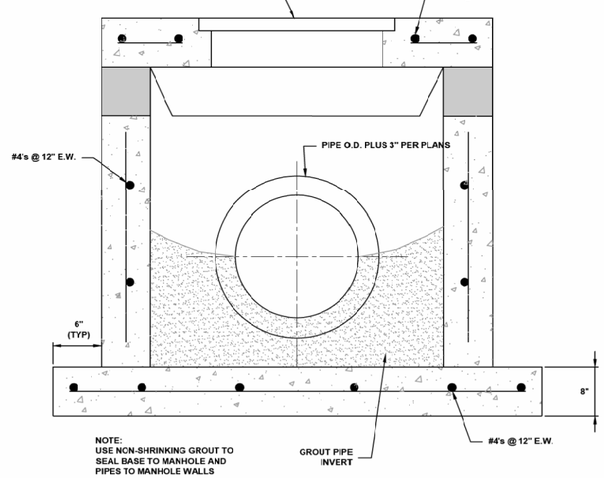

SECTION A-A

FIELD INLET DETAIL

GENERAL NOTES:

1. LOCATE RING AND COVER OVER OUTLET ON BLANK WALL.
2. USE ¾" CHAMFER ON ALL EXPOSED CONCRETE CORNERS.
3. FLOOR OF INLET GROUTED AND SHAPED TO MATCH PIPE INVERT TO PROVIDE SMOOTH FLOW.
4. STEPS REQUIRED AT 16" O.C. WHEN DEPTH FROM TOP OF CASTING TO INVERT EXCEEDS 3' ON BLANK WALL IF POSSIBLE.
5. BOXOUTS WILL NOT BE ALLOWED TO PROJECT THROUGH THE CORNERS OF THE STRUCTURE.
6. THE MINIMUM REINFORCING SHALL BE 1 H-BAR OVER A CAST-IN-PLACE PIPE AND 2 H-BARS OVER A PRECAST BOXOUT.
7. SHOW FIELD INLET ORIENTATION ON PLANS PLUS NUMBER AND SIDE OF OPENINGS.
8. PRECAST LIDS SHALL BE PINNED, SEALED WITH NON-SHRINKABLE GROUT AND REMOVABLE FOR FUTURE MAINTENANCE.
9. FOR RING AND COVER SEE THE STORMWATER APPROVED PRODUCT LIST.

Reid Catt
2025.03.01 21:32:30-06'00'

REID BRENNEN CATT-ENGINEER
MO# PE-2010019516

DATE PREPARED
2/28/2025

ROUTE	STATE
50/291	MO
DISTRICT	SHEET NO.
KC	40

COUNTY
JACKSON

JOB NO.
J4P3196

FEDERAL PROJECT NO.
STB-3001(009)

PROJECT NO.

BRIDGE NO.

IF A SEAL IS PRESENT ON THIS SHEET IT HAS BEEN ELECTRONICALLY SEALED AND DATED.

DESCRIPTION	DATE

MISSOURI HIGHWAYS AND TRANSPORTATION COMMISSION
105 WEST CAPITOL
JEFFERSON CITY, MO 65102
1-888-ASK-MODOT (1-888-275-6636)

LEE'S SUMMIT MISSOURI

olsson
1301 BURLINGTON ST., STE. 100
NORTH KANSAS CITY, MO 64116
PHONE: 816.361.1177
CERT. OF AUTHORITY NO. 001592

SPECIAL SHEET
LS FIELD INLET DETAIL
SHEET 11 OF 74

F:\2021\04501-05000\021-04786\40-Design\Microstation\J4P3196\plan_sheets\8 Special Sheets\040_SS_11_J4P3196_I1.dgn 2:13:03 PM 2/28/2025

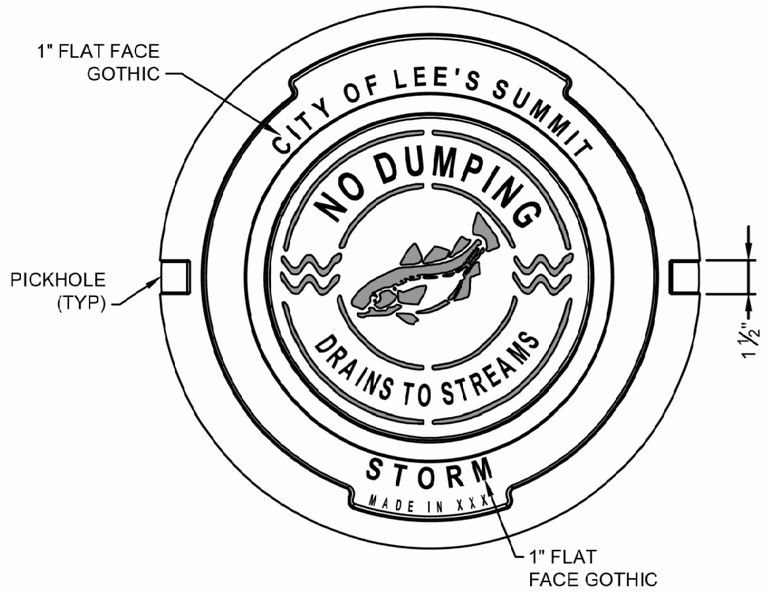

PLAN VIEW

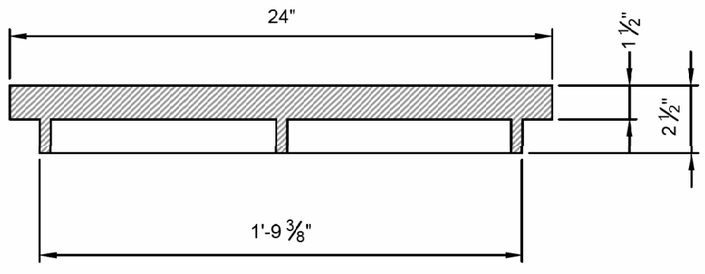

SECTION VIEW

STORM MANHOLE COVER

STANDARD 24" MANHOLE COVER
MINIMUM WEIGHT = 160 LB

*COVER AND FRAME MODEL INFORMATION REFER TO THE STORMWATER APPROVED PRODUCT LIST.

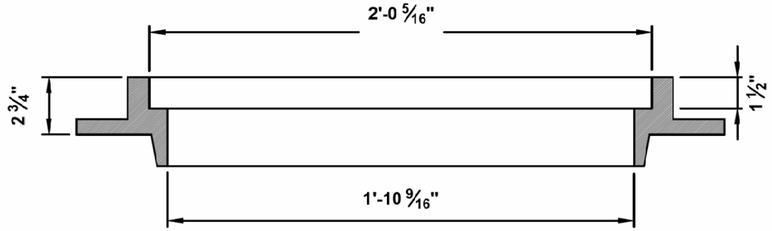

SLAB MANHOLE FRAME

LEE'S SUMMIT PART NO.: LS103A
MINIMUM WEIGHT = 145 LB

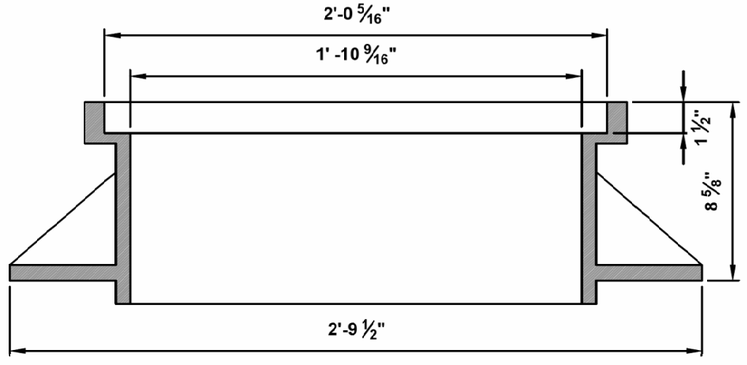

STANDARD 24" MANHOLE FRAME

LEE'S SUMMIT PART NO.: LS101A
MINIMUM WEIGHT = 250 LB

***COVER AND FRAME MODEL INFORMATION REFER TO THE STORMWATER APPROVED PRODUCTS LIST.**

STORM MANHOLE FRAME DETAIL

Reid Catt
2025.03.01 21:32:38-06'00'

REID BRENNEN CATT
NUMBER
PE-2010019516

REID BRENNEN CATT-ENGINEER
MO# PE-2010019516

DATE PREPARED
2/28/2025

ROUTE	STATE
50/291	MO
DISTRICT	SHEET NO.
KC	41

COUNTY
JACKSON

JOB NO.
J4P3196

FEDERAL PROJECT NO.
STB-3001(009)

PROJECT NO.

BRIDGE NO.

DESCRIPTION

DATE

IF A SEAL IS PRESENT ON THIS SHEET IT HAS BEEN ELECTRONICALLY SEALED AND DATED.

MISSOURI HIGHWAYS AND TRANSPORTATION COMMISSION
105 WEST CAPITOL
JEFFERSON CITY, MO 65102
1-888-ASK-MODOT (1-888-275-6636)

LEE'S SUMMIT MISSOURI

olsson
1301 BURLINGTON ST., STE. 100
NORTH KANSAS CITY, MO 64116
PHONE: 816.361.1177
CERT. OF AUTHORITY NO. 001592

SPECIAL SHEET
LS MANHOLE FRAME
& COVER DETAIL
SHEET 12 OF 74

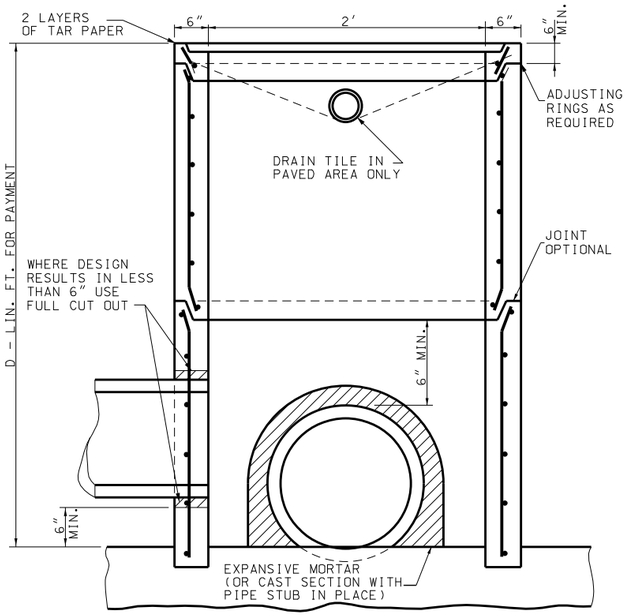

SECTION A-A

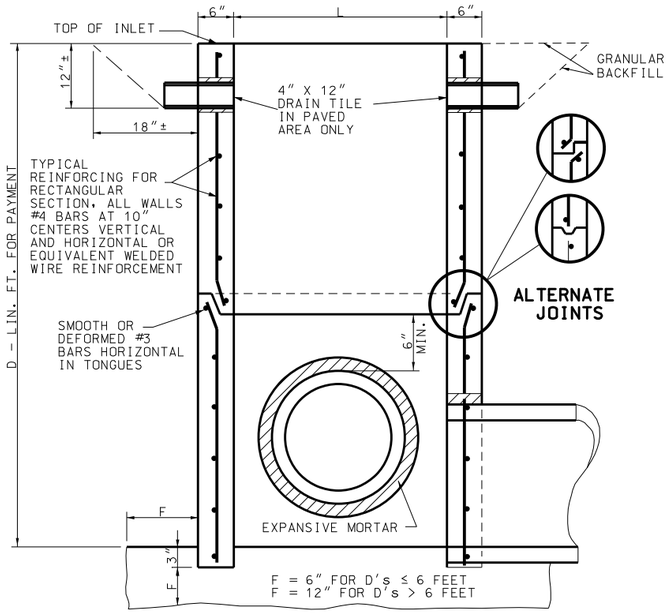

SECTION B-B

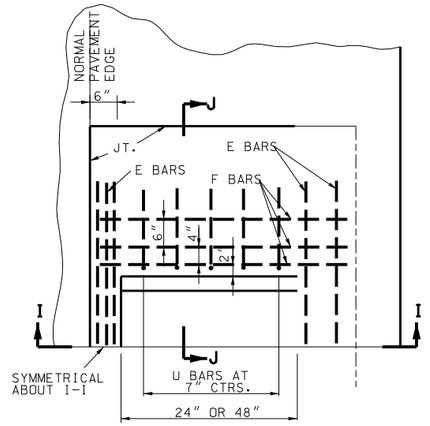

PAVEMENT BAR BILL					
TYPE	WIDTH	LENGTH	MARK	NO.	LENGTH
C	2'	10'	E	7	14'-0"
			F	6	3'-3"
			U	8	2'-9"
	3'	8'	E	7	12'-0"
			F	6	4'-3"
			U	8	2'-9"

BARS E, F, & U.....#4

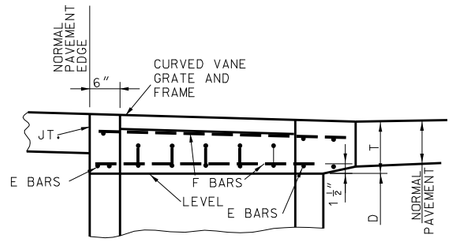

SECTION I-I

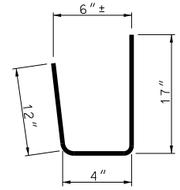

U-BARS BENDING DIAGRAM

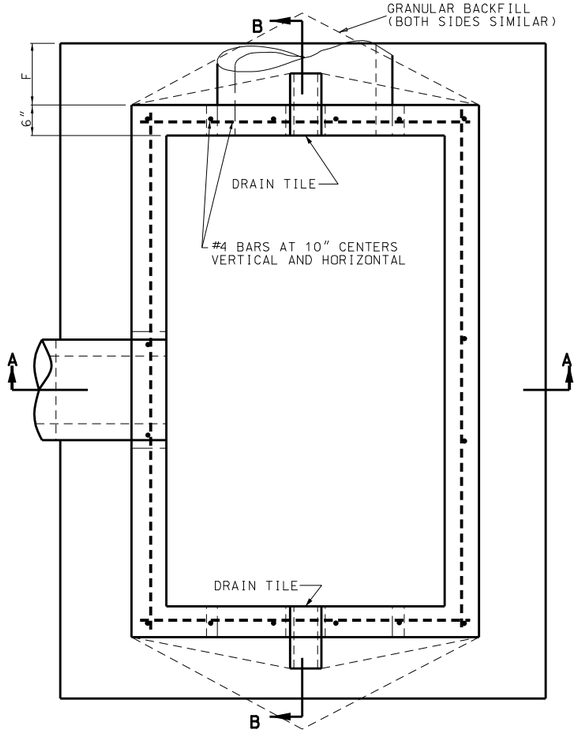

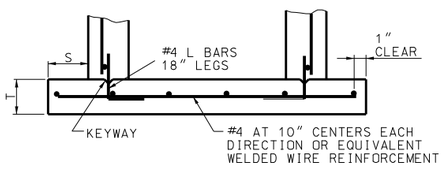

SECTION C-C

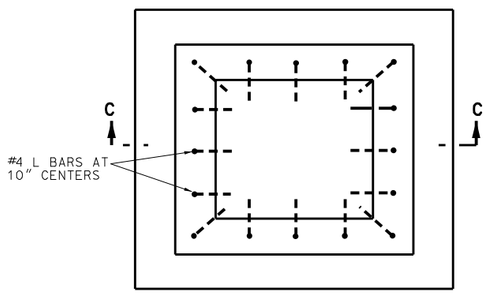

S = 0 FOR D ≤ 6 FEET AND 9" FOR D > 6 FEET

T = 6" FOR D ≤ 6 FEET AND 9" FOR D > 6 FEET

FOUNDATION SLAB AND BASE SECTION MAY BE POURED MONOLITHIC OR SEPARATELY WITH A KEYWAY.

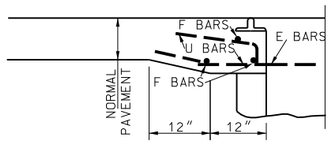

SECTION J-J

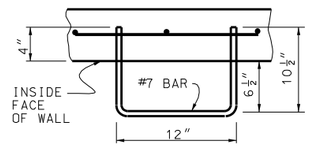

STEPS

GENERAL NOTES:

L = 12'
SEE PLAN SHEETS FOR DETAILS.

SEE STANDARD PLAN 614.11 FOR CURVED VANE GRATE. A SERIES OF 2'X2' OR 2'X4' GRATES SHALL BE USED AND INCLUDED IN PAYMENT FOR TRENCH DRAIN.

SPECIAL SHEET
2'X12' TRENCH DRAIN DETAIL
SHEET 13 OF 74

Reid Catt
2025.03.01 21:32:45-06'00'

REID BRENNEN CATT-ENGINEER
MO# PE-2010019516

DATE PREPARED
2/28/2025

ROUTE	STATE
50/291	MO
DISTRICT	SHEET NO.
KC	42

COUNTY
JACKSON

JOB NO.
J4P3196

FEDERAL PROJECT NO.
STB-3001(009)

PROJECT NO.

BRIDGE NO.

DESCRIPTION | DATE

IF A SEAL IS PRESENT ON THIS SHEET IT HAS BEEN ELECTRONICALLY SEALED AND DATED.

MISSOURI HIGHWAYS AND TRANSPORTATION COMMISSION

105 WEST CAPITOL
JEFFERSON CITY, MO 65102
1-888-ASK-MODOT (1-888-275-6636)

LEE'S SUMMIT MISSOURI

olsson
1301 BURLINGTON ST., STE. 100
NORTH KANSAS CITY, MO 64116
PHONE: 816.361.1177
CERT. OF AUTHORITY NO. 001592

F:\2021\04501-05000\021-04786\40-Design\Microstation\J4P3196\plan_sheets\8 Special Sheets\042_SS_13_J4P3196_I1.dgn 2:13:17 PM 2/28/2025

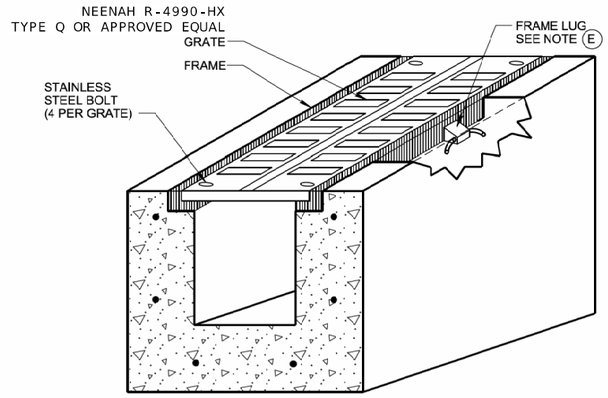

PERSPECTIVE VIEW

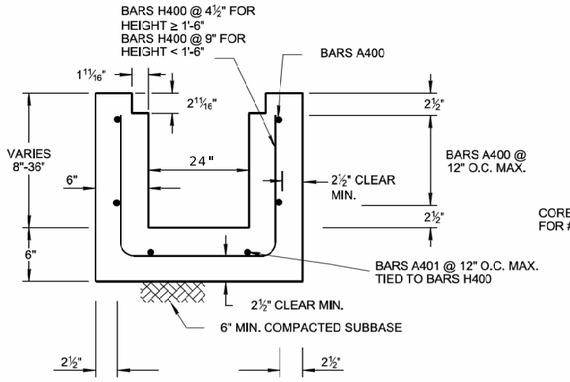

TYPICAL TRENCH CROSS SECTION

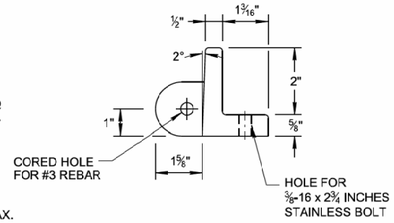

FRAME DETAIL SHOWING LUG

SEE NOTE (E)

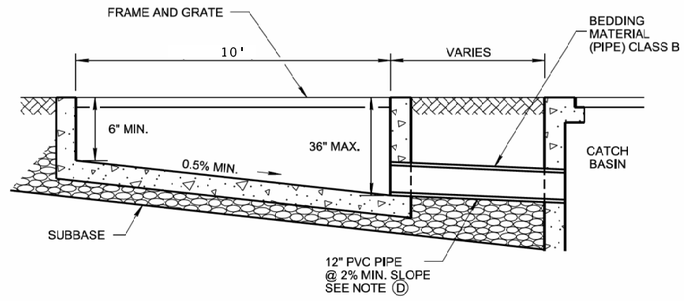

PROFILE VIEW -
IN MEDIAN WITH CATCH BASIN

REINFORCING STEEL LEGEND

A400 VARIABLE

A401 VARIABLE

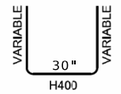

DIMENSIONS SHOWN ON THIS LEGEND ARE OUTSIDE TO OUTSIDE OF BAR. STANDARD C.R.S.I. HOOK AND TIE DETAILS SHALL APPLY, EXCEPT AS NOTED.

TRENCH DRAIN GENERAL NOTES

(A) TRENCH DRAIN MAY BE USED TO COLLECT ROADWAY RUNOFF IN AREAS WHERE LONG SECTIONS OF FLAT PROFILE GRADE ARE UNAVOIDABLE. THEY MAY BE USED IN MEDIANS OR IN OTHER AREAS WHERE RUNOFF MAY COLLECT.

(B) THE MAXIMUM ALLOWABLE OUTFLOW RATE THROUGH THE DISCHARGE PIPE SHOULD NOT EXCEED 4.5 CFS. THE DISCHARGE SHALL BE CALCULATED USING THE RATIONAL METHOD AS DESCRIBED IN CHAPTER 4 OF THE DRAINAGE DESIGN MANUAL.

(C) WHERE TRENCH DRAIN IS CONNECTED TO A CATCH BASIN AT THE LOW POINT OF THE PROFILE GRADE, THE OUTLET PIPE SHALL CONSIST OF 12-INCH PVC PIPE AT A SLOPE OF AT LEAST 2.0%. IN ORDER TO MAINTAIN MINIMUM COVER, THE TRENCH SHALL BE 36 INCHES DEEP AT THE OUTLET.

(D) PVC PIPE SHALL MEET THE REQUIREMENTS OF ASTM F949.

(E) TRENCH DRAIN FRAMES SHALL BE PROVIDED WITH LUGS SPACED AT 12 INCHES ON CENTER. LUG TYPE MAY VARY BY MANUFACTURER. LUGS SHALL BE PROVIDED WITH A HOLE THROUGH WHICH A #3 REBAR MAY BE PLACED PRIOR TO POURING THE TRENCH WALLS.

(F) GRATES SHALL BE SOLIDLY ATTACHED TO THE TRENCH DRAIN FRAMES BY MEANS OF STAINLESS STEEL BOLTS (⅜-16 x 2¾ INCHES) AND FLAT WASHERS AT EACH CORNER OF THE GRATE.

(G) THE GENERAL INSTALLATION PROCEDURE FOR CAST-IN-PLACE TRENCH DRAINS SHALL BE AS FOLLOWS:

1. SET REINFORCING STEEL.
2. FORM AND POUR TRENCH DRAIN BASE.
3. SET FORMS FOR TRENCH DRAIN WALLS.
4. SET TRENCH GRATES AND FRAMES INTO PLACE ON THE FORMS. GRATES MUST BE BOLTED TO THE FRAMES. INSERT SHORT SECTIONS OF #3 REBAR AS NEEDED INTO THE FRAME LUGS.
5. POUR TRENCH DRAIN WALLS.

(H) PRECAST TRENCH DRAIN SECTIONS MAY BE USED WITH THE APPROVAL OF THE ENGINEER.

(I) PAYMENT FOR TRENCH DRAINS WILL BE MADE UNDER ITEM NUMBER 731-99.02, TRENCH DRAIN PER EACH.

(J) OTHER APPROVED TRENCH DRAIN SYSTEMS ON QUALIFIED PRODUCT LIST MAY BE USED WITH THE APPROVAL OF THE ENGINEER.

(K) THE FOLLOWING MATERIAL PROPERTIES ARE REQUIRED FOR BOTH CAST-IN-PLACE AND PRECAST STRUCTURES:

CONCRETE: f'_c = 4,000 POUNDS PER SQUARE INCH AT 28 DAYS
REINFORCING STEEL: ASTM A615, F_y = 60,000 POUNDS PER SQUARE INCH
ALL REINFORCING IS TO BE INSTALLED AS DETAILED ON THIS DRAWING.

SPECIAL SHEET
TRENCH DRAIN DETAIL
SHEET 14 OF 74

Reid Catt
2025.03.01 21:32:53-06'00'

REID BRENNEN CATT
NUMBER
PE-2010019516

REID BRENNEN CATT-ENGINEER
MO# PE-2010019516

DATE PREPARED
2/28/2025

ROUTE	STATE
50/291	MO
DISTRICT	SHEET NO.
KC	43

COUNTY
JACKSON

JOB NO.
J4P3196

FEDERAL PROJECT NO.
STB-3001(009)

PROJECT NO.

BRIDGE NO.

DESCRIPTION	DATE

IF A SEAL IS PRESENT ON THIS SHEET IT HAS BEEN ELECTRONICALLY SEALED AND DATED.

MISSOURI HIGHWAYS AND TRANSPORTATION COMMISSION
105 WEST CAPITOL
JEFFERSON CITY, MO 65102
1-888-ASK-MODOT (1-888-275-6636)

LEE'S SUMMIT MISSOURI

olsson
1301 BURLINGTON ST., STE. 100
NORTH KANSAS CITY, MO 64116
PHONE: 816.361.1177
CERT. OF AUTHORITY NO. 001592

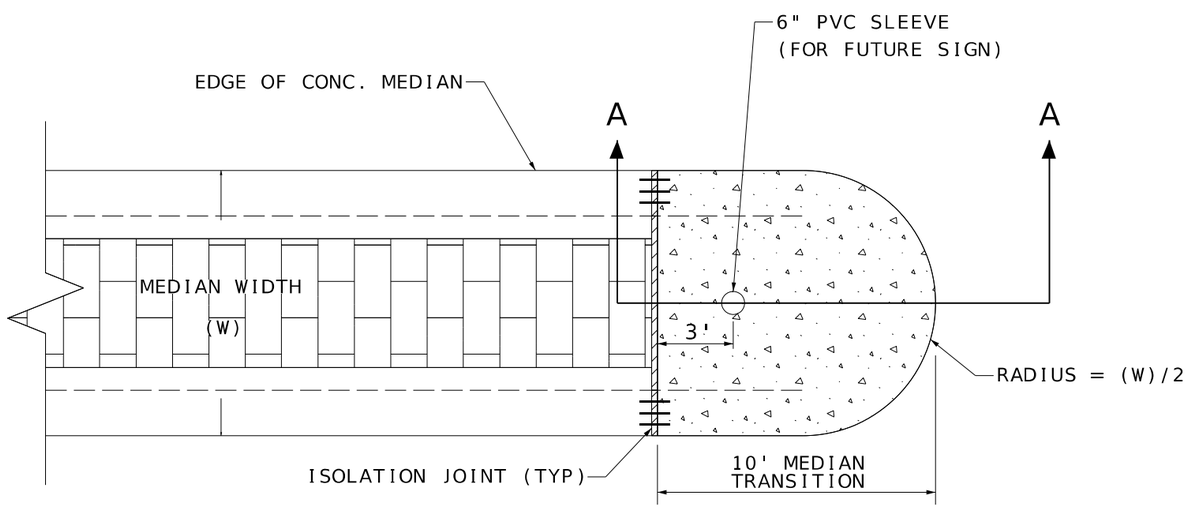

MEDIAN TRANSITION
PLAN VIEW

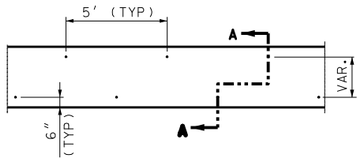

TIE BAR LOCATIONS FOR CONCRETE MEDIAN STRIP

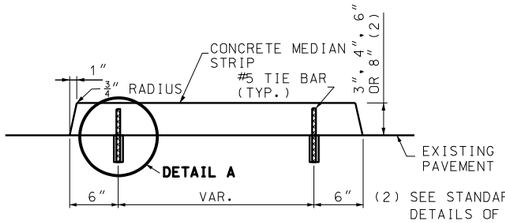

SECTION A-A
CONCRETE MEDIAN STRIP

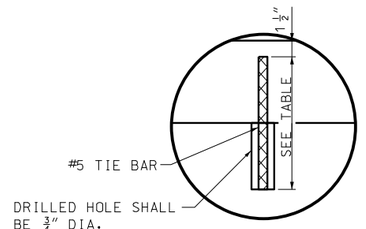

DETAIL A

MEDIAN HEIGHT	BAR LENGTH
3"	8"
4"	9"
6"	11"
8"	13"

GENERAL NOTES:

TIE BARS SHALL BE EPOXY COATED, DEFORMED REINFORCING BARS MEETING THE REQUIREMENTS OF SECTION 710 AND 1057.

BONDING FOR TIE BARS SHALL BE EPOXY OR POLYESTER BONDING AGENTS AS SPECIFIED IN SECTION 1039.

THE FACE OF THE MEDIAN MAY BE CONSTRUCTED WITHOUT BATTER WHEN CONSTRUCTED ON A RADIUS OF 6' OR LESS.

WHEN CONCRETE MEDIANS ARE CONSTRUCTED DIRECTLY BENEATH GUARDRAIL, THE MEDIAN HEIGHT WILL BE 4".

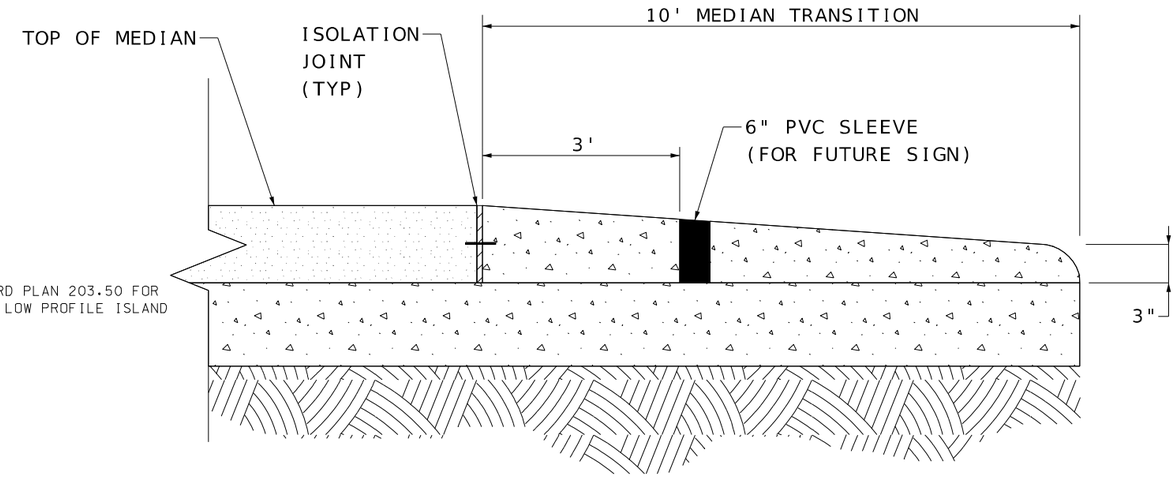

MEDIAN TRANSITION
SECTION A-A

NOTES:

1. 3/4" ISOLATION JOINT WITH 3 (2'-#5 BAR) SMOOTH DOWELS SHALL BE PLACED AT THE CONNECTION OF THE CURB. THESE DOWEL BARS SHALL BE EPOXY COATED, GREASED AND WRAPPED ON ONE END WITH EXPANSION TUBES.
2. ALL MEDIAN TRANSITIONS SHALL BE POURED MONOLITHICALLY.
3. ALL MEDIANS ON CITY RIGHT OF WAY SHALL USE KCMMB 4K CONCRETE.
4. WHITE CURING COMPOUND SHALL BE APPLIED UNIFORMLY TO THE CONCRETE SURFACE IMMEDIATELY AFTER FINAL FINISHING.
5. MEDIAN TRANSITIONS SHALL BE PAID FOR AS 6083008 8 IN. CONCRETE MEDIAN STRIP PER SQUARE YARD.

SPECIAL SHEET
MEDIAN TRANSITION
DETAIL
SHEET 15 OF 74

Reid Catt
2025.03.01 21:33:22-06'00'

REID BRENNEN CATT
NUMBER
PE-2010019516

REID BRENNEN CATT-ENGINEER
MO# PE-2010019516

DATE PREPARED
2/28/2025

ROUTE	STATE
50/291	MO
DISTRICT	SHEET NO.
KC	44

COUNTY
JACKSON

JOB NO.
J4P3196

FEDERAL PROJECT NO.
STB-3001(009)

PROJECT NO.

BRIDGE NO.

DESCRIPTION

DATE

IF A SEAL IS PRESENT ON THIS SHEET IT HAS BEEN ELECTRONICALLY SEALED AND DATED.

MISSOURI HIGHWAYS AND TRANSPORTATION COMMISSION
105 WEST CAPITOL
JEFFERSON CITY, MO 65102
1-888-ASK-MODOT (1-888-275-6636)

LEE'S SUMMIT MISSOURI

olsson
1301 BURLINGTON ST., STE. 100
NORTH KANSAS CITY, MO 64116
PHONE: 816.361.1177
CERT. OF AUTHORITY NO. 001592

MEDIAN A			
POINT	LOCATION	STATION	OFFSET
A1	ROUTE 291	169+75.21	6.16' RT.
A2	ROUTE 291	170+75.06	5.87' LT.
A3	ROUTE 291	173+87.17	7.01' LT.
A4	ROUTE 291	173+87.17	3.01' LT.
A5	ROUTE 291	170+74.96	1.87' LT.
A6	ROUTE 291	169+75.69	10.13' RT.

170

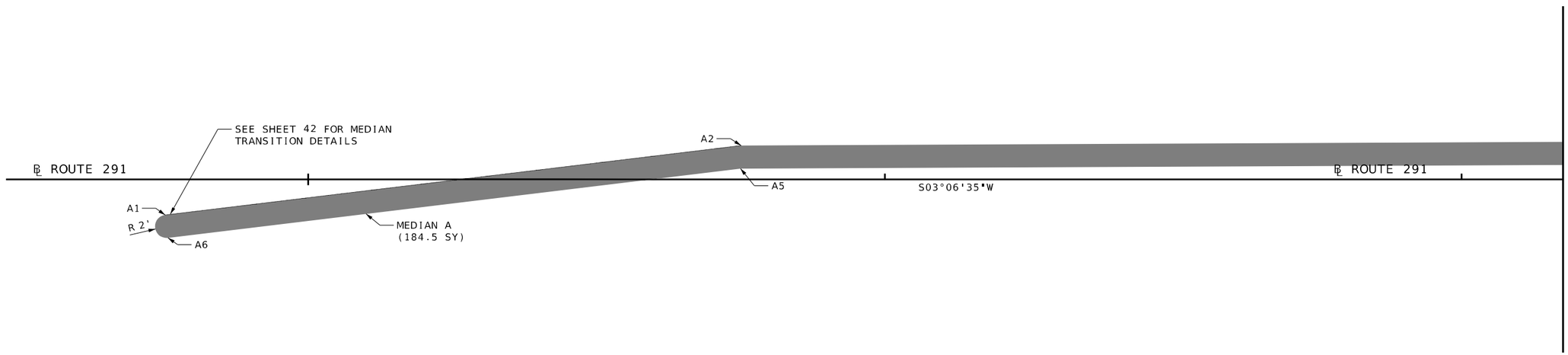

SCALE

0 10 20 30

SPECIAL SHEET
CONCRETE MEDIAN DETAILS
SHEET 16 OF 74

Reid Catt
2025.03.01 21:33:01-06'00'

REID BRENNEN CATT
NUMBER
PE-2010019516

REID BRENNEN CATT-ENGINEER
MO# PE-2010019516

DATE PREPARED
2/28/2025

ROUTE	STATE
50/291	MO
DISTRICT	SHEET NO.
KC	45

COUNTY
JACKSON

JOB NO.
J4P3196

FEDERAL PROJECT NO.
STB-3001(009)

PROJECT NO.

BRIDGE NO.

IF A SEAL IS PRESENT ON THIS SHEET IT HAS BEEN ELECTRONICALLY SEALED AND DATED.

DESCRIPTION	DATE

MISSOURI HIGHWAYS AND TRANSPORTATION COMMISSION
105 WEST CAPITOL
JEFFERSON CITY, MO 65102
1-888-ASK-MODOT (1-888-275-6636)

LEE'S SUMMIT MISSOURI

olsson
1301 BURLINGTON ST., STE. 100
NORTH KANSAS CITY, MO 64116
PHONE: 816.361.1177
CERT. OF AUTHORITY NO. 001592

MEDIAN A			
POINT	LOCATION	STATION	OFFSET
A1	ROUTE 291	169+75.21	6.16' RT.
A2	ROUTE 291	170+75.06	5.87' LT.
A3	ROUTE 291	173+87.17	7.01' LT.
A4	ROUTE 291	173+87.17	3.01' LT.
A5	ROUTE 291	170+74.96	1.87' LT.
A6	ROUTE 291	169+75.69	10.13' RT.

MEDIAN B			
POINT	LOCATION	STATION	OFFSET
B1	ROUTE 291	173+62.27	11.03' RT.
B2	ROUTE 291	174+05.24	10.98' RT.
B3	ROUTE 291	174+04.77	12.98' RT.
B4	ROUTE 291	174+04.77	19.04' RT.
B5	ROUTE 291	173+62.12	18.09' RT.

MEDIAN C			
POINT	LOCATION	STATION	OFFSET
C1	ROUTE 291	174+11.41	10.98' RT.
C2	ROUTE 291	174+16.41	10.98' RT.
C3	ROUTE 291	174+16.41	19.31' RT.
C4	ROUTE 291	174+10.76	19.18' RT.
C5	ROUTE 291	174+10.76	13.68' RT.

MEDIAN D			
POINT	LOCATION	STATION	OFFSET
D1	ROUTE 291	173+59.31	54.75' RT.
D2	ROUTE 291	174+04.77	55.86' RT.
D3	ROUTE 291	174+04.77	61.28' RT.
D4	ROUTE 291	173+96.18	61.21' RT.
D5	ROUTE 291	173+96.1	71.45' RT.
D6	ROUTE 291	173+93.91	75.94' RT.
D7	ROUTE 291	173+58.39	58.55' RT.

MEDIAN E			
POINT	LOCATION	STATION	OFFSET
E1	ROUTE 291	174+10.76	56.01' RT.
E2	ROUTE 291	174+23.91	56.35' RT.
E3	ROUTE 291	174+25.85	58.36' RT.
E4	ROUTE 291	174+25.83	61.46' RT.
E5	ROUTE 291	174+10.76	61.33' RT.

MEDIAN F			
POINT	LOCATION	STATION	OFFSET
F1	ROUTE 291	174+02.12	67.26' RT.
F2	ROUTE 291	174+25.78	67.46' RT.
F3	ROUTE 291	174+25.61	88.30' RT.
F4	ROUTE 291	174+22.74	90.10' RT.
F5	ROUTE 291	173+99.29	78.58' RT.
F6	ROUTE 291	174+02.08	72.86' RT.

MEDIAN G			
POINT	LOCATION	STATION	OFFSET
G1	ROUTE 291	174+11.65	42.59' LT.
G2	ROUTE 291	174+17.52	40.50' LT.
G3	ROUTE 291	174+15.77	33.17' LT.
G4	ROUTE 291	174+11.12	33.15' LT.
G5	ROUTE 291	174+09.22	35.82' LT.

MEDIAN H			
POINT	LOCATION	STATION	OFFSET
H1	ROUTE 291	174+23.7	40.53' LT.
H2	ROUTE 291	174+26.7	40.53' LT.
H3	ROUTE 291	174+26.66	35.20' LT.
H4	ROUTE 291	174+24.67	33.22' LT.
H5	ROUTE 291	174+21.95	33.21' LT.

MEDIAN I			
POINT	LOCATION	STATION	OFFSET
I1	ROUTE 291	174+15.02	52.01' LT.
I2	ROUTE 291	174+23.1	74.53' LT.
I3	ROUTE 291	174+26.99	73.84' LT.
I4	ROUTE 291	174+26.79	50.53' LT.
I5	ROUTE 291	174+19.17	50.52' LT.

MEDIAN J			
POINT	LOCATION	STATION	OFFSET
J1	ROUTE 291	174+79.54	65.66' LT.
J2	ROUTE 291	175+04.75	58.63' LT.
J3	ROUTE 291	175+00.14	50.50' LT.
J4	ROUTE 291	174+76.87	50.53' LT.
J5	ROUTE 291	174+77.	63.75' LT.

MEDIAN K			
POINT	LOCATION	STATION	OFFSET
K1	ROUTE 291	174+76.76	40.53' LT.
K2	ROUTE 291	175+05.97	40.49' LT.
K3	ROUTE 291	175+14.69	55.86' LT.
K4	ROUTE 291	175+81.12	37.21' LT.
K5	ROUTE 291	175+80.57	33.29' LT.
K6	ROUTE 291	174+78.71	33.53' LT.
K7	ROUTE 291	174+76.71	35.55' LT.

MEDIAN L			
POINT	LOCATION	STATION	OFFSET
L1	ROUTE 291	174+77.82	57.87' RT.
L2	ROUTE 291	175+06.16	58.99' RT.
L3	ROUTE 291	175+07.97	61.61' RT.
L4	ROUTE 291	174+99.33	87.77' RT.
L5	ROUTE 291	174+94.59	86.19' RT.
L6	ROUTE 291	174+92.32	79.87' RT.
L7	ROUTE 291	174+92.2	62.09' RT.
L8	ROUTE 291	174+75.74	61.92' RT.
L9	ROUTE 291	174+75.76	59.85' RT.

MEDIAN M			
POINT	LOCATION	STATION	OFFSET
M1	ROUTE 291	174+75.68	67.92' RT.
M2	ROUTE 291	174+86.26	68.03' RT.
M3	ROUTE 291	174+86.34	80.91' RT.
M4	ROUTE 291	174+89.95	90.97' RT.
M5	ROUTE 291	174+97.45	93.46' RT.
M6	ROUTE 291	174+82.58	138.54' RT.
M7	ROUTE 291	174+78.71	138.18' RT.
M8	ROUTE 291	174+75.5	85.24' RT.

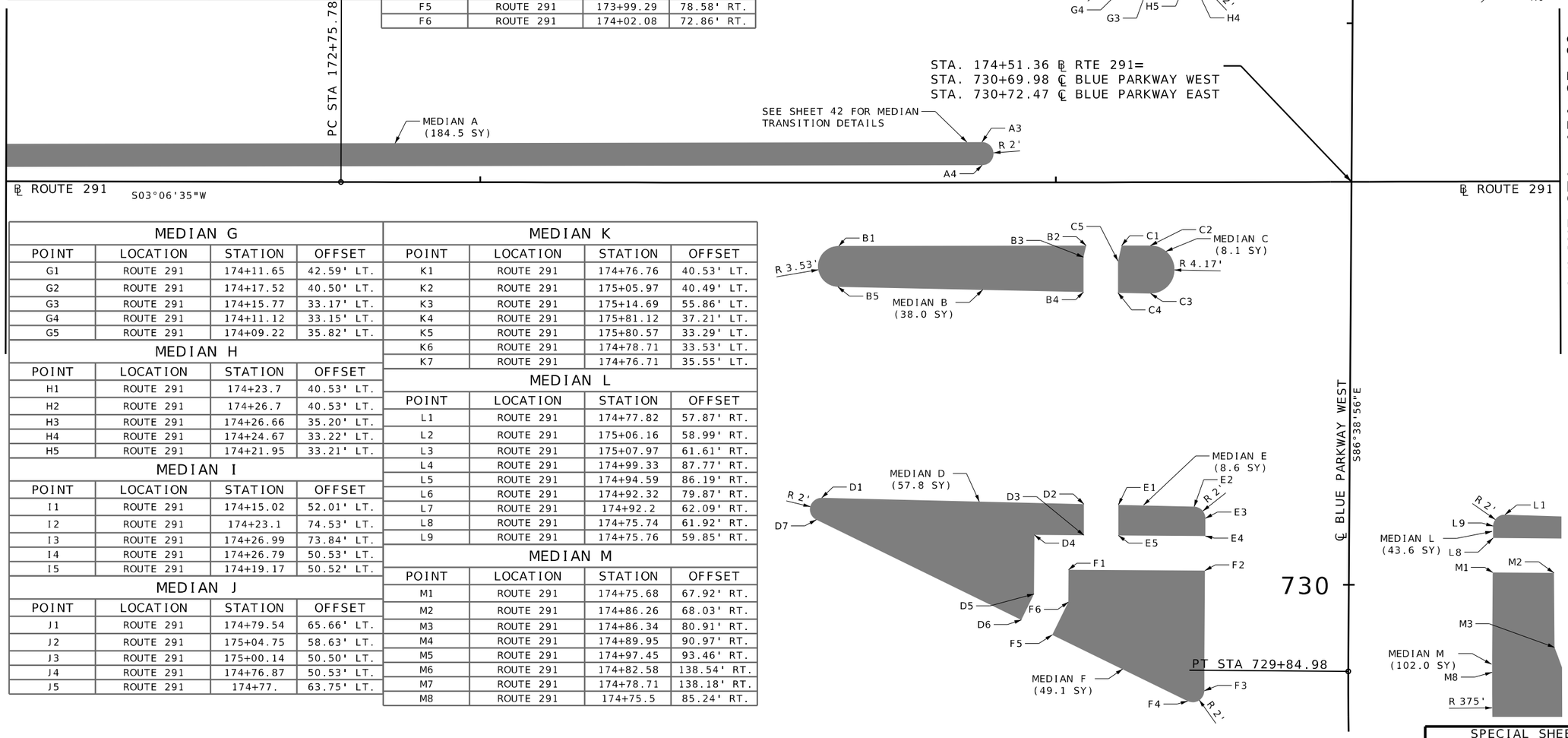

SPECIAL SHEET
CONCRETE MEDIAN DETAILS
SHEET 17 OF 74

Reid Catt
2025.03.01 21:33:30-06'00'

REID BRENNEN CATT-ENGINEER
MO# PE-2010019516

DATE PREPARED
2/28/2025

ROUTE	STATE
50/291	MO
DISTRICT	SHEET NO.
KC	46

COUNTY
JACKSON

JOB NO.
J4P3196

FEDERAL PROJECT NO.
STB-3001(009)

PROJECT NO.

BRIDGE NO.

DESCRIPTION	DATE

IF A SEAL IS PRESENT ON THIS SHEET IT HAS BEEN ELECTRONICALLY SEALED AND DATED.

MISSOURI HIGHWAYS AND TRANSPORTATION COMMISSION
105 WEST CAPITOL
JEFFERSON CITY, MO 65102
1-888-ASK-MODOT (1-888-275-6636)

LEE'S SUMMIT MISSOURI

olsson
1301 BURLINGTON ST., STE. 100
NORTH KANSAS CITY, MO 64116
PHONE: 816.361.1177
CERT. OF AUTHORITY NO. 001592

SCALE

0 10 20 30

MEDIAN J			
POINT	LOCATION	STATION	OFFSET
J1	ROUTE 291	174+79.54	65.66' LT.
J2	ROUTE 291	175+04.75	58.63' LT.
J3	ROUTE 291	175+00.14	50.50' LT.
J4	ROUTE 291	174+76.87	50.53' LT.
J5	ROUTE 291	174+77.	63.75' LT.

MEDIAN K			
POINT	LOCATION	STATION	OFFSET
K1	ROUTE 291	174+76.76	40.53' LT.
K2	ROUTE 291	175+05.97	40.49' LT.
K3	ROUTE 291	175+14.69	55.86' LT.
K4	ROUTE 291	175+81.12	37.21' LT.
K5	ROUTE 291	175+80.57	33.29' LT.
K6	ROUTE 291	174+78.71	33.53' LT.
K7	ROUTE 291	174+76.71	35.55' LT.

MEDIAN L			
POINT	LOCATION	STATION	OFFSET
L1	ROUTE 291	174+77.82	57.87' RT.
L2	ROUTE 291	175+06.16	58.99' RT.
L3	ROUTE 291	175+07.97	61.61' RT.
L4	ROUTE 291	174+99.33	87.77' RT.
L5	ROUTE 291	174+94.59	86.19' RT.
L6	ROUTE 291	174+92.32	79.87' RT.
L7	ROUTE 291	174+92.2	62.09' RT.
L8	ROUTE 291	174+75.74	61.92' RT.
L9	ROUTE 291	174+75.76	59.85' RT.

MEDIAN M			
POINT	LOCATION	STATION	OFFSET
M1	ROUTE 291	174+75.68	67.92' RT.
M2	ROUTE 291	174+86.26	68.03' RT.
M3	ROUTE 291	174+86.34	80.91' RT.
M4	ROUTE 291	174+89.95	90.97' RT.
M5	ROUTE 291	174+97.45	93.46' RT.
M6	ROUTE 291	174+82.58	138.54' RT.
M7	ROUTE 291	174+78.71	138.18' RT.
M8	ROUTE 291	174+75.5	85.24' RT.

MEDIAN N			
POINT	LOCATION	STATION	OFFSET
N1	ROUTE 291	175+02.24	10.48' RT.
N2	ROUTE 291	176+00.11	10.45' RT.
N3	ROUTE 291	177+00.1	3.68' RT.
N4	ROUTE 291	177+83.33	4.09' RT.
N5	ROUTE 291	178+50.08	6.60' LT.
N6	ROUTE 291	178+81.42	6.46' LT.
N7	ROUTE 291	178+81.29	21.96' RT.
N8	ROUTE 291	176+33.13	16.40' RT.
N9	ROUTE 291	175+33.18	22.98' RT.
N10	ROUTE 291	175+33.18	22.98' RT.
N11	ROUTE 291	175+18.2	22.32' RT.

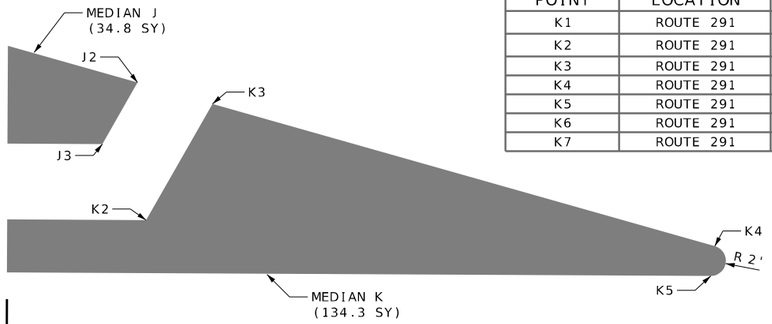

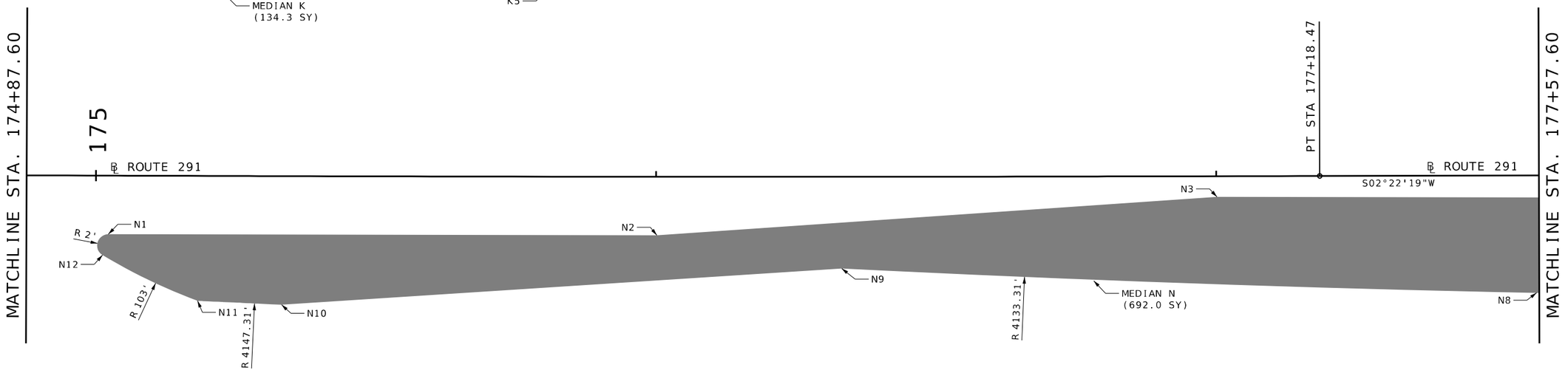

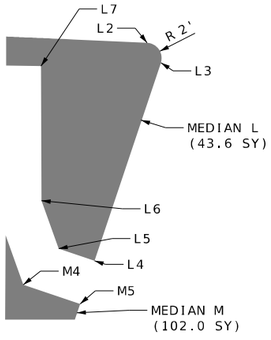

SPECIAL SHEET
CONCRETE MEDIAN DETAILS
SHEET 18 OF 74

Reid Catt
2025.03.01 21:33:37-06'00'

REID BRENNEN CATT
NUMBER
PE-2010019516

REID BRENNEN CATT-ENGINEER
MO# PE-2010019516

DATE PREPARED
2/28/2025

ROUTE 50/291 | STATE MO
DISTRICT KC | SHEET NO. 47
COUNTY JACKSON
JOB NO. J4P3196
FEDERAL PROJECT NO. STB-3001(009)
PROJECT NO.
BRIDGE NO.

DESCRIPTION | DATE

MISSOURI HIGHWAYS AND TRANSPORTATION COMMISSION
105 WEST CAPITOL
JEFFERSON CITY, MO 65102
1-888-ASK-MODOT (1-888-275-6636)

LEE'S SUMMIT MISSOURI

olsson
1301 BURLINGTON ST., STE. 100
NORTH KANSAS CITY, MO 64116
PHONE: 816.361.1177
CERT. OF AUTHORITY NO. 001592

IF A SEAL IS PRESENT ON THIS SHEET IT HAS BEEN ELECTRONICALLY SEALED AND DATED.

F:\2021\04501-05000\021-04786\40-Design\Microstation\J4P3196\plan_sheets\8 Special Sheets\047_SS_18_J4P3196_110.dgn 2:13:39 PM 2/28/2025

MEDIAN N			
POINT	LOCATION	STATION	OFFSET
N1	ROUTE 291	175+02.24	10.48' RT.
N2	ROUTE 291	176+00.11	10.45' RT.
N3	ROUTE 291	177+00.1	3.68' RT.
N4	ROUTE 291	177+83.33	4.09' RT.
N5	ROUTE 291	178+50.08	6.60' LT.
N6	ROUTE 291	178+81.42	6.46' LT.
N7	ROUTE 291	178+81.29	21.96' RT.
N8	ROUTE 291	176+33.13	16.40' RT.
N9	ROUTE 291	175+33.18	22.98' RT.
N10	ROUTE 291	175+33.18	22.98' RT.
N11	ROUTE 291	175+18.2	22.32' RT.
MEDIAN O			
POINT	LOCATION	STATION	OFFSET
O1	ROUTE 291	178+50.74	60.24' RT.
O2	ROUTE 291	178+88.87	59.95' RT.
O3	ROUTE 291	178+90.89	61.90' RT.
O4	ROUTE 291	178+91.55	81.61' RT.
O5	ROUTE 291	178+88.65	83.48' RT.
O6	ROUTE 291	178+49.85	64.06' RT
MEDIAN P			
POINT	LOCATION	STATION	OFFSET
P1	ROUTE 291	178+71.06	40.43' LT.
P2	ROUTE 291	178+88.55	38.52' LT.
P3	ROUTE 291	179+07.02	38.77' LT.
P4	ROUTE 291	179+07.08	34.38' LT.
P5	ROUTE 291	179+05.07	32.35' LT.
P6	ROUTE 291	178+67.66	32.52' LT.
P7	ROUTE 291	178+66.33	36.01' LT.

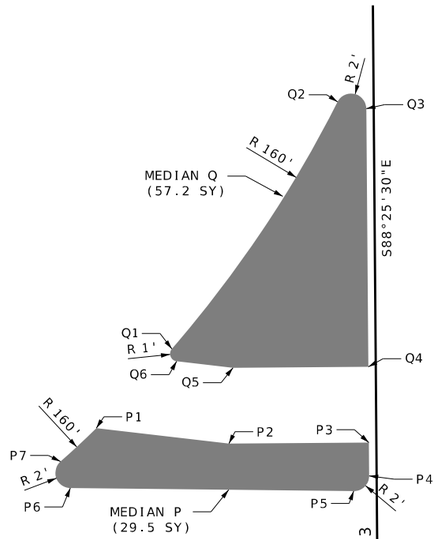

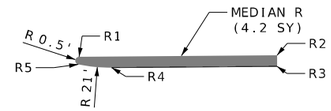

STA. 179+08.56 ℄ RTE 291=
STA. 9+75.28 ℄ RAMP 1
STA. 0+00.00 ℄ RAMP 3

MATCHLINE STA. 177+57.60

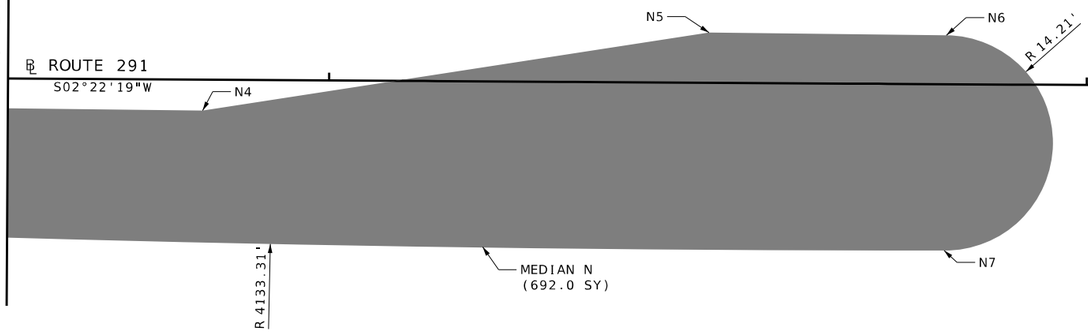

MATCHLINE STA. 180+27.60

℄ ROUTE 291
S01°34'30"W

MEDIAN Q			
POINT	LOCATION	STATION	OFFSET
Q1	ROUTE 291	178+80.95	50.98' LT.
Q2	ROUTE 291	179+02.62	83.71' LT.
Q3	ROUTE 291	179+06.41	82.84' LT.
Q4	ROUTE 291	179+06.88	48.77' LT.
Q5	ROUTE 291	178+89.03	48.52' LT.
Q6	ROUTE 291	178+81.60	49.34' LT.
MEDIAN R			
POINT	LOCATION	STATION	OFFSET
R1	ROUTE 291	179+53.25	38.79' LT.
R2	ROUTE 291	179+79.4	38.79' LT.
R3	ROUTE 291	179+79.4	37.33' LT.
R4	ROUTE 291	179+57.56	37.33' LT.
R5	ROUTE 291	179+53.15	37.30' LT.

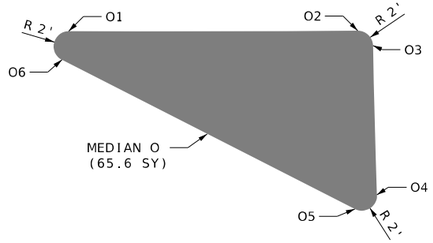

SCALE
0 10 20 30

℄ RAMP 1
S88°25'30"E

SPECIAL SHEET
CONCRETE MEDIAN DETAILS
SHEET 19 OF 74

Reid Catt
2025.03.01 21:33:15-06'00'

REID BRENNEN CATT-ENGINEER
MO# PE-2010019516

DATE PREPARED
2/28/2025

ROUTE	STATE
50/291	MO
DISTRICT	SHEET NO.
KC	48

COUNTY
JACKSON

JOB NO.
J4P3196

FEDERAL PROJECT NO.
STB-3001(009)

PROJECT NO.

BRIDGE NO.

IF A SEAL IS PRESENT ON THIS SHEET IT HAS BEEN ELECTRONICALLY SEALED AND DATED.

DESCRIPTION

DATE

MISSOURI HIGHWAYS AND TRANSPORTATION COMMISSION

105 WEST CAPITOL
JEFFERSON CITY, MO 65102
1-888-ASK-MODOT (1-888-275-6636)

LEE'S SUMMIT MISSOURI

olsson
1301 BURLINGTON ST., STE. 100
NORTH KANSAS CITY, MO 64116
PHONE: 816.361.1177
CERT. OF AUTHORITY NO. 001592

MEDIAN S			
POINT	LOCATION	STATION	OFFSET
S1	ROUTE 291	181+51.9	38.79' LT.
S2	ROUTE 291	181+59.24	38.79' LT.
S3	ROUTE 291	181+93.15	54.45' LT.
S4	ROUTE 291	181+94.26	53.50' LT.
S5	ROUTE 291	181+59.24	37.33' LT.
S6	ROUTE 291	181+51.9	37.33' LT.
MEDIAN T			
POINT	LOCATION	STATION	OFFSET
T1	ROUTE 291	182+24.14	57.25' LT.
T2	ROUTE 291	182+50.21	48.86' LT.
T3	ROUTE 291	182+31.33	47.49' LT.
T4	ROUTE 291	182+22.57	51.28' LT.
T5	ROUTE 291	182+22.57	55.28' LT.
T6	ROUTE 291	182+50.07	47.88' LT.

MEDIAN U			
POINT	LOCATION	STATION	OFFSET
U1	ROUTE 291	182+23.53	39.63' LT.
U2	ROUTE 291	182+29.48	37.11' LT.
U3	ROUTE 291	182+63.19	38.36' LT.
U4	ROUTE 291	182+65.04	44.09' LT.
U5	ROUTE 291	182+82.54	38.45' LT.
U6	ROUTE 291	182+82.	34.55' LT.
U7	ROUTE 291	182+24.37	32.42' LT.
U8	ROUTE 291	182+22.57	34.35' LT.
U9	ROUTE 291	182+22.57	38.67' LT.
MEDIAN V			
POINT	LOCATION	STATION	OFFSET
V1	ROUTE 291	182+34.61	17.23' RT.
V2	ROUTE 291	183+11.75	14.38' RT.
V3	ROUTE 291	184+90.39	15.03' RT.
V4	ROUTE 291	186+29.87	6.50' LT.
V5	ROUTE 291	187+14.99	5.00' LT.
V6	ROUTE 291	187+15.04	1.00' LT.
V7	ROUTE 291	185+82.39	4.87' RT.
V8	ROUTE 291	184+82.39	20.32' RT.
V9	ROUTE 291	183+12.73	30.36' RT.
V10	ROUTE 291	182+35.2	33.22' RT.
MEDIAN W			
POINT	LOCATION	STATION	OFFSET
W1	ROUTE 291	182+27.97	65.42' RT.
W2	ROUTE 291	182+39.07	65.21' RT.
W3	ROUTE 291	182+41.05	67.69' RT.
W4	ROUTE 291	182+30.34	111.04' RT.
W5	ROUTE 291	182+26.4	110.54' RT.
W6	ROUTE 291	182+26.01	67.48' RT.

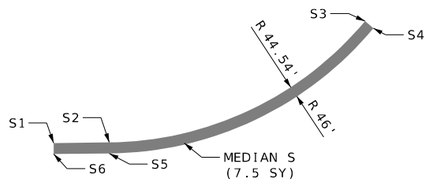

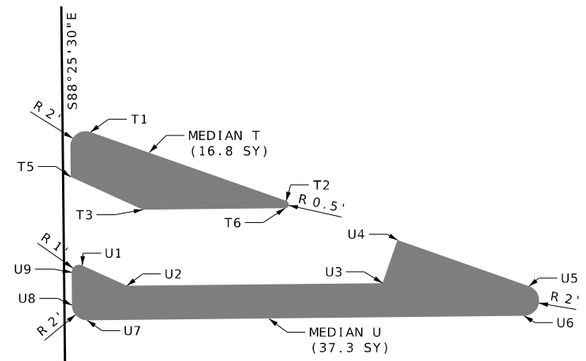

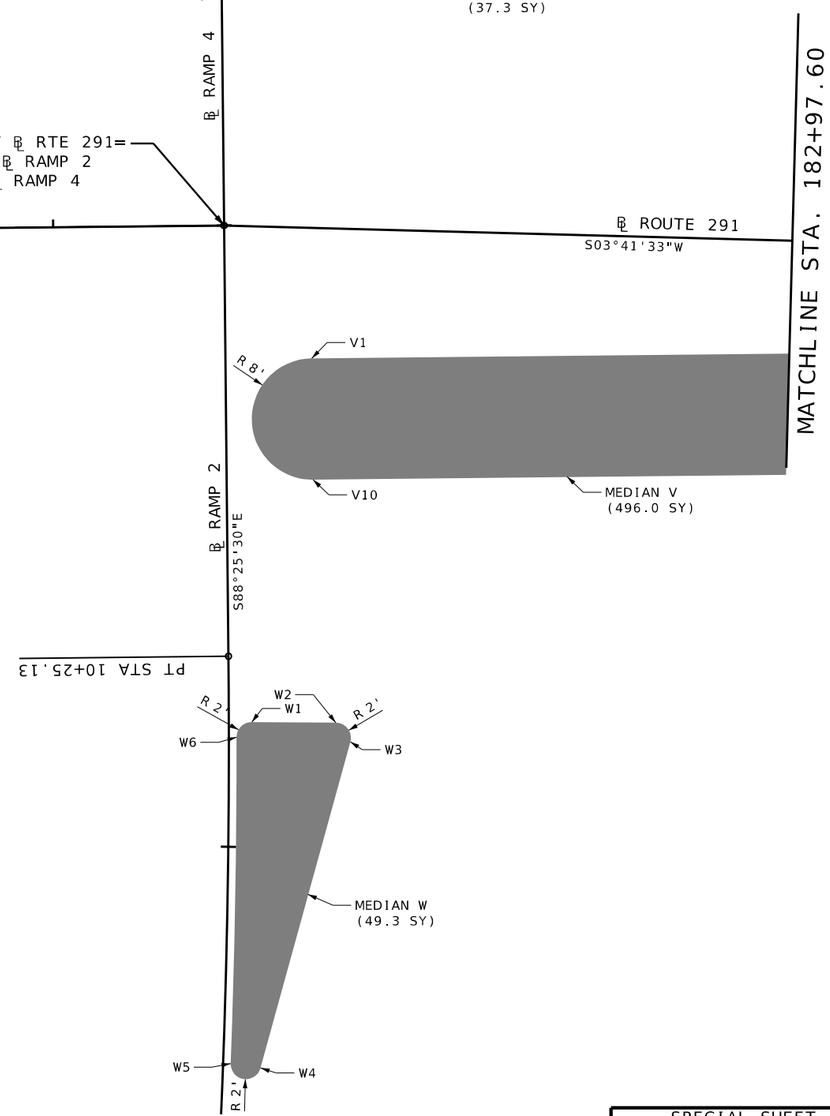

SCALE

0 10 20 30

10

SPECIAL SHEET
CONCRETE MEDIAN DETAILS
SHEET 20 OF 74

Reid Catt
2025.03.01 21:32:23-06'00'

REID BRENNEN CATT-ENGINEER
MO# PE-2010019516

DATE PREPARED
2/28/2025

ROUTE	STATE
50/291	MO
DISTRICT	SHEET NO.
KC	49

COUNTY
JACKSON

JOB NO.
J4P3196

FEDERAL PROJECT NO.
STB-3001(009)

PROJECT NO.

BRIDGE NO.

DESCRIPTION	DATE

MISSOURI HIGHWAYS AND TRANSPORTATION COMMISSION
105 WEST CAPITOL
JEFFERSON CITY, MO 65102
1-888-ASK-MODOT (1-888-275-6636)

LEE'S SUMMIT MISSOURI

olsson
1301 BURLINGTON ST., STE. 100
NORTH KANSAS CITY, MO 64116
PHONE: 816.361.1177
CERT. OF AUTHORITY NO. 001592

IF A SEAL IS PRESENT ON THIS SHEET IT HAS BEEN ELECTRONICALLY SEALED AND DATED.

F:\2021\04501-05000\021-04786\40-Design\Microstation\J4P3196\plan_sheets\8 Special Sheets\049_SS_20_J4P3196_110.dgn 2:13:41 PM 2/28/2025

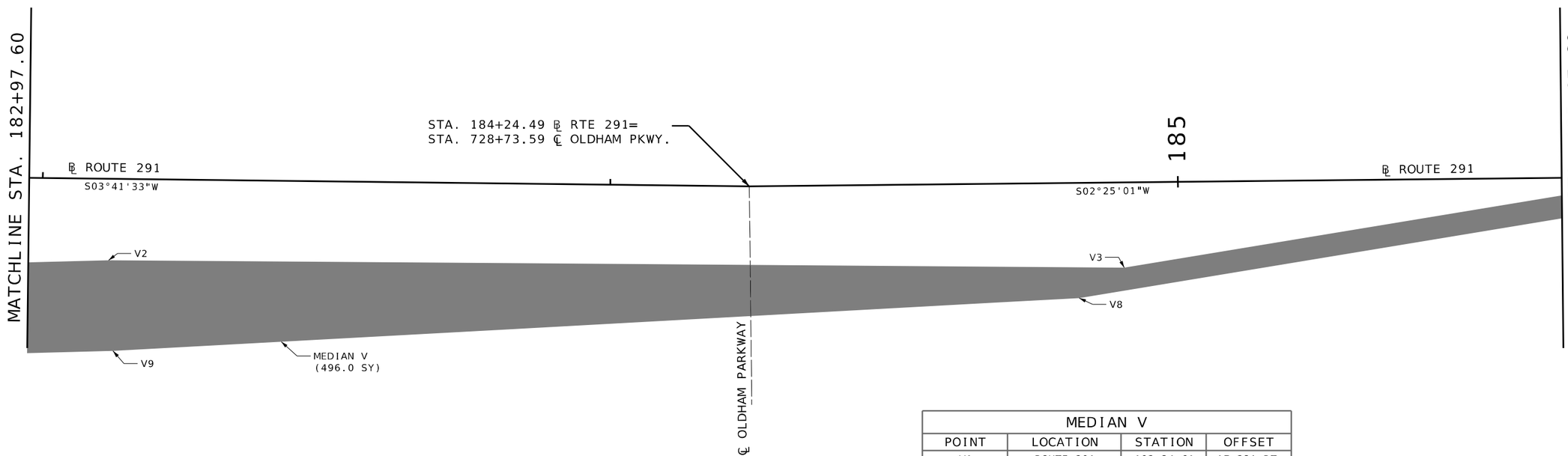

MEDIAN V			
POINT	LOCATION	STATION	OFFSET
V1	ROUTE 291	182+34.61	17.23' RT.
V2	ROUTE 291	183+11.75	14.38' RT.
V3	ROUTE 291	184+90.39	15.03' RT.
V4	ROUTE 291	186+29.87	6.50' LT.
V5	ROUTE 291	187+14.99	5.00' LT.
V6	ROUTE 291	187+15.04	1.00' LT.
V7	ROUTE 291	185+82.39	4.87' RT.
V8	ROUTE 291	184+82.39	20.32' RT.
V9	ROUTE 291	183+12.73	30.36' RT.
V10	ROUTE 291	182+35.2	33.22' RT.

SCALE
0 10 20 30

SPECIAL SHEET
CONCRETE MEDIAN DETAILS
SHEET 21 OF 74

Reid Catt
2025.03.01 21:34:14-06'00'

REID BRENNEN CATT
NUMBER
PE-2010019516

REID BRENNEN CATT-ENGINEER
MO# PE-2010019516

DATE PREPARED
2/28/2025

ROUTE	STATE
50/291	MO
DISTRICT	SHEET NO.
KC	50

COUNTY
JACKSON

JOB NO.
J4P3196

FEDERAL PROJECT NO.
STB-3001(009)

PROJECT NO.

BRIDGE NO.

DESCRIPTION	DATE

IF A SEAL IS PRESENT ON THIS SHEET IT HAS BEEN ELECTRONICALLY SEALED AND DATED.

MISSOURI HIGHWAYS AND TRANSPORTATION COMMISSION
105 WEST CAPITOL
JEFFERSON CITY, MO 65102
1-888-ASK-MODOT (1-888-275-6636)

LEE'S SUMMIT MISSOURI

olsson
1301 BURLINGTON ST., STE. 100
NORTH KANSAS CITY, MO 64116
PHONE: 816.361.1177
CERT. OF AUTHORITY NO. 001592

F:\2021\04501-05000\021-04786\40-Design\Microstation\J4P3196\plan_sheets\8 Special Sheets\050_SS_21_J4P3196_110.dgn 2:13:43 PM 2/28/2025

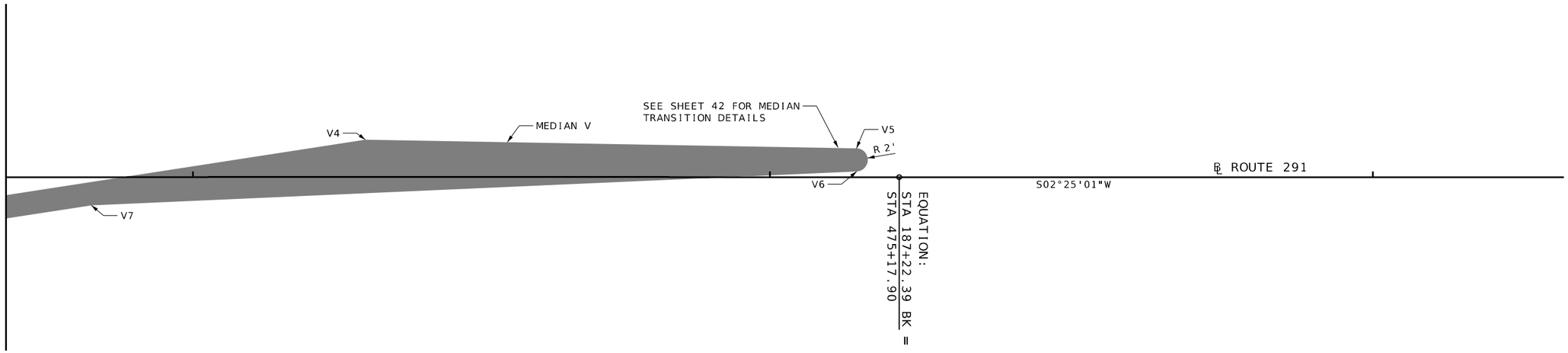

MEDIAN V			
POINT	LOCATION	STATION	OFFSET
V1	ROUTE 291	182+34.61	17.23' RT.
V2	ROUTE 291	183+11.75	14.38' RT.
V3	ROUTE 291	184+90.39	15.03' RT.
V4	ROUTE 291	186+29.87	6.50' LT.
V5	ROUTE 291	187+14.99	5.00' LT.
V6	ROUTE 291	187+15.04	1.00' LT.
V7	ROUTE 291	185+82.39	4.87' RT.
V8	ROUTE 291	184+82.39	20.32' RT.
V9	ROUTE 291	183+12.73	30.36' RT.
V10	ROUTE 291	182+35.2	33.22' RT.

SCALE
0 10 20 30

SPECIAL SHEET
CONCRETE MEDIAN DETAILS
SHEET 22 OF 74

Reid Catt
2025.03.01 21:34:21-06'00'

REID BRENNEN CATT-ENGINEER
MO# PE-2010019516

DATE PREPARED
2/28/2025

ROUTE	STATE
50/291	MO
DISTRICT	SHEET NO.
KC	51

COUNTY
JACKSON

JOB NO.
J4P3196

FEDERAL PROJECT NO.
STB-3001(009)

PROJECT NO.

BRIDGE NO.

DATE	DESCRIPTION

IF A SEAL IS PRESENT ON THIS SHEET IT HAS BEEN ELECTRONICALLY SEALED AND DATED.

MISSOURI HIGHWAYS AND TRANSPORTATION COMMISSION
105 WEST CAPITOL
JEFFERSON CITY, MO 65102
1-888-ASK-MODOT (1-888-275-6636)

LEE'S SUMMIT MISSOURI

olsson
1301 BURLINGTON ST., STE. 100
NORTH KANSAS CITY, MO 64116
PHONE: 816.361.1177
CERT. OF AUTHORITY NO. 001592

MEDIAN X			
POINT	LOCATION	STATION	OFFSET
X1	BLUE PKWY	727+31.42	9.00' LT.
X2	BLUE PKWY	729+84.57	9.00' LT.
X3	BLUE PKWY	729+84.57	5.00' LT.
X4	BLUE PKWY	727+31.42	5.00' LT.

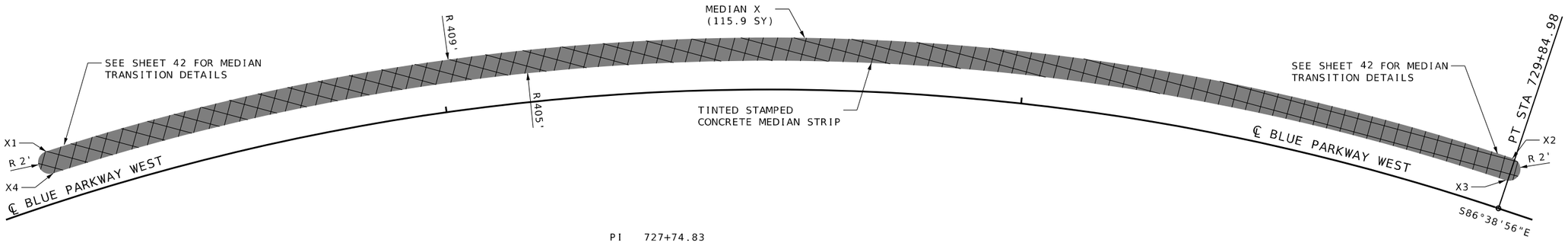

PI 727+74.83
PC 724+90.14
PT 729+84.98
Δ 70°52'52.0" (RT)
D 14°19'26.2"
L 494.84' (ARC)
T 284.69'
R 400.00'

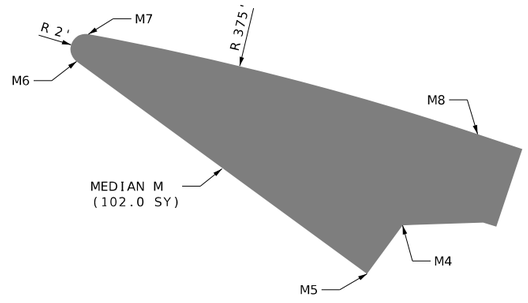

MEDIAN M			
POINT	LOCATION	STATION	OFFSET
M1	ROUTE 291	174+75.68	67.92' RT.
M2	ROUTE 291	174+86.26	68.03' RT.
M3	ROUTE 291	174+86.34	80.91' RT.
M4	ROUTE 291	174+89.95	90.97' RT.
M5	ROUTE 291	174+97.45	93.46' RT.
M6	ROUTE 291	174+82.58	138.54' RT.
M7	ROUTE 291	174+78.71	138.18' RT.
M8	ROUTE 291	174+75.5	85.24' RT.

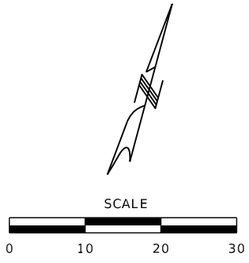

Reid Catt
2025.03.01 21:34:28-06'00'

REID BRENNEN CATT
NUMBER
PE-2010019516

REID BRENNEN CATT-ENGINEER
MO# PE-2010019516

DATE PREPARED
2/28/2025

ROUTE	STATE
50/291	MO
DISTRICT	SHEET NO.
KC	52

COUNTY
JACKSON

JOB NO.
J4P3196

FEDERAL PROJECT NO.
STB-3001(009)

PROJECT NO.

BRIDGE NO.

DESCRIPTION	DATE

IF A SEAL IS PRESENT ON THIS SHEET IT HAS BEEN ELECTRONICALLY SEALED AND DATED.

MISSOURI HIGHWAYS AND TRANSPORTATION COMMISSION
105 WEST CAPITOL
JEFFERSON CITY, MO 65102
1-888-ASK-MODOT (1-888-275-6636)

LEE'S SUMMIT MISSOURI

olsson
1301 BURLINGTON ST., STE. 100
NORTH KANSAS CITY, MO 64116
PHONE: 816.361.1177
CERT. OF AUTHORITY NO. 001592

SPECIAL SHEET
CONCRETE MEDIAN DETAILS
SHEET 23 OF 74

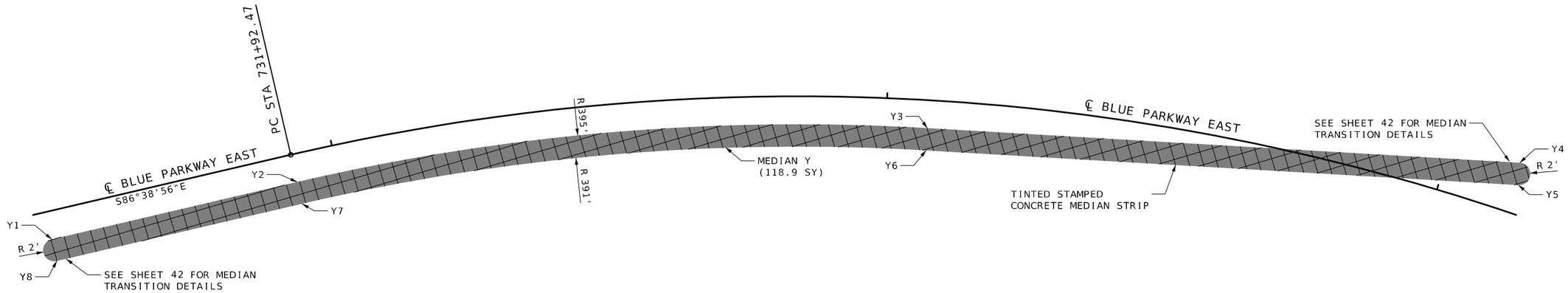

MEDIAN Y			
POINT	LOCATION	STATION	OFFSET
Y1	BLUE PKWY	731+47.39	5.00' RT.
Y2	BLUE PKWY	731+92.47	5.00' RT.
Y3	BLUE PKWY	733+07.48	5.00' RT.
Y4	BLUE PKWY	734+12.57	9.03' LT.
Y5	BLUE PKWY	734+13.59	5.17' LT.
Y6	BLUE PKWY	733+07.48	9.00' RT.
Y7	BLUE PKWY	731+92.47	9.00' RT.
Y8	BLUE PKWY	731+47.39	9.00' RT.

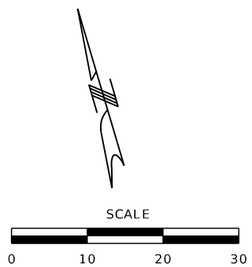

SPECIAL SHEET
CONCRETE MEDIAN DETAILS
SHEET 24 OF 74

Reid Catt
2025.03.01 21:34:34-06'00'

REID BRENNEN CATT-ENGINEER
MO# PE-2010019516

DATE PREPARED
2/28/2025

ROUTE	STATE
50/291	MO
DISTRICT	SHEET NO.
KC	53

COUNTY
JACKSON

JOB NO.
J4P3196

FEDERAL PROJECT NO.
STB-3001(009)

PROJECT NO.

BRIDGE NO.

DESCRIPTION | DATE

IF A SEAL IS PRESENT ON THIS SHEET IT HAS BEEN ELECTRONICALLY SEALED AND DATED.

MISSOURI HIGHWAYS AND TRANSPORTATION COMMISSION

105 WEST CAPITOL
JEFFERSON CITY, MO 65102
1-888-ASK-MODOT (1-888-275-6636)

LEE'S SUMMIT MISSOURI

olsson
1301 BURLINGTON ST., STE. 100
NORTH KANSAS CITY, MO 64116
PHONE: 816.361.1177
CERT. OF AUTHORITY NO. 001592

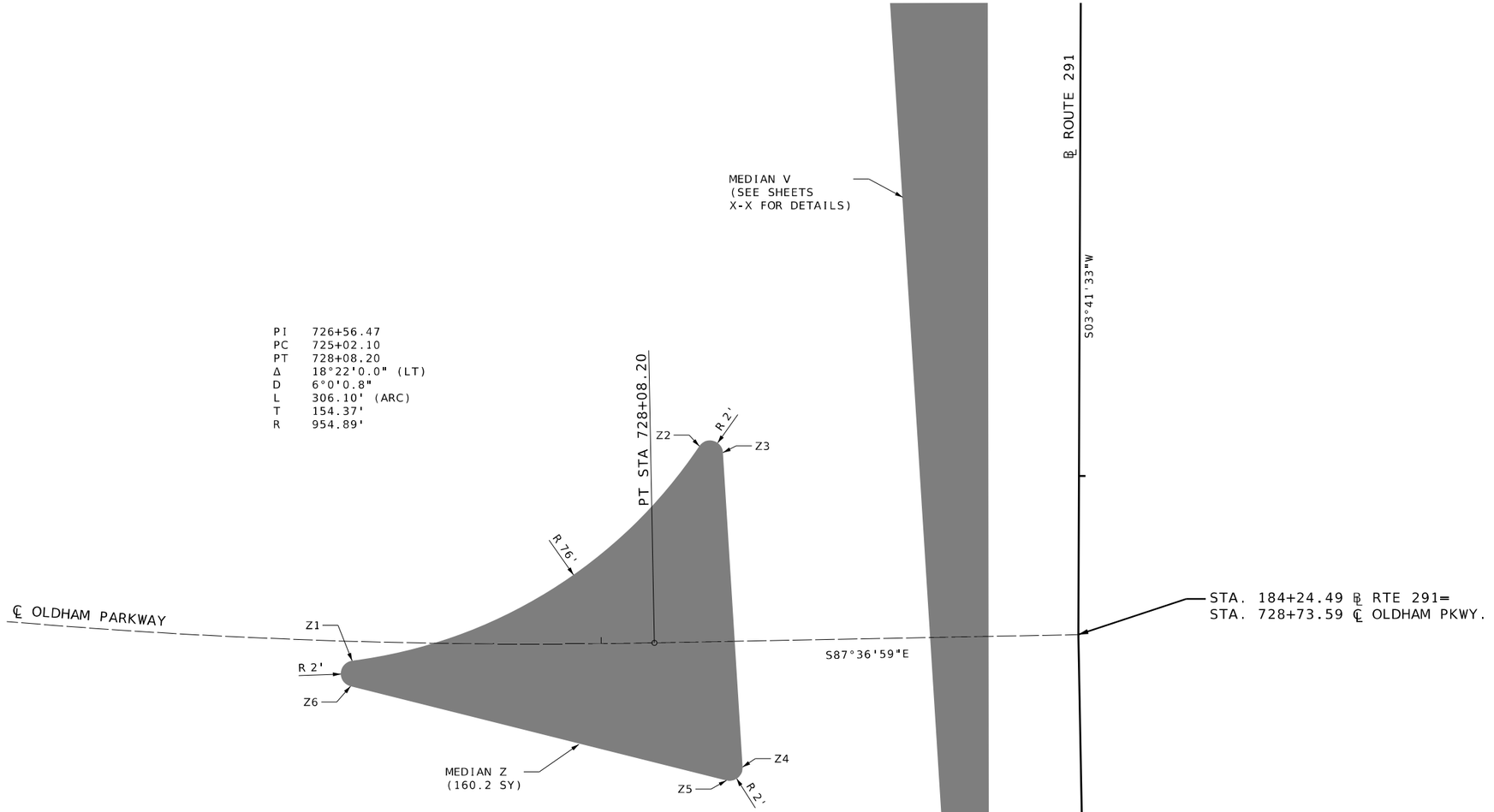

MEDIAN Z			
POINT	LOCATION	STATION	OFFSET
Z1	OLDHAM PKWY	727+61.67	3.00' RT.
Z2	OLDHAM PKWY	728+15.70	30.19' LT.
Z3	OLDHAM PKWY	728+19.33	29.14' LT.
Z4	OLDHAM PKWY	728+21.41	19.14' RT.
Z5	OLDHAM PKWY	728+18.89	21.43' RT.
Z6	OLDHAM PKWY	727+61.55	6.92' RT.

SCALE
0 10 20 30

SPECIAL SHEET
CONCRETE MEDIAN DETAILS
SHEET 25 OF 74

Reid Catt
2025.03.01 21:34:40-06'00'

REID BRENNEN CATT
NUMBER
PE-2010019516

REID BRENNEN CATT-ENGINEER
MO# PE-2010019516

DATE PREPARED
2/28/2025

ROUTE	STATE
50/291	MO
DISTRICT	SHEET NO.
KC	54

COUNTY
JACKSON

JOB NO.
J4P3196

FEDERAL PROJECT NO.
STB-3001(009)

PROJECT NO.

BRIDGE NO.

DESCRIPTION	DATE

IF A SEAL IS PRESENT ON THIS SHEET IT HAS BEEN ELECTRONICALLY SEALED AND DATED.

MISSOURI HIGHWAYS AND TRANSPORTATION COMMISSION
105 WEST CAPITOL
JEFFERSON CITY, MO 65102
1-888-ASK-MODOT (1-888-275-6636)

LEE'S SUMMIT MISSOURI

olsson
1301 BURLINGTON ST., STE. 100
NORTH KANSAS CITY, MO 64116
PHONE: 816.361.1177
CERT. OF AUTHORITY NO. 001592

SEE STANDARD PLAN 203.40 FOR ON & OFF RAMP DETAILS

SCALE
0 20 40 60

RAMP 1 SUPERELEVATION		
LT	STA.	RT
-2.0%	0+00.00	-2.0%
-6.2%	1+11.80	-6.2%
-6.2%	3+51.00	-6.2%
-2.0%	4+62.80	-2.0%
0.0%	5+16.00	0.0%
2.0%	5+57.40	2.0%
5.6%	6+32.00	5.6%
5.6%	7+99.00	5.6%
2.0%	8+73.60	2.0%
0.43%	9+15.00	0.43%

STA. 718+79.00 ROUTE 50
EL. 1044.41

STA. 0+00.00 RAMP 1
EL. 1044.18
STA. 0+20.00 RAMP 1
EL. 1043.99
STA. 0+40.00 RAMP 1
EL. 1043.77
STA. 0+60.00 RAMP 1
EL. 1043.53
STA. 0+80.00 RAMP 1
EL. 1043.25
STA. 1+00.00 RAMP 1
EL. 1042.95
STA. 1+20.00 RAMP 1
EL. 1042.65
STA. 1+27.69 RAMP 1
EL. 1042.55
STA. 1+40.00 RAMP 1
EL. 1042.39
STA. 1+60.00 RAMP 1
EL. 1042.24
STA. 1+80.00 RAMP 1
EL. 1041.79
STA. 2+00.00 RAMP 1
EL. 1041.45
STA. 2+20.00 RAMP 1
EL. 1041.09
STA. 2+40.00 RAMP 1
EL. 1040.70
STA. 2+60.00 RAMP 1
EL. 1040.28
STA. 2+80.00 RAMP 1
EL. 1039.85
STA. 3+00.00 RAMP 1
EL. 1039.38
STA. 3+02.51 RAMP 1
EL. 1039.32

℄ RAMP 1

STA. 720+07.40 ROUTE 50
EL. 1043.43

STA. 721+83.00 ROUTE 50
EL. 1040.43

WBL

WBL

℄ ROUTE 50

S88°21'19"E

℄ ROUTE 50

EBL

STA. 717+70.34 ROUTE 50
EL. 1044.51

STA. 718+50.05 ROUTE 50
EL. 1044.35

STA. 721+51.75 ROUTE 50
EL. 1040.98

STA. 722+05.70 ROUTE 50
EL. 1039.79

EBL

STA. 0+00.00 RAMP 2
EL. 1044.21
STA. 0+20.00 RAMP 2
EL. 1044.17
STA. 0+40.00 RAMP 2
EL. 1044.08
STA. 0+60.00 RAMP 2
EL. 1043.96
STA. 0+79.37 RAMP 2
EL. 1043.81
STA. 0+80.00 RAMP 2
EL. 1043.80
STA. 1+00.00 RAMP 2
EL. 1043.69
STA. 1+20.00 RAMP 2
EL. 1043.57
STA. 1+40.00 RAMP 2
EL. 1043.43
STA. 1+60.00 RAMP 2
EL. 1043.26
STA. 1+80.00 RAMP 2
EL. 1043.07
STA. 2+00.00 RAMP 2
EL. 1042.86
STA. 2+20.00 RAMP 2
EL. 1042.62
STA. 2+40.00 RAMP 2
EL. 1042.35
STA. 2+60.00 RAMP 2
EL. 1042.06
STA. 2+80.00 RAMP 2
EL. 1041.74
STA. 3+00.00 RAMP 2
EL. 1041.40
STA. 3+20.00 RAMP 2
EL. 1041.04
STA. 3+40.00 RAMP 2
EL. 1040.65
STA. 3+60.00 RAMP 2
EL. 1040.23
STA. 3+79.44 RAMP 2
EL. 1039.81
STA. 3+80.00 RAMP 2
EL. 1039.79
STA. 4+00.00 RAMP 2
EL. 1039.38
STA. 4+20.00 RAMP 2
EL. 1039.06
STA. 4+33.03 RAMP 2
EL. 1038.87
PT STA 4+39.07

℄ RAMP 2

S79°38'37"E

RAMP 2 SUPERELEVATION		
LT	STA.	RT
-2.0%	0+00.00	-2.0%
-5.2%	0+84.90	-5.2%
-5.2%	3+93.07	-5.2%
-2.0%	4+77.97	-2.0%
0.0%	6+45.75	0.0%
2.0%	8+13.52	2.0%
5.6%	8+88.18	5.6%
5.6%	9+00.40	5.6%
2.0%	9+75.00	2.0%
0.0%	10+15.00	0.0%
-0.43%	10+25.00	-0.43%

SPECIAL SHEET
RAMPS 1 & 2 GORES
SHEET 26 OF 74

Reid Catt
2025.03.01 21:34:47-06'00'

REID BRENNEN CATT
NUMBER PE-2010019516
REID BRENNEN CATT-ENGINEER
MO# PE-2010019516

DATE PREPARED
2/28/2025

ROUTE	STATE
50/291	MO
DISTRICT	SHEET NO.
KC	55

COUNTY
JACKSON

JOB NO.
J4P3196

FEDERAL PROJECT NO.
STB-3001(009)

PROJECT NO.

BRIDGE NO.

DESCRIPTION	DATE

IF A SEAL IS PRESENT ON THIS SHEET IT HAS BEEN ELECTRONICALLY SEALED AND DATED.

MISSOURI HIGHWAYS AND TRANSPORTATION COMMISSION
105 WEST CAPITOL
JEFFERSON CITY, MO 65102
1-888-ASK-MODOT (1-888-275-6636)

LEE'S SUMMIT MISSOURI

olsson
1301 BURLINGTON ST., STE. 100
NORTH KANSAS CITY, MO 64116
PHONE: 816.361.1177
CERT. OF AUTHORITY NO. 001592

F:\2021\04501-05000\021-04786\40-Design\Microstation\J4P3196\plan_sheets\8 Special Sheets\055_SS_26_J4P3196_I20.dgn 2:13:49 PM 2/28/2025

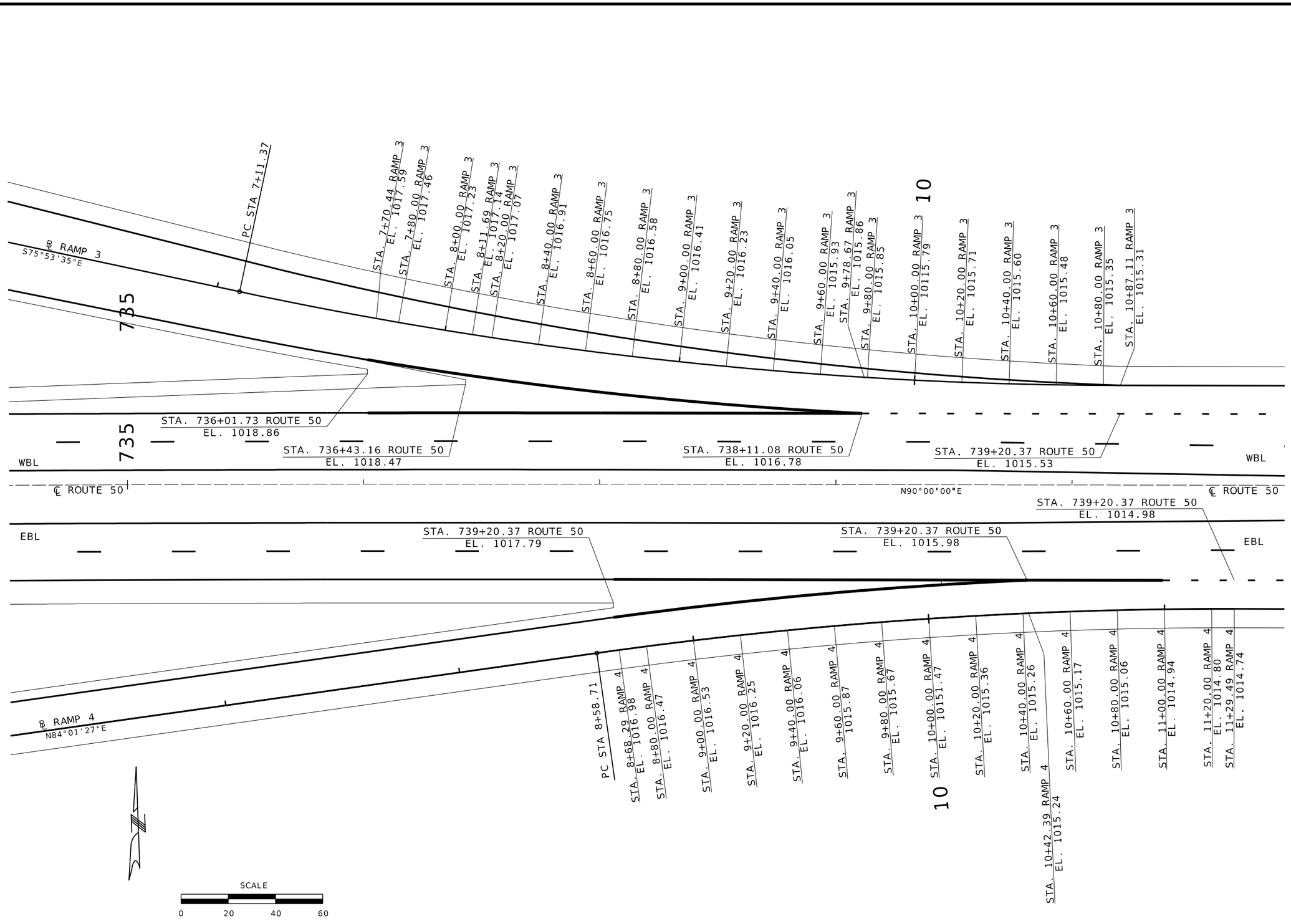

Reid Catt
2025.03.01 21:35:02-06'00'

REID BRENNEN CATT
NUMBER
PE-2010019516

REID BRENNEN CATT-ENGINEER
MO# PE-2010019516

DATE PREPARED
2/28/2025

ROUTE	STATE
50/291	MO
DISTRICT	SHEET NO.
KC	56

COUNTY
JACKSON

JOB NO.
J4P3196

FEDERAL PROJECT NO.
STB-3001(009)

PROJECT NO.

BRIDGE NO.

DATE	DESCRIPTION

IF A SEAL IS PRESENT ON THIS SHEET IT HAS BEEN ELECTRONICALLY SEALED AND DATED.

MISSOURI HIGHWAYS AND TRANSPORTATION COMMISSION

105 WEST CAPITOL
JEFFERSON CITY, MO 65102
1-888-ASK-MODOT (1-888-275-6636)

LEE'S SUMMIT MISSOURI

olsson
1301 BURLINGTON ST., STE. 100
NORTH KANSAS CITY, MO 64116
PHONE: 816.361.1177
CERT. OF AUTHORITY NO. 001592

SPECIAL SHEET
RAMPS 3 & 4 GORES
SHEET 27 OF 74

F:\2021\04501-05000\021-04786\40-Design\Microstation\J4P3196\plan_sheets\8 Special Sheets\056_SS_27_J4P3196_I20.dgn 2:13:51 PM 2/28/2025

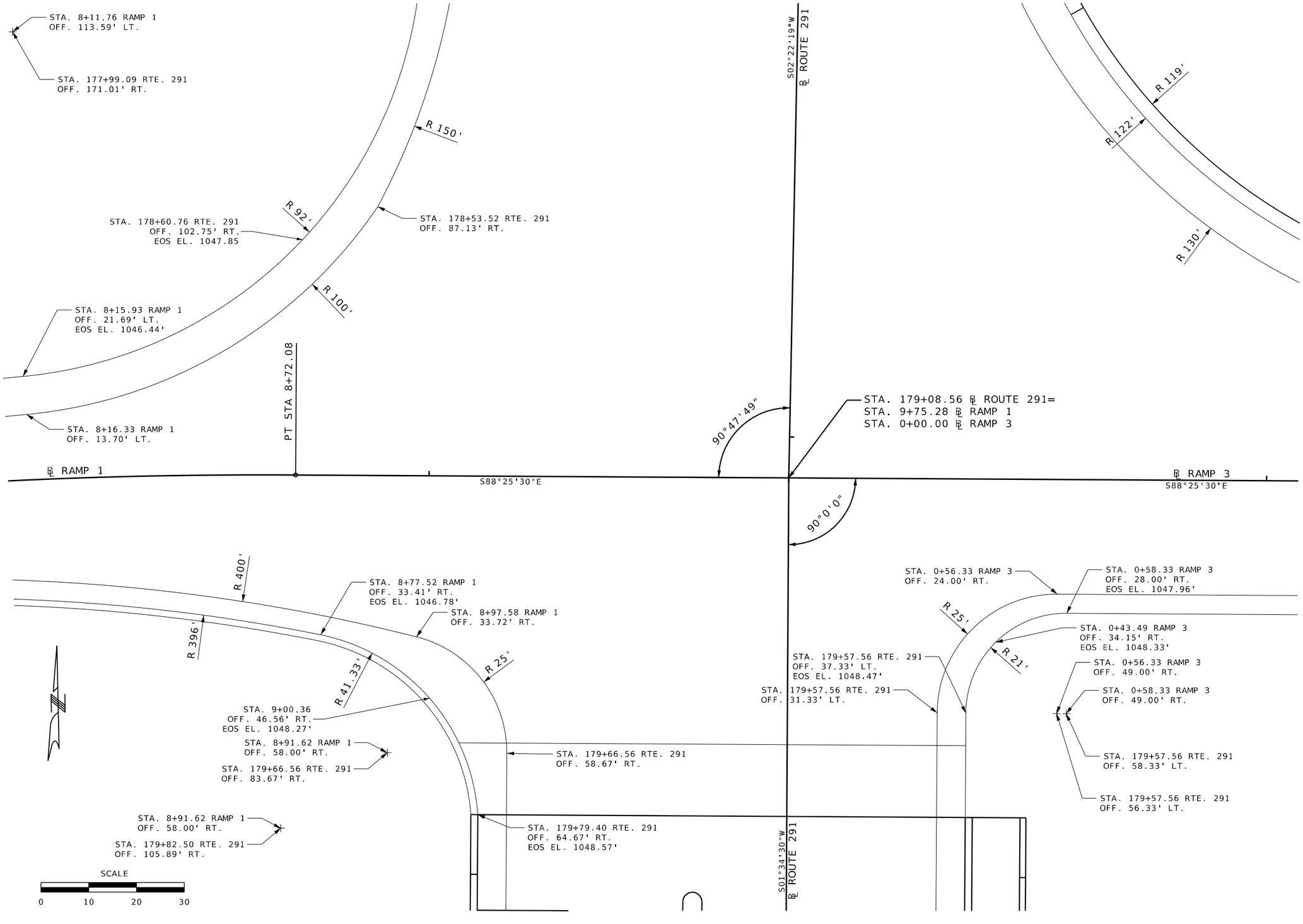

SPECIAL SHEET
RAMPS 1 & 3 DETAILS
SHEET 28 OF 74

Reid Catt
2025.03.01 21:34:54-06'00'

REID BRENNEN CATT
NUMBER
2010019516

REID BRENNEN CATT-ENGINEER
MO# PE-2010019516

DATE PREPARED
2/28/2025

ROUTE	STATE
50/291	MO
DISTRICT	SHEET NO.
KC	57

COUNTY
JACKSON

JOB NO.
J4P3196

FEDERAL PROJECT NO.
STB-3001(009)

PROJECT NO.

BRIDGE NO.

DESCRIPTION	DATE

IF A SEAL IS PRESENT ON THIS SHEET IT HAS BEEN ELECTRONICALLY SEALED AND DATED.

MISSOURI HIGHWAYS AND TRANSPORTATION COMMISSION
105 WEST CAPITOL
JEFFERSON CITY, MO 65102
1-888-ASK-MODOT (1-888-275-6636)

LEE'S SUMMIT MISSOURI

olsson
1301 BURLINGTON ST., STE. 100
NORTH KANSAS CITY, MO 64116
PHONE: 816.361.1177
CERT. OF AUTHORITY NO. 001592

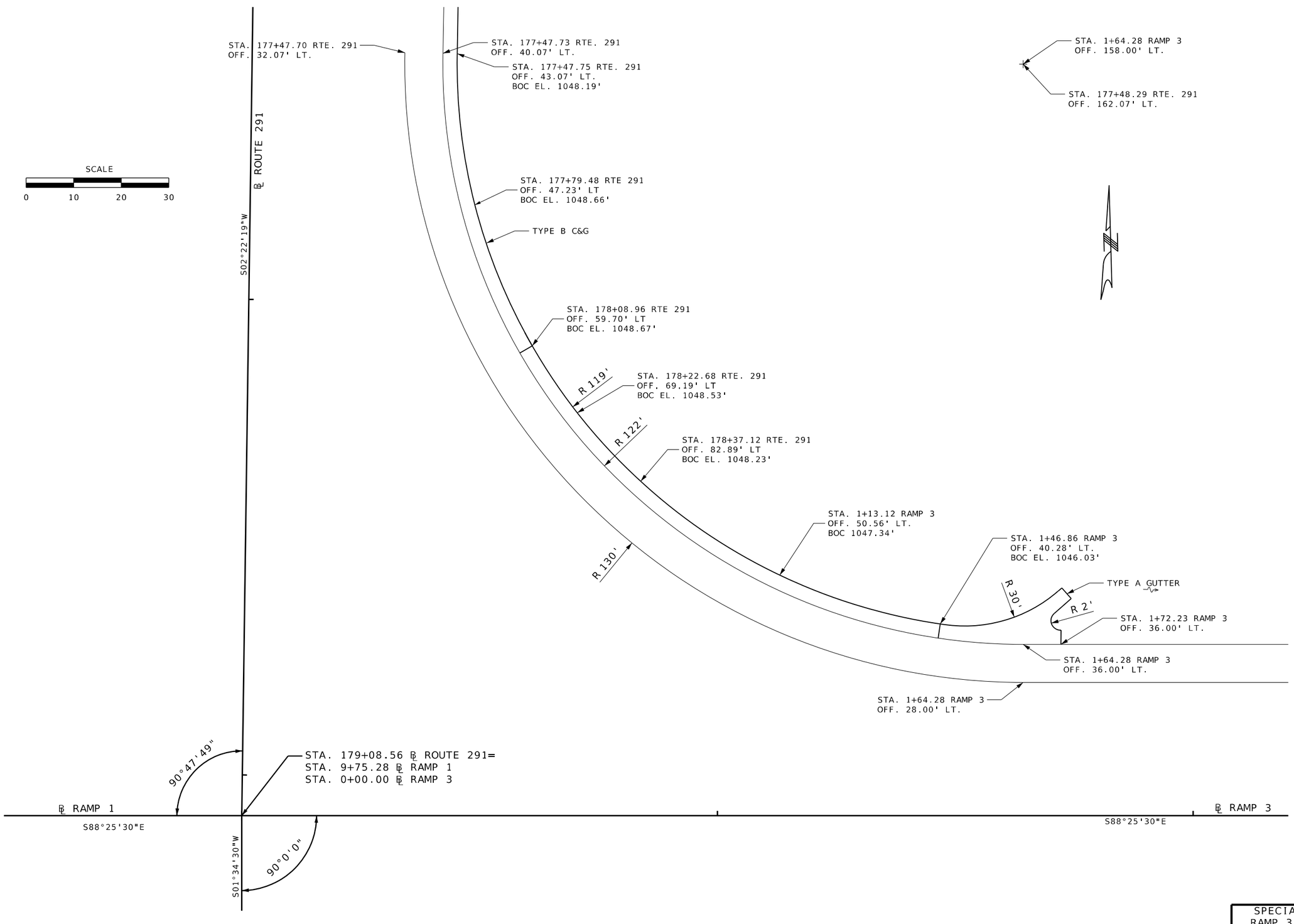

Reid Catt
2025.03.01 21:35:09-06'00'

REID BRENNEN CATT
NUMBER
PE-2010019516

REID BRENNEN CATT-ENGINEER
MO# PE-2010019516

DATE PREPARED
2/28/2025

ROUTE	STATE
50/291	MO
DISTRICT	SHEET NO.
KC	58

COUNTY
JACKSON

JOB NO.
J4P3196

FEDERAL PROJECT NO.
STB-3001(009)

PROJECT NO.

BRIDGE NO.

DESCRIPTION	DATE

IF A SEAL IS PRESENT ON THIS SHEET IT HAS BEEN ELECTRONICALLY SEALED AND DATED.

MISSOURI HIGHWAYS AND TRANSPORTATION COMMISSION
105 WEST CAPITOL
JEFFERSON CITY, MO 65102
1-888-ASK-MODOT (1-888-275-6636)

LEE'S SUMMIT MISSOURI

olsson
1301 BURLINGTON ST., STE. 100
NORTH KANSAS CITY, MO 64116
PHONE: 816.361.1177
CERT. OF AUTHORITY NO. 001592

SPECIAL SHEET
RAMP 3 DETAILS
SHEET 29 OF 74

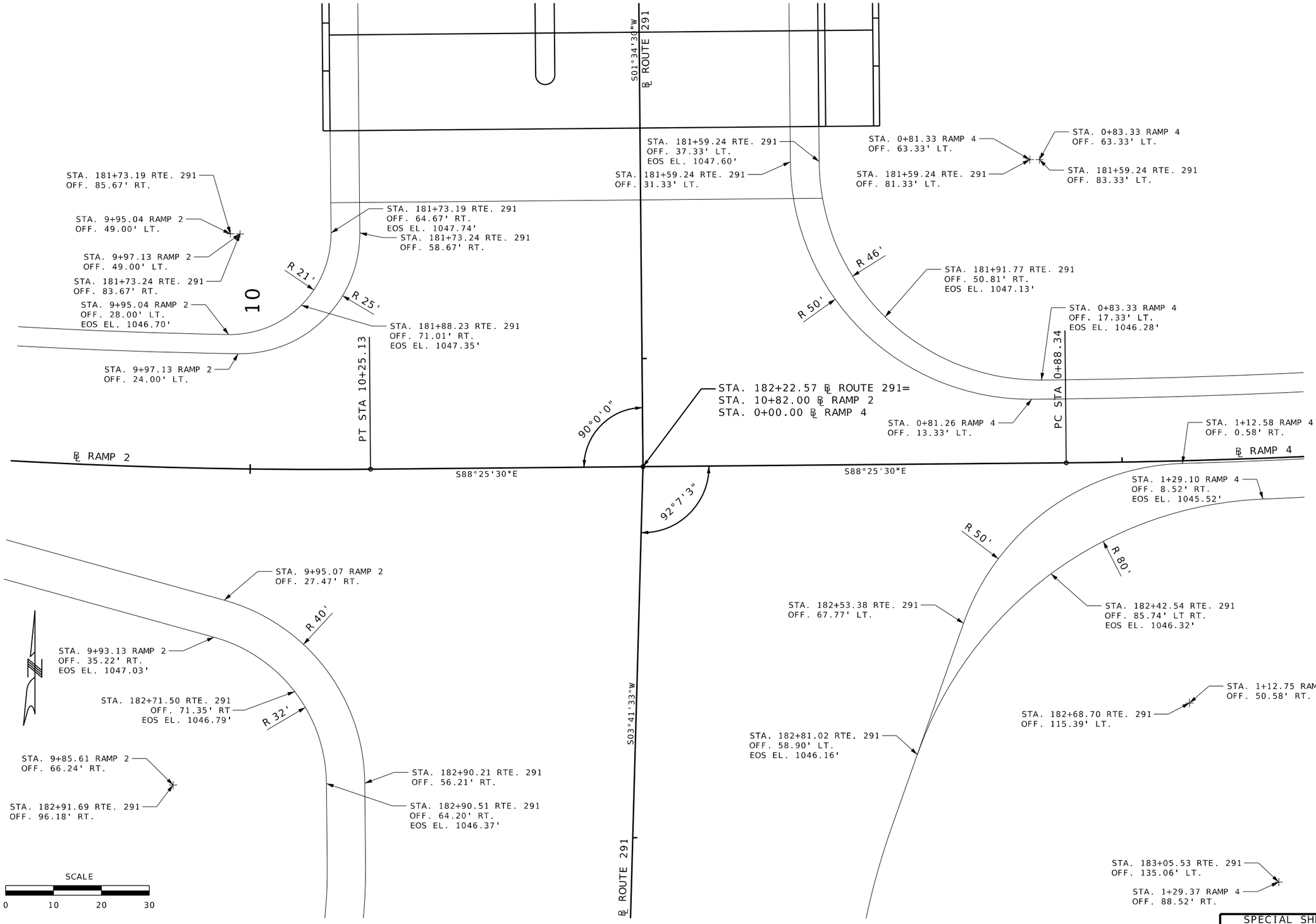

Reid Catt
2025.03.01 21:34:06-06'00'

REID BRENNEN CATT
NUMBER
PE-2010019516

REID BRENNEN CATT-ENGINEER
MO# PE-2010019516

DATE PREPARED
2/28/2025

ROUTE	STATE
50/291	MO
DISTRICT	SHEET NO.
KC	59

COUNTY
JACKSON

JOB NO.
J4P3196

FEDERAL PROJECT NO.
STB-3001(009)

PROJECT NO.

BRIDGE NO.

DESCRIPTION	DATE

IF A SEAL IS PRESENT ON THIS SHEET IT HAS BEEN ELECTRONICALLY SEALED AND DATED.

MISSOURI HIGHWAYS AND TRANSPORTATION COMMISSION

105 WEST CAPITOL
JEFFERSON CITY, MO 65102
1-888-ASK-MODOT (1-888-275-6636)

LEE'S SUMMIT MISSOURI

olsson
1301 BURLINGTON ST., STE. 100
NORTH KANSAS CITY, MO 64116
PHONE: 816.361.1177
CERT. OF AUTHORITY NO. 001592

SPECIAL SHEET
RAMPS 2 & 4 DETAILS
SHEET 30 OF 74

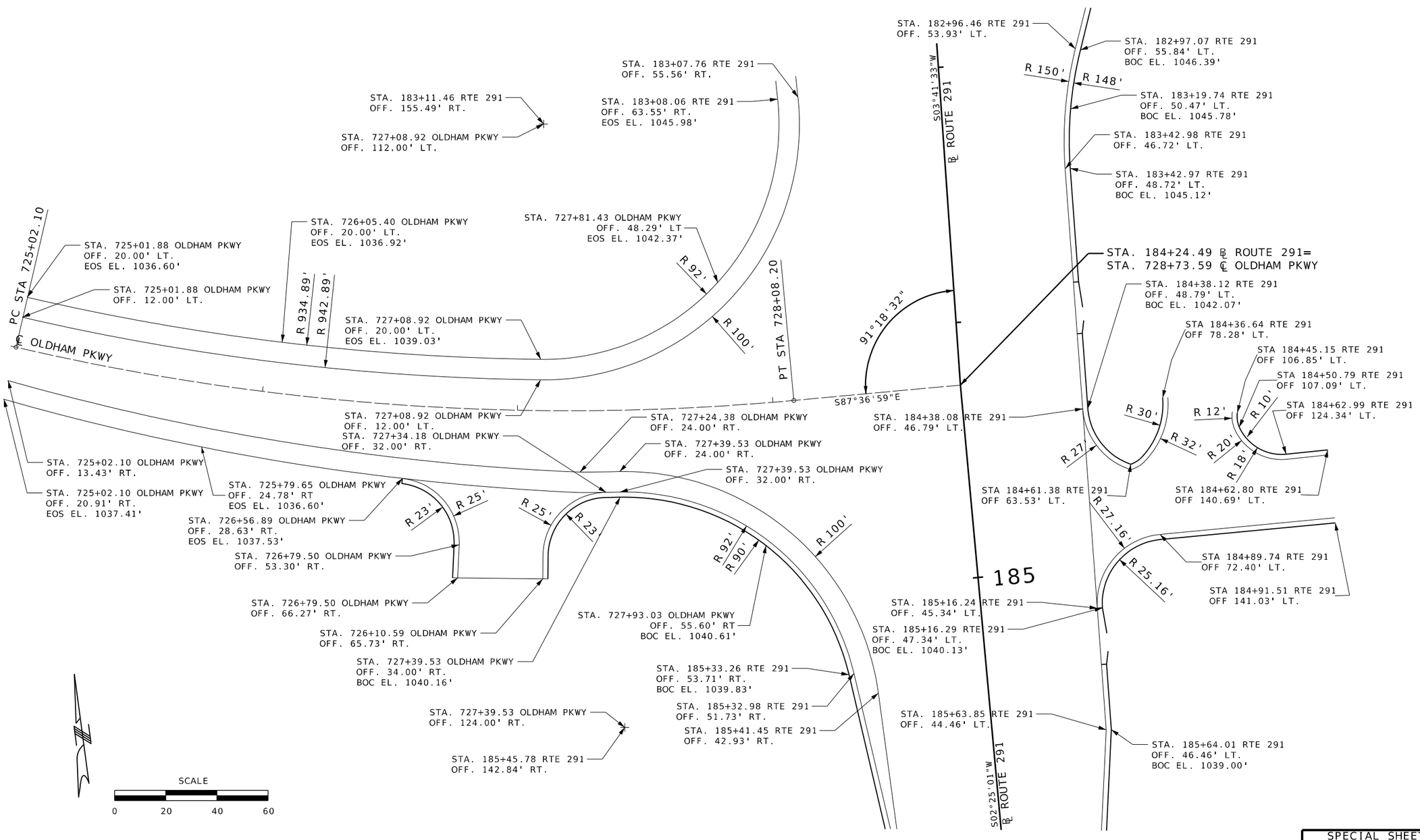

SPECIAL SHEET
OLDHAM PKWY DETAILS
SHEET 31 OF 74

Reid Catt
2025.03.01 21:36:01-06'00'

REID BRENNEN CATT-ENGINEER
MO# PE-2010019516

DATE PREPARED
2/28/2025

ROUTE	STATE
50/291	MO
DISTRICT	SHEET NO.
KC	60

COUNTY
JACKSON

JOB NO.
J4P3196

FEDERAL PROJECT NO.
STB-3001(009)

PROJECT NO.

BRIDGE NO.

DESCRIPTION | DATE

IF A SEAL IS PRESENT ON THIS SHEET IT HAS BEEN ELECTRONICALLY SEALED AND DATED.

MISSOURI HIGHWAYS AND TRANSPORTATION COMMISSION
105 WEST CAPITOL
JEFFERSON CITY, MO 65102
1-888-ASK-MODOT (1-888-275-6636)

LEE'S SUMMIT MISSOURI

olsson
1301 BURLINGTON ST., STE. 100
NORTH KANSAS CITY, MO 64116
PHONE: 816.361.1177
CERT. OF AUTHORITY NO. 001592

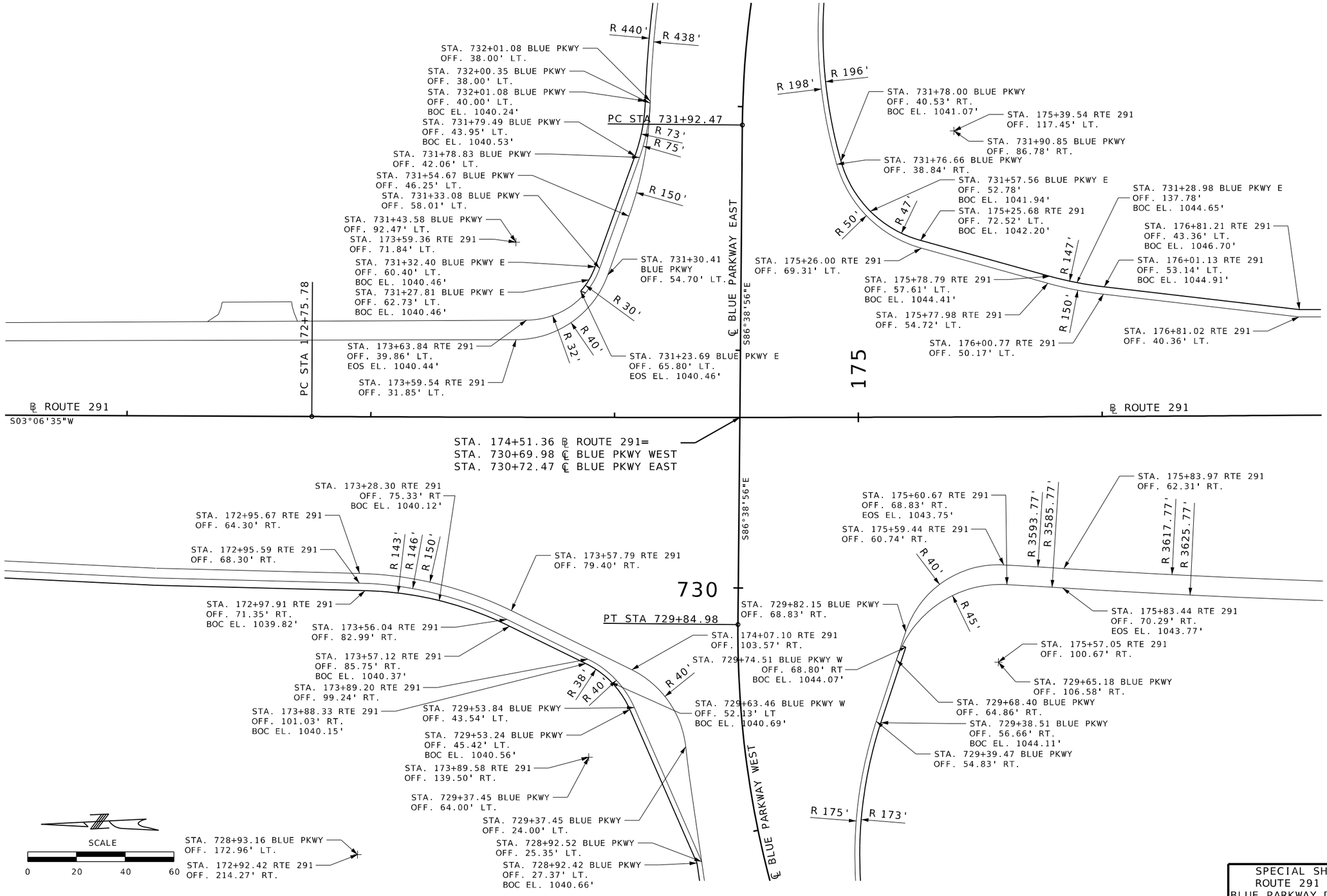

SPECIAL SHEET
ROUTE 291 AND
BLUE PARKWAY DETAILS
SHEET 32 OF 74

Reid Catt
2025.03.01 21:36:07-06'00'

REID BRENNEN CATT-ENGINEER
MO# PE-2010019516

DATE PREPARED
2/28/2025

ROUTE	STATE
50/291	MO
DISTRICT	SHEET NO.
KC	61

COUNTY
JACKSON

JOB NO.
J4P3196

FEDERAL PROJECT NO.
STB-3001(009)

PROJECT NO.

BRIDGE NO.

DESCRIPTION	DATE

IF A SEAL IS PRESENT ON THIS SHEET IT HAS BEEN ELECTRONICALLY SEALED AND DATED.

MISSOURI HIGHWAYS AND TRANSPORTATION COMMISSION
105 WEST CAPITOL
JEFFERSON CITY, MO 65102
1-888-ASK-MODOT (1-888-275-6636)

LEE'S SUMMIT MISSOURI

olsson
1301 BURLINGTON ST., STE. 100
NORTH KANSAS CITY, MO 64116
PHONE: 816.361.1177
CERT. OF AUTHORITY NO. 001592

F:\2021\04501-05000\021-04786\40-Design\Microstation\J4P3196\plan_sheets\8 Special Sheets\061_SS_32_J4P3196_120.dgn 2:13:59 PM 2/28/2025

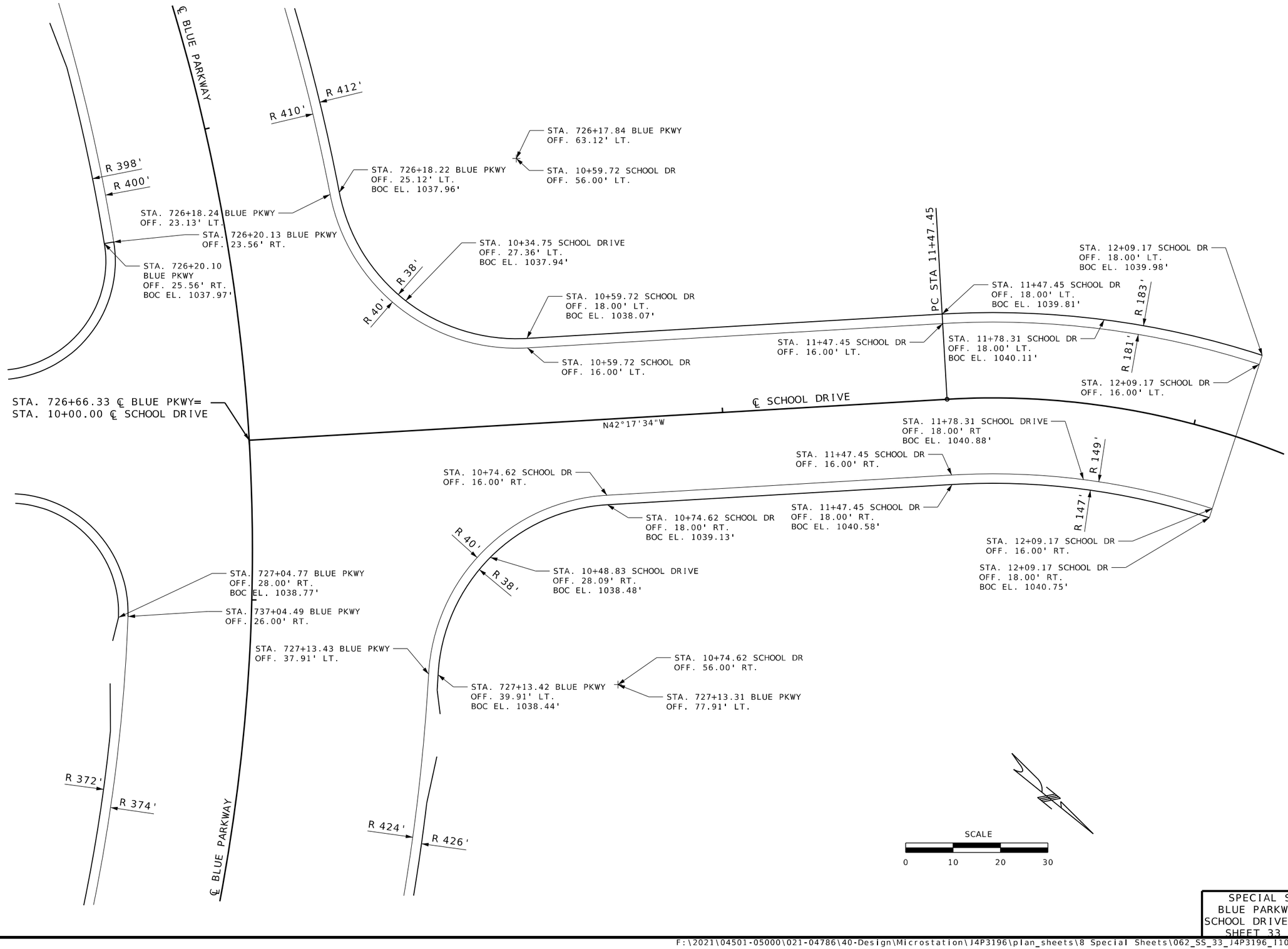

SPECIAL SHEET
BLUE PARKWAY AND
SCHOOL DRIVE DETAILS
SHEET 33 OF 74

Reid Catt
2025.03.01 21:36:37-06'00'

REID BRENNEN CATT-ENGINEER
MO# PE-2010019516

DATE PREPARED
2/28/2025

ROUTE	STATE
50/291	MO
DISTRICT	SHEET NO.
KC	62

COUNTY
JACKSON

JOB NO.
J4P3196

FEDERAL PROJECT NO.
STB-3001(009)

PROJECT NO.

BRIDGE NO.

DESCRIPTION	DATE

IF A SEAL IS PRESENT ON THIS SHEET IT HAS BEEN ELECTRONICALLY SEALED AND DATED.

MISSOURI HIGHWAYS AND TRANSPORTATION COMMISSION
105 WEST CAPITOL
JEFFERSON CITY, MO 65102
1-888-ASK-MODOT (1-888-275-6636)

LEE'S SUMMIT MISSOURI

olsson
1301 BURLINGTON ST., STE. 100
NORTH KANSAS CITY, MO 64116
PHONE: 816.361.1177
CERT. OF AUTHORITY NO. 001592

F:\2021\04501-05000\021-04786\40-Design\Microstation\J4P3196\plan_sheets\8 Special Sheets\062_SS_33_J4P3196_110.dgn 2:14:01 PM 2/28/2025

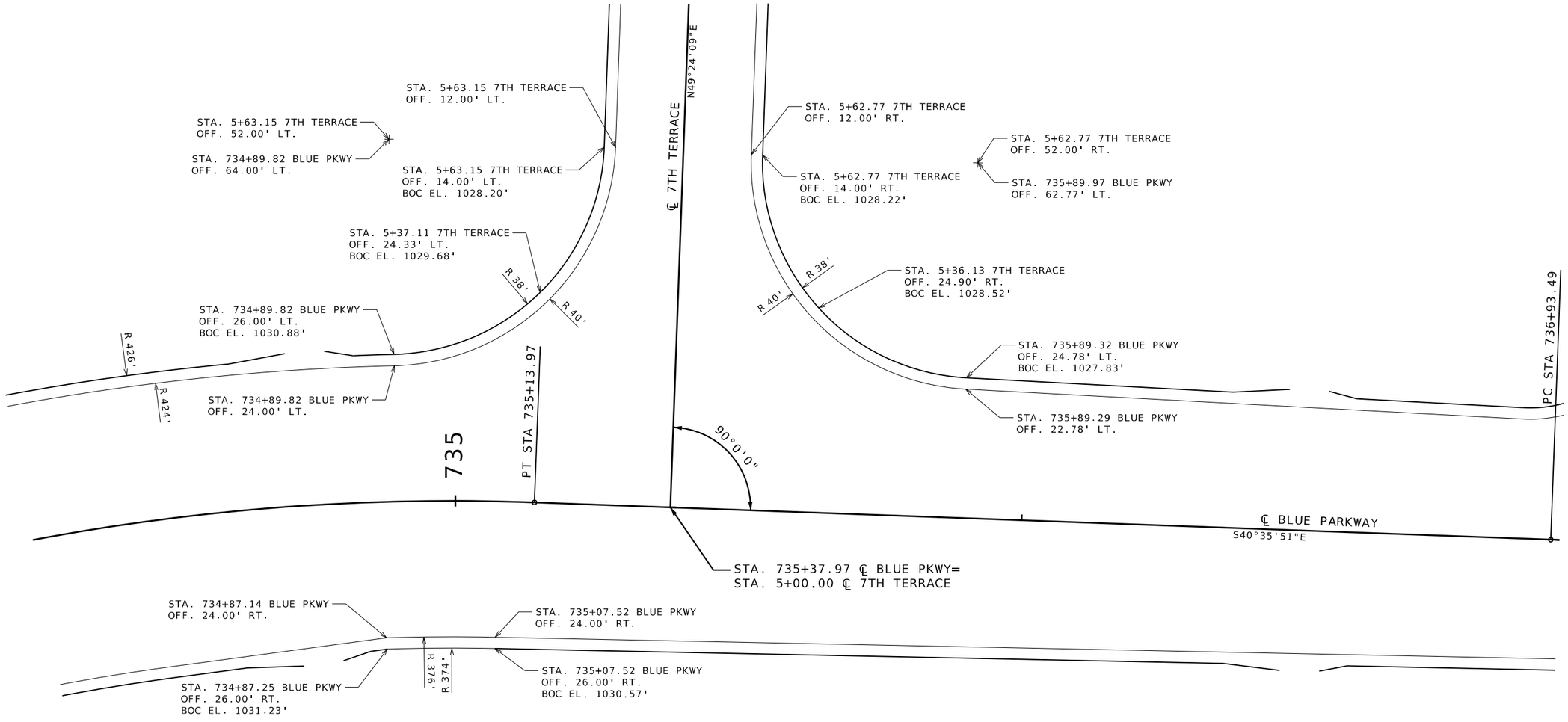

Reid Catt
2025.03.01 21:36:50-06'00'

REID BRENNEN CATT
NUMBER
PE-2010019516

REID BRENNEN CATT-ENGINEER
MO# PE-2010019516

DATE PREPARED
2/28/2025

ROUTE	STATE
50/291	MO
DISTRICT	SHEET NO.
KC	63

COUNTY
JACKSON

JOB NO.
J4P3196

FEDERAL PROJECT NO.
STB-3001(009)

PROJECT NO.

BRIDGE NO.

DESCRIPTION	DATE

IF A SEAL IS PRESENT ON THIS SHEET IT HAS BEEN ELECTRONICALLY SEALED AND DATED.

MISSOURI HIGHWAYS AND TRANSPORTATION COMMISSION

105 WEST CAPITOL
JEFFERSON CITY, MO 65102
1-888-ASK-MODOT (1-888-275-6636)

LEE'S SUMMIT MISSOURI

olsson
1301 BURLINGTON ST., STE. 100
NORTH KANSAS CITY, MO 64116
PHONE: 816.361.1177
CERT. OF AUTHORITY NO. 001592

SPECIAL SHEET
BLUE PARKWAY AND
7TH TERRACE DETAILS
SHEET 34 OF 74

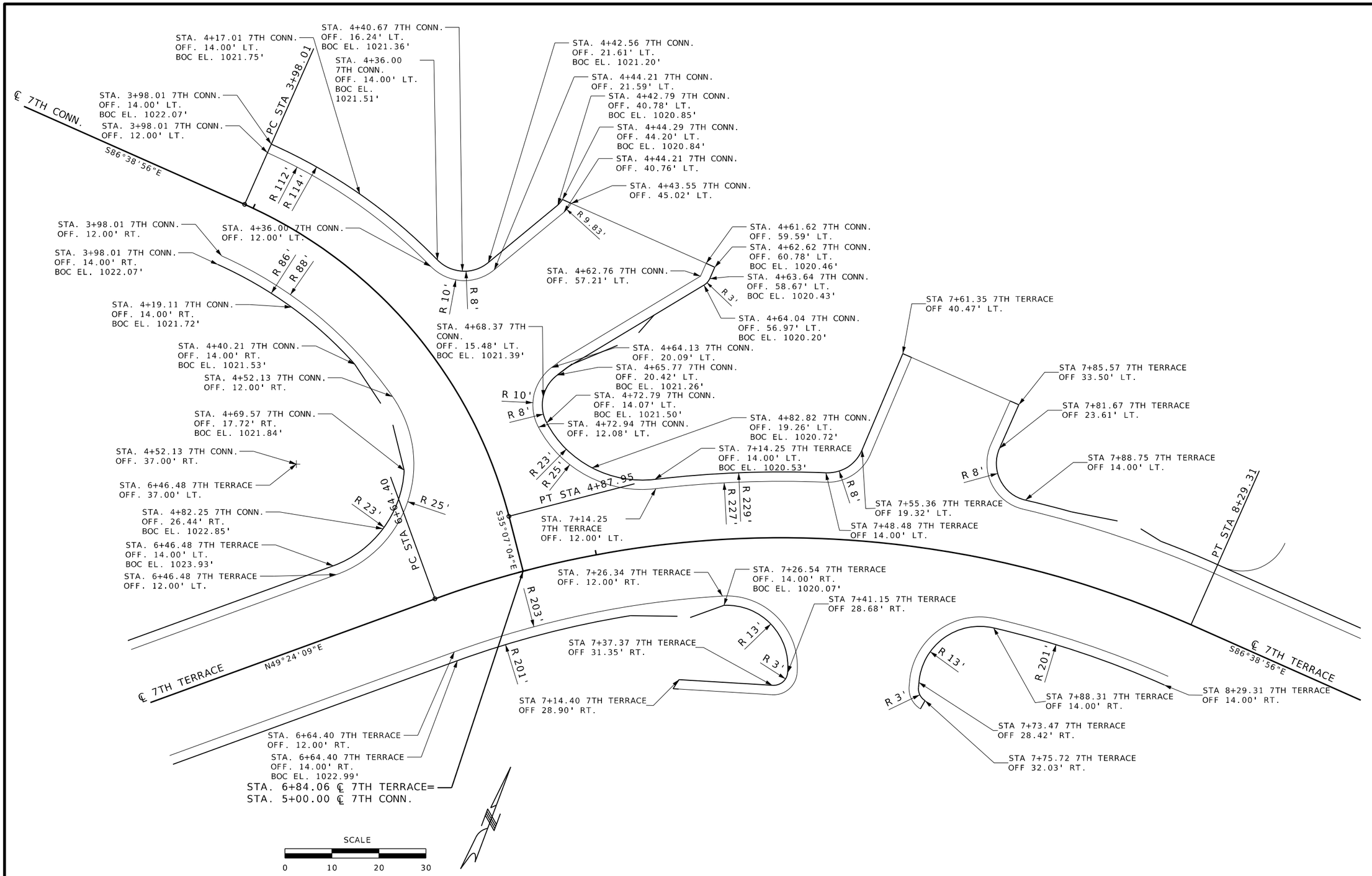

SPECIAL SHEET
7TH TERRACE AND
7TH CONN. DETAILS
SHEET 35 OF 74

Reid Catt
2025.03.01 21:36:23-06'00'

REID BRENNEN CATT-ENGINEER
MO# PE-2010019516

DATE PREPARED
2/28/2025

ROUTE	STATE
50/291	MO
DISTRICT	SHEET NO.
KC	64

COUNTY
JACKSON

JOB NO.
J4P3196

FEDERAL PROJECT NO.
STB-3001(009)

PROJECT NO.

BRIDGE NO.

IF A SEAL IS PRESENT ON THIS SHEET IT HAS BEEN ELECTRONICALLY SEALED AND DATED.

DESCRIPTION

DATE

MISSOURI HIGHWAYS AND TRANSPORTATION COMMISSION
105 WEST CAPITOL
JEFFERSON CITY, MO 65102
1-888-ASK-MODOT (1-888-275-6636)

LEE'S SUMMIT MISSOURI

olsson
1301 BURLINGTON ST., STE. 100
NORTH KANSAS CITY, MO 64116
PHONE: 816.361.1177
CERT. OF AUTHORITY NO. 001592

F:\2021\04501-05000\021-04786\40-Design\Microstation\J4P3196\plan_sheets\8 Special Sheets\064_SS_35_J4P3196_110.dgn 2:14:05 PM 2/28/2025

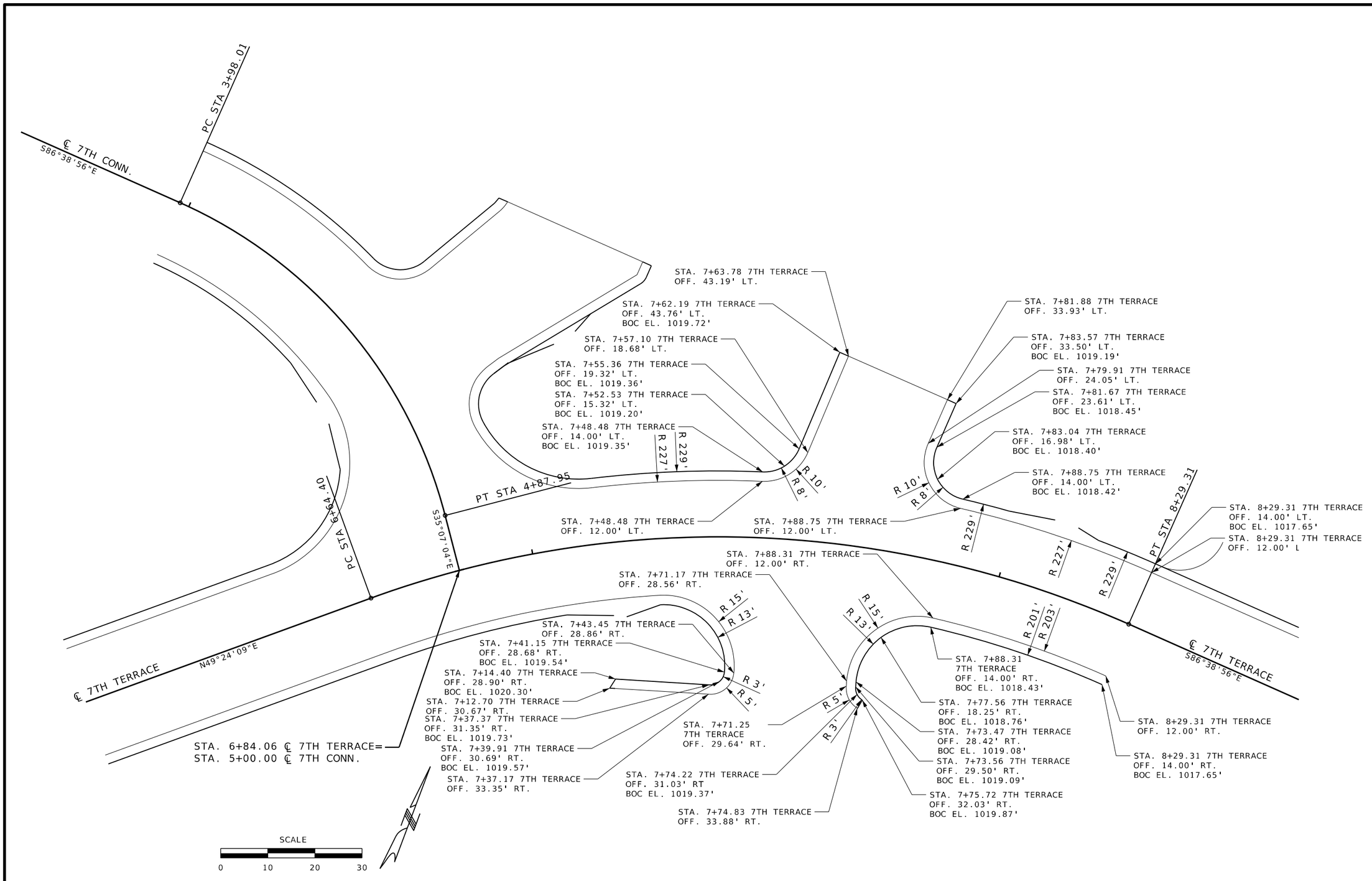

Reid Catt
2025.03.01 21:36:16-06'00'

REID BRENNEN CATT
NUMBER
PE-2010019516

REID BRENNEN CATT-ENGINEER
MO# PE-2010019516

DATE PREPARED
2/28/2025

ROUTE	STATE
50/291	MO
DISTRICT	SHEET NO.
KC	65

COUNTY
JACKSON

JOB NO.
J4P3196

FEDERAL PROJECT NO.
STB-3001(009)

PROJECT NO.

BRIDGE NO.

IF A SEAL IS PRESENT ON THIS SHEET IT HAS BEEN ELECTRONICALLY SEALED AND DATED.

DATE	DESCRIPTION

MISSOURI HIGHWAYS AND TRANSPORTATION COMMISSION

105 WEST CAPITOL
JEFFERSON CITY, MO 65102
1-888-ASK-MODOT (1-888-275-6636)

LEE'S SUMMIT MISSOURI

olsson
1301 BURLINGTON ST., STE. 100
NORTH KANSAS CITY, MO 64116
PHONE: 816.361.1177
CERT. OF AUTHORITY NO. 001592

SPECIAL SHEET
7TH TERRACE AND
7TH CONN. DETAILS
SHEET 36 OF 74

SEE TYPICAL SECTION SHEET 18 OF 19 FOR TEMPORARY OPTIONAL PAVEMENT DESIGNS

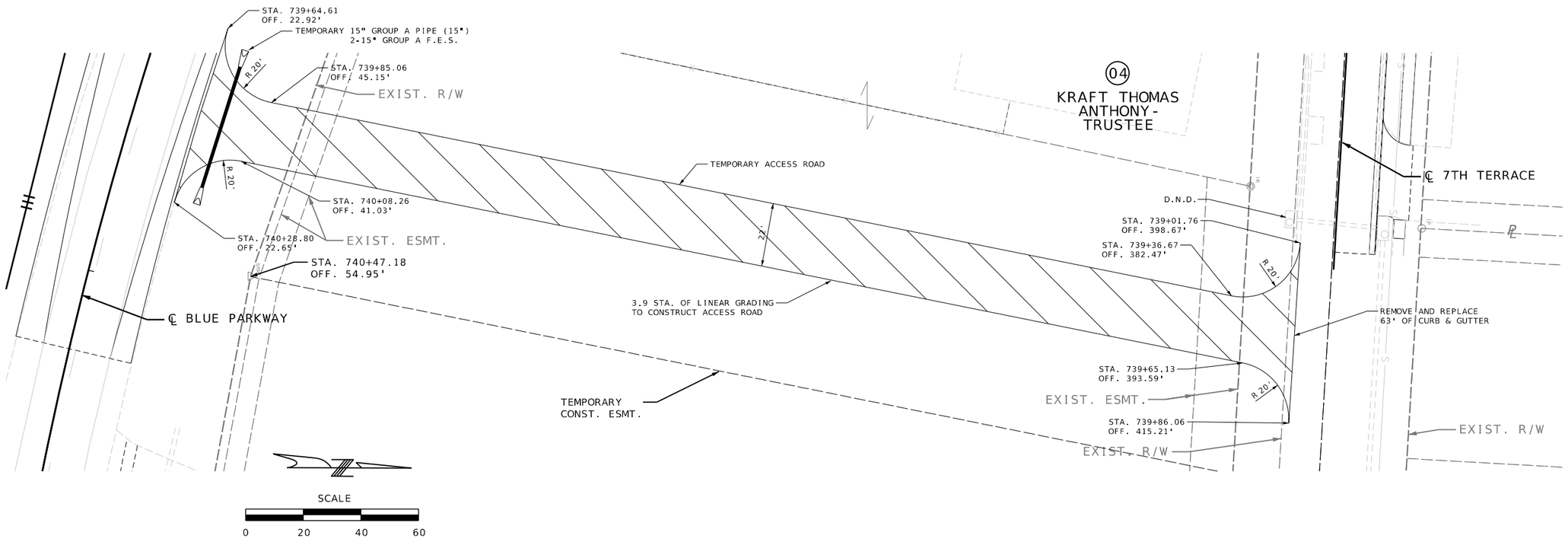

SPECIAL SHEET
TEMPORARY PAVEMENT
PHASE 1A & 1B DETAILS
SHEET 37 OF 74

Reid Catt
2025.04.08 19:11:43-05'00'

REID BRENNEN CATT-ENGINEER
MO# PE-2010019516

DATE PREPARED
4/8/2025

ROUTE	STATE
50/291	MO
DISTRICT	SHEET NO.
KC	66

COUNTY
JACKSON

JOB NO.
J4P3196

FEDERAL PROJECT NO.
STB-3001(009)

PROJECT NO.

BRIDGE NO.

DESCRIPTION	DATE

IF A SEAL IS PRESENT ON THIS SHEET IT HAS BEEN ELECTRONICALLY SEALED AND DATED.

MISSOURI HIGHWAYS AND TRANSPORTATION COMMISSION

105 WEST CAPITOL
JEFFERSON CITY, MO 65102
1-888-ASK-MODOT (1-888-275-6636)

LEE'S SUMMIT MISSOURI

olsson
1301 BURLINGTON ST., STE. 100
NORTH KANSAS CITY, MO 64116
PHONE: 816.361.1177
CERT. OF AUTHORITY NO. 001592

SEE TYPICAL SECTION SHEET 18 OF 19 FOR TEMPORARY OPTIONAL PAVEMENT DESIGNS

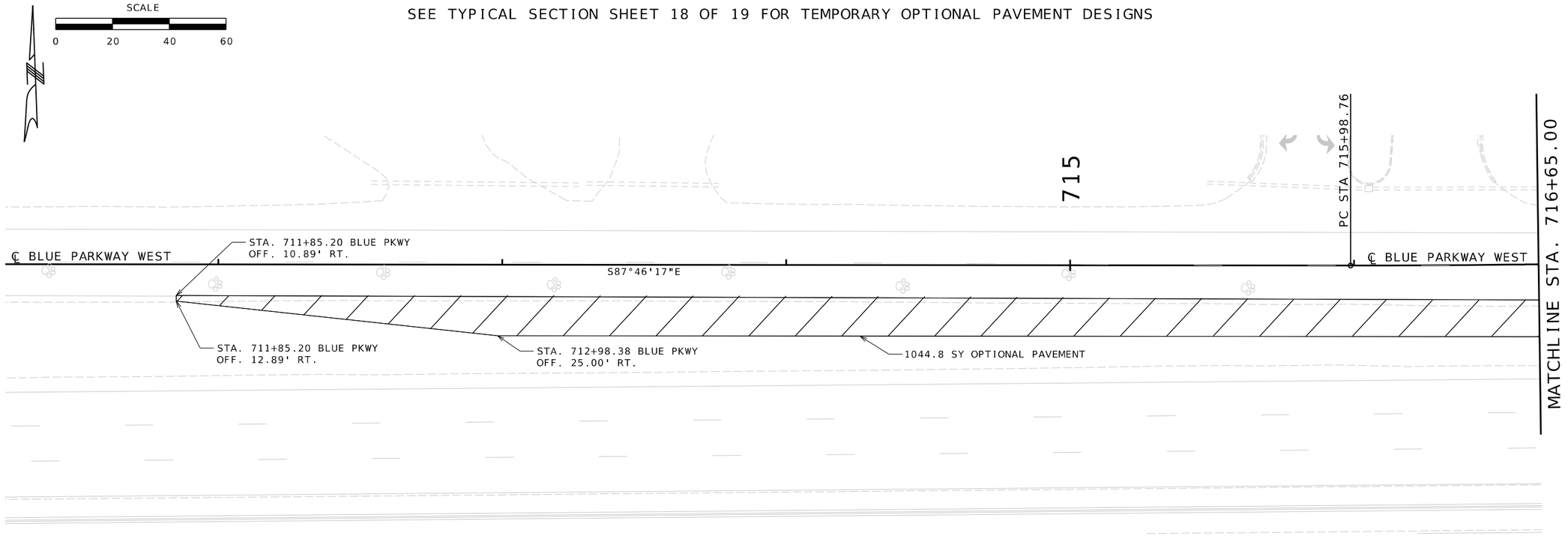

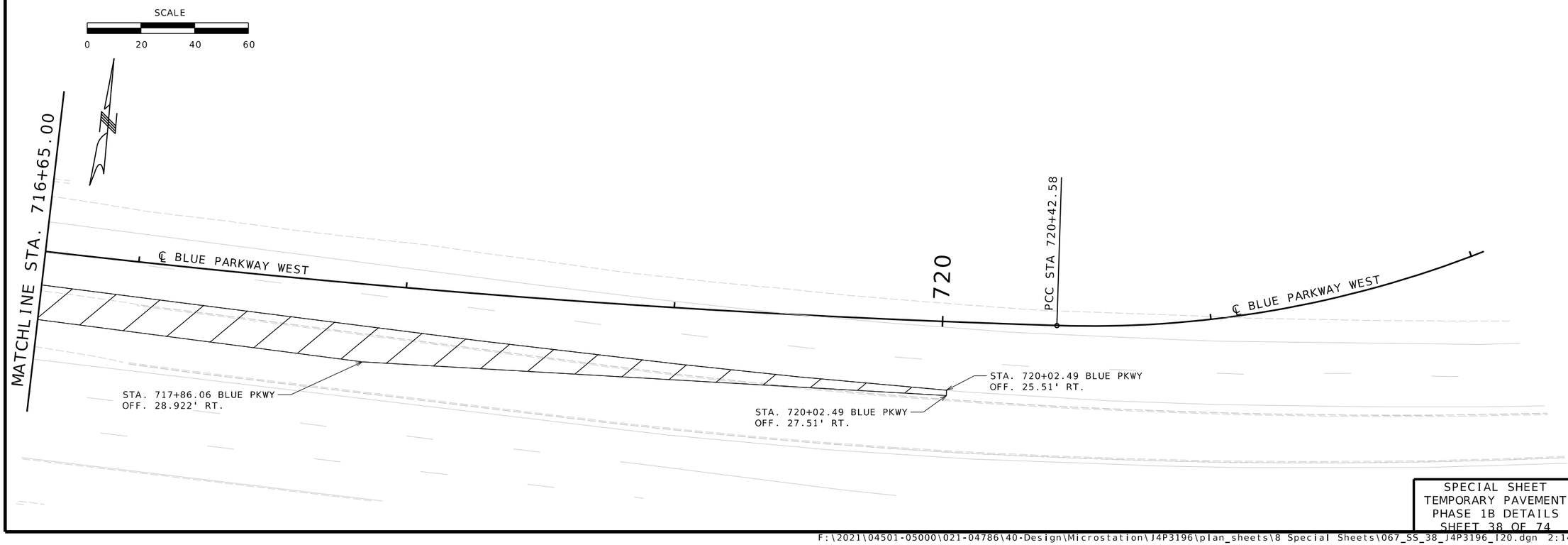

SPECIAL SHEET
TEMPORARY PAVEMENT
PHASE 1B DETAILS
SHEET 38 OF 74

Reid Catt
2025.03.01 21:36:31-06'00'

REID BRENNEN CATT-ENGINEER
MO# PE-2010019516

DATE PREPARED
2/28/2025

ROUTE	STATE
50/291	MO
DISTRICT	SHEET NO.
KC	67

COUNTY
JACKSON

JOB NO.
J4P3196

FEDERAL PROJECT NO.
STB-3001(009)

PROJECT NO.

BRIDGE NO.

DESCRIPTION	DATE

IF A SEAL IS PRESENT ON THIS SHEET IT HAS BEEN ELECTRONICALLY SEALED AND DATED.

MISSOURI HIGHWAYS AND TRANSPORTATION COMMISSION

105 WEST CAPITOL
JEFFERSON CITY, MO 65102
1-888-ASK-MODOT (1-888-275-6636)

LEE'S SUMMIT MISSOURI

olsson
1301 BURLINGTON ST., STE. 100
NORTH KANSAS CITY, MO 64116
PHONE: 816.361.1177
CERT. OF AUTHORITY NO. 001592

SEE TYPICAL SECTION SHEET 18 OF 19 FOR TEMPORARY OPTIONAL PAVEMENT DESIGNS

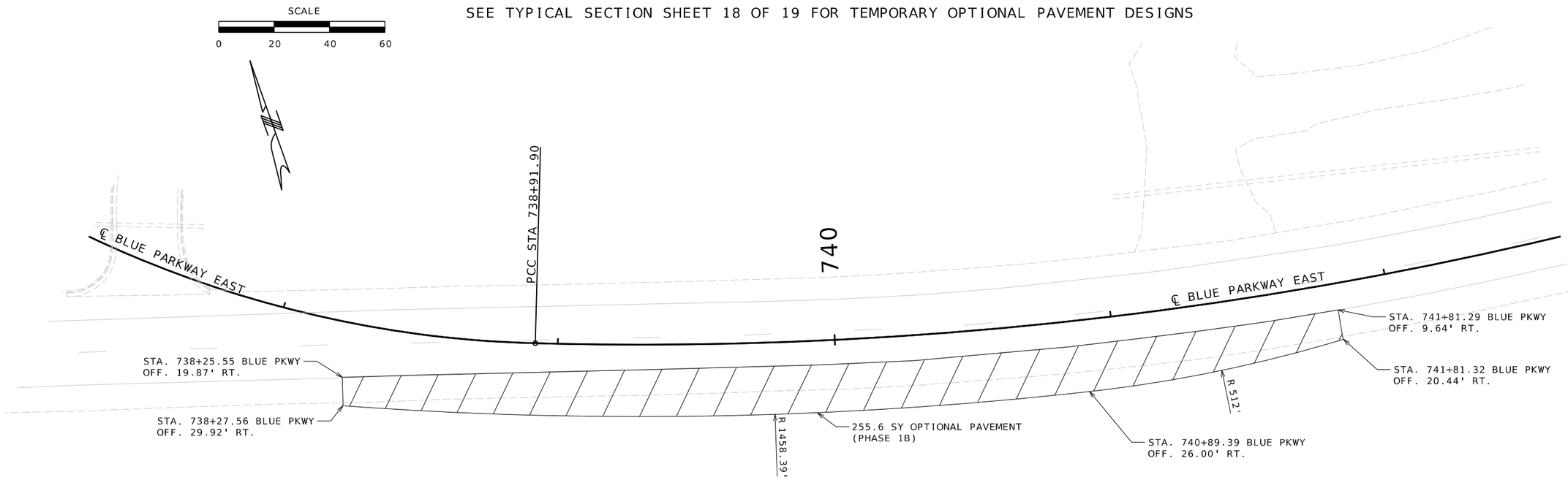

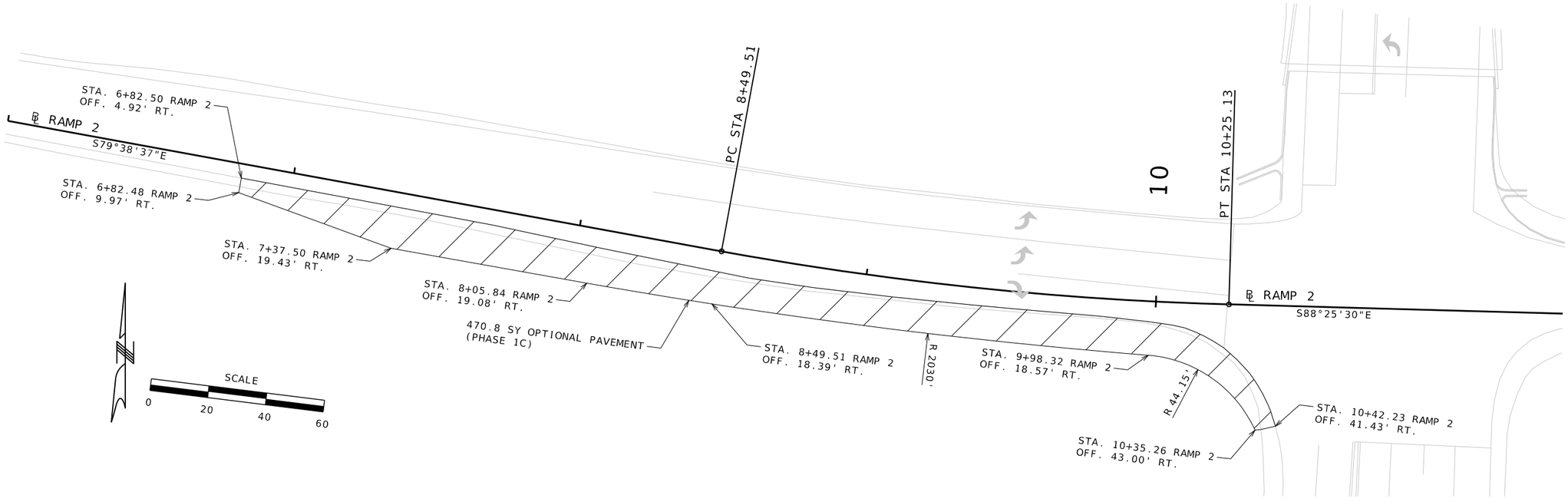

SPECIAL SHEET
TEMPORARY PAVEMENT
PHASE 1B & 1D DETAILS
SHEET 39 OF 74

Reid Catt
2025.03.01 21:36:43-06'00'

REID BRENNEN CATT-ENGINEER
MO# PE-2010019516

DATE PREPARED
2/28/2025

ROUTE	STATE
50/291	MO
DISTRICT	SHEET NO.
KC	68

COUNTY
JACKSON

JOB NO.
J4P3196

FEDERAL PROJECT NO.
STB-3001(009)

PROJECT NO.

BRIDGE NO.

DESCRIPTION	DATE

IF A SEAL IS PRESENT ON THIS SHEET IT HAS BEEN ELECTRONICALLY SEALED AND DATED.

MISSOURI HIGHWAYS AND TRANSPORTATION COMMISSION
105 WEST CAPITOL
JEFFERSON CITY, MO 65102
1-888-ASK-MODOT (1-888-275-6636)

LEE'S SUMMIT MISSOURI

olsson
1301 BURLINGTON ST., STE. 100
NORTH KANSAS CITY, MO 64116
PHONE: 816.361.1177
CERT. OF AUTHORITY NO. 001592

F:\2021\04501-05000\021-04786\40-Design\Microstation\J4P3196\plan_sheets\8 Special Sheets\068_SS_39_J4P3196_120.dgn 2:14:17 PM 2/28/2025

SEE TYPICAL SECTION SHEET 18 OF 19 FOR TEMPORARY OPTIONAL PAVEMENT DESIGNS

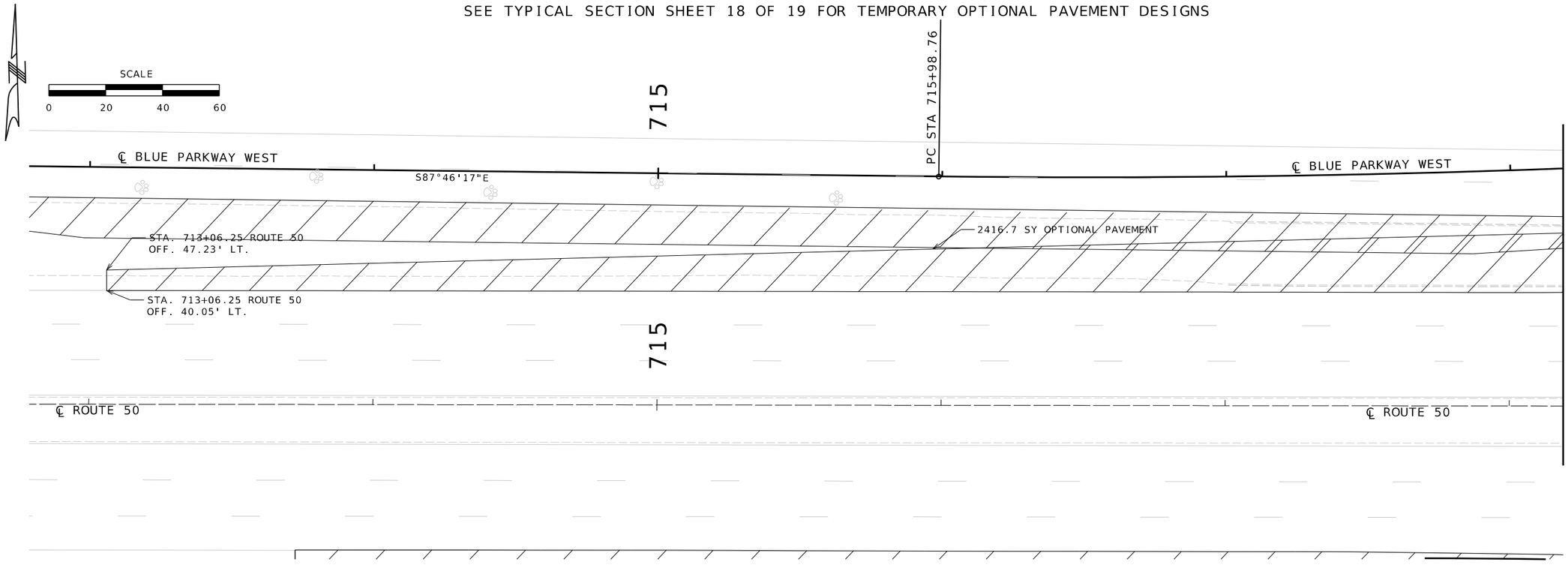

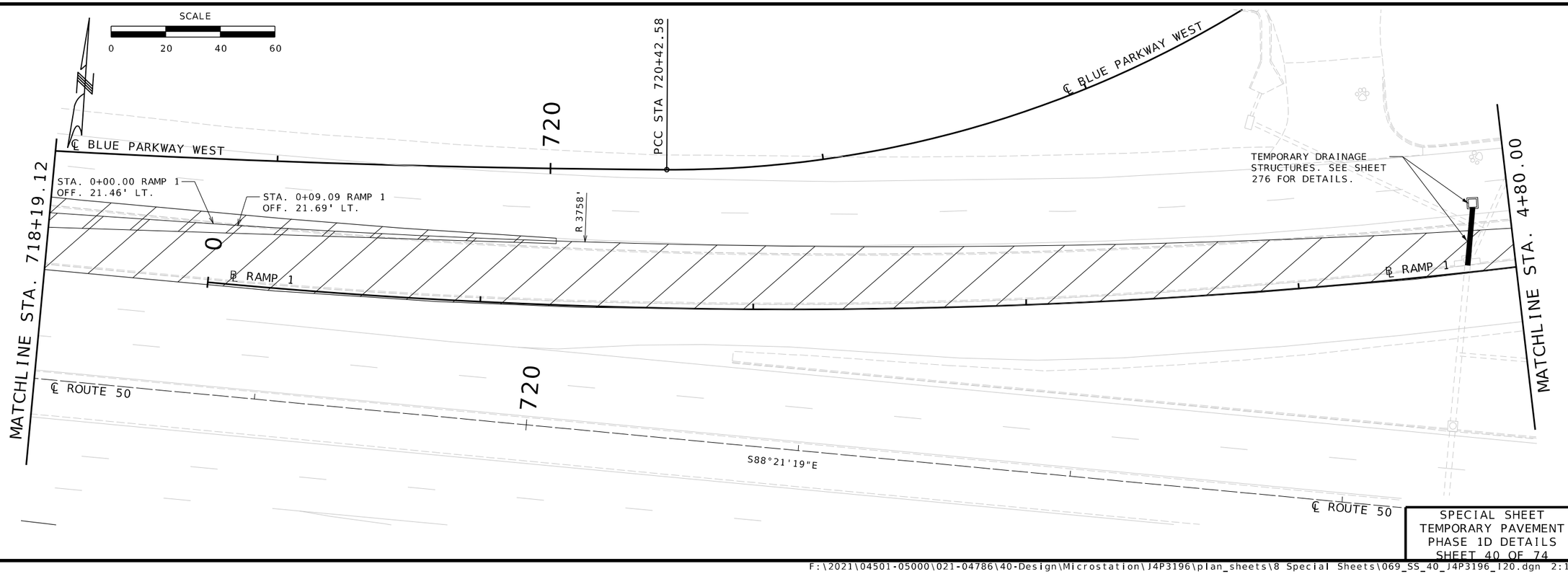

SPECIAL SHEET
TEMPORARY PAVEMENT
PHASE 1D DETAILS
SHEET 40 OF 74

IF A SEAL IS PRESENT ON THIS SHEET IT HAS BEEN ELECTRONICALLY SEALED AND DATED.

Reid Catt
2025.03.01 21:37:06-06'00'

REID BRENNEN CATT
NUMBER
PE-2010019516

REID BRENNEN CATT-ENGINEER
MO# PE-2010019516

DATE PREPARED
2/28/2025

ROUTE	STATE
50/291	MO
DISTRICT	SHEET NO.
KC	69

COUNTY
JACKSON

JOB NO.
J4P3196

FEDERAL PROJECT NO.
STB-3001(009)

PROJECT NO.

BRIDGE NO.

DESCRIPTION	DATE

MISSOURI HIGHWAYS AND TRANSPORTATION COMMISSION
105 WEST CAPITOL
JEFFERSON CITY, MO 65102
1-888-ASK-MODOT (1-888-275-6636)

LEE'S SUMMIT MISSOURI

olsson
1301 BURLINGTON ST., STE. 100
NORTH KANSAS CITY, MO 64116
PHONE: 816.361.1177
CERT. OF AUTHORITY NO. 001592

SEE TYPICAL SECTION SHEET 18 OF 19 FOR TEMPORARY OPTIONAL PAVEMENT DESIGNS

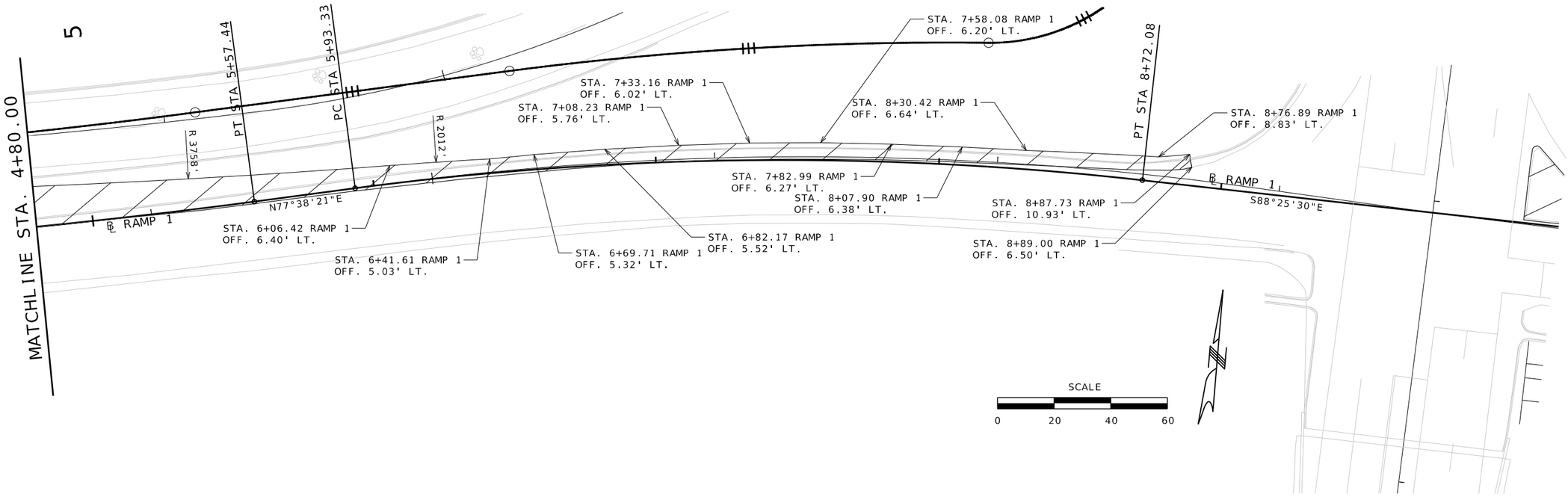

SPECIAL SHEET
TEMPORARY PAVEMENT
PHASE 1D DETAILS
SHEET 41 OF 74

Reid Catt
2025.03.01 21:35:52-06'00'

REID BRENNEN CATT NUMBER PE-2010019516
REID BRENNEN CATT-ENGINEER
MO# PE-2010019516

DATE PREPARED
2/28/2025

ROUTE	STATE
50/291	MO
DISTRICT	SHEET NO.
KC	70

COUNTY
JACKSON

JOB NO.
J4P3196

FEDERAL PROJECT NO.
STB-3001(009)

PROJECT NO.

BRIDGE NO.

DESCRIPTION	DATE

IF A SEAL IS PRESENT ON THIS SHEET IT HAS BEEN ELECTRONICALLY SEALED AND DATED.

MISSOURI HIGHWAYS AND TRANSPORTATION COMMISSION
105 WEST CAPITOL
JEFFERSON CITY, MO 65102
1-888-ASK-MODOT (1-888-275-6636)

LEE'S SUMMIT MISSOURI

olsson
1301 BURLINGTON ST., STE. 100
NORTH KANSAS CITY, MO 64116
PHONE: 816.361.1177
CERT. OF AUTHORITY NO. 001592

SEE TYPICAL SECTION SHEET 18 OF 19 FOR TEMPORARY OPTIONAL PAVEMENT DESIGNS

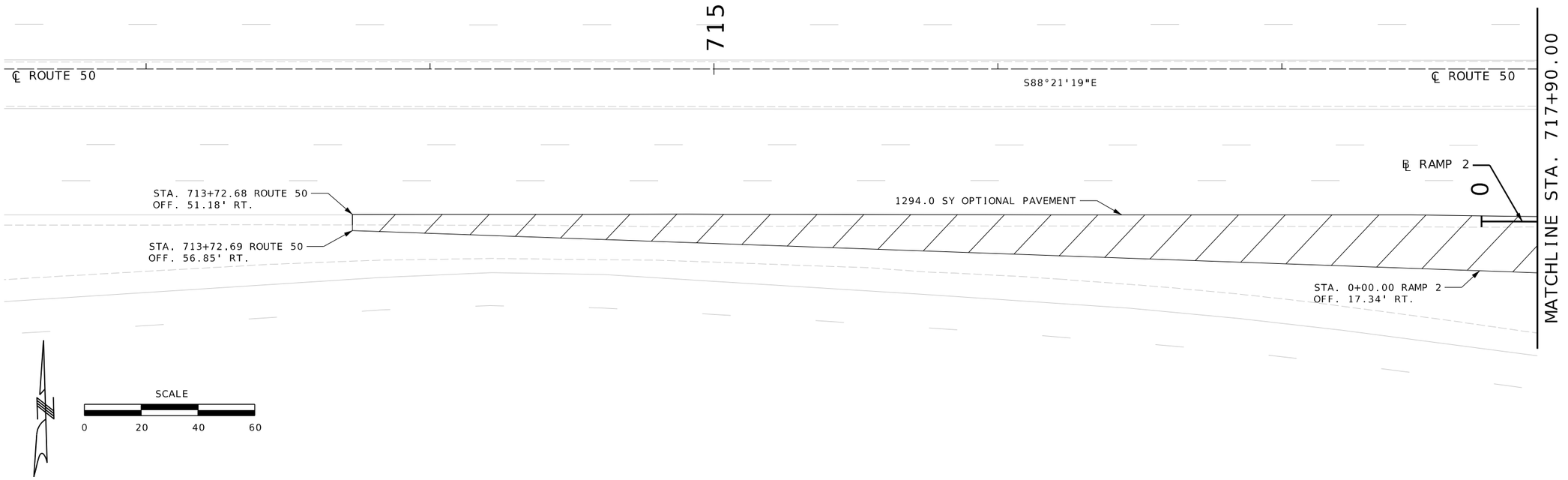

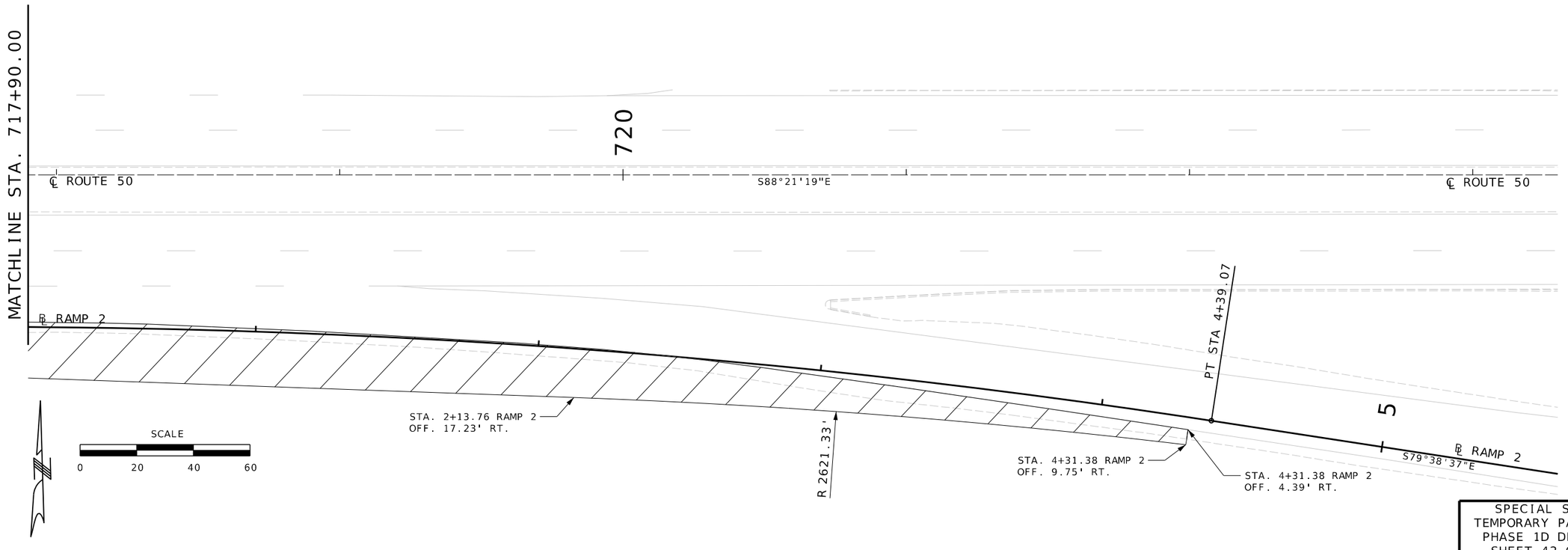

SPECIAL SHEET
TEMPORARY PAVEMENT
PHASE 1D DETAILS
SHEET 42 OF 74

Reid Catt
2025.03.01 21:37:45-06'00'

REID BRENNEN CATT
NUMBER
PE-2010019516

REID BRENNEN CATT-ENGINEER
MO# PE-2010019516

DATE PREPARED
2/28/2025

ROUTE	STATE
50/291	MO
DISTRICT	SHEET NO.
KC	71

COUNTY
JACKSON

JOB NO.
J4P3196

FEDERAL PROJECT NO.
STB-3001(009)

PROJECT NO.

BRIDGE NO.

DESCRIPTION	DATE

IF A SEAL IS PRESENT ON THIS SHEET IT HAS BEEN ELECTRONICALLY SEALED AND DATED.

MISSOURI HIGHWAYS AND TRANSPORTATION COMMISSION

105 WEST CAPITOL
JEFFERSON CITY, MO 65102
1-888-ASK-MODOT (1-888-275-6636)

LEE'S SUMMIT MISSOURI

olsson
1301 BURLINGTON ST., STE. 100
NORTH KANSAS CITY, MO 64116
PHONE: 816.361.1177
CERT. OF AUTHORITY NO. 001592

F:\2021\04501-05000\021-04786\40-Design\Microstation\J4P3196\plan_sheets\8 Special Sheets\071_SS_42_J4P3196_120.dgn 2:14:21 PM 2/28/2025

SEE TYPICAL SECTION SHEET 18 OF 19 FOR TEMPORARY OPTIONAL PAVEMENT DESIGNS

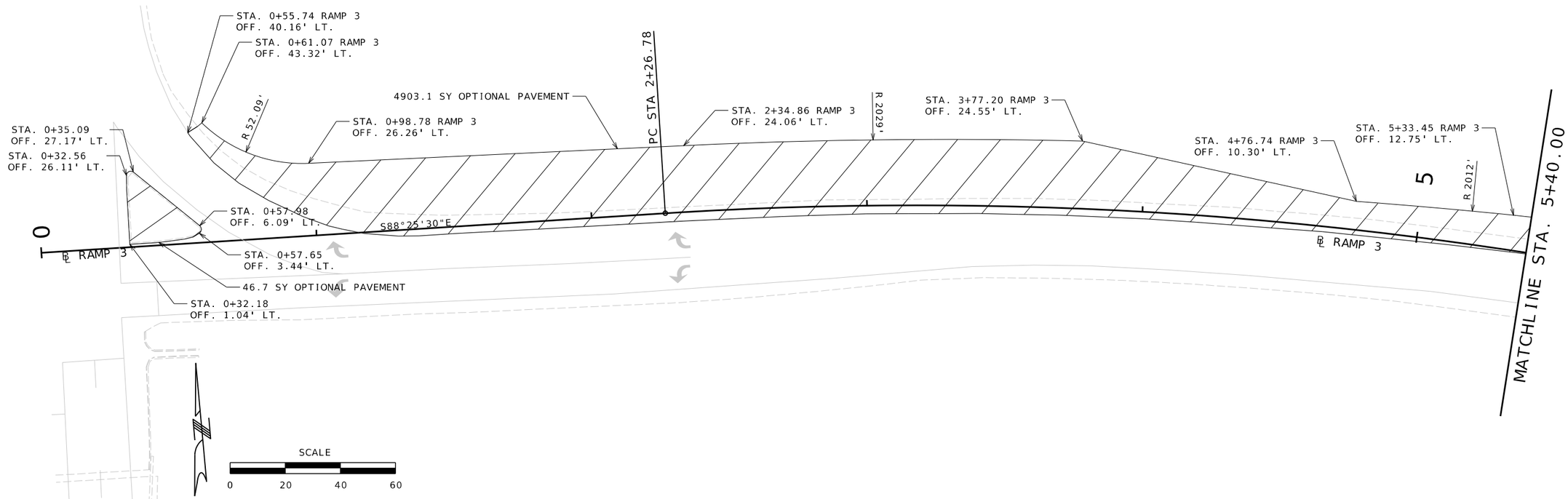

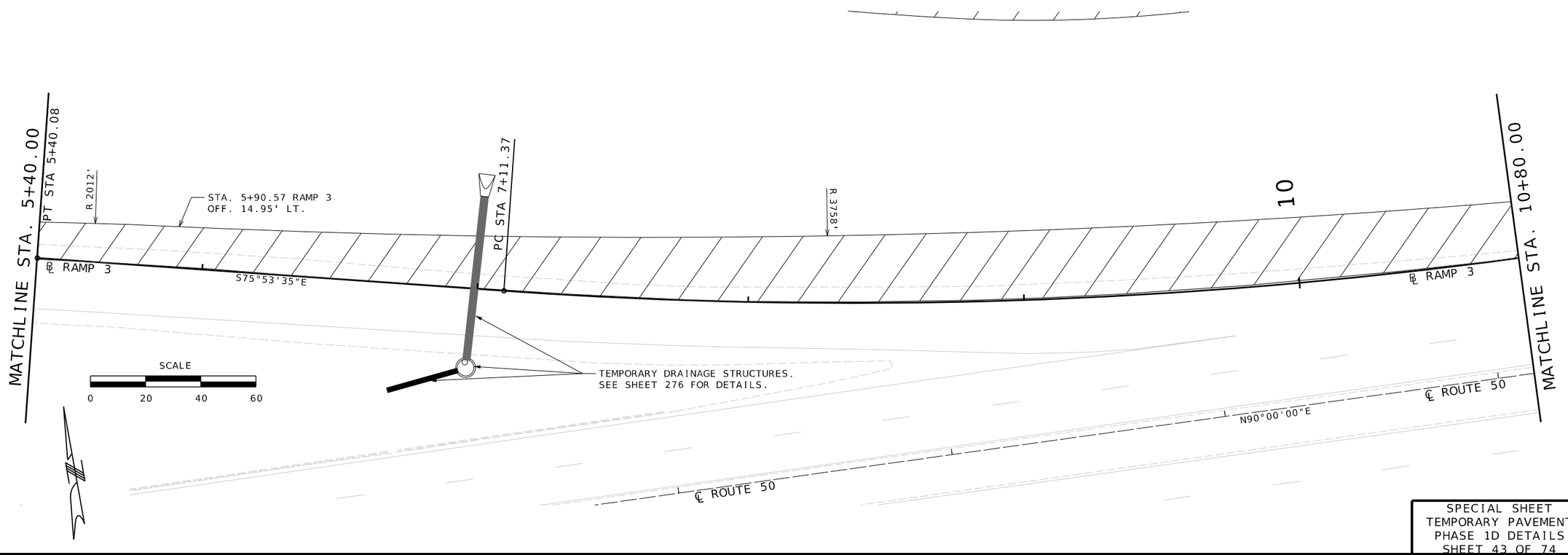

SPECIAL SHEET
TEMPORARY PAVEMENT
PHASE 1D DETAILS
SHEET 43 OF 74

Reid Catt
2025.03.01 21:37:52-06'00'

REID BRENNEN CATT
NUMBER
PE-2010019516

REID BRENNEN CATT-ENGINEER
MO# PE-2010019516

DATE PREPARED
2/28/2025

ROUTE	STATE
50/291	MO
DISTRICT	SHEET NO.
KC	72

COUNTY
JACKSON

JOB NO.
J4P3196

FEDERAL PROJECT NO.
STB-3001(009)

PROJECT NO.

BRIDGE NO.

DESCRIPTION	DATE

IF A SEAL IS PRESENT ON THIS SHEET IT HAS BEEN ELECTRONICALLY SEALED AND DATED.

MISSOURI HIGHWAYS AND TRANSPORTATION COMMISSION

105 WEST CAPITOL
JEFFERSON CITY, MO 65102
1-888-ASK-MODOT (1-888-275-6636)

LEE'S SUMMIT MISSOURI

olsson
1301 BURLINGTON ST., STE. 100
NORTH KANSAS CITY, MO 64116
PHONE: 816.361.1177
CERT. OF AUTHORITY NO. 001592

SEE TYPICAL SECTION SHEET 18 OF 19 FOR TEMPORARY OPTIONAL PAVEMENT DESIGNS

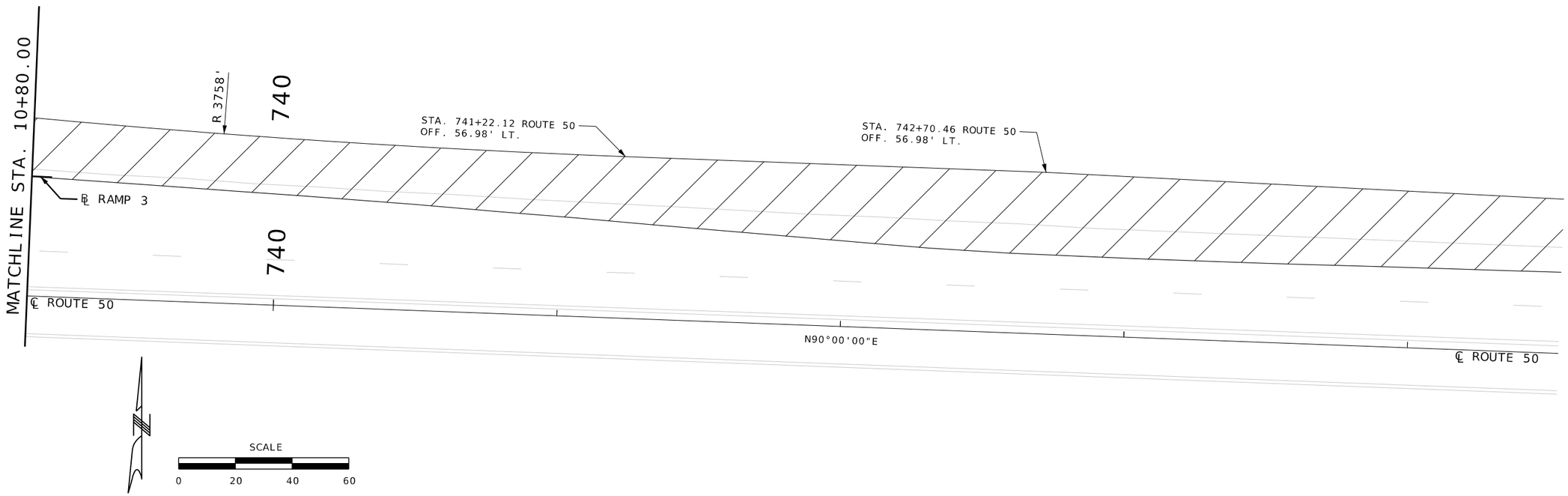

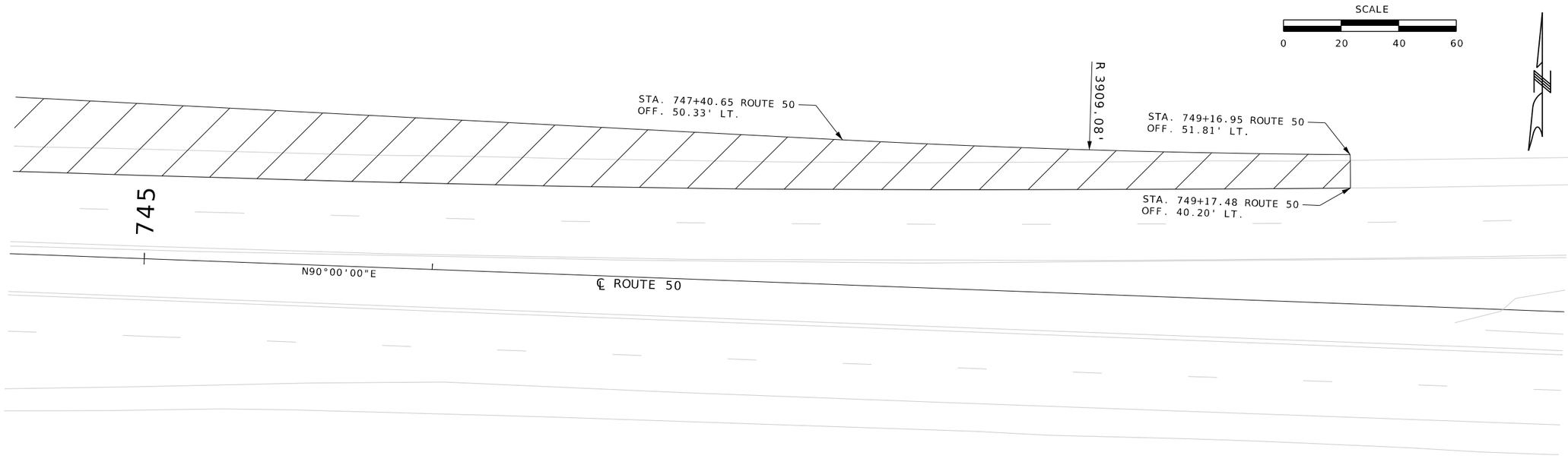

SPECIAL SHEET
TEMPORARY PAVEMENT
PHASE 1D DETAILS
SHEET 44 OF 74

Reid Catt
2025.03.01 21:37:58-06'00'

REID BRENNEN CATT
NUMBER
PE-2010019516

REID BRENNEN CATT-ENGINEER
MO# PE-2010019516

DATE PREPARED
2/28/2025

ROUTE	STATE
50/291	MO
DISTRICT	SHEET NO.
KC	73

COUNTY
JACKSON

JOB NO.
J4P3196

FEDERAL PROJECT NO.
STB-3001(009)

PROJECT NO.

BRIDGE NO.

DESCRIPTION	DATE

IF A SEAL IS PRESENT ON THIS SHEET IT HAS BEEN ELECTRONICALLY SEALED AND DATED.

MISSOURI HIGHWAYS AND TRANSPORTATION COMMISSION
105 WEST CAPITOL
JEFFERSON CITY, MO 65102
1-888-ASK-MODOT (1-888-275-6636)

LEE'S SUMMIT MISSOURI

olsson
1301 BURLINGTON ST., STE. 100
NORTH KANSAS CITY, MO 64116
PHONE: 816.361.1177
CERT. OF AUTHORITY NO. 001592

F:\2021\04501-05000\021-04786\40-Design\Microstation\J4P3196\plan_sheets\8 Special Sheets\073_SS_44_J4P3196_120.dgn 2:14:24 PM 2/28/2025

SEE TYPICAL SECTION SHEET 18 OF 19 FOR TEMPORARY OPTIONAL PAVEMENT DESIGNS

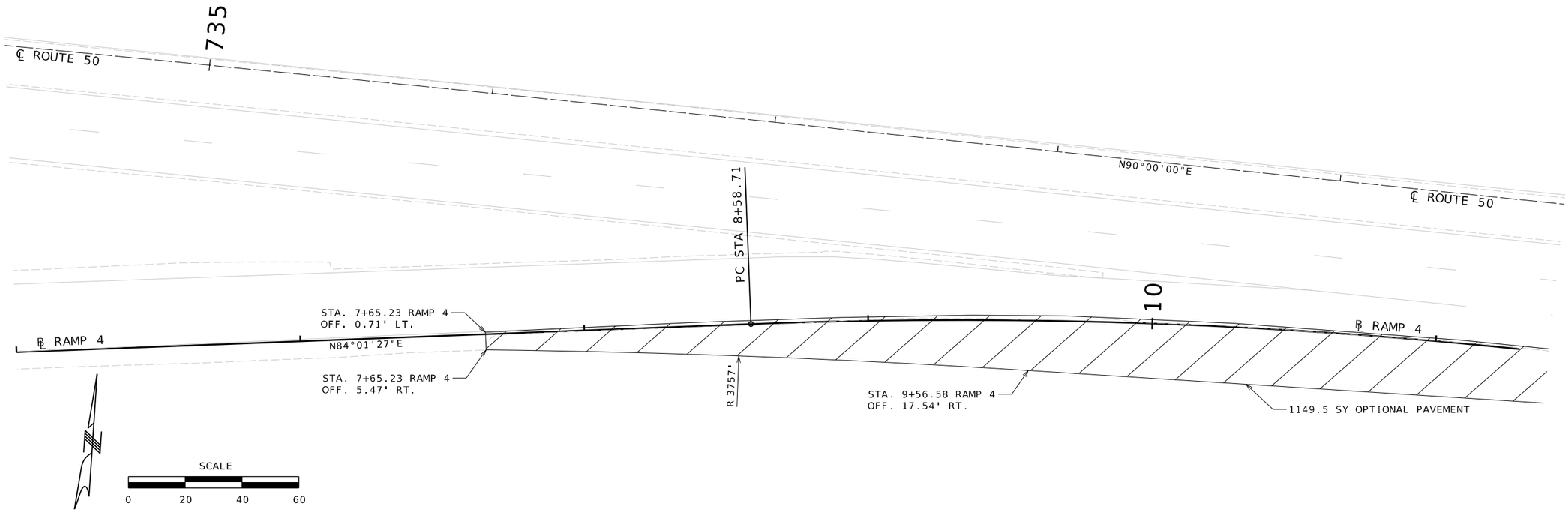

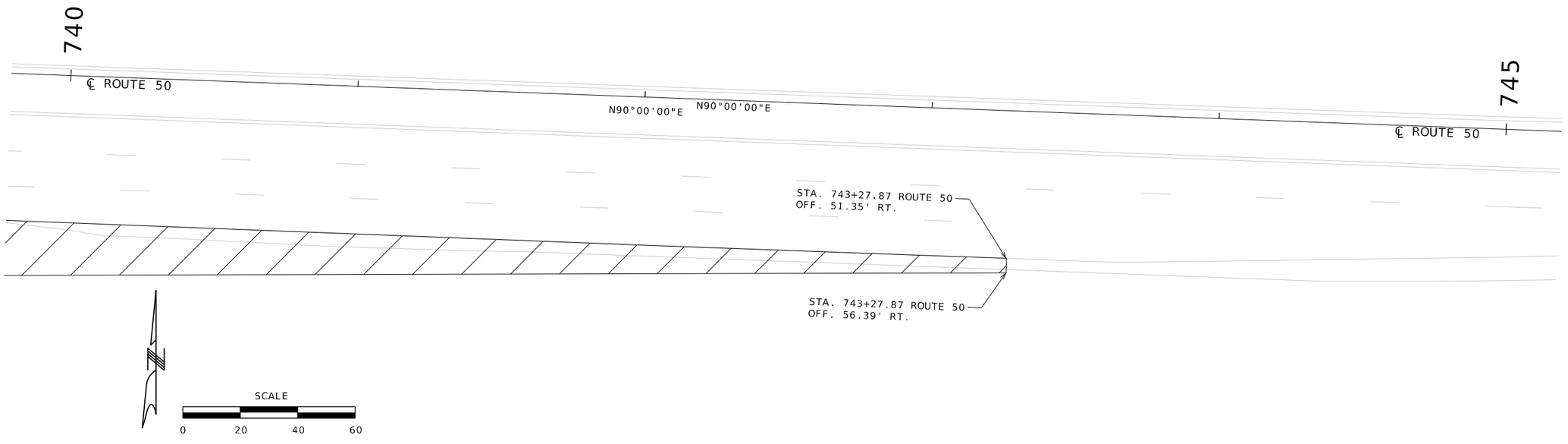

SPECIAL SHEET
TEMPORARY PAVEMENT
PHASE 1D DETAILS
SHEET 45 OF 74

Reid Catt
2025.03.01 21:38:05-06'00'

REID BRENNEN CATT
NUMBER PE-2010019516

REID BRENNEN CATT-ENGINEER
MO# PE-2010019516

DATE PREPARED
2/28/2025

ROUTE	STATE
50/291	MO
DISTRICT	SHEET NO.
KC	74

COUNTY
JACKSON

JOB NO.
J4P3196

FEDERAL PROJECT NO.
STB-3001(009)

PROJECT NO.

BRIDGE NO.

DESCRIPTION	DATE

IF A SEAL IS PRESENT ON THIS SHEET IT HAS BEEN ELECTRONICALLY SEALED AND DATED.

MISSOURI HIGHWAYS AND TRANSPORTATION COMMISSION

105 WEST CAPITOL
JEFFERSON CITY, MO 65102
1-888-ASK-MODOT (1-888-275-6636)

LEE'S SUMMIT MISSOURI

olsson
1301 BURLINGTON ST., STE. 100
NORTH KANSAS CITY, MO 64116
PHONE: 816.361.1177
CERT. OF AUTHORITY NO. 001592

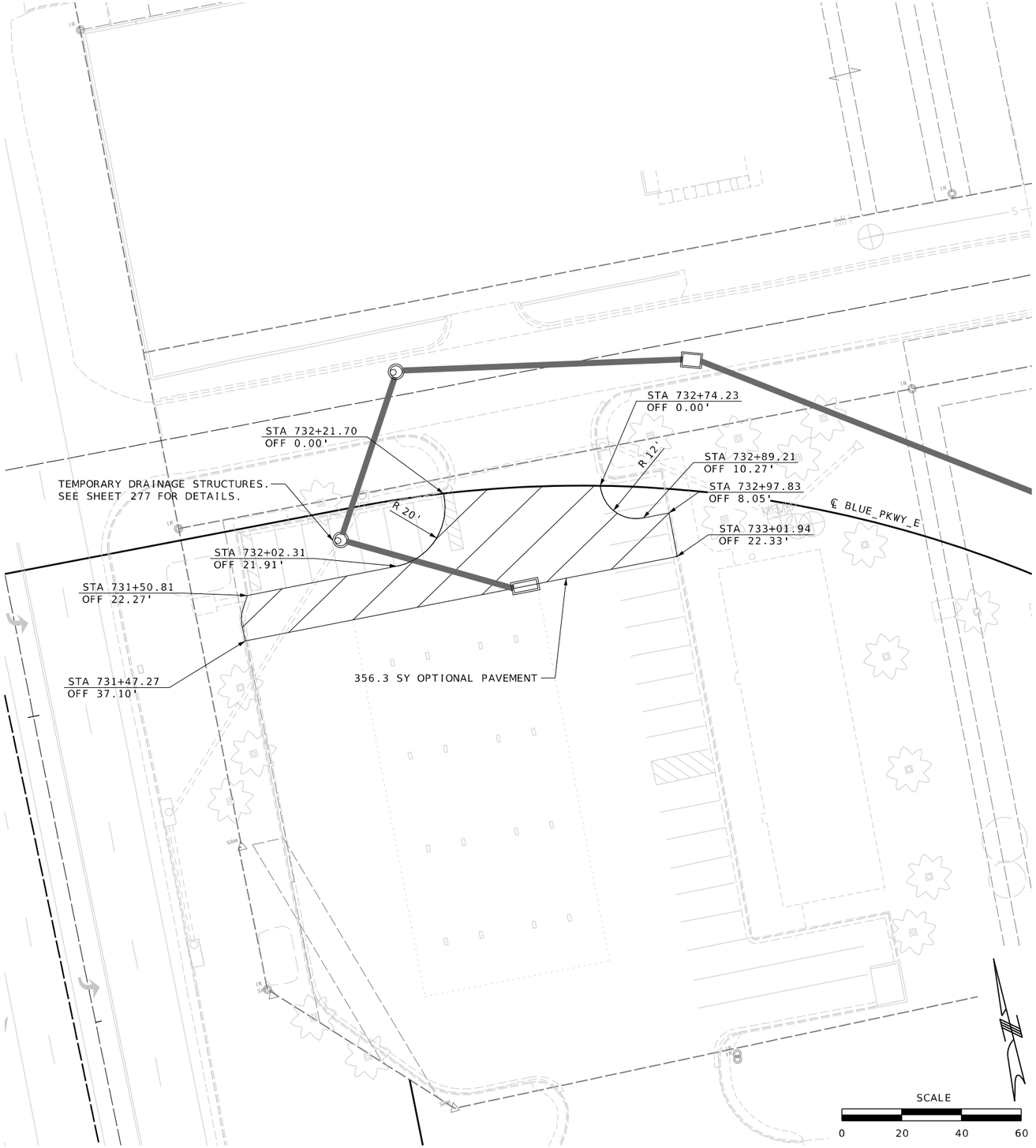

SPECIAL SHEET
TEMPORARY PAVEMENT
QUIKTRIP DETAILS
SHEET 46 OF 74

Reid Catt
2025.03.01 21:38:56-06'00'

REID BRENNEN CATT
NUMBER
PE-2010019516

REID BRENNEN CATT-ENGINEER
MO# PE-2010019516

DATE PREPARED
2/28/2025

ROUTE	STATE
50/291	MO
DISTRICT	SHEET NO.
KC	75

COUNTY
JACKSON

JOB NO.
J4P3196

FEDERAL PROJECT NO.
STB-3001(009)

PROJECT NO.

BRIDGE NO.

DESCRIPTION	DATE

IF A SEAL IS PRESENT ON THIS SHEET IT HAS BEEN ELECTRONICALLY SEALED AND DATED.

MISSOURI HIGHWAYS AND TRANSPORTATION COMMISSION
105 WEST CAPITOL
JEFFERSON CITY, MO 65102
1-888-ASK-MODOT (1-888-275-6636)

LEE'S SUMMIT MISSOURI

olsson
1301 BURLINGTON ST., STE. 100
NORTH KANSAS CITY, MO 64116
PHONE: 816.361.1177
CERT. OF AUTHORITY NO. 001592

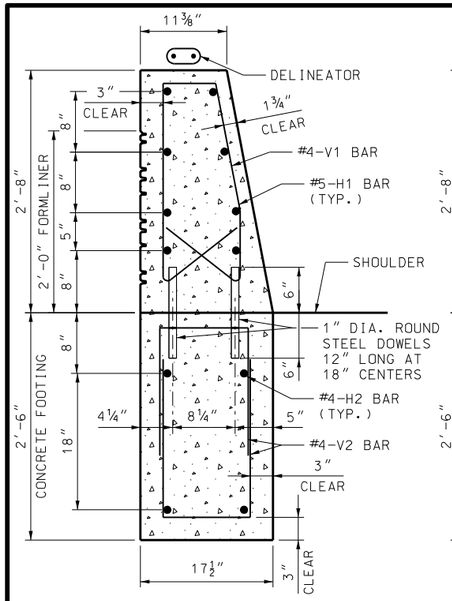

SECTION A-A

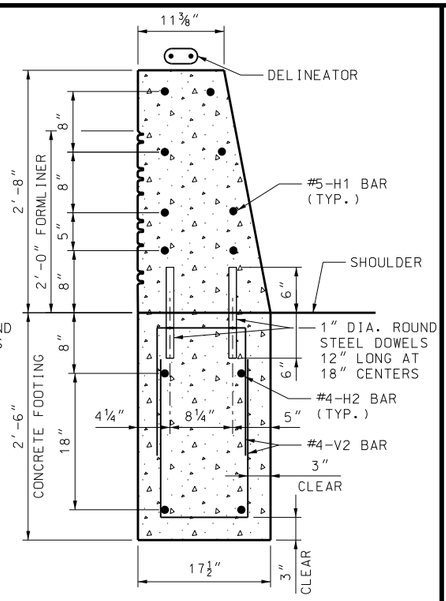

SECTION B-B

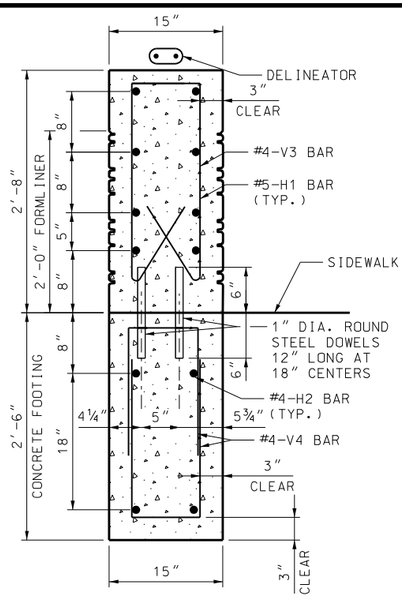

SECTION A-A

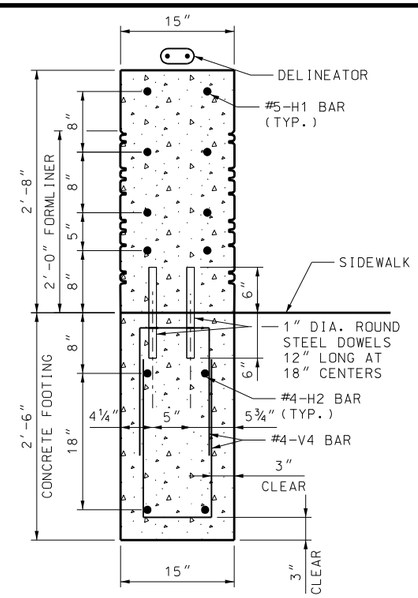

SECTION B-B

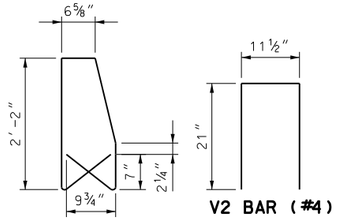

V1 BAR (#4)

V2 BAR (#4)

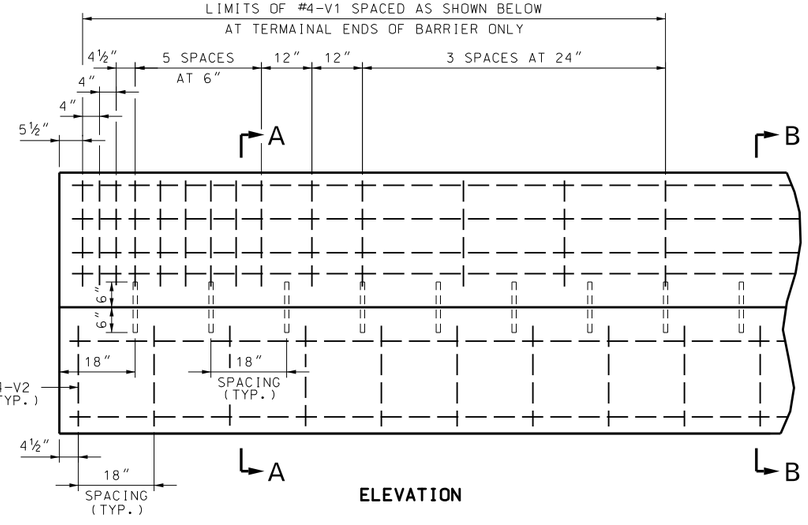

ELEVATION

TYPE H BARRIER

ELEVATION

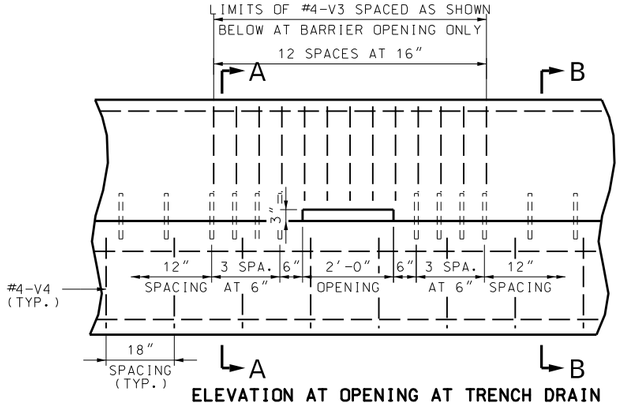

ELEVATION AT OPENING AT TRENCH DRAIN

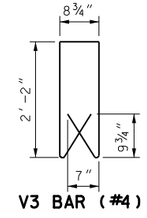

V3 BAR (#4)

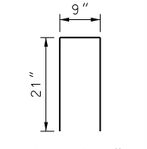

V4 BAR (#4)

PARAPET WALL

NOTES:

TOP OF BARRIER CURB SHALL BE BUILT PARALLEL TO GRADE WITH BARRIER CURB JOINTS (EXCEPT AT END BENTS) NORMAL TO GRADE.

ALL EXPOSED EDGES OF BARRIER CURB HALL HAVE EITHER A 1/2-INCH RADIUS OR A 3/8-INCH BEVEL, UNLESS OTHERWISE NOTED.

PAYMENT FOR ALL CONCRETE AND REINFORCEMENT, COMPLETE IN PLACE, WILL BE CONSIDERED COMPLETELY COVERED BY THE CONTRACT UNIT PRICE FOR TYPE H BARRIER PER LINEAR FOOT AND PARAPET WALL PER LINEAR FOOT.

CONCRETE IN THE BARRIER CURB SHALL BE CLASS B-1.

MEASUREMENT OF BARRIER CURB IS TO THE NEAREST LINEAR FOOT FOR EACH STRUCTURE, MEASURED ALONG THE TOP OF SLAB AT ROADWAY FACE.

CONCRETE TRAFFIC BARRIER DELINEATORS SHALL BE PLACED ON TOP OF THE BARRIER CURB AS SHOWN ON MISSOURI STANDARD PLANS 617.10 AND IN ACCORDANCE WITH SEC 617. DELINEATORS ON BRIDGES WITH TWO-LANE, TWO-WAY TRAFFIC SHALL HAVE RETROREFLECTIVE SHEETING ON BOTH SIDES. CONCRETE TRAFFIC BARRIER DELINEATORS WILL BE CONSIDERED COMPLETELY COVERED BY THE CONTRACT UNIT PRICE FOR TYPE H BARRIER PER LINEAR FOOT AND PARAPET WALL PER LINEAR FOOT.

ALL REINFORCEMENT SHALL BE GRADE 60 EPOXY COATED.

BAR SPLICES SHALL BE A MINIMUM OF 24 TIMES THE NOMINAL DIAMETER OF THE BAR.

MINIMUM CLEARANCE TO REINFORCING STEEL SHALL BE 1½", UNLESS OTHERWISE SHOWN.

ANY METHOD DEVICES BY THE CONTRACTOR AND APPROVED BY THE ENGINEER THAT WILL ASSURE THE LONGITUDINAL REINFORCING STEEL WILL BE POSITION ± ½ INCH AS DIMENSIONED WILL BE SATISFACTORY.

THE BARRIER SHALL NOT BE USED TO SUPPORT HIGHWAY LIGHTING POLES.

THIS BARRIER SHALL NOT BE USED FOR BRIDGE ROADWAY APPLICATIONS.

SAWED JOINTS SHALL BE SPACED AT 15'-0". SEE STANDARD PLANS FOR SAWED JOINT DETAIL.

BARRIER SHALL BE USED ONLY AT LOCATIONS SHOWN ON PLANS.

#8 REINFORCING BARS WITH AN EPOXY ANCHOR SYSTEM MAY BE SUBSTITUTED FOR SMOOTH 1" DIAMETER ROUND STEEL DOWELS.

FOR CONCRETE TRAFFIC BARRIER DELINEATION DETAILS SEE MODOT STD PLAN 903.03.

IF FORMS ARE USED FOR CONCRETE FOOTING CONSTRUCTION, PLACE BACKFILL AROUND THE COMPLETED FOOTING. CONCRETE FOOTING WILL BE CONSIDERED COMPLETELY COVERED BY THE CONTRACT UNIT PRICE FOR TYPE H BARRIER PER LINEAR FOOT AND PARAPET WALL PER LINEAR FOOT. (NO DIRECT PAY.)

THE COST OF FORM LINER WILL BE CONSIDERED COMPLETELY COVERED BY THE CONTRACT UNIT PRICE FOR FORM LINERS PER SQ. YD. THE COST OF CONCRETE NECESSARY TO FILL THE FORM LINERS SHALL BE INCLUDED IN THE CONTRACT UNIT PRICE PER SQ. YD. OF FORM LINERS. CONCRETE PAY QUANTITIES ARE CALCULATED TO THE INSIDE FACE OF FORM LINER.

THE FOLLOWING IS A LIST OF FORM LINER MANUFACTURES AND TYPES WHICH MAY BE USED. ALL FORM LINER PATTERN'S DEPTH OF RELIEF SHALL VARY UP TO 1 1/2 INCHES. THE HEIGHT OF ANY SINGLE 'STONE' SHALL BE 15 INCHES MAXIMUM.

SCOTT SYSTEMS, INC.:
FORM LINER PATTERN #167 "ASHLAR STONE"

FITZGERALD FORMLINERS:
FORM LINER PATTERN #16986 "ASHLAR STONE"

DAYTON SUPERIOR/SYMONS:
FORM LINER PATTER #1515 "ASHLAR STONE"

SPECIAL SHEET
BARRIER DETAILS
SHEET 47 OF 74

Reid Catt
2025.03.01 21:38:30-06'00'

REID BRENNEN CATT-ENGINEER
MO# PE-2010019516

DATE PREPARED
2/28/2025

ROUTE	STATE
50/291	MO
DISTRICT	SHEET NO.
KC	76

COUNTY
JACKSON

JOB NO.
J4P3196

FEDERAL PROJECT NO.
STB-3001(009)

PROJECT NO.

BRIDGE NO.

DESCRIPTION	DATE

IF A SEAL IS PRESENT ON THIS SHEET IT HAS BEEN ELECTRONICALLY SEALED AND DATED.

MISSOURI HIGHWAYS AND TRANSPORTATION COMMISSION
105 WEST CAPITOL
JEFFERSON CITY, MO 65102
1-888-ASK-MODOT (1-888-275-6636)

LEE'S SUMMIT MISSOURI

olsson
1301 BURLINGTON ST., STE. 100
NORTH KANSAS CITY, MO 64116
PHONE: 816.361.1177
CERT. OF AUTHORITY NO. 001592

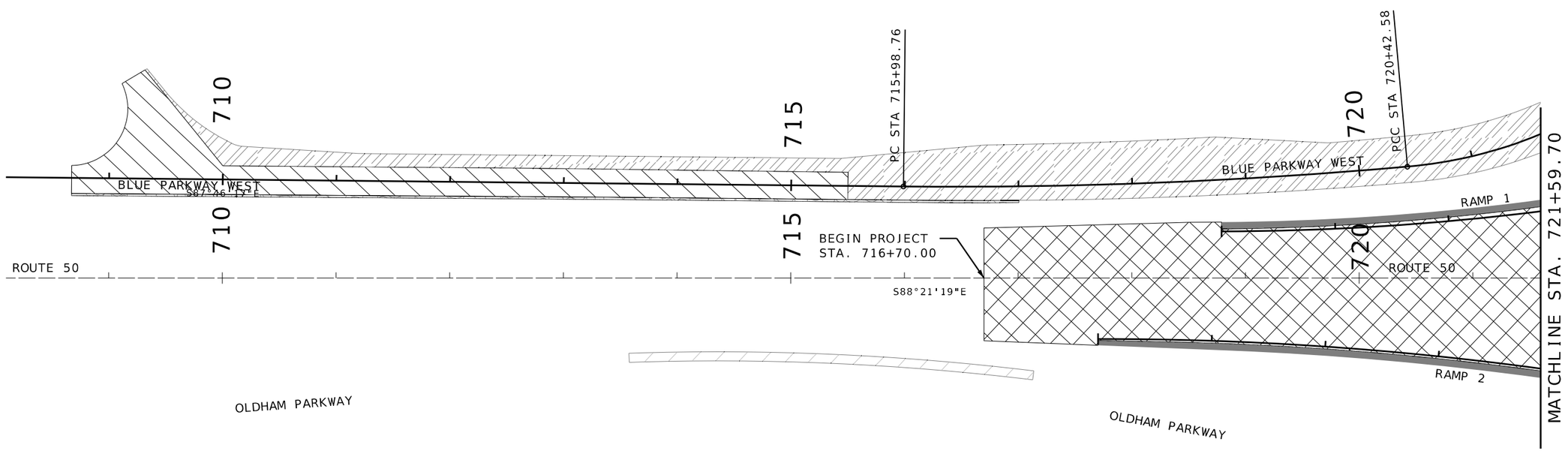

LEGEND

- ROUTE 291 & RAMPS 1 & 2 ALTERNATE PAVEMENT
- ASPHALT PAVEMENT OVERLAY
- BLUE PARKWAY ALTERNATE PAVEMENT
- ROUTE 50 ALTERNATE PAVEMENT
- RAMPS 3 & 4 ALTERNATE PAVEMENT
- A2 SHOULDERS
- CONCRETE APPROACH PAVEMENT

SCALE
0 50 100 150

SPECIAL SHEET
PAVEMENT LOCATION
DETAILS
SHEET 48 OF 74

Reid Catt
2025.03.01 21:38:10-06'00'

REID BRENNEN CATT-ENGINEER
MO# PE-2010019516

DATE PREPARED
2/28/2025

ROUTE	STATE
50/291	MO
DISTRICT	SHEET NO.
KC	77

COUNTY
JACKSON

JOB NO.
J4P3196

FEDERAL PROJECT NO.
STB-3001(009)

PROJECT NO.

BRIDGE NO.

DESCRIPTION | DATE

IF A SEAL IS PRESENT ON THIS SHEET IT HAS BEEN ELECTRONICALLY SEALED AND DATED.

MISSOURI HIGHWAYS AND TRANSPORTATION COMMISSION

105 WEST CAPITOL
JEFFERSON CITY, MO 65102
1-888-ASK-MODOT (1-888-275-6636)

LEE'S SUMMIT MISSOURI

olsson
1301 BURLINGTON ST., STE. 100
NORTH KANSAS CITY, MO 64116
PHONE: 816.361.1177
CERT. OF AUTHORITY NO. 001592

F:\2021\04501-05000\021-04786\40-Design\Microstation\J4P3196\plan_sheets\8 Special Sheets\077_SS_48_J4P3196_150.dgn 2:14:34 PM 2/28/2025

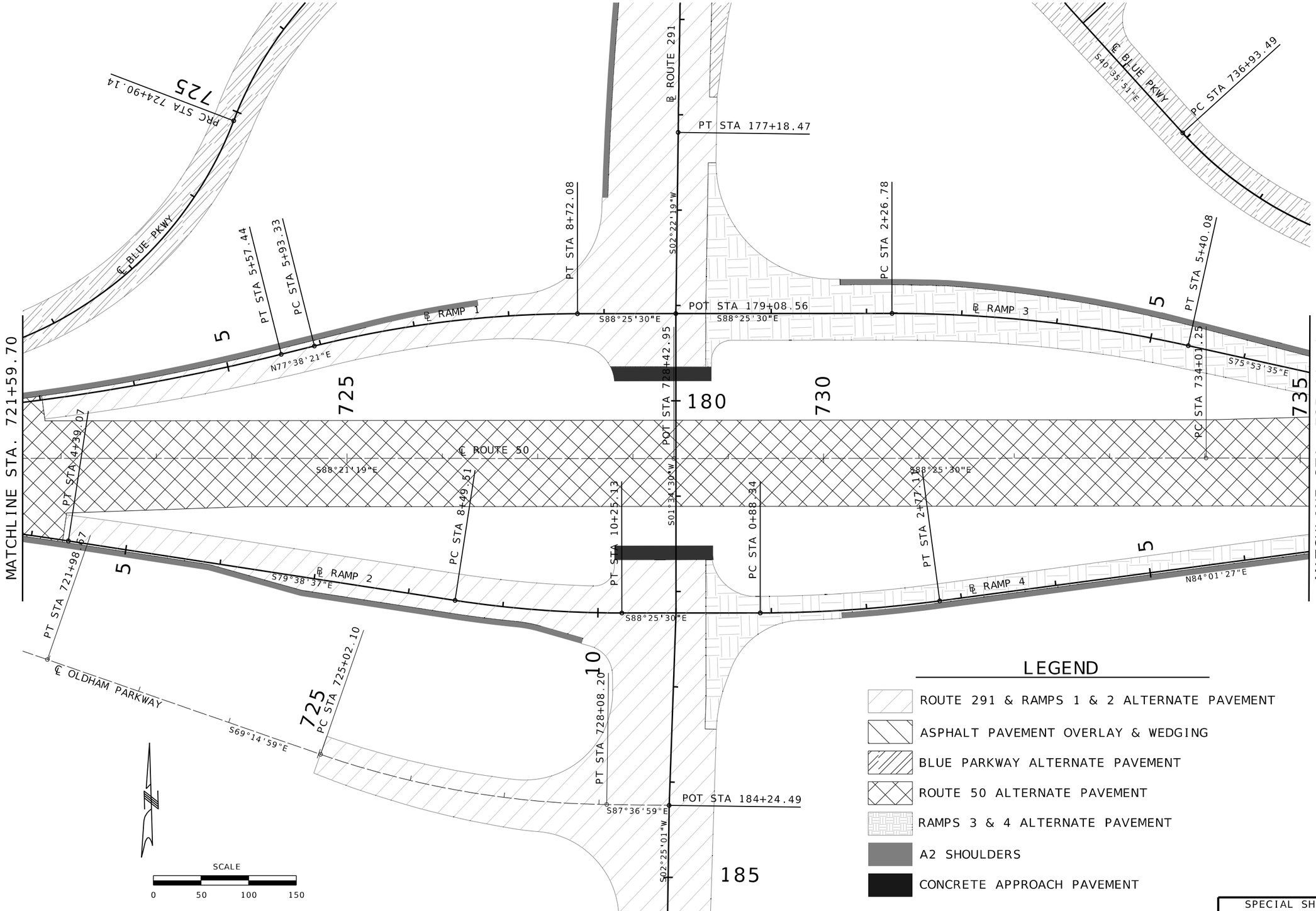

LEGEND

- ROUTE 291 & RAMPS 1 & 2 ALTERNATE PAVEMENT
- ASPHALT PAVEMENT OVERLAY & WEDGING
- BLUE PARKWAY ALTERNATE PAVEMENT
- ROUTE 50 ALTERNATE PAVEMENT
- RAMPS 3 & 4 ALTERNATE PAVEMENT
- A2 SHOULDERS
- CONCRETE APPROACH PAVEMENT

SPECIAL SHEET
PAVEMENT LOCATION
DETAILS
SHEET 49 OF 74

Reid Catt
2025.03.01 21:39:03-06'00'

REID BRENNEN CATT-ENGINEER
MO# PE-2010019516

DATE PREPARED
2/28/2025

ROUTE	STATE
50/291	MO
DISTRICT	SHEET NO.
KC	78

COUNTY
JACKSON

JOB NO.
J4P3196

FEDERAL PROJECT NO.
STB-3001(009)

PROJECT NO.

BRIDGE NO.

DESCRIPTION | DATE

IF A SEAL IS PRESENT ON THIS SHEET IT HAS BEEN ELECTRONICALLY SEALED AND DATED.

MISSOURI HIGHWAYS AND TRANSPORTATION COMMISSION
105 WEST CAPITOL
JEFFERSON CITY, MO 65102
1-888-ASK-MODOT (1-888-275-6636)

LEE'S SUMMIT MISSOURI

olsson
1301 BURLINGTON ST., STE. 100
NORTH KANSAS CITY, MO 64116
PHONE: 816.361.1177
CERT. OF AUTHORITY NO. 001592

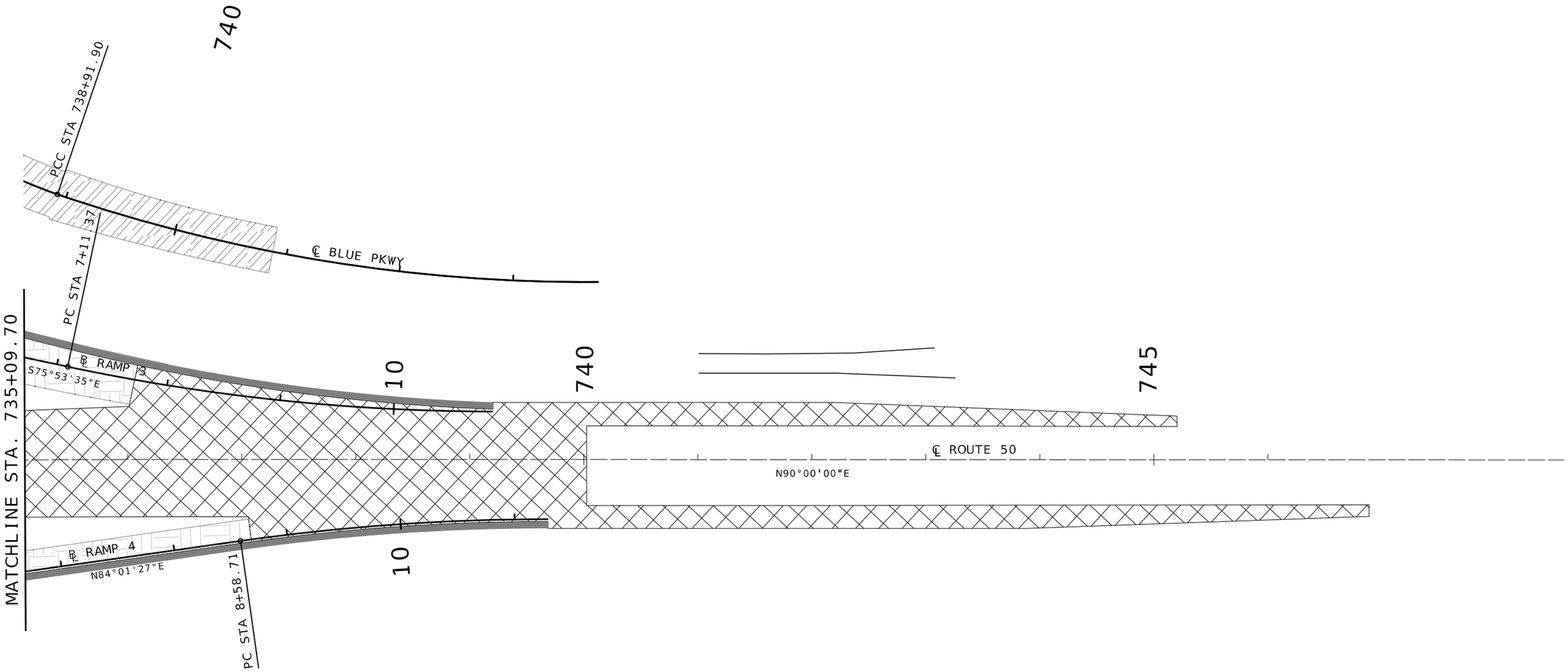

LEGEND

- ROUTE 291 & RAMPS 1 & 2 ALTERNATE PAVEMENT
- ASPHALT PAVEMENT
- BLUE PARKWAY ALTERNATE PAVEMENT
- ROUTE 50 ALTERNATE PAVEMENT
- RAMPS 3 & 4 ALTERNATE PAVEMENT
- A2 SHOULDERS
- CONCRETE APPROACH PAVEMENT

SPECIAL SHEET
PAVEMENT LOCATION
DETAILS
SHEET 50 OF 74

Reid Catt
2025.03.01 21:38:51-06'00'

REID BRENNEN CATT-ENGINEER
MO# PE-2010019516

DATE PREPARED
2/28/2025

ROUTE	STATE
50/291	MO
DISTRICT	SHEET NO.
KC	79

COUNTY
JACKSON

JOB NO.
J4P3196

FEDERAL PROJECT NO.
STB-3001(009)

PROJECT NO.

BRIDGE NO.

DESCRIPTION	DATE

IF A SEAL IS PRESENT ON THIS SHEET IT HAS BEEN ELECTRONICALLY SEALED AND DATED.

MISSOURI HIGHWAYS AND TRANSPORTATION COMMISSION
105 WEST CAPITOL
JEFFERSON CITY, MO 65102
1-888-ASK-MODOT (1-888-275-6636)

LEE'S SUMMIT MISSOURI

olsson
1301 BURLINGTON ST., STE. 100
NORTH KANSAS CITY, MO 64116
PHONE: 816.361.1177
CERT. OF AUTHORITY NO. 001592

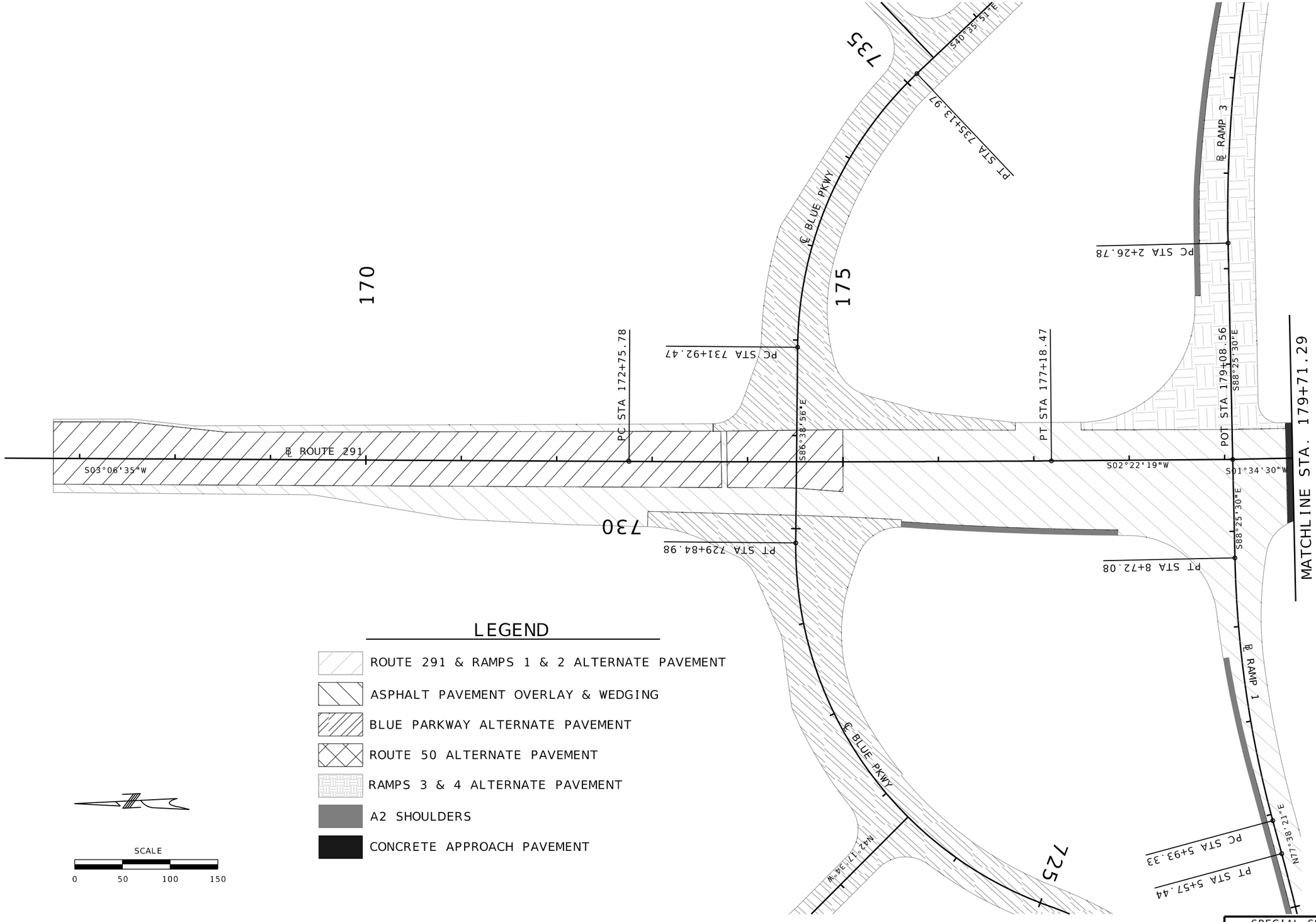

Reid Catt
2025.03.01 21:38:18-06'00'

REID BRENNEN CATT
NUMBER
PE-2010019516

REID BRENNEN CATT-ENGINEER
MO# PE-2010019516

DATE PREPARED
2/28/2025

ROUTE	STATE
50/291	MO
DISTRICT	SHEET NO.
KC	80

COUNTY
JACKSON

JOB NO.
J4P3196

FEDERAL PROJECT NO.
STB-3001(009)

PROJECT NO.

BRIDGE NO.

IF A SEAL IS PRESENT ON THIS SHEET IT HAS BEEN ELECTRONICALLY SEALED AND DATED.

DESCRIPTION

DATE

MISSOURI HIGHWAYS AND TRANSPORTATION COMMISSION

105 WEST CAPITOL
JEFFERSON CITY, MO 65102
1-888-ASK-MODOT (1-888-275-6636)

LEE'S SUMMIT MISSOURI

olsson
1301 BURLINGTON ST., STE. 100
NORTH KANSAS CITY, MO 64116
PHONE: 816.361.1177
CERT. OF AUTHORITY NO. 001592

SPECIAL SHEET
PAVEMENT LOCATION
DETAILS
SHEET 51 OF 74

F:\2021\04501-05000\021-04786\40-Design\Microstation\J4P3196\plan_sheets\8 Special Sheets\080_SS_51_J4P3196_150.dgn 2:14:39 PM 2/28/2025

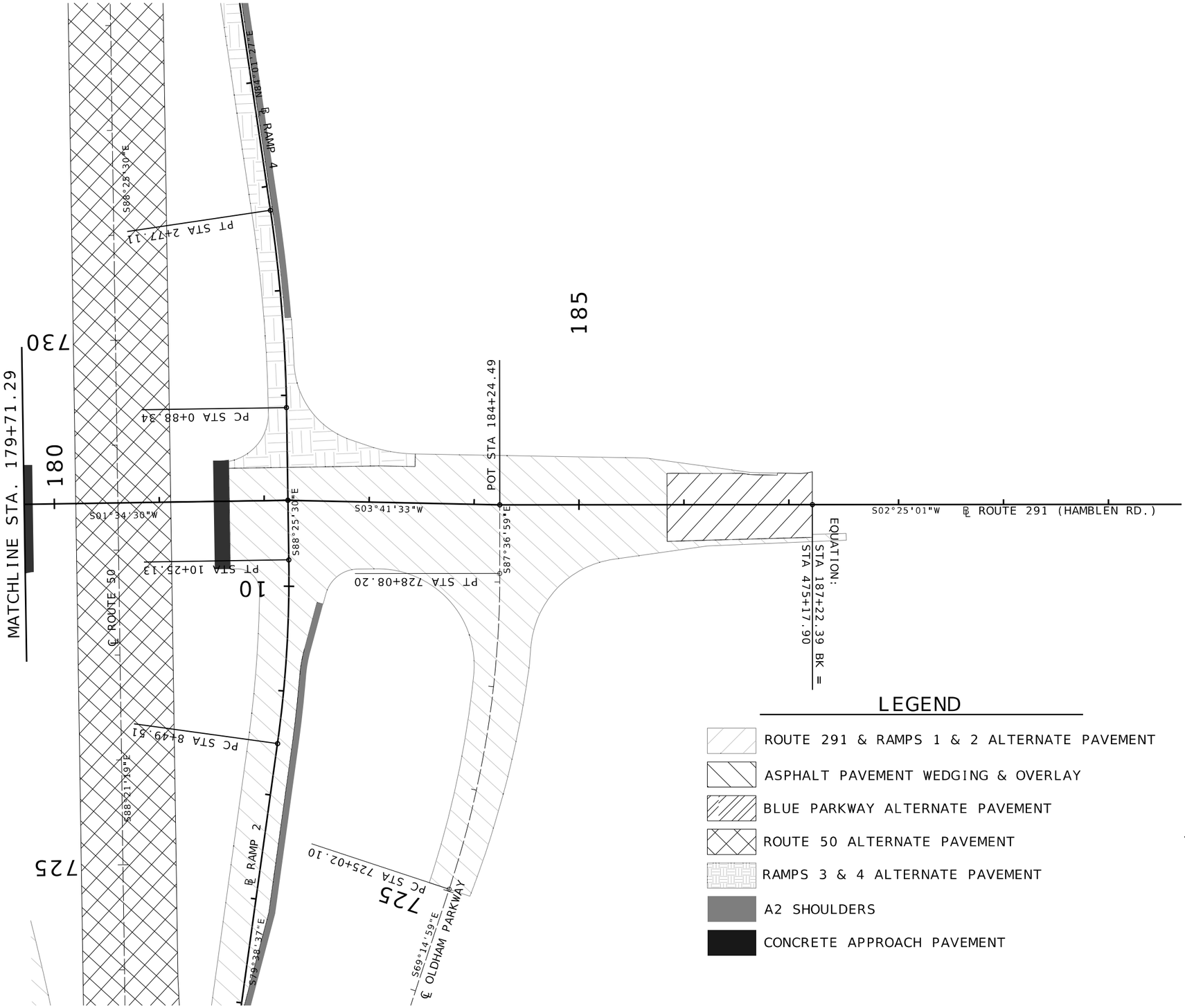

LEGEND

- ROUTE 291 & RAMPS 1 & 2 ALTERNATE PAVEMENT
- ASPHALT PAVEMENT WEDGING & OVERLAY
- BLUE PARKWAY ALTERNATE PAVEMENT
- ROUTE 50 ALTERNATE PAVEMENT
- RAMPS 3 & 4 ALTERNATE PAVEMENT
- A2 SHOULDERS
- CONCRETE APPROACH PAVEMENT

SCALE
0 50 100 150

SPECIAL SHEET
PAVEMENT LOCATION
DETAILS
SHEET 52 OF 74

Reid Catt
2025.03.01 21:38:37-06'00'

REID BRENNEN CATT
NUMBER
PE-2010019516

REID BRENNEN CATT-ENGINEER
MO# PE-2010019516

DATE PREPARED
2/28/2025

ROUTE	STATE
50/291	MO
DISTRICT	SHEET NO.
KC	81

COUNTY
JACKSON

JOB NO.
J4P3196

FEDERAL PROJECT NO.
STB-3001(009)

PROJECT NO.

BRIDGE NO.

DESCRIPTION	DATE

IF A SEAL IS PRESENT ON THIS SHEET IT HAS BEEN ELECTRONICALLY SEALED AND DATED.

MISSOURI HIGHWAYS AND TRANSPORTATION COMMISSION
105 WEST CAPITOL
JEFFERSON CITY, MO 65102
1-888-ASK-MODOT (1-888-275-6636)

LEE'S SUMMIT MISSOURI

olsson
1301 BURLINGTON ST., STE. 100
NORTH KANSAS CITY, MO 64116
PHONE: 816.361.1177
CERT. OF AUTHORITY NO. 001592

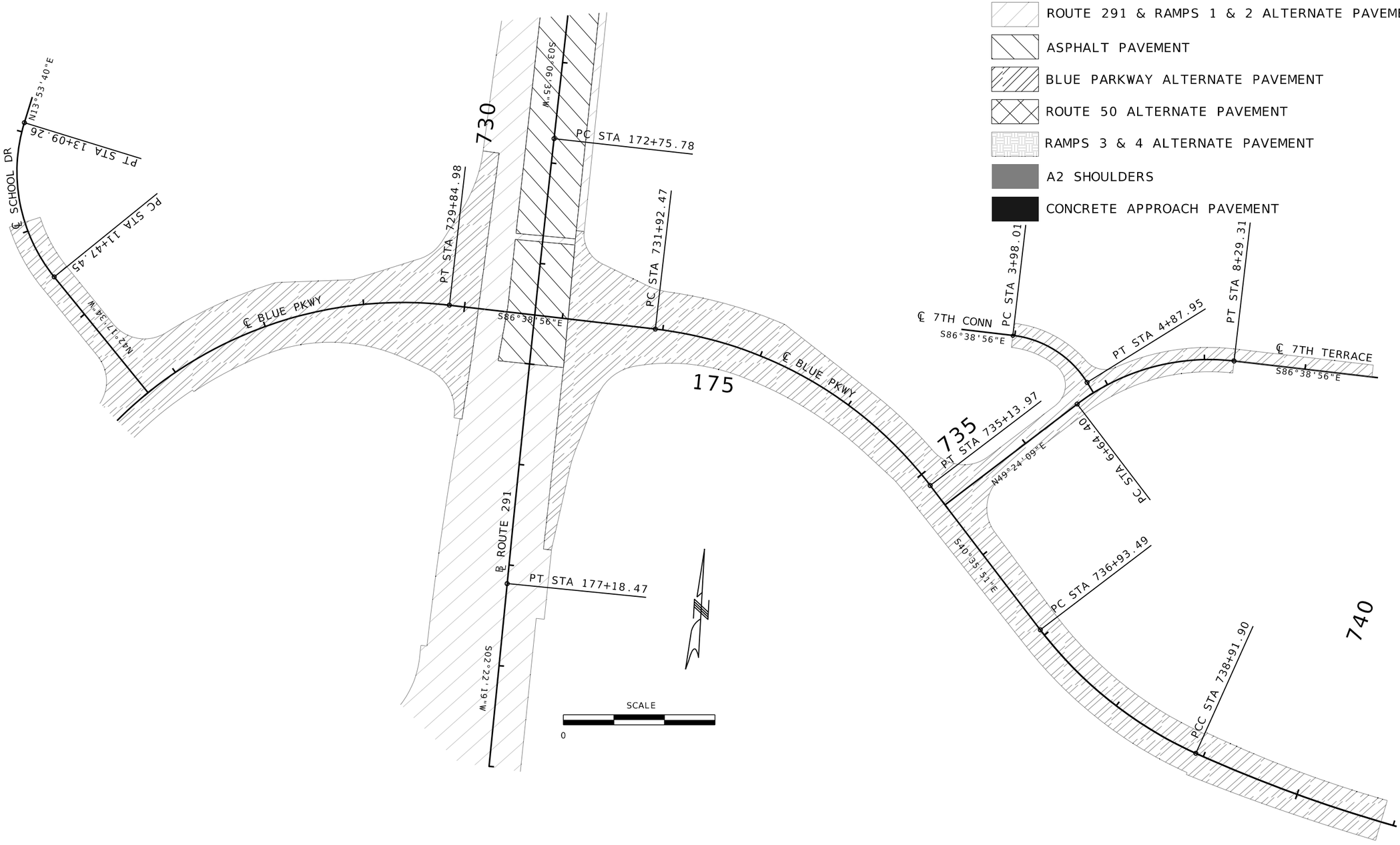

Reid Catt
2025.03.01 21:39:12-06'00'

REID BRENNEN CATT
NUMBER
PE-2010019516

REID BRENNEN CATT-ENGINEER
MO# PE-2010019516

DATE PREPARED
2/28/2025

ROUTE	STATE
50/291	MO
DISTRICT	SHEET NO.
KC	82

COUNTY
JACKSON

JOB NO.
J4P3196

FEDERAL PROJECT NO.
STB-3001(009)

PROJECT NO.

BRIDGE NO.

DESCRIPTION	DATE

IF A SEAL IS PRESENT ON THIS SHEET IT HAS BEEN ELECTRONICALLY SEALED AND DATED.

MISSOURI HIGHWAYS AND TRANSPORTATION COMMISSION

105 WEST CAPITOL
JEFFERSON CITY, MO 65102
1-888-ASK-MODOT (1-888-275-6636)

LEE'S SUMMIT MISSOURI

olsson
1301 BURLINGTON ST., STE. 100
NORTH KANSAS CITY, MO 64116
PHONE: 816.361.1177
CERT. OF AUTHORITY NO. 001592

SPECIAL SHEET
PAVEMENT LOCATION
DETAILS
SHEET 53 OF 74

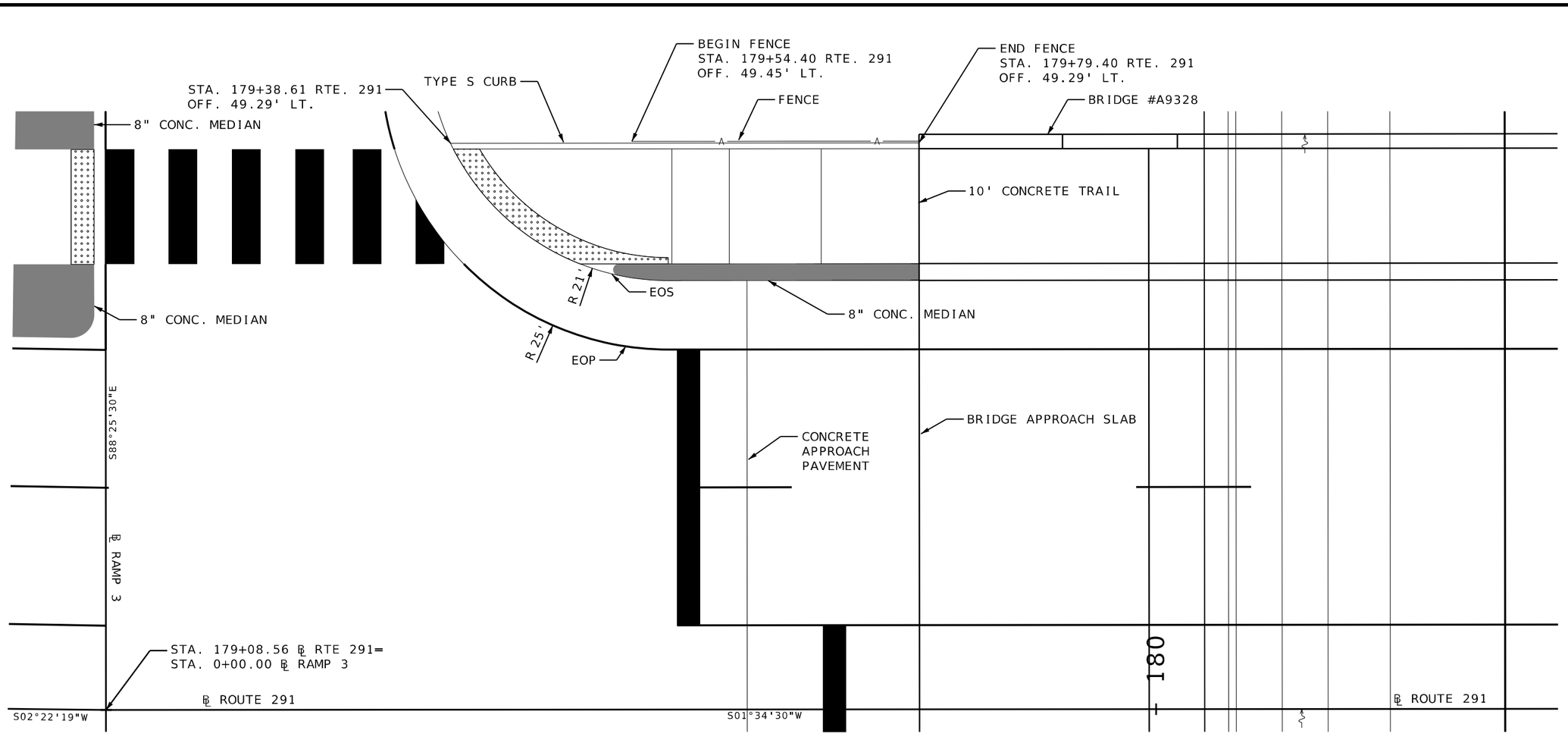

Reid Catt
2025.03.01 21:38:44-06'00'

REID BRENNEN CATT-ENGINEER
MO# PE-2010019516

DATE PREPARED
2/28/2025

ROUTE	STATE
50/291	MO
DISTRICT	SHEET NO.
KC	83

COUNTY
JACKSON

JOB NO.
J4P3196

FEDERAL PROJECT NO.
STB-3001(009)

PROJECT NO.

BRIDGE NO.

DESCRIPTION	DATE

IF A SEAL IS PRESENT ON THIS SHEET IT HAS BEEN ELECTRONICALLY SEALED AND DATED.

MISSOURI HIGHWAYS AND TRANSPORTATION COMMISSION
105 WEST CAPITOL
JEFFERSON CITY, MO 65102
1-888-ASK-MODOT (1-888-275-6636)

LEE'S SUMMIT MISSOURI

olsson
1301 BURLINGTON ST., STE. 100
NORTH KANSAS CITY, MO 64116
PHONE: 816.361.1177
CERT. OF AUTHORITY NO. 001592

SPECIAL SHEET
PARAPET WALL DETAILS
SHEET 54 OF 74

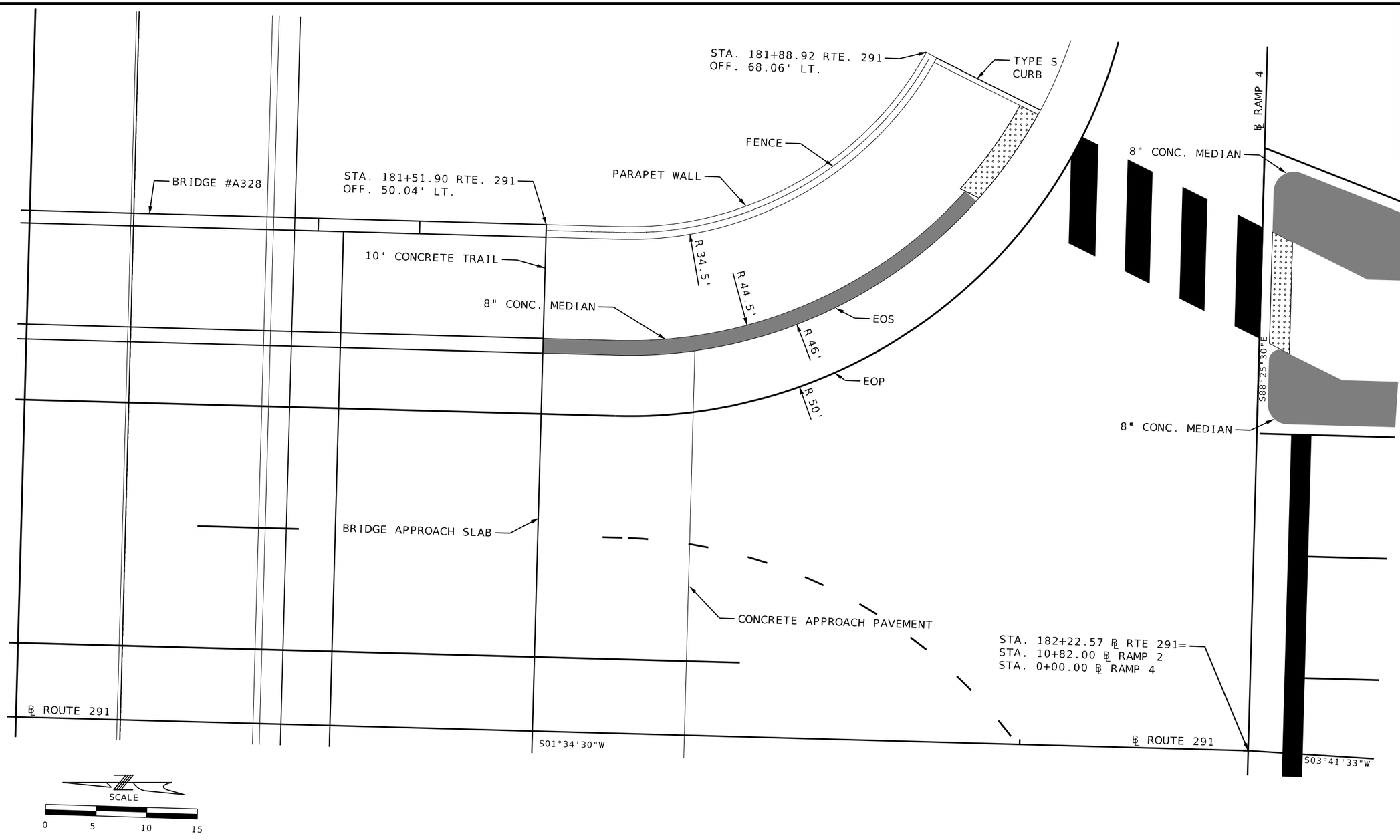

Reid Catt
2025.03.01 21:37:38-06'00'

REID BRENNEN CATT-ENGINEER
MO# PE-2010019516

DATE PREPARED
2/28/2025

ROUTE	STATE
50/291	MO
DISTRICT	SHEET NO.
KC	84

COUNTY
JACKSON

JOB NO.
J4P3196

FEDERAL PROJECT NO.
STB-3001(009)

PROJECT NO.

BRIDGE NO.

IF A SEAL IS PRESENT ON THIS SHEET IT HAS BEEN ELECTRONICALLY SEALED AND DATED.

DESCRIPTION	DATE

MISSOURI HIGHWAYS AND TRANSPORTATION COMMISSION
105 WEST CAPITOL
JEFFERSON CITY, MO 65102
1-888-ASK-MODOT (1-888-275-6636)

LEE'S SUMMIT MISSOURI

olsson
1301 BURLINGTON ST., STE. 100
NORTH KANSAS CITY, MO 64116
PHONE: 816.361.1177
CERT. OF AUTHORITY NO. 001592

SPECIAL SHEET
PARAPET WALL DETAILS
SHEET 55 OF 74

EXIST. EASEMENT

NEW R/W

EXIST. R/W

PERMANENT EASEMENT

TEMPORARY CONSTRUCTION EASEMENT

NEW R/W

PERMANENT EASEMENT

STA 723+27.02
OFF 0.00'
℄ BLUE_PKWY_W

STA 723+57.11
OFF 53.10'
℄ BLUE_PKWY_W

STA 723+61.63
OFF 58.68'
℄ BLUE_PKWY_W

STA 723+58.28
OFF 92.40'
℄ BLUE_PKWY_W

STA 723+30.17
OFF 80.15'
℄ BLUE_PKWY_W

STA 722+52.28
OFF 57.97'
℄ BLUE_PKWY_W

STA 6+01.33
OFF 99.52'
℄ RAMP_1

STA 5+30.41
OFF 81.08'
℄ RAMP_1

STA 5+52.57
OFF 49.21'
℄ RAMP_1

STA 4+94.24
OFF 71.31'
℄ RAMP_1

STA 5+53.08
OFF 41.00'
℄ RAMP_1

STA 4+01.59
OFF 45.75'
℄ RAMP_1

STA 4+01.91
OFF 38.65'
℄ RAMP_1

STA 3+44.62
OFF 23.88'
℄ RAMP_1

STA 5+37.47
OFF 11.92'
℄ RAMP_1

PCC STA 720+42.58

PT STA 5+57.44

PC STA 5+93.33

℄ BLUE_PKWY_W

℄ RAMP_1

℄ ROUTE 50

N77°38'21"E

S88°21'19"E

1045'
1040'
1035'
1030'

SCALE
0 20 40 60

DETENTION POND
GRADING
SPECIAL SHEET
SHEET 56 OF 74

Reid Catt
2025.03.01 21:40:58-06'00'

REID BRENNEN CATT-ENGINEER
MO# PE-2010019516

DATE PREPARED
2/28/2025

ROUTE	STATE
50/291	MO
DISTRICT	SHEET NO.
KC	85

COUNTY
JACKSON

JOB NO.
J4P3196

FEDERAL PROJECT NO.
STB-3001(009)

PROJECT NO.

BRIDGE NO.

DESCRIPTION

DATE

IF A SEAL IS PRESENT ON THIS SHEET IT HAS BEEN ELECTRONICALLY SEALED AND DATED.

MISSOURI HIGHWAYS AND TRANSPORTATION COMMISSION

105 WEST CAPITOL
JEFFERSON CITY, MO 65102
1-888-ASK-MODOT (1-888-275-6636)

LEE'S SUMMIT MISSOURI

olsson
1301 BURLINGTON ST., STE. 100
NORTH KANSAS CITY, MO 64116
PHONE: 816.361.1177
CERT. OF AUTHORITY NO. 001592

SECTION A-A

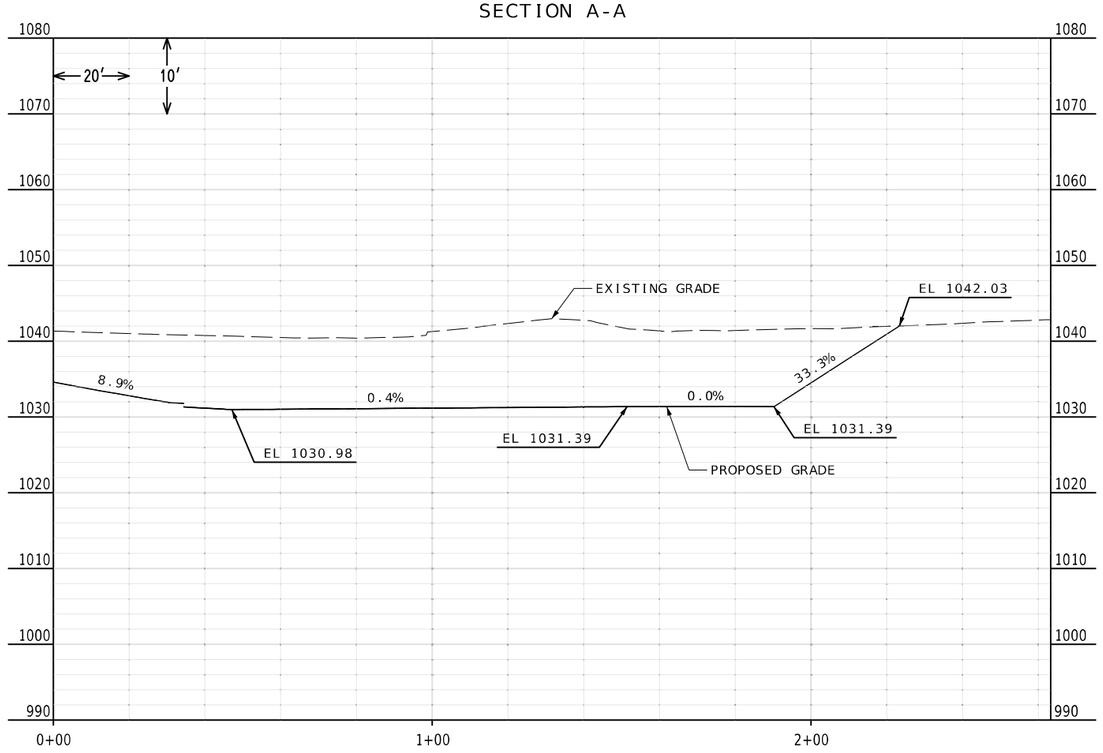

SECTION B-B

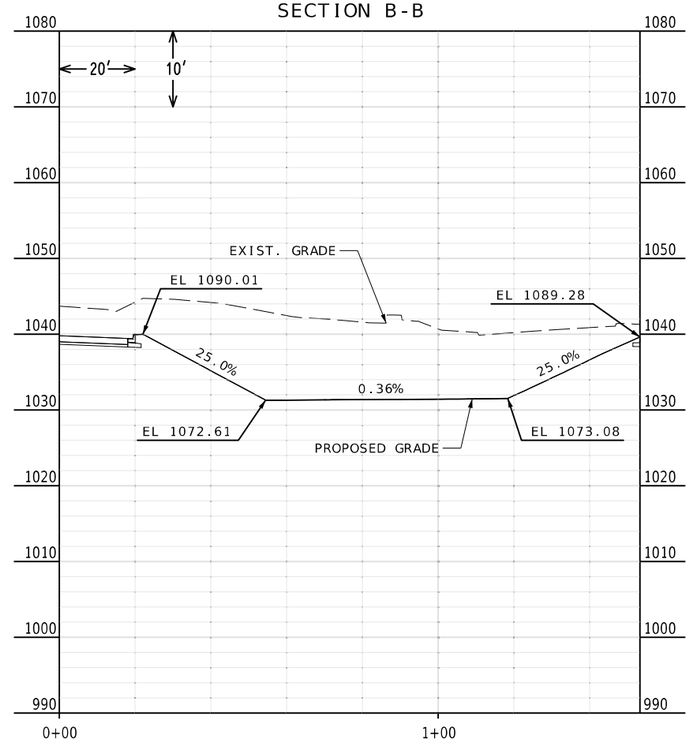

DETENTION POND
GRADING
SPECIAL SHEET
SHEET 57 OF 74

Reid Catt
2025.03.01 21:41:04-06'00'

REID BRENNEN CATT-ENGINEER
MO# PE-2010019516

DATE PREPARED
2/28/2025

ROUTE	STATE
50/291	MO
DISTRICT	SHEET NO.
KC	86

COUNTY
JACKSON

JOB NO.
J4P3196

FEDERAL PROJECT NO.
STB-3001(009)

PROJECT NO.

BRIDGE NO.

DESCRIPTION	DATE

IF A SEAL IS PRESENT ON THIS SHEET IT HAS BEEN ELECTRONICALLY SEALED AND DATED.

MISSOURI HIGHWAYS AND TRANSPORTATION COMMISSION

105 WEST CAPITOL
JEFFERSON CITY, MO 65102
1-888-ASK-MODOT (1-888-275-6636)

LEE'S SUMMIT MISSOURI

olsson
1301 BURLINGTON ST., STE. 100
NORTH KANSAS CITY, MO 64116
PHONE: 816.361.1177
CERT. OF AUTHORITY NO. 001592

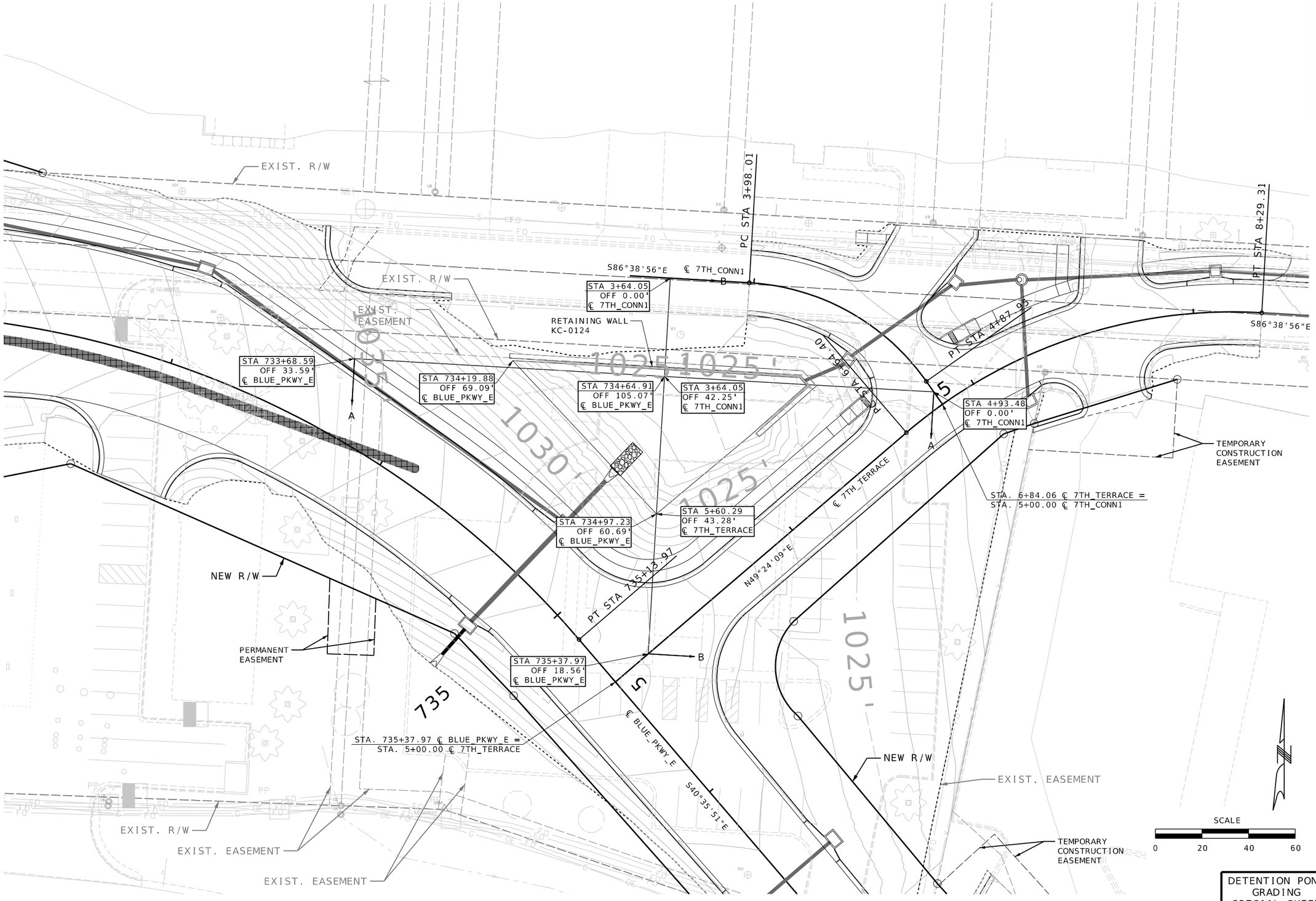
EXIST. R/W
EXIST. R/W
EXIST. EASEMENT
RETAINING WALL KC-0124
PC STA 3+98.01
S86°38'56"E
℄ 7TH_CONN1
B
STA 3+64.05
OFF 0.00'
℄ 7TH_CONN1
PT STA 8+29.31
S86°38'56"E
PT STA 4+87.95
STA 733+68.59
OFF 33.59'
℄ BLUE_PKWY_E
STA 734+19.88
OFF 69.09'
℄ BLUE_PKWY_E
STA 734+64.91
OFF 105.07'
℄ BLUE_PKWY_E
STA 3+64.05
OFF 42.25'
℄ 7TH_CONN1
PT STA 6+84.40
STA 4+93.48
OFF 0.00'
℄ 7TH_CONN1
TEMPORARY CONSTRUCTION EASEMENT
STA. 6+84.06 ℄ 7TH_TERRACE =
STA. 5+00.00 ℄ 7TH_CONN1
℄ 7TH_TERRACE
STA 734+97.23
OFF 60.69'
℄ BLUE_PKWY_E
STA 5+60.29
OFF 43.28'
℄ 7TH_TERRACE
PT STA 735+13.97
N49°24'09"E
NEW R/W
PERMANENT EASEMENT
STA 735+37.97
OFF 18.56'
℄ BLUE_PKWY_E
B
735
℄ BLUE_PKWY_E
S40°35'51"E
STA. 735+37.97 ℄ BLUE_PKWY_E =
STA. 5+00.00 ℄ 7TH_TERRACE
NEW R/W
EXIST. EASEMENT
EXIST. R/W
EXIST. EASEMENT
EXIST. EASEMENT
TEMPORARY CONSTRUCTION EASEMENT
SCALE
0 20 40 60
1025'
1030'
1025'
1025'
1025

SECTION A-A

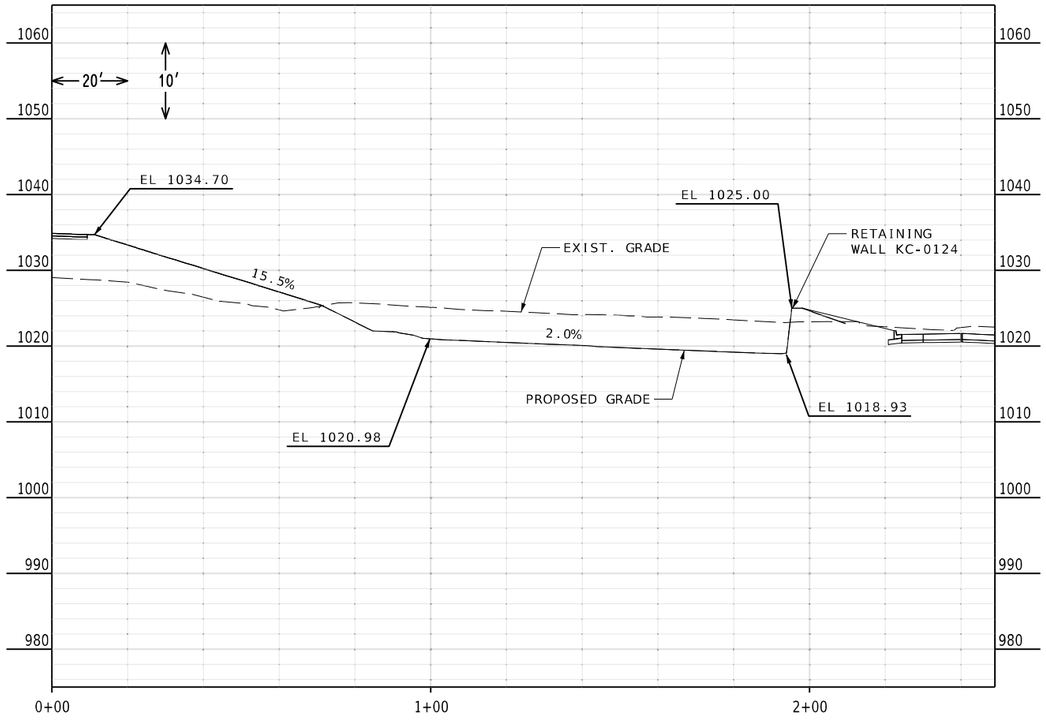

SECTION B-B

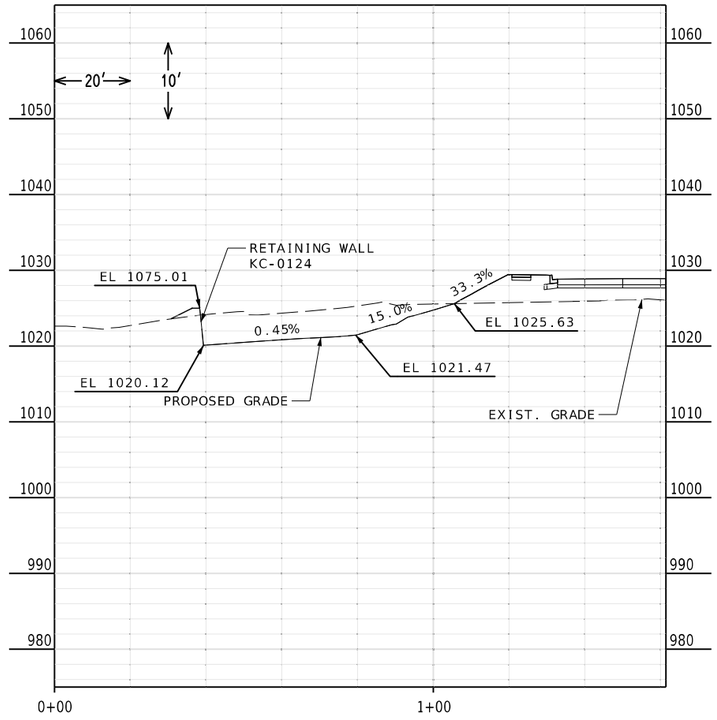

DETENTION POND
GRADING
SPECIAL SHEET
SHEET 59 OF 74

Reid Catt
2025.03.01 21:41:46-06'00'

REID BRENNEN CATT-ENGINEER
MO# PE-2010019516

DATE PREPARED
2/28/2025

ROUTE	STATE
50/291	MO
DISTRICT	SHEET NO.
KC	88

COUNTY
JACKSON

JOB NO.
J4P3196

FEDERAL PROJECT NO.
STB-3001(009)

PROJECT NO.

BRIDGE NO.

DESCRIPTION	DATE

IF A SEAL IS PRESENT ON THIS SHEET IT HAS BEEN ELECTRONICALLY SEALED AND DATED.

MISSOURI HIGHWAYS AND TRANSPORTATION COMMISSION

105 WEST CAPITOL
JEFFERSON CITY, MO 65102
1-888-ASK-MODOT (1-888-275-6636)

LEE'S SUMMIT MISSOURI

olsson
1301 BURLINGTON ST., STE. 100
NORTH KANSAS CITY, MO 64116
PHONE: 816.361.1177
CERT. OF AUTHORITY NO. 001592

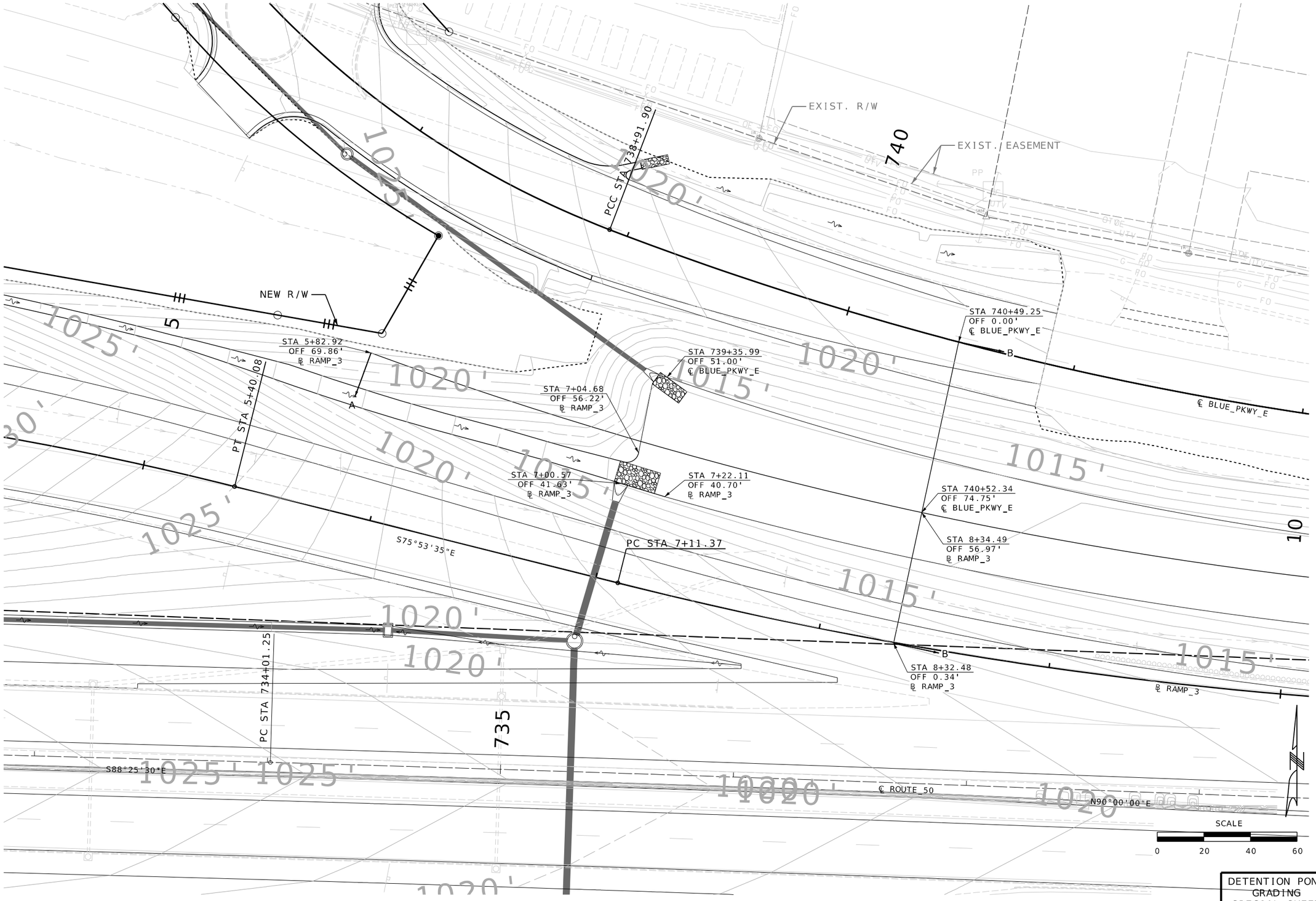

DETENTION POND
~~GRADING~~
SPECIAL SHEET
SHEET 60 OF 74

Reid Catt
2025.03.01 21:41:22-06'00'

REID BRENNEN CATT-ENGINEER
MO# PE-2010019516

DATE PREPARED	2/28/2025
ROUTE	50/291
STATE	MO
DISTRICT	KC
SHEET NO.	89
COUNTY	JACKSON
JOB NO.	J4P3196
FEDERAL PROJECT NO.	STB-3001(009)
PROJECT NO.	
BRIDGE NO.	

DESCRIPTION | DATE

MISSOURI HIGHWAYS AND TRANSPORTATION COMMISSION
105 WEST CAPITOL
JEFFERSON CITY, MO 65102
1-888-ASK-MODOT (1-888-275-6636)

LEE'S SUMMIT MISSOURI

olsson
1301 BURLINGTON ST., STE. 100
NORTH KANSAS CITY, MO 64116
PHONE: 816.361.1177
CERT. OF AUTHORITY NO. 001592

IF A SEAL IS PRESENT ON THIS SHEET IT HAS BEEN ELECTRONICALLY SEALED AND DATED.

STA 743+02.70
OFF 0.00'
℄ BLUE_PKWY_E

℄ BLUE_PKWY_E

STA 743+03.05
OFF 51.00'
℄ BLUE_PKWY_E

STA 743+03.16
OFF 67.49'
℄ BLUE_PKWY_E

STA 739+38.22
OFF 89.56'
℄ ROUTE_50

STA 739+37.53
OFF 69.57'
℄ ROUTE_50

℄ RAMP_3

STA 739+36.44
OFF 38.28'
℄ ROUTE_50

STA 740+60.31
OFF 105.21'
℄ ROUTE_50

STA 740+70.35
OFF 96.15'
℄ ROUTE_50

STA 740+72.24
OFF 76.17'
℄ ROUTE_50

STA 740+61.94
OFF 65.23'
℄ ROUTE_50

STA 741+59.58
OFF 81.84'
℄ ROUTE_50

740

N90°00'00"E

℄ ROUTE_50

CP#2

SCALE
0 20 40 60

DETENTION POND
GRADING
SPECIAL SHEET
SHEET 61 OF 74

Reid Catt
2025.03.01 21:41:28-06'00'

REID BRENNEN CATT
NUMBER
PE-2010019516

REID BRENNEN CATT-ENGINEER
MO# PE-2010019516

DATE PREPARED
2/28/2025

ROUTE	STATE
50/291	MO
DISTRICT	SHEET NO.
KC	90

COUNTY
JACKSON

JOB NO.
J4P3196

FEDERAL PROJECT NO.
STB-3001(009)

PROJECT NO.

BRIDGE NO.

DESCRIPTION	DATE

MISSOURI HIGHWAYS AND TRANSPORTATION COMMISSION
105 WEST CAPITOL
JEFFERSON CITY, MO 65102
1-888-ASK-MODOT (1-888-275-6636)

LEE'S SUMMIT MISSOURI

olsson
1301 BURLINGTON ST., STE. 100
NORTH KANSAS CITY, MO 64116
PHONE: 816.361.1177
CERT. OF AUTHORITY NO. 001592

IF A SEAL IS PRESENT ON THIS SHEET IT HAS BEEN ELECTRONICALLY SEALED AND DATED.

SECTION A-A

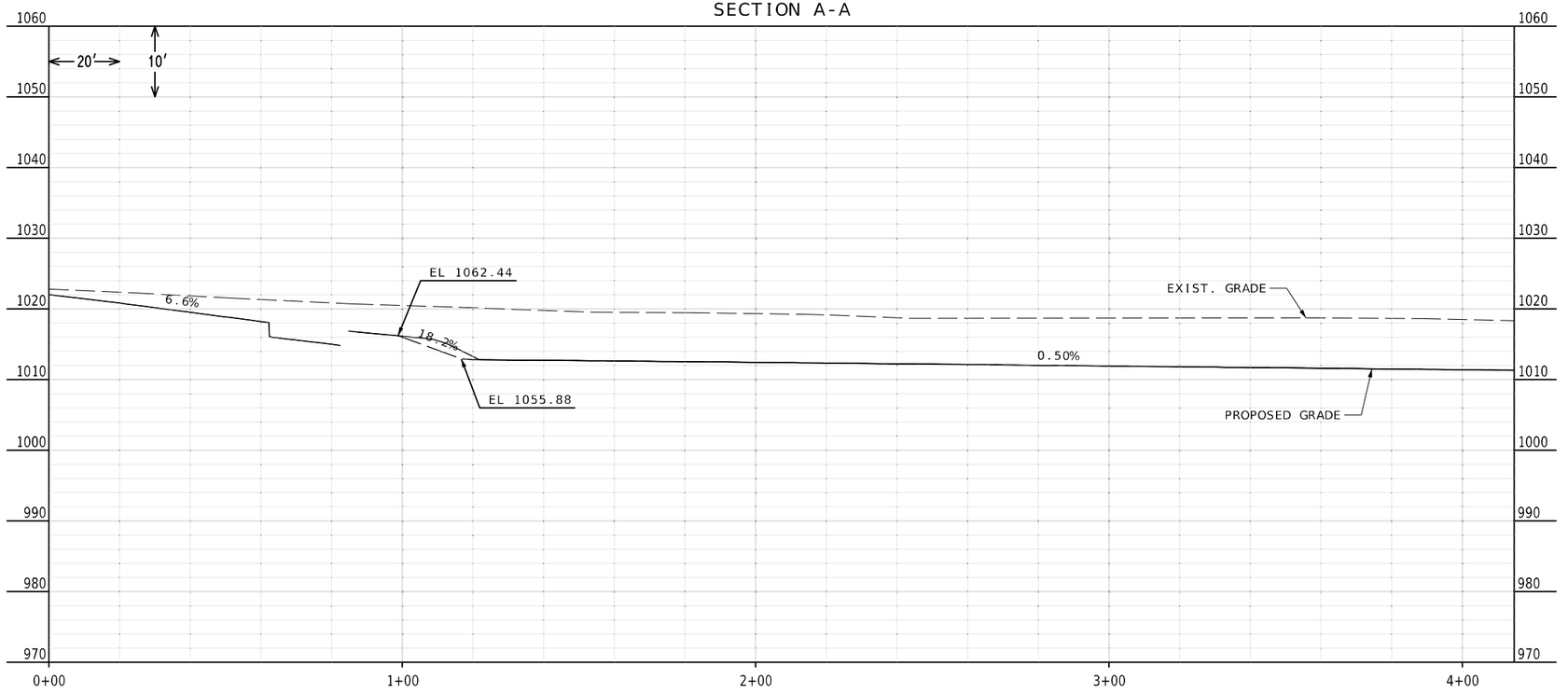

SECTION A-A

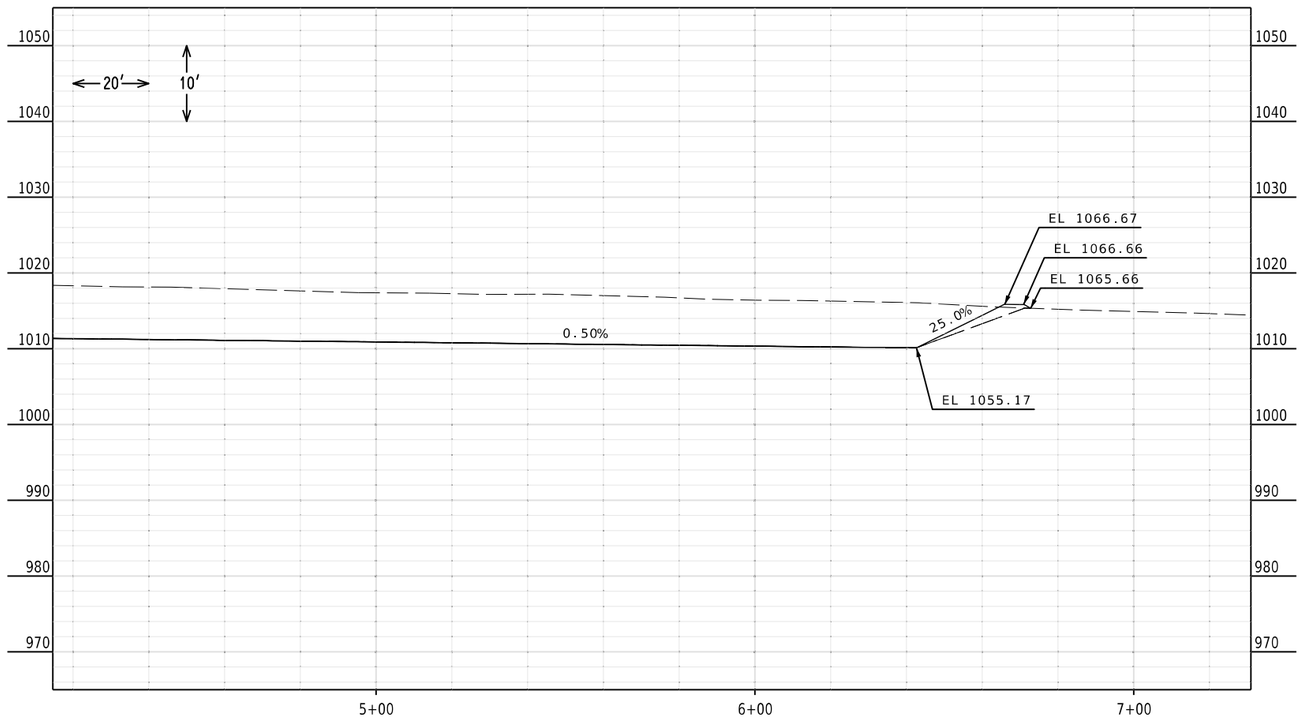

DETENTION POND GRADING
SPECIAL SHEET
SHEET 62 OF 74

Reid Catt
2025.03.01 21:41:10-06'00'

REID BRENNEN CATT-ENGINEER
MO# PE-2010019516

DATE PREPARED
2/28/2025

ROUTE	STATE
50/291	MO

DISTRICT	SHEET NO.
KC	91

COUNTY
JACKSON

JOB NO.
J4P3196

FEDERAL PROJECT NO.
STB-3001(009)

PROJECT NO.

BRIDGE NO.

DESCRIPTION	DATE

IF A SEAL IS PRESENT ON THIS SHEET IT HAS BEEN ELECTRONICALLY SEALED AND DATED.

MISSOURI HIGHWAYS AND TRANSPORTATION COMMISSION
105 WEST CAPITOL
JEFFERSON CITY, MO 65102
1-888-ASK-MODOT (1-888-275-6636)

LEE'S SUMMIT MISSOURI

olsson
1301 BURLINGTON ST., STE. 100
NORTH KANSAS CITY, MO 64116
PHONE: 816.361.1177
CERT. OF AUTHORITY NO. 001592

SECTION B-B

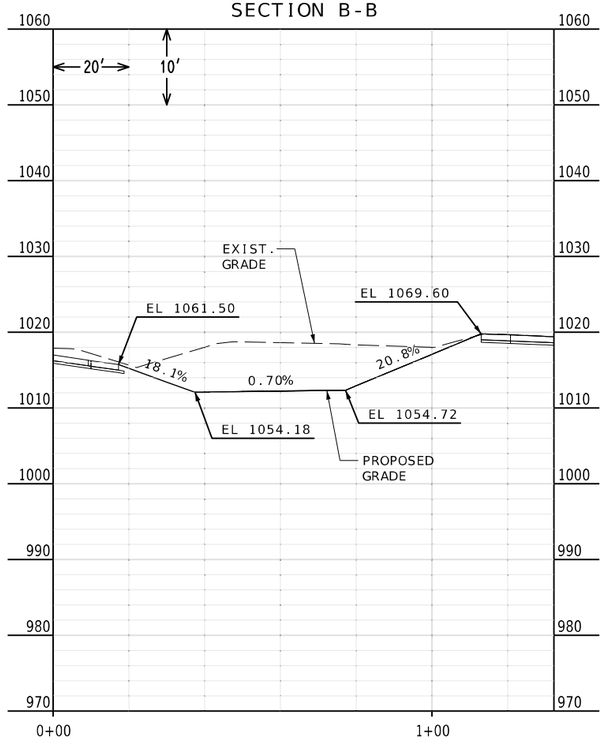

SECTION C-C

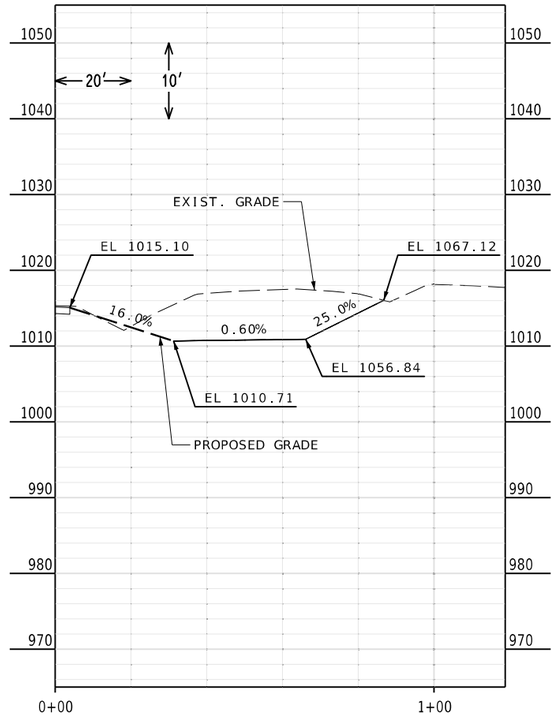

IF A SEAL IS PRESENT ON THIS SHEET IT HAS BEEN ELECTRONICALLY SEALED AND DATED.

Reid Catt
2025.03.01 21:40:51-06'00'

REID BRENNEN CATT-ENGINEER
MO# PE-2010019516

DATE PREPARED
2/28/2025

ROUTE	STATE
50/291	MO
DISTRICT	SHEET NO.
KC	92

COUNTY
JACKSON

JOB NO.
J4P3196

FEDERAL PROJECT NO.
STB-3001(009)

PROJECT NO.

BRIDGE NO.

DESCRIPTION	DATE

MISSOURI HIGHWAYS AND TRANSPORTATION COMMISSION

105 WEST CAPITOL
JEFFERSON CITY, MO 65102
1-888-ASK-MODOT (1-888-275-6636)

LEE'S SUMMIT MISSOURI

olsson
1301 BURLINGTON ST., STE. 100
NORTH KANSAS CITY, MO 64116
PHONE: 816.361.1177
CERT. OF AUTHORITY NO. 001592

DETENTION POND GRADING
SPECIAL SHEET
SHEET 63 OF 74

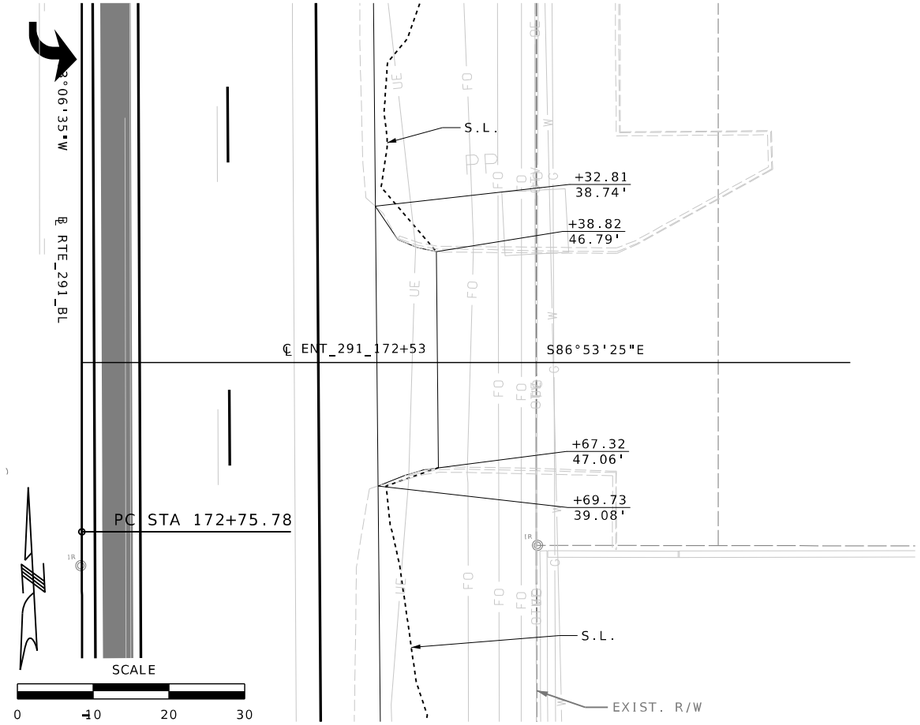

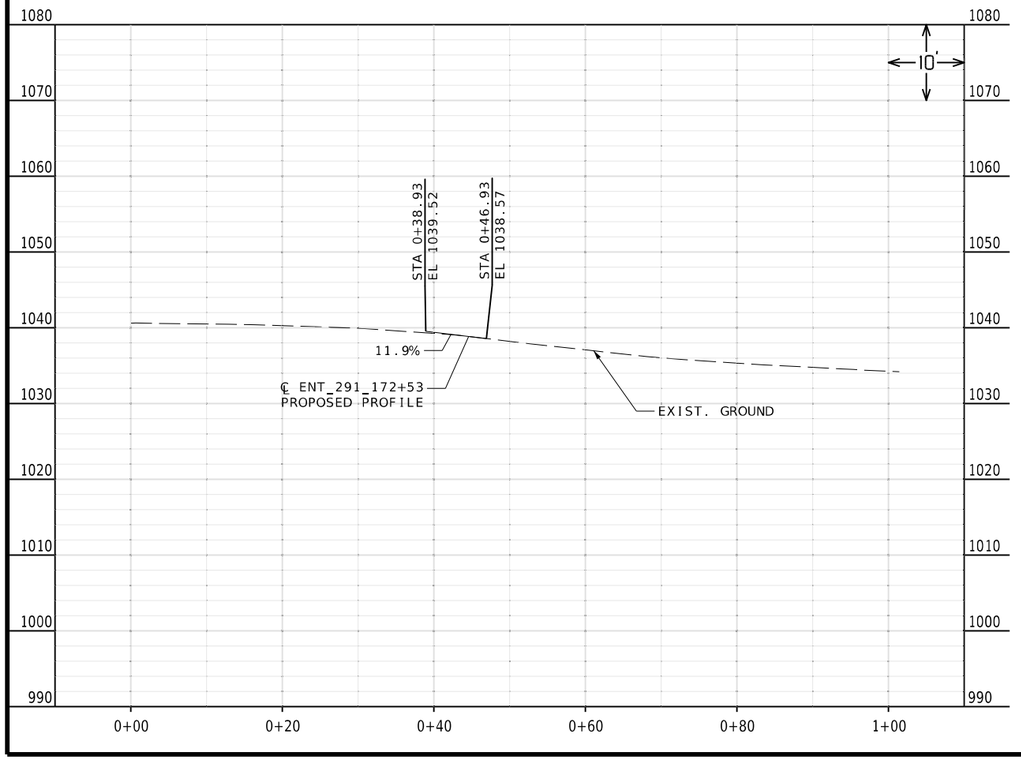

Reid Catt
2025.03.01 21:43:04-06'00'

REID BRENNEN CATT
NUMBER
PE-2010019516

REID BRENNEN CATT-ENGINEER
MO# PE-2010019516

DATE PREPARED
2/28/2025

ROUTE	STATE
50/291	MO
DISTRICT	SHEET NO.
KC	93

COUNTY
JACKSON

JOB NO.
J4P3196

FEDERAL PROJECT NO.
STB-3001(009)

PROJECT NO.

BRIDGE NO.

IF A SEAL IS PRESENT ON THIS SHEET IT HAS BEEN ELECTRONICALLY SEALED AND DATED.

DESCRIPTION	DATE

MISSOURI HIGHWAYS AND TRANSPORTATION COMMISSION
105 WEST CAPITOL
JEFFERSON CITY, MO 65102
1-888-ASK-MODOT (1-888-275-6636)

LEE'S SUMMIT MISSOURI

olsson
1301 BURLINGTON ST., STE. 100
NORTH KANSAS CITY, MO 64116
PHONE: 816.361.1177
CERT. OF AUTHORITY NO. 001592

ENTRANCE
SPECIAL SHEET
SHEET 64 OF 74

F:\2021\04501-05000\021-04786\40-Design\Microstation\J4P3196\plan_sheets\8 Special Sheets\093_SS_64_J4P3196_I10_ENTRANCE.dgn 2:15:41 PM 2/28/2025

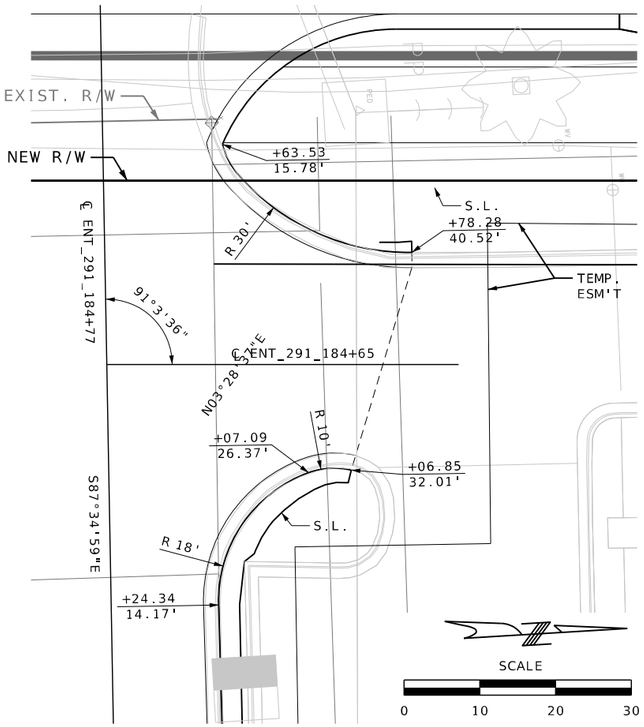

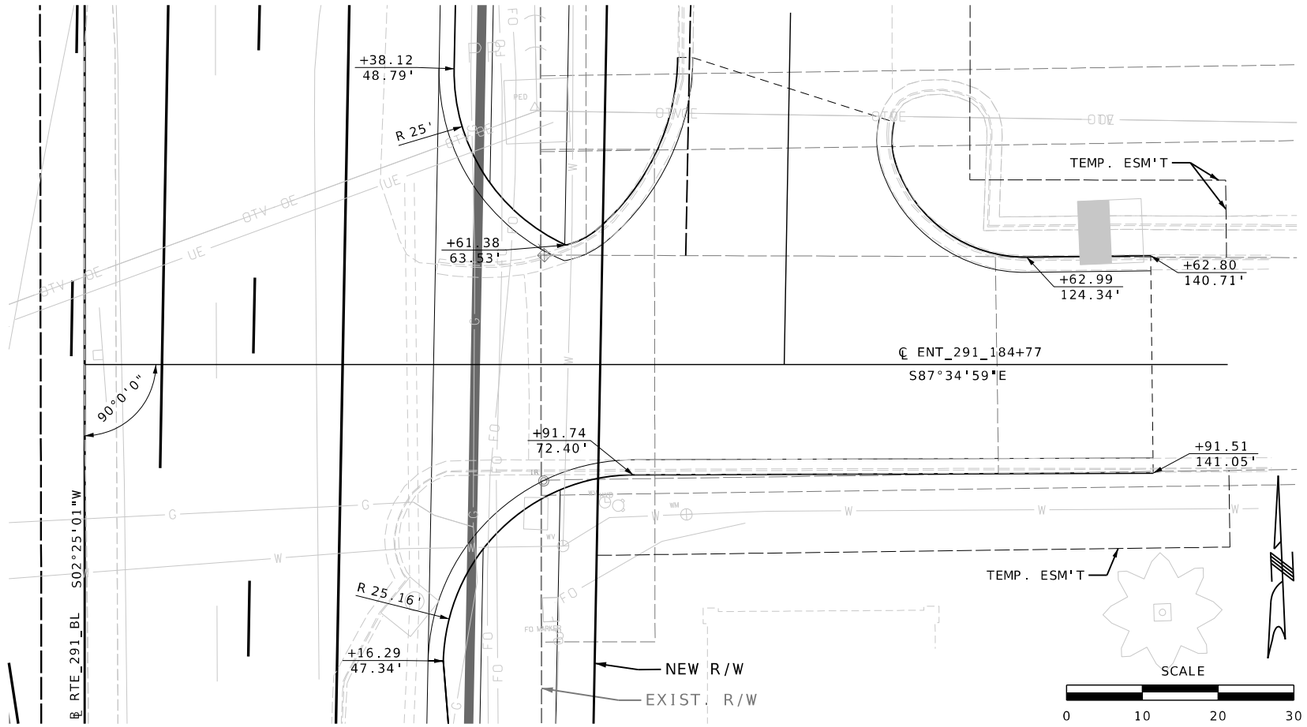

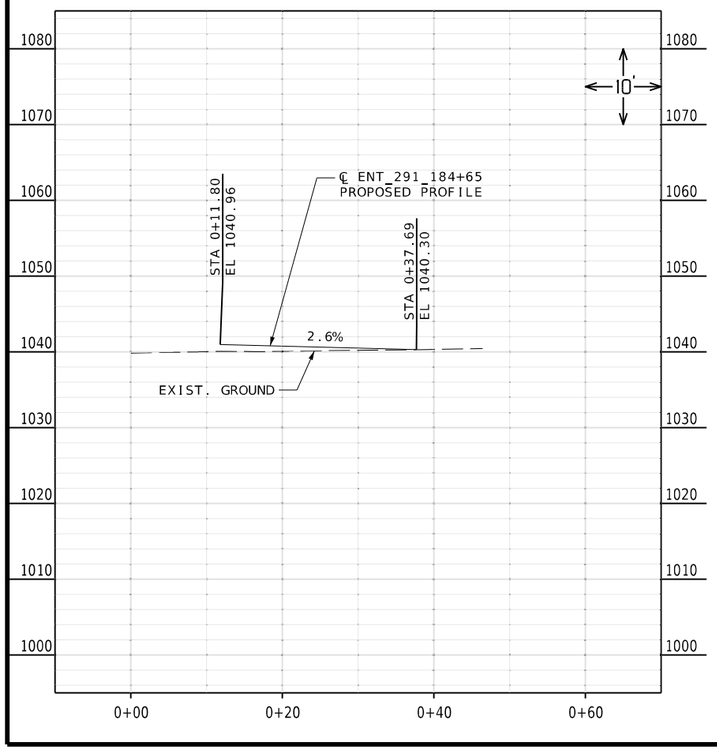

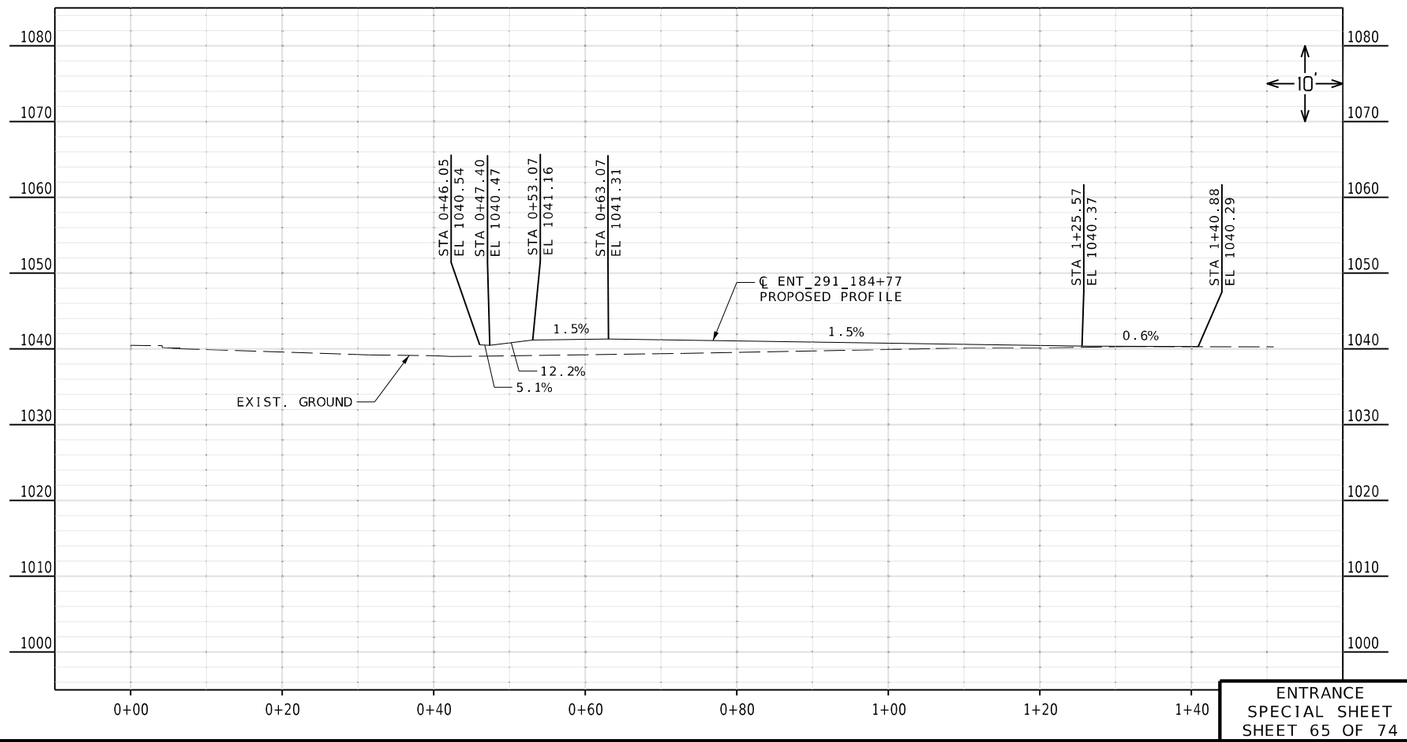

ENTRANCE
SPECIAL SHEET
SHEET 65 OF 74

Reid Catt
2025.03.01 21:43:31-06'00'

REID BRENNEN CATT
NUMBER
PE-2010019516

REID BRENNEN CATT-ENGINEER
MO# PE-2010019516

DATE PREPARED
2/28/2025

ROUTE	STATE
50/291	MO
DISTRICT	SHEET NO.
KC	94

COUNTY
JACKSON

JOB NO.
J4P3196

FEDERAL PROJECT NO.
STB-3001(009)

PROJECT NO.

BRIDGE NO.

DESCRIPTION	DATE

IF A SEAL IS PRESENT ON THIS SHEET IT HAS BEEN ELECTRONICALLY SEALED AND DATED.

MISSOURI HIGHWAYS AND TRANSPORTATION COMMISSION
105 WEST CAPITOL
JEFFERSON CITY, MO 65102
1-888-ASK-MODOT (1-888-275-6636)

LEE'S SUMMIT MISSOURI

olsson
1301 BURLINGTON ST., STE. 100
NORTH KANSAS CITY, MO 64116
PHONE: 816.361.1177
CERT. OF AUTHORITY NO. 001592

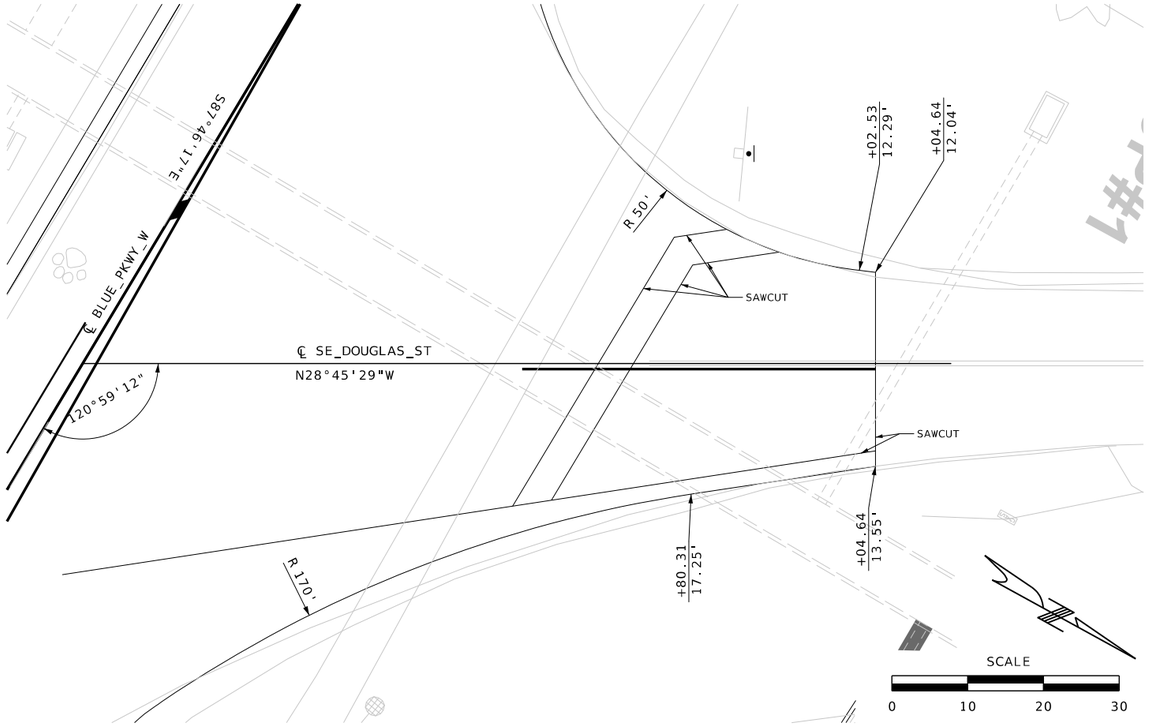

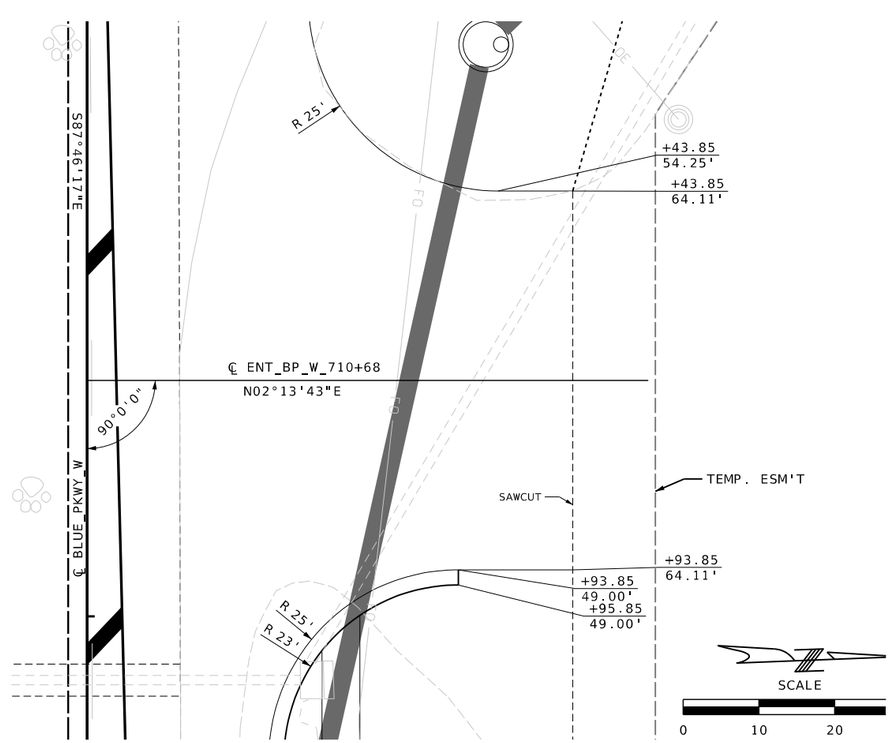

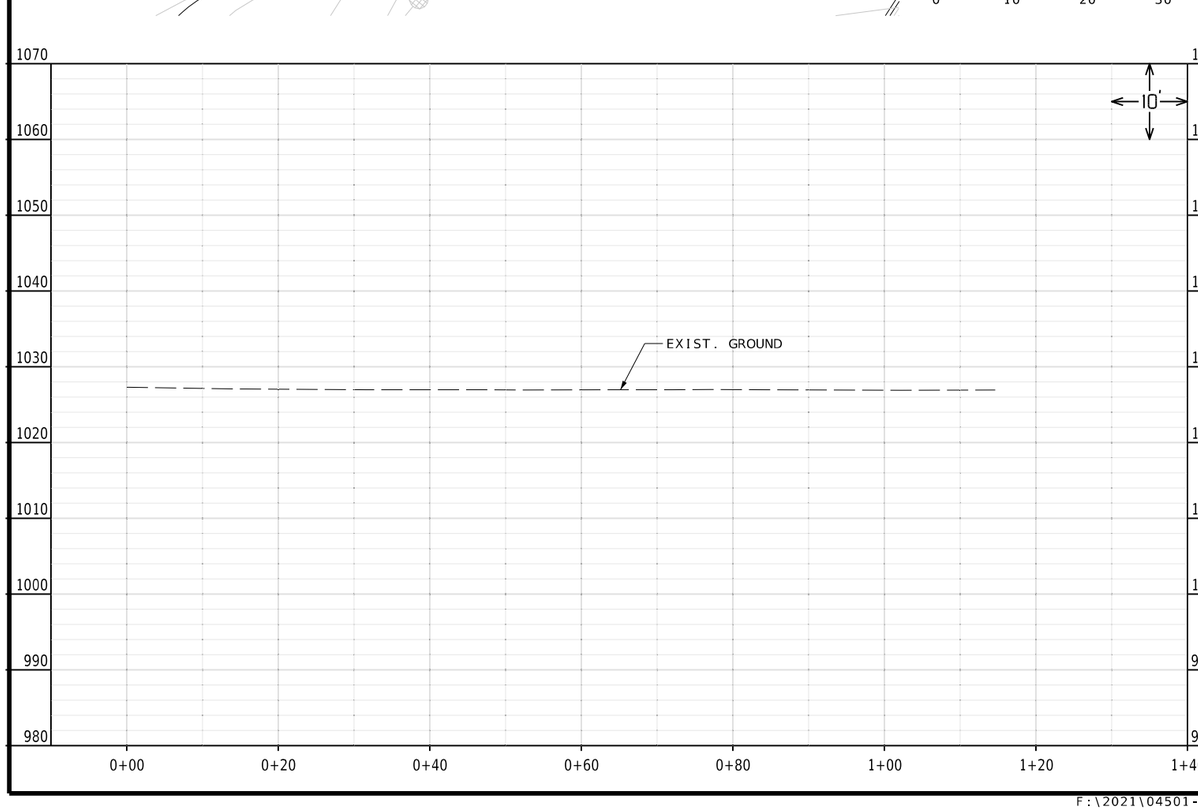

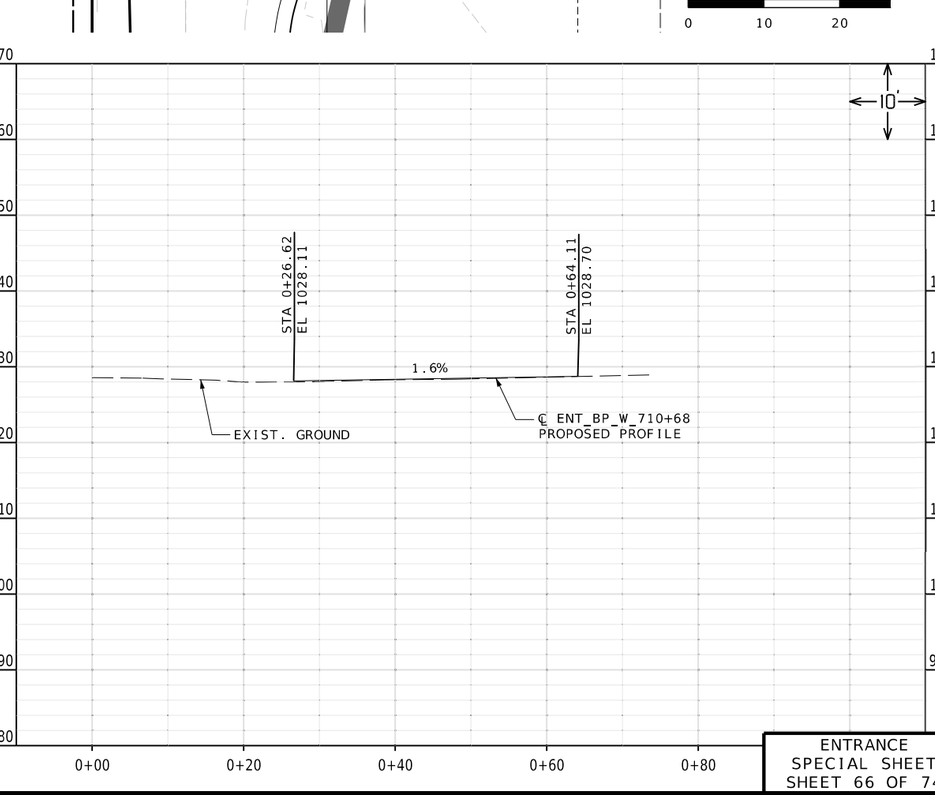

Reid Catt
2025.03.01 21:43:59-06'00'

REID BRENNEN CATT
NUMBER PE-2010019516
STATE OF MISSOURI
REID BRENNEN CATT-ENGINEER
MO# PE-2010019516

DATE PREPARED
2/28/2025

ROUTE	STATE
50/291	MO
DISTRICT	SHEET NO.
KC	95

COUNTY
JACKSON

JOB NO.
J4P3196

FEDERAL PROJECT NO.
STB-3001(009)

PROJECT NO.

BRIDGE NO.

DATE	DESCRIPTION

IF A SEAL IS PRESENT ON THIS SHEET IT HAS BEEN ELECTRONICALLY SEALED AND DATED.

MISSOURI HIGHWAYS AND TRANSPORTATION COMMISSION

105 WEST CAPITOL
JEFFERSON CITY, MO 65102
1-888-ASK-MODOT (1-888-275-6636)

LEE'S SUMMIT MISSOURI

olsson
1301 BURLINGTON ST., STE. 100
NORTH KANSAS CITY, MO 64116
PHONE: 816.361.1177
CERT. OF AUTHORITY NO. 001592

ENTRANCE
SPECIAL SHEET
SHEET 66 OF 74

F:\2021\04501-05000\021-04786\40-Design\Microstation\J4P3196\plan_sheets\8 Special Sheets\095_SS_66_J4P3196_110_ENTRANCE.dgn 2:15:48 PM 2/28/2025

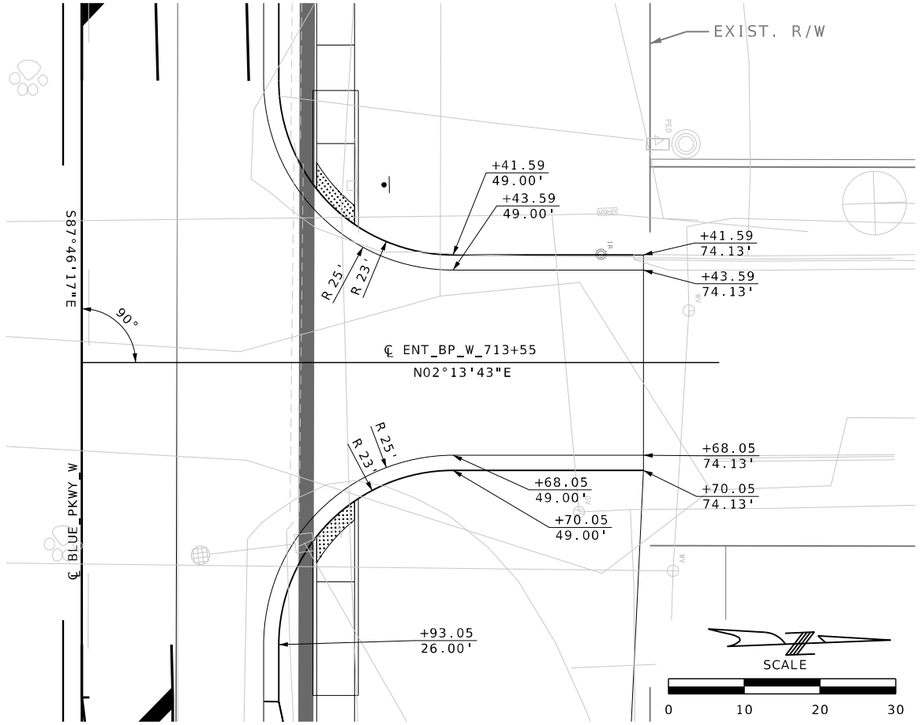

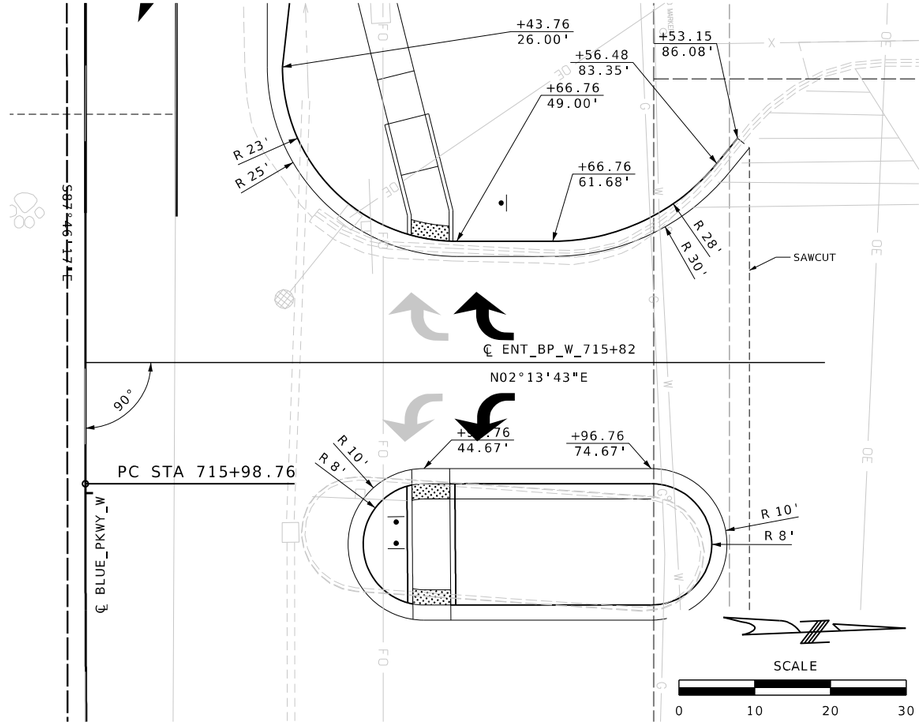

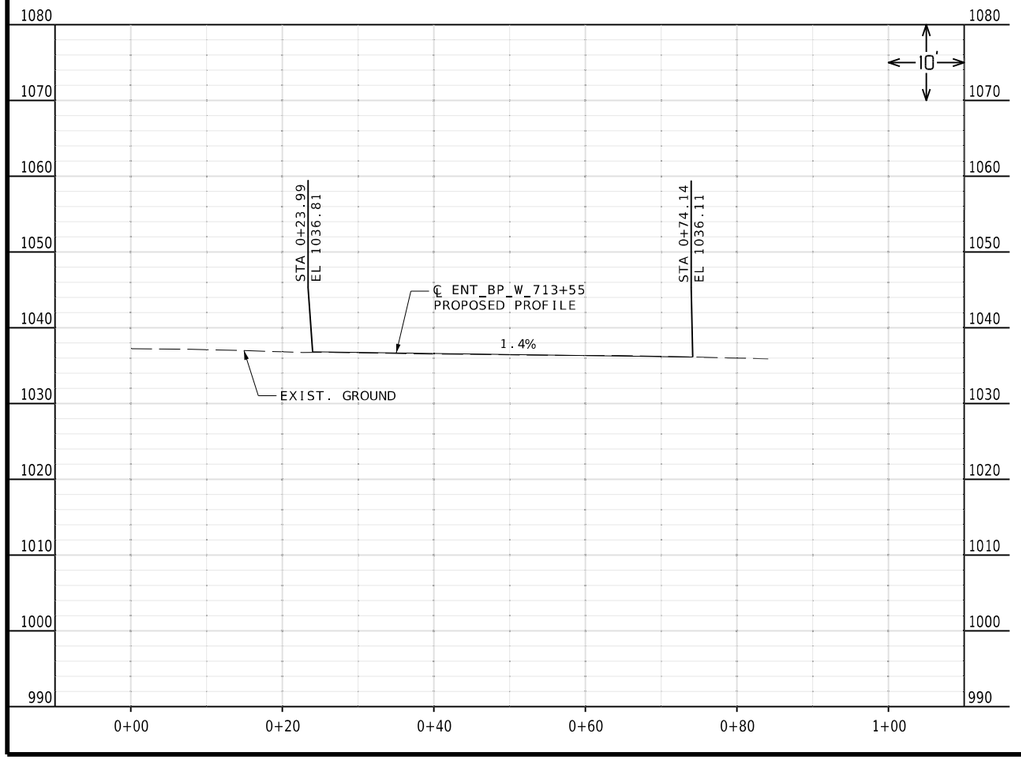

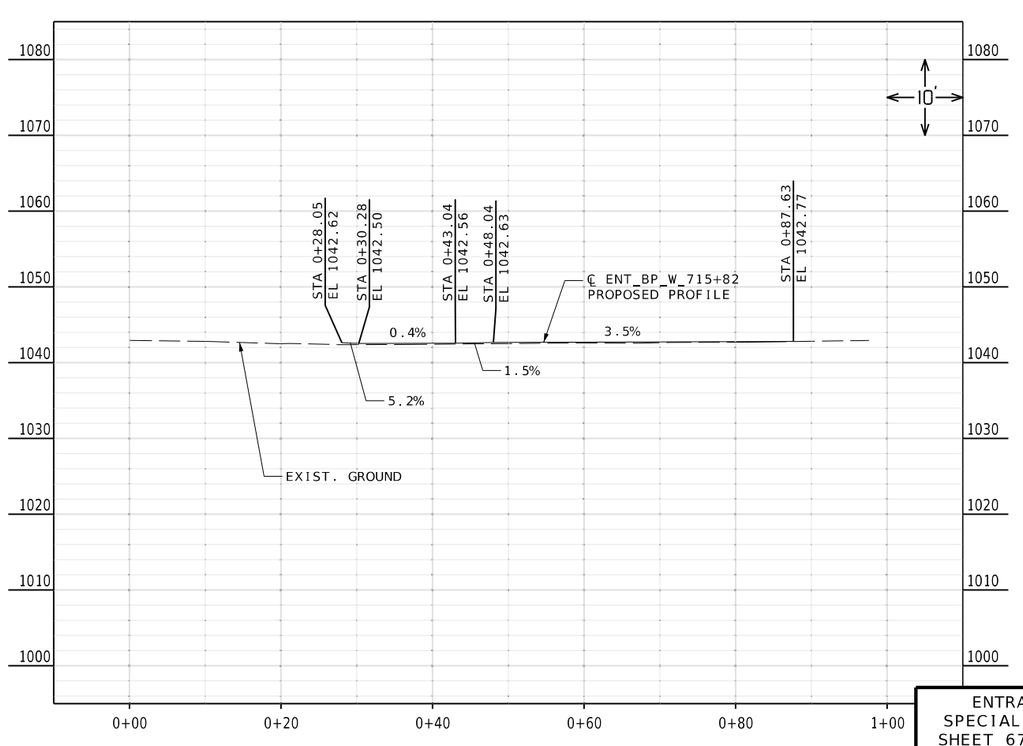

ENTRANCE
SPECIAL SHEET
SHEET 67 OF 74

Reid Catt
2025.03.01 21:44:26-06'00'

REID BRENNEN CATT
NUMBER PE-2010019516

REID BRENNEN CATT-ENGINEER
MO# PE-2010019516

DATE PREPARED
2/28/2025

ROUTE	STATE
50/291	MO
DISTRICT	SHEET NO.
KC	96

COUNTY
JACKSON

JOB NO.
J4P3196

FEDERAL PROJECT NO.
STB-3001(009)

PROJECT NO.

BRIDGE NO.

DESCRIPTION

DATE

MISSOURI HIGHWAYS AND TRANSPORTATION COMMISSION

105 WEST CAPITOL
JEFFERSON CITY, MO 65102
1-888-ASK-MODOT (1-888-275-6636)

LEE'S SUMMIT MISSOURI

olsson
1301 BURLINGTON ST., STE. 100
NORTH KANSAS CITY, MO 64116
PHONE: 816.361.1177
CERT. OF AUTHORITY NO. 001592

IF A SEAL IS PRESENT ON THIS SHEET IT HAS BEEN ELECTRONICALLY SEALED AND DATED.

F:\2021\04501-05000\021-04786\40-Design\Microstation\J4P3196\plan_sheets\8 Special Sheets\096_SS_67_J4P3196_I10_ENTRANCE.dgn 2:15:53 PM 2/28/2025

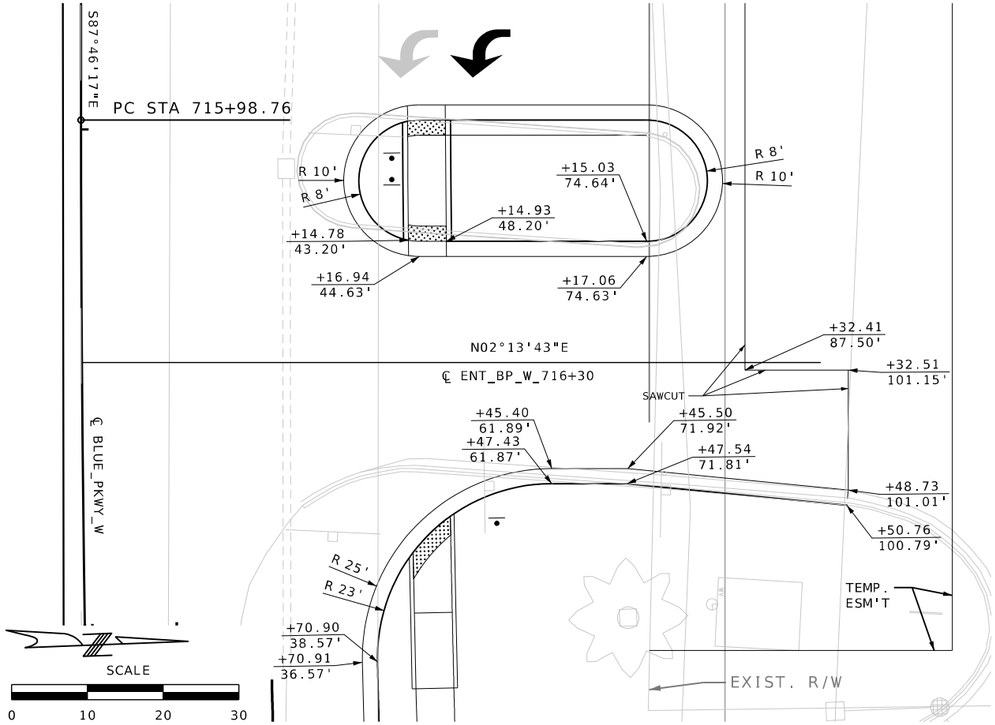

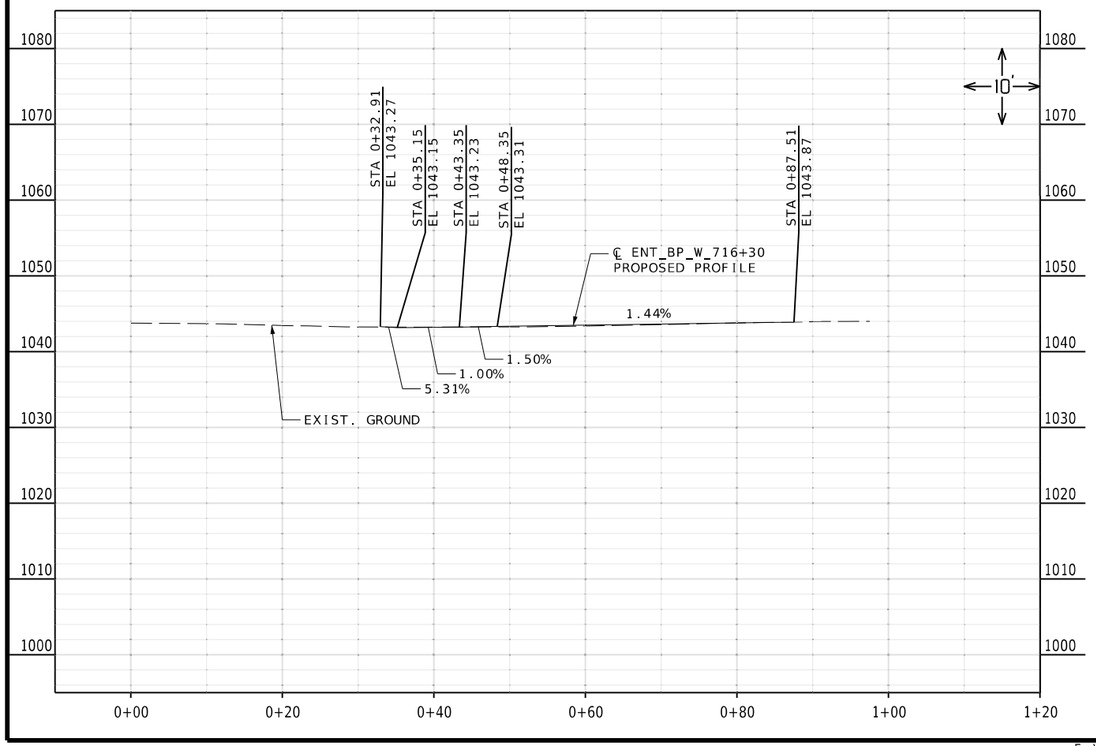

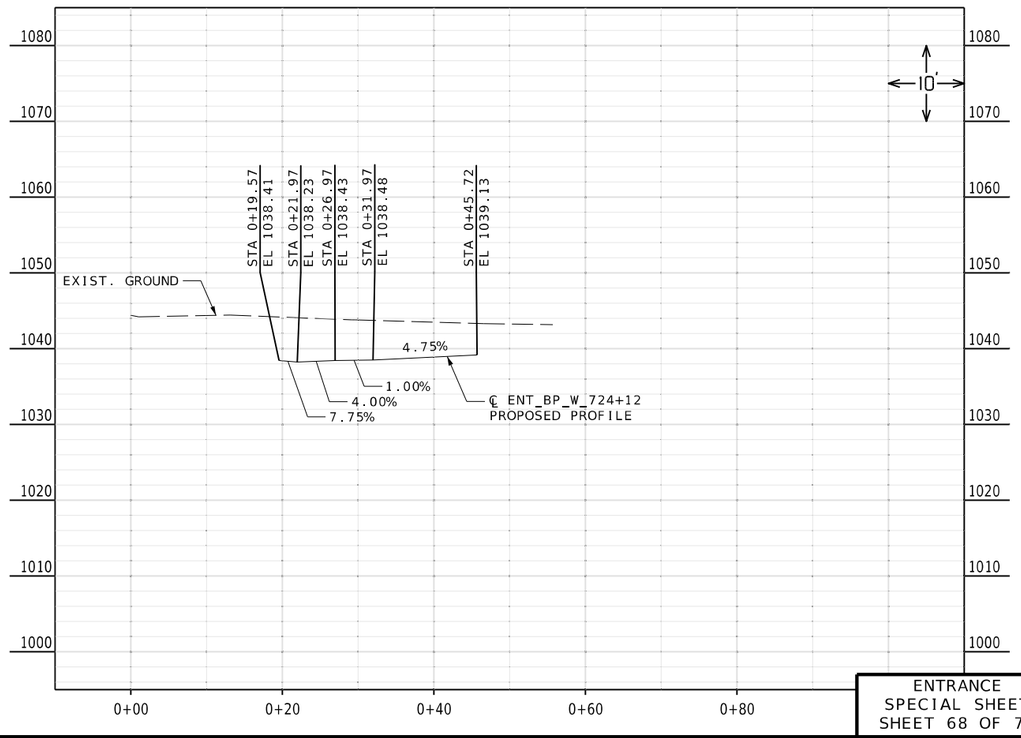

ENTRANCE
SPECIAL SHEET
SHEET 68 OF 74

Reid Catt
2025.03.01 21:43:25-06'00'

REID BRENNEN CATT
NUMBER
PE - 2010019516

REID BRENNEN CATT-ENGINEER
MO# PE-2010019516

DATE PREPARED
2/28/2025

ROUTE	STATE
50/291	MO
DISTRICT	SHEET NO.
KC	97

COUNTY
JACKSON

JOB NO.
J4P3196

FEDERAL PROJECT NO.
STB-3001(009)

PROJECT NO.

BRIDGE NO.

DESCRIPTION	DATE

IF A SEAL IS PRESENT ON THIS SHEET IT HAS BEEN ELECTRONICALLY SEALED AND DATED.

MISSOURI HIGHWAYS AND TRANSPORTATION COMMISSION
105 WEST CAPITOL
JEFFERSON CITY, MO 65102
1-888-ASK-MODOT (1-888-275-6636)

LEE'S SUMMIT MISSOURI

olsson
1301 BURLINGTON ST., STE. 100
NORTH KANSAS CITY, MO 64116
PHONE: 816.361.1177
CERT. OF AUTHORITY NO. 001592

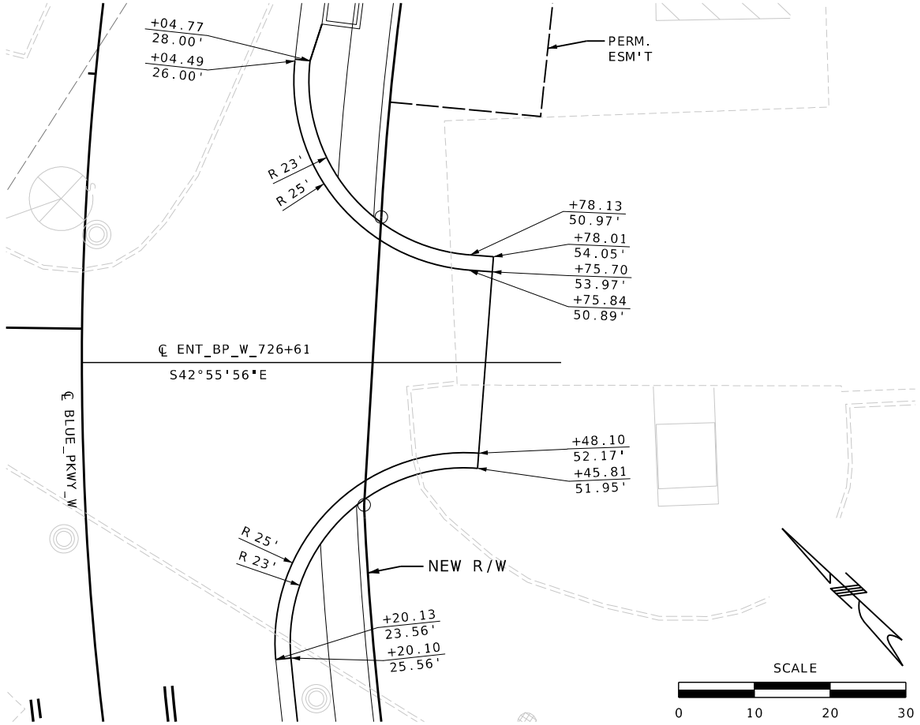

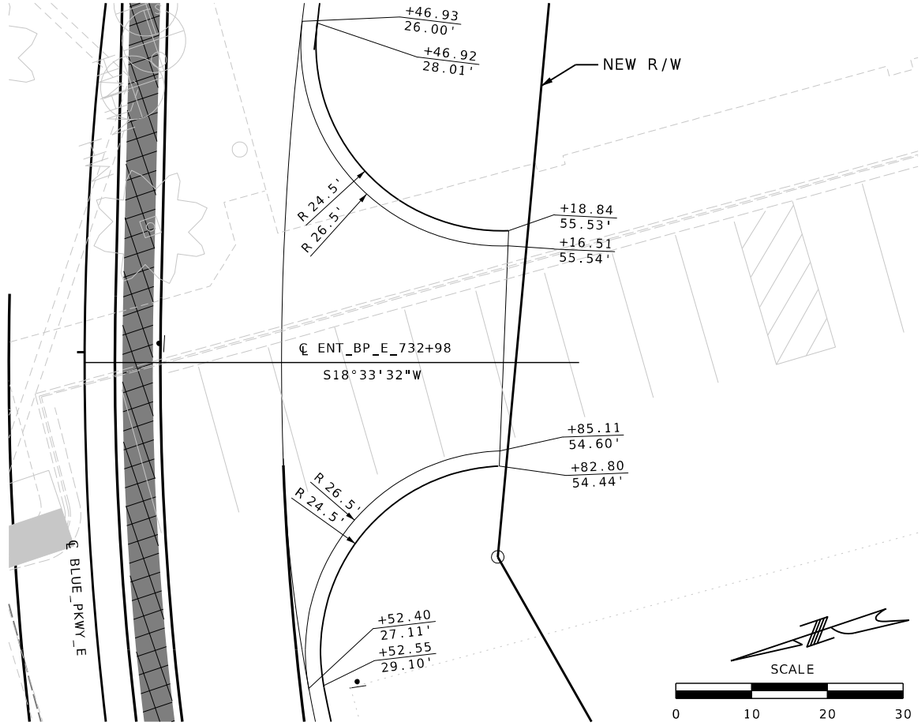

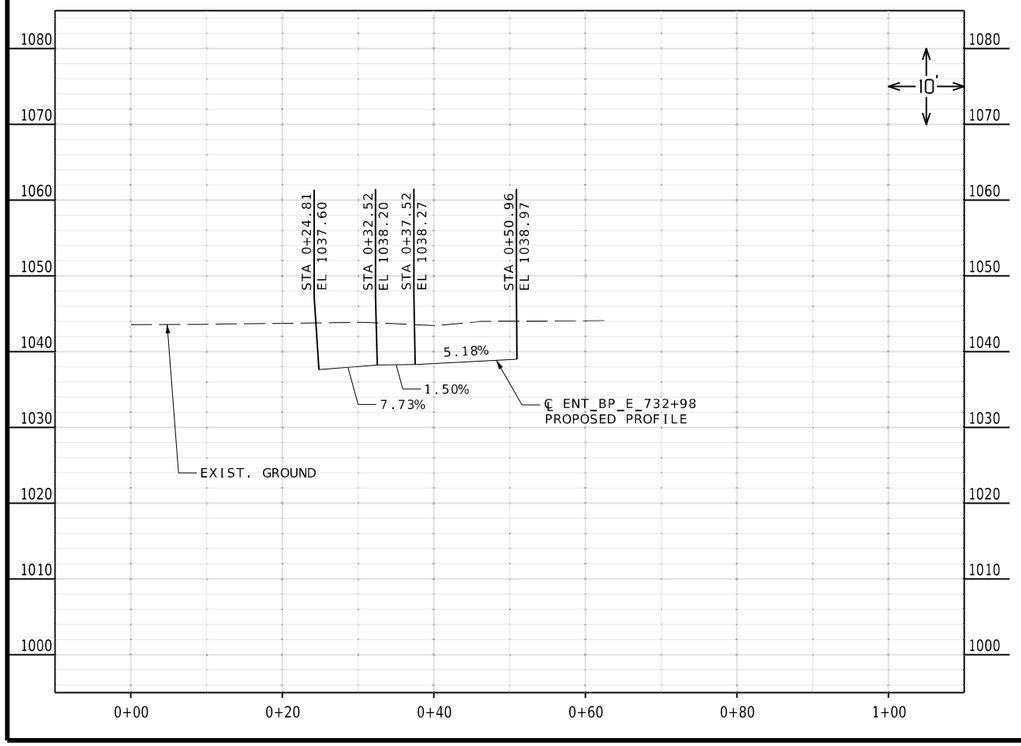

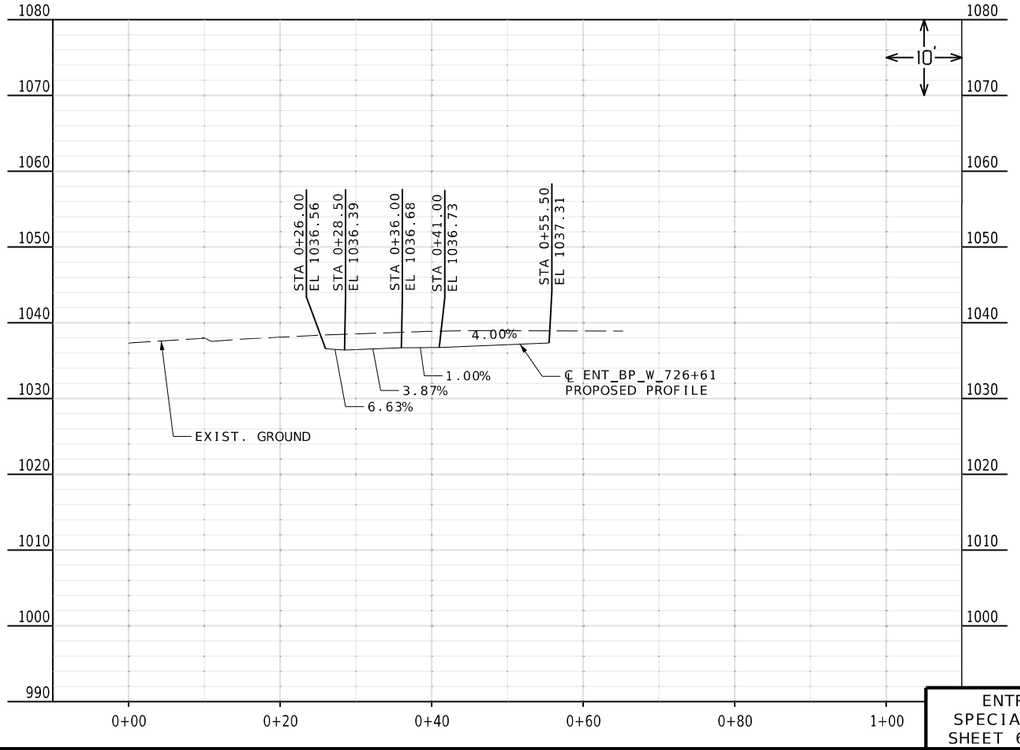

ENTRANCE
SPECIAL SHEET
SHEET 69 OF 74

Reid Catt
2025.03.01 21:43:38-06'00'

REID BRENNEN CATT-ENGINEER
MO# PE-2010019516

DATE PREPARED
2/28/2025

ROUTE	STATE
50/291	MO
DISTRICT	SHEET NO.
KC	98

COUNTY
JACKSON

JOB NO.
J4P3196

FEDERAL PROJECT NO.
STB-3001(009)

PROJECT NO.

BRIDGE NO.

DESCRIPTION	DATE

IF A SEAL IS PRESENT ON THIS SHEET IT HAS BEEN ELECTRONICALLY SEALED AND DATED.

MISSOURI HIGHWAYS AND TRANSPORTATION COMMISSION
105 WEST CAPITOL
JEFFERSON CITY, MO 65102
1-888-ASK-MODOT (1-888-275-6636)

LEE'S SUMMIT MISSOURI

olsson
1301 BURLINGTON ST., STE. 100
NORTH KANSAS CITY, MO 64116
PHONE: 816.361.1177
CERT. OF AUTHORITY NO. 001592

F:\2021\04501-05000\021-04786\40-Design\Microstation\J4P3196\plan_sheets\8 Special Sheets\098_SS_69_J4P3196_I10_ENTRANCE.dgn 2:16:03 PM 2/28/2025

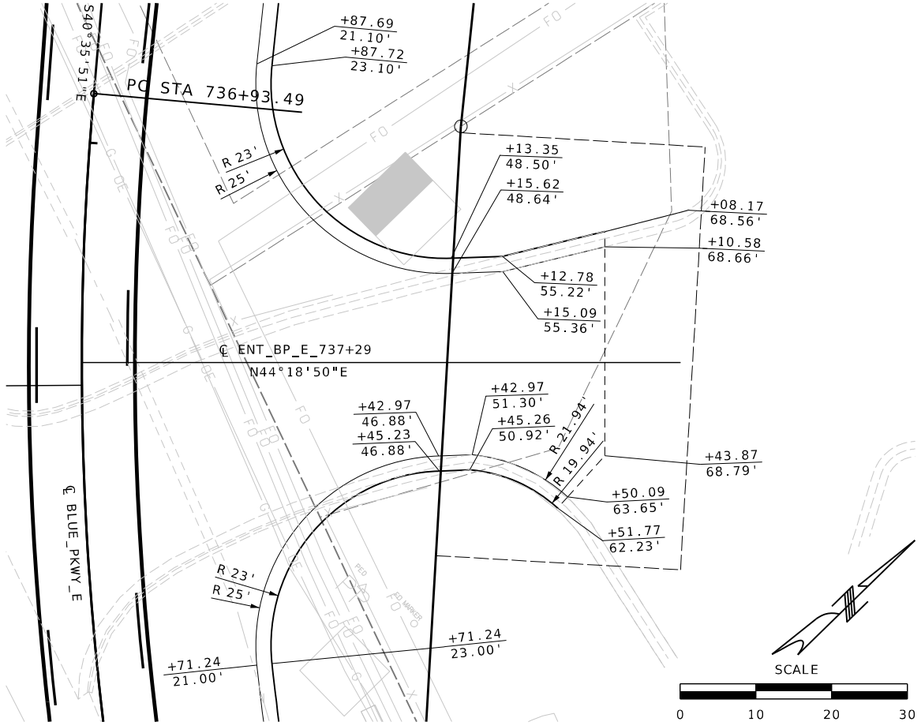

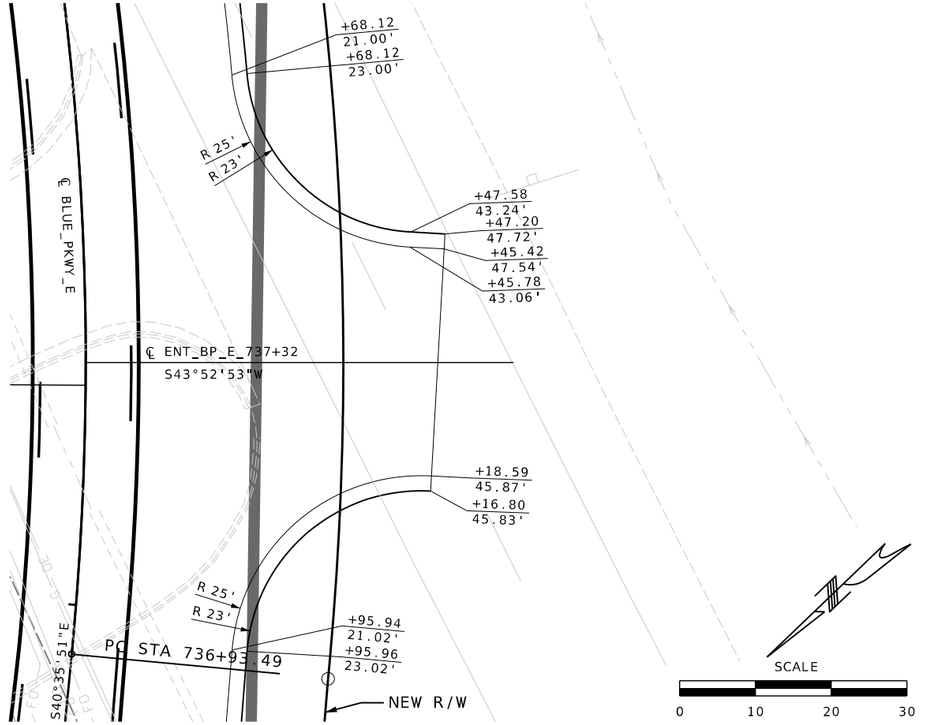

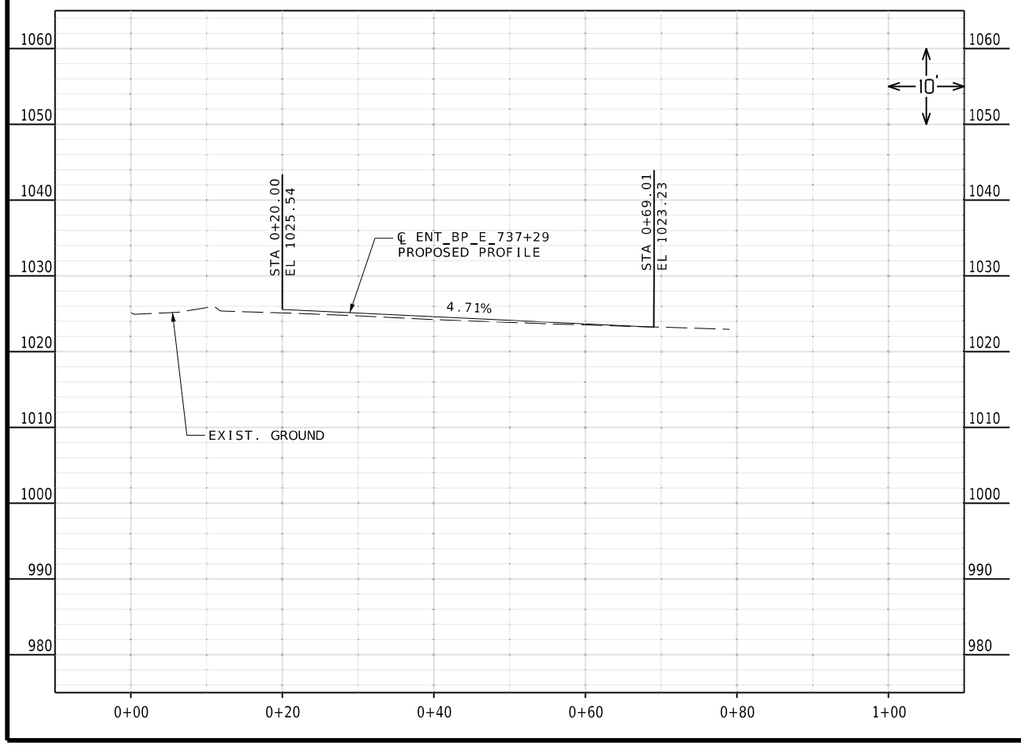

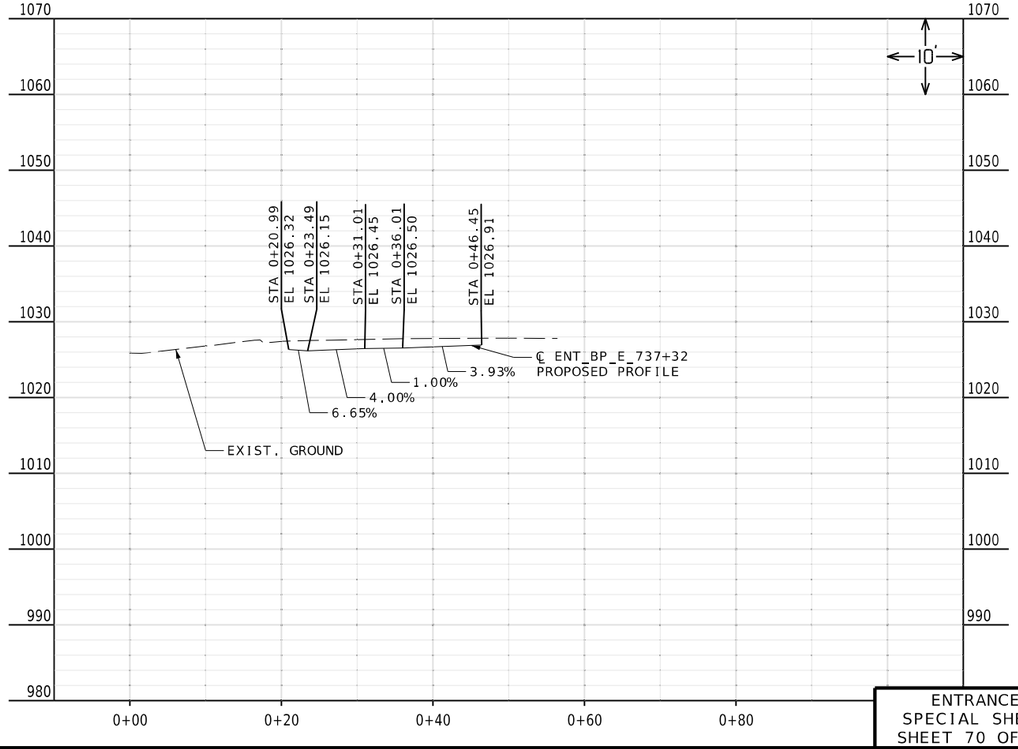

ENTRANCE
SPECIAL SHEET
SHEET 70 OF 74

Reid Catt
2025.03.01 21:43:12-06'00'

REID BRENNEN CATT-ENGINEER
MO# PE-2010019516

DATE PREPARED
2/28/2025

ROUTE	STATE
50/291	MO
DISTRICT	SHEET NO.
KC	99

COUNTY
JACKSON

JOB NO.
J4P3196

FEDERAL PROJECT NO.
STB-3001(009)

PROJECT NO.

BRIDGE NO.

DESCRIPTION	DATE

IF A SEAL IS PRESENT ON THIS SHEET IT HAS BEEN ELECTRONICALLY SEALED AND DATED.

MISSOURI HIGHWAYS AND TRANSPORTATION COMMISSION
105 WEST CAPITOL
JEFFERSON CITY, MO 65102
1-888-ASK-MODOT (1-888-275-6636)

LEE'S SUMMIT MISSOURI

olsson
1301 BURLINGTON ST., STE. 100
NORTH KANSAS CITY, MO 64116
PHONE: 816.361.1177
CERT. OF AUTHORITY NO. 001592

F:\2021\04501-05000\021-04786\40-Design\Microstation\J4P3196\plan_sheets\8 Special Sheets\099_SS_70_J4P3196_I10_ENTRANCE.dgn 2:16:09 PM 2/28/2025

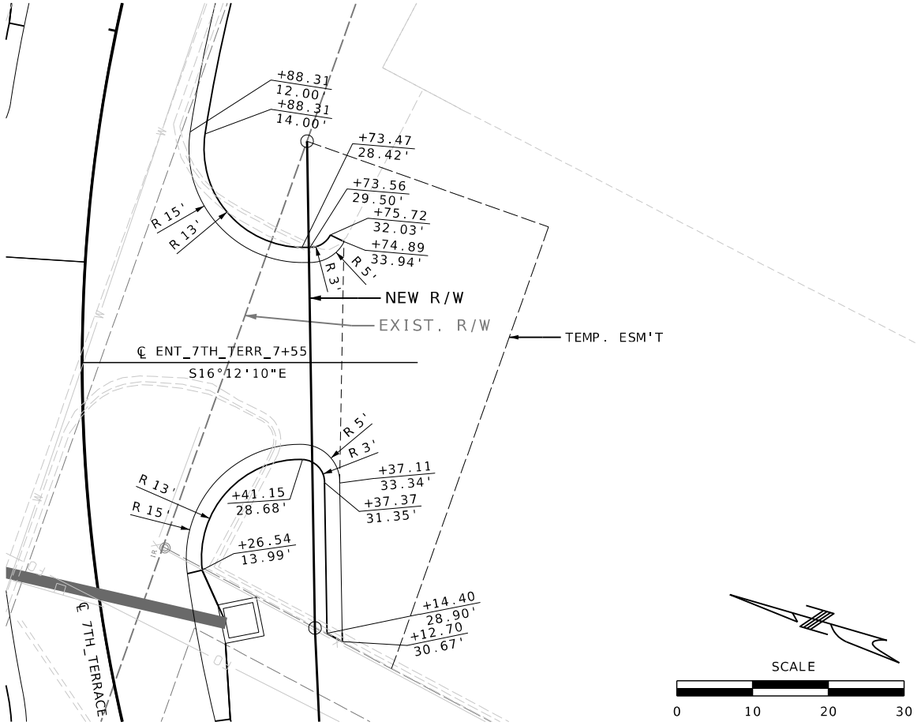

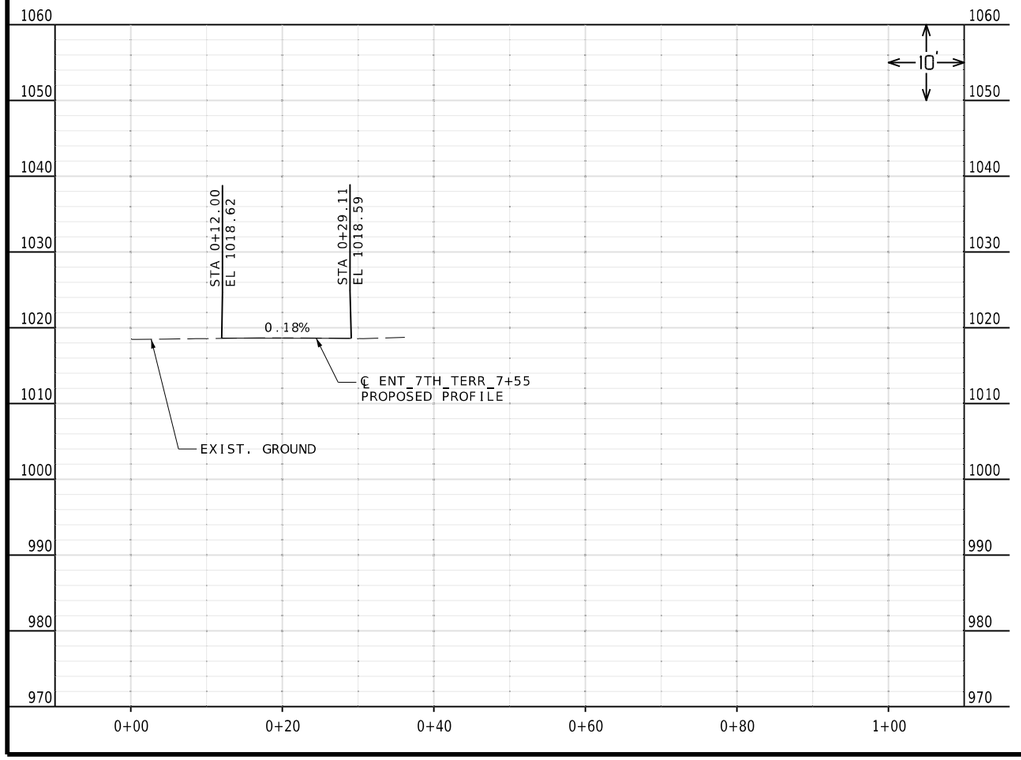

Reid Catt
2025.03.01 21:44:34-06'00'

REID BRENNEN CATT
NUMBER
PE-2010019516

REID BRENNEN CATT-ENGINEER
MO# PE-2010019516

DATE PREPARED
2/28/2025

ROUTE	STATE
50/291	MO
DISTRICT	SHEET NO.
KC	100

COUNTY
JACKSON

JOB NO.
J4P3196

FEDERAL PROJECT NO.
STB-3001(009)

PROJECT NO.

BRIDGE NO.

DESCRIPTION	DATE

IF A SEAL IS PRESENT ON THIS SHEET IT HAS BEEN ELECTRONICALLY SEALED AND DATED.

MISSOURI HIGHWAYS AND TRANSPORTATION COMMISSION

105 WEST CAPITOL
JEFFERSON CITY, MO 65102
1-888-ASK-MODOT (1-888-275-6636)

LEE'S SUMMIT MISSOURI

olsson
1301 BURLINGTON ST., STE. 100
NORTH KANSAS CITY, MO 64116
PHONE: 816.361.1177
CERT. OF AUTHORITY NO. 001592

ENTRANCE
SPECIAL SHEET
SHEET 71 OF 74

F:\2021\04501-05000\021-04786\40-Design\Microstation\J4P3196\plan_sheets\8 Special Sheets\100_SS_71_J4P3196_I10_ENTRANCE.dgn 2:16:14 PM 2/28/2025

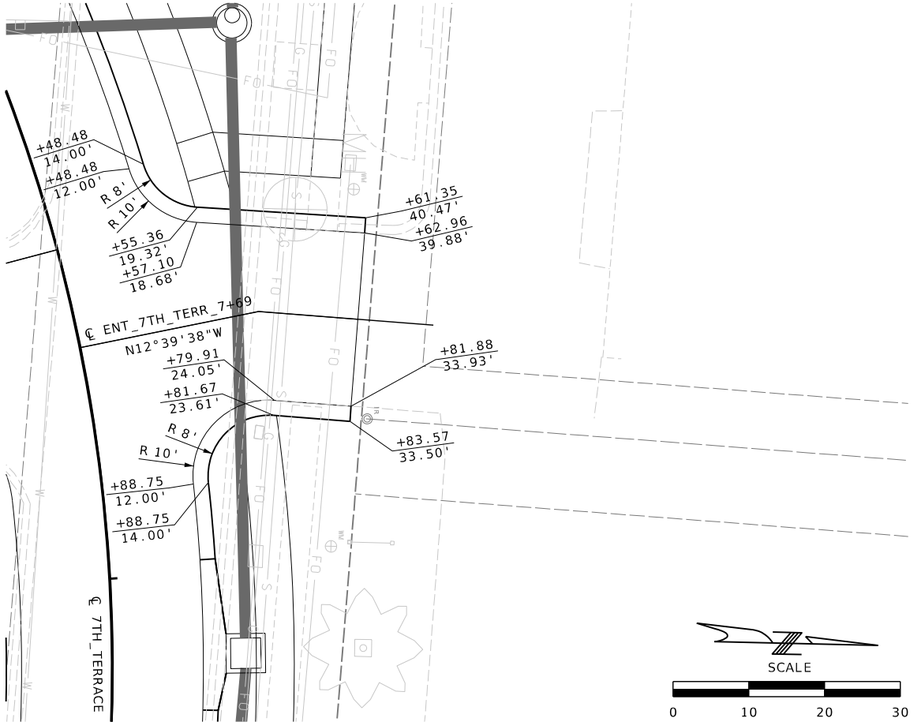

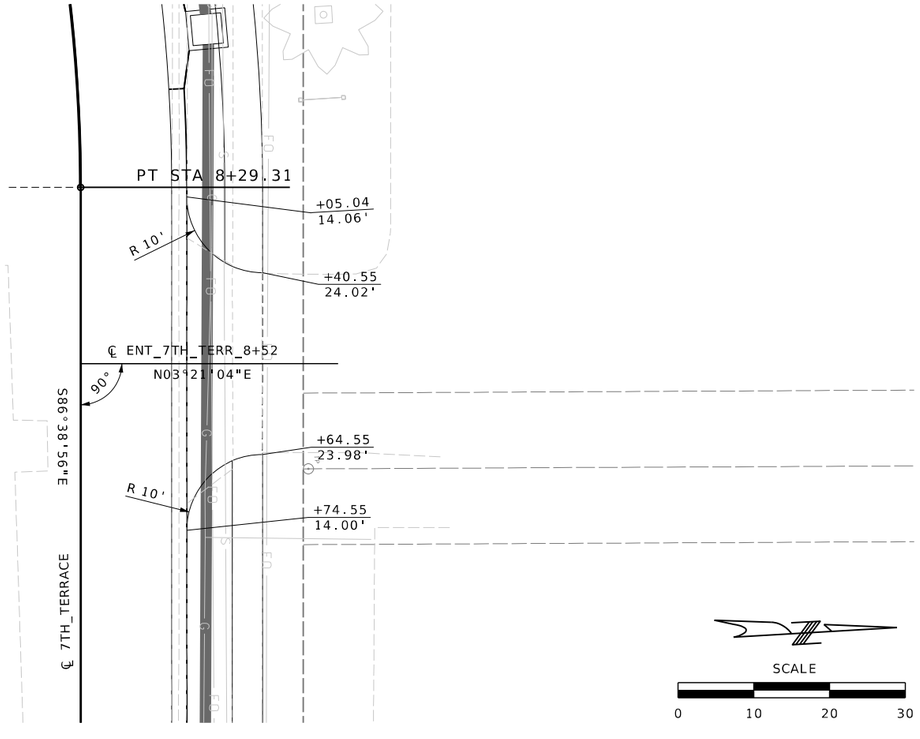

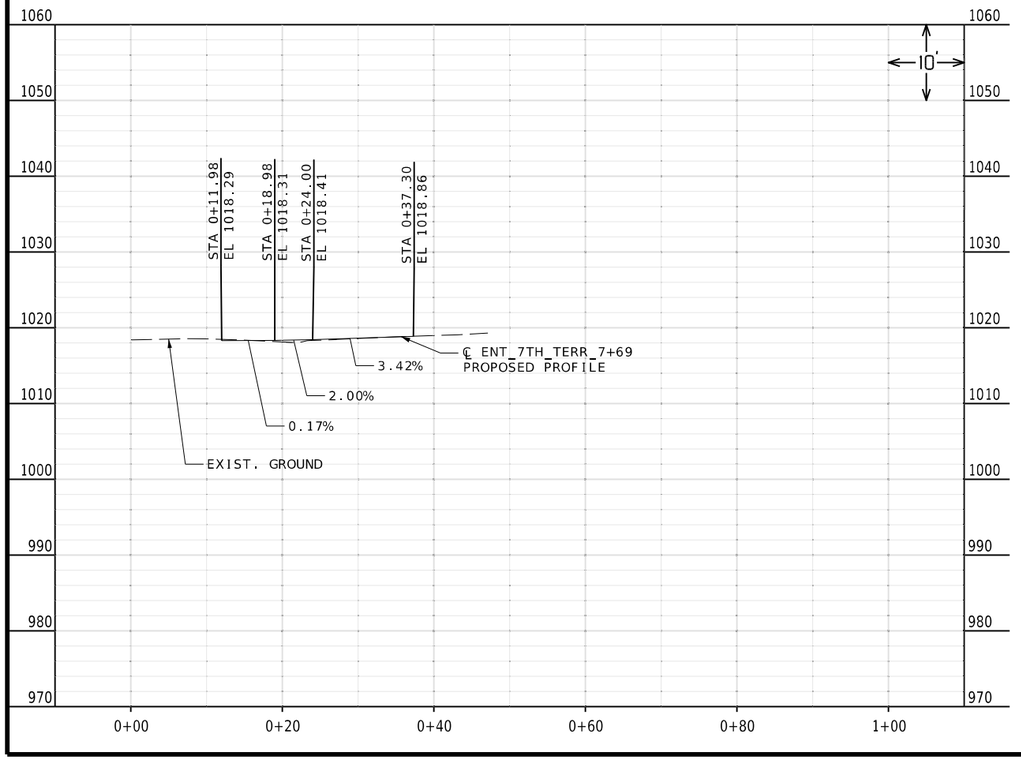

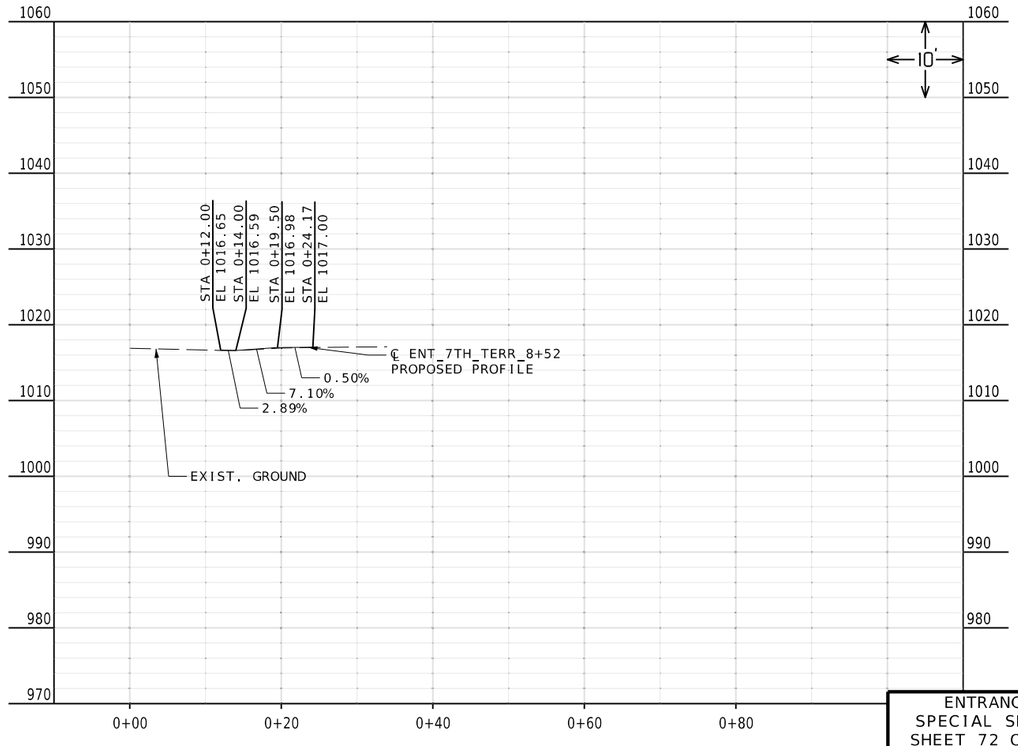

Reid Catt
2025.03.01 21:43:18-06'00'

REID BRENNEN CATT
NUMBER
PE-2010019516

REID BRENNEN CATT-ENGINEER
MO# PE-2010019516

DATE PREPARED
2/28/2025

ROUTE	STATE
50/291	MO
DISTRICT	SHEET NO.
KC	101

COUNTY
JACKSON

JOB NO.
J4P3196

FEDERAL PROJECT NO.
STB-3001(009)

PROJECT NO.

BRIDGE NO.

DESCRIPTION	DATE

IF A SEAL IS PRESENT ON THIS SHEET IT HAS BEEN ELECTRONICALLY SEALED AND DATED.

MISSOURI HIGHWAYS AND TRANSPORTATION COMMISSION
105 WEST CAPITOL
JEFFERSON CITY, MO 65102
1-888-ASK-MODOT (1-888-275-6636)

LEE'S SUMMIT MISSOURI

olsson
1301 BURLINGTON ST., STE. 100
NORTH KANSAS CITY, MO 64116
PHONE: 816.361.1177
CERT. OF AUTHORITY NO. 001592

ENTRANCE
SPECIAL SHEET
SHEET 72 OF 74

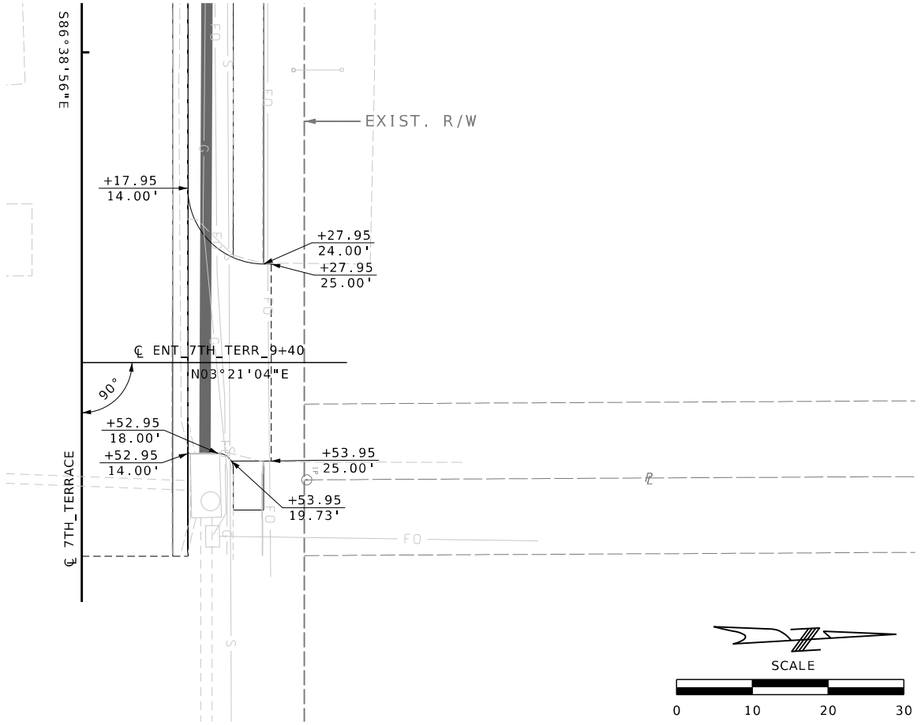

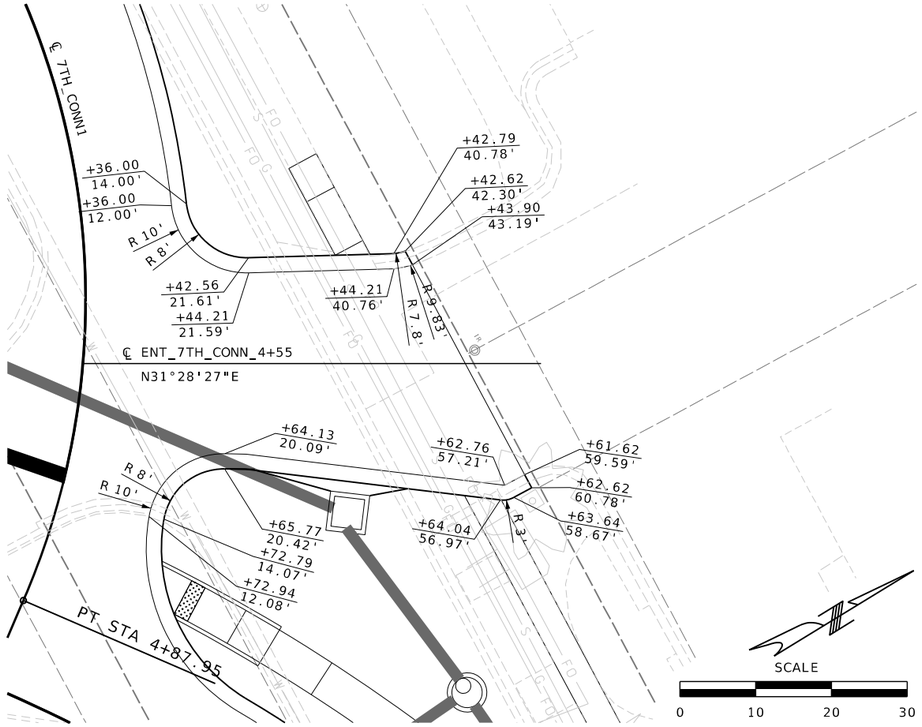

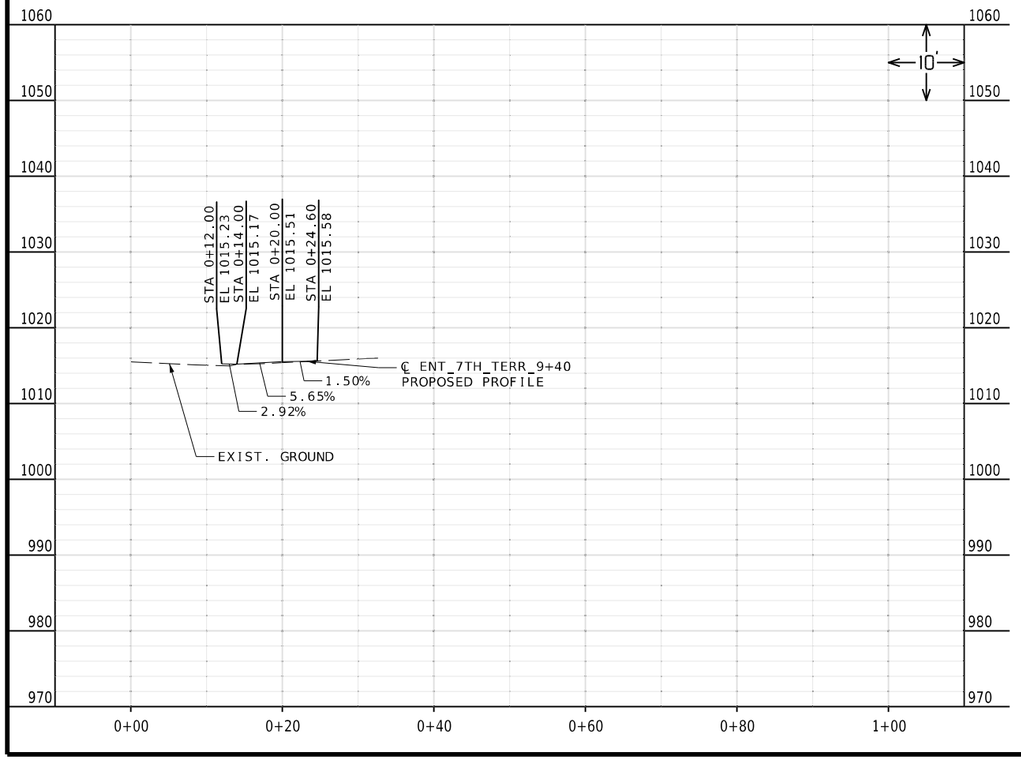

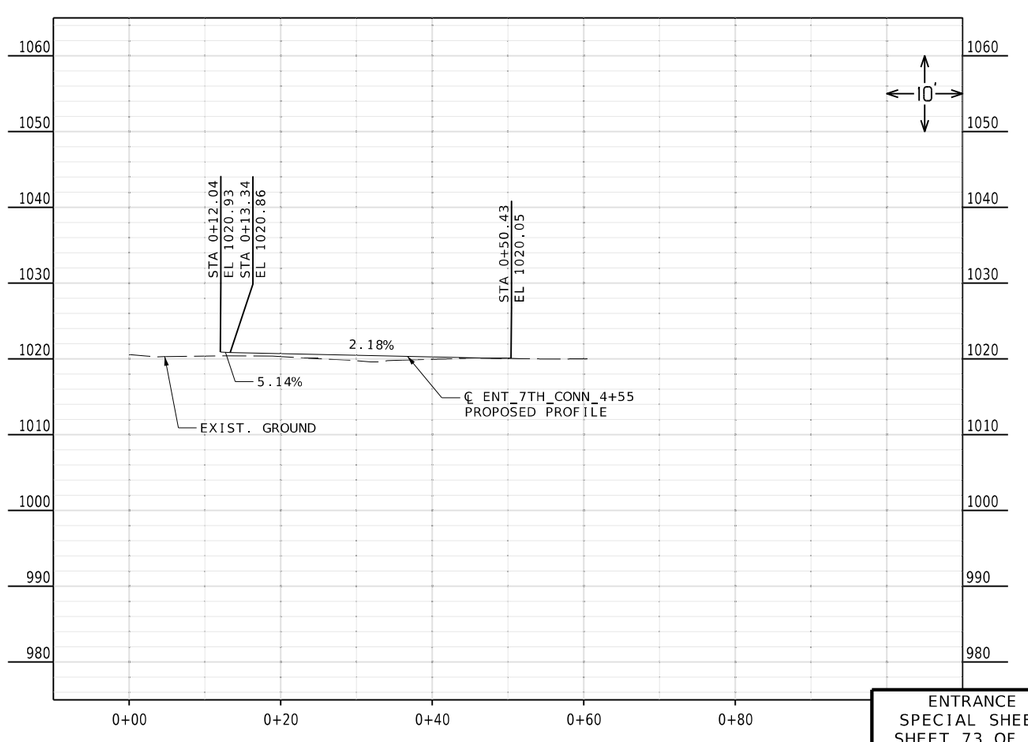

ENTRANCE
SPECIAL SHEET
SHEET 73 OF 74

Reid Catt
2025.03.01 21:43:44-06'00'

REID BRENNEN CATT-ENGINEER
MO# PE-2010019516

DATE PREPARED
2/28/2025

ROUTE	STATE
50/291	MO
DISTRICT	SHEET NO.
KC	102

COUNTY
JACKSON

JOB NO.
J4P3196

FEDERAL PROJECT NO.
STB-3001(009)

PROJECT NO.

BRIDGE NO.

DESCRIPTION

DATE

IF A SEAL IS PRESENT ON THIS SHEET IT HAS BEEN ELECTRONICALLY SEALED AND DATED.

MISSOURI HIGHWAYS AND TRANSPORTATION COMMISSION
105 WEST CAPITOL
JEFFERSON CITY, MO 65102
1-888-ASK-MODOT (1-888-275-6636)

LEE'S SUMMIT MISSOURI

olsson
1301 BURLINGTON ST., STE. 100
NORTH KANSAS CITY, MO 64116
PHONE: 816.361.1177
CERT. OF AUTHORITY NO. 001592

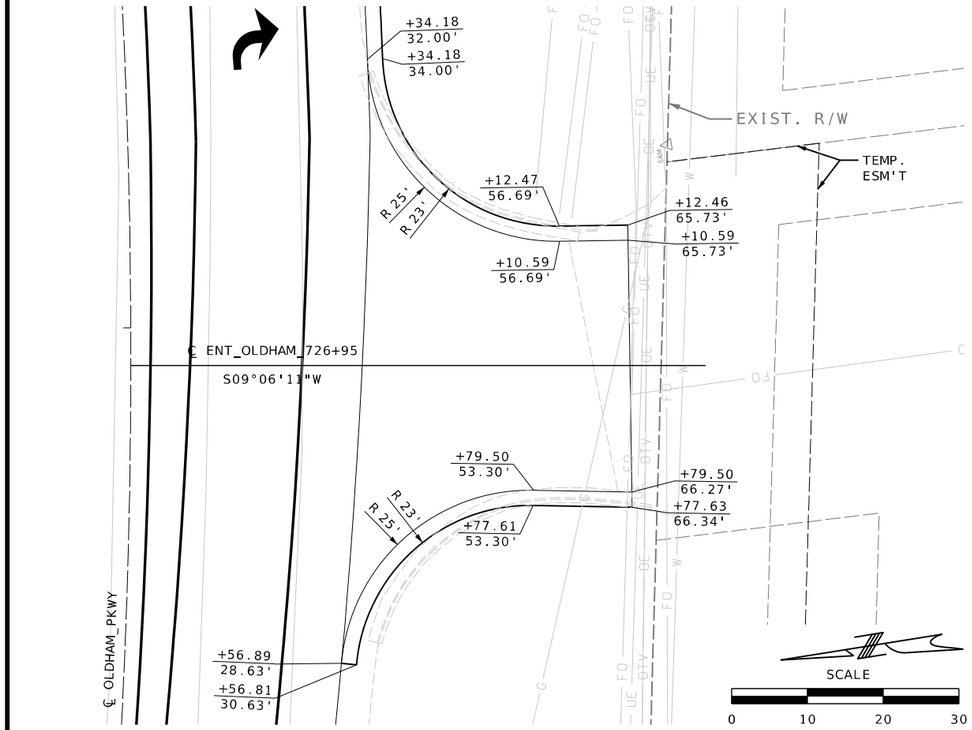

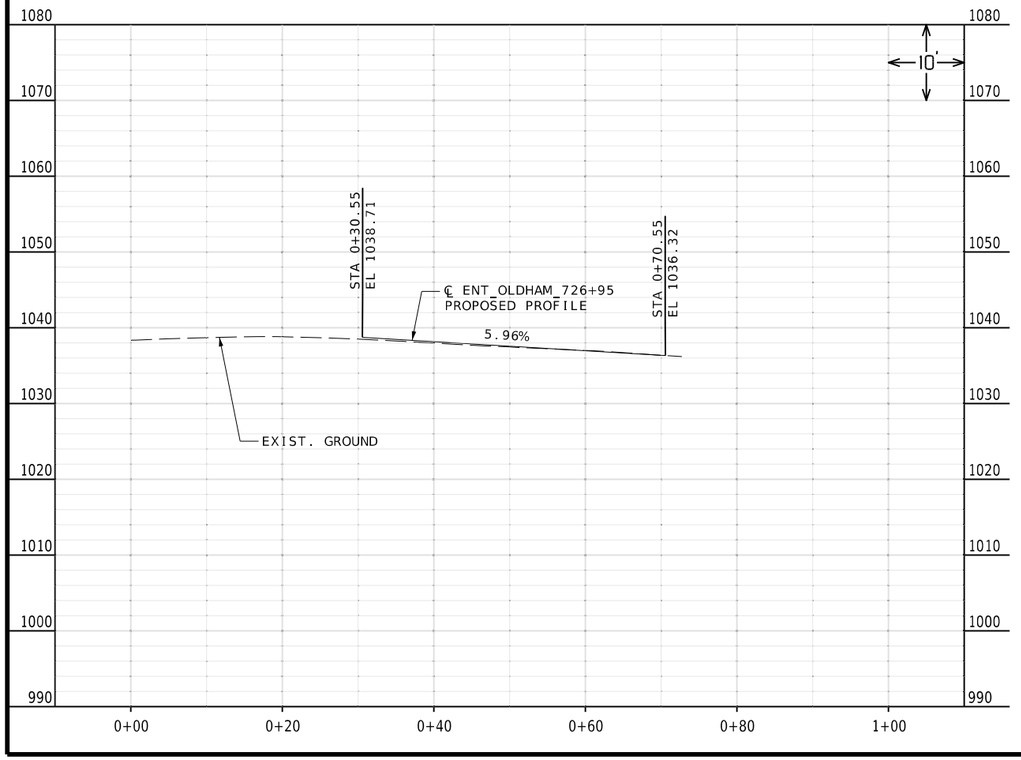

Reid Catt
2025.03.01 21:42:56-06'00'

REID BRENNEN CATT
NUMBER
PE-2010019516

REID BRENNEN CATT-ENGINEER
MO# PE-2010019516

DATE PREPARED
2/28/2025

ROUTE	STATE
50/291	MO
DISTRICT	SHEET NO.
KC	103

COUNTY
JACKSON

JOB NO.
J4P3196

FEDERAL PROJECT NO.
STB-3001(009)

PROJECT NO.

BRIDGE NO.

IF A SEAL IS PRESENT ON THIS SHEET IT HAS BEEN ELECTRONICALLY SEALED AND DATED.

DESCRIPTION	DATE

MISSOURI HIGHWAYS AND TRANSPORTATION COMMISSION

105 WEST CAPITOL
JEFFERSON CITY, MO 65102
1-888-ASK-MODOT (1-888-275-6636)

LEE'S SUMMIT MISSOURI

olsson
1301 BURLINGTON ST., STE. 100
NORTH KANSAS CITY, MO 64116
PHONE: 816.361.1177
CERT. OF AUTHORITY NO. 001592

ENTRANCE
SPECIAL SHEET
SHEET 74 OF 74

F:\2021\04501-05000\021-04786\40-Design\Microstation\J4P3196\plan_sheets\8 Special Sheets\103_SS_74_J4P3196_I10_ENTRANCE.dgn 2:16:26 PM 2/28/2025

SPACING AND TAPER LENGTHS FOR WORK ZONE SIGNS, CHANNELIZERS AND CONCRETE BARRIER

SIGN SPACING FOR ADVANCE SIGN SERIES (1)		
PERMANENT POSTED SPEED MPH	UNDIVIDED HIGHWAYS	DIVIDED HIGHWAYS
0-35	200′	200′
40-45	350′	500′
50-55	500′	1000′
60-70	1000′	SA - 1000′ SB - 1500′ SC - 2640′

TAPER LENGTHS AND END TREATEMENTS FOR CONCRETE BARRIER				
PERMANENT POSTED SPEED MPH	MINIMUM LANE TAPER LENGTH (2)			END TREATMENT (3)
	10′	11′	12′	
<40	160′	168′	176′	BARRIER HEIGHT TRANSITION
>40	160′	168′	176′	APPROVED CRASH CUSHION

TAPER LENGTHS AND SPACING FOR CHANNELIZERS							
PERMANENT POSTED SPEED MPH	MINIMUM LANE TAPER LENGTH			MINIMUM SHOULDER TAPER LENGTH BASED ON 10′ SHOULDER	BUFFER LENGTH FT.	MAXIMUM CHANNELIZER SPACING	
	10′	11′	12′			THROUGH TAPER	THROUGH WORK AREA
0-35	205′	225′	245′	70′	280′	35′	40′
40-45	450′	495′	540′	150′	400′	40′	80′
50-55	550′	605′	660′	185′	560′	50′	80′
60-70	700′	770′	840′	235′	840′	60′	120′

NOTE:
SEE STANDARD PLAN 616.10 FOR TEMPORARY TRAFFIC CONTROL DEVICES.

NOTES:

(1) SPACING BETWEEN SIGNS AND SPACING BETWEEN LAST SIGN AND FLAGGER, BEGINNING OF TAPER, OF SIGNED CONDITION MAY BE ADJUSTED BY INCREASING TO ACCOMMODATE FIELD CONDITIONS AND VISIBILITY.

(2) TAPER LENGTHS SHOWN INCLUDE LENGTH REQUIRED FOR LANE AND 10′ SHOULDER.

(3) CONCRETE BARRIER MAY BE INSTALLED AT AND 8:1 FLARE RATE FROM THE SHOULDER POINT TO THE LIMITS OF THE CLEAR ZONE WHERE THE SIDE SLOPE IS 6:1 OR FLATTER. CONTRACTOR MY PROVIDE CONCRETE BARRIER AT OWN EXPENSE. INCIDENTAL TO PROJECT.

GENERAL NOTES:

1. AS WITH ALL CONSTRUCTION ACTIVITIES TRAFFIC SITUATIONS ARE SUBJECT TO CHANGE. THE CONTRACTOR SHALL BE AWARE THAT ALL TEMPORARY TRAFFIC CONTROL SHALL CONFORM TO THE STANDARDS OUTLINED IN THE MANUAL ON UNIFORM TRAFFIC CONTROL DEVICES (M.U.T.C.D.) THE MISSOURI STANDARD PLANS FOR HIGHWAY CONSTRUCTION, SECTION 600 AND SHALL FOLLOW THE GUIDELINES IN THE MODOT 'TRAFFIC CONTROL FOR FIELD OPERATIONS MANUAL'.

2. A TOTAL OF FOUR (4) PORTABLE CHANGEABLE MESSAGE SIGNS SHALL BE SUPPLIED AND PLACED ROADSIDE OF EACH APPROACH TO THE WORK ZONE, INCLUDING ROUTE 291, HAMBLEN, AND ROUTE 50. A MINIMUM OF FOURTEEN (14) DAYS IN ADVANCE OF ANY TURNING RESTRICTIONS, LANE CLOSURES, OR DETOURS REQUIRED BY THE TEMPORARY TRAFFIC CONTROL.

3. PLACE A 'ROAD WORK AHEAD' SIGN ON THE APPROACH TO ALL INTERSECTIONS WHERE THE ADVANCE SIGNING FOR THE TEMPORARY TRAFFIC CONTROL EXTENDS PAST THAT INTERSECTION.

4. NOTIFY, MODOT RESIDENT ENGINEER AT 816-347-4143 (OFFICE) 48-HOURS IN ADVANCE OF ANY LANE CLOSURE OR ROADWAY CLOSURE.

5. ALL EXISTING SIGNS SHALL BE USED IN PLACE. ADJUSTED AND/OR COVERED AS CONDITIONS REQUIRE.

6. REFER TO MODOT STANDARD PLANS 619.10J. SHEETS 1-3 FOR "PAVEMENT EDGE TREATMENT" DETAILS. THE CONTRACTOR SHALL BE REQUIRED TO FOLLOW THIS STANDARD DURING WORKING AND NON-WORKING HOURS.

7. ALL STATIONING, DISTANCES, AND SPACING OF WORK ZONES DEVICES ARE APPROXIMATE AND MAY BE REVISED AS APPROVED BY ENGINEER.

8. TYPE III MOVEABLE BARRICADES TO BE LOCATED AS APPROVED BY THE ENGINEER TO FIT FIELD CONDITIONS.

9. FIRST ORDER OF WORK ON ALL PHASES SHALL BE PLACEMENT OF ALL WORK ZONE WARNING DEVICES AND SIGNS AS NOTED.

10. SIGNS SHALL REMAIN IN PLACE UNTIL CONSTRUCTION IS COMPLETED OR AS APPROVED BY THE ENGINEER.

11. SIGNS LEFT IN PLACE OVERNIGHT MUST BE MOUNTED AT 7′ MINIMUM.

12. ALTERNATE TRAFFIC CONTROL MAY BE USED AS NEEDED AT THE APPROVAL OF THE ENGINEER.

13. SPEED LIMIT SIGNS INDICATING THE NORMAL SPEED LIMIT SHALL BE INSTALLED AT THE END OF THE WORK ZONE, NO FURTHER WORK ZONES WILL BE ENCOUNTERED WITHIN THE NEXT 1/2 MILE.

14. TEMPORARY SPEED LIMIT SIGNS SHALL BE COVERED OR REMOVED WHEN THE CONDITIONS REQUIRING REDUCED SPEEDS DO NOT EXIST.

15. NO DIRECT PAYMENT WILL BE MADE FOR RELOCATION OF CHANNELIZERS OR CONSTRUCTION SIGNS.

16. DISTANCE MAY BE ADJUSTED (INCREASED, TYPICALLY) ACCORDING TO FIELD CONDITIONS.

17. REFER TO MODOT STANDARD PLAN, 612.20 FOR SAND FILLED IMPACT ATTENUATORS AND 617.20 FOR TEMPORARY CONCRETE TRAFFIC BARRIER.

STATE OF MISSOURI
JEREMY SCOTT STRETZ
NUMBER PE-2011021054
PROFESSIONAL ENGINEER
Jeremy Stretz 2025.02.28 15:01:46-06'00'

DATE PREPARED 2/28/2025
ROUTE 50/291 | STATE MO
DISTRICT KC | SHEET NO. 104
COUNTY JACKSON
JOB NO. J4P3196
FEDERAL PROJECT NO. STB-3001(009)
PROJECT NO.
BRIDGE NO.

DESCRIPTION | DATE

IF A SEAL IS PRESENT ON THIS SHEET IT HAS BEEN ELECTRONICALLY SEALED AND DATED.

MISSOURI HIGHWAYS AND TRANSPORTATION COMMISSION
MoDOT
105 WEST CAPITOL
JEFFERSON CITY, MO 65102
1-888-ASK-MODOT (1-888-275-6636)

LEE'S SUMMIT MISSOURI

olsson
1301 BURLINGTON ST., STE. 100
NORTH KANSAS CITY, MO 64116
PHONE: 816.361.1177
CERT. OF AUTHORITY NO. 001592

NOT TO SCALE

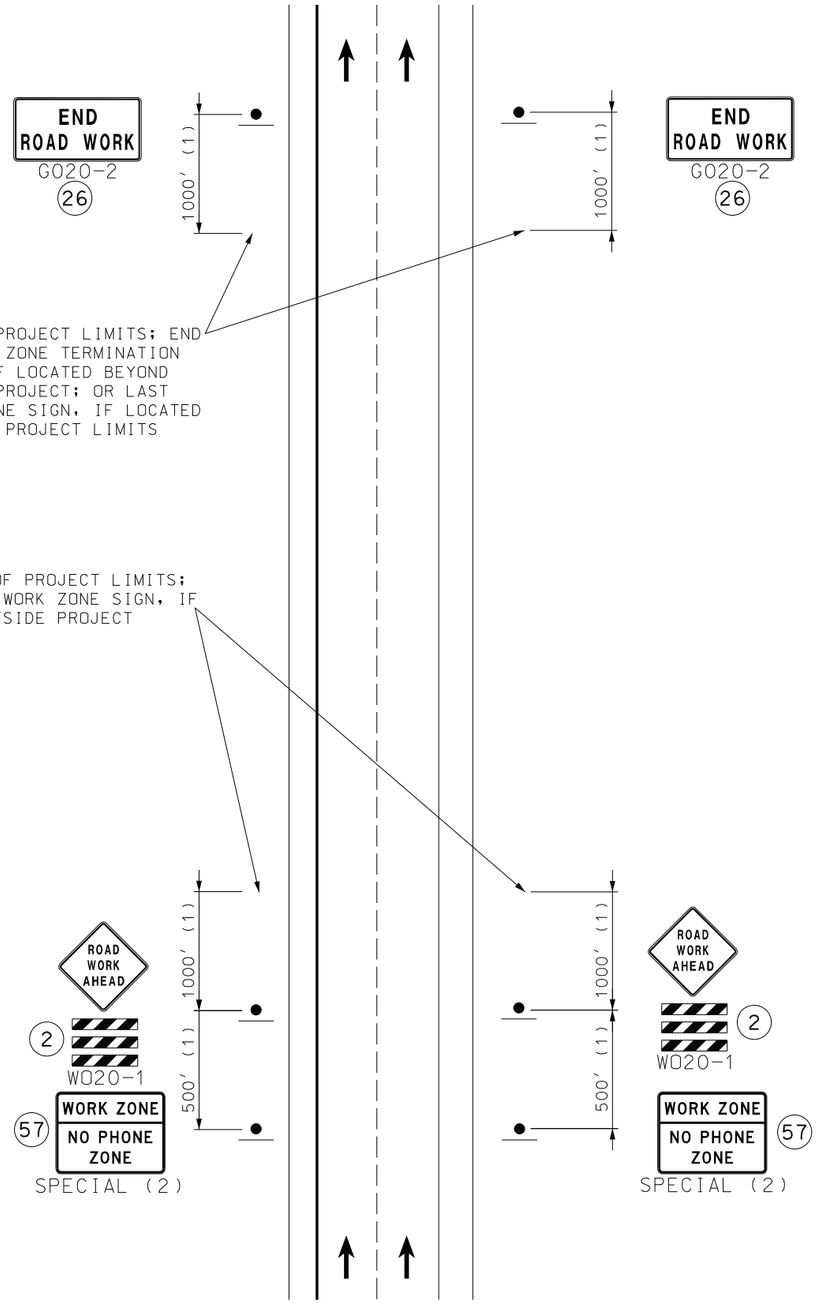

BEGIN/END PROJECT SIGNING
MULTI-LANE
DIVIDED

BEGINNING PROJECT SIGNING NOTES:

ANY EXISTING SIGNING THAT CONFLICTS WITH THE TRAFFIC CONTROL SIGNING SHALL BE COMPLETELY COVERED OR REMOVED.

(1) DISTANCE MAY BE ADJUSTED ACCORDING TO FIELD CONDITIONS. WHERE TRAFFIC BACKUPS ARE EXPECTED BEYOND THE ADVANCED WARNING AREA, ADDITIONAL SIGNING MAY BE NEEDED.

(2) THE "WORK ZONE ON PHONE ZONE" SIGN IS PLACED A MINIMUM OF 500 FEET BEFORE THE ROAD WORK AHEAD SIGN.

STATE OF MISSOURI
JEREMY SCOTT STRETZ
NUMBER PE-2011023054
PROFESSIONAL ENGINEER

Jeremy Stretz 2025.02.28 15:18:15-06'00'

DATE PREPARED
2/28/2025

ROUTE	STATE
50/291	MO
DISTRICT	SHEET NO.
KC	105

COUNTY
JACKSON

JOB NO.
J4P3196

FEDERAL PROJECT NO.
STB-3001(009)

PROJECT NO.

BRIDGE NO.

DESCRIPTION	DATE

IF A SEAL IS PRESENT ON THIS SHEET IT HAS BEEN ELECTRONICALLY SEALED AND DATED.

MISSOURI HIGHWAYS AND TRANSPORTATION COMMISSION
105 WEST CAPITOL
JEFFERSON CITY, MO 65102
1-888-ASK-MODOT (1-888-275-6636)

LEE'S SUMMIT MISSOURI

olsson
1301 BURLINGTON ST., STE. 100
NORTH KANSAS CITY, MO 64116
PHONE: 816.361.1177
CERT. OF AUTHORITY NO. 001592

F:\2021\04501-05000\021-04786\40-Design\Microstation\J4P3196\plan_sheets\9 Traffic Control\105_TC_02_ADV_WARNING_J4P3196_I50_RTE291.dgn 1:45:13 PM 2/28/2025

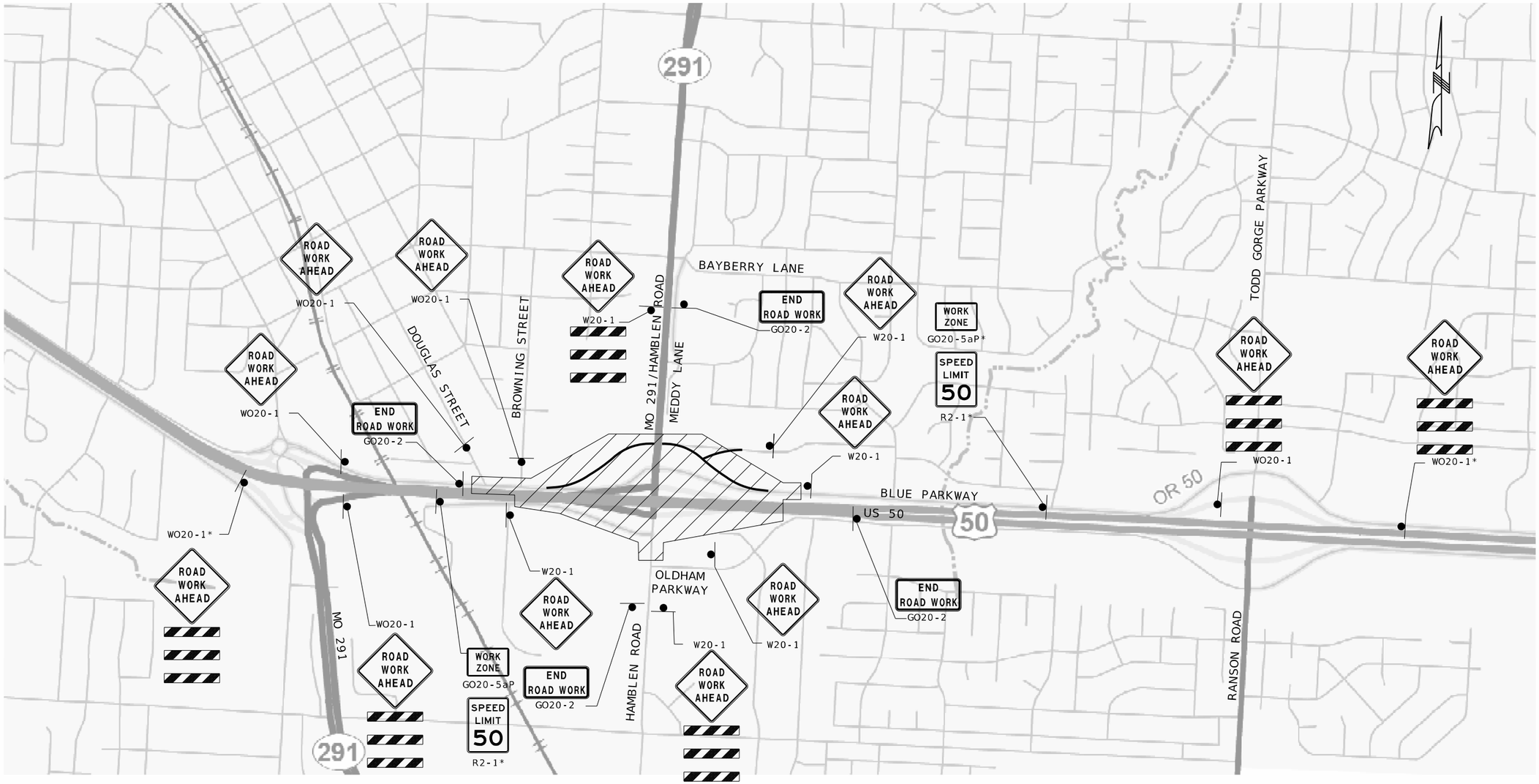

TRAFFIC CONTROL LEGEND

- WORK AREA
- SIGN (SINGLE SIDED)
- * DIVIDED ROADWAY SHALL HAVE SIGNS MOUNTED ON MEDIAN AND OUTSIDE SHOULDER

NOT TO SCALE

ADVANCED SIGNING

TRAFFIC CONTROL SHEET 3 OF 64

STATE OF MISSOURI — JEREMY SCOTT STRETZ — NUMBER PE-2017023864 — PROFESSIONAL ENGINEER

Jeremy Stretz 2025.02.28 15:18:29-06'00'

DATE PREPARED: 2/28/2025

ROUTE	STATE
50/291	MO
DISTRICT	SHEET NO.
KC	106

COUNTY: JACKSON

JOB NO.: J4P3196

FEDERAL PROJECT NO.: STB-3001(009)

PROJECT NO.:

BRIDGE NO.:

DESCRIPTION | DATE

IF A SEAL IS PRESENT ON THIS SHEET IT HAS BEEN ELECTRONICALLY SEALED AND DATED.

MISSOURI HIGHWAYS AND TRANSPORTATION COMMISSION
105 WEST CAPITOL
JEFFERSON CITY, MO 65102
1-888-ASK-MODOT (1-888-275-6636)

LEE'S SUMMIT MISSOURI

olsson
1301 BURLINGTON ST., STE. 100
NORTH KANSAS CITY, MO 64116
PHONE: 816.361.1177
CERT. OF AUTHORITY NO. 001592

F:\2021\04501-05000\021-04786\40-Design\Microstation\J4P3196\plan_sheets\9 Traffic Control\106_TC_03_ADV_WARNING_J4P3196_I50_RTE291.dgn 1:45:18 PM 2/28/2025

ALL EXISTING SIGNING AND UNUSED SIGNAL HEADS SHALL BE COVERED/BAGGED

CONTRACTOR SHALL NOTIFY MODOT AND THE CITY OF LEE'S SUMMIT AT LEAST TWO HOURS PRIOR TO ANY SIGNAL MODIFICATIONS TO NOTIFY THEM OF NEEDS OF SIGNAL TIMING MODIFICATIONS.

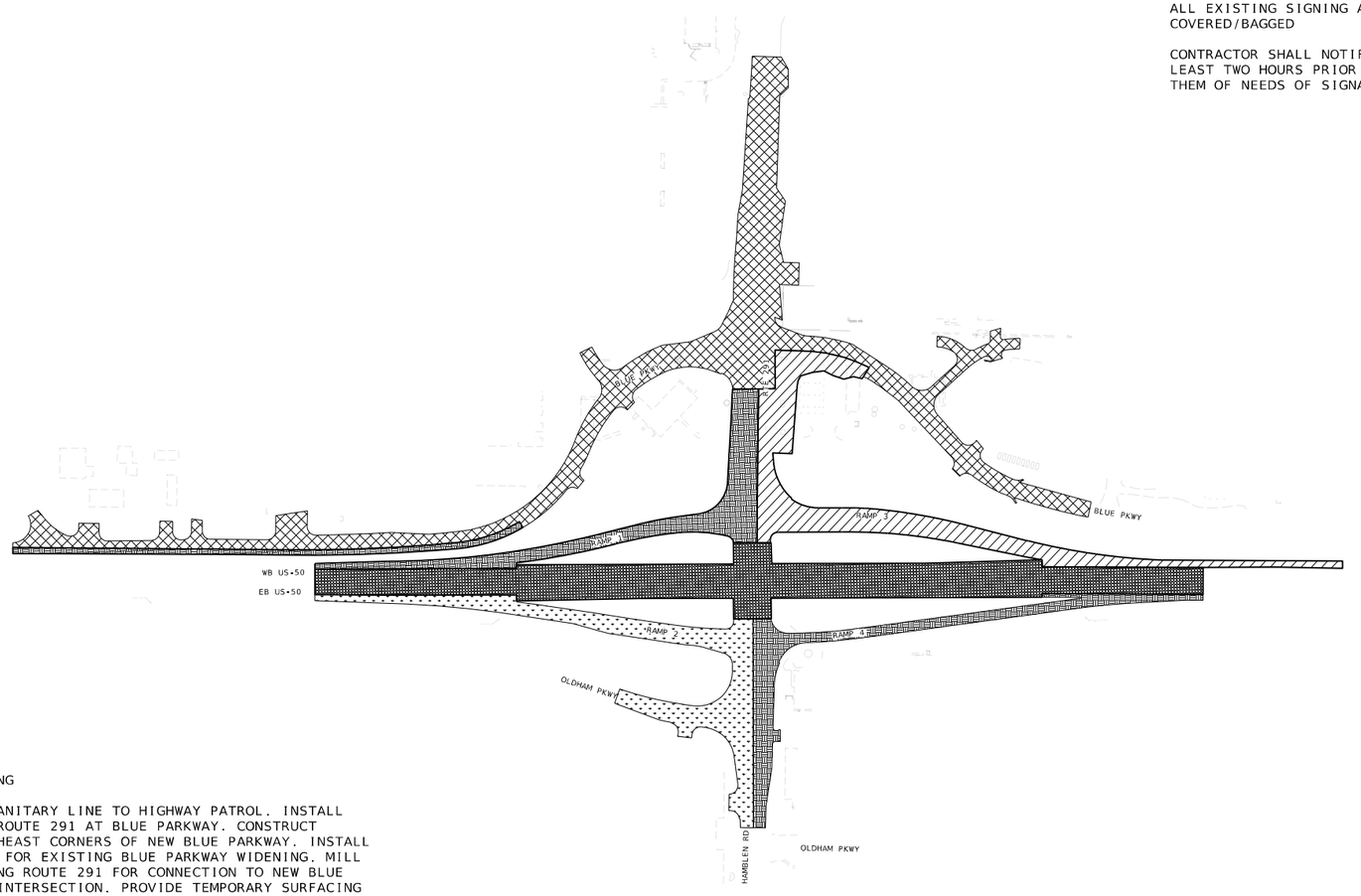

CONSTRUCTION PHASING

PHASE 1: INSTALL SANITARY LINE TO HIGHWAY PATROL. INSTALL WATER LINE ACROSS ROUTE 291 AT BLUE PARKWAY. CONSTRUCT NORTHWEST AND NORTHEAST CORNERS OF NEW BLUE PARKWAY. INSTALL TEMPORARY PAVEMENT FOR EXISTING BLUE PARKWAY WIDENING. MILL AND OVERLAY EXISTING ROUTE 291 FOR CONNECTION TO NEW BLUE PARKWAY NORTH NEW INTERSECTION. PROVIDE TEMPORARY SURFACING FOR CONNECTION TO NEW BLUE PARKWAY FOR CONNECTION AND WIDEN RAMPS 1 THROUGH 4 WITH TEMPORARY SURFACING TO PROVIDE ADDITIONAL WIDTH FOR PHASE 2 TRAFFIC CONTROL.

PHASE 2: RECONSTRUCT EB/WB US 50 ROADWAY, RETAINING WALL AND MO-291 BRIDGE OVER US-50. ALL US-50 EB/WB TRAFFIC TO BE DETOURED OVER RAMPS 1-4. PROPOSED MAINLINE CONNECTIONS WILL USE LANE SHIFTS AND TEMPORARY LANE CLOSURES WHILE MAINTAINING ONE LANE OF TRAFFIC IN EACH DIRECTION AT ALL TIMES DURING PEAK HOURS. US-50 TRAFFIC SHALL HAVE 2-LANES OPEN IN EACH DIRECTION AT ALL TIMES.

PHASE 3: CONSTRUCT SOUTHBOUND APPROACH OF MO-291 BRIDGE AND RETAINING WALL FOR US-50. CONSTRUCT RAMP 1 AND NW QUADRANT OF INTERCHANGE. CONSTRUCT RAMP 4 AND SE QUADRANT OF INTERCHANGE AND EAST SIDE OF HAMBLEN ROAD FROM SOUTH CONSTRUCTION EXTENTS. REMOVE AND OR REPLACE TEMPORARY PAVEMENT ON BLUE PARKWAY WITH PERMANENT PAVEMENT AT INDICATED LOCATIONS.

PHASE 4: CONSTRUCT RAMP 2 AND SW QUADRANT OF INTERCHANGE. CONSTRUCT OLDHAM PARKWAY AND WEST HALF OF HAMBLEN ROAD FROM INTERCHANGE TO SOUTH CONSTRUCTION EXTENTS.

PHASE 5: CONSTRUCT RAMP 3 AND NE QUADRANT OF INTERCHANGE. CONSTRUCT EAST SIDE OF MO-291/HAMBLEN ROAD FROM NE QUADRANT OF INTERCHANGE TO RELOCATE BLUE PARKWAY INTERSECTION. CONSTRUCT SOUTH PORTION OF BLUE PARKWAY EAST OF MO-291.

NOT SHOWN — PHASE 6: CONSTRUCT MEDIAN ISLANDS ALONG ROUTE 291 WITH INDIVIDUAL LANE CLOSURES AS REQUIRED.

SCALE

0 200 400 600 800 1000

TRAFFIC CONTROL
SHEET 4 OF 64

STATE OF MISSOURI
JEREMY SCOTT STRETZ
NUMBER PE-2017023856
PROFESSIONAL ENGINEER

Jeremy Stretz 2025.02.28 15:18:44-06'00'

DATE PREPARED
2/28/2025

ROUTE	STATE
50/291	MO
DISTRICT	SHEET NO.
KC	107

COUNTY
JACKSON

JOB NO.
J4P3196

FEDERAL PROJECT NO.
STB-3001(009)

PROJECT NO.

BRIDGE NO.

DESCRIPTION	DATE

IF A SEAL IS PRESENT ON THIS SHEET IT HAS BEEN ELECTRONICALLY SEALED AND DATED.

MISSOURI HIGHWAYS AND TRANSPORTATION COMMISSION
105 WEST CAPITOL
JEFFERSON CITY, MO 65102
1-888-ASK-MODOT (1-888-275-6636)

LEE'S SUMMIT MISSOURI

olsson
1301 BURLINGTON ST., STE. 100
NORTH KANSAS CITY, MO 64116
PHONE: 816.361.1177
CERT. OF AUTHORITY NO. 001592

PHASE 1A

TRAFFIC:
RAMP 1 OPEN
RAMP 2 OPEN
RAMP 3 OPEN
RAMP 4 OPEN

CONSTRUCTION:
CONSTRUCT NEW WATER AND SANITARY LINES ACROSS ROUTE 291 NORTH OF BLUE PARKWAY. EXISTING LANES SHALL BE REDUCED TO 1 LANE IN EACH DIRECTION USING THE EXISTING NORTHBOUND AND SOUTHBOUND LANES ALONG 291.

CONSTRUCT TEMPORARY CONNECTOR ROADWAY BETWEEN BLUE PARKWAY AND 7TH TERRACE.

CONSTRUCT NEW FIBER OPTIC CABLINER FOR KC SCOUT CONNECTION PRIOR TO PHASE 2 ROUTE 291 BRIDGE DEMOLITION.

NW BLUE PKWY & RTE 291 MODIFICATIONS

CONTRACTOR SHALL NOTIFY MODOT AND THE CITY OF LEE'S SUMMIT AT LEAST TWO DAYS PRIOR TO ANY SIGNAL MODIFICATIONS TO NOTIFY THEM OF THE NEEDS OF SIGNAL TIMING MODIFICATIONS

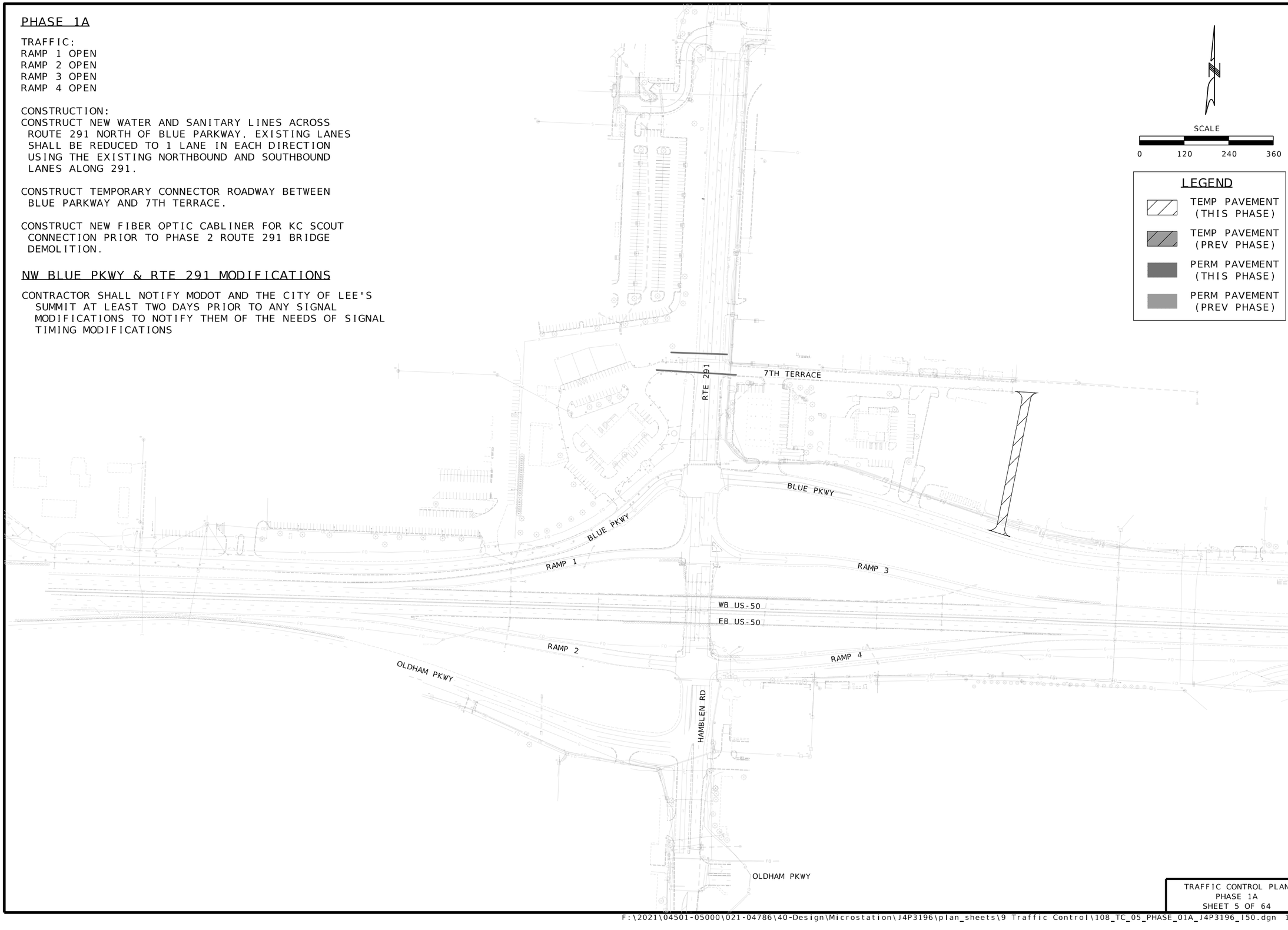

SCALE
0 120 240 360

LEGEND
- TEMP PAVEMENT (THIS PHASE)
- TEMP PAVEMENT (PREV PHASE)
- PERM PAVEMENT (THIS PHASE)
- PERM PAVEMENT (PREV PHASE)

STATE OF MISSOURI
JEREMY SCOTT STRETZ
NUMBER PE-2017023856
PROFESSIONAL ENGINEER
Jeremy Stretz 2025.02.28 15:18:56-06'00'

DATE PREPARED 2/28/2025
ROUTE 50/291 | STATE MO
DISTRICT KC | SHEET NO. 108
COUNTY JACKSON
JOB NO. J4P3196
FEDERAL PROJECT NO. STB-3001(009)
PROJECT NO.
BRIDGE NO.

IF A SEAL IS PRESENT ON THIS SHEET IT HAS BEEN ELECTRONICALLY SEALED AND DATED.

DESCRIPTION | DATE

MISSOURI HIGHWAYS AND TRANSPORTATION COMMISSION
MoDOT
105 WEST CAPITOL
JEFFERSON CITY, MO 65102
1-888-ASK-MODOT (1-888-275-6636)

LEE'S SUMMIT MISSOURI

olsson
1301 BURLINGTON ST., STE. 100
NORTH KANSAS CITY, MO 64116
PHONE: 816.361.1177
CERT. OF AUTHORITY NO. 001592

TRAFFIC CONTROL PLAN
PHASE 1A
SHEET 5 OF 64

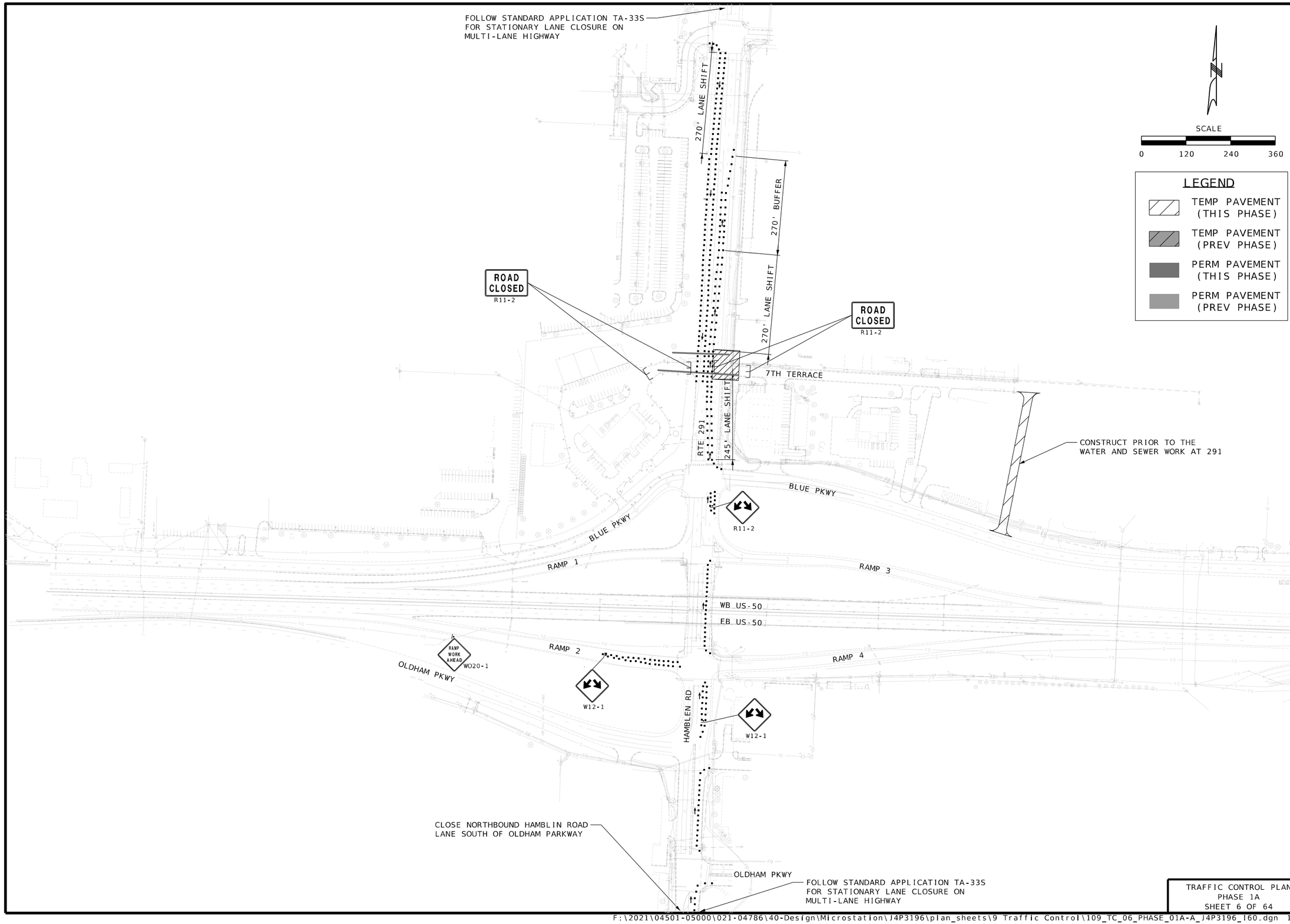

STATE OF MISSOURI
JEREMY SCOTT STRETZ
NUMBER PE-2017023856
PROFESSIONAL ENGINEER

Jeremy Stretz 2025.02.28 15:19:21-06'00'

DATE PREPARED
2/28/2025

ROUTE	STATE
50/291	MO
DISTRICT	SHEET NO.
KC	109

COUNTY
JACKSON

JOB NO.
J4P3196

FEDERAL PROJECT NO.
STB-3001(009)

PROJECT NO.

BRIDGE NO.

IF A SEAL IS PRESENT ON THIS SHEET IT HAS BEEN ELECTRONICALLY SEALED AND DATED.

DESCRIPTION	DATE

MISSOURI HIGHWAYS AND TRANSPORTATION COMMISSION

105 WEST CAPITOL
JEFFERSON CITY, MO 65102
1-888-ASK-MODOT (1-888-275-6636)

LEE'S SUMMIT MISSOURI

olsson
1301 BURLINGTON ST., STE. 100
NORTH KANSAS CITY, MO 64116
PHONE: 816.361.1177
CERT. OF AUTHORITY NO. 001592

TRAFFIC CONTROL PLAN
PHASE 1A
SHEET 6 OF 64

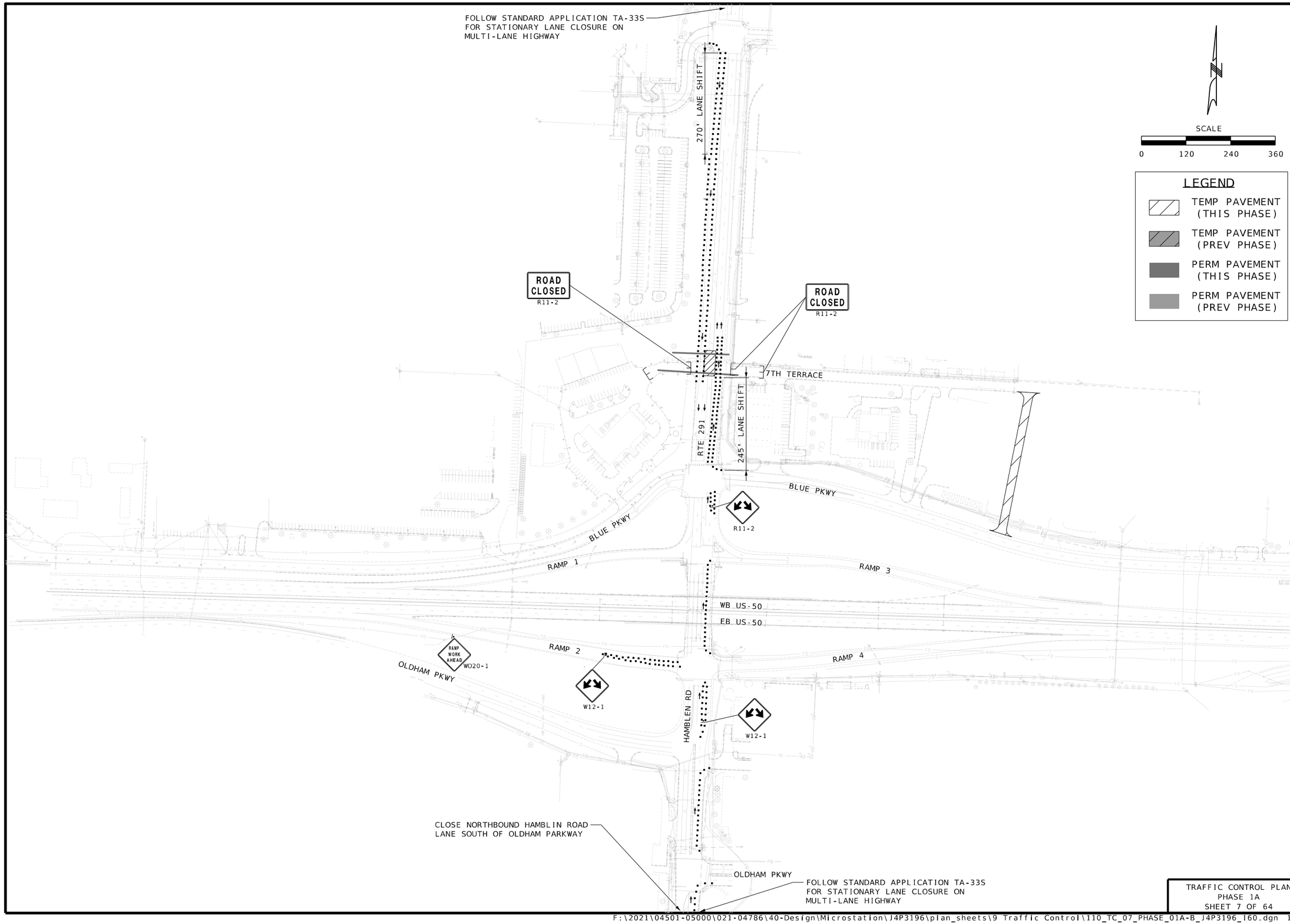

STATE OF MISSOURI
JEREMY SCOTT STRETZ
NUMBER PE-2017023856
PROFESSIONAL ENGINEER

Jeremy Stretz 2025.02.28 15:19:40-06'00'

DATE PREPARED
2/28/2025

ROUTE	STATE
50/291	MO
DISTRICT	SHEET NO.
KC	110

COUNTY
JACKSON

JOB NO.
J4P3196

FEDERAL PROJECT NO.
STB-3001(009)

PROJECT NO.

BRIDGE NO.

IF A SEAL IS PRESENT ON THIS SHEET IT HAS BEEN ELECTRONICALLY SEALED AND DATED.

DESCRIPTION	DATE

MISSOURI HIGHWAYS AND TRANSPORTATION COMMISSION

105 WEST CAPITOL
JEFFERSON CITY, MO 65102
1-888-ASK-MODOT (1-888-275-6636)

LEE'S SUMMIT MISSOURI

olsson
1301 BURLINGTON ST., STE. 100
NORTH KANSAS CITY, MO 64116
PHONE: 816.361.1177
CERT. OF AUTHORITY NO. 001592

TRAFFIC CONTROL PLAN
PHASE 1A
SHEET 7 OF 64

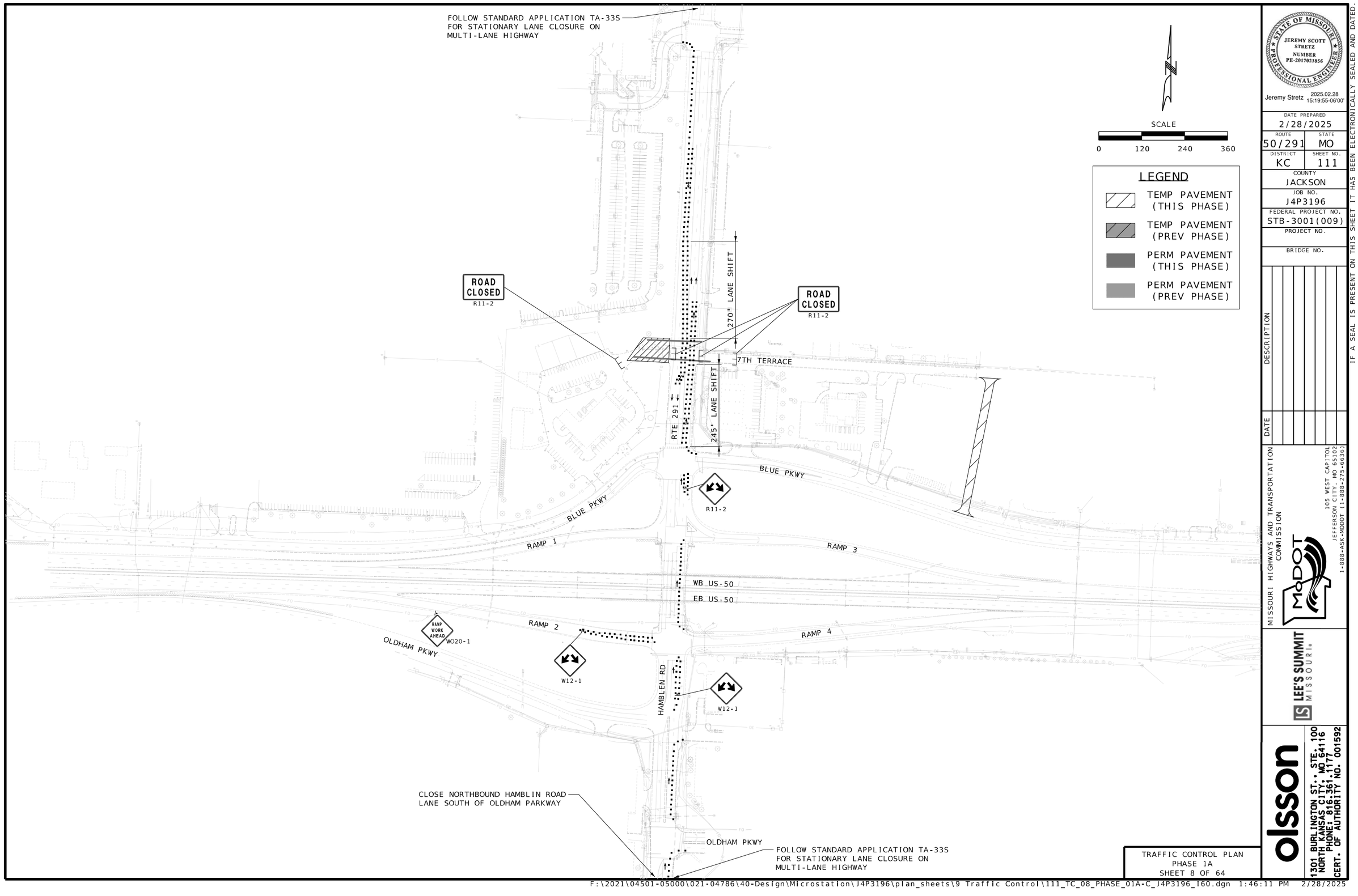

STATE OF MISSOURI
JEREMY SCOTT STRETZ
NUMBER PE-2017023856
PROFESSIONAL ENGINEER

Jeremy Stretz 2025.02.28 15:19:55-06'00'

DATE PREPARED
2/28/2025

ROUTE	STATE
50/291	MO
DISTRICT	SHEET NO.
KC	111

COUNTY
JACKSON

JOB NO.
J4P3196

FEDERAL PROJECT NO.
STB-3001(009)

PROJECT NO.

BRIDGE NO.

IF A SEAL IS PRESENT ON THIS SHEET IT HAS BEEN ELECTRONICALLY SEALED AND DATED.

DESCRIPTION	DATE

MISSOURI HIGHWAYS AND TRANSPORTATION COMMISSION

105 WEST CAPITOL
JEFFERSON CITY, MO 65102
1-888-ASK-MODOT (1-888-275-6636)

LEE'S SUMMIT MISSOURI

olsson
1301 BURLINGTON ST., STE. 100
NORTH KANSAS CITY, MO 64116
PHONE: 816.361.1177
CERT. OF AUTHORITY NO. 001592

TRAFFIC CONTROL PLAN
PHASE 1A
SHEET 8 OF 64

PHASE 1B

TRAFFIC:
RAMP 1 OPEN
RAMP 2 OPEN
RAMP 3 OPEN
RAMP 4 OPEN

CONSTRUCTION:
CONSTRUCT NEW OFF ALIGNMENT BLUE PARKWAY CONSTRUCTION. CONSTRUCT TEMPORARY ROADWAY BETWEEN 7TH STREET AND BLUE PARKWAY. RESURFACE LANES OF ROUTE 291 THROUGH NEW BLUE PARKWAY ALIGNMENT AND PROVIDE TEMPORARY SURFACING TO TIE-IN WITH EXISTING ROUTE 291 SOUTH OF NEW BLUE PARKWAY ALIGNMENT. THIS WORK SHALL BE COMPLETE UNDER MOBILE OPERATION, NO DETAILED TRAFFIC CONTROL PLANS SHOWN FOR THIS WORK.

NW BLUE PKWY & RTE 291 MODIFICATIONS

CONTRACTOR SHALL NOTIFY MODOT AND THE CITY OF LEE'S SUMMIT AT LEAST TWO DAYS PRIOR TO ANY SIGNAL MODIFICATIONS TO NOTIFY THEM OF THE NEEDS OF SIGNAL TIMING MODIFICATIONS

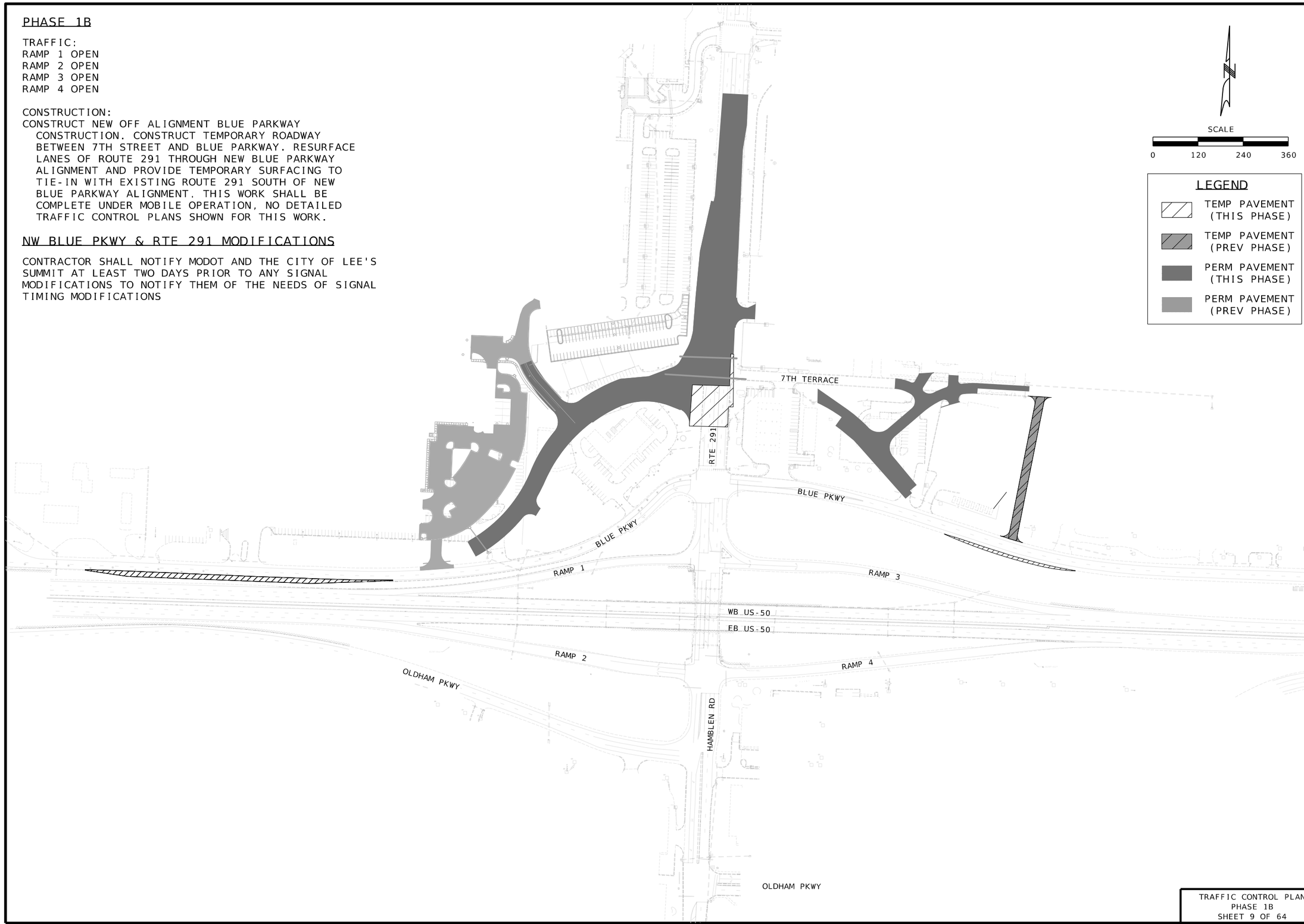

SCALE
0 120 240 360

LEGEND
- TEMP PAVEMENT (THIS PHASE)
- TEMP PAVEMENT (PREV PHASE)
- PERM PAVEMENT (THIS PHASE)
- PERM PAVEMENT (PREV PHASE)

STATE OF MISSOURI
JEREMY SCOTT STRETZ
NUMBER PE-2017023856
PROFESSIONAL ENGINEER
Jeremy Stretz 2025.02.28 15:20:13-06'00'

DATE PREPARED 2/28/2025
ROUTE 50/291 | STATE MO
DISTRICT KC | SHEET NO. 112
COUNTY JACKSON
JOB NO. J4P3196
FEDERAL PROJECT NO. STB-3001(009)
PROJECT NO.
BRIDGE NO.

IF A SEAL IS PRESENT ON THIS SHEET IT HAS BEEN ELECTRONICALLY SEALED AND DATED.

DATE	DESCRIPTION

MISSOURI HIGHWAYS AND TRANSPORTATION COMMISSION
105 WEST CAPITOL
JEFFERSON CITY, MO 65102
1-888-ASK-MODOT (1-888-275-6636)

LEE'S SUMMIT MISSOURI

olsson
1301 BURLINGTON ST., STE. 100
NORTH KANSAS CITY, MO 64116
PHONE: 816.361.1177
CERT. OF AUTHORITY NO. 001592

TRAFFIC CONTROL PLAN
PHASE 1B
SHEET 9 OF 64

F:\2021\04501-05000\021-04786\40-Design\Microstation\J4P3196\plan_sheets\9 Traffic Control\112_TC_09_PHASE_01B_J4P3196_150.dgn 1:46:15 PM 2/28/2025

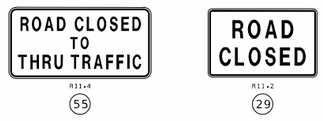

TRAFFIC CONTROL LEGEND

- SIGN (SINGLE SIDED)
- BARRICADE
- CHANGEABLE MESSAGE BOARD
- WORK AREA
- DETOUR ROUTE

NOT TO SCALE

7TH TERRACE
DETOUR SIGNING

TRAFFIC CONTROL PLAN
PHASE 1B-1D DETOUR MAP
SHEET 10 OF 64

STATE OF MISSOURI
JEREMY SCOTT STRETZ
NUMBER PE-2017023864
PROFESSIONAL ENGINEER

Jeremy Stretz 2025.02.28 15:20:27-06'00'

DATE PREPARED: 2/28/2025
ROUTE: 50/291
STATE: MO
DISTRICT: KC
SHEET NO.: 113
COUNTY: JACKSON
JOB NO.: J4P3196
FEDERAL PROJECT NO.: STB-3001(009)
PROJECT NO.:
BRIDGE NO.:

DESCRIPTION | DATE

IF A SEAL IS PRESENT ON THIS SHEET IT HAS BEEN ELECTRONICALLY SEALED AND DATED.

MISSOURI HIGHWAYS AND TRANSPORTATION COMMISSION
MoDOT
105 WEST CAPITOL
JEFFERSON CITY, MO 65102
1-888-ASK-MODOT (1-888-275-6636)

LEE'S SUMMIT MISSOURI

olsson
1301 BURLINGTON ST., STE. 100
NORTH KANSAS CITY, MO 64116
PHONE: 816.361.1177
CERT. OF AUTHORITY NO. 001592

F:\2021\04501-05000\021-04786\40-Design\Microstation\J4P3196\plan_sheets\9 Traffic Control\113_TC_10_DETOUR_P1_J4P3196_I50_RTE291.dgn 1:46:20 PM 2/28/2025

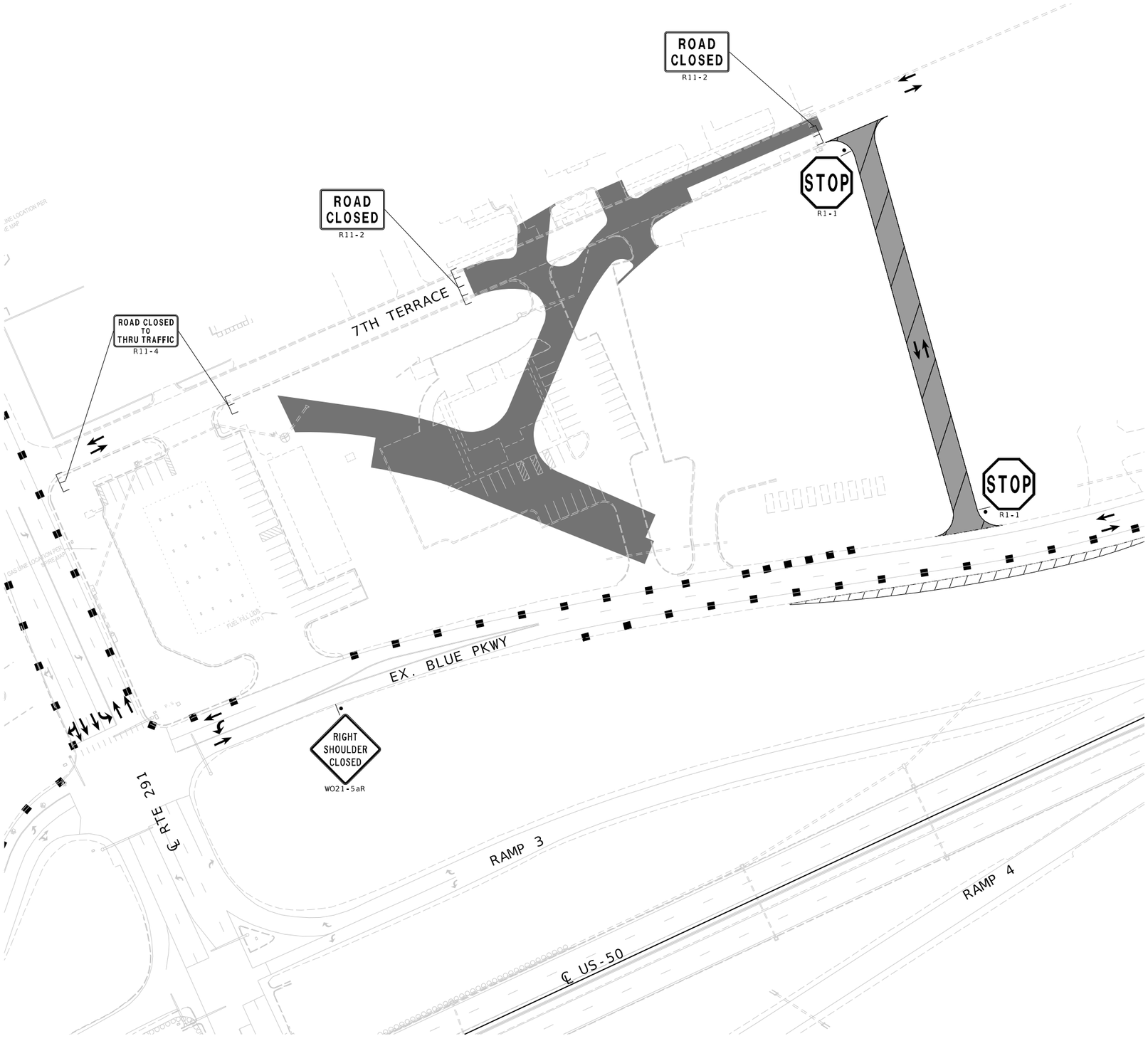

TRAFFIC CONTROL LEGEND

- SIGN (SINGLE SIDED)
- CHANNELIZER
- BARRICADE
- IMPACT ATTENUATOR
- TEMP PAVEMENT
- PERM PAVEMENT (PREV PHASE)
- PERM PAVEMENT (THIS PHASE)
- PORTABLE CONCRETE BARRIER
- DIRECTION OF TRAFFIC
- (A) TEMPORARY 4" SOLID WHITE EDGE LINE
- (B) TEMPORARY 4" SOLID YELLOW EDGE LINE
- (C) TEMPORARY 4" DOUBLE YELLOW
- (D) TEMPORARY 4" BROKEN WHITE

NOTES

1. EXISTING QT GAS STATION TO REMAIN OPEN UNTIL NEW BUILDING IS COMPLETE

SCALE

0 50 100 150

TRAFFIC CONTROL PLAN
BLUE PKWY, PHASE 1B
SHEET 11 OF 64

STATE OF MISSOURI
JEREMY SCOTT STRETZ
NUMBER PE-2017023054
PROFESSIONAL ENGINEER

Jeremy Stretz 2025.02.28 15:20:42-06'00'

DATE PREPARED	2/28/2025
ROUTE	50/291
STATE	MO
DISTRICT	KC
SHEET NO.	114
COUNTY	JACKSON
JOB NO.	J4P3196
FEDERAL PROJECT NO.	STB-3001(009)
PROJECT NO.	
BRIDGE NO.	

DESCRIPTION | DATE

IF A SEAL IS PRESENT ON THIS SHEET IT HAS BEEN ELECTRONICALLY SEALED AND DATED.

MISSOURI HIGHWAYS AND TRANSPORTATION COMMISSION

105 WEST CAPITOL
JEFFERSON CITY, MO 65102
1-888-ASK-MODOT (1-888-275-6636)

LEE'S SUMMIT MISSOURI

olsson
1301 BURLINGTON ST., STE. 100
NORTH KANSAS CITY, MO 64116
PHONE: 816.361.1177
CERT. OF AUTHORITY NO. 001592

F:\2021\04501-05000\021-04786\40-Design\Microstation\J4P3196\plan_sheets\9 Traffic Control\114_TC_11_P1S1_03_J4P3196_I50_BLUEPKWY.dgn 1:46:43 PM 2/28/2025

PHASE 1C

TRAFFIC:
RAMP 1 OPEN
RAMP 2 OPEN
RAMP 3 OPEN
RAMP 4 OPEN

CONSTRUCTION:
NEW OFF ALIGNMENT BLUE PKWY CONSTRUCTION CONTINUES ONE-WAY TRAFFIC ON BLUE PARKWAY AT CERTAIN POINT DURING CONSTRUCTION IS ANTICIPATED TO FACILITATE WORK - TRAFFIC WILL FLOW INBOUND TOWARDS ROUTE 291, USING US-50 TO DETOUR TRAFFIC TO ADJACENT INTERCHANGES.

NW BLUE PKWY & RTE 291 MODIFICATIONS

ALL EXISTING SIGNING AND UNUSED SIGNAL HEADS SHALL BE COVERED/BAGGED

CONTRACTOR SHALL NOTIFY MODOT AND THE CITY OF LEE'S SUMMIT AT LEAST TWO HOURS PRIOR TO ANY SIGNAL MODIFICATIONS TO NOTIFY THEM OF THE NEEDS OF SIGNAL TIMING MODIFICATIONS

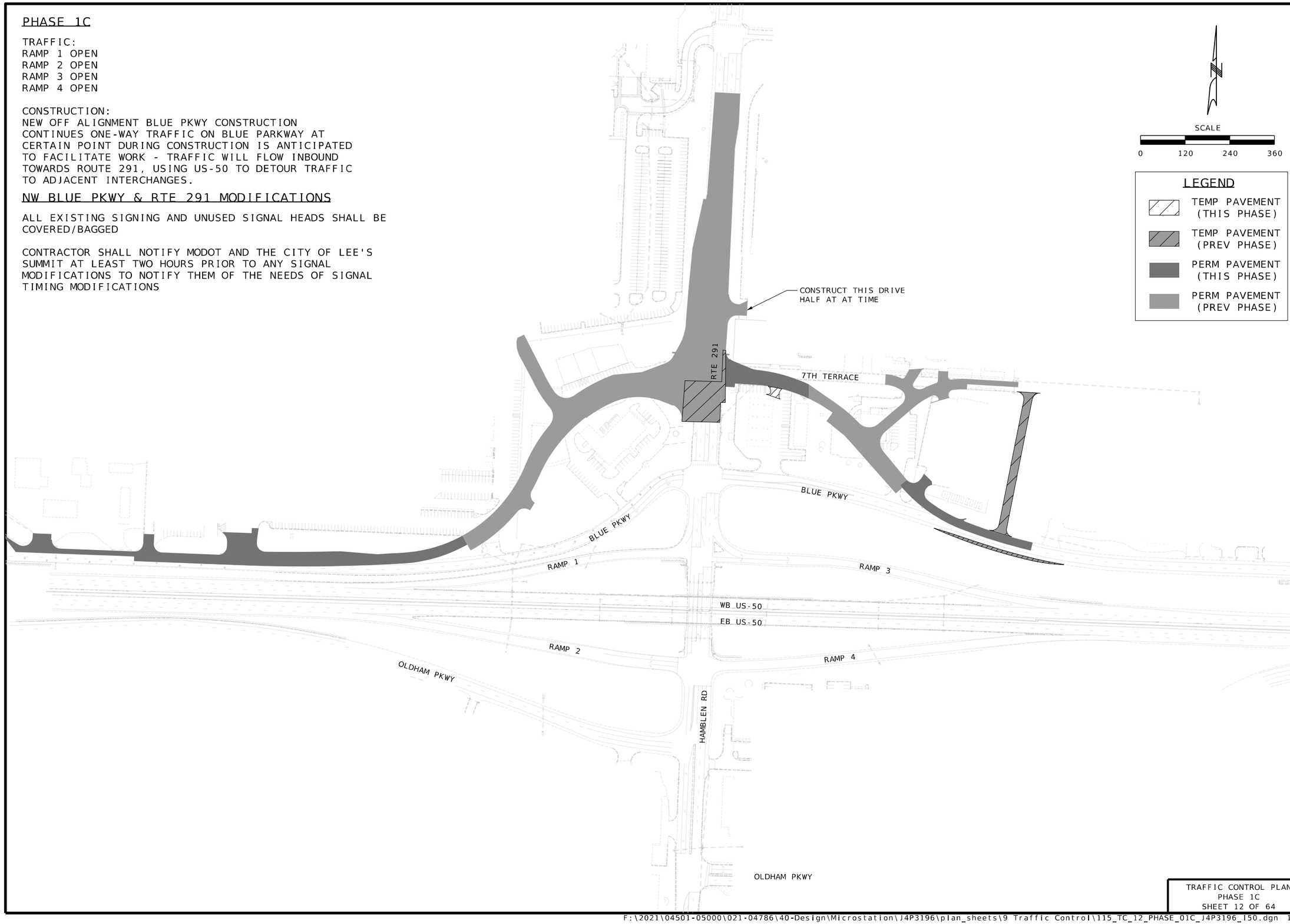

SCALE
0 120 240 360

LEGEND
- TEMP PAVEMENT (THIS PHASE)
- TEMP PAVEMENT (PREV PHASE)
- PERM PAVEMENT (THIS PHASE)
- PERM PAVEMENT (PREV PHASE)

TRAFFIC CONTROL PLAN
PHASE 1C
SHEET 12 OF 64

STATE OF MISSOURI
JEREMY SCOTT STRETZ
NUMBER PE-2017023856
PROFESSIONAL ENGINEER
Jeremy Stretz 2025.02.28 15:18:03-06'00'

DATE PREPARED 2/28/2025
ROUTE 50/291 | STATE MO
DISTRICT KC | SHEET NO. 115
COUNTY JACKSON
JOB NO. J4P3196
FEDERAL PROJECT NO. STB-3001(009)
PROJECT NO.
BRIDGE NO.

IF A SEAL IS PRESENT ON THIS SHEET IT HAS BEEN ELECTRONICALLY SEALED AND DATED.

DESCRIPTION	DATE

MISSOURI HIGHWAYS AND TRANSPORTATION COMMISSION
MoDOT
105 WEST CAPITOL
JEFFERSON CITY, MO 65102
1-888-ASK-MODOT (1-888-275-6636)

LEE'S SUMMIT MISSOURI

olsson
1301 BURLINGTON ST., STE. 100
NORTH KANSAS CITY, MO 64116
PHONE: 816.361.1177
CERT. OF AUTHORITY NO. 001592

F:\2021\04501-05000\021-04786\40-Design\Microstation\J4P3196\plan_sheets\9 Traffic Control\115_TC_12_PHASE_01C_J4P3196_I50.dgn 1:46:53 PM 2/28/2025

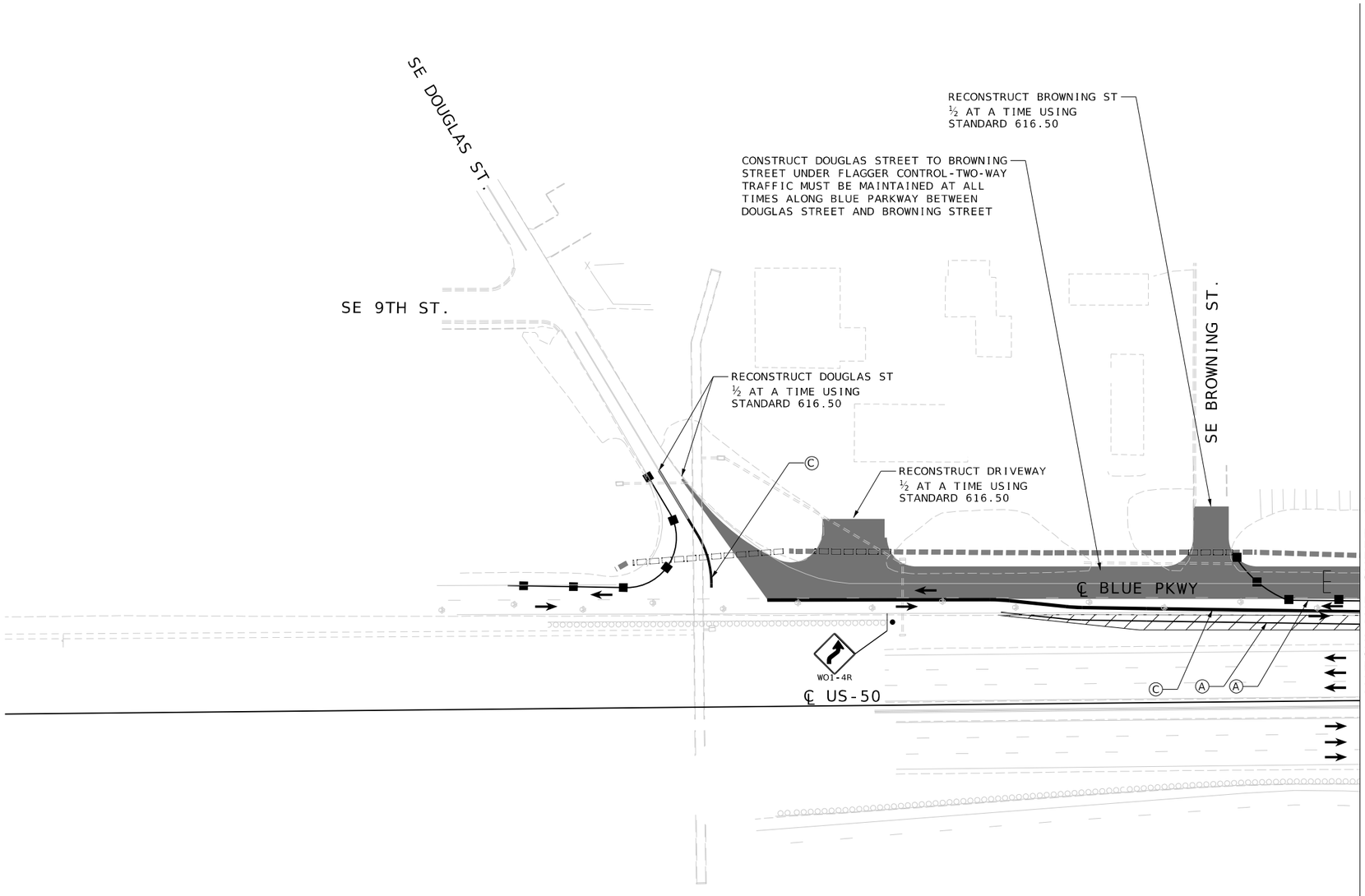

TRAFFIC CONTROL LEGEND

- SIGN (SINGLE SIDED)
- CHANNELIZER
- BARRICADE
- IMPACT ATTENUATOR
- TEMP PAVEMENT
- PERM PAVEMENT (PREV PHASE)
- PERM PAVEMENT (THIS PHASE)
- PORTABLE CONCRETE BARRIER
- DIRECTION OF TRAFFIC
- (A) TEMPORARY 4" SOLID WHITE EDGE LINE
- (B) TEMPORARY 4" SOLID YELLOW EDGE LINE
- (C) TEMPORARY 4" DOUBLE YELLOW
- (D) TEMPORARY 4" BROKEN WHITE

NOTES

1. CONTRACTOR SHALL MAINTAIN ACCESS TO PROPERTIES AT ALL TIMES

SCALE
0 50 100 150

TRAFFIC CONTROL PLAN
BLUE PKWY, PHASE 1C
SHEET 13 OF 64

STATE OF MISSOURI
JEREMY SCOTT STRETZ
NUMBER PE-2017023856
PROFESSIONAL ENGINEER
Jeremy Stretz 2025.02.28 15:22:16-06'00'

DATE PREPARED 2/28/2025
ROUTE 50/291 | STATE MO
DISTRICT KC | SHEET NO. 116
COUNTY JACKSON
JOB NO. J4P3196
FEDERAL PROJECT NO. STB-3001(009)
PROJECT NO.
BRIDGE NO.

DESCRIPTION | DATE

IF A SEAL IS PRESENT ON THIS SHEET IT HAS BEEN ELECTRONICALLY SEALED AND DATED.

MISSOURI HIGHWAYS AND TRANSPORTATION COMMISSION
105 WEST CAPITOL
JEFFERSON CITY, MO 65102
1-888-ASK-MODOT (1-888-275-6636)

LEE'S SUMMIT MISSOURI

olsson
1301 BURLINGTON ST., STE. 100
NORTH KANSAS CITY, MO 64116
PHONE: 816.361.1177
CERT. OF AUTHORITY NO. 001592

F:\2021\04501-05000\021-04786\40-Design\Microstation\J4P3196\plan_sheets\9 Traffic Control\116_TC_13_P1S2_01_J4P3196_I50_BLUEPKWY.dgn 1:47:04 PM 2/28/2025

TRAFFIC CONTROL LEGEND

- SIGN (SINGLE SIDED)
- CHANNELIZER
- BARRICADE
- IMPACT ATTENUATOR
- TEMP PAVEMENT
- PERM PAVEMENT (PREV PHASE)
- PERM PAVEMENT (THIS PHASE)
- PORTABLE CONCRETE BARRIER
- DIRECTION OF TRAFFIC
- (A) TEMPORARY 4" SOLID WHITE EDGE LINE
- (B) TEMPORARY 4" SOLID YELLOW EDGE LINE
- (C) TEMPORARY 4" DOUBLE YELLOW
- (D) TEMPORARY 4" BROKEN WHITE

SCALE
0 50 100 150

NOTES

1. CONTRACTOR SHALL MAINTAIN ACCESS TO PROPERTIES AT ALL TIMES

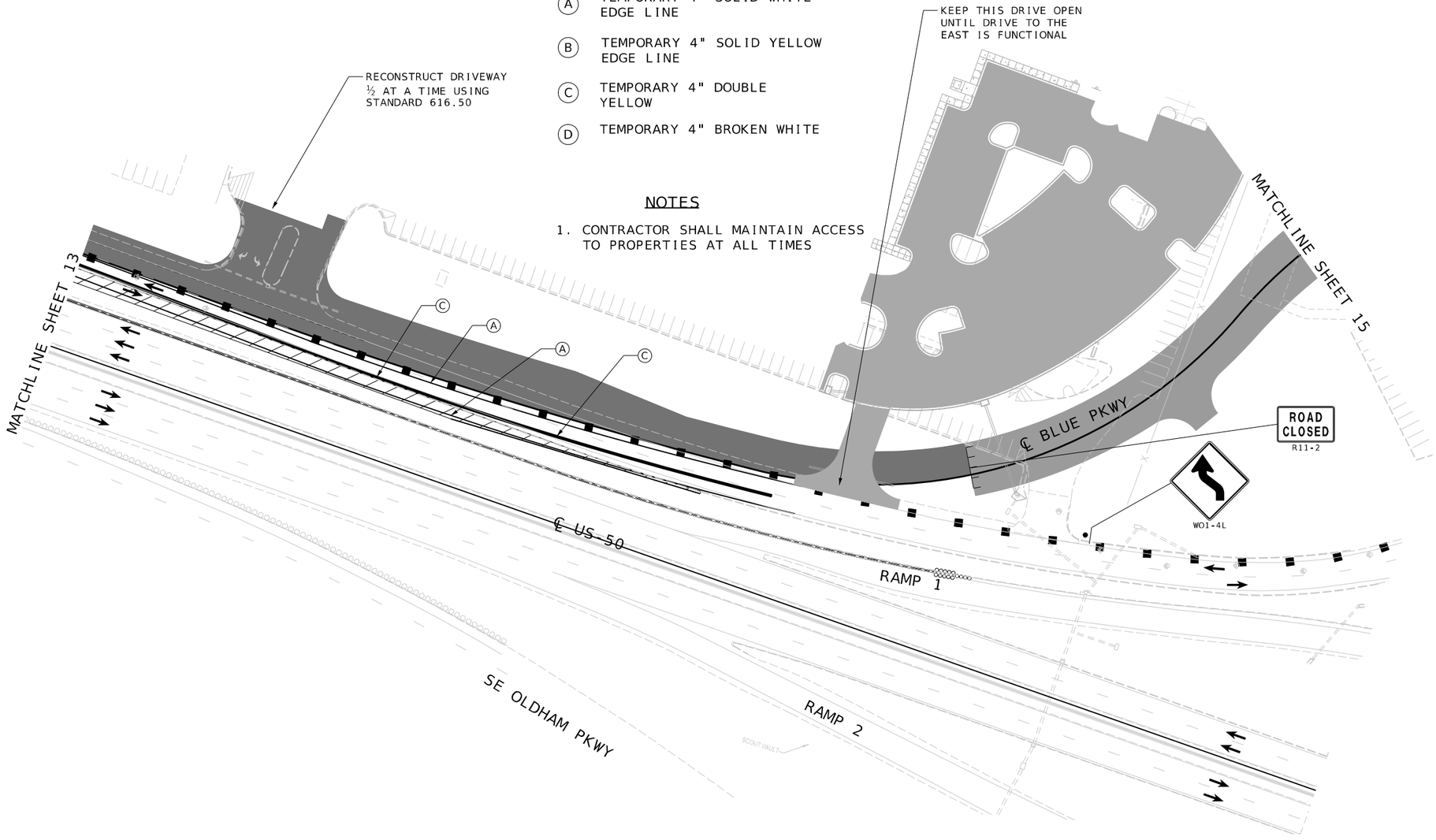

TRAFFIC CONTROL PLAN
BLUE PKWY, PHASE 1C
SHEET 14 OF 64

JEREMY SCOTT STRETZ NUMBER PE-2011021054 PROFESSIONAL ENGINEER STATE OF MISSOURI
Jeremy Stretz 2025.02.28 15:22:29-06'00'

DATE PREPARED 2/28/2025
ROUTE 50/291 | STATE MO
DISTRICT KC | SHEET NO. 117
COUNTY JACKSON
JOB NO. J4P3196
FEDERAL PROJECT NO. STB-3001(009)
PROJECT NO.
BRIDGE NO.

DESCRIPTION	DATE

IF A SEAL IS PRESENT ON THIS SHEET IT HAS BEEN ELECTRONICALLY SEALED AND DATED.

MISSOURI HIGHWAYS AND TRANSPORTATION COMMISSION
105 WEST CAPITOL
JEFFERSON CITY, MO 65102
1-888-ASK-MODOT (1-888-275-6636)

LEE'S SUMMIT MISSOURI

olsson
1301 BURLINGTON ST., STE. 100
NORTH KANSAS CITY, MO 64116
PHONE: 816.361.1177
CERT. OF AUTHORITY NO. 001592

F:\2021\04501-05000\021-04786\40-Design\Microstation\J4P3196\plan_sheets\9 Traffic Control\117_TC_14_P1S2_02_J4P3196_150_BLUEPKWY.dgn 1:47:08 PM 2/28/2025

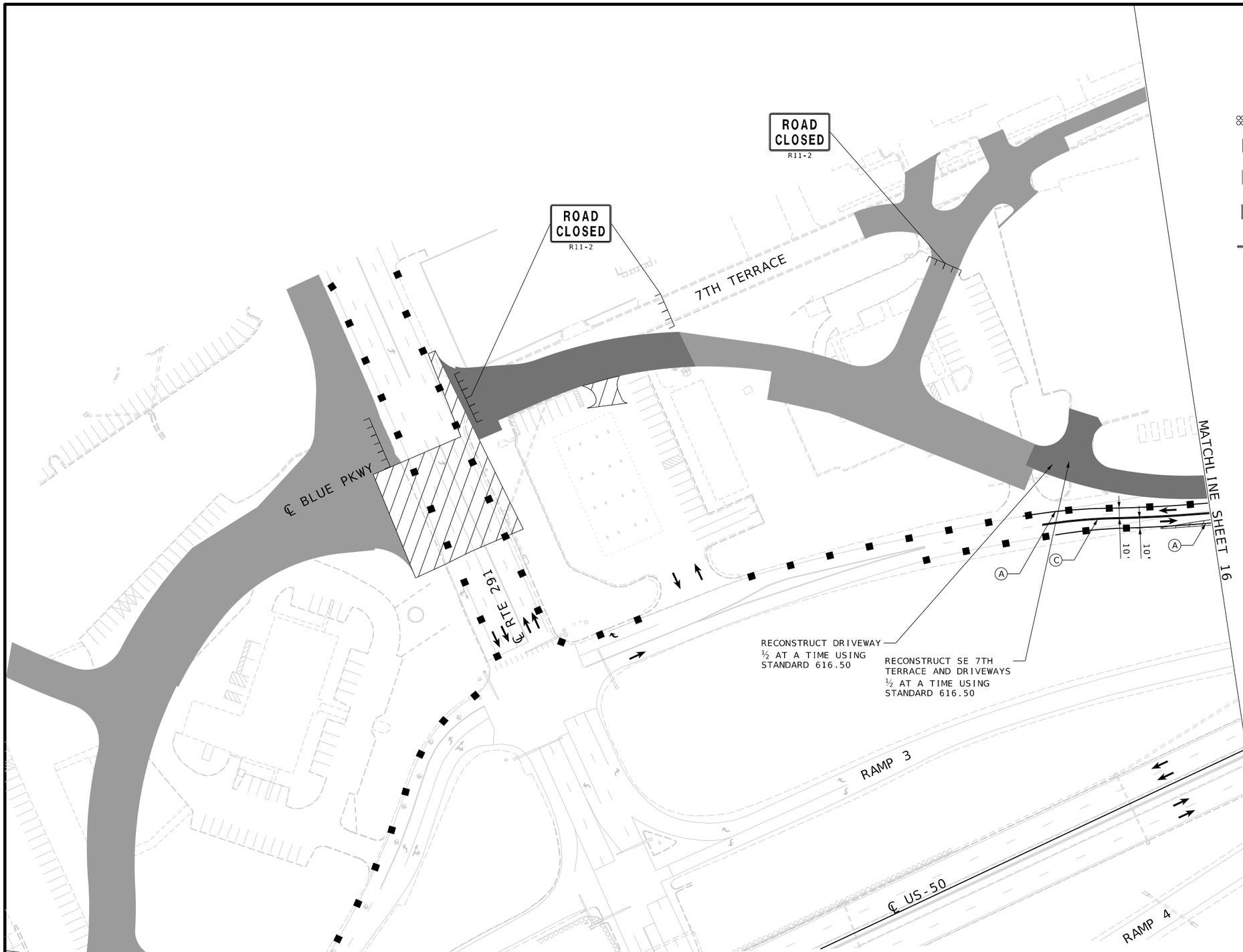

TRAFFIC CONTROL LEGEND

- SIGN (SINGLE SIDED)
- CHANNELIZER
- BARRICADE
- IMPACT ATTENUATOR
- TEMP PAVEMENT
- PERM PAVEMENT (PREV PHASE)
- PERM PAVEMENT (THIS PHASE)
- PORTABLE CONCRETE BARRIER
- DIRECTION OF TRAFFIC
- (A) TEMPORARY 4" SOLID WHITE EDGE LINE
- (B) TEMPORARY 4" SOLID YELLOW EDGE LINE
- (C) TEMPORARY 4" DOUBLE YELLOW
- (D) TEMPORARY 4" BROKEN WHITE

NOTES

1. CONTRACTOR TO MAINTAIN ACCESS TO PROPERTIES AT ALL TIMES

STATE OF MISSOURI
JEREMY SCOTT STRETZ
NUMBER PE-2011021864
PROFESSIONAL ENGINEER

Jeremy Stretz 2025.02.28 15:22:41-06'00'

DATE PREPARED: 2/28/2025
ROUTE: 50/291 | STATE: MO
DISTRICT: KC | SHEET NO.: 118
COUNTY: JACKSON
JOB NO.: J4P3196
FEDERAL PROJECT NO.: STB-3001(009)
PROJECT NO.:
BRIDGE NO.:

DATE	DESCRIPTION

IF A SEAL IS PRESENT ON THIS SHEET IT HAS BEEN ELECTRONICALLY SEALED AND DATED.

MISSOURI HIGHWAYS AND TRANSPORTATION COMMISSION
105 WEST CAPITOL
JEFFERSON CITY, MO 65102
1-888-ASK-MODOT (1-888-275-6636)

LEE'S SUMMIT MISSOURI

olsson
1301 BURLINGTON ST., STE. 100
NORTH KANSAS CITY, MO 64116
PHONE: 816.361.1177
CERT. OF AUTHORITY NO. 001592

TRAFFIC CONTROL PLAN
BLUE PKWY, PHASE 1C
SHEET 15 OF 64

F:\2021\04501-05000\021-04786\40-Design\Microstation\J4P3196\plan_sheets\9 Traffic Control\118_TC_15_P1S2_04_J4P3196_I50_BLUEPKWY.dgn 1:47:12 PM 2/28/2025

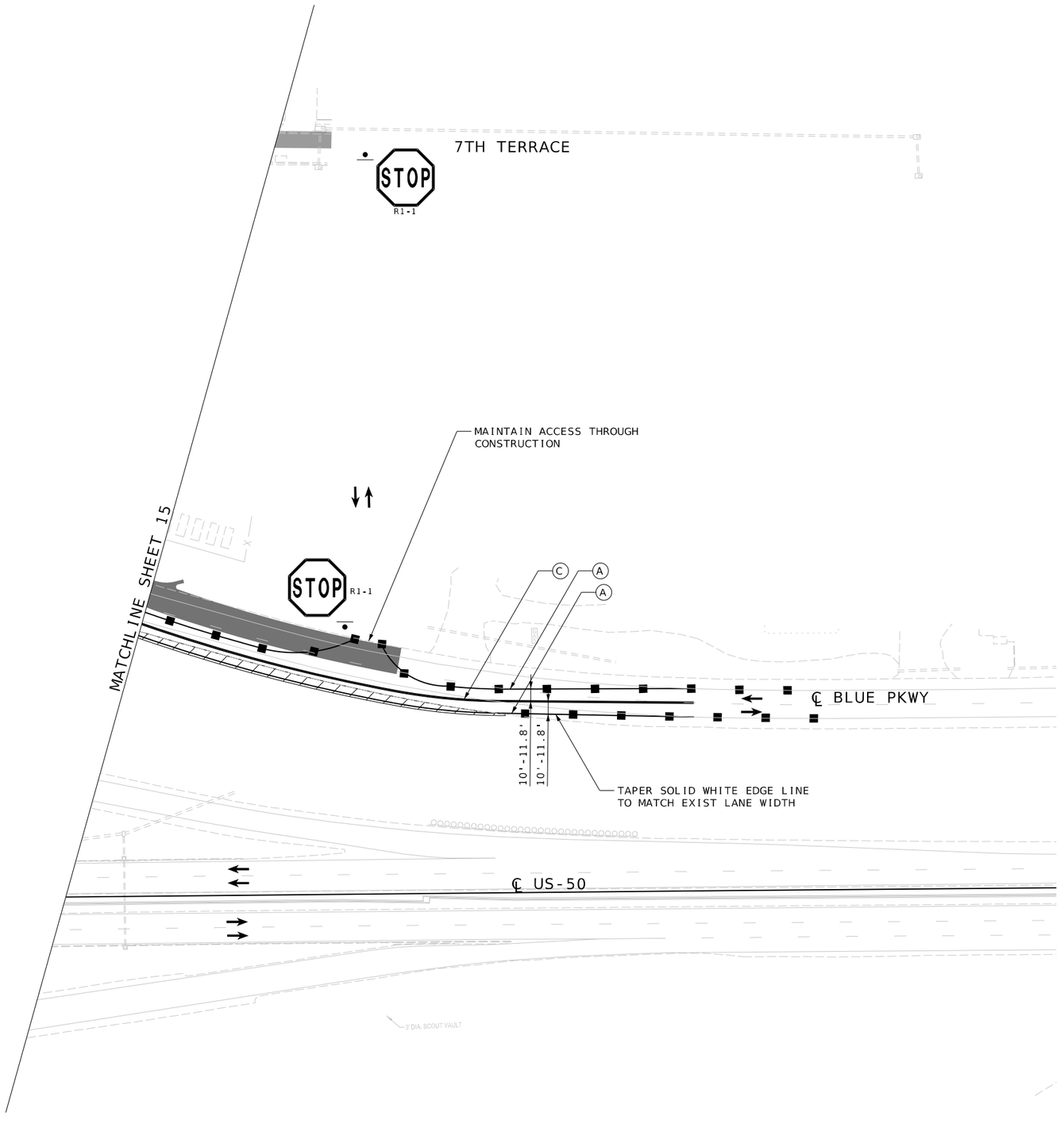

TRAFFIC CONTROL LEGEND

- SIGN (SINGLE SIDED)
- CHANNELIZER
- BARRICADE
- IMPACT ATTENUATOR
- TEMP PAVEMENT
- PERM PAVEMENT (PREV PHASE)
- PERM PAVEMENT (THIS PHASE)
- PORTABLE CONCRETE BARRIER
- DIRECTION OF TRAFFIC
- (A) TEMPORARY 4" SOLID WHITE EDGE LINE
- (B) TEMPORARY 4" SOLID YELLOW EDGE LINE
- (C) TEMPORARY 4" DOUBLE YELLOW
- (D) TEMPORARY 4" BROKEN WHITE

SCALE
0 50 100 150

TRAFFIC CONTROL PLAN
BLUE PKWY, PHASE 1C
SHEET 16 OF 64

STATE OF MISSOURI
JEREMY SCOTT STRETZ
NUMBER PE-2011023054
PROFESSIONAL ENGINEER

Jeremy Stretz 2025.02.28 15:22:54-06'00'

IF A SEAL IS PRESENT ON THIS SHEET IT HAS BEEN ELECTRONICALLY SEALED AND DATED.

DATE PREPARED: 2/28/2025
ROUTE: 50/291 | STATE: MO
DISTRICT: KC | SHEET NO.: 119
COUNTY: JACKSON
JOB NO.: J4P3196
FEDERAL PROJECT NO.: STB-3001(009)
PROJECT NO.:
BRIDGE NO.:

DESCRIPTION	DATE

MISSOURI HIGHWAYS AND TRANSPORTATION COMMISSION
MoDOT
105 WEST CAPITOL
JEFFERSON CITY, MO 65102
1-888-ASK-MODOT (1-888-275-6636)

LEE'S SUMMIT MISSOURI

olsson
1301 BURLINGTON ST., STE. 100
NORTH KANSAS CITY, MO 64116
PHONE: 816.361.1177
CERT. OF AUTHORITY NO. 001592

PHASE 1D

TRAFFIC:
RAMP 1 OPEN
RAMP 2 OPEN
RAMP 3 OPEN
RAMP 4 OPEN

CONSTRUCTION:
FULL CLOSURE OF BLUE PARKWAY IS ANTICIPATED FOR TIE-IN WITH OLD AND NEW ALIGNMENTS. TEMPORARY ACCESS DRIVEWAYS CONSTRUCTED TO MAINTAIN QUIKTRIP ACCESS.
RAMP 1 TEMPORARY SHOULDER WIDENING
RAMP 2 TEMPORARY SHOULDER WIDENING
RAMP 3 TEMPORARY SHOULDER WIDENING
RAMP 4 TEMPORARY SHOULDER WIDENING
FINALIZE CONSTRUCTION ON EASTERNMOST END OF BLUE PKWY

NW BLUE PKWY & RTE 291 MODIFICATIONS

TEMPORARY SIGNALS TO BE INSTALLED AT THE NEW BLUE PKWY INTERSECTION.

ALL EXISTING SIGNING AND UNUSED SIGNAL HEADS SHALL BE COVERED/BAGGED

CONTRACTOR SHALL NOTIFY MODOT AND THE CITY OF LEE'S SUMMIT AT LEAST TWO HOURS PRIOR TO ANY SIGNAL MODIFICATIONS TO NOTIFY THEM OF THE NEEDS OF SIGNAL TIMING MODIFICATIONS

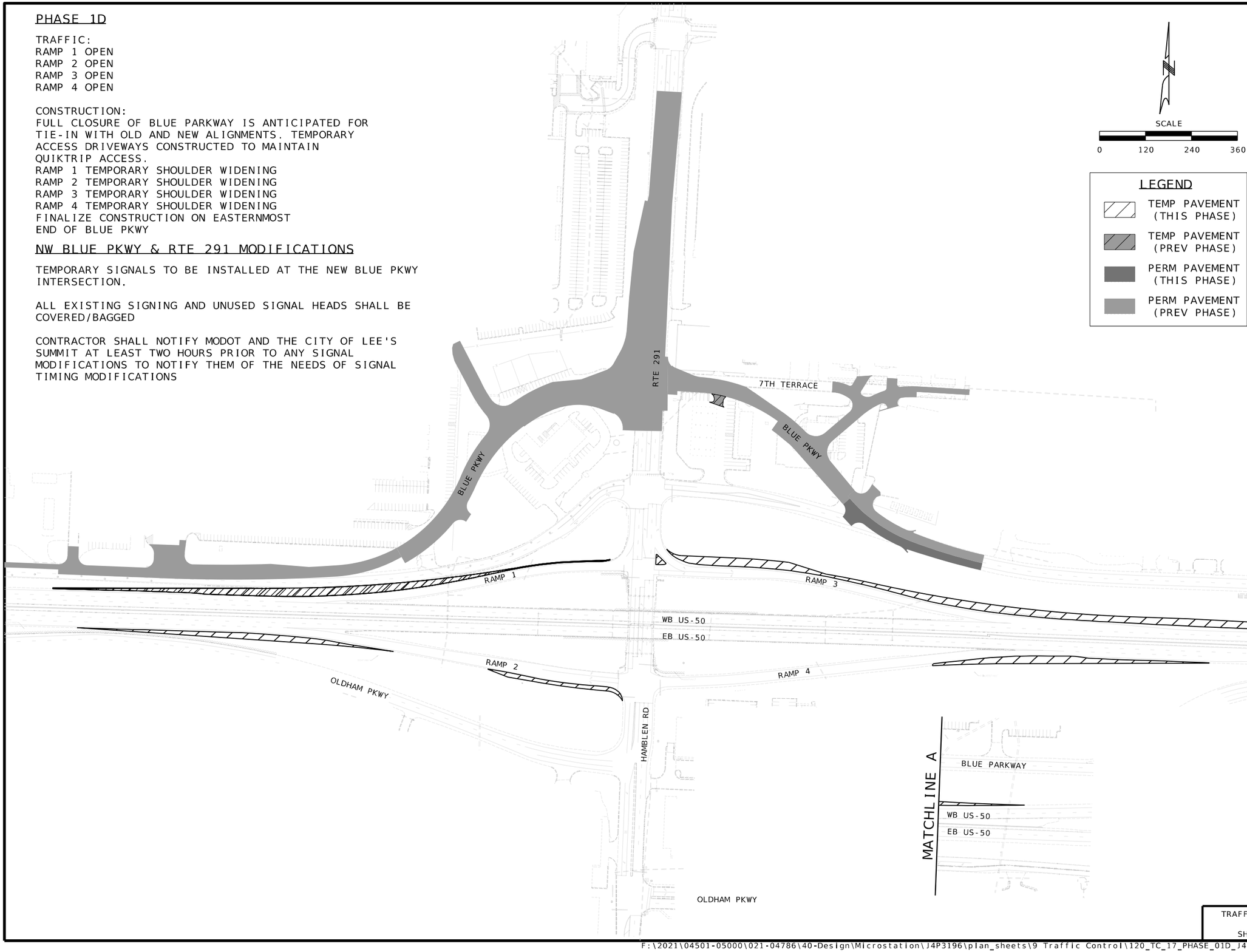

SCALE
0 120 240 360

LEGEND
- TEMP PAVEMENT (THIS PHASE)
- TEMP PAVEMENT (PREV PHASE)
- PERM PAVEMENT (THIS PHASE)
- PERM PAVEMENT (PREV PHASE)

STATE OF MISSOURI
JEREMY SCOTT STRETZ
NUMBER PE-2017023856
PROFESSIONAL ENGINEER
Jeremy Stretz 2025.02.28 15:23:09-06'00'

DATE PREPARED 2/28/2025
ROUTE 50/291 | STATE MO
DISTRICT KC | SHEET NO. 120
COUNTY JACKSON
JOB NO. J4P3196
FEDERAL PROJECT NO. STB-3001(009)
PROJECT NO.
BRIDGE NO.

IF A SEAL IS PRESENT ON THIS SHEET IT HAS BEEN ELECTRONICALLY SEALED AND DATED.

DESCRIPTION	DATE

MISSOURI HIGHWAYS AND TRANSPORTATION COMMISSION
105 WEST CAPITOL
JEFFERSON CITY, MO 65102
1-888-ASK-MODOT (1-888-275-6636)

LEE'S SUMMIT MISSOURI

olsson
1301 BURLINGTON ST., STE. 100
NORTH KANSAS CITY, MO 64116
PHONE: 816.361.1177
CERT. OF AUTHORITY NO. 001592

TRAFFIC CONTROL PLAN
PHASE 1D
SHEET 17 OF 64

F:\2021\04501-05000\021-04786\40-Design\Microstation\J4P3196\plan_sheets\9 Traffic Control\120_TC_17_PHASE_01D_J4P3196_150.dgn 1:47:20 PM 2/28/2025

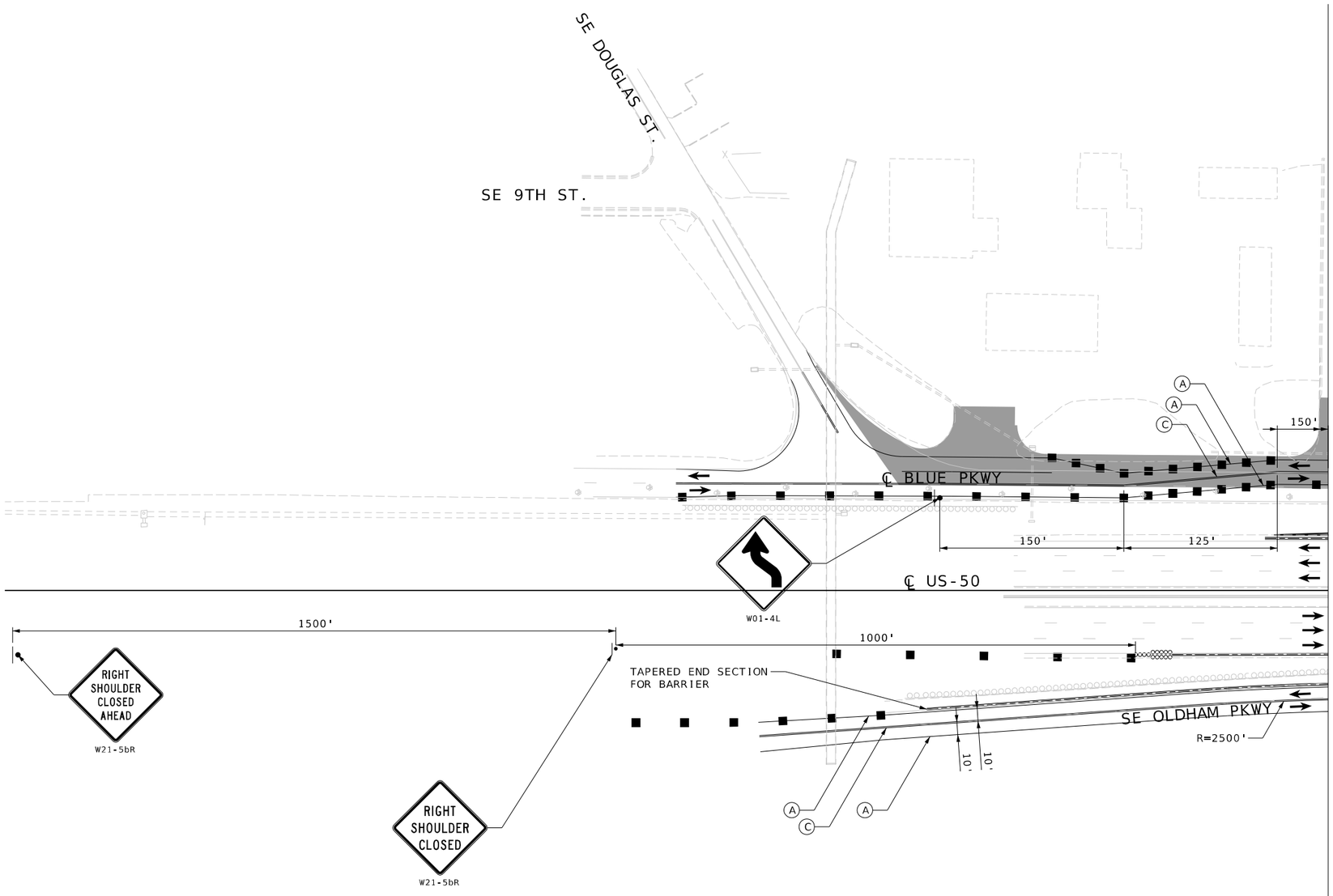

TRAFFIC CONTROL LEGEND

- SIGN (SINGLE SIDED)
- CHANNELIZER
- BARRICADE
- IMPACT ATTENUATOR
- TEMP PAVEMENT
- PERM PAVEMENT (PREV PHASE)
- PERM PAVEMENT (THIS PHASE)
- PORTABLE CONCRETE BARRIER
- DIRECTION OF TRAFFIC
- (A) TEMPORARY 4" SOLID WHITE EDGE LINE
- (B) TEMPORARY 4" SOLID YELLOW EDGE LINE
- (C) TEMPORARY 4" DOUBLE YELLOW
- (D) TEMPORARY 4" BROKEN WHITE

SCALE
0 50 100 150

TRAFFIC CONTROL PLAN
US-50, PHASE 1D
SHEET 18 OF 64

STATE OF MISSOURI
JEREMY SCOTT STRETZ
NUMBER PE-2011021864
PROFESSIONAL ENGINEER

Jeremy Stretz 2025.02.28 15:23:22-06'00'

DATE PREPARED 2/28/2025

ROUTE	STATE
50/291	MO
DISTRICT	SHEET NO.
KC	121

COUNTY: JACKSON
JOB NO.: J4P3196
FEDERAL PROJECT NO.: STB-3001(009)
PROJECT NO.:
BRIDGE NO.:

DESCRIPTION	DATE

IF A SEAL IS PRESENT ON THIS SHEET IT HAS BEEN ELECTRONICALLY SEALED AND DATED.

MISSOURI HIGHWAYS AND TRANSPORTATION COMMISSION
105 WEST CAPITOL
JEFFERSON CITY, MO 65102
1-888-ASK-MODOT (1-888-275-6636)

LEE'S SUMMIT MISSOURI

olsson
1301 BURLINGTON ST., STE. 100
NORTH KANSAS CITY, MO 64116
PHONE: 816.361.1177
CERT. OF AUTHORITY NO. 001592

F:\2021\04501-05000\021-04786\40-Design\Microstation\J4P3196\plan_sheets\9 Traffic Control\121_TC_18_P1S3_01_J4P3196_I50_US50.dgn 1:47:27 PM 2/28/2025

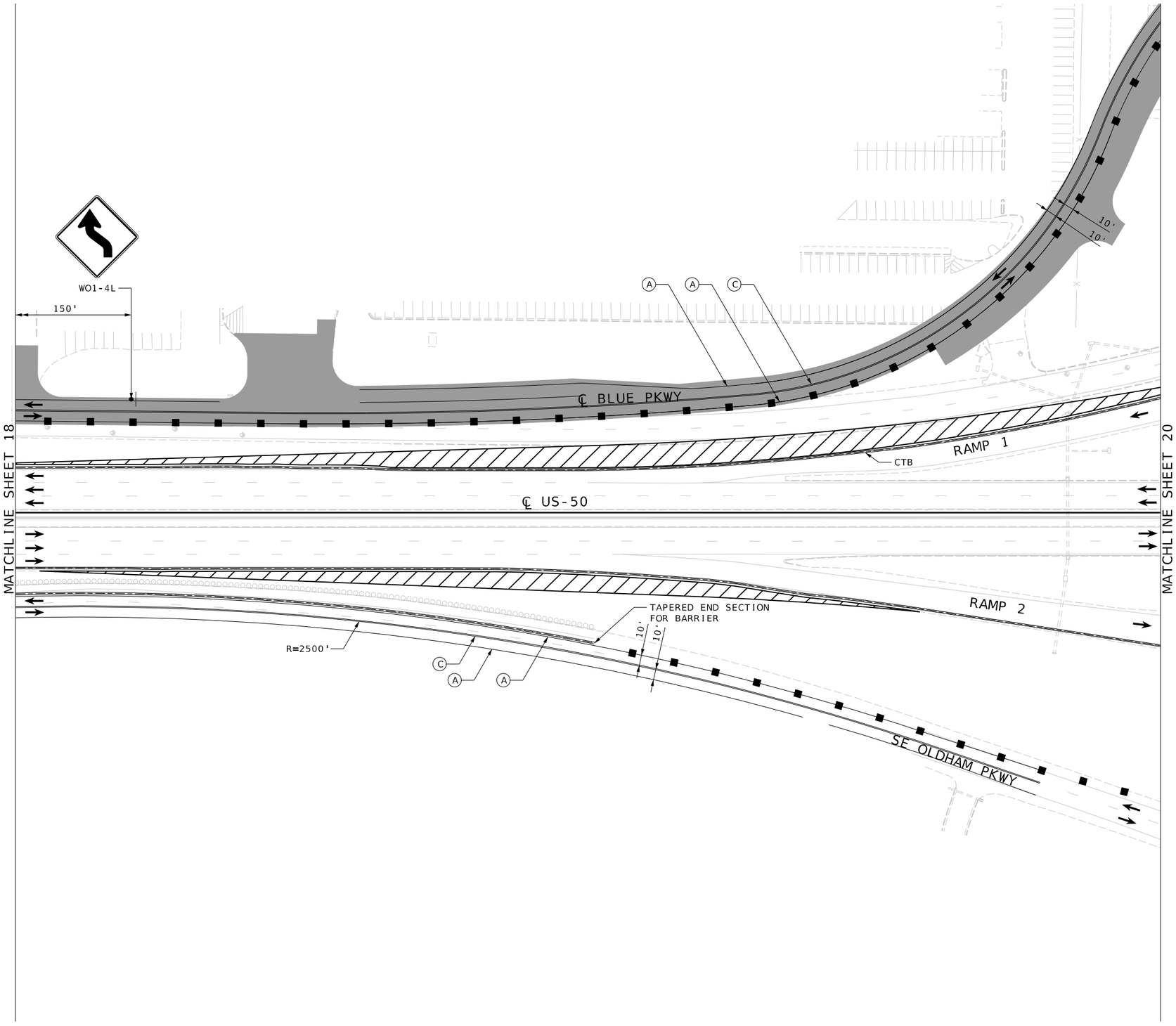

TRAFFIC CONTROL LEGEND

- SIGN (SINGLE SIDED)
- CHANNELIZER
- BARRICADE
- IMPACT ATTENUATOR
- TEMP PAVEMENT
- PERM PAVEMENT (PREV PHASE)
- PERM PAVEMENT (THIS PHASE)
- PORTABLE CONCRETE BARRIER
- DIRECTION OF TRAFFIC
- (A) TEMPORARY 4" SOLID WHITE EDGE LINE
- (B) TEMPORARY 4" SOLID YELLOW EDGE LINE
- (C) TEMPORARY 4" DOUBLE YELLOW
- (D) TEMPORARY 4" BROKEN WHITE

SCALE
0 50 100 150

TRAFFIC CONTROL PLAN
US-50, PHASE 1D
SHEET 19 OF 64

STATE OF MISSOURI
JEREMY SCOTT STRETZ
NUMBER PE-2011023054
PROFESSIONAL ENGINEER

Jeremy Stretz 2025.02.28 15:23:39-06'00'

IF A SEAL IS PRESENT ON THIS SHEET IT HAS BEEN ELECTRONICALLY SEALED AND DATED.

DATE PREPARED 2/28/2025

ROUTE	STATE
50/291	MO
DISTRICT	SHEET NO.
KC	122

COUNTY: JACKSON
JOB NO.: J4P3196
FEDERAL PROJECT NO.: STB-3001(009)
PROJECT NO.:
BRIDGE NO.:

DESCRIPTION	DATE

MISSOURI HIGHWAYS AND TRANSPORTATION COMMISSION
105 WEST CAPITOL
JEFFERSON CITY, MO 65102
1-888-ASK-MODOT (1-888-275-6636)

LEE'S SUMMIT MISSOURI

olsson
1301 BURLINGTON ST., STE. 100
NORTH KANSAS CITY, MO 64116
PHONE: 816.361.1177
CERT. OF AUTHORITY NO. 001592

F:\2021\04501-05000\021-04786\40-Design\Microstation\J4P3196\plan_sheets\9 Traffic Control\122_TC_19_P1S3_02_J4P3196_I50_US50.dgn 1:47:31 PM 2/28/2025

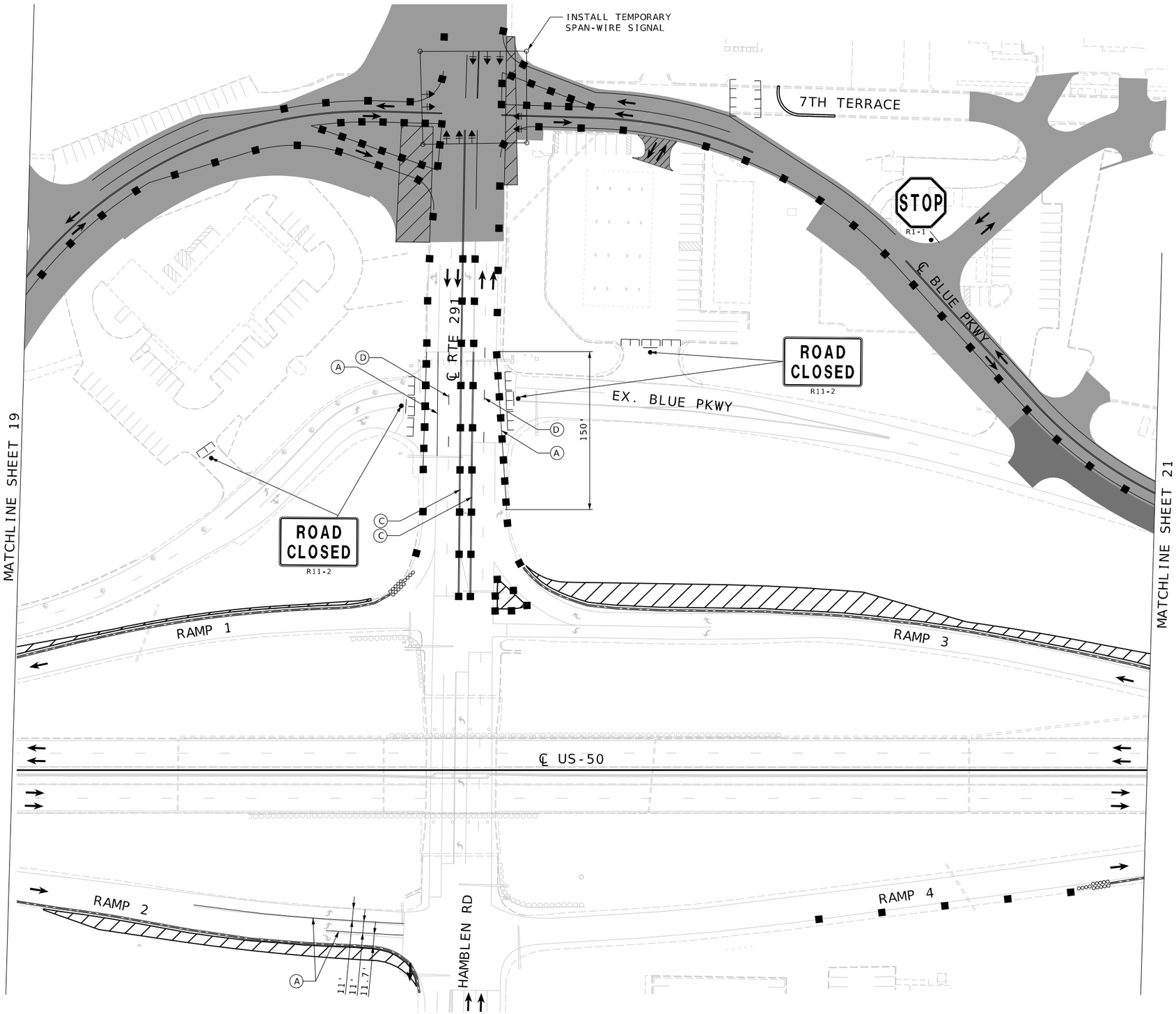

TRAFFIC CONTROL LEGEND

- SIGN (SINGLE SIDED)
- CHANNELIZER
- BARRICADE
- IMPACT ATTENUATOR
- TEMP PAVEMENT
- PERM PAVEMENT (PREV PHASE)
- PERM PAVEMENT (THIS PHASE)
- PORTABLE CONCRETE BARRIER
- DIRECTION OF TRAFFIC
- (A) TEMPORARY 4" SOLID WHITE EDGE LINE
- (B) TEMPORARY 4" SOLID YELLOW EDGE LINE
- (C) TEMPORARY 4" DOUBLE YELLOW
- (D) TEMPORARY 4" BROKEN WHITE

SCALE
0 50 100 150

TRAFFIC CONTROL PLAN
US-50, PHASE 1D
SHEET 20 OF 64

STATE OF MISSOURI
JEREMY SCOTT STRETZ
NUMBER PE-2011023056
PROFESSIONAL ENGINEER

Jeremy Stretz 2025.02.28 15:23:51-06'00'

DATE PREPARED: 2/28/2025
ROUTE: 50/291 | STATE: MO
DISTRICT: KC | SHEET NO.: 123
COUNTY: JACKSON
JOB NO.: J4P3196
FEDERAL PROJECT NO.: STB-3001(009)
PROJECT NO.:
BRIDGE NO.:

IF A SEAL IS PRESENT ON THIS SHEET IT HAS BEEN ELECTRONICALLY SEALED AND DATED.

DATE	DESCRIPTION

MISSOURI HIGHWAYS AND TRANSPORTATION COMMISSION
105 WEST CAPITOL
JEFFERSON CITY, MO 65102
1-888-ASK-MODOT (1-888-275-6636)

LEE'S SUMMIT MISSOURI

olsson
1301 BURLINGTON ST., STE. 100
NORTH KANSAS CITY, MO 64116
PHONE: 816.361.1177
CERT. OF AUTHORITY NO. 001592

F:\2021\04501-05000\021-04786\40-Design\Microstation\J4P3196\plan_sheets\9 Traffic Control\123_TC_20_P1S3_03_J4P3196_I50_US50.dgn 1:47:35 PM 2/28/2025

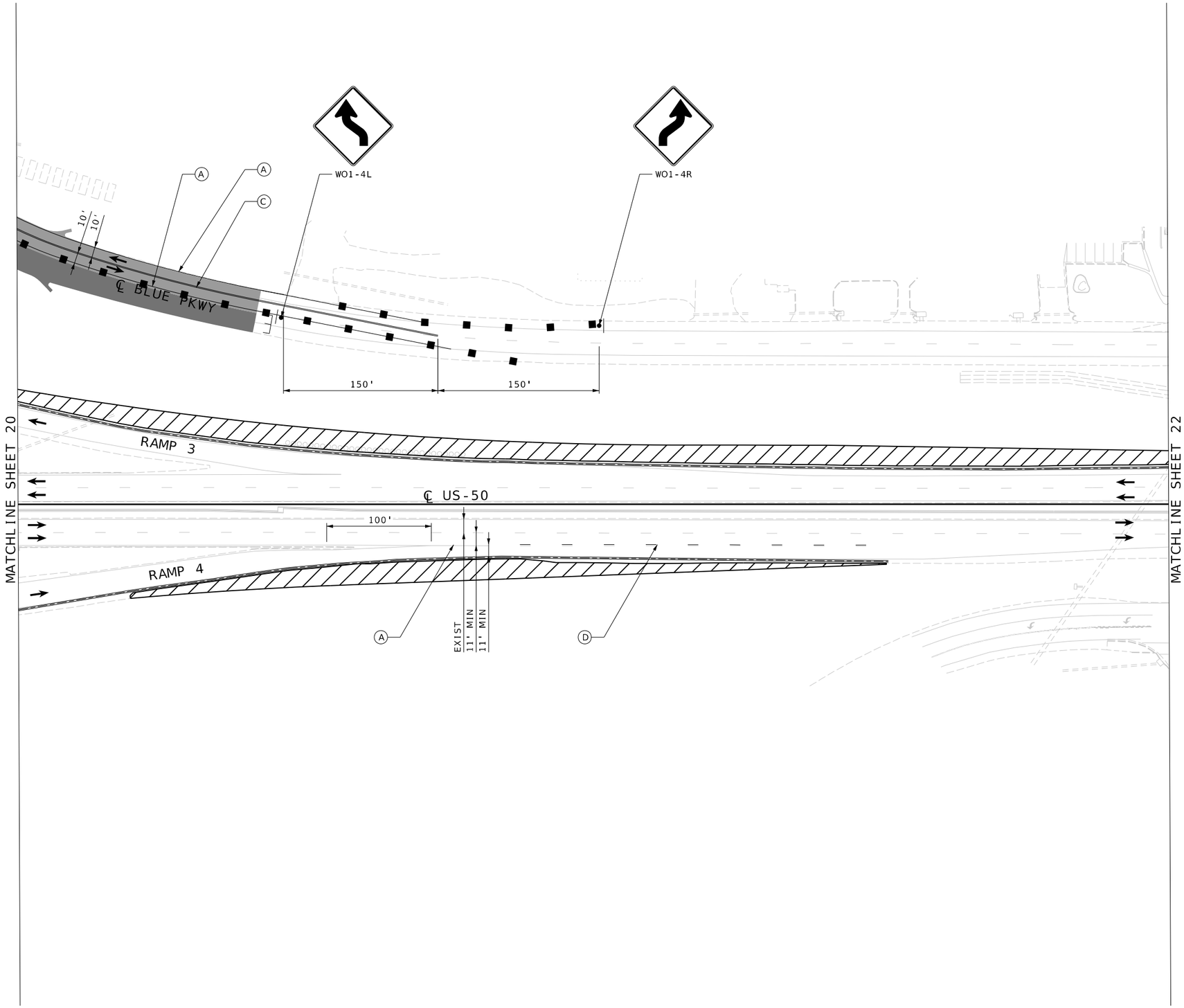

TRAFFIC CONTROL LEGEND

- SIGN (SINGLE SIDED)
- CHANNELIZER
- BARRICADE
- IMPACT ATTENUATOR
- TEMP PAVEMENT
- PERM PAVEMENT (PREV PHASE)
- PERM PAVEMENT (THIS PHASE)
- PORTABLE CONCRETE BARRIER
- DIRECTION OF TRAFFIC
- (A) TEMPORARY 4" SOLID WHITE EDGE LINE
- (B) TEMPORARY 4" SOLID YELLOW EDGE LINE
- (C) TEMPORARY 4" DOUBLE YELLOW
- (D) TEMPORARY 4" BROKEN WHITE

SCALE
0 50 100 150

TRAFFIC CONTROL PLAN
US-50, PHASE 1D
SHEET 21 OF 64

STATE OF MISSOURI
JEREMY SCOTT STRETZ
NUMBER PE-2011023054
PROFESSIONAL ENGINEER

Jeremy Stretz 2025.02.28 15:24:06-06'00'

DATE PREPARED 2/28/2025

ROUTE	STATE
50/291	MO
DISTRICT	SHEET NO.
KC	124

COUNTY: JACKSON
JOB NO.: J4P3196
FEDERAL PROJECT NO.: STB-3001(009)
PROJECT NO.:
BRIDGE NO.:

DESCRIPTION	DATE

IF A SEAL IS PRESENT ON THIS SHEET IT HAS BEEN ELECTRONICALLY SEALED AND DATED.

MISSOURI HIGHWAYS AND TRANSPORTATION COMMISSION
105 WEST CAPITOL
JEFFERSON CITY, MO 65102
1-888-ASK-MODOT (1-888-275-6636)

LEE'S SUMMIT MISSOURI

olsson
1301 BURLINGTON ST., STE. 100
NORTH KANSAS CITY, MO 64116
PHONE: 816.361.1177
CERT. OF AUTHORITY NO. 001592

F:\2021\04501-05000\021-04786\40-Design\Microstation\J4P3196\plan_sheets\9 Traffic Control\124_TC_21_P1S3_04_J4P3196_I50_US50.dgn 1:47:39 PM 2/28/2025

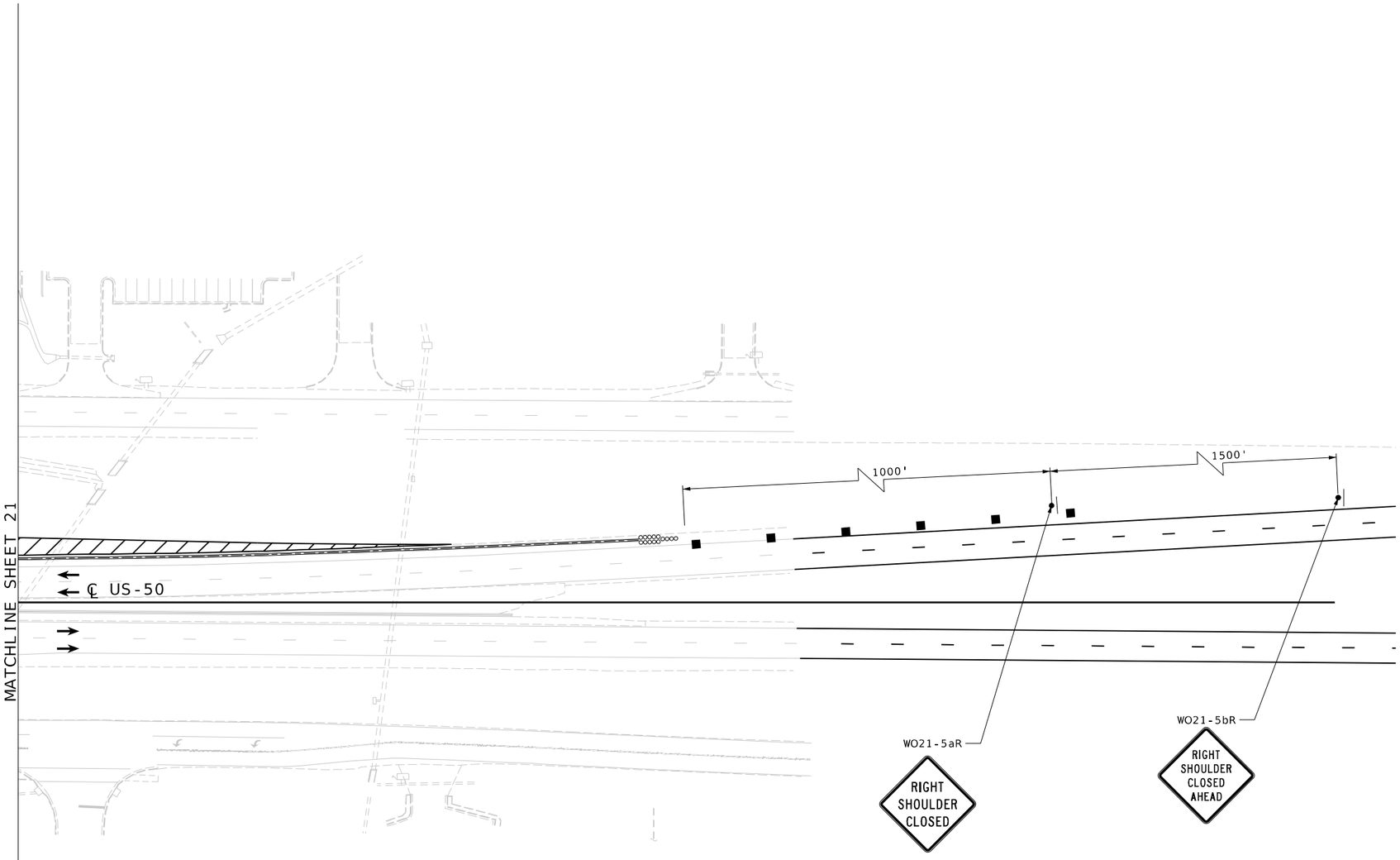

TRAFFIC CONTROL LEGEND

- SIGN (SINGLE SIDED)
- CHANNELIZER
- BARRICADE
- IMPACT ATTENUATOR
- TEMP PAVEMENT
- PERM PAVEMENT (PREV PHASE)
- PERM PAVEMENT (THIS PHASE)
- PORTABLE CONCRETE BARRIER
- DIRECTION OF TRAFFIC
- (A) TEMPORARY 4" SOLID WHITE EDGE LINE
- (B) TEMPORARY 4" SOLID YELLOW EDGE LINE
- (C) TEMPORARY 4" DOUBLE YELLOW
- (D) TEMPORARY 4" BROKEN WHITE

SCALE

0 50 100 150

TRAFFIC CONTROL PLAN
US-50, PHASE 1D
SHEET 22 OF 64

STATE OF MISSOURI
JEREMY SCOTT STRETZ
NUMBER PE-2011023054
PROFESSIONAL ENGINEER

Jeremy Stretz 2025.02.28 15:24:19-06'00'

DATE PREPARED 2/28/2025

ROUTE	STATE
50/291	MO
DISTRICT	SHEET NO.
KC	125

COUNTY: JACKSON

JOB NO.: J4P3196

FEDERAL PROJECT NO.: STB-3001(009)

PROJECT NO.:

BRIDGE NO.:

DESCRIPTION	DATE

IF A SEAL IS PRESENT ON THIS SHEET IT HAS BEEN ELECTRONICALLY SEALED AND DATED.

MISSOURI HIGHWAYS AND TRANSPORTATION COMMISSION
105 WEST CAPITOL
JEFFERSON CITY, MO 65102
1-888-ASK-MODOT (1-888-275-6636)

LEE'S SUMMIT MISSOURI

olsson
1301 BURLINGTON ST., STE. 100
NORTH KANSAS CITY, MO 64116
PHONE: 816.361.1177
CERT. OF AUTHORITY NO. 001592

PHASE 2

1. PLACE TRAFFIC CONTROL DEVICES AND TRAFFIC BARRIER ON EB AND WB US-50 MAINLANES AND EXISTING AND TEMPORARY PAVEMENT WIDENING AT RAMPS 1, 2, 3, & 4

2. SHIFT US-50 MAINLANE TRAFFIC ONTO EXISTING RAMPS AND NEWLY CONSTRUCTED TEMPORARY PAVEMENT WIDENING FOR TWO LANES OF MAINLANE TRAFFIC IN EACH DIRECTIONS FOR RAMP 1, 2, 3, & 4

3. EB AND WB US-50 TRAFFIC ON EXISTING RAMPS WILL BE CONTINUOUS THROUGH MOVEMENT AT THE RTE 291/HAMBLEN RD INTERSECTIONS

4. DEMO EXISTING RTE 291 BRIDGE

5. CONSTRUCT PROPOSED RTE 291 BRIDGE

6. CONSTRUCT PROPOSED RETAINING WALLS

7. CONSTRUCT EB AND WB PROPOSED US-50 MAINLANE PAVEMENT AS SHOWN IN PLANS

8. DETOUR SB RTE 291/HAMBLEN RD TRAFFIC TO EB BLUE PKWY. USE TODD GEORGE PARKWAY & US-50 INTERCHANGE ONTO WB OLDHAM ROAD

9. DETOUR NB RTE 291/HAMBLEN RD TRAFFIC TO EB OLDHAM ROAD. USE RANSON RD & US-50 INTERCHANGE ONTO WB BLUE PKWY.

RTE 291 / RAMP 1 & 3 SIGNAL MODIFICATIONS

COVER ALL SIGNAL HEADS AT INTERSECTION

RTE 291 / RAMP 2 & 4 SIGNAL MODIFICATIONS

COVER ALL SIGNAL HEADS AT INTERSECTION

ALL EXISTING SIGNING AND UNUSED SIGNAL HEADS SHALL BECOVERED/BAGGED

CONTRACTOR SHALL NOTIFY MODOT AND THE CITY OF LEE'S SUMMIT AT LEAST TWO HOURS PRIOR TO ANY SIGNAL MODIFICATIONS TO NOTIFY THEM OF THE NEEDS OF SIGNAL TIMING MODIFICATIONS

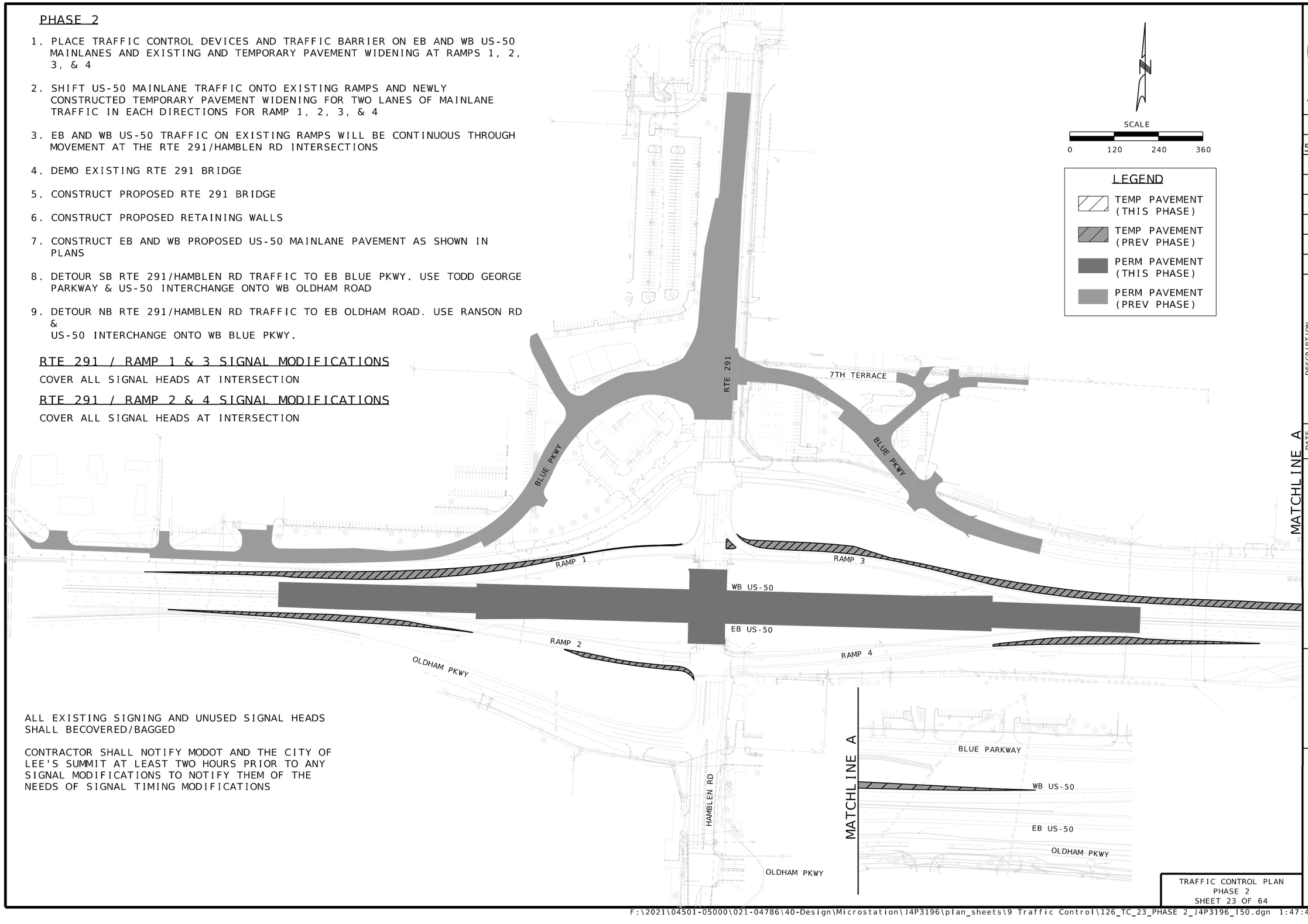

JEREMY SCOTT STRETZ
NUMBER PE-2017023856
PROFESSIONAL ENGINEER
STATE OF MISSOURI
Jeremy Stretz 2025.02.28 15:22:04-06'00'

DATE PREPARED 2/28/2025

ROUTE	STATE
50/291	MO
DISTRICT	SHEET NO.
KC	126

COUNTY JACKSON

JOB NO. J4P3196

FEDERAL PROJECT NO. STB-3001(009)

PROJECT NO.

BRIDGE NO.

IF A SEAL IS PRESENT ON THIS SHEET IT HAS BEEN ELECTRONICALLY SEALED AND DATED.

DESCRIPTION	DATE

MISSOURI HIGHWAYS AND TRANSPORTATION COMMISSION
105 WEST CAPITOL
JEFFERSON CITY, MO 65102
1-888-ASK-MODOT (1-888-275-6636)
LEE'S SUMMIT MISSOURI
olsson
1301 BURLINGTON ST., STE. 100
NORTH KANSAS CITY, MO 64116
PHONE: 816.361.1177
CERT. OF AUTHORITY NO. 001592

TRAFFIC CONTROL PLAN
PHASE 2
SHEET 23 OF 64

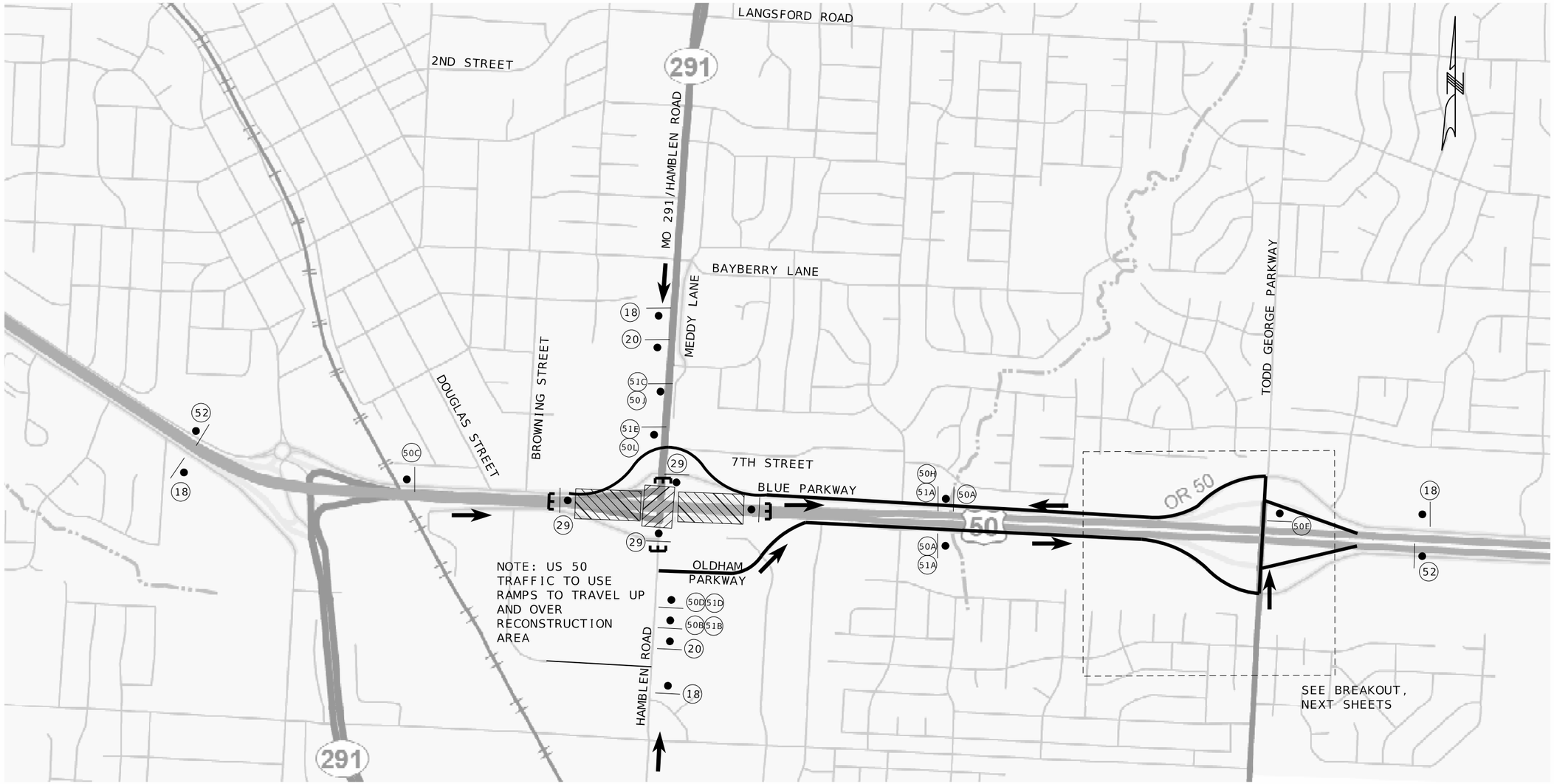

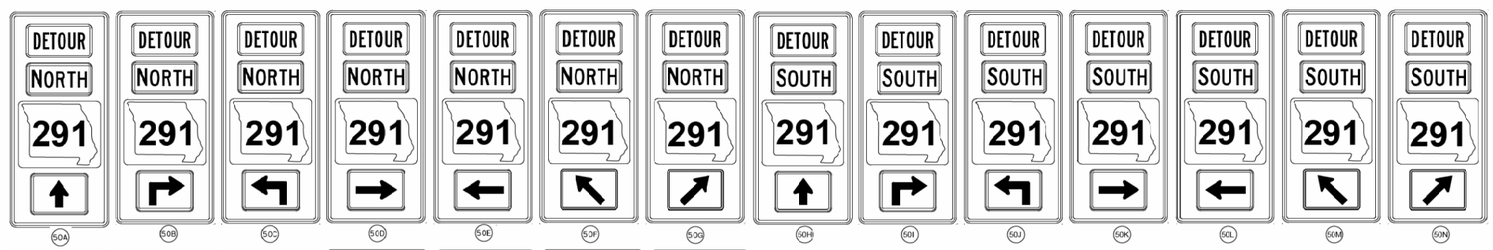

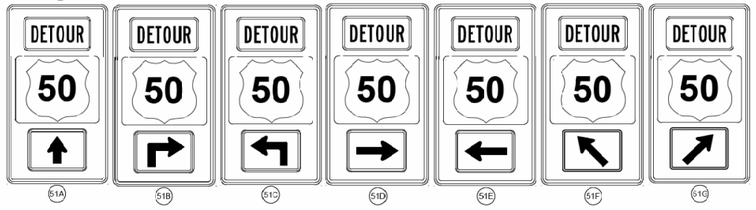

END DETOUR
MO4-8a
52

TRAFFIC CONTROL LEGEND

- SIGN (SINGLE SIDED)
- CHANNELIZER
- BARRICADE
- CHANGEABLE MESSAGE BOARD
- WORK AREA
- DETOUR ROUTE

NOT TO SCALE

TRAFFIC CONTROL PLAN
ROUTE 291, PHASE 2 DETOUR MAP
SHEET 24 OF 64

STATE OF MISSOURI
JEREMY SCOTT STRETZ
NUMBER PE-2011021864
PROFESSIONAL ENGINEER

Jeremy Stretz 2025.02.28 15:27:06-06'00'

DATE PREPARED: 2/28/2025
ROUTE: 50/291 | STATE: MO
DISTRICT: KC | SHEET NO.: 127
COUNTY: JACKSON
JOB NO.: J4P3196
FEDERAL PROJECT NO.: STB-3001(009)
PROJECT NO.:
BRIDGE NO.:

IF A SEAL IS PRESENT ON THIS SHEET IT HAS BEEN ELECTRONICALLY SEALED AND DATED.

DESCRIPTION	DATE

MISSOURI HIGHWAYS AND TRANSPORTATION COMMISSION
105 WEST CAPITOL
JEFFERSON CITY, MO 65102
1-888-ASK-MODOT (1-888-275-6636)

LEE'S SUMMIT MISSOURI

olsson
1301 BURLINGTON ST., STE. 100
NORTH KANSAS CITY, MO 64116
PHONE: 816.361.1177
CERT. OF AUTHORITY NO. 001592

F:\2021\04501-05000\021-04786\40-Design\Microstation\J4P3196\plan_sheets\9 Traffic Control\127_TC_24_DETOUR_P2_J4P3196_I50_RTE291.dgn 1:48:01 PM 2/28/2025

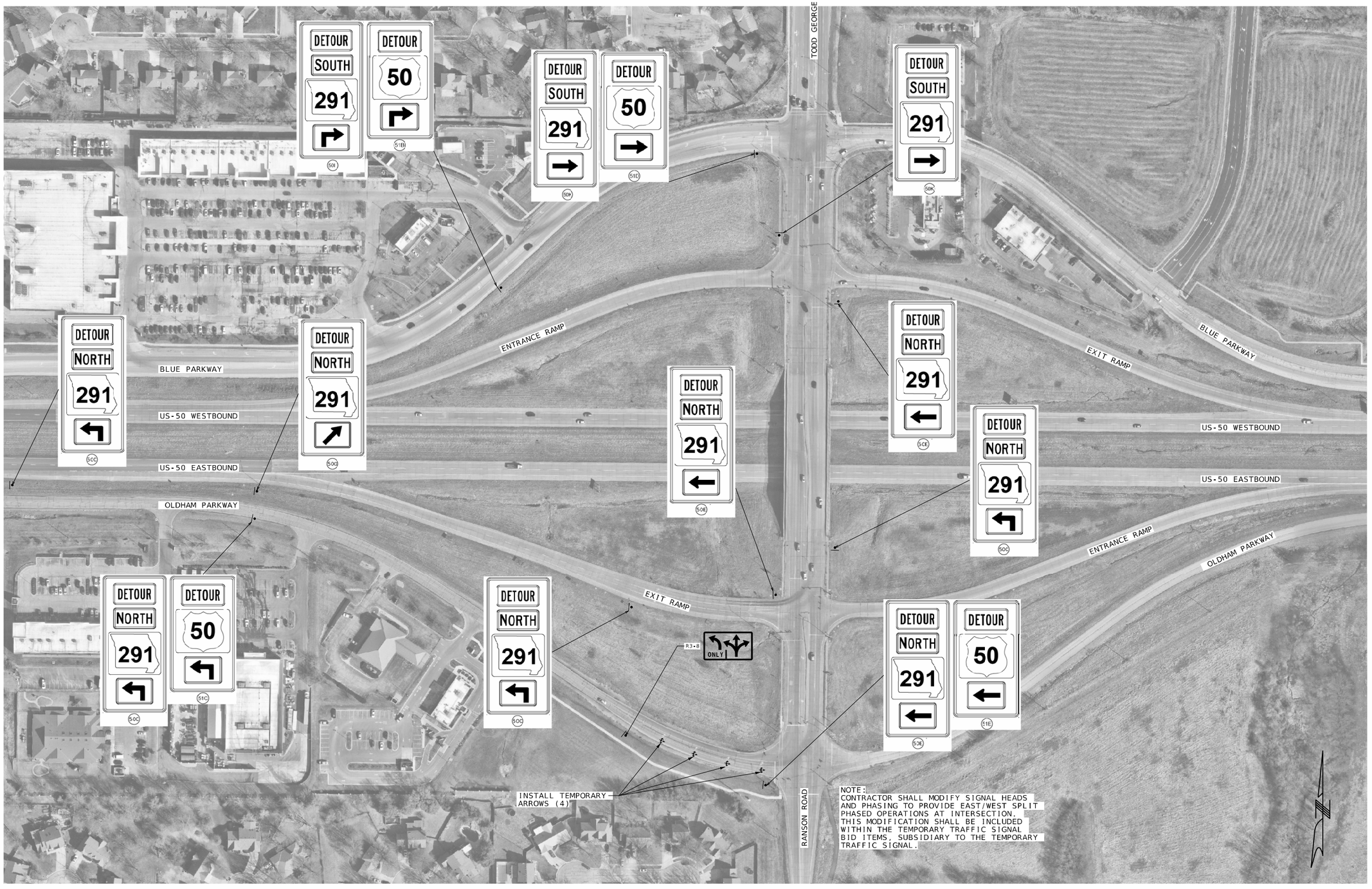

NOT TO SCALE

TRAFFIC CONTROL PLAN
PHASE 2 DETOUR MAP
SHEET 25 OF 64

STATE OF MISSOURI
JEREMY SCOTT STRETZ
NUMBER PE-2017023864
PROFESSIONAL ENGINEER

Jeremy Stretz 2025.02.28 15:27:17-06'00'

DATE PREPARED 2/28/2025

ROUTE	STATE
50/291	MO
DISTRICT	SHEET NO.
KC	128

COUNTY: JACKSON
JOB NO.: J4P3196
FEDERAL PROJECT NO.: STB-3001(009)
PROJECT NO.:
BRIDGE NO.:

DESCRIPTION	DATE

IF A SEAL IS PRESENT ON THIS SHEET IT HAS BEEN ELECTRONICALLY SEALED AND DATED.

MISSOURI HIGHWAYS AND TRANSPORTATION COMMISSION
105 WEST CAPITOL
JEFFERSON CITY, MO 65102
1-888-ASK-MODOT (1-888-275-6636)

LEE'S SUMMIT MISSOURI

olsson
1301 BURLINGTON ST., STE. 100
NORTH KANSAS CITY, MO 64116
PHONE: 816.361.1177
CERT. OF AUTHORITY NO. 001592

F:\2021\04501-05000\021-04786\40-Design\Microstation\J4P3196\plan_sheets\9 Traffic Control\128_TC_25_DETOUR_P2A_J4P3196_I50_RTE291.dgn 1:48:18 PM 2/28/2025

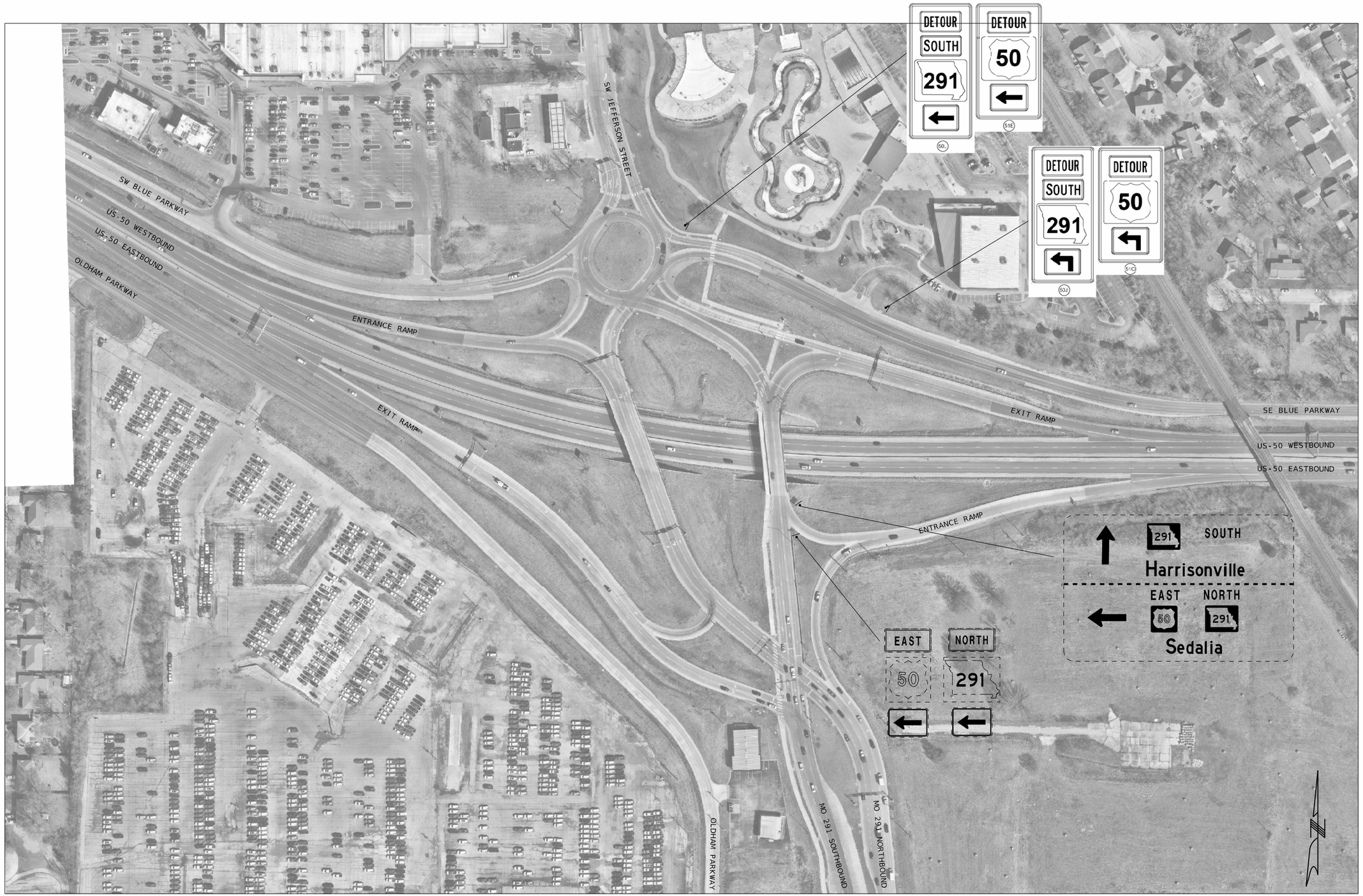

NOT TO SCALE

TRAFFIC CONTROL PLAN
PHASE 2 DETOUR MAP
SHEET 26 OF 64

IF A SEAL IS PRESENT ON THIS SHEET IT HAS BEEN ELECTRONICALLY SEALED AND DATED.

STATE OF MISSOURI
JEREMY SCOTT STRETZ
NUMBER PE-2017023864
PROFESSIONAL ENGINEER

Jeremy Stretz 2025.02.28 15:27:32-06'00'

DATE PREPARED	2/28/2025
ROUTE	50/291
STATE	MO
DISTRICT	KC
SHEET NO.	129
COUNTY	JACKSON
JOB NO.	J4P3196
FEDERAL PROJECT NO.	STB-3001(009)
PROJECT NO.	
BRIDGE NO.	

DESCRIPTION	DATE

MISSOURI HIGHWAYS AND TRANSPORTATION COMMISSION
MoDOT
105 WEST CAPITOL
JEFFERSON CITY, MO 65102
1-888-ASK-MODOT (1-888-275-6636)

LEE'S SUMMIT MISSOURI

olsson
1301 BURLINGTON ST., STE. 100
NORTH KANSAS CITY, MO 64116
PHONE: 816.361.1177
CERT. OF AUTHORITY NO. 001592

F:\2021\04501-05000\021-04786\40-Design\Microstation\J4P3196\plan_sheets\9 Traffic Control\129_TC_26_DETOUR_P2B_J4P3196_I50_RTE291.dgn 1:48:38 PM 2/28/2025

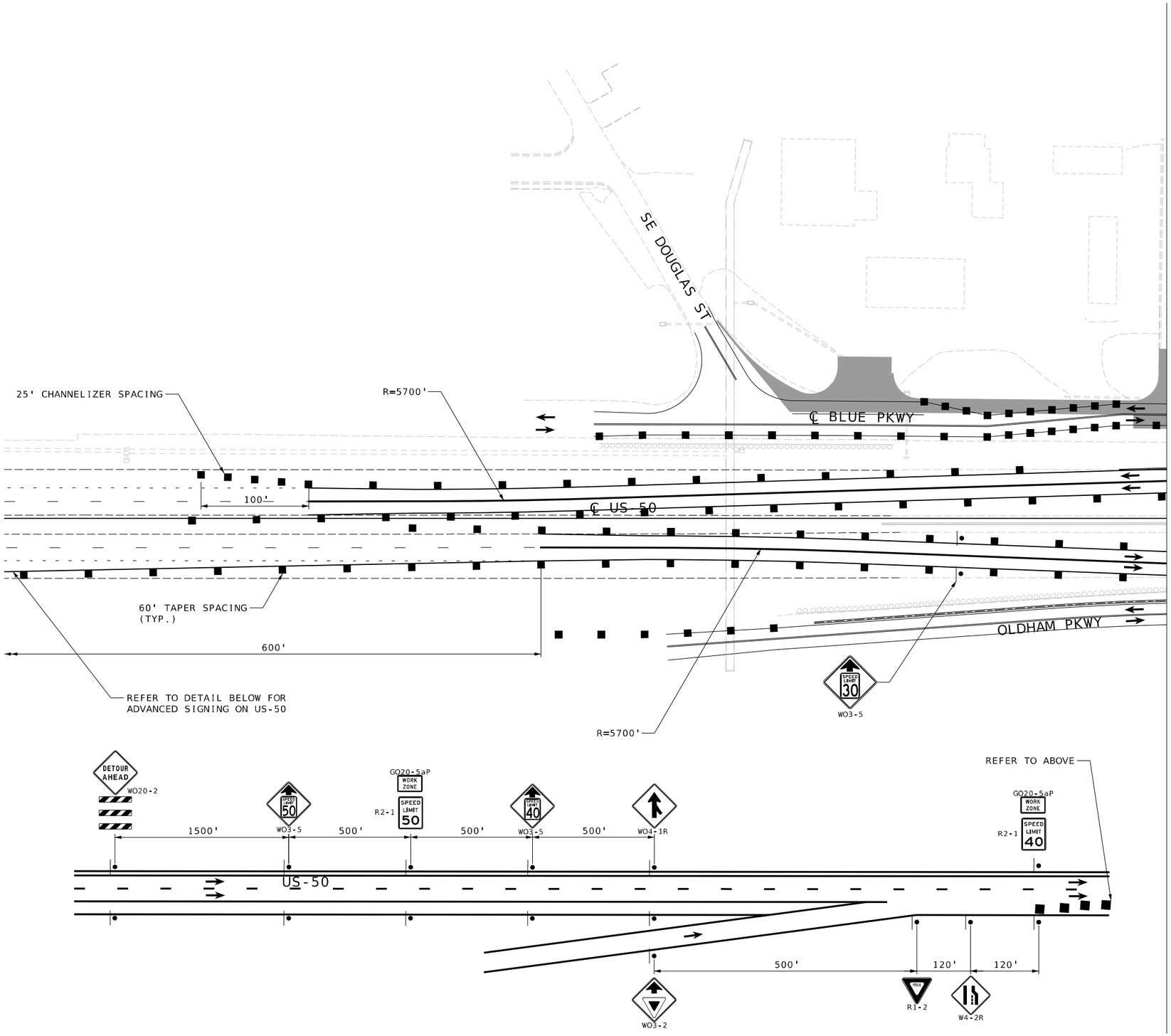

TRAFFIC CONTROL LEGEND

- SIGN (SINGLE SIDED)
- CHANNELIZER
- BARRICADE
- IMPACT ATTENUATOR
- CHANGEABLE MESSAGE BOARD
- TEMP PAVEMENT
- PERM PAVEMENT (PREV PHASE)
- PERM PAVEMENT (THIS PHASE)
- PORTABLE CONCRETE BARRIER
- DIRECTION OF TRAFFIC
- (A) TEMPORARY 4" SOLID WHITE EDGE LINE
- (B) TEMPORARY 4" SOLID YELLOW EDGE LINE
- (C) TEMPORARY 4" DOUBLE YELLOW
- (D) TEMPORARY 4" BROKEN WHITE

NOTES

1. TRAFFIC CONTROL DEVICES FOR BLUE PKWY AND OLDHAM PKWY TO REMAIN IN PLACE FROM PREVIOUS PHASES

SCALE

0 50 100 150

TRAFFIC CONTROL PLAN
US-50, PHASE 2
SHEET 27 OF 64

STATE OF MISSOURI
JEREMY SCOTT STRETZ
NUMBER PE-2011021054
PROFESSIONAL ENGINEER

Jeremy Stretz 2025.02.28 15:27:46-06'00'

DATE PREPARED 2/28/2025

ROUTE	STATE
50/291	MO
DISTRICT	SHEET NO.
KC	130

COUNTY: JACKSON
JOB NO.: J4P3196
FEDERAL PROJECT NO.: STB-3001(009)
PROJECT NO.:
BRIDGE NO.:

DESCRIPTION	DATE

IF A SEAL IS PRESENT ON THIS SHEET IT HAS BEEN ELECTRONICALLY SEALED AND DATED.

MISSOURI HIGHWAYS AND TRANSPORTATION COMMISSION
105 WEST CAPITOL
JEFFERSON CITY, MO 65102
1-888-ASK-MODOT (1-888-275-6636)

LEE'S SUMMIT MISSOURI

olsson
1301 BURLINGTON ST., STE. 100
NORTH KANSAS CITY, MO 64116
PHONE: 816.361.1177
CERT. OF AUTHORITY NO. 001592

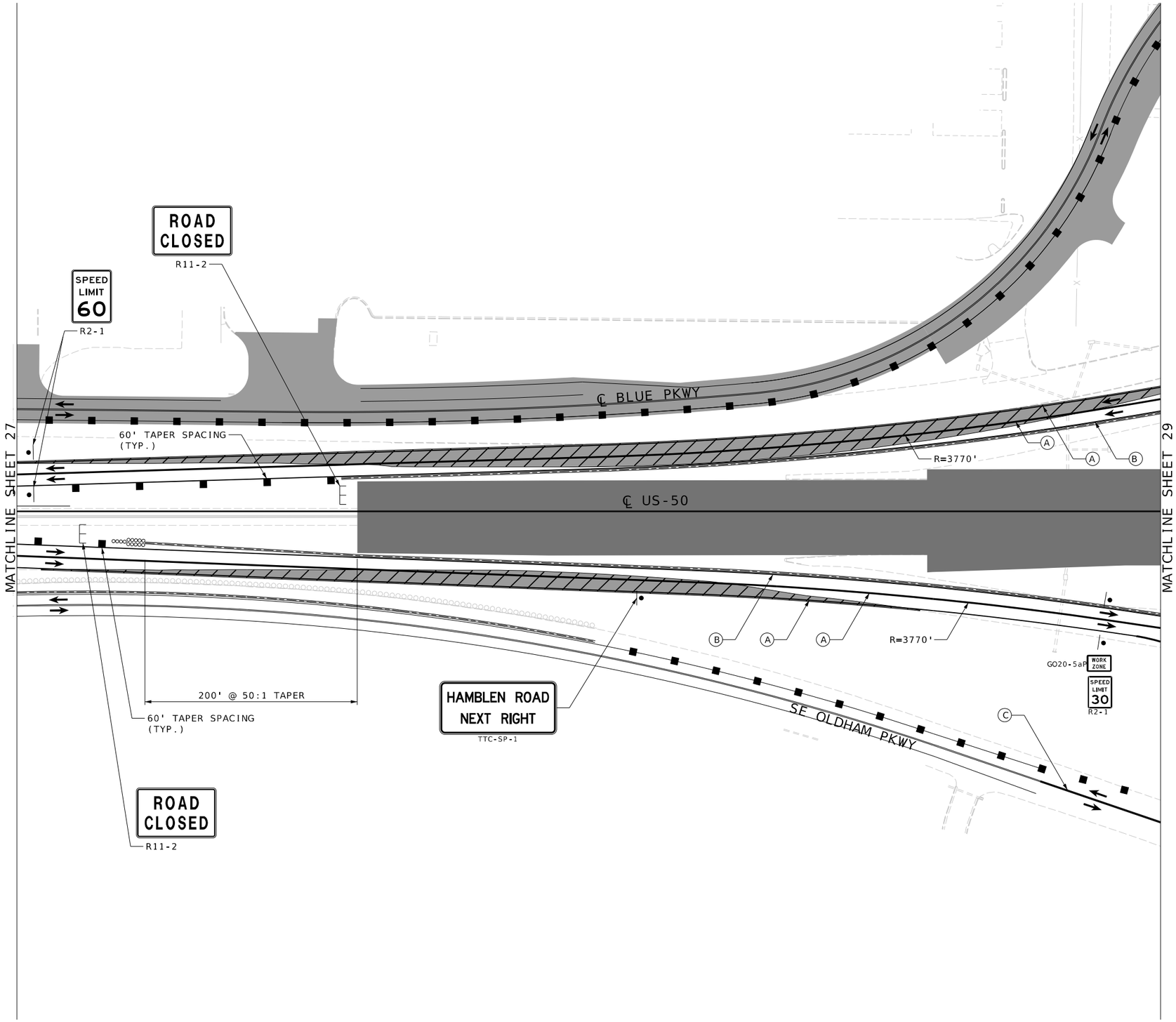

TRAFFIC CONTROL LEGEND

- SIGN (SINGLE SIDED)
- CHANNELIZER
- BARRICADE
- IMPACT ATTENUATOR
- TEMP PAVEMENT
- PERM PAVEMENT (PREV PHASE)
- PERM PAVEMENT (THIS PHASE)
- PORTABLE CONCRETE BARRIER
- DIRECTION OF TRAFFIC
- (A) TEMPORARY 4" SOLID WHITE EDGE LINE
- (B) TEMPORARY 4" SOLID YELLOW EDGE LINE
- (C) TEMPORARY 4" DOUBLE YELLOW
- (D) TEMPORARY 4" BROKEN WHITE

NOTES

1. TRAFFIC CONTROL DEVICES FOR BLUE PKWY AND OLDHAM PKWY TO REMAIN IN PLACE FROM PREVIOUS PHASES

SCALE

0 50 100 150

TRAFFIC CONTROL PLAN
US-50, PHASE 2
SHEET 28 OF 64

STATE OF MISSOURI
JEREMY SCOTT STRETZ
NUMBER PE-2011023864
PROFESSIONAL ENGINEER

Jeremy Stretz 2025.02.28 15:27:57-06'00'

DATE PREPARED 2/28/2025

ROUTE	STATE
50/291	MO
DISTRICT	SHEET NO.
KC	131

COUNTY: JACKSON
JOB NO.: J4P3196
FEDERAL PROJECT NO.: STB-3001(009)
PROJECT NO.:
BRIDGE NO.:

IF A SEAL IS PRESENT ON THIS SHEET IT HAS BEEN ELECTRONICALLY SEALED AND DATED.

DESCRIPTION	DATE

MISSOURI HIGHWAYS AND TRANSPORTATION COMMISSION
105 WEST CAPITOL
JEFFERSON CITY, MO 65102
1-888-ASK-MODOT (1-888-275-6636)

LEE'S SUMMIT MISSOURI

olsson
1301 BURLINGTON ST., STE. 100
NORTH KANSAS CITY, MO 64116
PHONE: 816.361.1177
CERT. OF AUTHORITY NO. 001592

F:\2021\04501-05000\021-04786\40-Design\Microstation\J4P3196\plan_sheets\9 Traffic Control\131_TC_28_P2_02_J4P3196_I50_US50.dgn 1:49:11 PM 2/28/2025

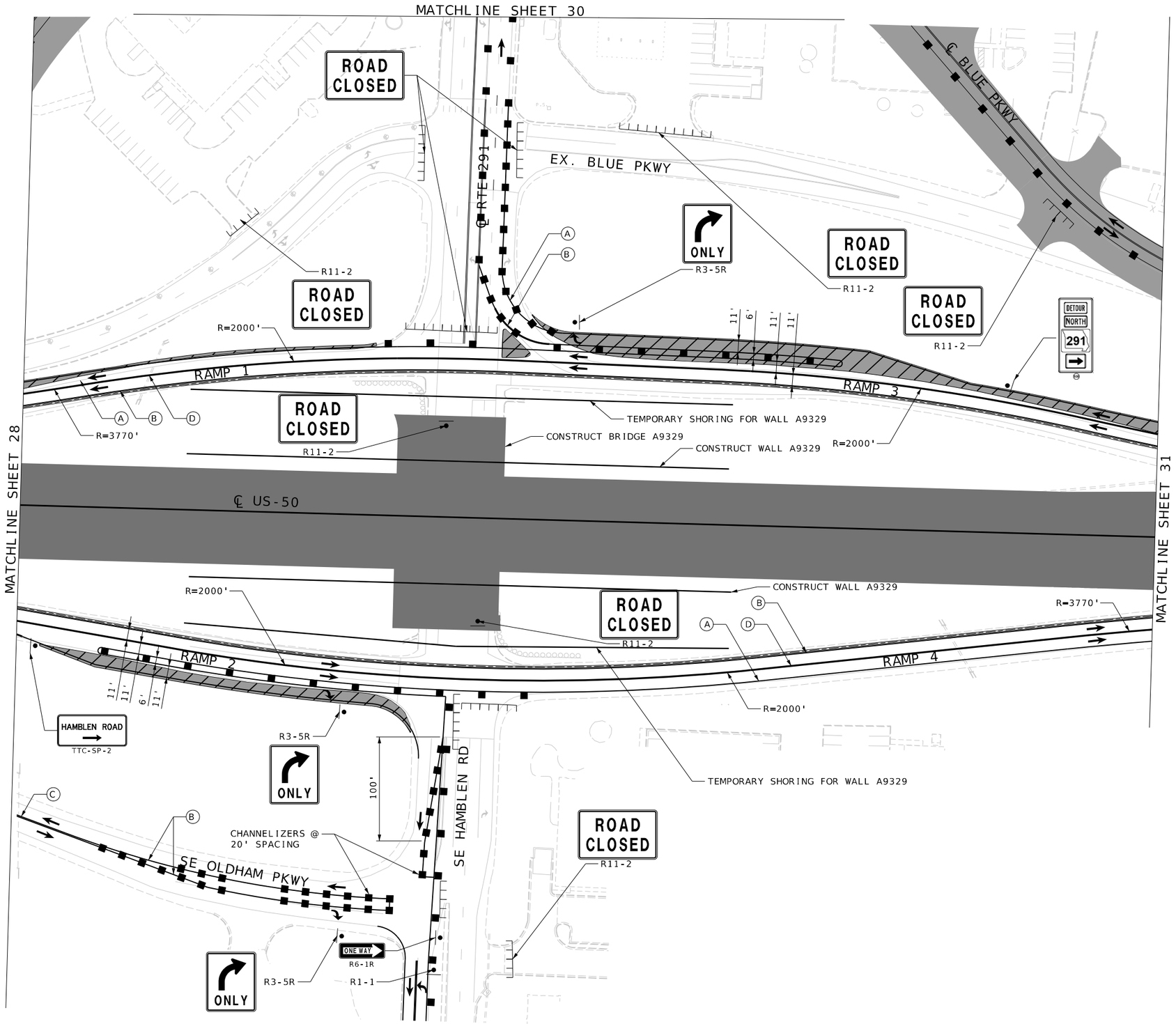

TRAFFIC CONTROL LEGEND

- SIGN (SINGLE SIDED)
- CHANNELIZER
- BARRICADE
- IMPACT ATTENUATOR
- TEMP PAVEMENT
- TEMP PAVEMENT (PREV PHASE)
- PERM PAVEMENT (PREV PHASE)
- PERM PAVEMENT (THIS PHASE)
- PORTABLE CONCRETE BARRIER
- DIRECTION OF TRAFFIC
- (A) TEMPORARY 4" SOLID WHITE EDGE LINE
- (B) TEMPORARY 4" SOLID YELLOW EDGE LINE
- (C) TEMPORARY 4" DOUBLE YELLOW
- (D) TEMPORARY 4" BROKEN WHITE

NOTES

1. TRAFFIC CONTROL DEVICES FOR BLUE PKWY AND OLDHAM PKWY TO REMAIN IN PLACE FROM PREVIOUS PHASES

SCALE
0 50 100 150

TRAFFIC CONTROL PLAN
US-50, PHASE 2
SHEET 29 OF 64

STATE OF MISSOURI
JEREMY SCOTT STRETZ
NUMBER PE-2011023864
PROFESSIONAL ENGINEER
Jeremy Stretz 2025.02.28 15:28:13-06'00'

DATE PREPARED 2/28/2025
ROUTE 50/291 | STATE MO
DISTRICT KC | SHEET NO. 132
COUNTY JACKSON
JOB NO. J4P3196
FEDERAL PROJECT NO. STB-3001(009)
PROJECT NO.
BRIDGE NO.

DESCRIPTION	DATE

IF A SEAL IS PRESENT ON THIS SHEET IT HAS BEEN ELECTRONICALLY SEALED AND DATED.

MISSOURI HIGHWAYS AND TRANSPORTATION COMMISSION
105 WEST CAPITOL
JEFFERSON CITY, MO 65102
1-888-ASK-MODOT (1-888-275-6636)

LEE'S SUMMIT MISSOURI

olsson
1301 BURLINGTON ST., STE. 100
NORTH KANSAS CITY, MO 64116
PHONE: 816.361.1177
CERT. OF AUTHORITY NO. 001592

F:\2021\04501-05000\021-04786\40-Design\Microstation\J4P3196\plan_sheets\9 Traffic Control\132_TC_29_P2_03_J4P3196_I50_US50.dgn 1:49:16 PM 2/28/2025

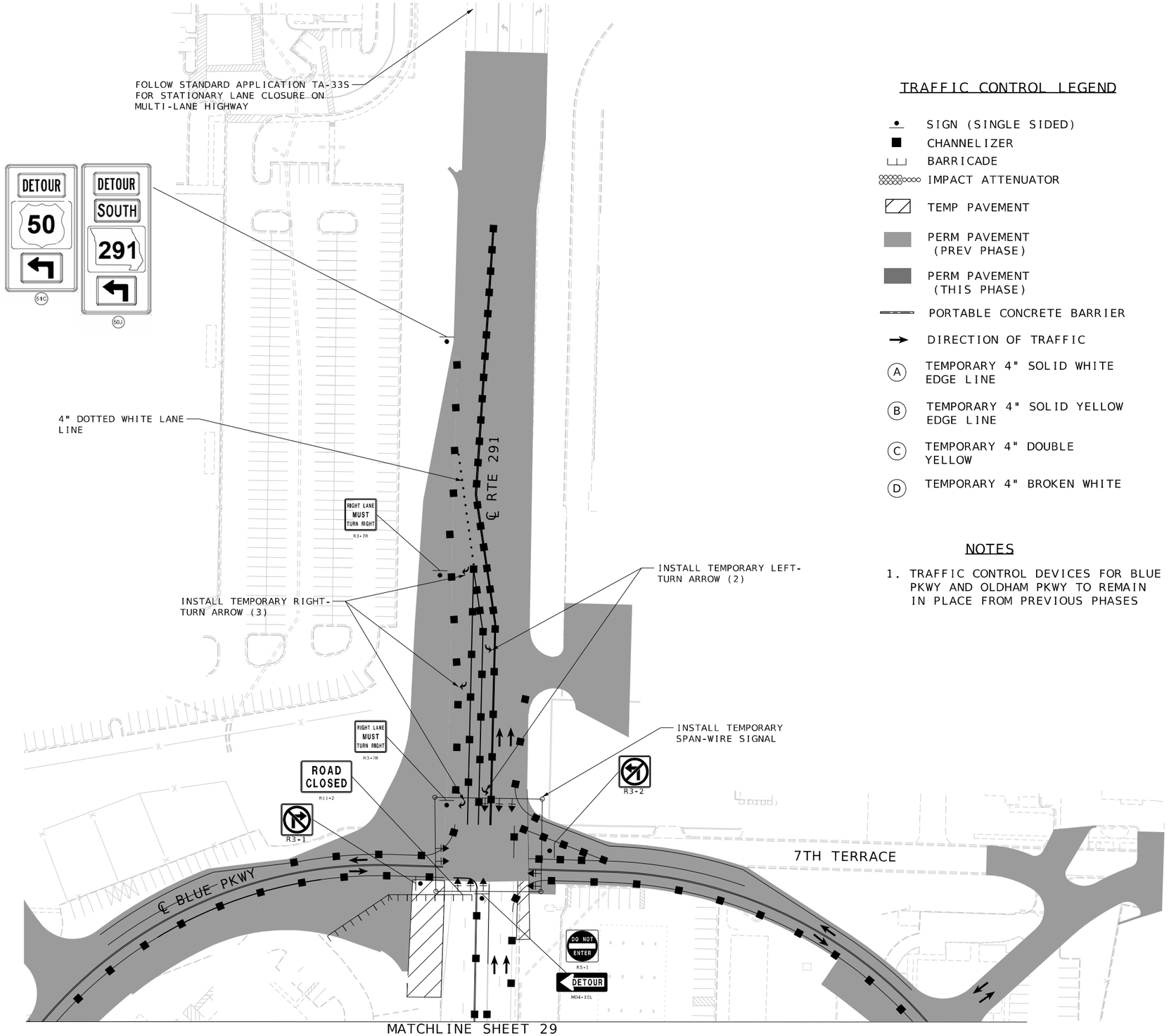

TRAFFIC CONTROL LEGEND

- SIGN (SINGLE SIDED)
- CHANNELIZER
- BARRICADE
- IMPACT ATTENUATOR
- TEMP PAVEMENT
- PERM PAVEMENT (PREV PHASE)
- PERM PAVEMENT (THIS PHASE)
- PORTABLE CONCRETE BARRIER
- DIRECTION OF TRAFFIC
- (A) TEMPORARY 4" SOLID WHITE EDGE LINE
- (B) TEMPORARY 4" SOLID YELLOW EDGE LINE
- (C) TEMPORARY 4" DOUBLE YELLOW
- (D) TEMPORARY 4" BROKEN WHITE

NOTES

1. TRAFFIC CONTROL DEVICES FOR BLUE PKWY AND OLDHAM PKWY TO REMAIN IN PLACE FROM PREVIOUS PHASES

SCALE
0 50 100 150

TRAFFIC CONTROL PLAN
US-50, PHASE 2
SHEET 30 OF 64

STATE OF MISSOURI
JEREMY SCOTT STRETZ
NUMBER PE-2011021864
PROFESSIONAL ENGINEER
Jeremy Stretz 2025.02.28 15:28:27-06'00'

DATE PREPARED 2/28/2025
ROUTE 50/291 | STATE MO
DISTRICT KC | SHEET NO. 133
COUNTY JACKSON
JOB NO. J4P3196
FEDERAL PROJECT NO. STB-3001(009)
PROJECT NO.
BRIDGE NO.

DESCRIPTION | DATE

IF A SEAL IS PRESENT ON THIS SHEET IT HAS BEEN ELECTRONICALLY SEALED AND DATED.

MISSOURI HIGHWAYS AND TRANSPORTATION COMMISSION
MoDOT
105 WEST CAPITOL
JEFFERSON CITY, MO 65102
1-888-ASK-MODOT (1-888-275-6636)

LEE'S SUMMIT MISSOURI

olsson
1301 BURLINGTON ST., STE. 100
NORTH KANSAS CITY, MO 64116
PHONE: 816.361.1177
CERT. OF AUTHORITY NO. 001592

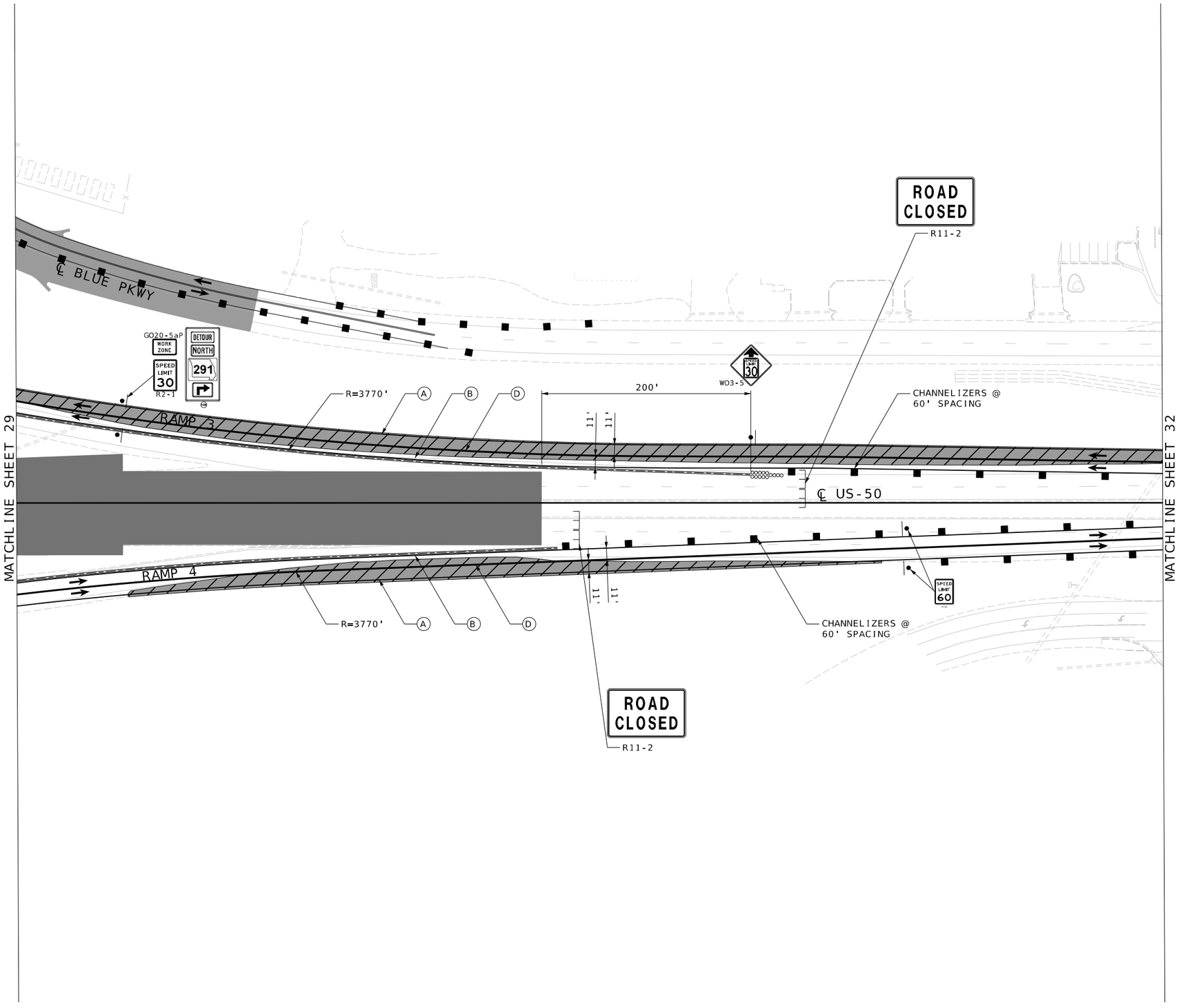

TRAFFIC CONTROL LEGEND

- SIGN (SINGLE SIDED)
- CHANNELIZER
- BARRICADE
- IMPACT ATTENUATOR
- TEMP PAVEMENT
- PERM PAVEMENT (PREV PHASE)
- PERM PAVEMENT (THIS PHASE)
- PORTABLE CONCRETE BARRIER
- DIRECTION OF TRAFFIC
- (A) TEMPORARY 4" SOLID WHITE EDGE LINE
- (B) TEMPORARY 4" SOLID YELLOW EDGE LINE
- (C) TEMPORARY 4" DOUBLE YELLOW
- (D) TEMPORARY 4" BROKEN WHITE

NOTES

1. TRAFFIC CONTROL DEVICES FOR BLUE PKWY AND OLDHAM PKWY TO REMAIN IN PLACE FROM PREVIOUS PHASES

SCALE

0 50 100 150

TRAFFIC CONTROL PLAN
US-50, PHASE 2
SHEET 31 OF 64

STATE OF MISSOURI
JEREMY SCOTT STRETZ
NUMBER PE-2011023864
PROFESSIONAL ENGINEER

Jeremy Stretz 2025.02.28 15:28:38-06'00'

DATE PREPARED 2/28/2025

ROUTE	STATE
50/291	MO
DISTRICT	SHEET NO.
KC	134

COUNTY: JACKSON
JOB NO.: J4P3196
FEDERAL PROJECT NO.: STB-3001(009)
PROJECT NO.:
BRIDGE NO.:

DATE	DESCRIPTION

IF A SEAL IS PRESENT ON THIS SHEET IT HAS BEEN ELECTRONICALLY SEALED AND DATED.

MISSOURI HIGHWAYS AND TRANSPORTATION COMMISSION
105 WEST CAPITOL
JEFFERSON CITY, MO 65102
1-888-ASK-MODOT (1-888-275-6636)

LEE'S SUMMIT MISSOURI

olsson
1301 BURLINGTON ST., STE. 100
NORTH KANSAS CITY, MO 64116
PHONE: 816.361.1177
CERT. OF AUTHORITY NO. 001592

F:\2021\04501-05000\021-04786\40-Design\Microstation\J4P3196\plan_sheets\9 Traffic Control\134_TC_31_P2_04_J4P3196_I50_US50.dgn 1:49:27 PM 2/28/2025

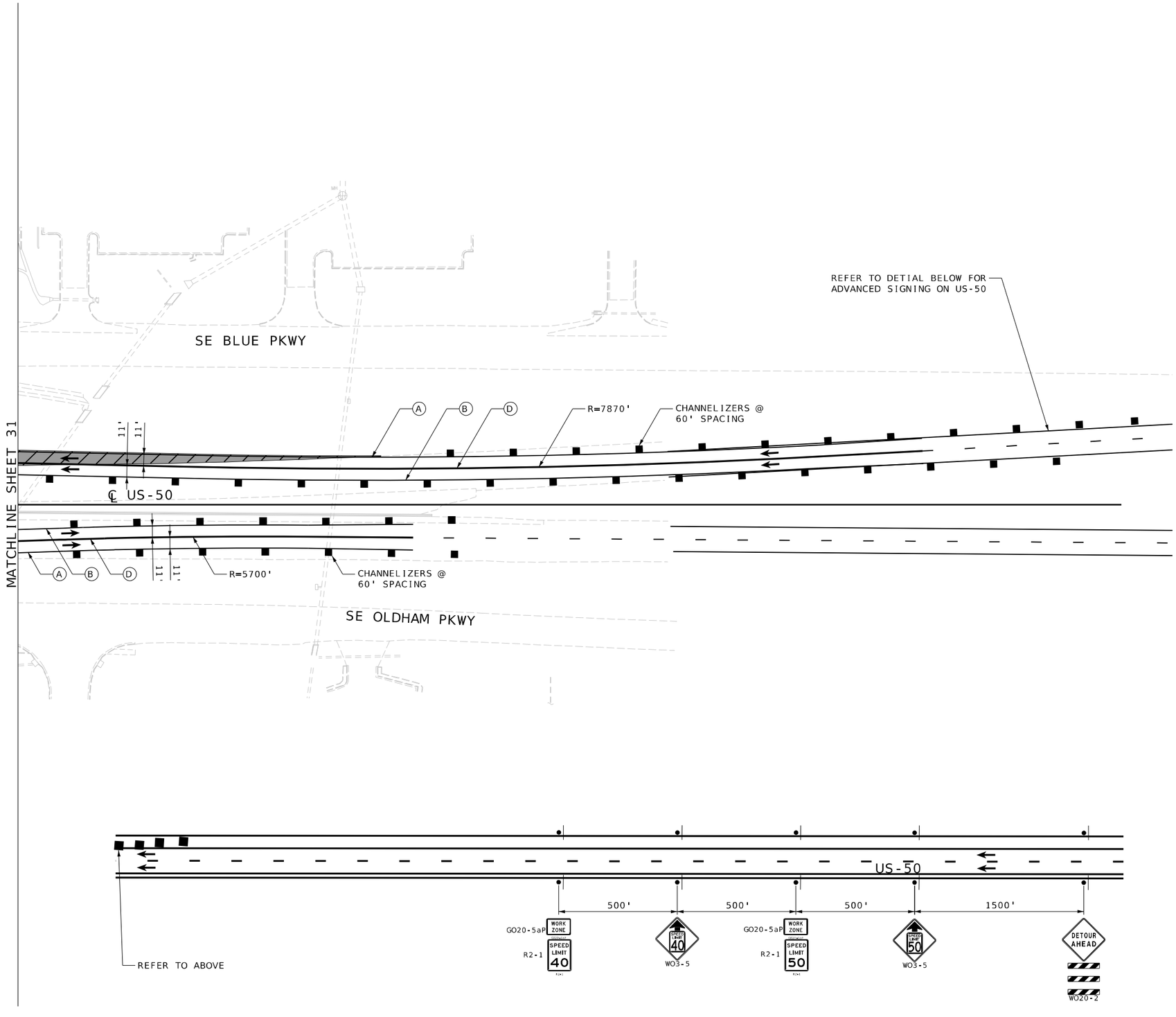

TRAFFIC CONTROL LEGEND

- SIGN (SINGLE SIDED)
- CHANNELIZER
- BARRICADE
- IMPACT ATTENUATOR
- CHANGEABLE MESSAGE BOARD
- TEMP PAVEMENT
- PERM PAVEMENT (PREV PHASE)
- PERM PAVEMENT (THIS PHASE)
- CONCRETE TRAFFIC BARRIER (CTB)
- DIRECTION OF TRAFFIC
- (A) TEMPORARY 4" SOLID WHITE EDGE LINE
- (B) TEMPORARY 4" SOLID YELLOW EDGE LINE
- (C) TEMPORARY 4" DOUBLE YELLOW
- (D) TEMPORARY 4" BROKEN WHITE

SCALE

0 50 100 150

TRAFFIC CONTROL PLAN
US-50, PHASE 2
SHEET 32 OF 64

STATE OF MISSOURI
JEREMY SCOTT STRETZ
NUMBER PE-2011021054
PROFESSIONAL ENGINEER

Jeremy Stretz 2025.02.28 15:28:52-06'00'

DATE PREPARED
2/28/2025

ROUTE	STATE
50/291	MO
DISTRICT	SHEET NO.
KC	135

COUNTY
JACKSON

JOB NO.
J4P3196

FEDERAL PROJECT NO.
STB-3001(009)

PROJECT NO.

BRIDGE NO.

NO.	DESCRIPTION	DATE

IF A SEAL IS PRESENT ON THIS SHEET IT HAS BEEN ELECTRONICALLY SEALED AND DATED.

MISSOURI HIGHWAYS AND TRANSPORTATION COMMISSION
105 WEST CAPITOL
JEFFERSON CITY, MO 65102
1-888-ASK-MODOT (1-888-275-6636)

LEE'S SUMMIT MISSOURI

olsson
1301 BURLINGTON ST., STE. 100
NORTH KANSAS CITY, MO 64116
PHONE: 816.361.1177
CERT. OF AUTHORITY NO. 001592

F:\2021\04501-05000\021-04786\40-Design\Microstation\J4P3196\plan_sheets\9 Traffic Control\135_TC_32_P2_05_J4P3196_I50_US50.dgn 1:49:33 PM 2/28/2025

PHASE 3

1. PLACE TRAFFIC CONTROL DEVICES, TEMPORARY STRIPING AND BARRIER ON EB & WB US-50.
2. SHIFT EB & WB US-50 MAINLANE TRAFFIC ONTO NEWLY CONSTRUCTED EB & WB US-50 PAVEMENT AS SHOWN ON PLANS
3. PLACE TEMP STRIPING ON RAMPS 2 AND 3 AND MAINTAIN RAMP TRAFFIC AS SHOWN ON PLANS
4. CONTINUE CONSTRUCTION ON PROPOSED RTE 291 BRIDGE
5. CONTINUE CONSTRUCTION ON PROPOSED RETAINING WALLS
6. CLOSE RAMP 1 AND CONSTRUCT PROPOSED RAMP 1 PAVEMENT AND NW QUADRANT OF PROPOSED INTERSECTION PAVEMENT
7. CLOSE RAMP 4 AND CONSTRUCT PROPOSED RAMP 4 PAVEMENT AND SE QUADRANT OF PROPOSED INTERSECTION PAVEMENT
8. CONSTRUCT PROPOSED NB HAMBLEN RD PAVEMENT
9. CONSTRUCT PROPOSED SB RTE 291 SOUTH OF THE BLUE PKWY INTERSECTION
10. CONSTRUCT SOUTH HALF OF PROPOSED PAVEMENT OF PROPOSED BLUE PKWY PAVEMENT WEST OF RTE 291
11. DETOUR SB RTE 291/HAMBLEN RD TRAFFIC TO WB BLUE PKWY. USE RTE 291 & US-50 INTERCHANGE ONTO EB US-50
12. DETOUR NB RTE 291/HAMBLEN RD TRAFFIC TO EB OLDHAM ROAD. USE RANSON RD & US-50 INTERCHANGE ONTO WB US- 50

RTE 291 / RAMP 1 & 3 SIGNAL MODIFICATIONS

ALL SIGNAL HEADS AT INTERSECTION TO REMAIN COVERED

RTE 291 / RAMP 2 & 4 SIGNAL MODIFICATIONS

ALL SIGNAL HEADS AT INTERSECTION TO REMAIN COVERED

RTE 291 / BLUE PKWY SIGNAL MODIFICATIONS

ADJUST TEMPORARY SIGNALS FOR NEW TRAFFIC PATTERN.

ALL EXISTING SIGNING AND UNUSED SIGNAL HEADS SHALL BECOVERED/BAGGED

CONTRACTOR SHALL NOTIFY MODOT AND THE CITY OF LEE'S SUMMIT AT LEAST TWO HOURS PRIOR TO ANY SIGNAL MODIFICATIONS TO NOTIFY THEM OF THE NEEDS OF SIGNAL TIMING MODIFICATIONS

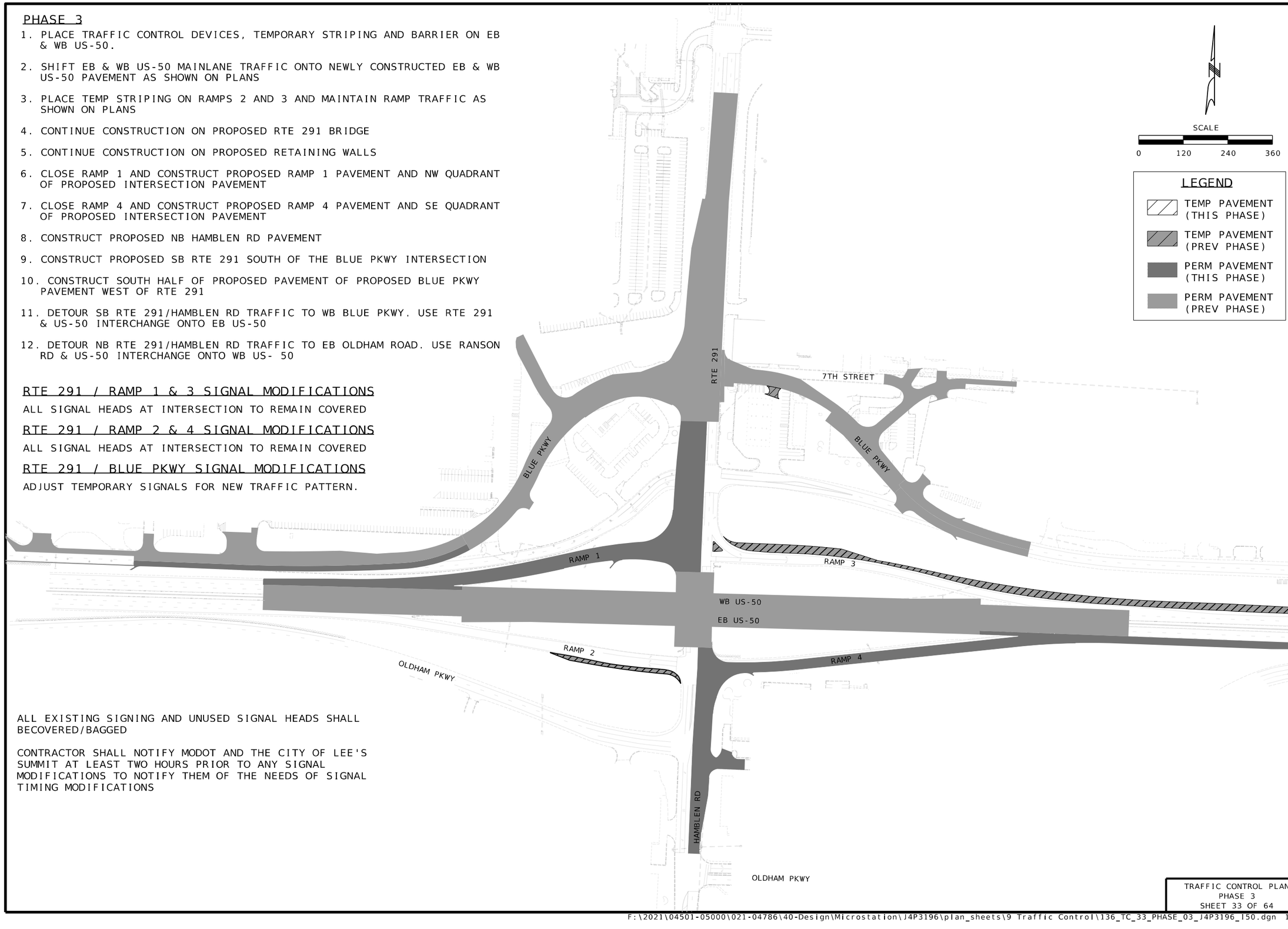

SCALE

0 120 240 360

LEGEND

- TEMP PAVEMENT (THIS PHASE)
- TEMP PAVEMENT (PREV PHASE)
- PERM PAVEMENT (THIS PHASE)
- PERM PAVEMENT (PREV PHASE)

STATE OF MISSOURI
JEREMY SCOTT STRETZ
NUMBER PE-2017023856
PROFESSIONAL ENGINEER

Jeremy Stretz 2025.02.28 15:29:04-06'00'

DATE PREPARED
2/28/2025

ROUTE	STATE
50/291	MO
DISTRICT	SHEET NO.
KC	136

COUNTY
JACKSON

JOB NO.
J4P3196

FEDERAL PROJECT NO.
STB-3001(009)

PROJECT NO.

BRIDGE NO.

DESCRIPTION	DATE

IF A SEAL IS PRESENT ON THIS SHEET IT HAS BEEN ELECTRONICALLY SEALED AND DATED.

MISSOURI HIGHWAYS AND TRANSPORTATION COMMISSION

105 WEST CAPITOL
JEFFERSON CITY, MO 65102
1-888-ASK-MODOT (1-888-275-6636)

olsson
1301 BURLINGTON ST., STE. 100
NORTH KANSAS CITY, MO 64116
PHONE: 816.361.1177
CERT. OF AUTHORITY NO. 001592

TRAFFIC CONTROL PLAN
PHASE 3
SHEET 33 OF 64

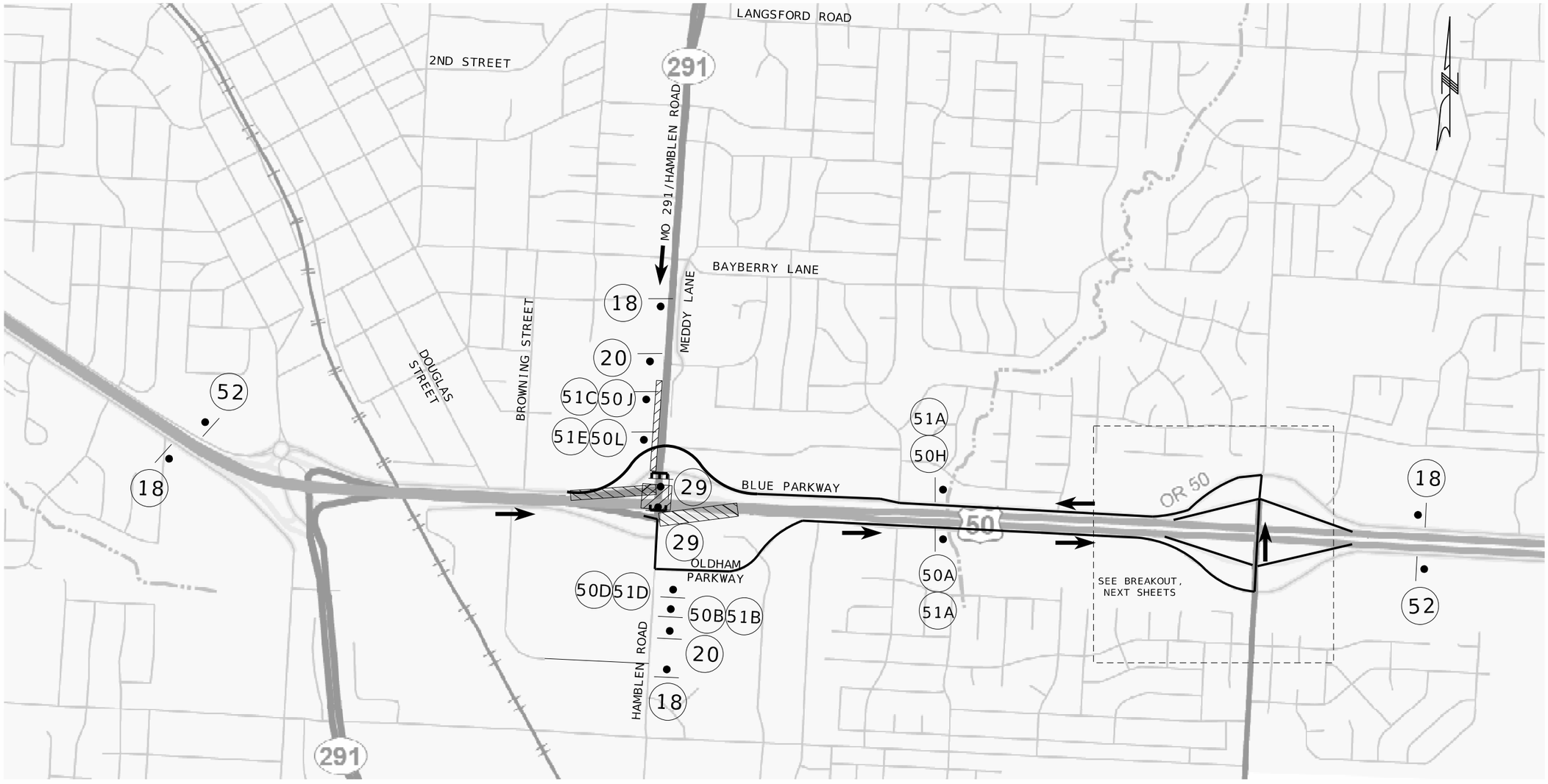

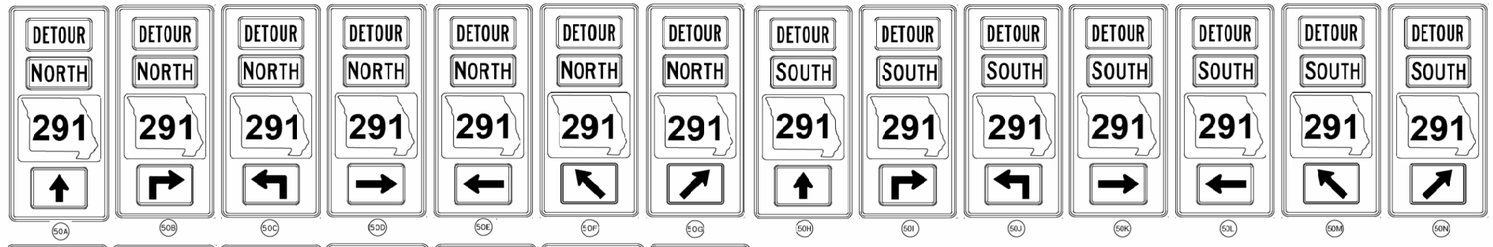

TRAFFIC CONTROL LEGEND

- SIGN (SINGLE SIDED)
- CHANNELIZER
- BARRICADE
- CHANGEABLE MESSAGE BOARD
- WORK AREA
- DETOUR ROUTE

NOT TO SCALE

TRAFFIC CONTROL PLAN
PHASE 3 DETOUR MAP
SHEET 34 OF 64

STATE OF MISSOURI
JEREMY SCOTT STRETZ
NUMBER PE-2017023864
PROFESSIONAL ENGINEER

Jeremy Stretz 2025.02.28 15:26:55-06'00'

DATE PREPARED: 2/28/2025

ROUTE	STATE
50/291	MO
DISTRICT	SHEET NO.
KC	137

COUNTY: JACKSON
JOB NO.: J4P3196
FEDERAL PROJECT NO.: STB-3001(009)
PROJECT NO.:
BRIDGE NO.:

DATE	DESCRIPTION

IF A SEAL IS PRESENT ON THIS SHEET IT HAS BEEN ELECTRONICALLY SEALED AND DATED.

MISSOURI HIGHWAYS AND TRANSPORTATION COMMISSION
105 WEST CAPITOL
JEFFERSON CITY, MO 65102
1-888-ASK-MODOT (1-888-275-6636)

LEE'S SUMMIT MISSOURI

olsson
1301 BURLINGTON ST., STE. 100
NORTH KANSAS CITY, MO 64116
PHONE: 816.361.1177
CERT. OF AUTHORITY NO. 001592

F:\2021\04501-05000\021-04786\40-Design\Microstation\J4P3196\plan_sheets\9 Traffic Control\137_TC_34_DETOUR_P3_J4P3196_I50_RTE291.dgn 1:49:42 PM 2/28/2025

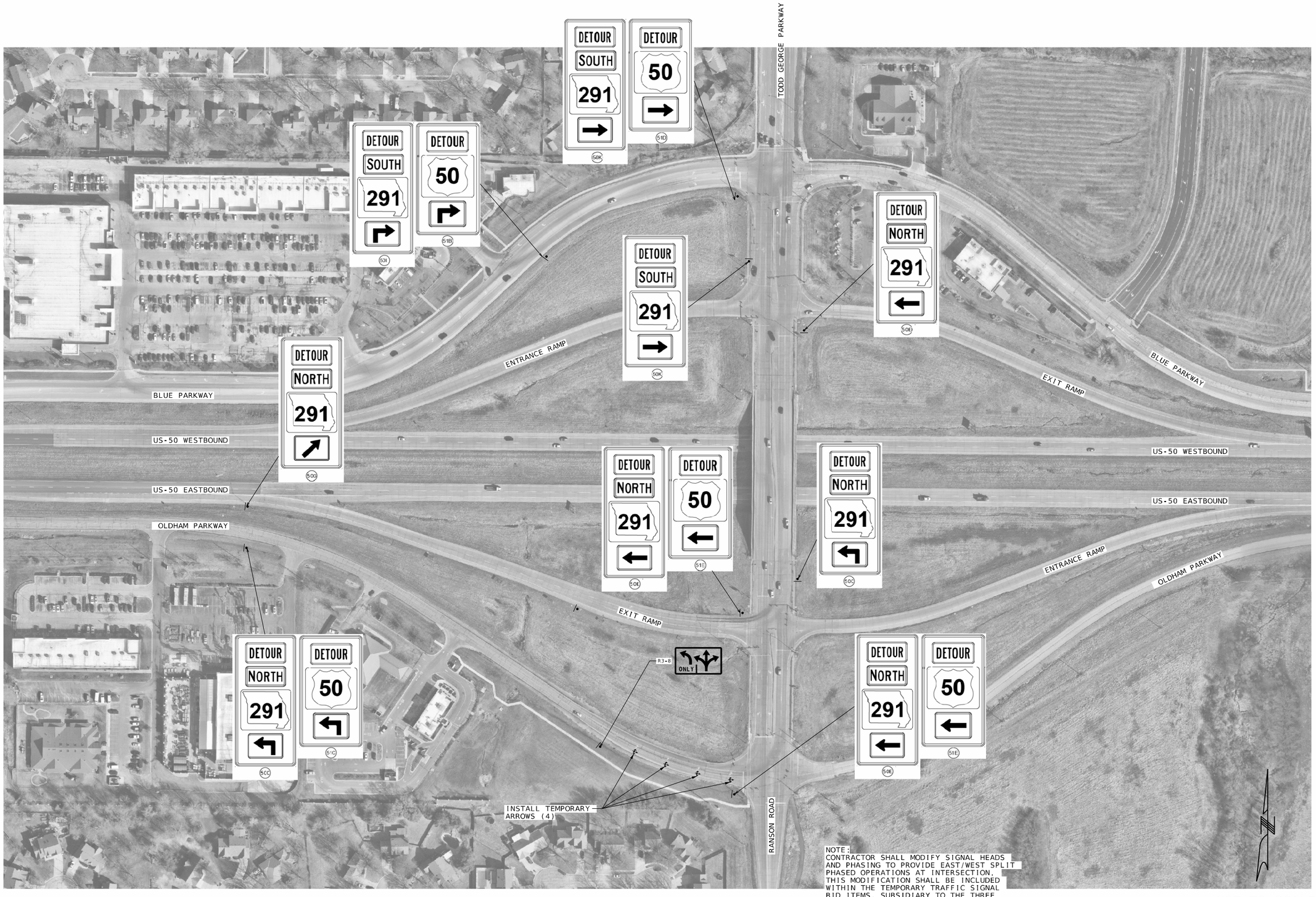

NOTE:
CONTRACTOR SHALL MODIFY SIGNAL HEADS AND PHASING TO PROVIDE EAST/WEST SPLIT PHASED OPERATIONS AT INTERSECTION. THIS MODIFICATION SHALL BE INCLUDED WITHIN THE TEMPORARY TRAFFIC SIGNAL BID ITEMS, SUBSIDIARY TO THE THREE TEMPORARY TRAFFIC SIGNALS.

NOT TO SCALE

TRAFFIC CONTROL PLAN
PHASE 3 DETOUR MAP
SHEET 35 OF 64

STATE OF MISSOURI
JEREMY SCOTT STRETZ
NUMBER PE-2017023864
PROFESSIONAL ENGINEER

Jeremy Stretz 2025.02.28 15:31:57-06'00'

DATE PREPARED	2/28/2025
ROUTE	50/291
STATE	MO
DISTRICT	KC
SHEET NO.	138
COUNTY	JACKSON
JOB NO.	J4P3196
FEDERAL PROJECT NO.	STB-3001(009)
PROJECT NO.	
BRIDGE NO.	

DESCRIPTION | DATE

IF A SEAL IS PRESENT ON THIS SHEET IT HAS BEEN ELECTRONICALLY SEALED AND DATED.

MISSOURI HIGHWAYS AND TRANSPORTATION COMMISSION
105 WEST CAPITOL
JEFFERSON CITY, MO 65102
1-888-ASK-MODOT (1-888-275-6636)

LEE'S SUMMIT MISSOURI

olsson
1301 BURLINGTON ST., STE. 100
NORTH KANSAS CITY, MO 64116
PHONE: 816.361.1177
CERT. OF AUTHORITY NO. 001592

F:\2021\04501-05000\021-04786\40-Design\Microstation\J4P3196\plan_sheets\9 Traffic Control\138_TC_35_DETOUR_P3A_J4P3196_I50_RTE291.dgn 1:49:56 PM 2/28/2025

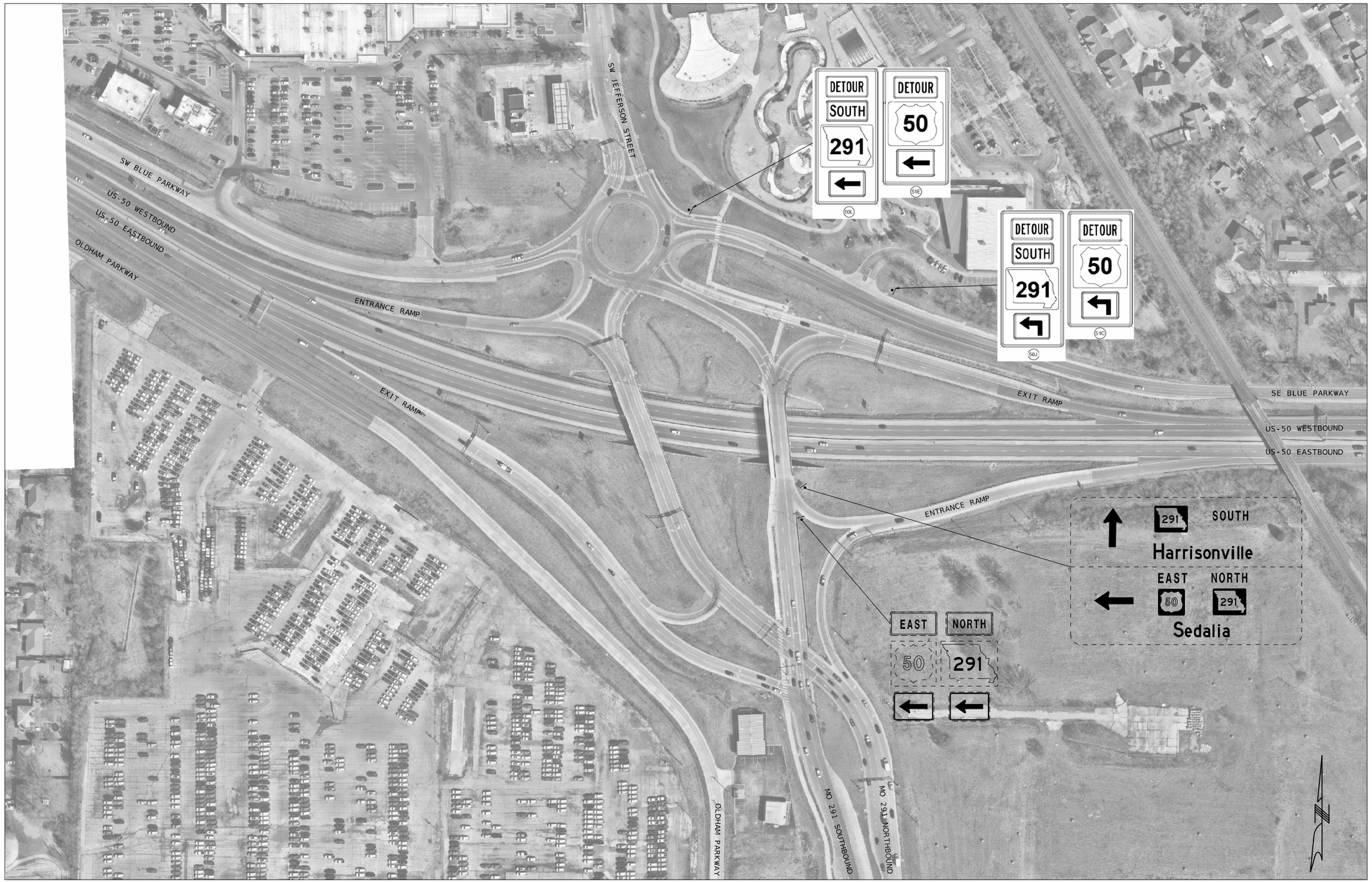

NOT TO SCALE

TRAFFIC CONTROL PLAN
PHASE 3 DETOUR
SHEET 36 OF 64

Jeremy Scott Stretz
Number PE-2011023864
Professional Engineer
State of Missouri

Jeremy Stretz 2025.02.28 15:31:43-06'00'

DATE PREPARED
2/28/2025

ROUTE	STATE
50/291	MO
DISTRICT	SHEET NO.
KC	139

COUNTY
JACKSON

JOB NO.
J4P3196

FEDERAL PROJECT NO.
STB-3001(009)

PROJECT NO.

BRIDGE NO.

DESCRIPTION	DATE

IF A SEAL IS PRESENT ON THIS SHEET IT HAS BEEN ELECTRONICALLY SEALED AND DATED.

MISSOURI HIGHWAYS AND TRANSPORTATION COMMISSION
105 WEST CAPITOL
JEFFERSON CITY, MO 65102
1-888-ASK-MODOT (1-888-275-6636)

LEE'S SUMMIT MISSOURI

olsson
1301 BURLINGTON ST., STE. 100
NORTH KANSAS CITY, MO 64116
PHONE: 816.361.1177
CERT. OF AUTHORITY NO. 001592

F:\2021\04501-05000\021-04786\40-Design\Microstation\J4P3196\plan_sheets\9 Traffic Control\139_TC_36_DETOUR_P3B_J4P3196_I50_RTE291.dgn 1:50:07 PM 2/28/2025

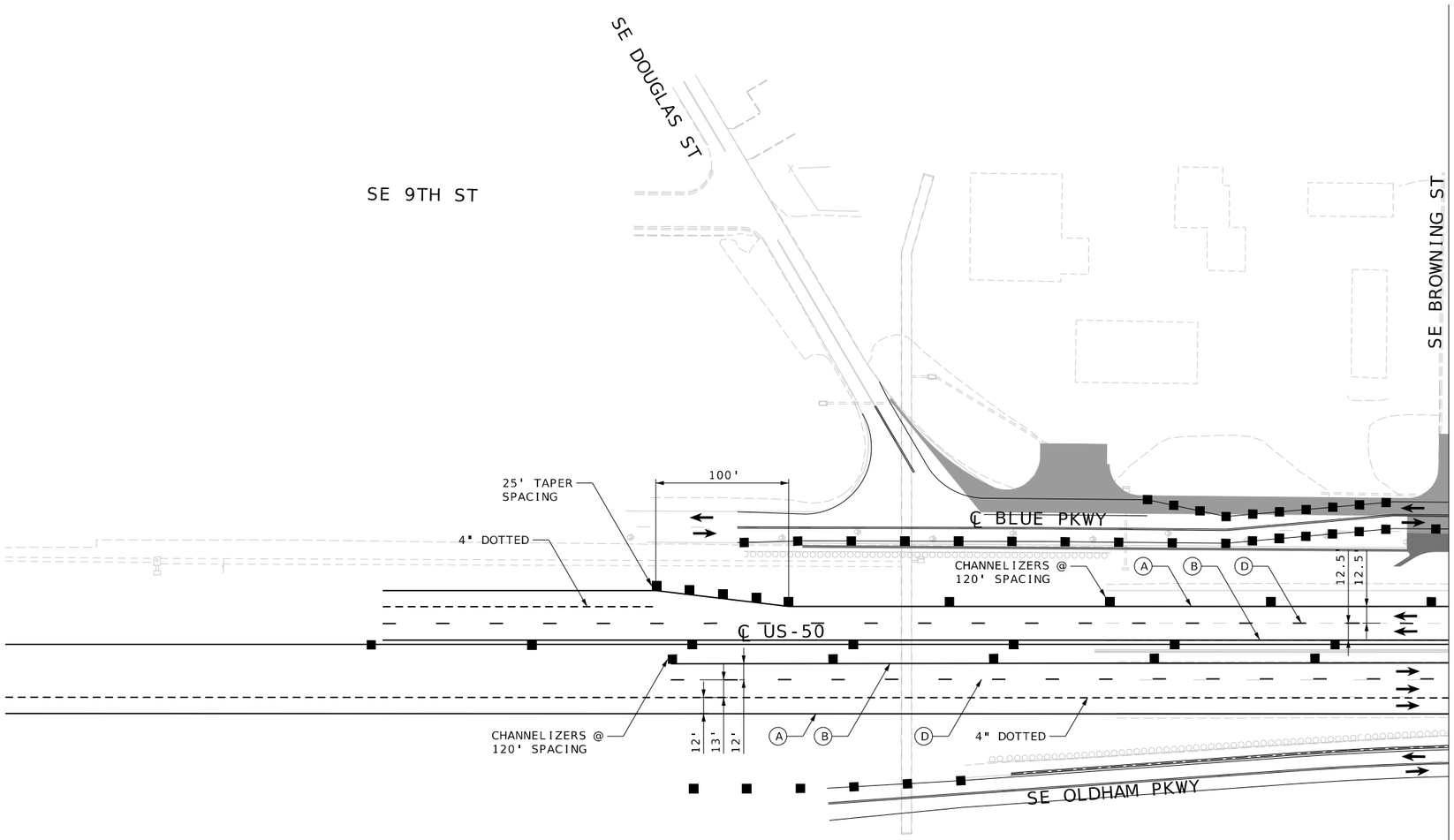

TRAFFIC CONTROL LEGEND

- SIGN (SINGLE SIDED)
- CHANNELIZER
- BARRICADE
- IMPACT ATTENUATOR
- TEMP PAVEMENT
- PERM PAVEMENT (PREV PHASE)
- PERM PAVEMENT (THIS PHASE)
- PORTABLE CONCRETE BARRIER
- DIRECTION OF TRAFFIC
- (A) TEMPORARY 4" SOLID WHITE EDGE LINE
- (B) TEMPORARY 4" SOLID YELLOW EDGE LINE
- (C) TEMPORARY 4" DOUBLE YELLOW
- (D) TEMPORARY 4" BROKEN WHITE

NOTES

1. TRAFFIC CONTROL DEVICES FOR BLUE PKWY AND OLDHAM PKWY TO REMAIN IN PLACE FROM PREVIOUS PHASES

SCALE
0 50 100 150

TRAFFIC CONTROL PLAN
US-50, PHASE 3
SHEET 37 OF 64

STATE OF MISSOURI
JEREMY SCOTT STRETZ
NUMBER PE-2011021054
PROFESSIONAL ENGINEER

Jeremy Stretz 2025.02.28 15:31:30-06'00'

DATE PREPARED 2/28/2025

ROUTE	STATE
50/291	MO
DISTRICT	SHEET NO.
KC	140

COUNTY: JACKSON
JOB NO.: J4P3196
FEDERAL PROJECT NO.: STB-3001(009)
PROJECT NO.:
BRIDGE NO.:

DESCRIPTION	DATE

IF A SEAL IS PRESENT ON THIS SHEET IT HAS BEEN ELECTRONICALLY SEALED AND DATED.

MISSOURI HIGHWAYS AND TRANSPORTATION COMMISSION
105 WEST CAPITOL
JEFFERSON CITY, MO 65102
1-888-ASK-MODOT (1-888-275-6636)

LEE'S SUMMIT MISSOURI

olsson
1301 BURLINGTON ST., STE. 100
NORTH KANSAS CITY, MO 64116
PHONE: 816.361.1177
CERT. OF AUTHORITY NO. 001592

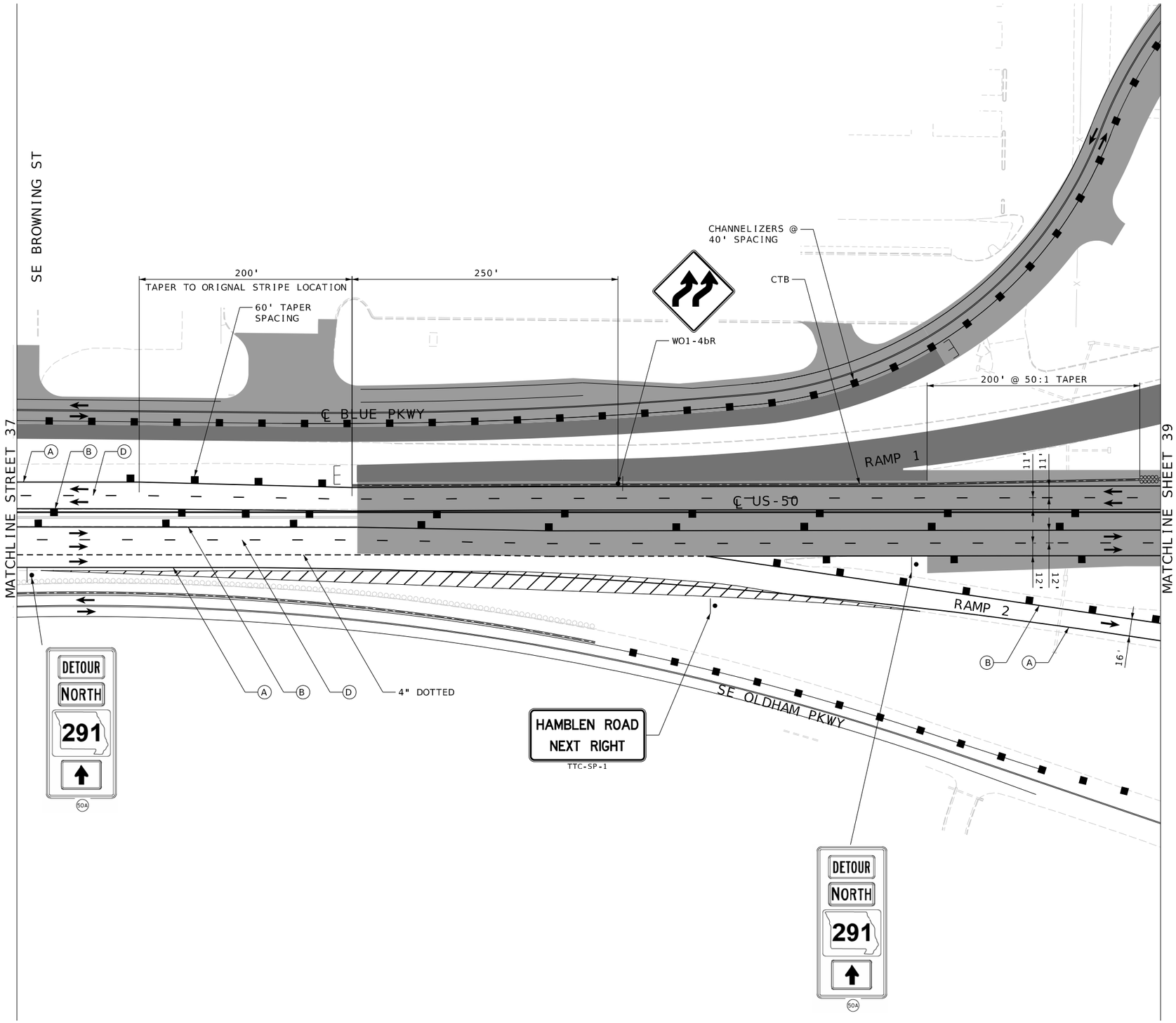

TRAFFIC CONTROL LEGEND

- SIGN (SINGLE SIDED)
- CHANNELIZER
- BARRICADE
- IMPACT ATTENUATOR
- TEMP PAVEMENT
- PERM PAVEMENT (PREV PHASE)
- PERM PAVEMENT (THIS PHASE)
- PORTABLE CONCTETE BARRIER
- DIRECTION OF TRAFFIC
- (A) TEMPORARY 4" SOLID WHITE EDGE LINE
- (B) TEMPORARY 4" SOLID YELLOW EDGE LINE
- (C) TEMPORARY 4" DOUBLE YELLOW
- (D) TEMPORARY 4" BROKEN WHITE

SCALE
0 50 100 150

TRAFFIC CONTROL PLAN
US-50, PHASE 3
SHEET 38 OF 64

STATE OF MISSOURI
JEREMY SCOTT STRETZ
NUMBER PE-2011023864
PROFESSIONAL ENGINEER

Jeremy Stretz 2025.02.28 15:31:18-06'00'

DATE PREPARED
2/28/2025

ROUTE	STATE
50/291	MO
DISTRICT	SHEET NO.
KC	141

COUNTY
JACKSON

JOB NO.
J4P3196

FEDERAL PROJECT NO.
STB-3001(009)

PROJECT NO.

BRIDGE NO.

DESCRIPTION	DATE

IF A SEAL IS PRESENT ON THIS SHEET IT HAS BEEN ELECTRONICALLY SEALED AND DATED.

MISSOURI HIGHWAYS AND TRANSPORTATION COMMISSION
105 WEST CAPITOL
JEFFERSON CITY, MO 65102
1-888-ASK-MODOT (1-888-275-6636)

LEE'S SUMMIT MISSOURI

olsson
1301 BURLINGTON ST., STE. 100
NORTH KANSAS CITY, MO 64116
PHONE: 816.361.1177
CERT. OF AUTHORITY NO. 001592

F:\2021\04501-05000\021-04786\40-Design\Microstation\J4P3196\plan_sheets\9 Traffic Control\141_TC_38_P3_02_J4P3196_150_US50.dgn 1:50:52 PM 2/28/2025

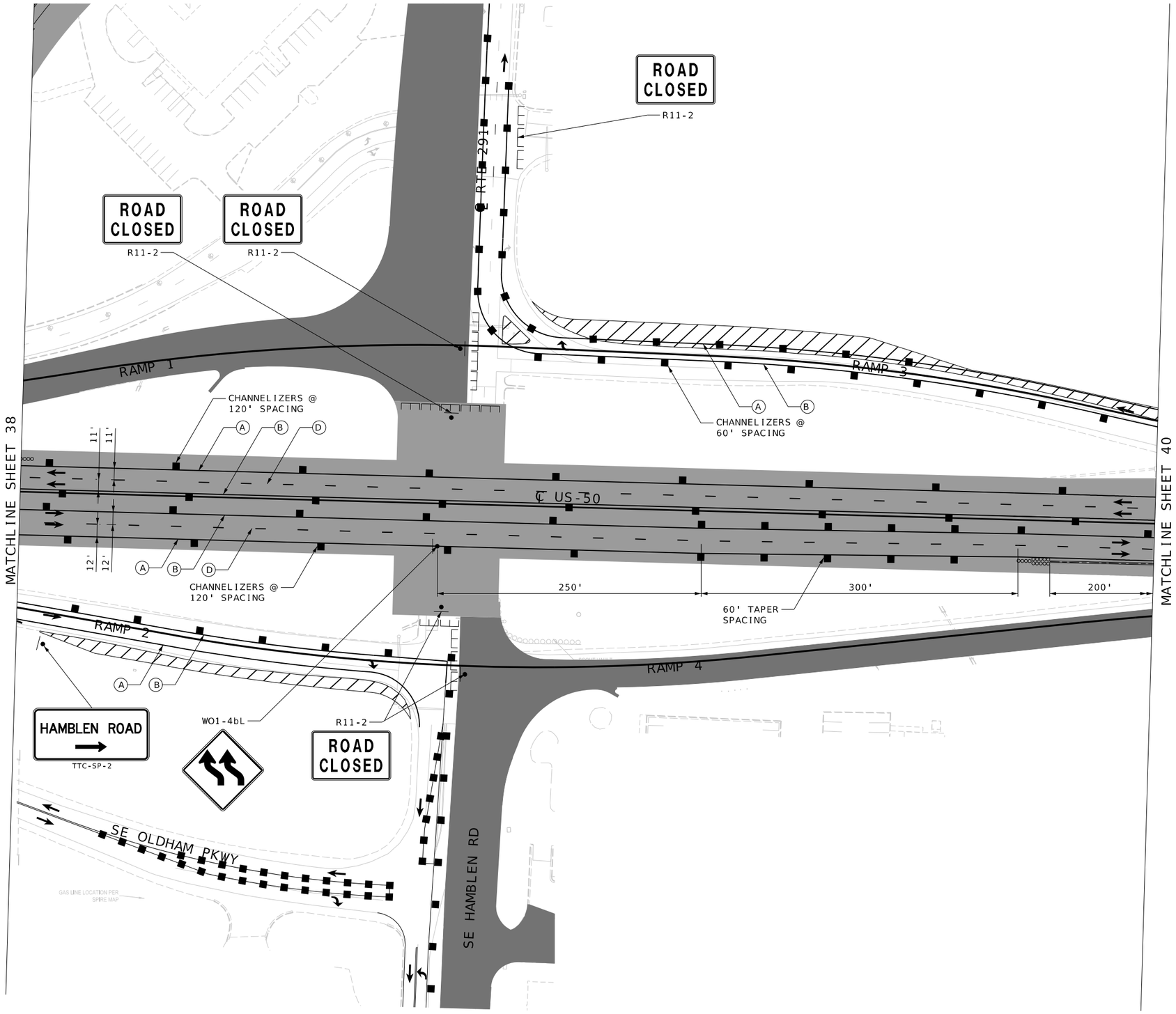

TRAFFIC CONTROL LEGEND

- SIGN (SINGLE SIDED)
- CHANNELIZER
- BARRICADE
- IMPACT ATTENUATOR
- TEMP PAVEMENT
- PERM PAVEMENT (PREV PHASE)
- PERM PAVEMENT (THIS PHASE)
- PORTABLE CONCRETE BARRIER
- DIRECTION OF TRAFFIC
- (A) TEMPORARY 4" SOLID WHITE EDGE LINE
- (B) TEMPORARY 4" SOLID YELLOW EDGE LINE
- (C) TEMPORARY 4" DOUBLE YELLOW
- (D) TEMPORARY 4" BROKEN WHITE

NOTES

1. TRAFFIC CONTROL DEVICES FOR BLUE PKWY AND OLDHAM PKWY TO REMAIN IN PLACE FROM PREVIOUS PHASES

SCALE
0 50 100 150

TRAFFIC CONTROL PLAN
US-50, PHASE 3
SHEET 39 OF 64

STATE OF MISSOURI
JEREMY SCOTT STRETZ
NUMBER PE-2011021864
PROFESSIONAL ENGINEER
Jeremy Stretz 2025.02.28 15:31:06-06'00'

DATE PREPARED 2/28/2025
ROUTE 50/291 | STATE MO
DISTRICT KC | SHEET NO. 142
COUNTY JACKSON
JOB NO. J4P3196
FEDERAL PROJECT NO. STB-3001(009)
PROJECT NO.
BRIDGE NO.

DATE | DESCRIPTION

IF A SEAL IS PRESENT ON THIS SHEET IT HAS BEEN ELECTRONICALLY SEALED AND DATED.

MISSOURI HIGHWAYS AND TRANSPORTATION COMMISSION
105 WEST CAPITOL
JEFFERSON CITY, MO 65102
1-888-ASK-MODOT | 1-888-275-6636)

LEE'S SUMMIT MISSOURI

olsson
1301 BURLINGTON ST., STE. 100
NORTH KANSAS CITY, MO 64116
PHONE: 816.361.1177
CERT. OF AUTHORITY NO. 001592

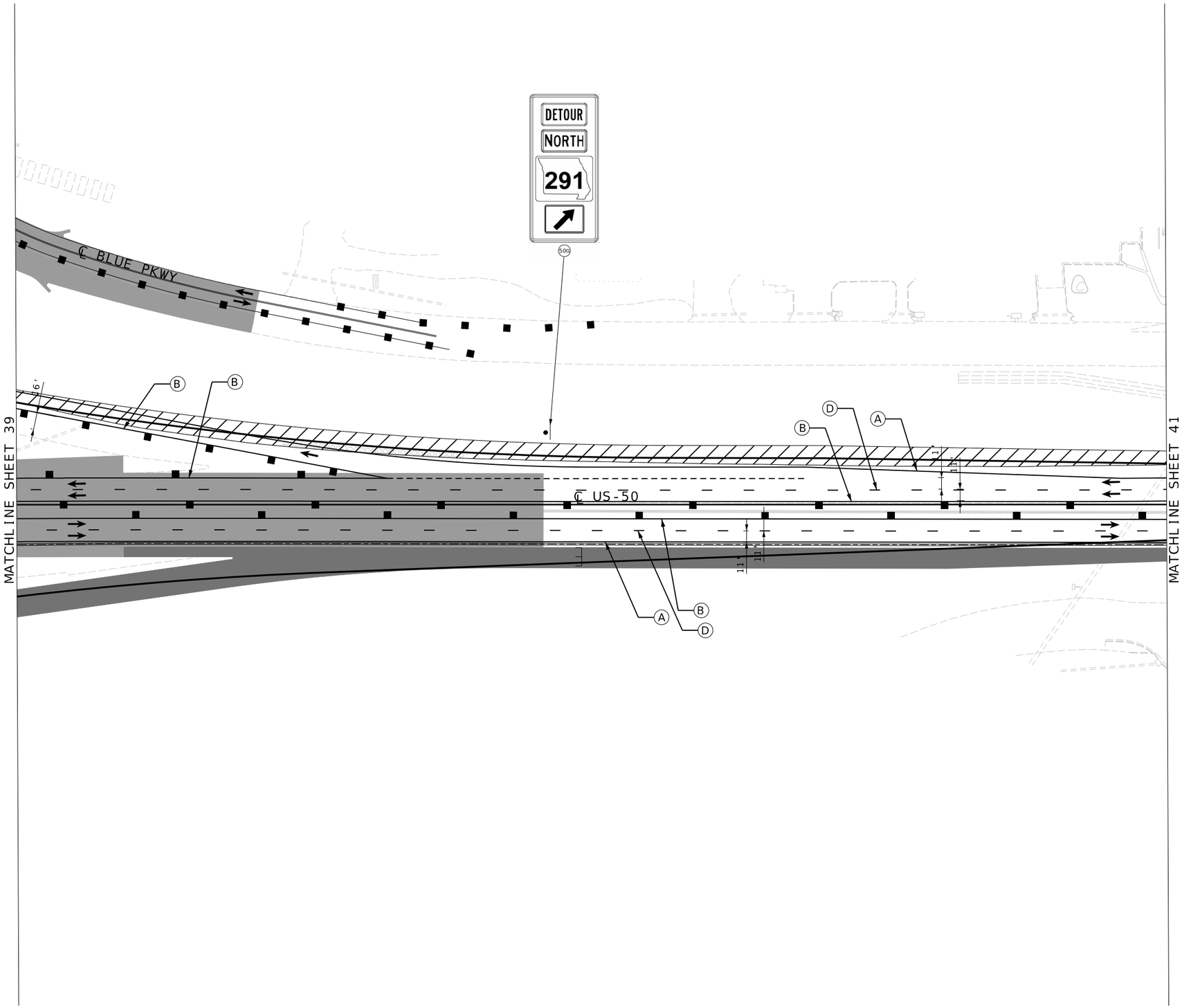

TRAFFIC CONTROL LEGEND

- SIGN (SINGLE SIDED)
- CHANNELIZER
- BARRICADE
- IMPACT ATTENUATOR
- TEMP PAVEMENT
- PERM PAVEMENT (PREV PHASE)
- PERM PAVEMENT (THIS PHASE)
- PORTABLE CONCRETE BARRIER
- DIRECTION OF TRAFFIC
- (A) TEMPORARY 4" SOLID WHITE EDGE LINE
- (B) TEMPORARY 4" SOLID YELLOW EDGE LINE
- (C) TEMPORARY 4" DOUBLE YELLOW
- (D) TEMPORARY 4" BROKEN WHITE

SCALE
0 50 100 150

TRAFFIC CONTROL PLAN
US-50, PHASE 3
SHEET 40 OF 64

STATE OF MISSOURI
JEREMY SCOTT STRETZ
NUMBER PE-2011023054
PROFESSIONAL ENGINEER
Jeremy Stretz 2025.02.28 15:30:53-06'00'

DATE PREPARED 2/28/2025
ROUTE 50/291 | STATE MO
DISTRICT KC | SHEET NO. 143
COUNTY JACKSON
JOB NO. J4P3196
FEDERAL PROJECT NO. STB-3001(009)
PROJECT NO.
BRIDGE NO.

IF A SEAL IS PRESENT ON THIS SHEET IT HAS BEEN ELECTRONICALLY SEALED AND DATED.

DESCRIPTION	DATE

MISSOURI HIGHWAYS AND TRANSPORTATION COMMISSION
105 WEST CAPITOL
JEFFERSON CITY, MO 65102
1-888-ASK-MODOT (1-888-275-6636)

LEE'S SUMMIT MISSOURI

olsson
1301 BURLINGTON ST., STE. 100
NORTH KANSAS CITY, MO 64116
PHONE: 816.361.1177
CERT. OF AUTHORITY NO. 001592

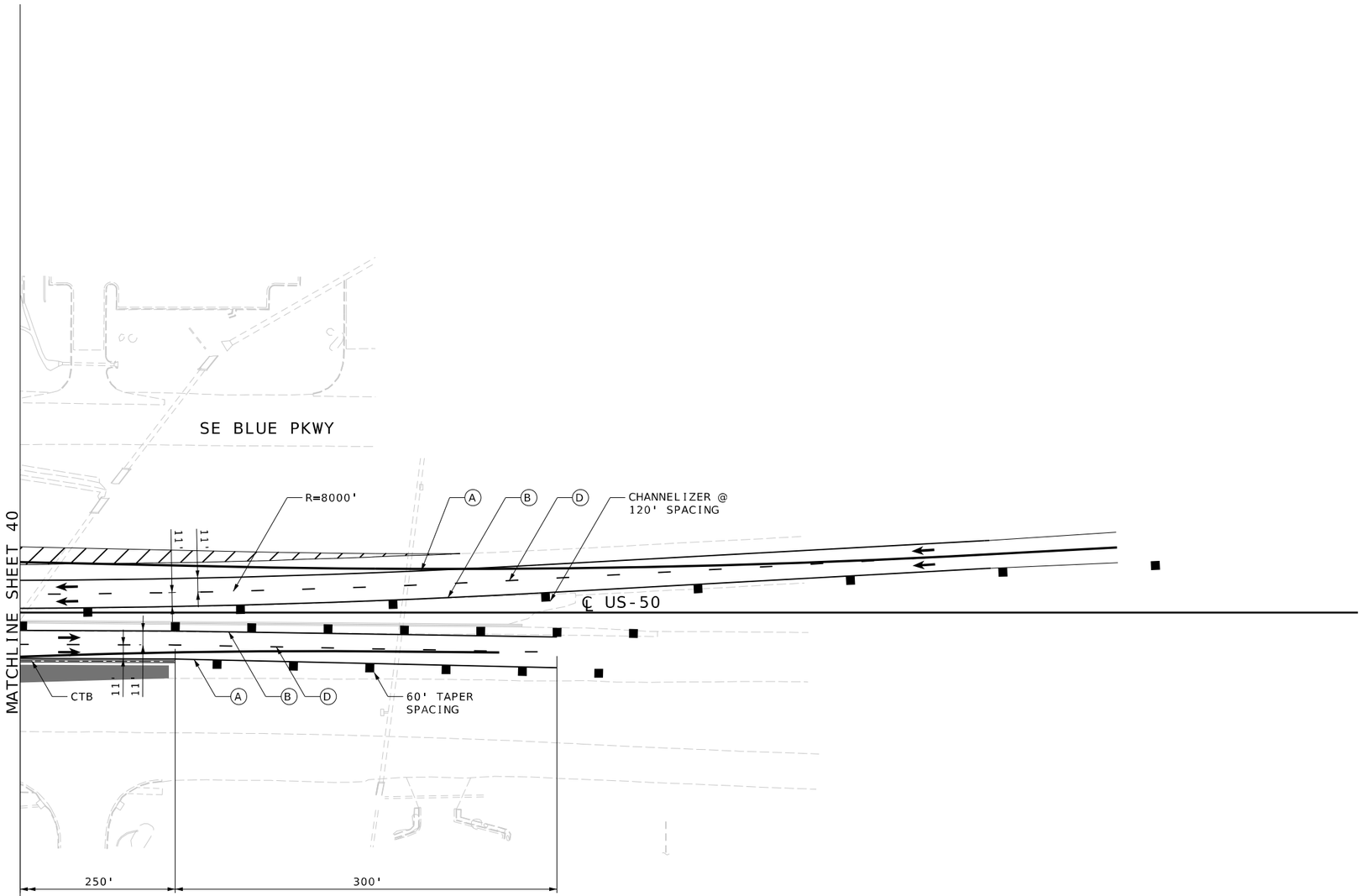

TRAFFIC CONTROL LEGEND

- SIGN (SINGLE SIDED)
- CHANNELIZER
- BARRICADE
- IMPACT ATTENUATOR
- TEMP PAVEMENT
- PERM PAVEMENT (PREV PHASE)
- PERM PAVEMENT (THIS PHASE)
- PORTABLE CONCRETE BARRIER
- DIRECTION OF TRAFFIC
- (A) TEMPORARY 4" SOLID WHITE EDGE LINE
- (B) TEMPORARY 4" SOLID YELLOW EDGE LINE
- (C) TEMPORARY 4" DOUBLE YELLOW
- (D) TEMPORARY 4" BROKEN WHITE

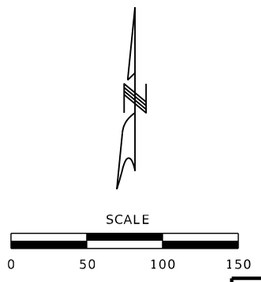

TRAFFIC CONTROL PLAN
US-50, PHASE 3
SHEET 41 OF 64

STATE OF MISSOURI
JEREMY SCOTT STRETZ
NUMBER PE-2011023054
PROFESSIONAL ENGINEER
Jeremy Stretz 2025.02.28 15:30:43-06'00'

DATE PREPARED 2/28/2025

ROUTE	STATE
50/291	MO
DISTRICT	SHEET NO.
KC	144

COUNTY: JACKSON

JOB NO.: J4P3196

FEDERAL PROJECT NO.: STB-3001(009)

PROJECT NO.:

BRIDGE NO.:

DESCRIPTION	DATE

IF A SEAL IS PRESENT ON THIS SHEET IT HAS BEEN ELECTRONICALLY SEALED AND DATED.

MISSOURI HIGHWAYS AND TRANSPORTATION COMMISSION
105 WEST CAPITOL
JEFFERSON CITY, MO 65102
1-888-ASK-MODOT (1-888-275-6636)
LEE'S SUMMIT MISSOURI
olsson
1301 BURLINGTON ST., STE. 100
NORTH KANSAS CITY, MO 64116
PHONE: 816.361.1177
CERT. OF AUTHORITY NO. 001592

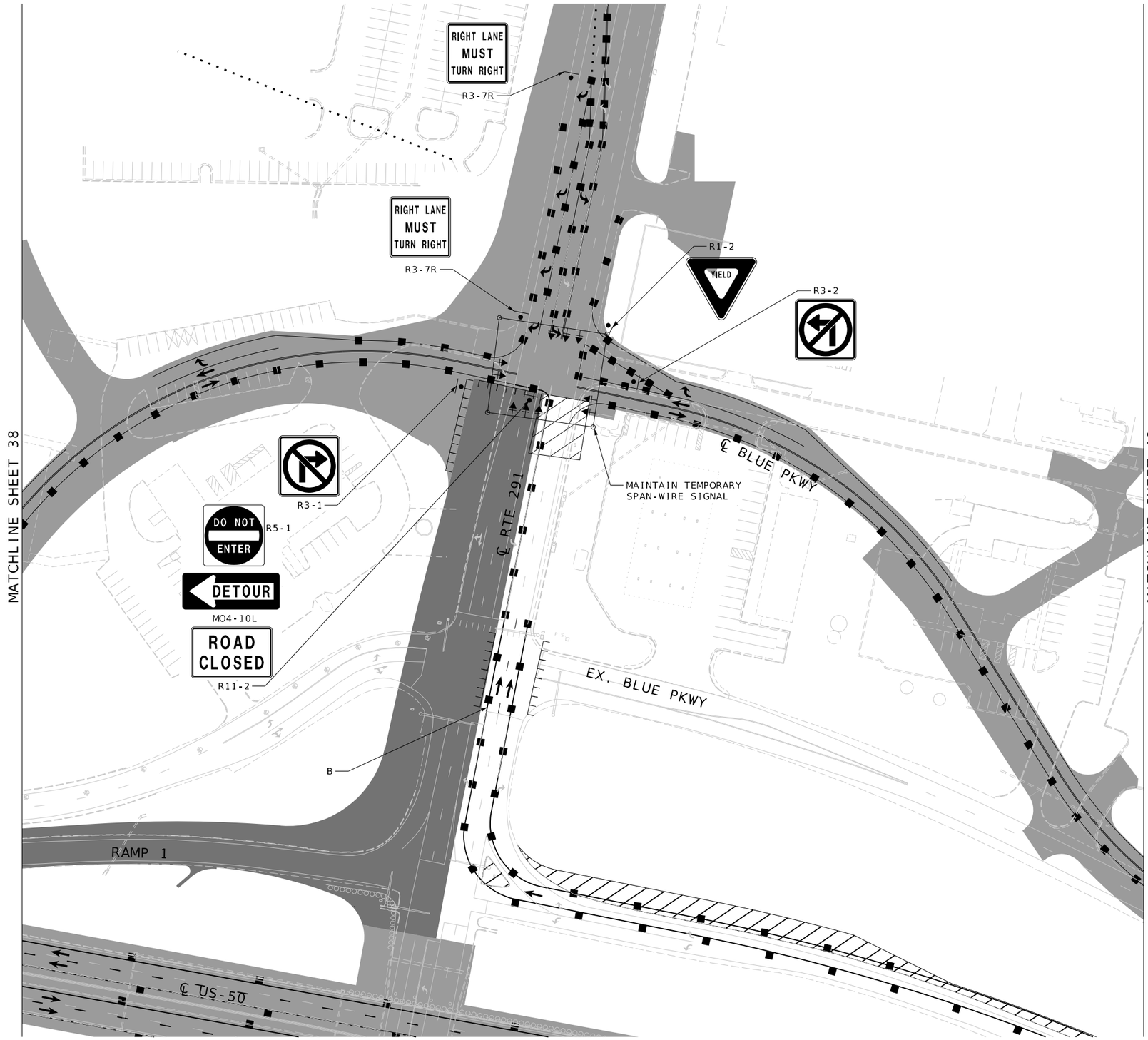

TRAFFIC CONTROL LEGEND

- SIGN (SINGLE SIDED)
- CHANNELIZER
- BARRICADE
- IMPACT ATTENUATOR
- TEMP PAVEMENT
- PERM PAVEMENT (PREV PHASE)
- PERM PAVEMENT (THIS PHASE)
- PORTABLE CONCRETE BARRIER
- DIRECTION OF TRAFFIC
- (A) TEMPORARY 4" SOLID WHITE EDGE LINE
- (B) TEMPORARY 4" SOLID YELLOW EDGE LINE
- (C) TEMPORARY 4" DOUBLE YELLOW
- (D) TEMPORARY 4" BROKEN WHITE

NOTES

1. TRAFFIC CONTROL DEVICES FOR BLUE PKWY AND RTE 291 TO REMAIN IN PLACE FROM PREVIOUS PHASES
2. TEMPORARY SIGNALS TO BE USED AT NEW RTE 291 AND BLUE PKWY INTERSECTION.

SCALE
0 50 100 150

TRAFFIC CONTROL PLAN
BLUE PKWY, PHASE 3
SHEET 42 OF 64

STATE OF MISSOURI
JEREMY SCOTT STRETZ
NUMBER PE-2011021864
PROFESSIONAL ENGINEER
Jeremy Stretz 2025.02.28 15:30:29-06'00'

IF A SEAL IS PRESENT ON THIS SHEET IT HAS BEEN ELECTRONICALLY SEALED AND DATED.

DATE PREPARED	2/28/2025
ROUTE	50/291
STATE	MO
DISTRICT	KC
SHEET NO.	145
COUNTY	JACKSON
JOB NO.	J4P3196
FEDERAL PROJECT NO.	STB-3001(009)
PROJECT NO.	
BRIDGE NO.	

DESCRIPTION	DATE

MISSOURI HIGHWAYS AND TRANSPORTATION COMMISSION
105 WEST CAPITOL
JEFFERSON CITY, MO 65102
1-888-ASK-MODOT (1-888-275-6636)

LEE'S SUMMIT MISSOURI

olsson
1301 BURLINGTON ST., STE. 100
NORTH KANSAS CITY, MO 64116
PHONE: 816.361.1177
CERT. OF AUTHORITY NO. 001592

F:\2021\04501-05000\021-04786\40-Design\Microstation\J4P3196\plan_sheets\9 Traffic Control\145_TC_42_P3_08_J4P3196_150_BLUEPKWY.dgn 1:51:12 PM 2/28/2025

PHASE 4

1. ADJUST TRAFFIC CONTROL DEVICES, TEMPORARY STRIPING, AND TRAFFIC BARRIER ON EB & WB US-50 MAINLANES AND RAMPS 1, 2, & 4 AS SHOWN ON PLANS
2. MAINTAIN TRAFFIC ON EB & WB US-50 MAINLANES
3. ADJUST TRAFFIC CONTROL DEVICES AND TEMPORARY STRIPING ON RTE 291/HAMBLEN RD AS SHOWN ON PLANS
4. ADJUST TRAFFIC CONTROL DEVICES AND TEMPORARY STRIPING ON BLUE PKWY NEAR THE RTE 291 INTERSECTION AS SHOWN ON PLANS
5. SHIFT SB RTE 291 TRAFFIC TO EXISTING NB HALF OF RTE 291 RD FOR A HEAD-TO-HEAD PATTERN
6. SHIFT HAMBLEN RD TRAFFIC TO NB HALF OF HAMBLEN RD FOR A ONE-WAY CONFIGURATION
7. CLOSE RAMP 2 AND CONSTRUCT PROPOSED RAMP 2 PAVEMENT AND SW QUADRANT OF PROPOSED INTERSECTION PAVEMENT
8. CONSTRUCT SB PROPOSED RTE 291/HAMBLEN RD PAVEMENT
9. PLACE TRAFFIC CONTROL DEVICES ON OLDHAM RD; PHASING THE HAMBLEN/OLDHAM RD INTERSECTION TO ALWAYS ALLOW ONE WAY ACCESS
10. CONSTRUCT PROPOSED OLDHAM RD PAVEMENT
11. DETOUR NB HAMBLEN RD TRAFFIC TO EB US-50. USE TODD GEORGE & US-50 INTERCHANGE ONTO WB US-50
12. DETOUR SB RTE 291 RD TRAFFIC TO EB BLUE PKWY. USE USE TODD GEORGE/RANSON RD TO WB OLDHAM RD
13. DETOUR ONE WAY WB OLDHAM PKWY TRAFFIC TO BROWNING STREET BACK TO HAMBLEN RD

ALL EXISTING SIGNING AND UNUSED SIGNAL HEADS SHALL BECOVERED/BAGGED

CONTRACTOR SHALL NOTIFY MODOT AND THE CITY OF LEE'S SUMMIT AT LEAST TWO HOURS PRIOR TO ANY SIGNAL MODIFICATIONS TO NOTIFY THEM OF THE NEEDS OF SIGNAL TIMING MODIFICATIONS

SCALE
0 120 240 360

LEGEND
- TEMP PAVEMENT (THIS PHASE)
- TEMP PAVEMENT (PREV PHASE)
- PERM PAVEMENT (THIS PHASE)
- PERM PAVEMENT (PREV PHASE)

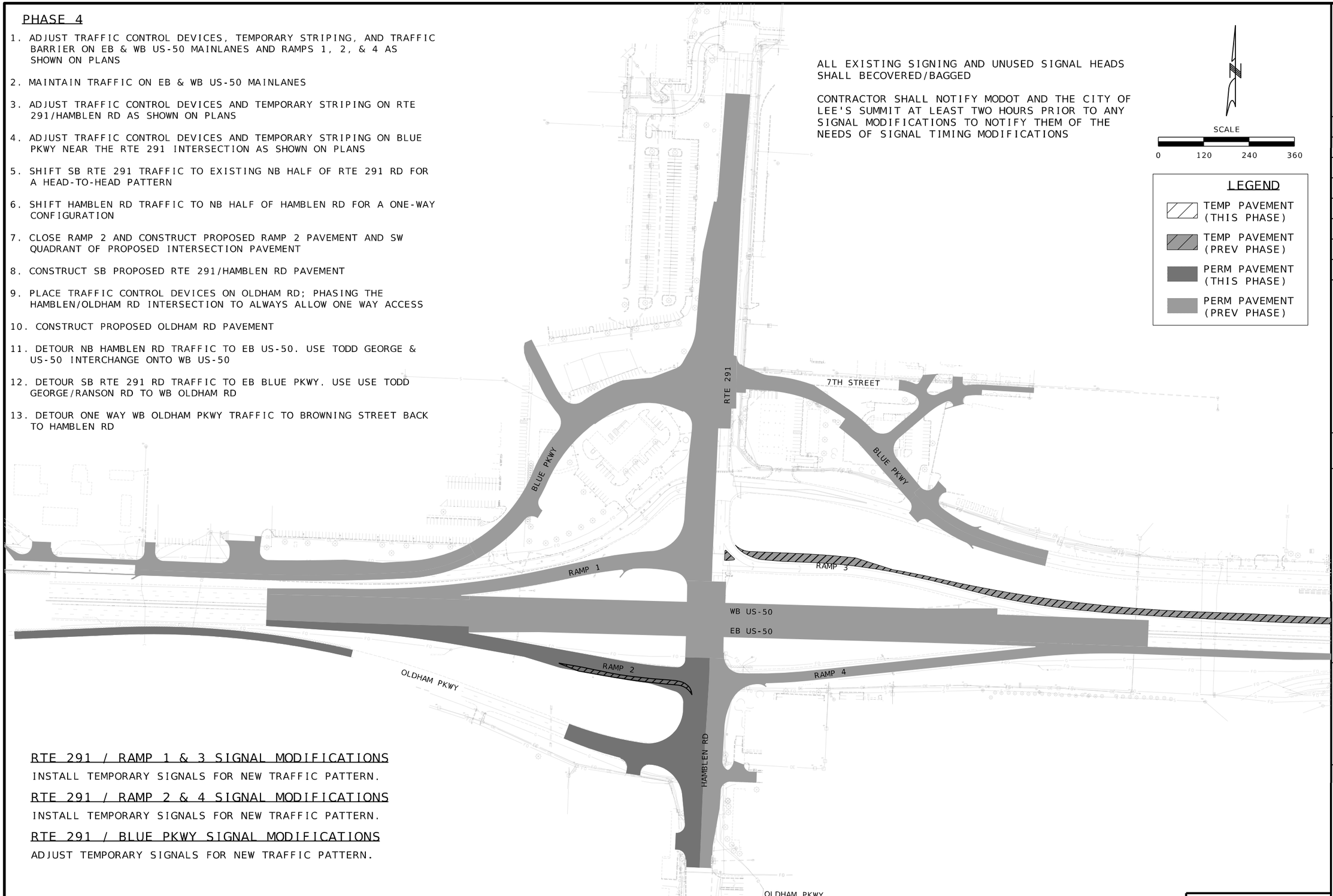

RTE 291 / RAMP 1 & 3 SIGNAL MODIFICATIONS
INSTALL TEMPORARY SIGNALS FOR NEW TRAFFIC PATTERN.

RTE 291 / RAMP 2 & 4 SIGNAL MODIFICATIONS
INSTALL TEMPORARY SIGNALS FOR NEW TRAFFIC PATTERN.

RTE 291 / BLUE PKWY SIGNAL MODIFICATIONS
ADJUST TEMPORARY SIGNALS FOR NEW TRAFFIC PATTERN.

TRAFFIC CONTROL PLAN
PHASE 4
SHEET 43 OF 64

STATE OF MISSOURI
JEREMY SCOTT STRETZ
NUMBER PE-2017023856
PROFESSIONAL ENGINEER
Jeremy Stretz 2025.02.28 15:30:17-06'00'

DATE PREPARED 2/28/2025
ROUTE 50/291 | STATE MO
DISTRICT KC | SHEET NO. 146
COUNTY JACKSON
JOB NO. J4P3196
FEDERAL PROJECT NO. STB-3001(009)
PROJECT NO.
BRIDGE NO.

DESCRIPTION	DATE

IF A SEAL IS PRESENT ON THIS SHEET IT HAS BEEN ELECTRONICALLY SEALED AND DATED.

MISSOURI HIGHWAYS AND TRANSPORTATION COMMISSION
MoDOT
105 WEST CAPITOL
JEFFERSON CITY, MO 65102
1-888-ASK-MODOT (1-888-275-6636)

LEE'S SUMMIT MISSOURI

olsson
1301 BURLINGTON ST., STE. 100
NORTH KANSAS CITY, MO 64116
PHONE: 816.361.1177
CERT. OF AUTHORITY NO. 001592

F:\2021\04501-05000\021-04786\40-Design\Microstation\J4P3196\plan_sheets\9 Traffic Control\146_TC_43_PHASE 4_J4P3196_150.dgn 1:51:16 PM 2/28/2025

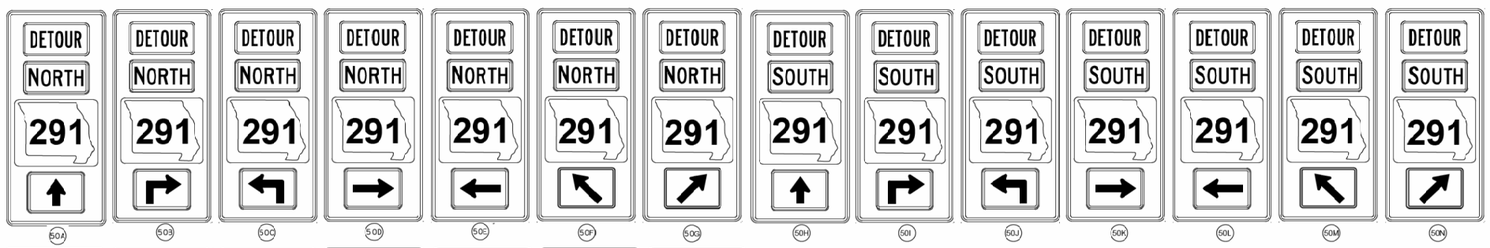

TRAFFIC CONTROL LEGEND

- SIGN (SINGLE SIDED)
- CHANNELIZER
- BARRICADE
- CHANGEABLE MESSAGE BOARD
- WORK AREA
- DETOUR ROUTE

NOT TO SCALE

TRAFFIC CONTROL PLAN
PHASE 4
SHEET 44 OF 64

IF A SEAL IS PRESENT ON THIS SHEET IT HAS BEEN ELECTRONICALLY SEALED AND DATED.

STATE OF MISSOURI
JEREMY SCOTT STRETZ
NUMBER PE-2011021864
PROFESSIONAL ENGINEER

Jeremy Stretz 2025.02.28 15:30:02-06'00'

DATE PREPARED	2/28/2025
ROUTE	50/291
STATE	MO
DISTRICT	KC
SHEET NO.	147
COUNTY	JACKSON
JOB NO.	J4P3196
FEDERAL PROJECT NO.	STB-3001(009)
PROJECT NO.	
BRIDGE NO.	

DESCRIPTION | DATE

MISSOURI HIGHWAYS AND TRANSPORTATION COMMISSION
105 WEST CAPITOL
JEFFERSON CITY, MO 65102
1-888-ASK-MODOT (1-888-275-6636)

LEE'S SUMMIT MISSOURI

olsson
1301 BURLINGTON ST., STE. 100
NORTH KANSAS CITY, MO 64116
PHONE: 816.361.1177
CERT. OF AUTHORITY NO. 001592

F:\2021\04501-05000\021-04786\40-Design\Microstation\J4P3196\plan_sheets\9 Traffic Control\147_TC_44_DETOUR_P4_J4P3196_I50_RTE291.dgn 1:51:31 PM 2/28/2025

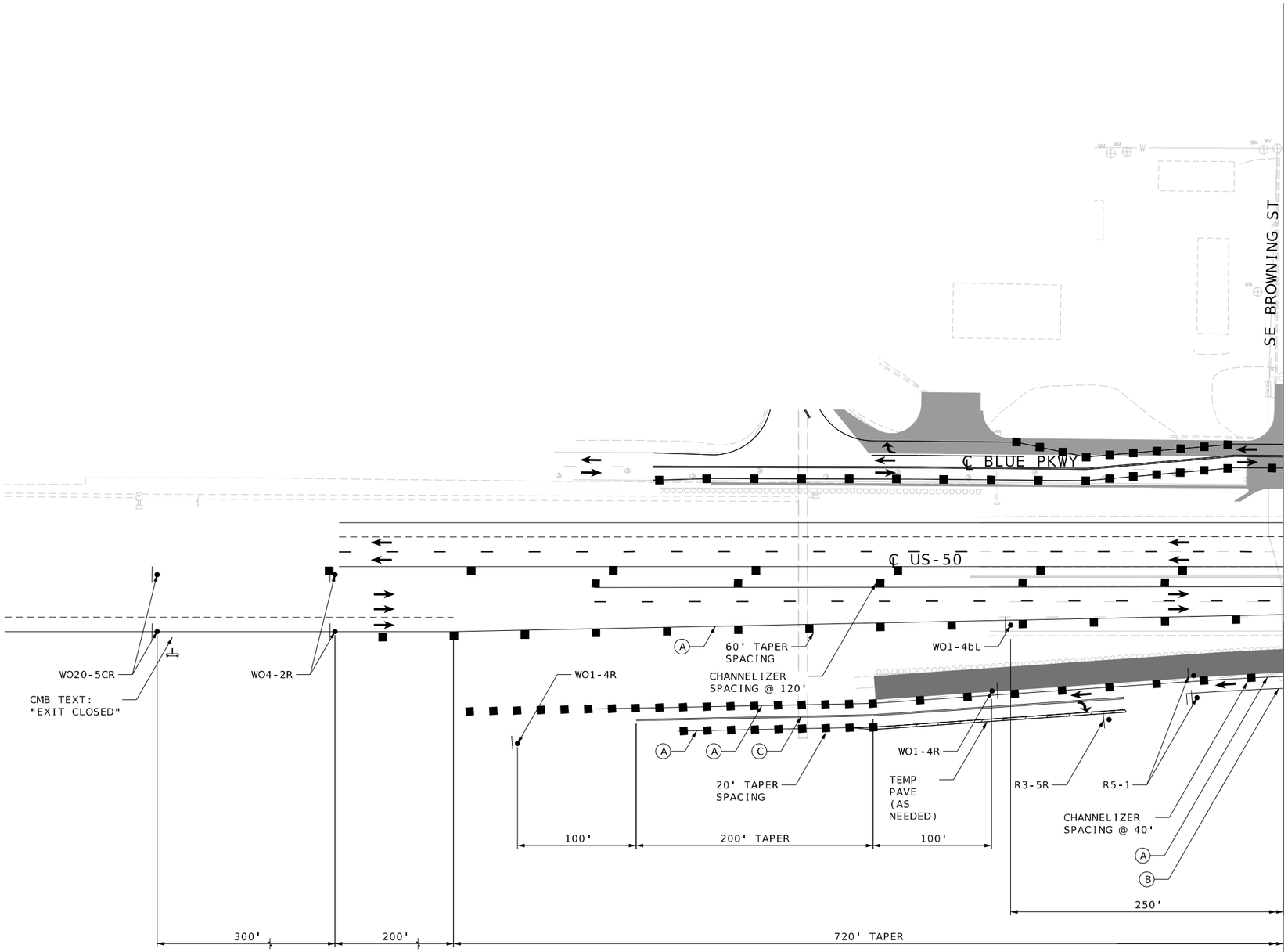

TRAFFIC CONTROL LEGEND

- SIGN (SINGLE SIDED)
- CHANNELIZER
- BARRICADE
- IMPACT ATTENUATOR
- CHANGEABLE MESSAGE BOARD
- TEMP PAVEMENT
- PERM PAVEMENT (PREV PHASE)
- PERM PAVEMENT (THIS PHASE)
- PORTABLE CONCRETE BARRIER
- DIRECTION OF TRAFFIC
- (A) TEMPORARY 4" SOLID WHITE EDGE LINE
- (B) TEMPORARY 4" SOLID YELLOW EDGE LINE
- (C) TEMPORARY 4" DOUBLE YELLOW
- (D) TEMPORARY 4" BROKEN WHITE

NOTES

1. TRAFFIC CONTROL DEVICES FOR BLUE PKWY TO REMAIN IN PLACE FROM PREVIOUS PHASES

WO20-5CR

WO4-2R

WO1-4R

WO1-4R

WO1-4bL

R3-5R

R5-1

SCALE

0 50 100 150

TRAFFIC CONTROL PLAN
US-50, PHASE 4
SHEET 45 OF 64

IF A SEAL IS PRESENT ON THIS SHEET IT HAS BEEN ELECTRONICALLY SEALED AND DATED.

JEREMY SCOTT STRETZ
NUMBER PE-2011021864
STATE OF MISSOURI
PROFESSIONAL ENGINEER

Jeremy Stretz 2025.02.28 15:32:11-06'00'

DATE PREPARED
2/28/2025

ROUTE	STATE
50/291	MO
DISTRICT	SHEET NO.
KC	148

COUNTY
JACKSON

JOB NO.
J4P3196

FEDERAL PROJECT NO.
STB-3001(009)

PROJECT NO.

BRIDGE NO.

DESCRIPTION	DATE

MISSOURI HIGHWAYS AND TRANSPORTATION COMMISSION
105 WEST CAPITOL
JEFFERSON CITY, MO 65102
1-888-ASK-MODOT (1-888-275-6636)

LEE'S SUMMIT MISSOURI

olsson
1301 BURLINGTON ST., STE. 100
NORTH KANSAS CITY, MO 64116
PHONE: 816.361.1177
CERT. OF AUTHORITY NO. 001592

F:\2021\04501-05000\021-04786\40-Design\Microstation\J4P3196\plan_sheets\9 Traffic Control\148_TC_45_P4_01_J4P3196_I50_US50.dgn 1:51:57 PM 2/28/2025

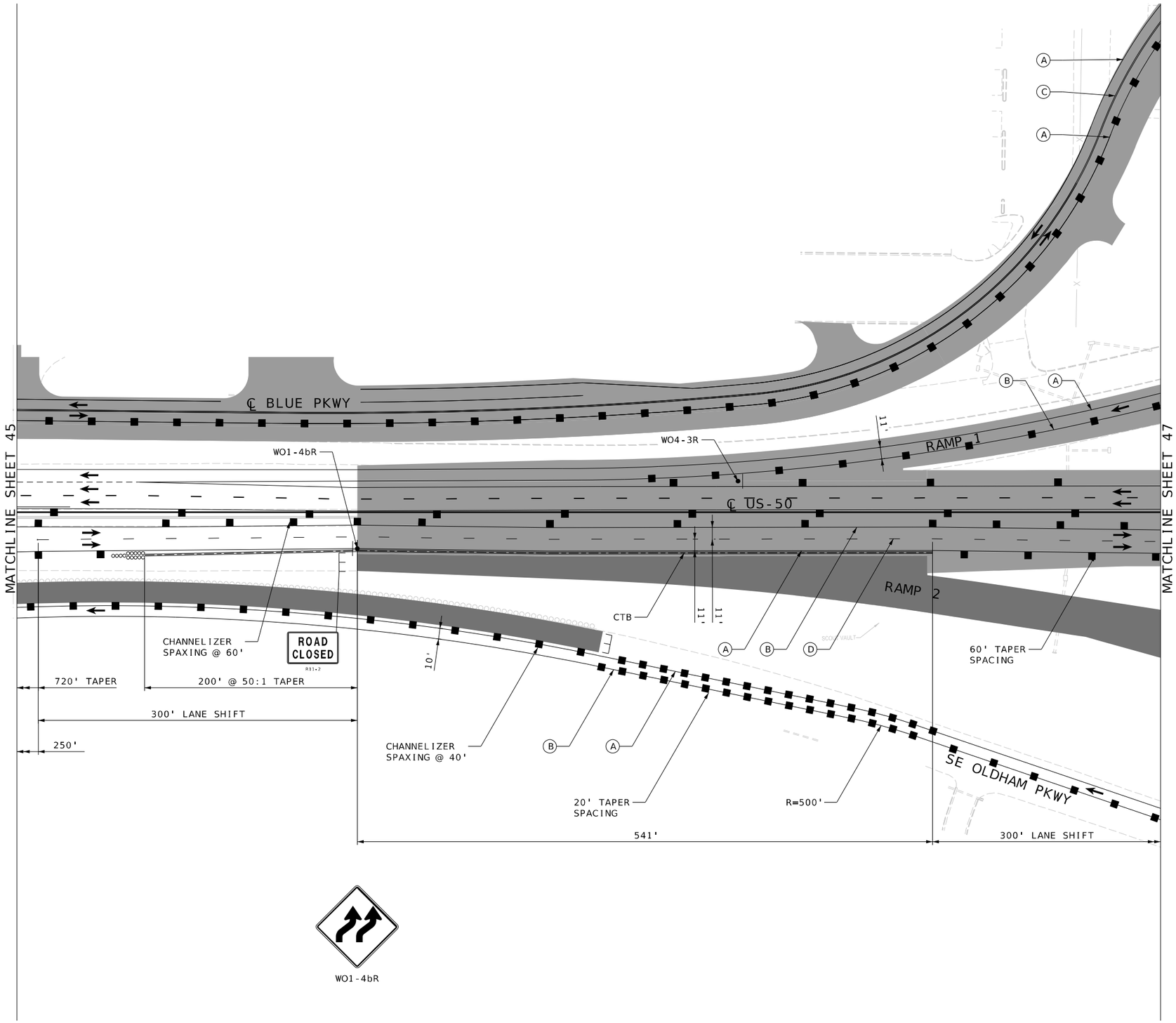

TRAFFIC CONTROL LEGEND

- SIGN (SINGLE SIDED)
- CHANNELIZER
- BARRICADE
- IMPACT ATTENUATOR
- TEMP PAVEMENT
- PERM PAVEMENT (PREV PHASE)
- PERM PAVEMENT (THIS PHASE)
- PORTABLE CONCRETE BARRIER
- DIRECTION OF TRAFFIC
- (A) TEMPORARY 4" SOLID WHITE EDGE LINE
- (B) TEMPORARY 4" SOLID YELLOW EDGE LINE
- (C) TEMPORARY 4" DOUBLE YELLOW
- (D) TEMPORARY 4" BROKEN WHITE

SCALE
0 50 100 150

IF A SEAL IS PRESENT ON THIS SHEET IT HAS BEEN ELECTRONICALLY SEALED AND DATED.

STATE OF MISSOURI
JEREMY SCOTT STRETZ
NUMBER PE-2011021864
PROFESSIONAL ENGINEER
Jeremy Stretz 2025.02.28 15:33:46-06'00'

DATE PREPARED: 2/28/2025
ROUTE: 50/291 | STATE: MO
DISTRICT: KC | SHEET NO.: 149
COUNTY: JACKSON
JOB NO.: J4P3196
FEDERAL PROJECT NO.: STB-3001(009)
PROJECT NO.:
BRIDGE NO.:

DESCRIPTION	DATE

MISSOURI HIGHWAYS AND TRANSPORTATION COMMISSION
105 WEST CAPITOL
JEFFERSON CITY, MO 65102
1-888-ASK-MODOT (1-888-275-6636)

LEE'S SUMMIT MISSOURI

olsson
1301 BURLINGTON ST., STE. 100
NORTH KANSAS CITY, MO 64116
PHONE: 816.361.1177
CERT. OF AUTHORITY NO. 001592

TRAFFIC CONTROL PLAN
US-50, PHASE 4
SHEET 46 OF 64

F:\2021\04501-05000\021-04786\40-Design\Microstation\J4P3196\plan_sheets\9 Traffic Control\149_TC_46_P4_02_J4P3196_I50_US50.dgn 1:52:07 PM 2/28/2025

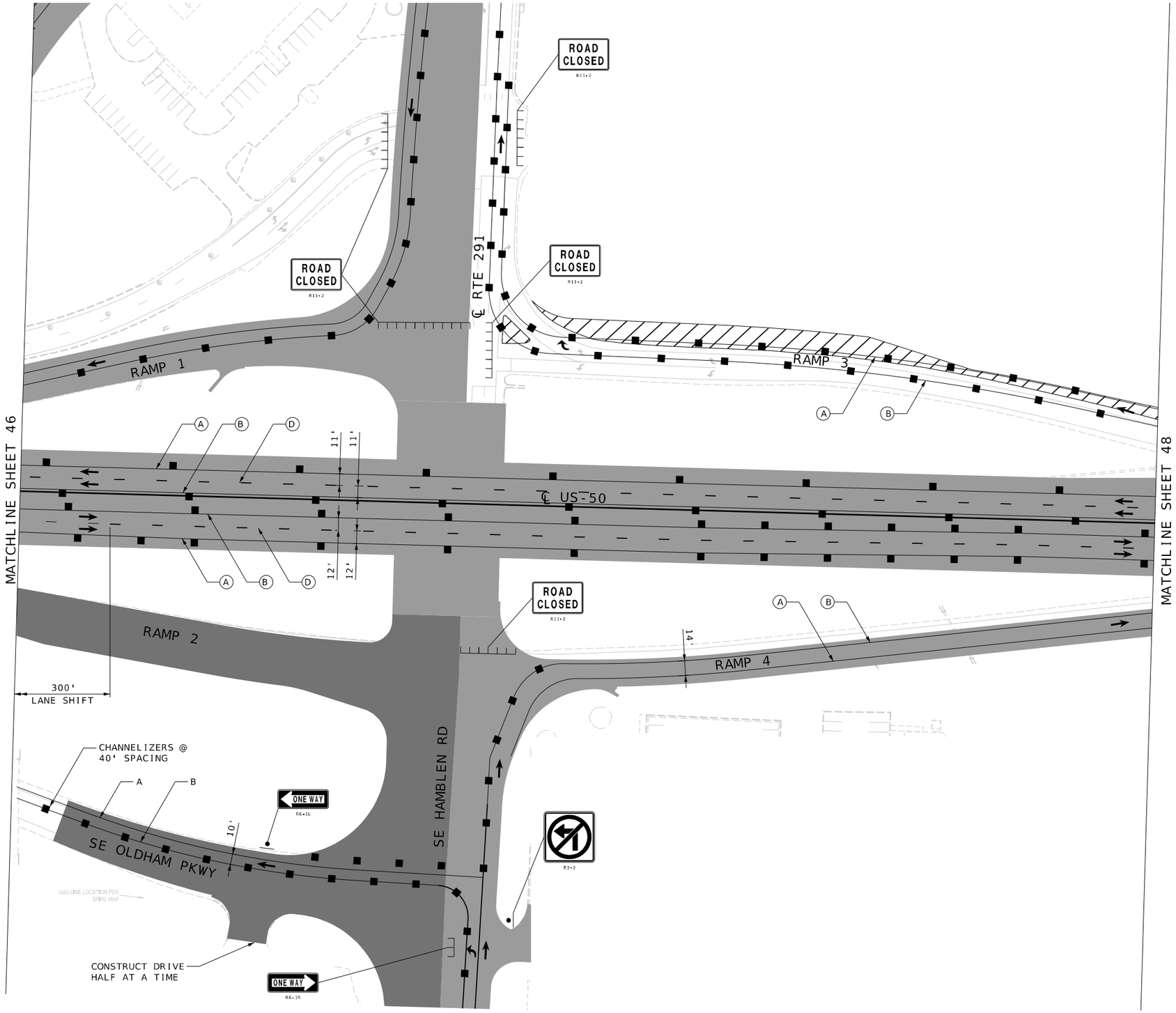

TRAFFIC CONTROL LEGEND

- SIGN (SINGLE SIDED)
- CHANNELIZER
- BARRICADE
- IMPACT ATTENUATOR
- TEMP PAVEMENT
- PERM PAVEMENT (PREV PHASE)
- PERM PAVEMENT (THIS PHASE)
- PORTABLE CONCRETE BARRIER
- DIRECTION OF TRAFFIC
- (A) TEMPORARY 4" SOLID WHITE EDGE LINE
- (B) TEMPORARY 4" SOLID YELLOW EDGE LINE
- (C) TEMPORARY 4" DOUBLE YELLOW
- (D) TEMPORARY 4" BROKEN WHITE

SCALE
0 50 100 150

TRAFFIC CONTROL PLAN
US-50, PHASE 4
SHEET 47 OF 64

STATE OF MISSOURI
JEREMY SCOTT STRETZ
NUMBER PE-2011023864
PROFESSIONAL ENGINEER

Jeremy Stretz 2025.02.28 15:33:58-06'00'

DATE PREPARED 2/28/2025

ROUTE	STATE
50/291	MO
DISTRICT	SHEET NO.
KC	150

COUNTY: JACKSON
JOB NO.: J4P3196
FEDERAL PROJECT NO.: STB-3001(009)
PROJECT NO.:
BRIDGE NO.:

DESCRIPTION	DATE

IF A SEAL IS PRESENT ON THIS SHEET IT HAS BEEN ELECTRONICALLY SEALED AND DATED.

MISSOURI HIGHWAYS AND TRANSPORTATION COMMISSION
105 WEST CAPITOL
JEFFERSON CITY, MO 65102
1-888-ASK-MODOT (1-888-275-6636)

LEE'S SUMMIT MISSOURI

olsson
1301 BURLINGTON ST., STE. 100
NORTH KANSAS CITY, MO 64116
PHONE: 816.361.1177
CERT. OF AUTHORITY NO. 001592

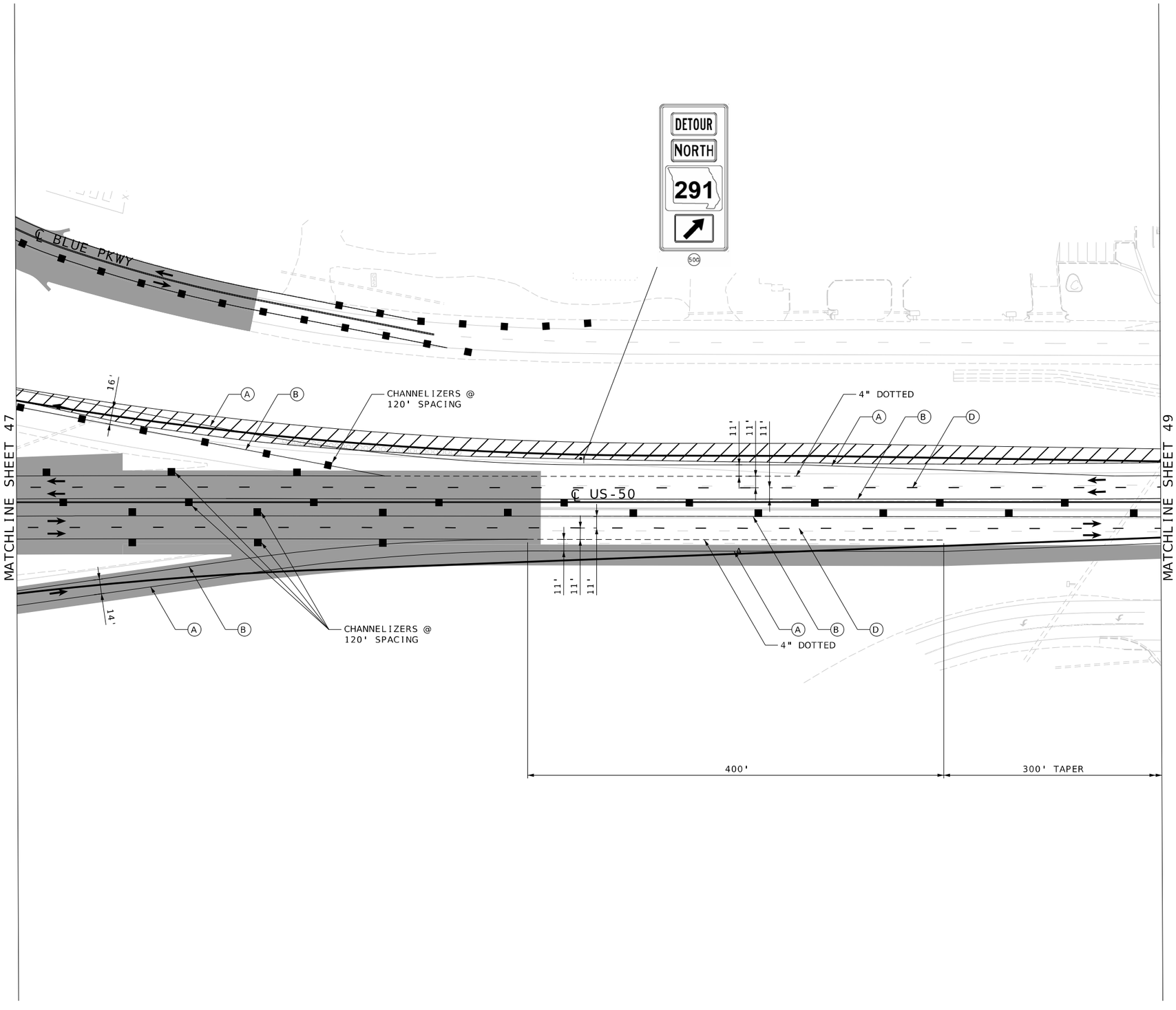

TRAFFIC CONTROL LEGEND

- SIGN (SINGLE SIDED)
- CHANNELIZER
- BARRICADE
- IMPACT ATTENUATOR
- TEMP PAVEMENT
- PERM PAVEMENT (PREV PHASE)
- PERM PAVEMENT (THIS PHASE)
- PORTABLE CONCRETE BARRIER
- DIRECTION OF TRAFFIC
- (A) TEMPORARY 4" SOLID WHITE EDGE LINE
- (B) TEMPORARY 4" SOLID YELLOW EDGE LINE
- (C) TEMPORARY 4" DOUBLE YELLOW
- (D) TEMPORARY 4" BROKEN WHITE

SCALE
0 50 100 150

TRAFFIC CONTROL PLAN
US-50, PHASE 4
SHEET 48 OF 64

STATE OF MISSOURI
JEREMY SCOTT STRETZ
NUMBER PE-2011023864
PROFESSIONAL ENGINEER

Jeremy Stretz 2025.02.28 15:34:09-06'00'

DATE PREPARED 2/28/2025

ROUTE	STATE
50/291	MO
DISTRICT	SHEET NO.
KC	151

COUNTY: JACKSON
JOB NO.: J4P3196
FEDERAL PROJECT NO.: STB-3001(009)
PROJECT NO.:
BRIDGE NO.:

DESCRIPTION	DATE

IF A SEAL IS PRESENT ON THIS SHEET IT HAS BEEN ELECTRONICALLY SEALED AND DATED.

MISSOURI HIGHWAYS AND TRANSPORTATION COMMISSION
105 WEST CAPITOL
JEFFERSON CITY, MO 65102
1-888-ASK-MODOT (1-888-275-6636)

LEE'S SUMMIT MISSOURI

olsson
1301 BURLINGTON ST., STE. 100
NORTH KANSAS CITY, MO 64116
PHONE: 816.361.1177
CERT. OF AUTHORITY NO. 001592

F:\2021\04501-05000\021-04786\40-Design\Microstation\J4P3196\plan_sheets\9 Traffic Control\151_TC_48_P4_04_J4P3196_I50_US50.dgn 1:52:16 PM 2/28/2025

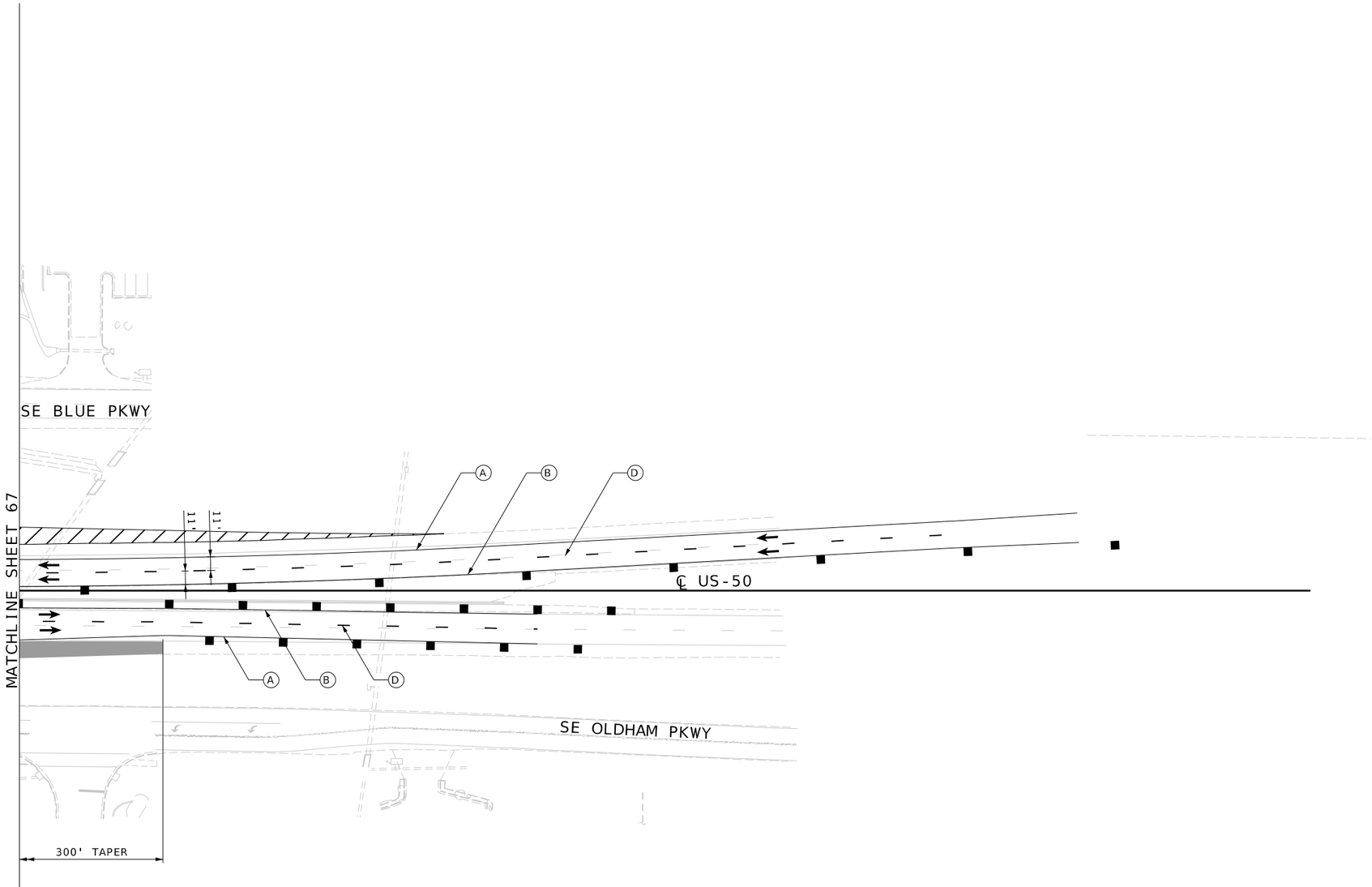

TRAFFIC CONTROL LEGEND

- SIGN (SINGLE SIDED)
- CHANNELIZER
- BARRICADE
- IMPACT ATTENUATOR
- TEMP PAVEMENT
- PERM PAVEMENT (PREV PHASE)
- PERM PAVEMENT (THIS PHASE)
- PORTABLE CONCRETE BARRIER
- DIRECTION OF TRAFFIC
- (A) TEMPORARY 4" SOLID WHITE EDGE LINE
- (B) TEMPORARY 4" SOLID YELLOW EDGE LINE
- (C) TEMPORARY 4" DOUBLE YELLOW
- (D) TEMPORARY 4" BROKEN WHITE

N

SCALE

0 50 100 150

TRAFFIC CONTROL PLAN
US-50, PHASE 4
SHEET 49 OF 64

STATE OF MISSOURI
JEREMY SCOTT STRETZ
NUMBER PE-2011023054
PROFESSIONAL ENGINEER

Jeremy Stretz 2025.02.28 15:34:21-06'00'

DATE PREPARED
2/28/2025

ROUTE	STATE
50/291	MO
DISTRICT	SHEET NO.
KC	152

COUNTY
JACKSON

JOB NO.
J4P3196

FEDERAL PROJECT NO.
STB-3001(009)

PROJECT NO.

BRIDGE NO.

DESCRIPTION	DATE

IF A SEAL IS PRESENT ON THIS SHEET IT HAS BEEN ELECTRONICALLY SEALED AND DATED.

MISSOURI HIGHWAYS AND TRANSPORTATION COMMISSION

MoDOT

105 WEST CAPITOL
JEFFERSON CITY, MO 65102
1-888-ASK-MODOT (1-888-275-6636)

LEE'S SUMMIT MISSOURI

olsson
1301 BURLINGTON ST., STE. 100
NORTH KANSAS CITY, MO 64116
PHONE: 816.361.1177
CERT. OF AUTHORITY NO. 001592

F:\2021\04501-05000\021-04786\40-Design\Microstation\J4P3196\plan_sheets\9 Traffic Control\152_TC_49_P4_05_J4P3196_I50_US50.dgn 1:52:20 PM 2/28/2025

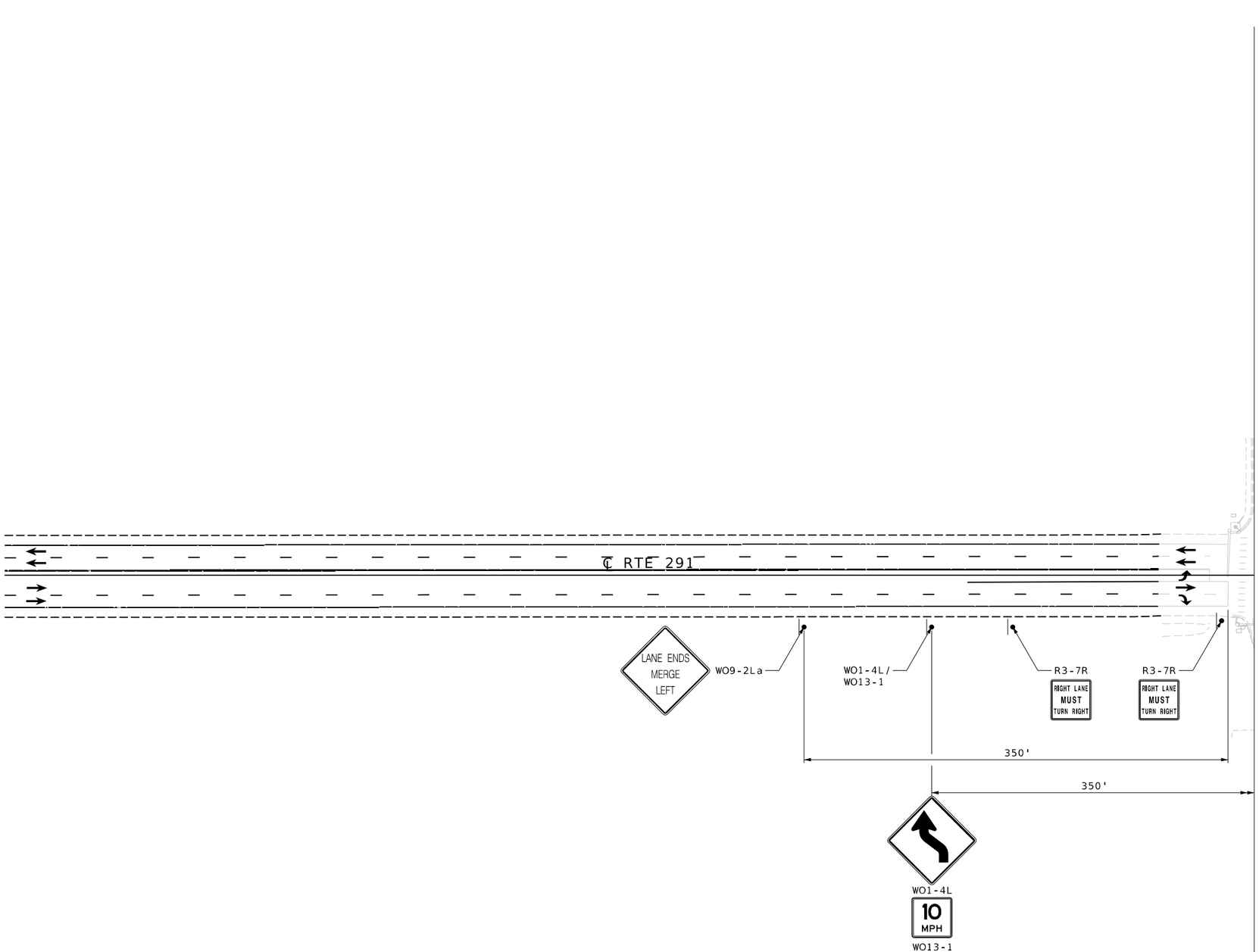

TRAFFIC CONTROL LEGEND

- SIGN (SINGLE SIDED)
- CHANNELIZER
- BARRICADE
- IMPACT ATTENUATOR
- TEMP PAVEMENT
- PERM PAVEMENT (PREV PHASE)
- PERM PAVEMENT (THIS PHASE)
- PORTABLE CONCRETE BARRIER
- DIRECTION OF TRAFFIC
- (A) TEMPORARY 4" SOLID WHITE EDGE LINE
- (B) TEMPORARY 4" SOLID YELLOW EDGE LINE
- (C) TEMPORARY 4" DOUBLE YELLOW
- (D) TEMPORARY 4" BROKEN WHITE

SCALE

0 50 100 150

TRAFFIC CONTROL PLAN
ROUTE 291, PHASE 4
SHEET 50 OF 64

STATE OF MISSOURI
JEREMY SCOTT STRETZ
NUMBER PE-2011021054
PROFESSIONAL ENGINEER

Jeremy Stretz 2025.02.28 15:34:31-06'00'

DATE PREPARED 2/28/2025

ROUTE	STATE
50/291	MO
DISTRICT	SHEET NO.
KC	153

COUNTY JACKSON

JOB NO. J4P3196

FEDERAL PROJECT NO. STB-3001(009)

PROJECT NO.

BRIDGE NO.

DATE	DESCRIPTION

IF A SEAL IS PRESENT ON THIS SHEET IT HAS BEEN ELECTRONICALLY SEALED AND DATED.

MISSOURI HIGHWAYS AND TRANSPORTATION COMMISSION
105 WEST CAPITOL
JEFFERSON CITY, MO 65102
1-888-ASK-MODOT (1-888-275-6636)

LEE'S SUMMIT MISSOURI

olsson
1301 BURLINGTON ST., STE. 100
NORTH KANSAS CITY, MO 64116
PHONE: 816.361.1177
CERT. OF AUTHORITY NO. 001592

F:\2021\04501-05000\021-04786\40-Design\Microstation\J4P3196\plan_sheets\9 Traffic Control\153_TC_50_P4_06_J4P3196_150_RTE291.dgn 1:52:24 PM 2/28/2025

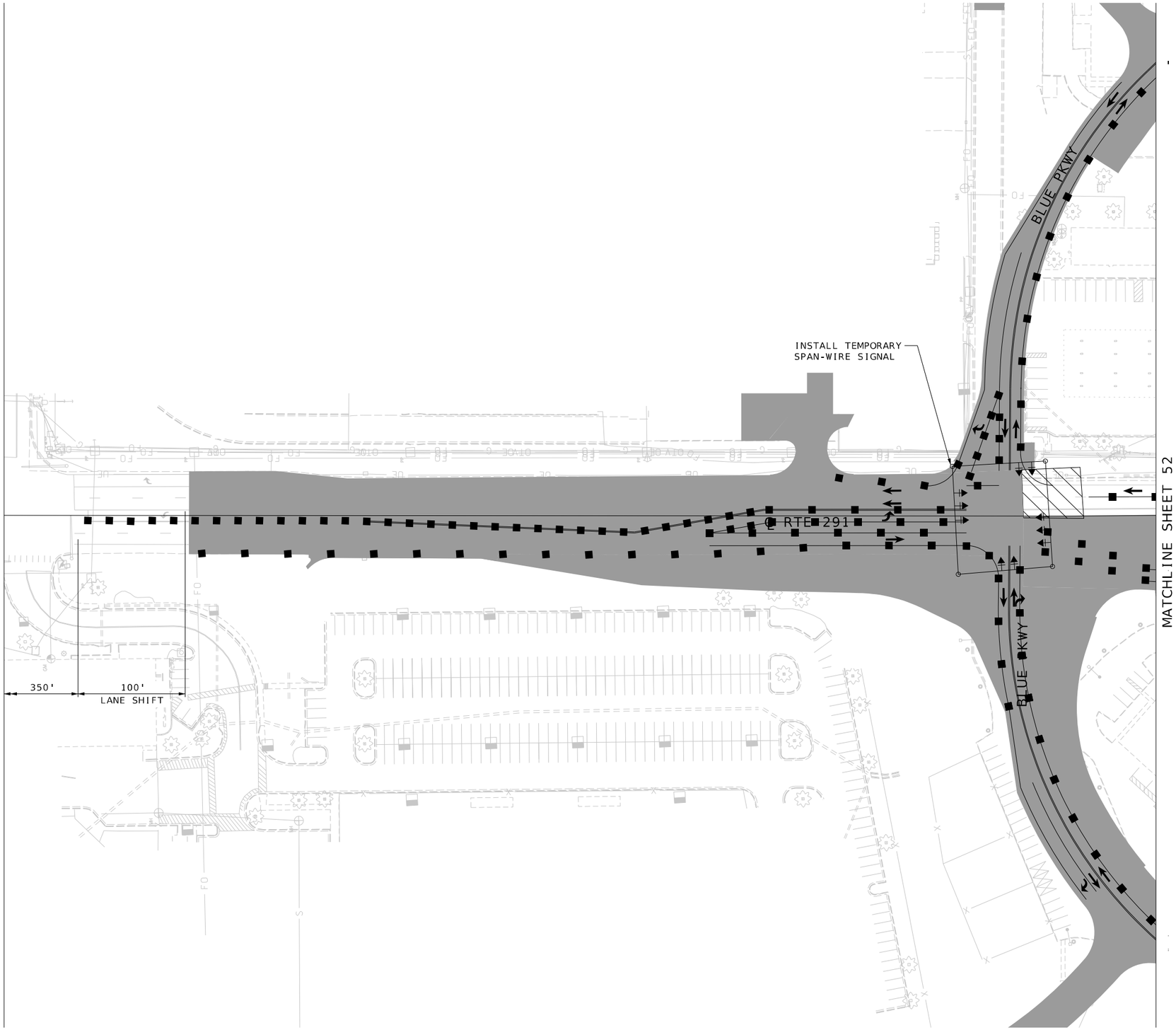

TRAFFIC CONTROL LEGEND

- SIGN (SINGLE SIDED)
- CHANNELIZER
- BARRICADE
- IMPACT ATTENUATOR
- TEMP PAVEMENT
- PERM PAVEMENT (PREV PHASE)
- PERM PAVEMENT (THIS PHASE)
- PORTABLE CONCRETE BARRIER
- DIRECTION OF TRAFFIC
- (A) TEMPORARY 4" SOLID WHITE EDGE LINE
- (B) TEMPORARY 4" SOLID YELLOW EDGE LINE
- (C) TEMPORARY 4" DOUBLE YELLOW
- (D) TEMPORARY 4" BROKEN WHITE

SCALE

0 50 100 150

TRAFFIC CONTROL PLAN
ROUTE, PHASE 4
SHEET 51 OF 64

STATE OF MISSOURI
JEREMY SCOTT STRETZ
NUMBER PE-2011023054
PROFESSIONAL ENGINEER

Jeremy Stretz 2025.02.28 15:34:42-06'00'

IF A SEAL IS PRESENT ON THIS SHEET IT HAS BEEN ELECTRONICALLY SEALED AND DATED.

DATE PREPARED: 2/28/2025

ROUTE	STATE
50/291	MO
DISTRICT	SHEET NO.
KC	154

COUNTY: JACKSON
JOB NO.: J4P3196
FEDERAL PROJECT NO.: STB-3001(009)
PROJECT NO.:
BRIDGE NO.:

DESCRIPTION	DATE

MISSOURI HIGHWAYS AND TRANSPORTATION COMMISSION
MoDOT
105 WEST CAPITOL
JEFFERSON CITY, MO 65102
1-888-ASK-MODOT (1-888-275-6636)

LEE'S SUMMIT MISSOURI

olsson
1301 BURLINGTON ST., STE. 100
NORTH KANSAS CITY, MO 64116
PHONE: 816.361.1177
CERT. OF AUTHORITY NO. 001592

F:\2021\04501-05000\021-04786\40-Design\Microstation\J4P3196\plan_sheets\9 Traffic Control\154_TC_51_P4_07_J4P3196_I50_RTE291.dgn 1:52:28 PM 2/28/2025

MATCHLINE SHEET 51

MATCHLINE SHEET 53

℄ RTE 291

SE HAMBLEN RD

℄ US-50

RAMP 1

RAMP 2

SE OLDHAM PKWY

WO1-1R

CHANNELIZER SPACING @ 40'

R11-2

ROAD CLOSED

W1-1R

CHANNELIZER SPACING @ 60'

R3-2

ONE WAY

R6-1R

CHANNELIZER SPACING @ 40'

4" WHITE DOTTED

R3-7L

LEFT LANE MUST TURN LEFT

R3-1

ONE WAY

R6-1L

BUILD OLDHAM PARKWAY HALF AT A TIME TO MAINTAIN ACCESS

TRAFFIC CONTROL LEGEND

- SIGN (SINGLE SIDED)
- CHANNELIZER
- BARRICADE
- IMPACT ATTENUATOR
- TEMP PAVEMENT
- PERM PAVEMENT (PREV PHASE)
- PERM PAVEMENT (THIS PHASE)
- PORTABLE CONCRETE BARRIER
- DIRECTION OF TRAFFIC
- (A) TEMPORARY 4" SOLID WHITE EDGE LINE
- (B) TEMPORARY 4" SOLID YELLOW EDGE LINE
- (C) TEMPORARY 4" DOUBLE YELLOW
- (D) TEMPORARY 4" BROKEN WHITE

NOTES

1. OLDHAM PKWY TO BE CONSTRUCTED IN HALVES WITH ACCESS PROVIDED AT ALL TIMES

SCALE

0 50 100 150

TRAFFIC CONTROL PLAN
ROUTE 291, PHASE 4
SHEET 52 OF 64

STATE OF MISSOURI
JEREMY SCOTT STRETZ
NUMBER PE-2011021054
PROFESSIONAL ENGINEER

Jeremy Stretz 2025.02.28 15:34:55-06'00'

DATE PREPARED 2/28/2025

ROUTE	STATE
50/291	MO
DISTRICT	SHEET NO.
KC	155

COUNTY JACKSON

JOB NO. J4P3196

FEDERAL PROJECT NO. STB-3001(009)

PROJECT NO.

BRIDGE NO.

DESCRIPTION	DATE

IF A SEAL IS PRESENT ON THIS SHEET IT HAS BEEN ELECTRONICALLY SEALED AND DATED.

MISSOURI HIGHWAYS AND TRANSPORTATION COMMISSION
105 WEST CAPITOL
JEFFERSON CITY, MO 65102
1-888-ASK-MODOT (1-888-275-6636)

LEE'S SUMMIT MISSOURI

olsson
1301 BURLINGTON ST., STE. 100
NORTH KANSAS CITY, MO 64116
PHONE: 816.361.1177
CERT. OF AUTHORITY NO. 001592

F:\2021\04501-05000\021-04786\40-Design\Microstation\J4P3196\plan_sheets\9 Traffic Control\155_TC_52_P4_08_J4P3196_I50_RTE291.dgn 1:52:32 PM 2/28/2025

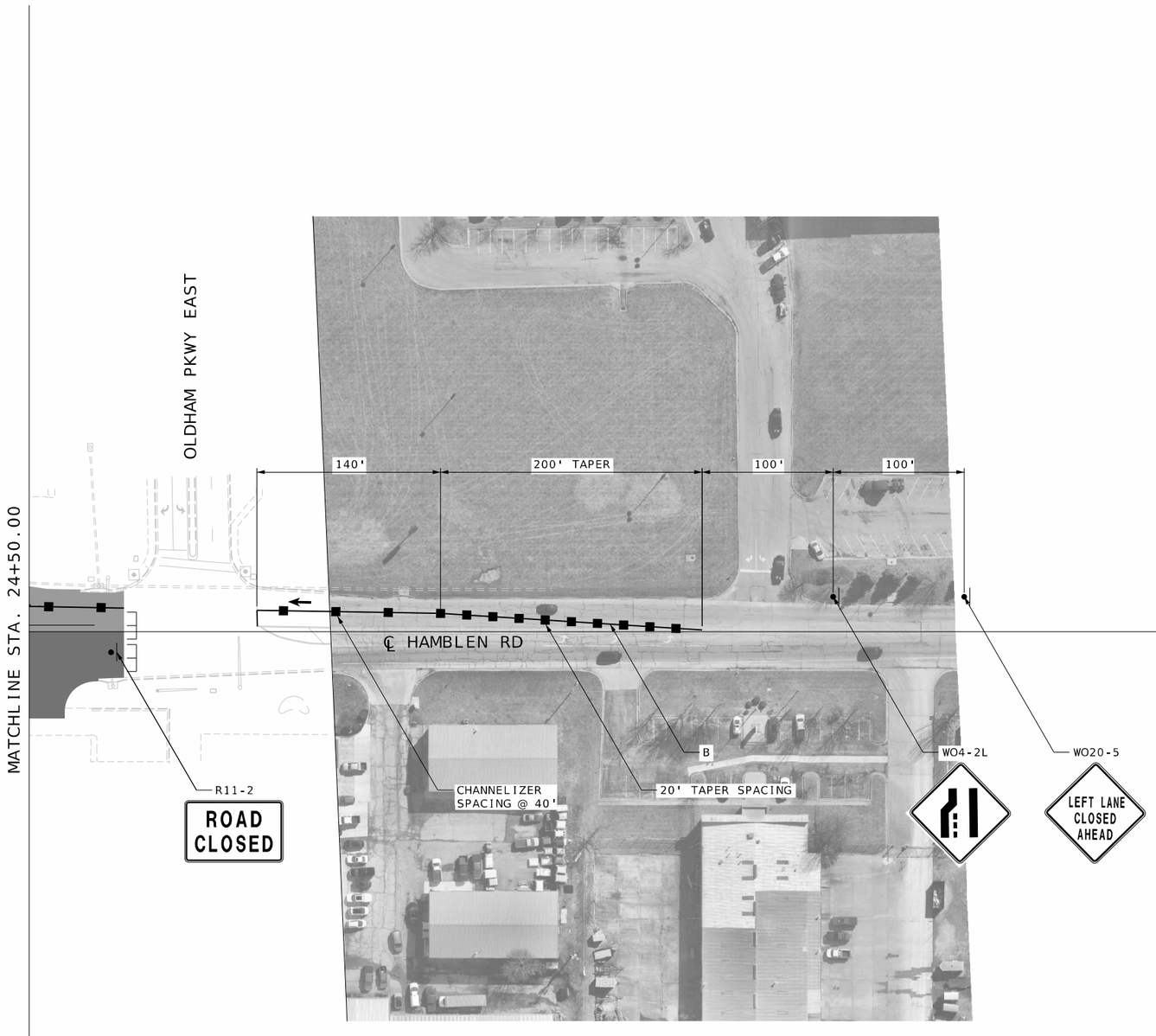

TRAFFIC CONTROL LEGEND

- SIGN (SINGLE SIDED)
- CHANNELIZER
- BARRICADE
- IMPACT ATTENUATOR
- TEMP PAVEMENT
- PERM PAVEMENT (PREV PHASE)
- PERM PAVEMENT (THIS PHASE)
- PORTABLE CONCRETE BARRIER
- DIRECTION OF TRAFFIC
- (A) TEMPORARY 4" SOLID WHITE EDGE LINE
- (B) TEMPORARY 4" SOLID YELLOW EDGE LINE
- (C) TEMPORARY 4" DOUBLE YELLOW
- (D) TEMPORARY 4" BROKEN WHITE

SCALE
0 50 100 150

TRAFFIC CONTROL PLAN
ROUTE 291, PHASE 4
SHEET 53 OF 64

STATE OF MISSOURI
JEREMY SCOTT STRETZ
NUMBER PE-2017023054
PROFESSIONAL ENGINEER
Jeremy Stretz 2025.02.28 15:35:07-06'00'

DATE PREPARED 2/28/2025
ROUTE 50/291 | STATE MO
DISTRICT KC | SHEET NO. 156
COUNTY JACKSON
JOB NO. J4P3196
FEDERAL PROJECT NO. STB-3001(009)
PROJECT NO.
BRIDGE NO.

DESCRIPTION	DATE

IF A SEAL IS PRESENT ON THIS SHEET IT HAS BEEN ELECTRONICALLY SEALED AND DATED.

MISSOURI HIGHWAYS AND TRANSPORTATION COMMISSION
105 WEST CAPITOL
JEFFERSON CITY, MO 65102
1-888-ASK-MODOT (1-888-275-6636)

LEE'S SUMMIT MISSOURI

olsson
1301 BURLINGTON ST., STE. 100
NORTH KANSAS CITY, MO 64116
PHONE: 816.361.1177
CERT. OF AUTHORITY NO. 001592

F:\2021\04501-05000\021-04786\40-Design\Microstation\J4P3196\plan_sheets\9 Traffic Control\156_TC_53_P4_09_J4P3196_150_RTE291.dgn 1:52:36 PM 2/28/2025

PHASE 5

1. ADJUST TRAFFIC CONTROL DEVICES AND TRAFFIC BARRIER ON OUTSIDE SHOULDER OF EB AND WB US-50 AT RAMPS 1, 2, 3, & 4 AS SHOWN ON PLANS
2. PLACE PERMANENT STRIPING ON US-50 MAINLANES, RAMPS 1, 2, & 4, AND RTE 291/HAMBLEN RD AS SHOWN ON PLANS
3. MAINTAIN TRAIFFC ON EB & WB US-50 MAINLANES
4. OPEN RAMPS 1, 2, & 4 FOR TRAFFIC
5. CLOSE AND CONSTRUCT RAMP 3 PROPOSED PAVEMENT
6. PLACE TRAFFIC CONTROL DEVICES AND TEMPORARY STRIPING ON RTE 291/HAMBLEN RD AS SHOWN ON PLANS
7. SHIFT NB AND SB RTE 291/HAMBLEN TRAFFIC TO THE NEWLY CONSTRUCTED NB PAVEMENT AND THE NEWLY CONSTRUCTED 291 BRIDGE FOR A HEAD-TO-HEAD PATTERN
8. CONSTRUCT EAST HALF OF RTE 291/HAMBLEN RD PAVEMENT WITH LEAVE OUT AT BLUE PKWY INTERSECTION
9. ADJUST TRAFFIC CONTROL DEVICES AND TEMPORARY STRIPING AT RTE 291/BLUE PKWY INTERSECTION
10. CONSTRUCT FINAL INTERSECTION PIECE AT RTE 291/BLUE PKWY INTERSECTION

ALL EXISTING SIGNING AND UNUSED SIGNAL HEADS SHALL BECOVERED/BAGGED

CONTRACTOR SHALL NOTIFY MODOT AND THE CITY OF LEE'S SUMMIT AT LEAST TWO HOURS PRIOR TO ANY SIGNAL MODIFICATIONS TO NOTIFY THEM OF THE NEEDS OF SIGNAL TIMING MODIFICATIONS

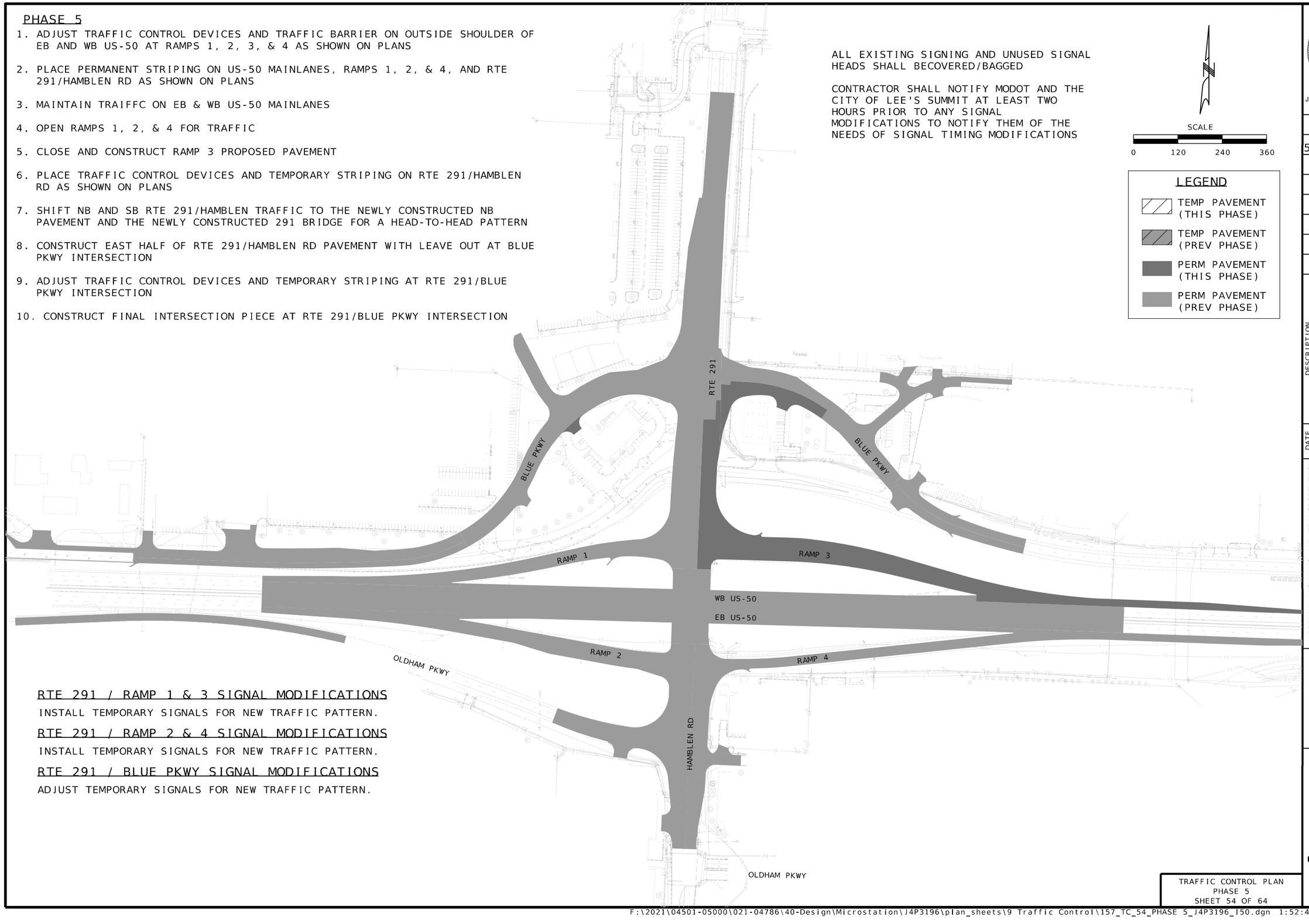

SCALE
0 120 240 360

LEGEND
- TEMP PAVEMENT (THIS PHASE)
- TEMP PAVEMENT (PREV PHASE)
- PERM PAVEMENT (THIS PHASE)
- PERM PAVEMENT (PREV PHASE)

RTE 291 / RAMP 1 & 3 SIGNAL MODIFICATIONS

INSTALL TEMPORARY SIGNALS FOR NEW TRAFFIC PATTERN.

RTE 291 / RAMP 2 & 4 SIGNAL MODIFICATIONS

INSTALL TEMPORARY SIGNALS FOR NEW TRAFFIC PATTERN.

RTE 291 / BLUE PKWY SIGNAL MODIFICATIONS

ADJUST TEMPORARY SIGNALS FOR NEW TRAFFIC PATTERN.

TRAFFIC CONTROL PLAN
PHASE 5
SHEET 54 OF 64

STATE OF MISSOURI
JEREMY SCOTT STRETZ
NUMBER PE-2017023856
PROFESSIONAL ENGINEER
Jeremy Stretz 2025.02.28 15:35:20-06'00'

DATE PREPARED 2/28/2025
ROUTE 50/291 | STATE MO
DISTRICT KC | SHEET NO. 157
COUNTY JACKSON
JOB NO. J4P3196
FEDERAL PROJECT NO. STB-3001(009)
PROJECT NO.
BRIDGE NO.

DESCRIPTION	DATE

IF A SEAL IS PRESENT ON THIS SHEET IT HAS BEEN ELECTRONICALLY SEALED AND DATED.

MISSOURI HIGHWAYS AND TRANSPORTATION COMMISSION
105 WEST CAPITOL
JEFFERSON CITY, MO 65102
1-888-ASK-MODOT (1-888-275-6636)

LEE'S SUMMIT MISSOURI

olsson
1301 BURLINGTON ST., STE. 100
NORTH KANSAS CITY, MO 64116
PHONE: 816.361.1177
CERT. OF AUTHORITY NO. 001592

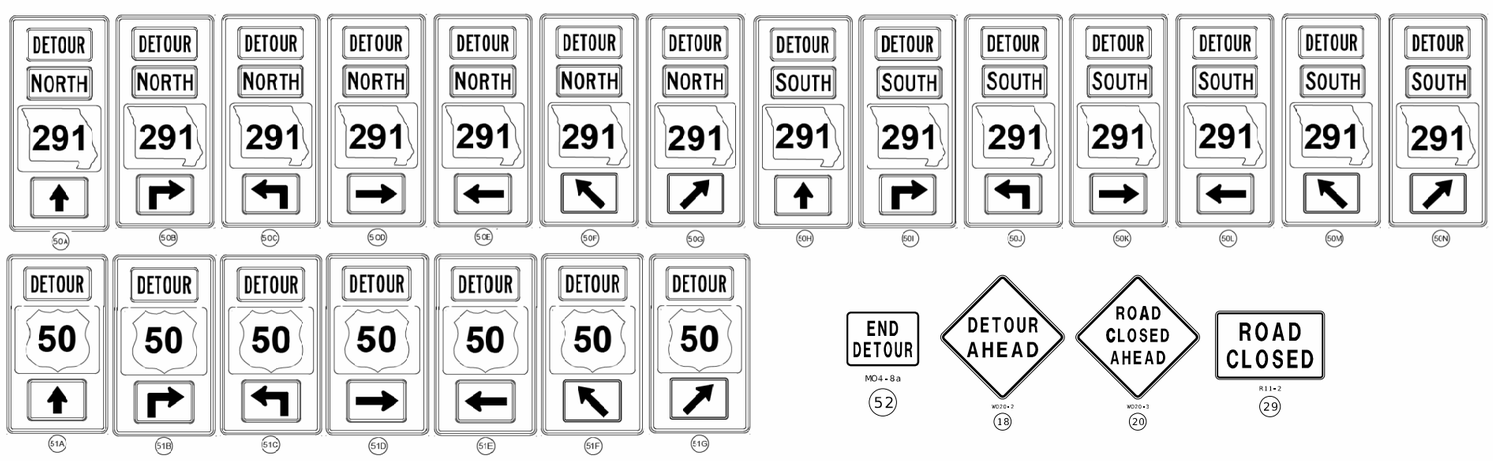

TRAFFIC CONTROL LEGEND

- SIGN (SINGLE SIDED)
- BARRICADE
- CHANGEABLE MESSAGE BOARD
- WORK AREA
- DETOUR ROUTE

NOT TO SCALE

TRAFFIC CONTROL PLAN
PHASE 5 DETOUR MAP
SHEET 55 OF 64

STATE OF MISSOURI
JEREMY SCOTT STRETZ
NUMBER PE-2017023056
PROFESSIONAL ENGINEER

Jeremy Stretz 2025.02.28 15:35:32-06'00'

DATE PREPARED	2/28/2025
ROUTE	50/291
STATE	MO
DISTRICT	KC
SHEET NO.	158
COUNTY	JACKSON
JOB NO.	J4P3196
FEDERAL PROJECT NO.	STB-3001(009)
PROJECT NO.	
BRIDGE NO.	

DATE	DESCRIPTION

IF A SEAL IS PRESENT ON THIS SHEET IT HAS BEEN ELECTRONICALLY SEALED AND DATED.

MISSOURI HIGHWAYS AND TRANSPORTATION COMMISSION
MoDOT
105 WEST CAPITOL
JEFFERSON CITY, MO 65102
1-888-ASK-MODOT (1-888-275-6636)

LEE'S SUMMIT MISSOURI

olsson
1301 BURLINGTON ST., STE. 100
NORTH KANSAS CITY, MO 64116
PHONE: 816.361.1177
CERT. OF AUTHORITY NO. 001592

F:\2021\04501-05000\021-04786\40-Design\Microstation\J4P3196\plan_sheets\9 Traffic Control\158_TC_55_DETOUR_P5_J4P3196_I50_RTE291.dgn 1:52:58 PM 2/28/2025

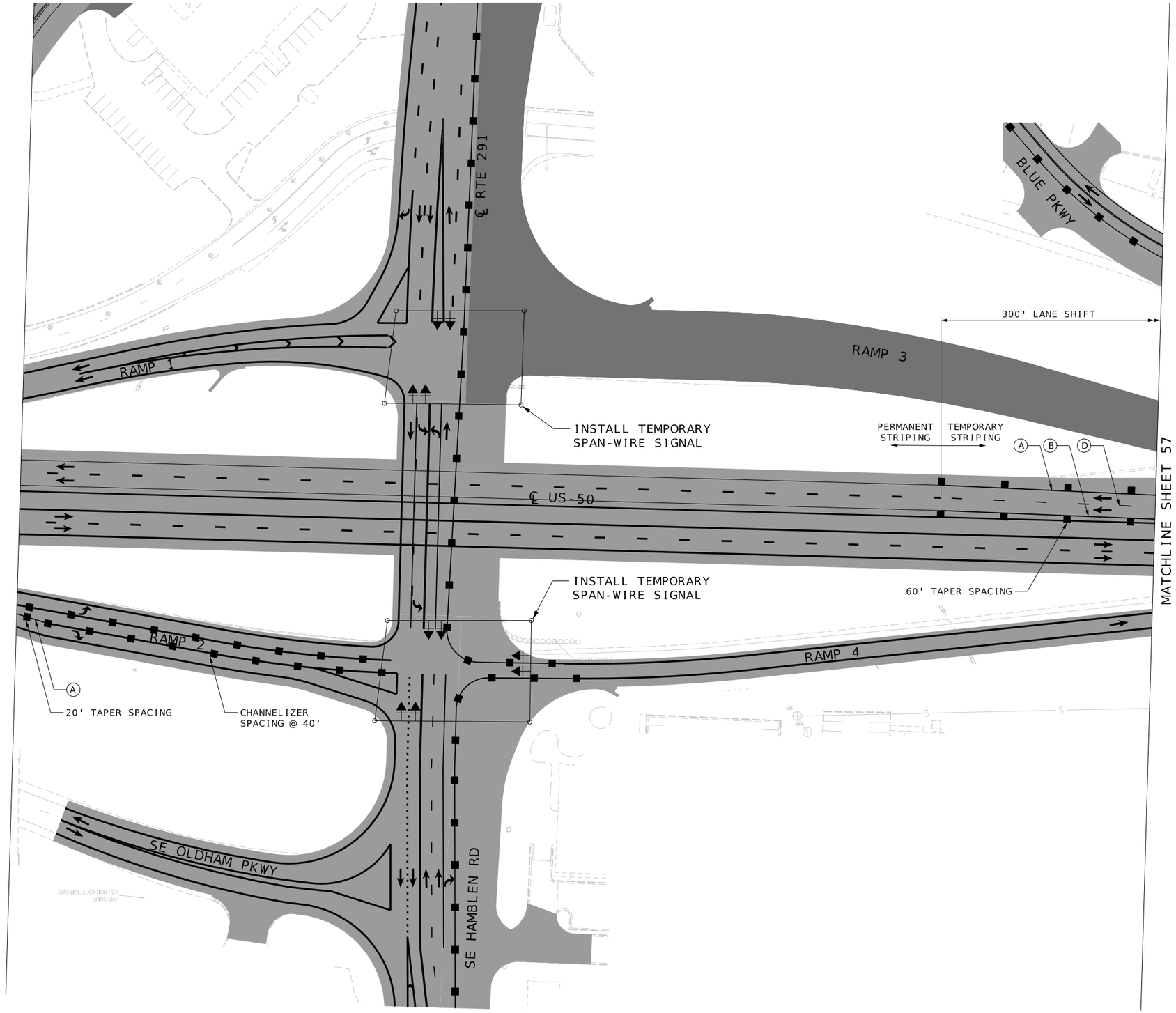

TRAFFIC CONTROL LEGEND

- SIGN (SINGLE SIDED)
- CHANNELIZER
- BARRICADE
- IMPACT ATTENUATOR
- TEMP PAVEMENT
- PERM PAVEMENT (PREV PHASE)
- PERM PAVEMENT (THIS PHASE)
- PORTABLE CONCRETE BARRIER
- DIRECTION OF TRAFFIC
- (A) TEMPORARY 4" SOLID WHITE EDGE LINE
- (B) TEMPORARY 4" SOLID YELLOW EDGE LINE
- (C) TEMPORARY 4" DOUBLE YELLOW
- (D) TEMPORARY 4" BROKEN WHITE

NOTES

1. CONTRACTOR TO PLACE PERMANENT STRIPING FOR US-50 AND ALL RAMPS AS SHOWN ON PLANS

SCALE

0 50 100 150

TRAFFIC CONTROL PLAN
US-50, PHASE 5
SHEET 56 OF 64

STATE OF MISSOURI
JEREMY SCOTT STRETZ
NUMBER PE-2011023864
PROFESSIONAL ENGINEER

Jeremy Stretz 2025.02.28 15:33:35-06'00

DATE PREPARED
2/28/2025

ROUTE	STATE
50/291	MO
DISTRICT	SHEET NO.
KC	159

COUNTY
JACKSON

JOB NO.
J4P3196

FEDERAL PROJECT NO.
STB-3001(009)

PROJECT NO.

BRIDGE NO.

DESCRIPTION	DATE

IF A SEAL IS PRESENT ON THIS SHEET IT HAS BEEN ELECTRONICALLY SEALED AND DATED.

MISSOURI HIGHWAYS AND TRANSPORTATION COMMISSION
105 WEST CAPITOL
JEFFERSON CITY, MO 65102
1-888-ASK-MODOT (1-888-275-6636)

LEE'S SUMMIT MISSOURI

olsson
1301 BURLINGTON ST., STE. 100
NORTH KANSAS CITY, MO 64116
PHONE: 816.361.1177
CERT. OF AUTHORITY NO. 001592

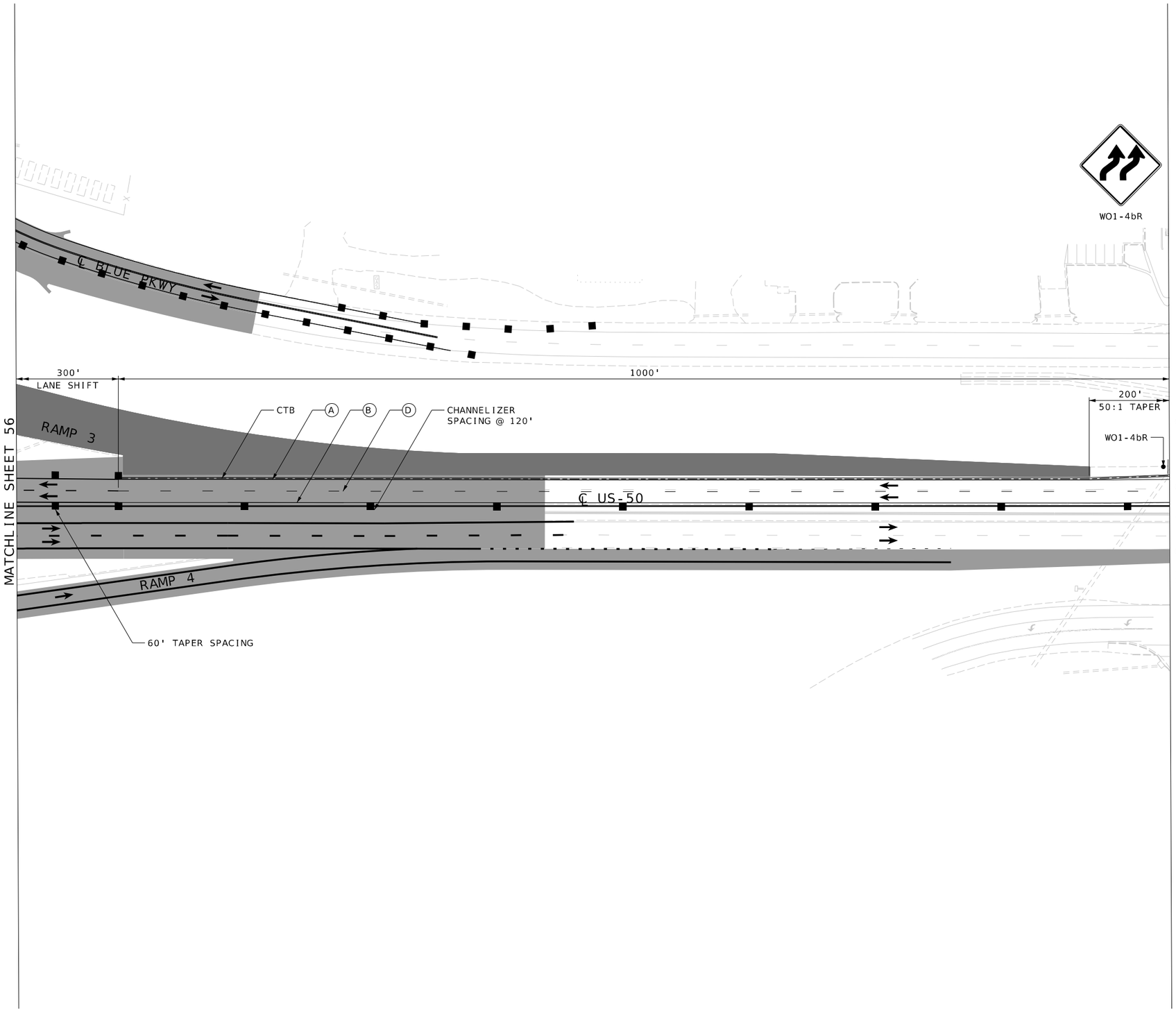

TRAFFIC CONTROL LEGEND

- SIGN (SINGLE SIDED)
- CHANNELIZER
- BARRICADE
- IMPACT ATTENUATOR
- TEMP PAVEMENT
- PERM PAVEMENT (PREV PHASE)
- PERM PAVEMENT (THIS PHASE)
- PORTABLE CONCRETE BARRIER
- DIRECTION OF TRAFFIC
- (A) TEMPORARY 4" SOLID WHITE EDGE LINE
- (B) TEMPORARY 4" SOLID YELLOW EDGE LINE
- (C) TEMPORARY 4" DOUBLE YELLOW
- (D) TEMPORARY 4" BROKEN WHITE

NOTES

1. CONTRACTOR TO PLACE PERMANENT STRIPING FOR EB US-50 AND RAMP 4

SCALE

0 50 100 150

TRAFFIC CONTROL PLAN
US-50, PHASE 5
SHEET 57 OF 64

STATE OF MISSOURI
JEREMY SCOTT STRETZ
NUMBER PE-2011023054
PROFESSIONAL ENGINEER

Jeremy Stretz 2025.02.28 15:37:51-06'00'

DATE PREPARED
2/28/2025

ROUTE	STATE
50/291	MO
DISTRICT	SHEET NO.
KC	160

COUNTY
JACKSON

JOB NO.
J4P3196

FEDERAL PROJECT NO.
STB-3001(009)

PROJECT NO.

BRIDGE NO.

DESCRIPTION	DATE

IF A SEAL IS PRESENT ON THIS SHEET IT HAS BEEN ELECTRONICALLY SEALED AND DATED.

MISSOURI HIGHWAYS AND TRANSPORTATION COMMISSION
105 WEST CAPITOL
JEFFERSON CITY, MO 65102
1-888-ASK-MODOT (1-888-275-6636)

LEE'S SUMMIT MISSOURI

olsson
1301 BURLINGTON ST., STE. 100
NORTH KANSAS CITY, MO 64116
PHONE: 816.361.1177
CERT. OF AUTHORITY NO. 001592

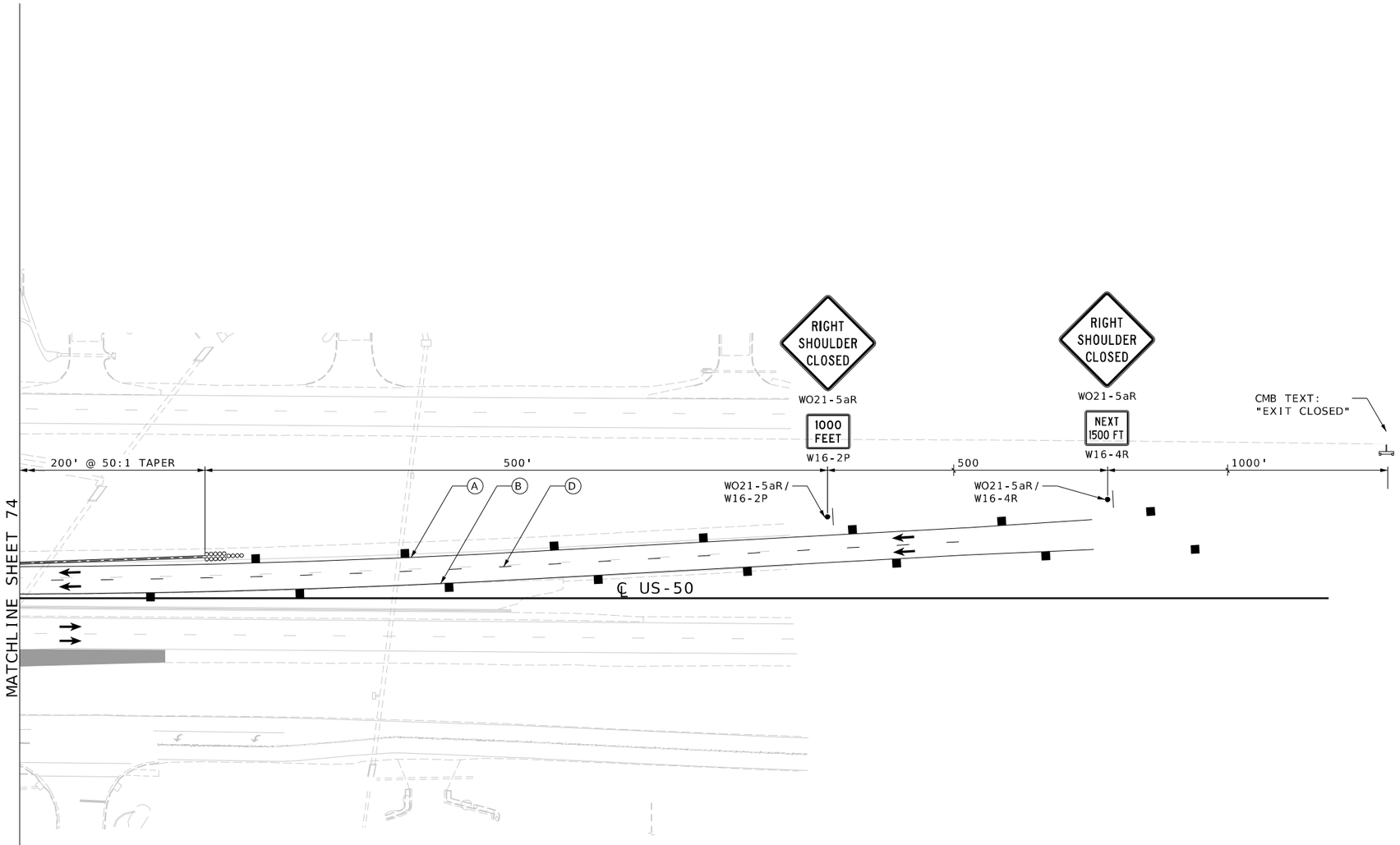

TRAFFIC CONTROL LEGEND

- SIGN (SINGLE SIDED)
- CHANNELIZER
- BARRICADE
- IMPACT ATTENUATOR
- CHANGEABLE MESSAGE BOARD
- TEMP PAVEMENT
- PERM PAVEMENT (PREV PHASE)
- PERM PAVEMENT (THIS PHASE)
- PORTABLE CONCRETE BARRIER
- DIRECTION OF TRAFFIC
- (A) TEMPORARY 4" SOLID WHITE EDGE LINE
- (B) TEMPORARY 4" SOLID YELLOW EDGE LINE
- (C) TEMPORARY 4" DOUBLE YELLOW
- (D) TEMPORARY 4" BROKEN WHITE

NOTES

1. TRAFFIC CONTROL DEVICES FOR BLUE PKWY AND OLDHAM PKWY TO REMAIN IN PLACE FROM PREVIOUS PHASES

SCALE

0 50 100 150

TRAFFIC CONTROL PLAN
US-50, PHASE 5
SHEET 58 OF 64

STATE OF MISSOURI
JEREMY SCOTT STRETZ
NUMBER PE-2011021864
PROFESSIONAL ENGINEER

Jeremy Stretz 2025.02.28 15:38:00-06'00'

DATE PREPARED
2/28/2025

ROUTE	STATE
50/291	MO
DISTRICT	SHEET NO.
KC	161

COUNTY
JACKSON

JOB NO.
J4P3196

FEDERAL PROJECT NO.
STB-3001(009)

PROJECT NO.

BRIDGE NO.

DESCRIPTION	DATE

IF A SEAL IS PRESENT ON THIS SHEET IT HAS BEEN ELECTRONICALLY SEALED AND DATED.

MISSOURI HIGHWAYS AND TRANSPORTATION COMMISSION
105 WEST CAPITOL
JEFFERSON CITY, MO 65102
1-888-ASK-MODOT (1-888-275-6636)

LEE'S SUMMIT MISSOURI

olsson
1301 BURLINGTON ST., STE. 100
NORTH KANSAS CITY, MO 64116
PHONE: 816.361.1177
CERT. OF AUTHORITY NO. 001592

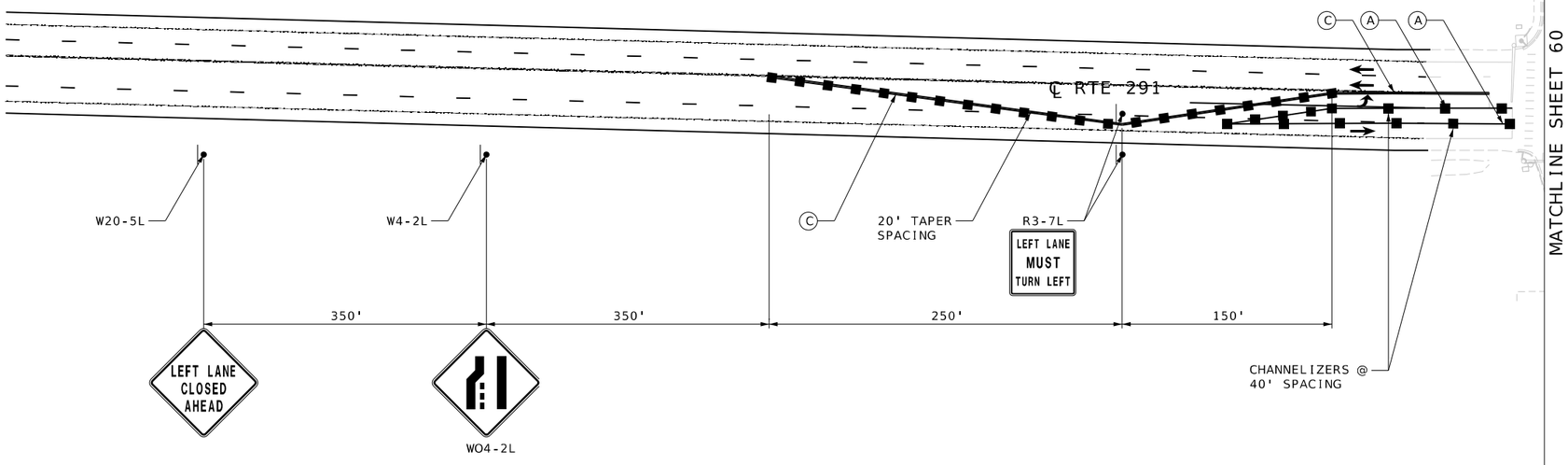

TRAFFIC CONTROL LEGEND

- SIGN (SINGLE SIDED)
- CHANNELIZER
- BARRICADE
- IMPACT ATTENUATOR
- TEMP PAVEMENT
- PERM PAVEMENT (PREV PHASE)
- PERM PAVEMENT (THIS PHASE)
- PORTABLE CONCRETE BARRIER
- DIRECTION OF TRAFFIC
- (A) TEMPORARY 4" SOLID WHITE EDGE LINE
- (B) TEMPORARY 4" SOLID YELLOW EDGE LINE
- (C) TEMPORARY 4" DOUBLE YELLOW
- (D) TEMPORARY 4" BROKEN WHITE

SCALE

0 50 100 150

TRAFFIC CONTROL PLAN
ROUTE 291, PHASE 5
SHEET 59 OF 64

STATE OF MISSOURI
JEREMY SCOTT STRETZ
NUMBER PE-2011021054
PROFESSIONAL ENGINEER

Jeremy Stretz 2025.02.28 15:38:15-06'00'

DATE PREPARED	
2/28/2025	
ROUTE	STATE
50/291	MO
DISTRICT	SHEET NO.
KC	162
COUNTY	
JACKSON	
JOB NO.	
J4P3196	
FEDERAL PROJECT NO.	
STB-3001(009)	
PROJECT NO.	
BRIDGE NO.	

DESCRIPTION	DATE

IF A SEAL IS PRESENT ON THIS SHEET IT HAS BEEN ELECTRONICALLY SEALED AND DATED.

MISSOURI HIGHWAYS AND TRANSPORTATION COMMISSION

105 WEST CAPITOL
JEFFERSON CITY, MO 65102
1-888-ASK-MODOT (1-888-275-6636)

LEE'S SUMMIT MISSOURI

olsson
1301 BURLINGTON ST., STE. 100
NORTH KANSAS CITY, MO 64116
PHONE: 816.361.1177
CERT. OF AUTHORITY NO. 001592

F:\2021\04501-05000\021-04786\40-Design\Microstation\J4P3196\plan_sheets\9 Traffic Control\162_TC_59_P5_04_J4P3196_I50_RTE291.dgn 1:53:41 PM 2/28/2025

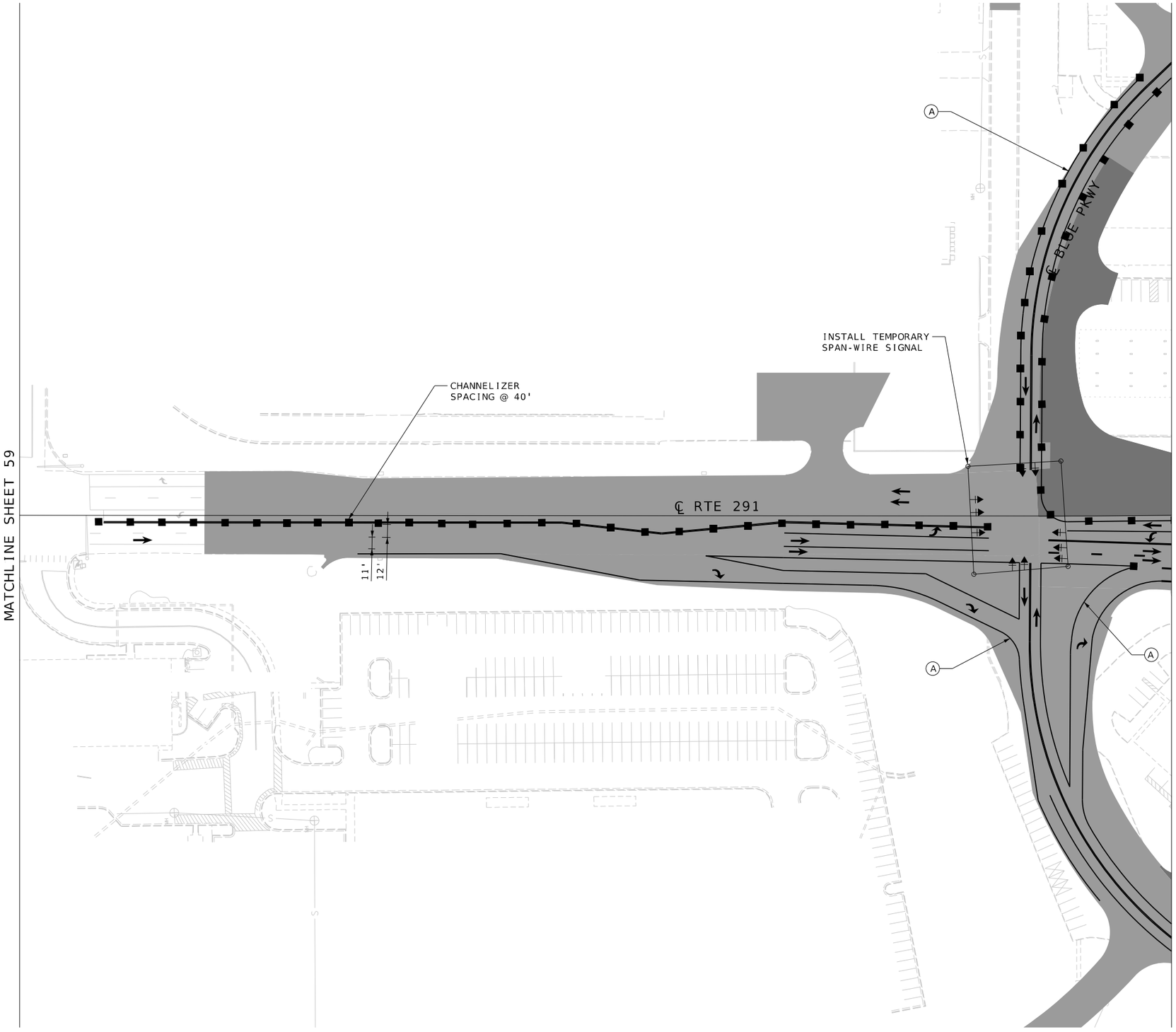

TRAFFIC CONTROL LEGEND

- SIGN (SINGLE SIDED)
- CHANNELIZER
- BARRICADE
- IMPACT ATTENUATOR
- TEMP PAVEMENT
- PERM PAVEMENT (PREV PHASE)
- PERM PAVEMENT (THIS PHASE)
- PORTABLE CONCRETE BARRIER
- DIRECTION OF TRAFFIC
- (A) TEMPORARY 4" SOLID WHITE EDGE LINE
- (B) TEMPORARY 4" SOLID YELLOW EDGE LINE
- (C) TEMPORARY 4" DOUBLE YELLOW
- (D) TEMPORARY 4" BROKEN WHITE

NOTES

1. RTE 291 / BLUE PKWY INTERSECTION TO BE CONSTRUCTED IN TWO STEPS.

SCALE

0 50 100 150

TRAFFIC CONTROL PLAN
ROUTE 291, PHASE 5
SHEET 60 OF 64

STATE OF MISSOURI
JEREMY SCOTT STRETZ
NUMBER PE-2011021054
PROFESSIONAL ENGINEER

Jeremy Stretz 2025.02.28 15:38:27-06'00'

DATE PREPARED 2/28/2025

ROUTE	STATE
50/291	MO
DISTRICT	SHEET NO.
KC	163

COUNTY: JACKSON
JOB NO.: J4P3196
FEDERAL PROJECT NO.: STB-3001(009)
PROJECT NO.:
BRIDGE NO.:

DATE	DESCRIPTION

IF A SEAL IS PRESENT ON THIS SHEET IT HAS BEEN ELECTRONICALLY SEALED AND DATED.

MISSOURI HIGHWAYS AND TRANSPORTATION COMMISSION
105 WEST CAPITOL
JEFFERSON CITY, MO 65102
1-888-ASK-MODOT (1-888-275-6636)

LEE'S SUMMIT MISSOURI

olsson
1301 BURLINGTON ST., STE. 100
NORTH KANSAS CITY, MO 64116
PHONE: 816.361.1177
CERT. OF AUTHORITY NO. 001592

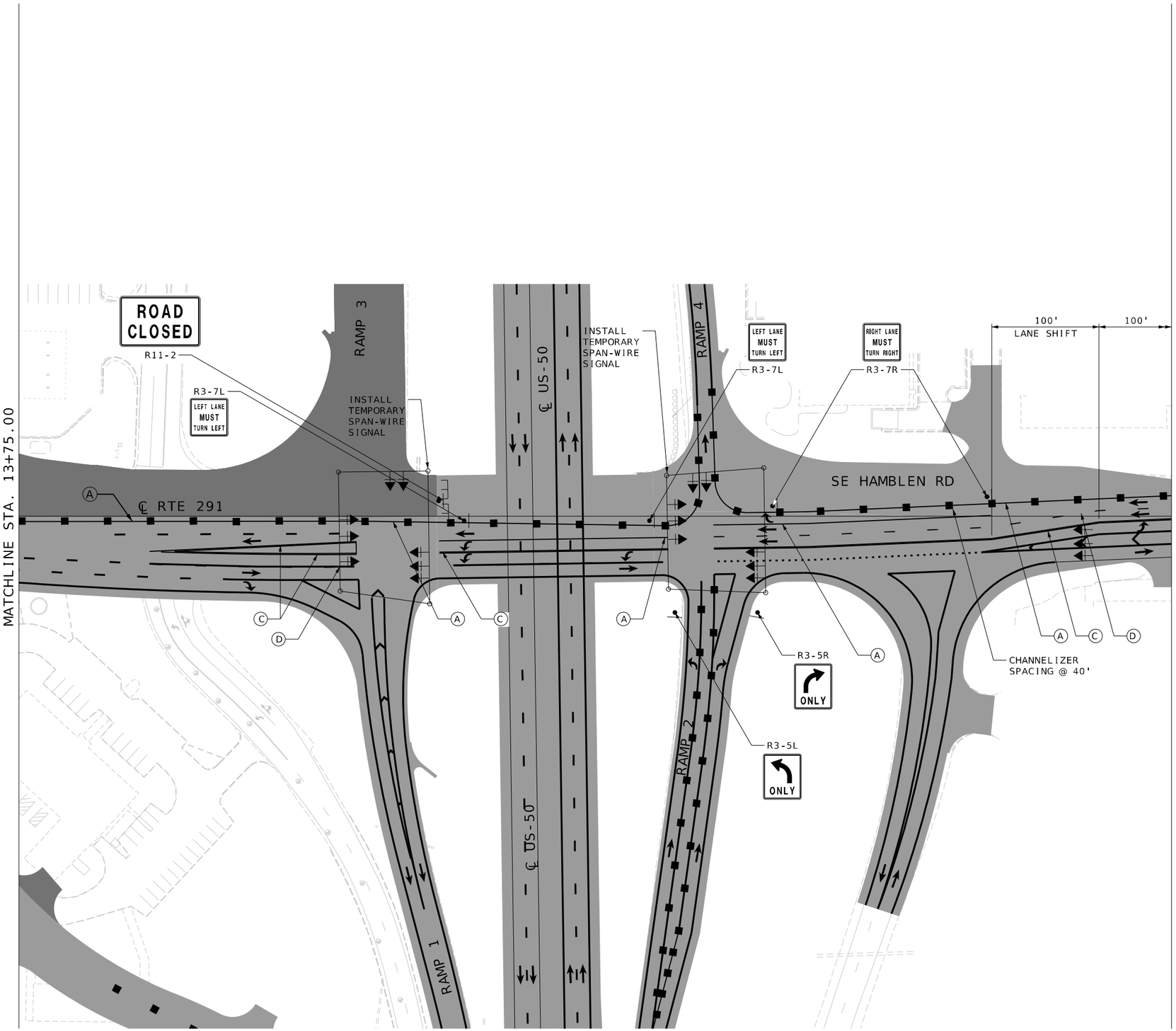

TRAFFIC CONTROL LEGEND

- SIGN (SINGLE SIDED)
- CHANNELIZER
- BARRICADE
- IMPACT ATTENUATOR
- TEMP PAVEMENT
- PERM PAVEMENT (PREV PHASE)
- PERM PAVEMENT (THIS PHASE)
- PORTABLE CONCRETE BARRIER
- DIRECTION OF TRAFFIC
- (A) TEMPORARY 4" SOLID WHITE EDGE LINE
- (B) TEMPORARY 4" SOLID YELLOW EDGE LINE
- (C) TEMPORARY 4" DOUBLE YELLOW
- (D) TEMPORARY 4" BROKEN WHITE

SCALE
0 50 100 150

TRAFFIC CONTROL PLAN
ROUTE 291, PHASE 5
SHEET 61 OF 64

STATE OF MISSOURI
JEREMY SCOTT STRETZ
NUMBER PE-2017023054
PROFESSIONAL ENGINEER

Jeremy Stretz 2025.02.28 15:38:39-06'00'

DATE PREPARED: 2/28/2025

ROUTE	STATE
50/291	MO
DISTRICT	SHEET NO.
KC	164

COUNTY: JACKSON
JOB NO.: J4P3196
FEDERAL PROJECT NO.: STB-3001(009)
PROJECT NO.:
BRIDGE NO.:

DESCRIPTION	DATE

IF A SEAL IS PRESENT ON THIS SHEET IT HAS BEEN ELECTRONICALLY SEALED AND DATED.

MISSOURI HIGHWAYS AND TRANSPORTATION COMMISSION
105 WEST CAPITOL
JEFFERSON CITY, MO 65102
1-888-ASK-MODOT (1-888-275-6636)

LEE'S SUMMIT MISSOURI

olsson
1301 BURLINGTON ST., STE. 100
NORTH KANSAS CITY, MO 64116
PHONE: 816.361.1177
CERT. OF AUTHORITY NO. 001592

F:\2021\04501-05000\021-04786\40-Design\Microstation\J4P3196\plan_sheets\9 Traffic Control\164_TC_61_P5_06_J4P3196_I50_RTE291.dgn 1:53:49 PM 2/28/2025

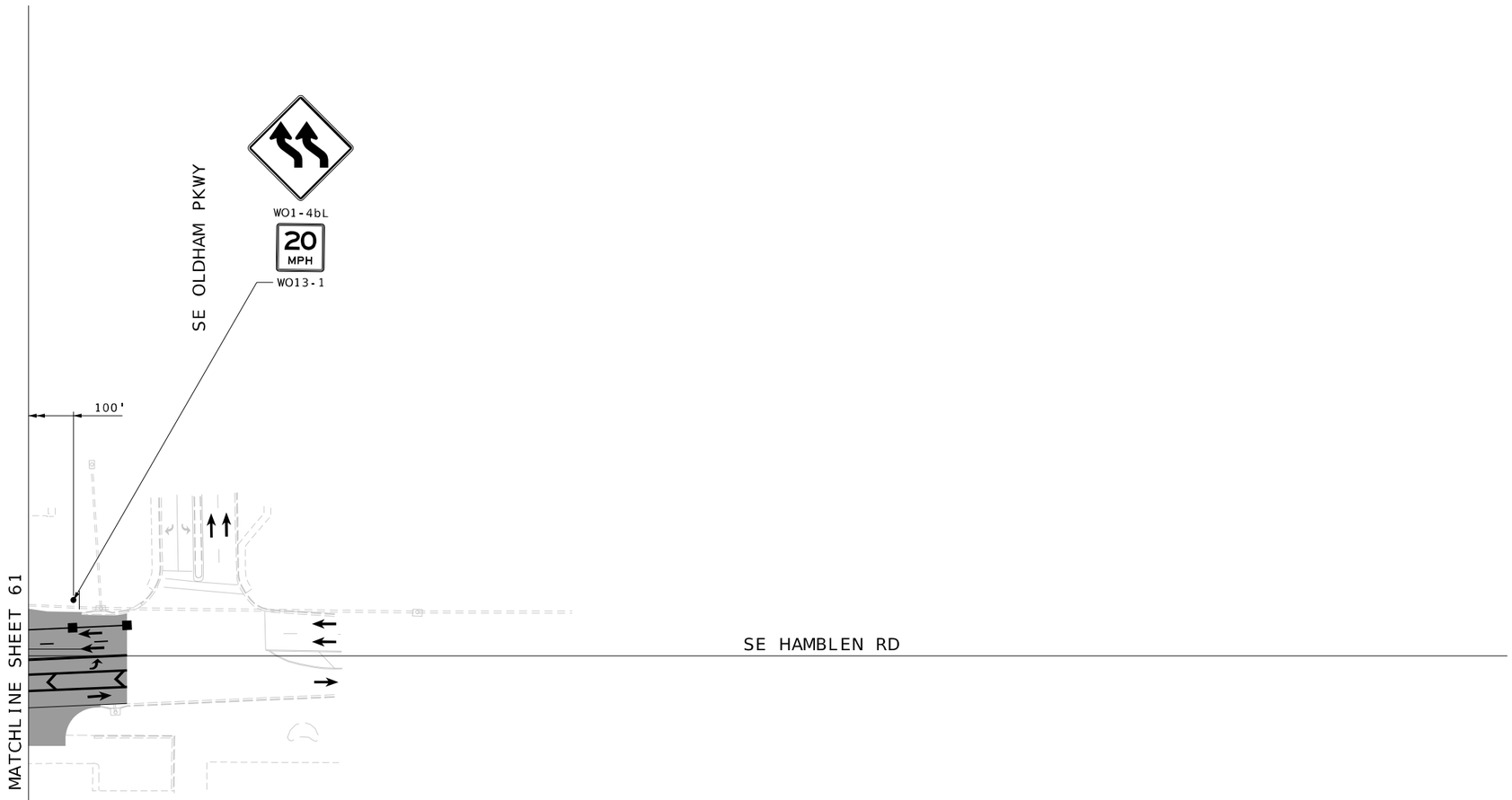

TRAFFIC CONTROL LEGEND

- SIGN (SINGLE SIDED)
- CHANNELIZER
- BARRICADE
- IMPACT ATTENUATOR
- TEMP PAVEMENT
- PERM PAVEMENT (PREV PHASE)
- PERM PAVEMENT (THIS PHASE)
- PORTABLE CONCRETE BARRIER
- DIRECTION OF TRAFFIC
- (A) TEMPORARY 4" SOLID WHITE EDGE LINE
- (B) TEMPORARY 4" SOLID YELLOW EDGE LINE
- (C) TEMPORARY 4" DOUBLE YELLOW
- (D) TEMPORARY 4" BROKEN WHITE

SCALE

0 50 100 150

TRAFFIC CONTROL PLAN
ROUTE 291, PHASE 5
SHEET 62 OF 64

STATE OF MISSOURI
JEREMY SCOTT STRETZ
NUMBER PE-2011023054
PROFESSIONAL ENGINEER

Jeremy Stretz 2025.02.28 15:38:51-06'00'

DATE PREPARED: 2/28/2025
ROUTE: 50/291 | STATE: MO
DISTRICT: KC | SHEET NO.: 165
COUNTY: JACKSON
JOB NO.: J4P3196
FEDERAL PROJECT NO.: STB-3001(009)
PROJECT NO.:
BRIDGE NO.:

IF A SEAL IS PRESENT ON THIS SHEET IT HAS BEEN ELECTRONICALLY SEALED AND DATED.

DATE	DESCRIPTION

MISSOURI HIGHWAYS AND TRANSPORTATION COMMISSION
MoDOT
105 WEST CAPITOL
JEFFERSON CITY, MO 65102
1-888-ASK-MODOT (1-888-275-6636)

LEE'S SUMMIT MISSOURI

olsson
1301 BURLINGTON ST., STE. 100
NORTH KANSAS CITY, MO 64116
PHONE: 816.361.1177
CERT. OF AUTHORITY NO. 001592

F:\2021\04501-05000\021-04786\40-Design\Microstation\J4P3196\plan_sheets\9 Traffic Control\165_TC_62_P5_07_J4P3196_I50_RTE291.dgn 1:53:53 PM 2/28/2025

MO4-11 SHF-FLAT SHEET FLUORESCENT:
2.250" Radius, 0.875" Border, 0.625" Indent, Black on Orange;
Table of letter and object lefts.

6.000	
6.000	
3.000	
7.500	

50A

MO4-11 SHF-FLAT SHEET FLUORESCENT:
2.250" Radius, 0.875" Border, 0.625" Indent, Black on Orange;
Table of letter and object lefts.

6.000	
6.000	
3.000	
7.500	

50B

MO4-11 SHF-FLAT SHEET FLUORESCENT:
2.250" Radius, 0.875" Border, 0.625" Indent, Black on Orange;
Table of letter and object lefts.

6.000	
6.000	
3.000	
7.500	

50C

MO4-11 SHF-FLAT SHEET FLUORESCENT
2.250" Radius, 0.875" Border, 0.625" incent, Black on Orange;
Table of letter and object lefts.

5.000	
5.000	
3.000	
7.500	

50D

MO4-11 SHF-FLAT SHEET FLUORESCENT:
2.250" Radius, 0.875" Border, 0.625" Indent, Black on Orange;
Table of letter and object lefts.

6.000	
6.000	
3.000	
7.500	

50E

MO4-11 SHF-FLAT SHEET FLUORESCENT:
2.250" Radius, 0.875" Border, 0.625" Indent, Black on Orange;
Table of letter and object lefts.

6.000	
6.000	
3.000	
7.500	

50F

MO4-11 SHF-FLAT SHEET FLUORESCENT:
2.250" Radius, 0.875" Border, 0.625" Indent, Black on Orange;
Table of letter and object lefts.

6.000	
6.000	
3.000	
7.500	

50G

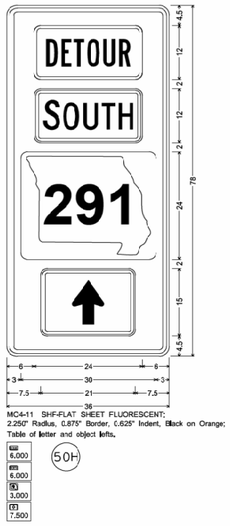

MO4-11 SHF-FLAT SHEET FLUORESCENT:
2.250" Radius, 0.875" Border, 0.625" Indent, Black on Orange;
Table of letter and object lefts.

6.000	
6.000	
3.000	
7.500	

50H

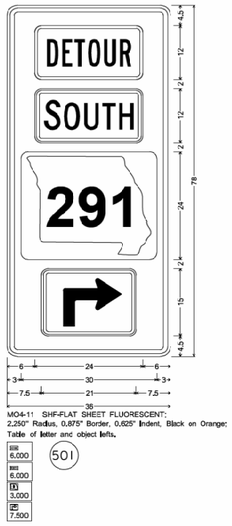

MO4-11 SHF-FLAT SHEET FLUORESCENT:
2.250" Radius, 0.875" Border, 0.625" Indent, Black on Orange;
Table of letter and object lefts.

6.000	
6.000	
3.000	
7.500	

50I

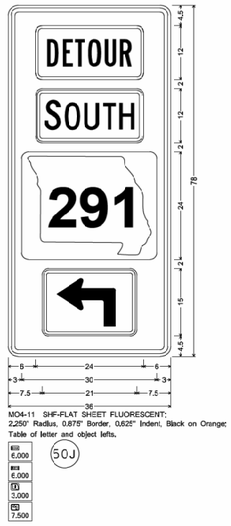

MO4-11 SHF-FLAT SHEET FLUORESCENT:
2.250" Radius, 0.875" Border, 0.625" Indent, Black on Orange;
Table of letter and object lefts.

6.000	
6.000	
3.000	
7.500	

50J

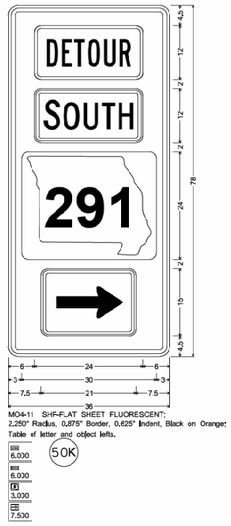

MO4-11 SHF-FLAT SHEET FLUORESCENT:
2.250" Radius, 0.875" Indent, Black on Orange;
Table of letter and object lefts.

6.000	
6.000	
3.000	
7.500	

50K

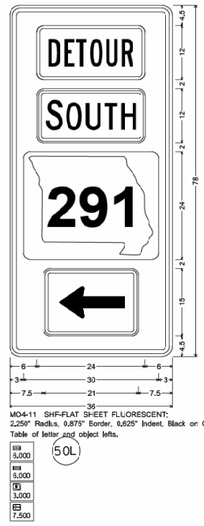

MO4-11 SHF-FLAT SHEET FLUORESCENT:
2.250" Radius, 0.875" Border, 0.625" Indent, Black on Orange;
Table of letter and object lefts.

5.000	
5.000	
3.000	
7.500	

50L

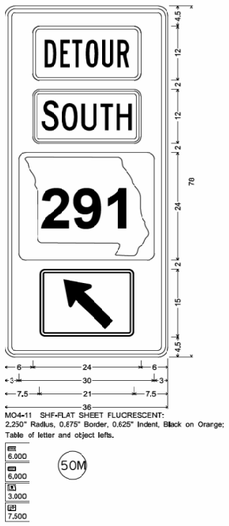

MO4-11 SHF-FLAT SHEET FLUORESCENT:
2.250" Radius, 0.875" Border, 0.625" Indent, Black on Orange;
Table of letter and object lefts.

6.000	
6.000	
3.000	
7.500	

50M

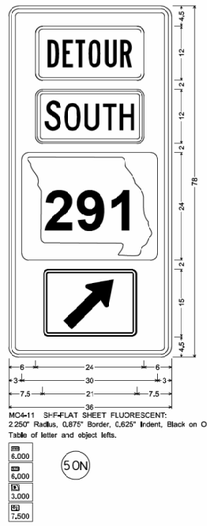

MO4-11 SHF-FLAT SHEET FLUORESCENT:
2.250" Radius, 0.875" Border, 0.625" Indent, Black on Orange;
Table of letter and object lefts.

6.000	
6.000	
3.000	
7.500	

50N

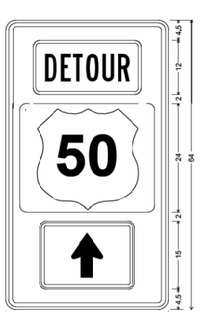

MO4-11 SHF-FLAT SHEET FLUORESCENT:
2.250" Radius, 0.875" Border, 0.625" Indent, Black on Orange;
Table of letter and object lefts.

6.000	
3.000	
7.500	

51A

MO4-11 SHF-FLAT SHEET FLUORESCENT:
2.250" Radius, 0.875" Border, 0.625" Indent, Black on Orange;
Table of letter and object lefts.

6.000	
3.000	
7.500	

51B

MO4-11 SHF-FLAT SHEET FLUORESCENT:
2.250" Radius, 0.875" Border, 0.625" Indent, Black on Orange;
Table of letter and object lefts.

6.000	
3.000	
7.500	

51C

MO4-11 SHF-FLAT SHEET FLUORESCENT:
2.250" Radius, 0.875" Border, 0.625" Indent, Black on Orange;
Table of letter and objec lefts.

6.000	
3.000	
7.500	

51D

MO4-11 SHF-FLAT SHEET FLUORESCENT:
2.250" Radius, 0.875" Border, 0.625" Indent, Black on Orarge;
Table of letter and objoct lefts.

6.000	
3.000	
7.500	

51E

MO4-11 SHF-FLAT SHEET FLUORESCENT:
2.250" Radius, 0.875" Border, 0.625" Indent, Black on Orange;
Table of letter and object lefts.

6.000	
3.000	
7.500	

51F

MO4-11 SHF-FLAT SHEET FLUORESCENT:
2.250" Radius, 0.875" Border, 0.625" Indent, Black on Orange;
Table of letter and object lefts.

6.000	
3.000	
7.500	

51G

TRAFFIC CONTROL PLAN
SHEET 63 OF 64

JEREMY SCOTT STRETZ
NUMBER PE-2011023864
PROFESSIONAL ENGINEER
STATE OF MISSOURI

Jeremy Stretz 2025.02.28 15:39:03-06'00'

DATE PREPARED
2/28/2025

ROUTE	STATE
50/291	MO
DISTRICT	SHEET NO.
KC	166

COUNTY
JACKSON

JOB NO.
J4P3196

FEDERAL PROJECT NO.
STB-3001(009)

PROJECT NO.

BRIDGE NO.

IF A SEAL IS PRESENT ON THIS SHEET IT HAS BEEN ELECTRONICALLY SEALED AND DATED.

DESCRIPTION

DATE

MISSOURI HIGHWAYS AND TRANSPORTATION COMMISSION
105 WEST CAPITOL
JEFFERSON CITY, MO 65102
1-888-ASK-MODOT (1-888-275-6636)

LEE'S SUMMIT MISSOURI

olsson
1301 BURLINGTON ST., STE. 100
NORTH KANSAS CITY, MO 64116
PHONE: 816.361.1177
CERT. OF AUTHORITY NO. 001592

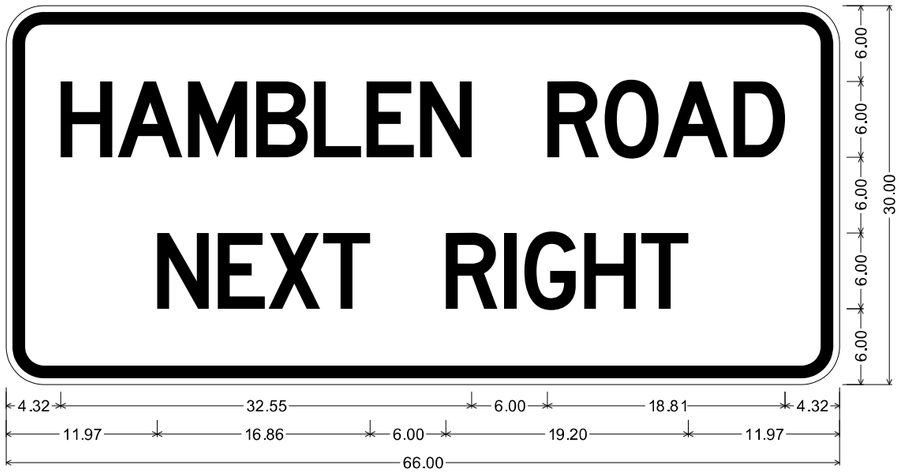

TTC-SP-1

3.00" Radius, 1.00" Border, 0.50" Indent, Black on Orange;
"HAMBLEN ROAD", D 2K 50% spacing; "NEXT RIGHT", D 2K 50% spacing;
Table of letter and object lefts

H	A	M	B	L	E	N	R	O	A	D
4.32	8.85	14.40	19.80	24.39	28.56	32.79	42.87	47.40	52.05	57.60

N	E	X	T	R	I	G	H	T
11.97	16.77	20.79	25.11	34.83	39.42	41.04	45.78	50.31

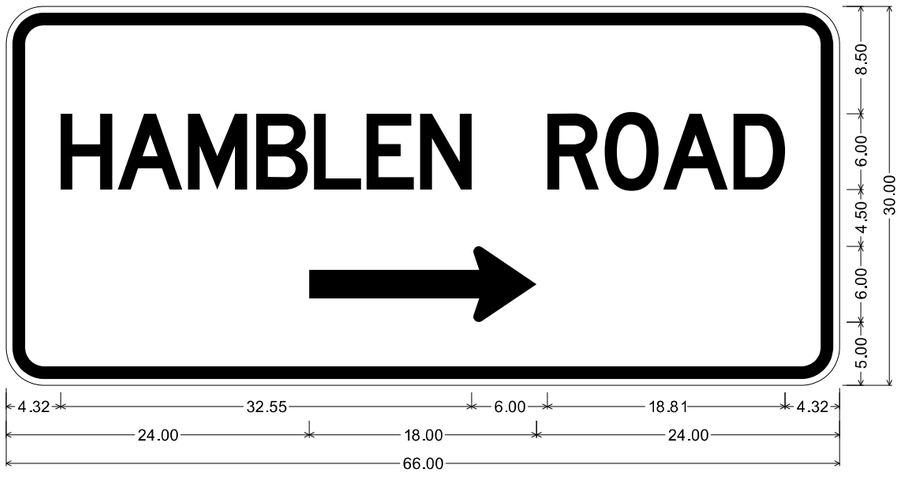

TTC-SP-2

3.00" Radius, 1.00" Border, 0.50" Indent, Black on Orange;
"HAMBLEN ROAD", D 2K 50% spacing; Standard Arrow Custom 18.00" X 6.00" 0°;
Table of letter and object lefts

H	A	M	B	L	E	N	R	O	A	D
4.32	8.85	14.40	19.80	24.39	28.56	32.79	42.87	47.40	52.05	57.60

→
24.00

TRAFFIC CONTROL PLAN
SHEET 64 OF 64

STATE OF MISSOURI
JEREMY SCOTT STRETZ
NUMBER PE-2011023054
PROFESSIONAL ENGINEER

Jeremy Stretz 2025.02.28 15:37:40-06'00'

DATE PREPARED
2/28/2025

ROUTE	STATE
50/291	MO
DISTRICT	SHEET NO.
KC	167

COUNTY
JACKSON

JOB NO.
J4P3196

FEDERAL PROJECT NO.
STB-3001(009)

PROJECT NO.

BRIDGE NO.

DESCRIPTION	DATE

IF A SEAL IS PRESENT ON THIS SHEET IT HAS BEEN ELECTRONICALLY SEALED AND DATED.

MISSOURI HIGHWAYS AND TRANSPORTATION COMMISSION
105 WEST CAPITOL
JEFFERSON CITY, MO 65102
1-888-ASK-MODOT (1-888-275-6636)

LEE'S SUMMIT MISSOURI

olsson
1301 BURLINGTON ST., STE. 100
NORTH KANSAS CITY, MO 64116
PHONE: 816.361.1177
CERT. OF AUTHORITY NO. 001592

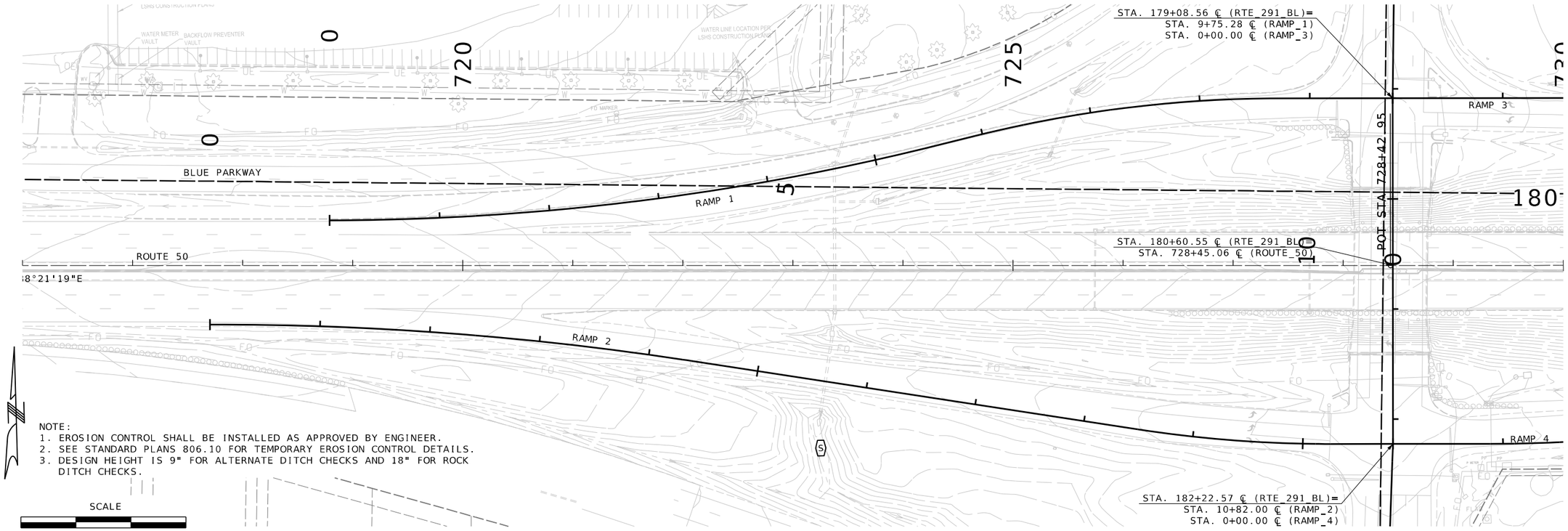

Reid Catt
2025.03.01 21:46:07-06'00'

REID BRENNEN CATT-ENGINEER
MO# PE-2010019516

DATE PREPARED
2/28/2025

ROUTE	STATE
50/291	MO
DISTRICT	SHEET NO.
KC	168

COUNTY
JACKSON

JOB NO.
J4P3196

FEDERAL PROJECT NO.
STB-3001(009)

PROJECT NO.

BRIDGE NO.

DATE	DESCRIPTION

IF A SEAL IS PRESENT ON THIS SHEET IT HAS BEEN ELECTRONICALLY SEALED AND DATED.

MISSOURI HIGHWAYS AND TRANSPORTATION COMMISSION

105 WEST CAPITOL
JEFFERSON CITY, MO 65102
1-888-ASK-MODOT (1-888-275-6636)

LEE'S SUMMIT MISSOURI

olsson
1301 BURLINGTON ST., STE. 100
NORTH KANSAS CITY, MO 64116
PHONE: 816.361.1177
CERT. OF AUTHORITY NO. 001592

EROSION CONTROL
INITIAL PHASE
SHEET 1 OF 15

F:\2021\04501-05000\021-04786\40-Design\Microstation\J4P3196\plan_sheets\10 Erosion Control\168_EC_01_J4P3196_I50_RTE50_INITIAL.dgn 4:36:04 PM 2/28/2025

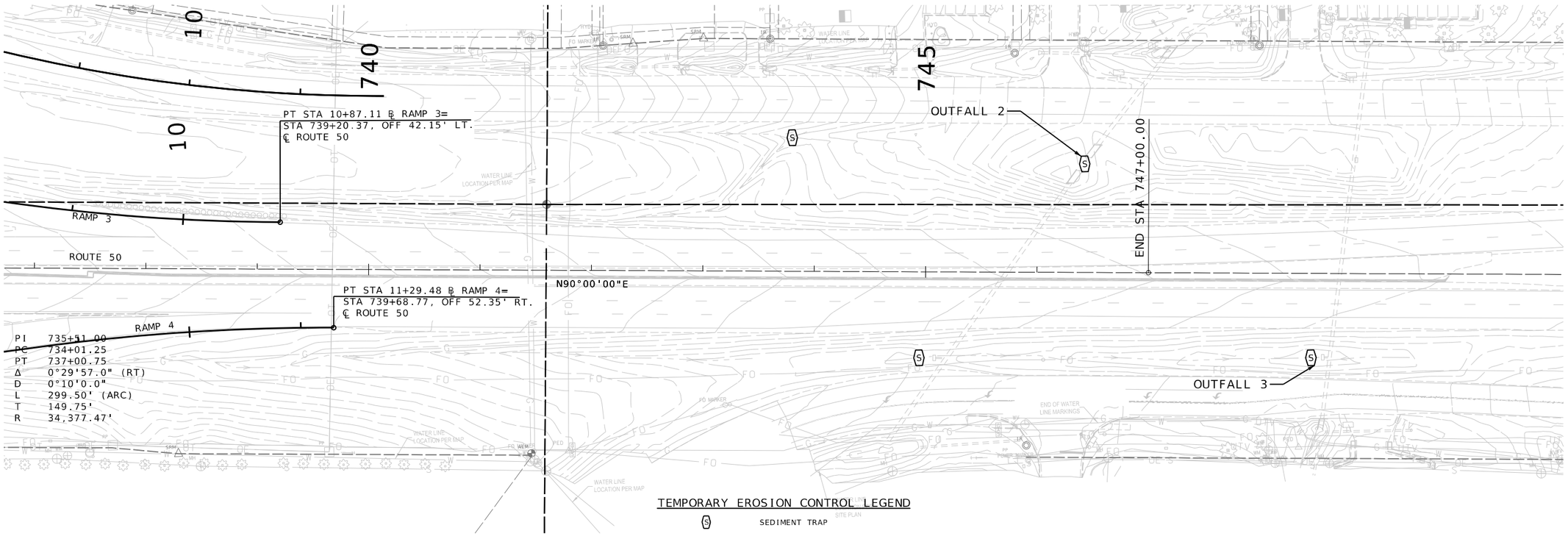

TEMPORARY EROSION CONTROL LEGEND

(S) SEDIMENT TRAP

SCALE

0 50 100 150

EROSION CONTROL
INITIAL PHASE
SHEET 2 OF 15

Reid Catt
2025.03.01 21:46:13-06'00'

REID BRENNEN CATT
NUMBER
PE-2010019516

REID BRENNEN CATT-ENGINEER
MO# PE-2010019516

DATE PREPARED
2/28/2025

ROUTE	STATE
50/291	MO

DISTRICT	SHEET NO.
KC	169

COUNTY
JACKSON

JOB NO.
J4P3196

FEDERAL PROJECT NO.
STB-3001(009)

PROJECT NO.

BRIDGE NO.

DESCRIPTION	DATE

IF A SEAL IS PRESENT ON THIS SHEET IT HAS BEEN ELECTRONICALLY SEALED AND DATED.

MISSOURI HIGHWAYS AND TRANSPORTATION COMMISSION

105 WEST CAPITOL
JEFFERSON CITY, MO 65102
1-888-ASK-MODOT (1-888-275-6636)

LEE'S SUMMIT MISSOURI

olsson
1301 BURLINGTON ST., STE. 100
NORTH KANSAS CITY, MO 64116
PHONE: 816.361.1177
CERT. OF AUTHORITY NO. 001592

F:\2021\04501-05000\021-04786\40-Design\Microstation\J4P3196\plan_sheets\10 Erosion Control\169_EC_02_J4P3196_I50_RTE50_INITIAL.dgn 4:36:23 PM 2/28/2025

TEMPORARY EROSION CONTROL LEGEND

(S) SEDIMENT TRAP

165 170 175 180 185

ROUTE 291

S03°06'35"W

S02°22'19"W

OUTFALL #4

PC STA 172+75.78

PT STA 177+18.47

BLUE PARKWAY

PI 174+97.13
PC 172+75.78
PT 177+18.47
Δ 0°44'16.2" (LT)
D 0°10'0.0"
L 442.69' (ARC)
T 221.35'
R 34,377.47'

POT STA 179+08.56

RAMP 3

ROUTE 50

POT STA 180+22.57

POT STA 184+24.49

OLDHAM PARKWAY

END STA 478+69.69 R2

HAMBLEN ROAD

S01°34'30"W

S03°41'33"W

S87°36'59"E

S25°01"W

EQUATION:
STA 187+22.39 BK =
STA 475+17.90

RAMP 1

RAMP 2

STA. 184+24.49 ℄ (RTE_291_BL)=
STA. 728+73.59 ℄ (OLDHAM_PKWY)

STA. 180+60.55 ℄ (RTE_291_BL)=
STA. 728+45.06 ℄ (ROUTE_50)

STA. 182+22.57 ℄ (RTE_291_BL)=
STA. 10+82.00 ℄ (RAMP_2)
STA. 0+00.00 ℄ (RAMP_4)

STA. 179+08.56 ℄ (RTE_291_BL)=
STA. 9+75.28 ℄ (RAMP_1)
STA. 0+00.00 ℄ (RAMP_3)

725

S69°14'59"E

OUTFALL #1

SCALE
0 50 100 150

EROSION CONTROL
INITIAL PHASE
SHEET 3 OF 15

Reid Catt
2025.03.01 21:46:18-06'00'

REID BRENNEN CATT
NUMBER
PE-2010019516

REID BRENNEN CATT-ENGINEER
MO# PE-2010019516

DATE PREPARED
2/28/2025

ROUTE	STATE
50/291	MO
DISTRICT	SHEET NO.
KC	170

COUNTY
JACKSON

JOB NO.
J4P3196

FEDERAL PROJECT NO.
STB-3001(009)

PROJECT NO.

BRIDGE NO.

DESCRIPTION	DATE

IF A SEAL IS PRESENT ON THIS SHEET IT HAS BEEN ELECTRONICALLY SEALED AND DATED.

MISSOURI HIGHWAYS AND TRANSPORTATION COMMISSION

105 WEST CAPITOL
JEFFERSON CITY, MO 65102
1-888-ASK-MODOT (1-888-275-6636)

LEE'S SUMMIT MISSOURI

olsson
1301 BURLINGTON ST., STE. 100
NORTH KANSAS CITY, MO 64116
PHONE: 816.361.1177
CERT. OF AUTHORITY NO. 001592

F:\2021\04501-05000\021-04786\40-Design\Microstation\J4P3196\plan_sheets\10 Erosion Control\170_EC_03_J4P3196_I50_RTE291_INITIAL.dgn 4:36:46 PM 2/28/2025

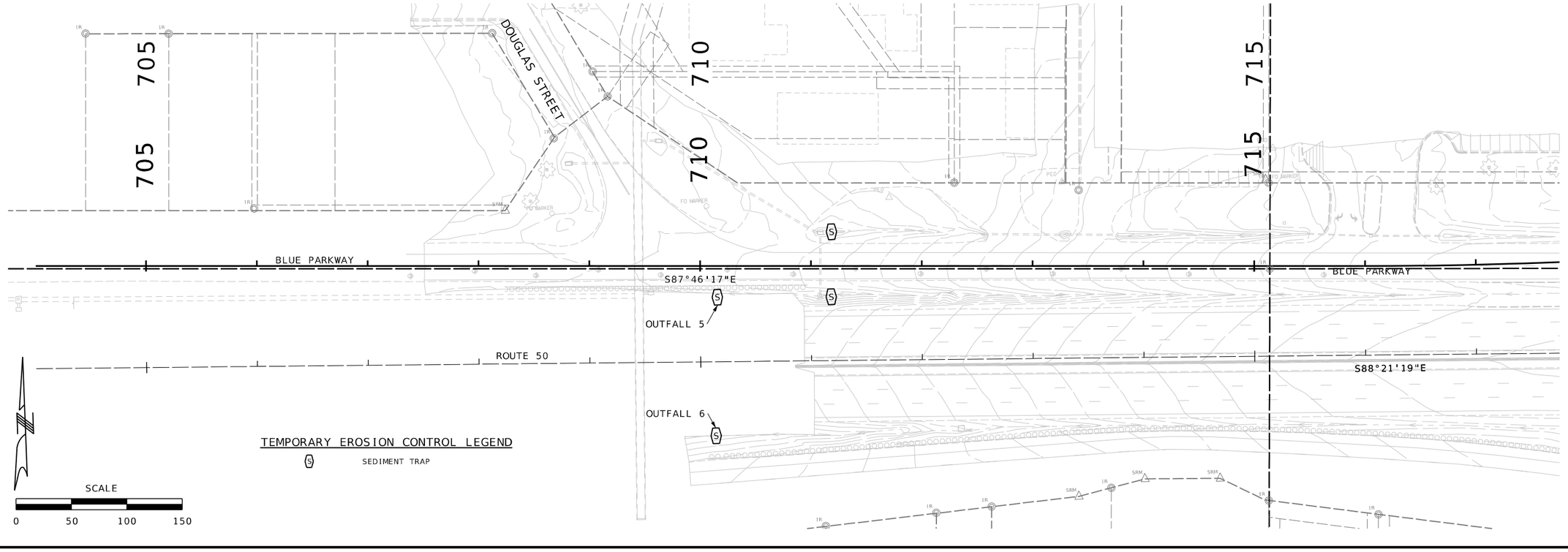

EROSION CONTROL
INITIAL PHASE
SHEET 4 OF 15

Reid Catt
2025.03.01 21:54:54-06'00'

REID BRENNEN CATT
NUMBER
PE-2010019516

REID BRENNEN CATT-ENGINEER
MO# PE-2010019516

DATE PREPARED	2/28/2025
ROUTE	50/291
STATE	MO
DISTRICT	KC
SHEET NO.	171
COUNTY	JACKSON
JOB NO.	J4P3196
FEDERAL PROJECT NO.	STB-3001(009)
PROJECT NO.	
BRIDGE NO.	

DESCRIPTION | DATE

IF A SEAL IS PRESENT ON THIS SHEET IT HAS BEEN ELECTRONICALLY SEALED AND DATED.

MISSOURI HIGHWAYS AND TRANSPORTATION COMMISSION

105 WEST CAPITOL
JEFFERSON CITY, MO 65102
1-888-ASK-MODOT (1-888-275-6636)

LEE'S SUMMIT MISSOURI

olsson
1301 BURLINGTON ST., STE. 100
NORTH KANSAS CITY, MO 64116
PHONE: 816.361.1177
CERT. OF AUTHORITY NO. 001592

F:\2021\04501-05000\021-04786\40-Design\Microstation\J4P3196\plan_sheets\10 Erosion Control\171_EC_04_J4P3196_I50_BLUE_PKWY_INITIAL.dgn 4:37:11 PM 2/28/2025

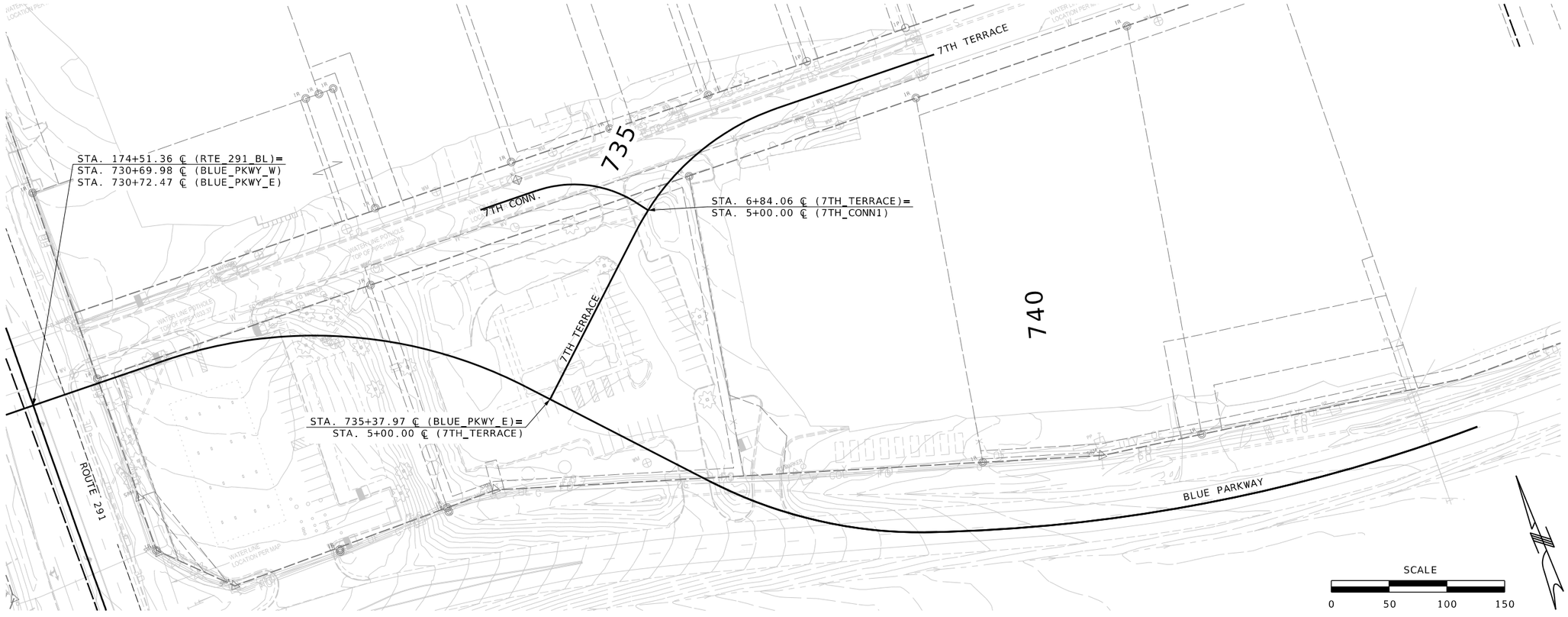

TEMPORARY EROSION CONTROL LEGEND

SEDIMENT TRAP

EROSION CONTROL
INITIAL PHASE
SHEET 5 OF 15

Reid Catt
2025.03.01 21:53:50-06'00'

REID BRENNEN CATT
NUMBER
PE-2010019516

REID BRENNEN CATT-ENGINEER
MO# PE-2010019516

DATE PREPARED
2/28/2025

ROUTE	STATE
50/291	MO
DISTRICT	SHEET NO.
KC	172

COUNTY
JACKSON

JOB NO.
J4P3196

FEDERAL PROJECT NO.
STB-3001(009)

PROJECT NO.

BRIDGE NO.

IF A SEAL IS PRESENT ON THIS SHEET IT HAS BEEN ELECTRONICALLY SEALED AND DATED.

DESCRIPTION	DATE

MISSOURI HIGHWAYS AND TRANSPORTATION COMMISSION
105 WEST CAPITOL
JEFFERSON CITY, MO 65102
1-888-ASK-MODOT (1-888-275-6636)

LEE'S SUMMIT MISSOURI

olsson
1301 BURLINGTON ST., STE. 100
NORTH KANSAS CITY, MO 64116
PHONE: 816.361.1177
CERT. OF AUTHORITY NO. 001592

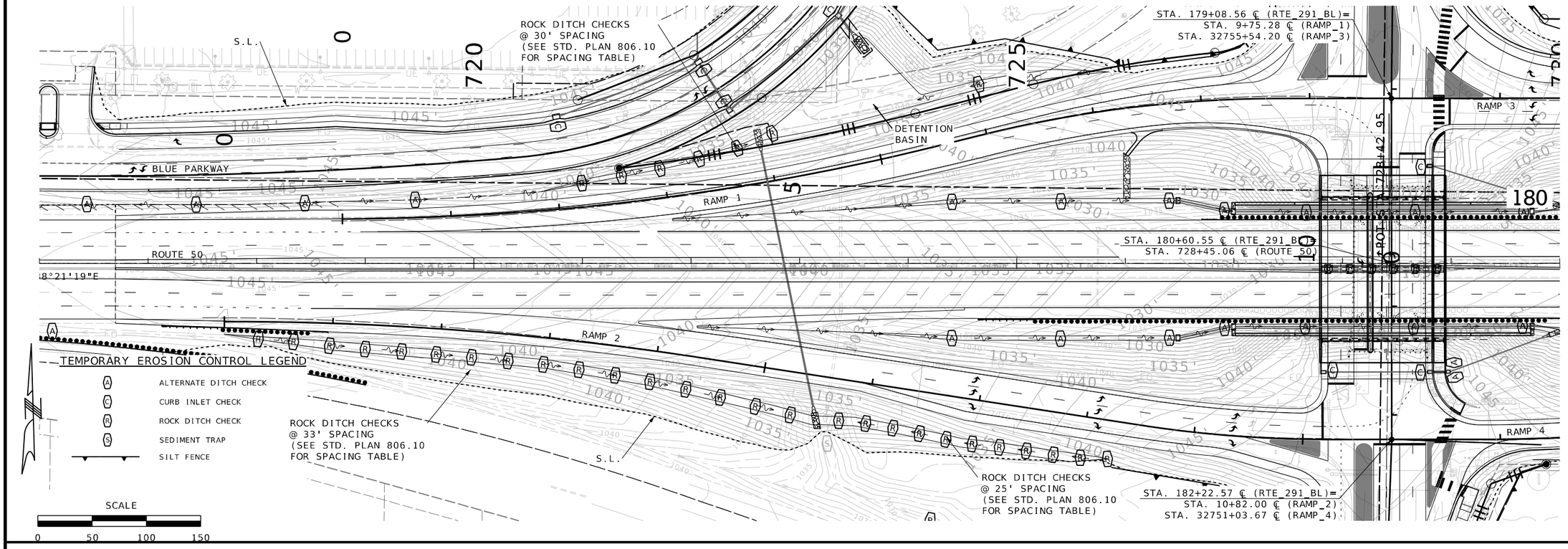

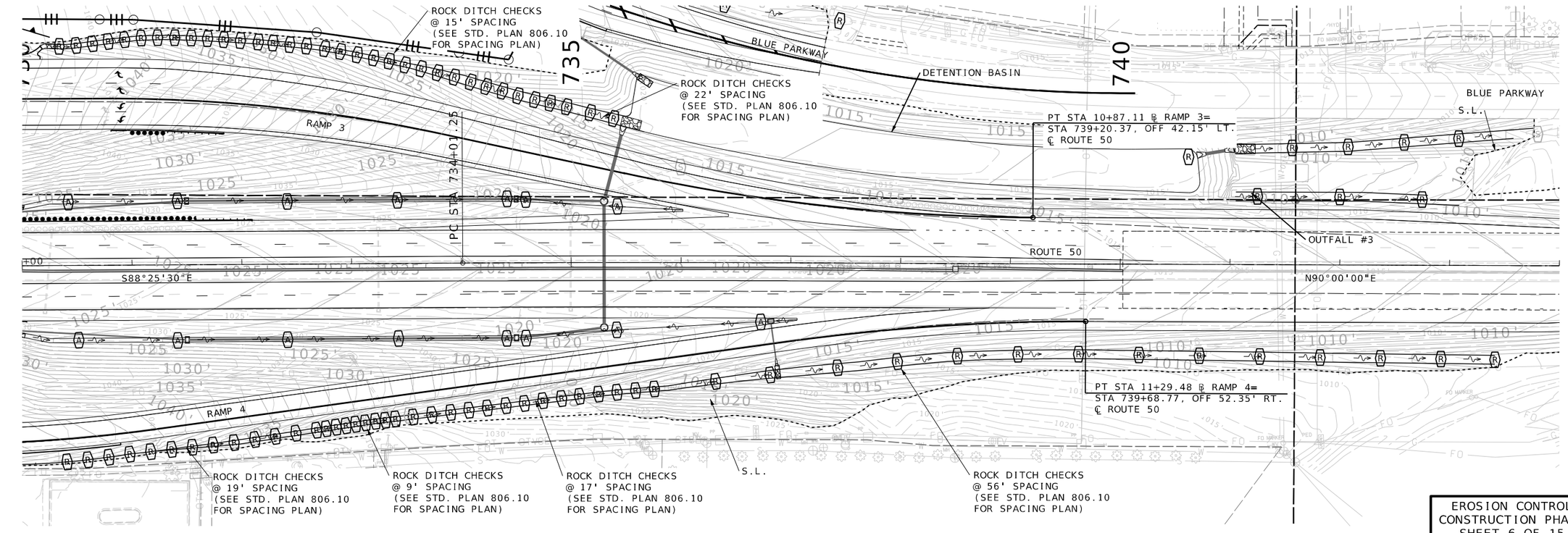

EROSION CONTROL
CONSTRUCTION PHASE
SHEET 6 OF 15

Reid Catt
2025.03.01 21:52:25-06'00'

REID BRENNEN CATT-ENGINEER
MO# PE-2010019516

DATE PREPARED
2/28/2025

ROUTE	STATE
50/291	MO
DISTRICT	SHEET NO.
KC	173

COUNTY
JACKSON

JOB NO.
J4P3196

FEDERAL PROJECT NO.
STB-3001(009)

PROJECT NO.

BRIDGE NO.

IF A SEAL IS PRESENT ON THIS SHEET IT HAS BEEN ELECTRONICALLY SEALED AND DATED.

DESCRIPTION | DATE

MISSOURI HIGHWAYS AND TRANSPORTATION COMMISSION
105 WEST CAPITOL
JEFFERSON CITY, MO 65102
1-888-ASK-MODOT (1-888-275-6636)

LEE'S SUMMIT MISSOURI

olsson
1301 BURLINGTON ST., STE. 100
NORTH KANSAS CITY, MO 64116
PHONE: 816.361.1177
CERT. OF AUTHORITY NO. 001592

F:\2021\04501-05000\021-04786\40-Design\Microstation\J4P3196\plan_sheets\10 Erosion Control\173_EC_06_J4P3196_I50_RTE50_CONST.dgn 4:38:03 PM 2/28/2025

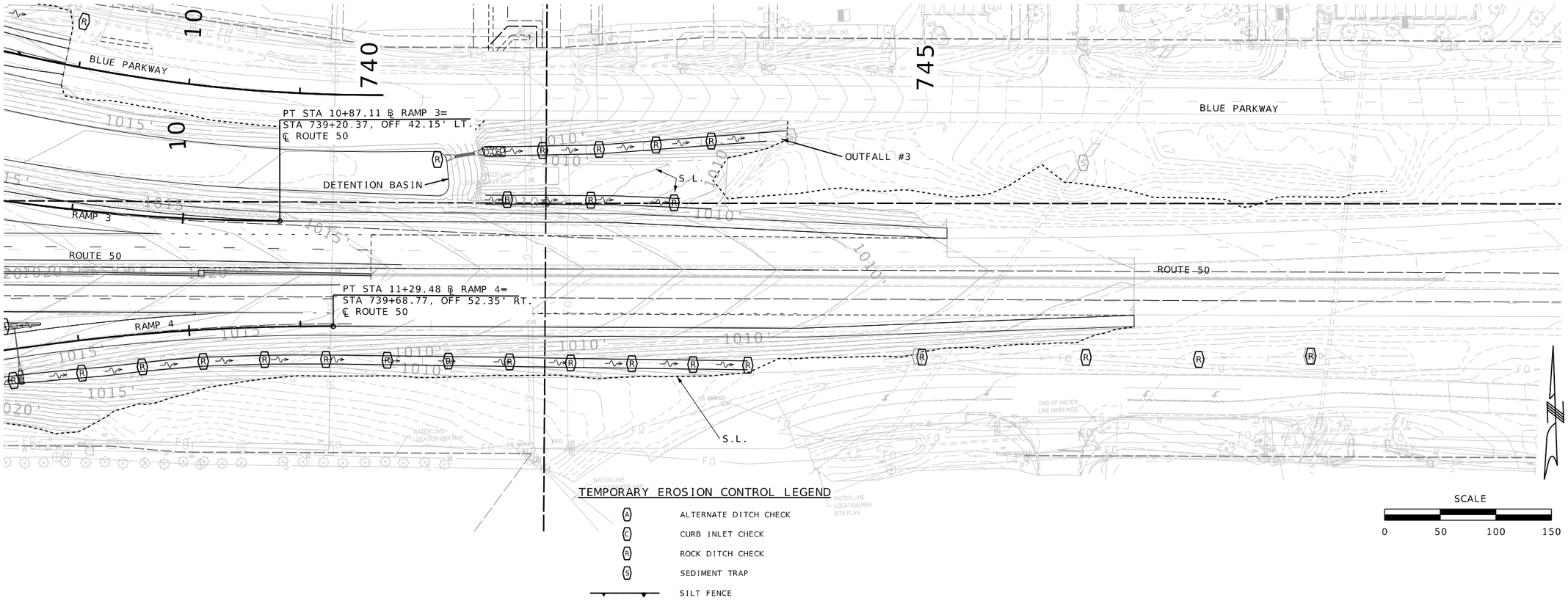

EROSION CONTROL
CONSTRUCTION PHASE
SHEET 7 OF 15

Reid Catt
2025.03.01 21:46:26-06'00'

REID BRENNEN CATT-ENGINEER
MO# PE-2010019516

DATE PREPARED
2/28/2025

ROUTE	STATE
50/291	MO

DISTRICT	SHEET NO.
KC	174

COUNTY
JACKSON

JOB NO.
J4P3196

FEDERAL PROJECT NO.
STB-3001(009)

PROJECT NO.

BRIDGE NO.

DESCRIPTION	DATE

IF A SEAL IS PRESENT ON THIS SHEET IT HAS BEEN ELECTRONICALLY SEALED AND DATED.

MISSOURI HIGHWAYS AND TRANSPORTATION COMMISSION
105 WEST CAPITOL
JEFFERSON CITY, MO 65102
1-888-ASK-MODOT (1-888-275-6636)

LEE'S SUMMIT MISSOURI

olsson
1301 BURLINGTON ST., STE. 100
NORTH KANSAS CITY, MO 64116
PHONE: 816.361.1177
CERT. OF AUTHORITY NO. 001592

F:\2021\04501-05000\021-04786\40-Design\Microstation\J4P3196\plan_sheets\10 Erosion Control\174_EC_07_J4P3196_I50_RTE50_CONST.dgn 4:38:26 PM 2/28/2025

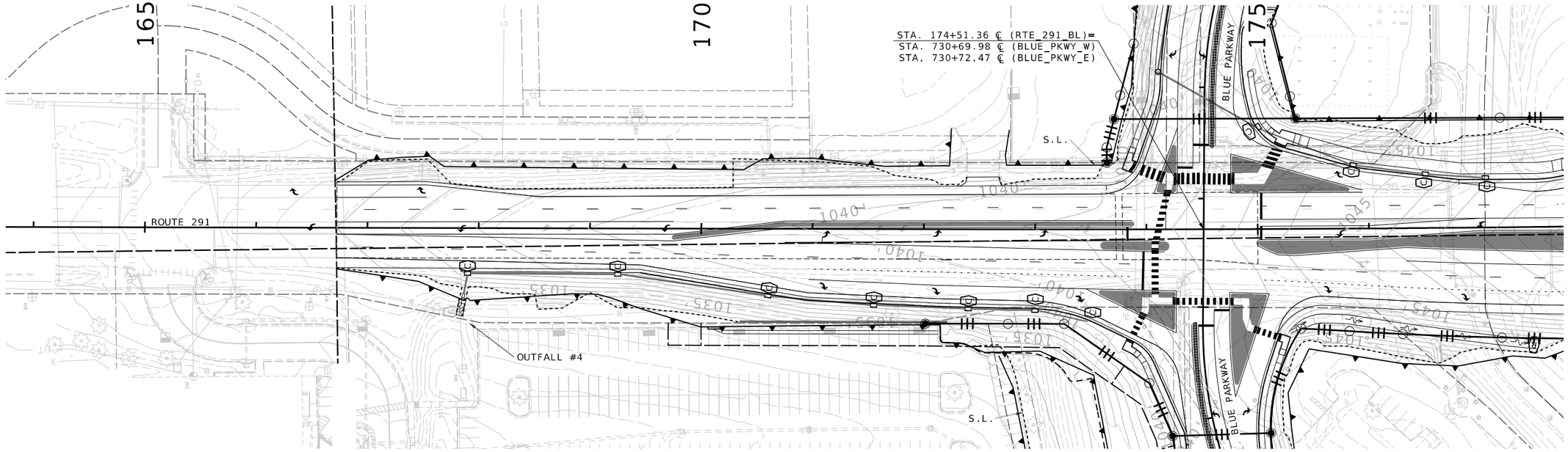

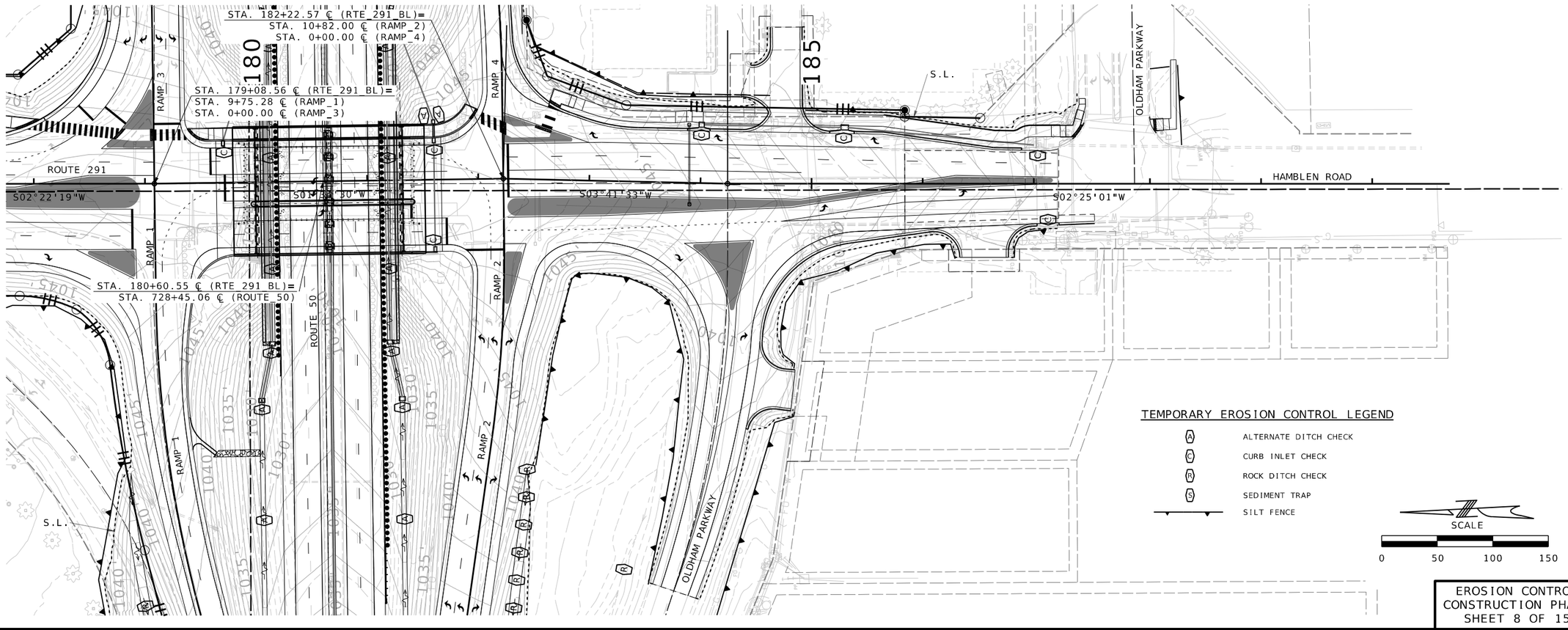

EROSION CONTROL
CONSTRUCTION PHASE
SHEET 8 OF 15

Reid Catt
2025.03.01 21:46:32-06'00'

REID BRENNEN CATT NUMBER PE-2010019516

REID BRENNEN CATT-ENGINEER
MO# PE-2010019516

DATE PREPARED
2/28/2025

ROUTE	STATE
50/291	MO
DISTRICT	SHEET NO.
KC	175

COUNTY
JACKSON

JOB NO.
J4P3196

FEDERAL PROJECT NO.
STB-3001(009)

PROJECT NO.

BRIDGE NO.

DESCRIPTION	DATE

IF A SEAL IS PRESENT ON THIS SHEET IT HAS BEEN ELECTRONICALLY SEALED AND DATED.

MISSOURI HIGHWAYS AND TRANSPORTATION COMMISSION
105 WEST CAPITOL
JEFFERSON CITY, MO 65102
1-888-ASK-MODOT (1-888-275-6636)

LEE'S SUMMIT MISSOURI

olsson
1301 BURLINGTON ST., STE. 100
NORTH KANSAS CITY, MO 64116
PHONE: 816.361.1177
CERT. OF AUTHORITY NO. 001592

F:\2021\04501-05000\021-04786\40-Design\Microstation\J4P3196\plan_sheets\10 Erosion Control\175_EC_08_J4P3196_I50_RTE291_CONST.dgn 4:38:50 PM 2/28/2025

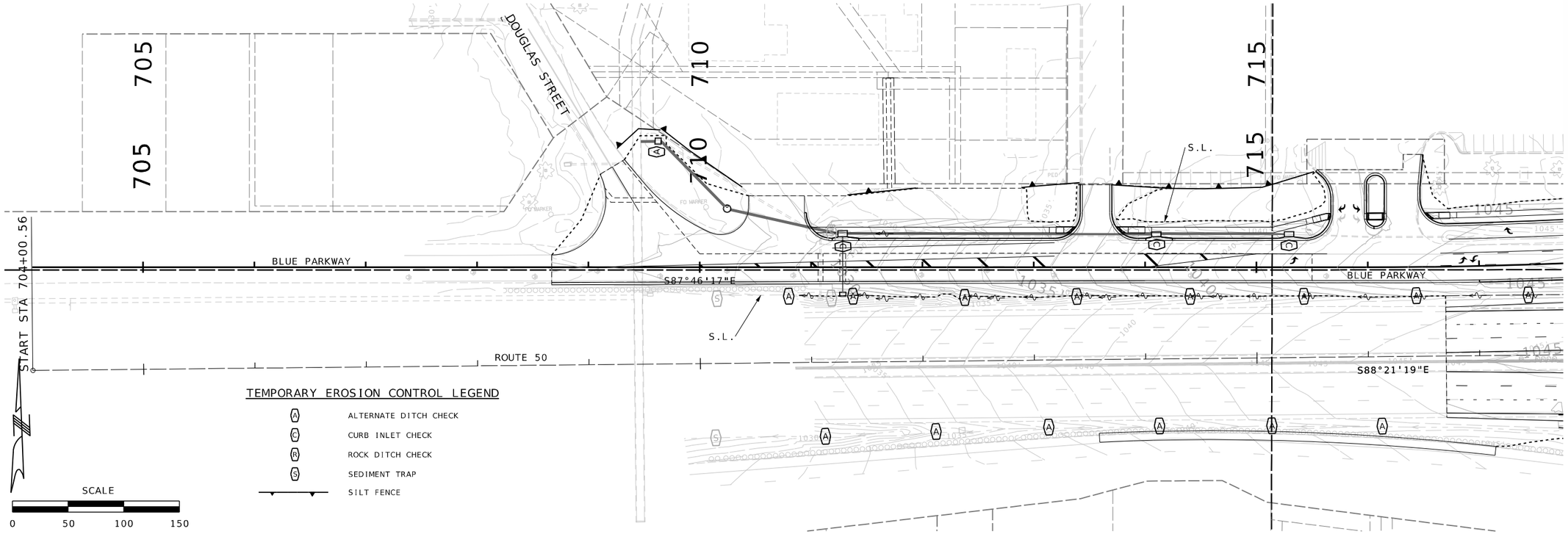

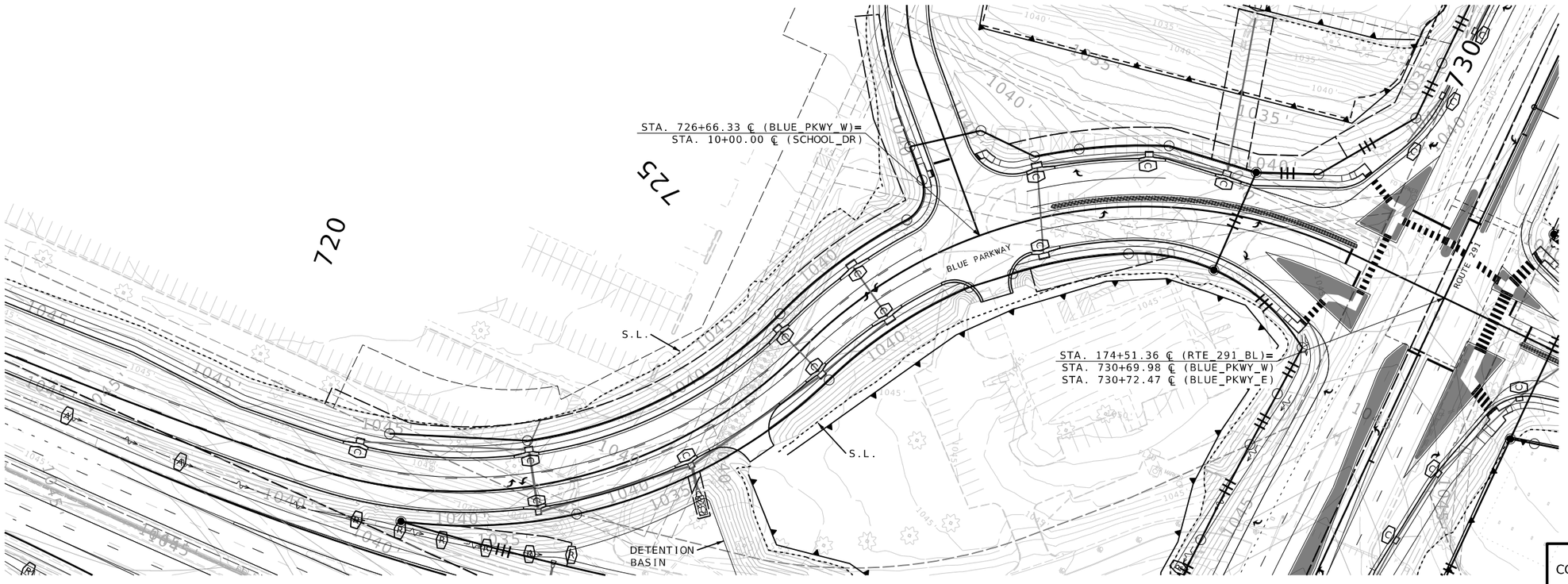

Reid Catt
2025.03.01 21:54:32-06'00'

REID BRENNEN CATT-ENGINEER
MO# PE-2010019516

DATE PREPARED
2/28/2025

ROUTE	STATE
50/291	MO
DISTRICT	SHEET NO.
KC	176

COUNTY
JACKSON

JOB NO.
J4P3196

FEDERAL PROJECT NO.
STB-3001(009)

PROJECT NO.

BRIDGE NO.

IF A SEAL IS PRESENT ON THIS SHEET IT HAS BEEN ELECTRONICALLY SEALED AND DATED.

DESCRIPTION	DATE

MISSOURI HIGHWAYS AND TRANSPORTATION COMMISSION

MoDOT

105 WEST CAPITOL
JEFFERSON CITY, MO 65102
1-888-ASK-MODOT (1-888-275-6636)

LEE'S SUMMIT MISSOURI

olsson
1301 BURLINGTON ST., STE. 100
NORTH KANSAS CITY, MO 64116
PHONE: 816.361.1177
CERT. OF AUTHORITY NO. 001592

EROSION CONTROL
CONSTRUCTION PHASE
SHEET 9 OF 15

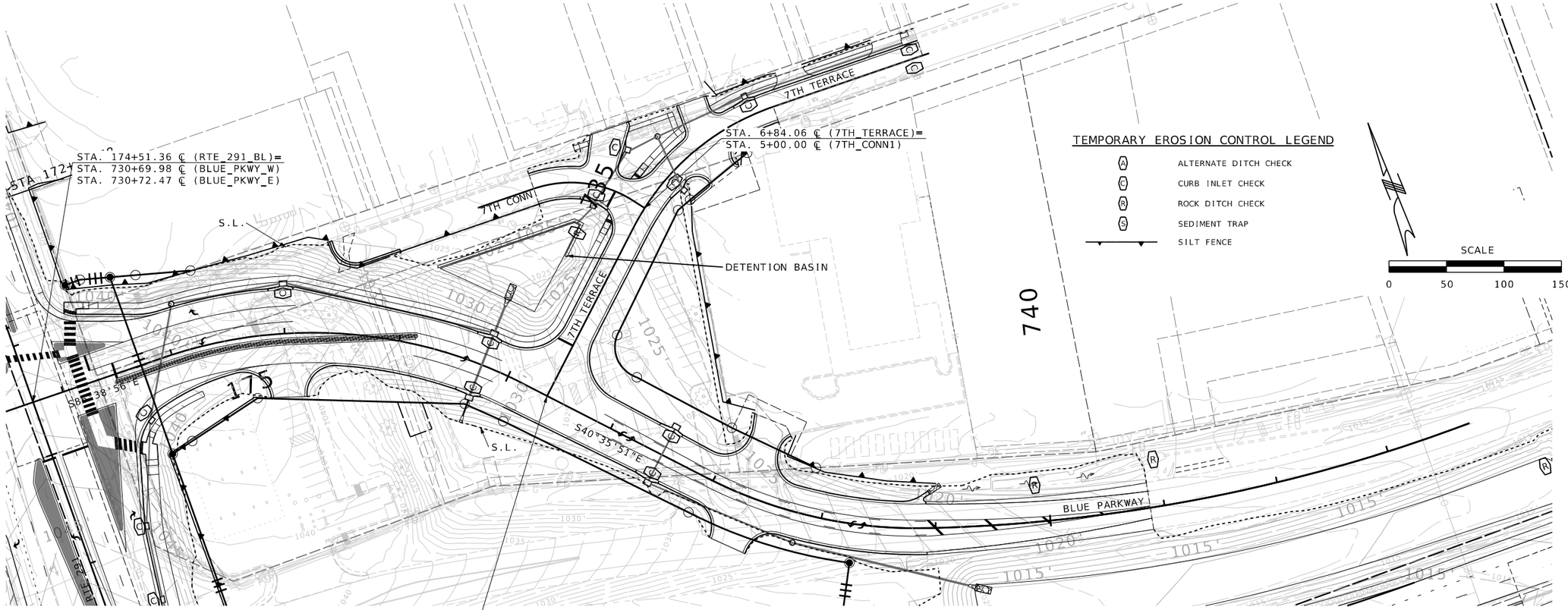

TEMPORARY EROSION CONTROL LEGEND

- (A) ALTERNATE DITCH CHECK
- (C) CURB INLET CHECK
- (R) ROCK DITCH CHECK
- (S) SEDIMENT TRAP
- SILT FENCE

SCALE

0 50 100 150

EROSION CONTROL
CONSTRUCTION PHASE
SHEET 10 OF 15

Reid Catt
2025.03.01 21:54:24-06'00'

REID BRENNEN CATT-ENGINEER
MO# PE-2010019516

DATE PREPARED
2/28/2025

ROUTE	STATE
50/291	MO
DISTRICT	SHEET NO.
KC	177

COUNTY
JACKSON

JOB NO.
J4P3196

FEDERAL PROJECT NO.
STB-3001(009)

PROJECT NO.

BRIDGE NO.

DESCRIPTION	DATE

MISSOURI HIGHWAYS AND TRANSPORTATION COMMISSION
105 WEST CAPITOL
JEFFERSON CITY, MO 65102
1-888-ASK-MODOT (1-888-275-6636)

LEE'S SUMMIT MISSOURI

olsson
1301 BURLINGTON ST., STE. 100
NORTH KANSAS CITY, MO 64116
PHONE: 816.361.1177
CERT. OF AUTHORITY NO. 001592

IF A SEAL IS PRESENT ON THIS SHEET IT HAS BEEN ELECTRONICALLY SEALED AND DATED.

F:\2021\04501-05000\021-04786\40-Design\Microstation\J4P3196\plan_sheets\10 Erosion Control\177_EC_10_J4P3196_I50_BLUE_PKWY_CONST.dgn 4:39:45 PM 2/28/2025

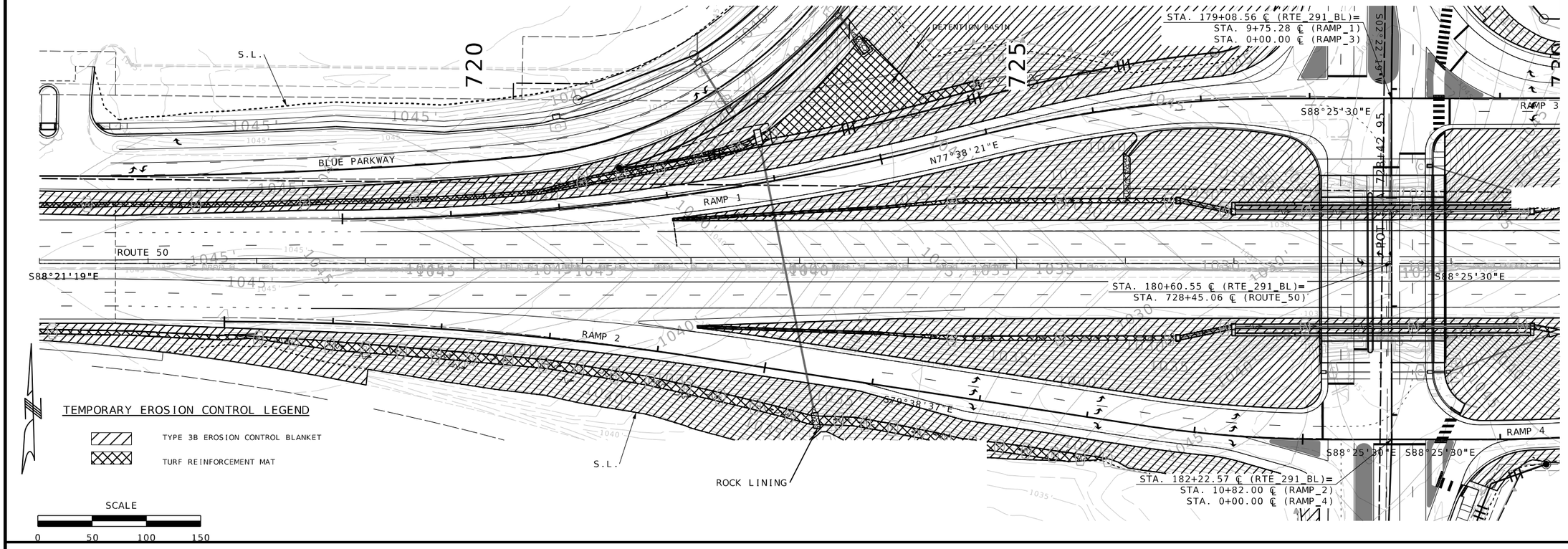

Reid Catt
2025.03.01 21:54:40-06'00'

REID BRENNEN CATT-ENGINEER
MO# PE-2010019516

DATE PREPARED
2/28/2025

ROUTE	STATE
50/291	MO
DISTRICT	SHEET NO.
KC	178

COUNTY
JACKSON

JOB NO.
J4P3196

FEDERAL PROJECT NO.
STB-3001(009)

PROJECT NO.

BRIDGE NO.

IF A SEAL IS PRESENT ON THIS SHEET IT HAS BEEN ELECTRONICALLY SEALED AND DATED.

DESCRIPTION

DATE

MISSOURI HIGHWAYS AND TRANSPORTATION COMMISSION
105 WEST CAPITOL
JEFFERSON CITY, MO 65102
1-888-ASK-MODOT (1-888-275-6636)

LEE'S SUMMIT MISSOURI

olsson
1301 BURLINGTON ST., STE. 100
NORTH KANSAS CITY, MO 64116
PHONE: 816.361.1177
CERT. OF AUTHORITY NO. 001592

EROSION CONTROL
FINAL PHASE
SHEET 11 OF 15

F:\2021\04501-05000\021-04786\40-Design\Microstation\J4P3196\plan_sheets\10 Erosion Control\178_EC_11_J4P3196_I50_RTE50_FINAL.dgn 4:40:12 PM 2/28/2025

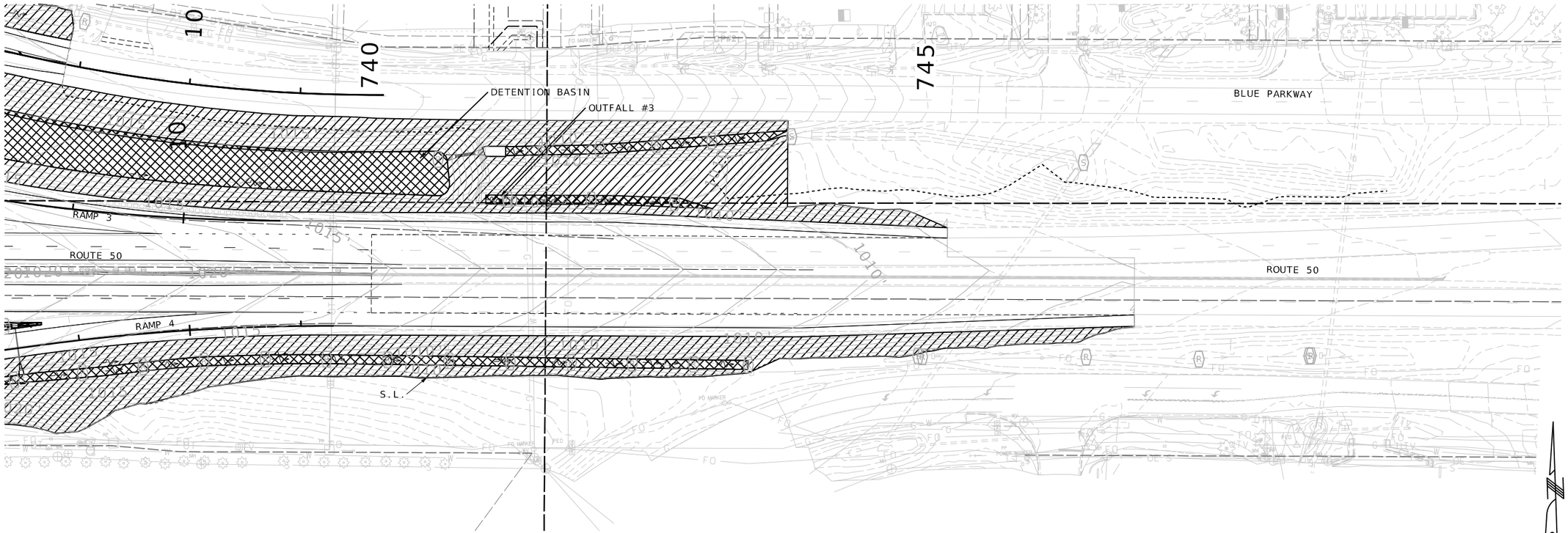

TEMPORARY EROSION CONTROL LEGEND

TYPE 3B EROSION CONTROL BLANKET

TURF REINFORCEMENT MAT

SCALE

0 50 100 150

EROSION CONTROL
FINAL PHASE
SHEET 12 OF 15

Reid Catt
2025.03.01 21:54:00-06'00'

REID BRENNEN CATT-ENGINEER
MO# PE-2010019516

DATE PREPARED
2/28/2025

ROUTE	STATE
50/291	MO

DISTRICT	SHEET NO.
KC	179

COUNTY
JACKSON

JOB NO.
J4P3196

FEDERAL PROJECT NO.
STB-3001(009)

PROJECT NO.

BRIDGE NO.

DESCRIPTION	DATE

IF A SEAL IS PRESENT ON THIS SHEET IT HAS BEEN ELECTRONICALLY SEALED AND DATED.

MISSOURI HIGHWAYS AND TRANSPORTATION COMMISSION
105 WEST CAPITOL
JEFFERSON CITY, MO 65102
1-888-ASK-MODOT (1-888-275-6636)

LEE'S SUMMIT MISSOURI

olsson
1301 BURLINGTON ST., STE. 100
NORTH KANSAS CITY, MO 64116
PHONE: 816.361.1177
CERT. OF AUTHORITY NO. 001592

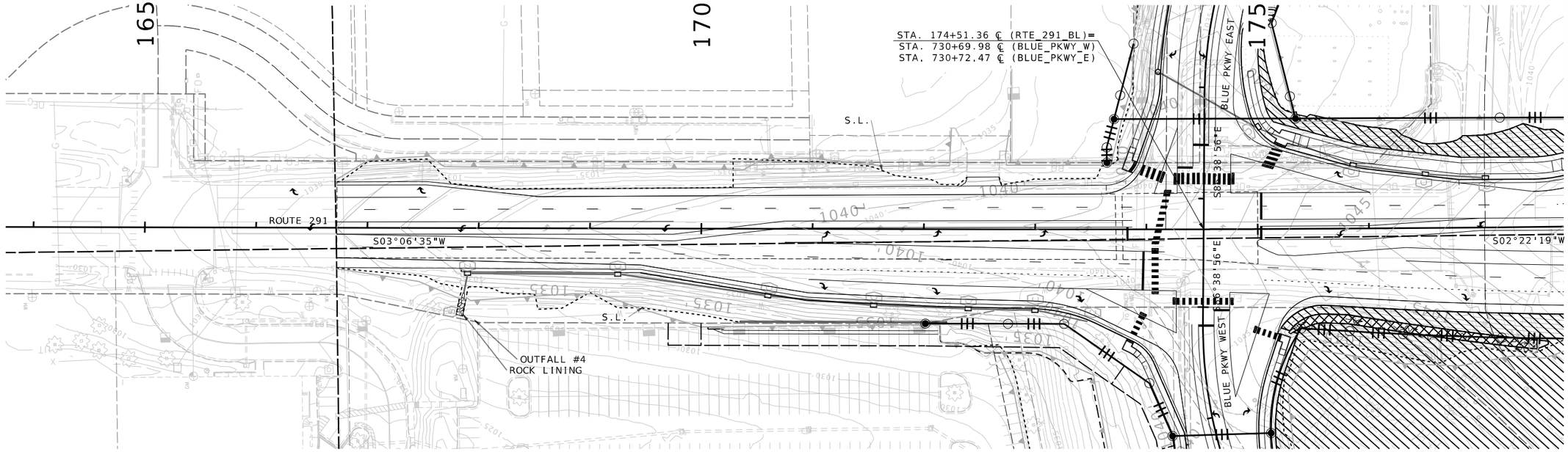

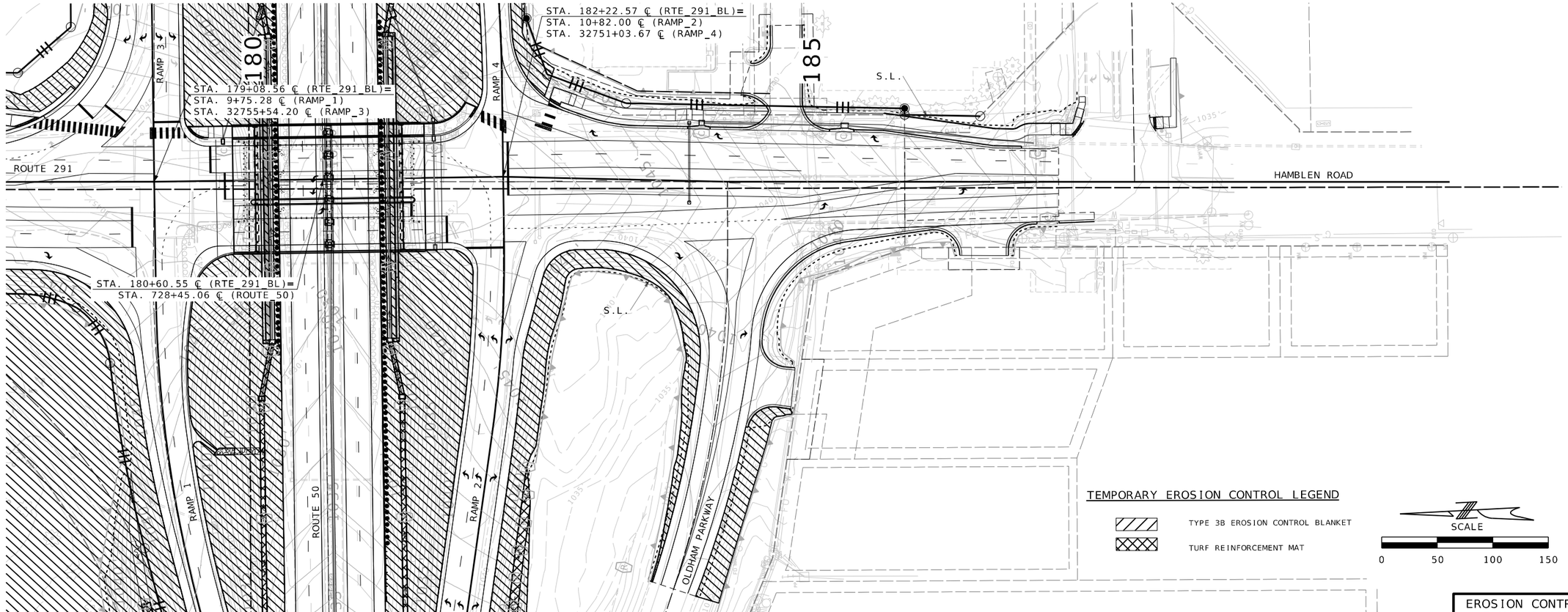

TEMPORARY EROSION CONTROL LEGEND

TYPE 3B EROSION CONTROL BLANKET

TURF REINFORCEMENT MAT

SCALE

0 50 100 150

EROSION CONTROL
FINAL PHASE
SHEET 13 OF 15

Reid Catt
2025.03.01 21:54:08-06'00'

REID BRENNEN CATT
NUMBER
PE-2010019516

REID BRENNEN CATT-ENGINEER
MO# PE-2010019516

DATE PREPARED
2/28/2025

ROUTE	STATE
50/291	MO
DISTRICT	SHEET NO.
KC	180

COUNTY
JACKSON

JOB NO.
J4P3196

FEDERAL PROJECT NO.
STB-3001(009)

PROJECT NO.

BRIDGE NO.

IF A SEAL IS PRESENT ON THIS SHEET IT HAS BEEN ELECTRONICALLY SEALED AND DATED.

DESCRIPTION	DATE

MISSOURI HIGHWAYS AND TRANSPORTATION COMMISSION
105 WEST CAPITOL
JEFFERSON CITY, MO 65102
1-888-ASK-MODOT (1-888-275-6636)

LEE'S SUMMIT MISSOURI

olsson
1301 BURLINGTON ST., STE. 100
NORTH KANSAS CITY, MO 64116
PHONE: 816.361.1177
CERT. OF AUTHORITY NO. 001592

F:\2021\04501-05000\021-04786\40-Design\Microstation\J4P3196\plan_sheets\10 Erosion Control\180_EC_13_J4P3196_I50_RTE291_FINAL.dgn 4:40:57 PM 2/28/2025

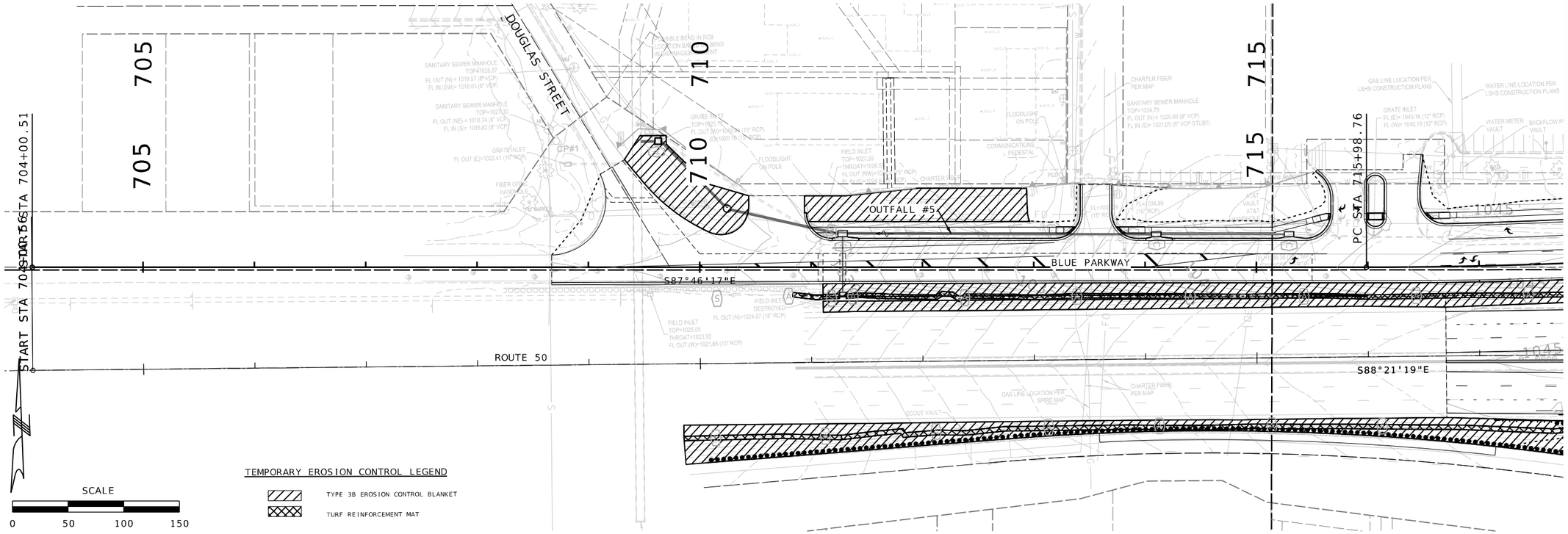

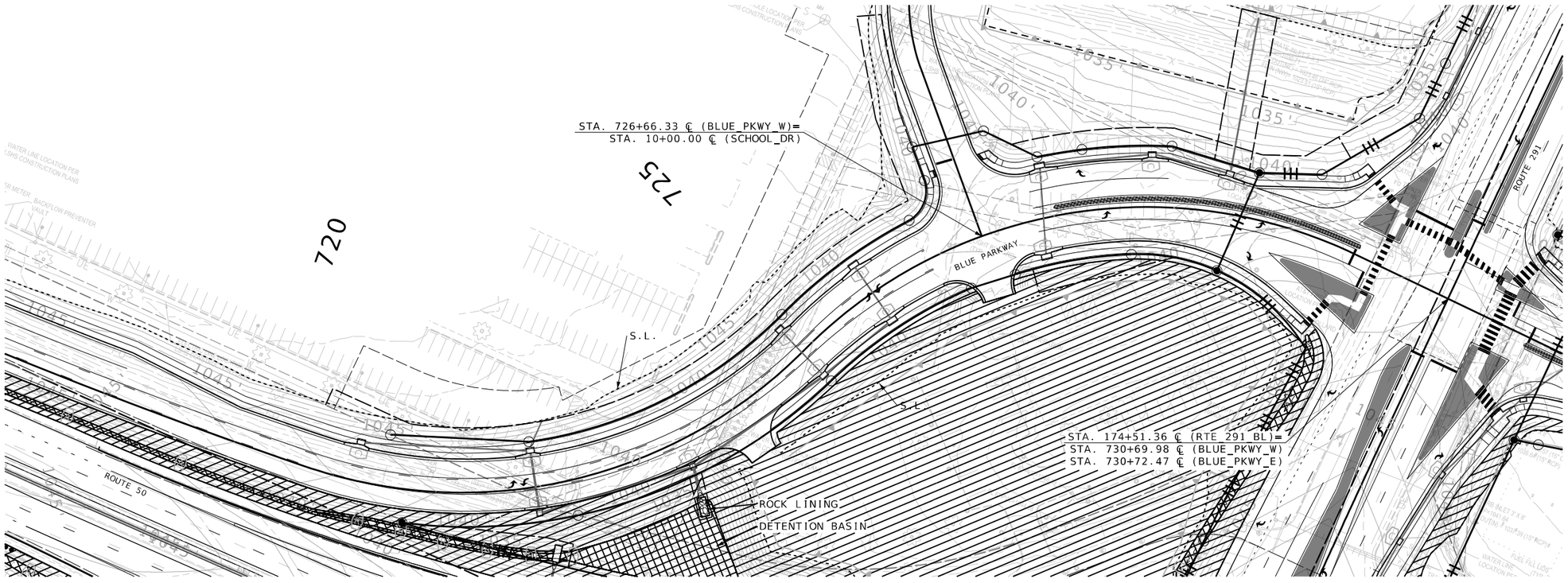

EROSION CONTROL
FINAL PHASE
SHEET 14 OF 15

Reid Catt
2025.03.01 21:54:16-06'00'

REID BRENNEN CATT-ENGINEER
MO# PE-2010019516

DATE PREPARED
2/28/2025

ROUTE	STATE
50/291	MO
DISTRICT	SHEET NO.
KC	181

COUNTY
JACKSON

JOB NO.
J4P3196

FEDERAL PROJECT NO.
STB-3001(009)

PROJECT NO.

BRIDGE NO.

DESCRIPTION	DATE

IF A SEAL IS PRESENT ON THIS SHEET IT HAS BEEN ELECTRONICALLY SEALED AND DATED.

MISSOURI HIGHWAYS AND TRANSPORTATION COMMISSION

105 WEST CAPITOL
JEFFERSON CITY, MO 65102
1-888-ASK-MODOT (1-888-275-6636)

LEE'S SUMMIT MISSOURI

olsson
1301 BURLINGTON ST., STE. 100
NORTH KANSAS CITY, MO 64116
PHONE: 816.361.1177
CERT. OF AUTHORITY NO. 001592

F:\2021\04501-05000\021-04786\40-Design\Microstation\J4P3196\plan_sheets\10 Erosion Control\181_EC_14_J4P3196_I50_BLUE_PKWY_FINAL.dgn 4:41:25 PM 2/28/2025

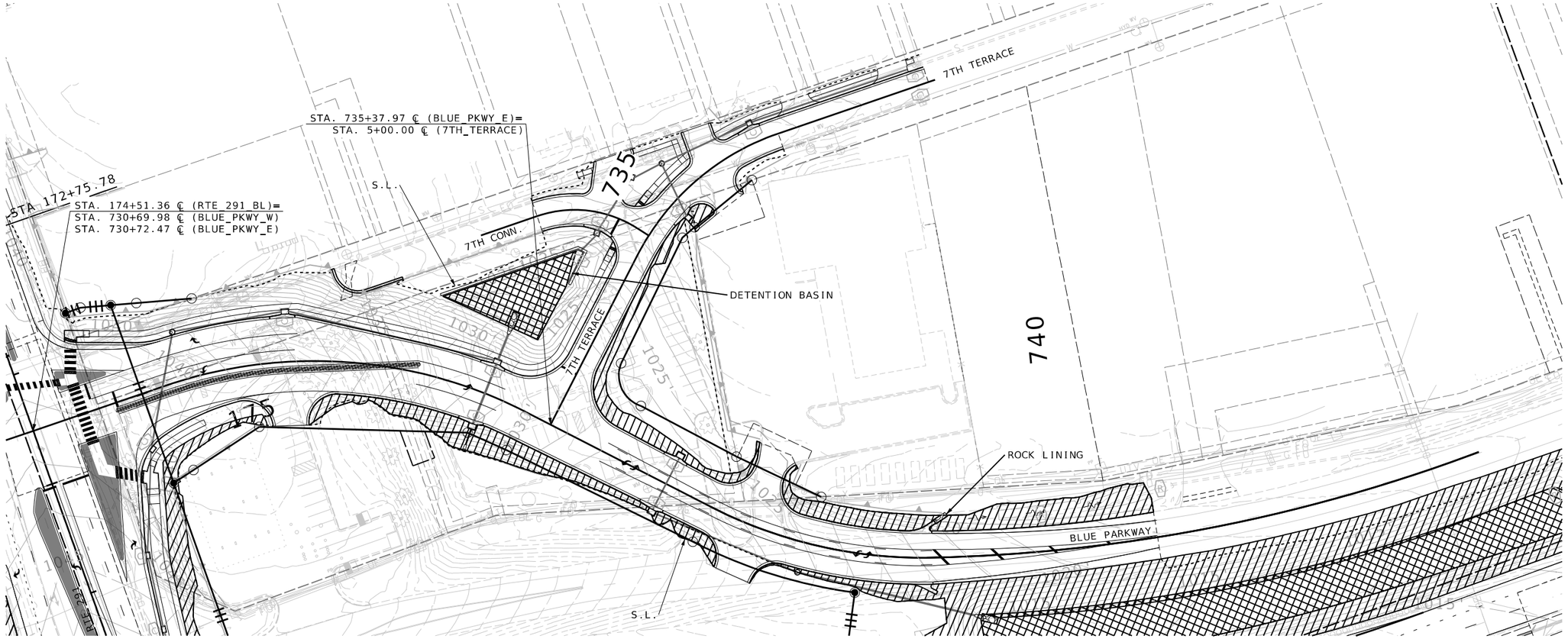
STA. 735+37.97 ℄ (BLUE_PKWY_E)=
STA. 5+00.00 ℄ (7TH_TERRACE)
STA. 172+75.78
STA. 174+51.36 ℄ (RTE 291 BL)=
STA. 730+69.98 ℄ (BLUE_PKWY_W)
STA. 730+72.47 ℄ (BLUE_PKWY_E)
7TH TERRACE
S.L.
7TH CONN.
DETENTION BASIN
7TH TERRACE
ROCK LINING
BLUE PARKWAY
S.L.
735
740
175
1000
1025
1030
1035
1040
1045
1050
1055
1060
1065
1070
1075
1080
1085
1090
1095
1100
1105
1110
1115
1120
1125
1130
1135
1140
1145
1150
1155
1160
1165
1170
1175
1180
1185
1190
1195
1200
1205
1210
1215
1220

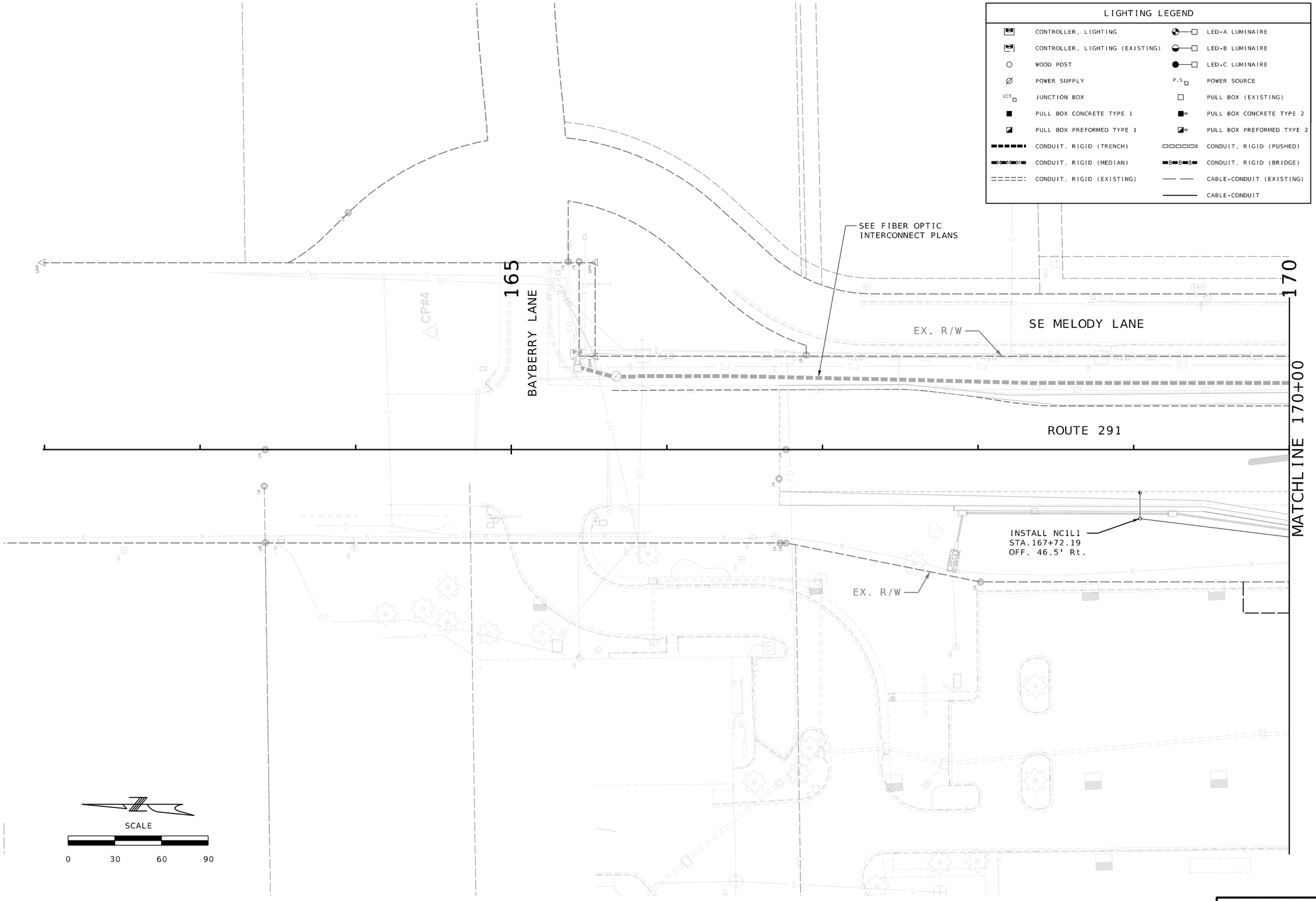

LIGHTING PLAN
SHEET 1 OF 15

JEREMY SCOTT STRETZ
NUMBER PE-2017023856
STATE OF MISSOURI
PROFESSIONAL ENGINEER

Jeremy Stretz 2025.04.08 17:51:54-05'00'

DATE PREPARED
4/8/2025

ROUTE	STATE
50/291	MO
DISTRICT	SHEET NO.
KC	183

COUNTY
JACKSON

JOB NO.
J4P3196

FEDERAL PROJECT NO.
STB-3001(009)

PROJECT NO.

BRIDGE NO.

IF A SEAL IS PRESENT ON THIS SHEET IT HAS BEEN ELECTRONICALLY SEALED AND DATED.

DESCRIPTION	DATE

MISSOURI HIGHWAYS AND TRANSPORTATION COMMISSION
105 WEST CAPITOL
JEFFERSON CITY, MO 65102
1-888-ASK-MODOT (1-888-275-6636)

LEE'S SUMMIT MISSOURI

olsson
1301 BURLINGTON ST., STE. 100
NORTH KANSAS CITY, MO 64116
PHONE: 816.361.1177
CERT. OF AUTHORITY NO. 001592

F:\2021\04501-05000\021-04786\40-Design\Microstation\J4P3196\plan_sheets\11 Lighting\183_LT_01_J4P3196.dgn 2:48:51 PM 4/8/2025

LIGHTING LEGEND

CONTROLLER, LIGHTING		LED-A LUMINAIRE	
CONTROLLER, LIGHTING (EXISTING)		LED-B LUMINAIRE	
WOOD POST		LED-C LUMINAIRE	
POWER SUPPLY		POWER SOURCE	
JUNCTION BOX		PULL BOX (EXISTING)	
PULL BOX CONCRETE TYPE 1		PULL BOX CONCRETE TYPE 2	
PULL BOX PREFORMED TYPE 1		PULL BOX PREFORMED TYPE 2	
CONDUIT, RIGID (TRENCH)		CONDUIT, RIGID (PUSHED)	
CONDUIT, RIGID (MEDIAN)		CONDUIT, RIGID (BRIDGE)	
CONDUIT, RIGID (EXISTING)		CABLE-CONDUIT (EXISTING)	
		CABLE-CONDUIT	

SCALE

0 30 60 90

7TH TERRACE

BLUE PARKWAY

EXISTING BLUE PARKWAY

170

175

MATCHLINE 170+00

MATCHLINE 178+00

EX.R/W

INSTALL NC1L4
STA:173+97.07
OFF:87.1' LT.

INSTALL N4
STA:173+91.68
OFF:70.2 LT.

EX.R/W

INSTALL N1
STA:173+58.06
OFF:47.0' LT.

SEE FIBER OPTIC
INTERCONNECT PLANS

LCN-CIRCUIT 1

INSTALL 240V
4 CIRCUIT LIGHTING
CONTROLLER "N"
STA:175+43.01
OFF:85.8' LT.

INSTALL NC3L1
STA:175+78.70
OFF:68.4' LT.

PROP. R/W

LCN-CIRCUIT 2 & 4

LCN-CIRCUIT 3

INSTALL N5
STA:175+41.76
OFF:81.5' LT.

ROUTE 291

SEE TRAFFIC
SIGNAL PLANS

EX. R/W

INSTALL NC1L2
STA:173+40.05
OFF:86.5' RT.

INSTALL N2
STA:173+61.67
OFF:96.5' RT.

PROP. R/W

INSTALL N3
STA:175+10.78
OFF:127.5' RT.

INSTALL NC1L3
STA:175+05.45
OFF:151.2 RT.

BLUE PARKWAY

N1 N2 N3 N4 N5

LIGHTING PLAN
SHEET 2 OF 15

F:\2021\04501-05000\021-04786\40-Design\Microstation\J4P3196\plan_sheets\11 Lighting\184_LT_02_J4P3196.dgn 2:49:05 PM 4/8/2025

STATE OF MISSOURI
PROFESSIONAL ENGINEER
JEREMY SCOTT STRETZ
NUMBER PE-2017023856

Jeremy Stretz 2025.04.08 17:52:14-05'00'

DATE PREPARED
4/8/2025

ROUTE	STATE
50/291	MO
DISTRICT	SHEET NO.
KC	184

COUNTY
JACKSON

JOB NO.
J4P3196

FEDERAL PROJECT NO.
STB-3001(009)

PROJECT NO.

BRIDGE NO.

IF A SEAL IS PRESENT ON THIS SHEET IT HAS BEEN ELECTRONICALLY SEALED AND DATED.

DESCRIPTION | DATE

MISSOURI HIGHWAYS AND TRANSPORTATION COMMISSION
105 WEST CAPITOL
JEFFERSON CITY, MO 65102
1-888-ASK-MODOT (1-888-275-6636)

LEE'S SUMMIT MISSOURI

olsson
1301 BURLINGTON ST., STE. 100
NORTH KANSAS CITY, MO 64116
PHONE: 816.361.1177
CERT. OF AUTHORITY NO. 001592

MATCHLINE 731+13.21

MATCHLINE 178+00

MATCHLINE 725+58.60

DETAIL 1 (TYP.)

NOT TO SCALE

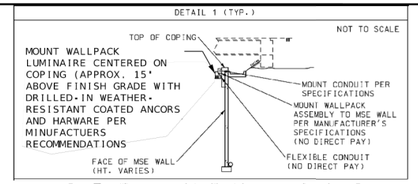

SCALE

0 30 60 90

LIGHTING LEGEND

CONTROLLER, LIGHTING		LED-A LUMINAIRE	
CONTROLLER, LIGHTING (EXISTING)		LED-B LUMINAIRE	
WOOD POST		LED-C LUMINAIRE	
POWER SUPPLY	P.S.	POWER SOURCE	
JUNCTION BOX	JCT	PULL BOX (EXISTING)	
PULL BOX CONCRETE TYPE 1		PULL BOX CONCRETE TYPE 2	
PULL BOX PREFORMED TYPE 1		PULL BOX PREFORMED TYPE 2	
CONDUIT, RIGID (TRENCH)		CONDUIT, RIGID (PUSHED)	
CONDUIT, RIGID (MEDIAN)		CONDUIT, RIGID (BRIDGE)	
CONDUIT, RIGID (EXISTING)		CABLE-CONDUIT (EXISTING)	
150 W-LED EQUIV. LUMINAIRE WALL MOUNT		CABLE-CONDUIT	

PROP. R/W

EX. R/W

RAMP 3

RAMP 4

RAMP 1

RAMP 2

WB HIGHWAY 50

EB HIGHWAY 50

ROUTE 291

OLDHAM PARKWAY

EXISTING BLUE PARKWAY

180

185

INSTALL NC2L2
STA. 178+60.83
OFF. 128.2' LT.

2" BRIDGE CONDUIT 1" CALBE-CONDUIT 2c#8 AWG

INSTALL NC2L1
STA. 179+68.40
OFF. 51.3' LT

INSTALL N6
STA. 178+12.34
OFF. 83.5' LT.

INSTALL N9
STA. 179+54.64
OFF. 61.8' LT

INSTALL NC3L2
STA:178+06.01
OFF:86.0' RT.

WALLPACK NC4L1 SEE DETAIL 1

WALLPACK SC4L2 SEE DETAIL 1

WALLPACK NC2L4 SEE DETAIL 1

WALLPACK SC4L1 SEE DETAIL 1

SEE TRAFFIC SIGNAL PLANS

INSTALL S1
STA. 182+48.47
OFF. 88.1' LT.

INSTALL 240V
4 CIRCUIT LIGHTING
CONTROLLER "S"
STA:182+54.56
OFF:98.6' LT.

INSTALL SC2L1
STA. 183+04.66
OFF. 57.4' LT.

2" BRIDGE CONDUIT 1" CALBE-CONDUIT 2c#8 AWG

INSTALL SX
STA. 181+76.20
OFF. 94.8' RT.

INSTALL SC3L1
STA. 181+58.32
OFF. 67.0' RT.

INSTALL SC2L2
STA. 183+09.22
OFF. 72.9' RT.

INSTALL S2
STA. 182+79.22
OFF. 74.7' RT.

INSTALL SC3L2
STA. 182+52.45
OFF. 139.8' RT.

INSTALL S3
STA. 183+88.59
OFF. 209.5' RT.

SEE FIBER OPTIC INTERCONNECT PLANS

INSTALL SC2L3
STA. 184+45.83
OFF. 231.0' RT.

LCN-CIRCUIT 2

LCN-CIRCUIT 2 & 4

LCN-CIRCUIT 3

LCS-CIRCUIT 1

LCS-CIRCUIT 2

LCS-CIRCUIT 3 & 4

LCS-CIRCUIT 3

N6 N9 S1 S2 S3 S8

15'

LIGHTING PLAN
SHEET 3 OF 15

IF A SEAL IS PRESENT ON THIS SHEET IT HAS BEEN ELECTRONICALLY SEALED AND DATED.

STATE OF MISSOURI
JEREMY SCOTT STRETZ
NUMBER PE-2017023856
PROFESSIONAL ENGINEER

Jeremy Stretz 2025.04.08 17:52:31-05'00'

DATE PREPARED
4/8/2025

ROUTE	STATE
50/291	MO
DISTRICT	SHEET NO.
KC	185

COUNTY
JACKSON

JOB NO.
J4P3196

FEDERAL PROJECT NO.
STB-3001(009)

PROJECT NO.

BRIDGE NO.

DESCRIPTION	DATE

MISSOURI HIGHWAYS AND TRANSPORTATION COMMISSION
105 WEST CAPITOL
JEFFERSON CITY, MO 65102
1-888-ASK-MODOT (1-888-275-6636)

LEE'S SUMMIT MISSOURI

olsson
1301 BURLINGTON ST., STE. 100
NORTH KANSAS CITY, MO 64116
PHONE: 816.361.1177
CERT. OF AUTHORITY NO. 001592

F:\2021\04501-05000\021-04786\40-Design\Microstation\J4P3196\plan_sheets\11 Lighting\185_LT_03_J4P3196.dgn 5:43:32 PM 4/8/2025

LIGHTING LEGEND

	CONTROLLER, LIGHTING		LED-A LUMINAIRE
	CONTROLLER, LIGHTING (EXISTING)		LED-B LUMINAIRE
	WOOD POST		LED-C LUMINAIRE
	POWER SUPPLY	P.S	POWER SOURCE
JCT	JUNCTION BOX		PULL BOX (EXISTING)
	PULL BOX CONCRETE TYPE 1		PULL BOX CONCRETE TYPE 2
	PULL BOX PREFORMED TYPE 1		PULL BOX PREFORMED TYPE 2
	CONDUIT, RIGID (TRENCH)		CONDUIT, RIGID (PUSHED)
M	CONDUIT, RIGID (MEDIAN)	B	CONDUIT, RIGID (BRIDGE)
	CONDUIT, RIGID (EXISTING)		CABLE-CONDUIT (EXISTING)
			CABLE-CONDUIT

SCALE

0 30 60 90

EX. R/W

BLUE PARKWAY

720

INSTALL NC3L3
STA. 718+78.58
OFF. 57.6' LT.

EXISTING BLUE PKWY

RAMP 1

725

INSTALL NEW PULL BOX N8
STA. 723+26.37
OFF. 103.9' LT.

WB ROUTE 50

EB ROUTE 50

INSTALL SC3L3
STA.717+71.68
OFF. 68.8'' RT.

SCOUT VAULT

INSTALL NEW PULL BOX S6
STA. 722+54.25
OFF. 108.0' RT.

RAMP 2

SIGNAL VAULT

MATCHLINE 725+58.60

LIGHTING PLAN
SHEET 4 OF 15

IF A SEAL IS PRESENT ON THIS SHEET IT HAS BEEN ELECTRONICALLY SEALED AND DATED.

JEREMY SCOTT STRETZ
NUMBER PE-2017023856
STATE OF MISSOURI
PROFESSIONAL ENGINEER

Jeremy Stretz 2025.04.08 17:52:51-05'00'

DATE PREPARED
4/8/2025

ROUTE	STATE
50/291	MO
DISTRICT	SHEET NO.
KC	186

COUNTY
JACKSON

JOB NO.
J4P3196

FEDERAL PROJECT NO.
STB-3001(009)

PROJECT NO.

BRIDGE NO.

DESCRIPTION	DATE

MISSOURI HIGHWAYS AND TRANSPORTATION COMMISSION
105 WEST CAPITOL
JEFFERSON CITY, MO 65102
1-888-ASK-MODOT (1-888-275-6636)

LEE'S SUMMIT MISSOURI

olsson
1301 BURLINGTON ST., STE. 100
NORTH KANSAS CITY, MO 64116
PHONE: 816.361.1177
CERT. OF AUTHORITY NO. 001592

LIGHTING LEGEND

	CONTROLLER, LIGHTING		LED-A LUMINAIRE
	CONTROLLER, LIGHTING (EXISTING)		LED-B LUMINAIRE
	WOOD POST		LED-C LUMINAIRE
	POWER SUPPLY	P.S.	POWER SOURCE
JCT	JUNCTION BOX		PULL BOX (EXISTING)
	PULL BOX CONCRETE TYPE 1		PULL BOX CONCRETE TYPE 2
	PULL BOX PREFORMED TYPE 1		PULL BOX PREFORMED TYPE 2
	CONDUIT, RIGID (TRENCH)		CONDUIT, RIGID (PUSHED)
M M M	CONDUIT, RIGID (MEDIAN)	B B B	CONDUIT, RIGID (BRIDGE)
	CONDUIT, RIGID (EXISTING)		CABLE-CONDUIT (EXISTING)
			CABLE-CONDUIT

MATCHLINE 731+13.21

°25'30"E

EX. R/W

BLUE PARKWAY

INSTALL NEW PULL BOX N7
STA. 733+89.47
OFF. 148.4 LT.

N7

735

RAMP 3

INSTALL NC2L3
STA. 738+21.60
OFF. 70.5' LT.

WB ROUTE 50

EB ROUTE 50

RAMP 4

740

S5

INSTALL NEW PULL BOX S5
STA. 738+45.81
OFF. 69.3' RT.

S4

INSTALL NEW PULL BOX S4
STA. 733+77.79
OFF. 126.6' RT.

MATCHLINE 739+55.87

INSTALL SC1L1
STA. 743+88.99
OFF. 66.4' RT.

MATCHLINE 739+55.87

SCALE

0 30 60 90

LIGHTING PLAN
SHEET 5 OF 15

STATE OF MISSOURI
PROFESSIONAL ENGINEER
JEREMY SCOTT STRETZ
NUMBER PE-2017023856

Jeremy Stretz 2025.04.08 17:53:06-05'00'

DATE PREPARED
4/8/2025

ROUTE	STATE
50/291	MO
DISTRICT	SHEET NO.
KC	187

COUNTY
JACKSON

JOB NO.
J4P3196

FEDERAL PROJECT NO.
STB-3001(009)

PROJECT NO.

BRIDGE NO.

IF A SEAL IS PRESENT ON THIS SHEET IT HAS BEEN ELECTRONICALLY SEALED AND DATED.

DESCRIPTION	DATE

MISSOURI HIGHWAYS AND TRANSPORTATION COMMISSION
MoDOT
105 WEST CAPITOL
JEFFERSON CITY, MO 65102
1-888-ASK-MODOT (1-888-275-6636)

LEE'S SUMMIT MISSOURI

olsson
1301 BURLINGTON ST., STE. 100
NORTH KANSAS CITY, MO 64116
PHONE: 816.361.1177
CERT. OF AUTHORITY NO. 001592

F:\2021\04501-05000\021-04786\40-Design\Microstation\J4P3196\plan_sheets\11 Lighting\187_LT_05_J4P3196.dgn 2:49:41 PM 4/8/2025

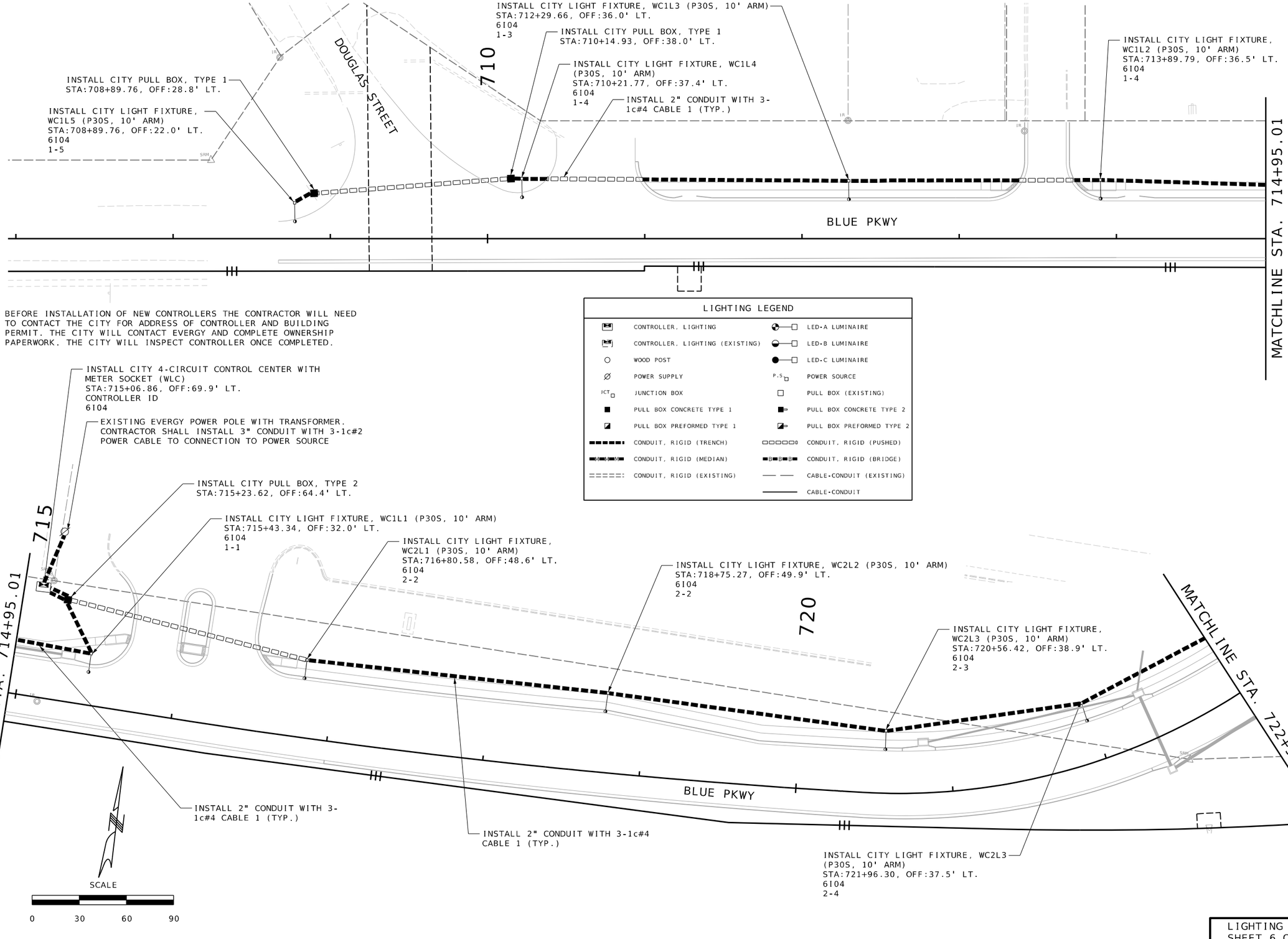

LIGHTING LEGEND

	CONTROLLER, LIGHTING		LED-A LUMINAIRE
	CONTROLLER, LIGHTING (EXISTING)		LED-B LUMINAIRE
	WOOD POST		LED-C LUMINAIRE
	POWER SUPPLY	P.S.	POWER SOURCE
JCT	JUNCTION BOX		PULL BOX (EXISTING)
	PULL BOX CONCRETE TYPE 1		PULL BOX CONCRETE TYPE 2
	PULL BOX PREFORMED TYPE 1		PULL BOX PREFORMED TYPE 2
	CONDUIT, RIGID (TRENCH)		CONDUIT, RIGID (PUSHED)
	CONDUIT, RIGID (MEDIAN)		CONDUIT, RIGID (BRIDGE)
	CONDUIT, RIGID (EXISTING)		CABLE-CONDUIT (EXISTING)
			CABLE-CONDUIT

LIGHTING PLAN
SHEET 6 OF 15

IF A SEAL IS PRESENT ON THIS SHEET IT HAS BEEN ELECTRONICALLY SEALED AND DATED.

STATE OF MISSOURI
JEREMY SCOTT STRETZ
NUMBER PE-2017031866
PROFESSIONAL ENGINEER

Jeremy Stretz 2025.04.08 17:53:19-05'00'

DATE PREPARED 4/8/2025

ROUTE	STATE
50/291	MO
DISTRICT	SHEET NO.
KC	188

COUNTY: JACKSON
JOB NO.: J4P3196
FEDERAL PROJECT NO.: STB-3001(009)
PROJECT NO.:
BRIDGE NO.:

DESCRIPTION	DATE

MISSOURI HIGHWAYS AND TRANSPORTATION COMMISSION
105 WEST CAPITOL
JEFFERSON CITY, MO 65102
1-888-ASK-MODOT (1-888-275-6636)

LEE'S SUMMIT MISSOURI

olsson
1301 BURLINGTON ST., STE. 100
NORTH KANSAS CITY, MO 64116
PHONE: 816.361.1177
CERT. OF AUTHORITY NO. 001592

LIGHTING LEGEND

	CONTROLLER, LIGHTING		LED-A LUMINAIRE
	CONTROLLER, LIGHTING (EXISTING)		LED-B LUMINAIRE
	WOOD POST		LED-C LUMINAIRE
	POWER SUPPLY	P.S	POWER SOURCE
JCT	JUNCTION BOX		PULL BOX (EXISTING)
	PULL BOX CONCRETE TYPE 1		PULL BOX CONCRETE TYPE 2
	PULL BOX PREFORMED TYPE 1		PULL BOX PREFORMED TYPE 2
	CONDUIT, RIGID (TRENCH)		CONDUIT, RIGID (PUSHED)
	CONDUIT, RIGID (MEDIAN)		CONDUIT, RIGID (BRIDGE)
	CONDUIT, RIGID (EXISTING)		CABLE-CONDUIT (EXISTING)
			CABLE-CONDUIT

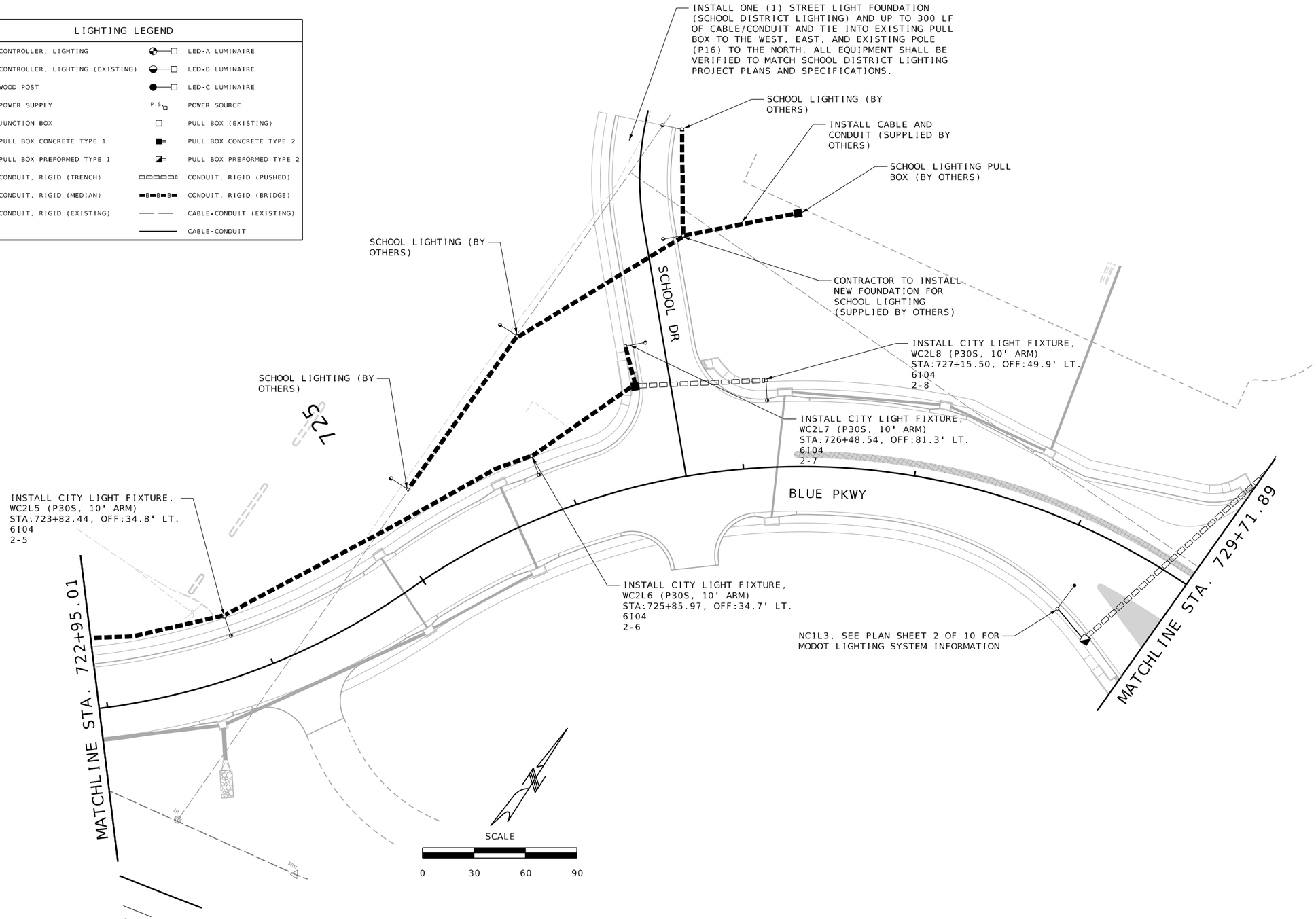

LIGHTING PLAN
SHEET 7 OF 15

JEREMY SCOTT STRETZ
NUMBER PE-2017023856
STATE OF MISSOURI
PROFESSIONAL ENGINEER
Jeremy Stretz 2025.04.08 17:53:33-05'00'

DATE PREPARED
4/8/2025

ROUTE	STATE
50/291	MO
DISTRICT	SHEET NO.
KC	189

COUNTY
JACKSON

JOB NO.
J4P3196

FEDERAL PROJECT NO.
STB-3001(009)

PROJECT NO.

BRIDGE NO.

IF A SEAL IS PRESENT ON THIS SHEET IT HAS BEEN ELECTRONICALLY SEALED AND DATED.

DESCRIPTION	DATE

MISSOURI HIGHWAYS AND TRANSPORTATION COMMISSION
105 WEST CAPITOL
JEFFERSON CITY, MO 65102
1-888-ASK-MODOT (1-888-275-6636)

LEE'S SUMMIT MISSOURI

olsson
1301 BURLINGTON ST., STE. 100
NORTH KANSAS CITY, MO 64116
PHONE: 816.361.1177
CERT. OF AUTHORITY NO. 001592

F:\2021\04501-05000\021-04786\40-Design\Microstation\J4P3196\plan_sheets\11 Lighting\CITY LIGHTING\189_LTC_02_J4P3196.dgn 2:49:54 PM 4/8/2025

INSTALL CITY LIGHT FIXTURE, EC1L1 (P30S, 10' ARM)
STA:735+13.97, OFF:98.6' LT. 6I05 1-1

INSTALL CITY 4-CIRCUIT CONTROL CENTER WITH METER SOCKET (WLC) CONTROLLER ID 6I05
STA:735+10.16, OFF:82.1' LT.

INSTALL CITY PULL BOX, TYPE 2
STA:735+11.33, OFF:67.8' LT.

EXISTING EVERGY POWER POLE WITH TRANSFORMER. CONTRACTOR SHALL INSTALL 3" CONDUIT WITH 3-1c#2 POWER CABLE TO CONNECTION TO POWER SOURCE

7TH TERR

BLUE PKWY

MATCHLINE STA. 731+74.38

MATCHLINE STA. 739+37.32

INSTALL CITY LIGHT FIXTURE, EC1L2 (P30S, 10' ARM)
STA:733+57.40, OFF:34.0' RT.
6I05
1-2

INSTALL CITY PULL BOX, TYPE 2
STA:735+19.11, OFF:31.0' RT.

INSTALL CITY LIGHT FIXTURE, EC2L1 (P30S, 10' ARM)
STA:735+28.77, OFF:31.7' RT.
6I05
2-1

INSTALL CITY LIGHT FIXTURE, EC2L2 (P30S, 10' ARM)
STA:736+96.35, OFF:29.0' RT.
6I05
2-2

INSTALL CITY PULL BOX, TYPE 2
STA:737+70.94, OFF:31.0' RT.

INSTALL CITY LIGHT FIXTURE, EC2L3 (P30S, 10' ARM)
STA:739+05.85, OFF:28.5' RT.
6I05
2-3

LIGHTING LEGEND

	CONTROLLER, LIGHTING		LED-A LUMINAIRE
	CONTROLLER, LIGHTING (EXISTING)		LED-B LUMINAIRE
	WOOD POST		LED-C LUMINAIRE
	POWER SUPPLY	P.S.	POWER SOURCE
JCT	JUNCTION BOX		PULL BOX (EXISTING)
	PULL BOX CONCRETE TYPE 1		PULL BOX CONCRETE TYPE 2
	PULL BOX PREFORMED TYPE 1		PULL BOX PREFORMED TYPE 2
	CONDUIT, RIGID (TRENCH)		CONDUIT, RIGID (PUSHED)
	CONDUIT, RIGID (MEDIAN)		CONDUIT, RIGID (BRIDGE)
	CONDUIT, RIGID (EXISTING)		CABLE-CONDUIT (EXISTING)
			CABLE-CONDUIT

MATCHLINE STA. 739+37.32

BLUE PKWY

INSTALL CITY LIGHT FIXTURE, EC2L4 (P30S, 10' ARM)
STA:740+87.82, OFF:24.1' RT.
6I05
2-4

740

SCALE
0 30 60 90

LIGHTING PLAN
SHEET 8 OF 15

JEREMY SCOTT STRETZ
NUMBER PE-2017023856
STATE OF MISSOURI
PROFESSIONAL ENGINEER
Jeremy Stretz 2025.04.08 17:54:00-05'00'

DATE PREPARED 4/8/2025

ROUTE	STATE
50/291	MO
DISTRICT	SHEET NO.
KC	190

COUNTY JACKSON
JOB NO. J4P3196
FEDERAL PROJECT NO. STB-3001(009)
PROJECT NO.
BRIDGE NO.

DESCRIPTION | DATE

IF A SEAL IS PRESENT ON THIS SHEET IT HAS BEEN ELECTRONICALLY SEALED AND DATED.

MISSOURI HIGHWAYS AND TRANSPORTATION COMMISSION
105 WEST CAPITOL
JEFFERSON CITY, MO 65102
1-888-ASK-MODOT (1-888-275-6636)

LEE'S SUMMIT MISSOURI

olsson
1301 BURLINGTON ST., STE. 100
NORTH KANSAS CITY, MO 64116
PHONE: 816.361.1177
CERT. OF AUTHORITY NO. 001592

F:\2021\04501-05000\021-04786\40-Design\Microstation\J4P3196\plan_sheets\11 Lighting\CITY LIGHTING\190_LTC_03_J4P3196.dgn 2:49:57 PM 4/8/2025

HIGHWAY LIGHTING

SH. NUM.	POLE NO.	ROADWAY	STATION	OFFSET	BRACKET ARM 15 FT (EACH) 9011115	LIGHTING POLE 45FT TYPE AT (EACH) 9011062	LED B LUMINAIRE (EACH) 9011312	LED C LUMINAIRE (EACH) 9011313	WALLPACK 150W HPS EQ. LED FIXTURE (EACH) 9019902	POLE FOUNDATION 45 FT M.H. (EACH) 9018245	CABLE, 10 AWG 1 CONDUCTOR, POLE AND BRACKET (LF) 9017110
1	NC1L1	ROUTE 291	167+72.19	46.5' RT	1	1	1			1	120
2	NC1L2	ROUTE 291	173+40.05	86.5' RT	1	1		1		1	120
2	NC1L4	ROUTE 291	173+97.07	87.1' LT	1	1		1		1	120
2	NC1L3	ROUTE 291	175+05.45	151.2' RT	1	1		1		1	120
2	NC3L1	ROUTE 291	175+78.70	68.4' LT	1	1		1		1	120
3	NC3L2	ROUTE 291	178+06.01	86.0' RT	1	1	1			1	120
3	NC2L2	ROUTE 291	178+60.83	128.2' LT	1	1	1			1	120
3	NC2L1	ROUTE 291	179+68.36	49.3' LT	1	1	1			1	120
5	NC2L3	WB HWY 50	738+21.60	70.5' LT	1	1	1			1	120
4	NC3L3	WB HWY 50	718+78.58	57.6' LT	1	1	1			1	120
3	SC3L1	ROUTE 291	181+58.32	67.0' RT	1	1	1			1	120
3	SC3L2	ROUTE 291	182+52.45	139.8' RT	1	1	1			1	120
3	SC2L1	ROUTE 291	183+04.66	57.4' LT	1	1	1			1	120
3	SC2L2	ROUTE 291	183+09.22	72.9' RT	1	1	1			1	120
3	SC2L3	ROUTE 291	184+45.83	231.0' RT	1	1	1			1	120
5	SC1L1	EB HWY 50	743+88.99	66.4' RT	1	1	1			1	120
4	SC3L3	EB HWY 50	718+12.51	70.7' RT	1	1	1			1	120
3	NC2L1&2	WB HWY 50	SEE	PLANS					2		
3	SC4L1&2	EB HWY 50	SEE	PLANS					2		
TOTAL					17	17	13	4	4	17	2040

POWER CABLE & RIGID CONDUIT

SH. NUM.	ROADWAY	FROM	TO	CTR. TO CTR.	CABLE, 2 AWG 1 CONDUCTOR (LF) 9017002	CONDUIT, 2 IN. RIGID-IN TRENCH (LF) 9013002	CONDUIT 2 IN. RIGID EXT. ON STR 9014502	CONDUIT, 4 IN. RIGID PUSHED (LF) 9014004
2	ROUTE 291	POWER SUPPLY	POWER SOURCE	59	225	59		
2	ROUTE 291	POWER SOURCE	CONTROLLER "N"	155	513			155
3	ROUTE 291	POWER SUPPLY	POWER SOURCE	10	78	10		
3	ROUTE 291	POWER SOURCE	CONTROLLER "S"	15	93	15		
2	ROUTE 291	N1	N2	150				148
2	ROUTE 291	N2	N3	158				156
2	BLUE PKWY	N5	N4	160				158
3	ROUTE 291	N6	N9	168				166
3	RAMP 3	N6	NC2L1	195				193
3	ROUTE 291	S1	S2	162				160
3	RAMP 2	S2	S9	105				103
3	OLDHAM PKWY	S5	SC2L3	72				70
3	WB HWY 50	-	NC2L4	180			182	
3	EB HWY 50	-	SC3L4	180			182	
TOTAL					909	84	364	1309

PULL BOXES

SH. NUM.	PULL BOX NO.	ROADWAY	STA.	OFF.	PULLBOX, CONCRETE STANDARD (EACH) 9016120	PULLBOX, CONCRETE DOUBLE, TYPE A (EACH) 9016121
2	N1	ROUTE 291	173+58.06	47.0' LT.	1	
2	N2	ROUTE 291	173+61.67	96.5' RT.	1	
2	N3	ROUTE 291	175+10.78	127.5' RT.	1	
2	N4	ROUTE 291	173+91.68	87.1' LT.	1	
2	N5	ROUTE 291	175+41.76	81.5' LT.		1
3	N6	ROUTE 291	178+12.34	83.5' LT.	1	
5	N7	WB HWY 50	733+89.47	148.4' LT.	1	
4	N8	WB HWY 50	723+26.37	103.9' LT.	1	
3	S1	ROUTE 291	182+48.47	88.1' LT.		1
3	S2	ROUTE 291	182+79.22	74.7' RT.	1	
3	S3	ROUTE 291	183+88.59	209.5' RT.	1	
5	S4	EB HWY 50	733+77.79	126.6' RT.	1	
5	S5	EB HWY 50	738+45.81	69.3 RT.	1	
4	S6	EB HWY 50	722+54.25	108.0' RT.	1	
3	N9	ROUTE 291	179+54.64	61.8' LT	1	
3	S9	ROUTE 291	181+76.20	94.8' RT	1	
TOTAL					14	2

CABLE AND CABLE CONDUIT

SH. NUM.	CIRCUIT	FROM	TO	CTR. TO CTR.	CABLE-CONDUIT 1 IN., 2 CONDUCTORS (AND 1 BARE NEUTRAL) 8 AWG (LF) 9017407	TRENCHING, TYPE I (LF) 9015010
2	LCN-1,2,3,4	LCN	N5	15	116	15
2	LCN-1	N5	N4	160	172	-
2	LCN-1	N4	NC1L4	20	31	20
2	LCN-1	N4	N1	40	52	40
2	LCN-1	N1	N2	150	162	-
2	LCN-1	N2	N3	158	170	-
2	LCN-1	N2	NC1L2	27	38	27
1,2	LCN-1	NC1L2	NC1L1	445	455	445
2	LCN-1	N3	NC1L3	30	41	30
2	LCN-3	N5	NC3L1	57	68	57
3	LCN-3	NC3L1	N6	215	226	215
2,3	LCN-2,4	N5	N6	273	570	273
3	LCN-3	N6	NC3L2	168	179	-
3	LCN-2,4	N6	N9	168	179	-
3	LCN-2	N6	NC2L2	85	96	85
3	LCN-2	N9	NC2L1	18	29	18
3,5	LCN-3	NC3L2	N8	516	527	516
5	LCN-3	N8	NC3L3	500	511	500
3,4	LCN-2	NC2L2	N7	470	481	470
4	LCN-2	N7	NC2L3	450	461	450
3	LCS-1,2,3,4	LCS	S1	15	116	15
3,5	LCS-1	S1	S4	491	503	491
5	LCS-1	S4	S5	470	482	470
5	LCS-1	S5	SC1L1	500	511	500
3	LCS-2	S1	SC2L1	68	79	68
3	LCS-2,3,4	S1	S2	162	522	-
3	LCS-2	S2	SC2L2	34	45	34
3	LCS-2	SC2L2	S3	202	213	202
3	LCS-2	S3	SC2L3	70	81	-
3	LCS-3,4	S2	S9	105	232	-
3	LCS-3	S9	SC3L1	122	133	122
3	LCS-3	S2	SC3L2	75	86	75
3,4	LCS-3	SC3L2	S6	500	511	500
4	LCS-3	S6	SC3L3	405	416	405
3	LCN-4	N9	NC4L1 & 2	90	282	90
3	LCS-4	S9	SC4L1 & 2	90	282	90
SUBTOTAL					9058	6223
5% FOR SNAKING					453	X
TOTAL					9520	6223

POWER SUPPLY AND BASE MOUNTED CONTROL STATION

SH. NUM.	ROADWAY	STA.	OFF.	POWER SUPPLY ASSEMBLY, TYPE 2, 240/120 VOLT SERVIE, LIGHTING ONLY (EACH) 9018612	BASE MOUNTED CONTROL STATION (240 VOLT-4 CIRCUIT) (EACH) 9012230	REMARKS
2	ROUTE 291	175+43.01	85.8' LT.	1	1	LC "S" NOTE: CIRCUIT 4 TO BE CONTINUOUSLY POWERED (NON-PHOTOCELL CONTROLLED)
3	ROUTE 291	182+54.56	98.6' LT.	1	1	LC "S" NOTE: CIRCUIT 4 TO BE CONTINUOUSLY POWERED (NON-PHOTOCELL CONTROLLED)
TOTAL				2	2	X

QUANTITY SHEET

LIGHTING PLAN
SHEET 9 OF 15

STATE OF MISSOURI
JEREMY SCOTT STRETZ
NUMBER PE-2011031866
PROFESSIONAL ENGINEER

Jeremy Stretz 2025.04.08 17:54:13-05'00'

DATE PREPARED 4/8/2025
ROUTE 50/291
STATE MO
DISTRICT KC
SHEET NO. 191
COUNTY JACKSON
JOB NO. J4P3196
FEDERAL PROJECT NO. STB-3001(009)
PROJECT NO.
BRIDGE NO.

DESCRIPTION | DATE

IF A SEAL IS PRESENT ON THIS SHEET IT HAS BEEN ELECTRONICALLY SEALED AND DATED.

MISSOURI HIGHWAYS AND TRANSPORTATION COMMISSION
105 WEST CAPITOL
JEFFERSON CITY, MO 65102
1-888-ASK-MODOT (1-888-275-6636)

LEE'S SUMMIT MISSOURI

olsson
1301 BURLINGTON ST., STE. 100
NORTH KANSAS CITY, MO 64116
PHONE: 816.361.1177
CERT. OF AUTHORITY NO. 001592

F:\2021\04501-05000\021-04786\40-Design\Microstation\J4P3196\plan_sheets\11 Lighting\CITY LIGHTING\191_LTC_04_J4P3196.dgn 5:44:00 PM 4/8/2025

RECAPITULATION OF QUANTITIES (CITY LIGHTING SYSTEMS)

BILL OF MATERIALS

ITEM	UNIT	QUANTITY	BID ITEM	STANDARD
STREET LIGHT POLE (P30S)	EA	19	9019902	CITY, 2800
10' BRACKET ARM	EA	19	9019902	CITY, 2800
B30 SCREW-IN FOUNDATION	EA	19	9019902	CITY, 2800
COBRA-HEAD LUMINAIRE w/250 WATT H.P.S. EQUIVALENT LED LAMP	EA	19	9019902	CITY, 2800
TYPE 1 JUNCTION BOX	EA	4	9019902	CITY, 2800
TYPE 2 JUNCTION BOX	EA	4	9019902	CITY, 2800
CLASS 1 PULL BOX	EA	-	9019902	CITY, 2800
4-CIRCUIT POWER SUPPLY ASSEMBLY	EA	2	9019902	CITY, 2800
FOUNDATION FOR POWER SUPPLY	EA	2	9019902	CITY, 2800
3" SCHEDULE 40 P.V.C. CONDUIT (POWER SUPPLY TO POWER POLE	L.F.	300	9019903	CITY, 2800
2" HIGH DENSITY POLYETHYLENE (HDPE) CONDUIT (GRAY)	L.F.	3100	9019903	CITY, 2800
3c No. 2 DISTRIBUTION CABLE	L.F.	420	9019903	CITY, 2800
3c No. 4 DISTRIBUTION CABLE	L.F.	3300	9019903	CITY, 2800
1c No. 10 POLE AND BRACKET CABLE	L.F.	2926	9019903	CITY, 2800
BREAK-AWAY FUSED CONNECTOR KIT	EA	38	9019902	CITY, 2800
BREAK-AWAY NON-FUSED CONNECTOR KIT	EA	19	9019902	CITY, 2800
MULTI-TAP CONNECTOR KIT	EA	57	9019902	CITY, 2800
CONDUIT MARKER	EA	16	9019902	CITY, 2800

BID ITEM LIST (SCHOOL LIGHTING SYSTEMS)

BID ITEM

ITEM	UNIT	QUANTITY
901.99.01 MISC. (SCHOOL LIGHTING SYSTEMS)	LS	1

STATE OF MISSOURI
JEREMY SCOTT STRETZ
NUMBER PE-2011031866
PROFESSIONAL ENGINEER

Jeremy Stretz 2025.04.08 17:54:30-05'00'

DATE PREPARED 4/8/2025

ROUTE	STATE
50/291	MO

DISTRICT	SHEET NO.
KC	192

COUNTY: JACKSON

JOB NO.: J4P3196

FEDERAL PROJECT NO.: STB-3001(009)

PROJECT NO.:

BRIDGE NO.:

DESCRIPTION	DATE

IF A SEAL IS PRESENT ON THIS SHEET IT HAS BEEN ELECTRONICALLY SEALED AND DATED.

MISSOURI HIGHWAYS AND TRANSPORTATION COMMISSION
105 WEST CAPITOL
JEFFERSON CITY, MO 65102
1-888-ASK-MODOT (1-888-275-6636)

LEE'S SUMMIT MISSOURI

olsson
1301 BURLINGTON ST., STE. 100
NORTH KANSAS CITY, MO 64116
PHONE: 816.361.1177
CERT. OF AUTHORITY NO. 001592

F:\2021\04501-05000\021-04786\40-Design\Microstation\J4P3196\plan_sheets\11 Lighting\CITY LIGHTING\192_LTC_05_J4P3196.dgn 2:50:03 PM 4/8/2025

STREET LIGHT POLE, BRACKET ARM, AND BREAK-AWAY BASE

POLE TYPE	MOUNTING HEIGHT (A)	BRACKET ARMS LENGTH (B) ARM 1	BRACKET ARMS LENGTH (B) ARM 2	POLE SHAFT BASE O.D.	POLE SHAFT TOP O.D.	POLE SHAFT MIN. WALL THICKNESS	POLE SHAFT SHAFT LENGTH (C)	SHOE BASE BOLT CIRCLE (BC)	ANCHOR BOLTS DIAMETER	ANCHOR BOLTS LENGTH	ANCHOR BOLTS HOOK
P12	12'	–	–	6"	3"	0.156"	12'-0"	9.5"	0.75" 10NC	25"	3"
P14	14'	–	–	6"	3"	0.156"	14'-0"	9.5"	0.75" 10NC	25"	3"
P30S	30'	6' or 10'	–	8"	6"	0.188"	26'-6" ±2"	11.0"	1.00" 8NC	36"	4"
P30D	30'	6' or 10'	6' or 10'	8"	6"	0.219"	26'-6" ±2"	11.0"	1.00" 8NC	36"	4"
P40S	40'	6', 10' or 15'	–	8"	6"	0.219"	36'-6" ±2"	11.5"	1.00" 8NC	36"	4"
P40D	40'	6', 10' or 15'	6', 10' or 15'	10"	6"	0.219"	36'-6" ±2"	14.5"	1.00" 8NC	48"	4"

NOTES:

1. ALL POLES, ARMS, AND MISCELLANEOUS EQUIPMENT SHALL CONFORM TO THESE DETAILS AND AS SPECIFIED BY THE LATEST CITY STANDARD SPECIFICATIONS.
2. POLE SHAFT SHALL HAVE A SATIN GROUND FINISH.
3. ALL HARDWARE (BOLTS, NUTS, WASHERS BUT NOT INCLUDING ANCHOR BOLTS) NOT OTHERWISE SPECIFICALLY DESIGNATED IN THE SPECIFICATIONS OR DETAILS SHALL BE 300-SERIES STAINLESS STEEL CONFORMING TO ASTM A193 OR A194.
4. ANCHOR BOLTS SHALL BE USED WITH CONCRETE BASES. ANCHOR BOLTS SHALL BE STEEL WITH 50,000 PSI MINIMUM YIELD; TOP 10" MIN. GALVANIZED; INCLUDING 8 NUTS AND 8 FLAT WASHERS GALVANIZED TO ASTM A153 STANDARDS. GALVANIZED HEX HEAD BOLTS (SEE POLE FOUNDATION SHEET) SHALL BE USED WITH SCREW-IN ANCHOR BASES. 4 BOLTS, 4 NUTS AND 8 FLAT WASHERS TO PROVIDED WITH EACH ANCHOR.
5. ALL WELDING IS TO BE DONE WITH 4043 WELD WIRE. ALL ARMS AND SHAFTS ARE TO BE HEAT-TREATED TO T6 TEMPER AFTER WELDING.
6. ANCHOR BOLTS SHALL PROJECT ABOVE THE CONCRETE BASE AS PER MANUFACTURER'S RECOMMENDED PRACTICES, 2½" TO 3".
7. THE ALUMINUM STREET LIGHT POLE ASSEMBLY, INCLUDING ANCHORAGE AND LUMINAIRE, SHALL COMPLY WITH THE LATEST CITY STANDARD SPECIFICATIONS AND THE AMERICAN ASSOCIATION OF STATE HIGHWAY AND TRANSPORTATION OFFICIALS (AASHTO) LOAD WIND LOADING.
8. ALL POLES AND ARMS SHALL BE CLEARLY IDENTIFIED BY THE MANUFACTURER'S NAME, ABBREVIATION, OR SYMBOL ENGRAVED ON THE SHAFT, SHOE BASE, HAND HOLE, OR OTHER MEANS SUCH AS TO BE READILY VISIBLE AFTER INSTALLATION.

MATERIAL DATA

COMPONENT	ALUMINUM ALLOY DESIGNATION	SPECIFICATION
SHOE BASE	356-T6, CAST	ASTM B26 OR B108
BREAKAWAY BASE	356-T6, CAST	ASTM B108
BOLT COVERS	356 OR 360, CAST	ASTM B26 OR B108
POLE SHAFT	6063-T6, EXTRUDED	ASTM B221 OR B241
GROUND LUG	6061-T5 OR 6063-T6, PLATE	ASTM B221
REINFORCED HANDHOLE FRAME	356-T6 OR 6061-T6	ASTM B26, B108 OR B221
HANDHOLE COVER	6063-T6	ASTM B209, B221 OR B241
BRACKET ARM & TUBING PIPES	6063-T6	ASTM B221, B241 OR B249
BRACKET ARM MOUNTING PLATES	6061-T6 OR 6063-T6 EXTRUDED	ASTM B221
BRACKET ARM STRUT & ARM CONNECTOR	AU5061-T6 OR 6063-T6 EXTRUDED	ASTM B221, B241 OR B249
POLE CAP	356, CAST	ASTM B26 OR B108
ANCHOR BOLTS	N/A	GALVANIZED PER ASTM A153

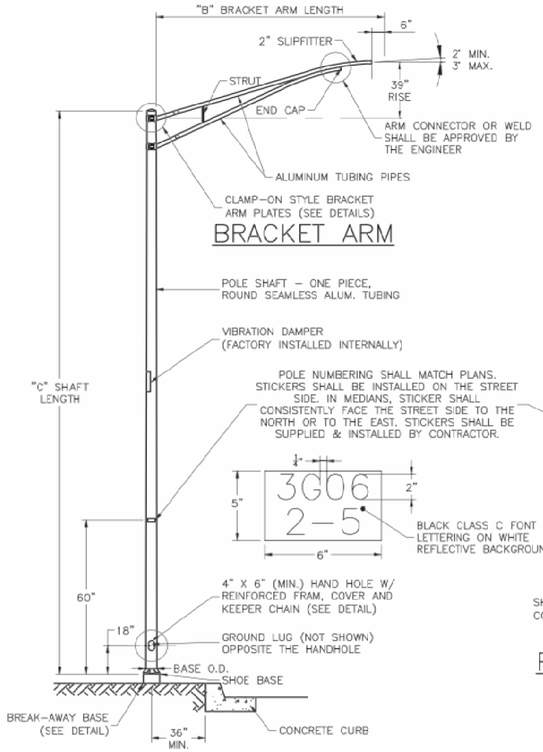

POLE ELEVATION

(SEE TABLES FOR DIMENSIONS AND MATERIALS)

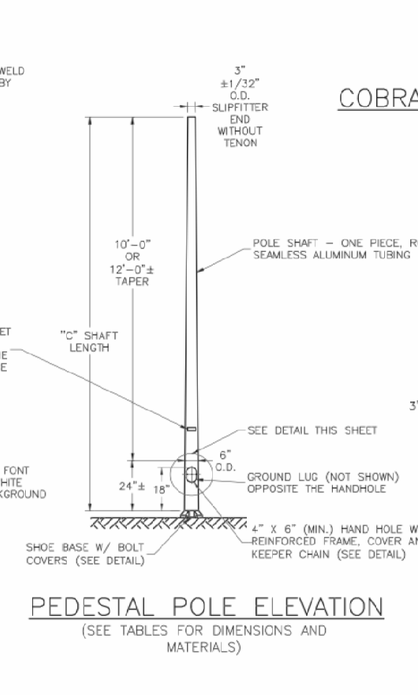

PEDESTAL POLE ELEVATION

(SEE TABLES FOR DIMENSIONS AND MATERIALS)

COBRA HEAD STYLE LUMINAIRE

7,500, 12,500, 24,500 LUMEN LED

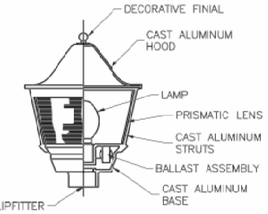

POST TOP LUMINAIRE

10,000 LUMEN LED

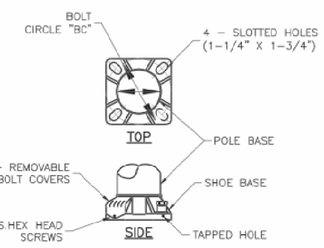

SHOE BASE

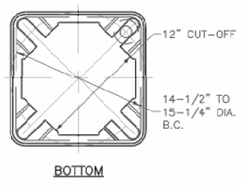

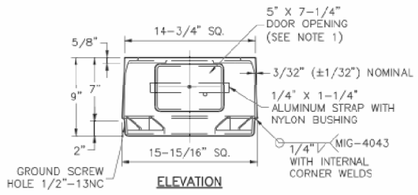

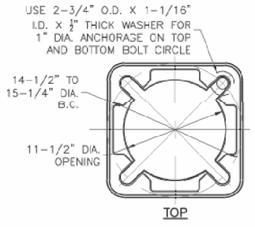

15" BREAK-AWAY BASE

NOTES:

1. DOOR SHALL BE ON THE SAME SIDE OF THE POLE AS THE HAND HOLE.
2. BASE CONFORMS TO BREAKAWAY CRITERIA OF AASHTO STANDARD SPECIFICATIONS FOR STRUCTURAL SUPPORTS FOR HIGHWAY SIGNS, LUMINAIRES AND TRAFFIC SIGNALS (1994).

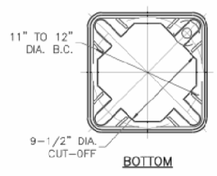

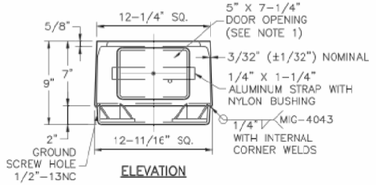

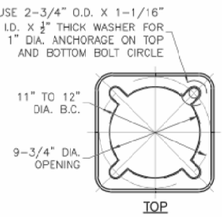

11" BREAK-AWAY BASE

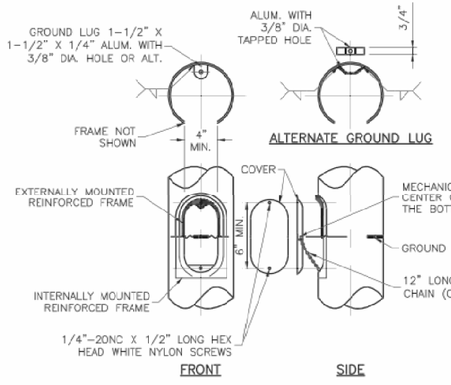

HAND HOLE

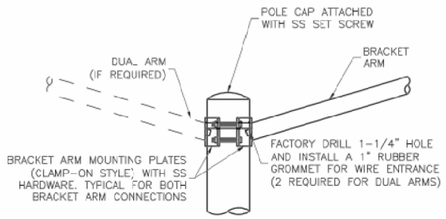

BRACKET ARM MOUNTING

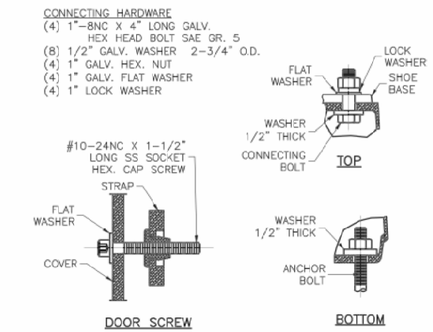

BREAK-AWAY BASE ANCHORAGE

LIGHTING PLAN
SHEET 11 OF 15

STATE OF MISSOURI
JEREMY SCOTT STRETZ
NUMBER PE-2011023056
PROFESSIONAL ENGINEER
Jeremy Stretz 2025.02.28 15:42:41-06'00'

DATE PREPARED 2/28/2025
ROUTE 50/291 | STATE MO
DISTRICT KC | SHEET NO. 193
COUNTY JACKSON
JOB NO. J4P3196
FEDERAL PROJECT NO. STB-3001(009)
PROJECT NO.
BRIDGE NO.

DESCRIPTION | DATE

IF A SEAL IS PRESENT ON THIS SHEET IT HAS BEEN ELECTRONICALLY SEALED AND DATED.

MISSOURI HIGHWAYS AND TRANSPORTATION COMMISSION
MoDOT
105 WEST CAPITOL
JEFFERSON CITY, MO 65102
1-888-ASK-MODOT (1-888-275-6636)
LEE'S SUMMIT MISSOURI
olsson
1301 BURLINGTON ST., STE. 100
NORTH KANSAS CITY, MO 64116
PHONE: 816.361.1177
CERT. OF AUTHORITY NO. 001592

POLE TYPE	BRACKET ARM	DEPTH (A)	BOLT CIRCLE (BC)
P12	---	48"	9.5"
P14	---	48"	9.5"
P30S OR P30D	SINGLE OR DUAL	72"	11.0"
P40S	SINGLE	94"	11.5"
P40D	DUAL	94"	14.5"

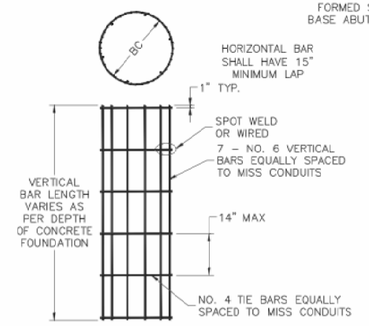

REBAR CAGE DETAIL

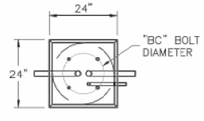

PLAN VIEW

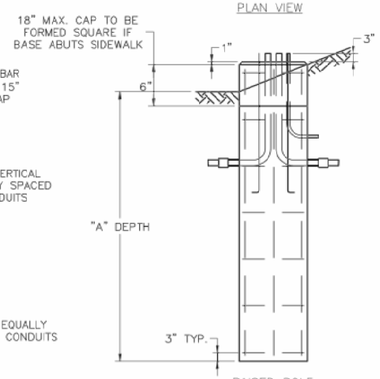

RAISED POLE BASE ELEVATION

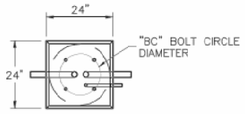

PLAN VIEW

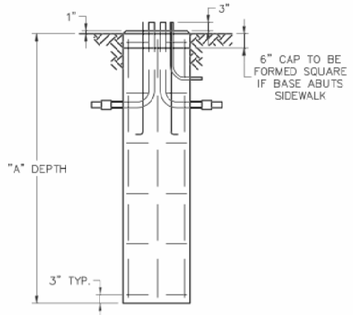

AT-GRADE POLE BASE ELEVATION

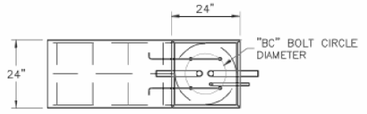

PLAN VIEW

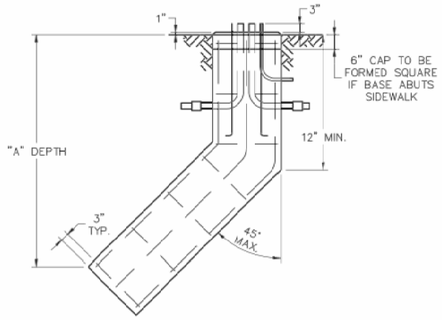

OFFSET CONCRETE BASE

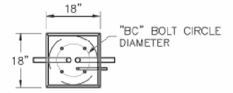

PLAN VIEW

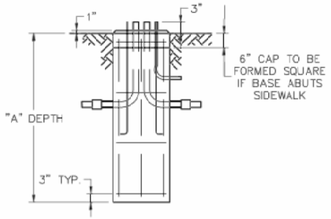

PEDESTAL POLE BASE

CONCRETE BASE DETAILS

BASE TYPE	POLE TYPE	MINIMUM TORQUE RATING (LBS. FT.)	MAXIMUM TORQUE RATING (LBS. FT.)	SHAFT DIA. (A)	SHAFT LENGTH (B)	HELIX DIA. (C)	PLATE SIZE (D)	PLATE THICKNESS (E)	BOLT CIRCLE (BC)	SLOT LOCATION (G)
B12	P12	2,000	15,000	6"	48"	12"	10"	0.75"	9.5"	12"
B14	P14	2,000	15,000	6"	48"	12"	10"	0.75"	9.5"	12"
B30	P30S & P30D	2,000	15,000	6"	60"	12"	12"	1.0"	11.0"	18"
B40S	P40S	2,000	20,000	8"	60"	14"	12"	1.0"	11.5"	18"
B40D	P40D	2,000	20,000	8"	60"	14"	15"	1.25"	14.5"	18"

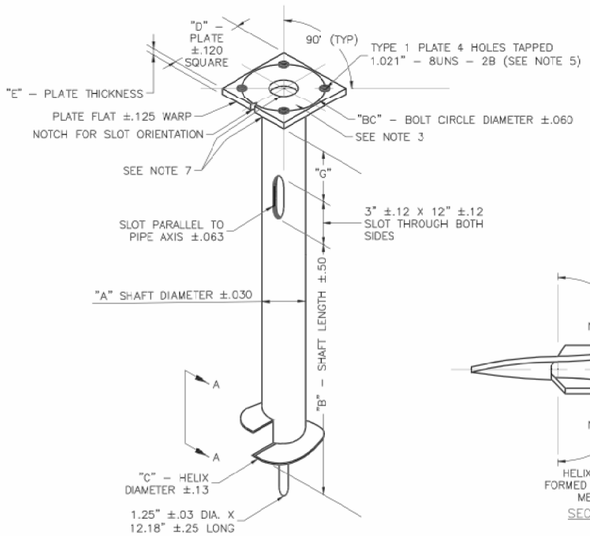

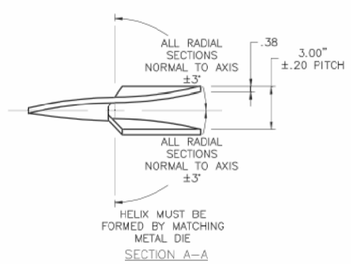

SECTION A–A

SCREW–IN ANCHOR BASE DETAILS

NOTES:

1. FINISH: HOT DIP GALVANIZE PER ASTM–A153 (LATEST REVISION).
2. BASEPLATE TO BE PERPENDICULAR TO SHAFT AXIS (±1°) AND HOLE AND CONCENTRIC (±.188 I.D. FIM) TO SHAFT AXIS.
3. ALL BASES SHALL BE IDENTIFIED BY THE MANUFACTURER'S INITIALS AND THE ANCHOR TYPE (1 OR 2) PERMANENTLY STAMPED INTO THE TOP PLATE WITH 1/2" LETTERS., THE JULIAN DATE OF MANUFACTURE SHALL BE PERMANENTLY STAMPED IN 1/4" NUMERALS.
4. PILOT POINT AND SHAFT AXES TO BE CONCENTRIC (±.125 FIM) AND IN LINE (±2°).
5. TAP 1" HOLES ON THE SPECIFIED BOLT CIRCLE PERPENDICULAR TO THE BASEPLATE. CLEAN AND CHASE THE THREADS AFTER HOT–DIP GALVANIZING SO THAT A BOLT MAY BE INSTALLED.
6. PREHEAT (ROOM TEMPERATURE 70°F), TUMBLEBLAST, HANDGRIND, AND CLEAN BASEPLATE, HELIX, AND CORE ON ALL WELD AREAS.
7. FLAME CUT IRREGULARITIES PERMISSIBLE:
   (1) VALLEYS NOT TO EXCEED 3/32 IN. BELOW NOMINAL SURFACE LEVEL.
   (2) PEAKS OR POSITIVE IRREGULARITIES NOT TO EXCEED 1/32 IN. ABOVE NOMINAL SURFACE LEVEL OR INTERSECTIONS OF NOMINAL SURFACES.
8. MANUFACTURER TO HAVE IN EFFECT INDUSTRY RECOGNIZED WRITTEN QUALITY CONTROL FOR ALL MATERIALS AND MANUFACTURING PROCESSES.
9. ALL MATERIAL IS TO BE NEW, UNUSED AND MILL TRACEABLE MEETING THE FOLLOWING SPECIFICATIONS:
   BASEPLATE: ASTM A36–(LATEST REVISION) HOT ROLLED STEEL PLATE (CONFORM TO AASHTO TECHNICAL BUL. #270).
   SHAFT: STEEL PIPE PILES, SEEMLESS OR STRAIGHT WELDED, GRADE 2 PER ASTM A252. ALTERNATE MATERIAL: PIPE TYPE E OR S, GRADE B PER ASTM A53.
   HELIX: ASTM A635–(LATEST REVISION) HOT ROLLED STEEL PLATE
   PILOT POINT: ASTM A575–(LATEST REVISION) HOT ROLLED STEEL
   BOLT: ASTM A325 OR GRADE 5 SAE J429 – 1" DIAMETER HOT DIP GALVANIZED HEX HEAD BOLT. BOLT SHALL INCLUDE ONE EACH LOCK AND FLAT WASHER.
10. THE DESIGN AND PERFORMANCE INTEGRITY OF THE FOUNDATION SHALL BE VERIFIED BY FULL–SCALE TESTS BY QUALIFIED ENGINEERS INDEPENDENT OF THE MANUFACTURER. CERTIFIED TEST REPORTS SHALL BE PROVIDED UPON REQUEST.
11. FLAME CUT NOTCH OR PROJECTION WILL BE ON THE BASE PLATE TO INDICATE SLOT ORIENTATION.

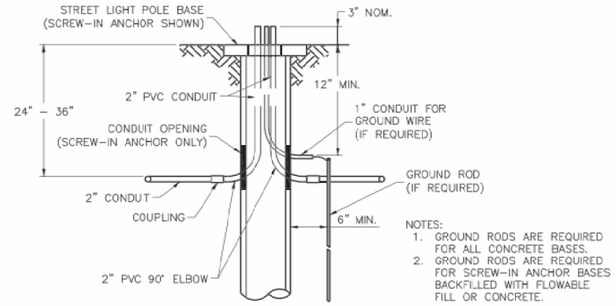

CONDUIT ENTRANCE AND GROUNDING

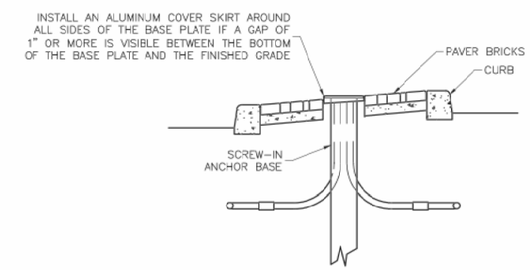

COVERSKIRT REQUIREMENTS

STATE OF MISSOURI
JEREMY SCOTT STRETZ
NUMBER PE-2011033866
PROFESSIONAL ENGINEER
Jeremy Stretz 2025.04.08 17:51:33-05'00'

DATE PREPARED 4/8/2025

ROUTE	STATE
50/291	MO
DISTRICT	SHEET NO.
KC	194

COUNTY: JACKSON

JOB NO.: J4P3196

FEDERAL PROJECT NO.: STB-3001(009)

PROJECT NO.:

BRIDGE NO.:

DESCRIPTION | DATE

IF A SEAL IS PRESENT ON THIS SHEET IT HAS BEEN ELECTRONICALLY SEALED AND DATED.

MISSOURI HIGHWAYS AND TRANSPORTATION COMMISSION
105 WEST CAPITOL
JEFFERSON CITY, MO 65102
1-888-ASK-MODOT (1-888-275-6636)
MoDOT
LEE'S SUMMIT MISSOURI
olsson
1301 BURLINGTON ST., STE. 100
NORTH KANSAS CITY, MO 64116
PHONE: 816.361.1177
CERT. OF AUTHORITY NO. 001592

LIGHTING PLAN
SHEET 12 OF 15

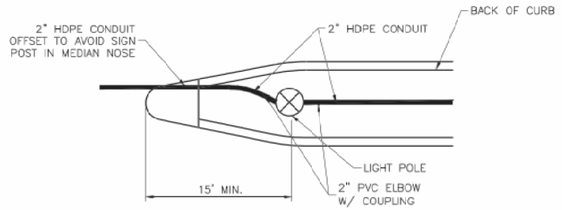

STREET LIGHT POLE IN MEDIAN

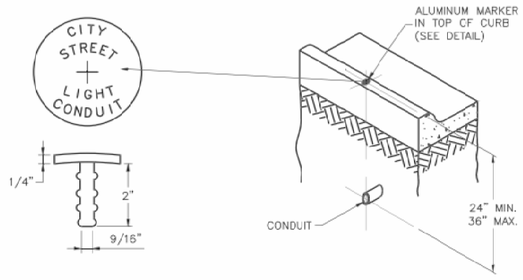

CONDUIT MARKING DETAIL

NOTES:

1. AN ALUMINUM MARKER SHALL BE PLACED IN THE TOP OF THE CURB DIRECTLY OVER THE CONDUIT.
2. MARKERS SHALL BE INSTALLED BY DRILLING THE CURB AND EXPOXYING THE MARKER IN PLACE. IF INSTALLED IN A SIDEWALK OR CURB RAMP, THE TOP OF THE MARKER SHALL BE FLUSH WITH THE CONCRETE SURFACE.
3. NO DIRECT PAYMENT SHALL BE MADE FOR CONDUIT MARKERS; THEY ARE SUBSIDIARY TO THE INSTALLATION OF CONDUIT.

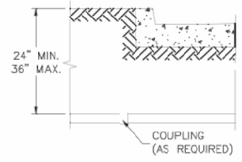

BORED CONDUIT

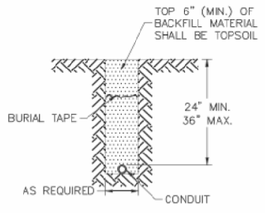

TRENCHED OR PLOWED CONDUIT

CONDUIT LOCATIONS

NOTES:

1. BACKFILL UNDER PAVED SURFACES SHALL BE FLOWABLE FILL.
2. THE CONDUIT SHALL NOT BE COVERED UNLESS INSPECTED AND APPROVED BY THE CITY ENGINEER, SO AS TO ENSURE PROPER DEPTH, CORRECT CONDUIT MATERIAL, AND PROPER CONDUIT END TREATMENT.

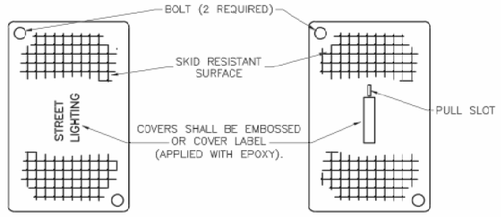

BOX COVER

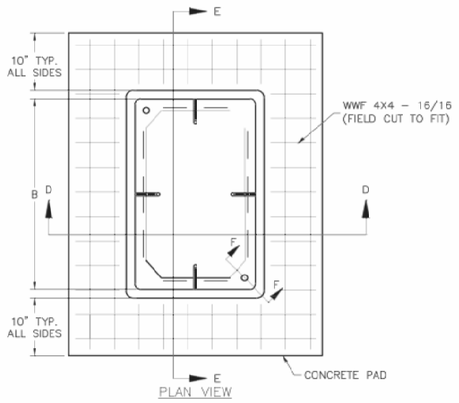

PLAN VIEW

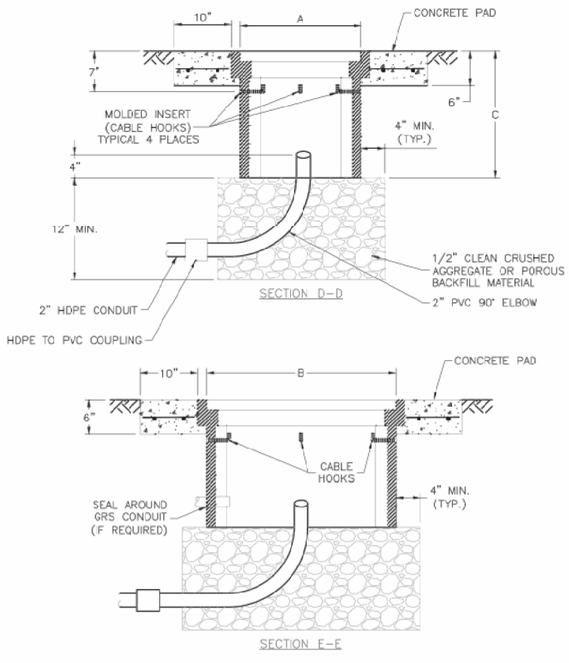

SECTION D–D

SECTION E–E

PULL OR JUNCTION BOX DETAILS

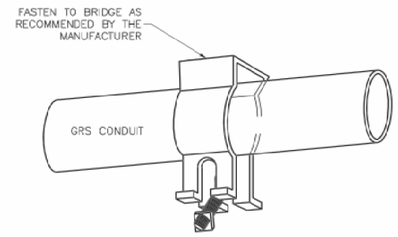

CONDUIT HANGER

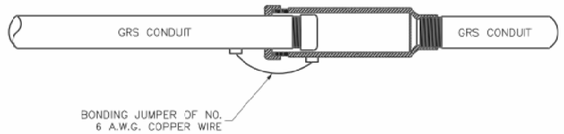

EXPANSION FITTING

GRS CONDUIT DETAILS

NOTES:

1. ALL CONDUITS INSTALLED ABOVE GROUND SHALL BE GRS.
2. CONDUIT ATTACHED TO BRIDGES SHALL HAVE EXPANSION FITTINGS INSTALLED AT EACH END OF THE BRIDGE AND AT EACH EXPANSION JOINT ON THE BRIDGE.
3. ALL GRS CONDUITS SHALL BE ELECTRICALLY BONDED BY A GROUNDING BUSHING AND GROUND WIRE AS DETAILED.
4. INSTALL THE CONDUIT AND CONNECTOR ASSEMBLY TO PERMIT A 1/2" MINIMUM LONGITUDINAL TRAVEL IN EITHER DIRECTION.

NUMBER OF ENTERING/EXITING CONDUITS	BOX TYPE	MINIMUM BOX DIMENSIONS		
		A	B	C
1 – 2	TYPE 1 JUNCTION BOX	12"	12"	12"
3 – 4	TYPE 2 JUNCTION BOX	12"	18"	12"
> 4	CLASS 1 PULL BOX	17"	30"	22"

ALL DIMENSIONS SHOWN ARE NOMINAL

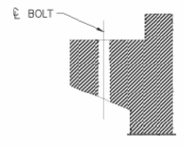

SECTION F–F

NOTES:

1. LIFT OPENING REQUIRED ON ALL COVERS.
2. PREFORMED BOX WALLS MAY BE EITHER FLARED OR VERTICAL. THE BOTTOM OF BOXES SHALL BE OPEN TO BELOW.
3. IF AN EXTENSION IS USED WITH A PREFORMED BOX, THE LIP OF THE EXTENSION MAY BE INTERIOR OR EXTERIOR. THE EXTENSION SHALL BE COMPATIBLE AND FROM THE SAME MANUFACTURER.
4. CABLE HOOKS ARE TO BE INCLUDED WITH CLASS 1 PULL BOXES ONLY.
5. A CLASS 1 PULL BOX SHALL BE INSTALLED ADJACENT TO EACH 4–CIRCUIT POWER SUPPLY.

STATE OF MISSOURI PROFESSIONAL ENGINEER
JEREMY SCOTT STRETZ NUMBER PE-2011023864
Jeremy Stretz 2025.02.28 15:43:06-06'00'

DATE PREPARED 2/28/2025
ROUTE 50/291 | STATE MO
DISTRICT KC | SHEET NO. 195
COUNTY JACKSON
JOB NO. J4P3196
FEDERAL PROJECT NO. STB-3001(009)
PROJECT NO.
BRIDGE NO.

DESCRIPTION	DATE

IF A SEAL IS PRESENT ON THIS SHEET IT HAS BEEN ELECTRONICALLY SEALED AND DATED.

MISSOURI HIGHWAYS AND TRANSPORTATION COMMISSION
105 WEST CAPITOL JEFFERSON CITY, MO 65102
1-888-ASK-MODOT (1-888-275-6636)

LEE'S SUMMIT MISSOURI

olsson
1301 BURLINGTON ST., STE. 100
NORTH KANSAS CITY, MO 64116
PHONE: 816.361.1177
CERT. OF AUTHORITY NO. 001592

LIGHTING PLAN
SHEET 13 OF 15

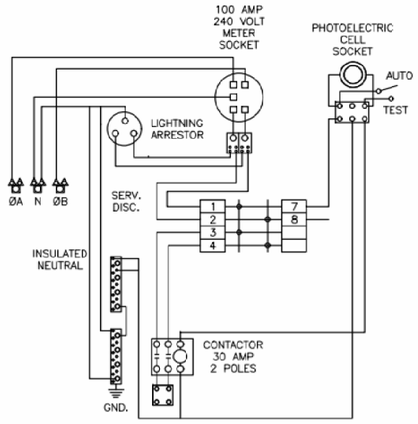

WIRING SCHEMATIC

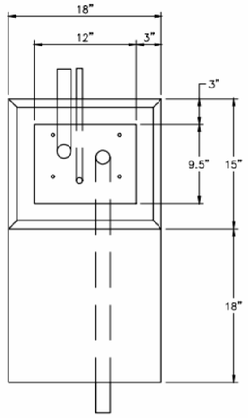

PLAN VIEW

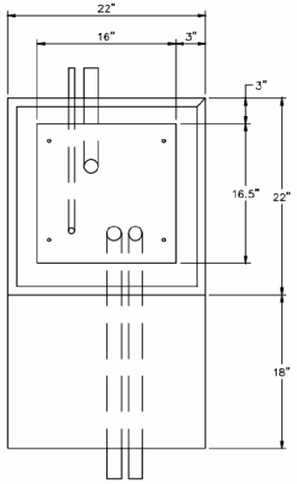

PLAN VIEW

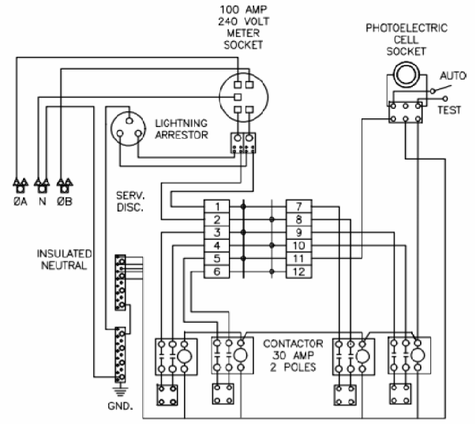

WIRING SCHEMATIC

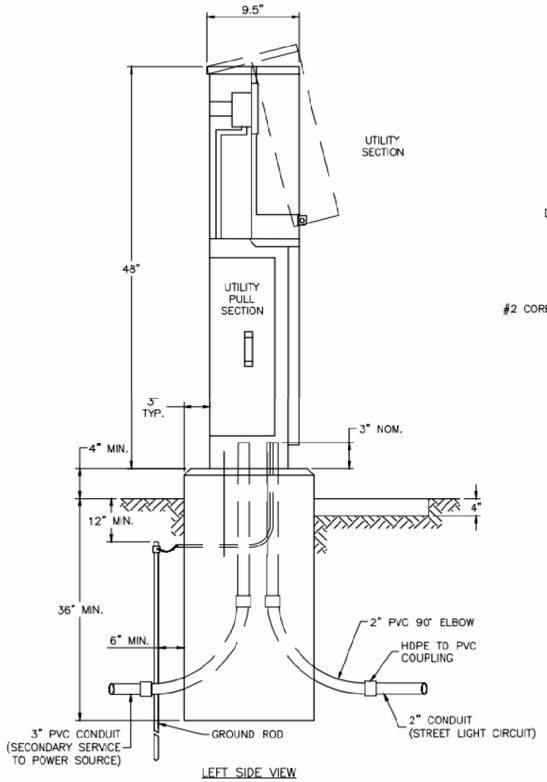

LEFT SIDE VIEW

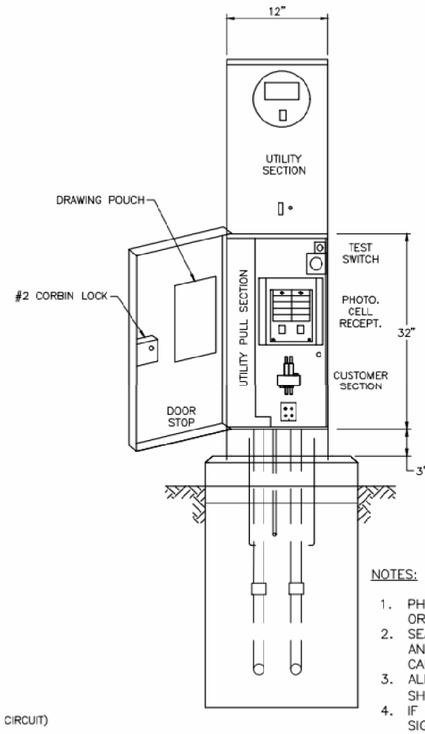

FRONT VIEW

FUSED CONTRACTORS ARE NOT PERMITTED

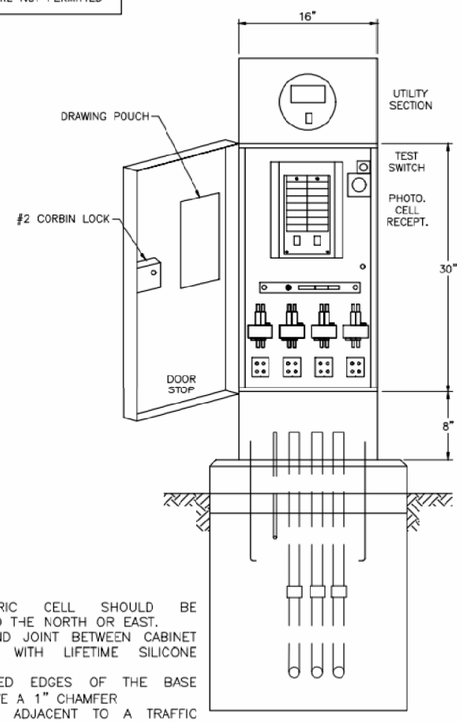

FRONT VIEW

NOTES:

1. PHOTOELECTRIC CELL SHOULD BE ORIENTED TO THE NORTH OR EAST.
2. SEAL AROUND JOINT BETWEEN CABINET AND BASE WITH LIFETIME SILICONE CAULK.
3. ALL EXPOSED EDGES OF THE BASE SHOULD HAVE A 1" CHAMFER
4. IF BASE IS ADJACENT TO A TRAFFIC SIGNAL CONTROLLER, RAISED PORTION OF BASE (ABOVE FINISHED GRADE) SHOULD BE CONSTRUCTED TO THE SAME HEIGHT AS THE SIGNAL CONTROLLER BASE.
5. THE STREET ADDRESS WITH THE POWER SUPPLY NUMBER BELOW IT SHOULD BE LABELED ON THE UPPER PORTION OF THE CABINET FACING THE STREET. THE CONTRACTOR WILL SUPPLY AND INSTALL STICKERS.

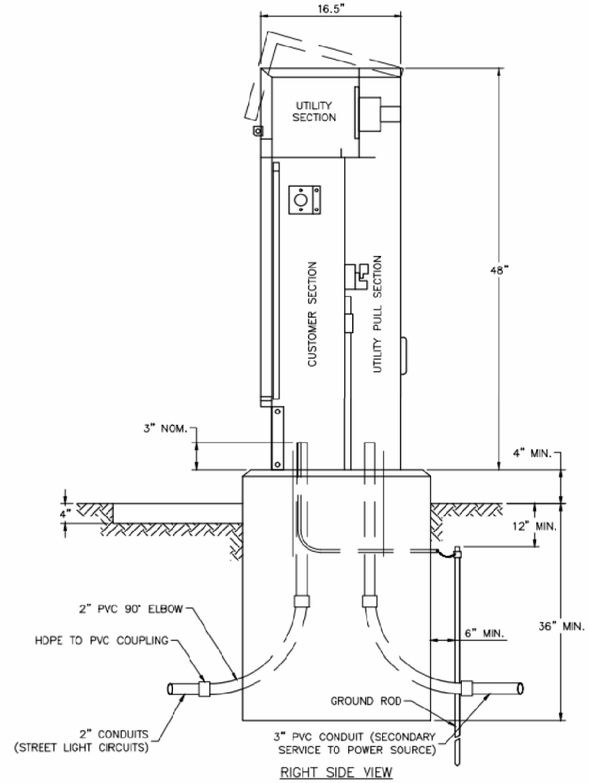

RIGHT SIDE VIEW

1 – CIRCUIT POWER SUPPLY

4 – CIRCUIT POWER SUPPLY

LIGHTING PLAN
SHEET 14 OF 15

STATE OF MISSOURI
JEREMY SCOTT STRETZ
NUMBER PE-2011023856
PROFESSIONAL ENGINEER

Jeremy Stretz 2025.02.28 15:43:20-06'00'

DATE PREPARED 2/28/2025
ROUTE 50/291
STATE MO
DISTRICT KC
SHEET NO. 196
COUNTY JACKSON
JOB NO. J4P3196
FEDERAL PROJECT NO. STB-3001(009)
PROJECT NO.
BRIDGE NO.

IF A SEAL IS PRESENT ON THIS SHEET IT HAS BEEN ELECTRONICALLY SEALED AND DATED.

DESCRIPTION | DATE

MISSOURI HIGHWAYS AND TRANSPORTATION COMMISSION
105 WEST CAPITOL
JEFFERSON CITY, MO 65102
1-888-ASK-MODOT (1-888-275-6636)

LEE'S SUMMIT MISSOURI

olsson
1301 BURLINGTON ST., STE. 100
NORTH KANSAS CITY, MO 64116
PHONE: 816.361.1177
CERT. OF AUTHORITY NO. 001592

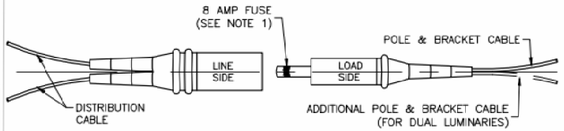

BREAK–AWAY FUSED ELECTRICAL CONNECTORS

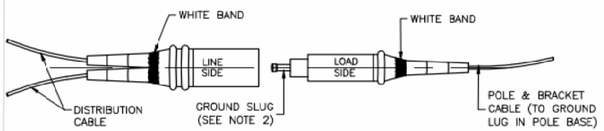

BREAK–AWAY NON FUSED ELECTRICAL CONNECTOR

NOTES:

1. FUSE REMAINS IN "LOAD SIDE" AFTER BREAK–AWAY.
2. GROUND "SLUG" REMAINS IN "LOAD SIDE" AFTER BREAK–AWAY.
3. CONNECTORS SHALL HAVE SET SCREW TYPE TERMINALS TO ATTACH CABLES.

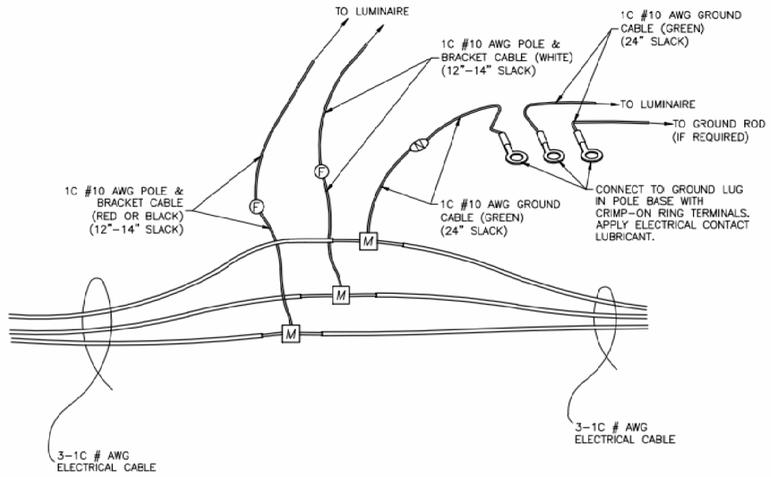

ELECTRICAL CONNECTOR KIT SCHEMATIC
(SINGLE LUMINAIRE)

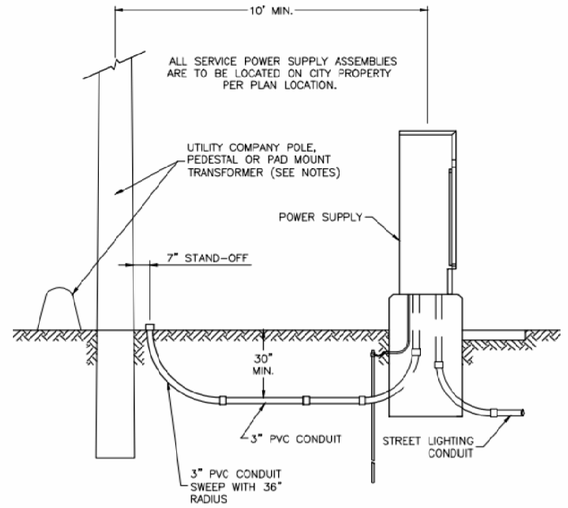

SECONDARY SERVICE CONNECTION DETAILS

NOTES:

1. CONTRACTOR SHALL INSTALL A CONDUIT STUB 24" TO 6" ABOVE GROUND AT UTILITY POLES. CONDUIT SHALL BE STUBBED TO THE SIDE OF THE POLE THAT WILL ALLOW A DIRECT RUN UP THE POLE TO THE TRANSFORMER WITHOUT CROSSING OTHER UTILITY LINES OR CABLES. THE END OF THE CONDUIT SHALL BE CAPPED.
2. CONTRACTOR SHALL INSTALL CONDUIT IN A TRENCH TO WITHIN 24" OF PEDESTALS OR PAD MOUNT TRANSFORMERS AND LEAVE A 36" X 36" X 36" ACCESS HOLE IN THE GROUND. CONTRACTOR SHALL KEEP OPEN TRENCH COVERED AND PROMPTLY BACKFILL ACCESS HOLE WHEN SERVICE IS COMPLETED.

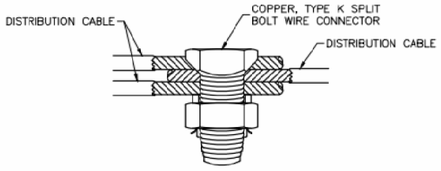

SPLICE KIT DETAILS

NOTES:

1. TO BE USED ONLY IN JUNCTION OR PULL BOXES WHERE CIRCUITS BRANCH OR "TEE".
2. ALL SPLICES SHALL BE PROTECTED WITH A RESIN SPLICE KIT (NOT SHOWN) INSTALLED IN ACCORDANCE WITH THE MANUFACTURER'S RECOMMENDATIONS.

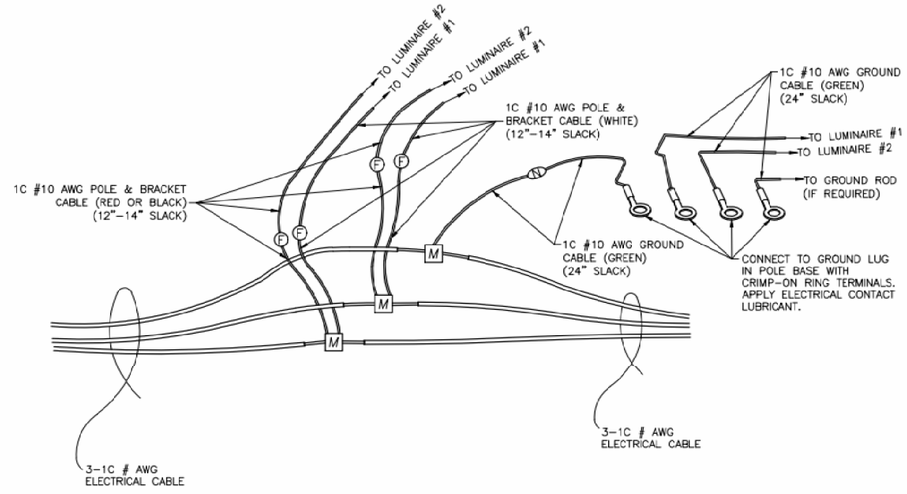

ELECTRICAL CONNECTOR KIT SCHEMATIC
(TWIN LUMINAIRES)

LEGEND

- (M) MULTI–TAP ELECTRICAL CONNECTOR
- (F) BREAK–AWAY FUSED ELECTRICAL CONNECTOR WITH 8 AMP FUSE
- (N) BREAK–AWAY NON–FUSED ELECTRICAL CONNECTOR WITH GROUND "SLUG"
- (S) SPLICE KIT

NOTES:

1. RED CABLES SHALL BE CONNECTED TO WEST OR NORTH ORIENTED LUMINAIRE. BLACK CABLES SHALL BE CONNECTED TO EAST OR SOUTH ORIENTED LUMINAIRE.
2. THE SPECIFIED CABLE SLACK SHALL BE PROVIDED ON EACH SIDE OF THE FUSED AND UN–FUSED CONNECTORS.
3. ADDTIONAL SLACK SHALL BE PROVIDED FOR THE #4 AWG CABLE SUCH THAT WHEN EXTENDED UPWARD, THE TOP OF THE MULTI–TAP CONNECTORS ARE NO LESS THAN 1" AND NO MORE THAN 3" ABOVE THE TOP OF THE HAND HOLE OPENING.

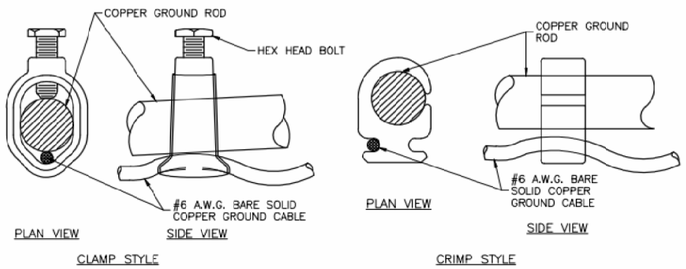

GROUND ROD CONNECTION DETAILS

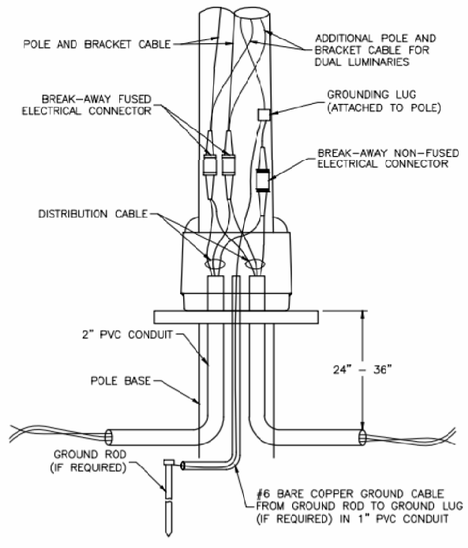

POLE WIRING DETAILS

STATE OF MISSOURI
JEREMY SCOTT STRETZ
NUMBER PE-2017023056
PROFESSIONAL ENGINEER
Jeremy Stretz 2025.02.28 15:40:16-06'00'

DATE PREPARED
2/28/2025

ROUTE	STATE
50/291	MO
DISTRICT	SHEET NO.
KC	197

COUNTY
JACKSON

JOB NO.
J4P3196

FEDERAL PROJECT NO.
STB-3001(009)

PROJECT NO.

BRIDGE NO.

DESCRIPTION	DATE

IF A SEAL IS PRESENT ON THIS SHEET IT HAS BEEN ELECTRONICALLY SEALED AND DATED.

MISSOURI HIGHWAYS AND TRANSPORTATION COMMISSION
105 WEST CAPITOL
JEFFERSON CITY, MO 65102
1-888-ASK-MODOT (1-888-275-6636)

LEE'S SUMMIT MISSOURI

olsson
1301 BURLINGTON ST., STE. 100
NORTH KANSAS CITY, MO 64116
PHONE: 816.361.1177
CERT. OF AUTHORITY NO. 001592

LIGHTING PLAN
SHEET 15 OF 15

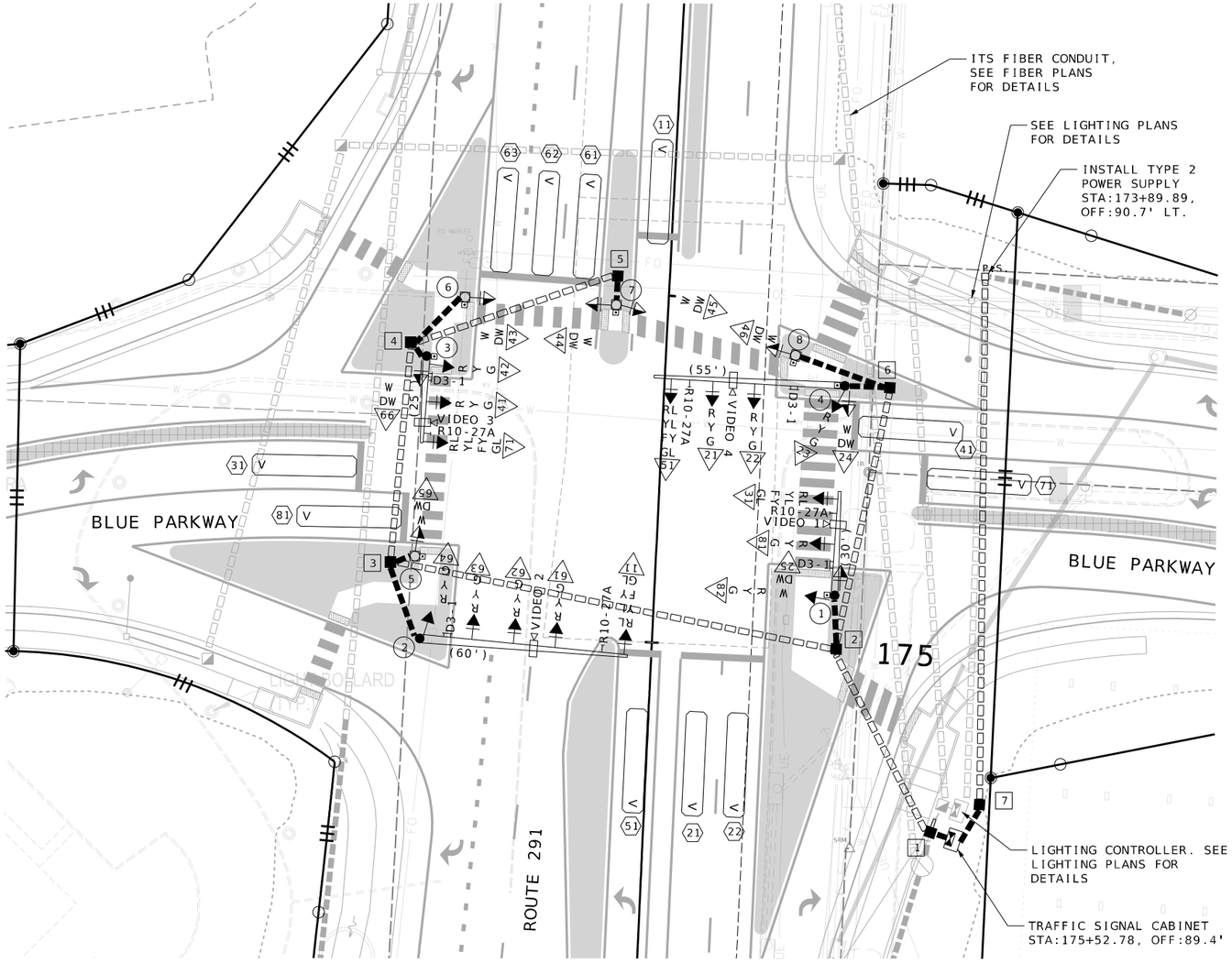

TRAFFIC SIGNALS LEGEND

- CONTROLLER
- CONTROLLER (EXISTING)
- JUNCTION BOX
- POWER SUPPLY
- WOOD POST
- SIGNAL HEAD (OPT LIM CONV)
- SIGNAL HEAD (OPT LIM)
- SIGNAL HEAD (PEDESTRIAN)
- SIGNAL HEAD (STANDARD)
- CCTV CAMERA
- VIDEO DETECTOR
- PUSH BUTTON DETECTOR
- PREFORMED PULL BOX TYPE 1
- PREFORMED PULL BOX TYPE 2
- CONCRETE PULL BOX TYPE 1
- CONCRETE PULL BOX TYPE 2
- ITS PULL BOX TYPE 2
- ITS PULL BOX TYPE 5
- V — VIDEO DETECTION ZONE
- 6 X 6 LOOP DETECTOR
- 6 X 15 LOOP DETECTOR
- 30 X 6 LOOP DETECTOR
- CONDUIT MEDIAN
- CONDUIT PUSHED
- CONDUIT BRIDGE
- CONDUIT EXISTING
- CONDUIT TRENCHED
- SPAN WIRE
- MAST ARM - TYPE A BASE
- MAST ARM - TYPE C BASE
- MAST ARM - TYPE F BASE

R	RED BALL
Y	YELLOW BALL
G	GREEN BALL
RL	RED LEFT ARROW
YL	YELLOW LEFT ARROW
GL	GREEN LEFT ARROW
S	STRAIGHT GREEN ARROW
RR	RIGHT RED ARROW
YR	YELLOW RIGHT ARROW
GR	GREEN RIGHT ARROW

ALL 12" LENS WITH TUNNEL VISOR

NOTES:

1.) ALL TRAFFIC SIGNAL CONSTRUCTION AND MATERIALS SHALL CONFORM TO THE MISSOURI STANDARD SPECIFICATIONS FOR HIGHWAY CONSTRUCTION, SECTION 902 (TRAFFIC SIGNALS), UNLESS OTHERWISE NOTED.

2.) THE CONTRACTOR SHALL STAKE LOCATIONS WHERE POLES, BOXES, AND THE CONTROLLER ARE TO BE INSTALLED. STAKED LOCATIONS SHALL BE REVIEWED AND APPROVED BY THE ENGINEER PRIOR TO PLACEMENT OF EQUIPMENT. SERVICE BOXES AND CONDUIT RUNS ARE APPROXIMATE AND MAY BE FIELD ADJUSTED TO CLEAR OBSTRUCTIONS AND FACILITATE WIRING, AS APPROVED BY THE ENGINEER.

3.) CONDUITS UNDER ANY NEW PAVEMENT SHALL EITHER BE TRENCHED PRIOR TO PAVEMENT CONSTRUCTION OR BORED FOLLOWING PAVEMENT CONSTRUCTION. CONDUITS UNDER ANY EXISTING PAVEMENT, INCLUDING SIDEWALKS AND DRIVEWAYS, SHALL BE BORED WITHOUT DISTURBANCE TO THE EXISTING PAVEMENT.

4.) CONDUIT, PULL BOXES, AND POLE BASES SHALL MAINTAIN AT LEAST 4' SETBACK FROM NEW GUARDRAIL OR CONCRETE BARRIER.

5.) CONTROLLER CABINET DOOR MUST OPEN AWAY FROM INTERSCTION.

6.) CONTRACTOR SHALL COORDINATE WITH POLE MANUFACTURER FOR BASE DESIGN COMPLIANCE PER MoDOT REQUIREMENTS. STANDARD SPECIFICATIONS: 1.92.2. CONTRACTOR SHALL SUBMIT SHOP DRAWINGS SEALED BY A REGISTERED PROFESSIONAL ENGINEER FROM THE MANUFACTURER TO THE PROJECT ENGINEER FOR APPROVAL PRIOR TO THE START OF FABRICATION. IF APPLICABLE PRE-APPROVED DRAWINGS MAY BE UTILIZED FOR PURCHASING AND SUPPLYING THE POLES.

SCALE
0 20 40 60

BLUE PARKWAY & ROUTE 291

SIGNAL PLAN
SHEET 1 OF 20

STATE OF MISSOURI
JEREMY SCOTT STRETZ
NUMBER PE-2017023856
PROFESSIONAL ENGINEER
Jeremy Stretz 2025.02.28 15:44:46-06'00'

DATE PREPARED 2/28/2025
ROUTE 50/291 | STATE MO
DISTRICT KC | SHEET NO. 198
COUNTY JACKSON
JOB NO. J4P3196
FEDERAL PROJECT NO. STB-3001(009)
PROJECT NO.
BRIDGE NO.

DESCRIPTION | DATE

IF A SEAL IS PRESENT ON THIS SHEET IT HAS BEEN ELECTRONICALLY SEALED AND DATED.

MISSOURI HIGHWAYS AND TRANSPORTATION COMMISSION
105 WEST CAPITOL
JEFFERSON CITY, MO 65102
1-888-ASK-MODOT (1-888-275-6636)

LEE'S SUMMIT MISSOURI

olsson
1301 BURLINGTON ST., STE. 100
NORTH KANSAS CITY, MO 64116
PHONE: 816.361.1177
CERT. OF AUTHORITY NO. 001592

F:\2021\04501-05000\021-04786\40-Design\Microstation\J4P3196\plan_sheets\12 Signals\198_SG_01_J4P3196.dgn 2:09:22 PM 2/28/2025

| POST NUMBER | PULL BOX NUMBER | LOCATION: APPROACH | STATION | OFFSET | BASE: A 9.0 | A 9.5 | A 10.0 | A 10.5 | A 11.0 | A 12.0 | F 9.0 | F 9.5 | F 10.0 | F 10.5 | F 11.0 | F 12.0 | C | CONCRETE** (CU.YDS.) | PULL BOX: PREFORMED CLASS 1 | PREFORMED CLASS 2 | PREFORMED CLASS 3 | PREFORMED CLASS 5 | CONCRETE STANDARD | CONCRETE DOUBLE, TYPE A | CONCRETE DOUBLE, TYPE B | DRAIN TYPE* I | DRAIN TYPE* II A | DRAIN TYPE* II B | DRAIN TYPE* II C | TOP MOUNT POST 8 FT. | TOP MOUNT POST 15 FT. | POST: TYPE C & CL ARM LENGTH 25 | 30 | 55 | 60 | SIGNAL SPACING B | C | D | D' | SIGN SPACING B | C | D | D' | TYPE B & BL ARM LENGTH E | K | E | K | LEFT ARM E SIGNAL SPACING F | G | I | H' | LEFT ARM E SIGN SPACING F | G | I | H' | RIGHT ARM K SIGNAL SPACING F | G | I | H' | RIGHT ARM K SIGN SPACING F | G | I | H' | INCLUDED ANGLE | LUMINAIRE BRACKET ARM* 4 FT. | 6 FT. | 8 FT. | 10 FT. | 12 FT. | 15 FT. |
|---|---|---

CONDUIT (WITH #14 TRACER WIRE)

FROM	TO	CENTER TO CENTER DISTANCE	LOOP DET.	TRENCH			PUSHED			MEDIAN			ON STRUCTURE		REMARKS
			1"	2"	3"	4"	2"	3"	4"	2"	3"	4"	2"	3"	
Ø	P.S.	61		59											
P.S.	CONT	167		165											Pass Thru PB
CONT	PB1	12			30										2 Conduits
PB1	PB2	64						124							
PB2	PB3	135						133							
PB2	PB6	80						78							
PB2	POLE 1	17			20										
PB3	POLE 5	10		11											
PB3	PB4	67						65							
PB3	POLE 2	30			33										
PB4	POLE 6	24		27											
PB4	POLE 3	24			27										
PB4	PB5	67					65								
PB5	POLE 7	10						11							
PB6	POLE 8	9		10											
PB6	POLE 4	13			16										

EFFECTIVE 04-01-2018

POWER SUPPLY

LOCATION			POWER SUPPLY ASSEMBLY		CIRCUIT BREAKER TRIP RATING*				LIGHTING CONTROL * (ON POWER SUPPLY)		SERVICE POLE	
					CONTROLLER		POWER SUPPLY DISCONNECT					
APPROACH	STATION	OFFSET	DRAWING 902.15	DRAWING	AUXILIARY BREAKER	CONT & SIGNAL LAMPS	MAIN BREAKER		120 VOLT CONTROL CABINET	MAIN BREAKER	CONTRACT FURNISH	UTILITY COMPANY
							SIGNALS	LIGHTING				
BLUE PARKWAY	173+89.89	96.4' LT.	Type 2		15 Amps	40 Amps	100 Amps	100 Amps		Amps	Cl. Ft.	EVERGY
			Type		15 Amps	40 Amps	Amps	Amps		Amps	Cl. Ft.	

CONTROLLER ASSEMBLY AND AUXILIARY EQUIPMENT

LOCATION			SYSTEM MASTER (CLOSED LOOP)		ACTUATED		ON-OFF* SWITCH		COORDINATION INTERFACE *					TIME * CLOCK	NEMA CABINET TYPE *			170 CABINET TYPE *		170 SOFTWARE *		UNINTERRUPTIBLE POWER SUPPLY
							TYPE		12C/7C HARDWIRE		TIME BASE	CLOSED LOOP										
APPROACH	STATION	OFFSET	NEMA	170	ECONOLITE COBALT	170	I	II	MASTER	LOCAL		NEMA	170	FIBER		E	EV	DOUBLE	332	336S	BITRAN	WAPITI	902-99.02
BLUE PARKWAY	175+52.78	89.4' LT.			1									1			1						1

NEMA DETECTOR ASSIGNMENT

		CARD POSITION							
		1	2	3	4	5	6	7	8
CHANNEL	1			VIDEO					
	2								

TOTAL NUMBER OF DETECTOR CARDS(2-CHANNEL) = X (1)

DETECTOR SCHEDULE

DETECTOR NUMBER	APPROACH	TYPE				
		PUSH BUTTON (2)	INDUCTION LOOP			INSYNC VIDEO (1) DETECTION
			STANDARD	DELAY/ EXTEND *	CALL UNIT *	
VIDEO 1	ROUTE 291					1
VIDEO 2	BLUE PARKWAY					1
VIDEO 3	ROUTE 291					1
VIDEO 4	BLUE PARKWAY					1
24	BLUE PARKWAY	1				
25	BLUE PARKWAY	1				
43	ROUTE 291	1				
44	ROUTE 291	1				
46	ROUTE 291	1				
64	BLUE PARKWAY	1				
65	BLUE PARKWAY	1				
TOTAL		7				

* ITEMS FOR WHICH SEPARATE PAYMENT WILL NOT BE MADE.

(1) RHYTHM DETECTION SYSTEM WILL BE PROVIDED TO THE CONTRACTOR WITH PURCHASE OF INSYNC SYSTEM. THE CONTRACTOR IS PAID FOR INSTALLATION ONLY THROUGH THE 1, LUMP SUM BID ITEM "ADAPTIVE TRAFFIC SIGNAL CONTROL SYSTEM".

(2) ALL PUSH BUTTONS SHALL BE APS AND UTLIZE A 2-WIRE CONTROL SYSTEM WITH CONTROL UNIT IN THE CABINET.

(3) CONTROL UNIT SHALL OPERATE IN MODE G. COMPACT MODE FOR FLASHING YELLOW ARROW.

MISCELLANEOUS BID ITEMS

BID ITEM	UNIT	QUANTITY
ADAPTIVE TRAFFIC SIGNAL CONTROL SYSTEM	LUMP SUM	1

NEMA LOAD SWITCH ASSIGNMENTS

1	2	3	4	5	6	7	8	9	10	11	12	13	14	15	16
Ø1 R Ø1 Y Ø1 FYA	Ø2 R Ø2 Y Ø2 G	Ø3 R Ø3 Y Ø3 FYA	Ø4 R Ø4 Y Ø4 G	Ø5 R Ø5 Y Ø5 FYA	Ø6 R Ø6 Y Ø6 G	Ø7 R Ø7 Y Ø7 FYA	Ø8 R Ø8 Y Ø8 G	Ø2P W Ø1 G Ø2P DW	Ø4P W Ø3 G Ø4P DW	Ø6P W Ø5 G Ø6P DW	Ø7 G				

NOTE: ASSIGN LEFT-TURN RED, GREEN, AND YELLOW ARROW INDICATIONS TO TRADITIOAL LOAD SWITCH, PERMISSIVE FLASHING YELLOW ARROW SHALL BE ASSIGNED TO PED OUTPUTS AND MMU OPERATE IN MODE G

SIGNAL SIGNS

QUANTITY	MUTCD SIGN NUMBER	SIZE	AREA	SIGN TOTAL AREA ITEM NO. 90208.33	SIGNAL SIGN MOUNTING HARDWARE ITEM NO. 90208.34
		INCHES	SQ.FT.	SQ.FT.	EA.
	R10-10L	24 X 30	5.0		
	R10-10R	24 X 30	5.0		
	R3-5L	30 X 36	7.5		
	R3-5R	30 X 36	7.5		
	R3-5A	30 X 36	7.5		
	R3-6L	30 X 36	7.5		
	R3-6R	30 X 36	7.5		
	R3-2	24 X 24	4.0		
	R3-1	24 X 24	4.0		
	R3-3	24 X 24	4.0		
4	D3-1 ***	VAR. X 18	12.00	48.00	4
	D3-1B ***	VAR. X 18			
	R10-3E	9 X 15	0.9		
	R10-11A	24 X 30	5.0		
	R10-13	36 X 24	6.0		
4	R10-27A	30 X 36	7.5	30.00	4
			SUBTOTAL	78.00	8
			TOTAL	78.00	8

JEREMY SCOTT STRETZ NUMBER PE-2017033866 STATE OF MISSOURI PROFESSIONAL ENGINEER
Jeremy Stretz 2025.04.08 17:55:04-05'00'

DATE PREPARED 4/8/2025

ROUTE 50/291 | STATE MO

DISTRICT KC | SHEET NO. 201

COUNTY JACKSON

JOB NO. J4P3196

FEDERAL PROJECT NO.

PROJECT NO.

BRIDGE NO.

DESCRIPTION | DATE

IF A SEAL IS PRESENT ON THIS SHEET IT HAS BEEN ELECTRONICALLY SEALED AND DATED.

MISSOURI HIGHWAYS AND TRANSPORTATION COMMISSION
105 WEST CAPITOL
JEFFERSON CITY, MO 65102
1-888-ASK-MODOT (1-888-275-6636)
LEE'S SUMMIT MISSOURI
olsson
1301 BURLINGTON ST., STE. 100
NORTH KANSAS CITY, MO 64116
PHONE: 816.361.1177
CERT. OF AUTHORITY NO. 001592

BLUE PARKWAY & ROUTE 291
INTERSECTION

D-37C
SIGNAL PLAN
SHEET 4 OF 20

EFFECTIVE 12-01-17

WIRING DIAGRAM

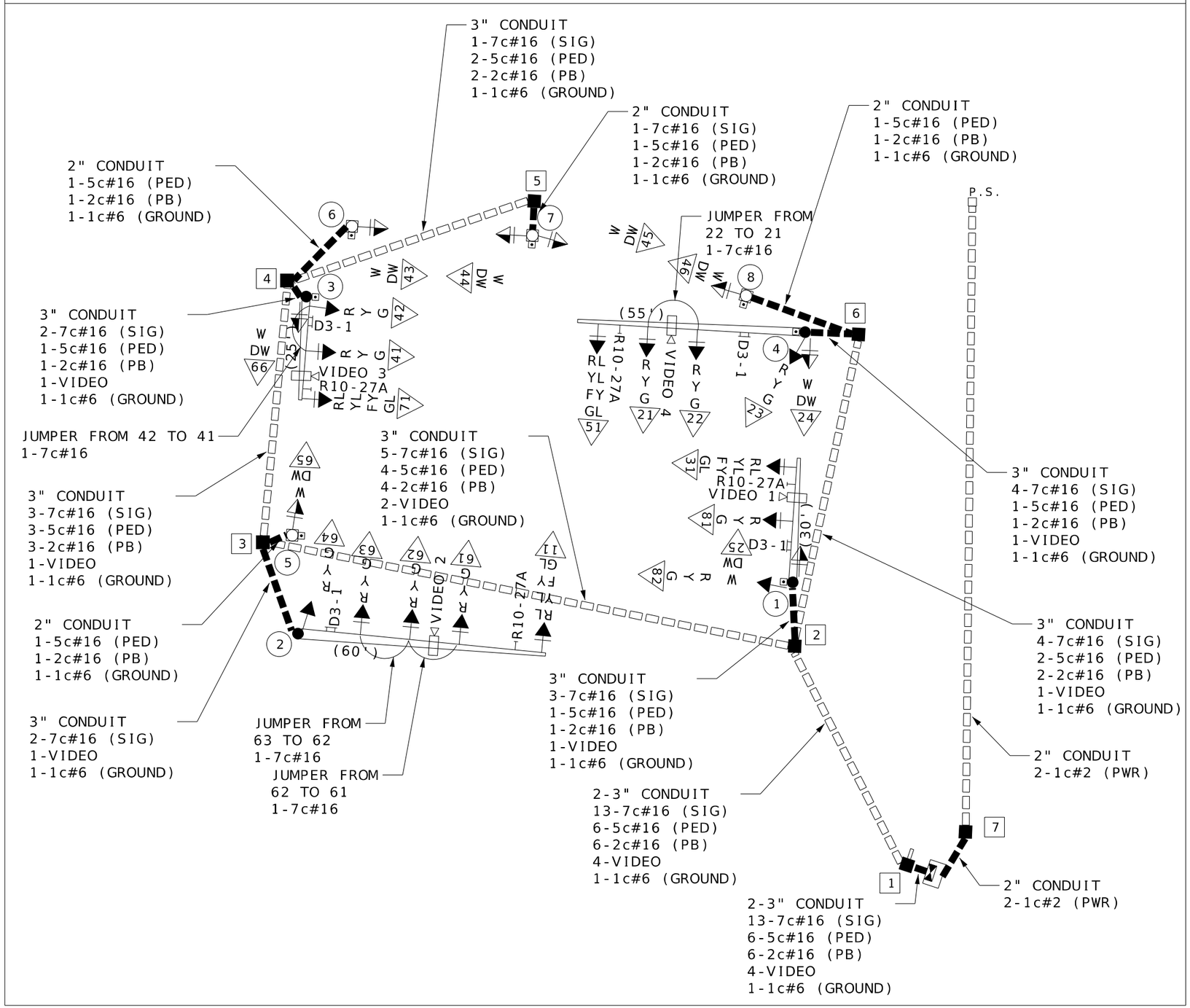

LEGEND

3" ━━	CONDUIT CONTAINING CABLE WITH SIZE
———	CABLE
X-Xc	MULTI-CONDUCTOR CABLE #16 AWG (UNLESS OTHERWISE INDICATED)
LIC	#14 AWG DETECTOR LEAD-IN CABLE (2C TWISTED SHIELDED)
X	PULL BOX WITH NUMBER
(X)	POST WITH NUMBER
(X)	POST WITH MAST ARM
(X)	POST WITH MAST ARM AND LUMINAIRE
X	DETECTOR WITH NUMBER
—X	SIGNAL HEAD WITH NUMBER
	SIGNAL CONTROLLER
	POWER SUPPLY
	LIGHTING CONTROLLER

BLUE PARKWAY & ROUTE 291

INTERSECTION

D-37D

SIGNAL PLAN
SHEET 5 OF 20

STATE OF MISSOURI
JEREMY SCOTT STRETZ
NUMBER PE-2011021864
PROFESSIONAL ENGINEER

Jeremy Stretz 2025.02.28 15:45:47-06'00'

DATE PREPARED
2/28/2025

ROUTE	STATE
50/291	MO
DISTRICT	SHEET NO.
KC	202

COUNTY
JACKSON

JOB NO.
J4P3196

FEDERAL PROJECT NO.
STB-3001(009)

PROJECT NO.

BRIDGE NO.

DATE	DESCRIPTION

IF A SEAL IS PRESENT ON THIS SHEET IT HAS BEEN ELECTRONICALLY SEALED AND DATED.

MISSOURI HIGHWAYS AND TRANSPORTATION COMMISSION
105 WEST CAPITOL
JEFFERSON CITY, MO 65102
1-888-ASK-MODOT (1-888-275-6636)

LEE'S SUMMIT MISSOURI

olsson
1301 BURLINGTON ST., STE. 100
NORTH KANSAS CITY, MO 64116
PHONE: 816.361.1177
CERT. OF AUTHORITY NO. 001592

F:\2021\04501-05000\021-04786\40-Design\Microstation\J4P3196\plan_sheets\12 Signals\202_SG_05_J4P3196.dgn 2:09:57 PM 2/28/2025

SIGNAL FACE LOCATION

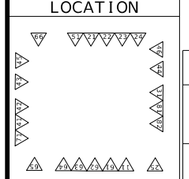

TRAFFIC PHASING AND COLOR SEQUENCE - ACTUATED CONTROLLERS

	PHASE 1	PHASE 2	PHASE 3	PHASE 4	PHASE 5	PHASE 6	PHASE 7	PHASE 8	PED Ø 2 OVERLAP	PED Ø 4 OVERLAP	PED Ø 6 OVERLAP	PED Ø 8 OVERLAP	OVERLAP A	OVERLAP B	OVERLAP C	OVERLAP D	
FACE NUMBERS	11	21 23	31	41	51	61 63	71	81	24	43 45	65	NOT IN-USE					FACE NUMBERS
		22		12	52	62 64		82	25	44 46	66						
SIGNAL INDICATIONS R	RL	R R	RL	R	RL	R R	RL	R	DW	DW DW	DW						R
SIGNAL INDICATIONS Y	YL	Y Y	YL	Y	YL	Y Y	YL	Y	FDW	FDW FDW	FDW						Y
SIGNAL INDICATIONS FYA													FY	FY	FY	FY	FYA
SIGNAL INDICATIONS G	GL	G G	GL	G	GL	G G	GL	G	W	W W	W						G
DETECTOR ASSIGNMENTS	11	21 22	31	41	51	61 62 63	71	81									DETECTOR ASSIGNMENTS
DETECTOR ASSIGNMENTS (PEDS. ONLY)									24 25	43 45 44 46	65 66						
OVERLAP PARENT PHASES													6	8	2	4	

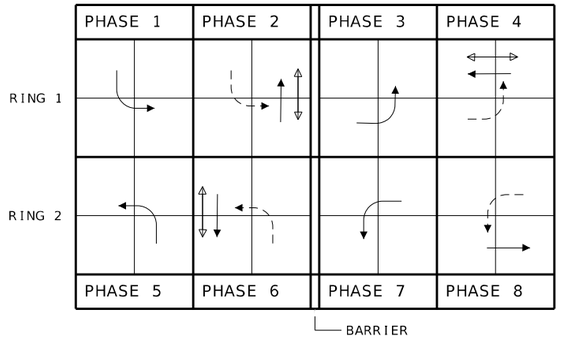

RING STRUCTURE

IF CALLED, ALL NON-CONFLICTING PHASES SHALL COMBINE AND TIME CONCURRENTLY. TIME TO BE DETERMINED BY THE ENGINEER AT SIGNAL TURN ON AND SET IN THE CONTROLLER BY THE CONTRACTOR.

LEGEND

- ACTUATED VEHICULAR MOVEMENT
- PARTIALLY RESTRICTED ACTUATED VEHICULAR MOVEMENT
- NON-ACTUATED VEHICULAR MOVEMENT
- PARTIALLY RESTRICTED NON-ACTUATED VEHICULAR MOVEMENT
- ACTUATED PEDESTRIAN MOVEMENT
- NON-ACTUATED PEDESTRIAN MOVEMENT
- VEHICLE STOPPED
- FDW — FLASHING DON'T WALK
- W — WALK
- DW — DON'T WALK
- R/W — RIGHT OF WAY INTERVAL
- YRt — YELLOW RIGHT ARROW
- RT. — GREEN RIGHT ARROW
- LY -YL — YELLOW LEFT ARROW
- L — GREEN LEFT ARROW
- S — GREEN STRAIGHT AHEAD ARROW
- G — CIRCULAR GREEN
- Y — CIRCULAR YELLOW
- R — CIRCULAR RED
- RL — RED LEFT ARROW
- Ø — TRAFFIC PHASE
- AO — ALL OTHERS
- FR — FLASHING RED
- FY — FLASHING CIRCULAR YELLOW
- FYL — FLASHING YELLOW LEFT ARROW

FLASHING OPERATION	
ALL MOVEMENTS	FR
	FY

CONTROLLER TYPE	NEMA

TRAFFIC SIGNAL CONTROL OPERATION

INTERSECTION OF

BLUE PARKWAY & ROUTE 291

D-38A

SIGNAL PLAN
SHEET 6 OF 20

IF A SEAL IS PRESENT ON THIS SHEET IT HAS BEEN ELECTRONICALLY SEALED AND DATED.

STATE OF MISSOURI — PROFESSIONAL ENGINEER
JEREMY SCOTT STRETZ
NUMBER PE-2011023864
Jeremy Stretz 2025.02.28 15:46:04-06'00'

DATE PREPARED: 2/28/2025
ROUTE: 50/291 | STATE: MO
DISTRICT: KC | SHEET NO.: 203
COUNTY: JACKSON
JOB NO.: J4P3196
FEDERAL PROJECT NO.:
PROJECT NO.:
BRIDGE NO.:

DESCRIPTION	DATE

MISSOURI HIGHWAYS AND TRANSPORTATION COMMISSION
105 WEST CAPITOL
JEFFERSON CITY, MO 65102
1-888-ASK-MODOT (1-888-275-6636)

LEE'S SUMMIT MISSOURI

olsson
1301 BURLINGTON ST., STE. 100
NORTH KANSAS CITY, MO 64116
PHONE: 816.361.1177
CERT. OF AUTHORITY NO. 001592

F:\2021\04501-05000\021-04786\40-Design\Microstation\J4P3196\plan_sheets\12 Signals\203_SG_06_J4P3196.dgn 2:10:00 PM 2/28/2025

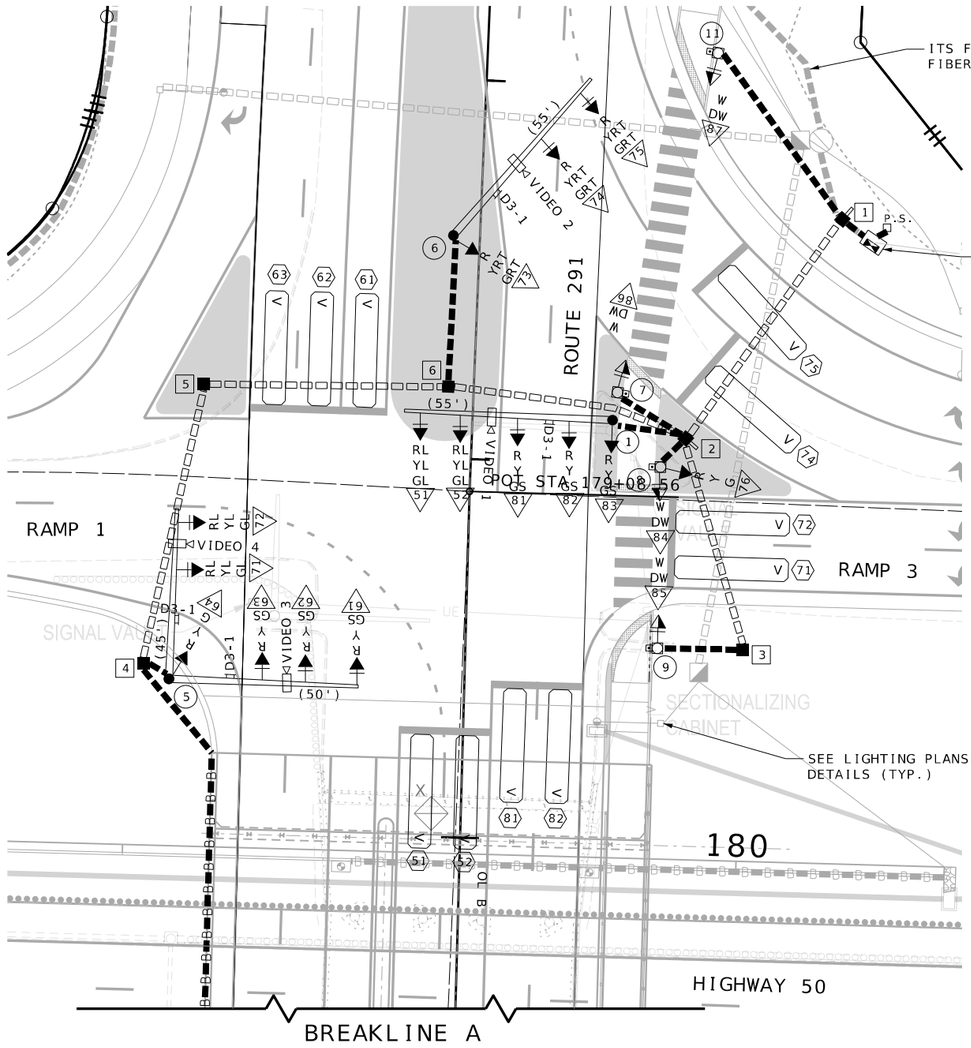

RAMP 1/RAMP 3 & ROUTE 291

TRAFFIC SIGNALS LEGEND

CONTROLLER	CCTV CAMERA	6 X 6 LOOP DETECTOR
CONTROLLER (EXISTING)	VIDEO DETECTOR	6 X 15 LOOP DETECTOR
JUNCTION BOX	PUSH BUTTON DETECTOR	30 X 6 LOOP DETECTOR
POWER SUPPLY	PREFORMED PULL BOX TYPE 1	CONDUIT MEDIAN
WOOD POST	PREFORMED PULL BOX TYPE 2	CONDUIT PUSHED
SIGNAL HEAD (OPT LIM CONV)	CONCRETE PULL BOX TYPE 1	CONDUIT BRIDGE
SIGNAL HEAD (OPT LIM)	CONCRETE PULL BOX TYPE 2	CONDUIT EXISTING
SIGNAL HEAD (PEDESTRIAN)	ITS PULL BOX TYPE 2	CONDUIT TRENCHED
SIGNAL HEAD (STANDARD)	ITS PULL BOX TYPE 5	SPAN WIRE
		MAST ARM - TYPE A BASE
		MAST ARM - TYPE C BASE
		MAST ARM - TYPE F BASE

R	RED BALL	ALL 12" LENS WITH TUNNEL VISOR
Y	YELLOW BALL	
G	GREEN BALL	
RL	RED LEFT ARROW	
YL	YELLOW LEFT ARROW	
GL	GREEN LEFT ARROW	
S	STRAIGHT GREEN ARROW	
RR	RIGHT RED ARROW	
YR	YELLOW RIGHT ARROW	
GR	GREEN RIGHT ARROW	

NOTES:

1.) ALL TRAFFIC SIGNAL CONSTRUCTION AND MATERIALS SHALL CONFORM TO THE MISSOURI STANDARD SPECIFICATIONS FOR HIGHWAY CONSTRUCTION, SECTION 902 (TRAFFIC SIGNALS), UNLESS OTHERWISE NOTED.

2.) THE CONTRACTOR SHALL STAKE LOCATIONS WHERE POLES, BOXES, AND THE CONTROLLER ARE TO BE INSTALLED. STAKED LOCATIONS SHALL BE REVIEWED AND APPROVED BY THE ENGINEER PRIOR TO PLACEMENT OF EQUIPMENT. SERVICE BOXES AND CONDUIT RUNS ARE APPROXIMATE AND MAY BE FIELD ADJUSTED TO CLEAR OBSTRUCTIONS AND FACILITATE WIRING, AS APPROVED BY THE ENGINEER.

3.) CONDUITS UNDER ANY NEW PAVEMENT SHALL EITHER BE TRENCHED PRIOR TO PAVEMENT CONSTRUCTION OR BORED FOLLOWING PAVEMENT CONSTRUCTION. CONDUITS UNDER ANY EXISTING PAVEMENT, INCLUDING SIDEWALKS AND DRIVEWAYS, SHALL BE BORED WITHOUT DISTURBANCE TO THE EXISTING PAVEMENT.

4.) CONDUIT, PULL BOXES, AND POLE BASES SHALL MAINTAIN AT LEAST 4' SETBACK FROM NEW GUARDRAIL OR CONCRETE BARRIER.

5.) CONTROLLER CABINET DOOR MUST OPEN AWAY FROM INTERSECTION.

6.) CONTRACTOR SHALL COORDINATE WITH POLE MANUFACTURER FOR BASE DESIGN COMPLIANCE PER MoDOT REQUIREMENTS. STANDARD SPECIFICATIONS: 1.92.2. CONTRACTOR SHALL SUBMIT SHOP DRAWINGS SEALED BY A REGISTERED PROFESSIONAL ENGINEER FROM THE MANUFACTURER TO THE PROJECT ENGINEER FOR APPROVAL PRIOR TO THE START OF FABRICATION. IF APPLICABLE PRE-APPROVED DRAWINGS MAY BE UTILIZED FOR PURCHASING AND SUPPLYING THE POLES.

SIGNAL PLAN
SHEET 7 OF 20

STATE OF MISSOURI
JEREMY SCOTT STRETZ
NUMBER PE-2017023856
PROFESSIONAL ENGINEER
Jeremy Stretz 2025.04.08 17:55:18-05'00'

DATE PREPARED: 4/8/2025
ROUTE: 50/291 | STATE: MO
DISTRICT: KC | SHEET NO.: 204
COUNTY: JACKSON
JOB NO.: J4P3196
FEDERAL PROJECT NO.: STB-3001(009)
PROJECT NO.:
BRIDGE NO.:

DESCRIPTION | DATE

IF A SEAL IS PRESENT ON THIS SHEET IT HAS BEEN ELECTRONICALLY SEALED AND DATED.

MISSOURI HIGHWAYS AND TRANSPORTATION COMMISSION
105 WEST CAPITOL
JEFFERSON CITY, MO 65102
1-888-ASK-MODOT (1-888-275-6636)

LEE'S SUMMIT MISSOURI

olsson
1301 BURLINGTON ST., STE. 100
NORTH KANSAS CITY, MO 64116
PHONE: 816.361.1177
CERT. OF AUTHORITY NO. 001592

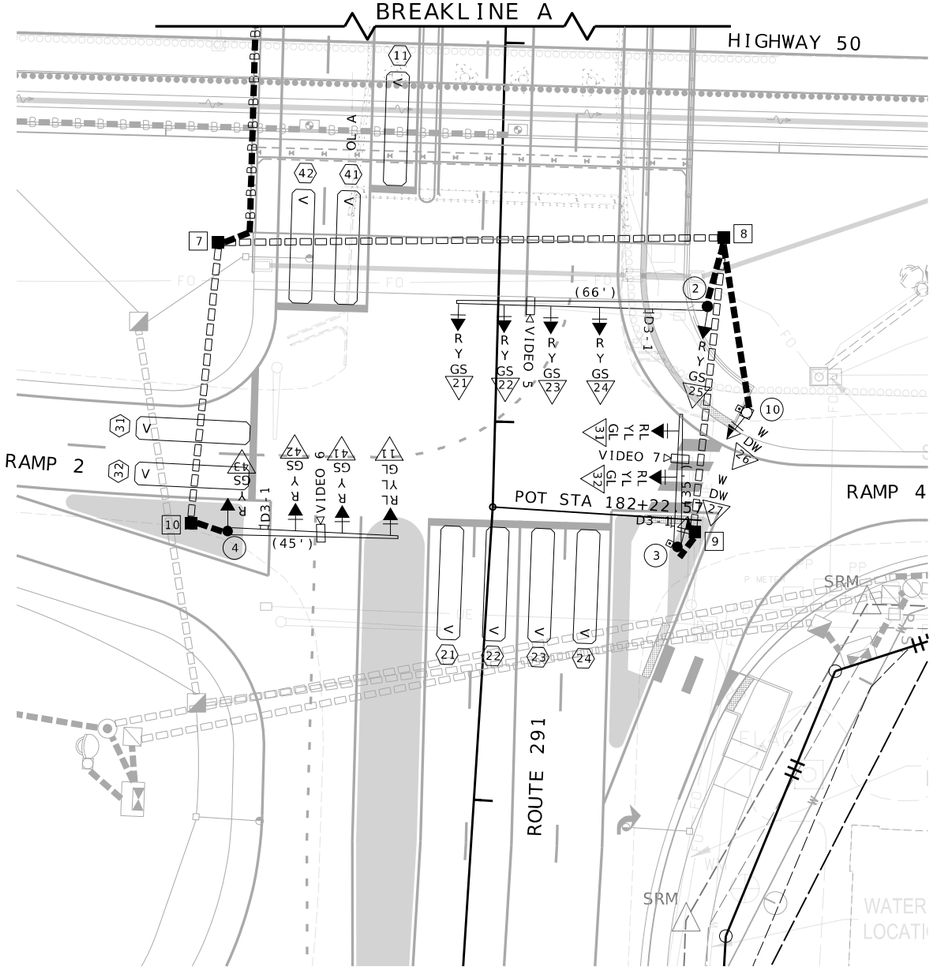

TRAFFIC SIGNALS LEGEND

- CONTROLLER
- CONTROLLER (EXISTING)
- JUNCTION BOX
- POWER SUPPLY
- WOOD POST
- SIGNAL HEAD (OPT LIM CONV)
- SIGNAL HEAD (OPT LIM)
- SIGNAL HEAD (PEDESTRIAN)
- SIGNAL HEAD (STANDARD)
- CCTV CAMERA
- VIDEO DETECTOR
- PUSH BUTTON DETECTOR
- PREFORMED PULL BOX TYPE 1
- PREFORMED PULL BOX TYPE 2
- CONCRETE PULL BOX TYPE 1
- CONCRETE PULL BOX TYPE 2
- ITS PULL BOX TYPE 2
- ITS PULL BOX TYPE 5
- 6 X 6 LOOP DETECTOR
- 6 X 15 LOOP DETECTOR
- 30 X 6 LOOP DETECTOR
- CONDUIT MEDIAN
- CONDUIT PUSHED
- CONDUIT BRIDGE
- CONDUIT EXISTING
- CONDUIT TRENCHED
- SPAN WIRE
- MAST ARM - TYPE A BASE
- MAST ARM - TYPE C BASE
- MAST ARM - TYPE F BASE

R	RED BALL
Y	YELLOW BALL
G	GREEN BALL
RL	RED LEFT ARROW
YL	YELLOW LEFT ARROW
GL	GREEN LEFT ARROW
S	STRAIGHT GREEN ARROW
RR	RIGHT RED ARROW
YR	YELLOW RIGHT ARROW
GR	GREEN RIGHT ARROW

ALL 12" LENS WITH TUNNEL VISOR

NOTES:

1.) ALL TRAFFIC SIGNAL CONSTRUCTION AND MATERIALS SHALL CONFORM TO THE MISSOURI STANDARD SPECIFICATIONS FOR HIGHWAY CONSTRUCTION, SECTION 902 (TRAFFIC SIGNALS), UNLESS OTHERWISE NOTED.

2.) THE CONTRACTOR SHALL STAKE LOCATIONS WHERE POLES, BOXES, AND THE CONTROLLER ARE TO BE INSTALLED. STAKED LOCATIONS SHALL BE REVIEWED AND APPROVED BY THE ENGINEER PRIOR TO PLACEMENT OF EQUIPMENT. SERVICE BOXES AND CONDUIT RUNS ARE APPROXIMATE AND MAY BE FIELD ADJUSTED TO CLEAR OBSTRUCTIONS AND FACILITATE WIRING, AS APPROVED BY THE ENGINEER.

3.) CONDUITS UNDER ANY NEW PAVEMENT SHALL EITHER BE TRENCHED PRIOR TO PAVEMENT CONSTRUCTION OR BORED FOLLOWING PAVEMENT CONSTRUCTION. CONDUITS UNDER ANY EXISTING PAVEMENT, INCLUDING SIDEWALKS AND DRIVEWAYS, SHALL BE BORED WITHOUT DISTURBANCE TO THE EXISTING PAVEMENT.

4.) CONDUIT, PULL BOXES, AND POLE BASES SHALL MAINTAIN AT LEAST 4' SETBACK FROM NEW GUARDRAIL OR CONCRETE BARRIER.

5.) CONTROLLER CABINET DOOR MUST OPEN AWAY FROM INTERSECTION.

6.) CONTRACTOR SHALL COORDINATE WITH POLE MANUFACTURER FOR BASE DESIGN COMPLIANCE PER MoDOT REQUIREMENTS. STANDARD SPECIFICATIONS: 1.92.2. CONTRACTOR SHALL SUBMIT SHOP DRAWINGS SEALED BY A REGISTERED PROFESSIONAL ENGINEER FROM THE MANUFACTURER TO THE PROJECT ENGINEER FOR APPROVAL PRIOR TO THE START OF FABRICATION. IF APPLICABLE PRE-APPROVED DRAWINGS MAY BE UTILIZED FOR PURCHASING AND SUPPLYING THE POLES.

SCALE
0 20 40 60

RAMP 2/RAMP 4 & ROUTE 291

SIGNAL PLAN
SHEET 8 OF 20

STATE OF MISSOURI
JEREMY SCOTT STRETZ
NUMBER PE-2017023856
PROFESSIONAL ENGINEER
Jeremy Stretz 2025.04.08 17:55:33-05'00'

DATE PREPARED 4/8/2025
ROUTE 50/291 | STATE MO
DISTRICT KC | SHEET NO. 205
COUNTY JACKSON
JOB NO. J4P3196
FEDERAL PROJECT NO. STB-3001(009)
PROJECT NO.
BRIDGE NO.

DESCRIPTION | DATE

IF A SEAL IS PRESENT ON THIS SHEET IT HAS BEEN ELECTRONICALLY SEALED AND DATED.

MISSOURI HIGHWAYS AND TRANSPORTATION COMMISSION
105 WEST CAPITOL
JEFFERSON CITY, MO 65102
1-888-ASK-MODOT (1-888-275-6636)

LEE'S SUMMIT MISSOURI

olsson
1301 BURLINGTON ST., STE. 100
NORTH KANSAS CITY, MO 64116
PHONE: 816.361.1177
CERT. OF AUTHORITY NO. 001592

F:\2021\04501-05000\021-04786\40-Design\Microstation\J4P3196\plan_sheets\12 Signals\205_SG_08_J4P3196.dgn 4/8/2025

POST NUMBER	PULL BOX NUMBER	LOCATION APPROACH	STATION	OFFSET	BASE A 9	A 9.5	A 10	A 10.5	A 11	A 12	BASE F 9	F 9.5	F 10	F 10.5	F 11	F 12	C	CONCRETE** (CU.YDS.)	PULL BOX PREFORMED CLASS 1	PREFORMED CLASS 2	PREFORMED CLASS 3	PREFORMED CLASS 5	CONCRETE STANDARD	CONCRETE DOUBLE, TYPE A	CONCRETE DOUBLE, TYPE B	DRAIN TYPE I	DRAIN TYPE II A	DRAIN TYPE II B	DRAIN TYPE II C	TOP MOUNT POST 8 FT.	TOP MOUNT POST 15 FT.
CONT			178+38.58	103.3' LT.														1.93													
1		Route 291	178+88.21	36.5' LT.				1										3.27													
2*		Route 291	181+68.10	55.2' LT					1									3.67													
3		Route 291	182+29.94	49.33' LT								1						2.49													
4		Route 291	182+33.11	64.5' RT				1										3.27													
5		Route 291	179+60.00	78.0' RT					1									3.67													
6		Route 291	178+41.00	7.1 RT				1										3.27													
7		Route 291	178+80.84	37.9' LT													1	0.44												1	
8		Route 291	179+00.23	50.0' LT													1	0.44												1	
9		Route 291	179+48.58	50.7' LT													1	0.44												1	
10		Route 291	181+95.83	66.3' LT													1	0.44												1	
11		Route 291	177+90.25	60.2' LT													1	0.44												1	
	1	Route 291	178+32.75	95.4' LT																				1			1				
	2	Route 291	178+92.23	56.4' LT																				1			1				
	3	Route 291	179+48.34	73.2' LT															1							1					
	4	Route 291	181+49.82	59.1' LT															1							1					
	5	Route 291	182+25.64	53.8' LT															1							1					
	6	Route 291	182+32.01	79.3' RT															1							1					
	7	Route 291	181+54.90	74.4' RT															1							1					
	8	Route 291	179+56.30	84.8' RT															1							1					
	9	Route 291	178+83.04	71.4' RT															1							1					
	10	Route 291	178+81.29	6.7 RT															1							1					
		SUBTOTAL																23.77		8				2					5	
		TOTAL																23.8		8				2					5	

POST NUMBER	PULL BOX NUMBER	POST TYPE ARM LENGTH 35	40	55	66	TYPE C & CL SIGNAL SPACING B	C	D	D'	SIGN SPACING B	C	D	D'	TYPE B & BL ARM LENGTH 45	50	E	K	E	K	LEFT ARM E SIGNAL SPACING F	G	H	H'	LEFT ARM E SIGN SPACING F	G	H	H'	RIGHT ARM K SIGNAL SPACING F	G	H	H'	RIGHT ARM K SIGN SPACING F	G	H	H'	INCLUDED ANGLE	LUMINAIRE BRACKET ARM 4 FT.	6 FT.	8 FT.	10 FT.	12 FT.	15 FT.
CONT																																									
1				1		11	12	15	10	17	29																															
2*					1	29	13	12	13	16																																	
3		1				21	12				10																															
4			1			18	12	13			9																															
5															1	1					25	12	13		16				29	41			16									
6				1		35	16			16																																
7																																										
8																																										
9																																										
10																																										
11																																										
	1																																									
	2																																									
	3																																									
	4																																									
	5																																									
	6																																									
	7																																									
	8																																									
	9																																									
	10																																									
	11																																									
		SUBTOTAL		1		1	1	2	1						1	1																									
		TOTAL		1		1	1	2	1						1	1																									

SIGNAL HEADS

| SPAN NUMBER | POST NUMBER | FACE NUMBER | LUMINAIRE LED TYPE A | INDICATIONS 12" LENS CONVENTIONAL R | RL | Y | YL | YRt | FYL | G | GL | S | GRt | (1) PED. | 12" LENS OPTICALLY LIMITING R | Y | YL | YRt | FYL | FYR | G | S | L | Rt | VISORS 12" LENS | (1) PED. | LOUVERS A | B | C | D | E | F | BACKPLATE LENSES 1 | 2 | 3 | 4 | 5 | RETROREFLECTIVE BACKPLATE LENSES 1 | 2 | 3 | 4 | 5 | BRACKET TYPE I | II | III | ONE-FACE SECTION 1- T | S | C | B | 3- T | S | C | B | 4- T | S | C | B | 5- T | S | C | B | TWO-FACE SECTION 11- T | S | C | B | 33- T | S | C | B | 34- S | B | 35- S | B | 44- S | B | 45- S | B |
|---|---|---|---|---|---|---|---|---|---|---|---|---|---|---|---|---|---|---

CONDUIT (WITH #14 TRACER WIRE)

FROM	TO	CENTER TO CENTER DISTANCE	LOOP DET.	TRENCH			PUSHED			MEDIAN			ON STRUCTURE		REMARKS
			1"	2"	3"	4"	2"	3"	4"	2"	3"	4"	2"	3"	
Ø	P.S.	100		98											
P.S.	CONT	100		98											
CONT	PB1	16			38										2 Conduits
PB1	PB2	75						146							2 Conduits
PB1	POLE 11	58			58										
PB2	PB3	60						58							
PB2	PB6	68						132							2 Conduits
PB2	POLE 1	24			22										
PB2	POLE 7	26			29										
PB2	POLE 8	13			18										
PB3	POLE 9	24		25											
PB6	PB 5	65						126							2 Conduits
PB6	POLE 6	45			48										
PB5	PB4	80						156							2 Conduits
PB4	POLE 5	12			15										
PB4	PB7	155												306	2 Conduits
PB7	PB8	135						133							
PB7	PB10	78						76							
PB8	PB9	85						83							
PB8	POLE 2	22			25										
PB8	POLE 10	50		51											
PB9	POLE 3	10			13										
PB10	POLE 4	14			17										
SUBTOTALS				272	283			910						306	
TOTALS				280	290			910						310	

CABLE

FROM	TO	CENTER TO CENTER DISTANCE	POWER		GROUND	CONTROL				CLOSED LOOP INTERCONNECT	LUMINAIRE		DETECTION				CCTV CABLE	REMARKS
			1c-#2 *	1c-#8	1c-#6	2c #16	5c #16	7c #16	3c #16	3 PAIR #16	CONTROL 2c #12	POLE & BRACKET 1c #10	1c #14 IN DUCT	2c #14 LEAD-IN CABLE	VIDEO CABLE **	RADAR CABLE		
Ø	P.S.	100	108															
P.S.	CONT	100	116															
CONT	PB1	16						234										
PB1	PB2	75						300										
PB1	POLE 11	58						28										Jumper
PB2	PB3	60													289			
PB2	PB6	68					150											
PB2	POLE 1	24				146												
PB2	POLE 7	26					150											
PB2	POLE 8	13				146												
PB3	POLE 9	24					143											
PB6	PB 5	65				139												
PB6	POLE 6	45						137										
PB5	PB4	80					214											
PB4	POLE 5	12				210												
PB4	PB7	155						211										
PB7	PB8	135						16										Jumper
PB7	PB10	78						211										
PB8	PB9	85						16										
PB8	POLE 2	22						148										
PB8	POLE 10	50													200			
PB9	POLE 3	10						420										
PB10	POLE 4	14						16										Jumper
								425										
								16										Jumper
								16										Jumper
								417										
															419			
															419			
								667										
								659										
								16										Jumper
								614										
															649			
								753										
								16										Jumper
								732										
								16										Jumper
								685										
								766										
								16										Jumper
															752			
							451											
						447												
							677											
						673												
SYS GROUND		1115			1154													
SUBTOTALS			224		1154	1761	1785	7551							2728			
TOTALS			230		1160	1770	1790	7560							2730			

NOTES FOR TYPICAL MoDOT JOB (BID PER ITEM):

NOTES: *CABLE AND CONDUIT FROM POWER SUPPLY ASSEMBLY TO UTILITY COMPANY FACILITIES SHALL ALSO BE PROVIDED AND ARE INCLUDED IN PRICE BID FOR POWER SUPPLY ASSEMBLY.

**VIDEO DETECTION CABLE SHALL BE SUBSIDIARY TO ADAPTIVE SIGNAL CONTROL SYSTEM (LUMP SUM)

STATE OF MISSOURI
JEREMY SCOTT STRETZ
NUMBER PE-2011031866
PROFESSIONAL ENGINEER
Jeremy Stretz 2025.04.08 17:56:04-05'00'

DATE PREPARED 4/8/2025
ROUTE 50/291 | STATE MO
DISTRICT KC | SHEET NO. 207
COUNTY JACKSON
JOB NO. J4P3196
FEDERAL PROJECT NO.
PROJECT NO.
BRIDGE NO.

DESCRIPTION | DATE

MISSOURI HIGHWAYS AND TRANSPORTATION COMMISSION
105 WEST CAPITOL
JEFFERSON CITY, MO 65102
1-888-ASK-MODOT (1-888-275-6636)

LEE'S SUMMIT MISSOURI

olsson
1301 BURLINGTON ST., STE. 100
NORTH KANSAS CITY, MO 64116
PHONE: 816.361.1177
CERT. OF AUTHORITY NO. 001592

IF A SEAL IS PRESENT ON THIS SHEET IT HAS BEEN ELECTRONICALLY SEALED AND DATED.

D-37B
SIGNAL PLAN
SHEET 10 OF 20

INTERSECTION HIGHWAY 50 INTERCHANGE & ROUTE 291

F:\2021\04501-05000\021-04786\40-Design\Microstation\J4P3196\plan_sheets\12 Signals\207_SG_10_J4P3196.dgn 3:01:43 PM 4/8/2025

EFFECTIVE 04-01-2018

POWER SUPPLY

LOCATION			POWER SUPPLY ASSEMBLY		CIRCUIT BREAKER TRIP RATING*				LIGHTING CONTROL * (ON POWER SUPPLY)		SERVICE POLE	
					CONTROLLER		POWER SUPPLY DISCONNECT					
APPROACH	STATION	OFFSET	DRAWING 902.15	DRAWING	AUXILIARY BREAKER	CONT & SIGNAL LAMPS	MAIN BREAKER		120 VOLT CONTROL CABINET	MAIN BREAKER	CONTRACT FURNISH	UTILITY COMPANY
							SIGNALS	LIGHTING				
BLUE PARKWAY	178+34.62	107.3' LT.	Type 2		15 Amps	40 Amps	Amps	Amps		Amps	Cl. Ft.	EVERGY
			Type		15 Amps	40 Amps	Amps	Amps		Amps	Cl. Ft.	

CONTROLLER ASSEMBLY AND AUXILIARY EQUIPMENT

LOCATION			SYSTEM MASTER (CLOSED LOOP)		ACTUATED		ON-OFF* SWITCH TYPE		COORDINATION INTERFACE *						TIME * CLOCK	NEMA CABINET TYPE *			170 CABINET TYPE *		170 SOFTWARE *		UNINTERRUPTIBLE POWER SUPPLY
									12C/7C HARDWIRE		TIME BASE	CLOSED LOOP		FIBER									902-99.02
APPROACH	STATION	OFFSET	NEMA	170	ECONOLITE COBALT	170	I	II	MASTER	LOCAL		NEMA	170			E	EV	DOUBLE	332	336S	BITRAN	WAPITI	
BLUE PARKWAY	178+38.58	103.8' LT.			1									1			1						1

* ITEMS FOR WHICH SEPARATE PAYMENT WILL NOT BE MADE.

(1) RHYTHM DETECTION SYSTEM WILL BE PROVIDED TO THE CONTRACTOR WITH PURCHASE OF INSYNC SYSTEM. THE CONTRACTOR IS PAID FOR INSTALLATION ONLY THROUGH THE 1, LUMP SUM BID ITEM "ADAPTIVE TRAFFIC SIGNAL CONTROL SYSTEM".

(2) ALL PUSH BUTTONS SHALL BE APS AND UTILIZE A 2-WIRE CONTROL SYSTEM WITH CONTROL UNIT IN THE CABINET.

NEMA DETECTOR ASSIGNMENT

CHANNEL	CARD POSITION 1	2	3	4	5	6	7	8
1			VIDEO					
2								

TOTAL NUMBER OF DETECTOR CARDS(2-CHANNEL) = (1)

MISCELLANEOUS BID ITEMS

BID ITEM	UNIT	QUANTITY
ADAPTIVE TRAFFIC SIGNAL CONTROL SYSTEM	LUMP SUM	1

NEMA LOAD SWITCH ASSIGNMENTS

1	2	3	4	5	6	7	8	9	10	11	12	13	14	15	16
Ø1 R Ø1 Y Ø1 G	Ø2 R Ø2 Y Ø2 G	Ø3 R Ø3 Y Ø3 G	Ø4 R Ø4 Y Ø4 G	Ø5 R Ø5 Y Ø5 G	Ø6 R Ø6 Y Ø6 G	Ø7 R Ø7 Y Ø7 G	Ø8 R Ø8 Y Ø8 G	Ø2P W - Ø2P DW	Ø4P W - Ø4P DW	Ø6P W - Ø6P DW	Ø8 W - Ø8 DW	OLA G OLA Y OLA R	OLB G OLB Y OLB R	OLC G OLC Y OLC R	OLD G OLD Y OLD R

DETECTOR SCHEDULE

DETECTOR NUMBER	APPROACH	TYPE				
		PUSH BUTTON (2)	INDUCTION LOOP			INSYNC VIDEO DETECTION (1)
			STANDARD	DELAY/ EXTEND *	CALL UNIT *	
VIDEO 1	ROUTE 291					1
VIDEO 2	RAMP 3					1
VIDEO 3	ROUTE 291					1
VIDEO 4	RAMP 3					1
VIDEO 5	ROUTE 291					1
VIDEO 6	ROUTE 291					1
VIDEO 7	RAMP 2					1
26	ROUTE 291@ RAMP 4	1				
27	ROUTE 291@ RAMP 4	1				
83	ROUTE 291@ RAMP 3	1				
84	ROUTE 291@ RAMP 3	1				
85	ROUTE 291@ RAMP 3	1				
86	ROUTE 291@ RAMP 3	1				
	TOTAL	6				

SIGNAL SIGNS

QUANTITY	MUTCD SIGN NUMBER	SIZE	AREA	SIGN TOTAL AREA ITEM NO. 90208.33	SIGNAL SIGN MOUNTING HARDWARE ITEM NO. 90208.34
		INCHES	SQ.FT.	SQ.FT.	EA.
	R10-10L	24 X 30	5.0		
	R10-10R	24 X 30	5.0		
	R3-5L	30 X 36	7.5		
	R3-5R	30 X 36	7.5		
	R3-5A	30 X 36	7.5		
	R3-6L	30 X 36	7.5		
	R3-6R	30 X 36	7.5		
	R3-2	24 X 24	4.0		
	R3-1	24 X 24	4.0		
	R3-3	24 X 24	4.0		
7	D3-1 ***	VAR. X 18	12.0	84.0	7
	D3-1B ***	VAR. X 18			
	R10-3E (R)	9 X 15	0.95	(INTEGRATED WITH BUTTON)	
	R10-3E (L)	9 X 15	0.95	(INTEGRATED WITH BUTTON)	
	R10-11A	24 X 30	5.0		
	R10-13	36 X 24	6.0		
	R10-27A	30 X 36	7.5		
			SUBTOTAL	84.0	7
			TOTAL	84.0	7

HIGHWAY 50 INTERCHANGE & ROUTE 291
INTERSECTION

D-37C
SIGNAL PLAN
SHEET 11 OF 20

STATE OF MISSOURI
JEREMY SCOTT STRETZ
NUMBER PE-2011031866
PROFESSIONAL ENGINEER

Jeremy Stretz 2025.04.08 17:56:18-05'00'

DATE PREPARED 4/8/2025
ROUTE 50/291 STATE MO
DISTRICT KC SHEET NO. 208
COUNTY JACKSON
JOB NO. J4P3196
FEDERAL PROJECT NO.
PROJECT NO.
BRIDGE NO.

DESCRIPTION | DATE

MISSOURI HIGHWAYS AND TRANSPORTATION COMMISSION
105 WEST CAPITOL
JEFFERSON CITY, MO 65102
1-888-ASK-MODOT (1-888-275-6636)

LEE'S SUMMIT MISSOURI

olsson
1301 BURLINGTON ST., STE. 100
NORTH KANSAS CITY, MO 64116
PHONE: 816.361.1177
CERT. OF AUTHORITY NO. 001592

IF A SEAL IS PRESENT ON THIS SHEET IT HAS BEEN ELECTRONICALLY SEALED AND DATED.

F:\2021\04501-05000\021-04786\40-Design\Microstation\J4P3196\plan_sheets\12 Signals\208_SG_11_J4P3196.dgn 3:01:57 PM 4/8/2025

EFFECTIVE 12-01-17

WIRING DIAGRAM

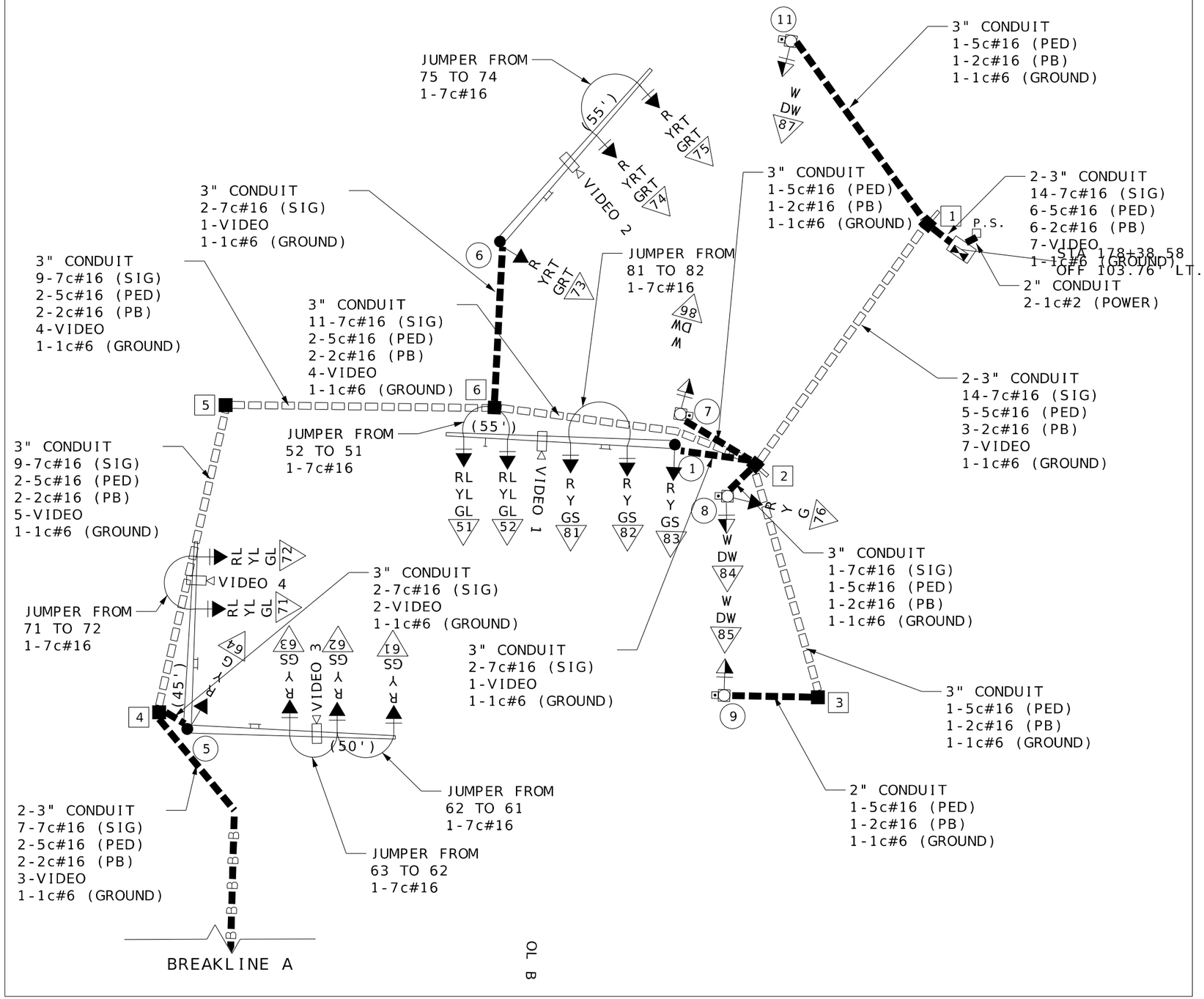

LEGEND

3"	CONDUIT CONTAINING CABLE WITH SIZE
	CABLE
X-Xc	MULTI-CONDUCTOR CABLE #16 AWG (UNLESS OTHERWISE INDICATED)
LIC	#14 AWG DETECTOR LEAD-IN CABLE (2C TWISTED SHIELDED)
X	PULL BOX WITH NUMBER
(X)	POST WITH NUMBER
(X)	POST WITH MAST ARM
(X)	POST WITH MAST ARM AND LUMINAIRE
X	DETECTOR WITH NUMBER
— X	SIGNAL HEAD WITH NUMBER
	SIGNAL CONTROLLER
	POWER SUPPLY
	LIGHTING CONTROLLER

IF A SEAL IS PRESENT ON THIS SHEET IT HAS BEEN ELECTRONICALLY SEALED AND DATED.

STATE OF MISSOURI
JEREMY SCOTT STRETZ
NUMBER PE-2011023864
PROFESSIONAL ENGINEER
Jeremy Stretz 2025.02.28 15:47:22-06'00'

DATE PREPARED 2/28/2025

ROUTE	STATE
50/291	MO
DISTRICT	SHEET NO.
KC	209

COUNTY: JACKSON
JOB NO.: J4P3196
FEDERAL PROJECT NO.: STB-3001(009)
PROJECT NO.:
BRIDGE NO.:

DESCRIPTION	DATE

MISSOURI HIGHWAYS AND TRANSPORTATION COMMISSION
105 WEST CAPITOL
JEFFERSON CITY, MO 65102
1-888-ASK-MODOT (1-888-275-6636)

LEE'S SUMMIT MISSOURI

olsson
1301 BURLINGTON ST., STE. 100
NORTH KANSAS CITY, MO 64116
PHONE: 816.361.1177
CERT. OF AUTHORITY NO. 001592

RAMP 1/RAMP 3 & ROUTE 291
INTERSECTION

D-37D
SIGNAL PLAN
SHEET 12 OF 20

F:\2021\04501-05000\021-04786\40-Design\Microstation\J4P3196\plan_sheets\12 Signals\209_SG_12_J4P3196.dgn 2:11:27 PM 2/28/2025

EFFECTIVE 12-01-17

WIRING DIAGRAM

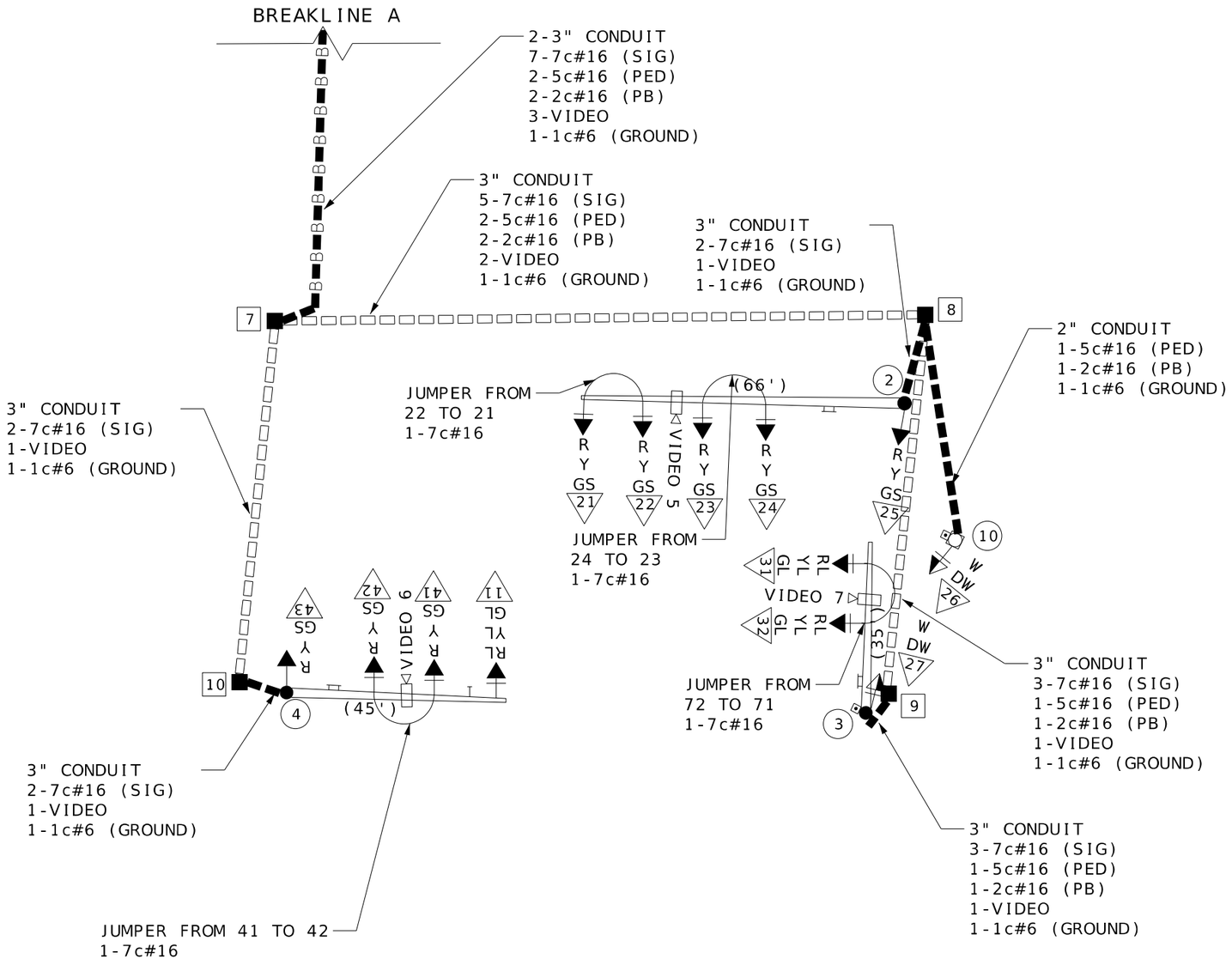

LEGEND

3" ━━	CONDUIT CONTAINING CABLE WITH SIZE
———	CABLE
X-Xc	MULTI-CONDUCTOR CABLE #16 AWG (UNLESS OTHERWISE INDICATED)
LIC	#14 AWG DETECTOR LEAD-IN CABLE (2C TWISTED SHIELDED)
X	PULL BOX WITH NUMBER
(X)	POST WITH NUMBER
(X)	POST WITH MAST ARM
(X)	POST WITH MAST ARM AND LUMINAIRE
X	DETECTOR WITH NUMBER
—X	SIGNAL HEAD WITH NUMBER
	SIGNAL CONTROLLER
	POWER SUPPLY
	LIGHTING CONTROLLER

IF A SEAL IS PRESENT ON THIS SHEET IT HAS BEEN ELECTRONICALLY SEALED AND DATED.

STATE OF MISSOURI
JEREMY SCOTT STRETZ
NUMBER PE-2011021864
PROFESSIONAL ENGINEER

Jeremy Stretz 2025.02.28 15:47:48-06'00'

DATE PREPARED 2/28/2025

ROUTE	STATE
50/291	MO
DISTRICT	SHEET NO.
KC	210

COUNTY: JACKSON
JOB NO.: J4P3196
FEDERAL PROJECT NO.: STB-3001(009)
PROJECT NO.:
BRIDGE NO.:

DESCRIPTION	DATE

MISSOURI HIGHWAYS AND TRANSPORTATION COMMISSION
105 WEST CAPITOL
JEFFERSON CITY, MO 65102
1-888-ASK-MODOT (1-888-275-6636)

LEE'S SUMMIT MISSOURI

olsson
1301 BURLINGTON ST., STE. 100
NORTH KANSAS CITY, MO 64116
PHONE: 816.361.1177
CERT. OF AUTHORITY NO. 001592

RAMPS 2/RAMP 4 & ROUTE 291

INTERSECTION

D-37D

SIGNAL PLAN
SHEET 13 OF 20

EFFECTIVE 12/01/2017

TRAFFIC PHASING AND COLOR SEQUENCE - ACTUATED CONTROLLERS

	PHASE 1	PHASE 2	PHASE 3	PHASE 4	PHASE 5	PHASE 6	PHASE 7	PHASE 8	PED Ø 2 OVERLAP	PED Ø 4 OVERLAP	PED Ø 6 OVERLAP	PED Ø 8 OVERLAP	OVERLAP A	OVERLAP B	OVERLAP C	OVERLAP D	
									NOT-IN-USE		NOT-IN-USE						
FACE NUMBERS	11	21 23 25	31	41	51	61 63	71 73 75 76	81	26		83 85		41 43 11	81 83 51	21 23 25	61	FACE NUMBERS
		22 24 26	32	42	52	62 64	72 74	82	27		84 86		42	82 52	22 24	62	
SIGNAL INDICATIONS R	RL	R R R	RL	R	RL	R R	RL R R R	R	DW		DW DW		R R RL	R RL	R R R	R R	R
SIGNAL INDICATIONS Y	YL	Y Y Y	YL	Y	YL	Y Y	YL YRT YLT Y	Y	FDW		FDW FDW		Y Y YL	Y YL	Y Y Y	Y Y	Y
SIGNAL INDICATIONS FYA																	FYA
SIGNAL INDICATIONS G	GL	GS GS G	GL	GS	GL	G G	GL GRT GLT G	GS	W		W W		GS GS GL	GS GL	GS GS GS	GS GS	G
DETECTOR ASSIGNMENTS	11	21 23 22 24	31 32	41 42	51 52	61 63 62	71 74 72 75	81 82									DETECTOR ASSIGNMENTS
DETECTOR ASSIGNMENTS (PEDS. ONLY)									26 27		83 85 84 86						
OVERLAP PARENT PHASES													1 2 4	2 5 8	2	6	

SIGNAL FACE LOCATION

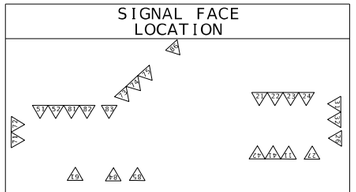

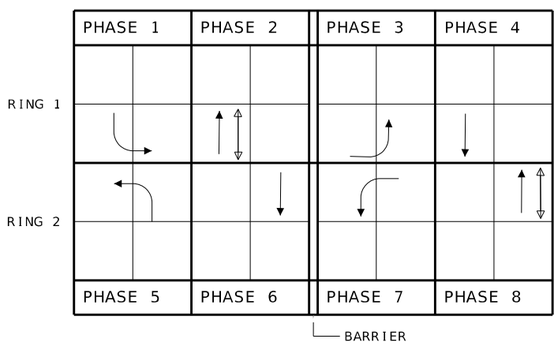

RING STRUCTURE

IF CALLED, ALL NON-CONFLICTING PHASES SHALL COMBINE AND TIME CONCURRENTLY. TIME TO BE DETERMINED BY THE ENGINEER AT SIGNAL TURN ON AND SET IN THE CONTROLLER BY THE CONTRACTOR.

LEGEND

- ACTUATED VEHICULAR MOVEMENT
- PARTIALLY RESTRICTED ACTUATED VEHICULAR MOVEMENT
- NON-ACTUATED VEHICULAR MOVEMENT
- PARTIALLY RESTRICTED NON-ACTUATED VEHICULAR MOVEMENT
- ACTUATED PEDESTRIAN MOVEMENT
- NON-ACTUATED PEDESTRIAN MOVEMENT
- VEHICLE STOPPED
- FDW — FLASHING DON'T WALK
- W — WALK
- DW — DON'T WALK
- R/W — RIGHT OF WAY INTERVAL
- YRt — YELLOW RIGHT ARROW
- RT. — GREEN RIGHT ARROW
- LY-YL — YELLOW LEFT ARROW
- L — GREEN LEFT ARROW
- S — GREEN STRAIGHT AHEAD ARROW
- G — CIRCULAR GREEN
- Y — CIRCULAR YELLOW
- R — CIRCULAR RED
- RL — RED LEFT ARROW
- Ø — TRAFFIC PHASE
- AO — ALL OTHERS
- FR — FLASHING RED
- FY — FLASHING CIRCULAR YELLOW
- FYL — FLASHING YELLOW LEFT ARROW

FLASHING OPERATION	
ALL MOVEMENTS	FR
	FY

CONTROLLER TYPE	NEMA

TRAFFIC SIGNAL CONTROL OPERATION

INTERSECTION OF

HIGHWAY 50 INTERCHANGE

D-38A

SIGNAL PLAN
SHEET 14 OF 20

STATE OF MISSOURI
PROFESSIONAL ENGINEER
JEREMY SCOTT STRETZ
NUMBER PE-2011023864
Jeremy Stretz 2025.02.28 15:48:00-06'00'

DATE PREPARED 2/28/2025

ROUTE	STATE
50/291	MO
DISTRICT	SHEET NO.
KC	211

COUNTY: JACKSON

JOB NO.: J4P3196

FEDERAL PROJECT NO.:

PROJECT NO.:

BRIDGE NO.:

DESCRIPTION | DATE

IF A SEAL IS PRESENT ON THIS SHEET IT HAS BEEN ELECTRONICALLY SEALED AND DATED.

MISSOURI HIGHWAYS AND TRANSPORTATION COMMISSION
105 WEST CAPITOL
JEFFERSON CITY, MO 65102
1-888-ASK-MODOT (1-888-275-6636)

LEE'S SUMMIT MISSOURI

olsson
1301 BURLINGTON ST., STE. 100
NORTH KANSAS CITY, MO 64116
PHONE: 816.361.1177
CERT. OF AUTHORITY NO. 001592

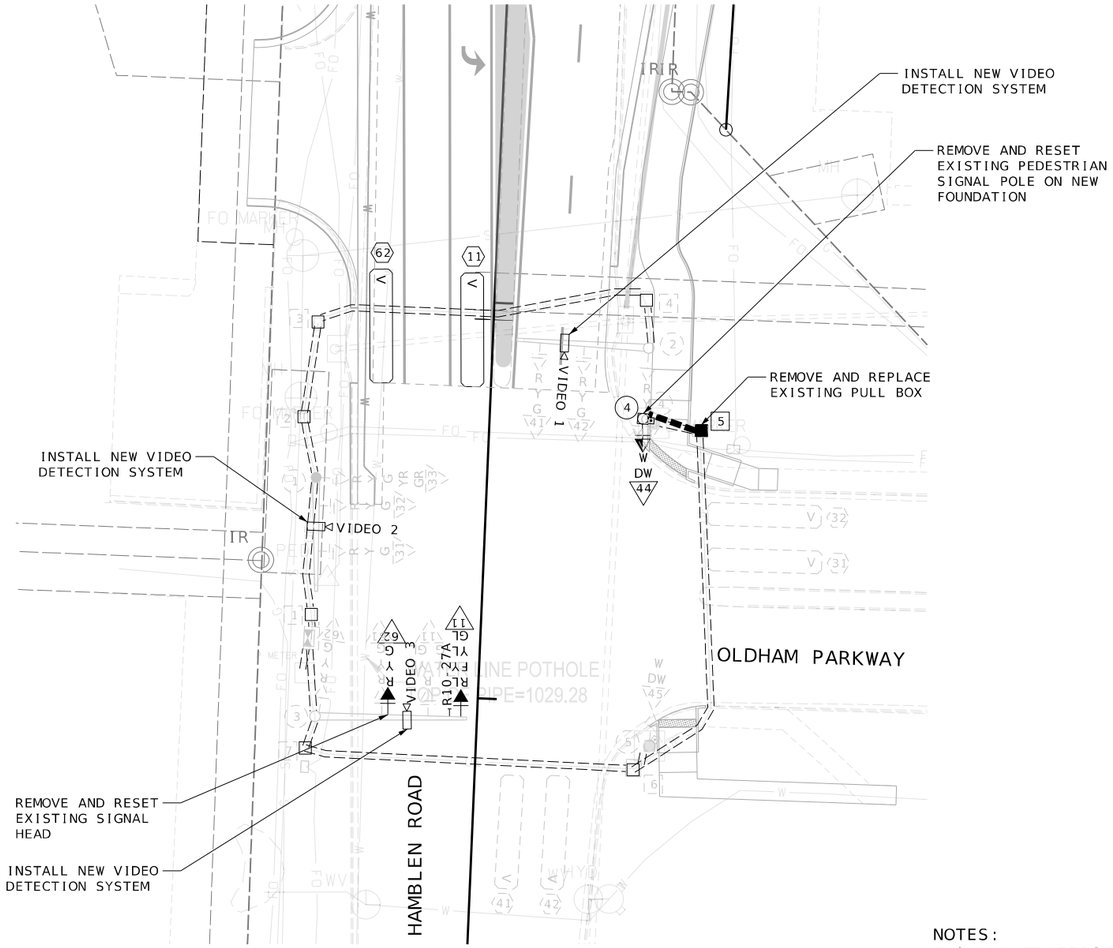

SCALE

0 20 40 60

HAMBLEN ROAD & OLDHAM PARKWAY

TRAFFIC SIGNALS LEGEND

CONTROLLER	CCTV CAMERA	6 X 6 LOOP DETECTOR
CONTROLLER (EXISTING)	VIDEO DETECTOR	6 X 15 LOOP DETECTOR
JCT JUNCTION BOX	PUSH BUTTON DETECTOR	30 X 6 LOOP DETECTOR
POWER SUPPLY	PREFORMED PULL BOX TYPE 1	CONDUIT MEDIAN
WOOD POST	PREFORMED PULL BOX TYPE 2	CONDUIT PUSHED
SIGNAL HEAD (OPT LIM CONV)	CONCRETE PULL BOX TYPE 1	CONDUIT BRIDGE
SIGNAL HEAD (OPT LIM)	CONCRETE PULL BOX TYPE 2	CONDUIT EXISTING
SIGNAL HEAD (PEDESTRIAN)	ITS ITS PULL BOX TYPE 2	CONDUIT TRENCHED
SIGNAL HEAD (STANDARD)	ITS ITS PULL BOX TYPE 5	SPAN WIRE
		MAST ARM - TYPE A BASE
		MAST ARM - TYPE C BASE
		MAST ARM - TYPE F BASE

R	RED BALL
Y	YELLOW BALL
G	GREEN BALL
RL	RED LEFT ARROW
YL	YELLOW LEFT ARROW
GL	GREEN LEFT ARROW
S	STRAIGHT GREEN ARROW
RR	RIGHT RED ARROW
YR	YELLOW RIGHT ARROW
GR	GREEN RIGHT ARROW

ALL 12" LENS WITH TUNNEL VISOR

NOTES:

1.) ALL TRAFFIC SIGNAL CONSTRUCTION AND MATERIALS SHALL CONFORM TO THE MISSOURI STANDARD SPECIFICATIONS FOR HIGHWAY CONSTRUCTION, SECTION 902 (TRAFFIC SIGNALS), UNLESS OTHERWISE NOTED.

2.) THE CONTRACTOR SHALL STAKE LOCATIONS WHERE POLES, BOXES, AND THE CONTROLLER ARE TO BE INSTALLED. STAKED LOCATIONS SHALL BE REVIEWED AND APPROVED BY THE ENGINEER PRIOR TO PLACEMENT OF EQUIPMENT. SERVICE BOXES AND CONDUIT RUNS ARE APPROXIMATE AND MAY BE FIELD ADJUSTED TO CLEAR OBSTRUCTIONS AND FACILITATE WIRING, AS APPROVED BY THE ENGINEER.

3.) CONDUITS UNDER ANY NEW PAVEMENT SHALL EITHER BE TRENCHED PRIOR TO PAVEMENT CONSTRUCTION OR BORED FOLLOWING PAVEMENT CONSTRUCTION. CONDUITS UNDER ANY EXISTING PAVEMENT, INCLUDING SIDEWALKS AND DRIVEWAYS, SHALL BE BORED WITHOUT DISTURBANCE TO THE EXISTING PAVEMENT.

4.) CONDUIT, PULL BOXES, AND POLE BASES SHALL MAINTAIN AT LEAST 4' SETBACK FROM NEW GUARDRAIL OR CONCRETE BARRIER.

5.) CONTROLLER CABINET DOOR MUST OPEN AWAY FROM INTERSECTION.

6.) CONTRACTOR SHALL COORDINATE WITH POLE MANUFACTURER FOR BASE DESIGN COMPLIANCE PER MoDOT REQUIREMENTS. STANDARD SPECIFICATIONS: 1.92.2. CONTRACTOR SHALL SUBMIT SHOP DRAWINGS SEALED BY A REGISTERED PROFESSIONAL ENGINEER FROM THE MANUFACTURER TO THE PROJECT ENGINEER FOR APPROVAL PRIOR TO THE START OF FABRICATION. IF APPLICABLE PRE-APPROVED DRAWINGS MAY BE UTILIZED FOR PURCHASING AND SUPPLYING THE POLES.

STATE OF MISSOURI
JEREMY SCOTT STRETZ
NUMBER PE-2017023856
PROFESSIONAL ENGINEER
Jeremy Stretz 2025.04.08 17:56:31-05'00'

DATE PREPARED 4/8/2025

ROUTE	STATE
50/291	MO
DISTRICT	SHEET NO.
KC	212

COUNTY: JACKSON
JOB NO.: J4P3196
FEDERAL PROJECT NO.: STB-3001(009)
PROJECT NO.:
BRIDGE NO.:

IF A SEAL IS PRESENT ON THIS SHEET IT HAS BEEN ELECTRONICALLY SEALED AND DATED.

DESCRIPTION | DATE

MISSOURI HIGHWAYS AND TRANSPORTATION COMMISSION
105 WEST CAPITOL
JEFFERSON CITY, MO 65102
1-888-ASK-MODOT (1-888-275-6636)

LEE'S SUMMIT MISSOURI

olsson
1301 BURLINGTON ST., STE. 100
NORTH KANSAS CITY, MO 64116
PHONE: 816.361.1177
CERT. OF AUTHORITY NO. 001592

SIGNAL PLAN
SHEET 15 OF 20

EFFECTIVE: 07/01/2018

| POST NUMBER | PULL BOX NUMBER | LOCATION APPROACH | LOCATION STATION | LOCATION OFFSET | BASE A 9 | BASE A 9.5 | BASE A 10 | BASE A 10.5 | BASE A 11 | BASE A 12 | BASE F 9 | BASE F 9.5 | BASE F 10 | BASE F 10.5 | BASE F 11 | BASE F 12 | BASE C | BASE CONCRETE** (CU. YDS.) | PULL BOX PREFORMED CLASS 1 | PULL BOX PREFORMED CLASS 2 | PULL BOX PREFORMED CLASS 3 | PULL BOX PREFORMED CLASS 5 | PULL BOX CONCRETE STANDARD | PULL BOX CONCRETE DOUBLE, TYPE A | PULL BOX CONCRETE DOUBLE, TYPE B | DRAIN TYPE* I | DRAIN TYPE* II A | DRAIN TYPE* II B | DRAIN TYPE* II C | POST TOP MOUNT POST 8 FT. | POST TOP MOUNT POST 15 FT. | POST TYPE C & CL ARM LENGTH A | POST TYPE C & CL ARM LENGTH A | POST TYPE C & CL ARM LENGTH A | POST TYPE C & CL ARM LENGTH A | POST TYPE C & CL SIGNAL SPACING B | POST TYPE C & CL SIGNAL SPACING C | POST TYPE C & CL SIGNAL SPACING D | POST TYPE C & CL SIGNAL SPACING D' | POST TYPE C & CL SIGN SPACING B | POST TYPE C & CL SIGN SPACING C | POST TYPE C & CL SIGN SPACING D | POST TYPE C & CL SIGN SPACING D' | POST TYPE B & BL ARM LENGTH E | POST TYPE B & BL ARM LENGTH K | POST TYPE B & BL ARM LENGTH E | POST TYPE B & BL ARM LENGTH E | POST TYPE B & BL ARM LENGTH K | POST TYPE B & BL LEFT ARM E SIGNAL SPACING F | POST TYPE B & BL LEFT ARM E SIGNAL SPACING G | POST TYPE B & BL LEFT ARM E SIGNAL SPACING H | POST TYPE B & BL LEFT ARM E SIGNAL SPACING H' | POST TYPE B & BL LEFT ARM E SIGN SPACING F | POST TYPE B & BL LEFT ARM E SIGN SPACING G | POST TYPE B & BL LEFT ARM E SIGN SPACING H | POST TYPE B & BL LEFT ARM E SIGN SPACING H' | POST TYPE B & BL RIGHT ARM K SIGNAL SPACING L | POST TYPE B & BL RIGHT ARM K SIGNAL SPACING M | POST TYPE B & BL RIGHT ARM K SIGNAL SPACING N | POST TYPE B & BL RIGHT ARM K SIGNAL SPACING N' | POST TYPE B & BL RIGHT ARM K SIGN SPACING L | POST TYPE B & BL RIGHT ARM K SIGN SPACING M | POST TYPE B & BL RIGHT ARM K SIGN SPACING N | POST TYPE B & BL RIGHT ARM K SIGN SPACING N' | POST TYPE B & BL INCLUDED ANGLE | LUMINAIRE BRACKET ARM* 4 FT. | LUMINAIRE BRACKET ARM* 6 FT. | LUMINAIRE BRACKET ARM* 8 FT. | LUMINAIRE BRACKET ARM* 10 FT | LUMINAIRE BRACKET ARM* 12 FT | LUMINAIRE BRACKET ARM* 15 FT |
|---|---|---

CONDUIT (WITH #14 TRACER WIRE)

FROM	TO	CENTER TO CENTER DISTANCE	LOOP DET.	TRENCH				PUSHED			MEDIAN			ON STRUCTURE			REMARKS
			1"	2"	3"	4"		2"	3"	4"	2"	3"	4"	2"	3"		
5	4	12		10													
SUBTOTALS				10													
TOTALS				10													

CABLE

FROM	TO	CENTER TO CENTER DISTANCE	POWER		CONTROL				CLOSED LOOP INTERCONNECT	LUMINAIRE		DETECTOR		FIBER		REMARKS
					2c #16	5c #16	7c #16	3c #16	3 PAIR #16	CONTROL 2c #12	POLE & BRACKET 1c #10	1c #14 IN DUCT	2c #14 LEAD-IN CABLE	SINGLE-MODE	MULTI-MODE	
SUBTOTALS																
TOTALS																

INTERSECTION HAMBLEN ROAD & OLDHAM PARKWAY

D-37B

SIGNAL PLAN
SHEET 17 OF 20

F:\2021\04501-05000\021-04786\40-Design\Microstation\J4P3196\plan_sheets\12 Signals\214_SG_17_J4P3196.dgn 2:12:02 PM 2/28/2025

STATE OF MISSOURI
JEREMY SCOTT STRETZ
NUMBER PE-2011021864
PROFESSIONAL ENGINEER

Jeremy Stretz 2025.02.28 15:49:25-06'00'

DATE PREPARED
2/28/2025

ROUTE 50/291 | STATE MO

DISTRICT KC | SHEET NO. 214

COUNTY
JACKSON

JOB NO.
J4P3196

FEDERAL PROJECT NO.

PROJECT NO.

BRIDGE NO.

DESCRIPTION | DATE

MISSOURI HIGHWAYS AND TRANSPORTATION COMMISSION
105 WEST CAPITOL
JEFFERSON CITY, MO 65102
1-888-ASK-MODOT (1-888-275-6636)

LEE'S SUMMIT MISSOURI

olsson
1301 BURLINGTON ST., STE. 100
NORTH KANSAS CITY, MO 64116
PHONE: 816.361.1177
CERT. OF AUTHORITY NO. 001592

IF A SEAL IS PRESENT ON THIS SHEET IT HAS BEEN ELECTRONICALLY SEALED AND DATED.

EFFECTIVE 04-01-2018

POWER SUPPLY

LOCATION			POWER SUPPLY ASSEMBLY		CIRCUIT BREAKER TRIP RATING*				LIGHTING CONTROL * (ON POWER SUPPLY)		SERVICE POLE	
					CONTROLLER		POWER SUPPLY DISCONNECT					
							MAIN BREAKER					
APPROACH	STATION	OFFSET	DRAWING 902.15	DRAWING	AUXILIARY BREAKER	CONT & SIGNAL LAMPS	SIGNALS	LIGHTING	120 VOLT CONTROL CABINET	MAIN BREAKER	CONTRACT FURNISH	UTILITY COMPANY
			Type		15 Amps	Amps	Amps	Amps		Amps	Cl. Ft.	
			Type		15 Amps	Amps	Amps	Amps		Amps	Cl. Ft.	

CONTROLLER ASSEMBLY AND AUXILIARY EQUIPMENT

LOCATION			SYSTEM MASTER (CLOSED LOOP)		ACTUATED		ON-OFF* SWITCH TYPE		COORDINATION INTERFACE *						TIME * CLOCK	NEMA CABINET TYPE *			170 CABINET TYPE *		170 SOFTWARE *	
									12C/7C HARDWIRE (1)		TIME BASE	CLOSED LOOP		FIBER								
APPROACH	STATION	OFFSET	NEMA	170	ECONOLITE COBALT	170	I	II	MASTER	LOCAL		NEMA	170			E	EV	DOUBLE	332	336S	BITRAN	WAPITI

NEMA DETECTOR ASSIGNMENT

		CARD POSITION							
		1	2	3	4	5	6	7	8
CHANNEL	1	VIDEO							
	2								

TOTAL NUMBER OF DETECTOR CARDS(2-CHANNEL) = (2)

NEMA LOAD SWITCH ASSIGNMENTS

1	2	3	4	5	6	7	8	9	10	11	12
EXISTING											

RECONFIGURE SBLT TO OPERATE AS FLASHING YELLOW ARROW, USE OPEN LOAD BAY AND RECONFIGURE CONTROLLER AS REQUIRED (NO DIRECT PAY)

SIGNAL SIGNS

QUANTITY	MUTCD SIGN NUMBER	SIZE	AREA	SIGN TOTAL AREA ITEM NO. 90208.33	SIGNAL SIGN MOUNTING HARDWARE ITEM NO. 90208.34
		INCHES	SQ.FT.	SQ.FT.	EA.
	R10-10L	24 X 30	5.0		
	R10-10R	24 X 30	5.0		
	R3-5L	30 X 36	7.5		
	R3-5R	30 X 36	7.5		
	R3-5A	30 X 36	7.5		
	R3-6L	30 X 36	7.5		
	R3-6R	30 X 36	7.5		
	R3-2	24 X 24	4.0		
	R3-1	24 X 24	4.0		
	R3-3	24 X 24	4.0		
	D3-1 ***	VAR. X 18			
	D3-1B ***	VAR. X 18			
	R10-3E	9 X 15	0.9		
	R10-11A	24 X 30	5.0		
	R10-13	36 X 24	6.0		
1	R10-27A	30 X 36	7.5	7.5	1
			SUBTOTAL	7.5	1
			TOTAL	7.5	1

DETECTOR SCHEDULE

DETECTOR NUMBER	APPROACH	TYPE				
		PUSH BUTTON	INDUCTION LOOP			VIDEO (1)
			STANDARD	DELAY/ EXTEND *	CALL UNIT *	
VIDEO 1	HAMBLIN ROAD					1
VIDEO 2	OLDHAM PARKWAY					1
VIDEO 3	HAMBLIN ROAD					1

EFFECTIVE 12-01-17

WIRING DIAGRAM

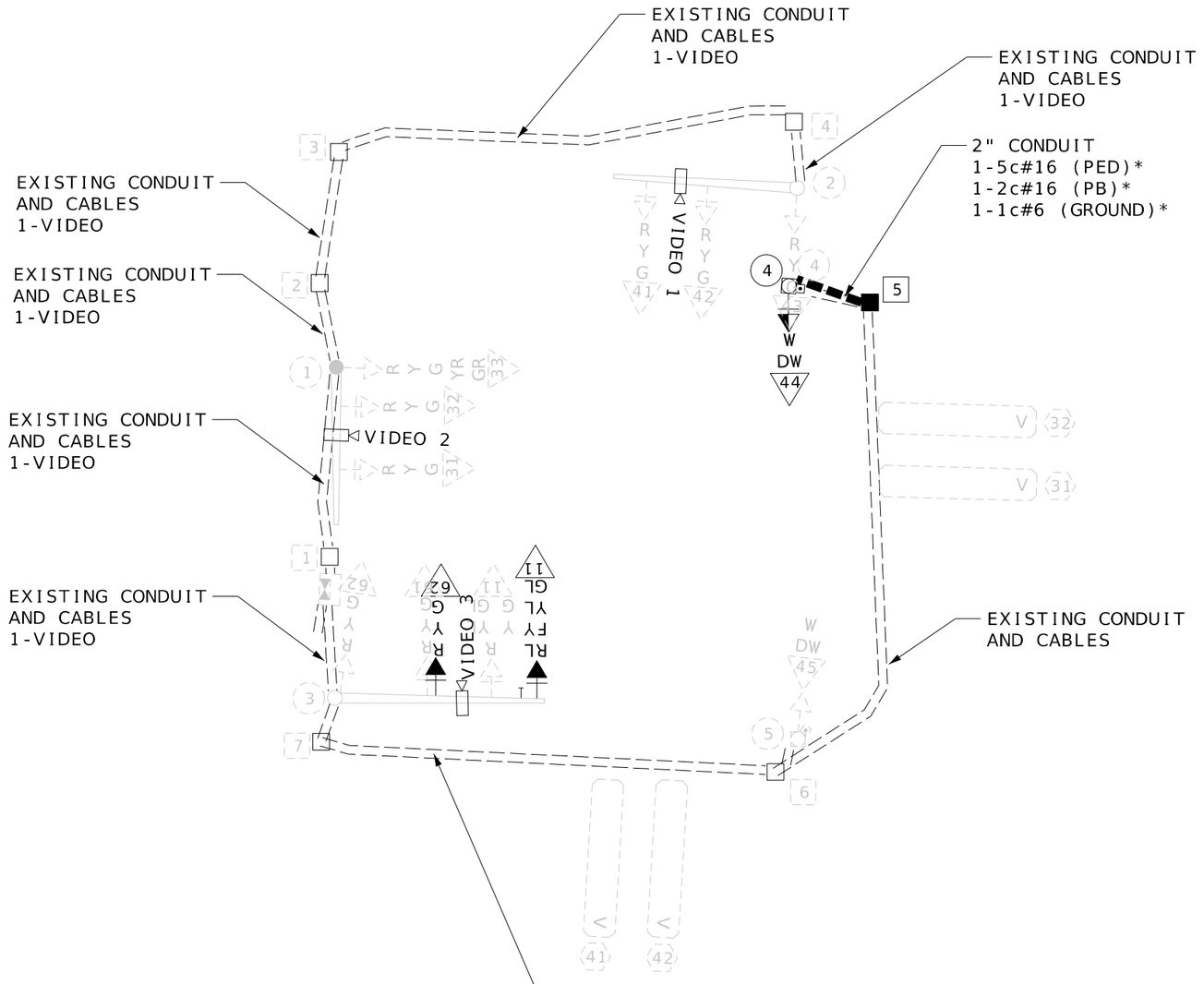

* NOTE:PULL EXISITNG CONDUCTORS BACK INTO EXISTING PULL BOX, REINSTALL IN NEW CONDUIT AND RECONNECT EXISTING PUSH BUTTON AND PEDESTRIAN SIGNAL HEAD

LEGEND

3"	CONDUIT CONTAINING CABLE WITH SIZE
	CABLE
X-Xc	MULTI-CONDUCTOR CABLE #16 AWG (UNLESS OTHERWISE INDICATED)
LIC	#14 AWG DETECTOR LEAD-IN CABLE (2C TWISTED SHIELDED)
X	PULL BOX WITH NUMBER
(X)	POST WITH NUMBER
(X)	POST WITH MAST ARM
(X)	POST WITH MAST ARM AND LUMINAIRE
X	DETECTOR WITH NUMBER
— X	SIGNAL HEAD WITH NUMBER
	SIGNAL CONTROLLER
	POWER SUPPLY
	LIGHTING CONTROLLER

STATE OF MISSOURI — JEREMY SCOTT STRETZ — NUMBER PE-2017023864 — PROFESSIONAL ENGINEER

Jeremy Stretz 2025.02.28 15:50:04-06'00'

IF A SEAL IS PRESENT ON THIS SHEET IT HAS BEEN ELECTRONICALLY SEALED AND DATED.

DATE PREPARED 2/28/2025

ROUTE	STATE
50/291	MO
DISTRICT	SHEET NO.
KC	216

COUNTY: JACKSON

JOB NO.: J4P3196

FEDERAL PROJECT NO.: STB-3001(009)

PROJECT NO.:

BRIDGE NO.:

DATE	DESCRIPTION

MISSOURI HIGHWAYS AND TRANSPORTATION COMMISSION
105 WEST CAPITOL
JEFFERSON CITY, MO 65102
1-888-ASK-MODOT (1-888-275-6636)

LEE'S SUMMIT MISSOURI

olsson
1301 BURLINGTON ST., STE. 100
NORTH KANSAS CITY, MO 64116
PHONE: 816.361.1177
CERT. OF AUTHORITY NO. 001592

HAMBLEN ROAD & OLDHAM PARKWAY

INTERSECTION

D-37D

SIGNAL PLAN
SHEET 19 OF 20

EFFECTIVE 12/01/2017

SIGNAL FACE LOCATION

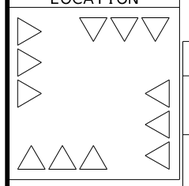

TRAFFIC PHASING AND COLOR SEQUENCE - ACTUATED CONTROLLERS

EXISTING TO REMAIN

	PHASE	PHASE	PHASE	PHASE	PHASE	PHASE	PHASE	PHASE	PED Ø OVERLAP	PED Ø OVERLAP	PED Ø OVERLAP	PED Ø OVERLAP
FACE NUMBERS												
SIGNAL INDICATIONS R												
SIGNAL INDICATIONS Y												
SIGNAL INDICATIONS FYA												
SIGNAL INDICATIONS G												
DETECTOR ASSIGNMENTS												
DETECTOR ASSIGNMENTS (PEDS. ONLY)												
OVERLAP PARENT PHASES												

FACE NUMBERS

SIGNAL INDICATIONS R Y FYA G

DETECTOR ASSIGNMENTS

	PHASE	PHASE	PHASE	PHASE
RING 1	EXISTING TO REMAIN			
RING 2				
	PHASE	PHASE	PHASE	PHASE

BARRIER

RING STRUCTURE

IF CALLED, ALL NON-CONFLICTING PHASES SHALL COMBINE AND TIME CONCURRENTLY. TIME TO BE DETERMINED BY THE ENGINEER AT SIGNAL TURN ON AND SET IN THE CONTROLLER BY THE CONTRACTOR.

LEGEND

- ACTUATED VEHICULAR MOVEMENT
- PARTIALLY RESTRICTED ACTUATED VEHICULAR MOVEMENT
- NON-ACTUATED VEHICULAR MOVEMENT
- PARTIALLY RESTRICTED NON-ACTUATED VEHICULAR MOVEMENT
- ACTUATED PEDESTRIAN MOVEMENT
- NON-ACTUATED PEDESTRIAN MOVEMENT
- VEHICLE STOPPED
- FDW — FLASHING DON'T WALK
- W — WALK
- DW — DON'T WALK
- R/W — RIGHT OF WAY INTERVAL
- YRt — YELLOW RIGHT ARROW
- RT. — GREEN RIGHT ARROW
- LY -YL — YELLOW LEFT ARROW
- L — GREEN LEFT ARROW
- S — GREEN STRAIGHT AHEAD ARROW
- G — CIRCULAR GREEN
- Y — CIRCULAR YELLOW
- R — CIRCULAR RED
- RL — RED LEFT ARROW
- Ø — TRAFFIC PHASE
- AO — ALL OTHERS
- FR — FLASHING RED
- FY — FLASHING CIRCULAR YELLOW
- FYL — FLASHING YELLOW LEFT ARROW

FLASHING OPERATION	
ALL MOVEMENTS	FR
	FY

CONTROLLER TYPE	EX

TRAFFIC SIGNAL CONTROL OPERATION
INTERSECTION OF
OLDHAM PARKWAY

D-38A

SIGNAL PLAN
SHEET 20 OF 20

STATE OF MISSOURI
JEREMY SCOTT STRETZ
NUMBER PE-2017023056
PROFESSIONAL ENGINEER

Jeremy Stretz 2025.02.28 15:50:17-06'00'

DATE PREPARED 2/28/2025

ROUTE	STATE
50/291	MO
DISTRICT	SHEET NO.
KC	217

COUNTY JACKSON

JOB NO. J4P3196

FEDERAL PROJECT NO.

PROJECT NO.

BRIDGE NO.

DESCRIPTION

DATE

MISSOURI HIGHWAYS AND TRANSPORTATION COMMISSION

MoDOT

105 WEST CAPITOL
JEFFERSON CITY, MO 65102
1-888-ASK-MODOT (1-888-275-6636)

LEE'S SUMMIT MISSOURI

olsson

1301 BURLINGTON ST., STE. 100
NORTH KANSAS CITY, MO 64116
PHONE: 816.361.1177
CERT. OF AUTHORITY NO. 001592

IF A SEAL IS PRESENT ON THIS SHEET IT HAS BEEN ELECTRONICALLY SEALED AND DATED.

F:\2021\04501-05000\021-04786\40-Design\Microstation\J4P3196\plan_sheets\12 Signals\217_SG_20_J4P3196.dgn 2:12:12 PM 2/28/2025

CONSTRUCTION NOTES:

1. FURNISH AND INSTALL NEW CONDUIT (PUSHED).
2. FURNISH AND INSTALL NEW CONDUIT (TRENCH). CONTRACTOR MAY CHOOSE TO PUSH CONDUIT IF DESIRED AT NO ADDITIONAL COST TO MoDOT.
3. INSTALL NEW CONDUIT INTO EXISTING PULL BOX.
4. FURNISH AND INSTALL NEW ITS PULL BOX CLASS 5. LID SHALL BE LABELED "STATE FIBER OPTICS". SEE MoDOT STANDARDS PLAN 902.20G FOR DETAILS. COIL 50' OF EITHER 24CT AND 48CT SINGLE MODE FIBER OPTIC CABLE IF ROUTED THROUGH PULL BOX.
5. FURNISH AND INSTALL NEW SINGLE MODE FIBER OPTIC CABLE WITH (1) #14 TRACER WIRE IN CONDUIT PER CONDUCTOR SCHEDULE. PROTECT ALL EXISTING CONDUCTORS/CABLES IN PLACE UNLESS DIRECTED OTHERWISE.
6. FURNISH AND INSTALL NEW SERVICE WIRE PER CONDUCTOR SCHEDULE.
7. FURNISH AND INSTALL NEW CAT ETHERNET CABLE(S) PER CONDUCTOR SCHEDULE. PROTECT ALL EXISTING CONDUCTORS/CABLES IN PLACE UNLESS DIRECTED OTHERWISE.
8. RELOCATE EXISTING 48-PORT DISTRIBUTION UNIT AND ASSOCIATED SPLICE TRAYS TO NEW CABINET. COMPLETE ALL CONNECTIONS FOR INTENDED OPERATIONS INCLUDING POWER, PIGTAILS AND FIBER OPTIC JUMPERS. POWER TO BE PROVIDED BY EXISTNG SERVICE CABINET. SEE SPECIAL PROVISIONS AND MODOT STANDARD PLAN 902.100 FOR DETAILS.
9. UTILIZE EXISTING 48-PORT DISTRIBUTION UNIT, ASSOCIATED SPLICE TRAYS, AND ETHERNET SWITCH. COMPLETE ALL CONNECTIONS FOR INTENDED OPERATIONS INCLUDING POWER, PIGTAILS AND FIBER OPTIC JUMPERS. SEE SPECIAL PROVISIONS AND MoDOT STANDARD PLAN 902.100 FOR DETAILS.
10. FUSION SPLICE APPLICABLE STRANDS OF FIBER OPTIC CABLE. SEE PROVIDED FIBER ASSIGNMENT FOR DETAILS.
12. RELOCATE MoDOT ETHERNET SWITCH TO NEW CABINET. FURNISH AND INSTALL CAT6 CABLES FOR SUPPORTED DEVICES. COMPLETE CONNECTIONS FOR INTENDED OPERTION.
22. COMPLETE ALL CAT6 CONNECTIONS TO EHTERNET DEVICES FOR INTENDED OPERATIONS.

SCALE

0 30 60 90

ITS LEGEND

- CABINET
- CABINET (EXISTING)
- JUNCTION BOX
- POWER SUPPLY
- PREFORMED PULL BOX TYPE 1
- PREFORMED PULL BOX TYPE 2
- CONCRETE PULL BOX TYPE 1
- CONCRETE PULL BOX, TYPE A TYPE I DRAIN, CONCRETE
- ITS PULL BOX CLASS 2
- ITS PULL BOX CLASS 5
- ITS SCOUT FIBER PULL BOX
- ITS SCOUT SPLICE FIBER PULL BOX
- ITS SCOUT PREFORMED PULL BOX, TYPE 2
- CONDUIT MEDIAN
- CONDUIT PUSHED
- CONDUIT BRIDGE
- CONDUIT EXISTING
- CONDUIT TRENCHED
- EXISTING POWER SOURCE
- EXISTING PULL BOX

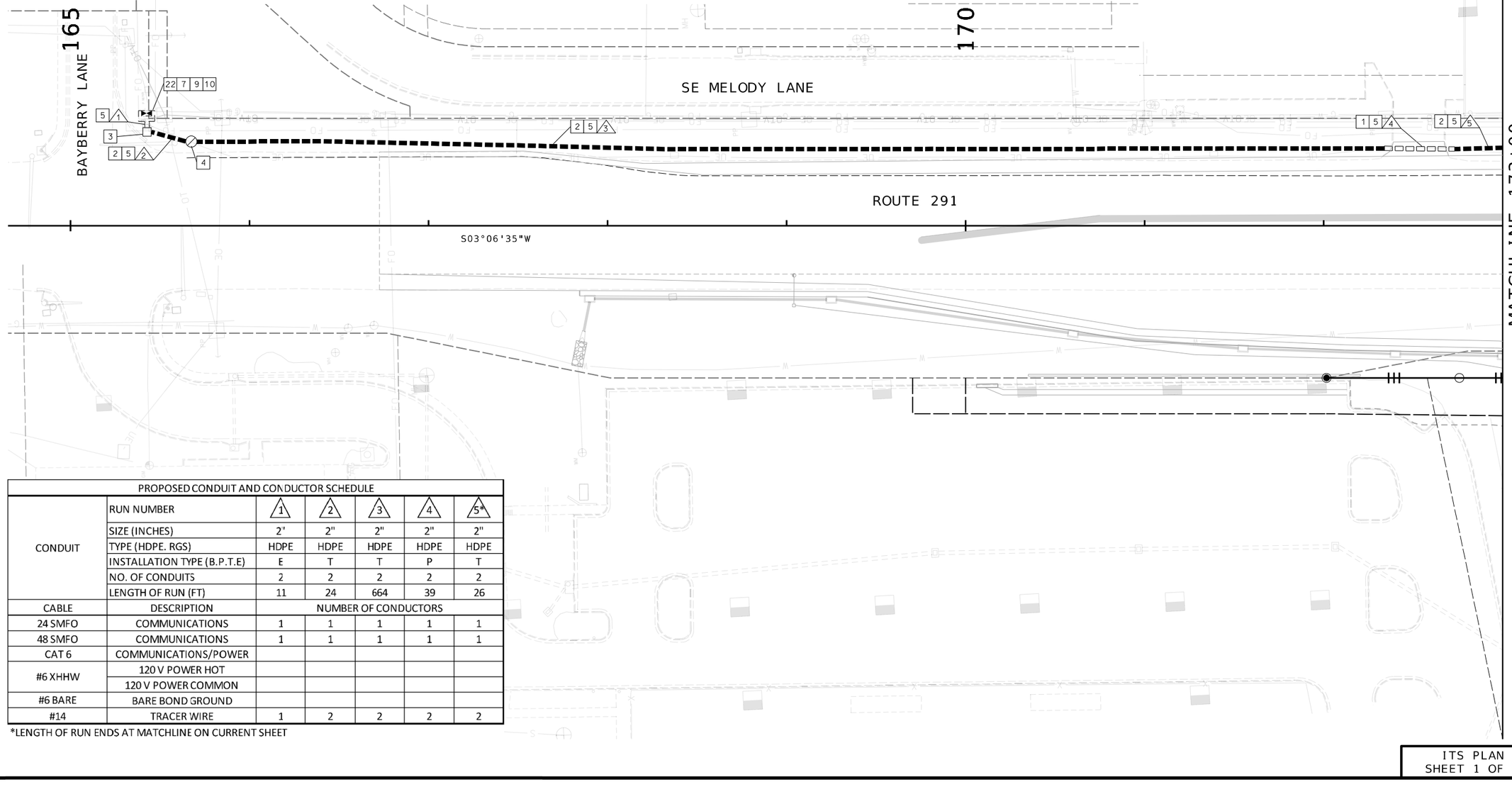

PROPOSED CONDUIT AND CONDUCTOR SCHEDULE						
CONDUIT	RUN NUMBER	1	2	3	4	5*
	SIZE (INCHES)	2"	2"	2"	2"	2"
	TYPE (HDPE. RGS)	HDPE	HDPE	HDPE	HDPE	HDPE
	INSTALLATION TYPE (B.P.T.E)	E	T	T	P	T
	NO. OF CONDUITS	2	2	2	2	2
	LENGTH OF RUN (FT)	11	24	664	39	26
CABLE	DESCRIPTION	NUMBER OF CONDUCTORS				
24 SMFO	COMMUNICATIONS	1	1	1	1	1
48 SMFO	COMMUNICATIONS	1	1	1	1	1
CAT 6	COMMUNICATIONS/POWER					
#6 XHHW	120 V POWER HOT					
	120 V POWER COMMON					
#6 BARE	BARE BOND GROUND					
#14	TRACER WIRE	1	2	2	2	2

*LENGTH OF RUN ENDS AT MATCHLINE ON CURRENT SHEET

ITS PLAN
SHEET 1 OF 8

STATE OF MISSOURI
JEREMY SCOTT STRETZ
NUMBER PE-2017023856
PROFESSIONAL ENGINEER

Jeremy Stretz 2025.02.28 15:50:28-06'00'

DATE PREPARED
2/28/2025

ROUTE	STATE
50/291	MO
DISTRICT	SHEET NO.
KC	218

COUNTY
JACKSON

JOB NO.
J4P3196

FEDERAL PROJECT NO.
STB-3001(009)

PROJECT NO.

BRIDGE NO.

DATE	DESCRIPTION

IF A SEAL IS PRESENT ON THIS SHEET IT HAS BEEN ELECTRONICALLY SEALED AND DATED.

LEE'S SUMMIT MISSOURI

olsson
1301 BURLINGTON ST., STE. 100
NORTH KANSAS CITY, MO 64116
PHONE: 816.361.1177
CERT. OF AUTHORITY NO. 001592

PROPOSED CONDUIT AND CONDUCTOR SCHEDULE

	RUN NUMBER	1*	2	3	4	5	6	7	8	9	10*	11	12	13
CONDUIT	SIZE (INCHES)	2"	2"	2"	2"	2"	2"	2"	4"	2"	2"	2"	2"	2"
	TYPE (HDPE. RGS)	HDPE	HDPE	HDPE	HDPE	HDPE	HDPE	HDPE	HDPE	HDPE	HDPE	HDPE	HDPE	HDPE
	INSTALLATION TYPE (B.P.T.E)	T	P	T	P	T	E	T	T	P	T	T	P	P
	NO. OF CONDUITS	2	2	2	1	1	1	1	1	1	1	1	1	1
	LENGTH OF RUN (FT)	35	40	120	252	3	5	265	25	5	151	355	217	124
CABLE	DESCRIPTION	NUMBER OF CONDUCTORS												
24 SMFO	COMMUNICATIONS	1	1	1	1	1	1	1	1	1				
48 SMFO	COMMUNICATIONS	1	1	1							1	1	1	1
CAT 6	COMMUNICATIONS/POWER													
#6 XHHW	120 V POWER HOT													
	120 V POWER COMMON													
#6 BARE	BARE BOND GROUND													
#14	TRACER WIRE	2	2	2	1	1	1	1	1	1	1	1	1	1

*LENGTH OF RUN ENDS AT MATCHLINE ON CURRENT SHEET

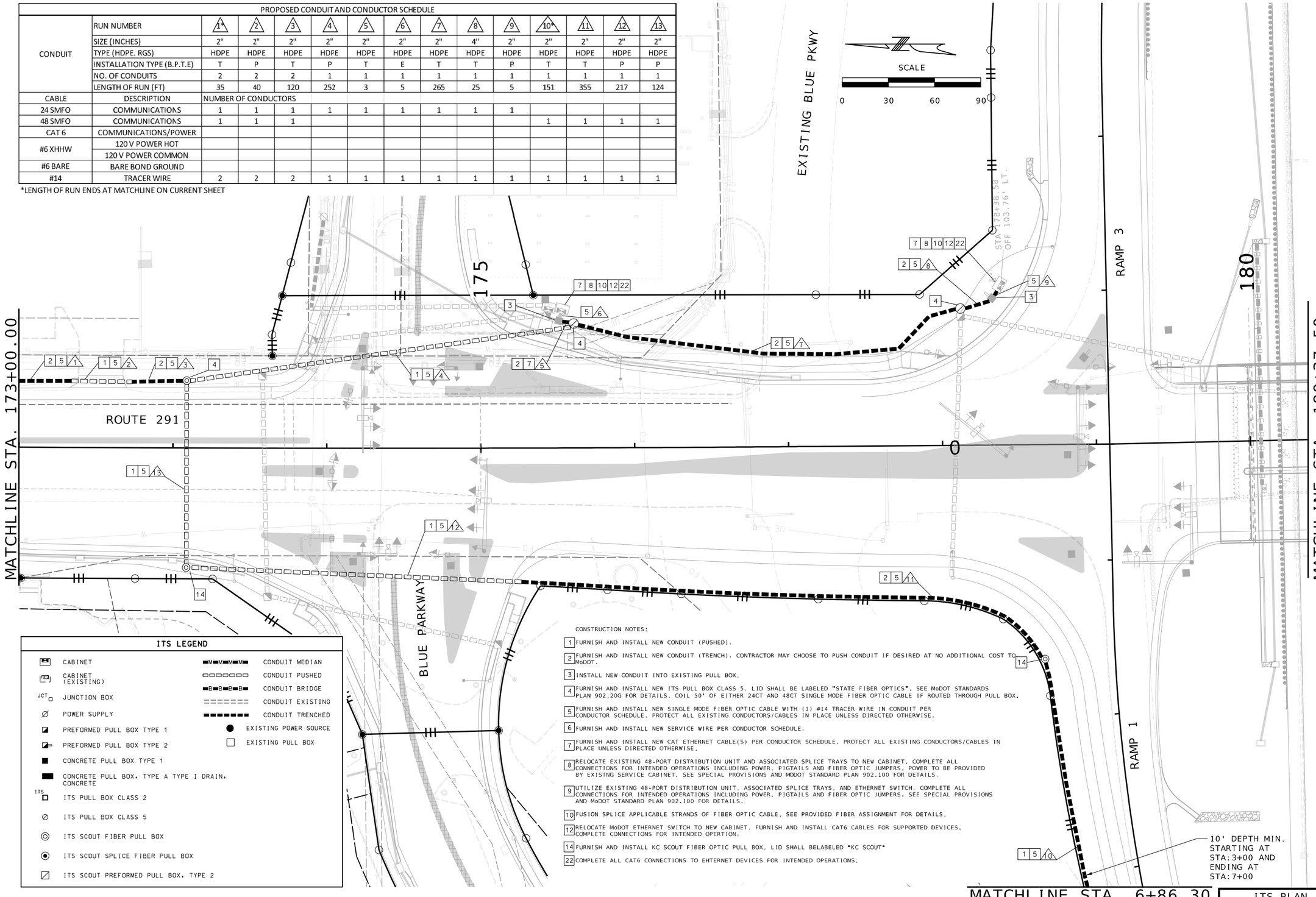

ITS LEGEND

- CABINET
- CABINET (EXISTING)
- JUNCTION BOX
- POWER SUPPLY
- PREFORMED PULL BOX TYPE 1
- PREFORMED PULL BOX TYPE 2
- CONCRETE PULL BOX TYPE 1
- CONCRETE PULL BOX, TYPE A TYPE I DRAIN, CONCRETE
- ITS PULL BOX CLASS 2
- ITS PULL BOX CLASS 5
- ITS SCOUT FIBER PULL BOX
- ITS SCOUT SPLICE FIBER PULL BOX
- ITS SCOUT PREFORMED PULL BOX, TYPE 2
- CONDUIT MEDIAN
- CONDUIT PUSHED
- CONDUIT BRIDGE
- CONDUIT EXISTING
- CONDUIT TRENCHED
- EXISTING POWER SOURCE
- EXISTING PULL BOX

CONSTRUCTION NOTES:

1. FURNISH AND INSTALL NEW CONDUIT (PUSHED).
2. FURNISH AND INSTALL NEW CONDUIT (TRENCH). CONTRACTOR MAY CHOOSE TO PUSH CONDUIT IF DESIRED AT NO ADDITIONAL COST TO MoDOT.
3. INSTALL NEW CONDUIT INTO EXISTING PULL BOX.
4. FURNISH AND INSTALL NEW ITS PULL BOX CLASS 5, LID SHALL BE LABELED "STATE FIBER OPTICS". SEE MoDOT STANDARDS PLAN 902.20G FOR DETAILS. COIL 50' OF EITHER 24CT AND 48CT SINGLE MODE FIBER OPTIC CABLE IF ROUTED THROUGH PULL BOX.
5. FURNISH AND INSTALL NEW SINGLE MODE FIBER OPTIC CABLE WITH (1) #14 TRACER WIRE IN CONDUIT PER CONDUCTOR SCHEDULE. PROTECT ALL EXISTING CONDUCTORS/CABLES IN PLACE UNLESS DIRECTED OTHERWISE.
6. FURNISH AND INSTALL NEW SERVICE WIRE PER CONDUCTOR SCHEDULE.
7. FURNISH AND INSTALL NEW CAT ETHERNET CABLE(S) PER CONDUCTOR SCHEDULE. PROTECT ALL EXISTING CONDUCTORS/CABLES IN PLACE UNLESS DIRECTED OTHERWISE.
8. RELOCATE EXISTING 48-PORT DISTRIBUTION UNIT AND ASSOCIATED SPLICE TRAYS TO NEW CABINET. COMPLETE ALL CONNECTIONS FOR INTENDED OPERATIONS INCLUDING POWER, PIGTAILS AND FIBER OPTIC JUMPERS. POWER TO BE PROVIDED BY EXISTNG SERVICE CABINET. SEE SPECIAL PROVISIONS AND MODOT STANDARD PLAN 902.100 FOR DETAILS.
9. UTILIZE EXISTING 48-PORT DISTRIBUTION UNIT, ASSOCIATED SPLICE TRAYS, AND ETHERNET SWITCH. COMPLETE ALL CONNECTIONS FOR INTENDED OPERATIONS INCLUDING POWER, PIGTAILS AND FIBER OPTIC JUMPERS. SEE SPECIAL PROVISIONS AND MoDOT STANDARD PLAN 902.100 FOR DETAILS.
10. FUSION SPLICE APPLICABLE STRANDS OF FIBER OPTIC CABLE. SEE PROVIDED FIBER ASSIGNMENT FOR DETAILS.
12. RELOCATE MoDOT ETHERNET SWITCH TO NEW CABINET. FURNISH AND INSTALL CAT6 CABLES FOR SUPPORTED DEVICES. COMPLETE CONNECTIONS FOR INTENDED OPERTION.
14. FURNISH AND INSTALL KC SCOUT FIBER OPTIC PULL BOX, LID SHALL BELABELED "KC SCOUT"
22. COMPLETE ALL CAT6 CONNECTIONS TO EHTERNET DEVICES FOR INTENDED OPERATIONS.

ITS PLAN
SHEET 2 OF 8

STATE OF MISSOURI
JEREMY SCOTT STRETZ
NUMBER PE-2017023856
PROFESSIONAL ENGINEER
Jeremy Stretz 2025.02.28 15:50:40-06'00

DATE PREPARED 2/28/2025
ROUTE 50/291 | STATE MO
DISTRICT KC | SHEET NO. 219
COUNTY JACKSON
JOB NO. J4P3196
FEDERAL PROJECT NO. STB-3001(009)
PROJECT NO.
BRIDGE NO.

DESCRIPTION | DATE

IF A SEAL IS PRESENT ON THIS SHEET IT HAS BEEN ELECTRONICALLY SEALED AND DATED.

MISSOURI HIGHWAYS AND TRANSPORTATION COMMISSION
105 WEST CAPITOL
JEFFERSON CITY, MO 65102
1-888-ASK-MODOT (1-888-275-6636)

LEE'S SUMMIT MISSOURI

olsson
1301 BURLINGTON ST., STE. 100
NORTH KANSAS CITY, MO 64116
PHONE: 816.361.1177
CERT. OF AUTHORITY NO. 001592

MATCHLINE STA. 2+84.87

MATCHLINE STA. 7+91.57

MATCHLINE STA. 180+37.50

WB HIGHWAY 50

EB HIGHWAY 50

RAMP 4

RAMP 2

ROUTE 291

OLDHAM PARKWAY

HAMBLEN ROAD

185

SCALE

0 30 60 90

PROPOSED CONDUIT AND CONDUCTOR SCHEDULE

		1	2	3*	4	5	6	7	8	9	10	11*
CONDUIT	RUN NUMBER											
	SIZE (INCHES)	3"	2"	2"	2"	2"	2"	2"	2"	2"	2"	2"
	TYPE (HDPE. RGS)	HDPE	HDPE	HDPE	HDPE	HDPE	HDPE	HDPE	HDPE	HDPE	HDPE	HDPE
	INSTALLATION TYPE (B.P.T.E)	T	P	T	T	T	T	T	P	P	T	T
	NO. OF CONDUITS	1	1	1	1	1	1	1	1	1	1	1
	LENGTH OF RUN (FT)	17	100	126	68	21	15	14	212	236	5	78
CABLE	DESCRIPTION	NUMBER OF CONDUCTORS										
24 SMFO	COMMUNICATIONS											
48 SMFO	COMMUNICATIONS			1	1				1			1
RADAR CABLE	COMMUNICATIONS/PCWER	1	1		1	1						
CAT 6	COMMUNICATIONS/PCWER						1					
#6 XHHW	120 V POWER HOT							1		1	1	
	120 V POWER COMMON							1		1	1	
#6 BARE	BARE BOND GROUND							1		1	1	
#14	TRACER WIRE	1	1	1	1	1	1	1	1	1	1	1

*LENGTH OF RUN ENDS AT MATCHLINE ON CURRENT SHEET

ITS LEGEND

- CABINET
- CABINET (EXISTING)
- JUNCTION BOX
- POWER SUPPLY
- PREFORMED PULL BOX TYPE 1
- PREFORMED PULL BOX TYPE 2
- CONCRETE PULL BOX TYPE 1
- CONCRETE PULL BOX, TYPE A TYPE I DRAIN, CONCRETE
- ITS PULL BOX CLASS 2
- ITS PULL BOX CLASS 5
- ITS SCOUT FIBER PULL BOX
- ITS SCOUT SPLICE FIBER PULL BOX
- ITS SCOUT PREFORMED PULL BOX, TYPE 2
- CONDUIT MEDIAN
- CONDUIT PUSHED
- CONDUIT BRIDGE
- CONDUIT EXISTING
- CONDUIT TRENCHED
- EXISTING POWER SOURCE
- EXISTING PULL BOX

CONSTRUCTION NOTES:

1 FURNISH AND INSTALL NEW CONDUIT (PUSHED).

2 FURNISH AND INSTALL NEW CONDUIT (TRENCH). CONTRACTOR MAY CHOOSE TO PUSH CONDUIT IF DESIRED AT NO ADDITIONAL COST TO MoDOT.

4 FURNISH AND INSTALL NEW ITS PULL BOX CLASS 5. LID SHALL BE LABELED "STATE FIBER OPTICS". SEE MoDOT STANDARDS PLAN 902.20G FOR DETAILS. COIL 50' OF EITHER 24CT AND 48CT SINGLE MODE FIBER OPTIC CABLE IF ROUTED THROUGH PULL BOX.

5 FURNISH AND INSTALL NEW SINGLE MODE FIBER OPTIC CABLE WITH (1) #14 TRACER WIRE IN CONDUIT PER CONDUCTOR SCHEDULE. PROTECT ALL EXISTING CONDUCTORS/CABLES IN PLACE UNLESS DIRECT OTHERWISE.

6 FURNISH AND INSTALL NEW SERVICE WIRES PER CONDUCTOR SCHEDULE.

7 FURNISH AND INSTALL NEW CAT ETHERNET CABLE(S) PER CONDUCTOR SCHEDULE. PROTECT ALL EXISTING CONDUCTORS/CABLES IN PLACE UNLESS DIRECTED OTHERWISE.

11 CUT EXISTING FIBER AT EXISTING KC SCOUT CABINET. EXISTING FIBER TO BE COILED BACK TO PULL BOXES LOCATED AT THE ENTRY AND EXIT POINTS OF RAMP 2 AND RAMP 4.

14 FURNISH AND INSTALL KC SCOUT FIBER OPTIC PULL BOX. LID SHALL BE LABELED "KC SCOUT".

22 COMPLETE ALL CAT6 CONNECTIONS TO EHTERNET DEVICES FOR INTENDED OPERATIONS.

23 INSTALL RELOCATED ITS CABINET TYPE 334 (EXISTING) ON CONCRETE FOUNDATION ON NEW CONCRETE FOUNDATION. RELOCATE ALL ASSOCIATED EQUIPMENT KC SCOUT CABINET TO RELOCATED ITS CABINET.

24 RELOCATE EXISTING KC SCOUT CCTV POLE AND CAMERA ONTO A NEW FOUNDATION BASE.

25 REMOVE AND RELOCATE EXISTING KC SCOUT RADAR ONTO NEW 30' POLE ON NEW SCREW-IN FOUNDATION.

26 REMOVE EXISTING MODOT ITS PULL BOX.

27 FURNISH AND INSTALL KC SCOUT ITS PREFORMED PULL BOX, TYPE 2. LID SHALL BE LABELED "KC SCOUT"

ITS PLAN
SHEET 3 OF 8

STATE OF MISSOURI
JEREMY SCOTT STRETZ
NUMBER PE-2017023856
PROFESSIONAL ENGINEER
Jeremy Stretz 2025.02.28 15:50:52-06'00'

DATE PREPARED 2/28/2025
ROUTE 50/291
STATE MO
DISTRICT KC
SHEET NO. 220
COUNTY JACKSON
JOB NO. J4P3196
FEDERAL PROJECT NO. STB-3001(009)
PROJECT NO.
BRIDGE NO.

DESCRIPTION | DATE

MISSOURI HIGHWAYS AND TRANSPORTATION COMMISSION
MoDOT
105 WEST CAPITOL
JEFFERSON CITY, MO 65102
1-888-ASK-MODOT (1-888-275-6636)

LEE'S SUMMIT MISSOURI

olsson
1301 BURLINGTON ST., STE. 100
NORTH KANSAS CITY, MO 64116
PHONE: 816.361.1177
CERT. OF AUTHORITY NO. 001592

IF A SEAL IS PRESENT ON THIS SHEET IT HAS BEEN ELECTRONICALLY SEALED AND DATED.

F:\2021\04501-05000\021-04786\40-Design\Microstation\J4P3196\plan_sheets\12 Signals\ITS\220_ITS_03_J4P3196.dgn 2:18:55 PM 2/28/2025

CONSTRUCTION NOTES:

1. FURNISH AND INSTALL NEW CONDUIT (PUSHED).
2. FURNISH AND INSTALL NEW CONDUIT (TRENCH). CONTRACTOR MAY CHOOSE TO PUSH CONDUIT IF DESIRED AT NO ADDITIONAL COST TO MoDOT.
5. FURNISH AND INSTALL SINGLE MODE FIBER OPTIC CABLE WITH (1) #14 TRACER WIRE IN CONDUIT PER CONDUCTOR SCHEDULE. PROTECT ALL EXISTING CONDUCTORS/CABLES IN PLACE UNLESS DIRECT OTHERWISE.
14. FURNISH AND INSTALL KC SCOUT FIBER OPTIC PULL BOX. LID SHALL BE LABELED "KC SCOUT".
15. FURNISH AND INSTALL KC SCOUT FIBER OPTIC SPLICE VAULT. LID SHALL BE LABELED "KC SCOUT".
20. REMOVE EXISTING KC SCOUT FIBER OPTIC VAULT.
21. INTERCEPT EXISTING KC SCOUT CONDUIT WITH PROPOSED KC SCOUT FIBER OPTIC SPLICE VAULT. SPLICE 48CT FIBER OPTIC CABLES IN PROPOSED SPLICE VAULT.
28. ROUTE NEW CONDUIT INTO EXISTING PULL BOX. SPLICE 48CT FIBER IPTIC CABLES IN EXISTING SPLICE.

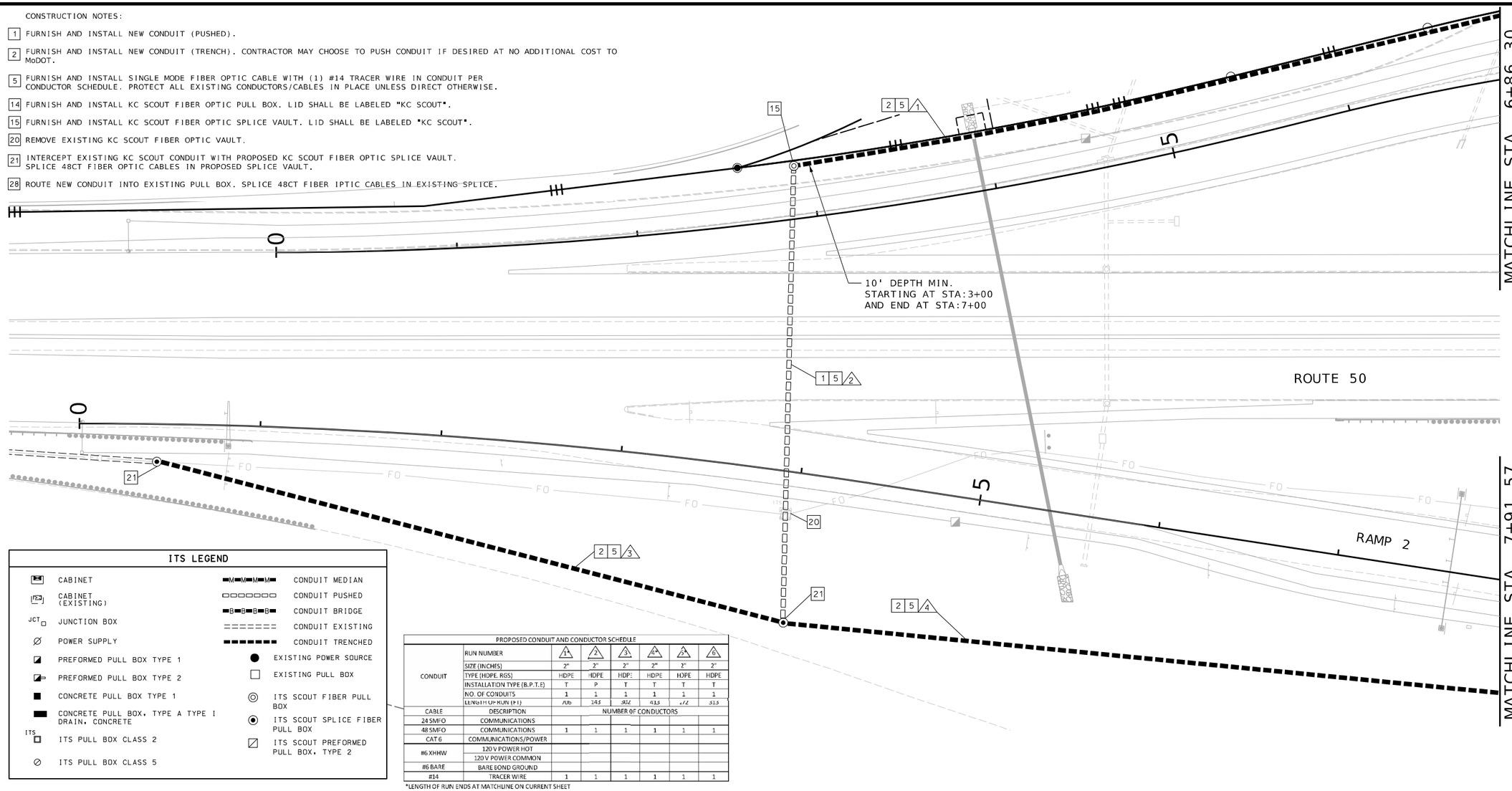

ITS LEGEND

CABINET	CONDUIT MEDIAN
CABINET (EXISTING)	CONDUIT PUSHED
JUNCTION BOX	CONDUIT BRIDGE
POWER SUPPLY	CONDUIT EXISTING
PREFORMED PULL BOX TYPE 1	CONDUIT TRENCHED
PREFORMED PULL BOX TYPE 2	EXISTING POWER SOURCE
CONCRETE PULL BOX TYPE 1	EXISTING PULL BOX
CONCRETE PULL BOX, TYPE A TYPE I DRAIN, CONCRETE	ITS SCOUT FIBER PULL BOX
ITS PULL BOX CLASS 2	ITS SCOUT SPLICE FIBER PULL BOX
ITS PULL BOX CLASS 5	ITS SCOUT PREFORMED PULL BOX, TYPE 2

PROPOSED CONDUIT AND CONDUCTOR SCHEDULE

CONDUIT	RUN NUMBER	1	2	3	4*	5	6
	SIZE (INCHES)	2"	2"	2"	2"	2"	2"
	TYPE (HDPE, RGS)	HDPE	HDPE	HDPE	HDPE	HDPE	HDPE
	INSTALLATION TYPE (B.P.T.E)	T	P	T	T	T	T
	NO. OF CONDUITS	1	1	1	1	1	1
	LENGTH OF RUN (FT)	706	143	302	413	472	513
CABLE	DESCRIPTION	NUMBER OF CONDUCTORS					
24 SMFO	COMMUNICATIONS						
48 SMFO	COMMUNICATIONS	1	1	1	1	1	1
CAT 6	COMMUNICATIONS/POWER						
#6 XHHW	120 V POWER HOT						
	120 V POWER COMMON						
#6 BARE	BARE BOND GROUND						
#14	TRACER WIRE	1	1	1	1	1	1

*LENGTH OF RUN ENDS AT MATCHLINE ON CURRENT SHEET

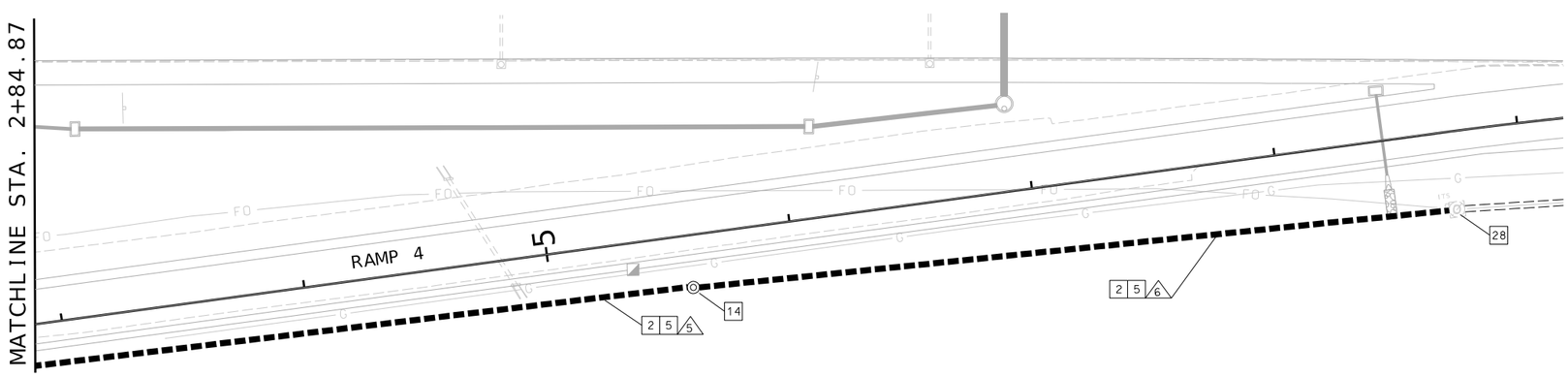

SCALE
0 30 60 90

ITS PLAN
SHEET 4 OF 8

F:\2021\04501-05000\021-04786\40-Design\Microstation\J4P3196\plan_sheets\12 Signals\ITS\221_ITS_04_J4P3196.dgn 2:19:07 PM 2/28/2025

STATE OF MISSOURI
JEREMY SCOTT STRETZ
NUMBER PE-2011021864
PROFESSIONAL ENGINEER
Jeremy Stretz 2025.02.28 15:51:04-06'00'

DATE PREPARED 2/28/2025
ROUTE 50/291 | STATE MO
DISTRICT KC | SHEET NO. 221
COUNTY JACKSON
JOB NO. J4P3196
FED. AID PROJ. NO. STB-3001(009)
CONTRACT ID. NO.
PROJECT NO.
BRIDGE NO.

DESCRIPTION | DATE

IF A SEAL IS PRESENT ON THIS SHEET, IT HAS BEEN ELECTRONICALLY SEALED AND DATED.

MISSOURI HIGHWAYS AND TRANSPORTATION COMMISSION
105 WEST CAPITOL
JEFFERSON CITY, MO 65102
1-888-ASK-MODOT (1-888-275-6636)

LEE'S SUMMIT MISSOURI

olsson
1301 BURLINGTON ST., STE. 100
NORTH KANSAS CITY, MO 64116
PHONE: 816.361.1177
CERT. OF AUTHORITY NO. 001592

PULLBOX								
ITS SHEET NUMBER	PULL BOX NO.	ROADWAY	STA.	OFF.	KC Scout Fiber Optic Pull Box	KC Scout Fiber Optic Splice Vault	KC Scout Preformed Pull Box, Type 2	ITS Pullbox Class 5
1	1	Route 291	165+68	46.5' LT.				1
2	2	Route 291	173+10	78.1' RT.	1			
2	3	Route 291	173+10	44.8' LT.				1
2	4	Route 291	175+60	80.7' LT.				1
2	5	Route 291	178+11	88.5' LT.	1			
2	6	Route 291	178+67	139.4' RT.	1			
3	7	Route 50 (RAMP 2)	9+15	43.2' LT.			1	
3	8	Route 50 (RAMP 2)	9+15	56.4' RT.	1			
3	9	Route 50 (RAMP 2)	9+84	62.5' RT.		1		
3	10	Route 50 (RAMP 2)	9+90	64.5' RT.			1	
3	11	Route 50 (RAMP 4)	1+04	20.7' RT.			1	
4	12	Route 50 (RAMP 2)	0+45	21.3' RT.		1		
4	13	Route 50 (RAMP 2)	3+92	84.2' RT.		1		
4	14	Route 50 (RAMP 1)	3+89	29.5' LT.	1			
4	15	Route 50 (RAMP 4)	5+57	21.7' RT.	1			
				TOTAL	6	3	3	3

FIBER OPTIC CABLE & CONDUIT												
ITS SHEET NUMBER	ROADWAY	CABLE, 24 SINGLE MODE FIBER OPTIC	CABLE, 48 SINGLE MODE FIBER OPTIC	RADAR CABLE	CABLE, CAT 6* *ITEM SUBSIDIARY TO OTHER BID ITEMS	CABLE, #6 XHHW (HOT AND COMMON), #6 BARE			CONDUIT, 2" HDPE-IN TRENCH (LF), WITH TRACER WIRE (LF)	CONDUIT, 2" HDPE PUSHED WITH TRACER WIRE (LF)	#14 TRACER WIRE*	REMARKS
						HOT	COMMON	BARE				
1 - 4	Route 291 - Route 50	2098	4539	216	206	255	255	255	5216	1519	471	
	TOTAL	2098	4539	216	206	255	255	255	5216	1519	471	
	COIL / SLACK	200	200									
	USE	2298	4739	216	206	510		255	5216	1519	7206	

*NOTE: FINAL TRACER WIRE QUANTITIES SHALL BE BID FOR ALL TRACER INCLUDED WTIHIN CONDUITS

FIBER EQUIPMENT/CONNECTIONS			
BID ITEM NO.	BID ITEM	Unit	QUANTITY
9011030	Lighting Pole, 30FT. Or 9.0M, TYPE AT	EA	1
9018230	Pole Foundation (30 ft. or 9.0 M Mounting Height)	EA	1
9029100	Base, Concrete	CY	1.93
9109902	CCTV Foundation Base	EA	1

CONTRACTOR QUANTITIES		
BID ITEM NO.	BID ITEM	QUANTITY
6181000	Mobilization	1
6274000	Contractor Furnished Surveying and Staking	1
8069901	Misc. (Temporary Erosion)	1

CONTRACTOR RELOCATION AND REINSTALLATION QUANTITIES		
BID ITEM NO.	BID ITEM	QUANTITY
9109902	Remove and Reset 48 Port Fiber Distribution Unit	3
9109902	Remove and Reset Ethernet Switch	3

STATE OF MISSOURI
JEREMY SCOTT STRETZ
NUMBER PE-2011021864
PROFESSIONAL ENGINEER

Jeremy Stretz 2025.02.28 15:51:17-06'00'

DATE PREPARED: 2/28/2025
ROUTE: 50/291 | STATE: MO
DISTRICT: KC | SHEET NO.: 222
COUNTY: JACKSON
JOB NO.: J4P3196
FEDERAL PROJECT NO.: STB-3001(009)
PROJECT NO.:
BRIDGE NO.:

IF A SEAL IS PRESENT ON THIS SHEET IT HAS BEEN ELECTRONICALLY SEALED AND DATED.

DESCRIPTION | DATE

MISSOURI HIGHWAYS AND TRANSPORTATION COMMISSION
105 WEST CAPITOL
JEFFERSON CITY, MO 65102
1-888-ASK-MODOT (1-888-275-6636)

LEE'S SUMMIT MISSOURI

olsson
1301 BURLINGTON ST., STE. 100
NORTH KANSAS CITY, MO 64116
PHONE: 816.361.1177
CERT. OF AUTHORITY NO. 001592

ITS PLAN
SHEET 5 OF 8

F:\2021\04501-05000\021-04786\40-Design\Microstation\J4P3196\plan_sheets\12 Signals\ITS\222_ITS_05_J4P3196.dgn 2:19:30 PM 2/28/2025

SCHEDULE OF CCTV POLE FOUNDATIONS

POLE HEIGHT (FT.)	FOUNDATION LENGTH	FOUNDATION DIAMETER	TYPE "C-1" NO. & SIZE	TYPE "C-1" LENGTH	*TYPE "C-2" NO. & SIZE	*TYPE "C-2" RD	*TYPE "C-2" LENGTH	REMARKS
45'	18'-0"	2'-6"	13-#8	17'-6"	13-#8	2'-0"	130'-3"	If rock is encountered shalower than foundation length, drill Rock Socket to design depth or 3'-9" into sand rock (4'-6" for 3'-0" dia. shaft), whichever is shallower. No additional payment will be made for Rock Sockets, if necessary

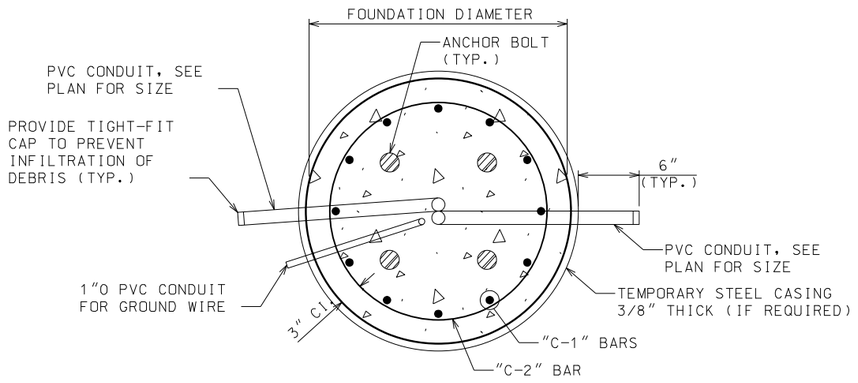

SECTION B-B

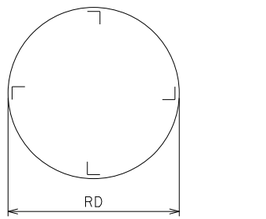

TYPE "C-2" BAR DETAIL

NOTES:

INTEGRITY TESTING ON COMPLETE DRILLED SHAFTS FOR CCTV POLE FOUNDATIONS WILL NOT BE REQUIRED.

FOR LOCATION, SIZE AND ORIENTATION OF PVC CONDUIT, SEE INDIVIDUAL PLAN SHEETS.

TEMPORARY STEEL CASING MAY BE REQUIRED IN EACH SHAFT TO PREVENT SOIL COLLAPSE.

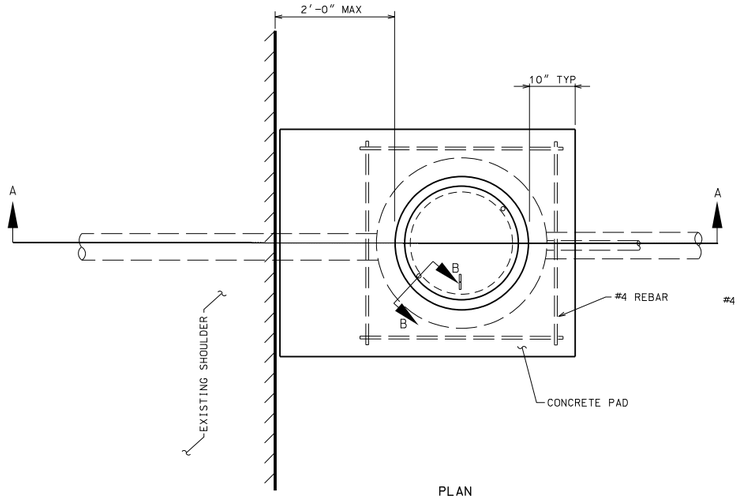

PLAN
PULL BOX ADJACENT TO SHOULDER

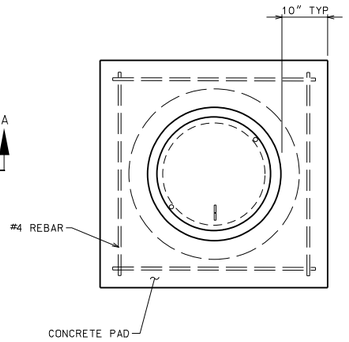

PLAN
PULL BOX GREATER THAN 2'-0" FROM SHOULDER

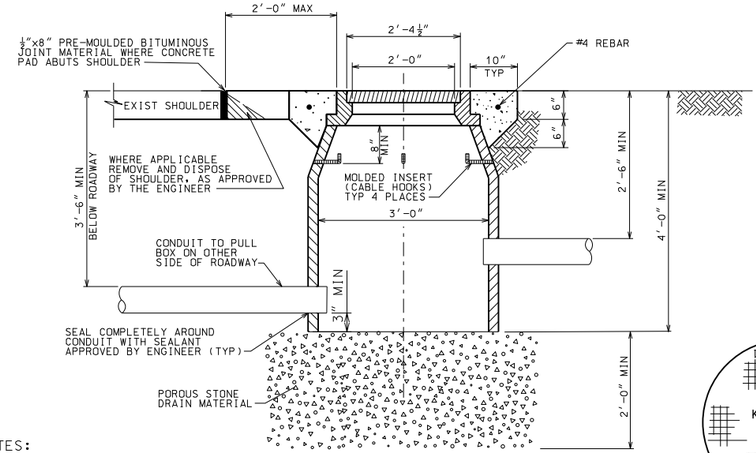

SECTION A-A

NOTES:

1. ALL DIMENSIONS SHOWN ARE NOMINAL, UNLESS OTHERWISE SPECIFIED.
2. BOLT CLEANOUT DETAIL SHALL BE APPROVED BY ENGINEER.
3. ALL CONCRETE SHALL BE 3,000 PSI MINIMUM.
4. LIFT HOLE REQUIRED ON ALL COVERS.
5. COVER SHALL BE A MINIMUM OF 20,000 LB. LOADING.
6. STONE DRAIN MATERIAL SHALL CONFORM TO SECTION 1009 OF THE STANDARD SPECIFICATIONS.

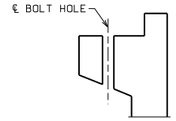

SECTION B-B
TYPICAL BOLT CLEANOUT

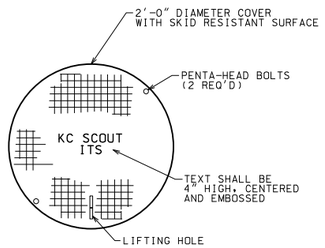

COVER

FIBER SPLICE VAULT DETAILS

ITS PLAN
SHEET 6 OF 8

STATE OF MISSOURI
JEREMY SCOTT STRETZ
NUMBER PE-2011022856
PROFESSIONAL ENGINEER
Jeremy Stretz 2025.02.28 15:51:39-06'00'

DATE PREPARED 2/28/2025
ROUTE 50/291 | STATE MO
DISTRICT KC | SHEET NO. 223
COUNTY JACKSON
JOB NO. J4P3196
FEDERAL PROJECT NO. STB-3001(009)
PROJECT NO.
BRIDGE NO.

DESCRIPTION | DATE

IF A SEAL IS PRESENT ON THIS SHEET IT HAS BEEN ELECTRONICALLY SEALED AND DATED.

MISSOURI HIGHWAYS AND TRANSPORTATION COMMISSION
105 WEST CAPITOL
JEFFERSON CITY, MO 65102
1-888-ASK-MODOT (1-888-275-6636)
LEE'S SUMMIT MISSOURI
olsson
1301 BURLINGTON ST., STE. 100
NORTH KANSAS CITY, MO 64116
PHONE: 816.361.1177
CERT. OF AUTHORITY NO. 001592

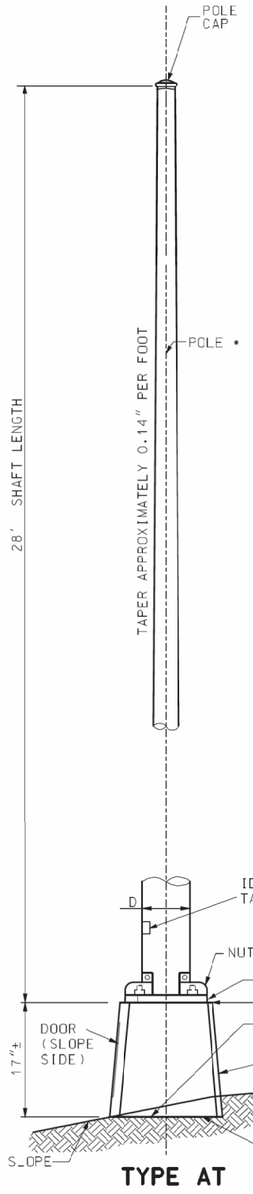

TYPE AT

GENERAL NOTES:

HOLES SHALL BE PUNCHED ONLY FOR SPECIFIED BOLT CIRCLE.

TYPE AT POLES SHALL BE EQUIPPED WITH THE GROUNDING LUG INSIDE THE TRANSFORMER BASE. TYPE B POLES SHALL BE EQUIPPED WITH A GROUNDING LUG INSIDE THE POLE.

TRANSFORMER BASES FOR 30 FOOT MOUNTING HEIGHT SHALL BE FURNISHED WITH ONE (1) DRILLED AND TAPPED HOLE AND GROUNDING LUG FOR GROUNDING EQUIPMENT.

ALIGN HANDHOLE SO THAT THE POLE IS BETWEEN THE ONCOMING TRAFFIC AND THE HANDHOLE. HANDHOLE SHALL BE APPROX. 4" X 6-1/2". HANDHOLE FRAME SHALL BE REINFORCED SO THAT THE POLE STRENGTH IS NOT REDUCED.

POST SHALL BE GROUNDED FROM GROUND LUG IN POST WITH #6 AWG BARE COPPER WIRE TO CONDUIT SYSTEM. GROUND LUG SHALL BE 90° OR 180° FROM THE HANDHOLE.

DESIGN OF STRUCTURAL SUPPORTS SHALL COMPLY WITH AASHTO STANDARD SPECIFICATIONS FOR STRUCTURAL SUPPORTS FOR HIGHWAY SIGNS, LUMINAIRES AND TRAFFIC SIGNALS 2001 AND INTERIMS THROUGH 2003.

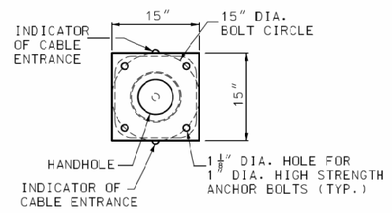

PLAN

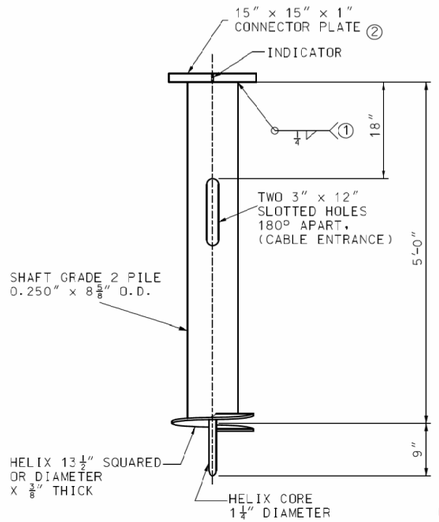

ELEVATION

DETAILS OF SCREW ANCHOR FOUNDATION

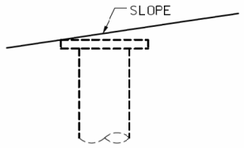

SCREW ANCHOR EMBEDMENT

DRIVE HOLES WILL BE PERMITTED PROVIDED THAT THEY DO NOT CONFLICT WITH OR COMPROMISE THE STRUCTURAL INTEGRITY OF THE PLATE, THE WELD BETWEEN THE PLATE AND SHAFT, OR THE BOLT HOLES.

NOTES:

① GRIND WELD AS NECESSARY TO CLEAR BOLT HEAD.

② FOUNDATIONS SHALL BE INSTALLED SO THAT CONNECTOR PLATES ARE LEVEL PERPENDICULAR TO THE BRACKET ARM AND SLOPED FOR POLE RAKING PARALLEL TO THE BRACKET ARM.

③ AT THE OPTION OF THE CONTRACTOR THE CONCRETE FOUNDATION MAY BE PRECAST. IF PRECAST, THEY SHALL BE SET IN DRILLED HOLES 3 FEET IN DIAMETER AND 6 INCHES DEEPER THAN THE BOTTOM OF THE CONCRETE FOUNDATION. THE BOTTOM 6 INCHES OF THE HOLE AND THE REMAINING SPACE AROUND THE FOUNDATION SHALL BE BACKFILLED WITH WET TAMPED LIMESTONE SCREENINGS IN LAYERS NOT EXCEEDING 12 INCHES.

GENERAL NOTES:

ALL CLASSIFICATIONS ARE ASTM UNLESS OTHERWISE NOTED SEE STANDARD SPECIFICATIONS FOR CLASSIFICATIONS NOT SHOWN.

ALL CONNECTOR PLATE AND CLOSURE PLATE THICKNESSES SHOWN ARE MINIMUM DIMENSIONS.

ALL ANCHOR BOLTS SHALL BE FULLY GALVANIZED 1" DIA. HIGH STRENGTH ANCHOR BOLTS.

ALL STEEL COMPONENTS SHALL BE HOT DIP GALVANIZED.

STATE OF MISSOURI — JEREMY SCOTT STRETZ — NUMBER PE-2011023864 — PROFESSIONAL ENGINEER

Jeremy Stretz 2025.02.28 15:51:51-06'00'

DATE PREPARED: 2/28/2025

ROUTE	STATE
50/291	MO
DISTRICT	SHEET NO.
KC	224

COUNTY: JACKSON

JOB NO.: J4P3196

FEDERAL PROJECT NO.: STB-3001(009)

PROJECT NO.:

BRIDGE NO.:

DESCRIPTION	DATE

IF A SEAL IS PRESENT ON THIS SHEET IT HAS BEEN ELECTRONICALLY SEALED AND DATED.

MISSOURI HIGHWAYS AND TRANSPORTATION COMMISSION
105 WEST CAPITOL
JEFFERSON CITY, MO 65102
1-888-ASK-MODOT (1-888-275-6636)

LEE'S SUMMIT MISSOURI

olsson
1301 BURLINGTON ST., STE. 100
NORTH KANSAS CITY, MO 64116
PHONE: 816.361.1177
CERT. OF AUTHORITY NO. 001592

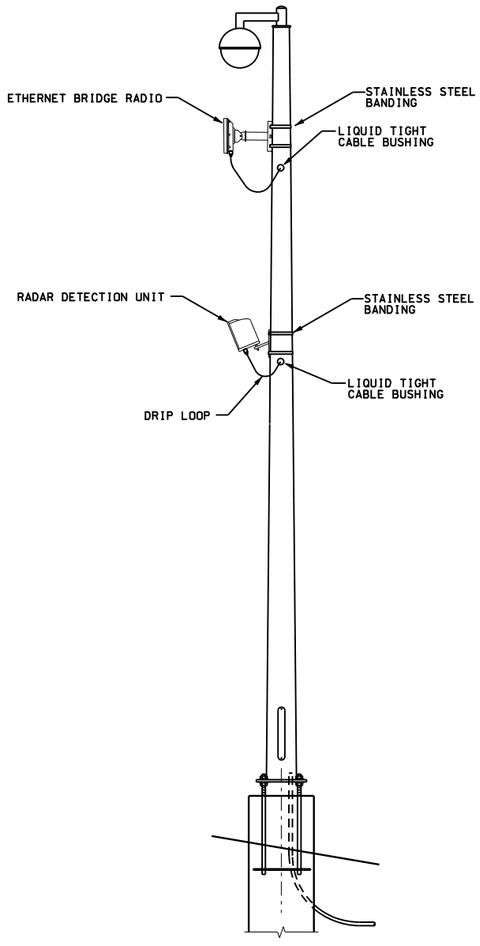

TYPICAL CCTV POLE CONFIGURATION

NOT TO SCALE

NOTES:

1. ALL CONNECTORS, BANDING AND MISCELLANEOUS EQUIPMENT SHALL BE STAINLESS STEEL.
2. THE MOUNTING HEIGHT OF THE DETECTOR UNIT SHALL BE PER THE MANUFACTURER'S RECOMMENDATION FOR THE DETECTOR OFFSET.

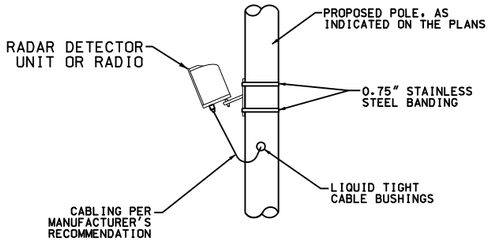

TYPICAL MOUNTING DETAIL POLE

NOT TO SCALE

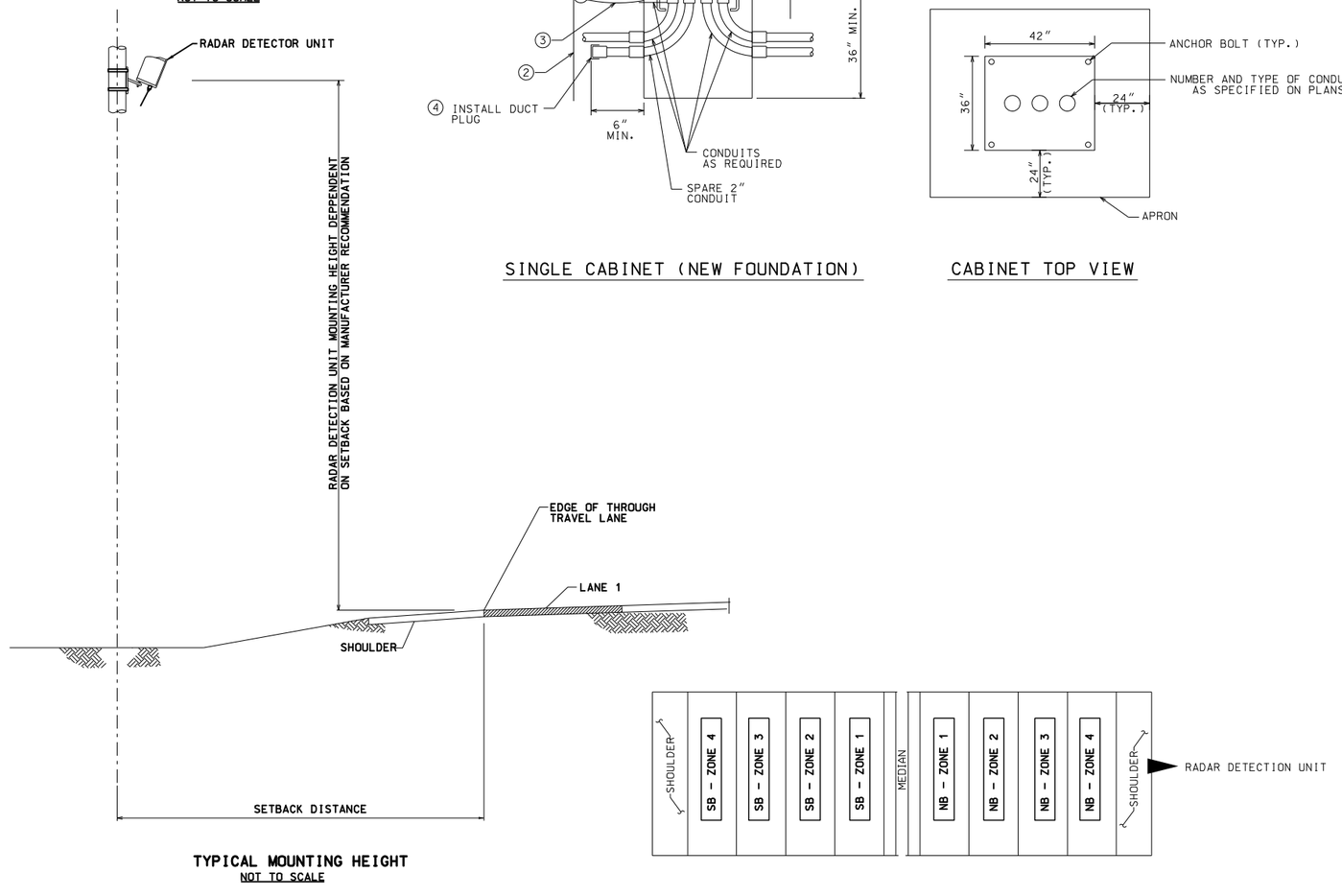

TYPICAL MOUNTING HEIGHT

NOT TO SCALE

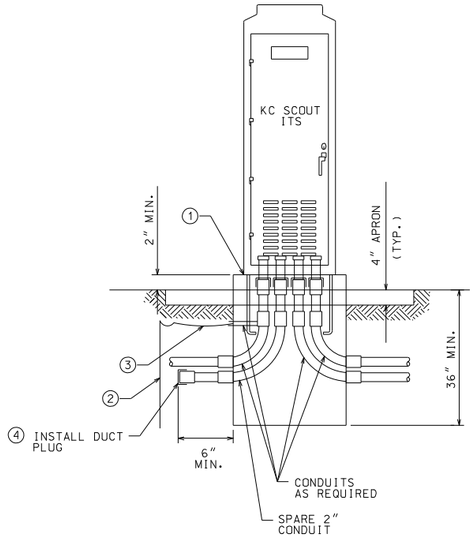

SINGLE CABINET (NEW FOUNDATION)

NOTES

1. 50 YEAR SILICONE CAULK BETWEEN CABINET AND BASE.
2. GROUNDING ROD, ¾ IN X 10 FT MIN. IF SUBSURFACE CONDITIONS EXIST WHICH PROHIBIT THE PLACEMENT OF THE GROUND ROD IN A VERTICAL POSTION, THE ROD MAY BE DRIVEN AT AN OBLIQUE ANGLE NOT TO EXCEED 45 DEGREES FROM VERTICAL OR BURIED IN A TRENCH AT LEAST 2.5 FT DEEP. CONNECTION TO GROUND ROD SHALL BE EXOTHERMICALLY WELDED.
3. MINIMUM NO. 4 COPPER GROUNDING CONDUCTOR FROM CABINET EQUIPMENT GROUND BUS TO GROUND ROD.
4. F&I 2 IN SPARE CONDUIT. STUB OUT 6 IN FROM FACE OF FOUNDATION. F&I DUCT PLUG. THIS IS SUBSIDIARY TO ITS CABINET AND SITE BID.

GENERAL NOTES

1. SLACK FOR FIBER OPTIC CABLE SHALL BE PLACED IN PULL BOXES AND SPLICE VAULTS ADJACENT TO CABINET.

CABINET TOP VIEW

RADAR DETECTION UNIT ZONE LAYOUT

NOT TO SCALE

STATE OF MISSOURI
JEREMY SCOTT STRETZ
NUMBER PE-2011021054
PROFESSIONAL ENGINEER

Jeremy Stretz 2025.02.28 15:52:03-06'00'

DATE PREPARED 2/28/2025

ROUTE	STATE
50/291	MO
DISTRICT	SHEET NO.
KC	225

COUNTY: JACKSON

JOB NO.: J4P3196

FEDERAL PROJECT NO.: STB-3001(009)

PROJECT NO.:

BRIDGE NO.:

DESCRIPTION	DATE

IF A SEAL IS PRESENT ON THIS SHEET IT HAS BEEN ELECTRONICALLY SEALED AND DATED.

MISSOURI HIGHWAYS AND TRANSPORTATION COMMISSION
105 WEST CAPITOL
JEFFERSON CITY, MO 65102
1-888-ASK-MODOT (1-888-275-6636)

LEE'S SUMMIT MISSOURI

olsson
1301 BURLINGTON ST., STE. 100
NORTH KANSAS CITY, MO 64116
PHONE: 816.361.1177
CERT. OF AUTHORITY NO. 001592

ITS PLAN
SHEET 8 OF 8

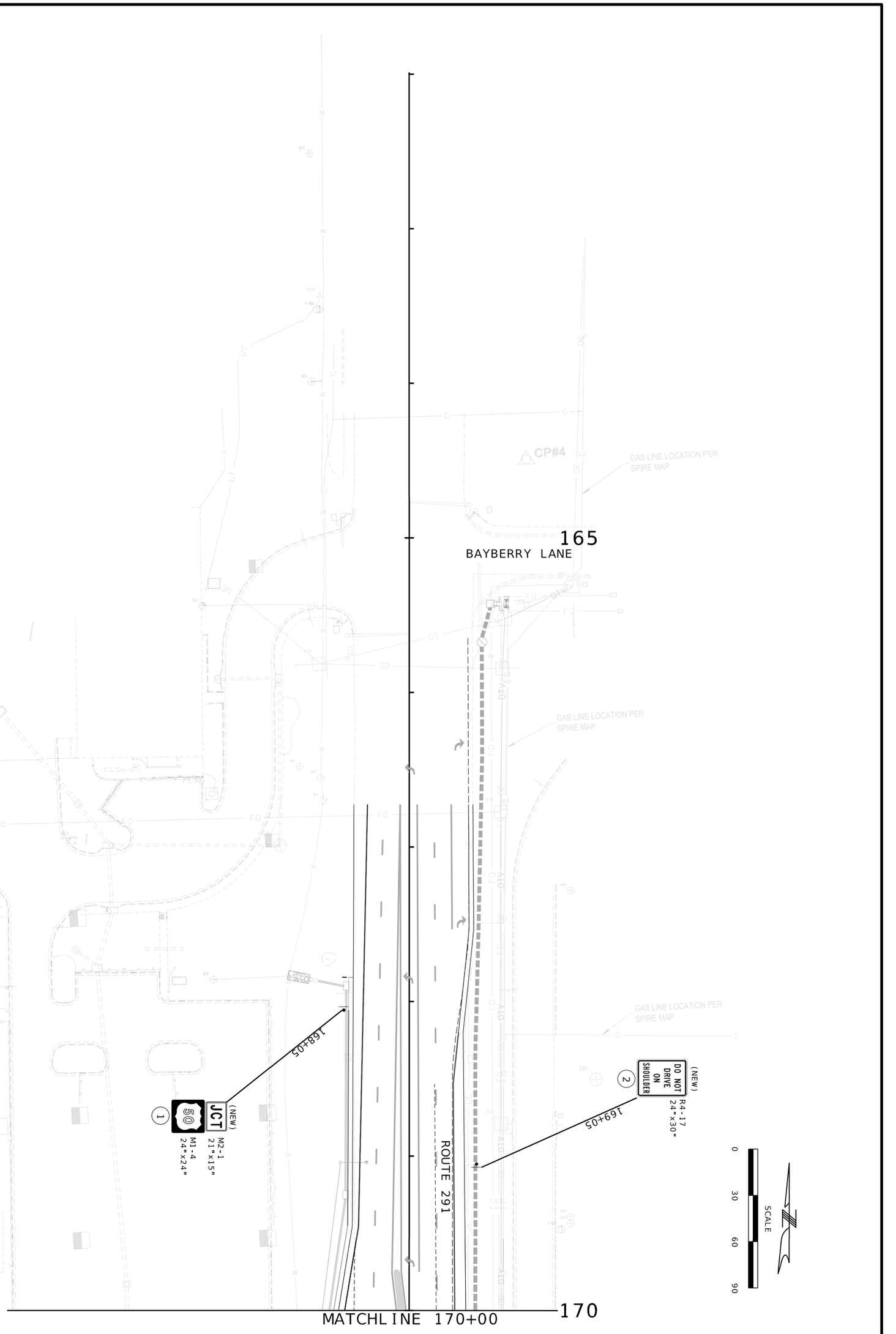

SIGNING PLAN
SHEET 1 OF 22

F:\2021\04501-05000\021-04786\40-Design\Microstation\J4P3196\plan_sheets\13 Signing\226_SN_01_J4P3196.dgn 2:20:46 PM 2/28/2025

olsson
1301 BURLINGTON ST., STE. 100
NORTH KANSAS CITY, MO 64116
PHONE: 816.361.1177
CERT. OF AUTHORITY NO. 001592

LEE'S SUMMIT MISSOURI

MISSOURI HIGHWAYS AND TRANSPORTATION COMMISSION
MoDOT
105 WEST CAPITOL
JEFFERSON CITY, MO 65102
1-888-ASK-MODOT (1-888-275-6636)

DATE	DESCRIPTION

BRIDGE NO.

FEDERAL PROJECT NO. STB-3001(009)
PROJECT NO. J4P3196
JOB NO.
COUNTY JACKSON
ROUTE 50/291 STATE MO
DISTRICT KC SHEET NO. 226
DATE PREPARED 2/28/2025

Jeremy Stretz 2025.02.28 15:48:59-05'00'

JEREMY SCOTT STRETZ NUMBER PE-2011023456
STATE OF MISSOURI
PROFESSIONAL ENGINEER

IF A SEAL IS PRESENT ON THIS SHEET IT HAS BEEN ELECTRONICALLY SEALED AND DATED.

SCALE

0 30 60 90

MATCHLINE 170+00

MATCHLINE 178+00

MATCHLINE 732+00

MATCHLINE 728+00

ROUTE 291

BLUE PARKWAY

EXISTING BLUE PARKWAY

170

175

730

(NEW) SPEED LIMIT 45 R2-1 36"x48" — 3 — 170+36

(NEW) M3-1 24"x12" NORTH M1-5 30"x24" 291 — 4 — 171+51

(NEW) R4-7 24"x30" — 7 — 173+84

(NEW) YIELD R1-2 48"x48"x48" — 8 — 173+79

(NEW) M3-1 24"x12" NORTH M1-4 24"x24" 50 291 M1-5 30"x24" M6-1 21"x15" M6-1 21"x15" — 10 — 174+05

(NEW) W12-1 36"x36" — 11 — 174+24

(NEW) R4-7 24"x30" — 14 — 174+59

(NEW) YIELD R1-2 48"x48"x48" — 18 — 175+14

(NEW) W12-1 36"x36" — 19 — 175+80

(NEW) EAST 50 Sedalia SP1-1 84"x96" — 20 — 176+57

(NEW) W12-1 36"x36" — 5 — 173+61

(NEW) W12-1 36"x36" — 6 — 173+60

(NEW) YIELD R1-2 48"x48"x48" — 9 — 174+08

(NEW) R4-7 24"x30" — 13 — 174+43

(NEW) W1-4L 36"x36" 30 M.P.H. W13-1P 24"x24" — 12 — 174+30

(NEW) W12-1 36"x36" — 15 — 174+80

(NEW) YIELD R1-2 48"x48"x48" — 17 — 175+40

(NEW) M3-1 24"x12" NORTH M1-5 30"x24" 291 50 M1-4 24"x24" M6-1 21"x15" M6-1 21"x15" — 16 — 175+02

(NEW) WEST SOUTH 50 291 Kansas City SP2-1 132"x108" — 21 — 176+54

SIGNING PLAN
SHEET 2 OF 22

F:\2021\04501-05000\021-04786\40-Design\Microstation\J4P3196\plan_sheets\13 Signing\227_SN_02_J4P3196.dgn 2:21:07 PM 2/28/2025

STATE OF MISSOURI
JEREMY SCOTT STRETZ
NUMBER PE-2017023856
PROFESSIONAL ENGINEER

Jeremy Stretz 2025.02.28 15:53:10-06'00'

DATE PREPARED 2/28/2025

ROUTE	STATE
50/291	MO
DISTRICT	SHEET NO.
KC	227

COUNTY JACKSON

JOB NO. J4P3196

FEDERAL PROJECT NO. STB-3001(009)

PROJECT NO.

BRIDGE NO.

DESCRIPTION

DATE

IF A SEAL IS PRESENT ON THIS SHEET IT HAS BEEN ELECTRONICALLY SEALED AND DATED.

LEE'S SUMMIT MISSOURI

olsson
1301 BURLINGTON ST., STE. 100
NORTH KANSAS CITY, MO 64116
PHONE: 816.361.1177
CERT. OF AUTHORITY NO. 001592

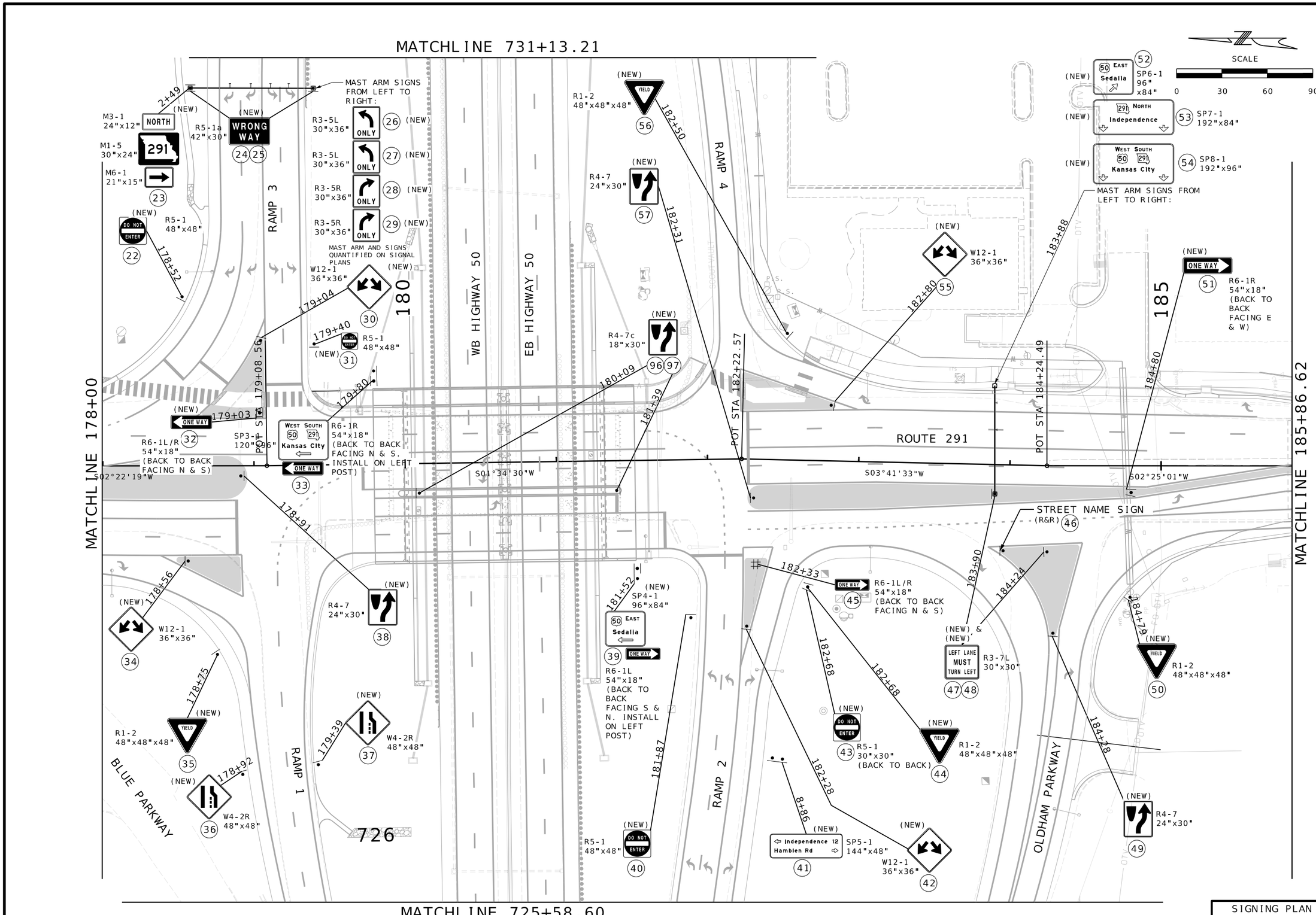

SIGNING PLAN
SHEET 3 OF 22

STATE OF MISSOURI
JEREMY SCOTT STRETZ
NUMBER PE-2017023856
PROFESSIONAL ENGINEER

Jeremy Stretz 2025.02.28 15:53:21-06'00'

DATE PREPARED	2/28/2025
ROUTE	50/291
STATE	MO
DISTRICT	KC
SHEET NO.	228
COUNTY	JACKSON
JOB NO.	J4P3196
FEDERAL PROJECT NO.	STB-3001(009)
PROJECT NO.	
BRIDGE NO.	

DATE | DESCRIPTION

IF A SEAL IS PRESENT ON THIS SHEET IT HAS BEEN ELECTRONICALLY SEALED AND DATED.

MISSOURI HIGHWAYS AND TRANSPORTATION COMMISSION
MoDOT
105 WEST CAPITOL
JEFFERSON CITY, MO 65102
1-888-ASK-MODOT (1-888-275-6636)

LEE'S SUMMIT MISSOURI

olsson
1301 BURLINGTON ST., STE. 100
NORTH KANSAS CITY, MO 64116
PHONE: 816.361.1177
CERT. OF AUTHORITY NO. 001592

F:\2021\04501-05000\021-04786\40-Design\Microstation\J4P3196\plan_sheets\13 Signing\228_SN_03_J4P3196.dgn 2:21:20 PM 2/28/2025

SCALE

0 30 60 90

MATCHLINE 185+86.62

475

OLDHAM PARKWAY

190

GAS LINE LOCATION PER SPIRE MAP

END STA 478+69.69

HAMBLEN ROAD

187+14

(NEW)

R4-7
24"x30"

58

SIGNING PLAN
SHEET 4 OF 22

F:\2021\04501-05000\021-04786\40-Design\Microstation\J4P3196\plan_sheets\13 Signing\229_SN_04_J4P3196.dgn 2:21:37 PM 2/28/2025

JEREMY SCOTT STRETZ
NUMBER PE-2017023856
STATE OF MISSOURI
PROFESSIONAL ENGINEER

Jeremy Stretz 2025.02.28 15:53:34-06'00'

DATE PREPARED
2/28/2025

ROUTE	STATE
50/291	MO

DISTRICT	SHEET NO.
KC	229

COUNTY
JACKSON

JOB NO.
J4P3196

FEDERAL PROJECT NO.
STB-3001(009)

PROJECT NO.

BRIDGE NO.

DATE	DESCRIPTION

IF A SEAL IS PRESENT ON THIS SHEET IT HAS BEEN ELECTRONICALLY SEALED AND DATED.

MISSOURI HIGHWAYS AND TRANSPORTATION COMMISSION

105 WEST CAPITOL
JEFFERSON CITY, MO 65102
1-888-ASK-MODOT (1-888-275-6636)

LEE'S SUMMIT MISSOURI

olsson
1301 BURLINGTON ST., STE. 100
NORTH KANSAS CITY, MO 64116
PHONE: 816.361.1177
CERT. OF AUTHORITY NO. 001592

NOTE:
BLUE ADVERTISING SIGNS WILL BE REMOVED AND INSTALLED BY OTHERS.

GAS,FOOD, AND LODGING SIGNS NEED TO BE TEMPORARILY RELOCATED DURING CONSTRUCTION OR STORED AND REINSTALLED WITHOUT DAMAGE.

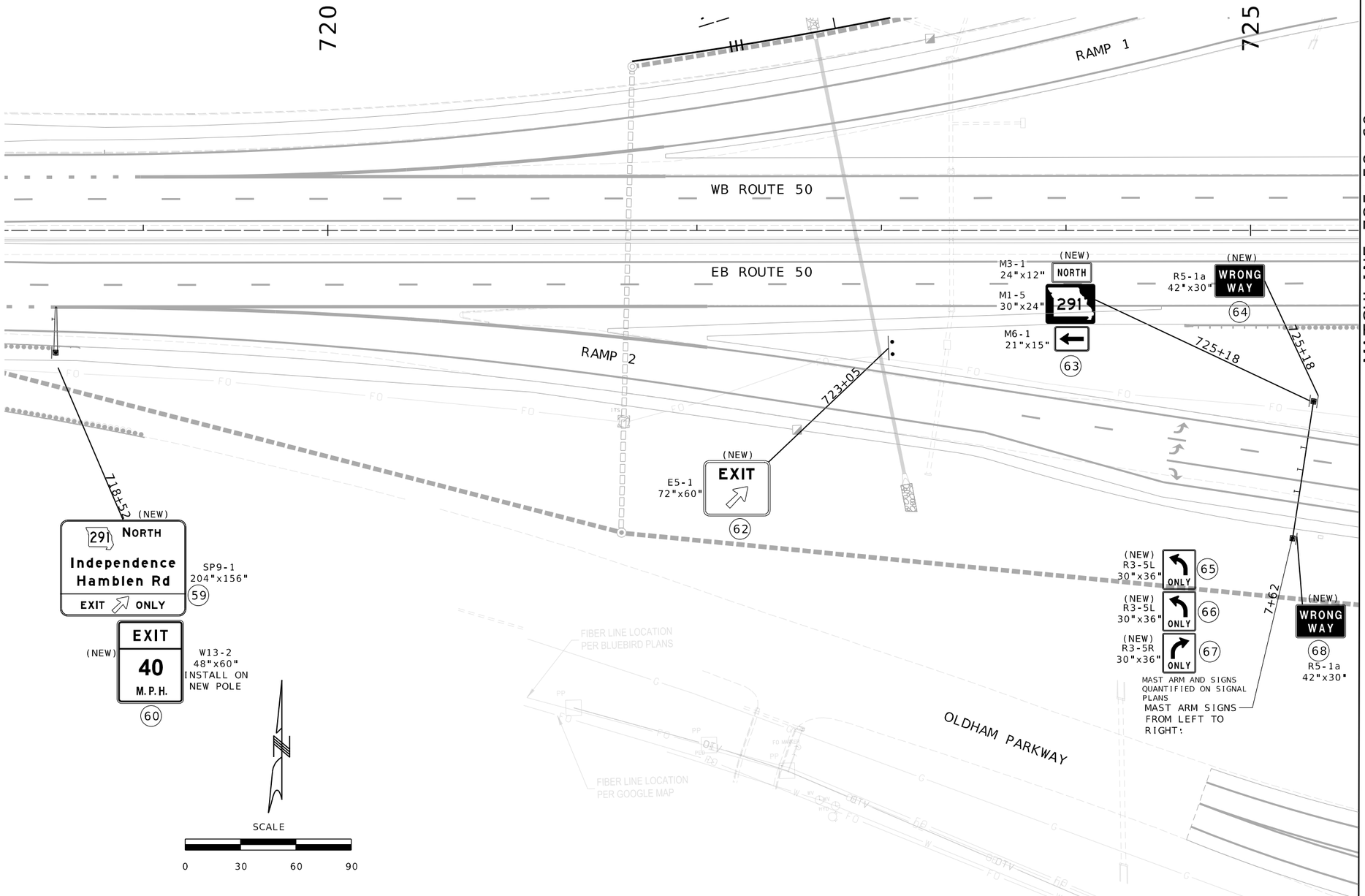

SIGNING PLAN
SHEET 5 OF 22

IF A SEAL IS PRESENT ON THIS SHEET IT HAS BEEN ELECTRONICALLY SEALED AND DATED.

STATE OF MISSOURI
JEREMY SCOTT STRETZ
NUMBER PE-2017023856
PROFESSIONAL ENGINEER

Jeremy Stretz 2025.02.28 15:53:45-06'00'

DATE PREPARED
2/28/2025

ROUTE	STATE
50/291	MO
DISTRICT	SHEET NO.
KC	230

COUNTY
JACKSON

JOB NO.
J4P3196

FEDERAL PROJECT NO.
STB-3001(009)

PROJECT NO.

BRIDGE NO.

DESCRIPTION	DATE

MISSOURI HIGHWAYS AND TRANSPORTATION COMMISSION
105 WEST CAPITOL
JEFFERSON CITY, MO 65102
1-888-ASK-MODOT (1-888-275-6636)

LEE'S SUMMIT MISSOURI

olsson
1301 BURLINGTON ST., STE. 100
NORTH KANSAS CITY, MO 64116
PHONE: 816.361.1177
CERT. OF AUTHORITY NO. 001592

NOTE:
BLUE ADVERTISING SIGNS WILL BE REMOVED AND INSTALLED BY OTHERS.

GAS,FOOD, AND LODGING SIGNS NEED TO BE TEMPORARLY RELOCATED DURING CONTRUCTION OR STORED AND REINSTALLED WITHOUT DAMAGE.

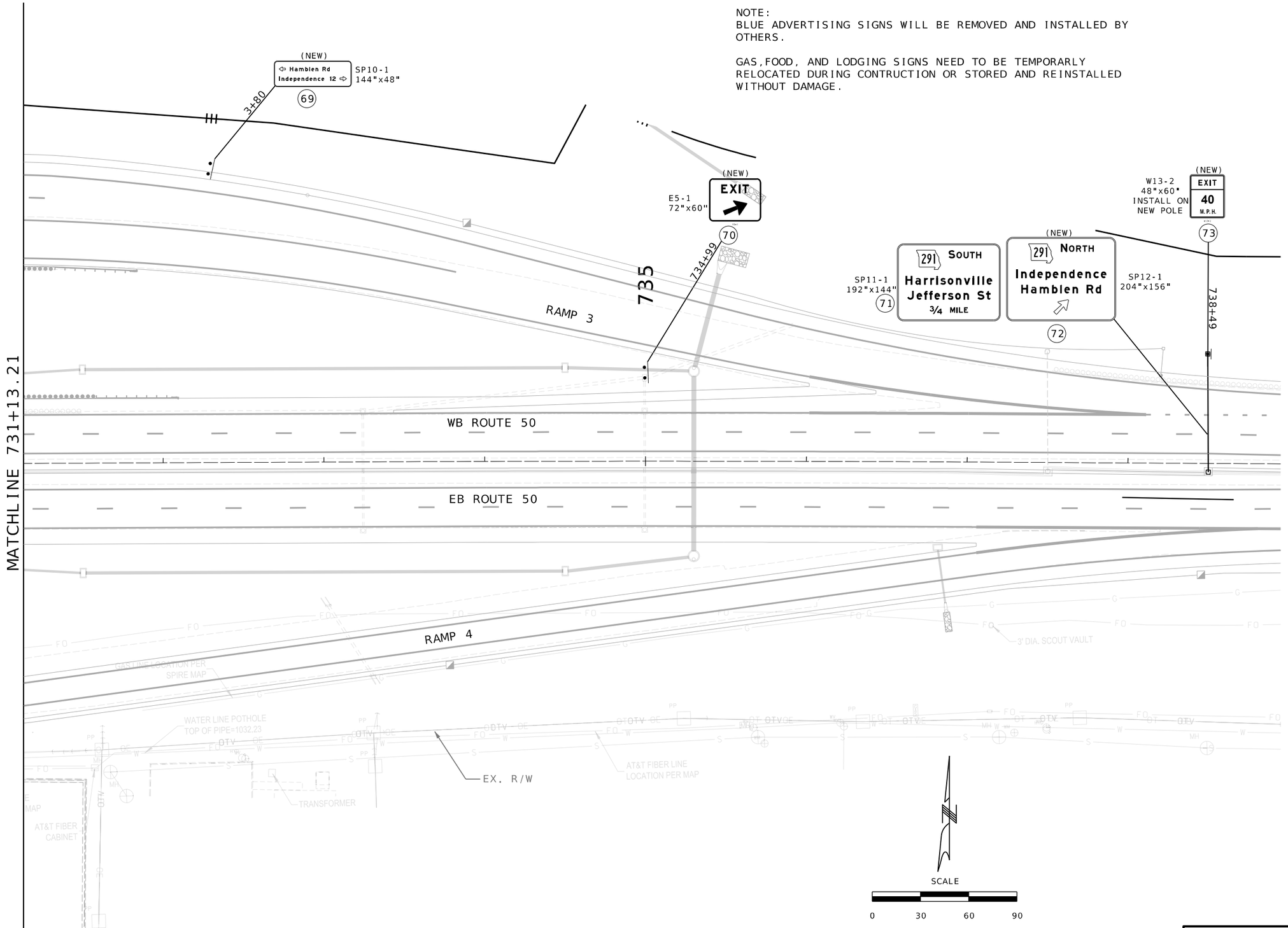

SIGNING PLAN
SHEET 6 OF 22

JEREMY SCOTT STRETZ
NUMBER PE-2017023856
STATE OF MISSOURI
PROFESSIONAL ENGINEER
Jeremy Stretz 2025.02.28 15:53:55-06'00'

DATE PREPARED
2/28/2025

ROUTE	STATE
50/291	MO
DISTRICT	SHEET NO.
KC	231

COUNTY
JACKSON

JOB NO.
J4P3196

FEDERAL PROJECT NO.
STB-3001(009)

PROJECT NO.

BRIDGE NO.

DESCRIPTION

DATE

IF A SEAL IS PRESENT ON THIS SHEET IT HAS BEEN ELECTRONICALLY SEALED AND DATED.

MISSOURI HIGHWAYS AND TRANSPORTATION COMMISSION
MoDOT
105 WEST CAPITOL
JEFFERSON CITY, MO 65102
1-888-ASK-MODOT (1-888-275-6636)

LEE'S SUMMIT MISSOURI

olsson
1301 BURLINGTON ST., STE. 100
NORTH KANSAS CITY, MO 64116
PHONE: 816.361.1177
CERT. OF AUTHORITY NO. 001592

F:\2021\04501-05000\021-04786\40-Design\Microstation\J4P3196\plan_sheets\13 Signing\231_SN_06_J4P3196.dgn 2:21:49 PM 2/28/2025

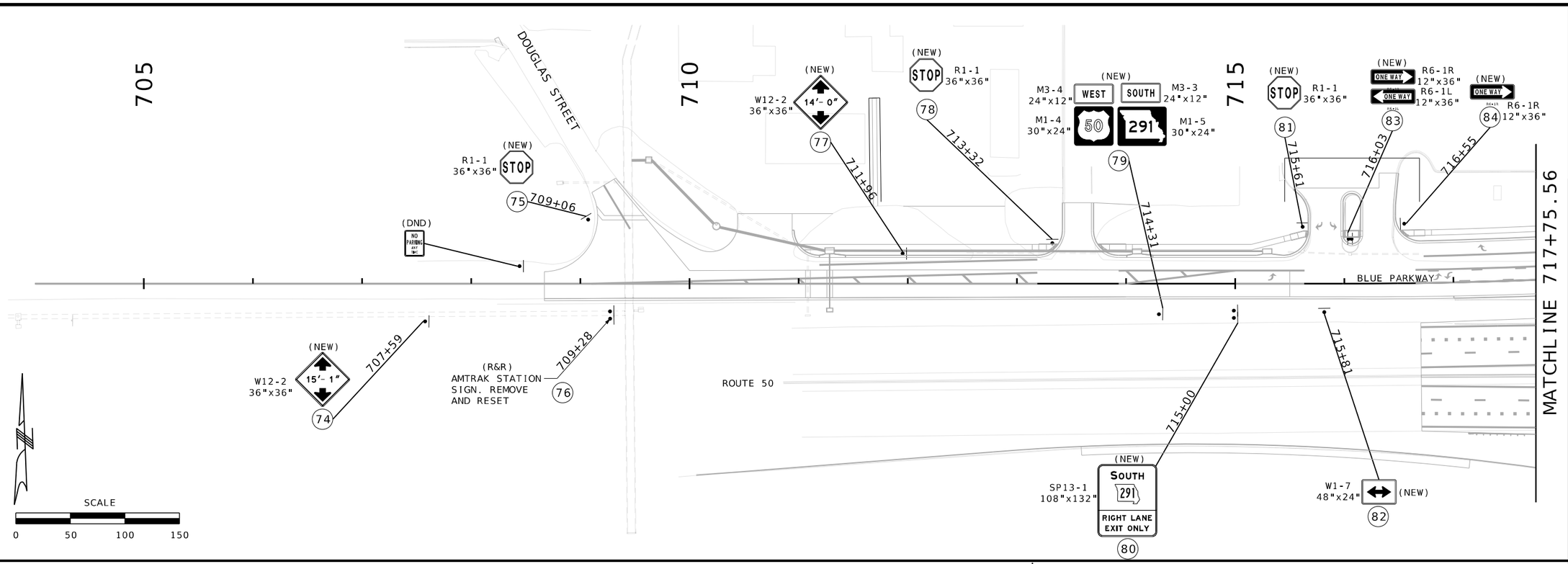

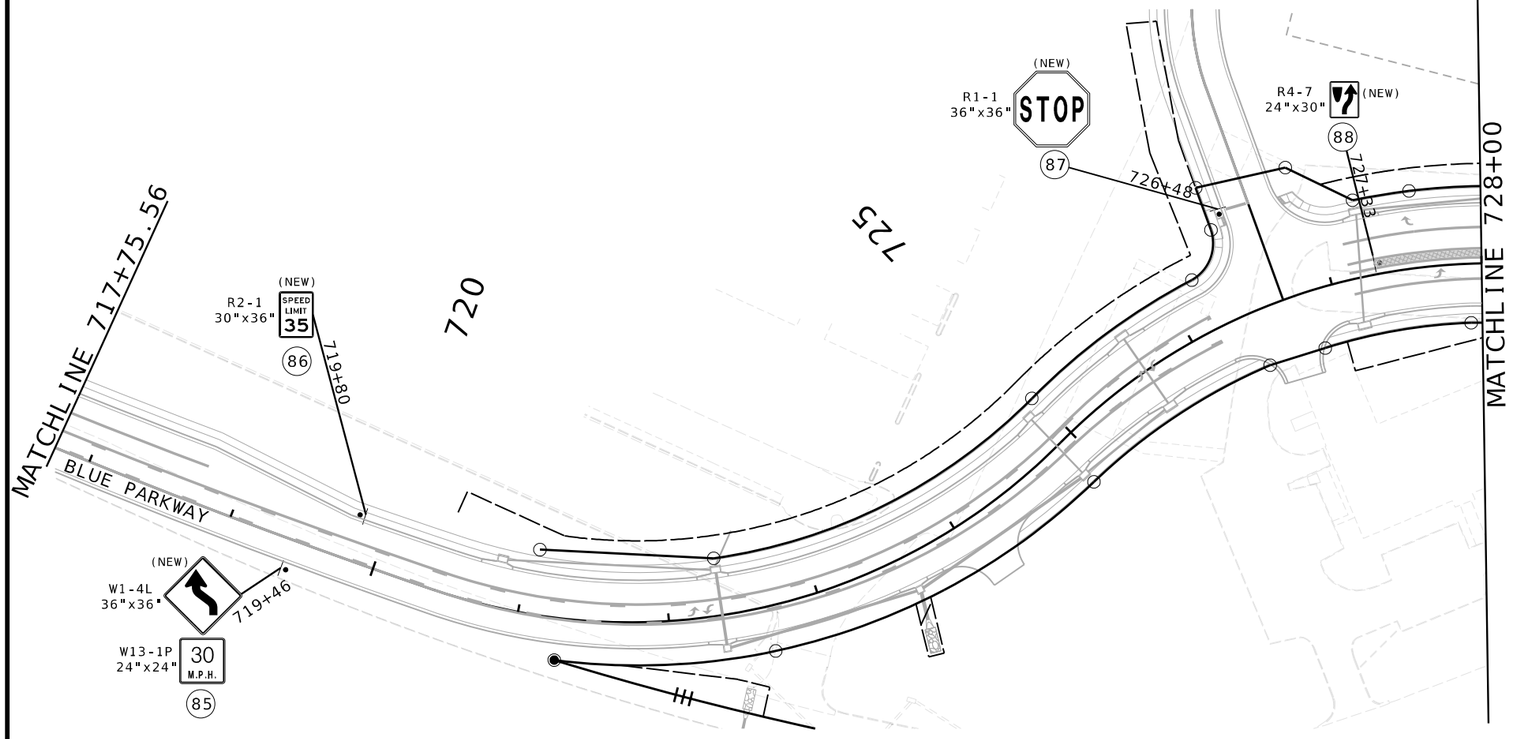

JEREMY SCOTT STRETZ NUMBER PE-2017023856 PROFESSIONAL ENGINEER STATE OF MISSOURI
Jeremy Stretz 2025.02.28 15:54:07-06'00'

DATE PREPARED 2/28/2025
ROUTE 50/291 | STATE MO
DISTRICT KC | SHEET NO. 232
COUNTY JACKSON
JOB NO. J4P3196
FEDERAL PROJECT NO. STB-3001(009)
PROJECT NO.
BRIDGE NO.

DESCRIPTION | DATE

IF A SEAL IS PRESENT ON THIS SHEET IT HAS BEEN ELECTRONICALLY SEALED AND DATED.

MISSOURI HIGHWAYS AND TRANSPORTATION COMMISSION
MoDOT
105 WEST CAPITOL
JEFFERSON CITY, MO 65102
1-888-ASK-MODOT (1-888-275-6636)

LEE'S SUMMIT MISSOURI

olsson
1301 BURLINGTON ST., STE. 100
NORTH KANSAS CITY, MO 64116
PHONE: 816.361.1177
CERT. OF AUTHORITY NO. 001592

SIGNING PLAN
SHEET 7 OF 22

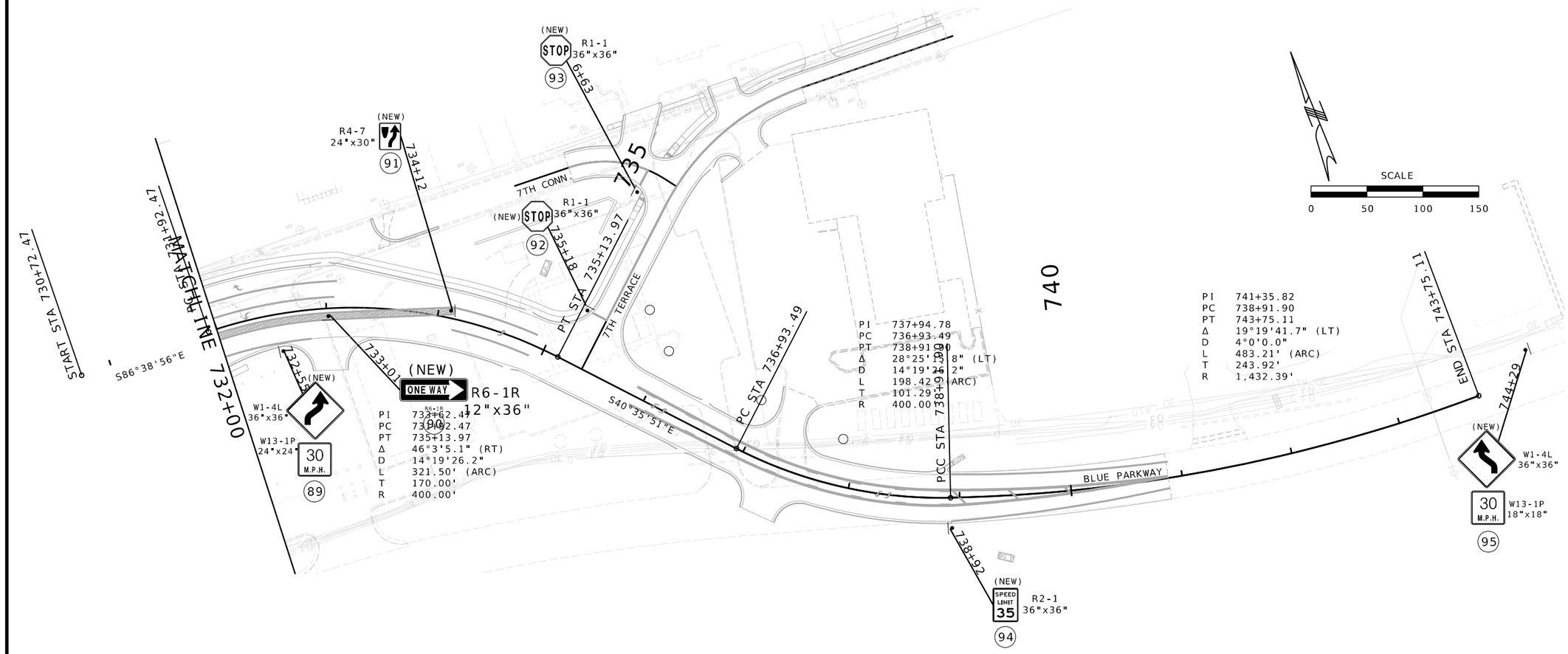

SIGNING PLAN
SHEET 8 OF 22

IF A SEAL IS PRESENT ON THIS SHEET IT HAS BEEN ELECTRONICALLY SEALED AND DATED.

STATE OF MISSOURI
JEREMY SCOTT STRETZ
NUMBER PE-2017023856
PROFESSIONAL ENGINEER

Jeremy Stretz 2025.02.28 15:54:19-06'00'

DATE PREPARED
2/28/2025

ROUTE	STATE
50/291	MO
DISTRICT	SHEET NO.
KC	233

COUNTY
JACKSON

JOB NO.
J4P3196

FEDERAL PROJECT NO.
STB-3001(009)

PROJECT NO.

BRIDGE NO.

DESCRIPTION	DATE

MISSOURI HIGHWAYS AND TRANSPORTATION COMMISSION
105 WEST CAPITOL
JEFFERSON CITY, MO 65102
1-888-ASK-MODOT (1-888-275-6636)

LEE'S SUMMIT MISSOURI

olsson
1301 BURLINGTON ST., STE. 100
NORTH KANSAS CITY, MO 64116
PHONE: 816.361.1177
CERT. OF AUTHORITY NO. 001592

SIGNS

902 SIGNAL SIGNS TABULATED ON D-37A SHEETS(S)

SIGN NO.	SIGN SIZE	STATION	HORZ CLEAR IF NOT STD	LOCATION	SIGN DTL. SHT. NO.	CONCRETE FOOTINGS ENCASED ITEM NO. 9031070 TOTAL CY	PIPE POST* PIPE SIZE IN.	POST NO. 1 LF	POST NO. 2 LF	LBS PER FT	TOTAL ITEM NO. 9031220 LBS	STRUCTURAL STEEL POST* POST DES NO.	POST NO. 1 LF	POST NO. 2 LF	POST NO. 3 LF	LBS PER FT	TOTAL ITEM NO. 9031310 LBS	BACKING BARS** 2" x 3/8" BARS @ 2.55 LBS PER FT NO. EACH	LGTH IN.	TOTAL LF	TOTAL LBS	U-CHANNEL POST ITEM NO. 9031260 LF	PERFORATED SQUARE STEEL TUBE POST 2.3 IN. POST NO. 1 LF	POST NO. 2 LF	TOTAL ITEM NO. 9031270A	ANCHORS DRIVEN POST ITEM NO. 9031273A	ANCHORS CONCRETE POST ITEM NO. 9031274	PERFORATED SQUARE STEEL TUBE POST 2.5 IN. POST NO. 1 LF	POST NO. 2 LF	TOTAL ITEM NO. 9031280	2.5 IN. INVERT ITEM NO. 9031277A	ANCHORS DRIVEN POST ITEM NO. 9031273A	ANCHORS CONCRETE POST ITEM NO. 9031274	BREAKAWAY ASSEMBLY	CONCRETE FOOTINGS EMBEDDED ITEM NO. 9031070 CY	CONCRETE FOOTINGS BOLT DOWN ITEM NO. 9031029 CY	REMARKS AND OTHER REQUIRED ITEMS.
1	ASSEMBLY	168+05.53	42.3' RT	Route 291																															INSTALL ON NEW POST
2	24"x30"	169+05.15	43.5' LT	Route 291																															INSTALL ON NEW POST
3	36"x48"	170+36.70	43.6' LT	Route 291																															INSTALL ON NEW POST
4	ASSEMBLY	171+51.62	44.2' LT	Route 291																															INSTALL ON NEW POST
5	36"x36"	173+61.14	14.6' RT	Route 291																															INSTALL ON NEW POST
6	36"x36"	173+60.22	57.0' RT	Route 291																															INSTALL ON NEW POST
7	24"x30"	173+84.49	4.9' LT	Route 291																															INSTALL ON NEW POST
8	48"x48"x48"	173+79.53	46.0' LT	Route 291																															INSTALL ON NEW POST
9	48"x48"x48"	174+08.23	128.4' RT	Route 291																															INSTALL ON NEW POST
10	ASSEMBLY	174+05.71	107.3' LT	Route 291								6	50	25.00	63.75																				INSTALL ON NEW POST
11	36"x36"	174+24.85	72.9' LT	Route 291																															INSTALL ON NEW POST
12	ASSEMBLY	174+30.79	183.3' RT	Route 291																															INSTALL ON NEW POST
13	24"x30"	174+43.66	86.4' RT	Route 291																															INSTALL ON NEW POST
14	24"x30"	174+59.08	75.9' LT	Route 291																															INSTALL ON NEW POST
15	36"x36"	174+80.76	136.9' RT	Route 291																															INSTALL ON NEW POST
16	ASSEMBLY	175+02.65	167.5' RT	Route 291								6	50	25.00	63.75																				INSTALL ON NEW POST
17	48"x48"x48"	175+40.14	74.3' RT	Route 291																															INSTALL ON NEW POST
18	48"x48"x48"	175+14.86	79.9' LT	Route 291																															INSTALL ON NEW POST
19	36"x36"	175+80.47	35.2' LT	Route 291																															INSTALL ON NEW POST
20	84"x96"	176+57.44	12.1' RT	Route 291																															INSTALL ON NEW CANTILEVER ASSEMBLY
21	132"x108"	176+54.29	80.4' RT	Route 291																															INSTALL ON NEW CANTILEVER ASSEMBLY
22	48"x48"	178+52.51	111.8' LT	Route 291														4	32	10.67	27.25														INSTALL ON NEW POST
23	ASSEMBLY	178+57.99	249.9' LT	Route 291																															INSTALL ON NEW TRUSS ASSEMBLY
24	42"x30"	178+57.99	249.9' LT	Route 291																															INSTALL ON NEW TRUSS ASSEMBLY
25	42"x30"	179+42.76	249.3' LT	Route 291																															INSTALL ON NEW TRUSS ASSEMBLY
26	30"x36"	179+42.76	249.3' LT	Route 291																															INSTALL ON NEW TRUSS ASSEMBLY
27	30"x36"	179+42.76	249.3' LT	Route 291																															INSTALL ON NEW TRUSS ASSEMBLY
28	30"x36"	179+42.76	249.3' LT	Route 291																															INSTALL ON NEW TRUSS ASSEMBLY
29	30"x36"	179+42.76	249.3' LT	Route 291																															INSTALL ON NEW TRUSS ASSEMBLY
30	36"x36"	179+04.41	82.8' LT	Route 291																															INSTALL ON NEW POST
31	48"x48"	179+40.93	80.1' LT	Route 291																															INSTALL ON NEW POST
32	ASSEMBLY	179+03.76	35.0' LT	Route 291																															INSTALL ON NEW POST
33	ASSEMBLY	179+80.01	55.0' LT	Route 291	28/29	0.54						2	21.50	22.80		15	664.50																		INSTALL NEW SIGN ON NEW SHARED ASSEMBLY
34	36"x36"	178+56.48	63.1' RT	Route 291																															INSTALL ON NEW POST
35	48"x48"x48"	178+75.81	124.85' RT	Route 291																															INSTALL ON NEW POST
36	48"x48"	178+92.51	204.2' RT	Route 291														4	30	10.00	25.50														INSTALL ON NEW POST
37	48"x48"	179+39.71	198.3' RT	Route 291														4	30	10.00	25.50														INSTALL ON NEW POST
38	24"x30"	178+91.28	6.8' RT	Route 291																															INSTALL ON NEW POST
39	ASSEMBLY	181+52.51	71.5' RT	Route 291	21/22	0.54						2	19.70	20.70		15	606.00																		INSTALL NEW SIGN ON NEW SHARED ASSEMBLY
40	48"x48"	181+87.46	104.6' RT	Route 291																															INSTALL ON NEW POSTS
41	144"x48"	182+53	197.3' RT	Route 291	25/29	0.3						2	18.80	20.70		9	355.50																		INSTALL ON NEW POSTS
42	30"x30"	182+28.40	110.7' RT	Route 291																															INSTALL ON BACK SIDE OF SIGN 44
43	48"x48"	182+68.10	83.7' RT	Route 291																															INSTALL ON FRONT SIDE OF SIGN 43
44	48"x48"x48"	182+68.10	83.7' RT	Route 291																															REMOVE AND RESET ON NEW POST
45	ASSEMBLY	182+33.51	69.6' RT	Route 291																															INSTALL ON NEW POSTS
46	-	182+33.51	69.6' RT	Route 291																		16		16		1									REMOVE AND REPLACE STREET NAME SIGN (SEPT. BY CITY)
47	30"x30"	183+90.48	19.4' RT	Route 291																															INSTALL ON NEW POST
48	30"x30"	184+24.52	57.0' RT	Route 291																															INSTALL NEW SIGN ON NEW TRUSS ASSEMBLY
49	24"x30"	184+27.09	148.7' RT	Route 291																															INSTALL ON NEW POST
50	48"x48"x48"	184+79.46	87.0' LT	Route 291																															INSTALL ON NEW POST
51	ASSEMBLY	184+80.15	17.7' RT	Route 291																															INSTALL ON NEW POST
52	96"x84"	183+88.82	52.2' LT	Route 291																															INSTALL NEW SIGN ON NEW TRUSS ASSEMBLY
53	192"x84"	183+88.82	52.2' LT	Route 291																															INSTALL NEW SIGN ON NEW TRUSS ASSEMBLY
54	192"x96"	183+88.82	52.2' LT	Route 291																															INSTALL NEW SIGN ON NEW TRUSS ASSEMBLY
55	36"x36"	182+90.95	36.8' LT	Route 291																															INSTALL ON NEW POST
56	48"x48"x48"	182+50.94	83.6' LT	Route 291																															INSTALL ON NEW POST
57	24"x30"	182+31.03	25.7' RT	Route 291																															INSTALL ON NEW POST
58	24"x30"	187+14.95	3.0' LT	Route 291																		16		16		1									INSTALL ON NEW POST
59	204"x156"	718+52.48	72.9' RT	Route 50																															INSTALL NEW SIGN ON NEW TRUSS ASSEMBLY
60	48"x60"	718+52.48	72.9' RT	Route 50																															INSTALL ON NEW CANTILEVER ASSEMBLY
62	72"x60"	723+05.86	60.3' RT	Route 50	23/29	0.72	4	16.2	15.9	10.79	346.4																								INSTALL ON NEW CANTILEVER ASSEMBLY
63	ASSEMBLY	725+18	92.6' RT	Route 50																															INSTALL NEW SIGN ON NEW TRUSS ASSEMBLY
64	42"x30"	725+18	92.6' RT	Route 50																															INSTALL NEW SIGN ON NEW TRUSS ASSEMBLY
65	30"x36"	725+23.12	164.8' RT	Route 50																															INSTALL NEW SIGN ON NEW TRUSS ASSEMBLY
66	30"x36"	725+23.12	164.8' RT	Route 50																															INSTALL NEW SIGN ON NEW TRUSS ASSEMBLY
67	30"x36"	725+23.12	164.8' RT	Route 50																															INSTALL NEW SIGN ON NEW TRUSS ASSEMBLY
68	42"x30"	725+23.12	164.8' RT	Route 50																															INSTALL NEW SIGN ON NEW TRUSS ASSEMBLY
69	144"x48"	732+28.72	179.6' LT	Route 50	26/29	0.3						2	16.6	18.4		9	315.00																		INSTALL ON NEW POST
70	72"x60"	734+99.52	51.8' LT	Route 50	24/29	0.72	4	17.3	17.6	10.79	376.6																								INSTALL ON NEW POST
71	192"x144"	738+49.34	58.8' LT	Route 50																															INSTALL NEW SIGN ON NEW TRUSS ASSEMBLY
72	204"x156"	738+49.34	58.8' LT	Route 50																															INSTALL NEW SIGN ON NEW TRUSS ASSEMBLY
73	48"x60"	738+49.34	58.8' LT	Route 50																															INSTALL NEW SIGN ON NEW TRUSS ASSEMBLY
74	36"x36"	707+59.15	34.6' RT	Blue Parkway																		16		16	1									REMOVE AND RESET ON NEW POST
75	36"x36"	709+06.35	59.9' LT	Blue Parkway																		16		16	1									REMOVE AND RESET ON NEW POST
76	-	709+28.51	25.4' RT	Blue Parkway		0.3						2	18	21		15	585.00																		REMOVE AND RESET ON NEW POST
77	36"x36"	711+96.67	27.6' LT	Blue Parkway																		16		16	1									REMOVE AND RESET ON NEW POST
78	36"x36"	713+32.37	38.5' LT	Blue Parkway																		16		16	1									REMOVE AND RESET ON NEW POST
79	ASSEMBLY	714+31.42	28.0' RT	Blue Parkway														4	50	16.67	42.75														INSTALL ON NEW POST
80	108"x132	715+00.06	24.7' RT	Blue Parkway		0.3						2	18	21		15	585.00																		INSTALL ON NEW POST
81	36"x36"	715+61.71	52.1' LT	Blue Parkway																		16		16	1									REMOVE AND RESET ON NEW POST
82	48"x24"	715+81.55	24.7' RT	Blue Parkway																		16		32	2									REMOVE AND RESET ON NEW POST
83	ASSEMBLY	716+03.86	41.0' LT	Blue Parkway																		16	16	16		1									REMOVE AND RESET ON NEW POST
84	12"x24"	716+55.48	54.6' LT	Blue Parkway																		16		16		1									REMOVE AND RESET ON NEW POST
85	ASSEMBLY	719+46.13	20.1' RT	Blue Parkway																		16		16	1									INSTALL ON NEW POST
86	24"X36"	719+80.08	30.7' RT	Blue Parkway																		16		16	1									INSTALL ON NEW POST
87	36"x36"	726+48.93	68.1' LT	Blue Parkway																		16		16	1									INSTALL ON NEW POST
88	24"x30"	727+33.70	7.1' LT	Blue Parkway																		16		16		1									INSTALL ON NEW POST
89	ASSEMBLY	732+55.63	33.4' RT	Blue Parkway																		16		16	1									INSTALL ON NEW POST
90	12"x36"	733+01.37	7.0' RT	Blue Parkway																		16		16		1									INSTALL ON NEW POST
91	24"x30"	734+12	6.6' LT	Blue Parkway																		16		16		1									INSTALL ON NEW POST
92	36"x36"	735+18.60	49.0' LT	Blue Parkway																		16		16	1									INSTALL ON NEW POST
93	36"x36"	6+63.50	28.1' LT	7th Terrace																		16		16	1									INSTALL ON NEW POST
94	36"x48"	738+92.70	27.1' RT	Blue Parkway																							16		16		1				INSTALL ON NEW POST
95	ASSEMBLY	744+29.00	22.6' LT	Blue Parkway																							16		16		1				INSTALL ON NEW POST
96	18"x30"	180+09	13' RT	Route 291																							16		16		1				INSTALL ON NEW POST
97	18"x30"	181+39	13' RT	Route 291																							16		16		1				INSTALL ON NEW POST
SUBTOTAL						3.72					723						3111				249						320	13		7			832		6	46			
TOTAL						3.72					720						3360				**						320	13		7			832		6	46			

** REFER TO MODOT DETAIL 903.03BL FOR INSTALLATION OF DELINEATORS

ROUND PIPE POST AND FOOTING DATA TABLE

NOM. SIZE (IN.)	WEIGHT LBS/FT	WEIGHT LBS/IN	STUB LENGTH	FOOTING DIA.	FOOTING DEPTH	CONCRETE C.Y.
2½	5.79	0.48	4'-3½"	12"	4'-6"	0.13
3	7.58	0.63	4'-3½"	12"	4'-6"	0.13
4	10.79	0.90	5'-3½"	18"	5'-6"	0.36

POST AND FOOTING DATA TABLE

POST DES. NO.	NOM. SIZE	POST WEIGHT LBS/FT	POST WEIGHT LBS/IN	POST STUB LENGTH	FOOTING DIA.	FOOTING LEVEL GROUND DEPTH	FOOTING LEVEL GROUND C.Y.	FOOTING 6:1 GRADE DEPTH	FOOTING 6:1 GRADE C.Y.	FOOTING 4:1 GRADE DEPTH	FOOTING 4:1 GRADE C.Y.	FOOTING 3:1 OR 2:1 GRADE DEPTH	FOOTING 3:1 OR 2:1 GRADE C.Y.
1	W6	9.0	0.75	3'-0"	15"	3'-0"	0.14	3'-2"	0.15	3'-3"	0.16	3'-6"	0.17
2	W6	15.0	1.25	4'-0"	24"	4'-0"	0.47	4'-2"	0.50	4'-3"	0.51	4'-6"	0.54
3	W8	18.0	1.50	4'-6"	28"	4'-6"	0.71	4'-8"	0.73	4'-9"	0.74	5'-0"	0.78
4	W10	22.0	1.83	5'-0"	36"	5'-0"	1.31	5'-2"	1.36	5'-3"	1.39	5'-6"	1.45
5	W10	26.0	2.17	5'-0"	36"	5'-0"	1.31	5'-3"	1.37	5'-5"	1.43	5'-9"	1.52
6	W12	35.0	2.92	5'-6"	36"	5'-6"	1.44	5'-9"	1.52	5'-11"	1.56	6'-3"	1.65

D-29

SIGNING PLAN
SHEET 9 OF 22

STATE OF MISSOURI
JEREMY SCOTT STRETZ
NUMBER PE-2011023866
PROFESSIONAL ENGINEER
Jeremy Stretz 2025.02.28 15:54:58-06'00'

DATE PREPARED 2/28/2025

ROUTE	STATE
50/291	MO
DISTRICT	SHEET NO.
KC	234

COUNTY: JACKSON
JOB NO.: J4P3196
FEDERAL PROJECT NO.: STB-3001(009)
PROJECT NO.:
BRIDGE NO.:

IF A SEAL IS PRESENT ON THIS SHEET IT HAS BEEN ELECTRONICALLY SEALED AND DATED.

DESCRIPTION	DATE

MISSOURI HIGHWAYS AND TRANSPORTATION COMMISSION
MoDOT
105 WEST CAPITOL
JEFFERSON CITY, MO 65102
1-888-ASK-MODOT (1-888-275-6636)

LEE'S SUMMIT MISSOURI

olsson
1301 BURLINGTON ST., STE. 100
NORTH KANSAS CITY, MO 64116
PHONE: 816.361.1177
CERT. OF AUTHORITY NO. 001592

DELINEATORS

BEGIN STATION	END STATION	LOCATION	7' CHANNEL POST DELINEATOR, DOUBLE STACKED WHITE 9031252	7' CHANNEL POST DELINEATOR, WHITE 9031256	7' CHANNEL POST DELINEATOR, YELLOW 9031257A	7' CHANNEL POST DELINEATOR, WHITE/RED 9031258	7' CHANNEL POST DELINEATOR, YELLOW/RED 9031259A
716+70	717+70	EB US-50, RT	2				
722+05	737+00	EB US-50, RT		8			
739+68	788+77	EB US-50, RT	7				
0+00	10+25	RAMP 2, RT				10	
0+00	10+25	RAMP 2, LT					4
0+88	11+29	RAMP 4, RT		8			
0+88	11+29	RAMP 4, LT			4		
715+70	718+80	WB US-50, LT	2				
721+83	736+01	WB US-50, LT	8				
0	9+75	RAMP 1, LT		9			
0	9+75	RAMP 1, RT			4		
0	10+87	RAMP 3, LT		6			
0	10+87	RAMP 3, RT					4
739+20	745+20	WB US-50, LT	6				
TOTALS			25	31	8	10	8

SIGN SUMMARY

STANDARD SIGN OR SPECIAL SIGN NO.	SIGN DETAIL SHEET NO.	NO. EACH	SIZE, TYPE & SQUARE FEET: SIZE	FLAT SHEET SH ITEM NO. 9035004A	FLAT SHEET FLUORESCENT SHF* ITEM NO. 9035069A	STRUCTURAL ST ITEM NO. 9035011A	STRUCTURAL FLORESCENT STF* ITEM NO. 9035071A
R1-1	STD.	6	36"X36"	9.0			
R1-2	STD.	8	48"X48"X48"	16.0			
R2-1	STD.	3	36"X48"	12.0			
R3-5L	STD.	4	30"X36"	7.5			
R3-5R	STD.	3	30"X36"	7.5			
R3-7L	STD.	2	30"X30"	6.3			
R4-7	STD.	9	24"X30"	5.0			
R4-7c	STD.	2	18"X30"	3.8			
R4-17	STD.	1	24"X30"	5.0			
R5-1	STD.	4	48"X48"	16.0			
R5-1A	STD.	4	42"X30"	8.8			
R6-1L	STD.	5	54"X18"	6.8			
R6-1R	STD.	7	54"X18"	6.8			
W1-4L	STD.	4	36"X36"		9.0		
W1-7	STD.	1	48"X24"		8.0		
W4-2R	STD.	2	48"X48"		16.0		
W12-1	STD.	9	36"X36"		9.0		
W12-2	STD.	2	36"X36"		9.0		
W13-1P	STD.	4	24"X24"		4.0		
W13-2	STD.	2	48"X60"		20.0		
M1-4	STD.	4	24"X24"	4.0			
M1-5	STD.	6	30"X24"	5.0			
M2-1	STD.	1	21"X15"	2.2			
M3-1	STD.	5	24"X12"	2.0			
M3-3	STD.	1	24"X12"	2.0			
M3-4	STD.	1	24"X12"	2.0			
M6-1	STD.	6	21"X15"	2.2			
E5-1	STD.	2	72"X60"	30.0			
SP1-1 (E1-1)	12 OF 22	1	84"X96"			56.0	
SP2-1 (E1-1)	12 OF 22	1	132"X108"			99.0	
SP3-1 (E8-1)	12 OF 22	1	132"X96"			80.0	
SP4-1 (E8-1)	15 OF 22	1	96"X84"			56.0	
SP5-1	12 OF 22	1	144"X48"			48.0	
SP6-1 (E1-1)	13 OF 22	1	96"X84"			56.0	
SP7-1 (E1-1)	13 OF 22	1	192"X84"			112.0	
SP8-1 (E1-1)	13 OF 22	1	192"X96"			128.0	
SP9-1 (E1-1)	14 OF 22	1	204"X156"			170.0	51.0
SP10-1	12 OF 22	1	144"X48"			48.0	
SP11-1	14 OF 22	1	192"X144"			192.0	
SP12-1 (E1-1)	15 OF 22	1	204"X156"			221.0	
SP13-1	15 OF 22	1	108"X132"			99.0	
SUBTOTAL				159.9	75.0	1365.0	51.0
TOTAL			TOTAL	160	75	1365	51

SIGN BRIDGE DIMENSIONS

Sign No.	Station Number	TRUSS DESCRIPTION: TYPE	"B"	"C"	CHORD: Alum.	CHORD: Steel	ROADWAY DESCRIPTION: a	b	c	"D"	SIGN SPACING: NEAR SIDE: d	ht.	e	f	ht	h	k	ht.	l	FAR SIDE: m	n	ht	o	p	ht	COLUMN DATA: Column 1 H	Column 1 Type	Column 2 H	Column 2 Type	Concrete Footings (Cu. Yd.)
52	183+88	B	71'-6"	-	-	4x4x1/2	5'	60'	5'-6"	8'	16'-0"	7'-0"	8'-2"	16'-0"	8'-0"	6'	8'-0"	7'-0"	-	-	-	-	-	-	-	22'-6"	II	22'-6"	II	26.4
53																														
54																														
71	738+49	B	75'-0"	-	-	4x4x1/2	24'	45'-6"	5'-6"	13'	17'-0"	13'-0"	3'-6"	16'-0"	12'-0"	-	-	-	-	-	-	-	-	-	-	23'-6"	II	29'-2"	II	27.2
72																														

Overhead Sign Dimensions

Sign No.	Station Number	Type Sign: Cant.	Butterfly	Col. H	Col. Type	Roadway Description: "C"	"D"	"E"	"F"	Sign Spacing: "G"	Ht.	"W"	"I"	"J"	Ht.	"R"	"N"	CONCRETE FOOTINGS (CU. YD.)
59	718+52	1	-	20	V	36'-0"	18'-0"	-	-	17'-0"	152"	5'-6"	-	-	-	204"	66"	20.6

TUBULAR STEEL SUPPORT DESIGN DATA - STANDARDS 903.05 THRU 903.08

SIGN NO.	STATION	LOCATION	SIGN DTL. SHT. NO.	TYPE	TUBULAR STRUCTURAL SUPPORT QTY	SPAN OR ARM LENGTH	B LENGTH	POST LENGTH NO. 1	POST LENGTH NO. 2	CONCRETE FOOTINGS	SIGN DATA: SPREAD	SIGN A: L	SIGN A: H	TOTAL
					EA	FT-IN	FT-IN	FT	FT	CY	FT-IN	IN	IN	SQ FT
20	176+57	Route 291	20 of 22	TYPE C, DOUBLE ARM CANTILEVER, TRUSS TYPE, C-2315-16	1	16	11.5	22		4.535		84	96	56.0
21	176+54	Route 291	20 of 22	TYPE C, DOUBLE ARM CANTILEVER, TRUSS TYPE, C-2318-26	1	26	20	22.5		4.535		132	108	99.0
26	179+42	Route 291	STD	TYPE S, ONE TUBE TUBULAR SUPPORT STEEL,	1	81'-3"		18	18	1.818	41.5	30	36	30
27			STD									30	36	
28			STD									30	36	
29			STD									30	36	
65	725+23	Route 50	STD	TYPE S, ONE TUBE TUBULAR SUPPORT STEEL,	1	75'-0"		18	18	1.818	27.0	30	36	108
66			STD									30	36	
67			STD									30	36	
SUBTOTAL					4					12.71				
TOTAL					4					12.7				

SIGNING PLAN
SHEET 10 OF 22

STATE OF MISSOURI
JEREMY SCOTT STRETZ
NUMBER PE-2011021056
PROFESSIONAL ENGINEER

Jeremy Stretz 2025.02.28 15:55:13-06'00'

DATE PREPARED: 2/28/2025
ROUTE: 50/291 | STATE: MO
DISTRICT: KC | SHEET NO.: 235
COUNTY: JACKSON
JOB NO.: J4P3196
FEDERAL PROJECT NO.: STB-3001(009)
PROJECT NO.:
BRIDGE NO.:

DESCRIPTION | DATE

IF A SEAL IS PRESENT ON THIS SHEET IT HAS BEEN ELECTRONICALLY SEALED AND DATED.

MISSOURI HIGHWAYS AND TRANSPORTATION COMMISSION
105 WEST CAPITOL
JEFFERSON CITY, MO 65102
1-888-ASK-MODOT (1-888-275-6636)

LEE'S SUMMIT MISSOURI

olsson
1301 BURLINGTON ST., STE. 100
NORTH KANSAS CITY, MO 64116
PHONE: 816.361.1177
CERT. OF AUTHORITY NO. 001592

STANDARD SIGN ASSEMBLIES

SIGN NO.	STATION	LOCATION	SH STOP 36"X36" R1-1	SH 48"X48"X48" R1-2	SH SPEED LIMIT 45 36"X48" R2-1	SH ONLY 30"X36" R3-5L	SH ONLY 30"X36" R3-5R	SH LEFT LANE MUST TURN LEFT 30"X30" R3-7L	SH 24"X30" R4-7	SH 18"X30" R4-7c	SH DO NOT DRIVE ON SHOULDER 24"X30" R4-17	SH DO NOT ENTER 48"X48" R5-1	SH WRONG WAY 42"X30" R5-1A	SH ONE WAY 36"X12" R6-1L	SH ONE WAY 36"X12" R6-1R	SH•F 36"X36" W1-4L	SH•F 48"X24" W1-7	SH•F 48"X48" W4-2R	SH•F 36"X36" W12-1	SH•F 36"X36" W12-2	SH•F MPH 24"X24" W13-1P	SH•F EXIT M.P.H. 48"X60" W13-2	SH 24"X24" M1-4	SH 30"X24" M1-5	SH JCT 21"X15" M2-1	SH NORTH 24"X12" M3-1	SH SOUTH 24"X12" M3-3	SH WEST 24"X12" M3-4	SH 21"X15" M6-1	ST EXIT 72"X60" E5-1	ST EAST Sedalia 84"X96" SP1-1	ST West South Kansas City 132"X108" SP2-1	ST West South Kansas City 132"X96" SP3-1	ST EAST Sedalia 96"X84" SP4-1	ST 144"X48" SP5-1	ST EAST Sedalia 96"X84" SP6-1	ST 192"X84" SP7-1	ST 192"X96" SP8-1	ST / ST•F 204"X156" SP9-1	ST 144"X48" SP10-1	ST 192"X144" SP11-1	ST 204"X156" SP12-1	ST 108"X132" SP13-1
1	168+05.53	Route 291																						1		1															
2	169+05.15	Route 291									1														1																
3	170+36.70	Route 291			1																																				
4	171+51.62	Route 291																							1			1													
5	173+61.14	Route 291																		1																					
6	173+60.22	Route 291																		1																					
7	173+84.49	Route 291							1																																
8	173+79.53	Route 291		1																																				
9	174+08.23	Route 291		1																																				
10	174+05.71	Route 291																						1	1			1			2									
11	174+24.85	Route 291																		1																					
12	174+30.79	Route 291														1						1																			
13	174+43.66	Route 291							1																																
14	174+59.08	Route 291							1																																
15	174+80.76	Route 291																		1																					
16	175+02.65	Route 291																						1	1			1			2									
17	175+40.14	Route 291		1																																				
18	175+14.86	Route 291		1																																				
19	175+80.47	Route 291																		1																					
20	176+57.44	Route 291																																	1						
21	176+54.29	Route 291																																		1					
22	178+52.51	Route 291										1																													
23	178+57.99	Route 291																							1			1			1									
24	178+57.99	Route 291											1																												
25	179+42.76	Route 291											1																												
26	179+42.76	Route 291				1																																		
27	179+42.76	Route 291				1																																		
28	179+42.76	Route 291					1																																	
29	179+42.76	Route 291					1																																	
30	179+04.41	Route 291																		1																					
31	179+40.93	Route 291										1																													
32	179+03.76	Route 291												1	1																										
33	179+80.01	Route 291												1																											
34	178+56.48	Route 291																		1																					
35	178+75.81	Route 291		1																																				
36	178+92.51	Route 291																1																							
37	179+39.71	Route 291																1																							
38	178+91.28	Route 291							1																																
39	181+52.51	Route 291													1																					1					
40	181+87.46	Route 291										1																													
41	182+53	Route 291																																			1				
42	182+28.40	Route 291																		1																					
43	182+68.10	Route 291										1																													
44	182+68.10	Route 291		1																																				
45	182+33.51	Route 291												2																											
46	182+33.51	Route 291																																							
47	183+90.48	Route 291						1																																	
48	184+24.52	Route 291						1																																	
49	184+27.09	Route 291							1																																
50	184+79.46	Route 291		1																																				
51	184+80.15	Route 291													2																										
52	183+88.82	Route 291																																			1				
53	183+88.82	Route 291																																				1			
54	183+88.82	Route 291																																					1		
55	182+90.95	Route 291																		1																					
56	182+50.94	Route 291		1																																				
57	182+31.03	Route 291							1																																
58	187+14.95	Route 291							1																																
59	718+52.48	Route 50																																					1		
60	718+52.48	Route 50																													1									
62	723+05.86	Route 50																																1						
63	725+18	Route 50																							1			1			1									
64	725+18	Route 50											1																												
65	725+23.12	Route 50				1																																		
66	725+23.12	Route 50				1																																		
67	725+23.12	Route 50					1																																	
68	725+23.12	Route 50											1																												
69	732+28.72	Route 50																																					1		
70	734+99.52	Route 50																																1						
71	738+49.34	Route 50																																					1		
72	738+49.34	Route 50																																						1	
73	738+49.34	Route 50																													1									
74	707+59.15	Blue Parkway																					1																	
75	709+06.35	Blue Parkway	1																																					
76	709+28.51	Blue Parkway																																						
77	711+96.67	Blue Parkway																					1																	
78	713+32.37	Blue Parkway	1																																					
79	714+31.42	Blue Parkway																							1	1				1	1									
80	715+00.06	Blue Parkway																																						1
81	715+61.71	Blue Parkway	1																																					
82	715+81.55	Blue Parkway															1																							
83	716+03.86	Blue Parkway												1	1																										
84	716+55.48	Blue Parkway													1																										
85	719+46.13	Blue Parkway														1								1																	
86	719+80.08	Blue Parkway			1																																			
87	726+48.93	Blue Parkway	1																																					
88	727+33.70	Blue Parkway							1																																
89	732+55.63	Blue Parkway														1						1																		
90	733+01.37	Blue Parkway													1																										
91	734+12	Blue Parkway							1																																
92	735+18.60	Blue Parkway	1																																					
93	6+63.50	7th Terrace	1																																					
94	738+92.70	Blue Parkway			1																																			
95	744+29.00	Blue Parkway														1						1																		
96	180+09	Route 291								1																															
97	181+39	Route 291								1																															
		TOTAL	6	8	3	4	3	2	9	2	1	4	4	5	7	4	1	2	9	2	4	2	4	6	1	5	1	1	6	2	1	1	1	1	1	1	1	1	1	1	1

D-30

SIGNING PLAN
SHEET 11 OF 22

STATE OF MISSOURI
JEREMY SCOTT STRETZ
NUMBER PE-2017023056
PROFESSIONAL ENGINEER

Jeremy Stretz 2025.02.28 15:55:43-06'00'

DATE PREPARED
2/28/2025

ROUTE	STATE
50/291	MO
DISTRICT	SHEET NO.
KC	236

COUNTY
JACKSON

JOB NO.
J4P3196

FEDERAL PROJECT NO.
STB-3001(009)

PROJECT NO.

BRIDGE NO.

DESCRIPTION	DATE

MISSOURI HIGHWAYS AND TRANSPORTATION COMMISSION
105 WEST CAPITOL
JEFFERSON CITY, MO 65102
1-888-ASK-MODOT (1-888-275-6636)

MoDOT

LEE'S SUMMIT MISSOURI

olsson
1301 BURLINGTON ST., STE. 100
NORTH KANSAS CITY, MO 64116
PHONE: 816.361.1177
CERT. OF AUTHORITY NO. 001592

IF A SEAL IS PRESENT ON THIS SHEET IT HAS BEEN ELECTRONICALLY SEALED AND DATED.

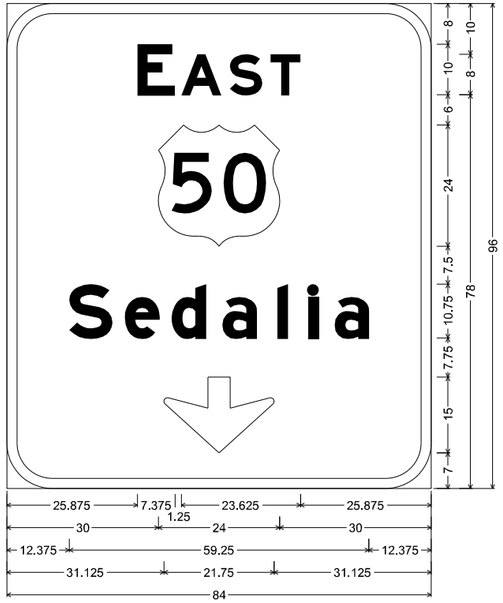

E1-1 ST-STRUCTURAL;
9.000" Radius, 2.000" Border, White on, Green;
"EAST", E Mod; "Sedalia", E Mod; Down Arrow 22.000" 270^;
Table of letter and object lefts

E 25.875	**A** 34.500	**S** 44.125	**T** 52.250
50 30.000			

S 12.375	**e** 23.375	**d** 32.625	**a** 42.625	**l** 53.500	**l** 59.625	**a** 64.875
31.125						

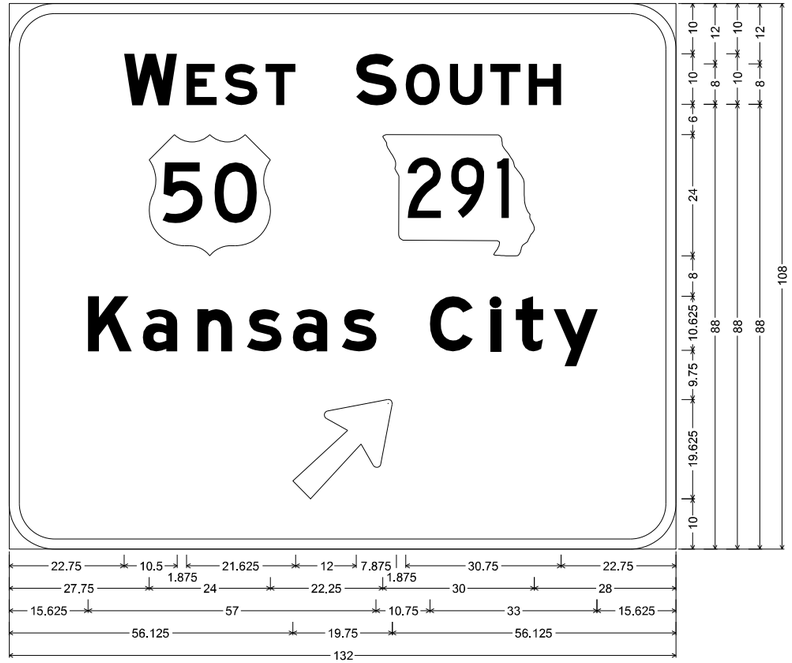

E1-1 ST-STRUCTURAL;
9.000" Radius, 2.000" Border, White on, Green;
"WEST", E Mod; "SOUTH", E Mod; State Highway 291 M1-6a1 12.000" C; "Kansas City", E Mod;
Arrow 80 - 25.000" 45';
Table of letter and object lefts

W 22.750	**E** 35.125	**S** 42.750	**T** 50.750	**S** 68.750	**O** 78.500	**U** 87.250	**T** 95.250	**H** 102.875	
50 27.750	291 74.000								

K 15.625	**a** 26.500	**n** 37.250	**s** 47.125	**a** 56.125	**s** 65.875	**C** 83.375	**i** 95.375	**t** 100.250	**y** 107.750
56.125									

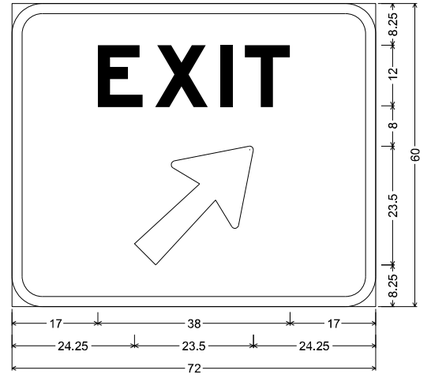

E5-1 ST-STRUCTURAL;
6.000" Radius, 2.000" Border, White on, Green;
"EXIT", E Mod; Arrow 133 - 30.000" 45';
Table of letter and object lefts

E 17.000	**X** 28.375	**I** 41.250	**T** 46.125
24.250			

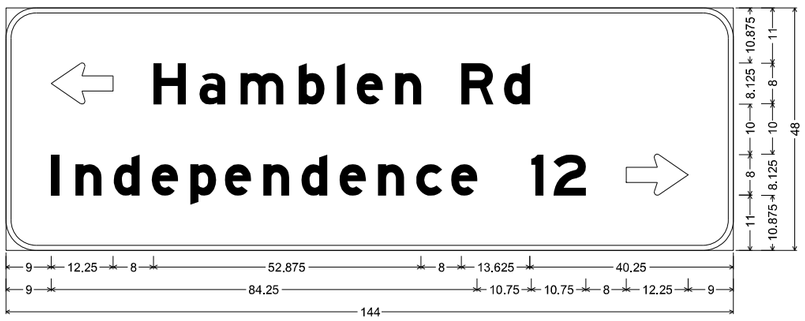

D1-2a ST-STRUCTURAL;
6.000" Radius, 1.000" Border, White on, Green;
Standard Arrow Custom 12.250" X 8.125" 180'; "Hamblen Rd", E Mod; "Independence", E Mod; "12", E Mod;
Standard Arrow Custom 12.250" X 8.125" 0';
Table of letter and object lefts

⇦ 9.000	**H** 29.250	**a** 38.375	**m** 46.500	**b** 58.000	**l** 65.500	**e** 69.500	**n** 77.125	**R** 90.125	**d** 98.625	
l 9.000	**n** 13.750	**d** 21.375	**e** 28.875	**p** 36.500	**e** 43.375	**n** 51.000	**d** 58.500	**e** 66.125	**n** 73.625	**c** 81.250	**e** 88.125	**1** 104.000	**2** 108.375	⇨ 122.750

D1-2a ST-STRUCTURAL;
6.000" Radius, 1.000" Border, White on, Green;
Standard Arrow Custom 12.250" X 8.125" 180'; "Independence", E Mod; "12", E Mod; "Hamblen Rd", E Mod;
Standard Arrow Custom 12.250" X 8.125" 0';
Table of letter and object lefts

⇦ 9.000	**I** 29.250	**n** 34.000	**d** 41.625	**e** 49.125	**p** 56.750	**e** 63.625	**n** 71.250	**d** 78.750	**e** 86.375	**n** 93.875	**c** 101.500	**e** 108.375	**1** 124.250	**2** 128.625

H 9.000	**a** 18.125	**m** 26.250	**b** 37.750	**l** 45.250	**e** 49.250	**n** 56.875	**R** 69.875	**d** 78.375	⇨ 122.750

SIGNING PLAN
SHEET 12 OF 22

IF A SEAL IS PRESENT ON THIS SHEET IT HAS BEEN ELECTRONICALLY SEALED AND DATED.

STATE OF MISSOURI
JEREMY SCOTT STRETZ
NUMBER PE-2011023864
PROFESSIONAL ENGINEER
Jeremy Stretz 2025.02.28 15:56:24-06'00'

DATE PREPARED: 2/28/2025
ROUTE: 50/291 | STATE: MO
DISTRICT: KC | SHEET NO.: 237
COUNTY: JACKSON
JOB NO.: J4P3196
FEDERAL PROJECT NO.: STB-3001(009)
PROJECT NO.:
BRIDGE NO.:

DATE	DESCRIPTION

MISSOURI HIGHWAYS AND TRANSPORTATION COMMISSION
105 WEST CAPITOL
JEFFERSON CITY, MO 65102
1-888-ASK-MODOT (1-888-275-6636)

LEE'S SUMMIT MISSOURI

olsson
1301 BURLINGTON ST., STE. 100
NORTH KANSAS CITY, MO 64116
PHONE: 816.361.1177
CERT. OF AUTHORITY NO. 001592

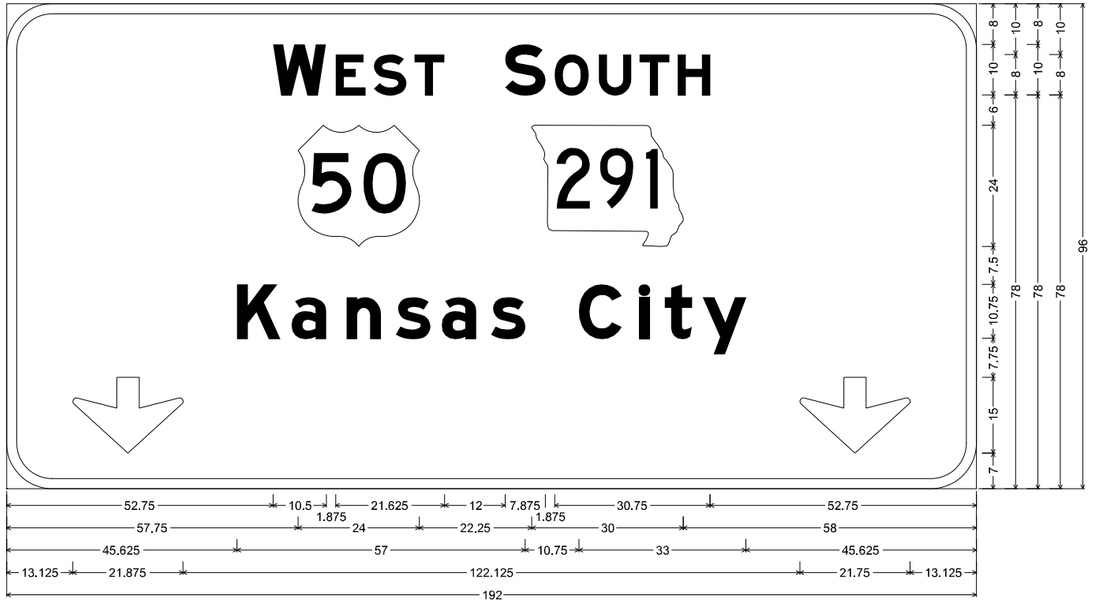

E1-1 ST-STRUCTURAL;
9.000" Radius, 2.000" Border, White on, Green;
"WEST", E Mod; "SOUTH", E Mod; State Highway 291 M1-6a1 12.000" C; "Kansas City", E Mod; Down Arrow 22.000" 270^; Down Arrow 22.000" 270^;
Table of letter and object lefts

W	E	S	T	S	O	U	T	H	
52.750	65.125	72.750	80.750	98.750	108.500	117.250	125.250	132.875	
50	291								
57.750	104.000								
K	a	n	s	a	s	C	l	t	y
45.625	56.500	67.250	77.125	86.125	95.875	113.375	125.375	130.250	137.750
13.125	157.125								

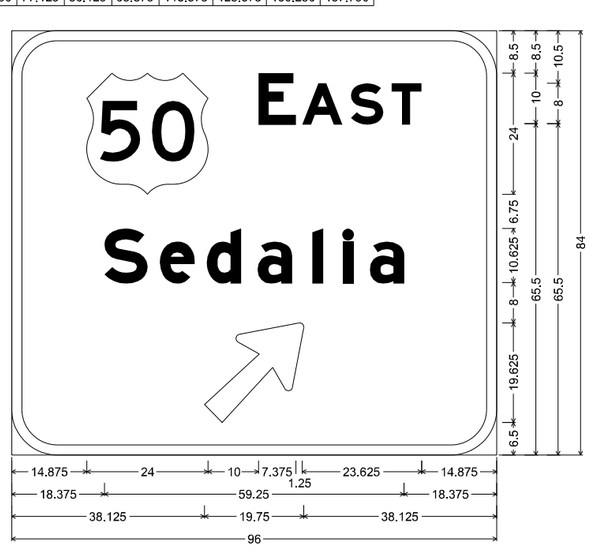

E1-1 ST-STRUCTURAL;
9.000" Radius, 2.000" Border, White on, Green;
"EAST", E Mod; "Sedalia", E Mod; Arrow 80 - 25.000" 45';
Table of letter and object lefts

50	E	A	S	T			
14.875	48.875	57.500	67.125	75.250			
S	e	d	a	l	l	a	
18.375	29.375	38.625	48.625	59.500	65.625	70.875	
38.125							

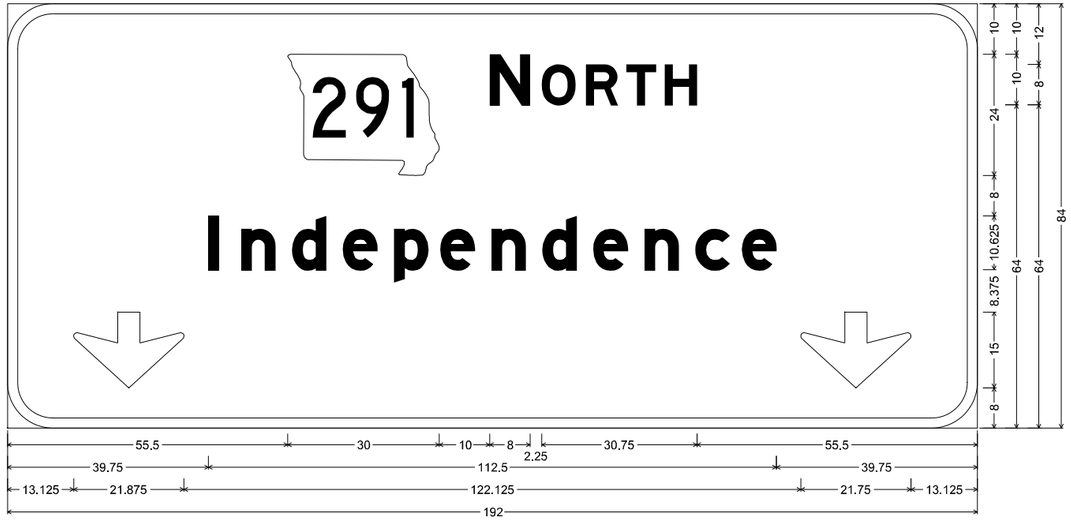

E1-1 ST-STRUCTURAL;
9.000" Radius, 2.000" Border, White on, Green;
State Highway 291 M1-6a1 12.000" C; "NORTH", E Mod; "Independence", E Mod; Down Arrow 22.000" 270^; Down Arrow 22.000" 270^;
Table of letter and object lefts

291	N	O	R	T	H	
55.500	95.500	105.750	114.500	122.500	130.125	
l	n	d	e	p	e	n	d	e	n	c	e
39.750	46.250	56.375	66.375	76.500	85.625	95.875	105.875	116.000	126.125	136.125	145.375
13.125	157.125										

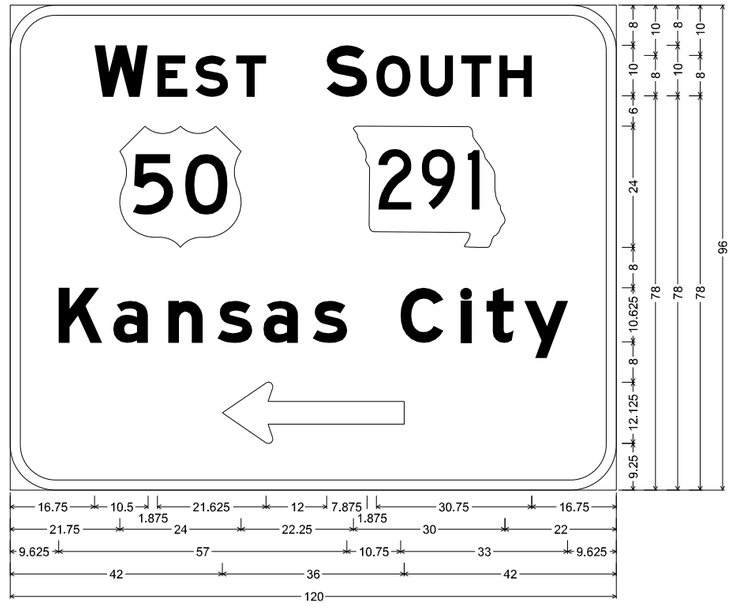

E8-1 ST-STRUCTURAL;
9.000" Radius, 2.000" Border, White on, Green;
"WEST", E Mod; "SOUTH", E Mod; State Highway 291 M1-6a1 12.000" C;
"Kansas City", E Mod; Standard Arrow Custom 36.000" X 12.125" 180';
Table of letter and object lefts

W	E	S	T	S	O	U	T	H	
16.750	29.125	36.750	44.750	62.750	72.500	81.250	89.250	96.875	
50	291								
21.750	68.000								
K	a	n	s	a	s	C	l	t	y
9.625	20.500	31.250	41.125	50.125	59.875	77.375	89.375	94.250	101.750
42.000									

SIGNING PLAN
SHEET 13 OF 22

STATE OF MISSOURI
JEREMY SCOTT STRETZ
NUMBER PE-2011023056
PROFESSIONAL ENGINEER
Jeremy Stretz 2025.02.28 15:56:36-06'00'

DATE PREPARED 2/28/2025
ROUTE 50/291 | STATE MO
DISTRICT KC | SHEET NO. 238
COUNTY JACKSON
JOB NO. J4P3196
FEDERAL PROJECT NO. STB-3001(009)
PROJECT NO.
BRIDGE NO.

DESCRIPTION | DATE

IF A SEAL IS PRESENT ON THIS SHEET IT HAS BEEN ELECTRONICALLY SEALED AND DATED.

MISSOURI HIGHWAYS AND TRANSPORTATION COMMISSION
105 WEST CAPITOL
JEFFERSON CITY, MO 65102
1-888-ASK-MODOT (1-888-275-6636)

LEE'S SUMMIT MISSOURI

olsson
1301 BURLINGTON ST., STE. 100
NORTH KANSAS CITY, MO 64116
PHONE: 816.361.1177
CERT. OF AUTHORITY NO. 001592

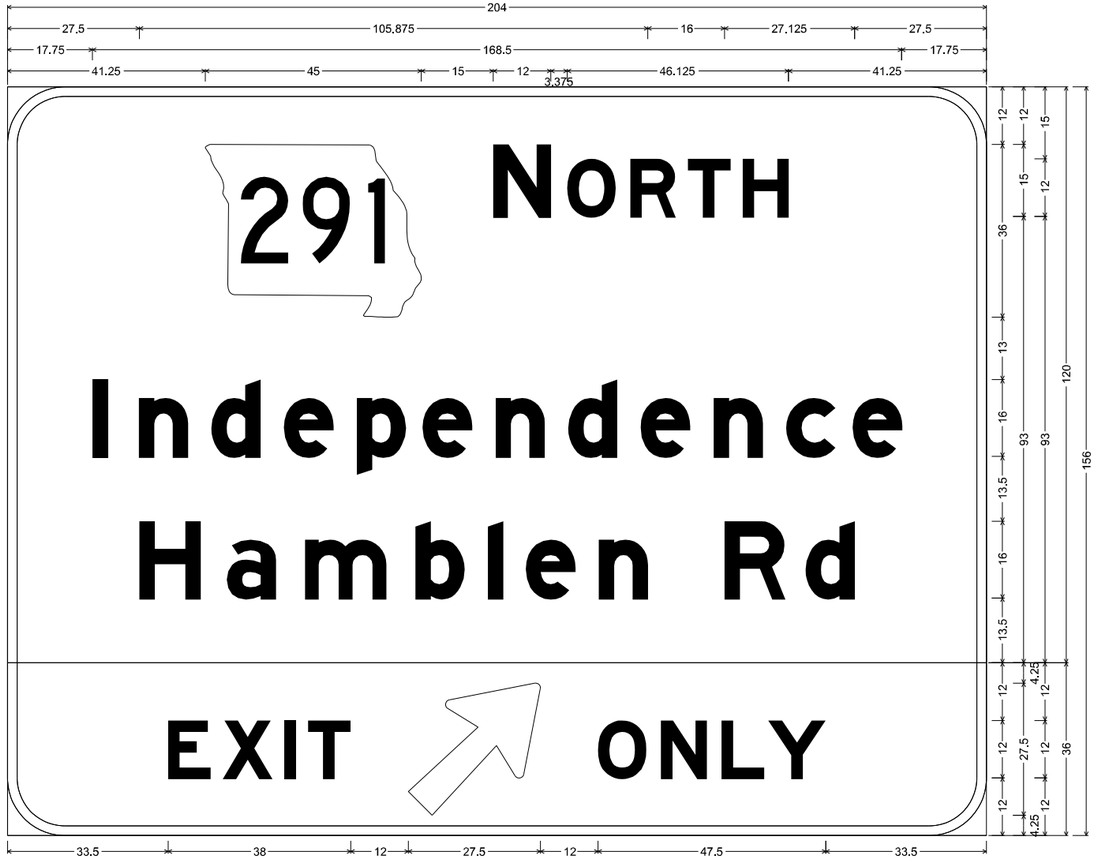

E1-1 ST-STRUCTURAL;
12.000" Radius, 2.000" Border, White on, Green;
State Highway 291 M1-6a4 18.000" C; "NORTH", E Mod; "Independence", E Mod; "Hamblen Rd", E Mod;

STF-STRUCTURAL FLUORESCENT;
12.000" Radius, 2.000" Border, Black on, Yellow;
"EXIT", E Mod; Arrow 160 - 35.000" 45°; "ONLY", E Mod;
Table of letter and object lefts

41.250	N 101.250	O 116.625	R 129.750	T 141.750	H 153.250

I 17.750	n 27.375	d 42.500	e 57.625	p 72.875	e 86.500	n 101.750	d 116.875	e 131.875	n 147.125	c 162.250	e 176.125	

H 27.500	a 45.750	m 62.000	b 85.000	l 100.125	e 108.000	n 123.250	R 149.375	d 166.375

E 33.500	X 44.875	I 57.750	T 62.625	83.500	O 123.000	N 136.125	L 148.750	Y 158.500

E1-1 ST-STRUCTURAL;
12.000" Radius, 2.000" Border, White on, Green;
State Highway 291 M1-6a4 18.000" C; "SOUTH", E Mod; "Harrisonville", E Mod; "Jefferson St", E Mod; "3/4", E Mod; "MILE", E Mod;
Table of letter and object lefts

35.625	S 95.625	O 110.375	U 123.375	T 135.500	H 146.875

H 15.250	a 33.500	r 49.750	r 61.250	I 72.750	s 80.250	o 93.875	n 109.250	v 124.000	I 140.375	I 149.500	I 158.625	e 166.500

J 18.375	e 35.875	f 49.500	f 59.250	e 69.250	r 84.500	s 94.250	o 107.875	n 123.375	S 149.500	t 165.625

3/4 60.250	M 98.500	I 110.250	L 114.875	E 124.375

SIGNING PLAN
SHEET 14 OF 22

STATE OF MISSOURI
JEREMY SCOTT STRETZ
NUMBER PE-2011021864
PROFESSIONAL ENGINEER
Jeremy Stretz 2025.02.28 15:56:46-06'00'

DATE PREPARED 2/28/2025
ROUTE 50/291 | STATE MO
DISTRICT KC | SHEET NO. 239
COUNTY JACKSON
JOB NO. J4P3196
FEDERAL PROJECT NO. STB-3001(009)
PROJECT NO.
BRIDGE NO.

DESCRIPTION | DATE

IF A SEAL IS PRESENT ON THIS SHEET IT HAS BEEN ELECTRONICALLY SEALED AND DATED.

MISSOURI HIGHWAYS AND TRANSPORTATION COMMISSION
MoDOT
105 WEST CAPITOL
JEFFERSON CITY, MO 65102
1-888-ASK-MODOT (1-888-275-6636)
LEE'S SUMMIT MISSOURI
olsson
1301 BURLINGTON ST., STE. 100
NORTH KANSAS CITY, MO 64116
PHONE: 816.361.1177
CERT. OF AUTHORITY NO. 001592

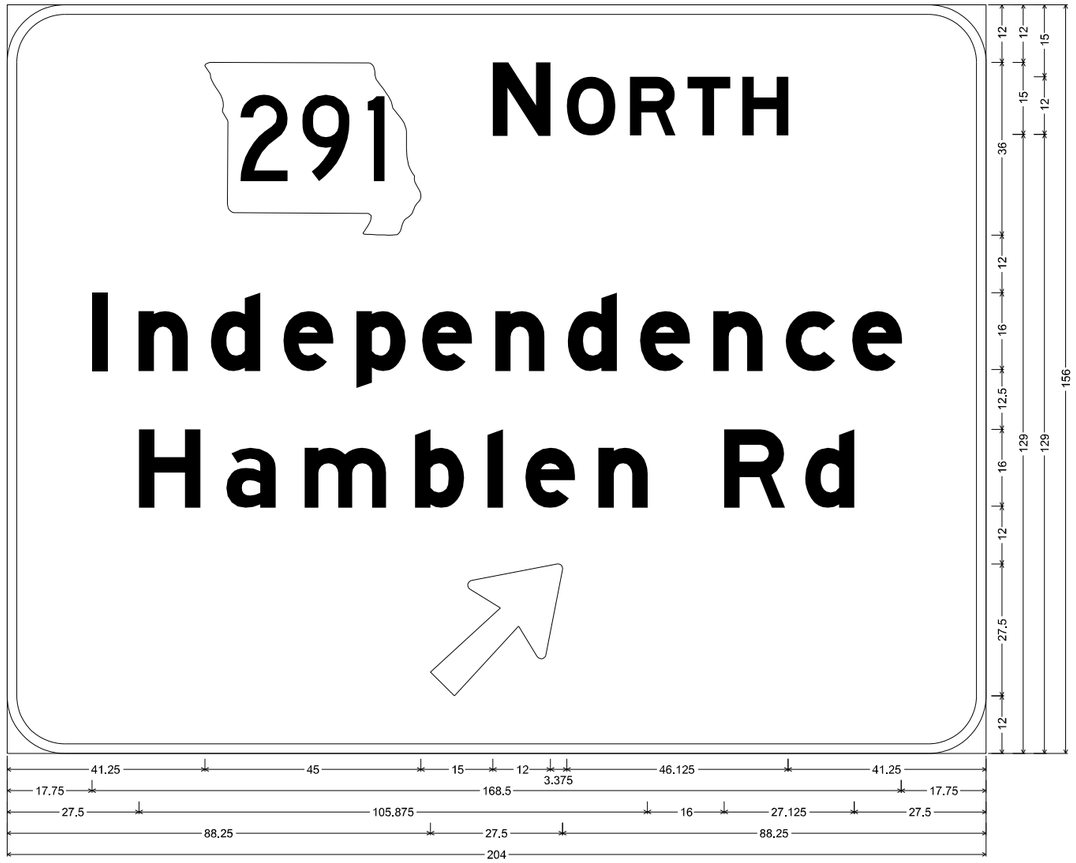

E1-1 ST-STRUCTURAL;
12.000" Radius, 2.000" Border, White on, Green;
State Highway 291 M1-6a4 18.000" C; "NORTH", E Mod; "Independence", E Mod; "Hamblen Rd", E Mod; Arrow 160 - 35.000" 45';
Table of letter and object lefts

41.250	**N** 101.250	**O** 116.625	**R** 129.750	**T** 141.750	**H** 153.250

I 17.750	**n** 27.375	**d** 42.500	**e** 57.625	**p** 72.875	**e** 86.500	**n** 101.750	**d** 116.875	**e** 131.875	**n** 147.125	**c** 162.250	**e** 176.125

H 27.500	**a** 45.750	**m** 62.000	**b** 85.000	**l** 100.125	**e** 108.000	**n** 123.250	**R** 149.375	**d** 166.375

88.250

E1-1 ST-STRUCTURAL;
9.000" Radius, 2.000" Border, White on, Green;
"SOUTH", E Mod; State Highway 291 M1-6a4 18.000" B;

STF-STRUCTURAL FLUORESCENT;
9.000" Radius, 2.000" Border, Black on, Yellow;
"RIGHT LANE", E Mod; "EXIT ONLY", E Mod;
Table of letter and object lefts

S 23.625	**O** 38.375	**U** 51.375	**T** 63.500	**H** 74.875

31.500

R 8.750	**I** 19.250	**G** 23.875	**H** 34.375	**T** 44.375	**L** 61.125	**A** 69.250	**N** 81.250	**E** 91.875

E 13.750	**X** 23.250	**I** 34.000	**T** 38.000	**O** 54.750	**N** 65.625	**L** 76.125	**Y** 84.250

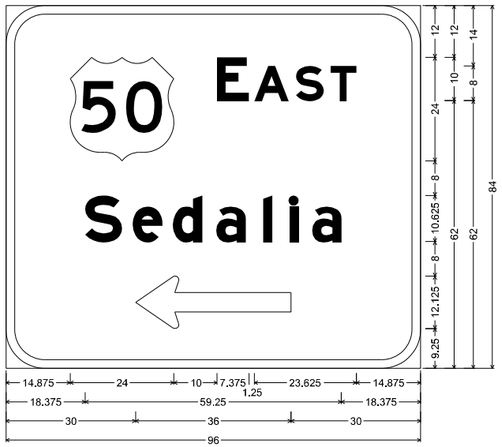

E8-1 ST-STRUCTURAL;
9.000" Radius, 2.000" Border, White on, Green;
"EAST", E Mod; "Sedalia", E Mod;
Standard Arrow Custom 36.000" X 12.125" 180';
Table of letter and object lefts

14.875	**E** 48.875	**A** 57.500	**S** 67.125	**T** 75.250

S 18.375	**e** 29.375	**d** 38.625	**a** 48.625	**l** 59.500	**l** 65.625	**a** 70.875

30.000

SIGNING PLAN
SHEET 15 OF 22

STATE OF MISSOURI
JEREMY SCOTT STRETZ
NUMBER PE-2017023056
PROFESSIONAL ENGINEER
Jeremy Stretz 2025.02.28 15:52:57-06'00'

DATE PREPARED 2/28/2025
ROUTE 50/291 | STATE MO
DISTRICT KC | SHEET NO. 240
COUNTY JACKSON
JOB NO. J4P3196
FEDERAL PROJECT NO. STB-3001(009)
PROJECT NO.
BRIDGE NO.

DESCRIPTION | DATE

IF A SEAL IS PRESENT ON THIS SHEET IT HAS BEEN ELECTRONICALLY SEALED AND DATED.

MISSOURI HIGHWAYS AND TRANSPORTATION COMMISSION
105 WEST CAPITOL
JEFFERSON CITY, MO 65102
1-888-ASK-MODOT (1-888-275-6636)

LEE'S SUMMIT MISSOURI

olsson
1301 BURLINGTON ST., STE. 100
NORTH KANSAS CITY, MO 64116
PHONE: 816.361.1177
CERT. OF AUTHORITY NO. 001592

(62) RTE. 50
STA. 723+05.00
72" X 60"
4" PIPE POST
0.72 CY

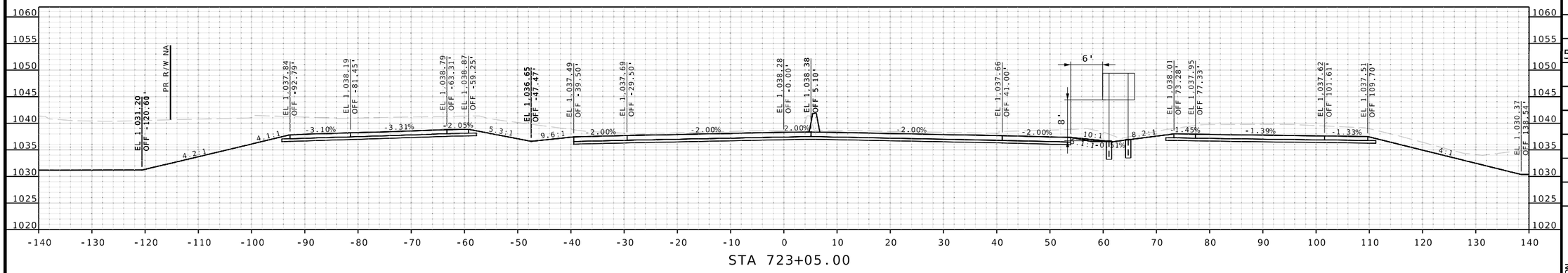

(59) RTE. 50
STA. 718+52.00
(60) 204" X 156"
48"X 60"
TYPE V POST
SIGN AREA 221 SF
POST LENGTH 27'-5"
ARM LENGTH 30'-0"
H= 21'-5"
S= 6'-0"
PEDESTAL= 4'-9" x 3'-8"
FOOTING= 9'-0" x 17'-0"

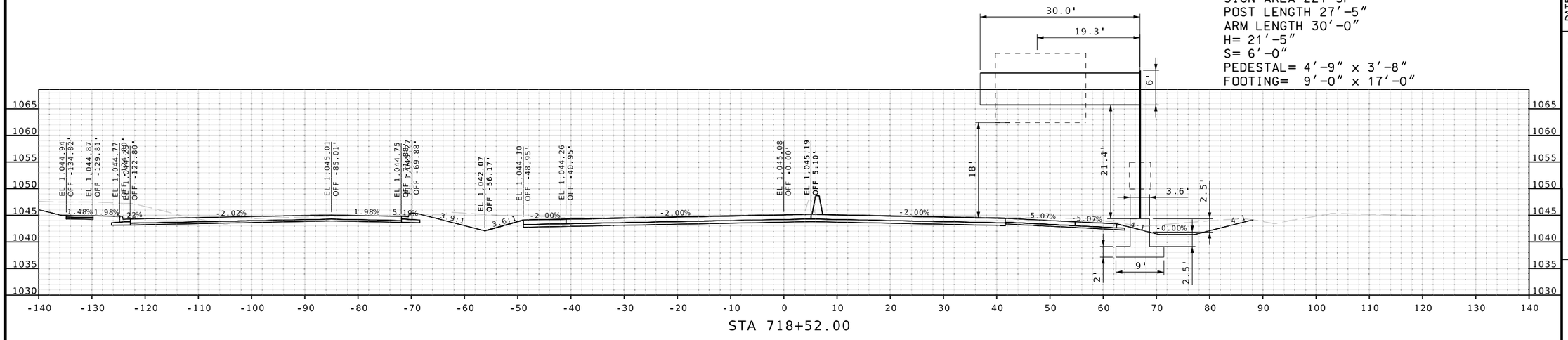

SIGNING PLAN
SHEET 16 OF 22

I F A SEAL IS PRESENT ON THIS SHEET IT HAS BEEN ELECTRONICALLY SEALED AND DATED.

STATE OF MISSOURI
JEREMY SCOTT STRETZ
NUMBER PE-2017023856
PROFESSIONAL ENGINEER
Jeremy Stretz 2025.02.28 15:58:07-06'00'

DATE PREPARED 2/28/2025
ROUTE 50/291 | STATE MO
DISTRICT KC | SHEET NO. 241
COUNTY JACKSON
JOB NO. J4P3196
FEDERAL AID PROJ. NO. STB-3001(009)
PROJECT NO.
BRIDGE NO.

DESCRIPTION | DATE

MISSOURI HIGHWAYS AND TRANSPORTATION COMMISSION
105 WEST CAPITOL
JEFFERSON CITY, MO 65102
1-888-ASK-MODOT (1-888-275-6636)

LEE'S SUMMIT MISSOURI

olsson
1301 BURLINGTON ST., STE. 100
NORTH KANSAS CITY, MO 64116
PHONE: 816.361.1177
CERT. OF AUTHORITY NO. 001592

RTE. 50
STA. 734+99
(70) 72" X 60"
4" PIPE POST
0.72 CY

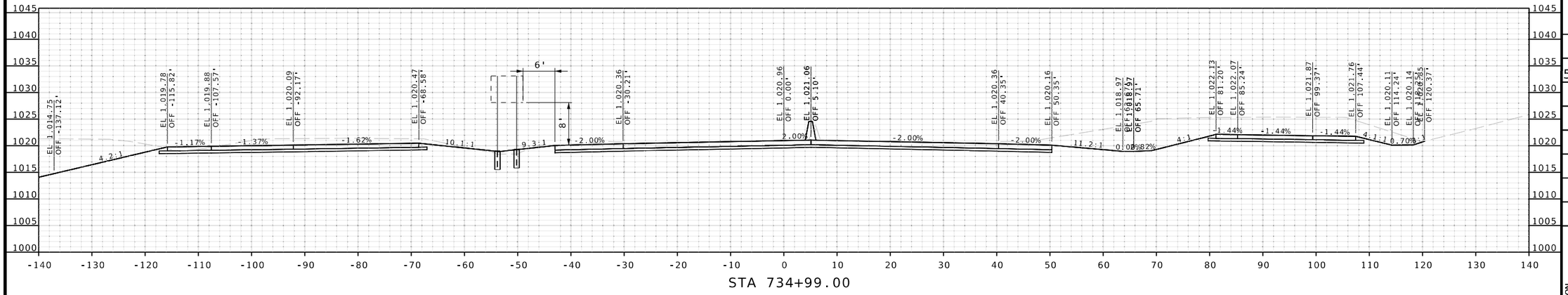

STA 734+99.00

RTE. 50
STA. 738+49
(71) 192" X 144"
(72) 204" X 156"
(73) 48" X 60"
TYPE II POSTS
SIGN AREA 413 SF
POST LENGTH 29'-2", 23'-6"
ARM LENGTH 75'-0"
PEDESTAL= 4'-4" X 3'-0"
FOOTING= 8'-0" X 16'-0"
TYPE C BARRIER FOOTING

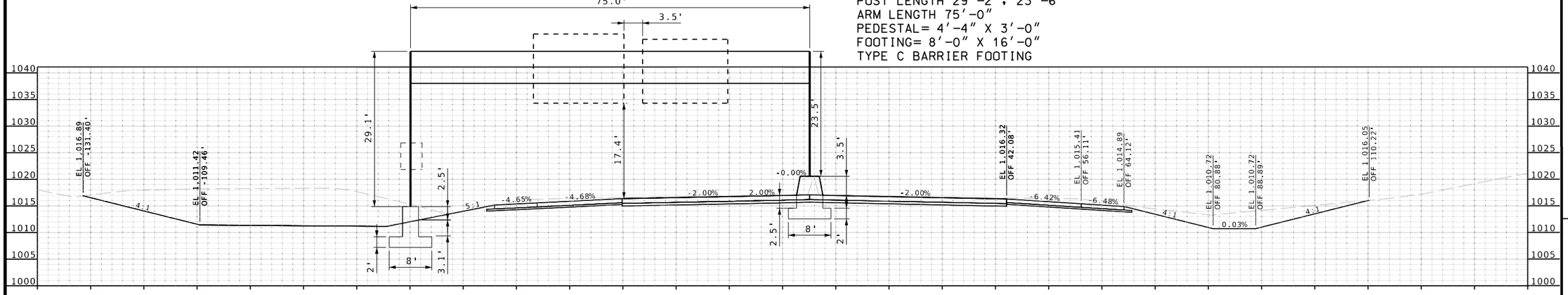

STA 738+49.00

SIGNING PLAN
SHEET 17 OF 22

I.F.A. SEAL, J.S. PRESENT ON THIS SHEET. IT HAS BEEN ELECTRONICALLY SEALED AND DATED.

STATE OF MISSOURI
JEREMY SCOTT STRETZ
NUMBER PE-2017023856
PROFESSIONAL ENGINEER

Jeremy Stretz 2025.02.28 15:58:22-06'00'

DATE PREPARED
2/28/2025

ROUTE	STATE
50/291	MO
DISTRICT	SHEET NO.
KC	242

COUNTY
JACKSON

JOB NO.
J4P3196

FEDERAL AID PROJ. NO.
STB-3001(009)

PROJECT NO.

BRIDGE NO.

DATE	DESCRIPTION

MISSOURI HIGHWAYS AND TRANSPORTATION COMMISSION
105 WEST CAPITOL
JEFFERSON CITY, MO 65102
1-888-ASK-MODOT (1-888-275-6636)

LEE'S SUMMIT MISSOURI

olsson
1301 BURLINGTON ST., STE. 100
NORTH KANSAS CITY, MO 64116
PHONE: 816.361.1177
CERT. OF AUTHORITY NO. 001592

F:\2021\04501-05000\021-04786\40-Design\Microstation\J4P3196\plan_sheets\13 Signing\241-242_SN_16-17_J4P3196_I10_RTE50.dgn 2:25:03 PM 2/28/2025

(41) RAMP 2
STA. 8+86.68
144" X 48"
2-#1 WF STRUCTURE
STEEL POST
0.30 CY

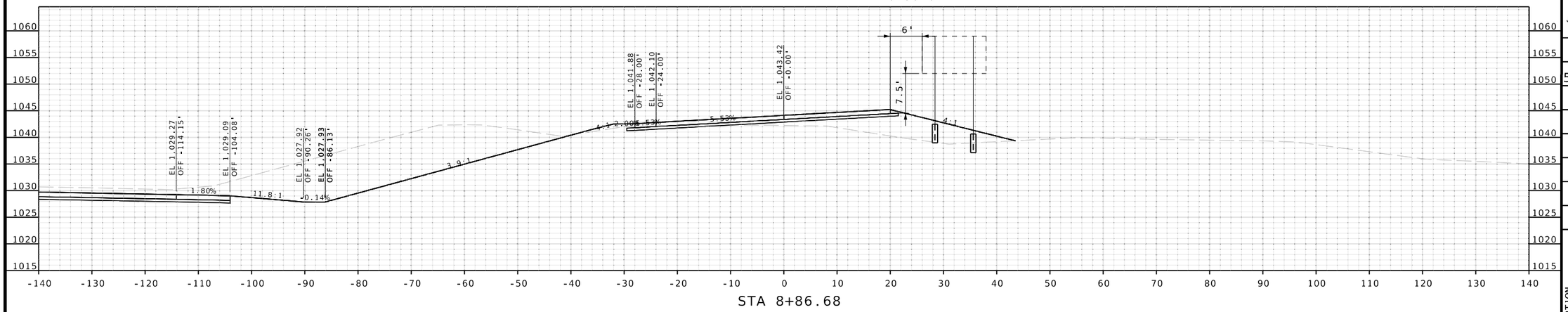

(63)
(64)
(65) RAMP 2
STA. 7+62.64
(66) TYPE S-1312
SPAN= 75'-0"
(67)
(68)

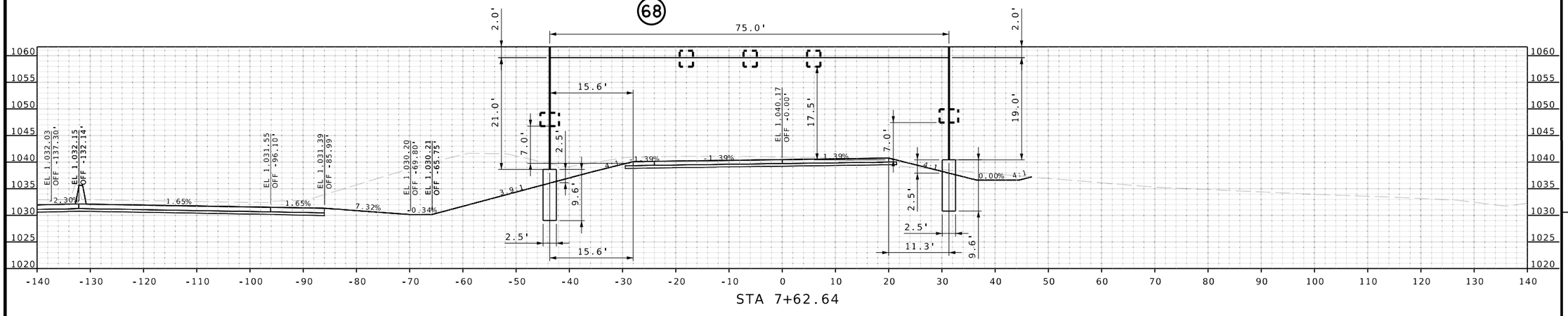

SIGNING PLAN
SHEET 18 OF 22

JEREMY SCOTT STRETZ
NUMBER PE-2017023856
PROFESSIONAL ENGINEER
STATE OF MISSOURI
Jeremy Stretz 2025.02.28 15:58:32-06'00'

DATE PREPARED 2/28/2025
ROUTE 50/291 | STATE MO
DISTRICT KC | SHEET NO. 243
COUNTY JACKSON
JOB NO. J4P3196
FEDERAL AID/CONTRACT NO. STB-3001(009)
PROJECT NO.
BRIDGE NO.

DESCRIPTION | DATE

IF A SEAL IS PRESENT ON THIS SHEET, IT HAS BEEN ELECTRONICALLY SEALED AND DATED.

MISSOURI HIGHWAYS AND TRANSPORTATION COMMISSION
105 WEST CAPITOL
JEFFERSON CITY, MO 65102
1-888-ASK-MODOT (1-888-275-6636)
LEE'S SUMMIT MISSOURI
olsson
1301 BURLINGTON ST., STE. 100
NORTH KANSAS CITY, MO 64116
PHONE: 816.361.1177
CERT. OF AUTHORITY NO. 001592

23
24
25
26
27
28 RAMP 3
STA. 2+49.81
TYPE S-1312
29 SPAN= 81'-3"

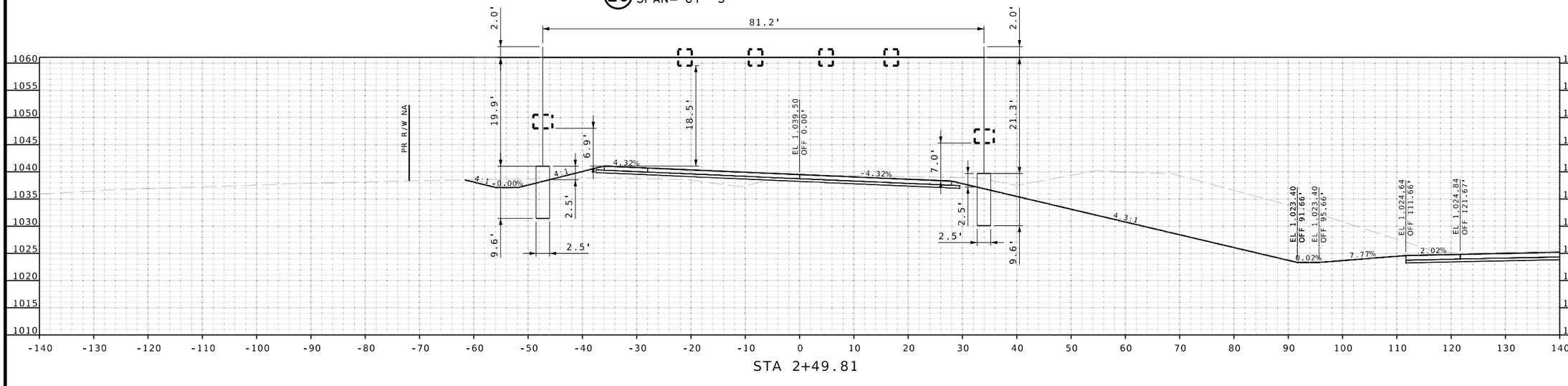

69 RAMP 3
STA. 3+80.10
144" X 48"
2-#1 WF STRUCTURE
STEEL POST
0.34 CY

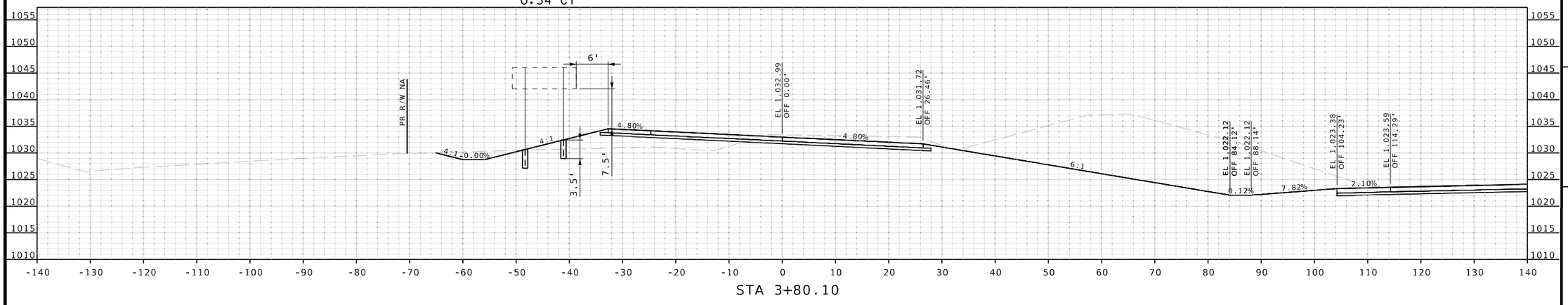

SIGNING PLAN
SHEET 19 OF 22

I F A SEAL IS PRESENT ON THIS SHEET IT HAS BEEN ELECTRONICALLY SEALED AND DATED.

STATE OF MISSOURI
JEREMY SCOTT STRETZ
NUMBER PE-2017023856
PROFESSIONAL ENGINEER
Jeremy Stretz 2025.02.28 15:58:44-06'00'

DATE PREPARED
2/28/2025

ROUTE	STATE
50/291	MO
DISTRICT	SHEET NO.
KC	244

COUNTY
JACKSON

JOB NO.
J4P3196

FEDERAL AID PROJ. NO.
STB-3001(009)

PROJECT NO.

BRIDGE NO.

DESCRIPTION	DATE

MISSOURI HIGHWAYS AND TRANSPORTATION COMMISSION
105 WEST CAPITOL
JEFFERSON CITY, MO 65102
1-888-ASK-MODOT (1-888-275-6636)

LEE'S SUMMIT MISSOURI

olsson
1301 BURLINGTON ST., STE. 100
NORTH KANSAS CITY, MO 64116
PHONE: 816.361.1177
CERT. OF AUTHORITY NO. 001592

(20) RTE. 291
STA. 176+57 LT.
84" X 96"
TYPE C2315-16
SIGN AREA 56 SF
POST LENGTH 23'
ARM LENGTH 16'
FH= 7'
FD= 3'
FB= 4'

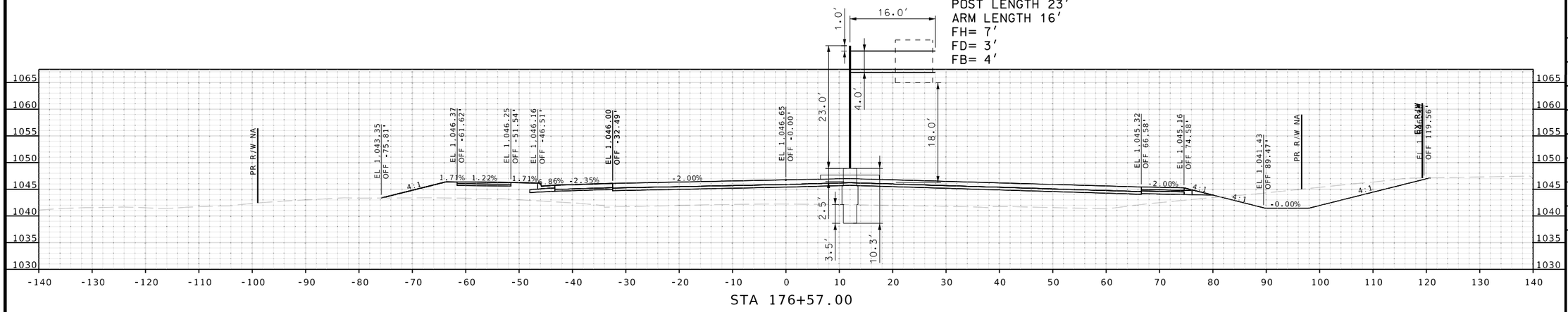

STA 176+57.00

(21) RTE. 291
STA. 176+54 RT.
132" X 108"
TYPE C2318-26
SIGN AREA 99 SF
POST LENGTH 25'
ARM LENGTH 26'
FH= 7'6"
FD= 3'6"
FB= 5'

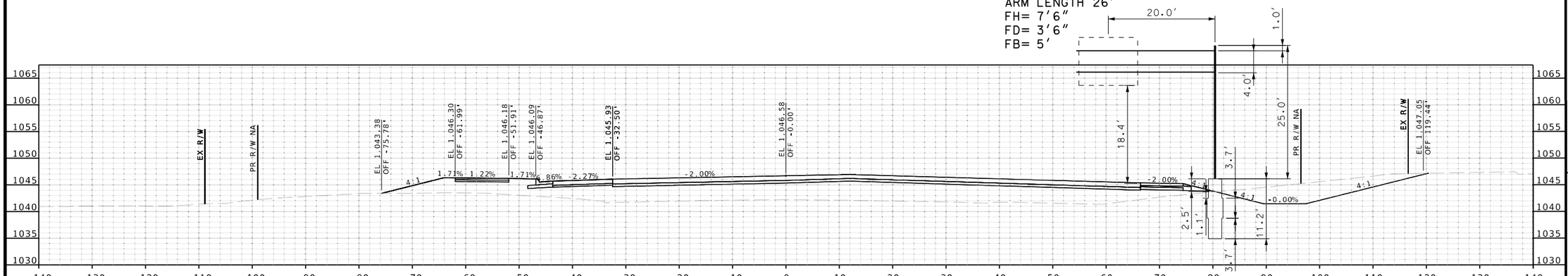

STA 176+54.00

PROFESSIONAL ENGINEER
STATE OF MISSOURI
JEREMY SCOTT STRETZ
NUMBER PE-2017023856
Jeremy Stretz 2025.02.28 15:58:57-06'00'

DATE PREPARED
2/28/2025

ROUTE	STATE
50/291	MO
DISTRICT	SHEET NO.
KC	245

COUNTY
JACKSON

JOB NO.
J4P3196

FED. AID PROJ. NO.
STB-3001(009)

PROJECT NO.

BRIDGE NO.

DESCRIPTION

DATE

IF A SEAL IS PRESENT ON THIS SHEET, IT HAS BEEN ELECTRONICALLY SEALED AND DATED.

MISSOURI HIGHWAYS AND TRANSPORTATION COMMISSION
105 WEST CAPITOL
JEFFERSON CITY, MO 65102
1-888-ASK-MODOT (1-888-275-6636)

LEE'S SUMMIT MISSOURI

olsson
1301 BURLINGTON ST., STE. 100
NORTH KANSAS CITY, MO 64116
PHONE: 816.361.1177
CERT. OF AUTHORITY NO. 001592

SIGNING PLAN
SHEET 20 OF 22

(33) RTE. 291
STA. 179+80.01 55′ LT.
120″ X 96″
54″ X 18″
2–#2 WF STRUCTURE
STEEL POST
0.54 CY CONCRETE

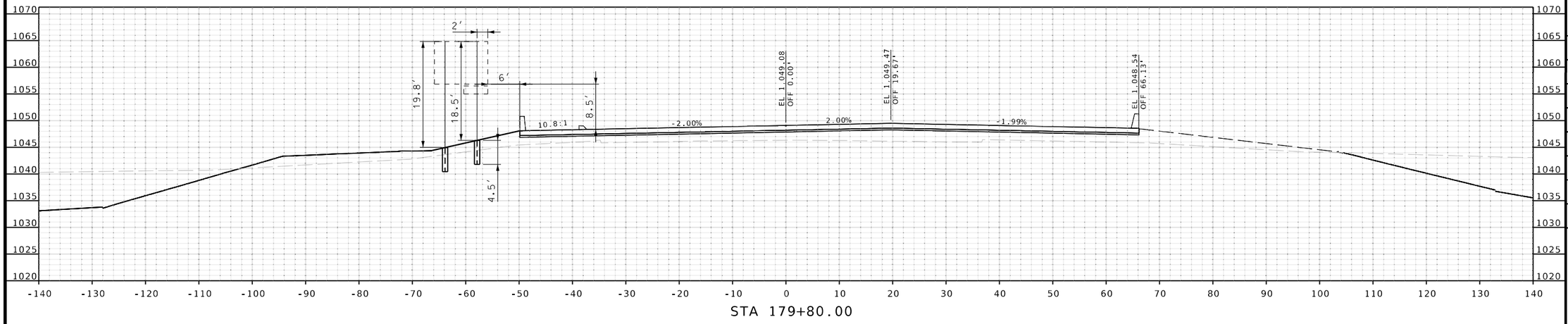

(39) RTE. 291
STA. 181+52.51 RT.
96″ X 84″
54″ X 18″
2–#2 WF STRUCTURE
STEEL POST
0.54 CY CONCRETE

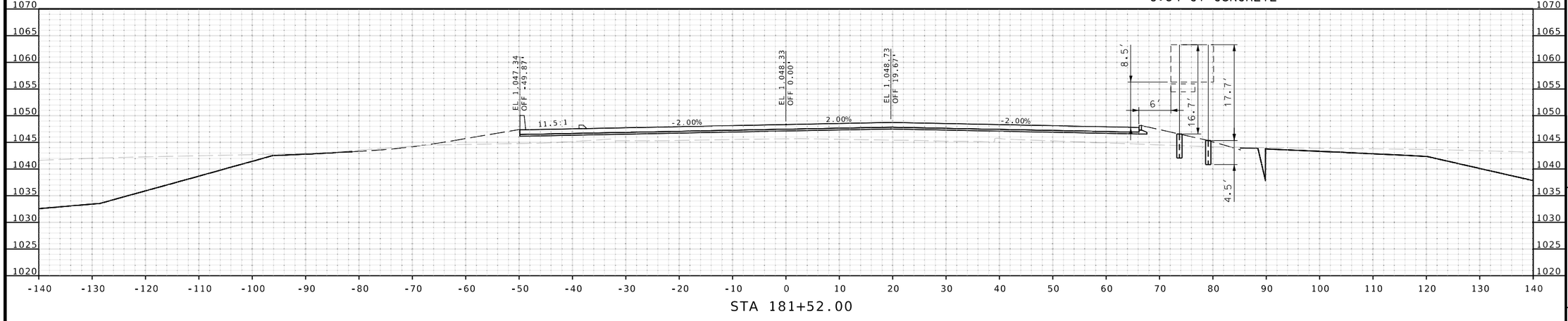

SIGNING PLAN
SHEET 21 OF 22

JEREMY SCOTT STRETZ
NUMBER PE-2017023856
PROFESSIONAL ENGINEER
STATE OF MISSOURI
Jeremy Stretz 2025.02.28 16:01:02-06'00'

DATE PREPARED 2/28/2025
ROUTE 50/291 | STATE MO
DISTRICT KC | SHEET NO. 246
COUNTY JACKSON
JOB NO. J4P3196
FEDERAL AID PROJ. NO. STB-3001(009)
PROJECT NO.
BRIDGE NO.

DESCRIPTION | DATE

IF A SEAL IS PRESENT ON THIS SHEET, IT HAS BEEN ELECTRONICALLY SEALED AND DATED.

MISSOURI HIGHWAYS AND TRANSPORTATION COMMISSION
105 WEST CAPITOL
JEFFERSON CITY, MO 65102
1-888-ASK-MODOT (1-888-275-6636)

LEE'S SUMMIT MISSOURI

olsson
1301 BURLINGTON ST., STE. 100
NORTH KANSAS CITY, MO 64116
PHONE: 816.361.1177
CERT. OF AUTHORITY NO. 001592

F:\2021\04501-05000\021-04786\40-Design\Microstation\J4P3196\plan_sheets\13 Signing\245-247_SN_20-22_J4P3196_110_RTE291.dgn 2:26:03 PM 2/28/2025

(52) RTE. 291
STA. 183+90.00
96" X 84"
(53) 192"X84"
192"X96"
(54) TYPE II POST
SIGN AREA 296 SF
POST LENGTH 22'-6", 22'-6"
ARM LENGTH 71'6"
PEDESTAL (2)= 4'-4" X 3'-0"
FOOTING (2)= 8'-0" X 16'-0"

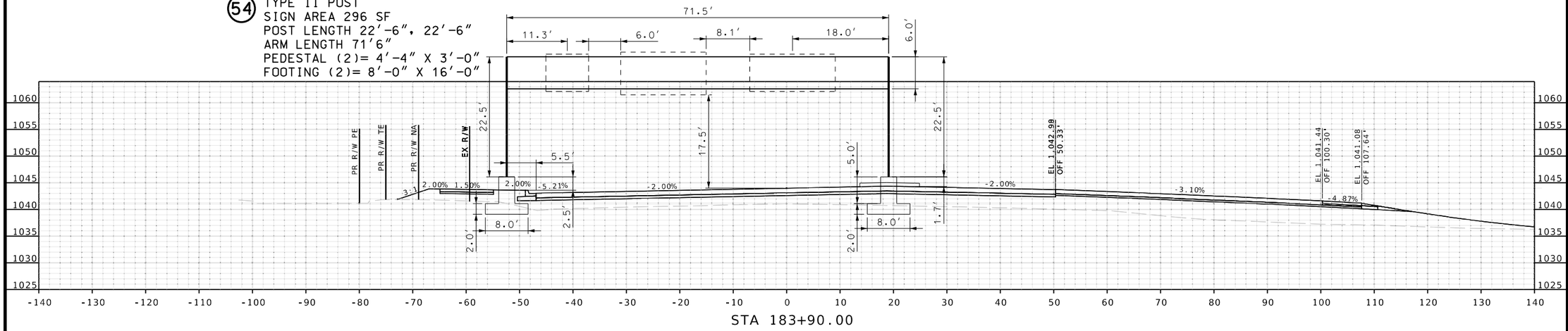

STA 183+90.00

SIGNING PLAN
SHEET 22 OF 22

I F A SEAL IS PRESENT ON THIS SHEET IT HAS BEEN ELECTRONICALLY SEALED AND DATED.

STATE OF MISSOURI
JEREMY SCOTT STRETZ
NUMBER PE-2017023856
PROFESSIONAL ENGINEER

Jeremy Stretz 2025.02.28 16:01:12-06'00'

DATE PREPARED
2/28/2025

ROUTE	STATE
50/291	MO
DISTRICT	SHEET NO.
KC	247

COUNTY
JACKSON

JOB NO.
J4P3196

FEDERAL AID PROJECT NO.
STB-3001(009)

PROJECT NO.

BRIDGE NO.

DESCRIPTION	DATE

MISSOURI HIGHWAYS AND TRANSPORTATION COMMISSION
105 WEST CAPITOL
JEFFERSON CITY, MO 65102
1-888-ASK-MODOT (1-888-275-6636)

LEE'S SUMMIT MISSOURI

olsson
1301 BURLINGTON ST., STE. 100
NORTH KANSAS CITY, MO 64116
PHONE: 816.361.1177
CERT. OF AUTHORITY NO. 001592

F:\2021\04501-05000\021-04786\40-Design\Microstation\J4P3196\plan_sheets\13 Signing\245-247_SN_20-22_J4P3196_I10_RTE291.dgn 2:26:06 PM 2/28/2025

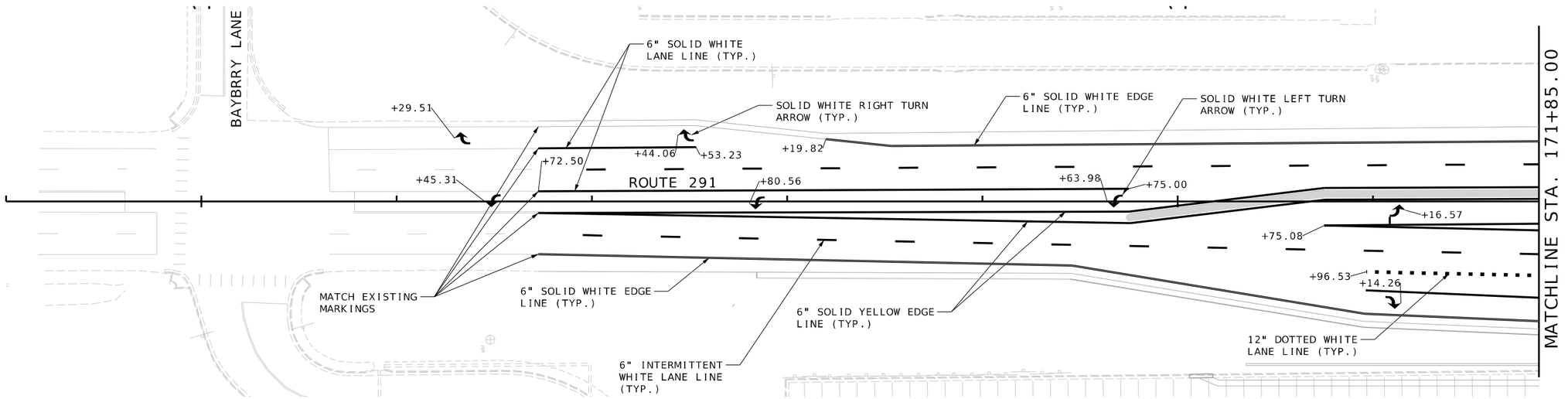

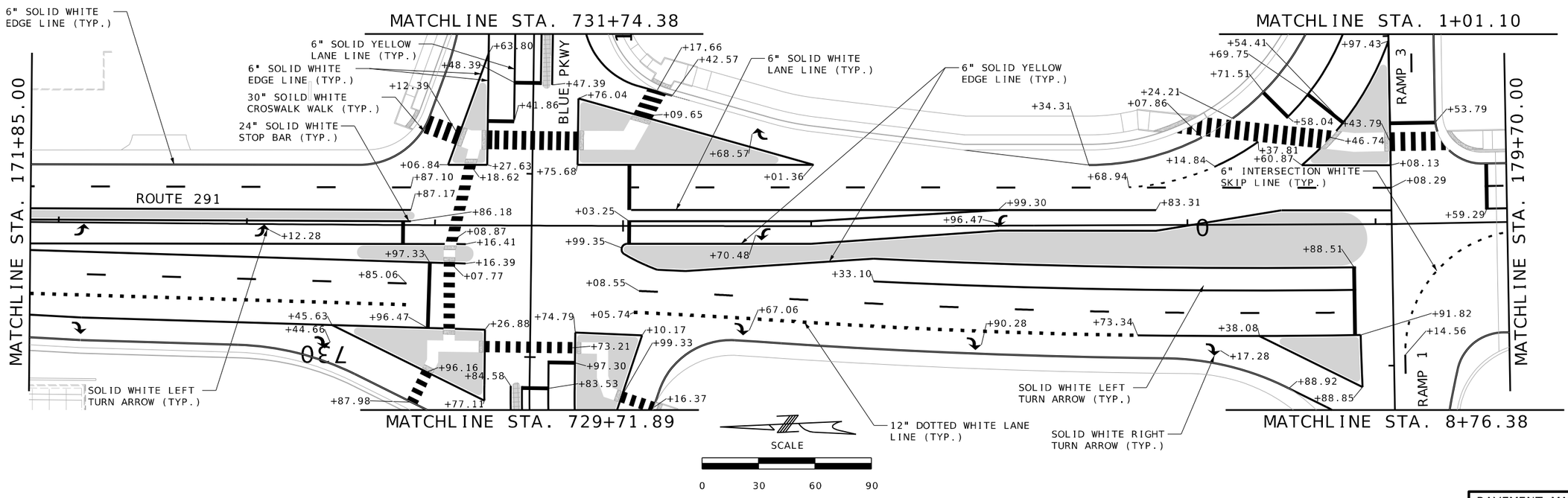

PAVEMENT MARKING
SHEET 1 OF 9

JEREMY SCOTT STRETZ
NUMBER PE-2017023856
STATE OF MISSOURI
PROFESSIONAL ENGINEER

Jeremy Stretz 2025.02.28 16:01:24-06'00'

DATE PREPARED
2/28/2025

ROUTE	STATE
50/291	MO
DISTRICT	SHEET NO.
KC	248

COUNTY
JACKSON

JOB NO.
J4P3196

FEDERAL AID PROJ. NO.
STB-3001(009)

PROJECT NO.

BRIDGE NO.

DESCRIPTION	DATE

I.E. A SEAL IS PRESENT ON THIS SHEET. IT HAS BEEN ELECTRONICALLY SEALED AND DATED.

MISSOURI HIGHWAYS AND TRANSPORTATION COMMISSION
105 WEST CAPITOL
JEFFERSON CITY, MO 65102
1-888-ASK-MODOT (1-888-275-6636)

LEE'S SUMMIT MISSOURI

olsson
1301 BURLINGTON ST., STE. 100
NORTH KANSAS CITY, MO 64116
PHONE: 816.361.1177
CERT. OF AUTHORITY NO. 001592

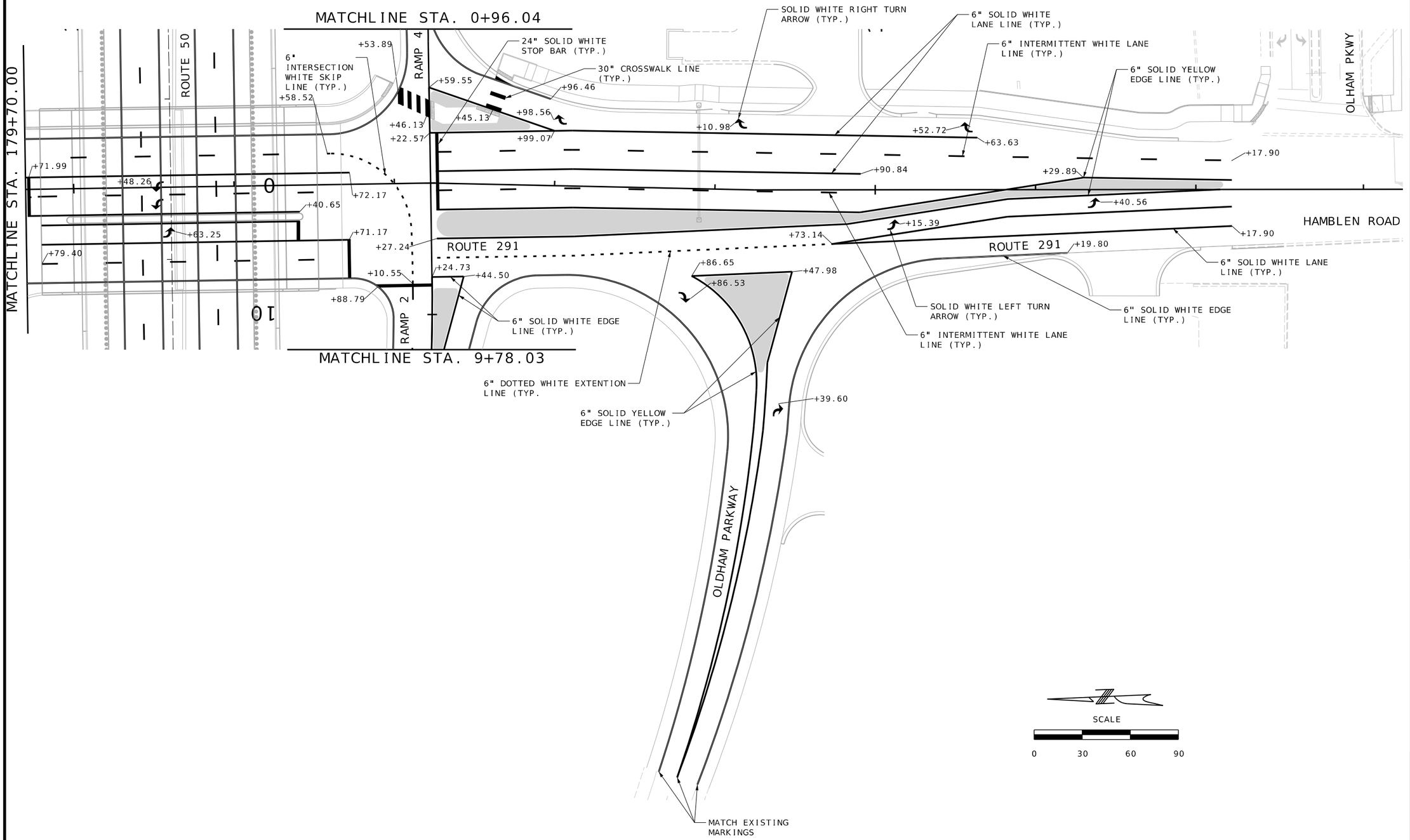

JEREMY SCOTT STRETZ
NUMBER PE-2017023856
PROFESSIONAL ENGINEER
STATE OF MISSOURI

Jeremy Stretz 2025.02.28 16:01:34-06'00'

I, A SEAL, IS PRESENT ON THIS SHEET. IT HAS BEEN ELECTRONICALLY SEALED AND DATED.

DATE PREPARED: 2/28/2025

ROUTE	STATE
50/291	MO
DISTRICT	SHEET NO.
KC	249

COUNTY: JACKSON

JOB NO.: J4P3196

FED. AID PROJ. NO.: STB-3001(009)

PROJECT NO.:

BRIDGE NO.:

DESCRIPTION	DATE

MISSOURI HIGHWAYS AND TRANSPORTATION COMMISSION

105 WEST CAPITOL
JEFFERSON CITY, MO 65102
1-888-ASK-MODOT (1-888-275-6636)

LEE'S SUMMIT MISSOURI

olsson
1301 BURLINGTON ST., STE. 100
NORTH KANSAS CITY, MO 64116
PHONE: 816.361.1177
CERT. OF AUTHORITY NO. 001592

PAVEMENT MARKING
SHEET 2 OF 9

F:\2021\04501-05000\021-04786\40-Design\Microstation\J4P3196\plan_sheets\14 Pavement Marking\249_PM_02_J4P3196_I30_RTE291.dgn 2:27:08 PM 2/28/2025

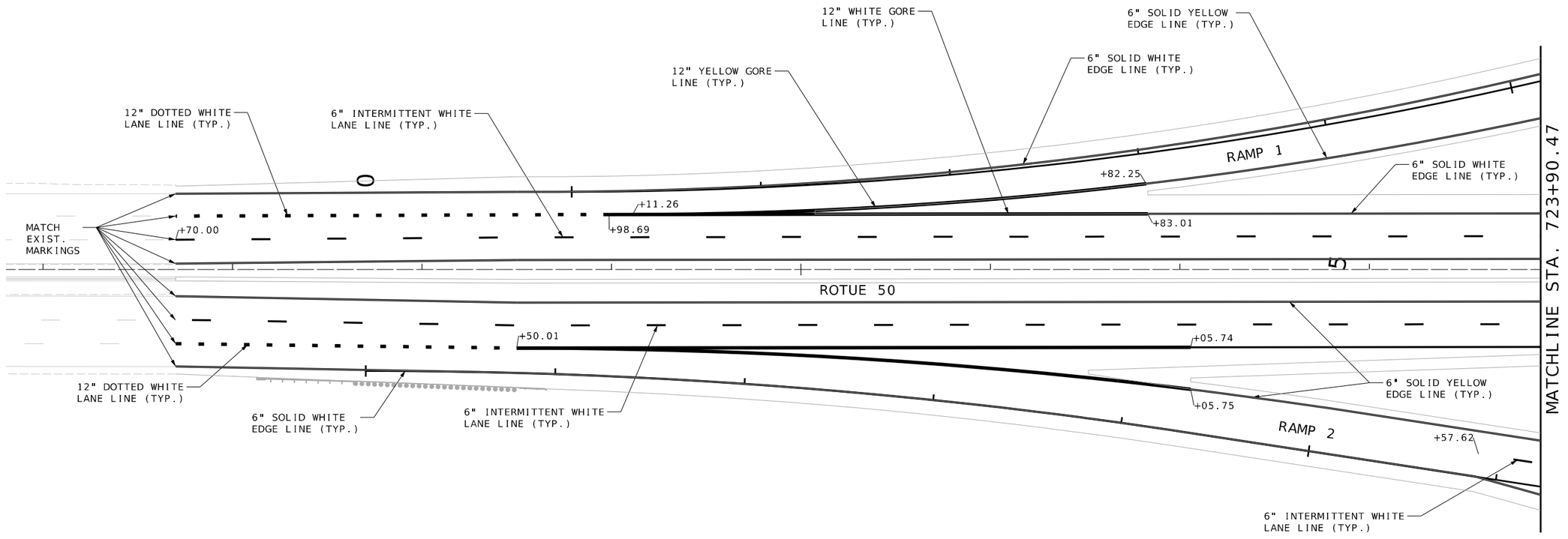

SCALE

0 30 60 90

PAVEMENT MARKING
SHEET 3 OF 9

JEREMY SCOTT STRETZ
NUMBER PE-2011023864
PROFESSIONAL ENGINEER
STATE OF MISSOURI

Jeremy Stretz 2025.02.28 16:01:52-06'00'

DATE PREPARED
2/28/2025

ROUTE	STATE
50/291	MO
DISTRICT	SHEET NO.
KC	250

COUNTY
JACKSON

JOB NO.
J4P3196

FED. AID PROJ. NO. (CONTRACT NO.)
STB-3001(009)

PROJECT NO.

BRIDGE NO.

DESCRIPTION	DATE

I.F. A SEAL, IS PRESENT ON THIS SHEET. IT HAS BEEN ELECTRONICALLY SEALED AND DATED.

MISSOURI HIGHWAYS AND TRANSPORTATION COMMISSION
105 WEST CAPITOL
JEFFERSON CITY, MO 65102
1-888-ASK-MODOT (1-888-275-6636)

LEE'S SUMMIT MISSOURI

olsson
1301 BURLINGTON ST., STE. 100
NORTH KANSAS CITY, MO 64116
PHONE: 816.361.1177
CERT. OF AUTHORITY NO. 001592

F:\2021\04501-05000\021-04786\40-Design\Microstation\J4P3196\plan_sheets\14 Pavement Marking\250_PM_03_J4P3196_I30_RTE 50 RAMPS.dgn 2:27:15 PM 2/28/2025

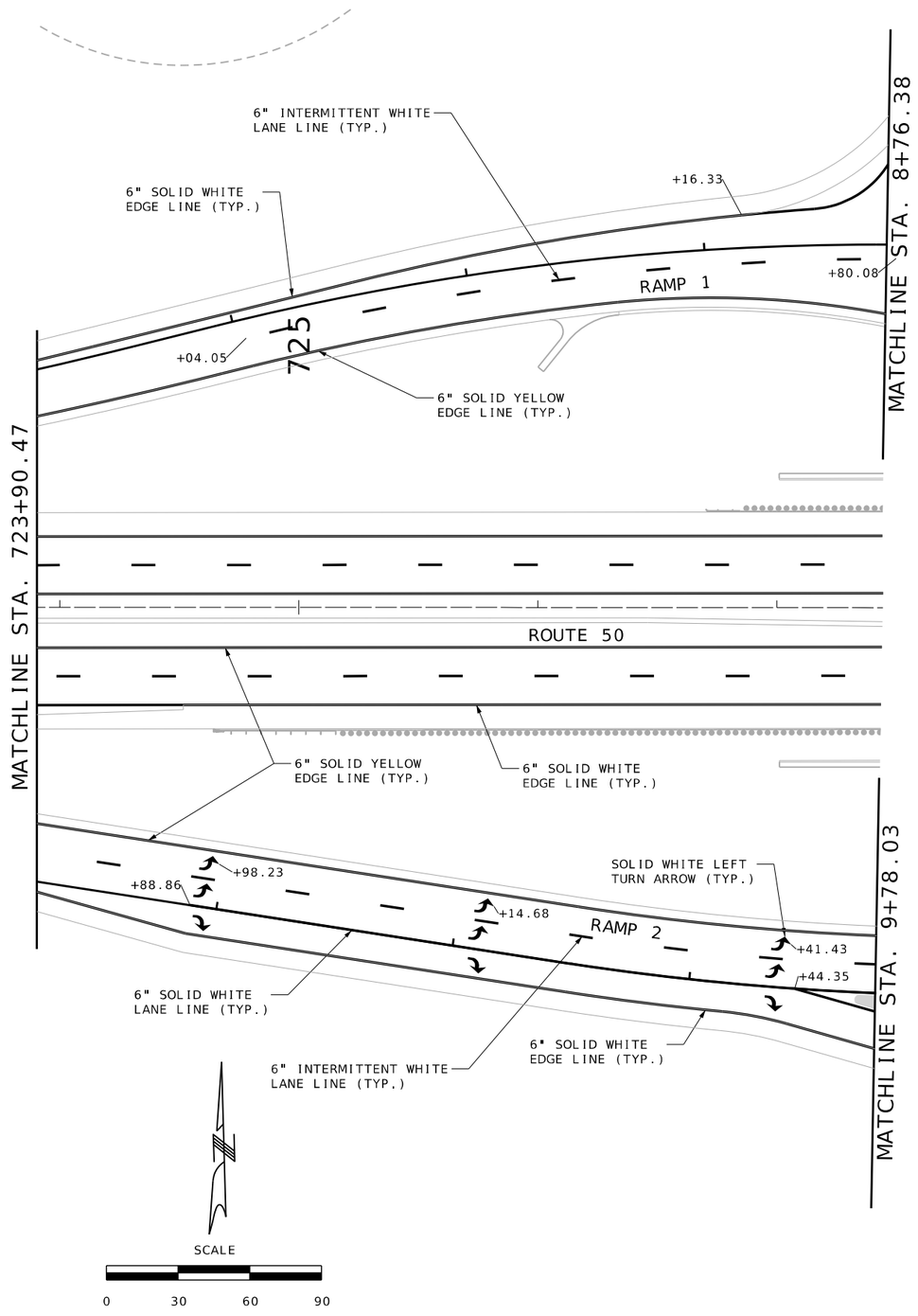

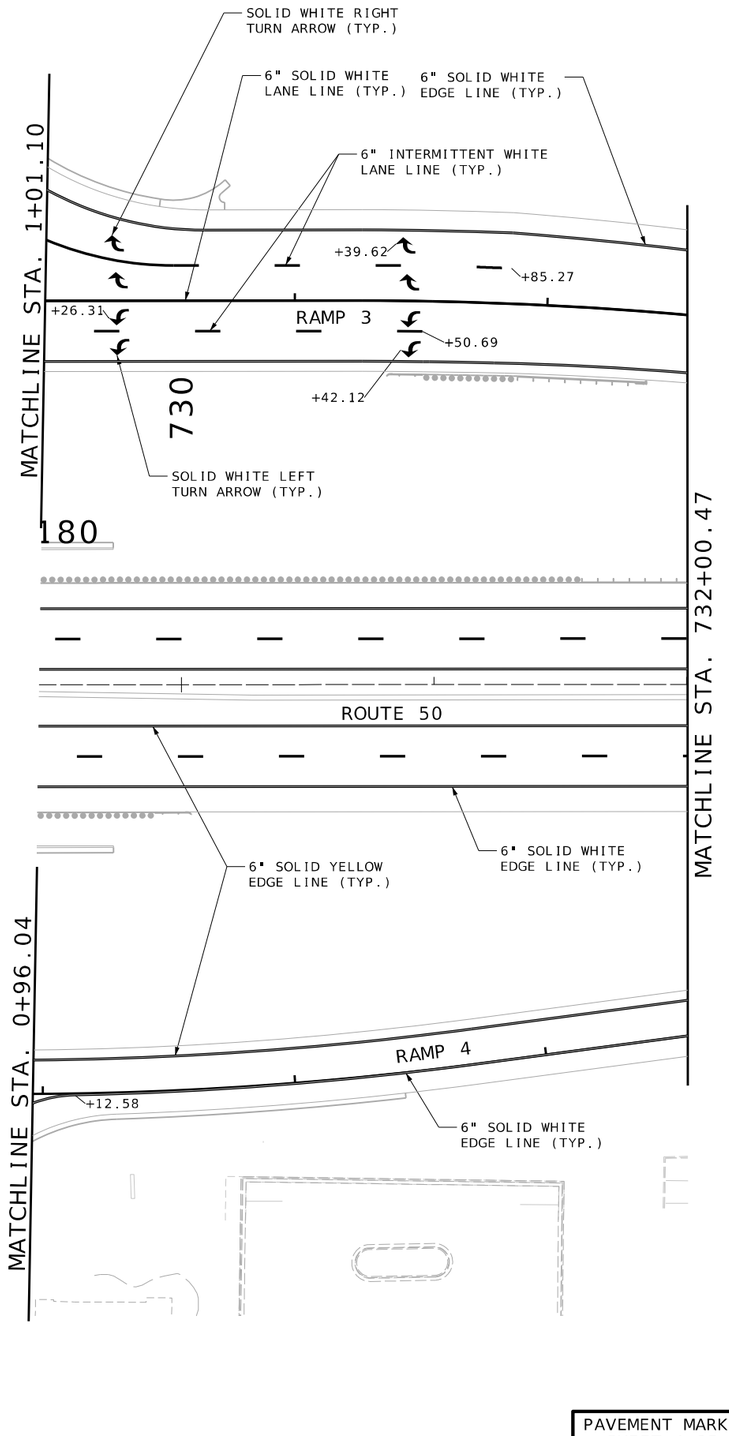

PAVEMENT MARKING
SHEET 4 OF 9

STATE OF MISSOURI
JEREMY SCOTT STRETZ
NUMBER PE-2017023856
PROFESSIONAL ENGINEER

Jeremy Stretz 2025.02.28 16:02:04-06'00'

DATE PREPARED
2/28/2025

ROUTE	STATE
50/291	MO
DISTRICT	SHEET NO.
KC	251

COUNTY
JACKSON

JOB NO.
J4P3196

FED. AID PROJ. NO.
STB-3001(009)

PROJECT NO.

BRIDGE NO.

DESCRIPTION	DATE

I.F.A. SEAL, JS. PRESENT ON THIS SHEET. IT HAS BEEN ELECTRONICALLY SEALED AND DATED.

MISSOURI HIGHWAYS AND TRANSPORTATION COMMISSION
105 WEST CAPITOL
JEFFERSON CITY, MO 65102
1-888-ASK-MODOT (1-888-275-6636)

LEE'S SUMMIT MISSOURI

olsson
1301 BURLINGTON ST., STE. 100
NORTH KANSAS CITY, MO 64116
PHONE: 816.361.1177
CERT. OF AUTHORITY NO. 001592

F:\2021\04501-05000\021-04786\40-Design\Microstation\J4P3196\plan_sheets\14 Pavement Marking\251_PM_04_J4P3196_I30_RTE 50 RAMPS.dgn 2:27:20 PM 2/28/2025

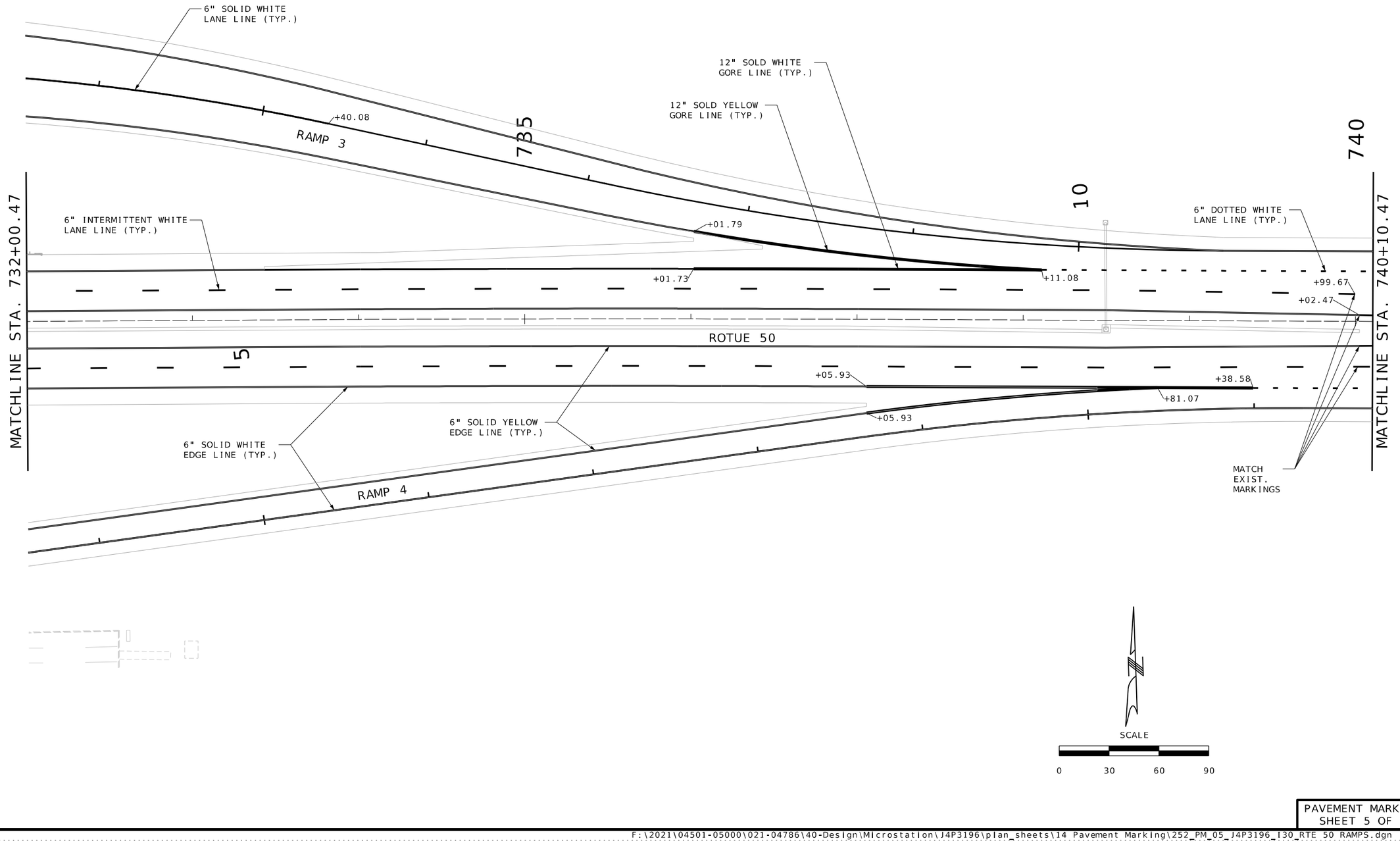

JEREMY SCOTT STRETZ
NUMBER PE-2011021864
STATE OF MISSOURI
PROFESSIONAL ENGINEER

Jeremy Stretz 2025.02.28 16:02:16-06'00'

DATE PREPARED
2/28/2025

ROUTE	STATE
50/291	MO
DISTRICT	SHEET NO.
KC	252

COUNTY
JACKSON

JOB NO.
J4P3196

FED. AID PROJ. NO.
STB-3001(009)

PROJECT NO.

BRIDGE NO.

DESCRIPTION	DATE

I.E. A SEAL, JS. PRESENT ON THIS SHEET. IT HAS BEEN ELECTRONICALLY SEALED AND DATED.

MISSOURI HIGHWAYS AND TRANSPORTATION COMMISSION
105 WEST CAPITOL
JEFFERSON CITY, MO 65102
1-888-ASK-MODOT (1-888-275-6636)

LEE'S SUMMIT MISSOURI

olsson
1301 BURLINGTON ST., STE. 100
NORTH KANSAS CITY, MO 64116
PHONE: 816.361.1177
CERT. OF AUTHORITY NO. 001592

PAVEMENT MARKING
SHEET 5 OF 9

745

STA. 740+10.47

MATCHLINE STA

6" DOTTED WHITE
LANE LINE (TYP.)

+20.37

+20.37

+30.00

ROTUE 50

+30.00

+88.77

+88.77

6" SOLID WHITE
EDGE LINE (TYP.)

6" SOLID YELLOW
EDGE LINE (TYP.)

SCALE

0 30 60 90

PAVEMENT MARKING
SHEET 6 OF 9

IF A SEAL IS PRESENT ON THIS SHEET, IT HAS BEEN ELECTRONICALLY SEALED AND DATED.

PROFESSIONAL ENGINEER
STATE OF MISSOURI
JEREMY SCOTT STRETZ
NUMBER PE-2011023864

Jeremy Stretz 2025.02.28 15:57:56-06'00'

DATE PREPARED
2/28/2025

ROUTE	STATE
50/291	MO
DISTRICT	SHEET NO.
KC	253

COUNTY
JACKSON

JOB NO.
J4P3196

FEDERAL AID PROJECT NO.
STB-3001(009)

PROJECT NO.

BRIDGE NO.

DESCRIPTION	DATE

MISSOURI HIGHWAYS AND TRANSPORTATION COMMISSION

105 WEST CAPITOL
JEFFERSON CITY, MO 65102
1-888-ASK-MODOT (1-888-275-6636)

LEE'S SUMMIT MISSOURI

olsson
1301 BURLINGTON ST., STE. 100
NORTH KANSAS CITY, MO 64116
PHONE: 816.361.1177
CERT. OF AUTHORITY NO. 001592

F:\2021\04501-05000\021-04786\40-Design\Microstation\J4P3196\plan_sheets\14 Pavement Marking\253_PM_06_J4P3196_I30_RTE 50 RAMPS.dgn 2:27:30 PM 2/28/2025

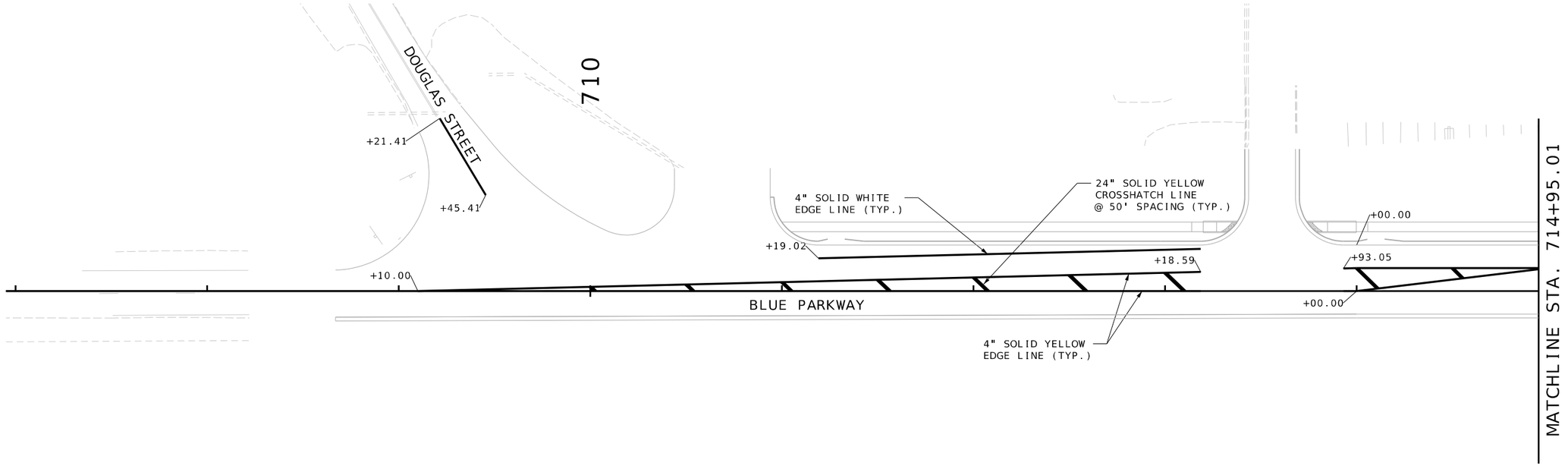

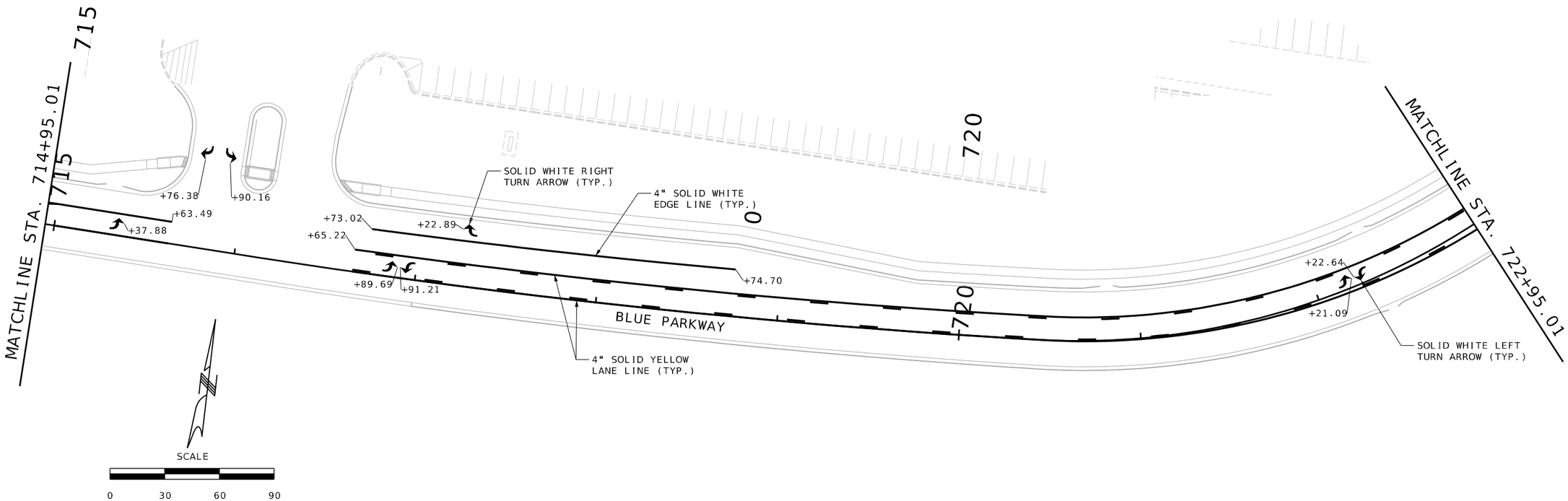

PAVEMENT MARKING
SHEET 7 OF 9

STATE OF MISSOURI
JEREMY SCOTT STRETZ
NUMBER PE-2011021864
PROFESSIONAL ENGINEER

Jeremy Stretz 2025.02.28 16:02:37-06'00'

DATE PREPARED
2/28/2025

ROUTE	STATE
50/291	MO
DISTRICT	SHEET NO.
KC	254

COUNTY
JACKSON

JOB NO.
J4P3196

FED. AID PROJ. NO.
STB-3001(009)

PROJECT NO.

BRIDGE NO.

DESCRIPTION	DATE

IF A SEAL IS PRESENT ON THIS SHEET, IT HAS BEEN ELECTRONICALLY SEALED AND DATED.

MISSOURI HIGHWAYS AND TRANSPORTATION COMMISSION
105 WEST CAPITOL
JEFFERSON CITY, MO 65102
1-888-ASK-MODOT (1-888-275-6636)

LEE'S SUMMIT MISSOURI

olsson
1301 BURLINGTON ST., STE. 100
NORTH KANSAS CITY, MO 64116
PHONE: 816.361.1177
CERT. OF AUTHORITY NO. 001592

F:\2021\04501-05000\021-04786\40-Design\Microstation\J4P3196\plan_sheets\14 Pavement Marking\254_PM_07_J4P3196_I30_BLUE PKWY.dgn 2:27:36 PM 2/28/2025

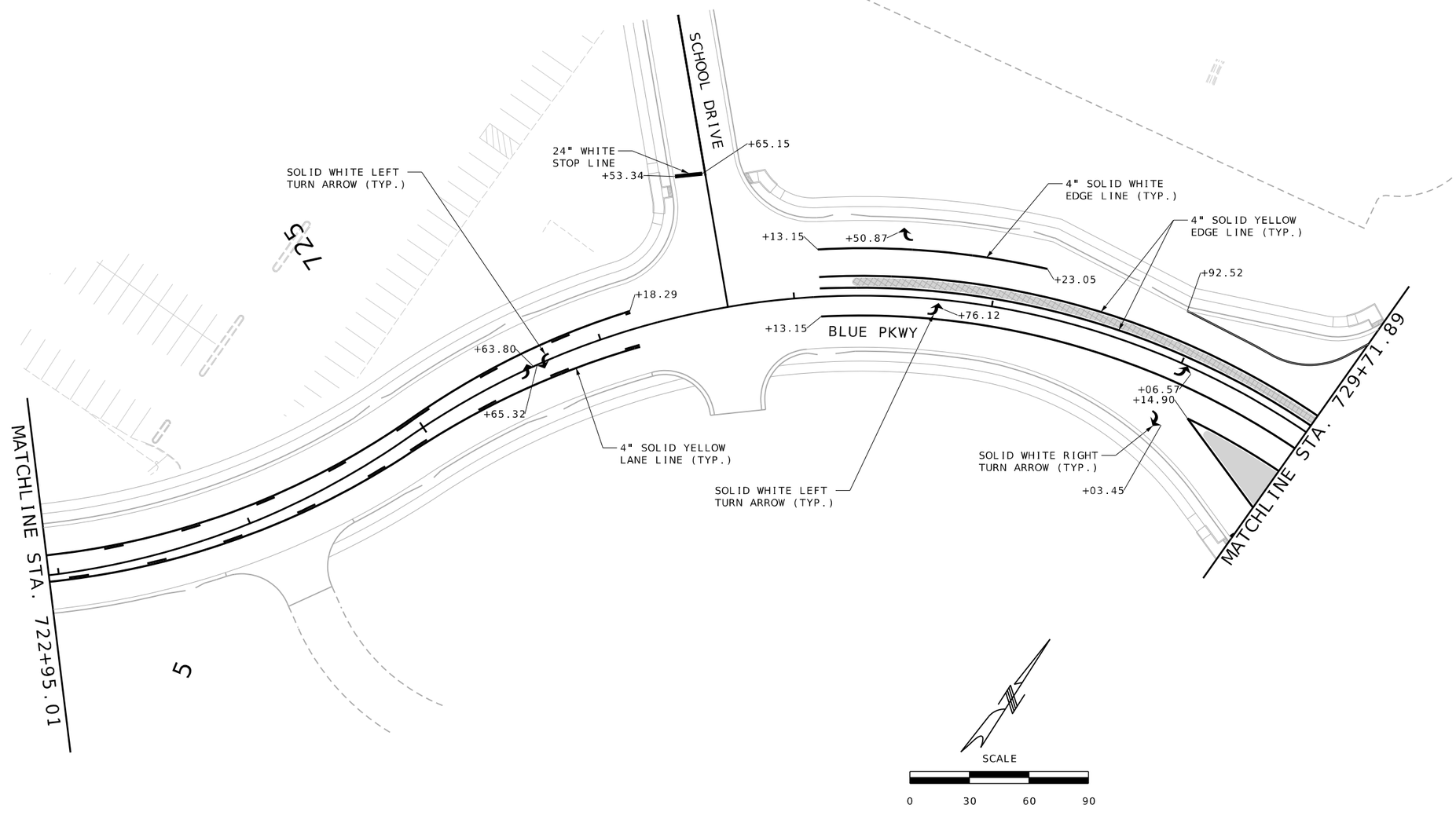

JEREMY SCOTT STRETZ
NUMBER PE-2017023856
PROFESSIONAL ENGINEER
STATE OF MISSOURI

Jeremy Stretz 2025.02.28 16:02:52-06'00'

I F A SEAL JS PRESENT ON THIS SHEET IT HAS BEEN ELECTRONICALLY SEALED AND DATED.

DATE PREPARED
2/28/2025

ROUTE	STATE
50/291	MO
DISTRICT	SHEET NO.
KC	255

COUNTY
JACKSON

JOB NO.
J4P3196

FEDERAL AID PROJECT NO.
STB-3001(009)

PROJECT NO.

BRIDGE NO.

DATE	DESCRIPTION

MISSOURI HIGHWAYS AND TRANSPORTATION COMMISSION

105 WEST CAPITOL
JEFFERSON CITY, MO 65102
1-888-ASK-MODOT (1-888-275-6636)

LEE'S SUMMIT MISSOURI

olsson
1301 BURLINGTON ST., STE. 100
NORTH KANSAS CITY, MO 64116
PHONE: 816.361.1177
CERT. OF AUTHORITY NO. 001592

PAVEMENT MARKING
SHEET 8 OF 9

F:\2021\04501-05000\021-04786\40-Design\Microstation\J4P3196\plan_sheets\14 Pavement Marking\255_PM_08_J4P3196_I30_BLUE_PKWY.dgn 2:27:42 PM 2/28/2025

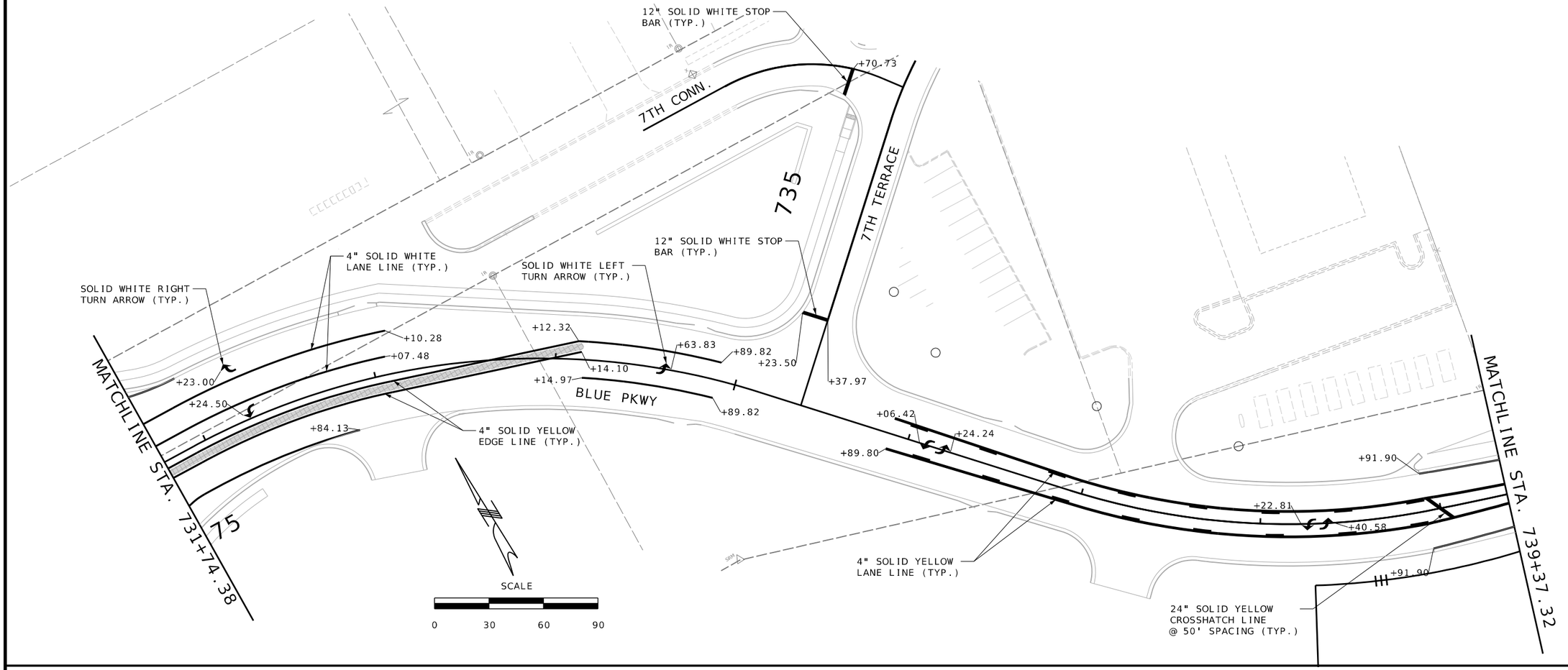

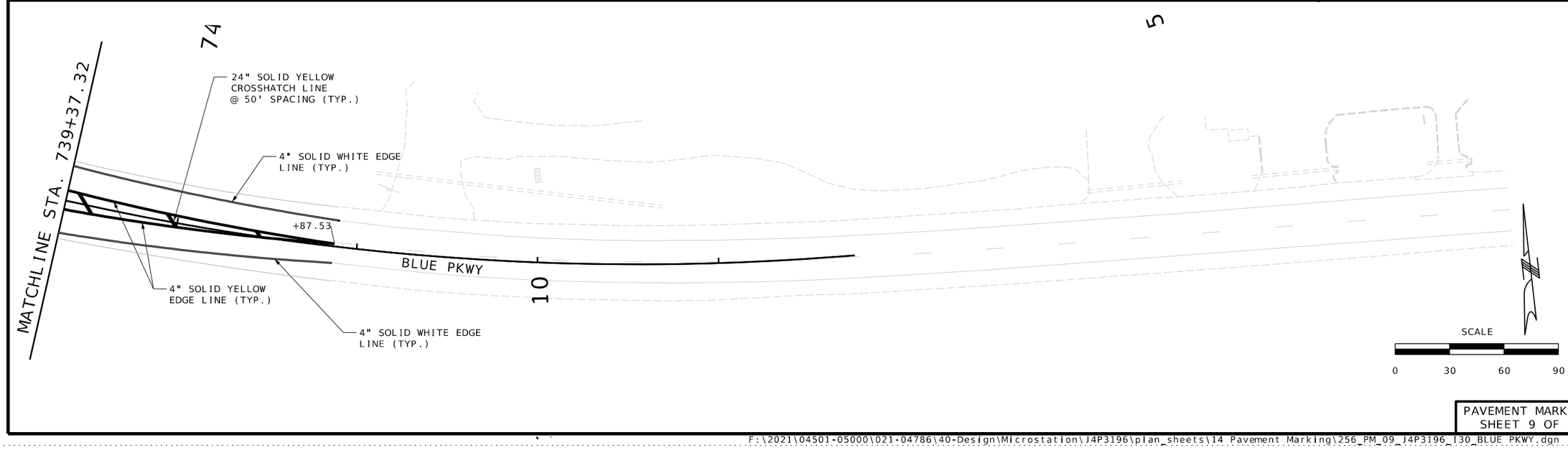

PAVEMENT MARKING
SHEET 9 OF 9

I.E. A SEAL, IS PRESENT ON THIS SHEET. IT HAS BEEN ELECTRONICALLY SEALED AND DATED.

STATE OF MISSOURI
JEREMY SCOTT STRETZ
NUMBER PE-2017023856
PROFESSIONAL ENGINEER

Jeremy Stretz 2025.02.28 16:02:26-06'00'

DATE PREPARED
2/28/2025

ROUTE	STATE
50/291	MO
DISTRICT	SHEET NO.
KC	256

COUNTY
JACKSON

JOB NO.
J4P3196

FEDERAL AID PROJECT NO.
STB-3001(009)

PROJECT NO.

BRIDGE NO.

DATE	DESCRIPTION

MISSOURI HIGHWAYS AND TRANSPORTATION COMMISSION
105 WEST CAPITOL
JEFFERSON CITY - MO 65102
1-888-ASK-MODOT (1-888-275-6636)

LEE'S SUMMIT MISSOURI

olsson
1301 BURLINGTON ST., STE. 100
NORTH KANSAS CITY, MO 64116
PHONE: 816.361.1177
CERT. OF AUTHORITY NO. 001592

F:\2021\04501-05000\021-04786\40-Design\Microstation\J4P3196\plan_sheets\14 Pavement Marking\256_PM_09_J4P3196_I30_BLUE PKWY.dgn 2:27:48 PM 2/28/2025

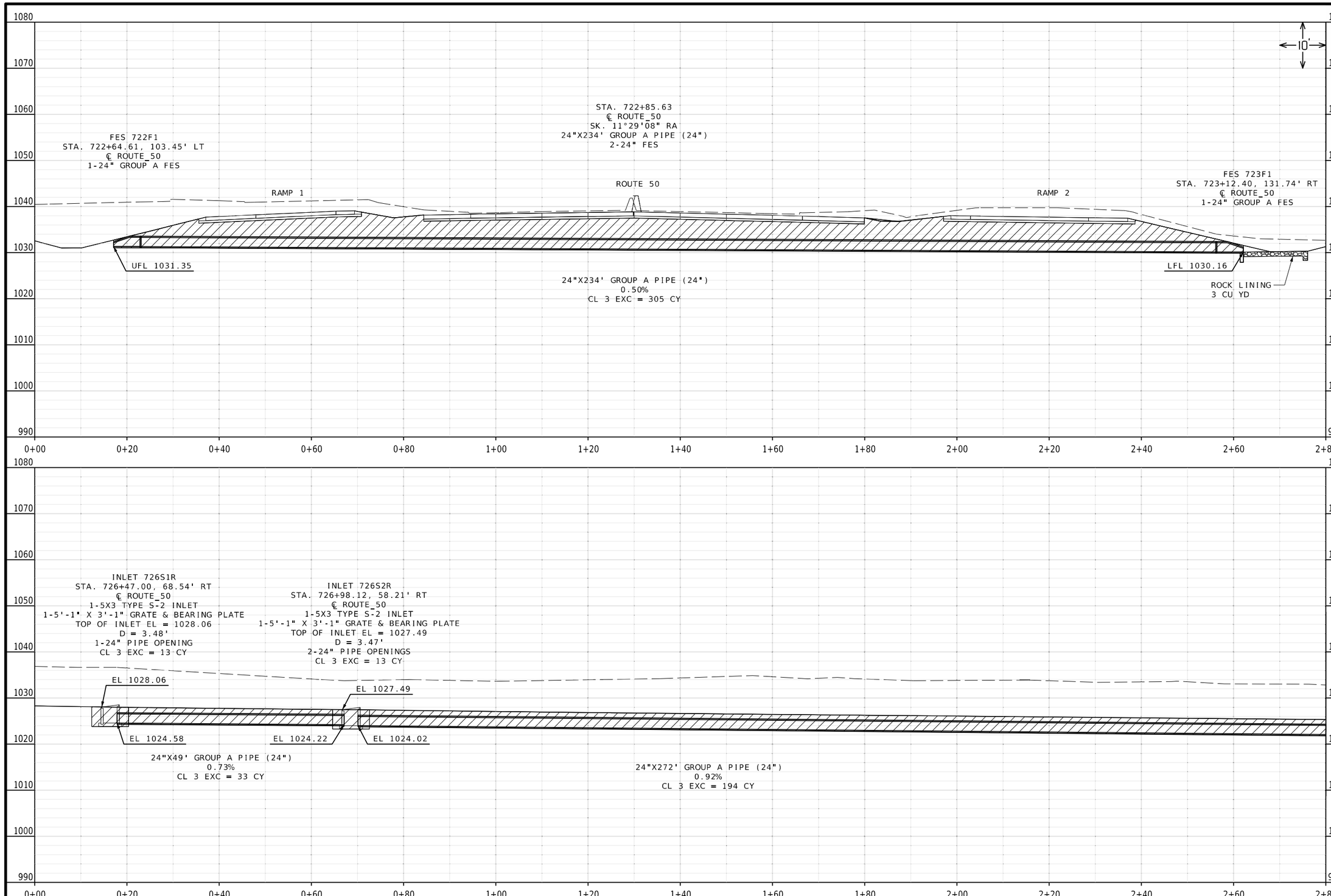

Reid Catt
2025.03.01 22:02:41-06'00'

REID BRENNEN CATT
NUMBER
PE-2010019516

REID BRENNEN CATT-ENGINEER
MO# PE-2010019516

DATE PREPARED
2/28/2025

ROUTE	STATE
50/291	MO
DISTRICT	SHEET NO.
KC	257

COUNTY
JACKSON

JOB NO.
J4P3196

FEDERAL PROJECT NO.
STB-3001(009)

PROJECT NO.

BRIDGE NO.

DESCRIPTION	DATE

IF A SEAL IS PRESENT ON THIS SHEET IT HAS BEEN ELECTRONICALLY SEALED AND DATED.

MISSOURI HIGHWAYS AND TRANSPORTATION COMMISSION

105 WEST CAPITOL
JEFFERSON CITY, MO 65102
1-888-ASK-MODOT (1-888-275-6636)

LEE'S SUMMIT MISSOURI

olsson
1301 BURLINGTON ST., STE. 100
NORTH KANSAS CITY, MO 64116
PHONE: 816.361.1177
CERT. OF AUTHORITY NO. 001592

CULVERT SECTION
SHEET 1 OF 21

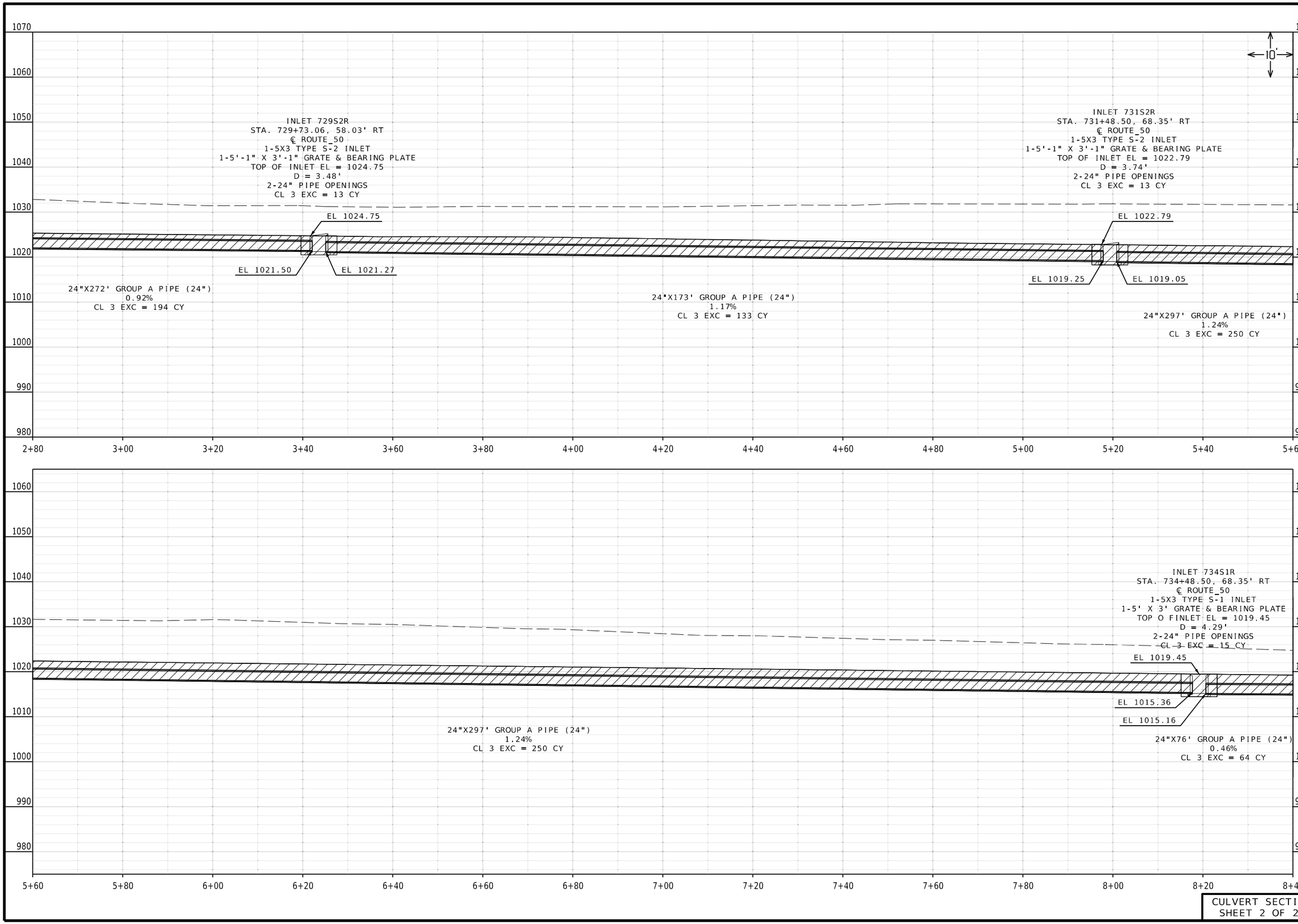

Reid Catt
2025.03.01 22:02:47-06'00'

REID BRENNEN CATT-ENGINEER
MO# PE-2010019516

DATE PREPARED
2/28/2025

ROUTE	STATE
50/291	MO
DISTRICT	SHEET NO.
KC	258

COUNTY
JACKSON

JOB NO.
J4P3196

FEDERAL PROJECT NO.
STB-3001(009)

PROJECT NO.

BRIDGE NO.

DESCRIPTION	DATE

IF A SEAL IS PRESENT ON THIS SHEET IT HAS BEEN ELECTRONICALLY SEALED AND DATED.

MISSOURI HIGHWAYS AND TRANSPORTATION COMMISSION

105 WEST CAPITOL
JEFFERSON CITY, MO 65102
1-888-ASK-MODOT (1-888-275-6636)

LEE'S SUMMIT MISSOURI

olsson
1301 BURLINGTON ST., STE. 100
NORTH KANSAS CITY, MO 64116
PHONE: 816.361.1177
CERT. OF AUTHORITY NO. 001592

CULVERT SECTION
SHEET 2 OF 21

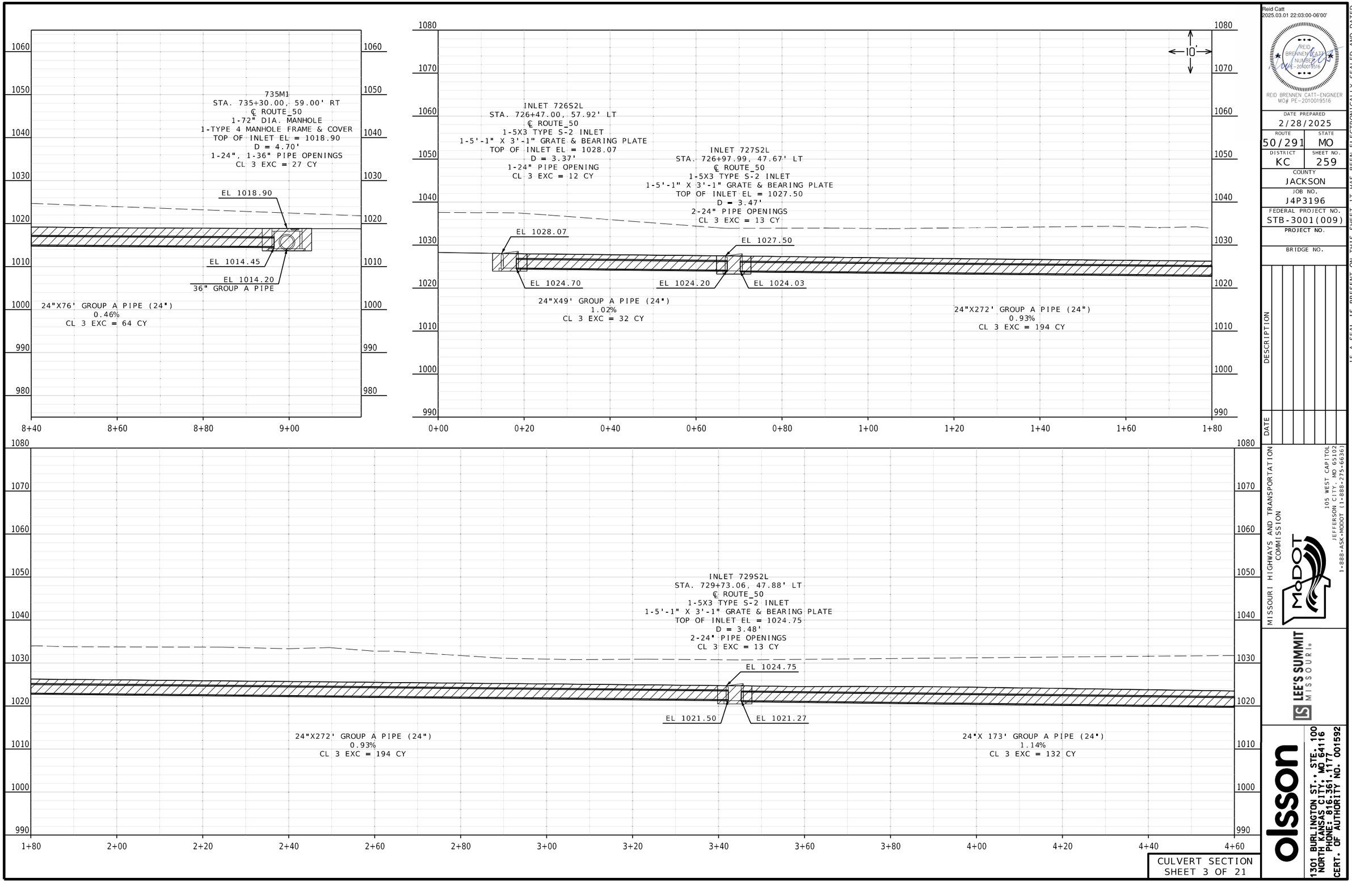

CULVERT SECTION
SHEET 3 OF 21

Reid Catt
2025.03.01 22:03:00-06'00'

REID BRENNEN CATT-ENGINEER
MO# PE-2010019516

DATE PREPARED
2/28/2025

ROUTE	STATE
50/291	MO
DISTRICT	SHEET NO.
KC	259

COUNTY
JACKSON

JOB NO.
J4P3196

FEDERAL PROJECT NO.
STB-3001(009)

PROJECT NO.

BRIDGE NO.

DESCRIPTION	DATE

IF A SEAL IS PRESENT ON THIS SHEET IT HAS BEEN ELECTRONICALLY SEALED AND DATED.

MISSOURI HIGHWAYS AND TRANSPORTATION COMMISSION
105 WEST CAPITOL
JEFFERSON CITY, MO 65102
1-888-ASK-MODOT (1-888-275-6636)

LEE'S SUMMIT MISSOURI

olsson
1301 BURLINGTON ST., STE. 100
NORTH KANSAS CITY, MO 64116
PHONE: 816.361.1177
CERT. OF AUTHORITY NO. 001592

INLET 731S2L
STA. 731+48.50, 58.15' LT
℄ ROUTE_50
1-5X3 TYPE S-2 INLET
1-5'-1" X 3'-1" GRATE & BEARING PLATE
TOP OF INLET EL = 1022.79
D = 3.72'
2-24" PIPE OPENINGS
CL 3 EXC = 13 CY

EL 1022.79
EL 1019.30
EL 1019.07

24"X173' GROUP A PIPE (24")
1.14%
CL 3 EXC = 132 CY

24"X297' GROUP A PIPE (24")
1.04%
CL 3 EXC = 232 CY

10'

734S1L
STA. 734+48.50, 58.15' LT
℄ ROUTE_50
1-5X3 TYPE S-1 INLET
1-5' X 3' GRATE & BEARING PLATE
TOP OF INLET EL = 1019.45
D = 3.68'
2-24" PIPE OPENINGS
CL 3 EXC = 13 CY

EL 1019.45
EL 1015.97
EL 1015.77

24"X297' GROUP A PIPE (24")
1.04%
CL 3 EXC = 232 CY

735M2
STA. 735+30.00, 56.00' LT
℄ ROUTE_50
1-72" DIA. MANHOLE
1-TYPE 4 MANHOLE FRAME & COVER
TOP OF INLET EL = 1019.07
D = 5.78'
2-24", 2-36"
PIPE OPENINGS
CL 3 EXC = 31 CY

NOTE: REMOVE TEMPORARY
PIPE AND PLUG HOLE.
NO DIRECT PAY.

EL 1019.07
EL 1014.20
EL 1014.32
24" TEMP. PIPE
EL 1013.51
36" GROUP A PIPE
EL 1013.29
36" GROUP A PIPE

24"X76' GROUP A PIPE (24")
2.07%
CL 3 EXC = 64 CY

740F1
STA. 740+77.67, 105.48' LT.
℄ ROUTE_50
1-36" GROUP A FES

740F2
STA. 740+95.95, 113.58' LT.
℄ ROUTE_50
1-36" GROUP A FES

ROCK LINING
9 CU YD

36"X16' GROUP A PIPE (36")
1.43%
CL 3 EXC = 31 CY

Reid Catt
2025.03.01 22:03:26-06'00'

REID BRENNEN CATT-ENGINEER
MO# PE-2010019516

DATE PREPARED
2/28/2025

ROUTE	STATE
50/291	MO
DISTRICT	SHEET NO.
KC	260

COUNTY
JACKSON

JOB NO.
J4P3196

FEDERAL PROJECT NO.
STB-3001(009)

PROJECT NO.

BRIDGE NO.

IF A SEAL IS PRESENT ON THIS SHEET IT HAS BEEN ELECTRONICALLY SEALED AND DATED.

DESCRIPTION | DATE

MISSOURI HIGHWAYS AND TRANSPORTATION COMMISSION
105 WEST CAPITOL
JEFFERSON CITY, MO 65102
1-888-ASK-MODOT (1-888-275-6636)

LEE'S SUMMIT MISSOURI

olsson
1301 BURLINGTON ST., STE. 100
NORTH KANSAS CITY, MO 64116
PHONE: 816.361.1177
CERT. OF AUTHORITY NO. 001592

CULVERT SECTION
SHEET 4 OF 21

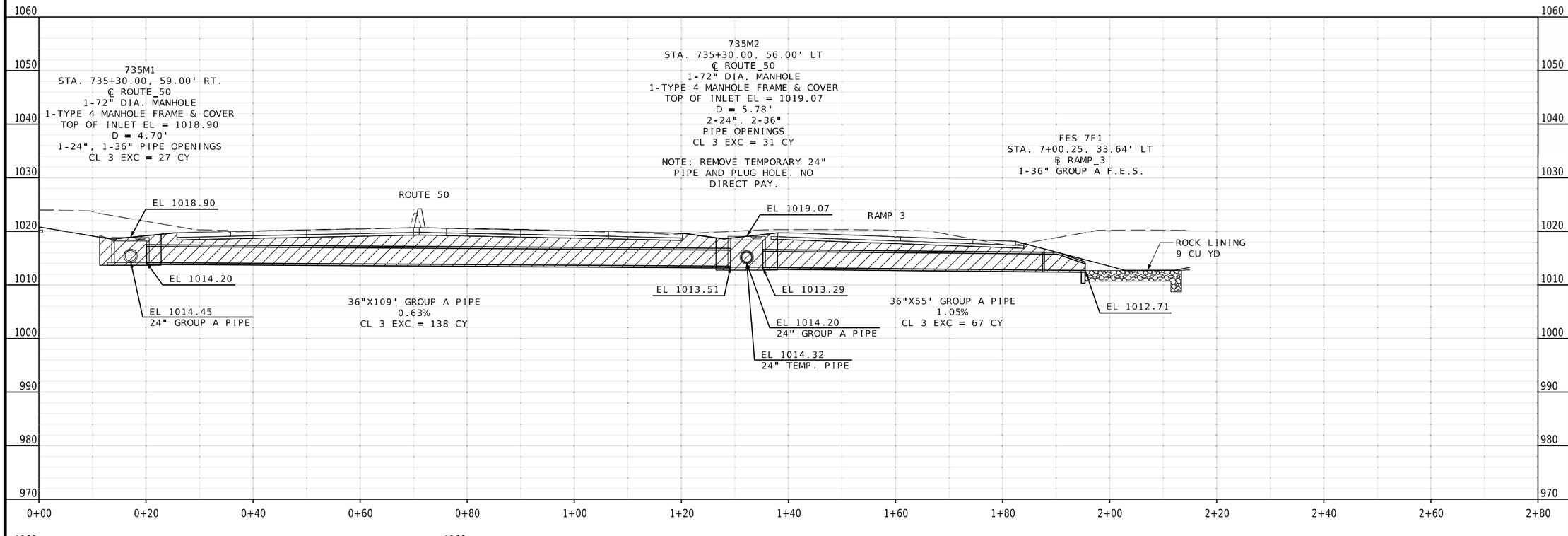

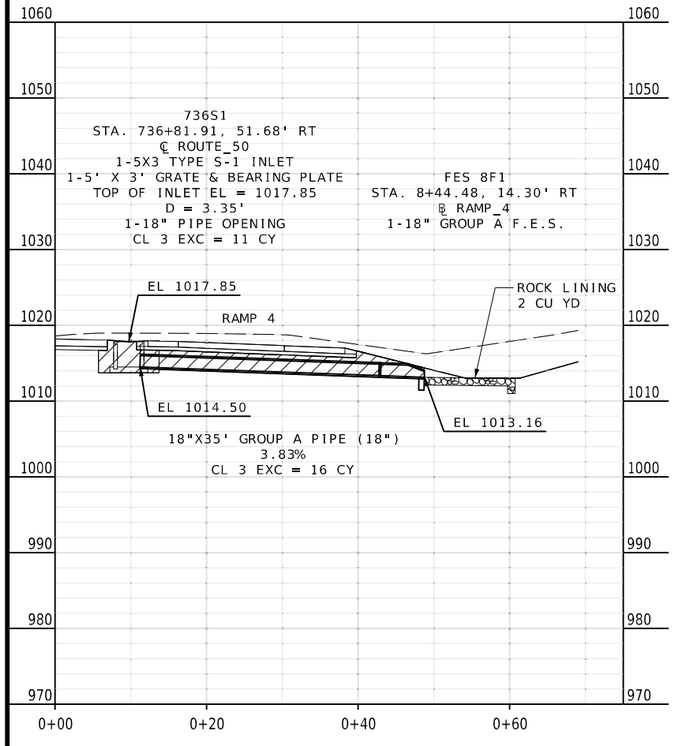

CULVERT SECTION
SHEET 5 OF 21

Reid Catt
2025.03.01 22:03:41-06'00'

REID BRENNEN CATT-ENGINEER
MO# PE-2010019516

DATE PREPARED
2/28/2025

ROUTE	STATE
50/291	MO
DISTRICT	SHEET NO.
KC	261

COUNTY
JACKSON

JOB NO.
J4P3196

FEDERAL PROJECT NO.
STB-3001(009)

PROJECT NO.

BRIDGE NO.

DESCRIPTION	DATE

IF A SEAL IS PRESENT ON THIS SHEET IT HAS BEEN ELECTRONICALLY SEALED AND DATED.

MISSOURI HIGHWAYS AND TRANSPORTATION COMMISSION
105 WEST CAPITOL
JEFFERSON CITY, MO 65102
1-888-ASK-MODOT (1-888-275-6636)

LEE'S SUMMIT MISSOURI

olsson
1301 BURLINGTON ST., STE. 100
NORTH KANSAS CITY, MO 64116
PHONE: 816.361.1177
CERT. OF AUTHORITY NO. 001592

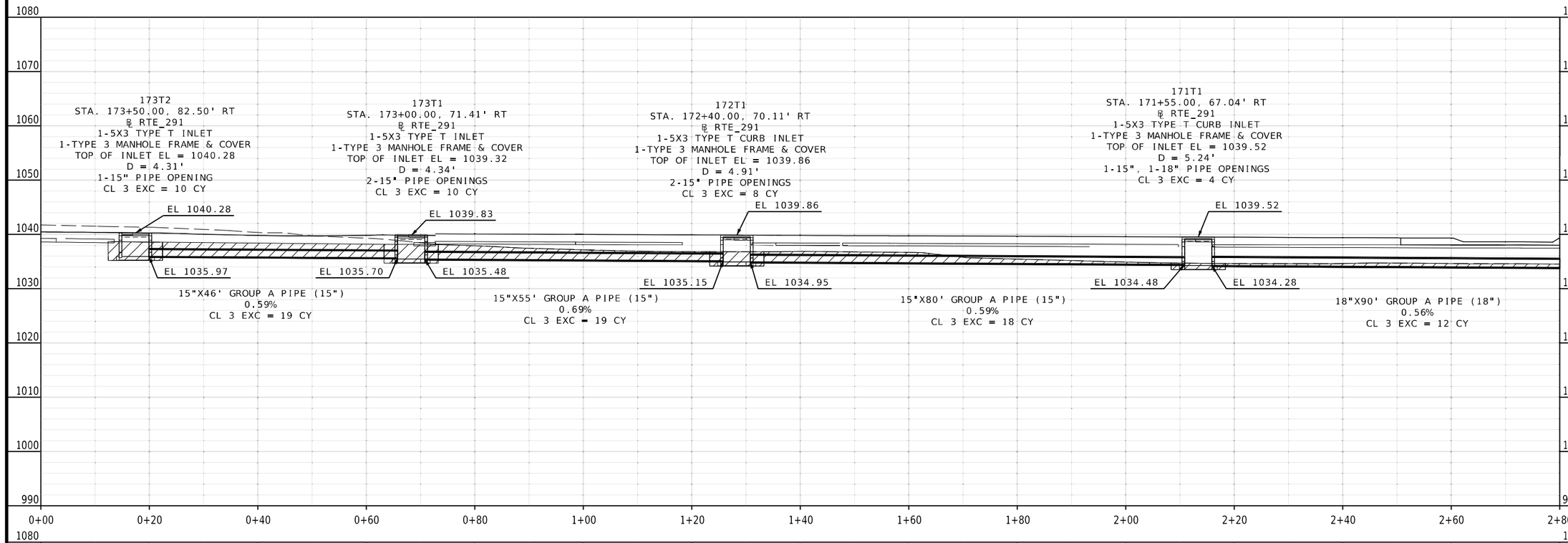

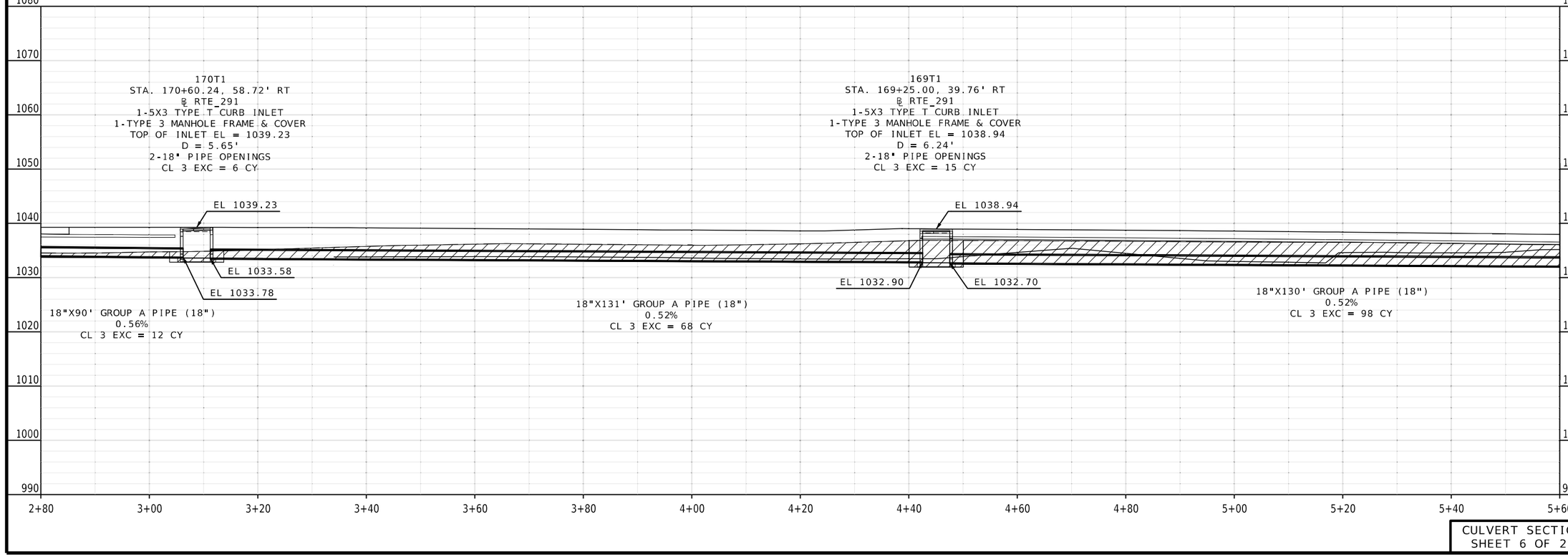

CULVERT SECTION
SHEET 6 OF 21

Reid Catt
2025.03.01 22:03:08-06'00'

REID BRENNEN CATT-ENGINEER
MO# PE-2010019516

DATE PREPARED
2/28/2025

ROUTE	STATE
50/291	MO
DISTRICT	SHEET NO.
KC	262

COUNTY
JACKSON

JOB NO.
J4P3196

FEDERAL PROJECT NO.
STB-3001(009)

PROJECT NO.

BRIDGE NO.

DESCRIPTION	DATE

IF A SEAL IS PRESENT ON THIS SHEET IT HAS BEEN ELECTRONICALLY SEALED AND DATED.

MISSOURI HIGHWAYS AND TRANSPORTATION COMMISSION

105 WEST CAPITOL
JEFFERSON CITY, MO 65102
1-888-ASK-MODOT (1-888-275-6636)

LEE'S SUMMIT MISSOURI

olsson
1301 BURLINGTON ST., STE. 100
NORTH KANSAS CITY, MO 64116
PHONE: 816.361.1177
CERT. OF AUTHORITY NO. 001592

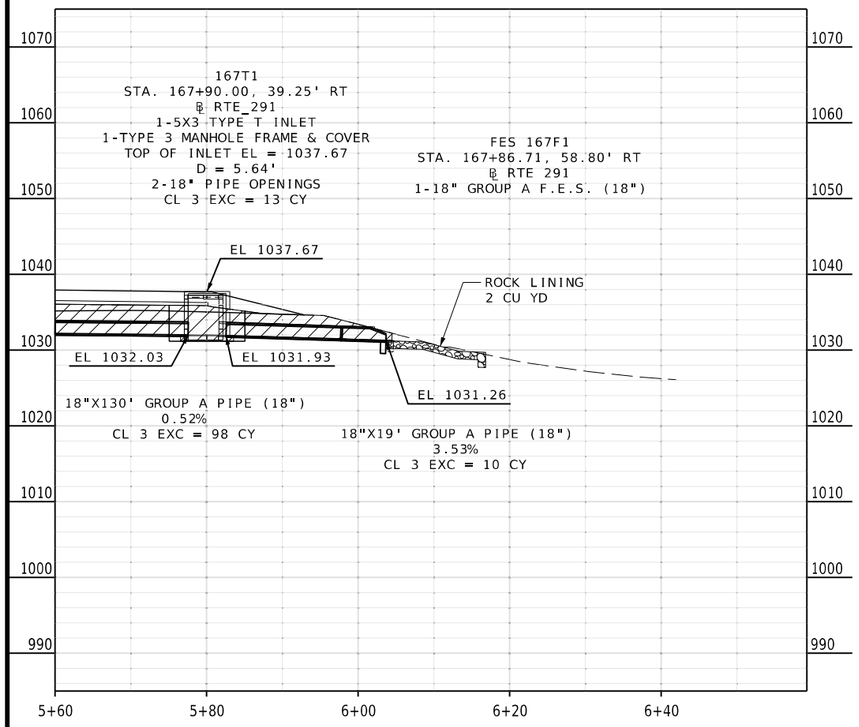

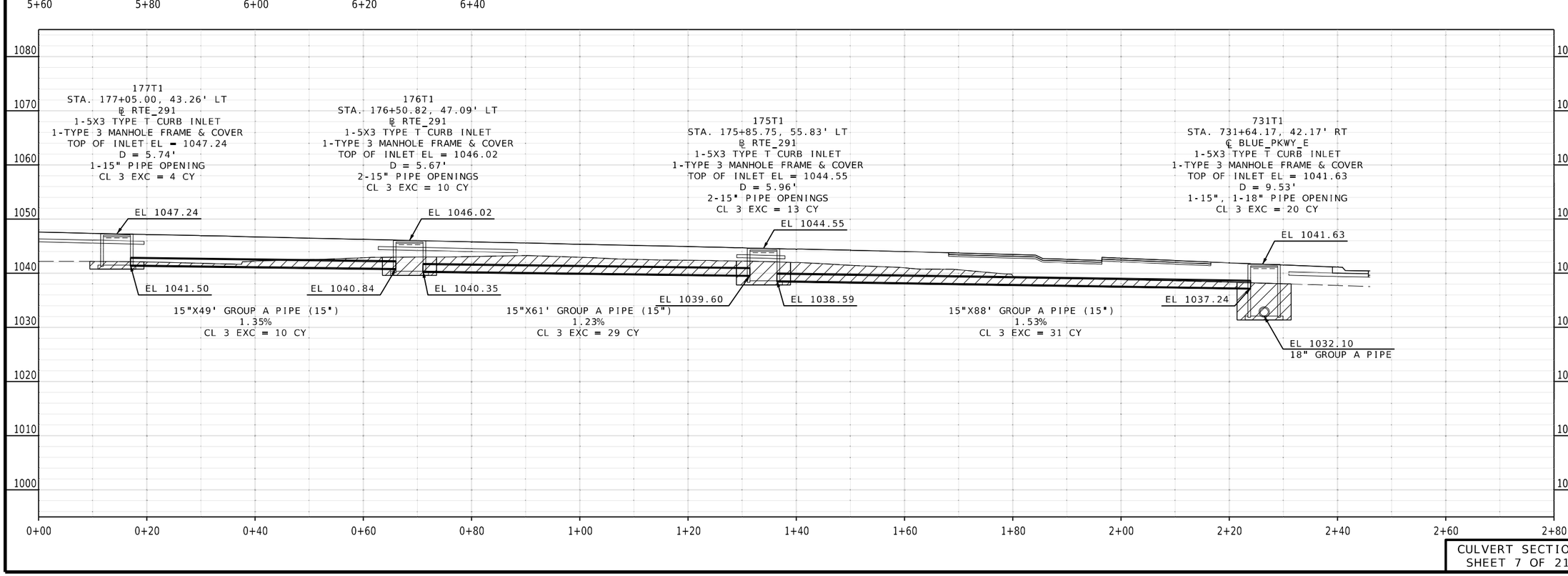

CULVERT SECTION
SHEET 7 OF 21

Reid Catt
2025.03.01 22:03:14-06'00'

REID BRENNEN CATT
NUMBER
PE-2010019516

REID BRENNEN CATT-ENGINEER
MO# PE-2010019516

DATE PREPARED
2/28/2025

ROUTE	STATE
50/291	MO
DISTRICT	SHEET NO.
KC	263

COUNTY
JACKSON

JOB NO.
J4P3196

FEDERAL PROJECT NO.
STB-3001(009)

PROJECT NO.

BRIDGE NO.

DESCRIPTION	DATE

IF A SEAL IS PRESENT ON THIS SHEET IT HAS BEEN ELECTRONICALLY SEALED AND DATED.

MISSOURI HIGHWAYS AND TRANSPORTATION COMMISSION

105 WEST CAPITOL
JEFFERSON CITY, MO 65102
1-888-ASK-MODOT (1-888-275-6636)

LEE'S SUMMIT MISSOURI

olsson
1301 BURLINGTON ST., STE. 100
NORTH KANSAS CITY, MO 64116
PHONE: 816.361.1177
CERT. OF AUTHORITY NO. 001592

184LS1
STA. 184+00.00, 50.44' LT
℄ RTE_291
1-4X4 TYPE LS CURB INLET
TOP OF INLET EL.= 1043.24
D= 4.94'
1-15" OPENING
CL 3 EXC. = 11 CY

EL 1043.24

EL 1038.30

15"X108' GROUP A PIPE (15")
1.89%
CL 3 EXC. = 54 CY

185LS1
STA. 185+29.82, 48.59' LT
℄ RTE_291
1-6X4 TYPE LS CURB INLET
TOP OF INLET EL.= 1039.81
D= 3.76'
2-15" OPENINGS
CL 3 EXC. = 18 CY

EL 1039.81

EL 1036.25

EL 1036.05

15"X180' GROUP A PIPE (15")
2.53%
CL 3 EXC. = 137 CY

1080 1070 1060 1050 1040 1030 1020 1010 1000 990

0+00 0+20 0+40 0+60 0+80 1+00 1+20 1+40 1+60 1+80 2+00 2+20 2+40 2+60

EXISTING INLET
STA. 187+00.06, 34.77' LT
℄ RTE 291

NOTE: CONNECT TO
EXISTING INLET,
NO DIRECT PAY

15"X180' GROUP A PIPE (15")
2.53%
CL 3 EXC. = 137 CY

EL 1031.49 (FIELD VERIFY)

729F1
STA. 729+84.45, 68.21' RT
℄ ROUTE_50
1-15" GROUP A FES

ROCK LINING
2 CU YD

EL 1024.59

EL 1024.75

15"X95'
GROUP A PIPE (15")
27.28%
CL 3 EXC. = 91 CY

181S1
STA. 181+60.35, 50.56' LT
℄ RTE_291
1-3X3 TYPE S-1 INLET
1-3' X 3' GRATE & BEARING PLATE
TOP OF INLET EL.= 1047.08
D= 5.03'
2-15" OPENINGS
CL 3 EXC = 8 CY

EL 1047.46

EL 1047.08

EL 1041.98

EL 1042.05

EL 1042.15

EL 1046.43

181TD
STA. 181+60.48, 38.81' LT
℄ RTE_291
1-2'x10' TRENCH DRAIN
TOP OF INLET EL.= 1047.59
D= 2.00'
1-15" OPENING
CL 3 EXC = 0 CY

EL 1047.59

EL 1047.65

EL 1042.39

EL 1045.49

EL 1042.29

EL 1045.59

15"X14'
GROUP A PIPE (15")
1.00%
CL 3 EXC. = 4 CY

181DB1
STA. 181+60.48, 33.33' LT
℄ RTE_291
1-4X2 DRAIN BASIN
TOP OF INLET EL.= 1047.65
D= 5.36'
1-12", 2-15" OPENINGS
CL 3 EXC = 9 CY

15"X3'
GROUP A PIPE (15")
4.00%

ROUTE 291

15"X94'
GROUP A PIPE (15")
1.00%
CL 3 EXC = 40 CY

181DB2
STA. 181+60.48, 60.67' RT
℄ RTE_291
1-4X2 DRAIN BASIN
TOP OF INLET EL.= 1047.87
D= 4.54'
1-15" OPENING
CL 3 EXC = 4 CY

EL 1047.87

EL 1043.33

1080 1070 1060 1050 1040 1030 1020 1010 1000 990

2+80 3+00 3+20 0+40 0+60 0+80 1+00 1+20 1+40 1+60 1+80 2+00 2+20 2+40

CULVERT SECTION
SHEET 8 OF 21

Reid Catt
2025.03.01 22:03:20-06'00'

REID BRENNEN CATT-ENGINEER
MO# PE-2010019516

DATE PREPARED
2/28/2025

ROUTE	STATE
50/291	MO
DISTRICT	SHEET NO.
KC	264

COUNTY
JACKSON

JOB NO.
J4P3196

FEDERAL PROJECT NO.
STB-3001(009)

PROJECT NO.

BRIDGE NO.

DESCRIPTION	DATE

IF A SEAL IS PRESENT ON THIS SHEET IT HAS BEEN ELECTRONICALLY SEALED AND DATED.

MISSOURI HIGHWAYS AND TRANSPORTATION COMMISSION
105 WEST CAPITOL
JEFFERSON CITY, MO 65102
1-888-ASK-MODOT (1-888-275-6636)

LEE'S SUMMIT MISSOURI

olsson
1301 BURLINGTON ST., STE. 100
NORTH KANSAS CITY, MO 64116
PHONE: 816.361.1177
CERT. OF AUTHORITY NO. 001592

F:\2021\04501-05000\021-04786\40-Design\Microstation\J4P3196\plan_sheets\15 Culvert Sections\264_CS_08_J4P3196_110.dgn 1:35:26 PM 2/28/2025

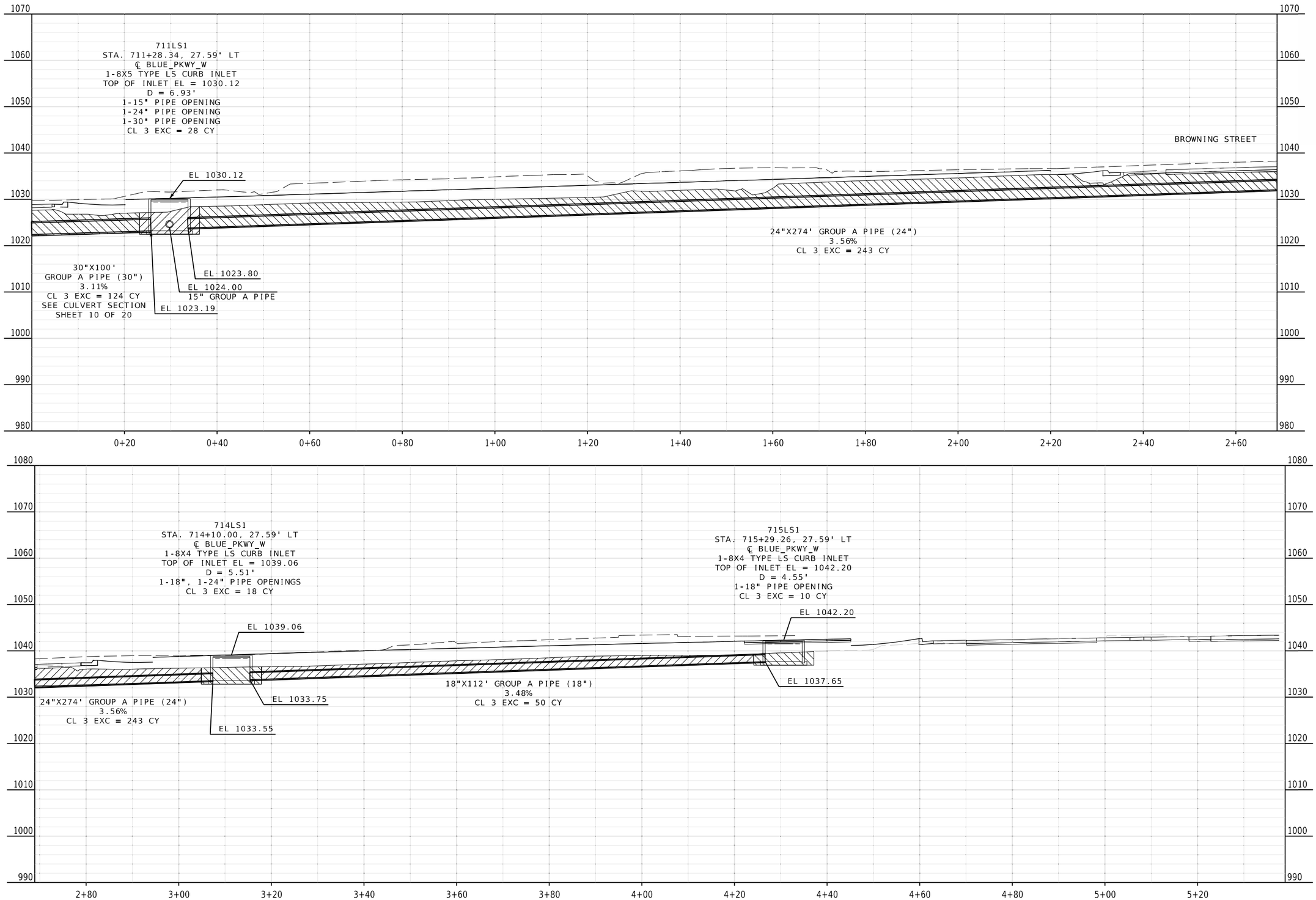

CULVERT SECTION
SHEET 9 OF 21

Reid Catt
2025.03.01 22:03:32-06'00'

REID BRENNEN CATT-ENGINEER
MO# PE-2010019516

DATE PREPARED
2/28/2025

ROUTE	STATE
50/291	MO

DISTRICT	SHEET NO.
KC	265

COUNTY
JACKSON

JOB NO.
J4P3196

FEDERAL PROJECT NO.
STB-3001(009)

PROJECT NO.

BRIDGE NO.

DESCRIPTION	DATE

MISSOURI HIGHWAYS AND TRANSPORTATION COMMISSION
105 WEST CAPITOL
JEFFERSON CITY, MO 65102
1-888-ASK-MODOT (1-888-275-6636)

LEE'S SUMMIT MISSOURI

olsson
1301 BURLINGTON ST., STE. 100
NORTH KANSAS CITY, MO 64116
PHONE: 816.361.1177
CERT. OF AUTHORITY NO. 001592

IF A SEAL IS PRESENT ON THIS SHEET IT HAS BEEN ELECTRONICALLY SEALED AND DATED.

F:\2021\04501-05000\021-04786\40-Design\Microstation\J4P3196\plan_sheets\15 Culvert Sections\265_CS_09_J4P3196_110.dgn 1:35:31 PM 2/28/2025

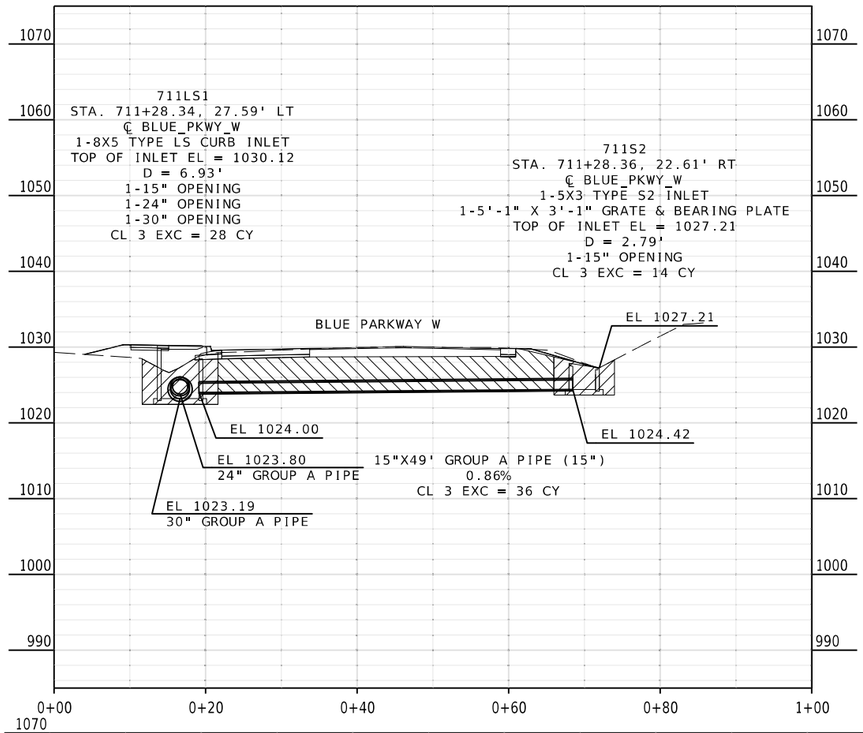

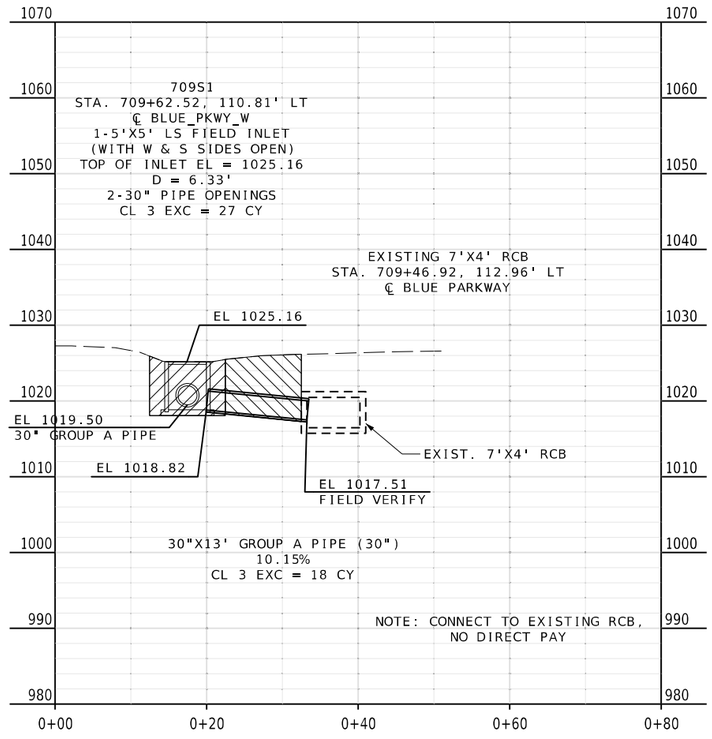

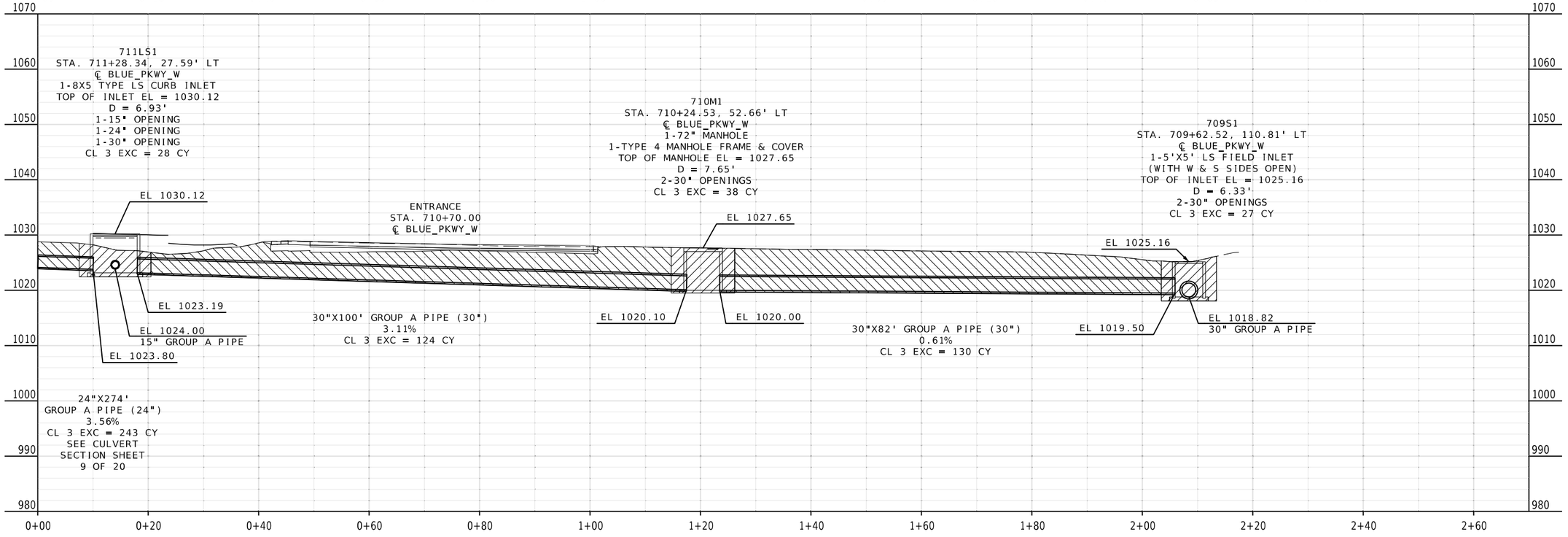

CULVERT SECTION
SHEET 10 OF 21

Reid Catt
2025.03.01 22:02:34-06'00'

REID BRENNEN CATT-ENGINEER
MO# PE-2010019516

DATE PREPARED
2/28/2025

ROUTE	STATE
50/291	MO
DISTRICT	SHEET NO.
KC	266

COUNTY
JACKSON

JOB NO.
J4P3196

FEDERAL PROJECT NO.
STB-3001(009)

PROJECT NO.

BRIDGE NO.

DESCRIPTION	DATE

IF A SEAL IS PRESENT ON THIS SHEET IT HAS BEEN ELECTRONICALLY SEALED AND DATED.

MISSOURI HIGHWAYS AND TRANSPORTATION COMMISSION
105 WEST CAPITOL
JEFFERSON CITY, MO 65102
1-888-ASK-MODOT (1-888-275-6636)

LEE'S SUMMIT MISSOURI

olsson
1301 BURLINGTON ST., STE. 100
NORTH KANSAS CITY, MO 64116
PHONE: 816.361.1177
CERT. OF AUTHORITY NO. 001592

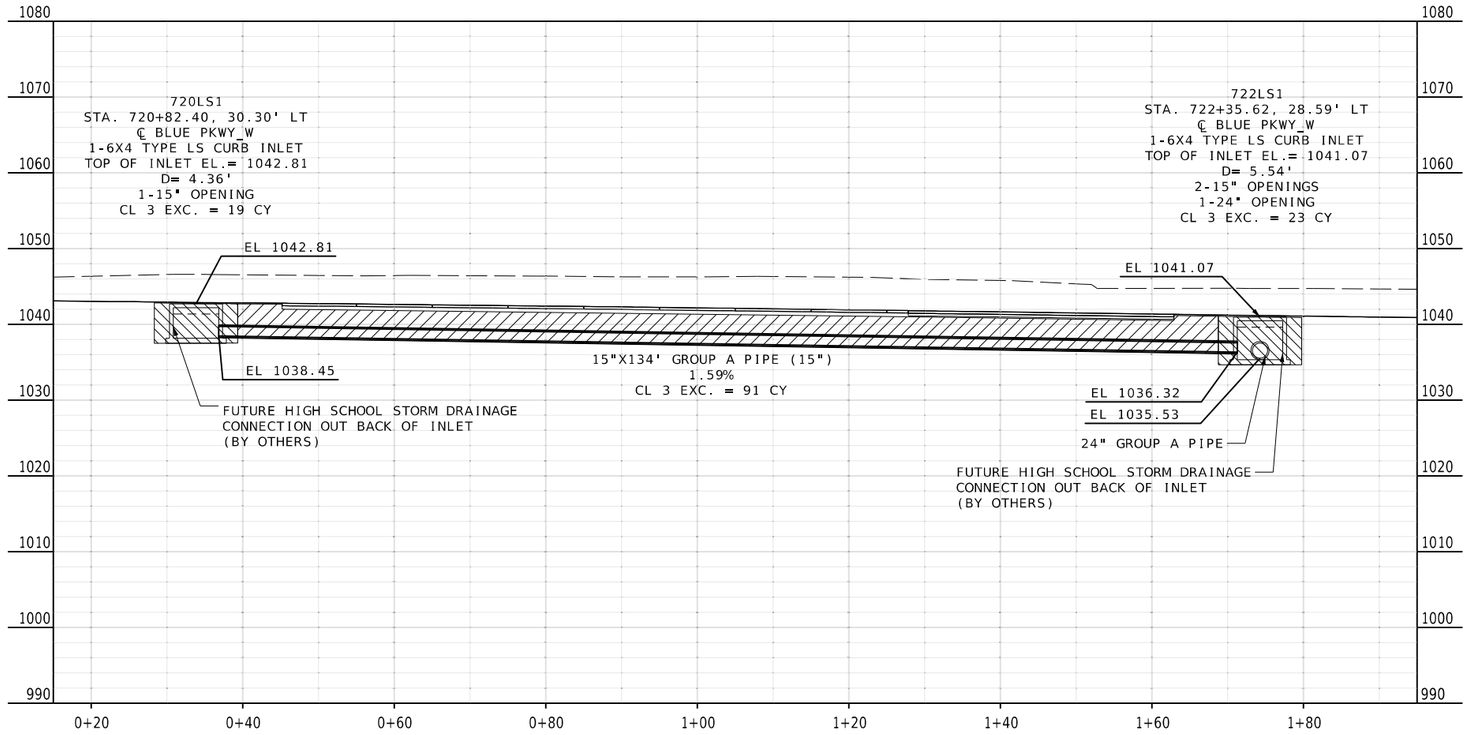

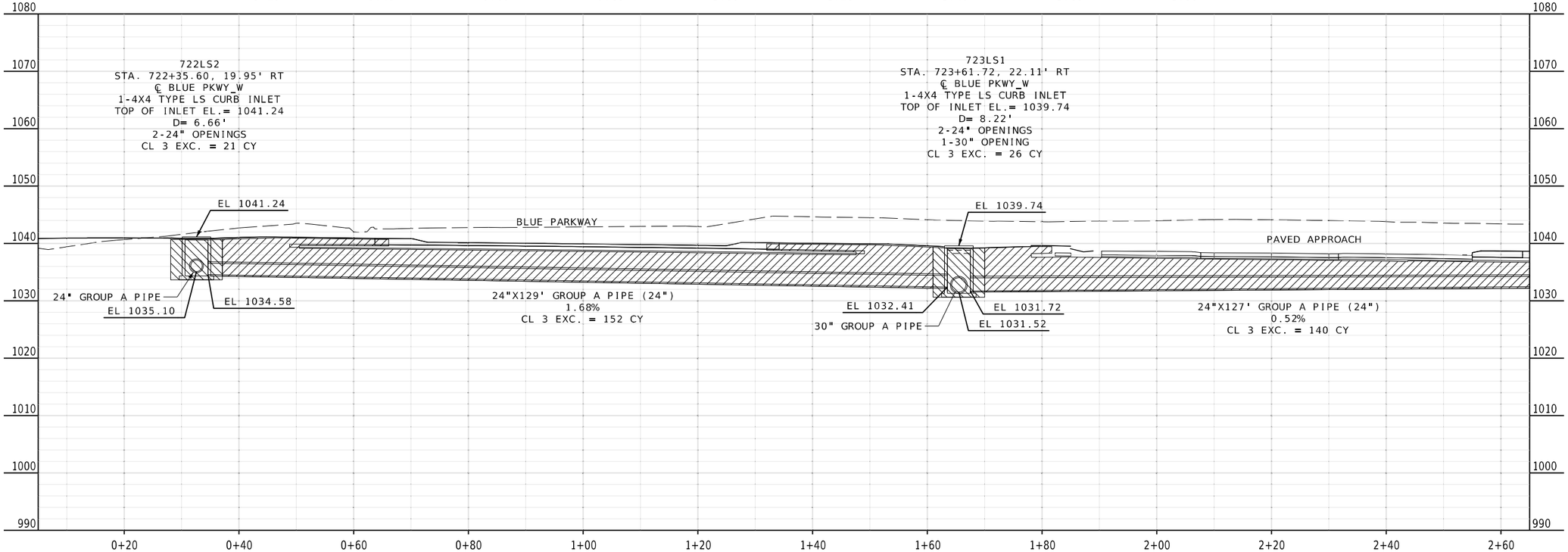

CULVERT SECTION
SHEET 11 OF 21

Reid Catt
2025.03.01 22:04:11-06'00'

REID BRENNEN CATT-ENGINEER
MO# PE-2010019516

DATE PREPARED
2/28/2025

ROUTE	STATE
50/291	MO
DISTRICT	SHEET NO.
KC	267

COUNTY
JACKSON

JOB NO.
J4P3196

FEDERAL PROJECT NO.
STB-3001(009)

PROJECT NO.

BRIDGE NO.

IF A SEAL IS PRESENT ON THIS SHEET IT HAS BEEN ELECTRONICALLY SEALED AND DATED.

DESCRIPTION	DATE

MISSOURI HIGHWAYS AND TRANSPORTATION COMMISSION
105 WEST CAPITOL
JEFFERSON CITY, MO 65102
1-888-ASK-MODOT (1-888-275-6636)

LEE'S SUMMIT MISSOURI

olsson
1301 BURLINGTON ST., STE. 100
NORTH KANSAS CITY, MO 64116
PHONE: 816.361.1177
CERT. OF AUTHORITY NO. 001592

F:\2021\04501-05000\021-04786\40-Design\Microstation\J4P3196\plan_sheets\15 Culvert Sections\267_CS_11_J4P3196_110.dgn 1:35:39 PM 2/28/2025

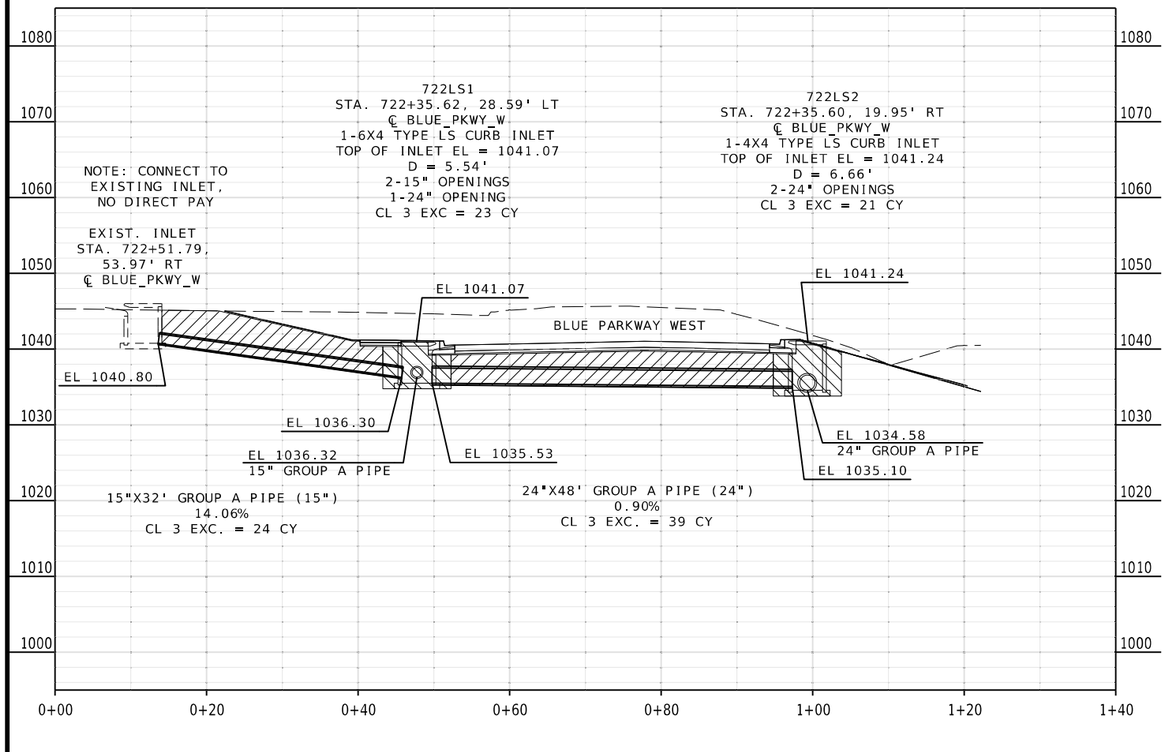

CULVERT SECTION
SHEET 12 OF 21

Reid Catt
2025.03.01 22:04:18-06'00'

REID BRENNEN CATT-ENGINEER
MO# PE-2010019516

DATE PREPARED
2/28/2025

ROUTE	STATE
50/291	MO
DISTRICT	SHEET NO.
KC	268

COUNTY
JACKSON

JOB NO.
J4P3196

FEDERAL PROJECT NO.
STB-3001(009)

PROJECT NO.

BRIDGE NO.

DESCRIPTION	DATE

IF A SEAL IS PRESENT ON THIS SHEET IT HAS BEEN ELECTRONICALLY SEALED AND DATED.

MISSOURI HIGHWAYS AND TRANSPORTATION COMMISSION

105 WEST CAPITOL
JEFFERSON CITY, MO 65102
1-888-ASK-MODOT (1-888-275-6636)

LEE'S SUMMIT MISSOURI

olsson
1301 BURLINGTON ST., STE. 100
NORTH KANSAS CITY, MO 64116
PHONE: 816.361.1177
CERT. OF AUTHORITY NO. 001592

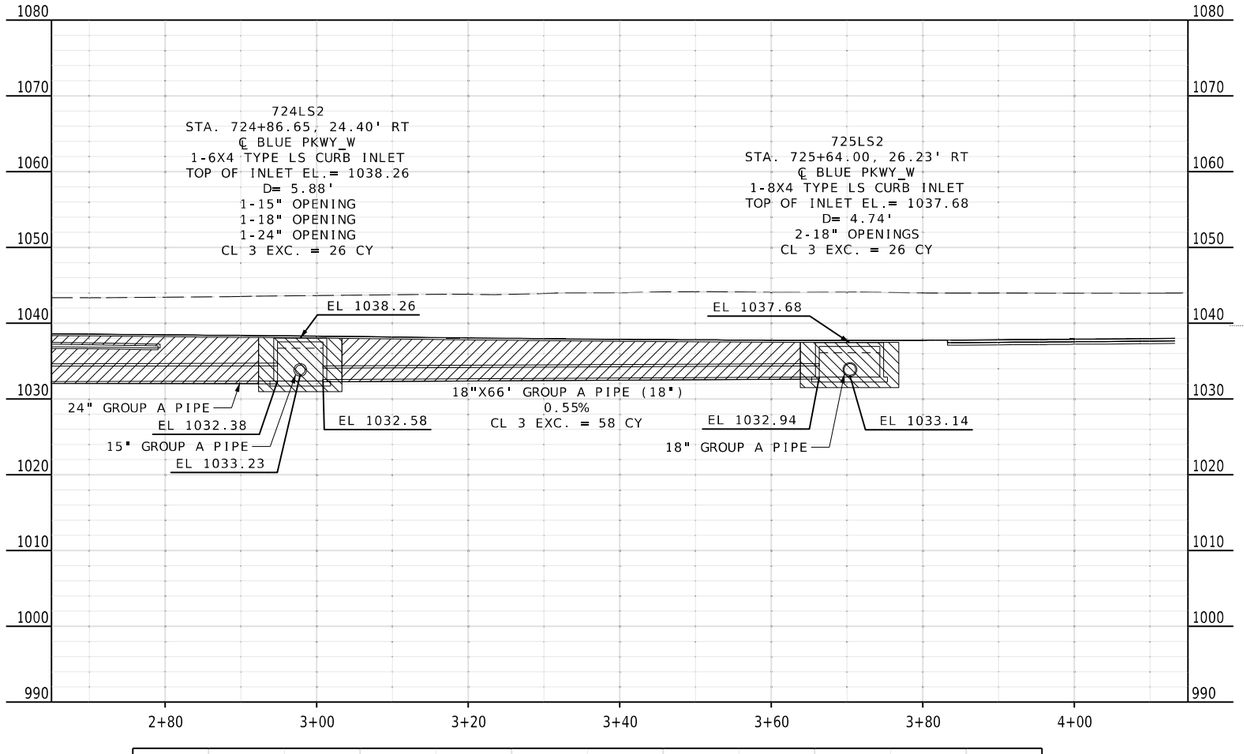

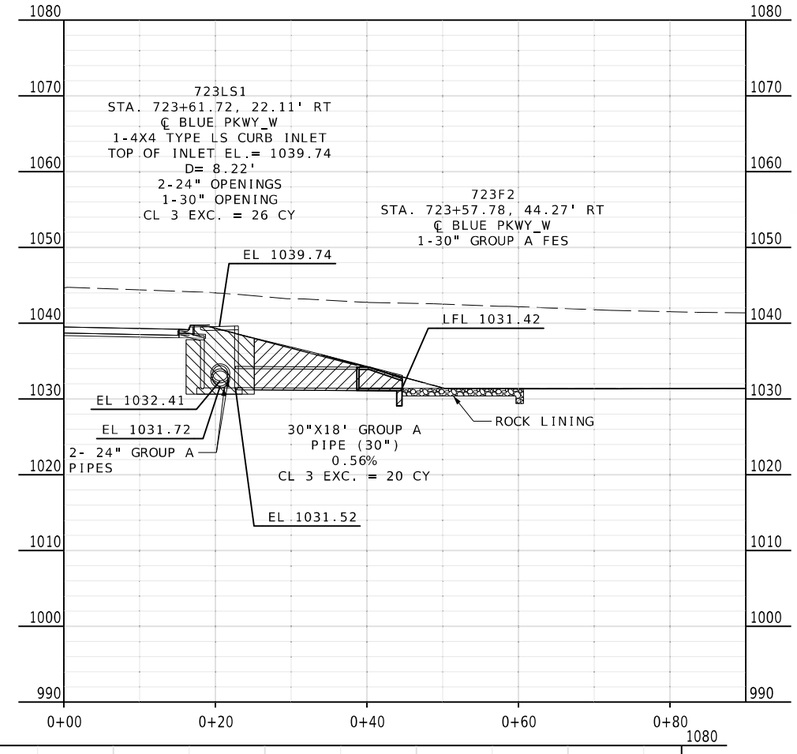

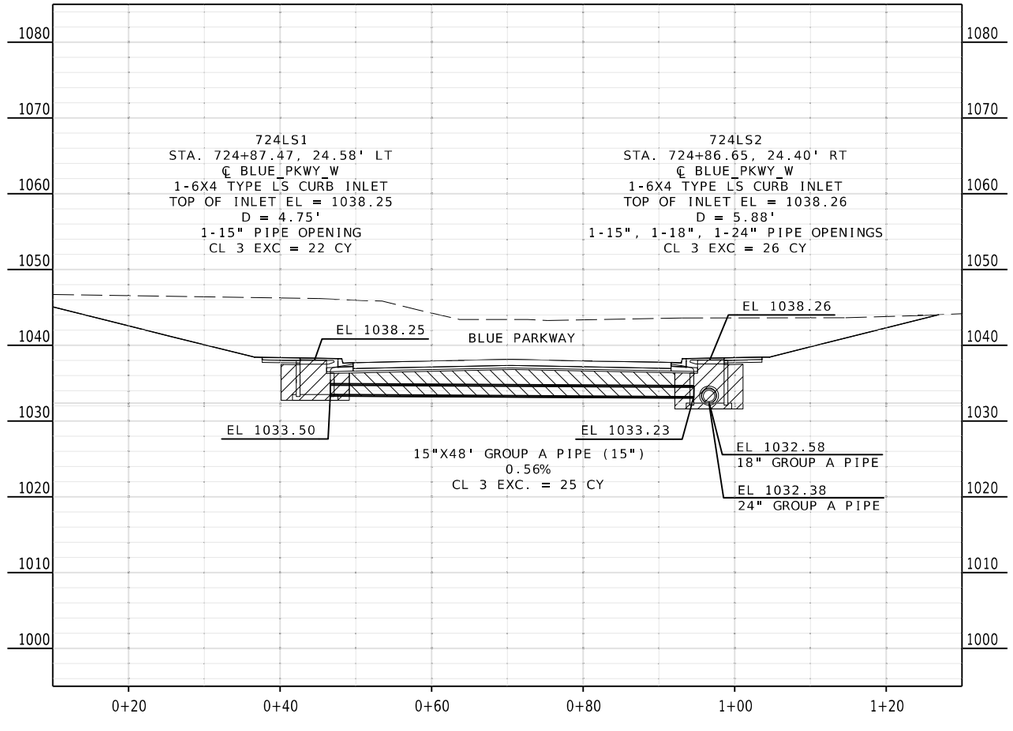

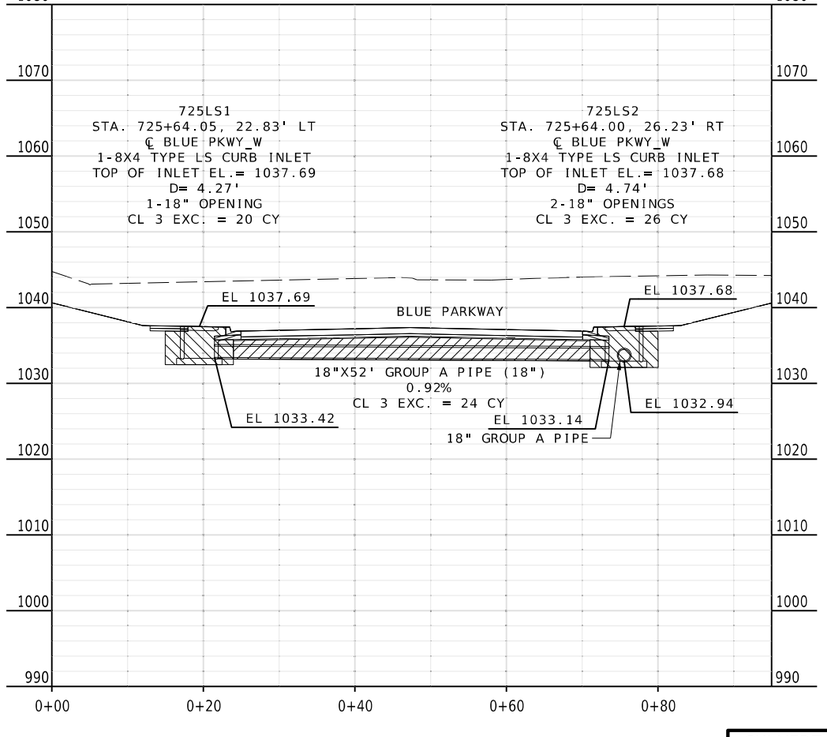

CULVERT SECTION
SHEET 13 OF 21

Reid Catt
2025.03.01 22:05:18-06'00'

REID BRENNEN CATT-ENGINEER
MO# PE-2010019516

DATE PREPARED
2/28/2025

ROUTE	STATE
50/291	MO
DISTRICT	SHEET NO.
KC	269

COUNTY
JACKSON

JOB NO.
J4P3196

FEDERAL PROJECT NO.
STB-3001(009)

PROJECT NO.

BRIDGE NO.

DESCRIPTION	DATE

IF A SEAL IS PRESENT ON THIS SHEET IT HAS BEEN ELECTRONICALLY SEALED AND DATED.

MISSOURI HIGHWAYS AND TRANSPORTATION COMMISSION
105 WEST CAPITOL
JEFFERSON CITY, MO 65102
1-888-ASK-MODOT (1-888-275-6636)

LEE'S SUMMIT MISSOURI

olsson
1301 BURLINGTON ST., STE. 100
NORTH KANSAS CITY, MO 64116
PHONE: 816.361.1177
CERT. OF AUTHORITY NO. 001592

F:\2021\04501-05000\021-04786\40-Design\Microstation\J4P3196\plan_sheets\15 Culvert Sections\269_CS_13_J4P3196_110.dgn 1:35:51 PM 2/28/2025

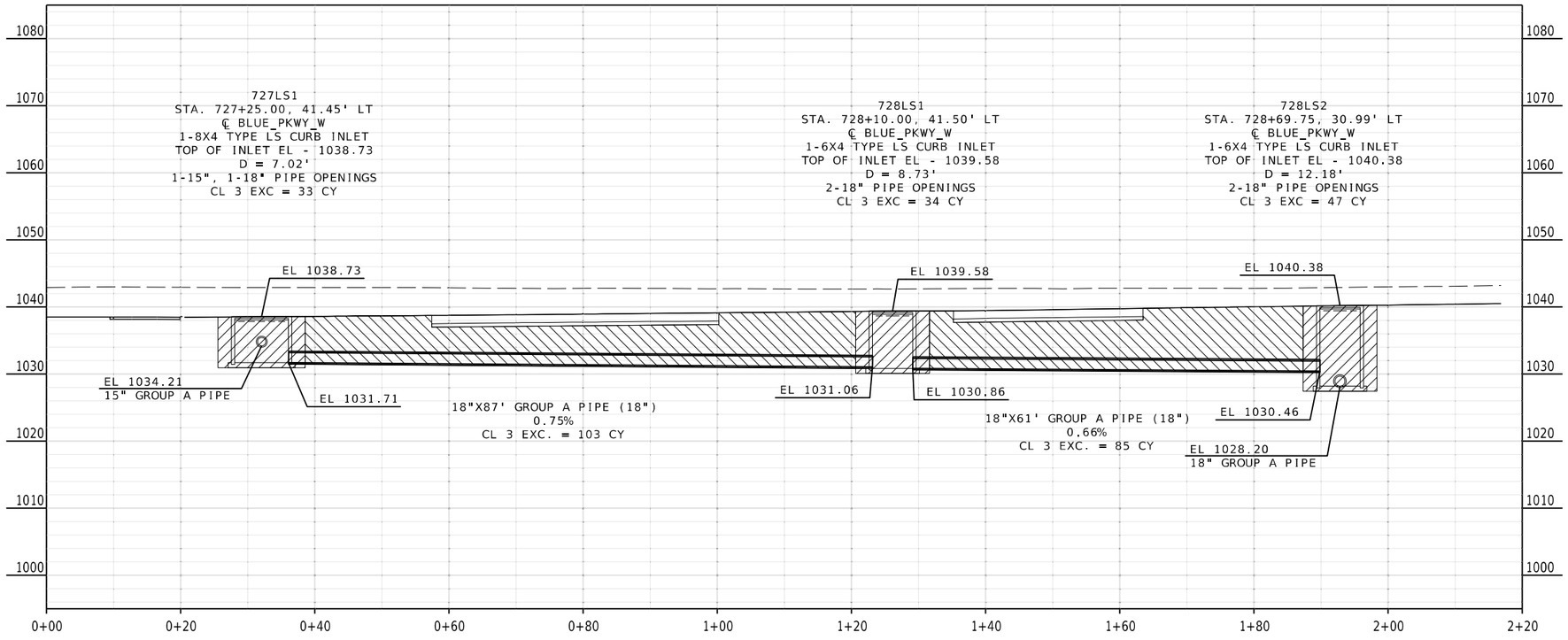

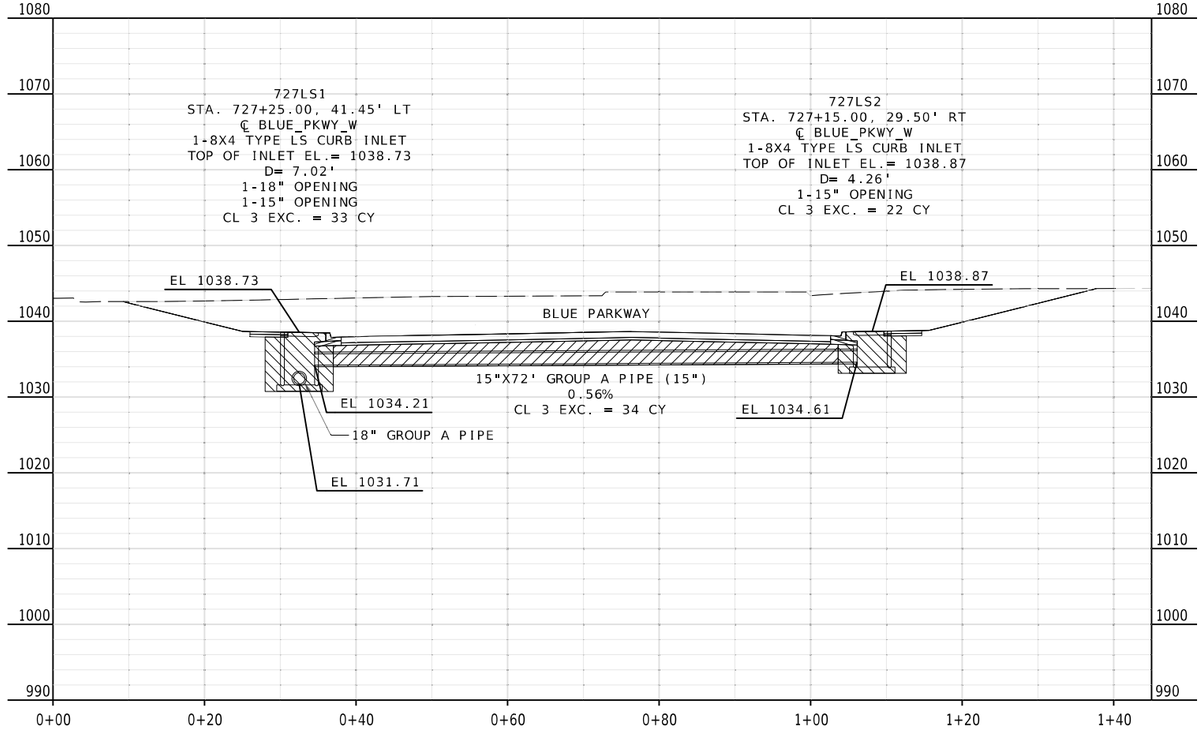

CULVERT SECTION
SHEET 14 OF 21

Reid Catt
2025.03.01 22:04:43-06'00'

REID BRENNEN CATT-ENGINEER
MO# PE-2010019516

DATE PREPARED
2/28/2025

ROUTE	STATE
50/291	MO
DISTRICT	SHEET NO.
KC	270

COUNTY
JACKSON

JOB NO.
J4P3196

FEDERAL PROJECT NO.
STB-3001(009)

PROJECT NO.

BRIDGE NO.

IF A SEAL IS PRESENT ON THIS SHEET IT HAS BEEN ELECTRONICALLY SEALED AND DATED.

DESCRIPTION	DATE

MISSOURI HIGHWAYS AND TRANSPORTATION COMMISSION
105 WEST CAPITOL
JEFFERSON CITY, MO 65102
1-888-ASK-MODOT (1-888-275-6636)

LEE'S SUMMIT MISSOURI

olsson
1301 BURLINGTON ST., STE. 100
NORTH KANSAS CITY, MO 64116
PHONE: 816.361.1177
CERT. OF AUTHORITY NO. 001592

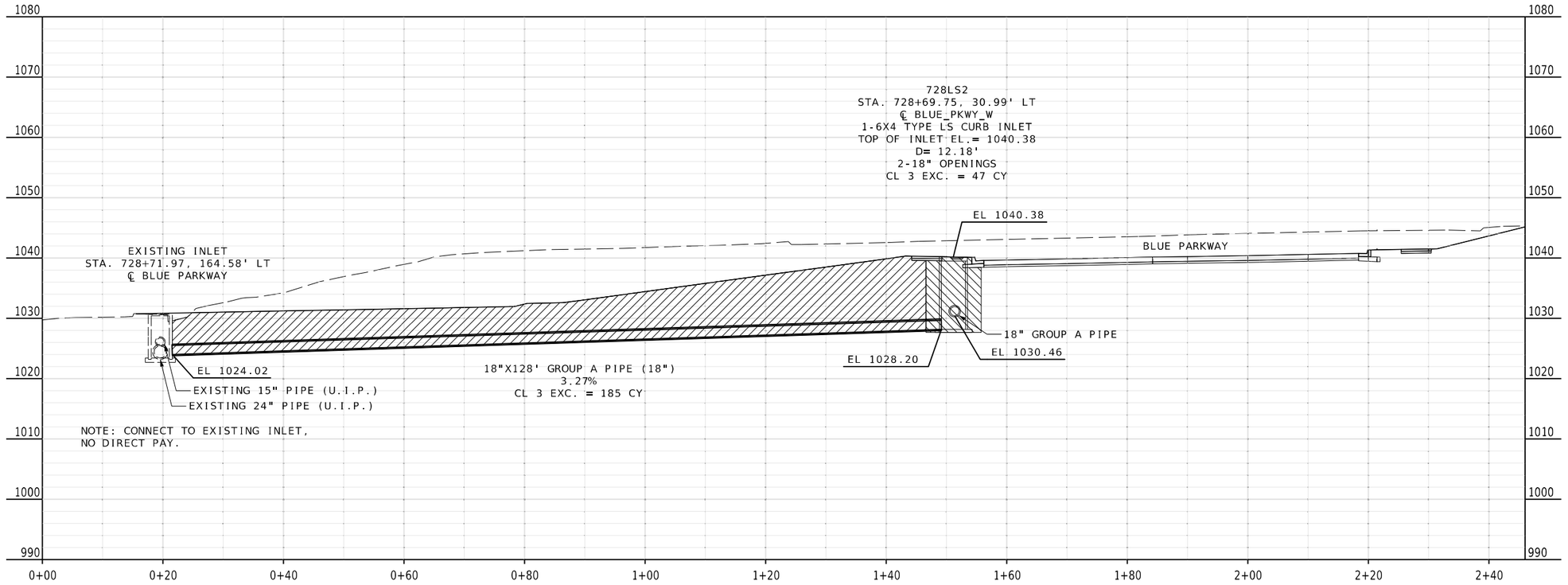

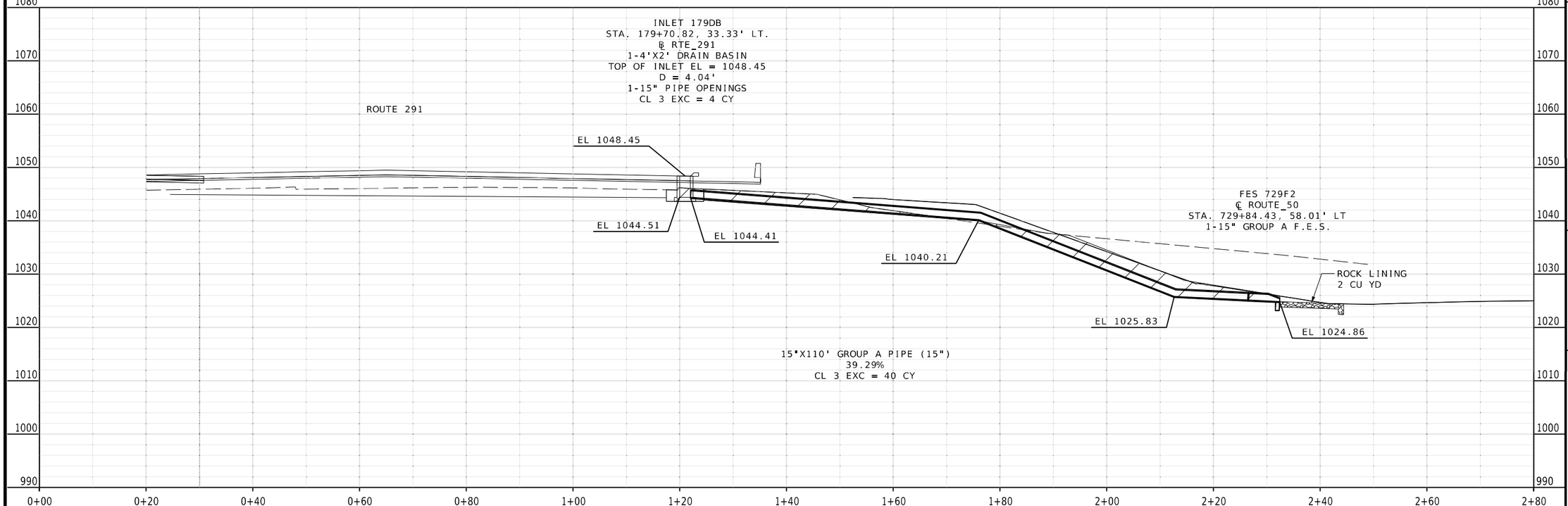

CULVERT SECTION
SHEET 15 OF 21

Reid Catt
2025.03.01 22:05:11-06'00'

REID BRENNEN CATT-ENGINEER
MO# PE-2010019516

DATE PREPARED
2/28/2025

ROUTE	STATE
50/291	MO
DISTRICT	SHEET NO.
KC	271

COUNTY
JACKSON

JOB NO.
J4P3196

FEDERAL PROJECT NO.
STB-3001(009)

PROJECT NO.

BRIDGE NO.

DESCRIPTION | DATE

IF A SEAL IS PRESENT ON THIS SHEET IT HAS BEEN ELECTRONICALLY SEALED AND DATED.

MISSOURI HIGHWAYS AND TRANSPORTATION COMMISSION

105 WEST CAPITOL
JEFFERSON CITY, MO 65102
1-888-ASK-MODOT (1-888-275-6636)

LEE'S SUMMIT MISSOURI

olsson
1301 BURLINGTON ST., STE. 100
NORTH KANSAS CITY, MO 64116
PHONE: 816.361.1177
CERT. OF AUTHORITY NO. 001592

F:\2021\04501-05000\021-04786\40-Design\Microstation\J4P3196\plan_sheets\15 Culvert Sections\271_CS_15_J4P3196_110.dgn 1:36:01 PM 2/28/2025

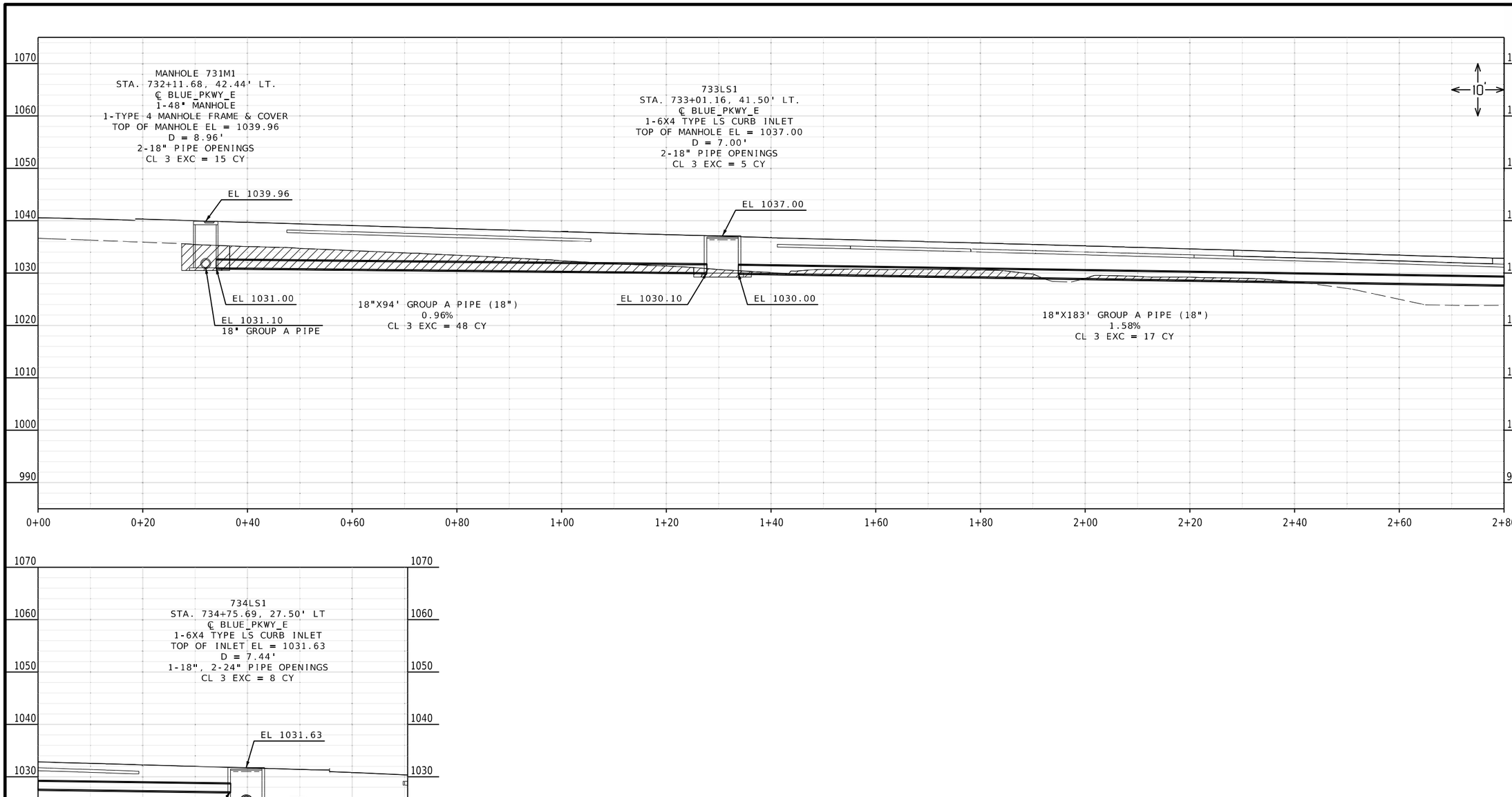

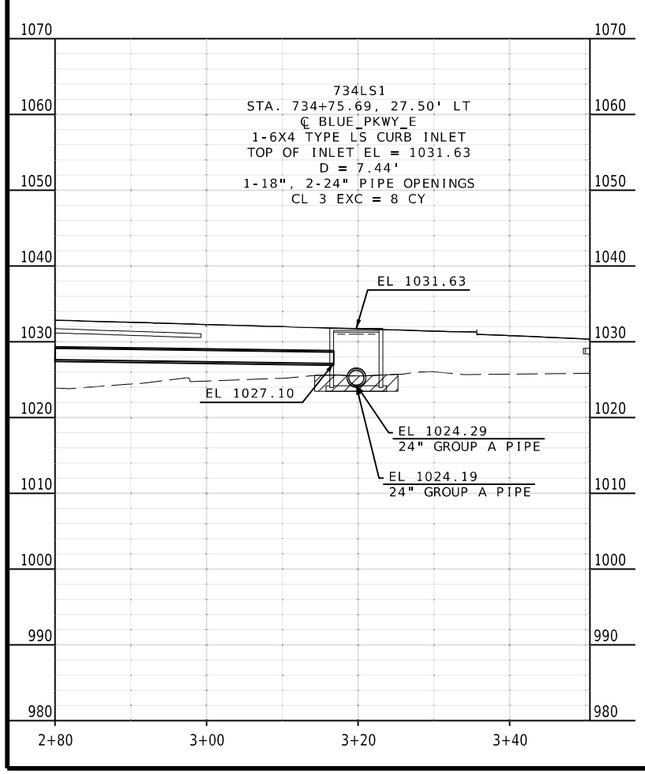

CULVERT SECTION
SHEET 16 OF 21

Reid Catt
2025.03.01 22:04:36-06'00'

REID BRENNEN CATT - ENGINEER
MO# PE-2010019516

DATE PREPARED
2/28/2025

ROUTE	STATE
50/291	MO

DISTRICT	SHEET NO.
KC	272

COUNTY
JACKSON

JOB NO.
J4P3196

FEDERAL PROJECT NO.
STB-3001(009)

PROJECT NO.

BRIDGE NO.

DESCRIPTION	DATE

IF A SEAL IS PRESENT ON THIS SHEET IT HAS BEEN ELECTRONICALLY SEALED AND DATED.

MISSOURI HIGHWAYS AND TRANSPORTATION COMMISSION

105 WEST CAPITOL
JEFFERSON CITY, MO 65102
1-888-ASK-MODOT (1-888-275-6636)

LEE'S SUMMIT MISSOURI

olsson
1301 BURLINGTON ST., STE. 100
NORTH KANSAS CITY, MO 64116
PHONE: 816.361.1177
CERT. OF AUTHORITY NO. 001592

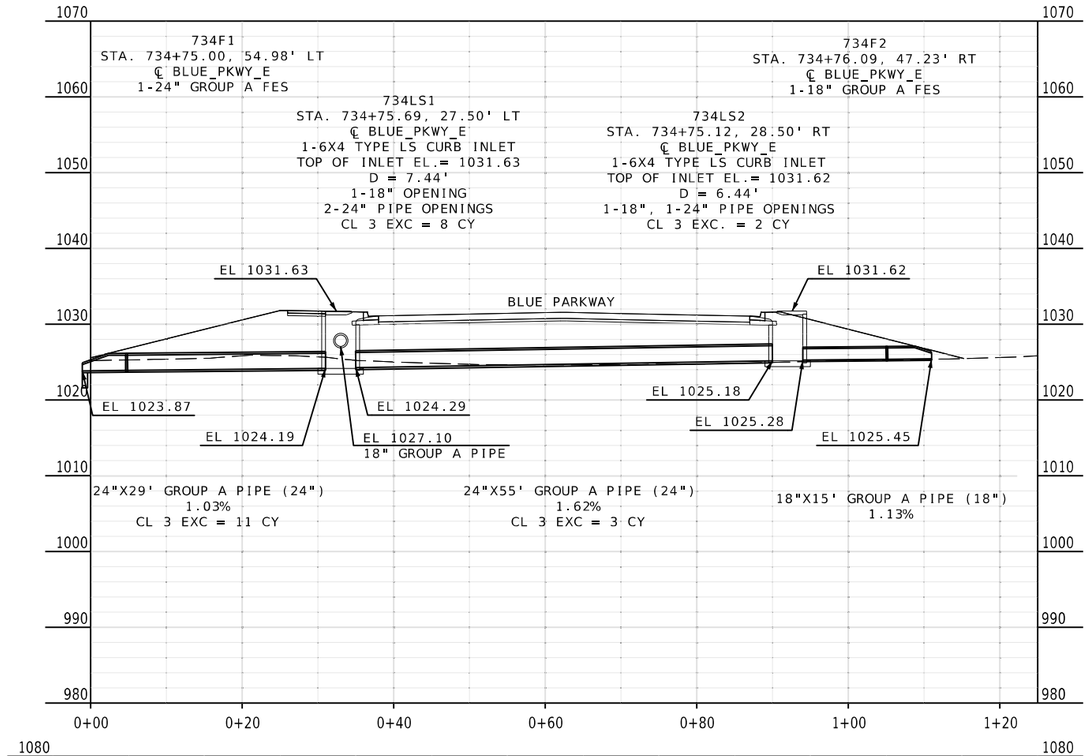

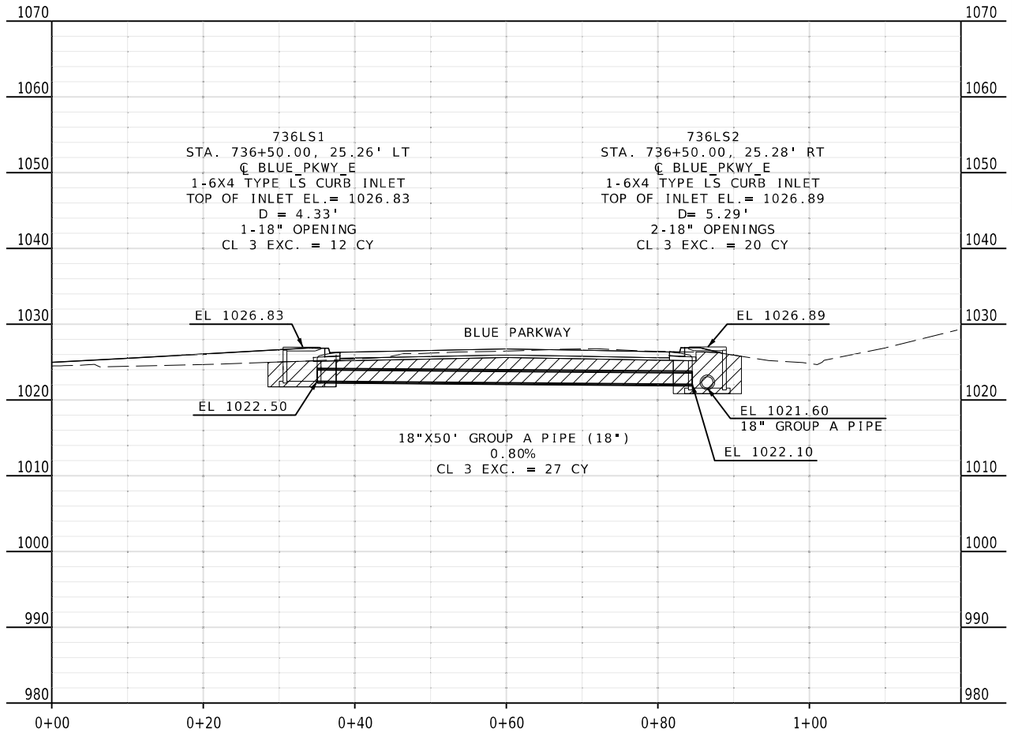

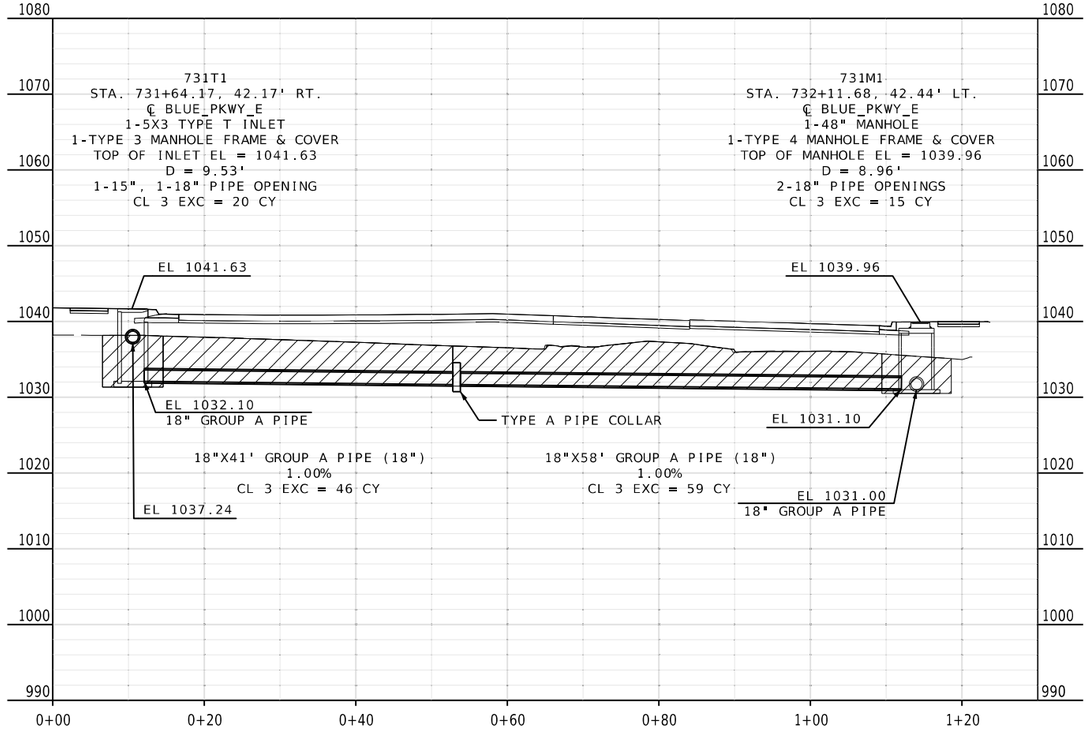

Reid Catt
2025.03.01 22:04:50-06'00'

REID BRENNEN CATT-ENGINEER
MO# PE-2010019516

DATE PREPARED
2/28/2025

ROUTE	STATE
50/291	MO
DISTRICT	SHEET NO.
KC	273

COUNTY
JACKSON

JOB NO.
J4P3196

FEDERAL PROJECT NO.
STB-3001(009)

PROJECT NO.

BRIDGE NO.

IF A SEAL IS PRESENT ON THIS SHEET IT HAS BEEN ELECTRONICALLY SEALED AND DATED.

DESCRIPTION	DATE

MISSOURI HIGHWAYS AND TRANSPORTATION COMMISSION
105 WEST CAPITOL
JEFFERSON CITY, MO 65102
1-888-ASK-MODOT (1-888-275-6636)

LEE'S SUMMIT MISSOURI

olsson
1301 BURLINGTON ST., STE. 100
NORTH KANSAS CITY, MO 64116
PHONE: 816.361.1177
CERT. OF AUTHORITY NO. 001592

CULVERT SECTION
SHEET 17 OF 21

F:\2021\04501-05000\021-04786\40-Design\Microstation\J4P3196\plan_sheets\15 Culvert Sections\273_CS_17_J4P3196_110.dgn 1:36:15 PM 2/28/2025

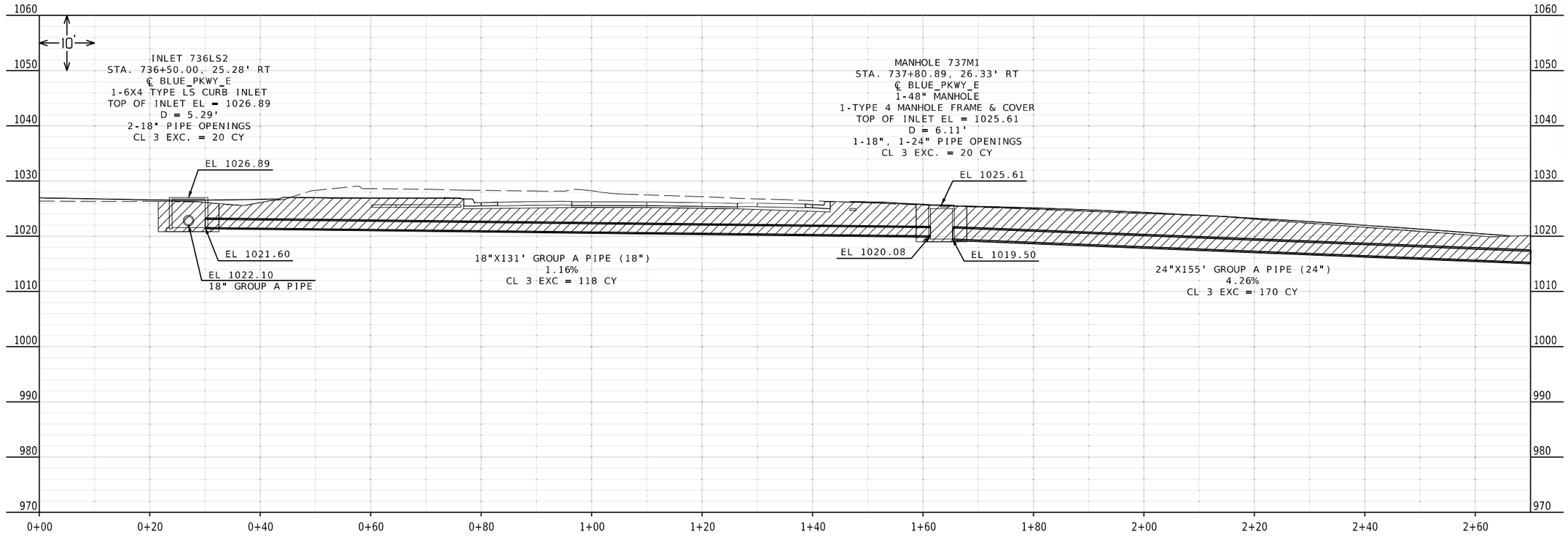

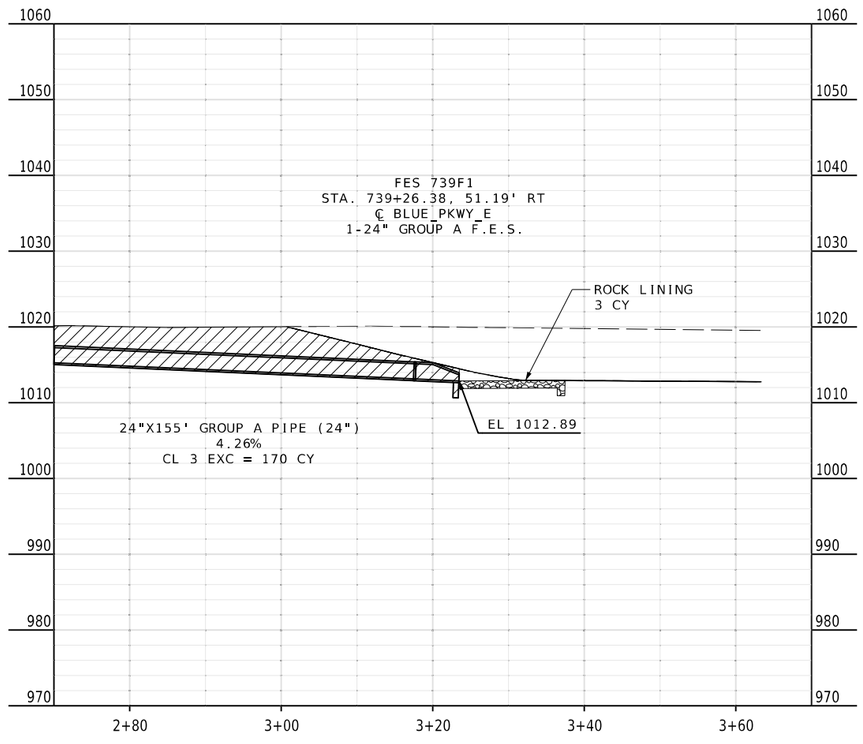

CULVERT SECTION
SHEET 18 OF 21

Reid Catt
2025.03.01 22:04:29-06'00'

REID BRENNEN CATT-ENGINEER
MO# PE-2010019516

DATE PREPARED
2/28/2025

ROUTE	STATE
50/291	MO
DISTRICT	SHEET NO.
KC	274

COUNTY
JACKSON

JOB NO.
J4P3196

FEDERAL PROJECT NO.
STB-3001(009)

PROJECT NO.

BRIDGE NO.

DESCRIPTION	DATE

IF A SEAL IS PRESENT ON THIS SHEET IT HAS BEEN ELECTRONICALLY SEALED AND DATED.

MISSOURI HIGHWAYS AND TRANSPORTATION COMMISSION
105 WEST CAPITOL
JEFFERSON CITY, MO 65102
1-888-ASK-MODOT (1-888-275-6636)

LEE'S SUMMIT MISSOURI

olsson
1301 BURLINGTON ST., STE. 100
NORTH KANSAS CITY, MO 64116
PHONE: 816.361.1177
CERT. OF AUTHORITY NO. 001592

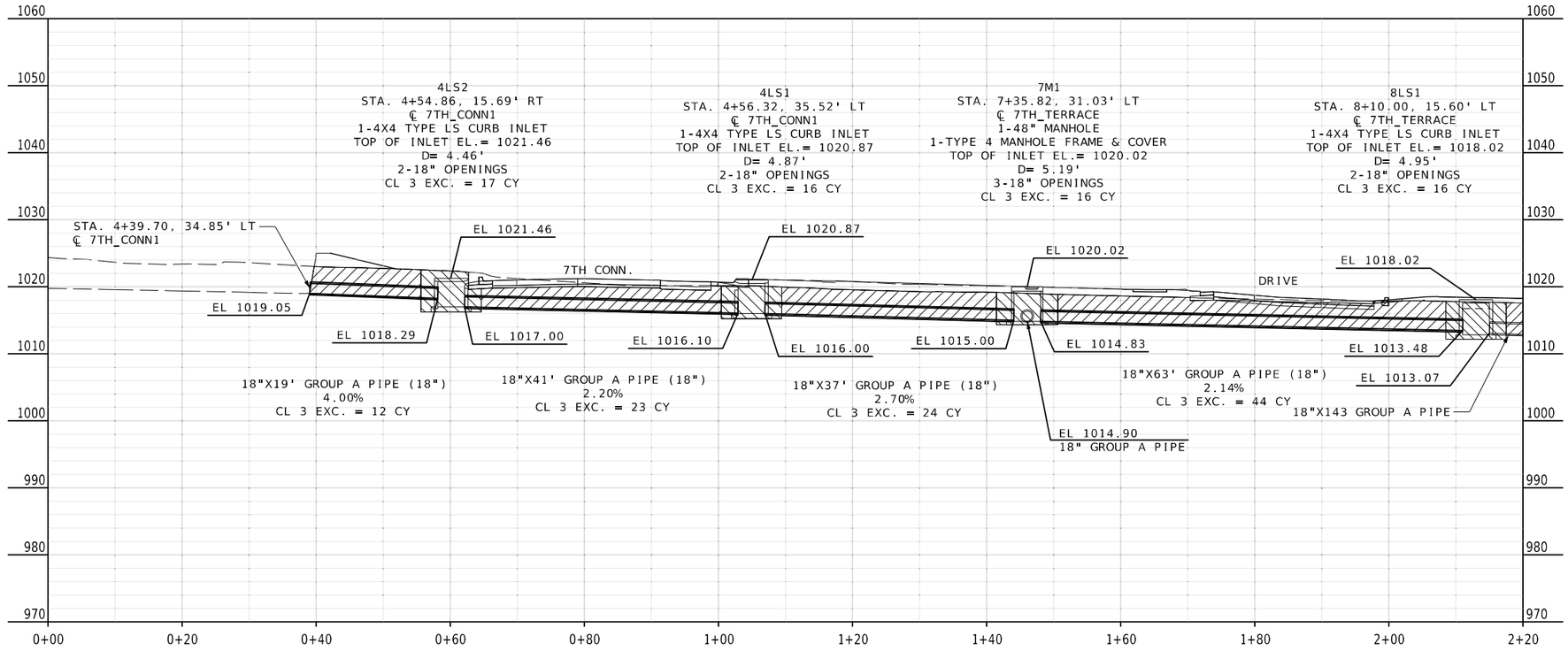

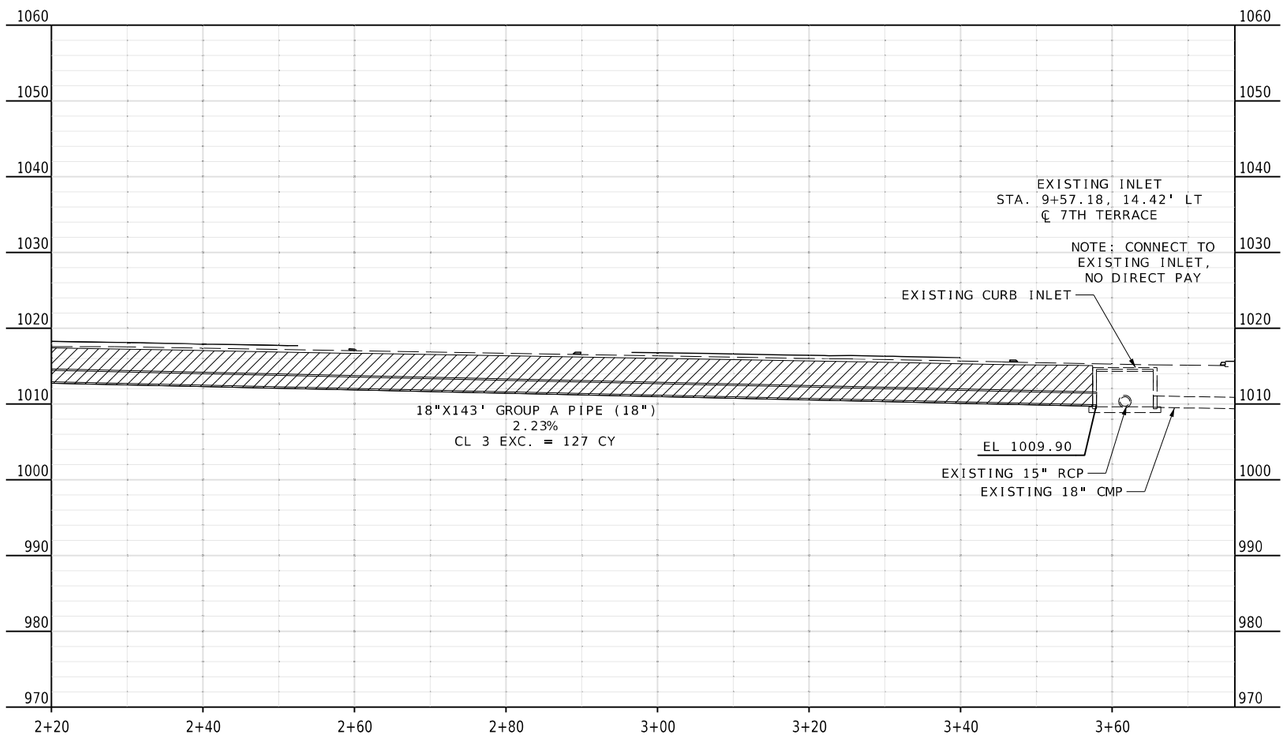

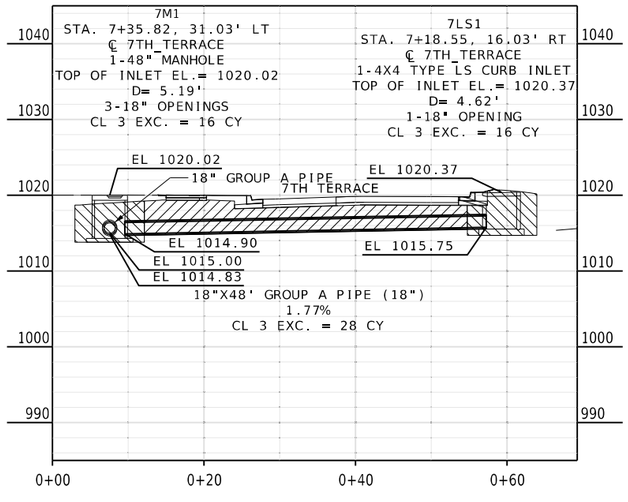

Reid Catt
2025.03.01 22:04:59-06'00'

REID BRENNEN CATT-ENGINEER
MO# PE-2010019516

DATE PREPARED
2/28/2025

ROUTE	STATE
50/291	MO
DISTRICT	SHEET NO.
KC	275

COUNTY
JACKSON

JOB NO.
J4P3196

FEDERAL PROJECT NO.
STB-3001(009)

PROJECT NO.

BRIDGE NO.

DESCRIPTION

DATE

IF A SEAL IS PRESENT ON THIS SHEET IT HAS BEEN ELECTRONICALLY SEALED AND DATED.

MISSOURI HIGHWAYS AND TRANSPORTATION COMMISSION

105 WEST CAPITOL
JEFFERSON CITY, MO 65102
1-888-ASK-MODOT (1-888-275-6636)

LEE'S SUMMIT MISSOURI

olsson
1301 BURLINGTON ST., STE. 100
NORTH KANSAS CITY, MO 64116
PHONE: 816.361.1177
CERT. OF AUTHORITY NO. 001592

CULVERT SECTION
SHEET 19 OF 21

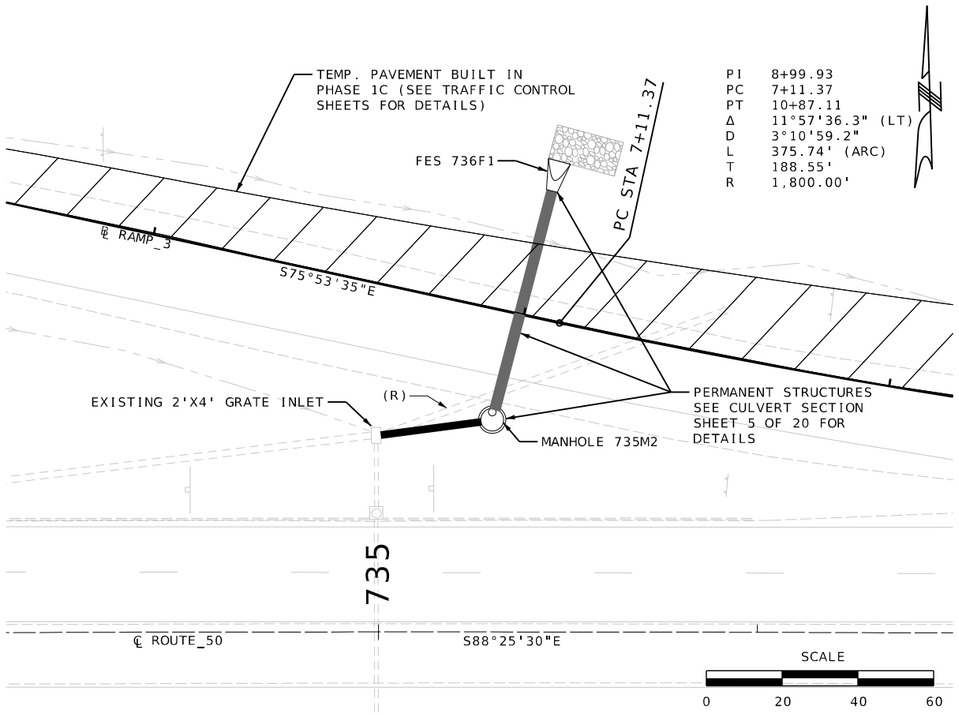

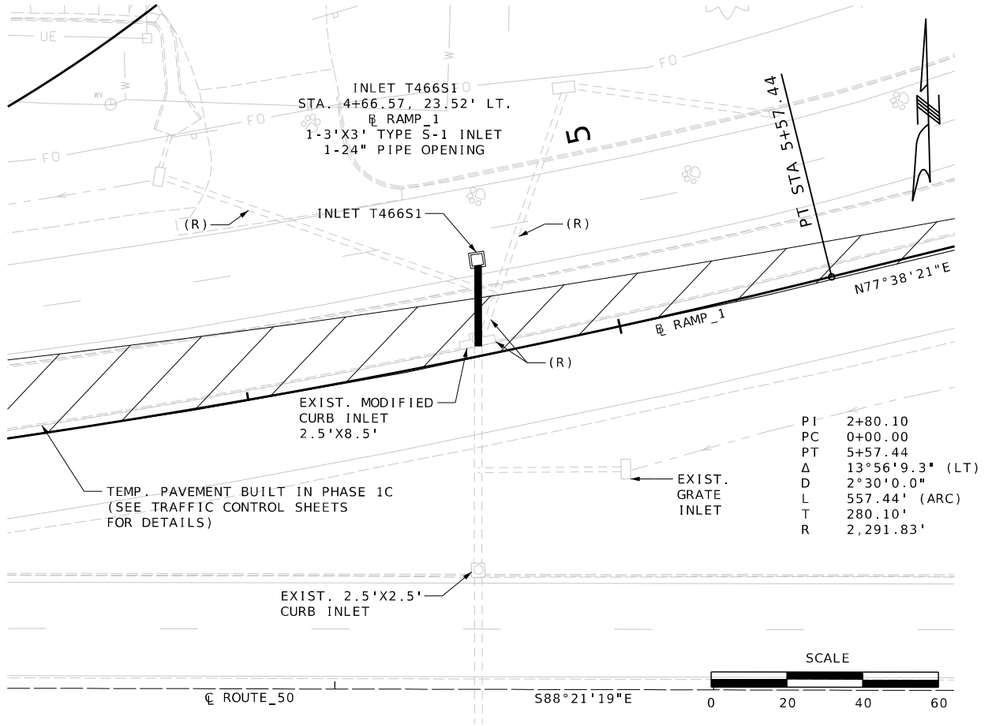

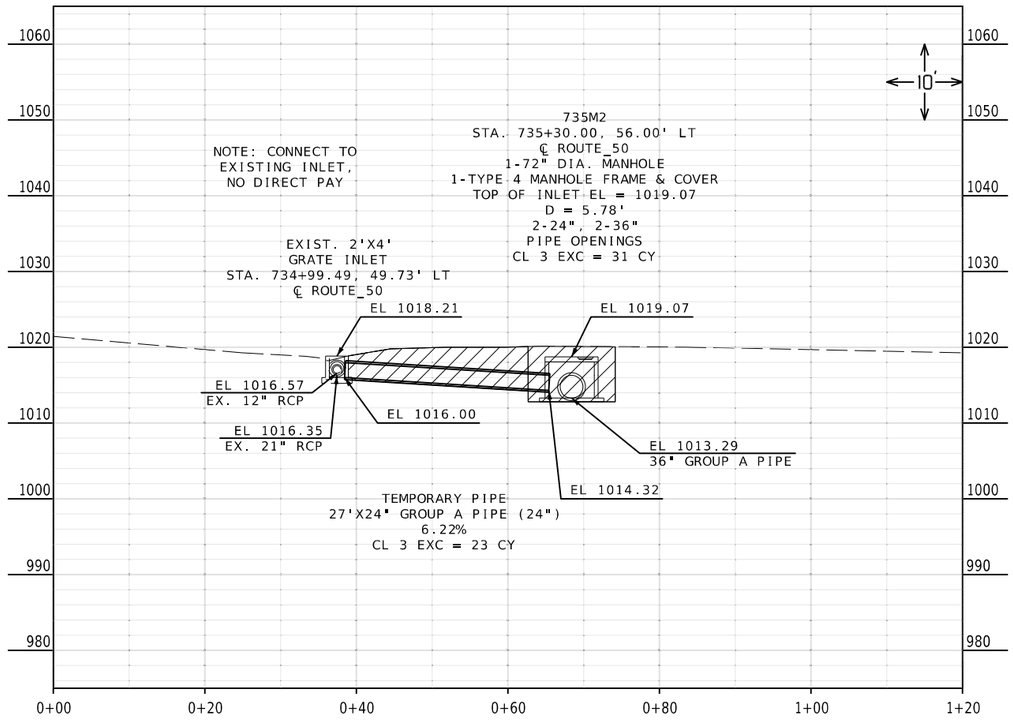

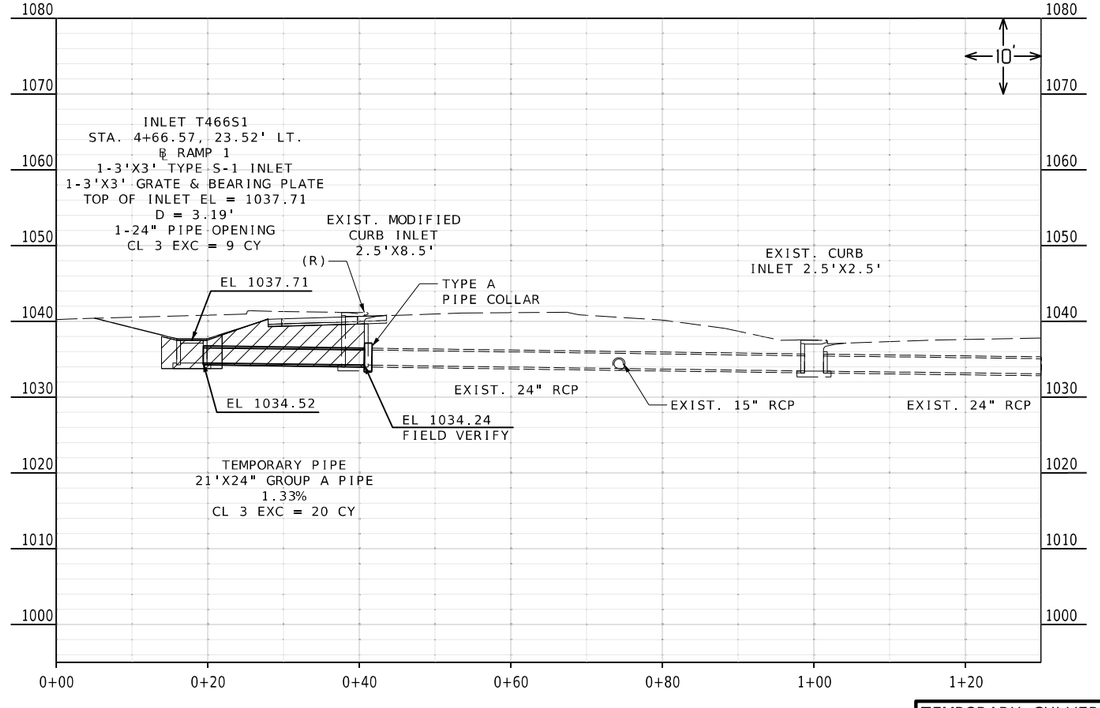

TEMPORARY CULVERT SHEET
SHEET 20 OF 21

Reid Catt
2025.03.01 22:05:05-06'00'

REID BRENNEN CATT-ENGINEER
MO# PE-2010019516

DATE PREPARED
2/28/2025

ROUTE	STATE
50/291	MO
DISTRICT	SHEET NO.
KC	276

COUNTY
JACKSON

JOB NO.
J4P3196

FEDERAL PROJECT NO.
STB-3001(009)

PROJECT NO.

BRIDGE NO.

DESCRIPTION

DATE

IF A SEAL IS PRESENT ON THIS SHEET IT HAS BEEN ELECTRONICALLY SEALED AND DATED.

MISSOURI HIGHWAYS AND TRANSPORTATION COMMISSION
105 WEST CAPITOL
JEFFERSON CITY, MO 65102
1-888-ASK-MODOT (1-888-275-6636)

LEE'S SUMMIT MISSOURI

olsson
1301 BURLINGTON ST., STE. 100
NORTH KANSAS CITY, MO 64116
PHONE: 816.361.1177
CERT. OF AUTHORITY NO. 001592

F:\2021\04501-05000\021-04786\40-Design\Microstation\J4P3196\plan_sheets\15 Culvert Sections\276_CS_20_J4P3196_I10_TEMP.dgn 1:36:33 PM 2/28/2025

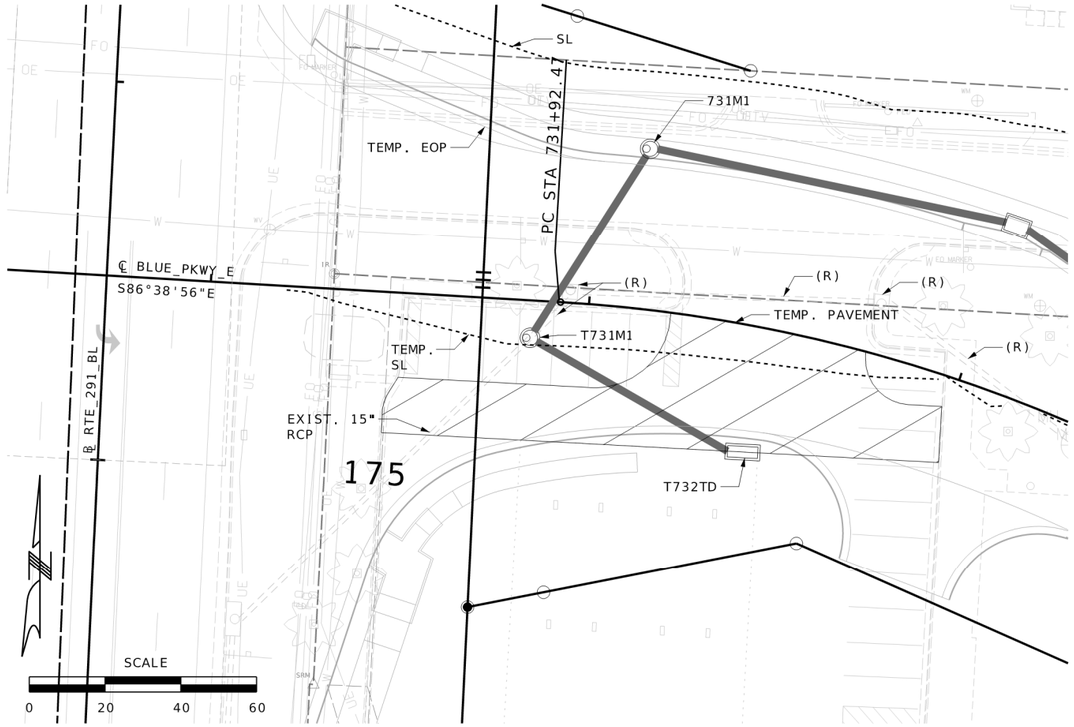

TEMPORARY MANHOLE T731M1
STA. 731+84.98, 9.87' RT
℄ BLUE_PKWY_E
1-48" MANHOLE
1-15", 2-18" PIPE OPENINGS

TEMPORARY INLET T732TD
STA. 732+47.32, 31.69' RT
℄ BLUE_PKWY_E
1-2'X12' TRENCH DRAIN
1-18" PIPE OPENING

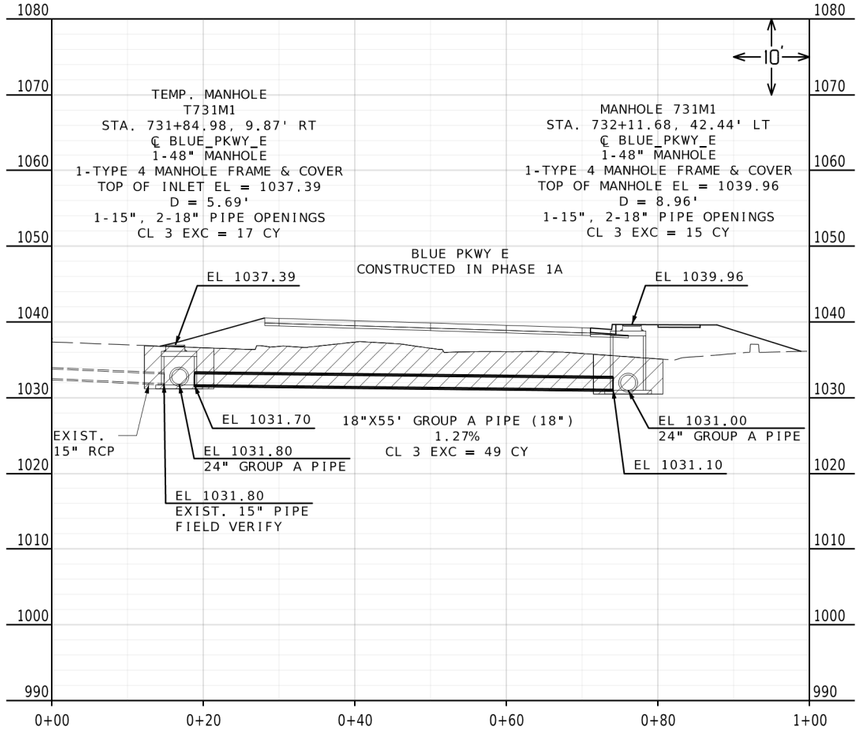

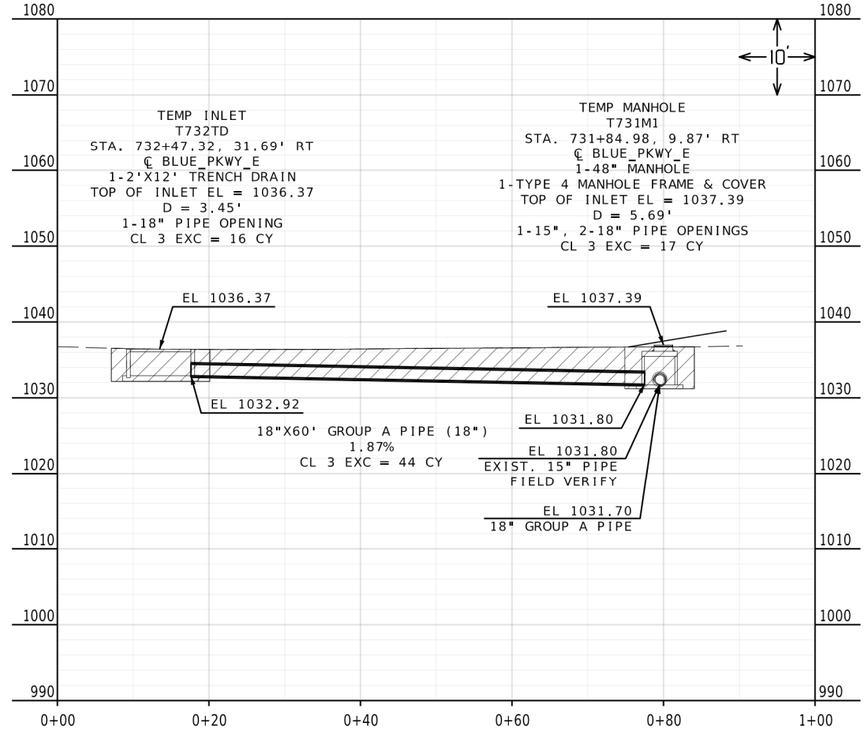

TEMPORARY CULVERT
SECTION SHEET
SHEET 21 OF 21

Reid Catt
2025.03.01 22:04:04-06'00'

REID BRENNEN CATT-ENGINEER
MO# PE-2010019516

DATE PREPARED
2/28/2025

ROUTE	STATE
50/291	MO
DISTRICT	SHEET NO.
KC	277

COUNTY
JACKSON

JOB NO.
J4P3196

FEDERAL PROJECT NO.
STB-3001(009)

PROJECT NO.

BRIDGE NO.

DESCRIPTION	DATE

IF A SEAL IS PRESENT ON THIS SHEET IT HAS BEEN ELECTRONICALLY SEALED AND DATED.

MISSOURI HIGHWAYS AND TRANSPORTATION COMMISSION
105 WEST CAPITOL
JEFFERSON CITY, MO 65102
1-888-ASK-MODOT (1-888-275-6636)

LEE'S SUMMIT MISSOURI

olsson
1301 BURLINGTON ST., STE. 100
NORTH KANSAS CITY, MO 64116
PHONE: 816.361.1177
CERT. OF AUTHORITY NO. 001592

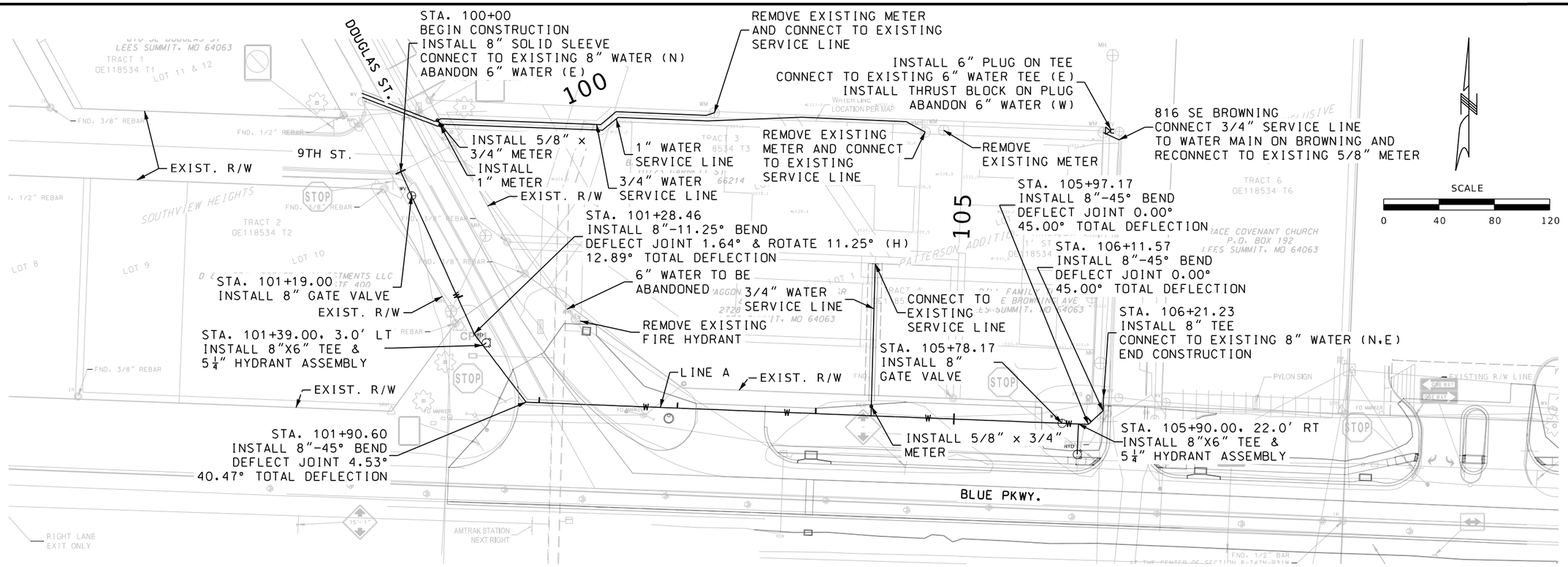

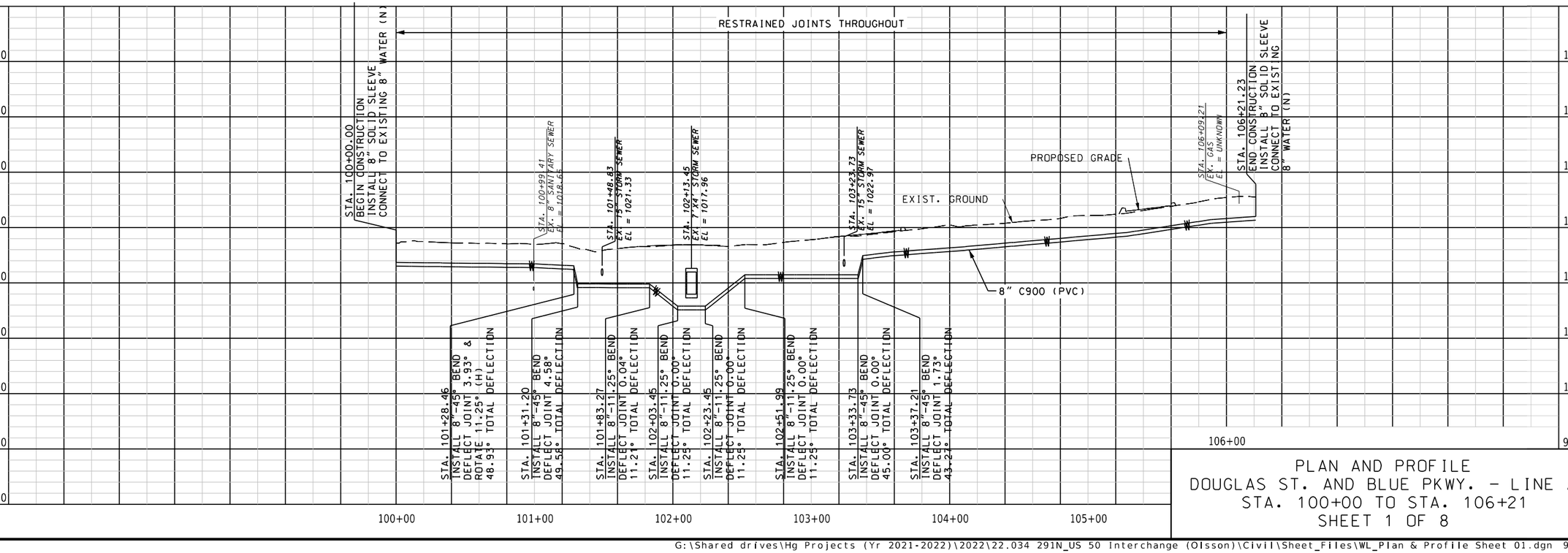

PLAN AND PROFILE
DOUGLAS ST. AND BLUE PKWY. - LINE A
STA. 100+00 TO STA. 106+21
SHEET 1 OF 8

STATE OF MISSOURI
CHAD S. HARRIS
NUMBER PE-2022005207
PROFESSIONAL ENGINEER
2/27/2025

DATE PREPARED	2/27/2025
ROUTE	STATE
50/291	MO
DISTRICT	SHEET NO.
KC	278
COUNTY	JACKSON
JOB NO.	J4P3196
CONTRACT ID.	.
PROJECT NO.	.
BRIDGE NO.	.

DESCRIPTION | DATE | REV.

IF A SEAL IS PRESENT ON THIS SHEET IT HAS BEEN ELECTRONICALLY SEALED AND DATED.

LEE'S SUMMIT MISSOURI®

Hg Consult Inc engineers planners
9111 NE 79th Streett Kansas City, MO 64158 (816)912-4720
Hg CONSULT, INC.
PRO. ENGINEER 2010005873

STA. 1000+00
BEGIN CONSTRUCTION
INSTALL 8" SOLID SLEEVE
CONNECT TO EXISTING 8" WATER (W)
ABANDON 8" WATER (E)

TEMP. CONSTRUCTION EASEMENT

STA. 1000+30.79
INSTALL 8"-11.25° BEND
DEFLECT JOINT 0.17°
11.42° TOTAL DEFLECTION

1000

STA. 1001+10.27
INSTALL 8"-22.5° BEND
DEFLECT JOINT 0.00°
22.5° TOTAL DEFLECTION

STA. 1001+37.00, 15.5' RT
INSTALL 8"X6" TEE &
5¼" HYDRANT ASSEMBLY

STA. 1004+31.35
INSTALL 8"-11.25° BEND
DEFLECT JOINT 2.32°
8.93° TOTAL DEFLECTION

LINE C
SEE SHEET 4

STA. 1004+97.93
INSTALL 8"-11.25° BEND
DEFLECT JOINT 2.32°
8.93° TOTAL DEFLECTION

LINE B

STA. 1008+43.37
INSTALL 8"-11.25° BEND
DEFLECT JOINT 4.17°
15.42° TOTAL DEFLECTION

STA. 1008+59.00, 14.0' RT
INSTALL 8"X6" TEE &
5¼" HYDRANT ASSEMBLY

MATCH LINE STA. 1009+00
SEE SHEET 3

STA. 1007+73.08
INSTALL 8"-11.25° BEND
DEFLECT JOINT 3.26°
14.51° TOTAL DEFLECTION

STA. 1007+26.63
INSTALL 8"-11.25° BEND
DEFLECT JOINT 0.44°
11.69° TOTAL DEFLECTION

STA. 1006+37.25
INSTALL 8"-11.25° BEND
DEFLECT JOINT 1.12°
12.37° TOTAL DEFLECTION

STA. 1005+56.68
INSTALL 8"X8" TEE &
2-8" GATE VALVES (S,E)

STA. 1005+50.37
INSTALL 8"-45° BEND
DEFLECT JOINT 2.11°
42.89° TOTAL DEFLECTION

STA. 1005+39.14
INSTALL 8"-45° BEND
DEFLECT JOINT 3.83°
41.17° TOTAL DEFLECTION

STA. 1005+23.00, 12.0' RT
INSTALL 8"X6" TEE &
5¼" HYDRANT ASSEMBLY

STA. 1003+98.06
INSTALL 8"-11.25° BEND
DEFLECT JOINT 0.00°
11.25° TOTAL DEFLECTION

STA. 1002+55.95
INSTALL 8"-11.25° BEND
DEFLECT JOINT 2.33°
13.58° TOTAL DEFLECTION

STA. 1002+31.72
INSTALL 8"-11.25° BEND
DEFLECT JOINT 0.00°
11.25° TOTAL DEFLECTION

BLUE PKWY.

15' DRAINAGE EASEMENT RESERVED TO MODOT

10' UTILITY EASEMENT BOOK 1815, PAGE 171

UTILITY EASEMENT BOOK 1815, PAGE 171

TRACT DESCRIBED IN BOOK 2014, PAGE 0000

SOUTH 1/4 CORNER SECTION 1-48-33

SIGNAL VAULT

(1) RESTRAIN JOINTS WITHIN 5 FEET OF FITTING.

(2) RESTRAIN JOINTS WITHIN 10 FEET OF FITTING.

SCALE
0 40 80 120

RESTRAINED JOINTS THROUGHOUT

RESTRAINED JOINTS THROUGHOUT

RESTRAINED JOINTS THROUGHOUT

STA. 1000+00.00
BEGIN CONSTRUCTION
INSTALL 8" SOLID SLEEVE
CONNECT TO EXISTING 8" WATER (E)

STA. 1000+04.54
INSTALL 8"-22.5° BEND
DEFLECT JOINT 0.00° &
22.50° TOTAL DEFLECTION

STA. 1000+18.30
INSTALL 8"-22.5° BEND
DEFLECT JOINT 0.00° &
22.50° TOTAL DEFLECTION

STA. 1000+28.30
PROP. 15" STORM SEWER
EL = 1039.15

STA. 1003+73.23
EX. WATER LINE
EL = UNKNOWN
TO BE ABANDONED

PROPOSED GRADE

EXIST. GROUND

8" C900 PVC

STA. 1006+25.59
INSTALL 8"-22.5° BEND
DEFLECT JOINT 0.00° &
22.50° TOTAL DEFLECTION

STA. 1006+28.99
INSTALL 8"-22.5° BEND
DEFLECT JOINT 0.00° &
22.50° TOTAL DEFLECTION

STA. 1006+38.99
PROP. 18" STORM SEWER
EL = 1032.65

STA. 1006+48.99
INSTALL 8"-22.5° BEND
DEFLECT JOINT 0.00° &
22.50° TOTAL DEFLECTION

STA. 1006+57.00
INSTALL 8"-22.5° BEND
DEFLECT JOINT 0.00° &
22.50° TOTAL DEFLECTION

STA. 1007+69.42
EX. WATER LINE
EL = UNKNOWN
TO BE ABANDONED

STA. 1008+27.16
PROP. 18" STORM SEWER
EL = 1029.10

1070 1060 1050 1040 1030 1020 1010 1000 990

1000+00 1001+00 1002+00 1003+00 1004+00 1005+00 1006+00 1007+00 1008+00 1009+00

PLAN AND PROFILE
BLUE PKWY. AND 291 HWY. - LINE B
STA. 1000+00 TO STA. 1009+00
SHEET 2 OF 8

STATE OF MISSOURI
CHAD S. HARRIS
NUMBER PE-2022005207
PROFESSIONAL ENGINEER
2/27/2025

DATE PREPARED 2/27/2025

ROUTE	STATE
50/291	MO
DISTRICT	SHEET NO.
KC	279

COUNTY JACKSON

JOB NO. J4P3196

CONTRACT ID. .

PROJECT NO. .

BRIDGE NO. .

DESCRIPTION

DATE

IF A SEAL IS PRESENT ON THIS SHEET IT HAS BEEN ELECTRONICALLY SEALED AND DATED.

LEE'S SUMMIT MISSOURI®

Hg Consult Inc engineers planners
9111 NE 79th Street Kansas City, MO 64158 (816)912-4720
Hg CONSULT, INC.
PRO. ENGINEER 2010005873

REV.

(1) RESTRAIN JOINTS WITHIN 5 FEET OF FITTING.

(2) RESTRAIN JOINTS WITHIN 10 FEET OF FITTING.

SCALE

0 40 80 120

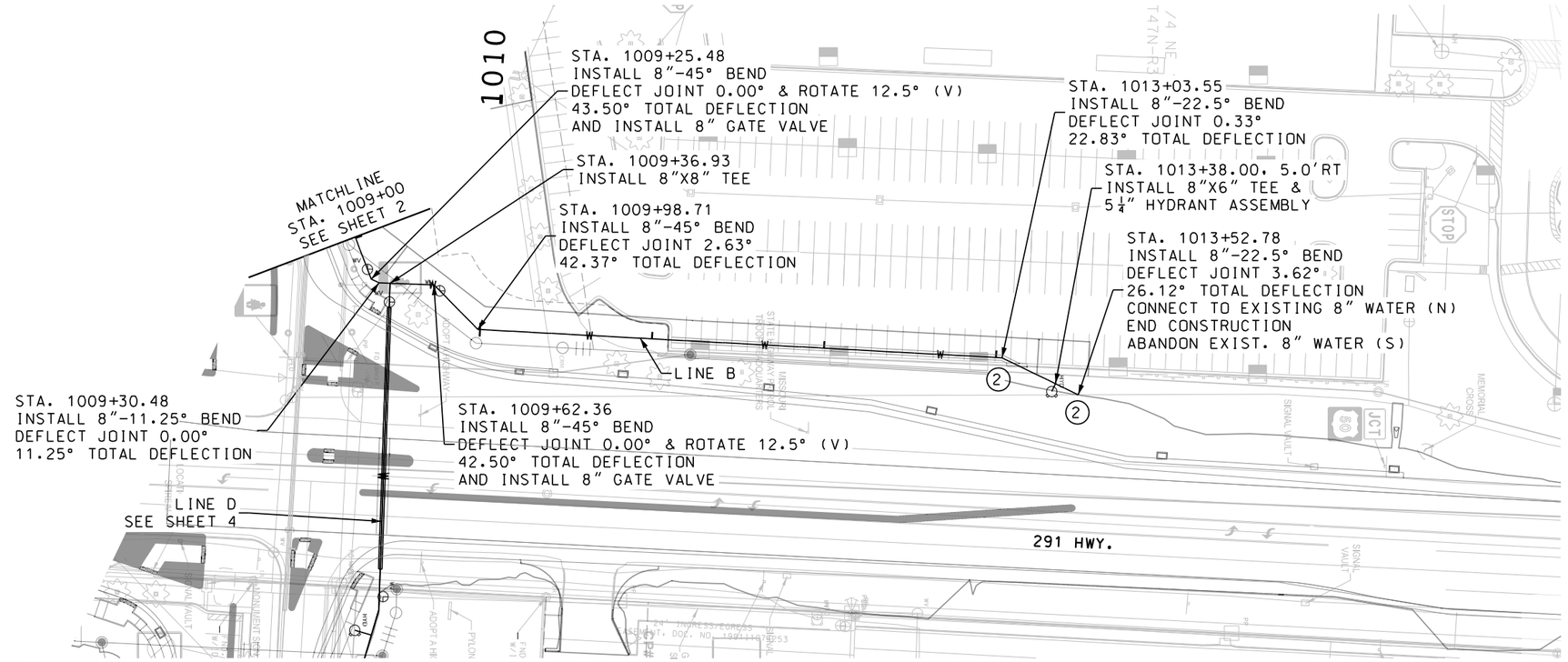

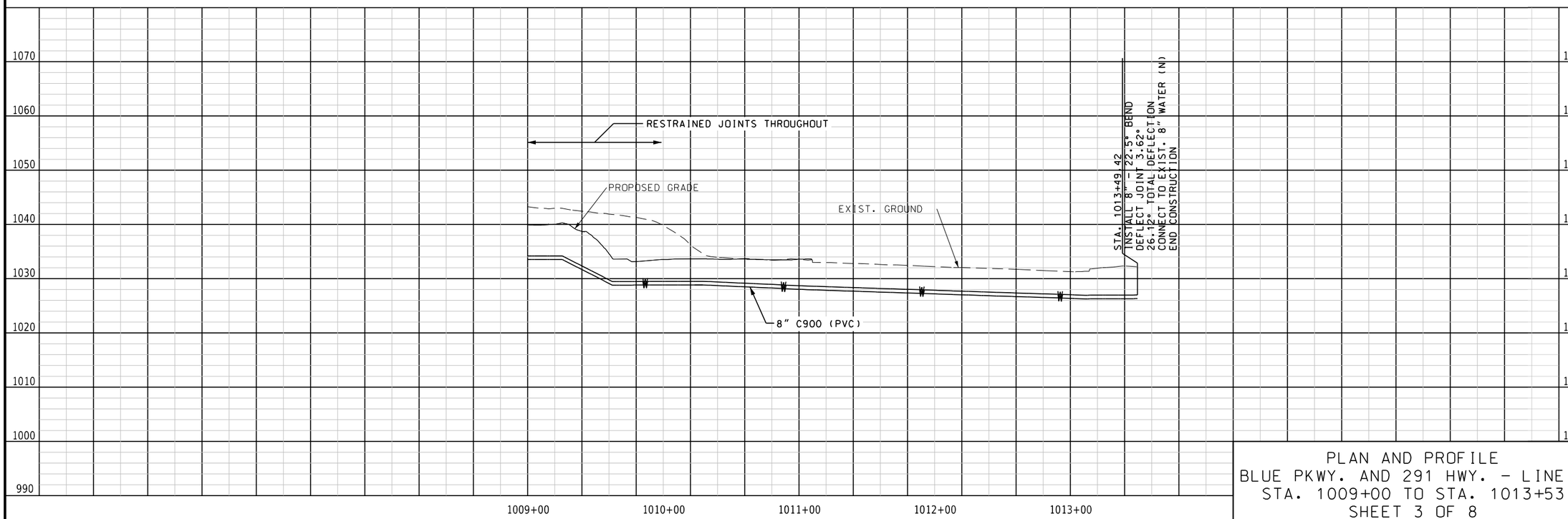

PLAN AND PROFILE
BLUE PKWY. AND 291 HWY. - LINE B
STA. 1009+00 TO STA. 1013+53
SHEET 3 OF 8

STATE OF MISSOURI
CHAD S. HARRIS
NUMBER PE-2022005207
PROFESSIONAL ENGINEER
2/27/2025

DATE PREPARED 2/27/2025

ROUTE	STATE
50/291	MO
DISTRICT	SHEET NO.
KC	280

COUNTY JACKSON
JOB NO. J4P3196
CONTRACT ID. .
PROJECT NO. .
BRIDGE NO. .

DESCRIPTION | DATE | REV.

IF A SEAL IS PRESENT ON THIS SHEET IT HAS BEEN ELECTRONICALLY SEALED AND DATED.

LEE'S SUMMIT MISSOURI®

Hg Consult Inc engineers planners
9111 NE 79th Streett Kansas City, MO 64158 (816)912-4720
Hg CONSULT, INC.
PRO. ENGINEER 2010005873

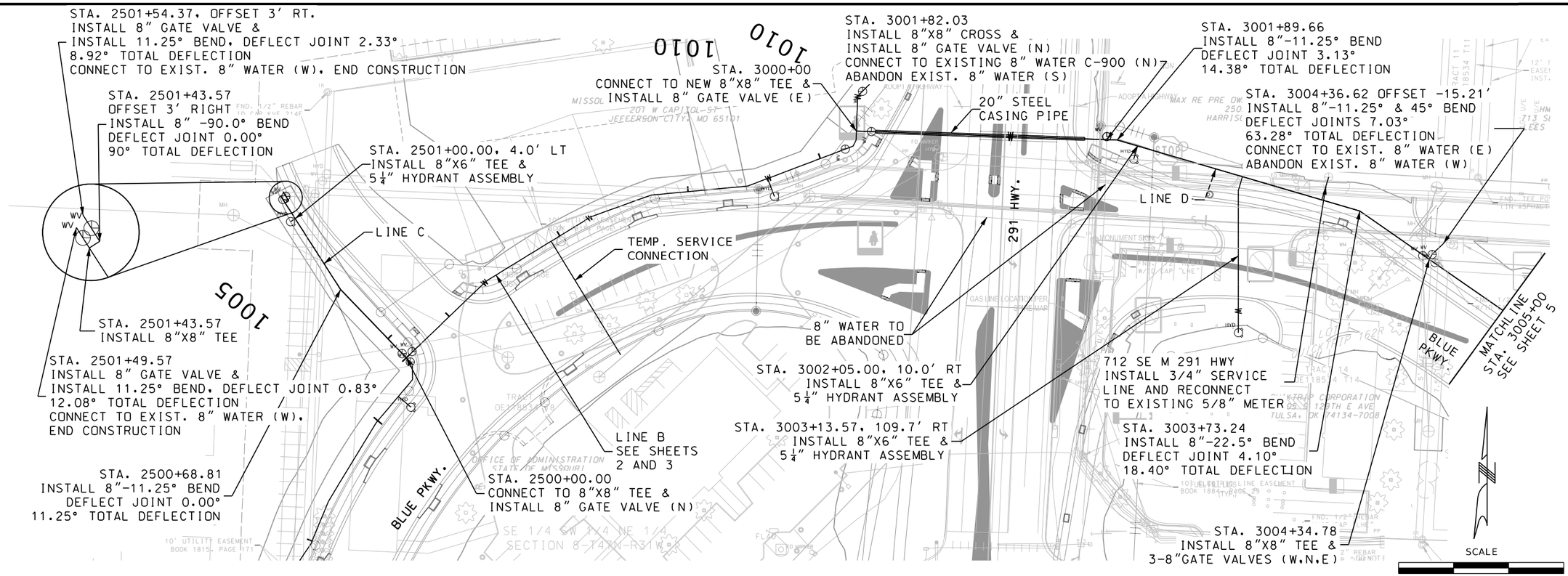

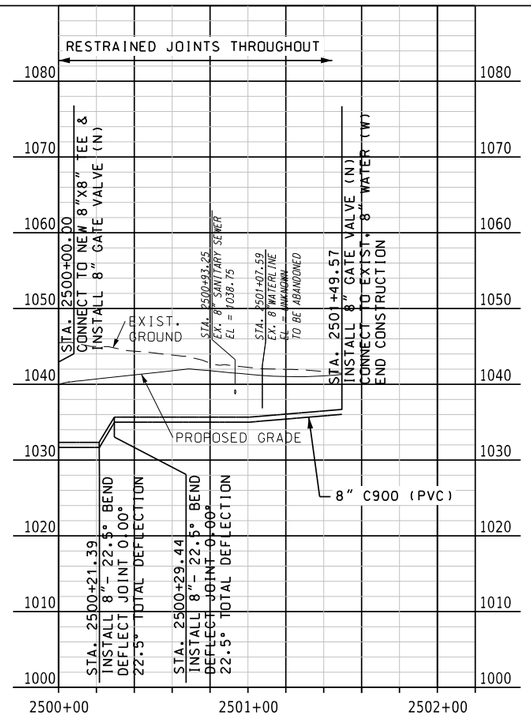

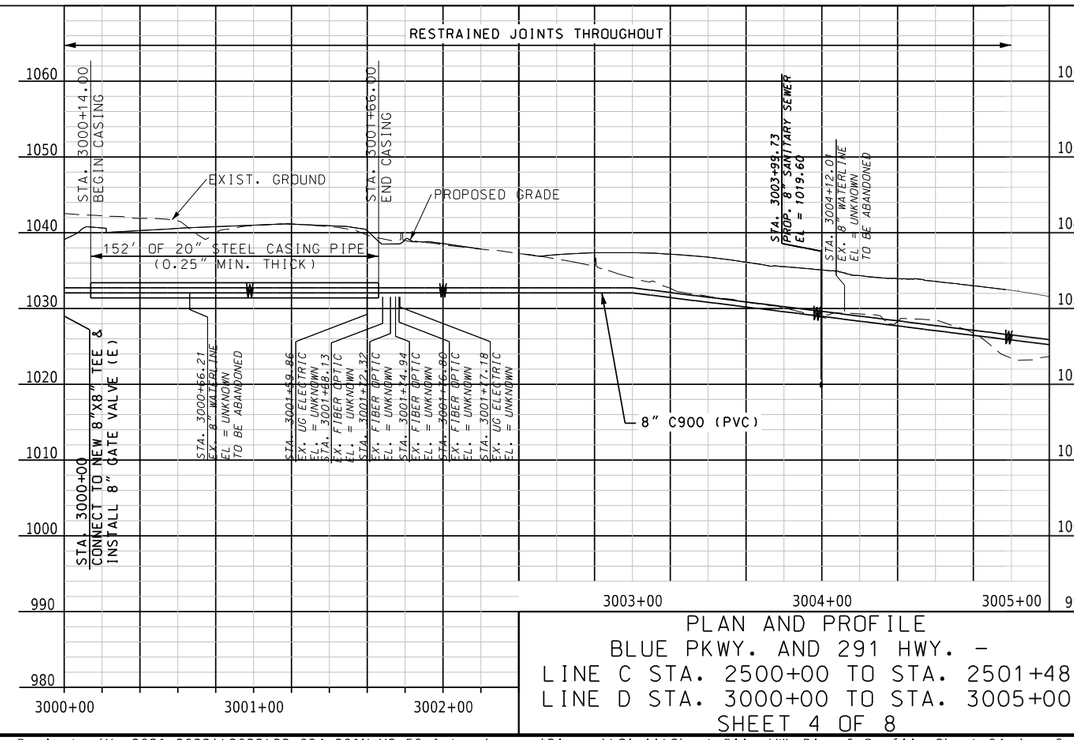

PLAN AND PROFILE
BLUE PKWY. AND 291 HWY. –
LINE C STA. 2500+00 TO STA. 2501+48
LINE D STA. 3000+00 TO STA. 3005+00
SHEET 4 OF 8

STATE OF MISSOURI
CHAD S. HARRIS
NUMBER PE-2022005207
PROFESSIONAL ENGINEER
2/27/2025

DATE PREPARED 2/27/2025

ROUTE	STATE
50/291	MO
DISTRICT	SHEET NO.
KC	281

COUNTY JACKSON
JOB NO. J4P3196
CONTRACT ID. .
PROJECT NO. .
BRIDGE NO. .

DESCRIPTION
DATE
REV.

IF A SEAL IS PRESENT ON THIS SHEET IT HAS BEEN ELECTRONICALLY SEALED AND DATED.

LEE'S SUMMIT MISSOURI®

Hg Consult Inc engineers planners
9111 NE 79th Street Kansas City, MO 64158 (816)912-4720
Hg CONSULT, INC.
PRO. ENGINEER 2010005873

1 RESTRAIN JOINTS WITHIN 5 FEET OF FITTING.

2 RESTRAIN JOINTS WITHIN 10 FEET OF FITTING.

MATCHLINE STA. 3005+00 SEE SHEET 4

STA. 3005+23.51
INSTALL 8"-11.25° BEND
DEFLECT JOINT 2.28°
8.97° TOTAL DEFLECTION

STA. 3005+92.65
INSTALL 8"-11.25° BEND
DEFLECT JOINT 2.28°
8.97° TOTAL DEFLECTION

STA. 3007+75.43, 70.0' RT
INSTALL 8"X6" TEE &
5¼" HYDRANT ASSEMBLY

STA. 3007+23.00, 9.5' RT
INSTALL 8"X6" TEE &
5¼" HYDRANT ASSEMBLY

801 SE M 291 HWY (2 METERS)
1" METER W/ 1" SERVICE LINE
1.5" METER W/ 2" SERVICE LINE

STA. 3008+32.98
INSTALL 8"-22.5° BEND
DEFLECT JOINT 0.00°
22.50° TOTAL DEFLECTION

STA. 3008+50.13
INSTALL 8"-45.0° BEND
DEFLECT JOINT 0.00°
45.0° TOTAL DEFLECTION

STA. 3008+67.29
INSTALL 8"-22.5° BEND
DEFLECT JOINT 0.00°
22.50° TOTAL DEFLECTION

STA. 3008+91.11
INSTALL 8"-22.5° BEND
DEFLECT JOINT 0.00°
22.50° TOTAL DEFLECTION

STA. 3010+30.61, 3.0' RT
INSTALL 8"X6" TEE &
5¼" HYDRANT ASSEMBLY

STA. 3013+02.61, 3.0' RT
INSTALL 8"X6" TEE &
5¼" HYDRANT ASSEMBLY

STA. 3015+63.56
INSTALL 8"-45° BEND
DEFLECT JOINT 0.00°
45° TOTAL DEFLECTION

712 SE BLUE PARKWAY
CONNECT TO EXIST.
SERVICE LINE

3/4" WATER
SERVICE LINE

INSTALL 5/8"
METER

STA. 3015+40.58
INSTALL 8"-45° BEND
DEFLECT JOINT 0.00°
45° TOTAL DEFLECTION

STA. 3015+79.30
CONNECT TO EXIST. 8" CROSS (W) &
INSTALL 1-8" GATE VALVE (W)

7TH TERRACE

BLUE PKWY.

LINE D (STORM)

SCALE 0 40 80 120

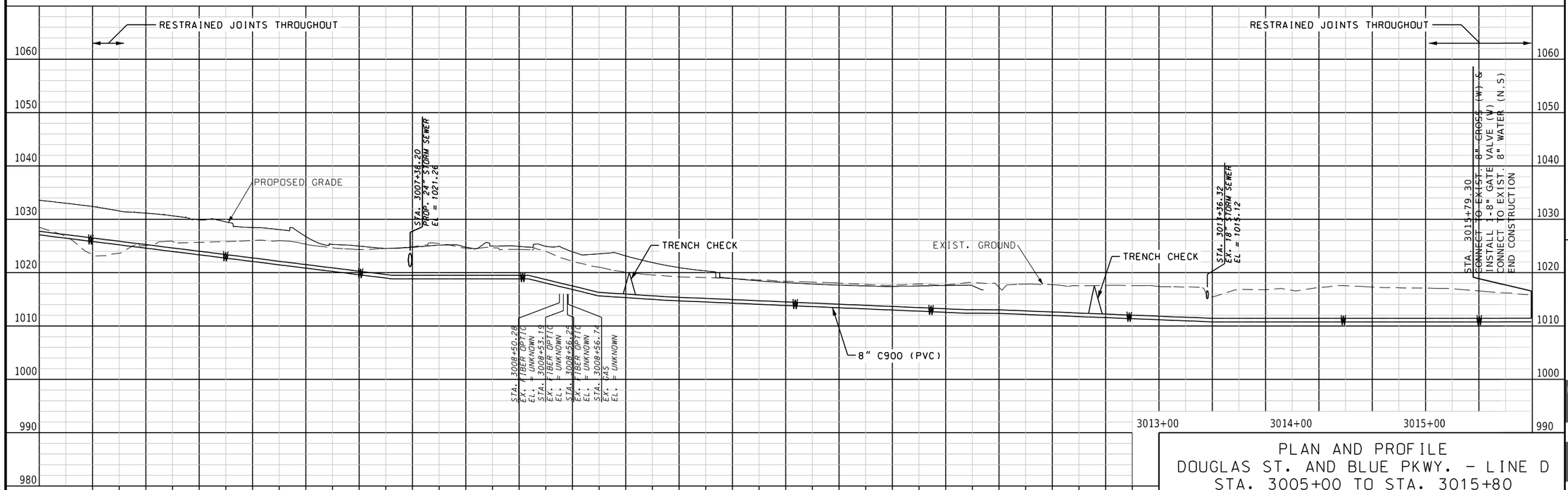

PLAN AND PROFILE
DOUGLAS ST. AND BLUE PKWY. - LINE D
STA. 3005+00 TO STA. 3015+80
SHEET 5 OF 8

STATE OF MISSOURI
CHAD S. HARRIS
NUMBER PE-2022005207
PROFESSIONAL ENGINEER
2/27/2025

DATE PREPARED 2/27/2025

ROUTE	STATE
50/291	MO
DISTRICT	SHEET NO.
KC	282

COUNTY JACKSON
JOB NO. J4P3196
CONTRACT ID. .
PROJECT NO. .
BRIDGE NO. .

DESCRIPTION
DATE
REV.

IF A SEAL IS PRESENT ON THIS SHEET IT HAS BEEN ELECTRONICALLY SEALED AND DATED.

LEE'S SUMMIT MISSOURI

Hg Consult Inc engineers planners
9111 NE 79th Street Kansas City, MO 64158 (816)912-4720
Hg CONSULT. INC.
PRO. ENGINEER 2010005873

G:\Shared drives\Hg Projects (Yr 2021-2022)\2022\22.034 291N_US 50 Interchange (Olsson)\Civil\Sheet_Files\WL_Plan & Profile Sheet 05.dgn 10:09:26 AM 2/27/2025

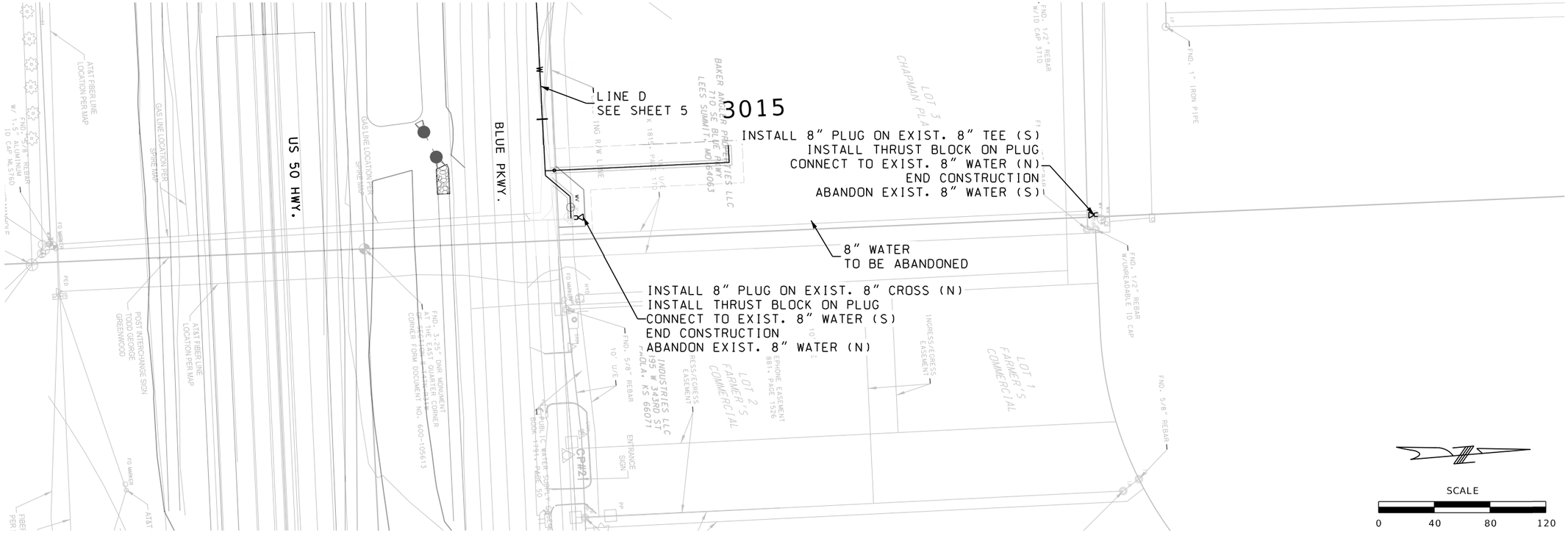

PLAN AND PROFILE
BLUE PKWY. AND 7TH TERRACE
SHEET 6 OF 8

STATE OF MISSOURI
CHAD S. HARRIS
NUMBER PE-2022005207
PROFESSIONAL ENGINEER
2/27/2025

DATE PREPARED
2/27/2025

ROUTE	STATE
50/291	MO
DISTRICT	SHEET NO.
KC	283

COUNTY
JACKSON

JOB NO.
J4P3196

CONTRACT ID.
.

PROJECT NO.
.

BRIDGE NO.
.

DATE	DESCRIPTION	REV.
.	.	.

IF A SEAL IS PRESENT ON THIS SHEET IT HAS BEEN ELECTRONICALLY SEALED AND DATED.

LEE'S SUMMIT MISSOURI®

Hg Consult Inc engineers planners
9111 NE 79th Street Kansas City, MO 64158 (816)912-4720
Hg CONSULT, INC.
PRO. ENGINEER 2010005873

STA. 5505+82.28
INSTALL 12"-45° BEND
DEFLECT JOINT 0.00°
45.00° TOTAL DEFLECTION

STA. 5505+93.06
INSTALL 12"-45° BEND
DEFLECT JOINT 0.00°
45.00° TOTAL DEFLECTION

LINE F

STA. 5506+58.72
CONNECT TO EXIST. 10" WATER (E)
END CONSTRUCTION
ABANDON 10" WATER (W)

STA. 5504+53.59
INSTALL 12"-22.5° BEND
DEFLECT JOINT 3.59°
18.91° TOTAL DEFLECTION

STA. 5502+43.78
INSTALL 12"X6" TEE & 1-6" GATE VALVE
CONNECT TO EXIST. 6" WATER (E)
RESTRAIN VALVE TO THE TEE

STA. 5500+26.94
INSTALL 12"X12" TEE &
3-12" GATE VALVES (W,S,E)
CONNECT TO PROP. 12" WATER (S)
ABANDON 10" WATER (E)

STA. 5504+21.06
INSTALL 12"-45° BEND
DEFLECT JOINT 0.00°
45.00° TOTAL DEFLECTION

1001 SE HAMBLEN RD
RELOCATE 5/8" WATER METER
AND CONNECT 3/4" SERVICE LINE
TO NEW MAIN

STA. 5500+15.95, 3.0' LT
INSTALL 12"X6" TEE &
5¼" HYDRANT ASSEMBLY

STA. 5503+16.58
INSTALL 12"-22.5° BEND
DEFLECT JOINT 1.11°
23.61° TOTAL DEFLECTION

STA. 5500+11.96
DEFLECT JOINT 0.00°
45.0° TOTAL DEFLECTION

STA. 5499+80.50
BEGIN CONSTRUCTION
INSTALL 11.25° BEND, DEFLECT JOINT 0.00°
11.25° TOTAL DEFLECTION
INSTALL 10"X12" REDUCER
CONNECT TO EXIST. 10" WATER (W)

STA. 5501+83.47
INSTALL 12"X12" TEE
CONNECT TO EXIST. 10" WATER (S)

STA. 5499+86.04
DEFLECT JOINT 0.00°
45.0° TOTAL DEFLECTION

LINE G

20" STEEL CASING PIPE

INSTALL 10" CAP
CONNECT TO EXIST. 10" WATER (E)
END CONSTRUCTION
ABANDON EXIST. 10" WATER (W)

DUTT KRUPA HOTEL LLC
& DEVOM HOTEL LLC
607 SE OLDHAM PKWY
LEES SUMMIT, MO 64081

NW 1/4 NE 1/4 SE 1/4
SECTION 8-T47N-R31W

① RESTRAIN JOINTS WITHIN 7 FEET OF FITTING.

② RESTRAIN JOINTS WITHIN 13 FEET OF FITTING.

SCALE
0 40 80 120

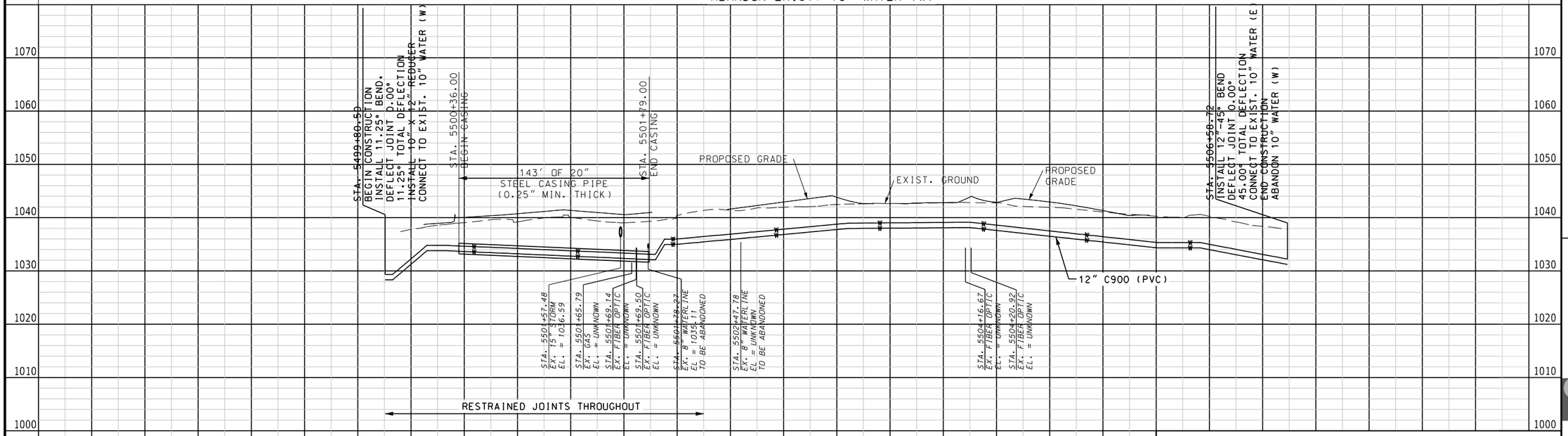

PLAN AND PROFILE
291 HWY. AND US 50 HWY. - LINE F
STA. 5500+00 TO STA. 5506+59
SHEET 7 OF 8

STATE OF MISSOURI
CHAD S. HARRIS
NUMBER PE-2022005207
PROFESSIONAL ENGINEER
2/27/2025

DATE PREPARED 2/27/2025
ROUTE 50/291
STATE MO
DISTRICT K-C
SHEET NO. 284
COUNTY JACKSON
JOB NO. J4P3196
CONTRACT ID. .
PROJECT NO. .
BRIDGE NO. .

DESCRIPTION
DATE
REV.

IF A SEAL IS PRESENT ON THIS SHEET IT HAS BEEN ELECTRONICALLY SEALED AND DATED.

LEE'S SUMMIT MISSOURI®

Hg Consult Inc engineers planners
9111 NE 79th Street Kansas City, MO 64158 (816)912-4720
Hg CONSULT. INC.
PRO. ENGINEER 2010005873

G:\Shared drives\Hg Projects (Yr 2021-2022)\2022\22.034 291N_US 50 Interchange (Olsson)\Civil\Sheet_Files\WL_Plan & Profile Sheet 07.dgn 10:11:40 AM 2/27/2025

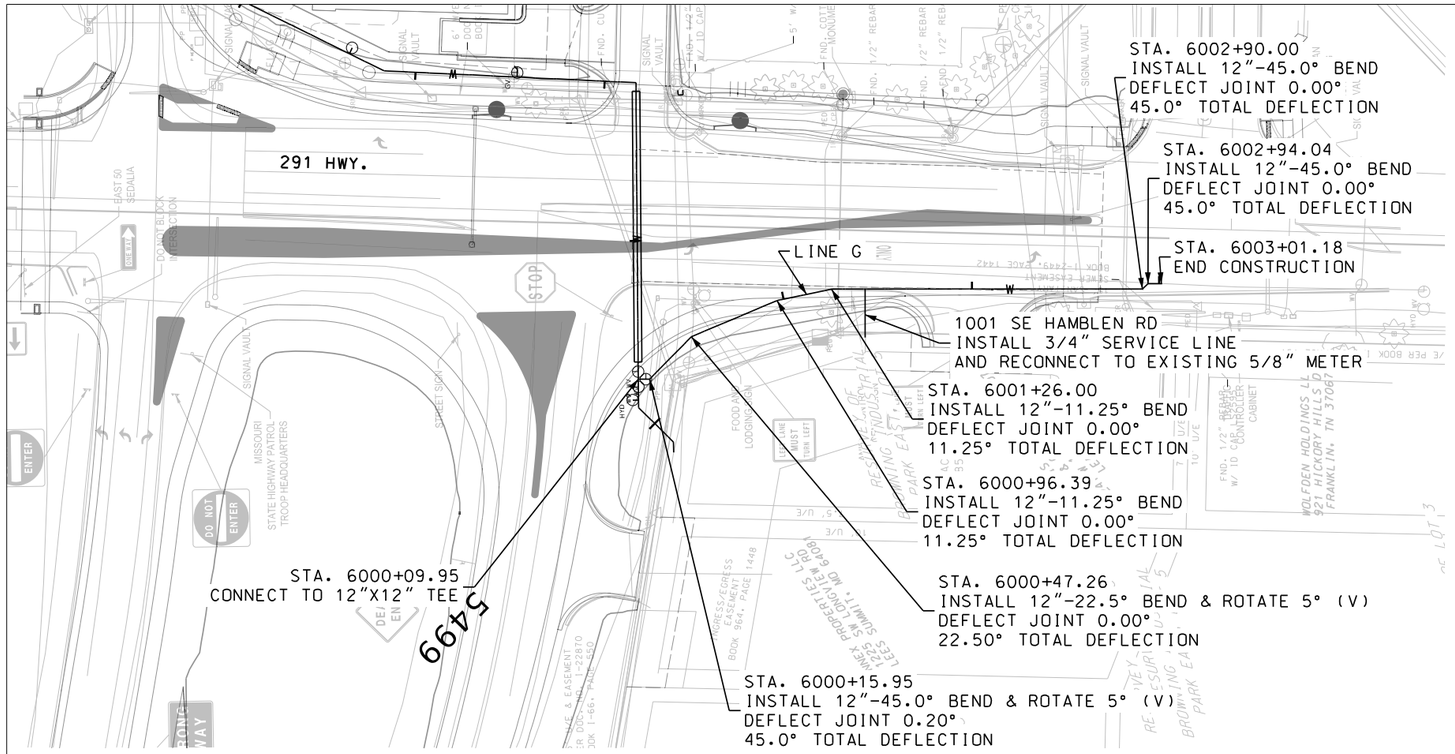

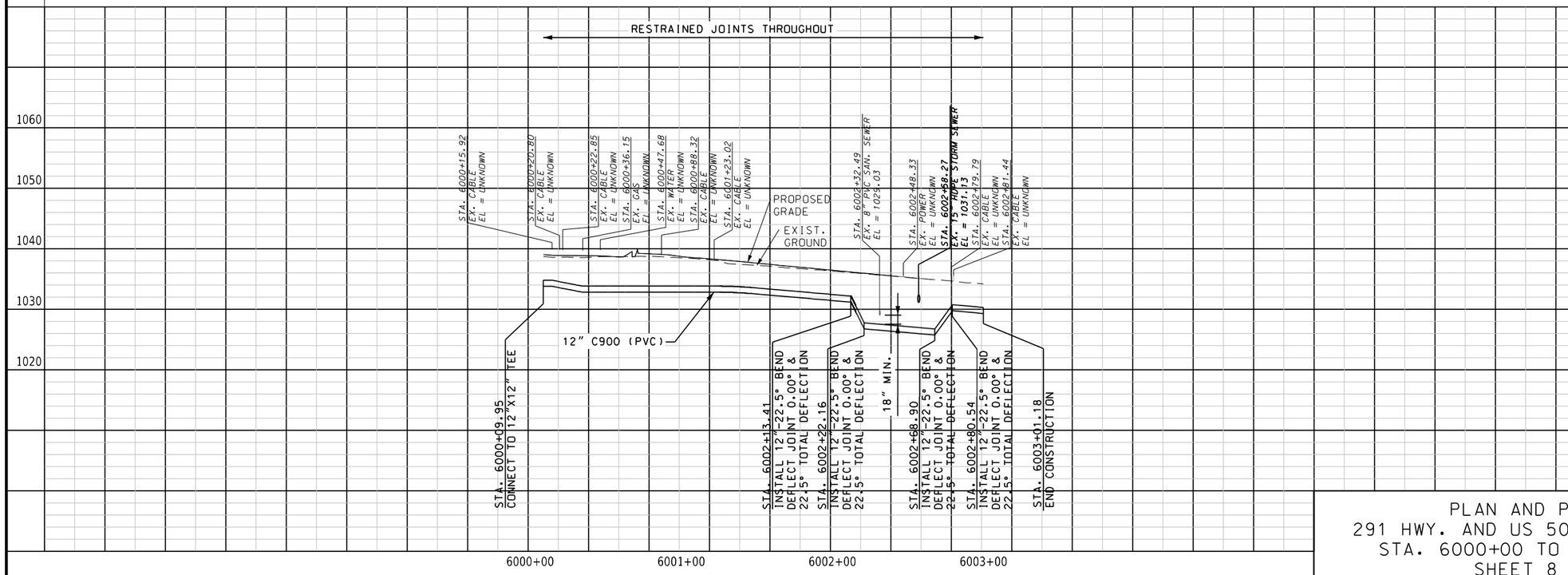

STATE OF MISSOURI
CHAD S. HARRIS
NUMBER PE-2022005207
PROFESSIONAL ENGINEER
2/27/2025

DATE PREPARED
2/27/2025

ROUTE	STATE
50/291	MO
DISTRICT	SHEET NO.
KC	285

COUNTY
JACKSON

JOB NO.
J4P3196

CONTRACT ID.
.

PROJECT NO.
.

BRIDGE NO.
.

DATE	DESCRIPTION
.	.

IF A SEAL IS PRESENT ON THIS SHEET IT HAS BEEN ELECTRONICALLY SEALED AND DATED.

LEE'S SUMMIT MISSOURI®

Hg Consult Inc engineers planners
9111 NE 79th Street Kansas City, MO 64158 (816)912-4720
Hg CONSULT, INC.
PRO. ENGINEER 2010005873

REV.

PLAN AND PROFILE
291 HWY. AND US 50 HWY. - LINE G
STA. 6000+00 TO STA. 6003+01
SHEET 8 OF 8

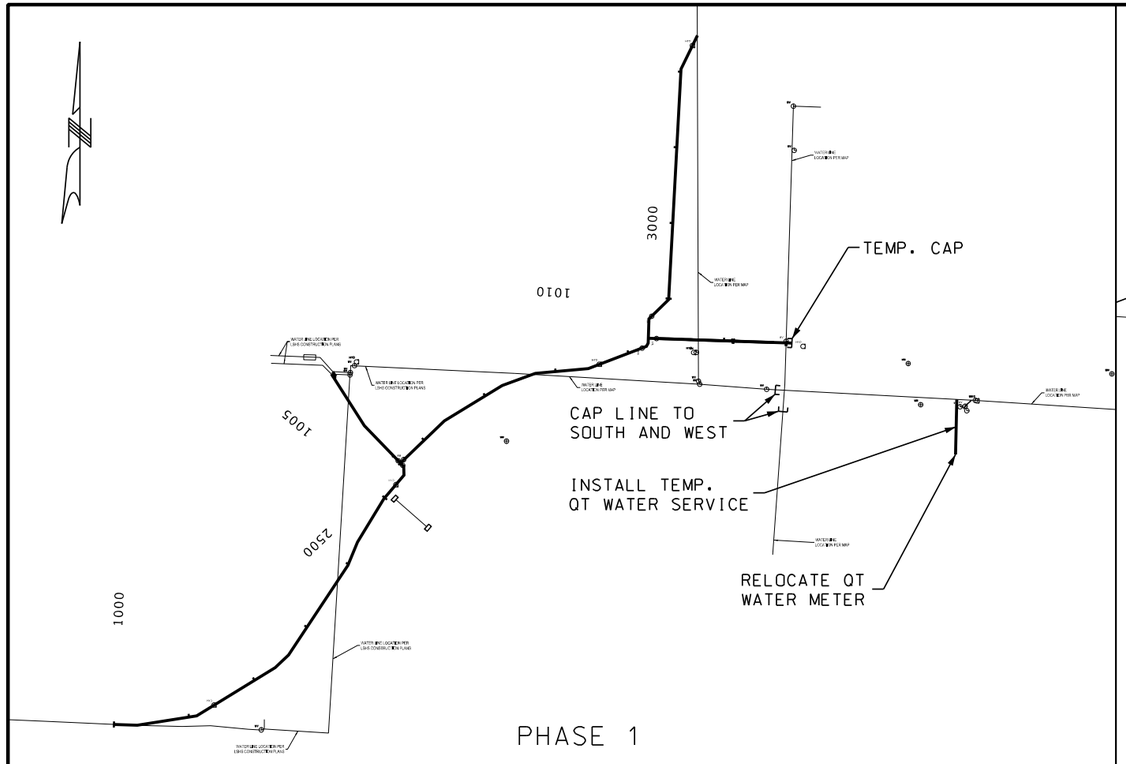

PHASE 1

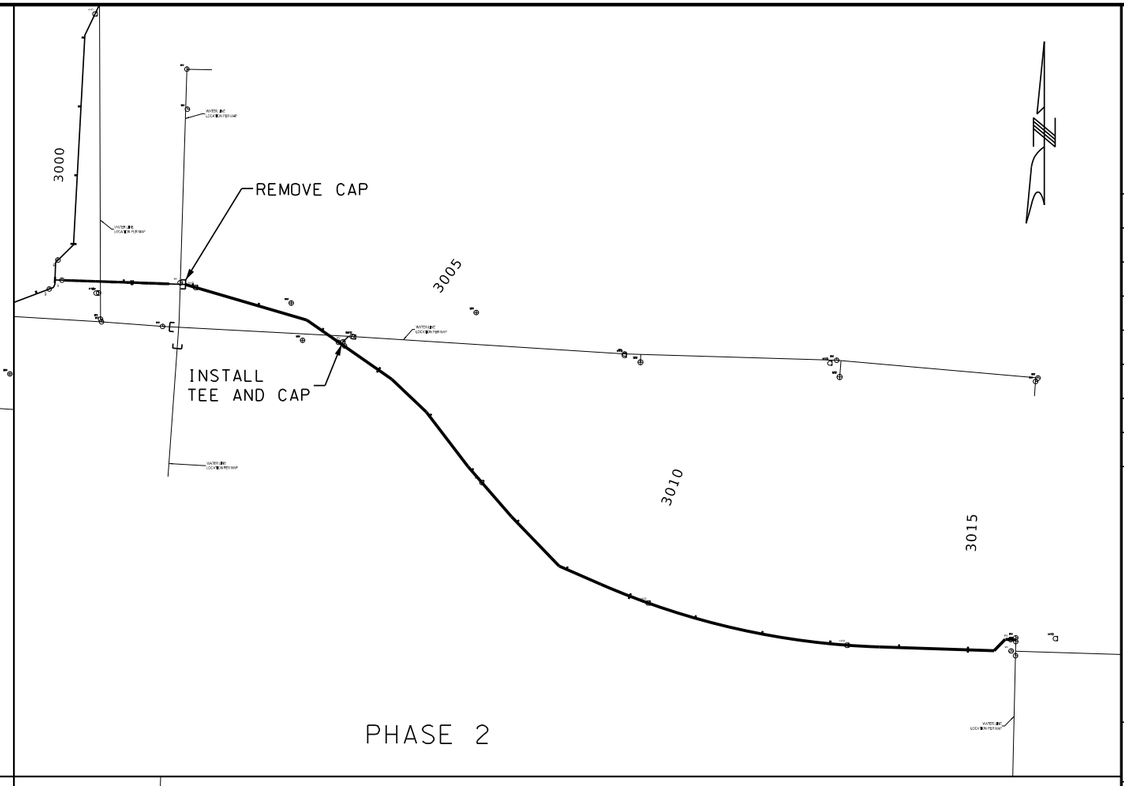

PHASE 2

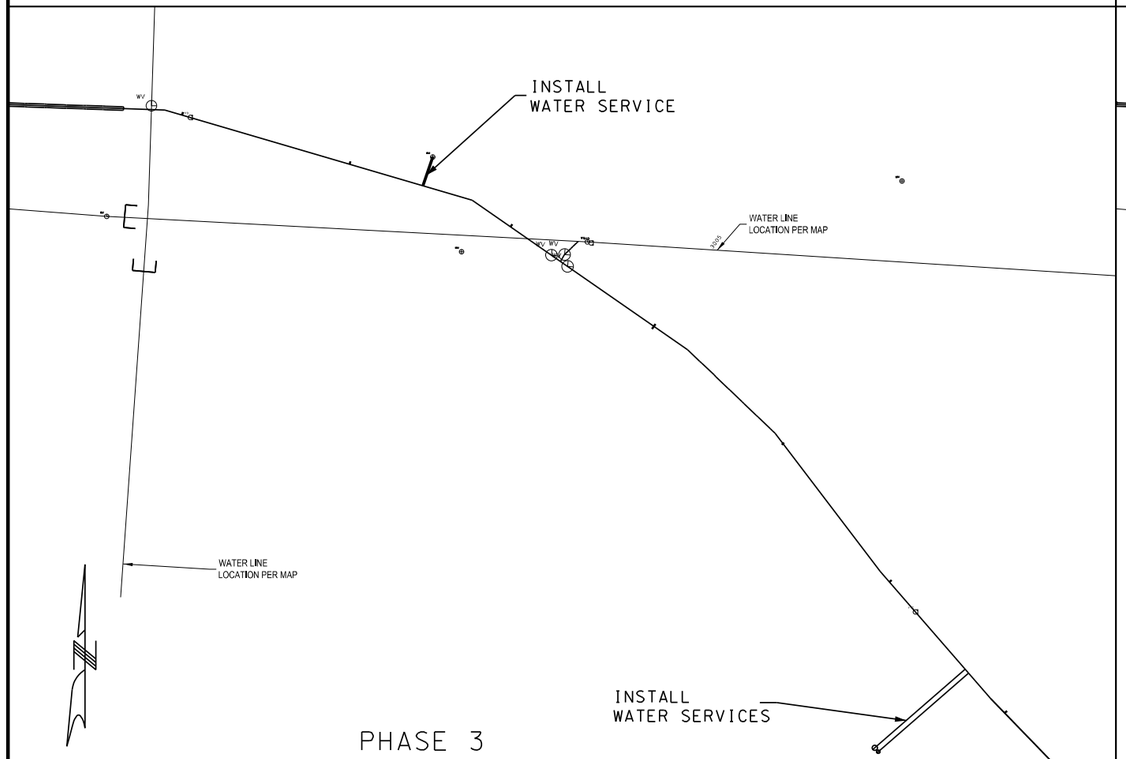

PHASE 3

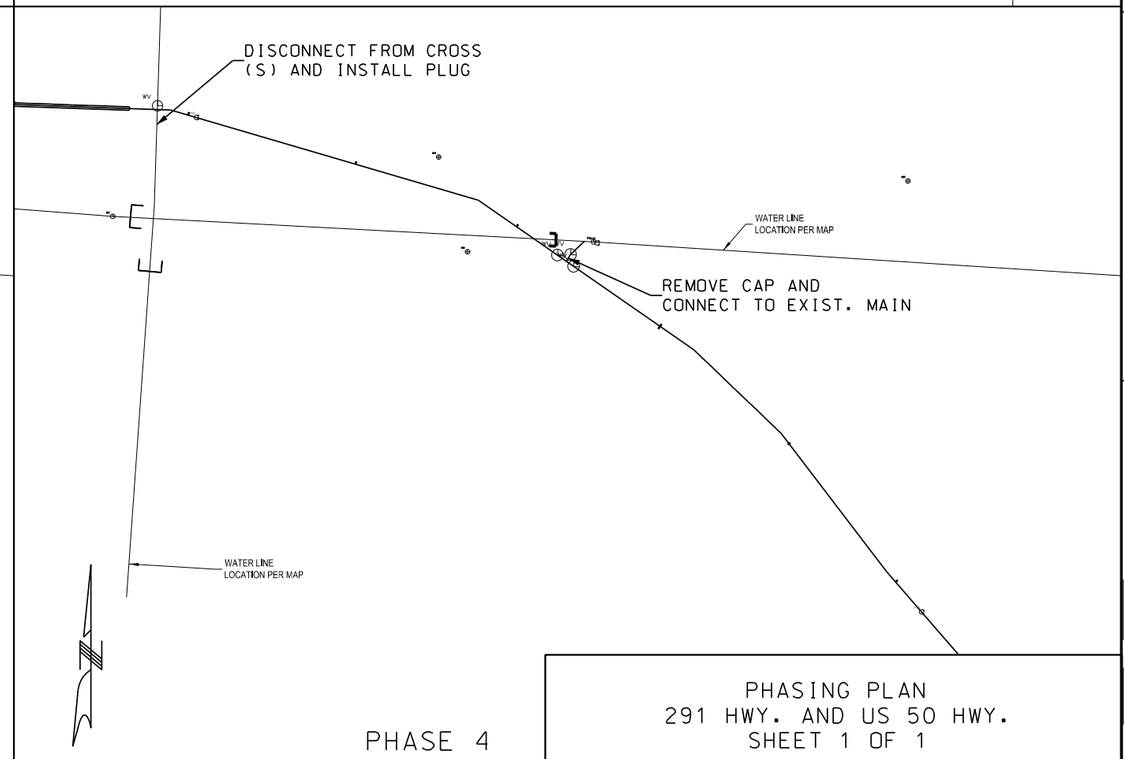

PHASE 4

PHASING PLAN
291 HWY. AND US 50 HWY.
SHEET 1 OF 1

STATE OF MISSOURI
CHAD S. HARRIS
NUMBER PE-2022005207
PROFESSIONAL ENGINEER
2/27/2025

DATE PREPARED
2/27/2025

ROUTE	STATE
50/291	MO
DISTRICT	SHEET NO.
KC	286

COUNTY
JACKSON

JOB NO.
J4P3196

CONTRACT ID.
.

PROJECT NO.
.

BRIDGE NO.
.

DESCRIPTION	DATE
.	.
.	.
.	.
.	.
.	.
.	.
.	.
.	.

REV.

IF A SEAL IS PRESENT ON THIS SHEET IT HAS BEEN ELECTRONICALLY SEALED AND DATED.

LEE'S SUMMIT MISSOURI®

Hg Consult Inc engineers planners
9111 NE 79th Streett Kansas City, MO 64158 (816)912-4720
Hg CONSULT, INC.
PRO. ENGINEER 2010005873

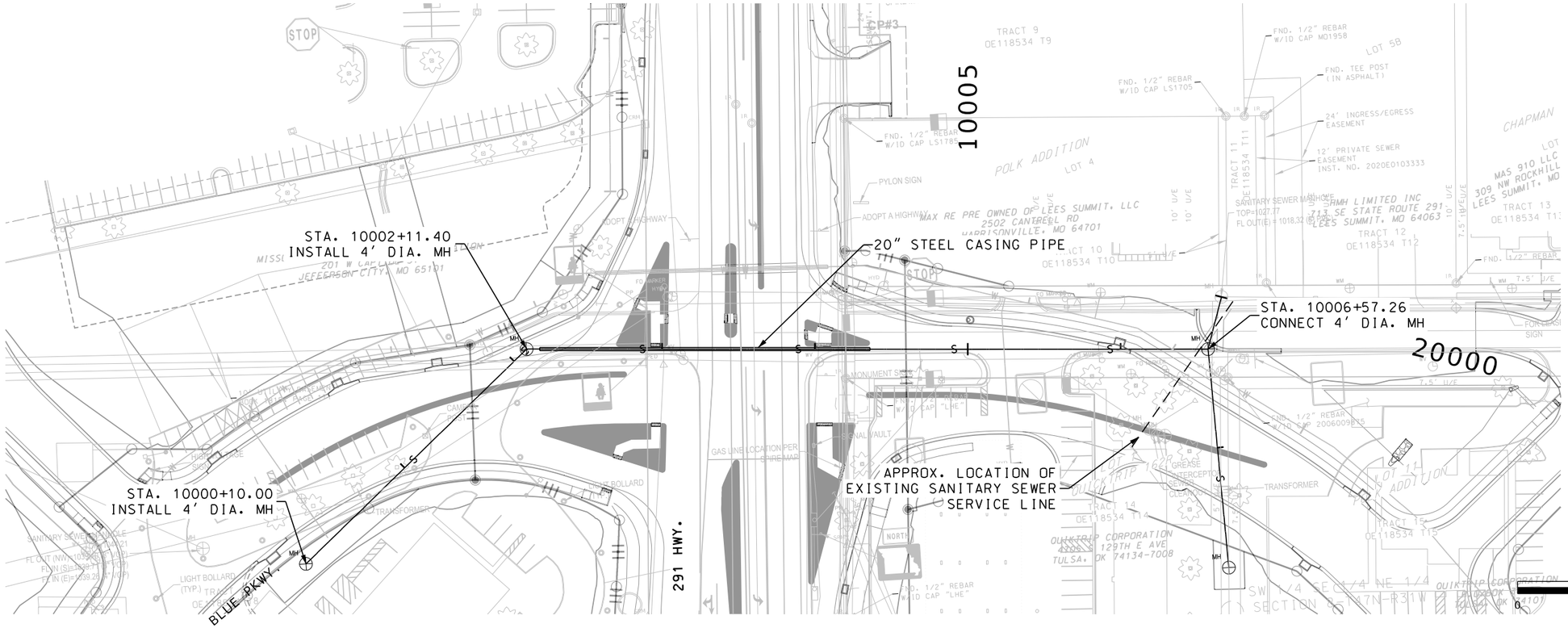

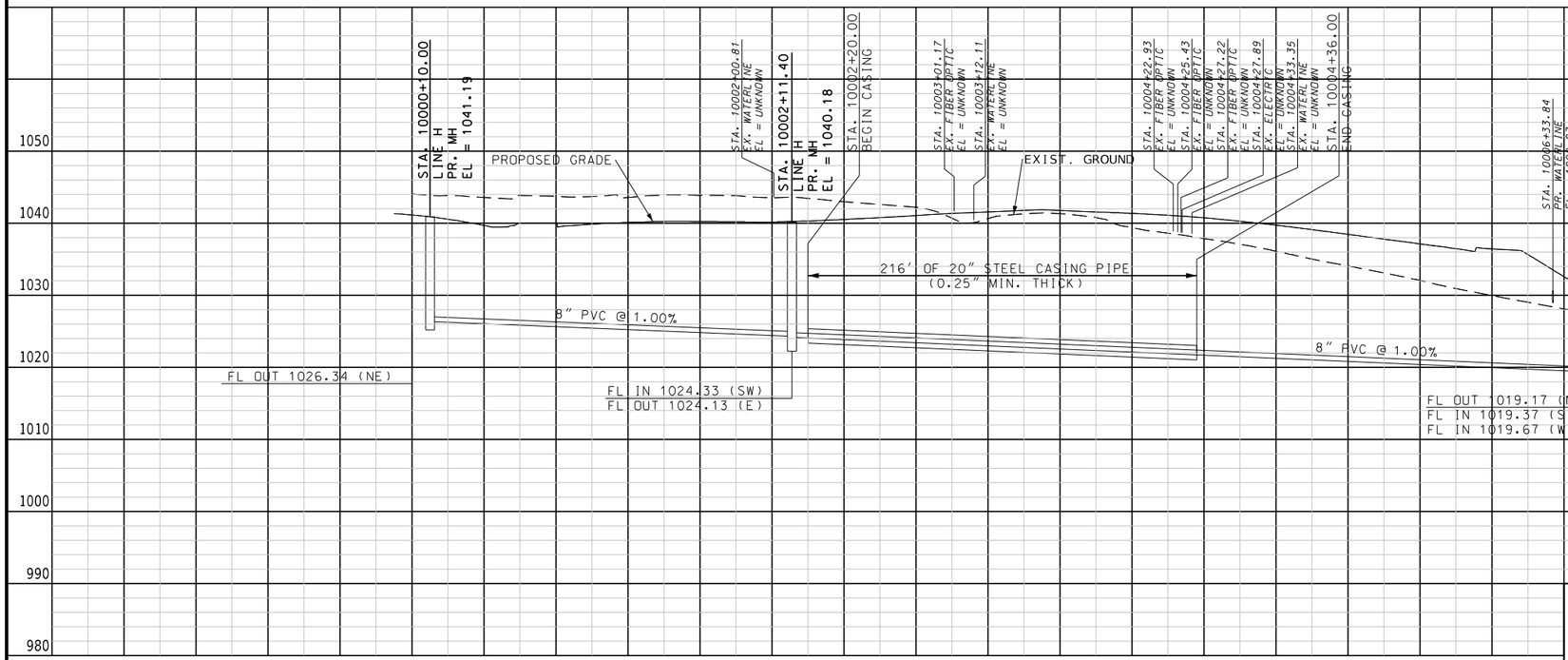

PLAN AND PROFILE
BLUE PKWY. AND 291 HWY. - LINE H
STA. 10000+00 TO STA. 10006+57
SHEET 1 OF 2

STATE OF MISSOURI
CHAD S. HARRIS
NUMBER PE-2022005207
PROFESSIONAL ENGINEER
2/27/2025

DATE PREPARED
2/27/2025

ROUTE	STATE
50/291	MO
DISTRICT	SHEET NO.
KC	287

COUNTY
JACKSON

JOB NO.
J4P3196

CONTRACT ID.
.

PROJECT NO.
.

BRIDGE NO.
.

DATE	DESCRIPTION	REV.
.	.	.

IF A SEAL IS PRESENT ON THIS SHEET IT HAS BEEN ELECTRONICALLY SEALED AND DATED.

LEE'S SUMMIT MISSOURI®

Hg Consult Inc engineers planners
9111 NE 79th Streett Kansas City, MO 64158 (816)912-4720
Hg CONSULT. INC.
PRO. ENGINEER 2010005873

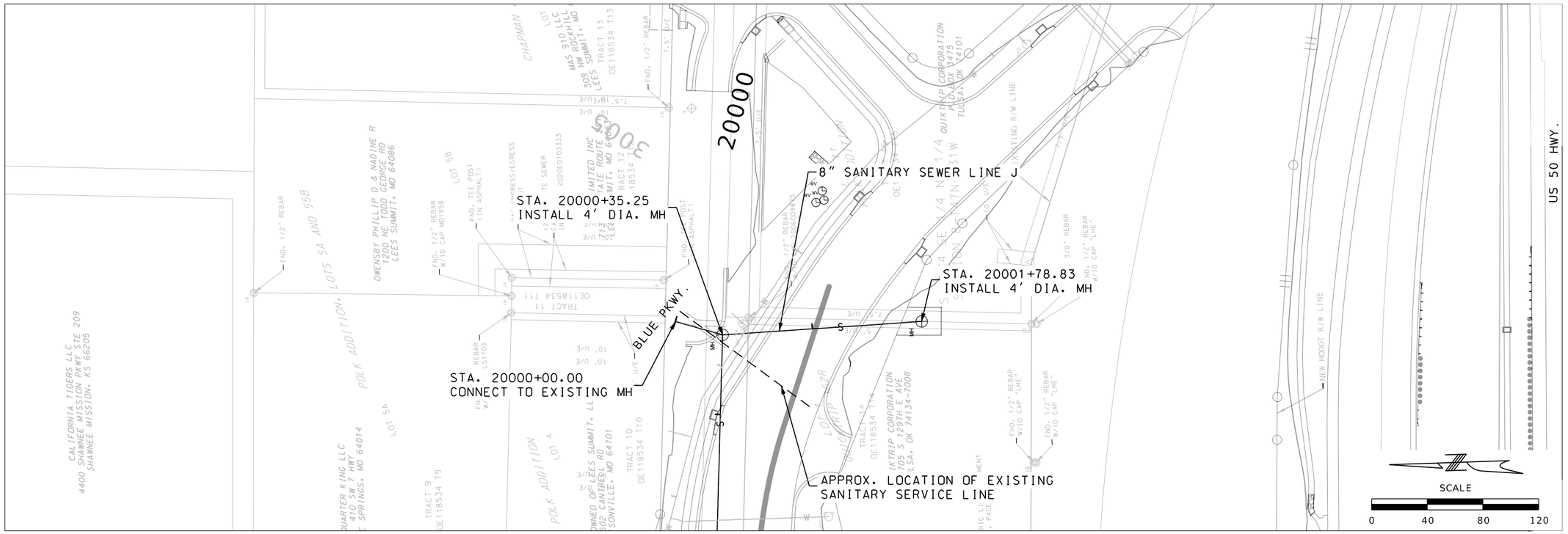

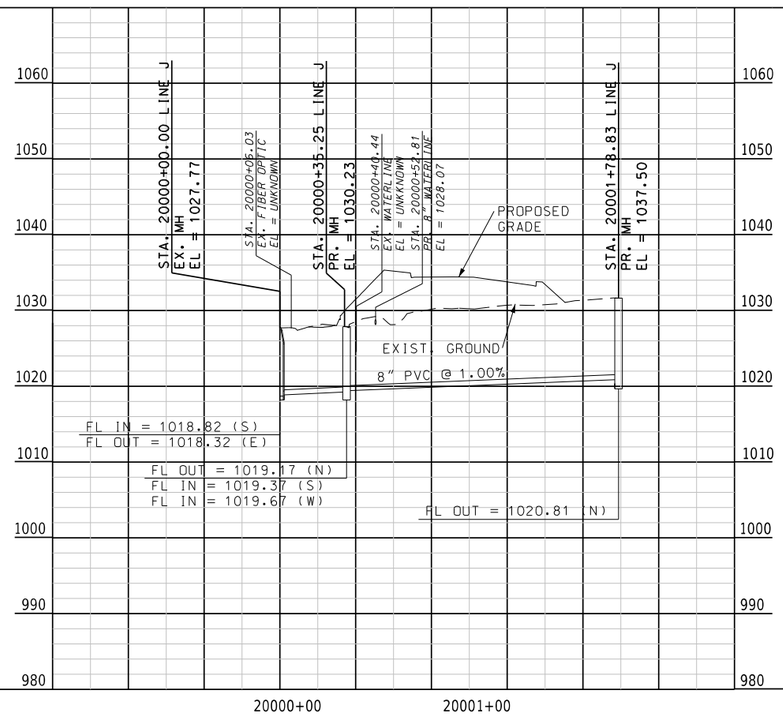

PLAN AND PROFILE
US 50 HWY. AND BLUE PKWY. - LINE J
STA. 20000+00 TO STA. 20001+79
SHEET 2 OF 2

STATE OF MISSOURI
CHAD S. HARRELL
NUMBER PE-2022005207
PROFESSIONAL ENGINEER
2/27/2025

DATE PREPARED 2/27/2025

ROUTE	STATE
50/291	MO
DISTRICT	SHEET NO.
KC	288

COUNTY JACKSON
JOB NO. J4P3196
CONTRACT ID. .
PROJECT NO. .
BRIDGE NO. .

DATE	DESCRIPTION	REV.

IF A SEAL IS PRESENT ON THIS SHEET IT HAS BEEN ELECTRONICALLY SEALED AND DATED.

LEE'S SUMMIT MISSOURI®

Hg Consult Inc engineers planners
9111 NE 79th Streett Kansas City, MO 64158 (816)912-4720
Hg CONSULT, INC.
PRO. ENGINEER 2010005873

WATER LINE QUANTITIES

ITEM NO.	DESCRIPTION	UNIT	QUANTITY
6039902	Service Connections	Ea.	8
6039902	12" Gate Valve	Ea.	3
6039902	8" Gate Valve	Ea.	15
6039902	6" Gate Valve	Ea.	1
6039902	Fire hydrant assembly	Ea.	11
6039903	12" Water Main (Including Fittings)	LF	960
6039903	8" Water Main (Including Fittings)	LF	3,702
6039903	6" Water Main (Including Fittings)	LF	8
6039903	20" Steel Casing	LF	295

SEWER LINE QUANTITIES

ITEM NO.	DESCRIPTION	UNIT	QUANTITY
7310048	Precast Concrete Manhole - 48"	FT	54
6143014	Manhole Frame and Cover, Type 4	Ea.	3
6143011	Manhole Frame and Cover, Type 1-B	Ea.	1
6039923	8" PVC Sewer Pipe	LF	826
6039923	20" Steel Casing	LF	216

STATE OF MISSOURI
CHAD S. HARRIS
NUMBER PE-2022005207
PROFESSIONAL ENGINEER
2/27/2025

DATE PREPARED
2/27/2025

ROUTE	STATE
50/291	MO
DISTRICT	SHEET NO.
KC	289

COUNTY
JACKSON

JOB NO.
J4P3196

CONTRACT ID.
.

PROJECT NO.
.

BRIDGE NO.
.

DATE	DESCRIPTION	REV.
.	.	.

IF A SEAL IS PRESENT ON THIS SHEET IT HAS BEEN ELECTRONICALLY SEALED AND DATED.

LEE'S SUMMIT MISSOURI®

Hg Consult Inc engineers planners
9111 NE 79th Street Kansas City, MO 64158 (816)912-4720
Hg CONSULT, INC.
PRO. ENGINEER 2010005873

WATER AND SEWER QUANTITY SHEET
SHEET 1 OF 1

SEC/SUR 8 TWP 47N RGE 31W

(65'-65') PRESTRESSED CONCRETE SPREAD BOX BEAM SPANS

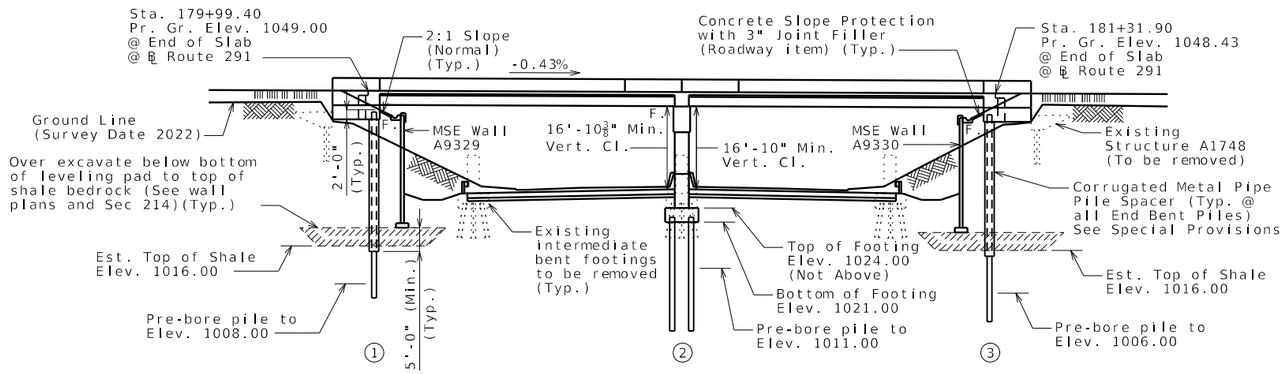

GENERAL ELEVATION

Pile Encasement	Option Used (✓)
Pipe Pile Spacer	
Pile Jacket	

MoDOT Construction personnel will indicate the pile encasement used.

Note:
Existing roadway fill under the ends of the bridge shall be removed as shown. Removal of existing roadway fill will be considered completely covered by the contract unit price for roadway excavation.

Roadway fill, exclusive of Select Granular Backfill for Structural Systems, shall be completed to the final roadway section and up to the elevation of the bottom of the concrete beam within the limits of the structure and for not less than 25 feet in back of the fill face of the end bents before any piles are driven for any bents falling within the embankment section.

For General Notes, Estimated Quantities, Estimated Quantities for Slab on Concrete Beam, Foundation Data and Location Sketch, see Sheet No. 2.

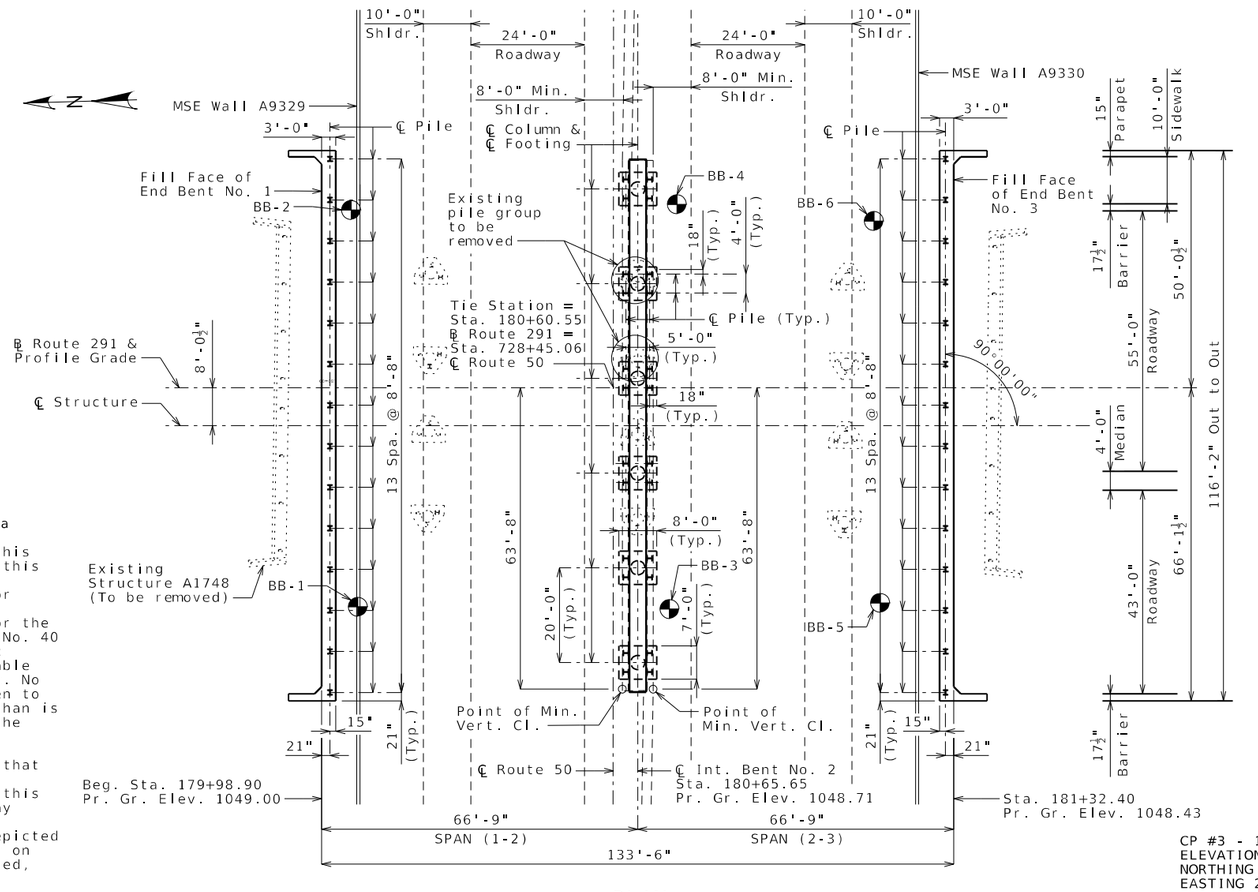

PLAN

Indicates location of borings.

Notice and Disclaimer Regarding Boring Log Data

The locations of all subsurface borings for this structure are shown on the plan sheet(s) for this structure. The boring data for all locations indicated, as well as any other boring logs or other factual records of subsurface data and investigations performed by the department for the design of the project, are shown on Sheet(s) No. 40 thru 46 and may be included in the Electronic Bridge Deliverables. They will also be available from the Project Contact upon written request. No greater significance or weight should be given to the boring data depicted on the plan sheets than is given to the subsurface data available from the district or elsewhere.

The Commission does not represent or warrant that any such boring data accurately depicts the conditions to be encountered in constructing this project. A contractor assumes all risks it may encounter in basing its bid prices, time or schedule of performance on the boring data depicted here or those available from the district, or on any other documentation not expressly warranted, which the contractor may obtain from the Commission.

CP #3 - 1/2" REBAR W/ CONTROL POINT CAP
ELEVATION = 1034.50
NORTHING 997220.24
EASTING 2828083.97

BRIDGE: ROUTE 291 OVER ROUTE 50

ROUTE 50 FROM ROUTE I-470 TO ROUTE 7
ABOUT 3.6 MILES SOUTHEAST OF ROUTE I-470
TIE STATION 728+45.06 (℄ Route 50)

Designed Sep. 2023
Detailed Oct. 2023
Checked Feb. 2024

Note: This drawing is not to scale. Follow dimensions.

Digitally signed by Grant Luckenbill
Date: 2025.02.28 14:54:32-06'00'

GRANT C. LUCKENBILL NUMBER PE-2012018100 2-28-25
GRANT C. LUCKENBILL-ENGINEER
MO# PE-2012018100

DATE PREPARED 2/27/2025
ROUTE 291 | STATE MO
DISTRICT BR | SHEET NO. 1
COUNTY JACKSON
JOB NO. J4P3196
FEDERAL PROJECT NO STB-3001(009)
PROJECT NO.
BRIDGE NO. A9328

DESCRIPTION | DATE | REV.

IF A SEAL IS PRESENT ON THIS SHEET IT HAS BEEN ELECTRONICALLY SEALED AND DATED.

MISSOURI HIGHWAYS AND TRANSPORTATION COMMISSION
105 WEST CAPITOL
JEFFERSON CITY, MO 65102
1-888-ASK-MODOT (1-888-275-6636)
MoDOT
LEE'S SUMMIT MISSOURI
olsson
1301 BURLINGTON ST., STE. 100
NORTH KANSAS CITY, MO 64116
PHONE: 816.361.1177
CERT. OF AUTHORITY NO. 001592

Estimated Quantities

Item		Substr.	Superstr.	Total
Removal of Miscellaneous ACM (Non-Friable)	sq. foot			15
Class 1 Excavation	cu. yard	125		125
Removal of Bridges (A1748)	lump sum			1
Bridge Approach Slab (Major)	sq. yard		512	512
(48 in.) Decorative Pedestrian Fence (Structures)	linear foot		172	172
Pedestrian Handrail	linear foot		131	131
Galvanized Structural Steel Piles (12 in.)	linear foot	1162		1162
Galvanized Structural Steel Piles (14 in.)	linear foot	576		576
Pile Wave Analysis	each	1		1
Pre-Bore for Piling	linear foot	604		604
Pile Point Reinforcement	each	52		52
Class B Concrete (Substructure)	cu. yard	239.9		239.9
Type H Barrier	linear foot		345	345
Slab on Concrete Beam	sq. yard		1711	1711
Raised Median Barrier	sq. foot		586	586
Form Liners	sq. yard		150	150
32 in. Parapet Wall	linear foot		173	173
24 in., Prestressed Concrete Spread Box Beam	linear foot		1301	1301
Reinforcing Steel (Bridges)	pound	4030		4030
Conduit System on Structure	lump sum		1	1
Reinforcing Steel (Epoxy Coated)	pound	24,180		24,180
Slab Drain	each		4	4
Vertical Drain at End Bents	each			2
Plain Neoprene Bearing Pad	each		20	20
Laminated Neoprene Bearing Pad	each		20	20
Pipe Pile Spacers	each	28		28

All concrete above the construction joint in the end bents is included in the Estimated Quantities for Slab on Concrete Beam.

All reinforcement in the end bents is included in the Estimated Quantities for Slab on Concrete Beam.

All reinforcement in the intermediate bent concrete diaphragms except reinforcement embedded in the beam cap is included in the Estimated Quantities for Slab on Concrete Beam.

All concrete above the intermediate beam cap is included in the Estimated Quantities for Slab on Concrete Beam.

Foundation Data

Type	Design Data		Bent Number 1	Bent Number 2	Bent Number 3
Load Bearing Pile	Pile Type and Size		HP 12x53	HP 14x73	HP 12x53
	Number	ea	14	24	14
	Approximate Length Per Each	ft	39	24	44
	Pile Point Reinforcement	ea	All	All	All
	Min. Galvanized Penetration (Elev.)	ft	Full Length	Full Length	Full Length
	Pile Driving Verification Method		DF	WEAP	DF
	Resistance Factor		0.4	0.5	0.4
	Minimum Nominal Axial Compressive Resistance	kip	528	660	528

DF = FHWA-modified Gates Dynamic Pile Formula
WEAP = Wave Equation Analysis of Piles

Minimum Nominal Axial Compressive Resistance = $\frac{\text{Maximum Factored Loads}}{\text{Resistance Factor}}$

Prebore for piles at Bents No. 1, 2, & 3 to elevations 1008, 1011, and 1006, respectively. The prebored hole shall be backfilled with sand prior to placement of the pile.

Manufactured pile point reinforcement shall be used on all piles in this structure.

All piles shall be galvanized down to the minimum galvanized penetration (elevation).

Pile point reinforcement need not be galvanized. Shop drawings will not be required for pile point reinforcement.

HP piles are anticipated to be driven to refusal on rock. Review all borings for depth of rock and restrict driving as appropriate to comply with hard rock driving criteria in accordance with Sec 702. When pile refusal on rock occurs, as approved by the engineer, the minimum nominal axial compressive resistance is verified and no additional pile driving verification method is required.

General Notes:

Design Specifications:
2020 AASHTO LRFD Bridge Design Specifications (9th Ed.)
Seismic Design Category = A

Design Loading:
Vehicular = HL-93
Future Wearing Surface = 35 lb/sf
Earth = 120 lb/cf
Equivalent Fluid Pressure = 45 lb/cf
Superstructure: Simply Supported Non-Composite for dead load.
Continuous Composite for live load.

Design Unit Stresses:

Class B Concrete	(Substructure)	f'c = 3,000 psi
Class B-2 Concrete	(Superstructure, except Prestressed Beams, Type H Barrier & Parapet Wall)	f'c = 4,000 psi
Class B-1 Concrete	(Type H Barrier & Parapet Wall)	f'c = 4,000 psi
Reinforcing Steel	(ASTM A615 Grade 60)	fy = 60,000 psi
Structural Steel HP Pile	(ASTM A709 Grade 50)	fy = 50,000 psi

For prestressed box beam stresses, see Sheet No. 19

Neoprene Pads:
Neoprene Bearing Pads shall be 60 durometer and shall be in accordance with Sec 716.

Joint Filler:
All joint filler shall be in accordance with Sec 1057 for preformed sponge rubber expansion and partition joint filler, except as noted.

Reinforcing Steel:
Minimum clearance to reinforcing steel shall be 1 1/2", unless otherwise shown.

Minimum clearance between galvanized piles and uncoated (plain) reinforcing steel including bar supports shall be 1 1/2". Nylon, PVC, or polyethylene spacers shall be used to maintain clearance. Nylon cable ties shall be used to bind the spacers to the reinforcement.

Traffic Handling:
Route 50 traffic to be routed onto ramps during construction. Structure to be closed during construction. Traffic to be maintained on other routes during construction. See roadway plans for traffic control.

Estimated Quantities for Slab on Concrete Beam

Item		Total
Class B-2 Concrete	cu. yard	499
Reinforcing Steel (Epoxy Coated)	pound	161,710

The table of Estimated Quantities for Slab on Concrete Beam represents the quantities used by the State in preparing the cost estimate for concrete slabs. The area of the concrete slab will be measured to the nearest square yard longitudinally from end of slab to end of slab and transversely from out to out of bridge slab (or with the horizontal dimensions as shown on the plan of slab). Payment for stay-in-place corrugated steel forms, conventional forms, all concrete and epoxy coated reinforcing steel will be considered completely covered by the contract unit price for the slab. Variations may be encountered in the estimated quantities but the variations cannot be used for an adjustment in the contract unit price.

Method of forming the slab shall be as shown on the plans and in accordance with Sec 703. All hardware for forming the slab to be left in place as a permanent part of the structure shall be coated in accordance with ASTM A123 or ASTM B633 with a thickness class SC 4 and a finish type I, II or III.

Slab shall be cast-in-place with conventional forms or stay-in-place corrugated steel forms. Precast panels will not be permitted.

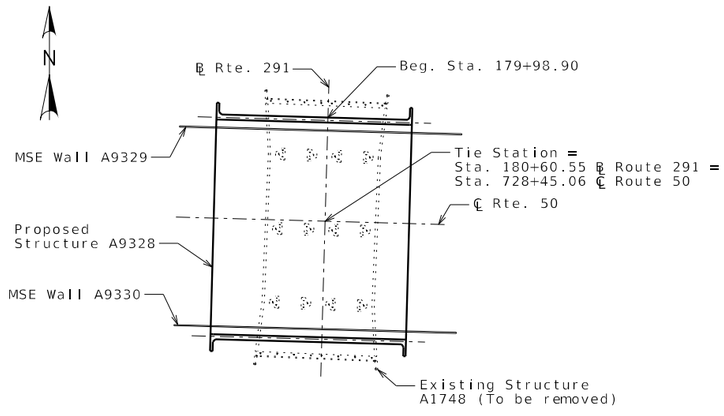

LOCATION SKETCH

Digitally signed by Grant Luckenbill
Date: 2025.03.07 11:10:09-06'00'

GRANT C. LUCKENBILL NUMBER PE-2012018100 — 7-25

GRANT C. LUCKENBILL—ENGINEER
MO# PE-2012018100

DATE PREPARED: 3/7/2025

ROUTE	STATE
291	MO
DISTRICT	SHEET NO.
BR	2

COUNTY: JACKSON
JOB NO.: J4P3196
FEDERAL PROJECT NO: STB-3001(009)
PROJECT NO.:
BRIDGE NO.: A9328

DESCRIPTION	DATE

IF A SEAL IS PRESENT ON THIS SHEET IT HAS BEEN ELECTRONICALLY SEALED AND DATED.

MISSOURI HIGHWAYS AND TRANSPORTATION COMMISSION
105 WEST CAPITOL
JEFFERSON CITY, MO 65102
1-888-ASK-MODOT (1-888-275-6636)

LEE'S SUMMIT MISSOURI

olsson
1301 BURLINGTON ST., STE. 100
NORTH KANSAS CITY, MO 64116
PHONE: 816.361.1177
CERT. OF AUTHORITY NO. 001592

GENERAL NOTES AND QUANTITIES

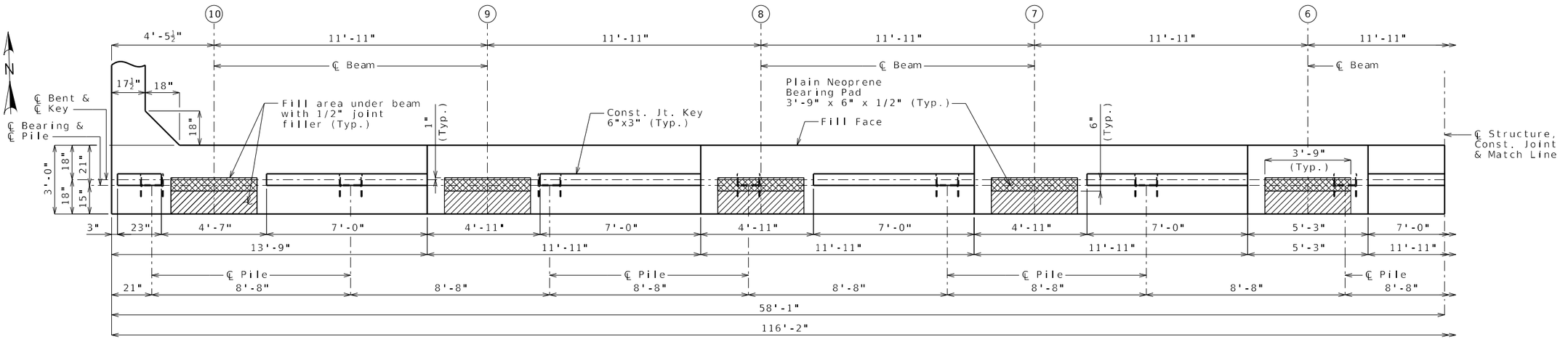

PART PLAN OF BEAM

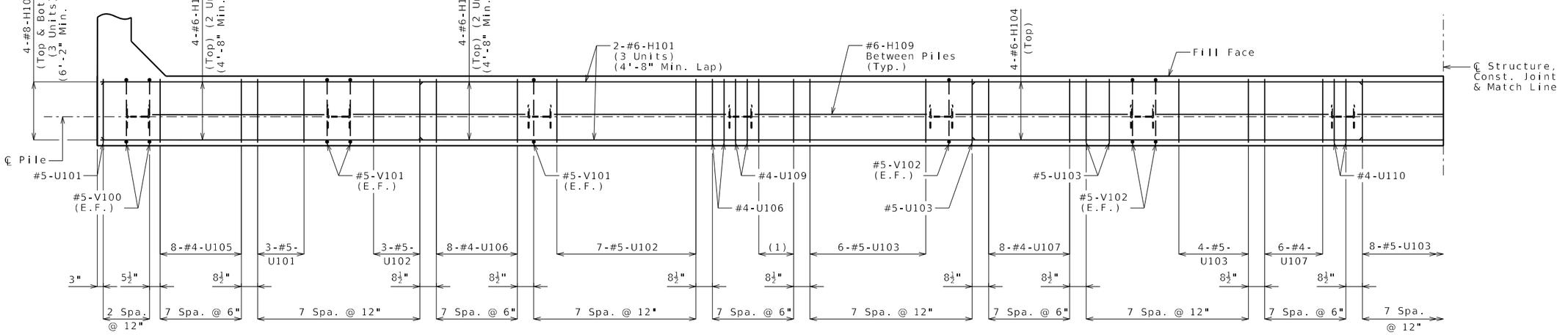

PART PLAN OF BEAM SHOWING REINFORCEMENT

(Keys and steps not shown for clarity.)
(1) 4-#5-U106

Substructure Quantity Table for Bent No. 1		
Item		Quantity
Galvanized Structural Steel Piles (12 in.)	linear foot	546
Pre-Bore for Piling	linear foot	168
Pile Point Reinforcement	each	14
Class B Concrete (Substructure)	cu. yard	49.5

These quantities are included in the Estimated Quantities table on Sheet No. 2.

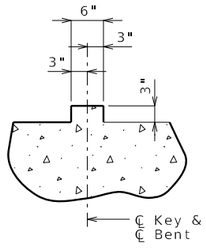

SECTION THRU KEY

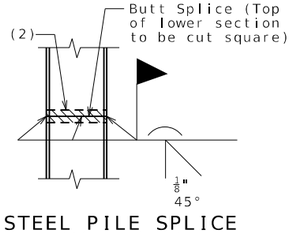

STEEL PILE SPLICE
(If required)

(2) Galvanizing material shall be omitted or removed one inch clear of weld locations in accordance with Sec 702.

Notes:

Work this sheet with Sheets No. 4, 5, 6, and 7.

Reinforcing steel shall be shifted to clear piles. U bars shall clear piles by at least 1 1/2 inches.

DETAILS OF END BENT NO. 1

Detailed Oct. 2023
Checked Feb. 2024

Note: This drawing is not to scale. Follow dimensions.

F:\2021\04501-05000\021-04786\40-Design\Microstation\J4P3196\plan_sheets\16 Bridge Sheets\B_A9328_003_J4P3196_EB1_1.dgn 5:37:11 PM 2/27/2025

Digitally signed by Grant Luckenbill
Date: 2025.02.28 14:54:21-06'00'
GRANT C. LUCKENBILL NUMBER PE-2012018100
2-28-25
GRANT C. LUCKENBILL–ENGINEER
MO# PE-2012018100

DATE PREPARED
2/27/2025

ROUTE	STATE
291	MO
DISTRICT	SHEET NO.
BR	3

COUNTY
JACKSON

JOB NO.
J4P3196

FEDERAL PROJECT NO
STB-3001(009)

PROJECT NO.

BRIDGE NO.
A9328

IF A SEAL IS PRESENT ON THIS SHEET IT HAS BEEN ELECTRONICALLY SEALED AND DATED.

DESCRIPTION

DATE

REV.

MISSOURI HIGHWAYS AND TRANSPORTATION COMMISSION
105 WEST CAPITOL
JEFFERSON CITY, MO 65102
1-888-ASK-MODOT (1-888-275-6636)

LEE'S SUMMIT MISSOURI

olsson
1301 BURLINGTON ST., STE. 100
NORTH KANSAS CITY, MO 64116
PHONE: 816.361.1177
CERT. OF AUTHORITY NO. 001592

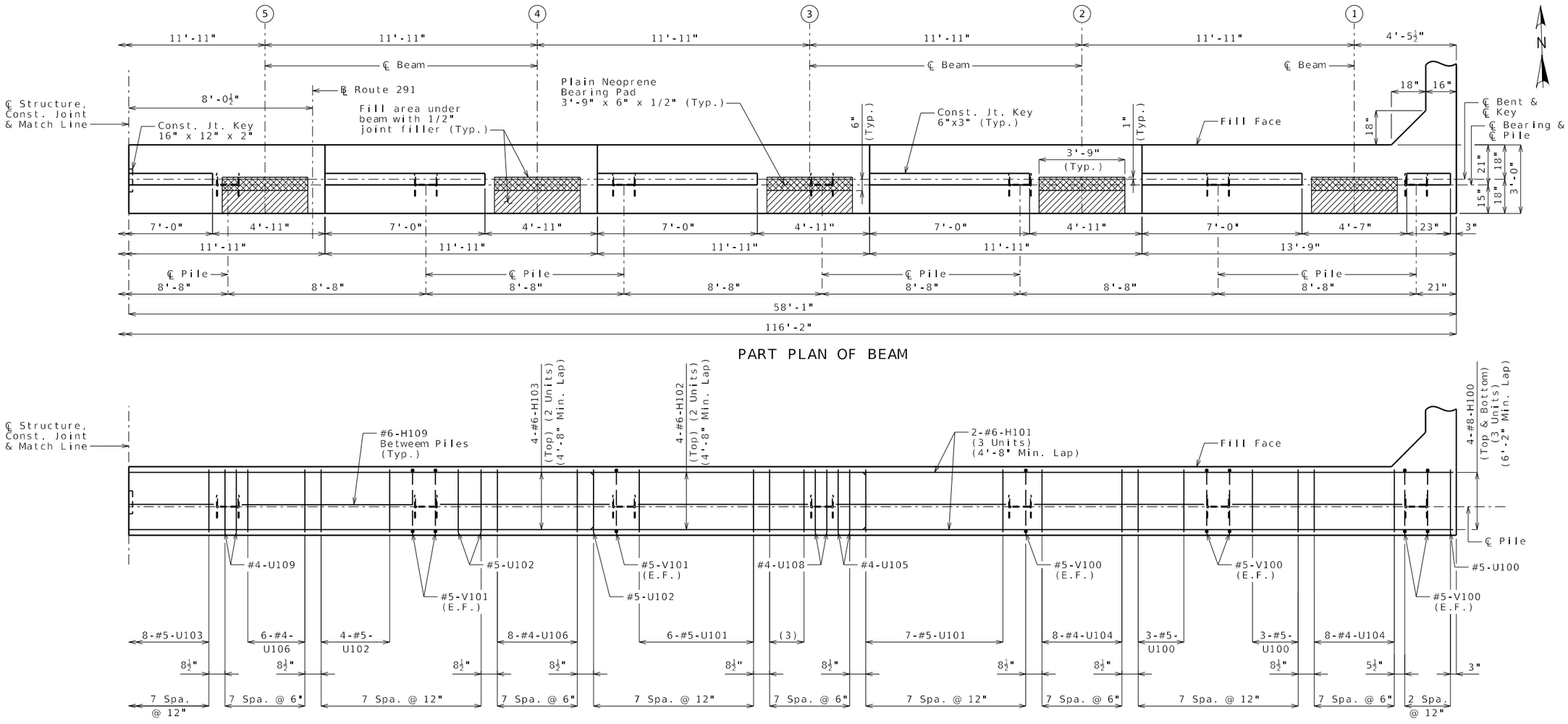

PART PLAN OF BEAM

PART PLAN OF BEAM SHOWING REINFORCEMENT

(Keys and steps not shown for clarity.)
(3) 4-#5-U105

DETAILS OF END BENT NO. 1

Notes:

Work this sheet with Sheets No. 3, 5, 6, and 7.

Detailed Oct. 2023
Checked Feb. 2024

Note: This drawing is not to scale. Follow dimensions.

F:\2021\04501-05000\021-04786\40-Design\Microstation\J4P3196\plan_sheets\16 Bridge Sheets\B_A9328_004_J4P3196_EB1_2.dgn 5:37:23 PM 2/27/2025

Digitally signed by Grant Luckenbill
Date: 2025.02.28 14:54:57-06'00'

GRANT C. LUCKENBILL NUMBER PE-2012018100 2-28-25

GRANT C. LUCKENBILL–ENGINEER
MO# PE-2012018100

DATE PREPARED
2/27/2025

ROUTE	STATE
291	MO
DISTRICT	SHEET NO.
BR	4

COUNTY
JACKSON

JOB NO.
J4P3196

FEDERAL PROJECT NO
STB-3001(009)

PROJECT NO.

BRIDGE NO.
A9328

DESCRIPTION	DATE

IF A SEAL IS PRESENT ON THIS SHEET IT HAS BEEN ELECTRONICALLY SEALED AND DATED.

MISSOURI HIGHWAYS AND TRANSPORTATION COMMISSION

105 WEST CAPITOL
JEFFERSON CITY, MO 65102
1-888-ASK-MODOT (1-888-275-6636)

LEE'S SUMMIT MISSOURI

olsson
1301 BURLINGTON ST., STE. 100
NORTH KANSAS CITY, MO 64116
PHONE: 816.361.1177
CERT. OF AUTHORITY NO. 001592

REV.

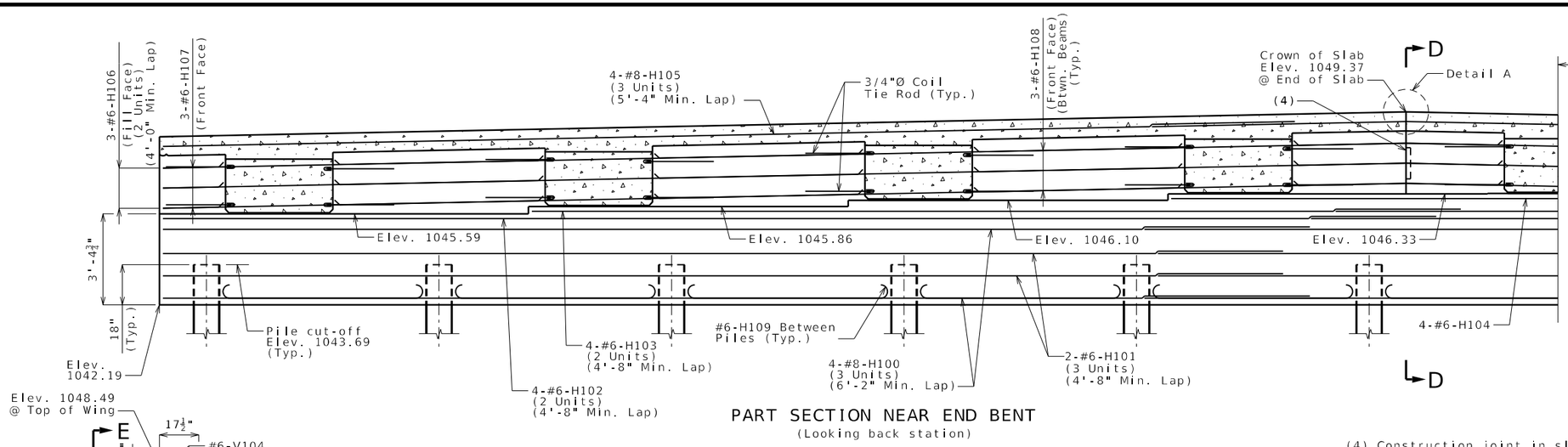

PART SECTION NEAR END BENT

(Looking back station)

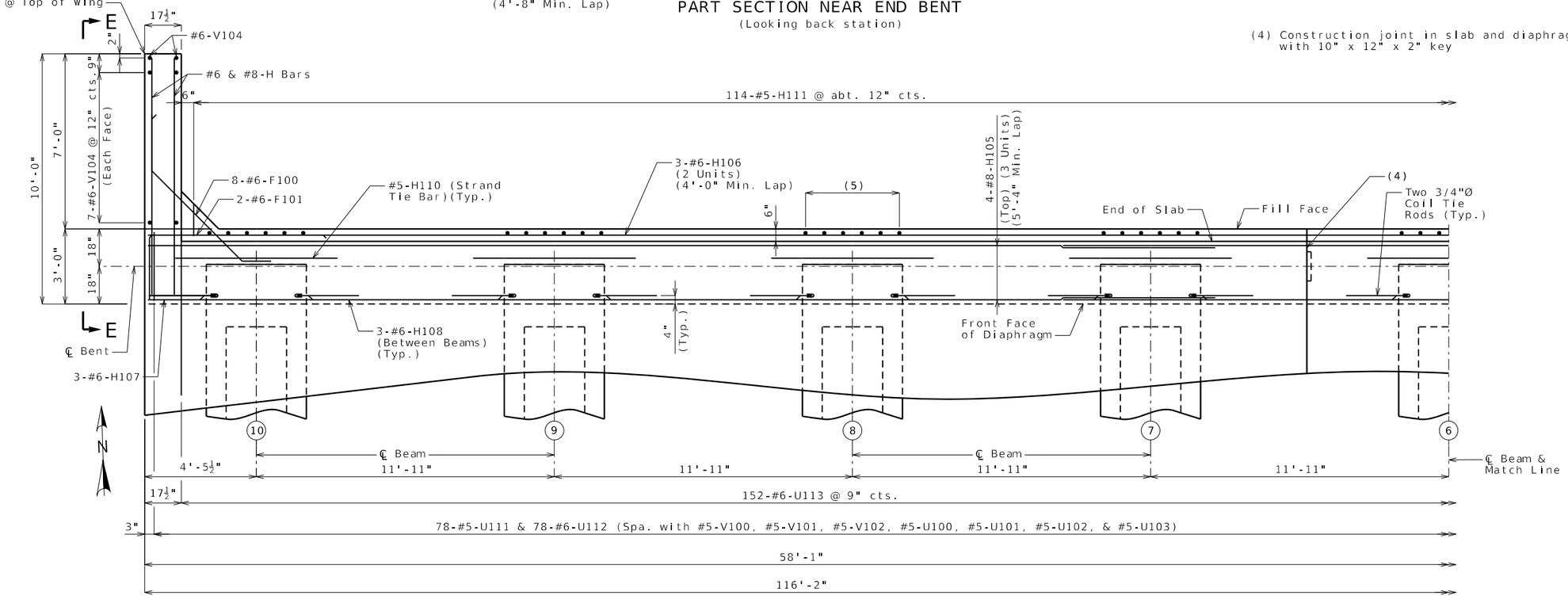

(4) Construction joint in slab and diaphragm with 10" x 12" x 2" key

PART PLAN

(5) 6-#6-V103 centered behind beam @ 9" cts. (Typ.)

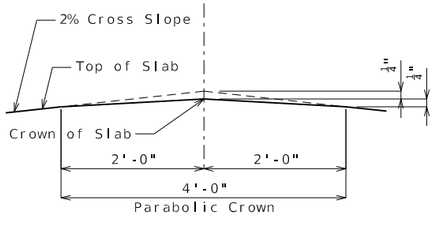

DETAIL A

Notes:

Work this sheet with Sheets No. 3, 4, 6, and 7.

For Section D-D and Elevation E-E, see Sheet No. 7.

The #6-F100 bars shall be bent in the field to clear beams.

All concrete in the end bent above top of beam and below top of slab shall be Class B-2.

Strands at end of the beams shall be field bent or, if necessary, cut in field to maintain 1 1/2-inch minimum clearance to fill face of end bent.

For location of coil tie rods and #5-H110 (strand tie bar), see Sheet No. 19.

For details of vertical drain at end bents, see Sheet No. 8.

For details of bridge approach slab, see Sheet No. 35.

DETAILS OF END BENT NO. 1

Detailed Oct. 2023
Checked Feb. 2024

Note: This drawing is not to scale. Follow dimensions.

F:\2021\04501-05000\021-04786\40-Design\Microstation\J4P3196\plan_sheets\16 Bridge Sheets\B_A9328_005_J4P3196_EB1_3.dgn 5:37:26 PM 2/27/2025

Digitally signed by Grant Luckenbill
Date: 2025.02.28 14:53:47-06'00'

GRANT C. LUCKENBILL NUMBER PE-2012018100 2-28-25

GRANT C. LUCKENBILL-ENGINEER
MO# PE-2012018100

DATE PREPARED
2/27/2025

ROUTE	STATE
291	MO
DISTRICT	SHEET NO.
BR	5

COUNTY
JACKSON

JOB NO.
J4P3196

FEDERAL PROJECT NO
STB-3001(009)

PROJECT NO.

BRIDGE NO.
A9328

DESCRIPTION	DATE

IF A SEAL IS PRESENT ON THIS SHEET IT HAS BEEN ELECTRONICALLY SEALED AND DATED.

MISSOURI HIGHWAYS AND TRANSPORTATION COMMISSION
105 WEST CAPITOL
JEFFERSON CITY, MO 65102
1-888-ASK-MODOT (1-888-275-6636)

LEE'S SUMMIT MISSOURI

olsson
1301 BURLINGTON ST., STE. 100
NORTH KANSAS CITY, MO 64116
PHONE: 816.361.1177
CERT. OF AUTHORITY NO. 001592

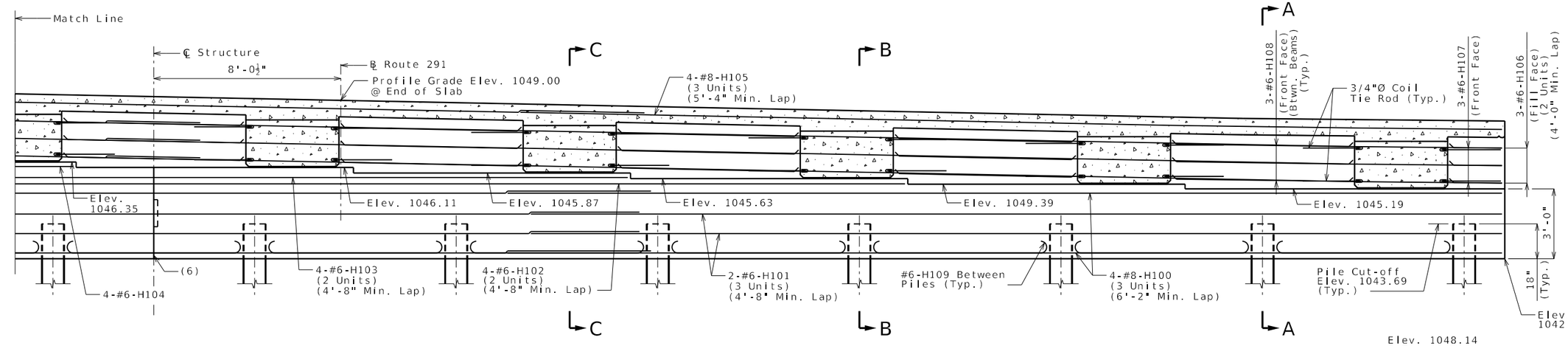

PART SECTION NEAR END BENT

(Looking back station)

(6) Construction joint in beam with 16" x 12" x2" key

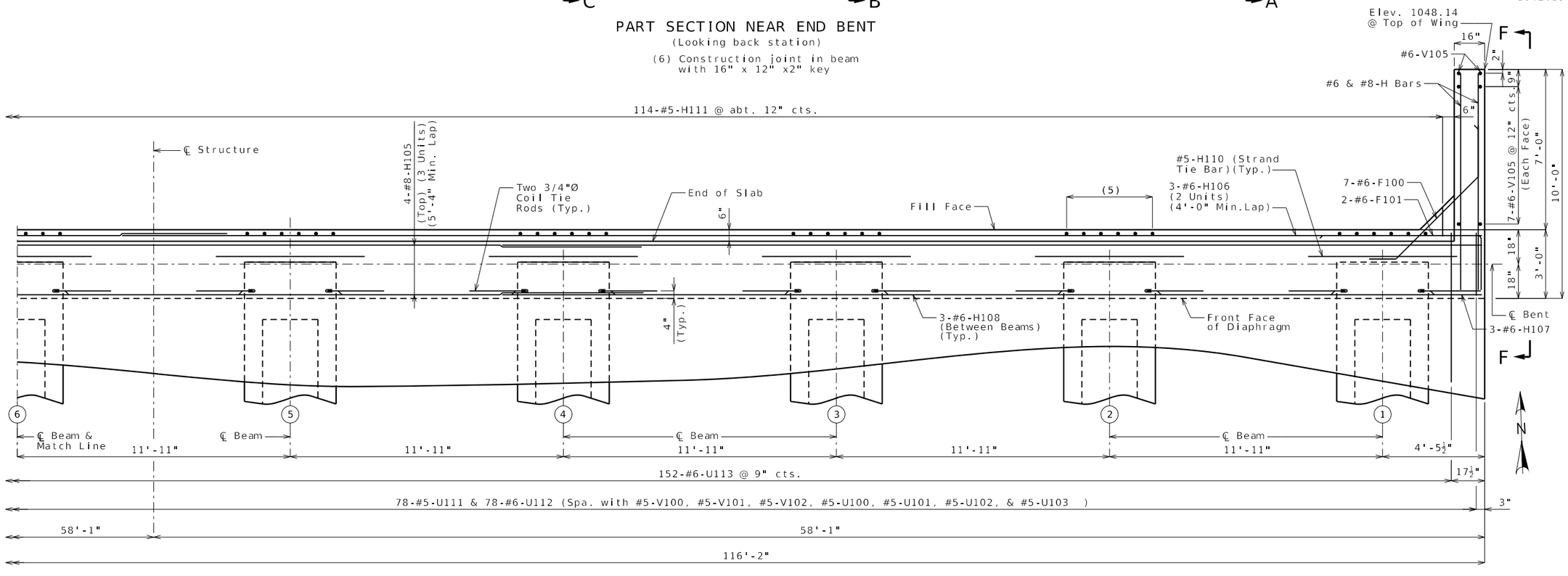

PART PLAN

(5)6-#6-V103 centered behind beam @ 9" cts. (Typ.)

Notes:

Work this sheet with Sheets No. 3, 4, 5, and 7.

For Sections A-A, B-B & C-C and Elevation F-F, see Sheet No. 7.

For reinforcement of Raised Median Barrier, see Sheet No. 26.

DETAILS OF END BENT NO. 1

Detailed Oct. 2023
Checked Feb. 2024

Note: This drawing is not to scale. Follow dimensions.

F:\2021\04501-05000\021-04786\40-Design\Microstation\J4P3196\plan_sheets\16 Bridge Sheets\B_A9328_006_J4P3196_EB1_4.dgn 5:37:29 PM 2/27/2025

Digitally signed by Grant Luckenbill
Date: 2025.02.28 14:53:36-06'00'

GRANT C. LUCKENBILL NUMBER PE-2012018100
2-28-25
GRANT C. LUCKENBILL-ENGINEER
MO# PE-2012018100

DATE PREPARED
2/27/2025

ROUTE	STATE
291	MO
DISTRICT	SHEET NO.
BR	6

COUNTY
JACKSON

JOB NO.
J4P3196

FEDERAL PROJECT NO
STB-3001(009)

PROJECT NO.

BRIDGE NO.
A9328

DESCRIPTION | DATE

IF A SEAL IS PRESENT ON THIS SHEET IT HAS BEEN ELECTRONICALLY SEALED AND DATED.

MISSOURI HIGHWAYS AND TRANSPORTATION COMMISSION
105 WEST CAPITOL
JEFFERSON CITY, MO 65102
1-888-ASK-MODOT (1-888-275-6636)

LEE'S SUMMIT MISSOURI

olsson
1301 BURLINGTON ST., STE. 100
NORTH KANSAS CITY, MO 64116
PHONE: 816.361.1177
CERT. OF AUTHORITY NO. 001592

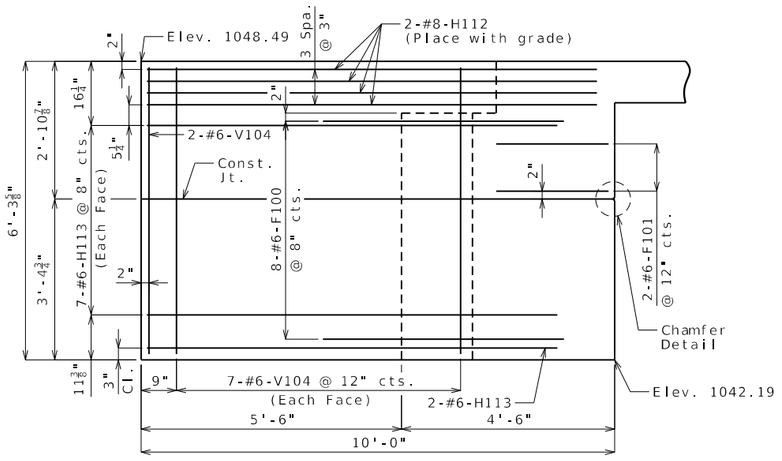

ELEVATION E-E

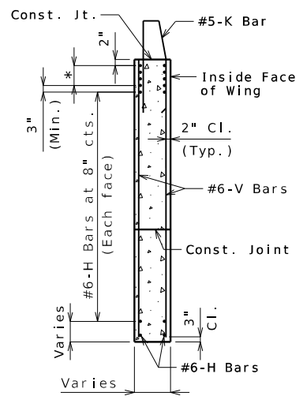

TYPICAL SECTION THRU WING

* #8-H Bars at 3" cts. (Each face)(Place with grade)

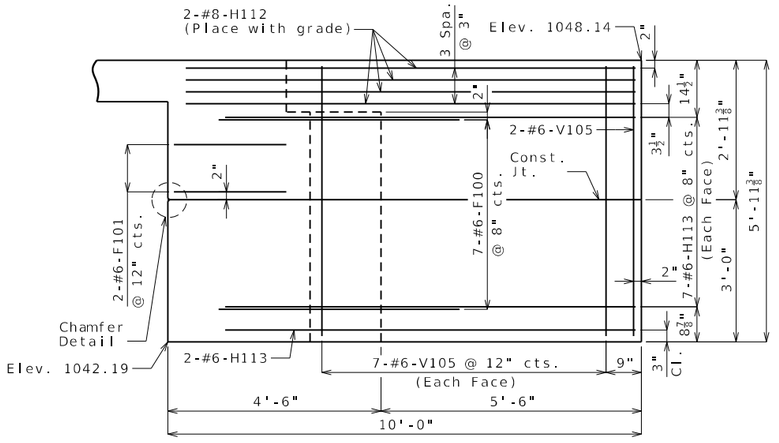

ELEVATION F-F

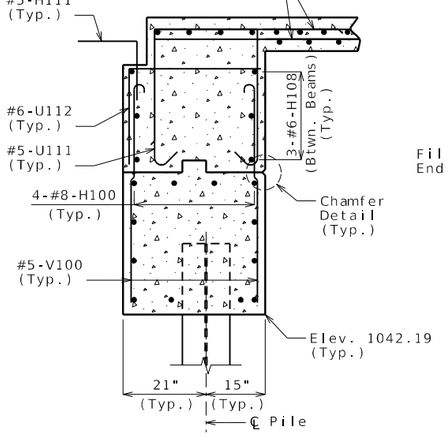

SECTION A-A

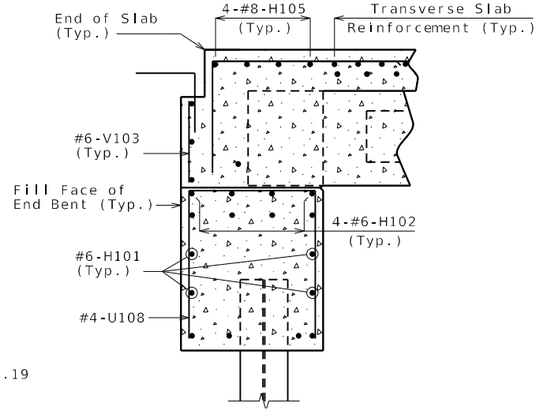

SECTION B-B

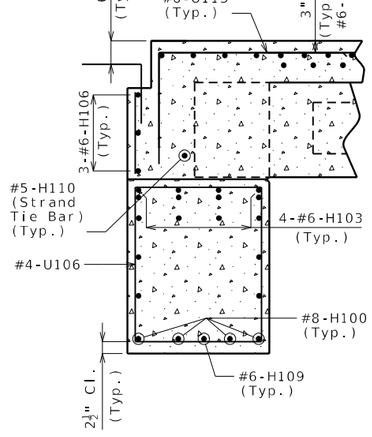

SECTION C-C

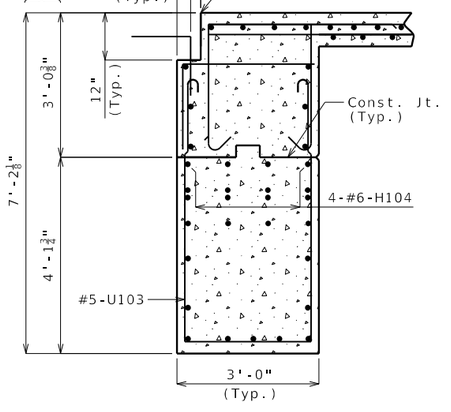

SECTION D-D

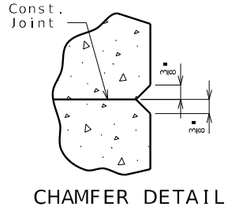

CHAMFER DETAIL

DETAILS OF END BENT NO. 1

Notes:

Work this sheet with Sheets No. 3, 4, 5, and 6.

For reinforcement of the Type H Barrier, see Sheets No. 31 and 32.

For reinforcement of the Parapet Wall, see Sheet No. 28.

Detailed Oct. 2023
Checked Feb. 2024

Note: This drawing is not to scale. Follow dimensions.

F:\2021\04501-05000\021-04786\40-Design\Microstation\J4P3196\plan_sheets\16 Bridge Sheets\B_A9328_007_J4P3196_EB1_5.dgn 5:37:31 PM 2/27/2025

Digitally signed by Grant Luckenbill
Date: 2025.02.28 14:53:25-06'00'

GRANT C. LUCKENBILL NUMBER PE-2012018100 2-28-25

GRANT C. LUCKENBILL–ENGINEER
MO# PE-2012018100

DATE PREPARED 2/27/2025

ROUTE	STATE
291	MO
DISTRICT	SHEET NO.
BR	7

COUNTY JACKSON

JOB NO. J4P3196

FEDERAL PROJECT NO STB-3001(009)

PROJECT NO.

BRIDGE NO. A9328

DESCRIPTION | DATE

IF A SEAL IS PRESENT ON THIS SHEET IT HAS BEEN ELECTRONICALLY SEALED AND DATED.

MISSOURI HIGHWAYS AND TRANSPORTATION COMMISSION
105 WEST CAPITOL
JEFFERSON CITY, MO 65102
1-888-ASK-MODOT (1-888-275-6636)

LEE'S SUMMIT MISSOURI

olsson
1301 BURLINGTON ST., STE. 100
NORTH KANSAS CITY, MO 64116
PHONE: 816.361.1177
CERT. OF AUTHORITY NO. 001592

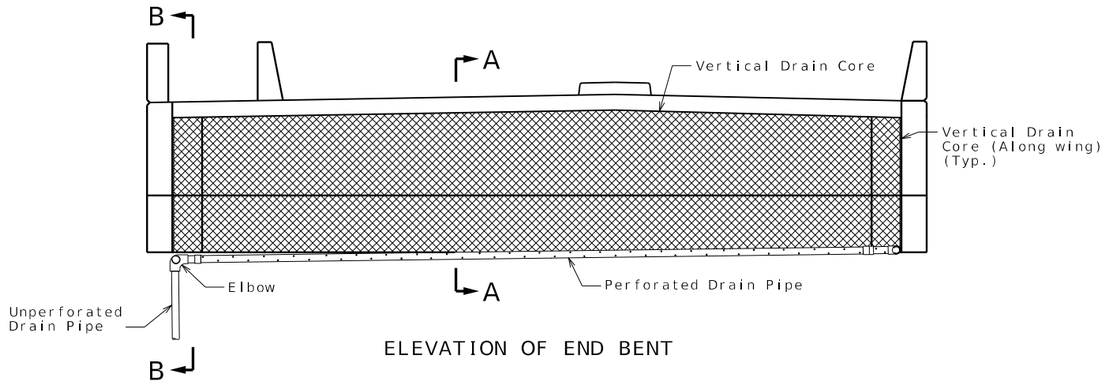

ELEVATION OF END BENT

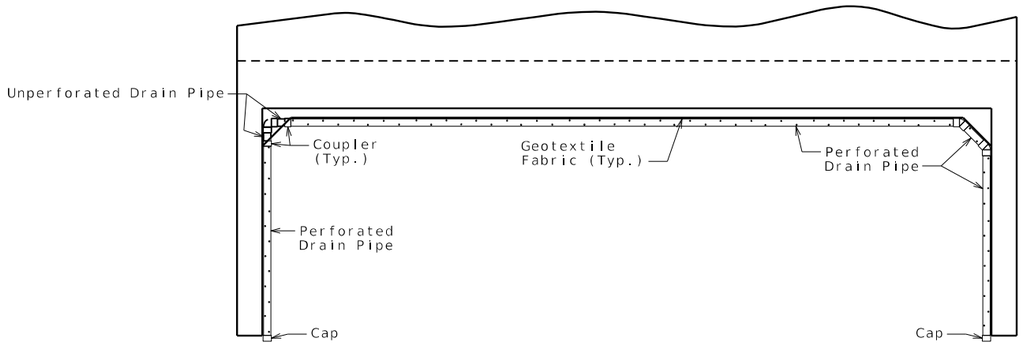

PLAN OF END BENT

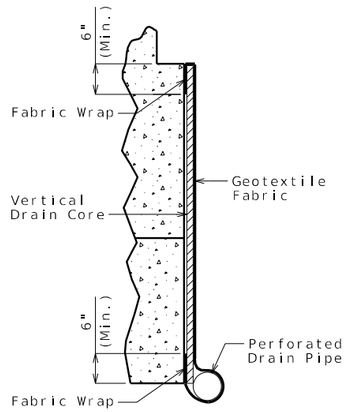

PART SECTION A-A
(Section thru wing similar)

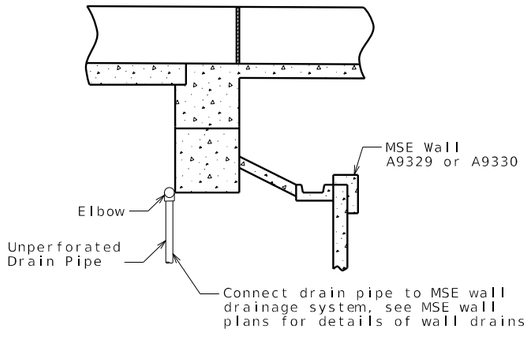

SECTION B-B

General Notes:

All drain pipe shall be sloped 1 to 2 percent.

Drain pipe may be either 6-inch diameter corrugated metallic-coated steel pipe underdrain, 4-inch diameter corrugated polyvinyl chloride (PVC) drain pipe, or 4-inch diameter corrugated polyethylene (PE) drain pipe.

Drain pipe shall be placed at fill face of end bent and inside face of wings. The pipe shall slope to lowest grade of ground line, also missing the lower beam of end bent by a minimum of 1 1/2 inches.

Perforated pipe shall be placed at fill face side and inside face of wings at the bottom of end bent and plain pipe shall be used where the vertical drain ends to the exit at ground line.

VERTICAL DRAIN AT END BENTS

Detailed Oct. 2023
Checked Feb. 2024

Note: This drawing is not to scale. Follow dimensions.

F:\2021\04501-05000\021-04786\40-Design\Microstation\J4P3196\plan_sheets\16 Bridge Sheets\B_A9328_008_J4P3196_Vertical Drain at End Bents.dgn 5:38:06 PM 2/27/2025

Digitally signed by Grant Luckenbill
Date: 2025.02.28 14:55:47-06'00'

GRANT C. LUCKENBILL NUMBER PE-2012018100 2-28-25

GRANT C. LUCKENBILL-ENGINEER
MO# PE-2012018100

DATE PREPARED
2/27/2025

ROUTE	STATE
291	MO
DISTRICT	SHEET NO.
BR	8

COUNTY
JACKSON

JOB NO.
J4P3196

FEDERAL PROJECT NO
STB-3001(009)

PROJECT NO.

BRIDGE NO.
A9328

DESCRIPTION	DATE

IF A SEAL IS PRESENT ON THIS SHEET IT HAS BEEN ELECTRONICALLY SEALED AND DATED.

MISSOURI HIGHWAYS AND TRANSPORTATION COMMISSION
105 WEST CAPITOL
JEFFERSON CITY, MO 65102
1-888-ASK-MODOT (1-888-275-6636)

LEE'S SUMMIT MISSOURI

olsson
1301 BURLINGTON ST., STE. 100
NORTH KANSAS CITY, MO 64116
PHONE: 816.361.1177
CERT. OF AUTHORITY NO. 001592

REV.

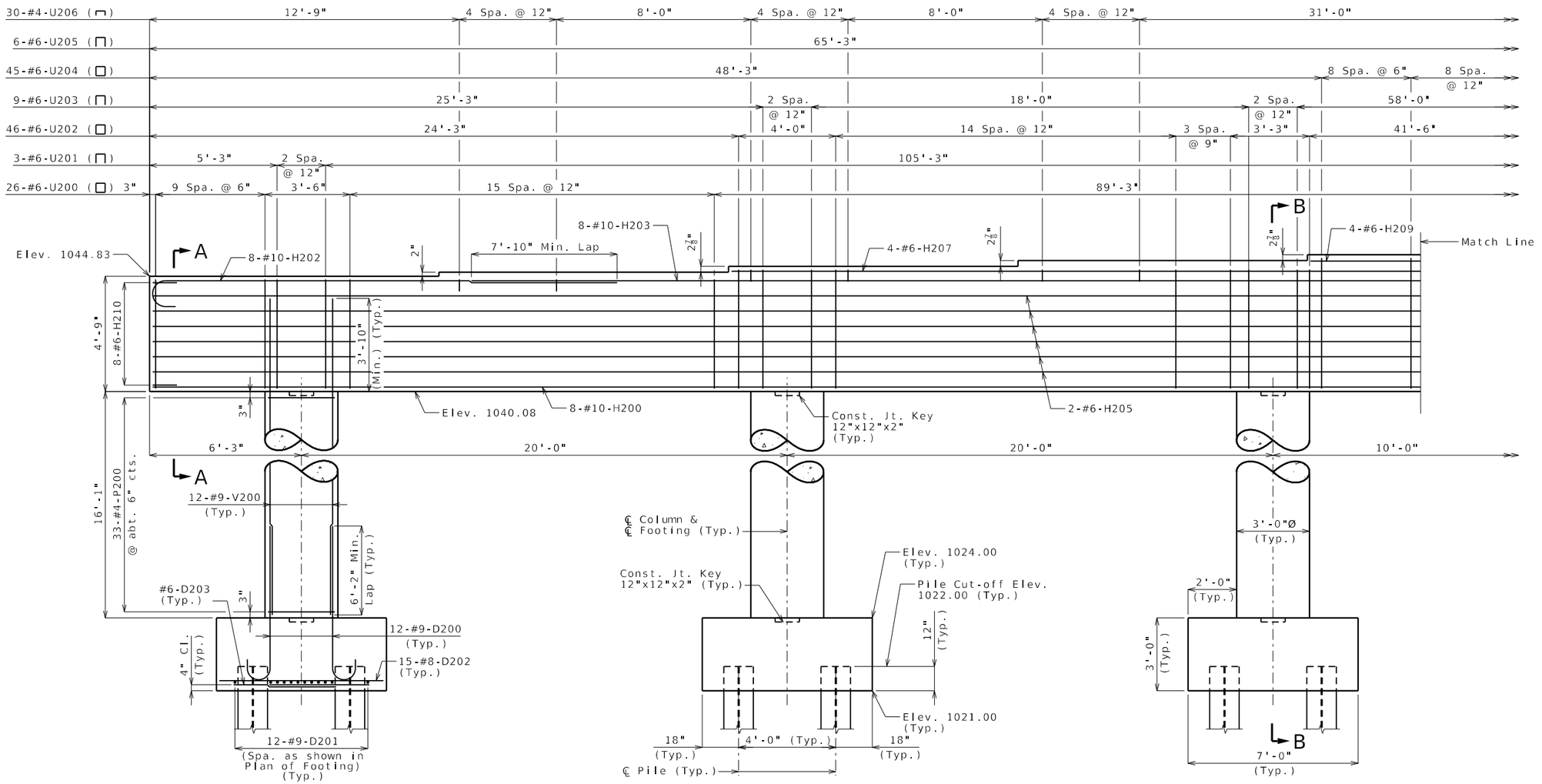

PART ELEVATION
(Beam keys not shown for clarity.)

Substructure Quantity Table for Bent No. 2		
Item		Quantity
Class 1 Excavation	cu. yard	125
Galvanized Structural Steel Piles (14 in.)	linear foot	576
Pile Wave Analysis	each	1
Pre-Bore for Piling	linear foot	240
Pile Point Reinforcement	each	24
Class B Concrete (Substructure)	cu. yard	140.9
Reinforcing Steel (Bridges)	pound	4030
Reinforcing Steel (Epoxy Coated)	pound	24,180

These quantities are included in the Estimated Quantities table on Sheet No. 2.

DETAILS OF INTERMEDIATE BENT NO. 2

Notes:

Work this sheet with Sheets No. 10, 11, 12, and 13.

Detailed Oct. 2023
Checked Feb. 2024

Note: This drawing is not to scale. Follow dimensions.

F:\2021\04501-05000\021-04786\40-Design\Microstation\J4P3196\plan_sheets\16 Bridge Sheets\B_A9328_009_J4P3196_IB2_1.dgn 5:38:15 PM 2/27/2025

Digitally signed by Grant Luckenbill
Date: 2025.02.28 14:53:01-06'00'

GRANT C. LUCKENBILL NUMBER PE-2012018100 2-28-25

GRANT C. LUCKENBILL–ENGINEER
MO# PE-2012018100

DATE PREPARED
2/27/2025

ROUTE	STATE
291	MO
DISTRICT	SHEET NO.
BR	9

COUNTY
JACKSON

JOB NO.
J4P3196

FEDERAL PROJECT NO
STB-3001(009)

PROJECT NO.

BRIDGE NO.
A9328

IF A SEAL IS PRESENT ON THIS SHEET IT HAS BEEN ELECTRONICALLY SEALED AND DATED.

DESCRIPTION

DATE

REV.

MISSOURI HIGHWAYS AND TRANSPORTATION COMMISSION
105 WEST CAPITOL
JEFFERSON CITY, MO 65102
1-888-ASK-MODOT (1-888-275-6636)

LEE'S SUMMIT MISSOURI

olsson
1301 BURLINGTON ST., STE. 100
NORTH KANSAS CITY, MO 64116
PHONE: 816.361.1177
CERT. OF AUTHORITY NO. 001592

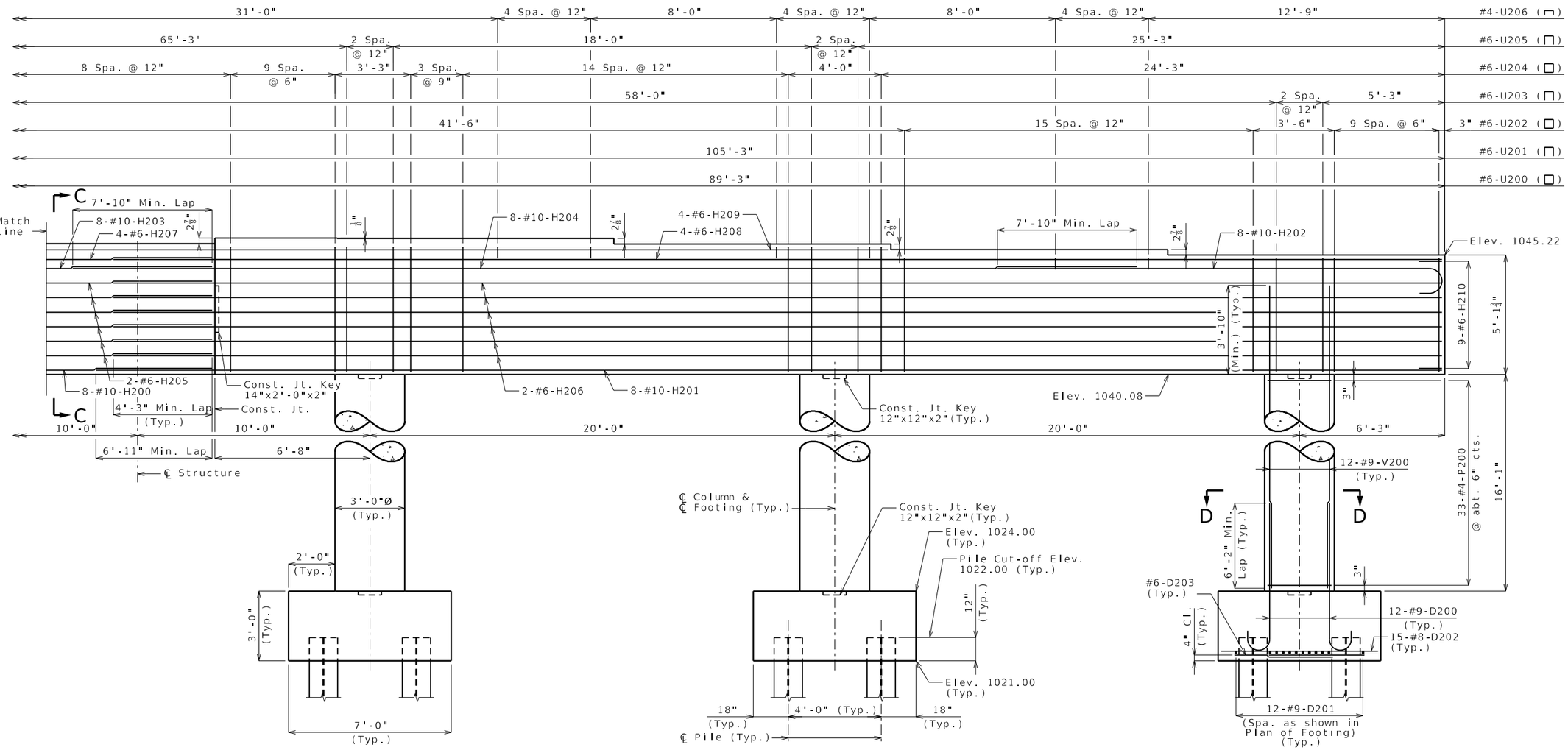

PART ELEVATION
(Beam keys not shown for clarity.)

DETAILS OF INTERMEDIATE BENT NO. 2

Notes:

Work this sheet with Sheets No. 9, 11, 12, and 13.

Detailed Oct. 2023
Checked Feb. 2024

Note: This drawing is not to scale. Follow dimensions.

F:\2021\04501-05000\021-04786\40-Design\Microstation\J4P3196\plan_sheets\16 Bridge Sheets\B_A9328_010_J4P3196_IB2_2.dgn 5:38:18 PM 2/27/2025

Digitally signed by Grant Luckenbill
Date: 2025.02.28 14:52:46-06'00'

GRANT C. LUCKENBILL NUMBER PE-2012018100
2-28-25
GRANT C. LUCKENBILL–ENGINEER
MO# PE-2012018100

DATE PREPARED
2/27/2025

ROUTE	STATE
291	MO
DISTRICT	SHEET NO.
BR	10

COUNTY
JACKSON

JOB NO.
J4P3196

FEDERAL PROJECT NO
STB-3001(009)

PROJECT NO.

BRIDGE NO.
A9328

IF A SEAL IS PRESENT ON THIS SHEET IT HAS BEEN ELECTRONICALLY SEALED AND DATED.

DESCRIPTION	DATE

MISSOURI HIGHWAYS AND TRANSPORTATION COMMISSION
105 WEST CAPITOL
JEFFERSON CITY, MO 65102
1-888-ASK-MODOT (1-888-275-6636)

LEE'S SUMMIT MISSOURI

olsson
1301 BURLINGTON ST., STE. 100
NORTH KANSAS CITY, MO 64116
PHONE: 816.361.1177
CERT. OF AUTHORITY NO. 001592

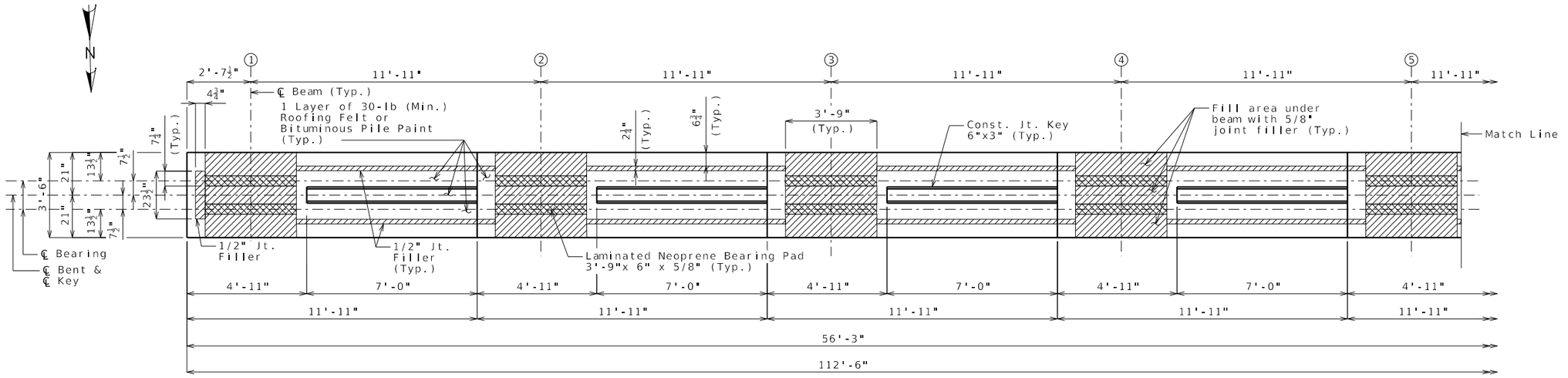

PART PLAN OF BEAM
(Footings not shown for clarity.)

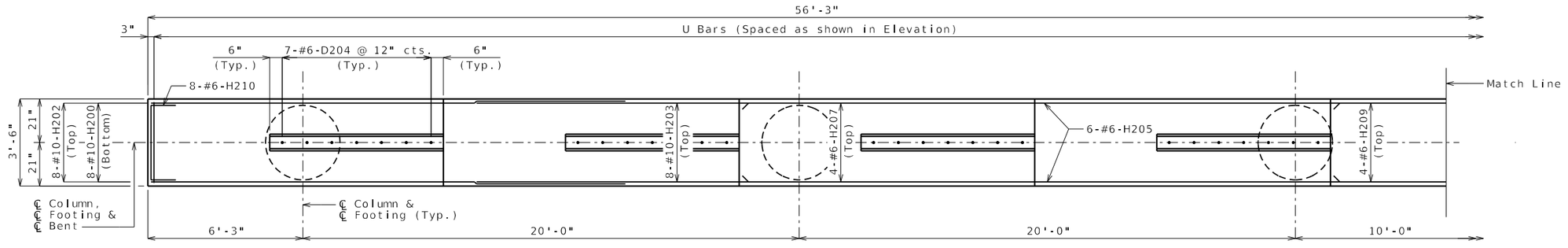

PART PLAN OF BEAM SHOWING REINFORCEMENT
(Footings not shown for clarity.)

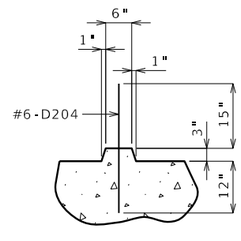

SECTION THRU KEY

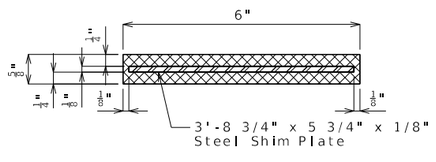

SECTION THRU LAMINATED NEOPRENE BEARING PAD

DETAILS OF INTERMEDIATE BENT NO. 2

Notes:

Work this sheet with Sheets No. 9, 10, 12, and 13.

For steps 2 inches or more, use 2 1/4 x 1/2 inch joint filler up vertical face.

Detailed Oct. 2023
Checked Feb. 2024

Note: This drawing is not to scale. Follow dimensions.

F:\2021\04501-05000\021-04786\40-Design\Microstation\J4P3196\plan_sheets\16 Bridge Sheets\B_A9328_011_J4P3196_IB2_3.dgn 5:38:47 PM 2/27/2025

Digitally signed by Grant Luckenbill
Date: 2025.02.28 14:57:40-06'00'

GRANT C. LUCKENBILL NUMBER PE-2012018100 2-28-25

GRANT C. LUCKENBILL–ENGINEER
MO# PE-2012018100

DATE PREPARED
2/27/2025

ROUTE	STATE
291	MO
DISTRICT	SHEET NO.
BR	11

COUNTY
JACKSON

JOB NO.
J4P3196

FEDERAL PROJECT NO
STB-3001(009)

PROJECT NO.

BRIDGE NO.
A9328

DESCRIPTION	DATE

IF A SEAL IS PRESENT ON THIS SHEET IT HAS BEEN ELECTRONICALLY SEALED AND DATED.

MISSOURI HIGHWAYS AND TRANSPORTATION COMMISSION
105 WEST CAPITOL
JEFFERSON CITY, MO 65102
1-888-ASK-MODOT (1-888-275-6636)

LEE'S SUMMIT MISSOURI

olsson
1301 BURLINGTON ST., STE. 100
NORTH KANSAS CITY, MO 64116
PHONE: 816.361.1177
CERT. OF AUTHORITY NO. 001592

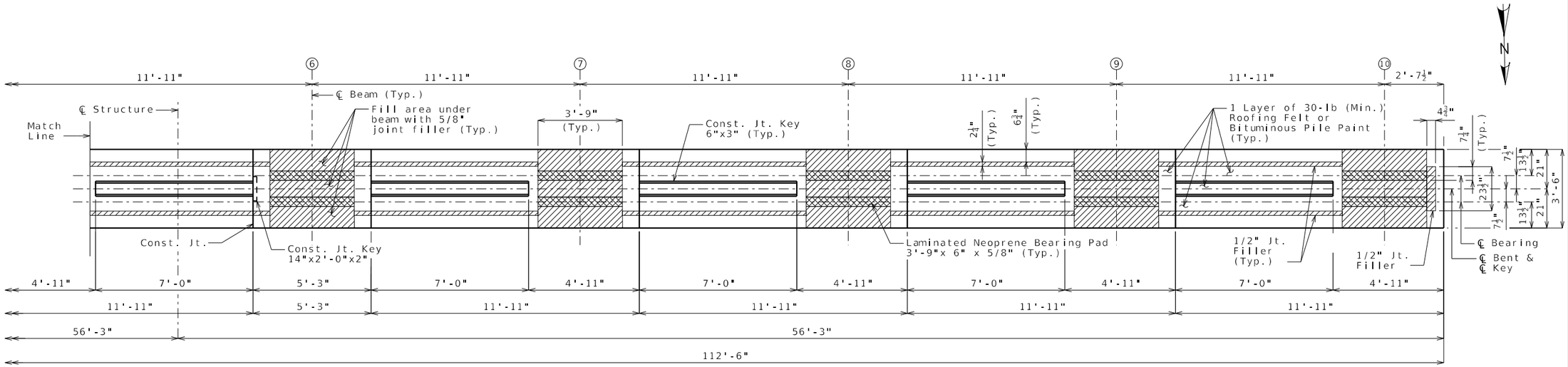

PART PLAN OF BEAM

(Footings not shown for clarity.)

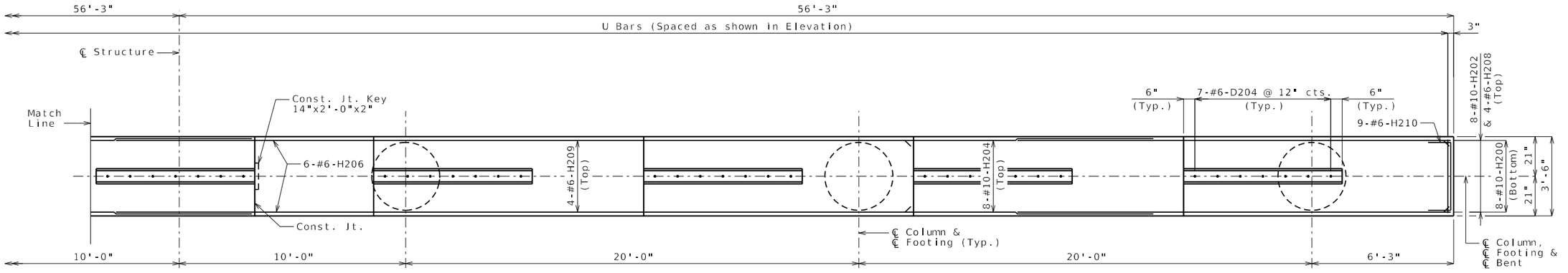

PART PLAN OF BEAM SHOWING REINFORCEMENT

(Footings not shown for clarity.)

DETAILS OF INTERMEDIATE BENT NO. 2

Notes:

Work this sheet with Sheets No. 9, 10, 11, and 13.

For steps 2 inches or more, use 2 1/4 x 1/2 inch joint filler up vertical face.

Detailed Oct. 2023
Checked Feb. 2024

Note: This drawing is not to scale. Follow dimensions.

F:\2021\04501-05000\021-04786\40-Design\Microstation\J4P3196\plan_sheets\16 Bridge Sheets\B_A9328_012_J4P3196_IB2_4.dgn 5:38:59 PM 2/27/2025

Digitally signed by Grant Luckenbill
Date: 2025.02.28 14:57:28-06'00'

GRANT C. LUCKENBILL NUMBER PE-2012018100
2-28-25
GRANT C. LUCKENBILL-ENGINEER
MO# PE-2012018100

DATE PREPARED: 2/27/2025
ROUTE: 291 | STATE: MO
DISTRICT: BR | SHEET NO.: 12
COUNTY: JACKSON
JOB NO.: J4P3196
FEDERAL PROJECT NO: STB-3001(009)
PROJECT NO.:
BRIDGE NO.: A9328

DESCRIPTION | DATE

IF A SEAL IS PRESENT ON THIS SHEET IT HAS BEEN ELECTRONICALLY SEALED AND DATED.

MISSOURI HIGHWAYS AND TRANSPORTATION COMMISSION
105 WEST CAPITOL
JEFFERSON CITY, MO 65102
1-888-ASK-MODOT (1-888-275-6636)

LEE'S SUMMIT MISSOURI

olsson
1301 BURLINGTON ST., STE. 100
NORTH KANSAS CITY, MO 64116
PHONE: 816.361.1177
CERT. OF AUTHORITY NO. 001592

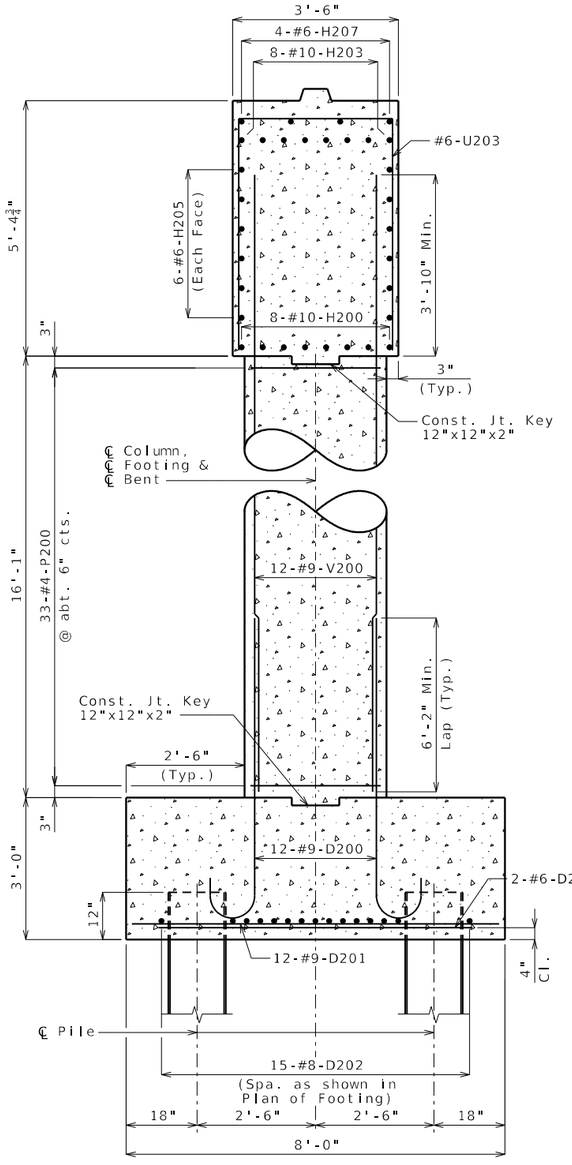

SECTION B-B

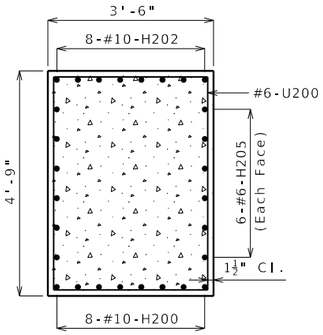

SECTION A-A

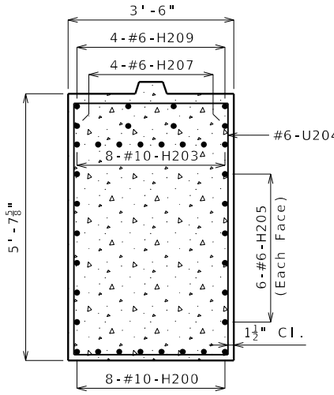

SECTION C-C

SECTION D-D

* Minimum lap 2'-10"
(Stagger adjacent bar splices.)

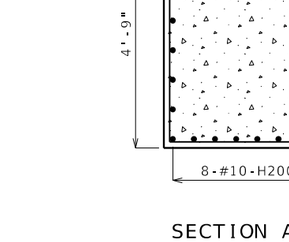

STEEL PILE SPLICE

(If required)

** Galvanizing material shall be omitted or removed one inch clear of weld locations in accordance with Sec 702.

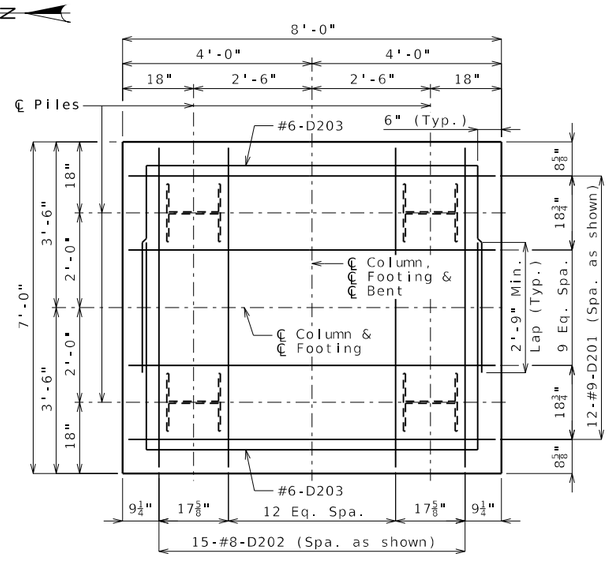

PLAN OF FOOTING

Notes:

Work this sheet with Sheets No. 9, 10, 11, and 12.

DETAILS OF INTERMEDIATE BENT NO. 2

Detailed Oct. 2023
Checked Feb. 2024

Note: This drawing is not to scale. Follow dimensions.

F:\2021\04501-05000\021-04786\40-Design\Microstation\J4P3196\plan_sheets\16 Bridge Sheets\B_A9328_013_J4P3196_IB2_5.dgn 5:39:01 PM 2/27/2025

Digitally signed by Grant Luckenbill
Date: 2025.02.28 14:57:19-06'00'

GRANT C. LUCKENBILL NUMBER PE-2012018100 2-28-25

GRANT C. LUCKENBILL–ENGINEER
MO# PE-2012018100

DATE PREPARED
2/27/2025

ROUTE	STATE
291	MO
DISTRICT	SHEET NO.
BR	13

COUNTY
JACKSON

JOB NO.
J4P3196

FEDERAL PROJECT NO
STB-3001(009)

PROJECT NO.

BRIDGE NO.
A9328

DESCRIPTION	DATE

IF A SEAL IS PRESENT ON THIS SHEET IT HAS BEEN ELECTRONICALLY SEALED AND DATED.

MISSOURI HIGHWAYS AND TRANSPORTATION COMMISSION
105 WEST CAPITOL
JEFFERSON CITY, MO 65102
1-888-ASK-MODOT (1-888-275-6636)

LEE'S SUMMIT MISSOURI

olsson
1301 BURLINGTON ST., STE. 100
NORTH KANSAS CITY, MO 64116
PHONE: 816.361.1177
CERT. OF AUTHORITY NO. 001592

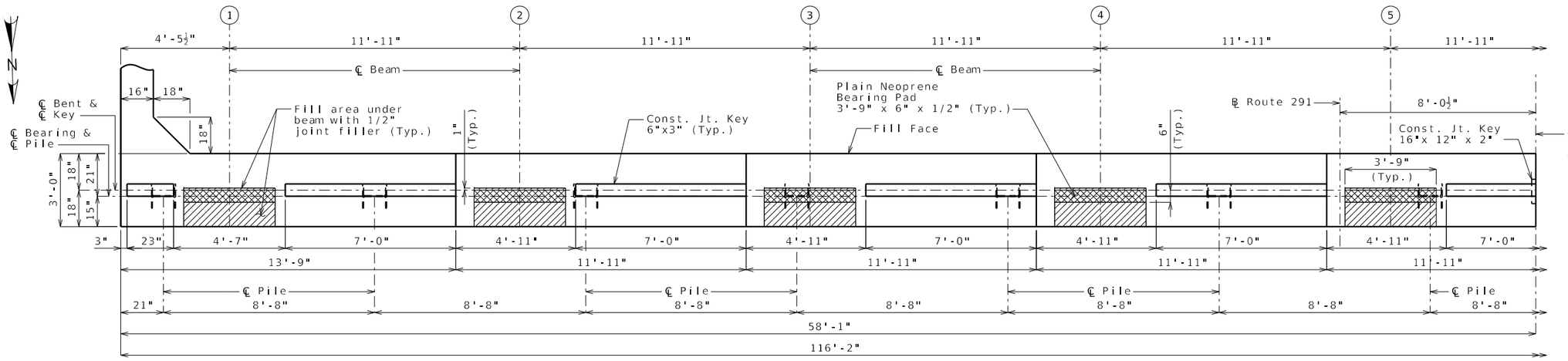

PART PLAN OF BEAM

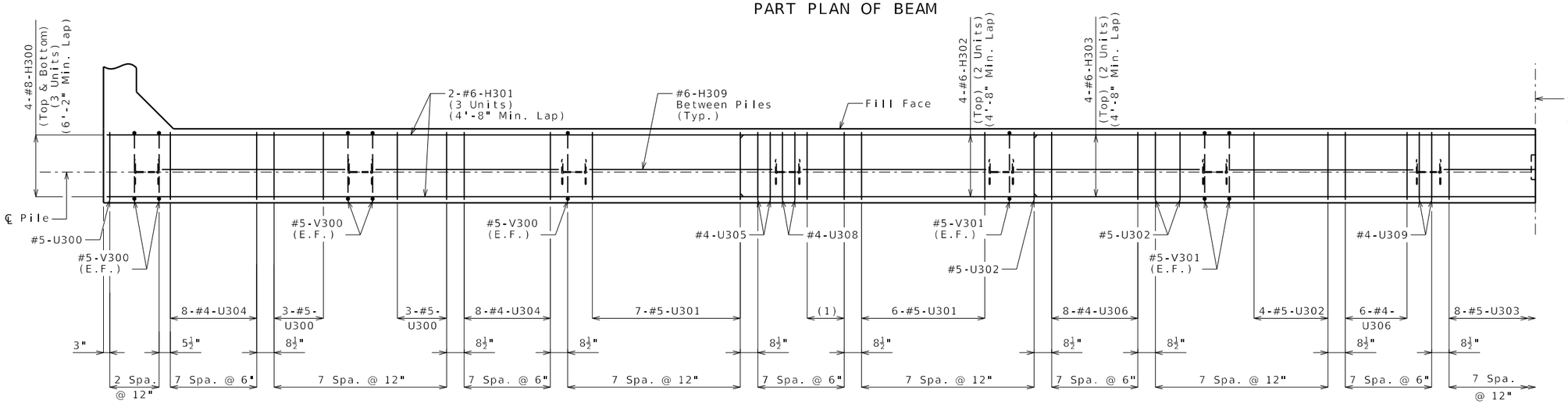

PART PLAN OF BEAM SHOWING REINFORCEMENT

(Keys and steps not shown for clarity.)
(1) 4-#5-U305

Substructure Quantity Table for Bent No. 3		
Item		Quantity
Galvanized Structural Steel Piles (12 in.)	linear foot	616
Pre-Bore for Piling	linear foot	196
Pile Point Reinforcement	each	14
Class B Concrete (Substructure)	cu. yard	49.5

These quantities are included in the Estimated Quantities table on Sheet No. 2.

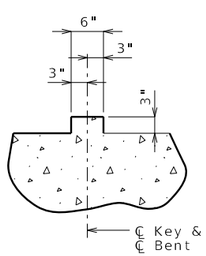

SECTION THRU KEY

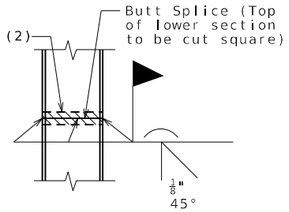

STEEL PILE SPLICE
(If required)

(2) Galvanizing material shall be omitted or removed one inch clear of weld locations in accordance with Sec 702.

Notes:

Work this sheet with Sheets No. 15, 16, 17, and 18.

Reinforcing steel shall be shifted to clear piles. U bars shall clear piles by at least 1 1/2 inches.

DETAILS OF END BENT NO. 3

Detailed Oct. 2023
Checked Feb. 2024

Note: This drawing is not to scale. Follow dimensions.

F:\2021\04501-05000\021-04786\40-Design\Microstation\J4P3196\plan_sheets\16 Bridge Sheets\B_A9328_014_J4P3196_EB3_1.dgn 5:39:05 PM 2/27/2025

Digitally signed by Grant Luckenbill
Date: 2025.02.28 14:56:19-06'00'

GRANT C. LUCKENBILL NUMBER PE-2012018100 2-28-25
GRANT C. LUCKENBILL–ENGINEER
MO# PE-2012018100

DATE PREPARED 2/27/2025
ROUTE 291 | STATE MO
DISTRICT BR | SHEET NO. 14
COUNTY JACKSON
JOB NO. J4P3196
FEDERAL PROJECT NO STB-3001(009)
PROJECT NO.
BRIDGE NO. A9328

IF A SEAL IS PRESENT ON THIS SHEET IT HAS BEEN ELECTRONICALLY SEALED AND DATED.

DESCRIPTION | DATE | REV.

MISSOURI HIGHWAYS AND TRANSPORTATION COMMISSION
105 WEST CAPITOL
JEFFERSON CITY, MO 65102
1-888-ASK-MODOT (1-888-275-6636)

LEE'S SUMMIT MISSOURI

olsson
1301 BURLINGTON ST., STE. 100
NORTH KANSAS CITY, MO 64116
PHONE: 816.361.1177
CERT. OF AUTHORITY NO. 001592

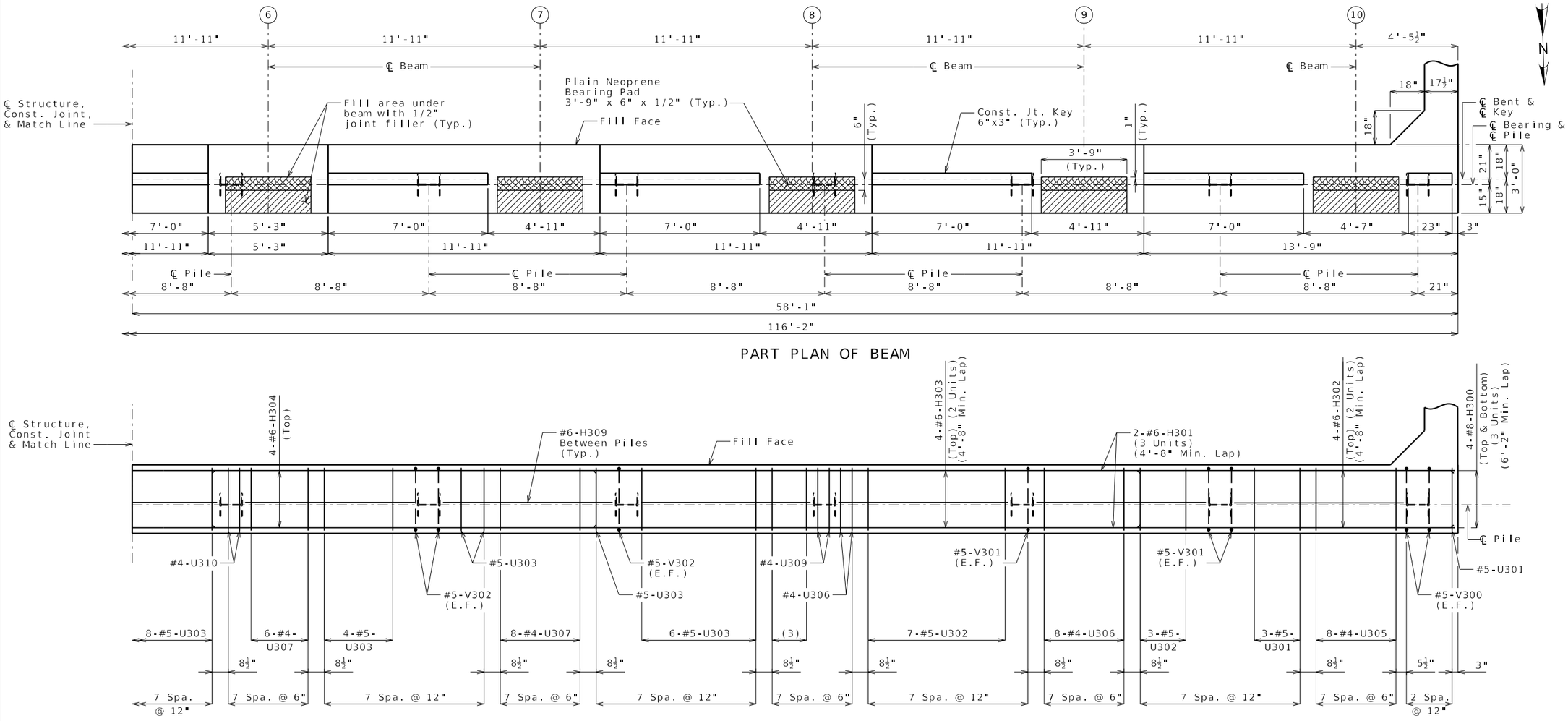

PART PLAN OF BEAM

PART PLAN OF BEAM SHOWING REINFORCEMENT

(Keys and steps not shown for clarity.)
(3) 4-#5-U306

DETAILS OF END BENT NO. 3

Notes:

Work this sheet with Sheets No. 14, 16, 17, and 18.

Detailed Oct. 2023
Checked Feb. 2024

Note: This drawing is not to scale. Follow dimensions.

F:\2021\04501-05000\021-04786\40-Design\Microstation\J4P3196\plan_sheets\16 Bridge Sheets\B_A9328_015_J4P3196_EB3_2.dgn 5:39:07 PM 2/27/2025

Digitally signed by Grant Luckenbill
Date: 2025.02.28 14:56:27-06'00'

GRANT C. LUCKENBILL NUMBER PE-2012018100 2-28-25

GRANT C. LUCKENBILL–ENGINEER
MO# PE-2012018100

DATE PREPARED 2/27/2025

ROUTE	STATE
291	MO
DISTRICT	SHEET NO.
BR	15

COUNTY: JACKSON

JOB NO.: J4P3196

FEDERAL PROJECT NO: STB-3001(009)

PROJECT NO.:

BRIDGE NO.: A9328

DATE	DESCRIPTION

IF A SEAL IS PRESENT ON THIS SHEET IT HAS BEEN ELECTRONICALLY SEALED AND DATED.

MISSOURI HIGHWAYS AND TRANSPORTATION COMMISSION

105 WEST CAPITOL
JEFFERSON CITY, MO 65102
1-888-ASK-MODOT (1-888-275-6636)

LEE'S SUMMIT MISSOURI

olsson
1301 BURLINGTON ST., STE. 100
NORTH KANSAS CITY, MO 64116
PHONE: 816.361.1177
CERT. OF AUTHORITY NO. 001592

REV.

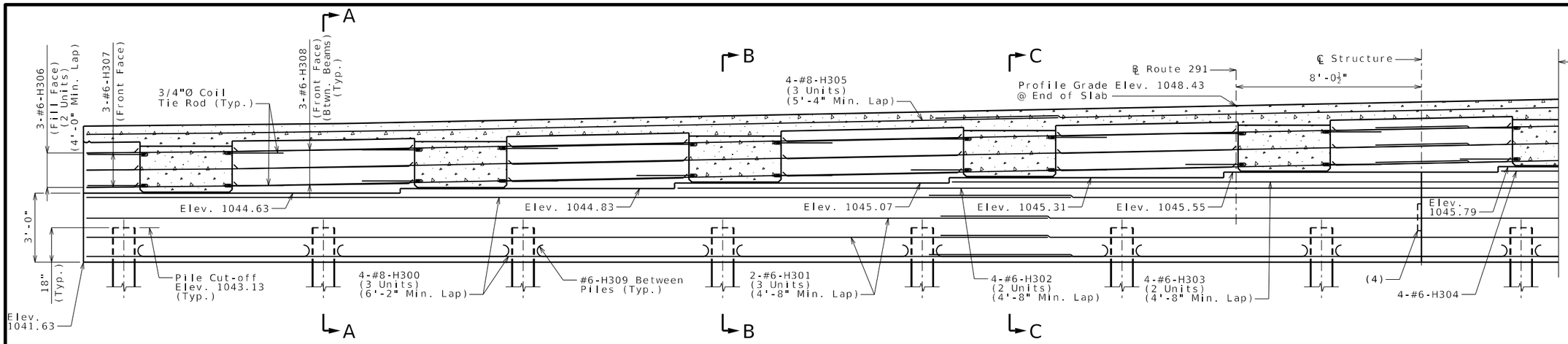

PART SECTION NEAR END BENT

(Looking ahead station)

(4) Construction joint in beam with 16" x 12" x 2" key

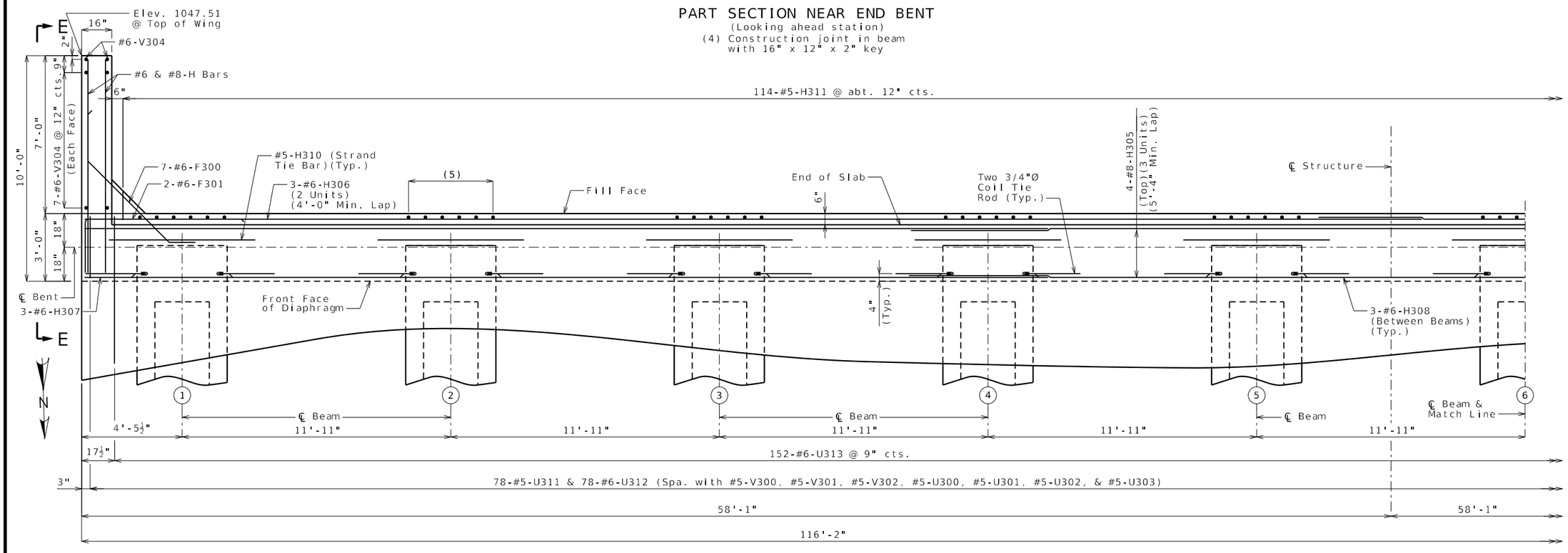

PART PLAN

(5)6-#6-V303 centered behind beam @ 9" cts. (Typ.)

Notes:

Work this sheet with Sheets No. 14, 15, 17, and 18.

For Sections A-A, B-B & C-C and Elevation E-E, see Sheet No. 18.

The #6-F300 bars shall be bent in the field to clear beams.

All concrete in the end bent above top of beam and below top of slab shall be Class B-2.

Strands at end of the beams shall be field bent or, if necessary, cut in field to maintain 1 1/2-inch minimum clearance to fill face of end bent.

For location of coil tie rods and #5-H310 (strand tie bar), see Sheet No. 19.

For details of vertical drain at end bents, see Sheet No. 8.

For details of bridge approach slab, see Sheet No. 35.

DETAILS OF END BENT NO. 3

Detailed Oct. 2023
Checked Feb. 2024

Note: This drawing is not to scale. Follow dimensions.

Digitally signed by Grant Luckenbill
Date: 2025.02.28 14:56:58-06'00'
GRANT C. LUCKENBILL NUMBER PE-2012018100
2-28-25
GRANT C. LUCKENBILL-ENGINEER
MO# PE-2012018100

DATE PREPARED
2/27/2025

ROUTE	STATE
291	MO
DISTRICT	SHEET NO.
BR	16

COUNTY
JACKSON

JOB NO.
J4P3196

FEDERAL PROJECT NO
STB-3001(009)

PROJECT NO.

BRIDGE NO.
A9328

DESCRIPTION | DATE

MISSOURI HIGHWAYS AND TRANSPORTATION COMMISSION
105 WEST CAPITOL
JEFFERSON CITY, MO 65102
1-888-ASK-MODOT (1-888-275-6636)
LEE'S SUMMIT MISSOURI
olsson
1301 BURLINGTON ST., STE. 100
NORTH KANSAS CITY, MO 64116
PHONE: 816.361.1177
CERT. OF AUTHORITY NO. 001592

IF A SEAL IS PRESENT ON THIS SHEET IT HAS BEEN ELECTRONICALLY SEALED AND DATED.

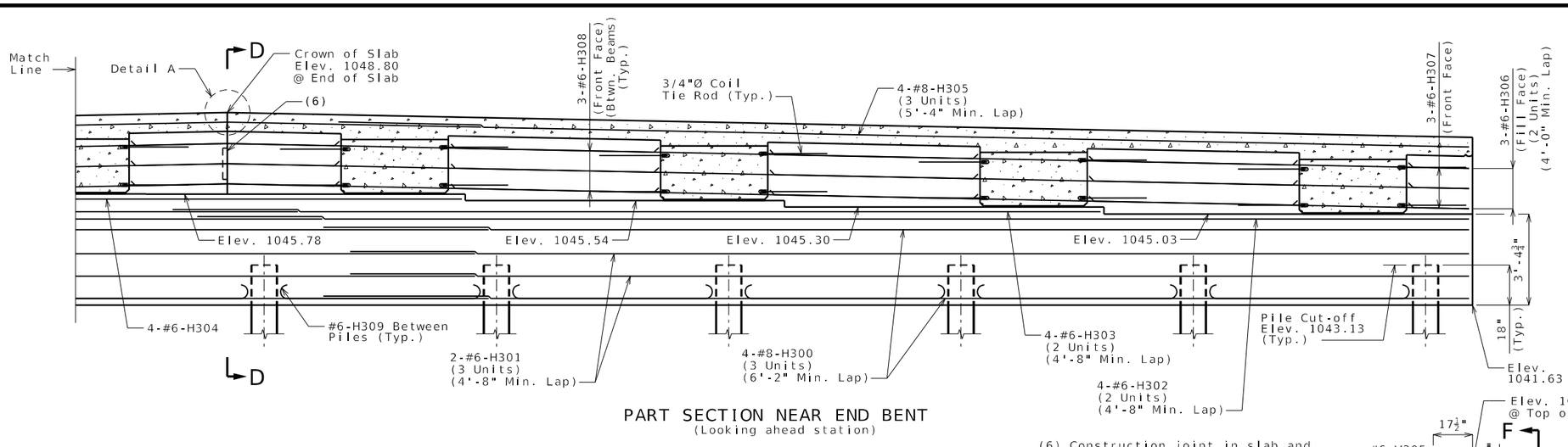

PART SECTION NEAR END BENT
(Looking ahead station)

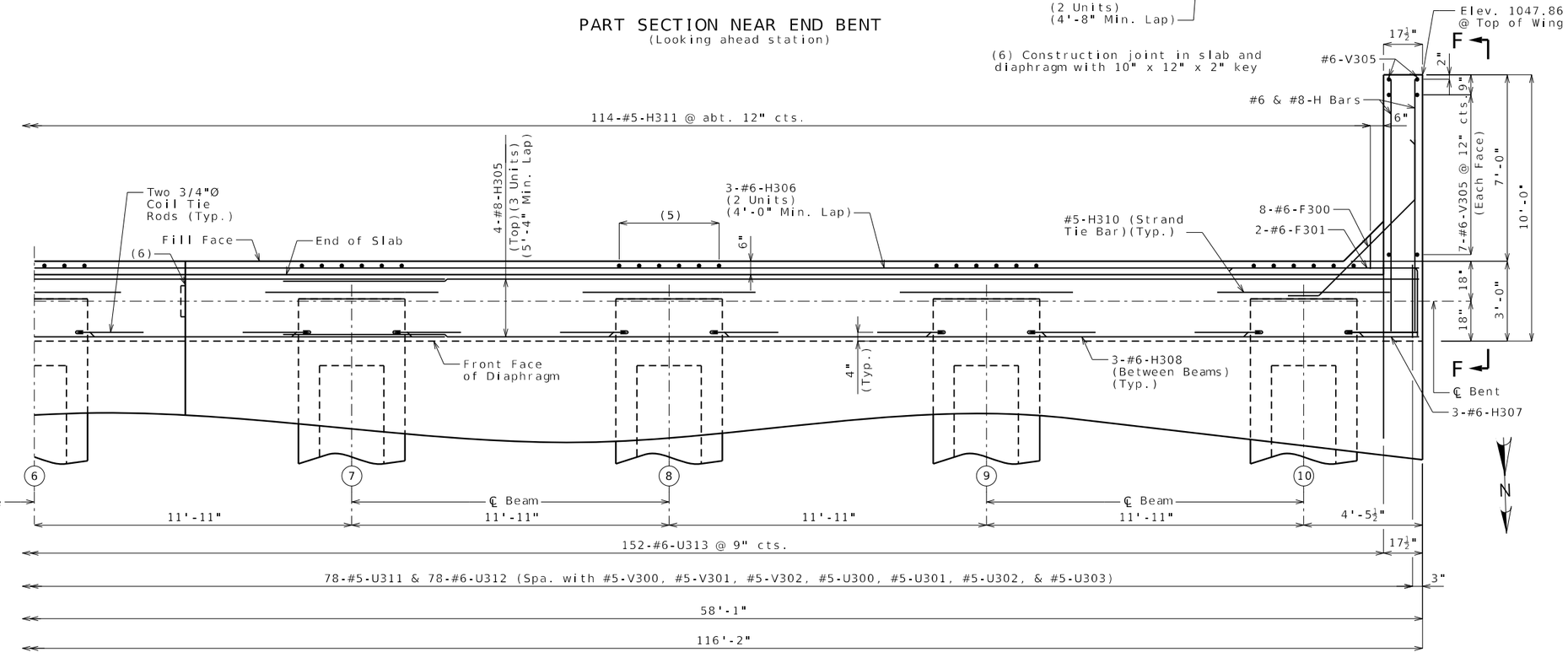

PART PLAN
(5) 6-#6-V303 centered behind beam @ 9" cts. (Typ.)

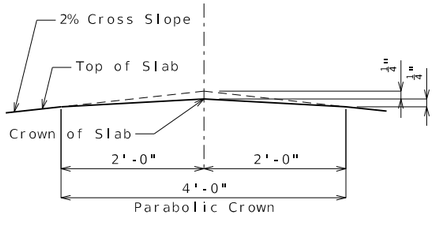

DETAIL A

Notes:
Work this sheet with Sheets No. 14, 15, 16, and 18.
For Section D-D and Elevation F-F, see Sheet No. 18.
For reinforcement of Raised Median Barrier, see Sheet No. 26.

DETAILS OF END BENT NO. 3

Detailed Oct. 2023
Checked Feb. 2024

Note: This drawing is not to scale. Follow dimensions.

F:\2021\04501-05000\021-04786\40-Design\Microstation\J4P3196\plan_sheets\16 Bridge Sheets\B_A9328_017_J4P3196_EB3_4.dgn 5:39:13 PM 2/27/2025

Digitally signed by Grant Luckenbill
Date: 2025.02.28 14:57:53-06'00'

GRANT C. LUCKENBILL NUMBER PE-2012018100
2-28-25
GRANT C. LUCKENBILL-ENGINEER
MO# PE-2012018100

DATE PREPARED
2/27/2025

ROUTE	STATE
291	MO
DISTRICT	SHEET NO.
BR	17

COUNTY
JACKSON

JOB NO.
J4P3196

FEDERAL PROJECT NO
STB-3001(009)

PROJECT NO.

BRIDGE NO.
A9328

DESCRIPTION | DATE

IF A SEAL IS PRESENT ON THIS SHEET IT HAS BEEN ELECTRONICALLY SEALED AND DATED.

MISSOURI HIGHWAYS AND TRANSPORTATION COMMISSION
105 WEST CAPITOL
JEFFERSON CITY, MO 65102
1-888-ASK-MODOT (1-888-275-6636)

LEE'S SUMMIT MISSOURI

olsson
1301 BURLINGTON ST., STE. 100
NORTH KANSAS CITY, MO 64116
PHONE: 816.361.1177
CERT. OF AUTHORITY NO. 001592

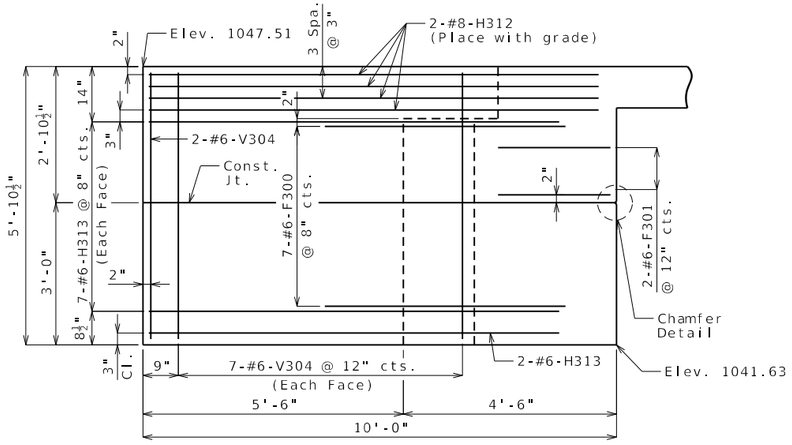

ELEVATION E-E

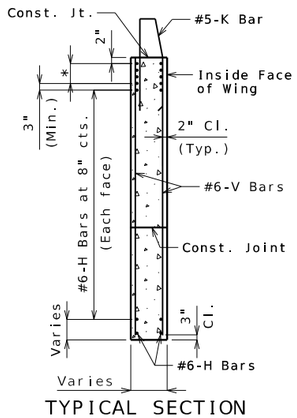

TYPICAL SECTION THRU WING

* #8-H Bars at 3" cts. (Each face)(Place with grade)

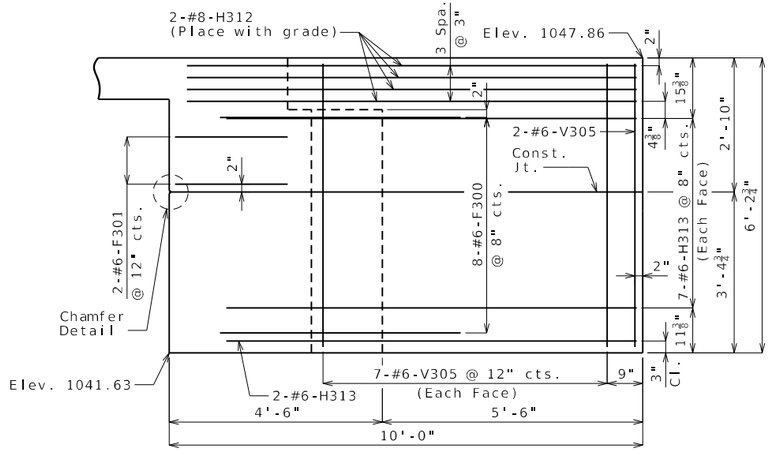

ELEVATION F-F

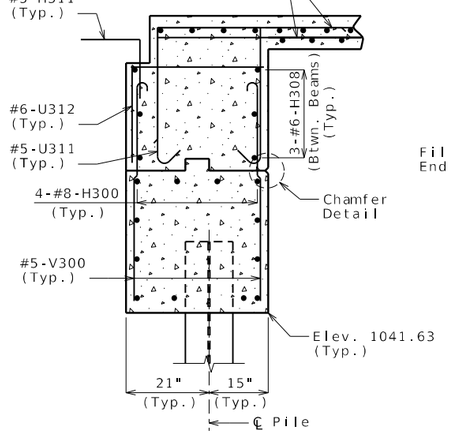

SECTION A-A

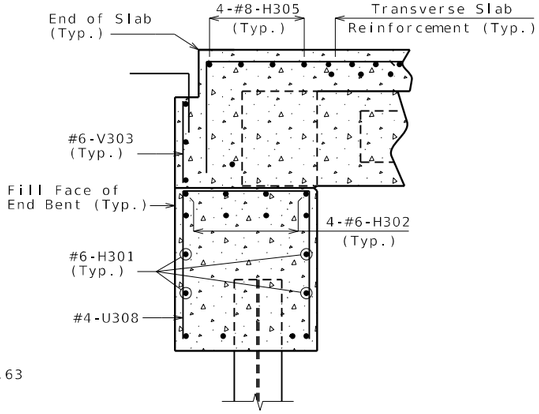

SECTION B-B

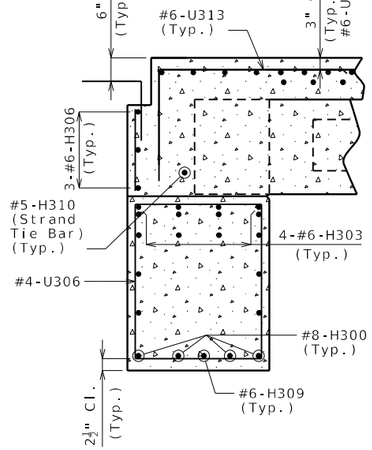

SECTION C-C

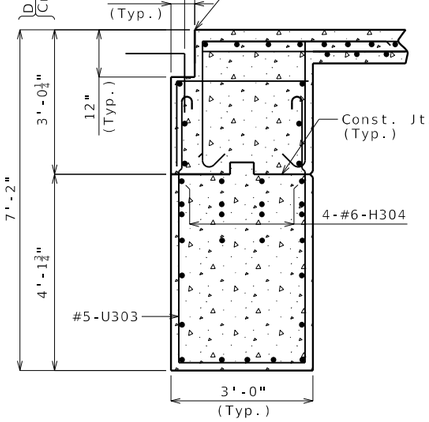

SECTION D-D

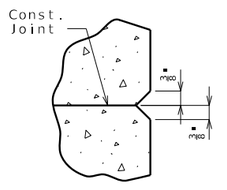

CHAMFER DETAIL

Notes:

Work this sheet with Sheets No. 14, 15, 16, and 17.

For reinforcement of the Type H Barrier, see Sheets No. 31 and 32.

For reinforcement of the Parapet Wall, see Sheet No. 28.

DETAILS OF END BENT NO. 3

Detailed Oct. 2023
Checked Feb. 2024

Note: This drawing is not to scale. Follow dimensions.

F:\2021\04501-05000\021-04786\40-Design\Microstation\J4P3196\plan_sheets\16 Bridge Sheets\B_A9328_018_J4P3196_EB3_5.dgn 5:39:16 PM 2/27/2025

Digitally signed by Grant Luckenbill
Date: 2025.02.28 14:56:09-06'00'

GRANT C. LUCKENBILL NUMBER PE-2012018100 2-28-25

GRANT C. LUCKENBILL–ENGINEER
MO# PE-2012018100

DATE PREPARED 2/27/2025

ROUTE	STATE
291	MO
DISTRICT	SHEET NO.
BR	18

COUNTY JACKSON

JOB NO. J4P3196

FEDERAL PROJECT NO STB-3001(009)

PROJECT NO.

BRIDGE NO. A9328

IF A SEAL IS PRESENT ON THIS SHEET IT HAS BEEN ELECTRONICALLY SEALED AND DATED.

DESCRIPTION	DATE

MISSOURI HIGHWAYS AND TRANSPORTATION COMMISSION
105 WEST CAPITOL
JEFFERSON CITY, MO 65102
1-888-ASK-MODOT (1-888-275-6636)

LEE'S SUMMIT MISSOURI

olsson
1301 BURLINGTON ST., STE. 100
NORTH KANSAS CITY, MO 64116
PHONE: 816.361.1177
CERT. OF AUTHORITY NO. 001592

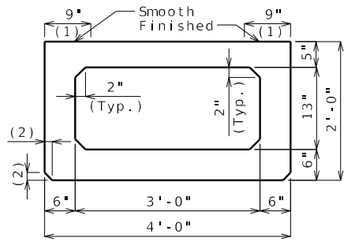

DIMENSIONS

(1) Fabricator shall apply a bond breaker to this region.

(2) $1\frac{1}{2}$" (Typ.) ($\frac{3}{4}$" Optional)

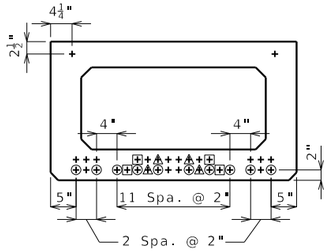

STRAND ARRANGEMENT

All strands are fully bonded unless otherwise noted.

+ Indicates prestressing strand.

○ Indicates cut and shop bend with 2'-0" projection.

□ Indicates debonded for 4'-0" from end of beam.

△ Indicates debonded for 6'-0" from end of beam.

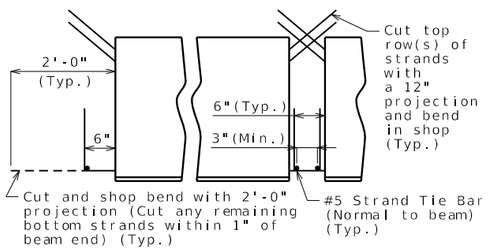

STRANDS AT BEAM ENDS

BILL OF REINFORCING STEEL - EACH BEAM				
NO.	SIZE & MARK	ACTUAL LENGTH	SHAPE	BENDING DIAGRAM
10	5 A1	33'-9"	20	
8	4 A2	33'-6"	20	
11	4 C1	3'-7"	20	
65	5 S1	7'-9"	10	
65	5 S2	7'-3"	51	
65	4 S3	4'-6"	50	
18	5 S4	7'-9"	10	
18	5 S5	6'-10"	10	
12	6 U1	4'-10"	10	
6	4 U2	7'-4"	10	

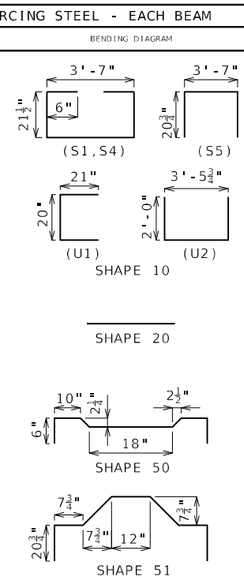

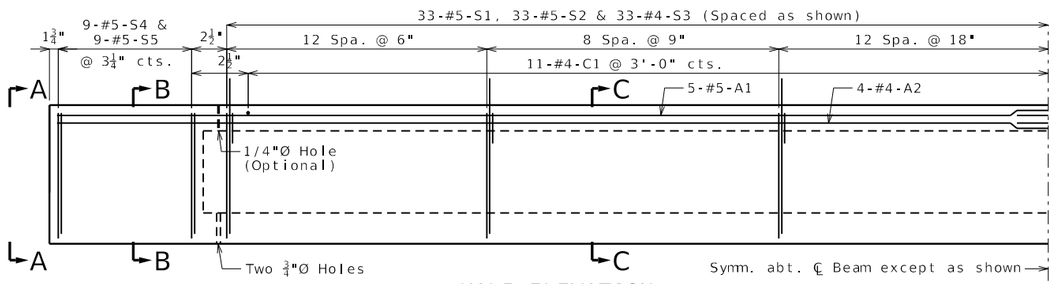

HALF ELEVATION

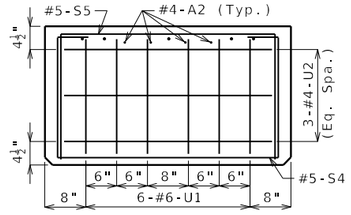

ELEVATION A-A

Strands not shown for clarity.

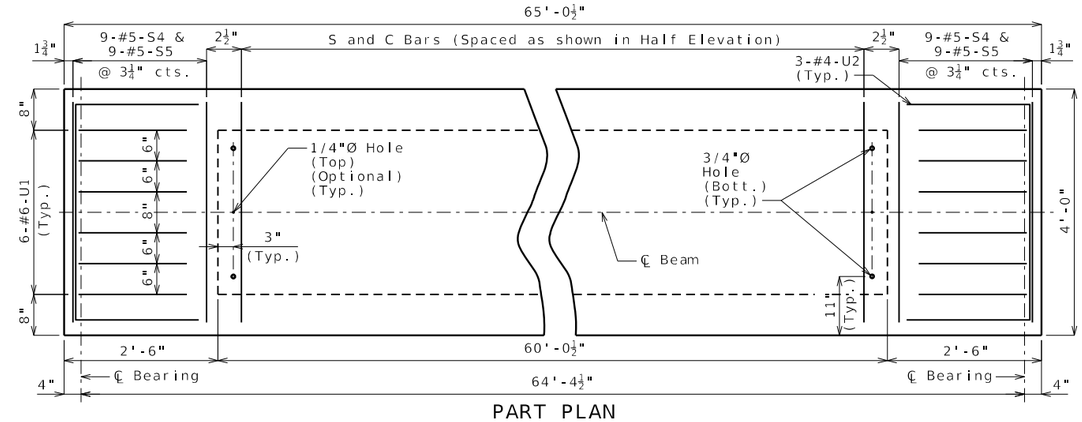

PART PLAN

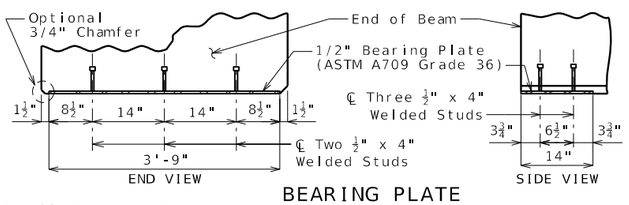

BEARING PLATE

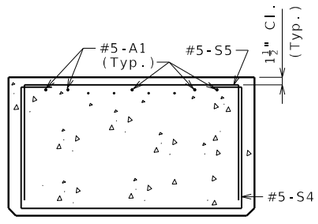

SECTION B-B

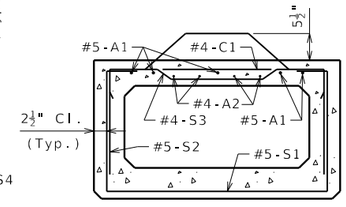

SECTION C-C

(4) ℄ 3/4"Ø (Min.) Coil Tie Rods 2'-6" long

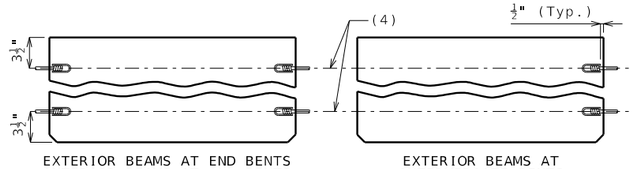

EXTERIOR BEAMS AT END BENTS
INTERIOR BEAMS AT ALL BENTS

EXTERIOR BEAMS AT INTERMEDIATE BENTS

COIL TIES

All dimensions are out to out. Use symmetry for dimensions not shown.

Hooks and bends shall be in accordance with the CRSI Manual of Standard Practice for Detailing Reinforced Concrete Structures, Stirrup and Tie Dimensions.

Actual lengths are measured along centerline of bar to the nearest inch.

Minimum clearance to reinforcing shall be 1", unless otherwise shown.

All reinforcement shall be Grade 60.

All S2 bars shall be epoxy coated.

General Notes:

Concrete for prestressed beams shall be Class A-1 with f'c = 8,000 psi and f'ci = 6,500 psi.

Use 34 strands, 0.6"Ø Grade 270, with an initial prestress force of 1494 kips.

Pretensioned members shall be in accordance with Sec 1029.

Fabricator shall be responsible for location and design of lifting devices.

Exterior and interior beams are the same except: coil inserts for slab drains.

For Beam Camber Diagram, see Sheet No. 22.

For location of coil inserts at slab drains, see Sheet No. 21.

For location of coil ties at concrete bent diaphragms, see Sheets No. 5, 6, 16, 17 and 20.

Digitally signed by Grant Luckenbill
Date: 2025.02.28 14:56:40-06'00'

GRANT C. LUCKENBILL NUMBER PE-2012018100 2-28-25 LICENSED MISSOURI

GRANT C. LUCKENBILL–ENGINEER
MO# PE-2012018100

DATE PREPARED
2/27/2025

ROUTE	STATE
291	MO
DISTRICT	SHEET NO.
BR	19

COUNTY
JACKSON

JOB NO.
J4P3196

FEDERAL PROJECT NO
STB-3001(009)

PROJECT NO.

BRIDGE NO.
A9328

IF A SEAL IS PRESENT ON THIS SHEET IT HAS BEEN ELECTRONICALLY SEALED AND DATED.

DESCRIPTION

DATE

MISSOURI HIGHWAYS AND TRANSPORTATION COMMISSION

105 WEST CAPITOL
JEFFERSON CITY, MO 65102
1-888-ASK-MODOT (1-888-275-6636)

LEE'S SUMMIT MISSOURI

olsson
1301 BURLINGTON ST., STE. 100
NORTH KANSAS CITY, MO 64116
PHONE: 816.361.1177
CERT. OF AUTHORITY NO. 001592

Detailed Oct. 2023
Checked Feb. 2024

SPREAD BOX BEAMS - SPANS (1-2) AND (2-3)

Note: This drawing is not to scale. Follow dimensions.

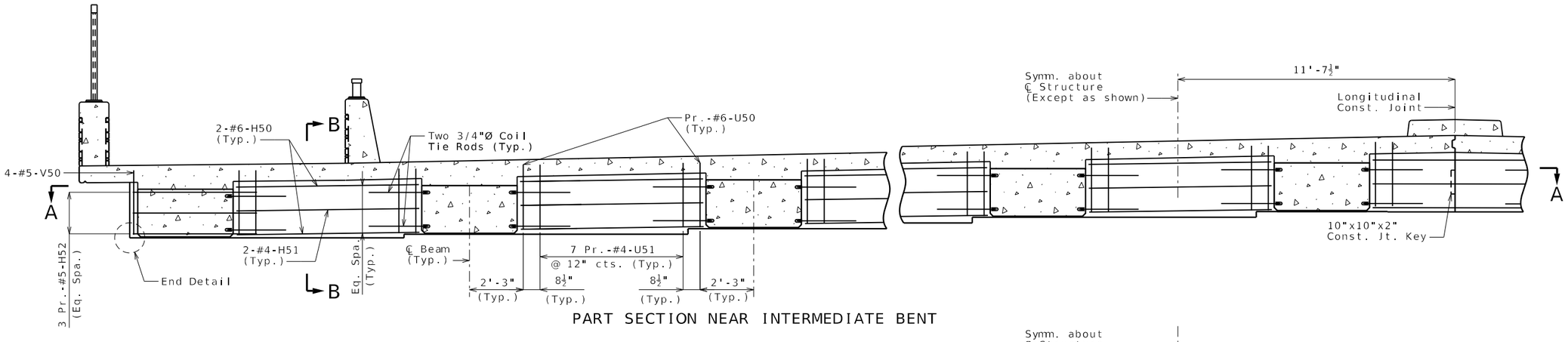

PART SECTION NEAR INTERMEDIATE BENT

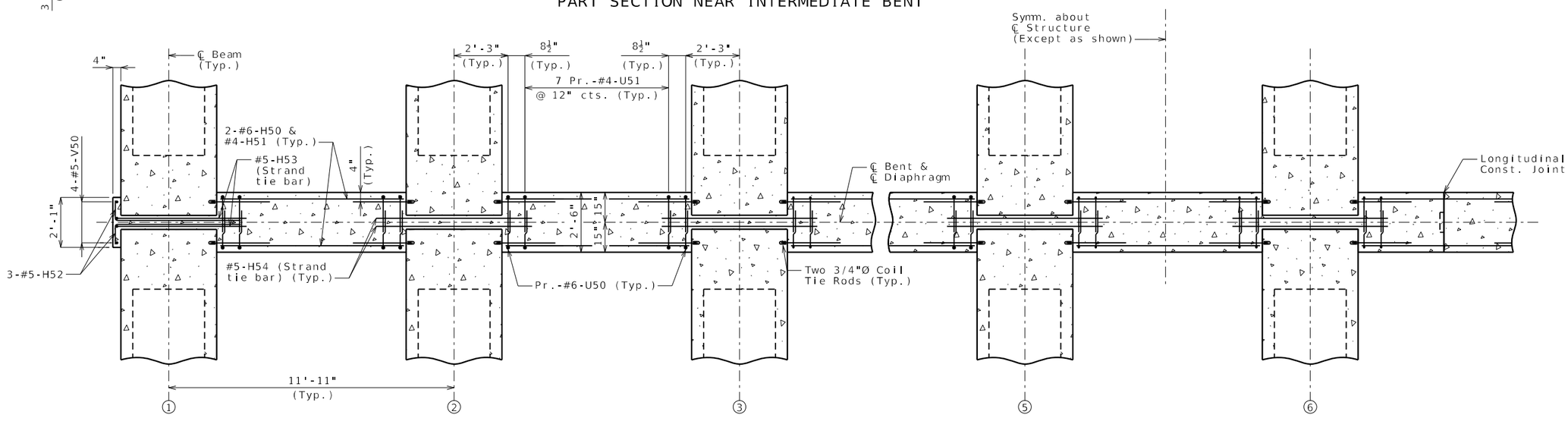

SECTION A-A

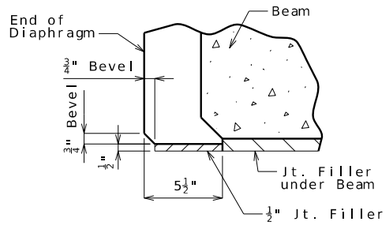

END DETAIL

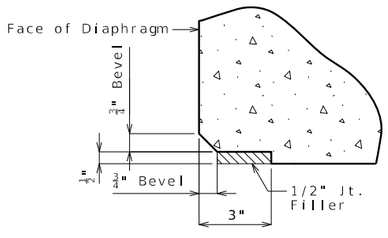

EDGE DETAIL

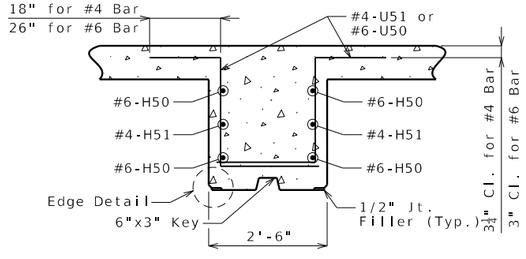

SECTION B-B

Notes:

For location of Strand Tie Bars, see Sheet No. 19.

For location and details of Coil Tie Rods, see Sheet No. 19.

Diaphragms at intermediate bents shall be built vertical.

CONCRETE DIAPHRAGMS AT INTERMEDIATE BENT NO. 2

Detailed Oct. 2023
Checked Feb. 2024

Note: This drawing is not to scale. Follow dimensions.

F:\2021\04501-05000\021-04786\40-Design\Microstation\J4P3196\plan_sheets\16 Bridge Sheets\B_A9328_020_J4P3196_Diaphragm at Int. Bent.dgn 5:39:22 PM 2/27/2025

Digitally signed by Grant Luckenbill
Date: 2025.02.28 14:56:49-06'00'

GRANT C. LUCKENBILL NUMBER PE-2012018100 2-28-25

GRANT C. LUCKENBILL–ENGINEER
MO# PE-2012018100

DATE PREPARED
2/27/2025

ROUTE	STATE
291	MO
DISTRICT	SHEET NO.
BR	20

COUNTY
JACKSON

JOB NO.
J4P3196

FEDERAL PROJECT NO
STB-3001(009)

PROJECT NO.

BRIDGE NO.
A9328

DESCRIPTION | DATE

IF A SEAL IS PRESENT ON THIS SHEET IT HAS BEEN ELECTRONICALLY SEALED AND DATED.

MISSOURI HIGHWAYS AND TRANSPORTATION COMMISSION

105 WEST CAPITOL
JEFFERSON CITY, MO 65102
1-888-ASK-MODOT (1-888-275-6636)

LEE'S SUMMIT MISSOURI

olsson
1301 BURLINGTON ST., STE. 100
NORTH KANSAS CITY, MO 64116
PHONE: 816.361.1177
CERT. OF AUTHORITY NO. 001592

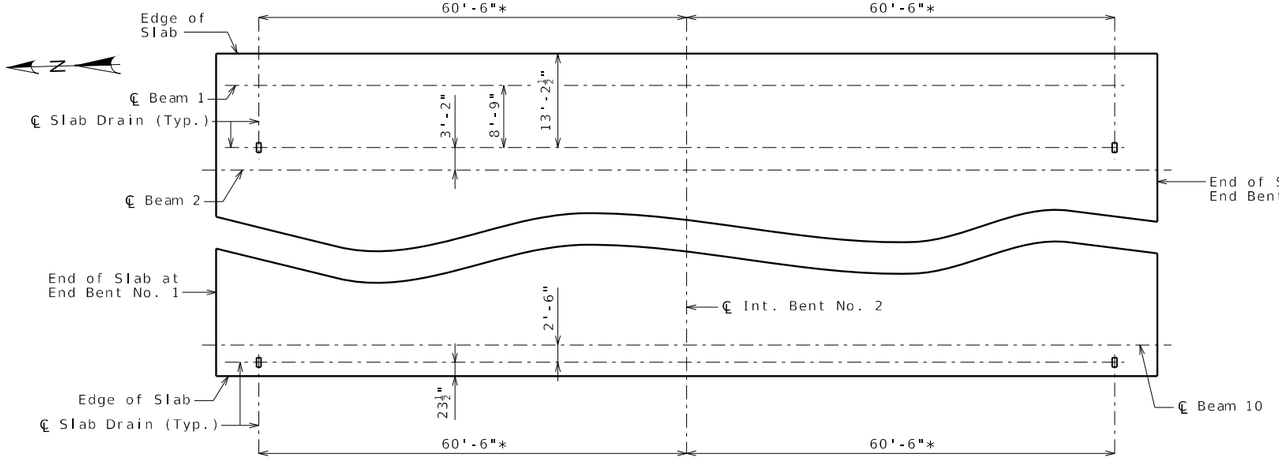

PLAN OF SLAB SHOWING SLAB DRAIN LOCATIONS

* Slab drains shall be located and angled to direct flow of water into the gutter in the direction of flow. Water shall be discharged from the slab drains at a minimum height above the gutter so that splashing and erosion of fill behind the MSE walls does not occur.

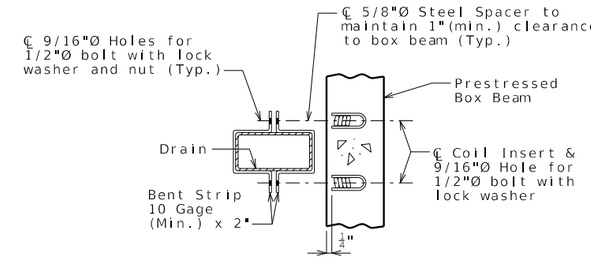

PART SECTION SHOWING BRACKET ASSEMBLY

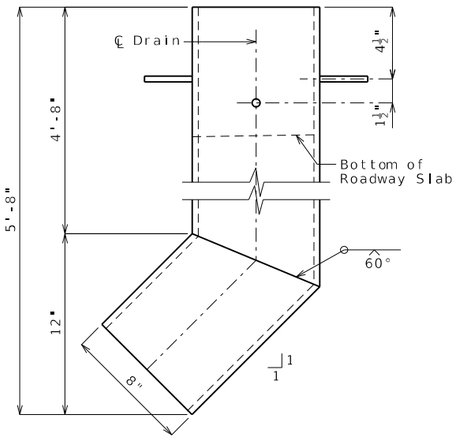

ELEVATION OF DRAIN

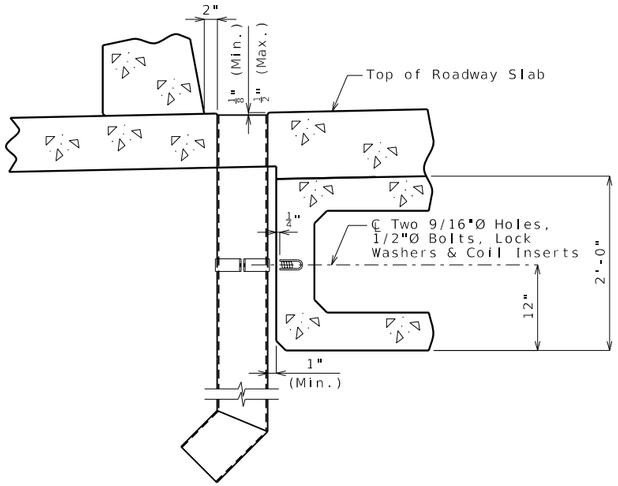

PART SECTION NEAR DRAIN

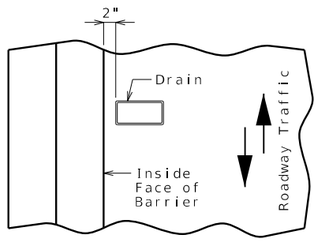

PART PLAN OF SLAB AT DRAIN

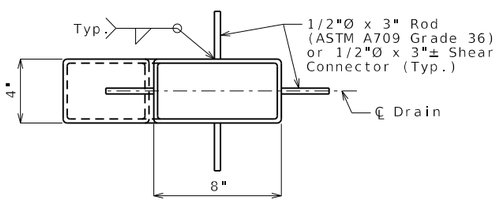

PLAN OF STEEL DRAIN OPTION

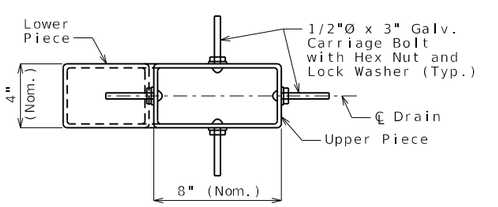

PLAN OF FRP DRAIN OPTION

General Notes:

Contractor shall have the option to construct either steel or FRP slab drains. All drains shall be of same type.

Slab drain bracket assembly shall be ASTM A709 Grade 36 steel.

Locate drains in slab by dimensions shown in Part Section Near Drain.

Reinforcing steel shall be shifted to clear drains.

The coil inserts and bracket assembly shall be galvanized in accordance with ASTM A123.

All bolts, hardened washers, lock washers and nuts shall be galvanized in accordance with AASHTO M 232 (ASTM A153), Class C.

All 1/2"Ø bolts shall be ASTM A307.

Shop drawings will not be required for the slab drains and the bracket assembly.

The coil inserts required for the bracket assembly attachment shall be located on the prestressed beam shop drawings.

Coil inserts shall have a concrete pull-out strength (ultimate load) of at least 2,500 pounds in 5,000 psi concrete.

The bolts required to attach the slab drain bracket assembly to the prestressed beam shall be supplied by the prestressed beam fabricator.

Notes for Steel Drain:

Slab drains may be fabricated of either 1/4" welded sheets of ASTM A709 Grade 36 steel or from 1/4" structural steel tubing ASTM A500 or A501.

Outside dimensions of drains are 8" x 4".

The drains shall be galvanized in accordance with ASTM A123.

Notes for FRP Drain:

Drains shall be machine filament-wound thermosetting resin tubing meeting the requirements of ASTM D2996 with the following exceptions:

Shape of drains shall be rectangular with outside nominal dimensions of 8" x 4".

Minimum reinforced wall thickness shall be 1/4 inch.

The resin used shall be ultraviolet (UV) resistant and/or have UV inhibitors mixed throughout. Drains may have an exterior coating for additional UV resistance.

The color of the slab drain shall be gray (Federal Standard 26373). The color shall be uniform throughout the resin and any coating used.

The combination of materials used in the manufacture of the drains shall be tested for UV resistance in accordance with ASTM D4329 Cycle A. The representative material shall withstand at least 500 hours of testing with only minor discoloration and without any physical deterioration. The contractor shall furnish the results of the required ultraviolet testing prior to acceptance of the slab drains.

At the contractor's option, drains may be field cut. The method of cutting FRP slab drain shall be as recommended by the manufacturer to ensure a smooth, chip free cut.

Both upper and lower drain pieces shall be rigidly connected to each other. Drain flow shall not be obstructed. Approval of the engineer is required.

SLAB DRAINS

Detailed Oct. 2023
Checked Feb. 2024

Note: This drawing is not to scale. Follow dimensions.

F:\2021\04501-05000\021-04786\40-Design\Microstation\J4P3196\plan_sheets\16 Bridge Sheets\B_A9328_021_J4P3196_Slab Drains.dgn 5:39:26 PM 2/27/2025

Digitally signed by Grant Luckenbill
Date: 2025.02.28 14:59:47-06'00'

GRANT C. LUCKENBILL NUMBER PE-2012018100 2-28-25
GRANT C. LUCKENBILL–ENGINEER
MO# PE-2012018100

DATE PREPARED 2/27/2025
ROUTE 291 | STATE MO
DISTRICT BR | SHEET NO. 21
COUNTY JACKSON
JOB NO. J4P3196
FEDERAL PROJECT NO STB-3001(009)
PROJECT NO.
BRIDGE NO. A9328

IF A SEAL IS PRESENT ON THIS SHEET IT HAS BEEN ELECTRONICALLY SEALED AND DATED.

REV.	DESCRIPTION	DATE

MISSOURI HIGHWAYS AND TRANSPORTATION COMMISSION
105 WEST CAPITOL
JEFFERSON CITY, MO 65102
1-888-ASK-MODOT (1-888-275-6636)

LEE'S SUMMIT MISSOURI

olsson
1301 BURLINGTON ST., STE. 100
NORTH KANSAS CITY, MO 64116
PHONE: 816.361.1177
CERT. OF AUTHORITY NO. 001592

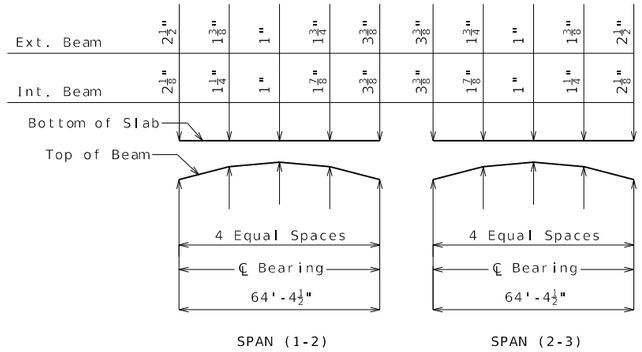

THEORETICAL SLAB HAUNCHING DIAGRAM (ESTIMATED AT 90 DAYS)

If beam camber is different from that shown in the camber diagram, in order to maintain minimum slab thickness, an adjustment of the slab haunches, an increase in slab thickness or a raise in grade uniformly throughout the structure shall be necessary. No payment will be made for additional labor or materials required for variation in haunching, slab thickness or grade adjustment.

Concrete in the slab haunches is included in the Estimated Quantities for Slab on Concrete Beam.

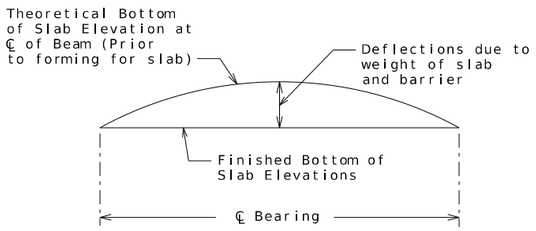

TYPICAL SLAB ELEVATIONS DIAGRAM

Theoretical Bottom of Slab Elevations at Centerline of Beam (Prior to forming for slab) (Estimated at 90 days)

Beam Number	Span (1-2) (64'-4½" ℄ Brg. - ℄ Brg.)					Span (2-3) (64'-4½" ℄ Brg. - ℄ Brg.)				
	℄ Brg.	.25	.50	.75	℄ Brg.	℄ Brg.	.25	.50	.75	℄ Brg.
1	1047.44	1047.48	1047.46	1047.34	1047.16	1047.16	1047.20	1047.17	1047.06	1046.88
2	1047.61	1047.67	1047.65	1047.53	1047.33	1047.33	1047.38	1047.36	1047.25	1047.05
3	1047.85	1047.90	1047.88	1047.77	1047.57	1047.57	1047.62	1047.60	1047.48	1047.29
4	1048.09	1048.14	1048.12	1048.00	1047.81	1047.81	1047.86	1047.84	1047.72	1047.53
5	1048.33	1048.38	1048.36	1048.24	1048.05	1048.04	1048.10	1048.08	1047.96	1047.77
6	1048.56	1048.62	1048.60	1048.48	1048.29	1048.28	1048.34	1048.32	1048.20	1048.01
7	1048.55	1048.61	1048.59	1048.47	1048.28	1048.27	1048.33	1048.31	1048.19	1047.99
8	1048.31	1048.37	1048.35	1048.23	1048.04	1048.03	1048.09	1048.07	1047.95	1047.76
9	1048.08	1048.13	1048.11	1047.99	1047.80	1047.79	1047.85	1047.83	1047.71	1047.52
10	1047.84	1047.88	1047.85	1047.74	1047.56	1047.56	1047.60	1047.57	1047.46	1047.28

Elevations are based on a constant slab thickness of 8 1/2" and include allowance for theoretical dead load deflections due to weight of slab, barrier, parapet, median, pedestrian fence, and pedestrian handrail.

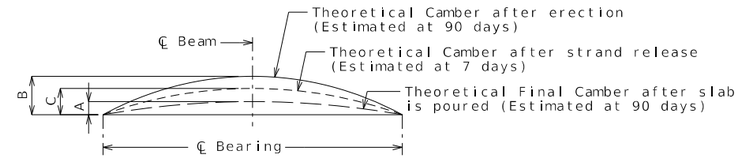

Beam	Span (1-2)			Span (2-3)		
	A	B	C	A	B	C
Exterior	1⅞"	3¾"	2⅛"	1⅞"	3¾"	2⅛"
Interior	1¾"			1¾"		

BEAM CAMBER DIAGRAM

Conversion Factors for Beam Camber (Estimated at 90 days):
0.25 pt. = 0.7125 x 0.5 pt.

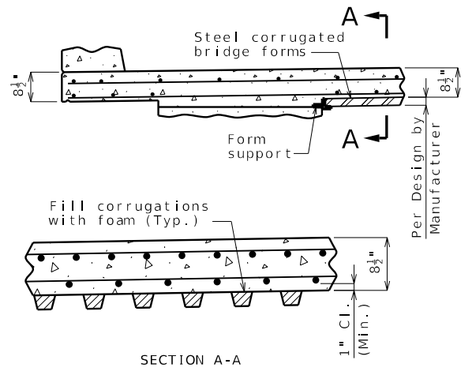

SECTION A-A

OPTIONAL STAY-IN-PLACE FORM DETAILS

Stay-In-Place Forms:

Corrugated steel forms, supports, closure elements and accessories shall be in accordance with grade requirement and coating designation G165 of ASTM A653. Complete shop drawings of the permanent steel deck forms shall be required in accordance with Sec 1080.

Corrugations of stay-in-place forms shall be filled with an expanded polystyrene material. The polystyrene material shall be placed in the forms with an adhesive in accordance with the manufacturer's recommendations.

Form sheets shall not rest directly on the top of beam. Sheets shall be securely fastened to form supports with a minimum bearing length of one inch on each end. Form supports shall be placed in direct contact with the top of beam. Drilling holes in the beam will not be permitted. All steel fabrication and construction shall be in accordance with Sec 1080 and 712. Certified field welders will not be required for welding of the form supports.

The design of stay-in-place corrugated steel forms is per manufacturer which shall be in accordance with Sec 703 for false work and forms. Maximum actual weight of corrugated steel forms allowed shall be 4 psf assumed for beam loading.

Digitally signed by Grant Luckenbill
Date: 2025.02.28 14:59:37-06'00'
GRANT C. LUCKENBILL NUMBER PE-2012018100
2-28-25
GRANT C. LUCKENBILL-ENGINEER
MO# PE-2012018100

DATE PREPARED: 2/27/2025
ROUTE: 291 | STATE: MO
DISTRICT: BR | SHEET NO.: 22
COUNTY: JACKSON
JOB NO.: J4P3196
FEDERAL PROJECT NO: STB-3001(009)
PROJECT NO.:
BRIDGE NO.: A9328

DESCRIPTION | DATE

IF A SEAL IS PRESENT ON THIS SHEET IT HAS BEEN ELECTRONICALLY SEALED AND DATED.

MISSOURI HIGHWAYS AND TRANSPORTATION COMMISSION
105 WEST CAPITOL
JEFFERSON CITY, MO 65102
1-888-ASK-MODOT (1-888-275-6636)
LEE'S SUMMIT MISSOURI
olsson
1301 BURLINGTON ST., STE. 100
NORTH KANSAS CITY, MO 64116
PHONE: 816.361.1177
CERT. OF AUTHORITY NO. 001592

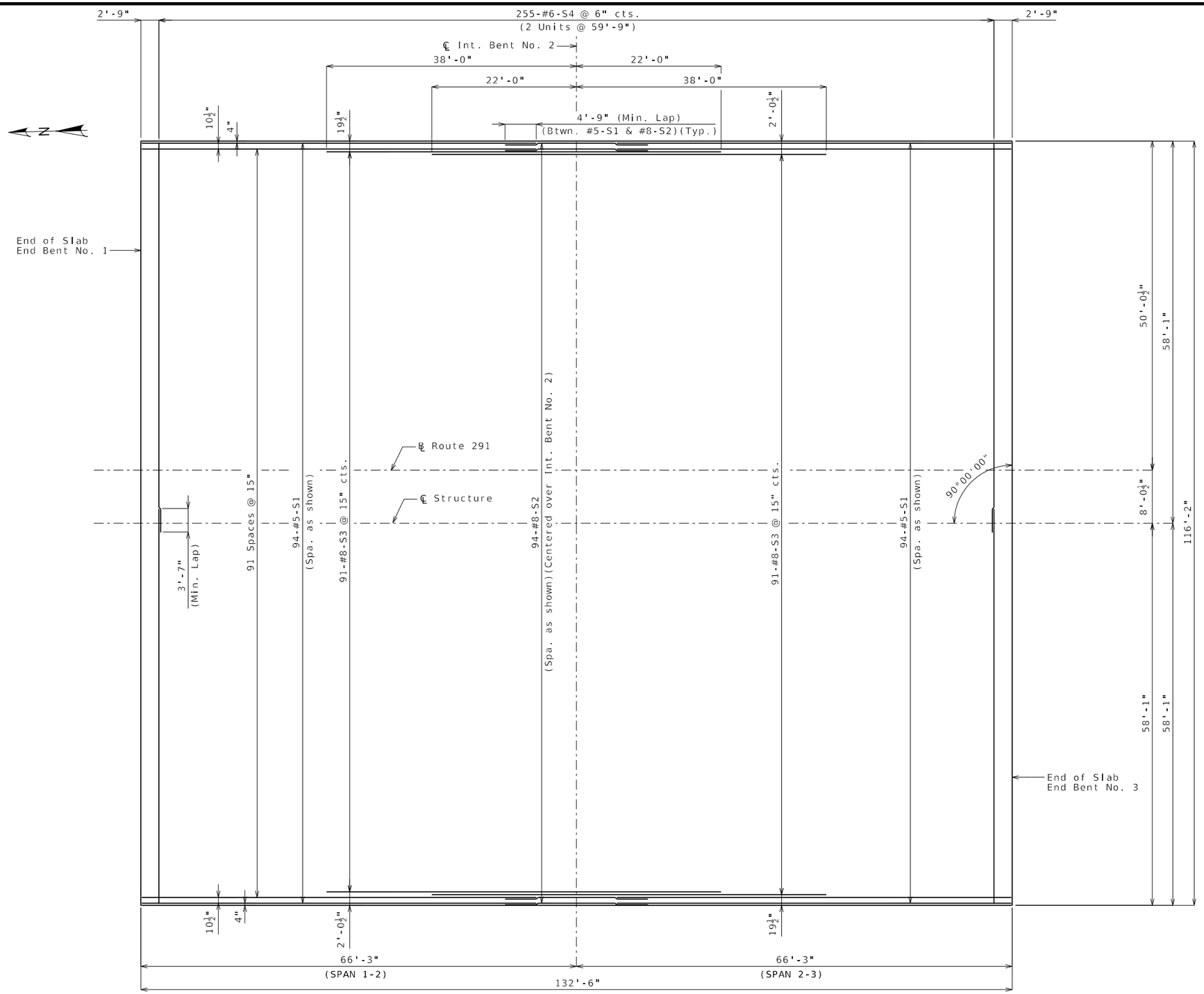

TOP REINFORCEMENT

PLAN OF SLAB SHOWING REINFORCEMENT

Note: This drawing is not to scale. Follow dimensions.

Sheet No. 23 of 46

Detailed Oct. 2023
Checked Feb. 2024

Notes:

Longitudinal slab dimensions are measured horizontally.

For Plan of Slab Showing Bottom Reinforcement, see Sheet No. 24.

For Section Thru Slab and Slab Pouring Sequence, see Sheet No. 25.

For details of Raised Median Barrier not shown, see Sheet No. 26.

For details of Parapet not shown, see Sheets No. 27 and 28.

For details of Type H Barrier not shown, see Sheets No. 29, 30, 31, and 32.

For details and locations of Slab Drains, see Sheet No. 21.

For Theoretical Bottom of Slab Elevations, Beam Camber Diagram, and Theoretical Slab Haunching Diagram, see Sheet No. 22.

Digitally signed by Grant Luckenbill
Date: 2025.02.28 14:59:27-06'00'

GRANT C. LUCKENBILL NUMBER PE-2012018100 2-28-25

GRANT C. LUCKENBILL–ENGINEER
MO# PE-2012018100

DATE PREPARED
2/27/2025

ROUTE	STATE
291	MO
DISTRICT	SHEET NO.
BR	23

COUNTY
JACKSON

JOB NO.
J4P3196

FEDERAL PROJECT NO
STB-3001(009)

PROJECT NO.

BRIDGE NO.
A9328

DESCRIPTION	DATE

IF A SEAL IS PRESENT ON THIS SHEET IT HAS BEEN ELECTRONICALLY SEALED AND DATED.

MISSOURI HIGHWAYS AND TRANSPORTATION COMMISSION

105 WEST CAPITOL
JEFFERSON CITY, MO 65102
1-888-ASK-MODOT (1-888-275-6636)

LEE'S SUMMIT MISSOURI

olsson
1301 BURLINGTON ST., STE. 100
NORTH KANSAS CITY, MO 64116
PHONE: 816.361.1177
CERT. OF AUTHORITY NO. 001592

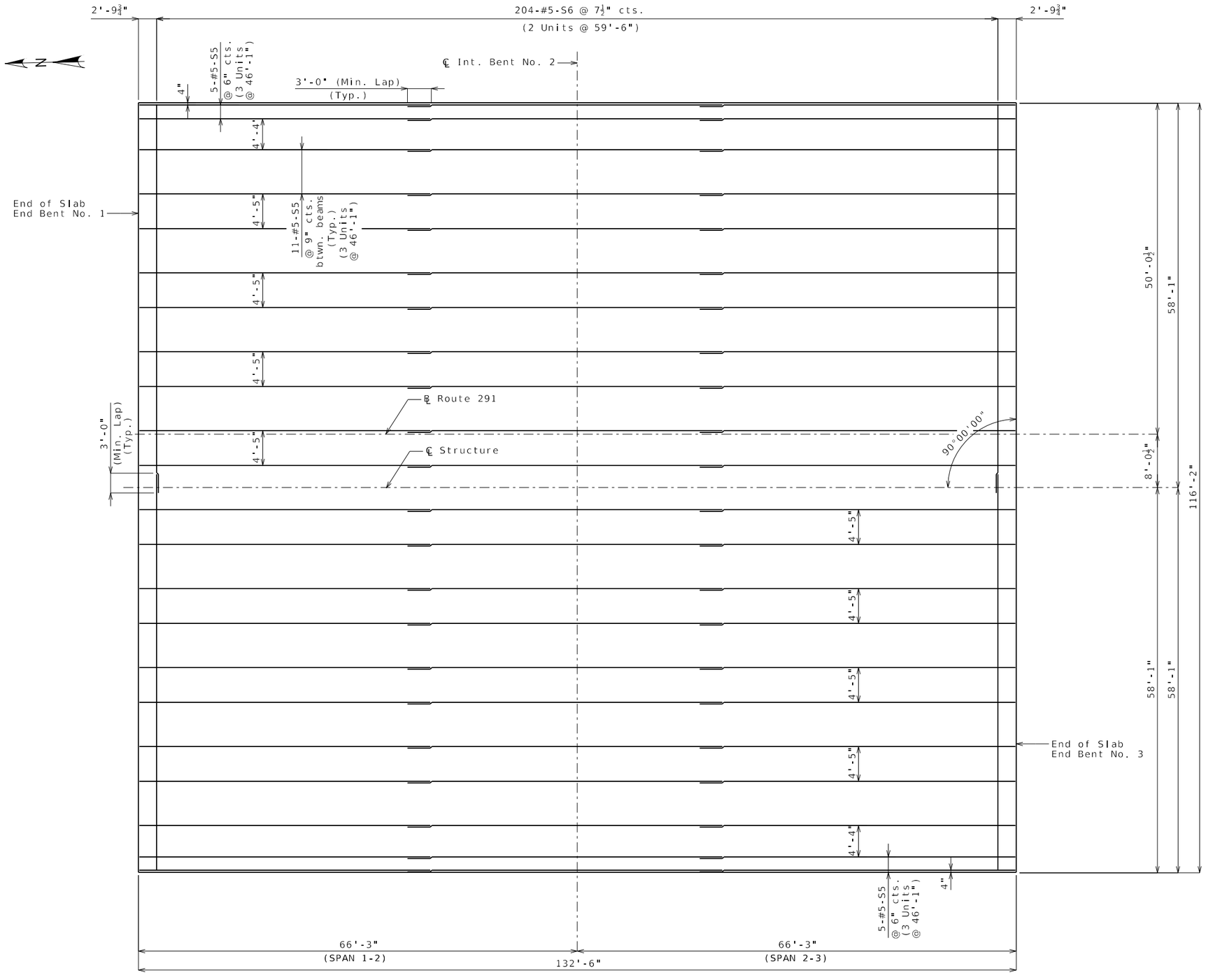

BOTTOM REINFORCEMENT

PLAN OF SLAB SHOWING REINFORCEMENT

Notes:

Longitudinal slab dimensions are measured horizontally.

For Plan of Slab Showing Top Reinforcement, see Sheet No. 23.

For Section Thru Slab and Slab Pouring Sequence, see Sheet No. 25.

For details of Raised Median Barrier not shown, see Sheet No. 26.

For details of Parapet not shown, see Sheets No. 27 and 28.

For details of Type H Barrier not shown, see Sheets No. 29, 30, 31, and 32.

For details and locations of Slab Drains, see Sheet No. 21.

For Theoretical Bottom of Slab Elevations, Beam Camber Diagram, and Theoretical Slab Haunching Diagram, see Sheet No. 22.

Detailed Oct. 2023
Checked Feb. 2024

Note: This drawing is not to scale. Follow dimensions.

F:\2021\04501-05000\021-04786\40-Design\Microstation\J4P3196\plan_sheets\16 Bridge Sheets\B_A9328_024_J4P3196_Slab Plan 02_BOTTOM.dgn 5:40:03 PM 2/27/2025

Digitally signed by Grant Luckenbill
Date: 2025.02.28 14:59:17-06'00'

GRANT C. LUCKENBILL NUMBER PE-2012018100 2-28-25

GRANT C. LUCKENBILL–ENGINEER
MO# PE-2012018100

DATE PREPARED
2/27/2025

ROUTE	STATE
291	MO
DISTRICT	SHEET NO.
BR	24

COUNTY
JACKSON

JOB NO.
J4P3196

FEDERAL PROJECT NO
STB-3001(009)

PROJECT NO.

BRIDGE NO.
A9328

DESCRIPTION	DATE

IF A SEAL IS PRESENT ON THIS SHEET IT HAS BEEN ELECTRONICALLY SEALED AND DATED.

MISSOURI HIGHWAYS AND TRANSPORTATION COMMISSION
105 WEST CAPITOL
JEFFERSON CITY, MO 65102
1-888-ASK-MODOT (1-888-275-6636)

LEE'S SUMMIT MISSOURI

olsson
1301 BURLINGTON ST., STE. 100
NORTH KANSAS CITY, MO 64116
PHONE: 816.361.1177
CERT. OF AUTHORITY NO. 001592

REV.

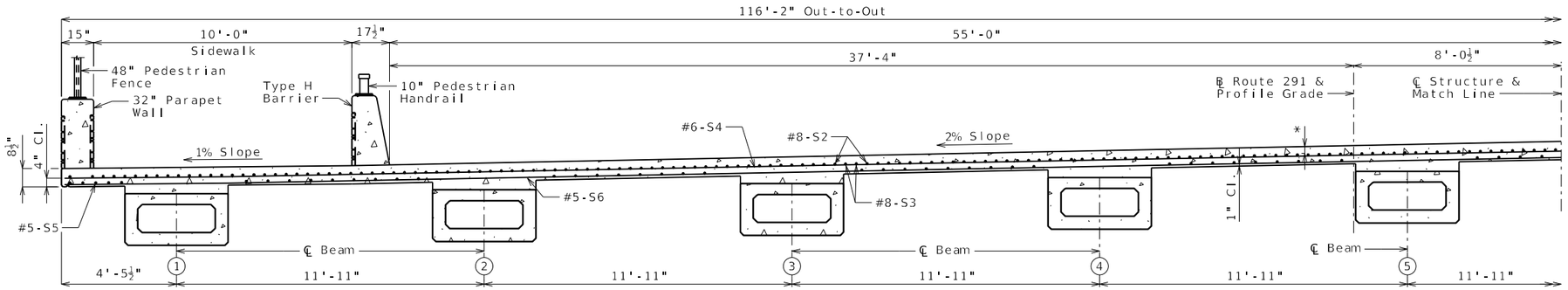

HALF SECTION NEAR INTERMEDIATE BENT

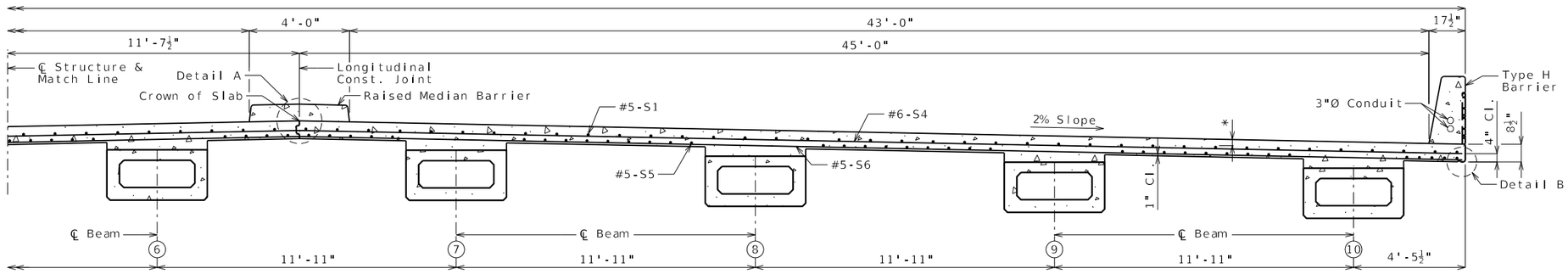

HALF SECTION NEAR MIDSPAN

SECTION THRU SLAB

* 3⅛" Cl. (#5 Bar)
2¾" Cl. (#8 Bar)

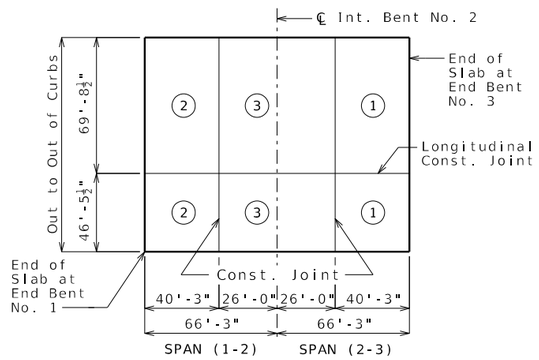

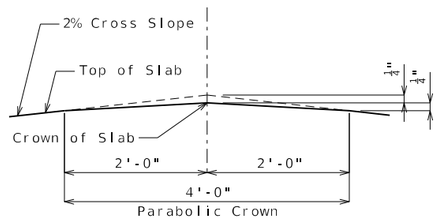

DETAIL A

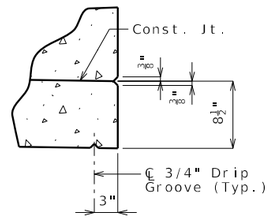

DETAIL B

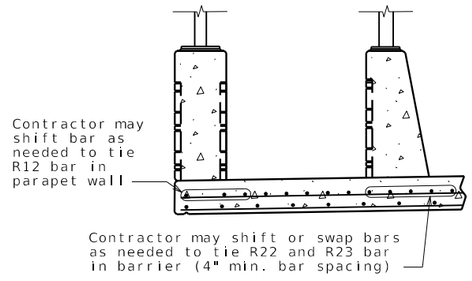

OPTIONAL SHIFTING TOP BARS AT BARRIER

	Sequence of Pours			Min. Rate of Pour Cu. Yds./Hr.
	Direction			With Retarder
Basic Sequence	1	2	3	25
	Either Direction			
Alternate pours to the basic skip sequence are subject to the approval of the engineer in accordance with Sec 703.				
Alternate A Pours	1	3 + 2		51
	End to 3	1 to End		
Alternate B Pours	1+3+2			51
	End to End			

The contractor shall furnish an approved retarder to retard the set of the concrete to 2.5 hours, and shall pour and satisfactorily finish the slab pours at the rate given.

The concrete diaphragm at the intermediate bents and integral end bents shall be poured a minimum of 30 minutes and a maximum of 2 hours before the slab is poured.

The longitudinal construction joint may be omitted with the approval of the engineer. When the longitudinal construction joint is omitted, the minimum rate of pour for alternate pouring sequences shall be increased by a factor of 1.67.

SLAB POURING SEQUENCE

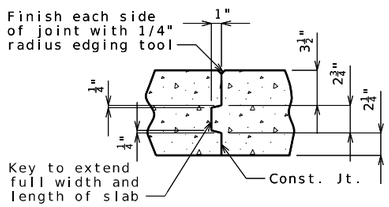

SLAB CONSTRUCTION JOINT

Notes:

For details of Pedestrian Fence not shown, see Sheet No. 33.

For details of Pedestrian Handrail not shown, see Sheet No. 34.

For details and reinforcement of Raised Median Barrier not shown, see Sheet No. 26.

For details and reinforcement of 32 in. Parapet Wall not shown, see Sheet No. 27.

For details and reinforcement of Type H Barriers not shown, see Sheets No. 29 and 31.

For Theoretical Bottom of Slab Elevations, Beam Camber Diagram and Theoretical Slab Haunching Diagram, see Sheet No. 22.

For Plan of Slab Showing Reinforcement, see Sheets No. 23 and 24.

SLAB DETAILS

Detailed Oct. 2023
Checked Feb. 2024

Note: This drawing is not to scale. Follow dimensions.

Sheet No. 25 of 46

Digitally signed by Grant Luckenbill
Date: 2025.02.28 14:58:38-06'00'
GRANT C. LUCKENBILL NUMBER PE-2012018100
2-28-25
GRANT C. LUCKENBILL-ENGINEER
MO# PE-2012018100

DATE PREPARED
2/27/2025

ROUTE	STATE
291	MO
DISTRICT	SHEET NO.
BR	25

COUNTY
JACKSON

JOB NO.
J4P3196

FEDERAL PROJECT NO
STB-3001(009)

PROJECT NO.

BRIDGE NO.
A9328

IF A SEAL IS PRESENT ON THIS SHEET IT HAS BEEN ELECTRONICALLY SEALED AND DATED.

DESCRIPTION

DATE

MISSOURI HIGHWAYS AND TRANSPORTATION COMMISSION
105 WEST CAPITOL
JEFFERSON CITY, MO 65102
1-888-ASK-MODOT (1-888-275-6636)
LEE'S SUMMIT MISSOURI
olsson
1301 BURLINGTON ST., STE. 100
NORTH KANSAS CITY, MO 64116
PHONE: 816.361.1177
CERT. OF AUTHORITY NO. 001592

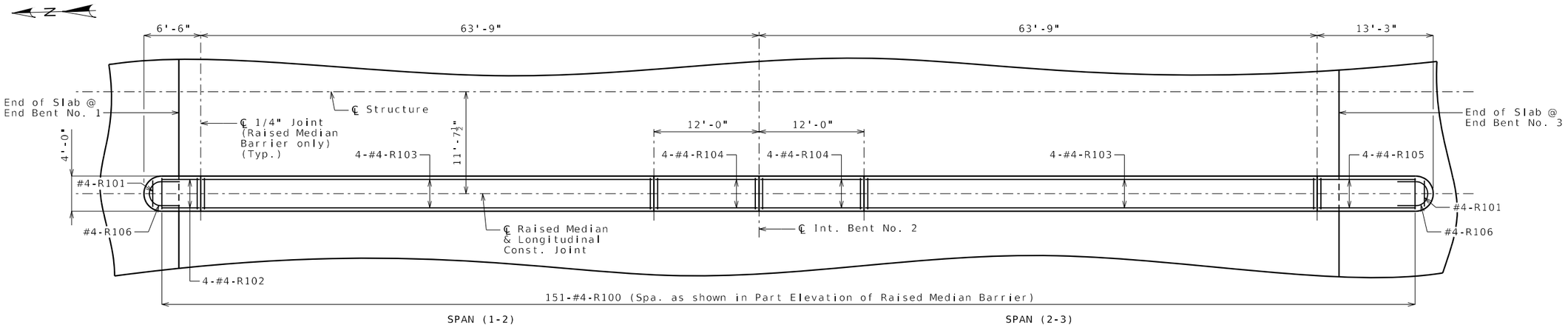

PLAN OF RAISED MEDIAN BARRIER

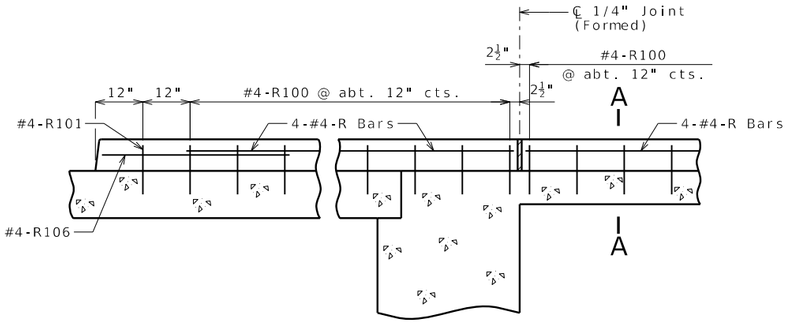

PART ELEVATION OF RAISED MEDIAN BARRIER

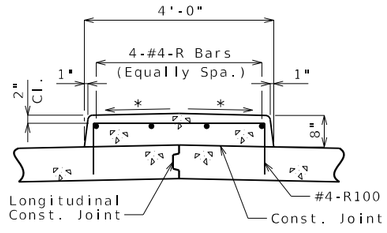

SECTION A-A
*Slope 1/8" per ft.

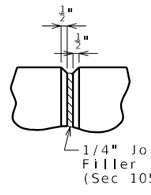

PART ELEVATION AT FORMED JOINT

Notes:
Top of raised median barrier shall be built parallel to grade and raised median barrier joints (except at end bents) normal to grade.

All exposed edges of raised median barrier shall have either a 1/2-inch radius or a 3/8-inch bevel, unless otherwise noted.

Payment for all concrete and reinforcing, complete in place, will be considered completely covered by the contract unit price for Raised Median Barrier per square foot.

Concrete in the raise median barrier shall be Class B-2.

Measurement of raised median barrier is to the nearest square foot measured transversely between roadway faces of raised median barrier and longitudinally from end of raised median barrier to end of raised median barrier.

RAISED MEDIAN BARRIER

Detailed Oct. 2023
Checked Feb. 2024

Note: This drawing is not to scale. Follow dimensions.

F:\2021\04501-05000\021-04786\40-Design\Microstation\J4P3196\plan_sheets\16 Bridge Sheets\B_A9328_026_J4P3196_Concrete Median Details.dgn 5:40:37 PM 2/27/2025

Digitally signed by Grant Luckenbill
Date: 2025.02.28 14:58:20-06'00'

GRANT C. LUCKENBILL NUMBER PE-2012018100
2-28-25
GRANT C. LUCKENBILL–ENGINEER
MO# PE-2012018100

DATE PREPARED
2/27/2025

ROUTE	STATE
291	MO
DISTRICT	SHEET NO.
BR	26

COUNTY
JACKSON

JOB NO.
J4P3196

FEDERAL PROJECT NO
STB-3001(009)

PROJECT NO.

BRIDGE NO.
A9328

IF A SEAL IS PRESENT ON THIS SHEET IT HAS BEEN ELECTRONICALLY SEALED AND DATED.

DESCRIPTION	DATE

MISSOURI HIGHWAYS AND TRANSPORTATION COMMISSION
105 WEST CAPITOL
JEFFERSON CITY, MO 65102
1-888-ASK-MODOT (1-888-275-6636)

LEE'S SUMMIT MISSOURI

olsson
1301 BURLINGTON ST., STE. 100
NORTH KANSAS CITY, MO 64116
PHONE: 816.361.1177
CERT. OF AUTHORITY NO. 001592

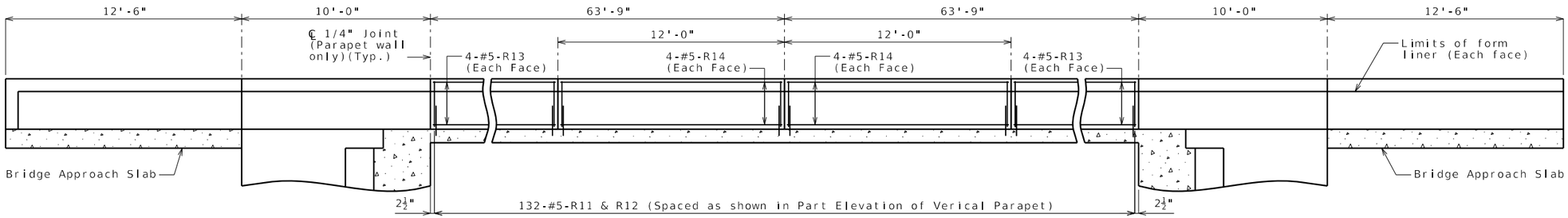

ELEVATION OF 32IN. PARAPET WALL

(Sidewalk face of parapet wall shown)
Longitudinal dimensions are horizontal.

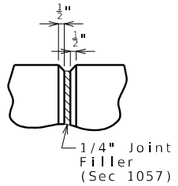

PART ELEVATION AT FORMED JOINT

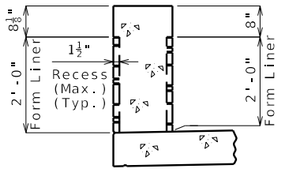

FORM LINER DETAIL

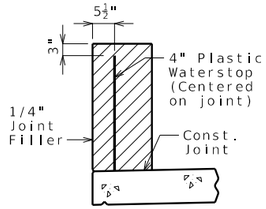

WATERSTOP DETAIL

Plastic waterstop shall be placed in all formed joints, except structures with superelevation, use on lower joints only.

Cost of plastic waterstop, complete in place, will be considered completely covered by the contract unit price for 32 in. Parapet Wall.

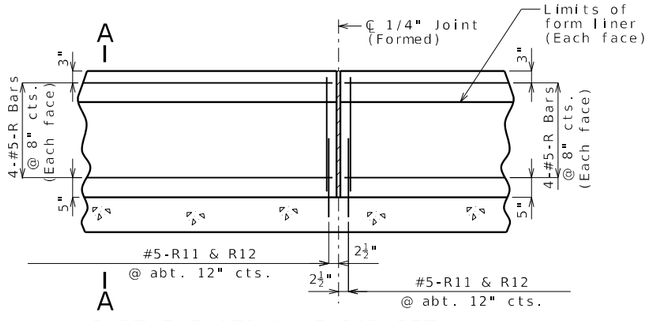

PART ELEVATION OF PARAPET WALL

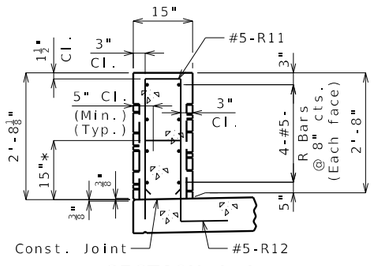

SECTION A-A

Use a minimum lap of 3'-1" for #5 horizontal parapet bars.

The cross-sectional area above the slab is 3.34 square feet.

* To top of bar

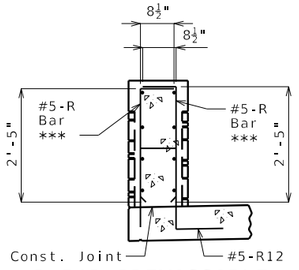

R-BAR PREMISSIBLE ALTERNATE SHAPE

*** The R11 bar may be separated into two bars as shown at the contractor's option. (All dimensions are out to out.)

General Notes:

Pedestrian fence not shown for clarity. See Sheet No. 33 for details of pedestrian fence.

Conventional forming shall be used.

Top of parapet wall shall be built parallel to grade and parapet wall joints (except at end bents) normal to grade.

All exposed edges of parapet wall shall have either a 1/2-inch radius or a 3/8-inch bevel, unless otherwise noted.

Payment for all concrete and reinforcement, complete in place, will be considered completely covered by the contract unit price for 32 in. Parapet Wall per linear foot.

Concrete in parapet wall shall be Class B-1.

Measurement of parapet wall is to the nearest linear foot for each structure, measured along the outside top of slab from end of approach slab to end of approach slab.

Concrete traffic barrier delineators shall be placed on top of the parapet wall as shown on Missouri Standard Plan 617.10 and in accordance with Sec 617. Delineators on bridges with two-lane, two-way traffic shall have retroreflective sheeting on both sides. Concrete traffic barrier delineators will be considered completely covered by the contract unit price for 32 in. Parapet Wall.

The cost of form liner will be considered completely covered by the contract unit price for Form Liners per square yard.

The following is a list of form liner manufacturers and types which may be used. All form liner pattern's depth of relief shall vary up to 1 1/2 inches. The height of any single 'stone' shall be be 15 inches maximum.

Scott Systems, Inc.:
Form liner pattern #167 "Ashlar Stone"

Fitzgerald Formliners:
Form liner pattern # 16986 "Ashlar Stone"

Dayton Superior/Symons:
Form liner pattern #1515 "Ashlar Stone"

32 IN. PARAPET WALL

Detailed Oct. 2023
Checked Feb. 2024

Note: This drawing is not to scale. Follow dimensions.

Digitally signed by Grant Luckenbill
Date: 2025.02.28 14:58:47-06'00'
GRANT C. LUCKENBILL NUMBER PE-2012018100
2-28-25
GRANT C. LUCKENBILL–ENGINEER
MO# PE-2012018100

DATE PREPARED
2/27/2025

ROUTE	STATE
291	MO
DISTRICT	SHEET NO.
BR	27

COUNTY
JACKSON

JOB NO.
J4P3196

FEDERAL PROJECT NO
STB-3001(009)

PROJECT NO.

BRIDGE NO.
A9328

DESCRIPTION | DATE

MISSOURI HIGHWAYS AND TRANSPORTATION COMMISSION
105 WEST CAPITOL
JEFFERSON CITY, MO 65102
1-888-ASK-MODOT (1-888-275-6636)
LEE'S SUMMIT MISSOURI
olsson
1301 BURLINGTON ST., STE. 100
NORTH KANSAS CITY, MO 64116
PHONE: 816.361.1177
CERT. OF AUTHORITY NO. 001592

REV.

IF A SEAL IS PRESENT ON THIS SHEET IT HAS BEEN ELECTRONICALLY SEALED AND DATED.

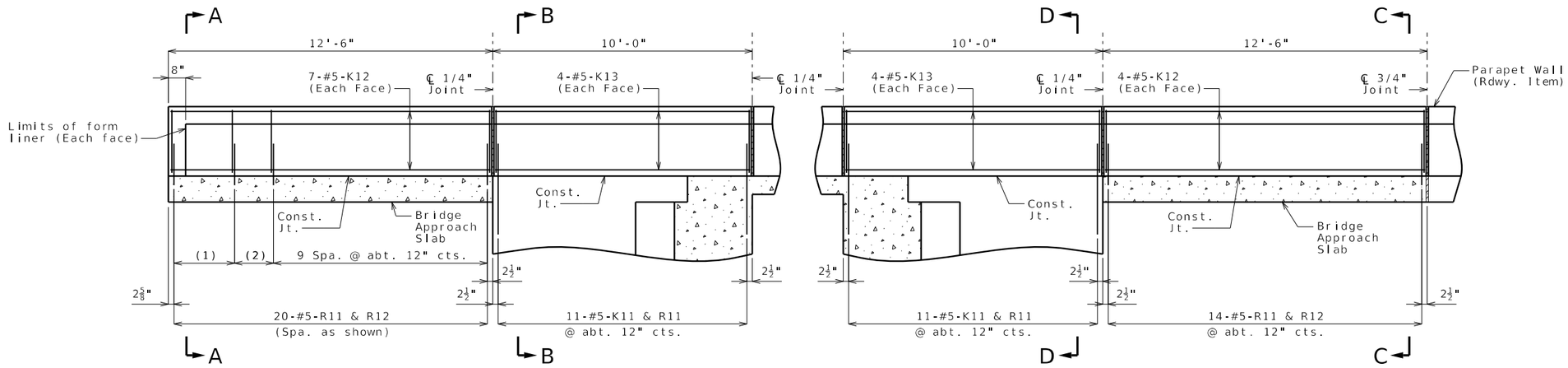

PART ELEVATION

(1) 7 Spaces @ 4"
(2) 3 Spaces @ 6"

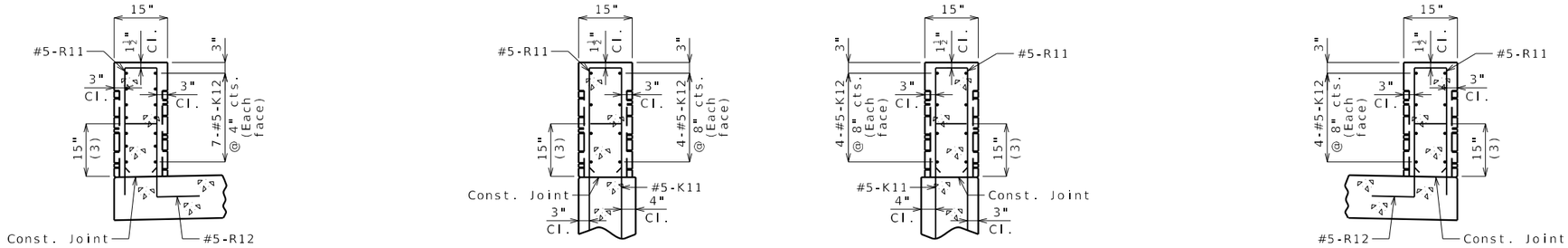

SECTION A-A

SECTION B-B

SECTION D-D

SECTION C-C

(3) To top of bar

General Notes:

For details of form liner, see Sheet No. 27.

Concrete traffic barrier delineators shall be placed on top of the parapet wall as shown on Missouri Standard Plan 617.10 and in accordance with Sec 617. Delineators on bridges with two-lane, two-way traffic shall have retroreflective sheeting on both sides. Concrete traffic barrier delineators will be considered completely covered by the contract unit price for 32 in. Parapet Wall.

Reinforcing Steel:
Minimum clearance to reinforcing steel shall be 1 1/2" except as shown for bars embedded into end bent.

32 IN. PARAPET WALL AT END BENTS

Detailed Oct. 2023
Checked Feb. 2024

Note: This drawing is not to scale. Follow dimensions.

Digitally signed by Grant Luckenbill
Date: 2025.02.28 14:59:08-06'00'

GRANT C. LUCKENBILL NUMBER PE-2012018100 2-28-25

GRANT C. LUCKENBILL-ENGINEER
MO# PE-2012018100

DATE PREPARED
2/27/2025

ROUTE	STATE
291	MO
DISTRICT	SHEET NO.
BR	28

COUNTY
JACKSON

JOB NO.
J4P3196

FEDERAL PROJECT NO
STB-3001(009)

PROJECT NO.

BRIDGE NO.
A9328

DESCRIPTION | DATE | REV.

IF A SEAL IS PRESENT ON THIS SHEET IT HAS BEEN ELECTRONICALLY SEALED AND DATED.

MISSOURI HIGHWAYS AND TRANSPORTATION COMMISSION
105 WEST CAPITOL
JEFFERSON CITY, MO 65102
1-888-ASK-MODOT (1-888-275-6636)

LEE'S SUMMIT MISSOURI

olsson
1301 BURLINGTON ST., STE. 100
NORTH KANSAS CITY, MO 64116
PHONE: 816.361.1177
CERT. OF AUTHORITY NO. 001592

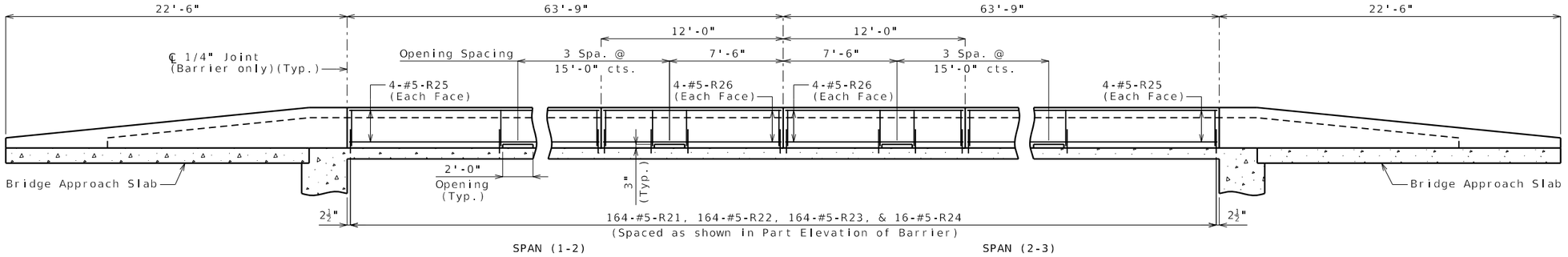

ELEVATION OF TYPE H BARRIER

Longitudinal dimensions are horizontal.
(Roadway face of barrier shown)

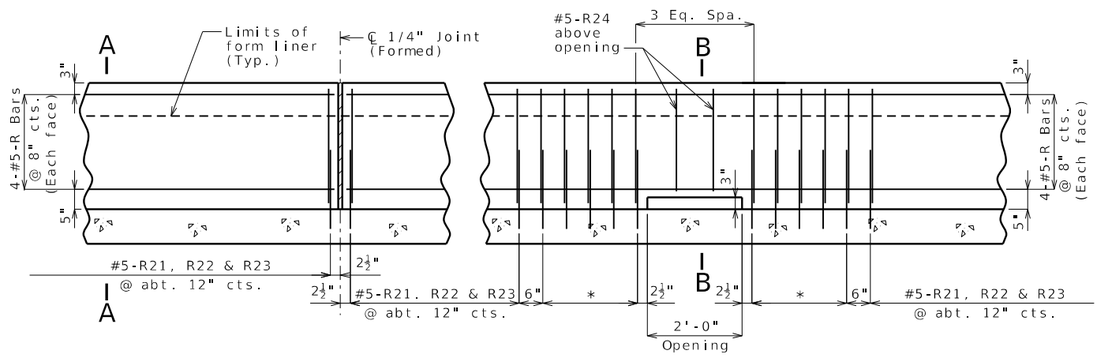

PART ELEVATION OF BARRIER

* 5-#5-R21, 5-#5-R22, & 5-#5-R23
@ 6" cts. adjacent to opening

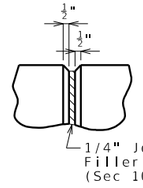

PART ELEVATION AT FORMED JOINT

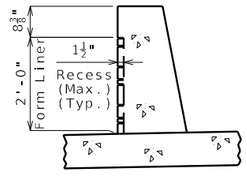

FORM LINER DETAIL

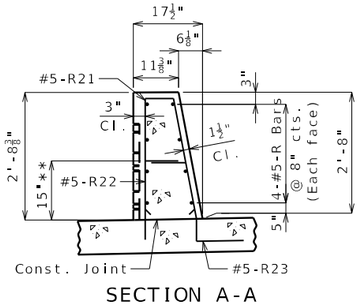

SECTION A-A

Use a minimum lap of 3'-1" for #5 horizontal barrier bars.

The cross-sectional area above the slab is 3.23 square feet.

** To top of bar

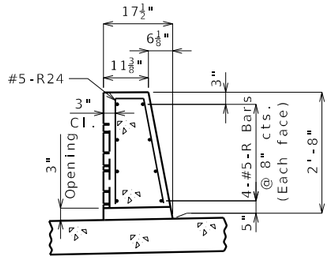

SECTION B-B

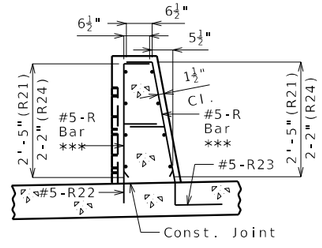

R-BAR PERMISSIBLE ALTERNATE SHAPE

*** The R21 and R24 bars may be separated into two bars as shown at the contractor's option. (All dimensions are out to out.)

General Notes:

Pedestrian handrail not shown for clarity. See Sheet No. 34 for details of pedestrian handrail.

Conventional forming shall be used.

Top of barrier shall be built parallel to grade and barrier joints (except at end bents) normal to grade.

All exposed edges of barrier shall have either a 1/2-inch radius or a 3/8-inch bevel, unless otherwise noted.

Payment for all concrete and reinforcement, complete in place, will be considered completely covered by the contract unit price for Type H Barrier per linear foot.

Concrete in barrier shall be Class B-1.

Measurement of barrier is to the nearest linear foot for each structure, measured along the outside top of slab from end of approach slab to end of approach slab.

Concrete traffic barrier delineators shall be placed on top of the barrier as shown on Missouri Standard Plan 617.10 and in accordance with Sec 617. Delineators on bridges with two-lane, two-way traffic shall have retroreflective sheeting on both sides. Concrete traffic barrier delineators will be considered completely covered by the contract unit price for Type H Barrier.

The cost of form liner will be considered completely covered by the contract unit price for Form Liners per square yard.

The following is a list of form liner manufacturers and types which may be used. All form liner pattern's depth of relief shall vary up to 1 1/2 inches. The height of any single 'stone' shall be be 15 inches maximum.

Scott Systems, Inc.:
Form liner pattern #167 "Ashlar Stone"

Fitzgerald Formliners:
Form liner pattern # 16986 "Ashlar Stone"

Dayton Superior/Symons:
Form liner pattern #1515 "Ashlar Stone"

LEFT TYPE H BARRIER

Detailed Oct. 2023
Checked Feb. 2024

Note: This drawing is not to scale. Follow dimensions.

Digitally signed by Grant Luckenbill
Date: 2025.02.28 14:58:59-06'00'
GRANT C. LUCKENBILL NUMBER PE-2012018100
2-28-25
GRANT C. LUCKENBILL-ENGINEER
MO# PE-2012018100

DATE PREPARED: 2/27/2025
ROUTE: 291 | STATE: MO
DISTRICT: BR | SHEET NO.: 29
COUNTY: JACKSON
JOB NO.: J4P3196
FEDERAL PROJECT NO: STB-3001(009)
PROJECT NO.:
BRIDGE NO.: A9328

DESCRIPTION | DATE

MISSOURI HIGHWAYS AND TRANSPORTATION COMMISSION
105 WEST CAPITOL
JEFFERSON CITY, MO 65102
1-888-ASK-MODOT (1-888-275-6636)
LEE'S SUMMIT MISSOURI
olsson
1301 BURLINGTON ST., STE. 100
NORTH KANSAS CITY, MO 64116
PHONE: 816.361.1177
CERT. OF AUTHORITY NO. 001592

REV.

IF A SEAL IS PRESENT ON THIS SHEET IT HAS BEEN ELECTRONICALLY SEALED AND DATED.

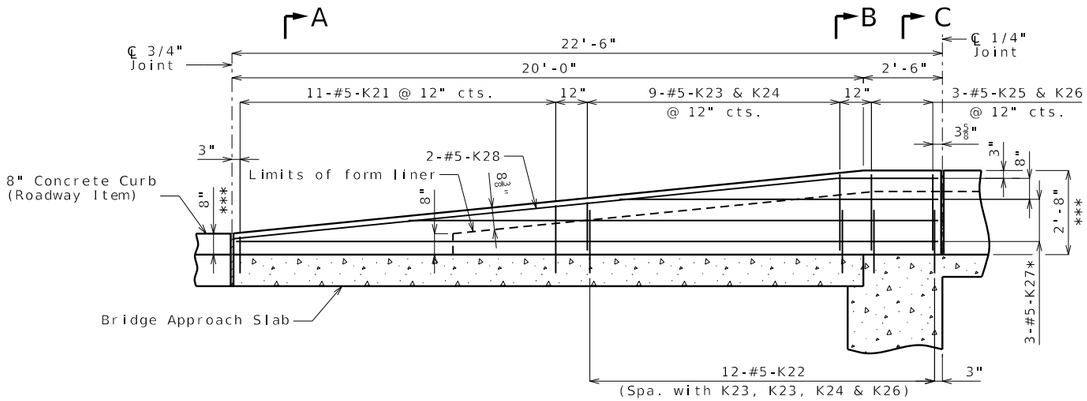

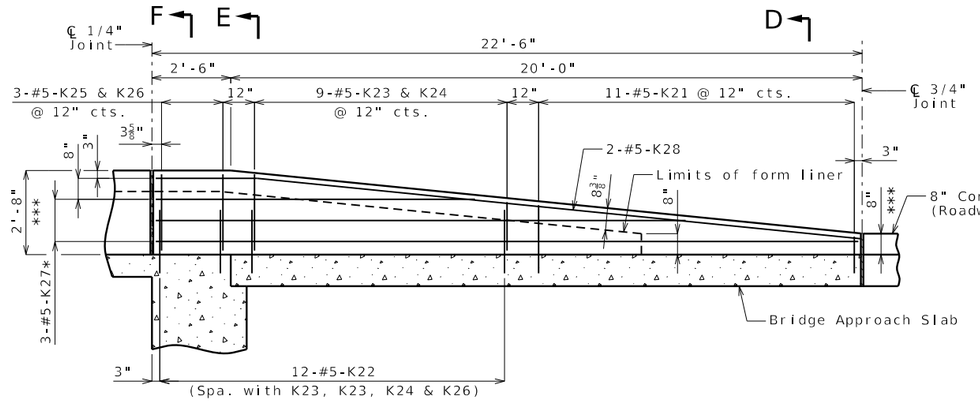

PART ELEVATION

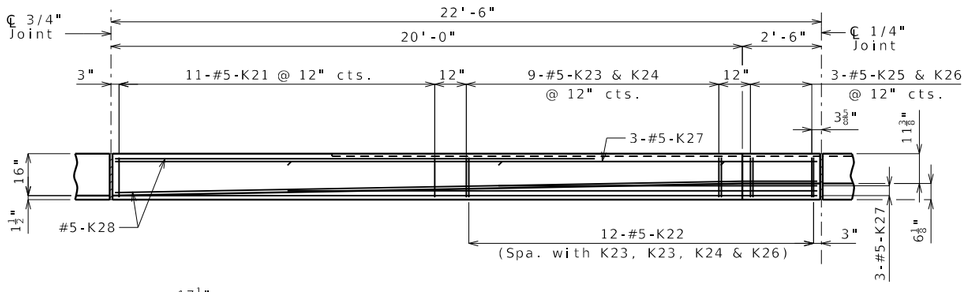

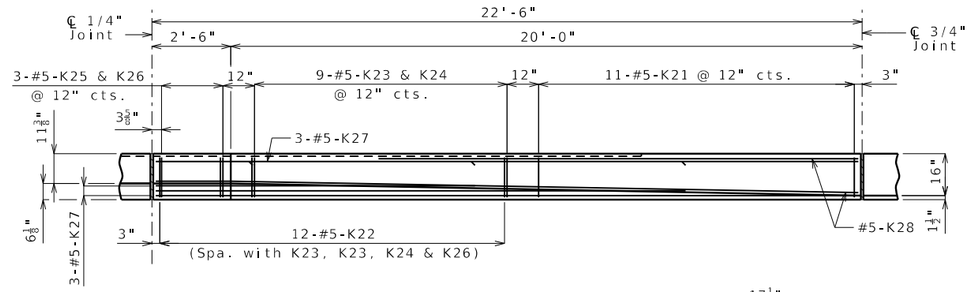

PART PLAN

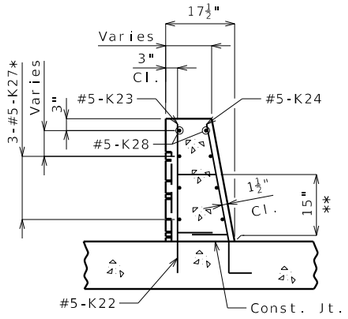

SECTION B-B

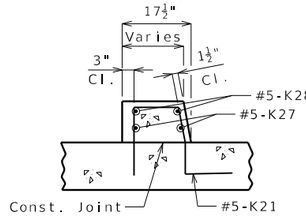

SECTION A-A

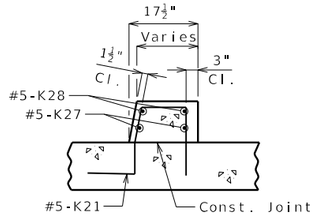

SECTION D-D

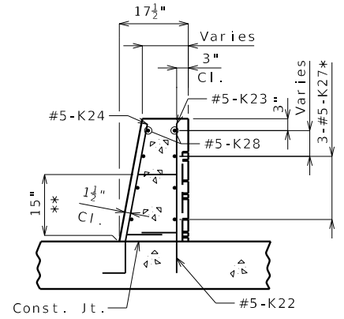

SECTION E-E

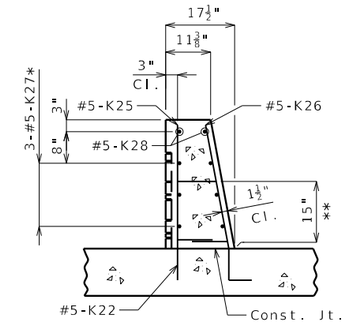

SECTION C-C

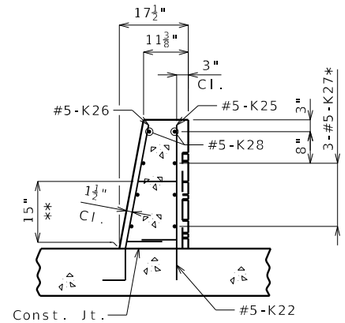

SECTION F-F

* Spaced @ 8", each face.
** To top of bar.
*** At roadway face of barrier

General Notes:

Concrete traffic barrier delineators shall be placed on top of the barrier as shown on Missouri Standard Plan 617.10 and in accordance with Sec 617. Delineators on bridges with two-lane, two-way traffic shall have retroreflective sheeting on both sides. Concrete traffic barrier delineators will be considered completely covered by the contract unit price for Type H Barrier.

Reinforcing Steel:

Minimum clearance to reinforcing steel shall be 1 1/2" except as shown for bars on the back face of the barrier.

LEFT TYPE H BARRIER AT END BENTS

Detailed Oct. 2023
Checked Feb. 2024

Note: This drawing is not to scale. Follow dimensions.

F:\2021\04501-05000\021-04786\40-Design\Microstation\J4P3196\plan_sheets\16 Bridge Sheets\B_A9328_030_J4P3196_Type H Barrier at EB Lt EAST.dgn 5:40:48 PM 2/27/2025

Digitally signed by Grant Luckenbill
Date: 2025.02.28 14:58:29-06'00'

GRANT C. LUCKENBILL NUMBER PE-2012018100 2-28-25
GRANT C. LUCKENBILL-ENGINEER
MO# PE-2012018100

DATE PREPARED 2/27/2025
ROUTE 291 | STATE MO
DISTRICT BR | SHEET NO. 30
COUNTY JACKSON
JOB NO. J4P3196
FEDERAL PROJECT NO STB-3001(009)
PROJECT NO.
BRIDGE NO. A9328

DESCRIPTION | DATE | REV.

IF A SEAL IS PRESENT ON THIS SHEET IT HAS BEEN ELECTRONICALLY SEALED AND DATED.

MISSOURI HIGHWAYS AND TRANSPORTATION COMMISSION
105 WEST CAPITOL
JEFFERSON CITY, MO 65102
1-888-ASK-MODOT (1-888-275-6636)

LEE'S SUMMIT MISSOURI

olsson
1301 BURLINGTON ST., STE. 100
NORTH KANSAS CITY, MO 64116
PHONE: 816.361.1177
CERT. OF AUTHORITY NO. 001592

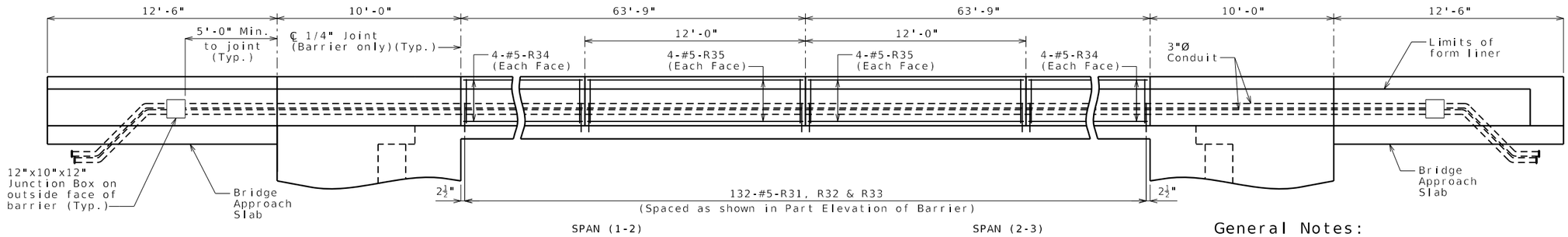

ELEVATION OF TYPE H BARRIER

Longitudinal dimensions are horizontal.
(Outside Face of Barrier shown)

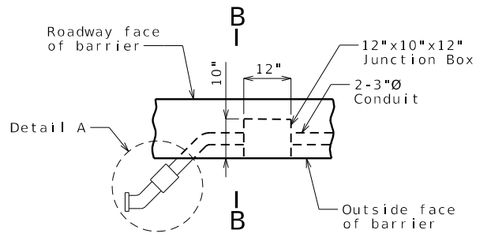

PART PLAN OF BARRIER SHOWING CONDUIT PLACEMENT

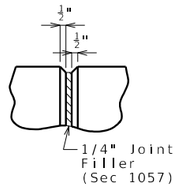

PART ELEVATION AT FORMED JOINT

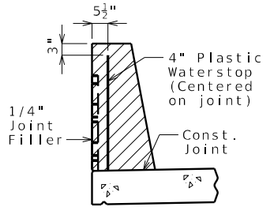

WATERSTOP DETAIL

Plastic waterstop shall be placed in all formed joints, except structures with superelevation, use on lower joints only.

Cost of plastic waterstop, complete in place, will be considered completely covered by the contract unit price for Type H Barrier.

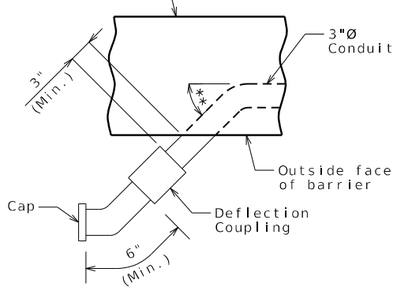

DETAIL A

** 30°-45°

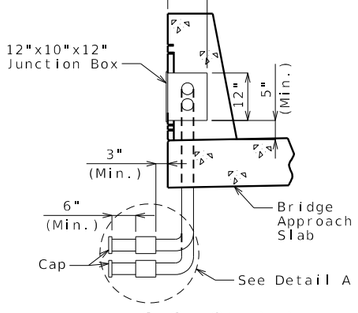

SECTION B-B

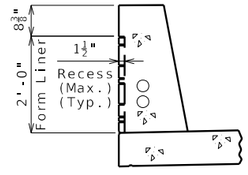

FORM LINER DETAIL

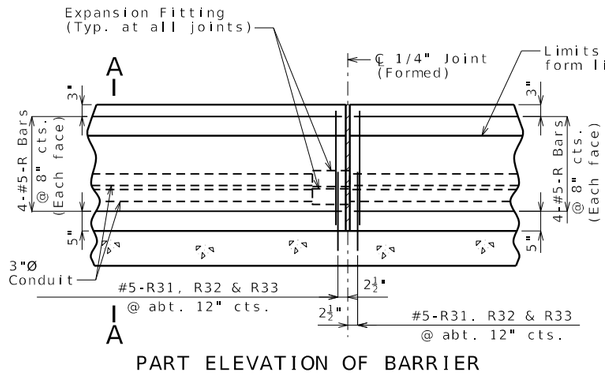

PART ELEVATION OF BARRIER

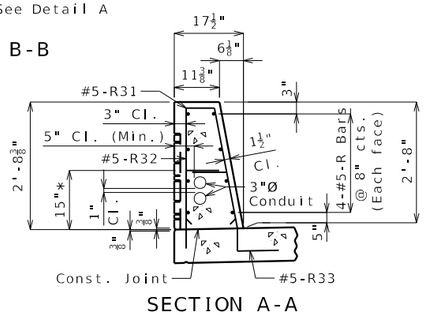

SECTION A-A

Use a minimum lap of 3'-1" for #5 horizontal barrier bars.

The cross-sectional area above the slab is 3.23 square feet.

* To top of bar

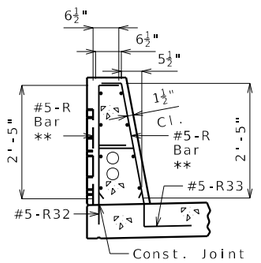

R-BAR PERMISSIBLE ALTERNATE SHAPE

** The R31 bar may be separated into two bars as shown, at the contractor's option. (All dimensions are out to out.)

General Notes:

Conventional forming shall be used.

Top of barrier shall be built parallel to grade and barrier joints (except at end bents) normal to grade.

All exposed edges of barrier shall have either a 1/2-inch radius or a 3/8-inch bevel, unless otherwise noted.

Payment for all concrete and reinforcement, complete in place, will be considered completely covered by the contract unit price for Type H Barrier per linear foot.

Concrete in barrier shall be Class B-1.

Measurement of barrier is to the nearest linear foot for each structure, measured along the outside top of slab from end of approach slab to end of approach slab.

Concrete traffic barrier delineators shall be placed on top of the barrier as shown on Missouri Standard Plan 617.10 and in accordance with Sec 617. Delineators on bridges with two-lane, two-way traffic shall have retroreflective sheeting on both sides. Concrete traffic barrier delineators will be considered completely covered by the contract unit price for Type H Barrier.

All conduits shall be rigid nonmetallic schedule 40 heavy wall polyvinyl chloride (PVC) with 5-inch minimum cover in barrier. Each section of conduit shall bear the Underwriters Laboratories (UL) label.

Shift reinforcing steel in field where necessary to clear conduit and junction boxes.

Expansion fittings shall be placed as shown and set in accordance with the manufacturer's requirements and based on the air temperature at the time of setting given an estimated total expansion movement of 1 inch at filled joints using a maximum temperature range of 120°F and a maximum temperature of 110°F.

All barrier junction boxes shall be PVC molded in accordance with Sec 1062 and designed for flush mounting. The conduit terminations shall be permanent or separable. The terminations and covers shall be of watertight construction and shall meet requirements for NEMA 4 or NEMA 4X enclosure.

Drainage shall be provided at low points or other critical locations of all conduits and all junction boxes in accordance with Sec 707. All conduits shall be sloped to drain where possible.

Junction box size shown on plan may require special order. Smaller junction box may be substituted if junction box meets conduit installation, clearance and project requirements.

MoDOT Construction Personnel: Indicate in field and on bridge plans for future work the exact location of buried conduit at ends of bridge that are capped and not immediately used.

Payment for furnishing and installing Conduit System, complete in place, will be considered completely covered by the contract lump sum price for Conduit System on Structure.

The cost of form liner will be considered completely covered by the contract unit price for Form Liners per square yard.

The following is a list of form liner manufacturers and types which may be used. All form liner pattern's depth of relief shall vary up to 1 1/2 inches. The height of any single 'stone' shall be be 15 inches maximum.

Scott Systems, Inc.:
Form liner pattern #167 "Ashlar Stone"

Fitzgerald Formliners:
Form liner pattern # 16986 "Ashlar Stone"

Dayton Superior/Symons:
Form liner pattern #1515 "Ashlar Stone"

RIGHT TYPE H BARRIER

Detailed Oct. 2023
Checked Feb. 2024

Note: This drawing is not to scale. Follow dimensions.

Digitally signed by Grant Luckenbill
Date: 2025.02.28 15:01:28-06'00'
GRANT C. LUCKENBILL NUMBER PE-2012018100
2-28-25
GRANT C. LUCKENBILL–ENGINEER
MO# PE-2012018100

DATE PREPARED: 2/27/2025
ROUTE: 291 | STATE: MO
DISTRICT: BR | SHEET NO.: 31
COUNTY: JACKSON
JOB NO.: J4P3196
FEDERAL PROJECT NO: STB-3001(009)
PROJECT NO.:
BRIDGE NO.: A9328

DESCRIPTION	DATE

MISSOURI HIGHWAYS AND TRANSPORTATION COMMISSION
105 WEST CAPITOL
JEFFERSON CITY, MO 65102
1-888-ASK-MODOT (1-888-275-6636)
LEE'S SUMMIT MISSOURI
olsson
1301 BURLINGTON ST., STE. 100
NORTH KANSAS CITY, MO 64116
PHONE: 816.361.1177
CERT. OF AUTHORITY NO. 001592

IF A SEAL IS PRESENT ON THIS SHEET IT HAS BEEN ELECTRONICALLY SEALED AND DATED.

REV.

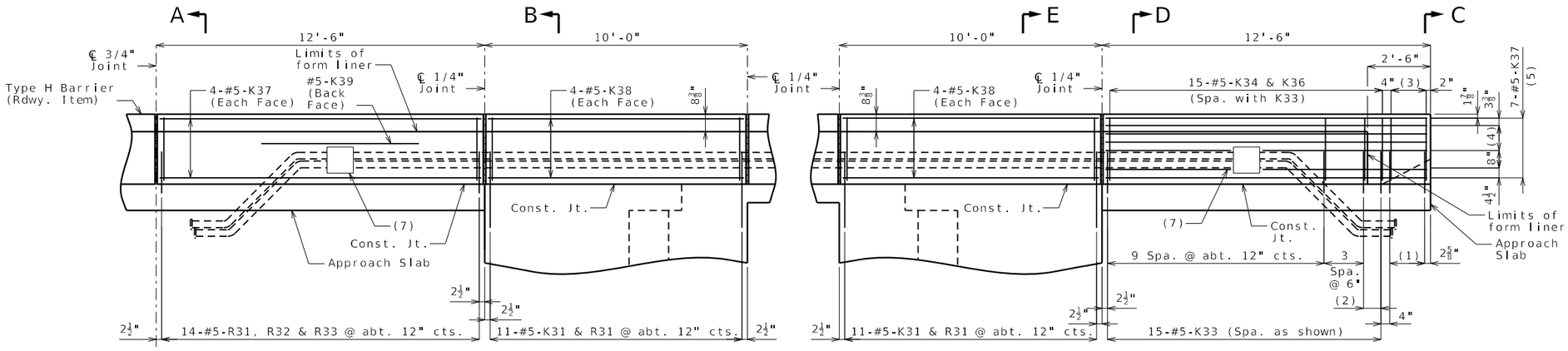

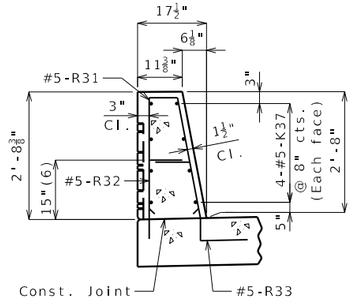

SECTION A-A

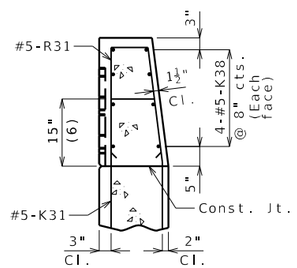

SECTION B-B

PART ELEVATION

(1) 5-#5-K32 @ 4" cts.

(2) 2 Spaces @ 4"

(3) 5-#5-K34 and 5-#5-K35, spaced with K32

(4) 3 Spaces @ 3 13/16"

(5) Spaced as shown, each face

(6) To top of bar

(7) Cut and patch back face #5-K37 bars at junction box

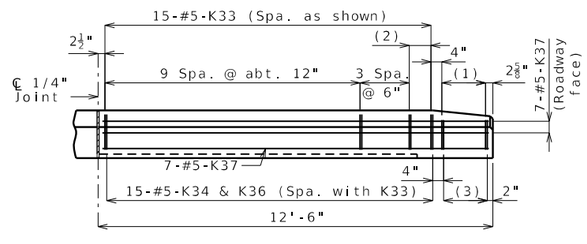

PART PLAN

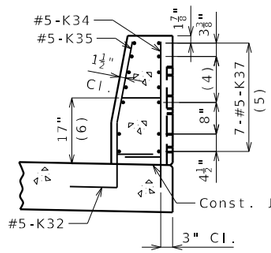

SECTION C-C

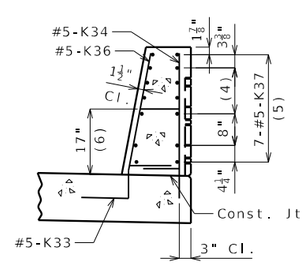

SECTION D-D

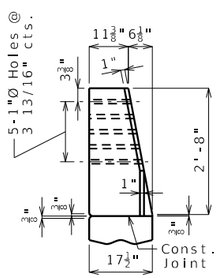

ELEVATION F-F

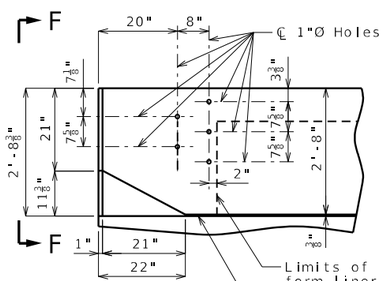

ELEVATION

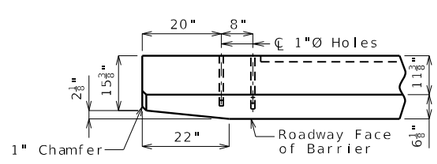

PLAN

DETAILS OF GUARD RAIL ATTACHMENT

General Notes:

Concrete traffic barrier delineators shall be placed on top of the barrier as shown on Missouri Standard Plan 617.10 and in accordance with Sec 617. Delineators on bridges with two-lane, two-way traffic shall have retroreflective sheeting on both sides. Concrete traffic barrier delineators will be considered completely covered by the contract unit price for Type H Barrier.

Reinforcing Steel:

Minimum clearance to reinforcing steel shall be 1 1/2" except as shown for bars embedded into end bent.

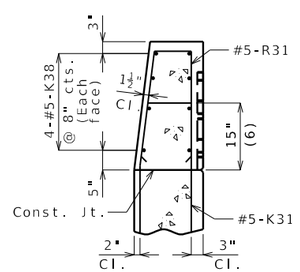

SECTION E-E

RIGHT TYPE H BARRIER AT END BENTS

Detailed Oct. 2023
Checked Feb. 2024

Note: This drawing is not to scale. Follow dimensions.

Sheet No. 32 of 46

F:\2021\04501-05000\021-04786\40-Design\Microstation\J4P3196\plan_sheets\16 Bridge Sheets\B_A9328_032_J4P3196_Type H Barrier at EB Rt WEST.dgn 5:40:54 PM 2/27/2025

Digitally signed by Grant Luckenbill
Date: 2025.02.28 15:01:18-06'00'

GRANT C. LUCKENBILL NUMBER PE-2012018100 2-28-25

GRANT C. LUCKENBILL–ENGINEER
MO# PE-2012018100

DATE PREPARED
2/27/2025

ROUTE	STATE
291	MO
DISTRICT	SHEET NO.
BR	32

COUNTY
JACKSON

JOB NO.
J4P3196

FEDERAL PROJECT NO
STB-3001(009)

PROJECT NO.

BRIDGE NO.
A9328

DESCRIPTION

DATE

REV.

IF A SEAL IS PRESENT ON THIS SHEET IT HAS BEEN ELECTRONICALLY SEALED AND DATED.

MISSOURI HIGHWAYS AND TRANSPORTATION COMMISSION

105 WEST CAPITOL
JEFFERSON CITY, MO 65102
(MO 65102)
1-888-ASK-MODOT (1-888-275-6636)

LEE'S SUMMIT MISSOURI

olsson
1301 BURLINGTON ST., STE. 100
NORTH KANSAS CITY, MO 64116
PHONE: 816.361.1177
CERT. OF AUTHORITY NO. 001592

Notes:

(48 in.) Pedestrian Fence shall be installed to the top of the parapet wall from end of approach slab to end of approach slab.

These details are a general representation of a Decorative Pedestrian Fence. The actual fence components and component positions may be different than what is shown.

Fence shall have a gloss black finish (Federal Standard #17038). See special provisions.

Base plate shall be ASTM A709, Grade 50.

All base plates, U bolts, hex nuts and washers shall be galvanized in accordance with ASTM A123 and Sec 1081.

Center of posts shall clear parapet wall joints or ends by at least 6 inches.

Measurement of pedestrian fence will be made horizontally and to the nearest linear foot along centerline fence.

Payment for furnishing and erecting the fence, complete in place, will be considered completely covered by the contract unit price for (48 in.) Decorative Pedestrian Fence (Structures).

All fence posts shall be vertical.

Grout shall be placed under the post base plates in accordance with Sec 1066.

Decorative pedestrian fencing shall be in accordance with 2020-AASHTO LRFD Bridge Design Specifications, 9th Ed.

The design line load for pedestrian railings will not require a 50lb/ft and 200lb load be applied simultaneously. The posts of pedestrian railing will require both loadings applied simultaneously.

Contractor shall submit complete detailed shop drawings in accordance with Sec 1080.

All materials used in fabrication and construction of the decorative pedestrian fencing shall be in accordance with the manufacturer's specifications, except as modified in the contract documents.

Decorative pedestrian fencing system shall be supplied by only one of the manufacturers. Decorative pedestrian fencing system shall include all components except the anchor bolts and hardware, and #4 bars welded to the anchor bolts. The assembly of the pickets to the rails and the rails to the posts shall be the same as the style mentioned for the manufacturer.

Ameristar Fence Products, Inc.
1555 N. Mingo
Tulsa, OK, 74116
(800) 321-8724
www.ameristarfence.com

Style: AEGIS II Majestic

Iron Eagle Industries, Inc.
1256 Cardiff Blvd.
Mississauga, Ontario Canada L5S1R1
(905) 670-2558
www.ironeagleind.com

Style: Silver Eagle II

Betafence USA
3309 S.W. Interstate 45
Ennis, TX, 75119
(888) 650-4766
www.betafenceusa.com

Style: Upgrade-I Landmark

Merchants Metals
6575 Romiss Court
St. Louis, MO 63134
(800) 293-3363
www.merchantmetals.com

Style: Guardsman Monroe

Substitution for the U-bolt cages will not be permitted.

U-bolts shall be ASTM F1554 Grade 36.

For details of Parapet Wall, see Sheets No. 27 & 28.

Longitudinal dimensions of fence are horizontal.

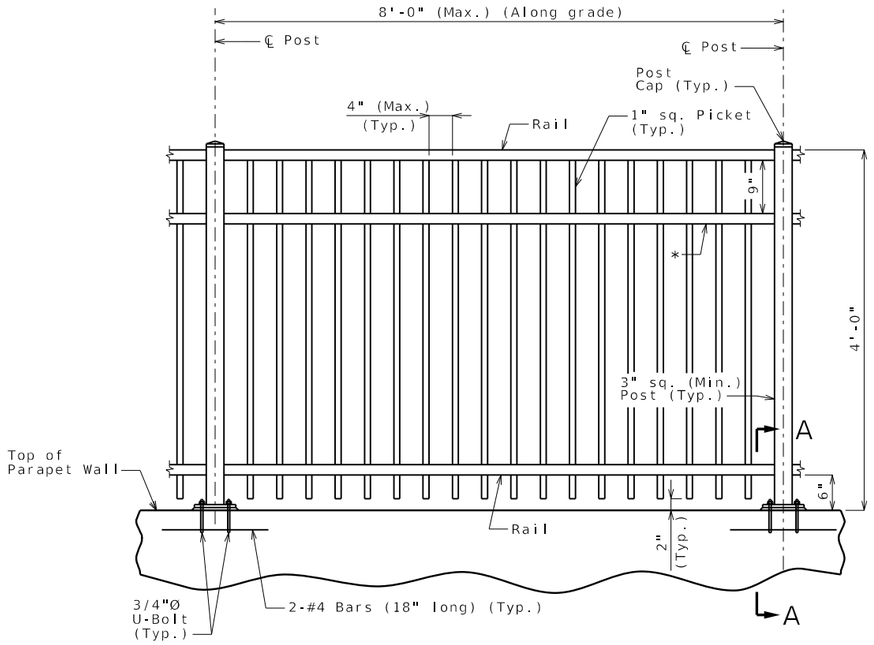

TYPICAL PART ELEVATION

* Optional rail. Need is based on design computations performed by the manufacturer and approved by MoDOT, or may be added for aesthetics.

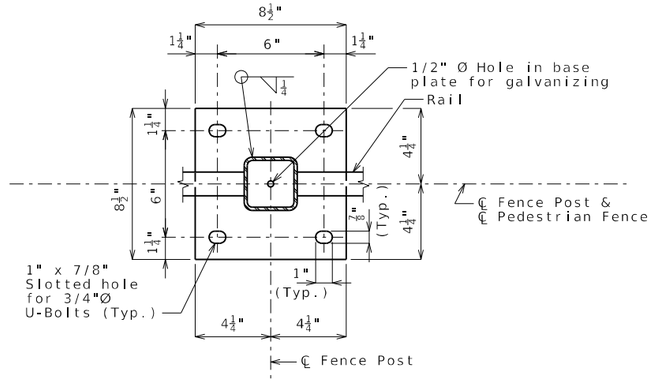

PART PLAN SHOWING BASE PLATE

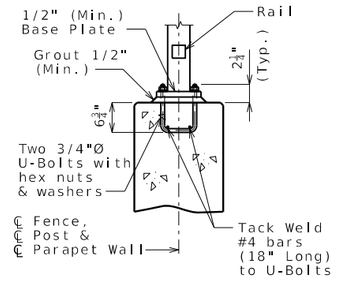

SECTION A-A

1/2-inch diameter hole in base plate not shown for clarity.

(48 IN.) DECORATIVE PEDESTRIAN FENCE

Detailed Oct. 2023
Checked Feb. 2024

Note: This drawing is not to scale. Follow dimensions.

Digitally signed by Grant Luckenbill
Date: 2025.02.28 15:01:09-06'00'

GRANT C. LUCKENBILL NUMBER PE-2012018100 2-28-25
GRANT C. LUCKENBILL-ENGINEER
MO# PE-2012018100

DATE PREPARED 2/27/2025
ROUTE 291 | STATE MO
DISTRICT BR | SHEET NO. 33
COUNTY JACKSON
JOB NO. J4P3196
FEDERAL PROJECT NO STB-3001(009)
PROJECT NO.
BRIDGE NO. A9328

DESCRIPTION | DATE

IF A SEAL IS PRESENT ON THIS SHEET IT HAS BEEN ELECTRONICALLY SEALED AND DATED.

MISSOURI HIGHWAYS AND TRANSPORTATION COMMISSION
105 WEST CAPITOL
JEFFERSON CITY, MO 65102
1-888-ASK-MODOT (1-888-275-6636)

LEE'S SUMMIT MISSOURI

olsson
1301 BURLINGTON ST., STE. 100
NORTH KANSAS CITY, MO 64116
PHONE: 816.361.1177
CERT. OF AUTHORITY NO. 001592

REV.

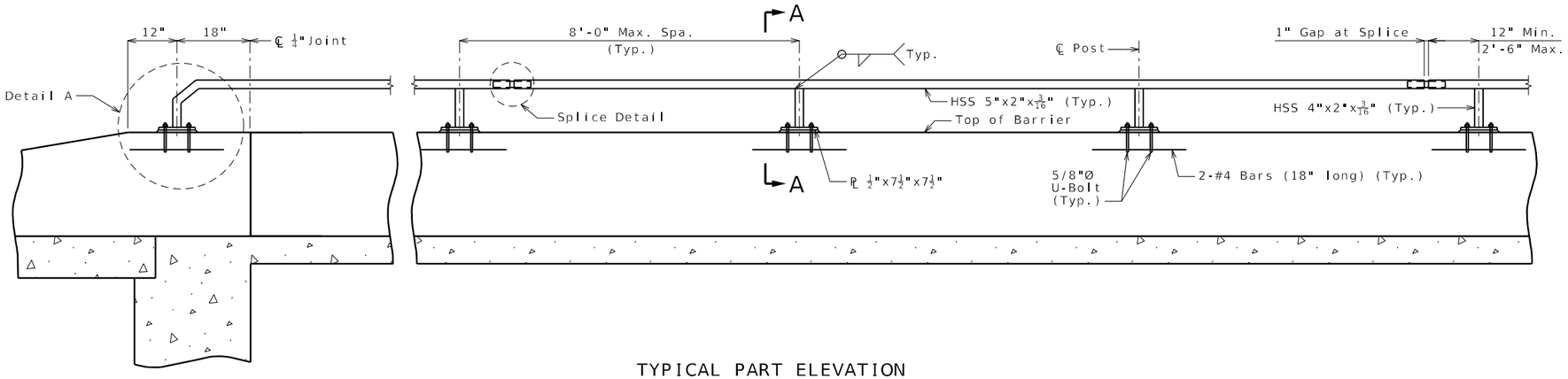

TYPICAL PART ELEVATION

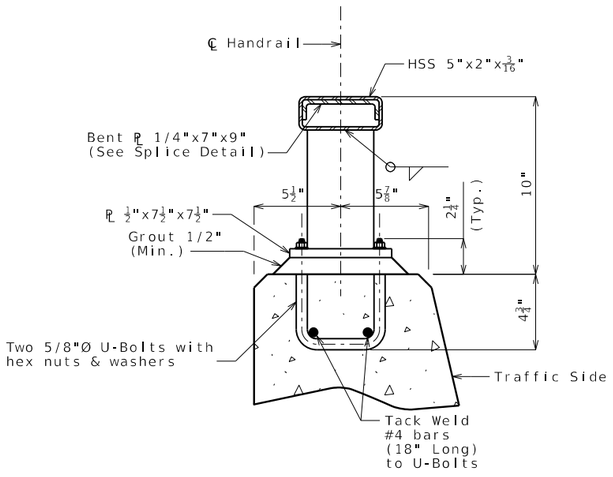

SECTION A-A

1/2-inch diameter hole in base plate not shown for clarity.

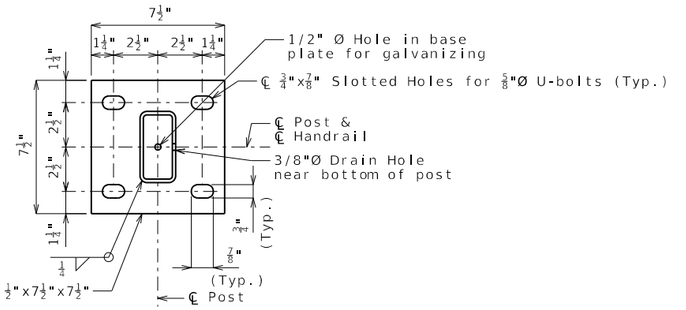

PART PLAN SHOWING BASE PLATE

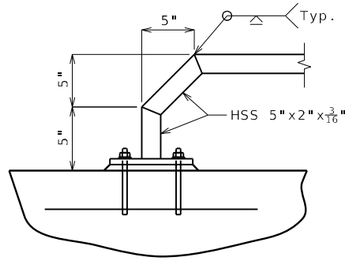

DETAIL A

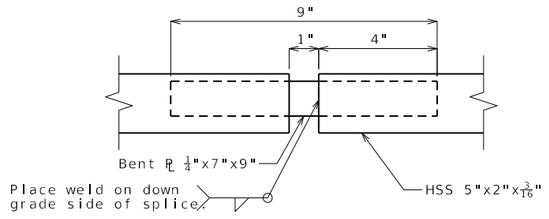

SPLICE DETAIL

Notes:

Handrail shall have a gloss black finish (Federal Standard #17038). See special provisions.

Base plate shall be ASTM A709, Grade 50.

All base plates, U bolts, hex nuts and washers shall be galvanized in accordance with ASTM A123 and Sec 1081.

Center of posts shall clear barrier joints by at least 6 inches.

Measurement of pedestrian handrail will be made horizontally and to the nearest linear foot along centerline handrail.

Payment for furnishing and erecting the handrail, complete in place, will be considered completely covered by the contract unit price for Pedestrian Handrail.

Structural tubing for the handrail shall conform to the requirements of ASTM A500 Grade B.

Handrail posts shall be set plumb. Structural tubing for handrail shall have a minimum length of 20'-0" and a maximum length of 40'-0" between splices. All areas of handrail fabrication which can retain water shall be provided with a 3/8"Ø drain hole.

Contractor shall submit complete detailed shop drawings in accordance with Sec 1080.

Grout shall be placed under the post base plates in accordance with Sec 1066.

All handrail posts shall be vertical.

Substitution for the U-bolt cages will not be permitted.

U-bolts shall be ASTM F1554 Grade 36.

For details of Type H Barrier, see Sheets No. 29 & 30.

Longitudinal dimensions of handrail are horizontal.

PEDESTRIAN HANDRAIL

Detailed Oct. 2023
Checked Feb. 2024

Note: This drawing is not to scale. Follow dimensions.

Digitally signed by Grant Luckenbill
Date: 2025.02.28 15:01:01-06'00'
GRANT C. LUCKENBILL NUMBER PE-2012018100
2-28-25
GRANT C. LUCKENBILL-ENGINEER
MO# PE-2012018100

DATE PREPARED 2/27/2025

ROUTE	STATE
291	MO
DISTRICT	SHEET NO.
BR	34

COUNTY: JACKSON
JOB NO.: J4P3196
FEDERAL PROJECT NO: STB-3001(009)
PROJECT NO.:
BRIDGE NO.: A9328

DESCRIPTION | DATE

MISSOURI HIGHWAYS AND TRANSPORTATION COMMISSION
105 WEST CAPITOL
JEFFERSON CITY, MO 65102
1-888-ASK-MODOT (1-888-275-6636)
LEE'S SUMMIT MISSOURI
olsson
1301 BURLINGTON ST., STE. 100
NORTH KANSAS CITY, MO 64116
PHONE: 816.361.1177
CERT. OF AUTHORITY NO. 001592

REV.

IF A SEAL IS PRESENT ON THIS SHEET IT HAS BEEN ELECTRONICALLY SEALED AND DATED.

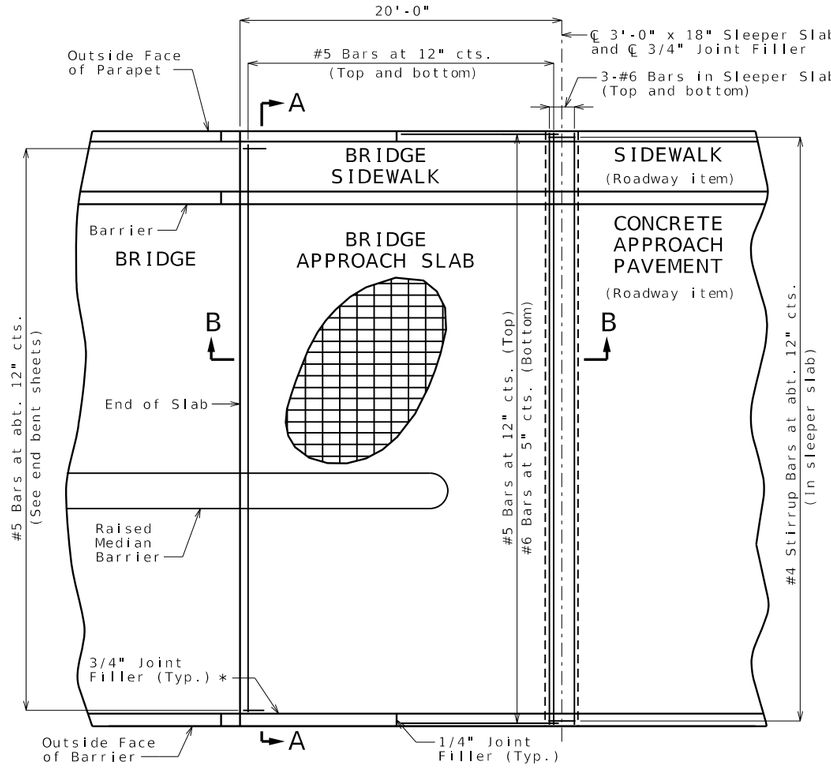

PART PLAN SHOWING REINFORCEMENT

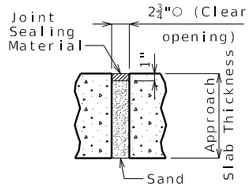

UNDERSEAL ACCESS HOLE DETAIL

(If required)

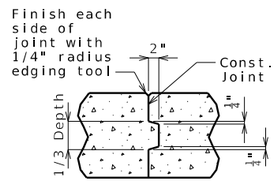

CONSTRUCTION JOINT DETAIL

General Notes:

All concrete for the bridge approach slab and sleeper slab shall be in accordance with Sec 503 (f'c = 4,000 psi).

The reinforcing steel in the bridge approach slab and the sleeper slab shall be epoxy coated Grade 60 with fy = 60,000 psi.

Drain pipe may be either 6" diameter corrugated metallic-coated pipe underdrain, 4" diameter corrugated polyvinyl chloride (PVC) drain pipe, or 4" diameter corrugated polyethylene (PE) drain pipe.

Minimum clearance to reinforcing steel shall be 1 1/2", unless otherwise shown.

The reinforcing steel in the bridge approach slab and the sleeper slab shall be continuous. The transverse reinforcing steel may be made continuous by providing a minimum lap splice of 29 inches for #5 bars and 44 inches for #6 bars, or by mechanical bar splice.

Mechanical bar splices shall be in accordance with Sec 710.

All joint filler shall be in accordance with Sec 1057 for preformed fiber expansion joint filler except as noted.

The contractor shall pour and satisfactorily finish the bridge slab before placing the bridge approach slab.

Longitudinal construction joints in approach slab and sleeper slab shall be aligned with longitudinal construction joints in bridge slab.

For concrete approach pavement details, see roadway plans.

See Missouri Standard Plan 609.00 for details of Type A curb.

Payment for furnishing all materials, labor and excavation necessary to construct the approach slab, including the timber header, sleeper slab, underdrain, Type 5 aggregate base, joint filler and all other appurtenances and incidental work as shown on this sheet, complete in place, will be considered completely covered by the contract unit price for Bridge Approach Slab (Major) per square yard.

* Seal joint between vertical face of approach slab and wing with sealant in accordance with Sec 717 for silicone joint sealant for saw cut and formed joints.

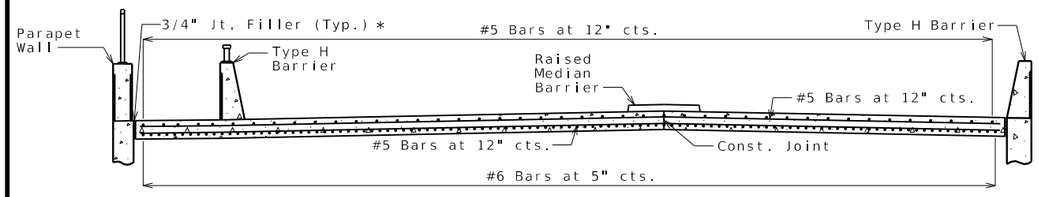

SECTION A-A

Bottom of the approach slab shall be crowned to match the crown of the roadway surface.

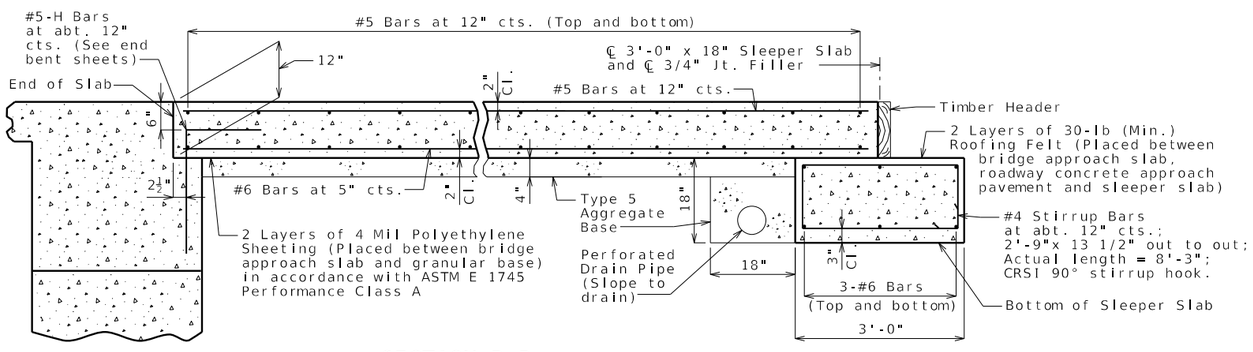

SECTION B-B

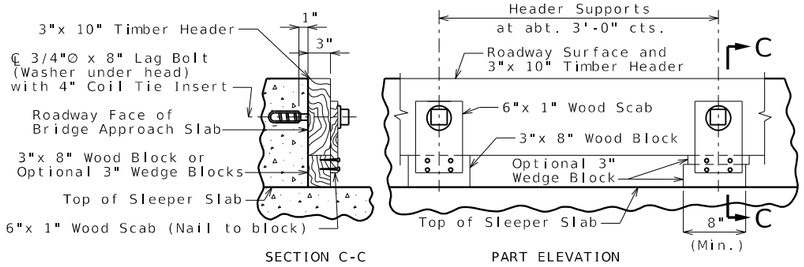

DETAILS OF TIMBER HEADER

Remove timber header when concrete pavement is placed.

BRIDGE APPROACH SLAB (MAJOR)

Detailed Oct. 2023
Checked Feb. 2024

Note: This drawing is not to scale. Follow dimensions.

Sheet No. 35 of 46

F:\2021\04501-05000\021-04786\40-Design\Microstation\J4P3196\plan_sheets\16 Bridge Sheets\B_A9328_035_J4P3196_Approach Slab (Major).dgn 5:41:49 PM 2/27/2025

Digitally signed by Grant Luckenbill
Date: 2025.02.28 15:00:52-06'00'

GRANT C. LUCKENBILL NUMBER PE-2012018100
2-28-25
GRANT C. LUCKENBILL–ENGINEER
MO# PE-2012018100

DATE PREPARED: 2/27/2025

ROUTE	STATE
291	MO
DISTRICT	SHEET NO.
BR	35

COUNTY: JACKSON
JOB NO.: J4P3196
FEDERAL PROJECT NO: STB-3001(009)
PROJECT NO.:
BRIDGE NO.: A9328

DESCRIPTION	DATE

IF A SEAL IS PRESENT ON THIS SHEET IT HAS BEEN ELECTRONICALLY SEALED AND DATED.

MISSOURI HIGHWAYS AND TRANSPORTATION COMMISSION

105 WEST CAPITOL
JEFFERSON CITY, MO 65102
1-888-ASK-MODOT (1-888-275-6636)

LEE'S SUMMIT MISSOURI

olsson
1301 BURLINGTON ST., STE. 100
NORTH KANSAS CITY, MO 64116
PHONE: 816.361.1177
CERT. OF AUTHORITY NO. 001592

BILL OF REINFORCING STEEL

NO. REQ'D.	MARK NO. SIZE	MARK	LOCATION	EPOXY (E)	SHAPE NO.	STIRRUP (S)	SUBSTR. (X)	VARIES (V)	NO. EACH	DIMENSIONS B FT.	B IN.	C FT.	C IN.	D FT.	D IN.	E FT.	E IN.	F FT.	F IN.	H FT.	H IN.	K FT.	K IN.	NOMINAL LENGTH FT.	NOMINAL LENGTH IN.	ACTUAL LENGTH FT.	ACTUAL LENGTH IN.	WEIGHT LBS.
			SUBSTRUCTURE																									
			INT. BENT 2																									
72	9	D200	FOOTING	E	17		X			8	9.000													10	0	10	0	2448
72	9	D201	FOOTING		20		X			7	9.000													7	9	7	9	1897
90	8	D202	FOOTING		20		X			6	9.000													6	9	6	9	1622
12	6	D203	FOOTING		10	S	X					4	4.500	7	0.000									15	9	15	5	278
63	6	D204	BEAM		20		X			2	6.000													2	6	2	6	237
8	10	H200	BEAM	E	20		X			59	4.000													59	4	59	4	2042
8	10	H201	BEAM	E	20		X			59	10.000													59	10	59	10	2060
16	10	H202	BEAM	E	17		X			19	1.000													20	6	20	6	1411
8	10	H203	BEAM	E	20		X			48	1.000													48	1	48	1	1655
8	10	H204	BEAM	E	20		X			49	6.000													49	6	49	6	1704
12	6	H205	BEAM	E	20		X			59	4.000													59	4	59	4	1069
12	6	H206	BEAM	E	20		X			57	2.000													57	2	57	2	1030
4	6	H207	BEAM	E	20		X			35	6.000													35	6	35	6	213
4	6	H208	BEAM	E	20		X			57	2.000													57	2	57	2	343
4	6	H209	BEAM	E	20		X			40	9.000													40	9	40	9	245
17	6	H210	BEAM	E	10	S	X					12	0.000	3	3.000									5	3	4	11	126
198	4	P200	COLUMN	E	16		X			2	9.000													11	6	11	4	1499
26	6	U200	BEAM	E	13	S	X			3	3.000	4	6.000	3	3.000	4	6.000							16	10	16	4	638
3	6	U201	BEAM	E	10	S	X					4	6.000	3	3.000									12	3	11	11	54
46	6	U202	BEAM	E	13	S	X			3	3.000	4	10.750	3	3.000	4	10.750							17	8	17	2	1186
9	6	U203	BEAM	E	10	S	X					4	10.750	3	3.000									13	1	12	9	172
45	6	U204	BEAM	E	13	S	X			3	3.000	5	4.500	3	3.000	5	4.500							18	7	18	1	1222
6	6	U205	BEAM	E	10	S	X					5	4.500	3	3.000									14	0	13	8	123
30	4	U206	BEAM	E	10	S	X						6.000	3	3.000									4	3	4	1	82
72	9	V200	COLUMN	E	20		X			19	10.000													19	10	19	10	4855
			SUPER-																									
			STRUCTURE																									
			END BENT 1																									
15	6	F100	WING BRACE	E	15	S				2	3.000	4	11.750		14.000		10.000	10.000		19.000		19.000		8	5	8	4	188
4	6	F101	DIAPHRAGM	E	19	S				7	10.000	2	8.250											10	6	10	4	62
24	8	H100	BEAM	E	20					42	9.000													42	9	42	9	2739
12	6	H101	BEAM	E	20					41	9.000													41	9	41	9	753
8	6	H102	BEAM	E	20					47	6.000													47	6	47	6	571
8	6	H103	BEAM	E	20					34	8.000													34	8	34	8	417
4	6	H104	BEAM	E	20					16	11.000													16	11	16	11	102
12	8	H105	DIAPHRAGM	E	20					42	3.000													42	3	42	3	1354
6	6	H106	DIAPHRAGM	E	20					60	0.000													60	0	60	0	541
6	6	H107	DIAPHRAGM	E	20					2	2.000													2	2	2	2	20
27	6	H108	DIAPHRAGM	E	20					7	8.000													7	8	7	8	311
13	6	H109	BEAM	E	18					7	5.250													8	9	8	9	171
10	5	H110	STRAND TIE	E	20					6	6.000													6	6	6	6	68
114	5	H111	DIAPHRAGM	E	19	S				2	0.000		15.000											3	3	3	2	377
16	8	H112	WING	E	20					9	6.000													9	6	9	6	406
32	6	H113	WING	E	20					8	8.000													8	8	8	8	417
7	5	U100	BEAM	E	31	S				4	6.750	2	9.000	4	6.750									12	10	12	7	92
17	5	U101	BEAM	E	31	S				4	10.250	2	9.000	4	10.250									13	5	13	2	233

BILL OF REINFORCING STEEL

NO. REQ'D.	MARK NO. SIZE	MARK	LOCATION	EPOXY (E)	SHAPE NO.	STIRRUP (S)	SUBSTR. (X)	VARIES (V)	NO. EACH	DIMENSIONS B FT.	B IN.	C FT.	C IN.	D FT.	D IN.	E FT.	E IN.	F FT.	F IN.	H FT.	H IN.	K FT.	K IN.	NOMINAL LENGTH FT.	NOMINAL LENGTH IN.	ACTUAL LENGTH FT.	ACTUAL LENGTH IN.	WEIGHT LBS.
17	5	U102	BEAM	E	31	S				5	1.500	2	9.000	5	1.500									13	11	13	9	244
21	5	U103	BEAM	E	31	S				5	6.500	2	9.000	5	6.500									14	9	14	7	319
16	4	U104	BEAM	E	13	S				2	9.000	2	8.000	2	9.000	2	8.000							11	7	11	4	121
14	4	U105	BEAM	E	13	S				2	9.000	3	0.750	2	9.000	3	0.750							12	5	12	2	114
28	4	U106	BEAM	E	13	S				2	9.000	3	4.000	2	9.000	3	4.000							12	11	12	8	237
14	4	U107	BEAM	E	13	S				2	9.000	3	9.750	2	9.000	3	9.750							13	11	13	8	128
2	4	U108	BEAM	E	10	S						3	0.750	2	9.000									8	11	8	9	12
4	4	U109	BEAM	E	10	S						3	4.000	2	9.000									9	5	9	3	25
2	4	U110	BEAM	E	10	S						3	9.750	2	9.000									10	5	10	3	14
78	5	U111	DIAPHRAGM	E	31	S				2	6.500	2	3.000	2	6.500									8	3	8	1	658
78	6	U112	DIAPHRAGM	E	19	S				1	8.000	2	9.000											4	5	4	3	498
152	6	U113	DIAPHRAGM	E	19	S				2	11.000	4	6.500											7	6	7	4	1674
14	5	V100	BEAM	E	17					4	7.000													5	2	5	2	75
12	5	V101	BEAM	E	17					5	1.000													5	8	5	8	71
6	5	V102	BEAM	E	17					5	7.000													6	2	6	2	39
60	6	V103	DIAPHRAGM	E	20						19.000													1	7	1	7	143
16	6	V104	WING	E	20					6	0.000													6	0	6	0	144
16	6	V105	WING	E	20					5	8.000													5	8	5	8	136
			END BENT 3																									
15	6	F300	WING BRACE	E	15	S				2	3.000	4	11.750		14.000		10.000	10.000		19.000		19.000		8	5	8	4	188
4	6	F301	DIAPHRAGM	E	19	S				7	10.000	2	8.250											10	6	10	4	62
24	8	H300	BEAM	E	20					42	9.000													42	9	42	9	2739
12	6	H301	BEAM	E	20					41	9.000													41	9	41	9	753
8	6	H302	BEAM	E	20					47	6.000													47	6	47	6	571
8	6	H303	BEAM	E	20					34	8.000													34	8	34	8	417
4	6	H304	BEAM	E	20					16	11.000													16	11	16	11	102
12	8	H305	DIAPHRAGM	E	20					42	3.000													42	3	42	3	1354
6	6	H306	DIAPHRAGM	E	20					60	0.000													60	0	60	0	541
6	6	H307	DIAPHRAGM	E	20					2	2.000													2	2	2	2	20
27	6	H308	DIAPHRAGM	E	20					7	8.000													7	8	7	8	311
13	6	H309	BEAM	E	18					7	5.250													8	9	8	9	171
10	5	H310	STRAND TIE	E	20					6	6.000													6	6	6	6	68
114	5	H311	DIAPHRAGM	E	19	S				2	0.000		15.000											3	3	3	2	377
16	8	H312	WING	E	20					9	6.000													9	6	9	6	406
32	6	H313	WING	E	20					8	8.000													8	8	8	8	417
7	5	U300	BEAM	E	31	S				4	6.750	2	9.000	4	6.750									12	10	12	7	92
17	5	U301	BEAM	E	31	S				4	10.250	2	9.000	4	10.250									13	5	13	2	233
17	5	U302	BEAM	E	31	S				5	1.500	2	9.000	5	1.500									13	11	13	9	244
21	5	U303	BEAM	E	31	S				5	6.500	2	9.000	5	6.500									14	9	14	7	319
16	4	U304	BEAM	E	13	S				2	9.000	2	8.000	2	9.000	2	8.000							11	7	11	4	121
14	4	U305	BEAM	E	13	S				2	9.000	3	0.750	2	9.000	3	0.750							12	5	12	2	114
28	4	U306	BEAM	E	13	S				2	9.000	3	4.000	2	9.000	3	4.000							12	11	12	8	237
14	4	U307	BEAM	E	13	S				2	9.000	3	9.750	2	9.000	3	9.750							13	11	13	8	128
2	4	U308	BEAM	E	10	S						3	0.750	2	9.000									8	11	8	9	12
4	4	U309	BEAM	E	10	S						3	4.000	2	9.000									9	5	9	3	25
2	4	U310	BEAM	E	10	S						3	9.750	2	9.000									10	5	10	3	14
78	5	U311	DIAPHRAGM	E	31	S				2	6.500	2	3.000	2	6.500									8	3	8	1	658
78	6	U312	DIAPHRAGM	E	19	S				1	8.000	2	9.000											4	5	4	3	498
152	6	U313	DIAPHRAGM	E	19	S				2	11.000	4	6.500											7	6	7	4	1674
14	5	V300	BEAM	E	17					4	7.000													5	2	5	2	75
12	5	V301	BEAM	E	17					5	1.000													5	8	5	8	71
6	5	V302	BEAM	E	17					5	7.000													6	2	6	2	39
60	6	V303	DIAPHRAGM	E	20						19.000													1	7	1	7	143
16	6	V304	WING	E	20					5	7.000													5	7	5	7	134

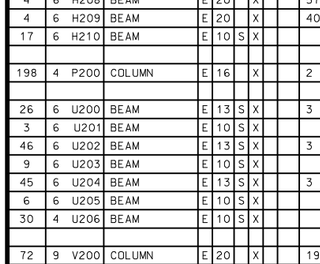

STIRRUP HOOK DIMENSIONS				
GRADES 40 - 50 - 60 KSI				
BAR SIZE	D (IN.)	90° HOOK	135° HOOK	
		HOOK A OR G	HOOK A OR G	APPROX. H
#4	2"	4 1/2"	4 1/2"	3"
#5	2 1/2"	6"	5 1/2"	3 3/4"
#6	4 1/2"	12"	8"	4 1/2"

NOTE: UNLESS OTHERWISE NOTED, DIAMETER "D" IS THE SAME FOR ALL BENDS AND HOOKS ON A BAR.

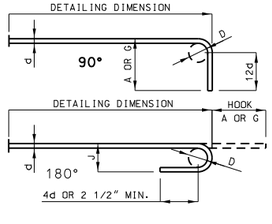

END HOOK DIMENSIONS					
BAR SIZE	D (IN.)	ALL GRADES			
		180° HOOKS		90° HOOKS	
		A OR G	J	A OR G	
#3	2 1/4"	5"	3"	6"	
#4	3"	6"	4"	8"	
#5	3 3/4"	7"	5"	10"	
#6	4 1/2"	8"	6"	12"	
#7	5 1/4"	10"	7"	14"	
#8	6"	11"	8"	16"	
#9	9 1/2"	15"	11 3/4"	19"	
#10	10 3/4"	17"	13 1/4"	22"	
#11	12"	19"	14 3/4"	2'-0"	
#14	18 1/4"	2'-3"	21 3/4"	2'-7"	

NOTE:
ALL STANDARD HOOKS AND BENDS OTHER THAN 180 DEGREE ARE TO BE BENT WITH SAME PROCEDURE AS FOR 90 DEGREE STANDARD HOOKS.

HOOKS AND BENDS SHALL BE IN ACCORDANCE WITH THE PROCEDURES AS SHOWN ON THIS SHEET.

E = EPOXY COATED REINFORCEMENT.
S = STIRRUP.
X = BAR IS INCLUDED IN SUBSTRUCTURE QUANTITIES.
V = BAR DIMENSIONS VARY IN EQUAL INCREMENTS BETWEEN DIMENSIONS SHOWN ON THIS LINE AND THE FOLLOWING LINE.
NO. EA. = NUMBER OF BARS OF EACH LENGTH.

NOMINAL LENGTHS ARE BASED ON OUT TO OUT DIMENSIONS SHOWN IN BENDING DIAGRAMS AND ARE LISTED FOR FABRICATORS USE. (NEAREST INCH)

ACTUAL LENGTHS ARE MEASURED ALONG CENTERLINE BAR TO THE NEAREST INCH.

PAYWEIGHTS ARE BASED ON ACTUAL LENGTHS.

FOUR ANGLE OR CHANNEL SPACERS ARE REQUIRED FOR EACH COLUMN SPIRAL. SPACERS ARE TO BE PLACED ON INSIDE OF SPIRALS. LENGTH AND WEIGHT OF COLUMN SPIRALS DO NOT INCLUDE SPLICES OR SPACERS.

REINFORCING STEEL (GRADE 60) FY = 60,000 PSI.

BENDING DIAGRAMS

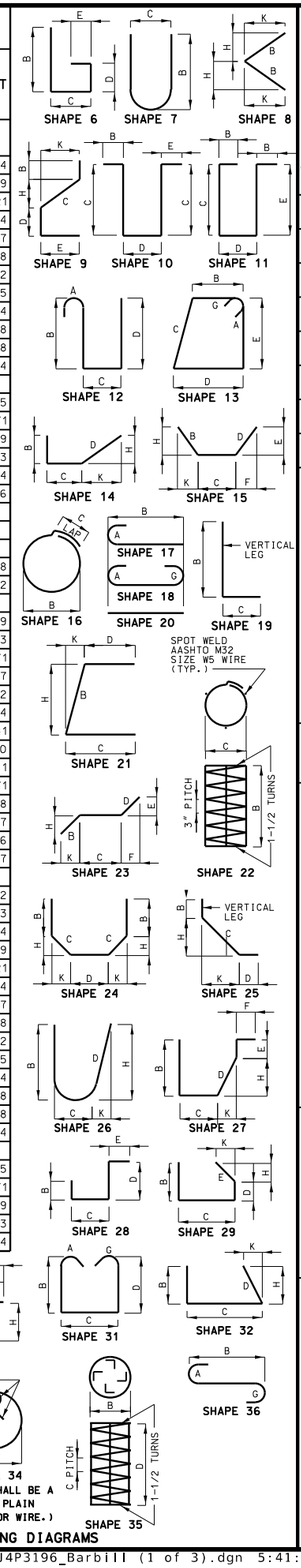

Digitally signed by Grant Luckenbill
Date: 2025.02.28 15:00:07-06'00'

GRANT C. LUCKENBILL NUMBER PE-2012018100 2-28-25

GRANT C. LUCKENBILL-ENGINEER
MO# PE-2012018100

DATE PREPARED
2/27/2025

ROUTE	STATE
291	MO
DISTRICT	SHEET NO.
BR	36

COUNTY
JACKSON

JOB NO.
J4P3196

FEDERAL PROJECT NO
STB-3001(009)

PROJECT NO.

BRIDGE NO.
A9328

IF A SEAL IS PRESENT ON THIS SHEET IT HAS BEEN ELECTRONICALLY SEALED AND DATED.

REV.	DESCRIPTION	DATE

MISSOURI HIGHWAYS AND TRANSPORTATION COMMISSION
105 WEST CAPITOL
JEFFERSON CITY, MO 65102
1-888-ASK-MODOT (1-888-275-6636)

LEE'S SUMMIT MISSOURI

olsson
1301 BURLINGTON ST., STE. 100
NORTH KANSAS CITY, MO 64116
PHONE: 816.361.1177
CERT. OF AUTHORITY NO. 001592

Detailed Oct. 2023
Checked Feb. 2024

Note: This drawing is not to scale. Follow dimensions.

BILL OF REINFORCING STEEL

NO. REQ'D.	MARK NO. SIZE	MARK	LOCATION	EPOXY (E)	SHAPE NO.	STIRRUP (S)	SUBSTR. (X)	VARIES (V)	NO. EACH	DIMENSIONS B FT.	B IN.	C FT.	C IN.	D FT.	D IN.	E FT.	E IN.	F FT.	F IN.	H FT.	H IN.	K FT.	K IN.	NOMINAL LENGTH FT.	NOMINAL LENGTH IN.	ACTUAL LENGTH FT.	ACTUAL LENGTH IN.	WEIGHT LBS.
16	6	V305	WING	E	20					5	11.000													5	11	5	11	142
			INT. BENT																									
			DIAPHRAGM																									
36	6	H50	DIAPHRAGM	E	20					7	8.000													7	8	7	8	415
18	4	H51	DIAPHRAGM	E	20					7	8.000													7	8	7	8	92
12	5	H52	DIAPHRAGM	E	19	S				5	2.500	10	.250											6	1	6	0	75
4	5	H53	STRAND TIE	E	20					5	6.000													5	6	5	6	23
16	5	H54	STRAND TIE	E	20					6	6.000													6	6	6	6	108
36	6	U50	DIAPHRAGM	E	28	S						2	3.000	2	5.500	2	2.000					2		6	11	6	7	356
126	4	U51	DIAPHRAGM	E	28	S						2	1.000	2	4.750	18	.000					2		6	0	5	9	484
8	5	V50	DIAPHRAGM	E	20					2	7.000													2	7	2	7	22
			SLAB																									
188	5	S1	SLAB	E	20					60	0.000													60	0	60	0	11765
94	8	S2	SLAB	E	20					21	9.000													21	9	21	9	5459
182	8	S3	SLAB	E	20					60	0.000													60	0	60	0	29156
510	6	S4	SLAB	E	20					59	9.000													59	9	59	9	45770
327	5	S5	SLAB	E	20					46	1.000													46	1	46	1	15717
408	5	S6	SLAB	E	20					59	6.000													59	6	59	6	25320
			PARAPET WALL																									
22	5	K11	PARAPET WALL	E	10	S						3	6.000		9.000									7	9	7	7	174
22	5	K12	PARAPET WALL	E	20					12	3.000													12	3	12	3	281
16	5	K13	PARAPET WALL	E	20					9	9.000													9	9	9	9	163
188	5	R11	PARAPET WALL	E	10	S						2	5.000		9.000									5	7	5	5	1062
166	5	R12	PARAPET WALL	E	10	S				12	.000	20	.500		9.000									5	2	4	10	837
16	5	R13	PARAPET WALL	E	20	S				51	6.000													51	6	51	6	859
16	5	R14	PARAPET WALL	E	20	S				11	9.000													11	9	11	9	196
			BARRIER																									
22	5	K21	BARRIER	E	27	S		V	2		12.750	11	.500	4	.500	7	.750	12	.000	4	.500	1	.000	4	1	3	9	
			INCREMENT =							2	0.750	9	.250	16	.500	7	.750	12	.000	16	.250	3	.250	5	10	5	6	107
			B: 1.200 INCH, C: 0.225 INCH, D: 1.200 INCH, TOTAL: 2.175 INCH																									
24	5	K22	BARRIER	E	27	S					20.500	10	.000	13	.000	7	.750	12	.000	12	.750	2	.500	5	3	5	0	125
18	5	K23	BARRIER	E	19	S		V	2		18.000	10	.000											2	4	2	3	
			INCREMENT =							2	4.000	10	.000											3	2	3	1	50
			1.250 INCH																									
18	5	K24	BARRIER	E	21	S		V	2		17.750	10	.000							17	.500	3	.500	2	4	2	2	
			INCREMENT =							2	3.750	10	.000							2	3.250	5	.500	3	2	3	0	48
			1.250 INCH																									
6	5	K25	BARRIER	E	19	S				2	5.000	10	.000											3	3	3	2	20
6	5	K26	BARRIER	E	21	S				2	5.000	10	.000							2	4.250	6	.000	3	3	3	1	19
12	5	K27	BARRIER	E	20			V	4	10	0.000													10	0	10	0	
			INCREMENT =							22	2.000													22	2	22	2	201
			73.000 INCH																									
4	5	K28	BARRIER	E	14							2	4.000	19	11.750					2	0.000	19	10.750	22	4	22	2	93
22	5	K31	BARRIER	E	27	S				3	6.000	9	.250	14	.500	2	3.750			14	.250	2	.750	7	10	7	7	174
5	5	K32	BARRIER	E	27	S				22	.500	9	.250	5	.250	17	.250	12	.000	5	.250	1	.000	5	6	5	2	27
15	5	K33	BARRIER	E	27	S				22	.500	9	.250	14	.500	7	.750	12	.000	14	.250	2	.750	5	6	5	2	81
20	5	K34	BARRIER	E	19	S				2	5.000	10	.000											3	3	3	2	66
5	5	K35	BARRIER	E	14	S				8	.250	9	.500	19	.250					4	.250	18	.750	3	1	3	0	16
15	5	K36	BARRIER	E	21	S				2	5.000	10	.000							2	4.250	6	.000	3	3	3	1	48

BILL OF REINFORCING STEEL

NO. REQ'D.	MARK NO. SIZE	MARK	LOCATION	EPOXY (E)	SHAPE NO.	STIRRUP (S)	SUBSTR. (X)	VARIES (V)	NO. EACH	DIMENSIONS B FT.	B IN.	C FT.	C IN.	D FT.	D IN.	E FT.	E IN.	F FT.	F IN.	H FT.	H IN.	K FT.	K IN.	NOMINAL LENGTH FT.	NOMINAL LENGTH IN.	ACTUAL LENGTH FT.	ACTUAL LENGTH IN.	WEIGHT LBS.
22	5	K37	BARRIER	E	20					12	3.000													12	3	12	3	281
16	5	K38	BARRIER	E	20					9	9.000													9	9	9	9	163
1	5	K39	BARRIER	E	20					6	0.000													6	0	6	0	6
164	5	R21	BARRIER	E	14	S				2	5.000	6	.500	2	5.500					2	5.000	5	.500	5	5	5	3	898
164	5	R22	BARRIER	E	19	S				20	.500	9	.500											2	6	2	5	413
164	5	R23	BARRIER	E	27	S						9	.500	15	.250	5	.000	12	.000	15	.000	3	.000	3	6	3	4	570
16	5	R24	BARRIER	E	14	S				2	2.000	6	.500	2	2.500					2	2.000	5	.000	4	11	4	9	79
16	5	R25	BARRIER	E	20					51	6.000													51	6	51	6	859
16	5	R26	BARRIER	E	20					11	9.000													11	9	11	9	196
168	5	R31	BARRIER	E	14	S				2	5.000	6	.500	2	5.500					2	5.000	5	.500	5	5	5	3	920
146	5	R32	BARRIER	E	19	S				20	.500	9	.500											2	6	2	5	368
146	5	R33	BARRIER	E	27	S						9	.500	15	.250	5	.000	12	.000	15	.000	3	.000	3	6	3	4	508
16	5	R34	BARRIER	E	20					51	6.000													51	6	51	6	859
16	5	R35	BARRIER	E	20					11	9.000													11	9	11	9	196
			RAISED																									
			MEDIAN																									
			BARRIER																									
151	4	R100	MEDIAN	E	10	S						13	.000	3	7.000									5	9	5	7	563
2	4	R101	MEDIAN	E	10	S						13	.000	2	11.500									5	2	5	0	7
4	4	R102	MEDIAN	E	20					4	3.000													4	3	4	3	11
8	4	R103	MEDIAN	E	20					51	6.000													51	6	51	6	275
8	4	R104	MEDIAN	E	20					11	9.000													11	9	11	9	63
4	4	R105	MEDIAN	E	20					11	0.000	3												11	0	11	0	29
2	4	R106	MEDIAN	E	7					3	9.500	6	.000											9	7	9	6	13

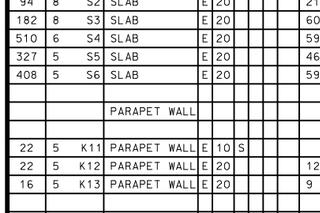

STIRRUP HOOK DIMENSIONS				
GRADES 40 - 50 - 60 KSI				
BAR SIZE	D (IN.)	90° HOOK	135° HOOK	
		HOOK A OR G	HOOK A OR G	APPROX. H
#4	2"	4 1/2"	4 1/2"	3"
#5	2 1/2"	6"	5 1/2"	3 3/4"
#6	4 1/2"	12"	8"	4 1/2"

NOTE: UNLESS OTHERWISE NOTED, DIAMETER "D" IS THE SAME FOR ALL BENDS AND HOOKS ON A BAR.

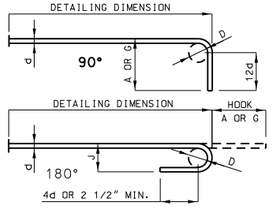

END HOOK DIMENSIONS				
BAR SIZE	D (IN.)	ALL GRADES		
		180° HOOKS		90° HOOKS
		A OR G	J	A OR G
#3	2 1/4"	5"	3"	6"
#4	3"	6"	4"	8"
#5	3 3/4"	7"	5"	10"
#6	4 1/2"	8"	6"	12"
#7	5 1/4"	10"	7"	14"
#8	6"	11"	8"	16"
#9	9 1/2"	15"	11 3/4"	19"
#10	10 3/4"	17"	13 1/4"	22"
#11	12"	19"	14 3/4"	2'-0"
#14	18 1/4"	2'-3"	21 3/4"	2'-7"

NOTE:
ALL STANDARD HOOKS AND BENDS OTHER THAN 180 DEGREE ARE TO BE BENT WITH SAME PROCEDURE AS FOR 90 DEGREE STANDARD HOOKS.

HOOKS AND BENDS SHALL BE IN ACCORDANCE WITH THE PROCEDURES AS SHOWN ON THIS SHEET.

E = EPOXY COATED REINFORCEMENT.
S = STIRRUP.
X = BAR IS INCLUDED IN SUBSTRUCTURE QUANTITIES.
V = BAR DIMENSIONS VARY IN EQUAL INCREMENTS BETWEEN DIMENSIONS SHOWN ON THIS LINE AND THE FOLLOWING LINE.
NO. EA. = NUMBER OF BARS OF EACH LENGTH.

NOMINAL LENGTHS ARE BASED ON OUT TO OUT DIMENSIONS SHOWN IN BENDING DIAGRAMS AND ARE LISTED FOR FABRICATORS USE. (NEAREST INCH)

ACTUAL LENGTHS ARE MEASURED ALONG CENTERLINE BAR TO THE NEAREST INCH.

PAYWEIGHTS ARE BASED ON ACTUAL LENGTHS.

FOUR ANGLE OR CHANNEL SPACERS ARE REQUIRED FOR EACH COLUMN SPIRAL. SPACERS ARE TO BE PLACED ON INSIDE OF SPIRALS. LENGTH AND WEIGHT OF COLUMN SPIRALS DO NOT INCLUDE SPLICES OR SPACERS.

REINFORCING STEEL (GRADE 60) FY = 60,000 PSI.

BENDING DIAGRAMS

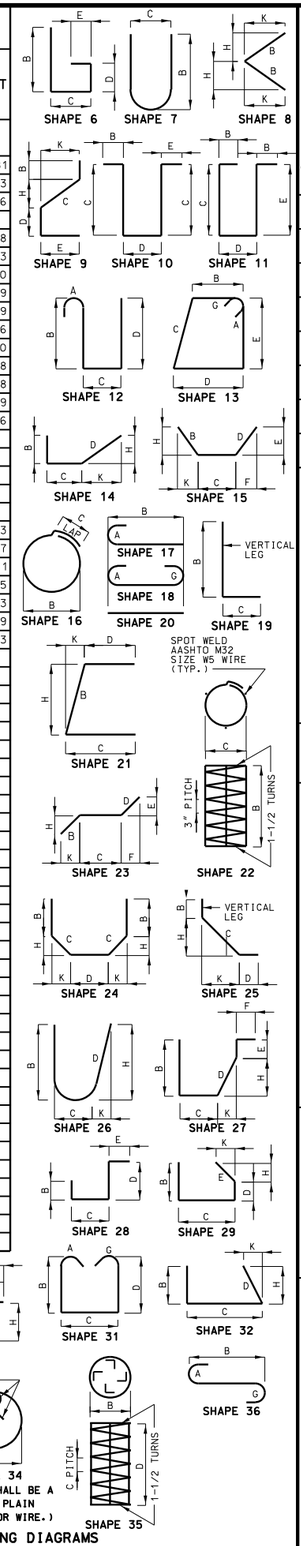

Digitally signed by Grant Luckenbill
Date: 2025.02.28 15:00:33-06'00'

GRANT C. LUCKENBILL NUMBER PE-2012018100 2-28-25

GRANT C. LUCKENBILL-ENGINEER
MO# PE-2012018100

DATE PREPARED
2/27/2025

ROUTE	STATE
291	MO
DISTRICT	SHEET NO.
BR	37

COUNTY
JACKSON

JOB NO.
J4P3196

FEDERAL PROJECT NO
STB-3001(009)

PROJECT NO.

BRIDGE NO.
A9328

DESCRIPTION

DATE

REV.

MISSOURI HIGHWAYS AND TRANSPORTATION COMMISSION
105 WEST CAPITOL
JEFFERSON CITY, MO 65102
1-888-ASK-MODOT (1-888-275-6636)

LEE'S SUMMIT MISSOURI

olsson
1301 BURLINGTON ST., STE. 100
NORTH KANSAS CITY, MO 64116
PHONE: 816.361.1177
CERT. OF AUTHORITY NO. 001592

IF A SEAL IS PRESENT ON THIS SHEET IT HAS BEEN ELECTRONICALLY SEALED AND DATED.

Detailed Oct. 2023
Checked Feb. 2024

Note: This drawing is not to scale. Follow dimensions.

BILL OF REINFORCING STEEL

NO. REQ'D.	MARK NO. SIZE	MARK	LOCATION	EPOXY (E)	SHAPE NO.	STIRRUP (S)	SUBSTR. (X)	VARIES (V)	NO. EACH	DIMENSIONS B FT.	B IN.	C FT.	C IN.	D FT.	D IN.	E FT.	E IN.	F FT.	F IN.	H FT.	H IN.	K FT.	K IN.	NOMINAL LENGTH FT.	NOMINAL LENGTH IN.	ACTUAL LENGTH FT.	ACTUAL LENGTH IN.	WEIGHT LBS.
			TOTALS																									
	4			E																								4420
	5			E																								68345
	6																											515
	6			E																								65254
	8																											1622
	8			E																								43613
	9																											1897
	9			E																								7303
	10			E																								8872
			TOTAL																									4034
			TOTAL	E																								197807
			Slab on																									
			Beam																									
	4			E																								1878
	5			E																								57382
	6			E																								58833
	8			E																								43613
			TOTAL	E																								161706
			Reinforcing																									
			Steel																									
			(Bridges)																									
	4			E																								1581
	6																											515
	6			E																								6421
	8																											1622
	9																											1897
	9			E																								7303
	10			E																								8872
			TOTAL																									4034
			TOTAL	E																								24177
			Parapet Wall																									
	5			E																								3572
			TOTAL	E																								3572
			Barrier																									
	5			E																								7391
			TOTAL	E																								7391
			Raised																									
			Median																									
			Barrier																									
	4			E																								961
			TOTAL	E																								961

BILL OF REINFORCING STEEL

NO. REQ'D.	MARK NO. SIZE	MARK	LOCATION	EPOXY (E)	SHAPE NO.	STIRRUP (S)	SUBSTR. (X)	VARIES (V)	NO. EACH	DIMENSIONS B FT.	B IN.	C FT.	C IN.	D FT.	D IN.	E FT.	E IN.	F FT.	F IN.	H FT.	H IN.	K FT.	K IN.	NOMINAL LENGTH FT.	NOMINAL LENGTH IN.	ACTUAL LENGTH FT.	ACTUAL LENGTH IN.	WEIGHT LBS.

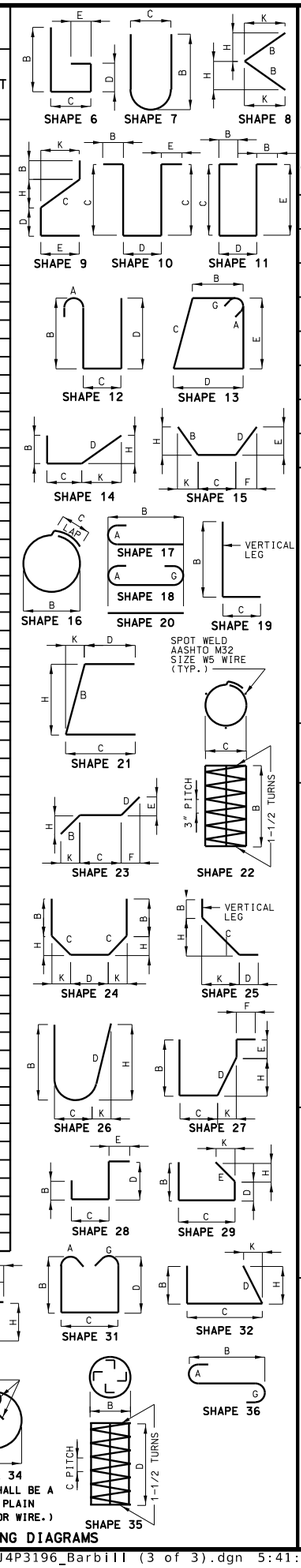

BENDING DIAGRAMS

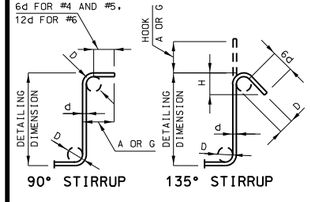

STIRRUP HOOK DIMENSIONS

GRADES 40 - 50 - 60 KSI

BAR SIZE	D (IN.)	90° HOOK HOOK A OR G	135° HOOK HOOK A OR G	135° HOOK APPROX. H
#4	2"	4 1/2"	4 1/2"	3"
#5	2 1/2"	6"	5 1/2"	3 3/4"
#6	4 1/2"	12"	8"	4 1/2"

NOTE: UNLESS OTHERWISE NOTED, DIAMETER "D" IS THE SAME FOR ALL BENDS AND HOOKS ON A BAR.

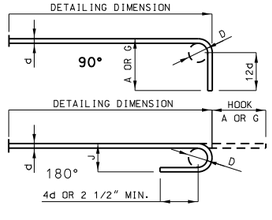

END HOOK DIMENSIONS

BAR SIZE	D (IN.)	ALL GRADES 180° HOOKS A OR G	180° HOOKS J	90° HOOKS A OR G
#3	2 1/4"	5"	3"	6"
#4	3"	6"	4"	8"
#5	3 3/4"	7"	5"	10"
#6	4 1/2"	8"	6"	12"
#7	5 1/4"	10"	7"	14"
#8	6"	11"	8"	16"
#9	9 1/2"	15"	11 3/4"	19"
#10	10 3/4"	17"	13 1/4"	22"
#11	12"	19"	14 3/4"	2'-0"
#14	18 1/4"	2'-3"	21 3/4"	2'-7"

NOTE:
ALL STANDARD HOOKS AND BENDS OTHER THAN 180 DEGREE ARE TO BE BENT WITH SAME PROCEDURE AS FOR 90 DEGREE STANDARD HOOKS.

HOOKS AND BENDS SHALL BE IN ACCORDANCE WITH THE PROCEDURES AS SHOWN ON THIS SHEET.

E = EPOXY COATED REINFORCEMENT.
S = STIRRUP.
X = BAR IS INCLUDED IN SUBSTRUCTURE QUANTITIES.
V = BAR DIMENSIONS VARY IN EQUAL INCREMENTS BETWEEN DIMENSIONS SHOWN ON THIS LINE AND THE FOLLOWING LINE.
NO. EA. = NUMBER OF BARS OF EACH LENGTH.

NOMINAL LENGTHS ARE BASED ON OUT TO OUT DIMENSIONS SHOWN IN BENDING DIAGRAMS AND ARE LISTED FOR FABRICATORS USE. (NEAREST INCH)

ACTUAL LENGTHS ARE MEASURED ALONG CENTERLINE BAR TO THE NEAREST INCH.

PAYWEIGHTS ARE BASED ON ACTUAL LENGTHS.

FOUR ANGLE OR CHANNEL SPACERS ARE REQUIRED FOR EACH COLUMN SPIRAL. SPACERS ARE TO BE PLACED ON INSIDE OF SPIRALS. LENGTH AND WEIGHT OF COLUMN SPIRALS DO NOT INCLUDE SPLICES OR SPACERS.

REINFORCING STEEL (GRADE 60) FY = 60,000 PSI.

Detailed Oct. 2023
Checked Feb. 2024

Note: This drawing is not to scale. Follow dimensions.

Digitally signed by Grant Luckenbill
Date: 2025.02.28 15:00:43-06'00'
GRANT C. LUCKENBILL NUMBER PE-2012018100 2-28-25
GRANT C. LUCKENBILL-ENGINEER
MO# PE-2012018100

DATE PREPARED 2/27/2025
ROUTE 291 | STATE MO
DISTRICT BR | SHEET NO. 38
COUNTY JACKSON
JOB NO. J4P3196
FEDERAL PROJECT NO STB-3001(009)
PROJECT NO.
BRIDGE NO. A9328

DESCRIPTION | DATE | REV.

MISSOURI HIGHWAYS AND TRANSPORTATION COMMISSION
105 WEST CAPITOL
JEFFERSON CITY, MO 65102
1-888-ASK-MODOT (1-888-275-6636)

LEE'S SUMMIT MISSOURI

olsson
1301 BURLINGTON ST., STE. 100
NORTH KANSAS CITY, MO 64116
PHONE: 816.361.1177
CERT. OF AUTHORITY NO. 001592

IF A SEAL IS PRESENT ON THIS SHEET IT HAS BEEN ELECTRONICALLY SEALED AND DATED.

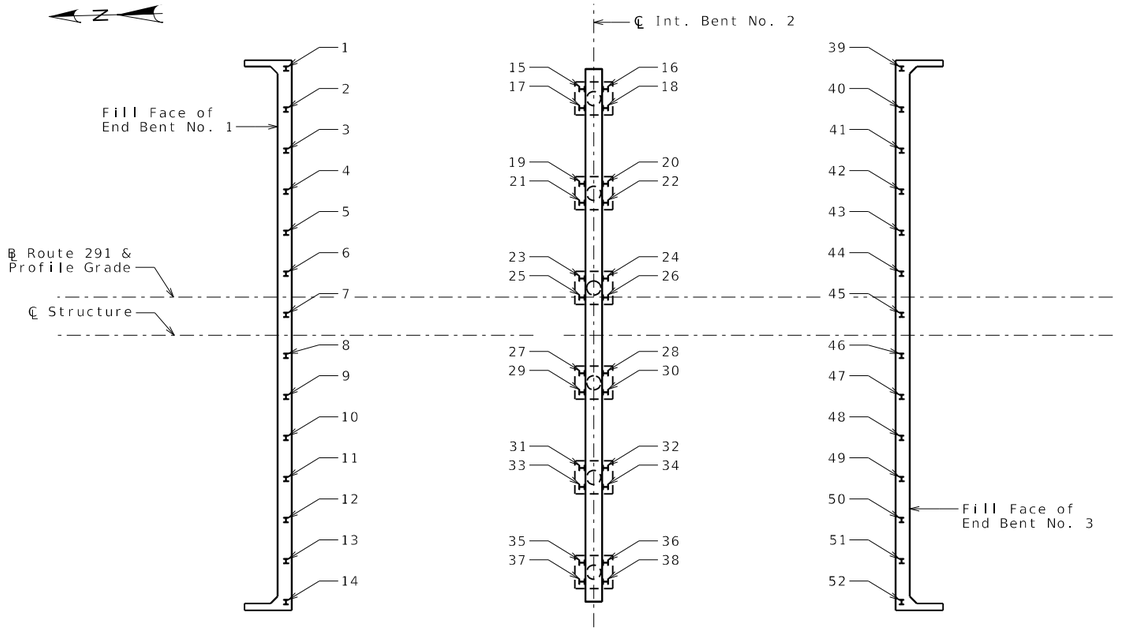

PART PLAN SHOWING PILE NUMBERING
FOR RECORDING AS-BUILT PILE DATA

As-Built Pile Data			
Pile No.	Length in Place (ft.)	Computed Nominal Axial Compressive Resistance (kips)	Remarks
			End Bent No. 1
1			
2			
3			
4			
5			
6			
7			
8			
9			
10			
11			
12			
13			
14			

As-Built Pile Data			
Pile No.	Length in Place (ft.)	Computed Nominal Axial Compressive Resistance (kips)	Remarks
			Int. Bent No. 2
15			
16			
17			
18			
19			
20			
21			
22			
23			
24			
25			
26			
27			
28			
29			
30			
31			
32			
33			
34			
35			
36			
37			
38			

As-Built Pile Data			
Pile No.	Length in Place (ft.)	Computed Nominal Axial Compressive Resistance (kips)	Remarks
			End Bent No. 3
39			
40			
41			
42			
43			
44			
45			
46			
47			
48			
49			
50			
51			
52			

Note:
Indicate in remarks column:
A. Pile type and grade
B. Batter
C. Driven to practical refusal

This sheet to be completed by construction personnel.

AS-BUILT PILE DATA

Detailed Oct. 2023
Checked Feb. 2024

Note: This drawing is not to scale. Follow dimensions.

F:\2021\04501-05000\021-04786\40-Design\Microstation\J4P3196\plan_sheets\16 Bridge Sheets\B_A9328_039_J4P3196_Asbuilt.dgn 5:42:01 PM 2/27/2025

Digitally signed by Grant Luckenbill
Date: 2025.02.28 15:00:24-06'00'

GRANT C. LUCKENBILL NUMBER PE-2012018100 2-28-25

GRANT C. LUCKENBILL-ENGINEER
MO# PE-2012018100

DATE PREPARED
2/27/2025

ROUTE	STATE
291	MO
DISTRICT	SHEET NO.
BR	39

COUNTY
JACKSON

JOB NO.
J4P3196

FEDERAL PROJECT NO
STB-3001(009)

PROJECT NO.

BRIDGE NO.
A9328

DESCRIPTION	DATE

IF A SEAL IS PRESENT ON THIS SHEET IT HAS BEEN ELECTRONICALLY SEALED AND DATED.

MISSOURI HIGHWAYS AND TRANSPORTATION COMMISSION
105 WEST CAPITOL
JEFFERSON CITY, MO 65102
1-888-ASK-MODOT (1-888-275-6636)

LEE'S SUMMIT MISSOURI

olsson
1301 BURLINGTON ST., STE. 100
NORTH KANSAS CITY, MO 64116
PHONE: 816.361.1177
CERT. OF AUTHORITY NO. 001592

REV.

olsson

BOREHOLE REPORT NO. BB-1

Sheet 1 of 2

PROJECT NAME: Lee's Summit M291 Interchange Hwy 50
CLIENT: Missouri Department of Transportion
PROJECT NUMBER: 021-04786
LOCATION: Lee's Summit, Missouri

Shelby Tube ☒ Split Spoon
Rock Core

ELEVATION (ft)	MATERIAL DESCRIPTION	GRAPHIC LOG	DEPTH (ft)	SAMPLE TYPE NUMBER	CLASSIFICATION (USCS)	BLOWS/6" N-VALUE	UNC. STR. (tsf)	MOISTURE (%)	DRY DENSITY (pcf)	LL/PI (%)	ADDITIONAL DATA/ REMARKS
	: X: 0 Y: 110										
	APPROX. SURFACE ELEV. (ft):1028		0								
	ASPHALT 0.3'										
	Thickness of 3"										
	CONCRETE 1.0'										
	Thickness of 9"										
1025	***LEAN TO FAT CLAY***										
	Very stiff to hard, grayish brown and yellowish brown, moist, trace sand, silty			U 1				28.4	97.8		PP = 3.5 tsf
			5	U 2				24.7	102.4		PP = 4.25 tsf
	7.0'										
1020	*Grades to dry, shaley*										
			10	U 3				16.9	112.4		PP = 4.5+ tsf
	12.0'										
1015	***WEATHERED SHALE***										
	Yellowish brown, silty, trace sand - Chanute Shale Formation			SS 4		12-50/5.5"		13.9			
			15								
	▽										
1010				SS 5		50/5"		11.9			
			20								

CONTINUED NEXT PAGE

WATER LEVEL OBSERVATIONS	
WD	▽ 16.0 ft
IAD	▼ Not Performed
AD	▼ Not Performed

OLSSON, INC.
1700 E. 123RD STREET
OLATHE, KANSAS 66061

STARTED:	12/13/22	FINISHED:	12/13/22
DRILL CO.:	OLSSON	DRILL RIG:	CME 550X
DRILLER:	D. LUDWIG	LOGGED BY:	E. CRISP
METHOD:	HOLLOW STEM AUGER / ROCK CORE		

olsson

BOREHOLE REPORT NO. BB-1

Sheet 2 of 2

PROJECT NAME: Lee's Summit M291 Interchange Hwy 50
CLIENT: Missouri Department of Transportion
PROJECT NUMBER: 021-04786
LOCATION: Lee's Summit, Missouri

Shelby Tube ☒ Split Spoon
Rock Core

ELEVATION (ft)	MATERIAL DESCRIPTION	GRAPHIC LOG	DEPTH (ft)	SAMPLE TYPE NUMBER	CLASSIFICATION (USCS)	BLOWS/6" N-VALUE	UNC. STR. (tsf)	MOISTURE (%)	DRY DENSITY (pcf)	LL/PI (%)	ADDITIONAL DATA/ REMARKS
	WEATHERED SHALE		20								
	Yellowish brown, silty, trace sand - Chanute Shale Formation (continued)										
	22.0'										
1005	*Grades to gray, sandy - Chanute Shale Formation*			SS 6		50/4"		9.6			
			25								
1000				SS 7		50/3"		10.1			
	30.0'		30								
	SANDSTONE										
	Gray - Chanute Shale Formation			RC 8							Recovery 100.0% RQD 47.5%
995			35								
				RC 9				469.0 222.0			Recovery 100.0% RQD 66.7%
990	40.0'		40								

BASE OF BORING AT 40.0 FEET

WATER LEVEL OBSERVATIONS	
WD	▽ 16.0 ft
IAD	▼ Not Performed
AD	▼ Not Performed

OLSSON, INC.
1700 E. 123RD STREET
OLATHE, KANSAS 66061

STARTED:	12/13/22	FINISHED:	12/13/22
DRILL CO.:	OLSSON	DRILL RIG:	CME 550X
DRILLER:	D. LUDWIG	LOGGED BY:	E. CRISP
METHOD:	HOLLOW STEM AUGER / ROCK CORE		

Digitally signed by Grant Luckenbill
Date: 2025.02.28 15:00:15-06'00'

GRANT C. LUCKENBILL NUMBER PE-2012018100 2-28-25
GRANT C. LUCKENBILL–ENGINEER
MO# PE-2012018100

DATE PREPARED: 2/27/2025
ROUTE: 291 | STATE: MO
DISTRICT: BR | SHEET NO.: 40
COUNTY: JACKSON
JOB NO.: J4P3196
FEDERAL PROJECT NO: STB-3001(009)
PROJECT NO.:
BRIDGE NO.: A9328

DESCRIPTION | DATE

MISSOURI HIGHWAYS AND TRANSPORTATION COMMISSION
105 WEST CAPITOL
JEFFERSON CITY, MO 65102
1-888-ASK-MODOT (1-888-275-6636)

MoDOT

LEE'S SUMMIT MISSOURI

olsson
1301 BURLINGTON ST., STE. 100
NORTH KANSAS CITY, MO 64116
PHONE: 816.361.1177
CERT. OF AUTHORITY NO. 001592

IF A SEAL IS PRESENT ON THIS SHEET IT HAS BEEN ELECTRONICALLY SEALED AND DATED.

BORING DATA

Note: For locations of borings, see Sheet No. 1.

Detailed Oct. 2023
Checked Feb. 2024

Note: This drawing is not to scale. Follow dimensions.

F:\2021\04501-05000\021-04786\40-Design\Microstation\J4P3196\plan_sheets\16 Bridge Sheets\B_A9328_040_J4P3196_Boring Log (1 of 7).dgn 5:42:03 PM 2/27/2025

olsson

BOREHOLE REPORT NO. BB-2

Sheet 1 of 2

PROJECT NAME: Lee's Summit M291 Interchange Hwy 50
CLIENT: Missouri Department of Transportion
PROJECT NUMBER: 021-04786
LOCATION: Lee's Summit, Missouri

Shelby Tube ☒ Split Spoon
Rock Core

ELEVATION (ft)	MATERIAL DESCRIPTION	GRAPHIC LOG	DEPTH (ft)	SAMPLE TYPE NUMBER	CLASSIFICATION (USCS)	BLOWS/6" N-VALUE	UNC. STR. (tsf)	MOISTURE (%)	DRY DENSITY (pcf)	LL/PI (%)	ADDITIONAL DATA/ REMARKS
	: X: 80 Y: 110										
	APPROX. SURFACE ELEV. (ft):1028		0								
	ASPHALT 0.3'										
	Thickness of 3"										
	CONCRETE 1.0'										
	Thickness of 9"										
1025	***LEAN TO FAT CLAY***			U 1				16.2	113.2		PP = 4.5 tsf
	Hard, grayish brown and yellowish brown, moist, some sand, silty										
			5	U 2				13.3			PP = 4.5+ tsf
	7.0'										
1020	*Grades to dry, shaley*										
			10	U 3				14.8	111.0		PP = 4.5+ tsf
	12.0'										
1015	***WEATHERED SHALE***										
	Yellowish brown, silty, trace sand - Chanute Shale Formation										
	▽		15	SS 4		15-32-50/4"		13.6			
1010											
			20	SS 5		50/5.5"		11.4			

CONTINUED NEXT PAGE

WATER LEVEL OBSERVATIONS	
WD	▽ 14.0 ft
IAD	▼ Not Performed
AD	▼ Not Performed

OLSSON, INC.
1700 E. 123RD STREET
OLATHE, KANSAS 66061

STARTED:	12/13/22	FINISHED:	12/13/22
DRILL CO.:	OLSSON	DRILL RIG:	CME 550X
DRILLER:	D. LUDWIG	LOGGED BY:	E. CRISP
METHOD:	HOLLOW STEM AUGER / ROCK CORE		

olsson

BOREHOLE REPORT NO. BB-2

Sheet 2 of 2

PROJECT NAME: Lee's Summit M291 Interchange Hwy 50
CLIENT: Missouri Department of Transportion
PROJECT NUMBER: 021-04786
LOCATION: Lee's Summit, Missouri

Shelby Tube ☒ Split Spoon
Rock Core

ELEVATION (ft)	MATERIAL DESCRIPTION	GRAPHIC LOG	DEPTH (ft)	SAMPLE TYPE NUMBER	CLASSIFICATION (USCS)	BLOWS/6" N-VALUE	UNC. STR. (tsf)	MOISTURE (%)	DRY DENSITY (pcf)	LL/PI (%)	ADDITIONAL DATA/ REMARKS
	WEATHERED SHALE		20								
	Yellowish brown, silty, trace sand - Chanute Shale Formation (continued)										
	22.0'										
1005	*Grades to gray, sandy - Chanute Shale Formation*			SS 6		50/4"		9.5			
			25								
1000				SS 7		50/3"		9.7			
	30.0'		30								
	SANDSTONE										
	Gray - Chanute Shale Formation			RC 8							Recovery 100.0% RQD 54.2%
995			35								
990				RC 9				76.0			Recovery 100.0% RQD 64.2%
	40.0'		40								

BASE OF BORING AT 40.0 FEET

WATER LEVEL OBSERVATIONS	
WD	▽ 14.0 ft
IAD	▼ Not Performed
AD	▼ Not Performed

OLSSON, INC.
1700 E. 123RD STREET
OLATHE, KANSAS 66061

STARTED:	12/13/22	FINISHED:	12/13/22
DRILL CO.:	OLSSON	DRILL RIG:	CME 550X
DRILLER:	D. LUDWIG	LOGGED BY:	E. CRISP
METHOD:	HOLLOW STEM AUGER / ROCK CORE		

Digitally signed by Grant Luckenbill
Date: 2025.02.28 15:02:55-06'00'

GRANT C. LUCKENBILL NUMBER PE-2012018100 2-28-25
GRANT C. LUCKENBILL–ENGINEER
MO# PE-2012018100

DATE PREPARED: 2/27/2025
ROUTE: 291 | STATE: MO
DISTRICT: BR | SHEET NO.: 41
COUNTY: JACKSON
JOB NO.: J4P3196
FEDERAL PROJECT NO: STB-3001(009)
PROJECT NO.:
BRIDGE NO.: A9328

DESCRIPTION | DATE

MISSOURI HIGHWAYS AND TRANSPORTATION COMMISSION
105 WEST CAPITOL
JEFFERSON CITY, MO 65102
1-888-ASK-MODOT (1-888-275-6636)

LEE'S SUMMIT MISSOURI

olsson
1301 BURLINGTON ST., STE. 100
NORTH KANSAS CITY, MO 64116
PHONE: 816.361.1177
CERT. OF AUTHORITY NO. 001592

IF A SEAL IS PRESENT ON THIS SHEET IT HAS BEEN ELECTRONICALLY SEALED AND DATED.

BORING DATA

Note: For locations of borings, see Sheet No. 1.

Detailed Oct. 2023
Checked Feb. 2024

Note: This drawing is not to scale. Follow dimensions.

F:\2021\04501-05000\021-04786\40-Design\Microstation\J4P3196\plan_sheets\16 Bridge Sheets\B_A9328_041_J4P3196_Boring Log (2 of 7).dgn 5:42:08 PM 2/27/2025

olsson

BOREHOLE REPORT NO. BB-3

Sheet 1 of 3

PROJECT NAME: Lee's Summit M291 Interchange Hwy 50
CLIENT: Missouri Department of Transportion
PROJECT NUMBER: 021-04786
LOCATION: Lee's Summit, Missouri

Shelby Tube ☒ Split Spoon
Rock Core

MATERIAL DESCRIPTION

: X: 0 Y: 45

APPROX. SURFACE ELEV. (ft):1028

ELEVATION (ft)	MATERIAL DESCRIPTION	GRAPHIC LOG	DEPTH (ft)	SAMPLE TYPE NUMBER	CLASSIFICATION (USCS)	BLOWS/6" N-VALUE	UNC. STR. (tsf)	MOISTURE (%)	DRY DENSITY (pcf)	LL/PI (%)	ADDITIONAL DATA/ REMARKS
	CONCRETE		0								
	Thickness of 12" 1.0'										
	LEAN TO FAT CLAY										
1025	*Stiff, yellowish brown, moist, trace sand and trace fine gravel*			U 1				27.9	96.5		PP = 3.25 tsf
	▽		5	U 2				25.9	99.2		PP = 4.25 tsf
	7.0'										
1020	*Grades to hard, dry, shaley*										
			10	U 3				14.6	111.2		PP = 4.5+ tsf
1015											
			15	U 4				17.8	105.3		PP = 4.5+ tsf
	17.0'										
	WEATHERED SHALE										
1010	▽ *Yellowish brown, silty, trace sand – Chanute Shale Formation*			SS 5		50/5.5"		12.0			
			20								

CONTINUED NEXT PAGE

WATER LEVEL OBSERVATIONS	
WD	▽ 18.0 ft
IAD	▼ Not Encountered
AD	▼ 3.5 ft after 24Hrs

OLSSON, INC.
1700 E. 123RD STREET
OLATHE, KANSAS 66061

STARTED:	11/29/22	FINISHED:	11/29/22
DRILL CO.:	OLSSON	DRILL RIG:	CME 550X
DRILLER:	D. LUDWIG	LOGGED BY:	E. CRISP
METHOD:	HOLLOW STEM AUGER / ROCK CORE		

olsson

BOREHOLE REPORT NO. BB-3

Sheet 2 of 3

PROJECT NAME: Lee's Summit M291 Interchange Hwy 50
CLIENT: Missouri Department of Transportion
PROJECT NUMBER: 021-04786
LOCATION: Lee's Summit, Missouri

Shelby Tube ☒ Split Spoon
Rock Core

MATERIAL DESCRIPTION

ELEVATION (ft)	MATERIAL DESCRIPTION	GRAPHIC LOG	DEPTH (ft)	SAMPLE TYPE NUMBER	CLASSIFICATION (USCS)	BLOWS/6" N-VALUE	UNC. STR. (tsf)	MOISTURE (%)	DRY DENSITY (pcf)	LL/PI (%)	ADDITIONAL DATA/ REMARKS
	WEATHERED SHALE		20								
	Yellowish brown, silty, trace sand - Chanute Shale Formation (continued)										
1005	23.0'										
	Grades to gray, sandy - Chanute Shale Formation			SS 6		50/5.5"		10.4			
			25								
1000				SS 7		50/4"		10.1			
	30.0'		30								
	SANDSTONE										
	Gray - Chanute Shale Formation			RC 8				162.0			Recovery 88.3% RQD 88.3%
995			35								
				RC 9				123.0			Recovery 100.0% RQD 73.3%
990			40								

CONTINUED NEXT PAGE

WATER LEVEL OBSERVATIONS	
WD	▽ 18.0 ft
IAD	▼ Not Encountered
AD	▼ 3.5 ft after 24Hrs

OLSSON, INC.
1700 E. 123RD STREET
OLATHE, KANSAS 66061

STARTED:	11/29/22	FINISHED:	11/29/22
DRILL CO.:	OLSSON	DRILL RIG:	CME 550X
DRILLER:	D. LUDWIG	LOGGED BY:	E. CRISP
METHOD:	HOLLOW STEM AUGER / ROCK CORE		

Digitally signed by Grant Luckenbill
Date: 2025.02.28 15:02:46-06'00'

GRANT C. LUCKENBILL NUMBER PE-2012018100 2-28-25
GRANT C. LUCKENBILL–ENGINEER
MO# PE-2012018100

IF A SEAL IS PRESENT ON THIS SHEET IT HAS BEEN ELECTRONICALLY SEALED AND DATED.

DATE PREPARED: 2/27/2025
ROUTE: 291 | STATE: MO
DISTRICT: BR | SHEET NO.: 42
COUNTY: JACKSON
JOB NO.: J4P3196
FEDERAL PROJECT NO: STB-3001(009)
PROJECT NO.:
BRIDGE NO.: A9328

DESCRIPTION | DATE

MISSOURI HIGHWAYS AND TRANSPORTATION COMMISSION
105 WEST CAPITOL
JEFFERSON CITY, MO 65102
1-888-ASK-MODOT (1-888-275-6636)

LEE'S SUMMIT MISSOURI

olsson
1301 BURLINGTON ST., STE. 100
NORTH KANSAS CITY, MO 64116
PHONE: 816.361.1177
CERT. OF AUTHORITY NO. 001592

BORING DATA

Note: For locations of borings, see Sheet No. 1.

Detailed Oct. 2023
Checked Feb. 2024

Note: This drawing is not to scale. Follow dimensions.

F:\2021\04501-05000\021-04786\40-Design\Microstation\J4P3196\plan_sheets\16 Bridge Sheets\B_A9328_042_J4P3196_Boring Log (3 of 7).dgn 5:42:12 PM 2/27/2025

olsson

BOREHOLE REPORT NO. BB-3

Sheet 3 of 3

PROJECT NAME: Lee's Summit M291 Interchange Hwy 50
PROJECT NUMBER: 021-04786
CLIENT: Missouri Department of Transportion
LOCATION: Lee's Summit, Missouri

Shelby Tube ☒ Split Spoon
Rock Core

ELEVATION (ft)	MATERIAL DESCRIPTION	GRAPHIC LOG	DEPTH (ft)	SAMPLE TYPE NUMBER	CLASSIFICATION (USCS)	BLOWS/6" N-VALUE	UNC. STR. (tsf)	MOISTURE (%)	DRY DENSITY (pcf)	LL/PI (%)	ADDITIONAL DATA/ REMARKS
	40										
	SANDSTONE										
	Gray -										
	Chanute Shale Formation (continued)										
	42.0'										
985	***SHALE***			RC 10							Recovery 93.3% RQD 36.7%
	Gray, sandy -										
	Liberty Memorial Shale Formation		45								
	46.0'										
980	***LIMESTONE***			RC 11			394.0 530.0				Recovery 98.3% RQD 73.3%
	Light bluish-gray -										
	Drum Limestone Formation		50								
	50.0'										
	SHALE										
	Gray -										
	Cherryvale Shale Formation			RC 12							Recovery 95.0% RQD 61.7%
975			55								
				RC 13							Recovery 100.0% RQD 86.7%
970											
	60.0'		60								
	BASE OF BORING AT 60.0 FEET										

WATER LEVEL OBSERVATIONS	
WD	▽ 18.0 ft
IAD	▼ Not Encountered
AD	▼ 3.5 ft after 24Hrs

OLSSON, INC.
1700 E. 123RD STREET
OLATHE, KANSAS 66061

STARTED:	11/29/22	FINISHED:	11/29/22
DRILL CO.:	OLSSON	DRILL RIG:	CME 550X
DRILLER:	D. LUDWIG	LOGGED BY:	E. CRISP
METHOD:	HOLLOW STEM AUGER / ROCK CORE		

olsson

BOREHOLE REPORT NO. BB-4

Sheet 1 of 3

PROJECT NAME: Lee's Summit M291 Interchange Hwy 50
PROJECT NUMBER: 021-04786
CLIENT: Missouri Department of Transportion
LOCATION: Lee's Summit, Missouri

Shelby Tube ☒ Split Spoon
Rock Core

: X: 80 Y: 45
APPROX. SURFACE ELEV. (ft): 1028

ELEVATION (ft)	MATERIAL DESCRIPTION	GRAPHIC LOG	DEPTH (ft)	SAMPLE TYPE NUMBER	CLASSIFICATION (USCS)	BLOWS/6" N-VALUE	UNC. STR. (tsf)	MOISTURE (%)	DRY DENSITY (pcf)	LL/PI (%)	ADDITIONAL DATA/ REMARKS
	CONCRETE		0								
	Thickness of 12" ***1.0'***										
	LEAN TO FAT CLAY			U 1				21.7	106.7		PP = 4.5+ tsf
1025	*Very stiff, yellowish brown, moist*										
			5	U 2				17.5	114.9		PP = 4.5+ tsf
	7.0'										
1020	*Grades to hard, dry, shaley, silty, trace sand*			U 3				14.5	114.4		PP = 4.5+ tsf
			10								
1015				U 4				18.1	107.9		PP = 4.5+ tsf
			15								
	▽ ***17.0'***										
	WEATHERED SHALE										
1010	*Yellowish brown, grayish brown -*			SS 5		50/5.5"		12.3			
	Chanute Shale Formation		20								
	CONTINUED NEXT PAGE										

WATER LEVEL OBSERVATIONS	
WD	▽ 16.0 ft
IAD	▼ Not Encountered
AD	▼ Not Encountered

OLSSON, INC.
1700 E. 123RD STREET
OLATHE, KANSAS 66061

STARTED:	11/30/22	FINISHED:	11/30/22
DRILL CO.:	OLSSON	DRILL RIG:	CME 550X
DRILLER:	D. LUDWIG	LOGGED BY:	E. CRISP
METHOD:	HOLLOW STEM AUGER / ROCK CORE		

Digitally signed by Grant Luckenbill
Date: 2025.02.28 15:01:55-06'00'

GRANT C. LUCKENBILL NUMBER PE-2012018100 LICENSED 2-28-25
GRANT C. LUCKENBILL–ENGINEER
MO# PE-2012018100

IF A SEAL IS PRESENT ON THIS SHEET IT HAS BEEN ELECTRONICALLY SEALED AND DATED.

DATE PREPARED: 2/27/2025
ROUTE: 291 | STATE: MO
DISTRICT: BR | SHEET NO.: 43
COUNTY: JACKSON
JOB NO.: J4P3196
FEDERAL PROJECT NO: STB-3001(009)
PROJECT NO.:
BRIDGE NO.: A9328

DESCRIPTION | DATE

MISSOURI HIGHWAYS AND TRANSPORTATION COMMISSION
105 WEST CAPITOL
JEFFERSON CITY, MO 65102
1-888-ASK-MODOT (1-888-275-6636)

LEE'S SUMMIT MISSOURI

olsson
1301 BURLINGTON ST., STE. 100
NORTH KANSAS CITY, MO 64116
PHONE: 816.361.1177
CERT. OF AUTHORITY NO. 001592

BORING DATA

Note: For locations of borings, see Sheet No. 1.

Detailed Oct. 2023
Checked Feb. 2024

Note: This drawing is not to scale. Follow dimensions.

F:\2021\04501-05000\021-04786\40-Design\Microstation\J4P3196\plan_sheets\16 Bridge Sheets\B_A9328_043_J4P3196_Boring Log (4 of 7).dgn 5:42:15 PM 2/27/2025

olsson

BOREHOLE REPORT NO. BB-4

Sheet 2 of 3

PROJECT NAME: Lee's Summit M291 Interchange Hwy 50
CLIENT: Missouri Department of Transportion
PROJECT NUMBER: 021-04786
LOCATION: Lee's Summit, Missouri

Shelby Tube ☒ Split Spoon
Rock Core

ELEVATION (ft)	MATERIAL DESCRIPTION	GRAPHIC LOG	DEPTH (ft)	SAMPLE TYPE NUMBER	CLASSIFICATION (USCS)	BLOWS/6" N-VALUE	UNC. STR. (tsf)	MOISTURE (%)	DRY DENSITY (pcf)	LL/PI (%)	ADDITIONAL DATA/ REMARKS
			20								
1005	***WEATHERED SHALE*** *Yellowish brown, grayish brown -* *Chanute Shale Formation (continued)*										
	23.0'										
	Grades to gray - *Chanute Shale Formation*		25	SS 6		50/5"		12.4			
1000				SS 7		50/5"		20.0			
	30.0'		30								
	SANDSTONE *Gray -* *Chanute Shale Formation*			RC 8							Recovery 98.3% RQD 30.0%
995			35								
				RC 9			205.0 162.0				Recovery 96.7% RQD 41.7%
990			40								
	CONTINUED NEXT PAGE										

WATER LEVEL OBSERVATIONS	
WD	▽ 16.0 ft
IAD	▼ Not Encountered
AD	▼ Not Encountered

OLSSON, INC.
1700 E. 123RD STREET
OLATHE, KANSAS 66061

STARTED:	11/30/22	FINISHED:	11/30/22
DRILL CO.:	OLSSON	DRILL RIG:	CME 550X
DRILLER:	D. LUDWIG	LOGGED BY:	E. CRISP
METHOD:	HOLLOW STEM AUGER / ROCK CORE		

olsson

BOREHOLE REPORT NO. BB-4

Sheet 3 of 3

PROJECT NAME: Lee's Summit M291 Interchange Hwy 50
CLIENT: Missouri Department of Transportion
PROJECT NUMBER: 021-04786
LOCATION: Lee's Summit, Missouri

Shelby Tube ☒ Split Spoon
Rock Core

ELEVATION (ft)	MATERIAL DESCRIPTION	GRAPHIC LOG	DEPTH (ft)	SAMPLE TYPE NUMBER	CLASSIFICATION (USCS)	BLOWS/6" N-VALUE	UNC. STR. (tsf)	MOISTURE (%)	DRY DENSITY (pcf)	LL/PI (%)	ADDITIONAL DATA/ REMARKS
			40								
	SANDSTONE *Gray -* *Chanute Shale Formation (continued)*			RC 10							Recovery 95.0% RQD 17.5%
985			45								
	46.0'										
	LIMESTONE *Light bluish-gray -* *Drum Limestone Formation*			RC 11			664.0 944.0				Recovery 100.0% RQD 51.7%
980	***48.5'***										
	SHALE *Gray -* *Cherryvale Shale Formation*		50								
975				RC 12							Recovery 100.0% RQD 43.3%
			55								
970				RC 13							Recovery 100.0% RQD 13.3%
	60.0'		60								
	BASE OF BORING AT 60.0 FEET										

WATER LEVEL OBSERVATIONS	
WD	▽ 16.0 ft
IAD	▼ Not Encountered
AD	▼ Not Encountered

OLSSON, INC.
1700 E. 123RD STREET
OLATHE, KANSAS 66061

STARTED:	11/30/22	FINISHED:	11/30/22
DRILL CO.:	OLSSON	DRILL RIG:	CME 550X
DRILLER:	D. LUDWIG	LOGGED BY:	E. CRISP
METHOD:	HOLLOW STEM AUGER / ROCK CORE		

Digitally signed by Grant Luckenbill
Date: 2025.02.28 15:02:05-06'00'

GRANT C. LUCKENBILL NUMBER PE-2012018100 LICENSED 2-28-25
GRANT C. LUCKENBILL–ENGINEER
MO# PE-2012018100

DATE PREPARED: 2/27/2025
ROUTE: 291 | STATE: MO
DISTRICT: BR | SHEET NO.: 44
COUNTY: JACKSON
JOB NO.: J4P3196
FEDERAL PROJECT NO: STB-3001(009)
PROJECT NO.:
BRIDGE NO.: A9328

DESCRIPTION | DATE

MISSOURI HIGHWAYS AND TRANSPORTATION COMMISSION
105 WEST CAPITOL
JEFFERSON CITY, MO 65102
1-888-ASK-MODOT (1-888-275-6636)

LEE'S SUMMIT MISSOURI

olsson
1301 BURLINGTON ST., STE. 100
NORTH KANSAS CITY, MO 64116
PHONE: 816.361.1177
CERT. OF AUTHORITY NO. 001592

IF A SEAL IS PRESENT ON THIS SHEET IT HAS BEEN ELECTRONICALLY SEALED AND DATED.

BORING DATA

Note: For locations of borings, see Sheet No. 1.

Detailed Oct. 2023
Checked Feb. 2024

Note: This drawing is not to scale. Follow dimensions.

F:\2021\04501-05000\021-04786\40-Design\Microstation\J4P3196\plan_sheets\16 Bridge Sheets\B_A9328_044_J4P3196_Boring Log (5 of 7).dgn 5:42:19 PM 2/27/2025

olsson

BOREHOLE REPORT NO. BB-5

Sheet 1 of 2

PROJECT NAME: Lee's Summit M291 Interchange Hwy 50
PROJECT NUMBER: 021-04786
CLIENT: Missouri Department of Transportion
LOCATION: Lee's Summit, Missouri

Shelby Tube | Split Spoon | Rock Core

ELEVATION (ft)	MATERIAL DESCRIPTION	GRAPHIC LOG	DEPTH (ft)	SAMPLE TYPE NUMBER	CLASSIFICATION (USCS)	BLOWS/6" N-VALUE	UNC. STR. (tsf)	MOISTURE (%)	DRY DENSITY (pcf)	LL/PI (%)	ADDITIONAL DATA/ REMARKS
	: X: 0 Y: 0										
	APPROX. SURFACE ELEV. (ft):1028		0								
	ASPHALT *0.3'*										
	Thickness of 3" *1.0'*										
	CONCRETE										
	Thickness of 9"										
1025	***LEAN TO FAT CLAY***			U 1				28.7	96.3		PP = 3.5 tsf
	Stiff, yellowish brown, moist										
				U 2				27.4	98.6		PP = 4.0 tsf
			5								
	7.0'										
1020	*Grades to hard, shaley*										
				U 3				19.8	108.4		PP = 4.5+ tsf
			10								
	12.0'										
	WEATHERED SHALE										
1015	*Yellowish brown, silty, trace sand - Chanute Shale Formation*			SS 4		50/2"		23.6			
	15.0'		15								
	SANDSTONE										
	Yellowish brown - Chanute Shale Formation			RC 5							Recovery 85.0% RQD 0.0%
1010	*20.0'*		20								

CONTINUED NEXT PAGE

WATER LEVEL OBSERVATIONS	
WD	Not Encountered
IAD	Not Encountered
AD	Not Encountered

OLSSON, INC.
1700 E. 123RD STREET
OLATHE, KANSAS 66061

STARTED:	12/1/22	FINISHED:	12/1/22
DRILL CO.:	OLSSON	DRILL RIG:	CME 550X
DRILLER:	D. LUDWIG	LOGGED BY:	E. CRISP
METHOD:	HOLLOW STEM AUGER / ROCK CORE		

olsson

BOREHOLE REPORT NO. BB-5

Sheet 2 of 2

PROJECT NAME: Lee's Summit M291 Interchange Hwy 50
PROJECT NUMBER: 021-04786
CLIENT: Missouri Department of Transportion
LOCATION: Lee's Summit, Missouri

Shelby Tube | Split Spoon | Rock Core

ELEVATION (ft)	MATERIAL DESCRIPTION	GRAPHIC LOG	DEPTH (ft)	SAMPLE TYPE NUMBER	CLASSIFICATION (USCS)	BLOWS/6" N-VALUE	UNC. STR. (tsf)	MOISTURE (%)	DRY DENSITY (pcf)	LL/PI (%)	ADDITIONAL DATA/ REMARKS
			20								
	SHALE										
	Yellowish brown - Chanute Shale Formation *21.5'*										
1005	*Grades to gray - Chanute Shale Formation*			RC 6							Recovery 100.0% RQD 35.0%
	25.0'		25								

BASE OF BORING AT 25.0 FEET

WATER LEVEL OBSERVATIONS	
WD	Not Encountered
IAD	Not Encountered
AD	Not Encountered

OLSSON, INC.
1700 E. 123RD STREET
OLATHE, KANSAS 66061

STARTED:	12/1/22	FINISHED:	12/1/22
DRILL CO.:	OLSSON	DRILL RIG:	CME 550X
DRILLER:	D. LUDWIG	LOGGED BY:	E. CRISP
METHOD:	HOLLOW STEM AUGER / ROCK CORE		

Digitally signed by Grant Luckenbill
Date: 2025.02.28 15:02:15-06'00'

GRANT C. LUCKENBILL NUMBER PE-2012018100 LICENSED 2-28-25
GRANT C. LUCKENBILL–ENGINEER
MO# PE-2012018100

DATE PREPARED: 2/27/2025
ROUTE: 291 | STATE: MO
DISTRICT: BR | SHEET NO.: 45
COUNTY: JACKSON
JOB NO.: J4P3196
FEDERAL PROJECT NO: STB-3001(009)
PROJECT NO.:
BRIDGE NO.: A9328

DESCRIPTION | DATE

MISSOURI HIGHWAYS AND TRANSPORTATION COMMISSION
105 WEST CAPITOL
JEFFERSON CITY, MO 65102
1-888-ASK-MODOT (1-888-275-6636)

LEE'S SUMMIT MISSOURI

olsson
1301 BURLINGTON ST., STE. 100
NORTH KANSAS CITY, MO 64116
PHONE: 816.361.1177
CERT. OF AUTHORITY NO. 001592

IF A SEAL IS PRESENT ON THIS SHEET IT HAS BEEN ELECTRONICALLY SEALED AND DATED.

BORING DATA

Note: For locations of borings, see Sheet No. 1.

Detailed Oct. 2023
Checked Feb. 2024

Note: This drawing is not to scale. Follow dimensions.

F:\2021\04501-05000\021-04786\40-Design\Microstation\J4P3196\plan_sheets\16 Bridge Sheets\B_A9328_045_J4P3196_Boring Log (6 of 7).dgn 5:42:23 PM 2/27/2025

olsson

BOREHOLE REPORT NO. BB-6

Sheet 1 of 2

PROJECT NAME: Lee's Summit M291 Interchange Hwy 50
CLIENT: Missouri Department of Transportion
PROJECT NUMBER: 021-04786
LOCATION: Lee's Summit, Missouri

Shelby Tube ☒ Split Spoon
Rock Core

MATERIAL DESCRIPTION

: X: 80 Y: 0

APPROX. SURFACE ELEV. (ft):1028

ELEVATION (ft)	MATERIAL DESCRIPTION	GRAPHIC LOG	DEPTH (ft)	SAMPLE TYPE NUMBER	CLASSIFICATION (USCS)	BLOWS/6" N-VALUE	UNC. STR. (tsf)	MOISTURE (%)	DRY DENSITY (pcf)	LL/PI (%)	ADDITIONAL DATA/ REMARKS
	ASPHALT 0.3'		0								
	Thickness of 4" 1.0'										
	CONCRETE										
	Thickneess of 8"										
1025	***LEAN TO FAT CLAY***			U 1				17.1	108.7		PP = 4.5+ tsf
	Very stiff, yellowish brown, dry, trace sand										
			5	U 2				16.1	113.5		PP = 4.5+ tsf
1020											
	8.5'										
	SANDY CLAY			U 3				16.1	111.5		PP = 4.5+ tsf
	Hard, yellowish brown, dry		10								
	11.0'										
	SHALE										
1015	*Yellowish brown and grayish brown - Chanute Shale Formation*										
			15	SS 4		17-32-50/4"		14.3			
	▽										
1010											
				SS 5		50/4"		12.4			
			20								

CONTINUED NEXT PAGE

WATER LEVEL OBSERVATIONS	
WD	▽ 17.0 ft
IAD	▼ Not Encountered
AD	▼ Not Encountered

OLSSON, INC.
1700 E. 123RD STREET
OLATHE, KANSAS 66061

STARTED:	12/1/22	FINISHED:	12/1/22
DRILL CO.:	OLSSON	DRILL RIG:	CME 550X
DRILLER:	D. LUDWIG	LOGGED BY:	E. CRISP
METHOD:	HOLLOW STEM AUGER / ROCK CORE		

olsson

BOREHOLE REPORT NO. BB-6

Sheet 2 of 2

PROJECT NAME: Lee's Summit M291 Interchange Hwy 50
CLIENT: Missouri Department of Transportion
PROJECT NUMBER: 021-04786
LOCATION: Lee's Summit, Missouri

Shelby Tube ☒ Split Spoon
Rock Core

MATERIAL DESCRIPTION

ELEVATION (ft)	MATERIAL DESCRIPTION	GRAPHIC LOG	DEPTH (ft)	SAMPLE TYPE NUMBER	CLASSIFICATION (USCS)	BLOWS/6" N-VALUE	UNC. STR. (tsf)	MOISTURE (%)	DRY DENSITY (pcf)	LL/PI (%)	ADDITIONAL DATA/ REMARKS
	SHALE		20								
	Yellowish brown and grayish brown - Chanute Shale Formation (continued)										
1005	23.0'										
	Grades to gray - Chanute Shale Formation			SS 6		50/3"		10.3			
			25								
1000				SS 7		50/1"		10.7			
			30								
				RC 8							Recovery 98.3% RQD 73.3%
995	33.8'										
	SANDSTONE		35								
	Gray - Chanute Shale Formation			RC 9				244.0 262.0			Recovery 98.3% RQD 56.7%
990	40.0'										
			40								

BASE OF BORING AT 40.0 FEET

WATER LEVEL OBSERVATIONS	
WD	▽ 17.0 ft
IAD	▼ Not Encountered
AD	▼ Not Encountered

OLSSON, INC.
1700 E. 123RD STREET
OLATHE, KANSAS 66061

STARTED:	12/1/22	FINISHED:	12/1/22
DRILL CO.:	OLSSON	DRILL RIG:	CME 550X
DRILLER:	D. LUDWIG	LOGGED BY:	E. CRISP
METHOD:	HOLLOW STEM AUGER / ROCK CORE		

Digitally signed by Grant Luckenbill
Date: 2025.02.28 15:02:31-06'00'

GRANT C. LUCKENBILL NUMBER PE-2012018100 2-28-25
GRANT C. LUCKENBILL–ENGINEER
MO# PE-2012018100

DATE PREPARED: 2/27/2025
ROUTE: 291 | STATE: MO
DISTRICT: BR | SHEET NO.: 46
COUNTY: JACKSON
JOB NO.: J4P3196
FEDERAL PROJECT NO: STB-3001(009)
PROJECT NO.:
BRIDGE NO.: A9328

DESCRIPTION | DATE

IF A SEAL IS PRESENT ON THIS SHEET IT HAS BEEN ELECTRONICALLY SEALED AND DATED.

MISSOURI HIGHWAYS AND TRANSPORTATION COMMISSION
105 WEST CAPITOL
JEFFERSON CITY, MO 65102
1-888-ASK-MODOT (1-888-275-6636)

LEE'S SUMMIT MISSOURI

olsson
1301 BURLINGTON ST., STE. 100
NORTH KANSAS CITY, MO 64116
PHONE: 816.361.1177
CERT. OF AUTHORITY NO. 001592

BORING DATA

Note: For locations of borings, see Sheet No. 1.

Detailed Oct. 2023
Checked Feb. 2024

Note: This drawing is not to scale. Follow dimensions.

F:\2021\04501-05000\021-04786\40-Design\Microstation\J4P3196\plan_sheets\16 Bridge Sheets\B_A9328_046_J4P3196_Boring Log (7 of 7).dgn 5:42:27 PM 2/27/2025

272' MECHANICALLY STABILIZED EARTH (MSE) RETAINING WALL SYSTEM

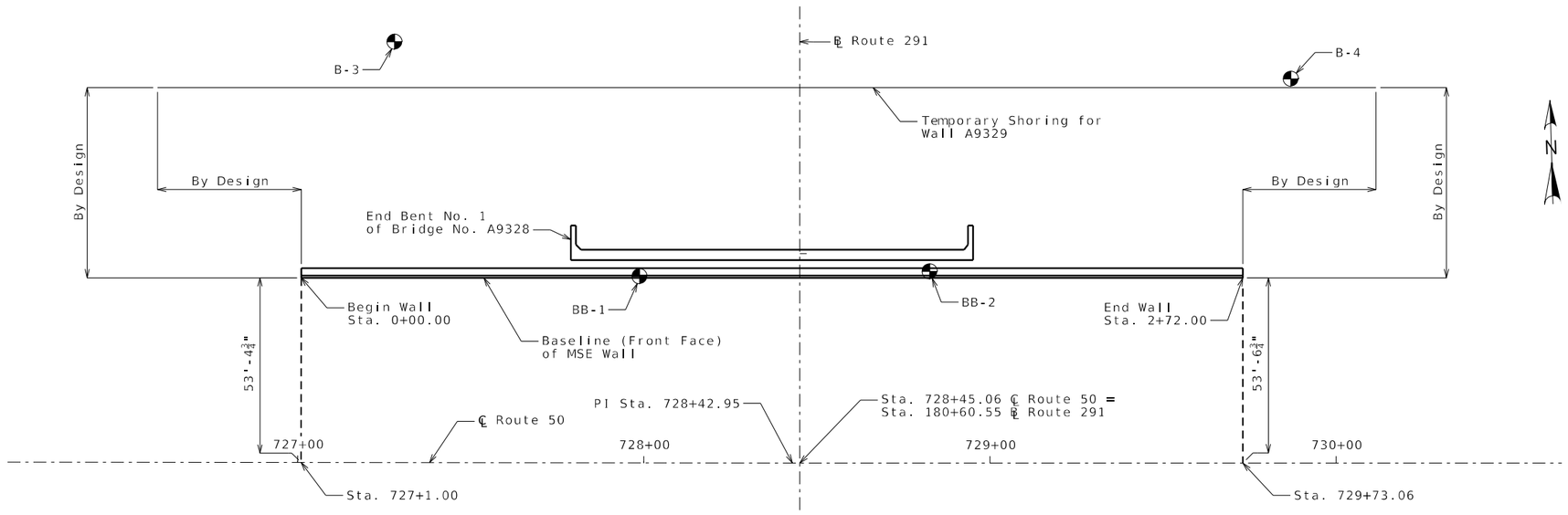

PLAN

Concrete Leveling pad and Coping not shown for clarity

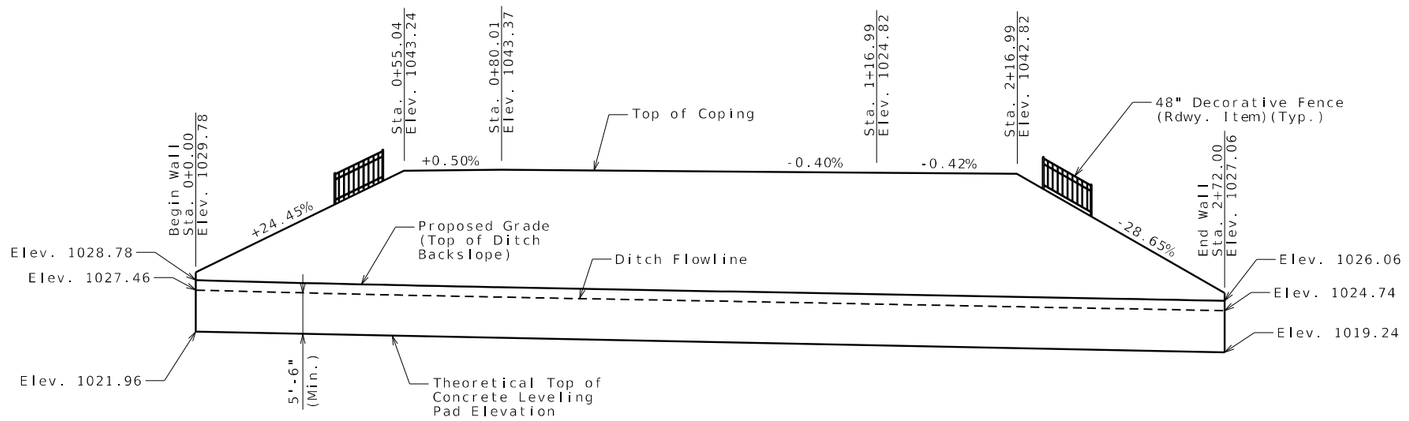

DEVELOPED ELEVATION

Concrete Leveling pad and Coping not shown for clarity. (1)
Ground Improvements not shown for clarity. (2)

(1) Wall contractor shall show the following items on the design drawings and/or on the fabricator shop drawing.

- Leveling pad horizontal.
- Leveling pad length and step elevations shall be based on wall manufacturer's recommendation. Top of leveling pad elevations shall not be higher than theoretical top of leveling pad elevations shown on these plans.

(2) See Sheet No. 3 for details of ground improvement

SEC/SUR 8 TWP 47N RGE 31W

◔ Indicates location of borings.

Notice and Disclaimer Regarding Boring Log Data

The locations of all subsurface borings for this structure are shown on the plan sheet(s) for this structure. The boring data for all locations indicated, as well as any other boring logs or other factual records of subsurface data and investigations performed by the department for the design of the project, are shown on Sheet(s) No. 5 thru 8 and may be included in the Electronic Bridge Deliverables. They will also be available from the Project Contact upon written request. No greater significance or weight should be given to the boring data depicted on the plan sheets than is given to the subsurface data available from the district or elsewhere.

The Commission does not represent or warrant that any such boring data accurately depicts the conditions to be encountered in constructing this project. A contractor assumes all risks it may encounter in basing its bid prices, time or schedule of performance on the boring data depicted here or those available from the district, or on any other documentation not expressly warranted, which the contractor may obtain from the Commission.

Digitally signed by Grant Luckenbill
Date: 2025.02.28 15:01:47-06'00'

GRANT C. LUCKENBILL NUMBER PE-2012018100 2-28-25

GRANT C. LUCKENBILL–ENGINEER
MO# PE-2012018100

DATE PREPARED 2/27/2025

ROUTE	STATE
291	MO
DISTRICT	SHEET NO.
BR	1

COUNTY JACKSON

JOB NO. J4P3196

FEDERAL PROJECT NO STB-3001(009)

PROJECT NO.

BRIDGE NO. A9329

DESCRIPTION	DATE

IF A SEAL IS PRESENT ON THIS SHEET IT HAS BEEN ELECTRONICALLY SEALED AND DATED.

MISSOURI HIGHWAYS AND TRANSPORTATION COMMISSION

105 WEST CAPITOL
JEFFERSON CITY, MO 65102
1-888-ASK-MODOT (1-888-275-6636)

LEE'S SUMMIT MISSOURI

olsson
1301 BURLINGTON ST., STE. 100
NORTH KANSAS CITY, MO 64116
PHONE: 816.361.1177
CERT. OF AUTHORITY NO. 001592

CP #3 - 1/2" REBAR W/ CONTROL POINT CAP
ELEVATION = 1034.50
NORTHING 997220.24
EASTING 2828083.97

RETAINING WALL ALONG LEFT SIDE OF ROUTE 50

ROUTE 50 FROM ROUTE I-470 TO ROUTE 7
ABOUT 3.6 MILES SOUTHEAST OF ROUTE I-470
BEGINNING STATION 727+01.00

Designed Feb. 2023
Detailed Sept. 2024
Checked Sept. 2024

Note: This drawing is not to scale. Follow dimensions.

F:\2021\04501-05000\021-04786\40-Design\Microstation\J4P3196\plan_sheets\20 Retaining Walls\A9329\B_A9329_001_JP43196_PLAN AND ELEV.dgn 5:57:26 PM 2/27/2025

General Notes:

Design Specifications:

2002 AASHTO LFD (17th Ed.) Standard Specifications (Section 5 ASD Design)
Seismic Performance Category = A
Acceleration Coefficient = 0.04

Design Loading:

Φ_b = 24° and Unit weight, γ_b = 120 pcf for retained backfill material to be retained by the mechanically stabilized earth wall system.

Φ_f = 32° for improved foundation ground where wall is to bear.

For improved foundation ground, the allowable bearing pressure is 5 ksf.

The maximum applied bearing pressure for the controlling design case at the foundation level shall be shown on the shop drawings and shall be less than the allowable bearing pressure for foundation ground provided herein. For seismic design the maximum applied bearing pressure shall be less than two times the allowable bearing pressure.

Allowable bearing pressure and limits of improved foundation ground shall not be adjusted from that as shown on the plans.

Contractor shall include design Φ_f (actual $\Phi_f \geq 34°$) and the total unit weight, γ_f , for the select granular backfill (reinforced backfill and wedge area backfill) for structural systems on shop drawings. Contractor shall identify source of select granular backfill material, submit proctor in accordance with AASHTO T 99 (ASTM D698) and gradation with the shop drawings. When backfill material is too coarse to develop a proctor curve the contractor shall determine the maximum dry density (relative density) in accordance with ASTM D4253 and ASTM D4254 and assume percent passing the 200 sieve for optimum water content.

Total unit weight, γ_f = (95% compaction) x (maximum dry density) x (1 + optimum water content)

Design Φ_f = 34°for the select granular backfill (reinforced backfill) only for structural systems.

Factor of safety shall be 2.0 for overturning and 1.5 for sliding.

For seismic design the factor of safety shall be 1.5 for overturning and 1.1 for sliding.

Use default values for the pullout friction factor, F^*, in accordance with AASHTO figure 5.8.5.2A and default value for scale effect correction factor, α, in accordance with AASHTO table 5.8.5.2A. For approved steel strips not shown in AASHTO figure 5.8.5.2A, use $F^* \leq 2.0$ at zero depth and $F^* \leq \text{Tan } \Phi_f$ at 20 feet depth and Φ_f design = 34°. F^* and α values shall be shown on the shop drawings.

Design Unit Stresses:

All concrete for leveling pad and coping shall be Class B or B-1 with f'c = 4000 psi.

The minimum compressive strength of concrete for precast panel shall be 4,000 psi in accordance with Sec 1052.

Miscellaneous:

The MSE wall system shall be built vertical.

The MSE wall system shall be built in accordance with Sec 720.

The MSE wall system shall be a large block wall system.

Panel, concrete block and coping (or capstone) reinforcement shall be epoxy coated.

A filter cloth meeting the requirements for a Separation Geotextile material shall be placed between the select granular backfill for structural systems and the backfill being retained by the mechanically stabilized earth wall system.

Coping shall be required on this structure. When CIP coping sections extend beyond the limits of a single panel, bond breaker (roofing felt or other approved alternate) between wall panel and coping is required. Coping joints shall use 3/4-inch chamfers and shall be sealed with 3/4-inch joint filler. Coping reinforcement shall terminate 1 1/2-inch minimum from face of coping joint.

The contractor shall be solely responsible to coordinate construction of the wall with bridge and roadway construction and ensure that the bridge and roadway construction, resulting or existing obstructions, shall not impact the construction or performance of the wall. Soil reinforcement shall be designed and placed to avoid damage by pile driving, guardrail post installation, utility and sign foundations. (See Roadway and Bridge plans.)

The contractor shall coordinate the design of the temporary shoring with the design of the MSE wall soil reinforcement.

Minimum 18" wide Geotextile strips shall be centered at vertical and horizontal joints of panel. Geotextile material shall be adhered to back face of panel using an adhesive compound supplied by the manufacturer. All edges of each fabric strip shall provide a positive seal. A minimum 18" overlap shall be provided between spliced filter fabric.

Aluminized soil reinforcement shall have edges coated with coating material per manufacturer.

Soil reinforcement shall be spaced to avoid roadway drop inlet behind wall.

All steel soil reinforcements shall be separated from other metallic elements by at least 3 inches.

The splay angle should be less than 15° and tensile capacity of splayed reinforcement shall be reduced by the cosine of the splay angle. Soil reinforcement shall clear the obstruction by at least 3 inches.

No reinforcement shall be left unconnected to the wall face or arbitrarily cut/bent in the field to avoid the obstruction.

Where interference between the vertical obstruction and the soil reinforcement is unavoidable, the design of the wall near the obstruction may be modified using one of the alternatives in FHWA-NHI-10-24, Section 5.4.2. Show detail layout on the drawings. For wall designs with horizontal obstructions in reinforced soil mass, see FHWA-NHI-10-024, Section 5.4.3.

Concrete and masonry protective coating shall be applied on all exposed concrete areas in accordance with Sec 711.

Sacrificial graffiti protective coating shall be applied on all exposed concrete areas in accordance with Sec 711.

Excavation:

Excavation quantities and pay items are given on the roadway plans. Excavation quantities are based on a soil reinforcement length of 30 ft. The soil reinforcement length may vary based upon the wall design selected by the contractor. Plan excavation quantities will be paid regardless of any actual quantities removed based on the soil reinforcement length and design selected.

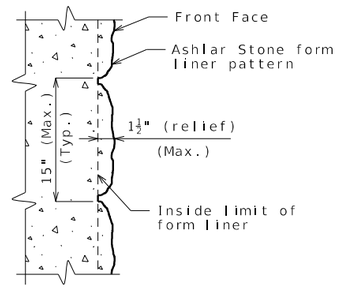

FORM LINER DETAIL
(Large Block Wall)

Notes:

The cost of form liners for MSE wall systems, complete in place, will be considered completely covered by the contract unit price for Mechanically Stabilized Earth Wall Systems.

Form liner shall be constructed in accordance with Special Provisions.

The following is a list of form liner manufacturers and types which may be used. Depth of relief for all form liner pattern's shall vary up to 1 1/2". The height of any single 'stone' shall be 15" maximum.

- Scott System, Inc.: Form liner pattern #167 "Ashlar Stone"
- Fitzgerald Formliners: Form liner pattern #16986 "Ashlar Stone"
- Greenstreak: Form liner pattern #330 "Ashlar Stone"
- Spec Formliners: Form liner pattern #1515 "Ashlar Stone"
- Customrock: Form liner pattern #12020 "Tollway Ashlar"
- An approved equal

Estimated Quantities

Item		Total
Temporary Shoring	lump sum	1
Type 5 Aggregate	cu. yard	1,634
Concrete and Masonry Protection System	lump sum	1
Sacrificial Graffiti Protection System	lump sum	1
Mechanically Stabilized Earth Wall Systems	sq. foot	5,314

MSE Wall Systems Data Table

Proprietary Wall Systems		Combination Wall Systems			
Manufacturer	System	Facing Unit Manufacturer	Facing Unit	Geogrid Manufacturer	Geogrid

MSE Wall Systems Data Table is to be completed by MoDOT construction personnel to record the manufacturer of the proprietary wall system or the manufacturers of the combination wall system that was used for constructing the MSE wall.

Digitally signed by Grant Luckenbill
Date: 2025.02.28 15:02:38-06'00'
GRANT C. LUCKENBILL NUMBER PE-2012018100
2-28-25
GRANT C. LUCKENBILL–ENGINEER
MO# PE-2012018100

DATE PREPARED
2/27/2025

ROUTE	STATE
291	MO
DISTRICT	SHEET NO.
BR	2

COUNTY
JACKSON

JOB NO.
J4P3196

FEDERAL PROJECT NO
STB-3001(009)

PROJECT NO.

BRIDGE NO.
A9329

DATE	DESCRIPTION

IF A SEAL IS PRESENT ON THIS SHEET IT HAS BEEN ELECTRONICALLY SEALED AND DATED.

MISSOURI HIGHWAYS AND TRANSPORTATION COMMISSION
MoDOT
105 WEST CAPITOL
JEFFERSON CITY, MO 65102
1-888-ASK-MODOT (1-888-275-6636)

LEE'S SUMMIT MISSOURI

olsson
1301 BURLINGTON ST., STE. 100
NORTH KANSAS CITY, MO 64116
PHONE: 816.361.1177
CERT. OF AUTHORITY NO. 001592

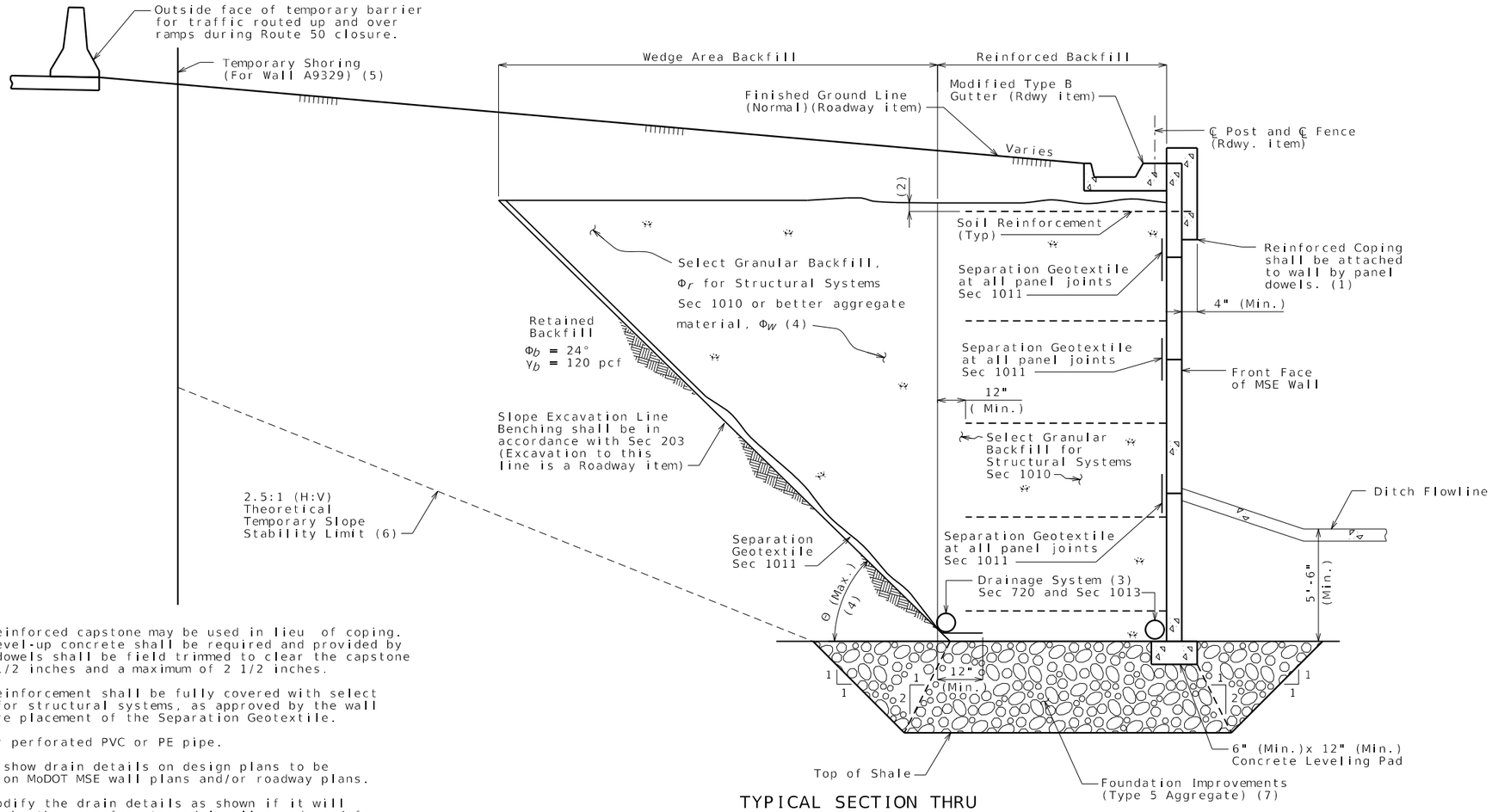

TYPICAL SECTION THRU
LARGE BLOCK WALL SHOWING FILTER CLOTH

(1) Inverted U-shape reinforced capstone may be used in lieu of coping. Panel dowels for level-up concrete shall be required and provided by manufacturer. The dowels shall be field trimmed to clear the capstone by a minimum of 1 1/2 inches and a maximum of 2 1/2 inches.

(2) Topmost layer of reinforcement shall be fully covered with select granular backfill for structural systems, as approved by the wall manufacturer, before placement of the Separation Geotextile.

(3) Minimum 6" diameter perforated PVC or PE pipe.

Manufacturer shall show drain details on design plans to be submitted as shown on MoDOT MSE wall plans and/or roadway plans.

Contractor shall modify the drain details as shown if it will improve flow as may be the case for stepped leveling pad, and for an uneven ground line (approval of the engineer required).

(4) Select granular backfill shall extend a minimum of 12" beyond the end of all soil reinforcement. Where the angle, Θ, between the retained backfill excavation/fill line and the horizontal is less than 90°, the wedge area backfill between Θ and 90° shall be filled with select granular backfill for structural systems meeting the requirements of Section 1010.

- For $(45° + \Phi_b/3) < \Theta \leq 90°$, properties for retained backfill shall be used for active force computations.

- For $\Theta \leq (45° + \Phi_b/3)$, contractor shall have the option to use select granular backfill, Φ_r, or better aggregate material, Φ_w for active force computations in the wedge area backfill. For active force computations, the angle of internal friction for wedge area backfill material, Φ_r or Φ_w, shall be limited to 34° unless determined otherwise in accordance with Section 1010. If Φ_r or $\Phi_w > 34°$ is desired for wedge area backfill then test report shall be submitted with shop drawings. Φ_r or Φ_w shall not be greater than 40° for computations. Final configuration of this option shall be sent to Geotechnical Section for a new overall global stability analysis. Design Φ_w shall be shown on the shop drawings if used.

(5) Contractor shall design and provide temporary shoring in accordance with Section 206. Location and length shall be designed and field verified by the Contractor. Temporary slopes shall be maintained no steeper than a 2.5:1(H:V) to the edge of a traveled way on the ramps without being shored. See roadway plans. Temporary shoring shall be installed prior to performing excavation for MSE wall construction and built in conjunction with the roadway and bridge improvements. Temporary shoring design and shop drawings shall be provided to the Engineer for review and approval prior to ordering materials. Designs shall be completed by a professional engineer licensed in the State of Missouri. All labor and materials necessary to design and construct the temporary shoring, including removal and any additional phasing requirements, shall be completely covered by the lump sum bid item Temporary Shoring.

(6) Temporary shoring wall shall be designed and installed at locations that are steeper than 2.5:1 measured from the temporary excavation limit to the outside face of barrier.

(7) Over excavate below bottom of leveling pad to top of shale and backfill with Type 5 Aggregate. Type 5 Aggregate shall be compacted in accordance with Sec 304. The cost of over excavation, Type 5 Aggregate backfill, and compaction shall be considered completely covered by the contract unit price for Type 5 Aggregate per cubic yard. The quantity given on the plans is based on a uniform depth of Type 5 Aggregate of 4 feet. This quantity shall be under/overrun based on the conditions observed at the direction of the Engineer.

Material Properties Used in Design				
Reinf. Fill/Select Granular Backfill		Active Force Computations		Foundation
Φ°	γ (pcf)	Φ°	γ (pcf)	Φ°

Note: MSE Wall designer shall include table on shop drawings and provide values used in the design computations. Effects of cohesion shall be ignored unless approved by the engineer.

The slope excavation line shall be benched and separation geotextile shall be placed between the retained backfill and either select granular backfill or better aggregate material, and between the select granular backfill and better aggregate material.

Show range of acceptable theta (Θ) angle on shop drawings which must be consistent with design computations and proposed construction of wall. Show active force computation properties on shop drawings and in design computations. Coordination between wall designer (manufacturer) and contractor is required before shop drawing submittal.

DETAILS FOR GENERIC MSE WALL

Detailed Sept. 2024
Checked Sept. 2024

Note: This drawing is not to scale. Follow dimensions.

Digitally signed by Grant Luckenbill
Date: 2025.02.28 15:02:23-06'00'

GRANT C. LUCKENBILL NUMBER PE-2012018100 2-28-25

GRANT C. LUCKENBILL–ENGINEER
MO# PE-2012018100

DATE PREPARED
2/27/2025

ROUTE	STATE
291	MO
DISTRICT	SHEET NO.
BR	3

COUNTY
JACKSON

JOB NO.
J4P3196

FEDERAL PROJECT NO
STB-3001(009)

PROJECT NO.

BRIDGE NO.
A9329

DESCRIPTION	DATE

IF A SEAL IS PRESENT ON THIS SHEET IT HAS BEEN ELECTRONICALLY SEALED AND DATED.

MISSOURI HIGHWAYS AND TRANSPORTATION COMMISSION
105 WEST CAPITOL
JEFFERSON CITY, MO 65102
1-888-ASK-MODOT (1-888-275-6636)

LEE'S SUMMIT MISSOURI

olsson
1301 BURLINGTON ST., STE. 100
NORTH KANSAS CITY, MO 64116
PHONE: 816.361.1177
CERT. OF AUTHORITY NO. 001592

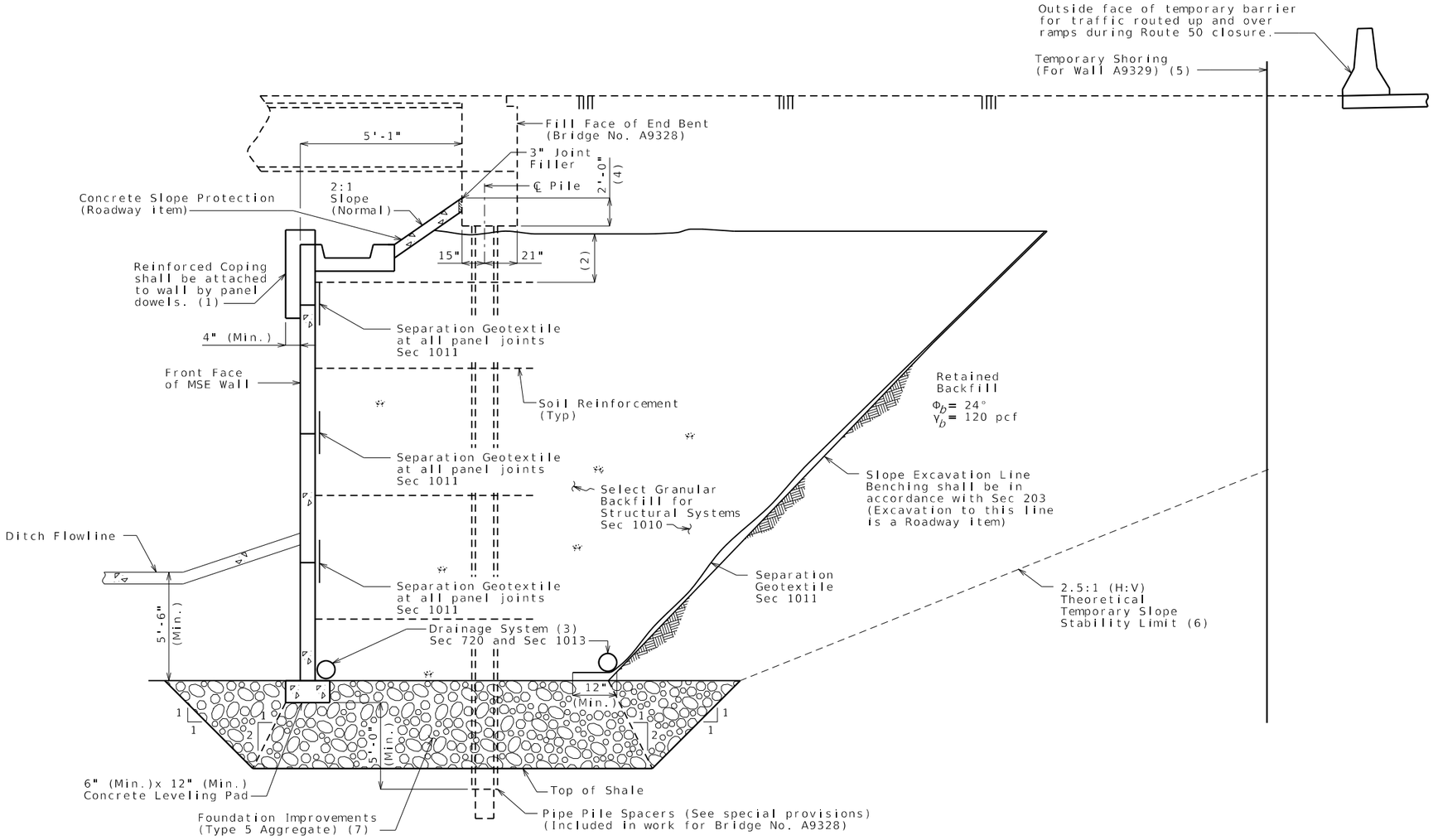

TYPICAL SECTION THRU
LARGE BLOCK WALL UNDER BRIDGE

Note: For additional information, see TYPICAL SECTION THRU LARGE BLOCK WALL SHOWING FILTER CLOTH.

(1) Inverted U-shape reinforced capstone may be used in lieu of coping. Panel dowels for level-up concrete shall be required and provided by manufacturer. The dowels shall be field trimmed to clear the capstone by a minimum of 1 1/2 inches and a maximum of 2 1/2 inches.

(2) Topmost layer of reinforcement shall be fully covered with select granular backfill for structural systems, as approved by the wall manufacturer, before placement of the Separation Geotextile.

(3) Minimum 6" diameter perforated PVC or PE pipe.

Manufacturer shall show drain details on design plans to be submitted as shown on MoDOT MSE wall plans and/or roadway plans.

Contractor shall modify the drain details as shown if it will improve flow as may be the case for stepped leveling pad, and for an uneven ground line (approval of the engineer required).

(4) See bridge plans.

(5) Contractor shall design and provide temporary shoring in accordance with Section 206. Location and length shall be designed and field verified by the Contractor. Temporary slopes shall be maintained no steeper than a 2.5:1 (H:V) to the edge of a traveled way on the ramps without being shored. See roadway plans. Temporary shoring shall be installed prior to performing excavation for MSE wall construction and built in conjunction with the roadway and bridge improvements. Temporary shoring design and shop drawings shall be provided to the Engineer for review and approval prior to ordering materials. Designs shall be completed by a professional engineer licensed in the State of Missouri. All labor and materials necessary to design and construct the temporary shoring, including removal and any additional phasing requirements, shall be completely covered by the lump sum bid item Temporary Shoring.

(6) Temporary shoring wall shall be designed and installed at locations that are steeper than 2.5:1 measured from the temporary excavation limit to the outside face of barrier.

(7) Over excavate below bottom of leveling pad to top of shale and backfill with Type 5 Aggregate. Type 5 Aggregate shall be compacted in accordance with Sec 304. The cost of over excavation, Type 5 Aggregate backfill, and compaction shall be considered completely covered by the contract unit price for Type 5 Aggregate per cubic yard. The quantity given on the plans is based on a uniform depth of Type 5 Aggregate of 4 feet. This quantity shall be under/overrun based on the conditions observed at the direction of the Engineer.

DETAILS FOR GENERIC MSE WALL

Detailed Sept. 2024
Checked Sept. 2024

Note: This drawing is not to scale. Follow dimensions.

Digitally signed by Grant Luckenbill
Date: 2025.02.28 15:06:00-06'00'
GRANT C. LUCKENBILL NUMBER PE-2012018100
2-28-25
GRANT C. LUCKENBILL-ENGINEER
MO# PE-2012018100

DATE PREPARED
2/27/2025

ROUTE	STATE
291	MO
DISTRICT	SHEET NO.
BR	4

COUNTY
JACKSON

JOB NO.
J4P3196

FEDERAL PROJECT NO
STB-3001(009)

PROJECT NO.

BRIDGE NO.
A9329

DATE	DESCRIPTION

IF A SEAL IS PRESENT ON THIS SHEET IT HAS BEEN ELECTRONICALLY SEALED AND DATED.

MISSOURI HIGHWAYS AND TRANSPORTATION COMMISSION
105 WEST CAPITOL
JEFFERSON CITY, MO 65102
1-888-ASK-MODOT (1-888-275-6636)

LEE'S SUMMIT MISSOURI

olsson
1301 BURLINGTON ST., STE. 100
NORTH KANSAS CITY, MO 64116
PHONE: 816.361.1177
CERT. OF AUTHORITY NO. 001592

olsson

BOREHOLE REPORT NO. B-3

Sheet 1 of 2

PROJECT NAME: Lee's Summit M291 Interchange Hwy 50
CLIENT: Missouri Department of Transportion
PROJECT NUMBER: 021-04786
LOCATION: Lee's Summit, Missouri

■ Shelby Tube ☒ Split Spoon

: X: 300 Y: 150

APPROX. SURFACE ELEV. (ft): 1042

ELEVATION (ft)	MATERIAL DESCRIPTION	GRAPHIC LOG	DEPTH (ft)	SAMPLE TYPE NUMBER	CLASSIFICATION (USCS)	BLOWS/6" N-VALUE	UNC. STR. (tsf)	MOISTURE (%)	DRY DENSITY (pcf)	LL/PI (%)	ADDITIONAL DATA/ REMARKS
	0.3' ***ROOT ZONE***		0								
1040	***LEAN TO FAT CLAY*** *Firm, brown and olive brown, moist*			U 1				27.4	94.8		
				U 2			1.0	27.8	96.1		
1035			5								
				U 3				19.6	108.7		
			10								
1030											
	14.0' *Grades to light reddish brown*			U 4			0.8	26.2	98.4		
			15								
1025	18.0' *Grades to wet*										
	▽			U 5				17.5	103.1		
			20								

CONTINUED NEXT PAGE

WATER LEVEL OBSERVATIONS	
WD	▽ 20.0 ft
IAD	▼ 32.5 ft after 0 Hrs
AD	▼ Not Performed

OLSSON, INC.
1700 E. 123RD STREET
OLATHE, KANSAS 66061

STARTED:	6/28/22	FINISHED:	6/28/22
DRILL CO.:	OLSSON	DRILL RIG:	CME 75
DRILLER:	D. LUDWIG	LOGGED BY:	B. GROFF
METHOD: CONTINUOUS FLIGHT AUGER			

olsson

BOREHOLE REPORT NO. B-3

Sheet 2 of 2

PROJECT NAME: Lee's Summit M291 Interchange Hwy 50
CLIENT: Missouri Department of Transportion
PROJECT NUMBER: 021-04786
LOCATION: Lee's Summit, Missouri

■ Shelby Tube ☒ Split Spoon

ELEVATION (ft)	MATERIAL DESCRIPTION	GRAPHIC LOG	DEPTH (ft)	SAMPLE TYPE NUMBER	CLASSIFICATION (USCS)	BLOWS/6" N-VALUE	UNC. STR. (tsf)	MOISTURE (%)	DRY DENSITY (pcf)	LL/PI (%)	ADDITIONAL DATA/ REMARKS
	Grades to wet (continued)		20								
1020	23.0' ***WEATHERED SHALE*** *Brown, dry*			SS 6		18-17-23 N=40		14.1			
1015	28.0' ***SHALE*** *Brown, moist*		25	SS 7		50/5"		27.1			
			30								
1010	▽			SS 8		50/3"		19.2			
	35.0'		35								

BASE OF BORING AT 35.0 FEET

WATER LEVEL OBSERVATIONS	
WD	▽ 20.0 ft
IAD	▼ 32.5 ft after 0 Hrs
AD	▼ Not Performed

OLSSON, INC.
1700 E. 123RD STREET
OLATHE, KANSAS 66061

STARTED:	6/28/22	FINISHED:	6/28/22
DRILL CO.:	OLSSON	DRILL RIG:	CME 75
DRILLER:	D. LUDWIG	LOGGED BY:	B. GROFF
METHOD: CONTINUOUS FLIGHT AUGER			

Digitally signed by Grant Luckenbill
Date: 2025.02.28 15:06:09-06'00'

GRANT C. LUCKENBILL NUMBER PE-2012018100 2-28-25
GRANT C. LUCKENBILL–ENGINEER
MO# PE-2012018100

DATE PREPARED: 2/27/2025
ROUTE: 291 | STATE: MO
DISTRICT: BR | SHEET NO.: 5
COUNTY: JACKSON
JOB NO.: J4P3196
FEDERAL PROJECT NO: STB-3001(009)
PROJECT NO.:
BRIDGE NO.: A9329

DESCRIPTION | DATE

MISSOURI HIGHWAYS AND TRANSPORTATION COMMISSION
105 WEST CAPITOL
JEFFERSON CITY, MO 65102
1-888-ASK-MODOT (1-888-275-6636)

LEE'S SUMMIT MISSOURI

olsson
1301 BURLINGTON ST., STE. 100
NORTH KANSAS CITY, MO 64116
PHONE: 816.361.1177
CERT. OF AUTHORITY NO. 001592

IF A SEAL IS PRESENT ON THIS SHEET IT HAS BEEN ELECTRONICALLY SEALED AND DATED.

BORING DATA

Note: For locations of borings, see Sheet No. 1.

Detailed Sept. 2024
Checked Sept. 2024

Note: This drawing is not to scale. Follow dimensions.

F:\2021\04501-05000\021-04786\40-Design\Microstation\J4P3196\plan_sheets\20 Retaining Walls\A9329\B_A9329_005_JP43196_BORINGS 1 OF 4.dgn 5:57:35 PM 2/27/2025

olsson

BOREHOLE REPORT NO. B-4

Sheet 1 of 2

PROJECT NAME: Lee's Summit M291 Interchange Hwy 50
CLIENT: Missouri Department of Transportion
PROJECT NUMBER: 021-04786
LOCATION: Lee's Summit, Missouri

Shelby Tube ■ Split Spoon ⊠

ELEVATION (ft)	MATERIAL DESCRIPTION	GRAPHIC LOG	DEPTH (ft)	SAMPLE TYPE NUMBER	CLASSIFICATION (USCS)	BLOWS/6" N-VALUE	UNC. STR. (tsf)	MOISTURE (%)	DRY DENSITY (pcf)	LL/PI (%)	ADDITIONAL DATA/ REMARKS
	: X: 560 Y: 150 APPROX. SURFACE ELEV. (ft):1042		0								
	ROOT ZONE 0.5'										
	FILL										
1040	*Brown, gray, olive, moist, silt, sand*			U 1				25.0	85.5		PP = 3.5 tsf
	3.0'										
	LEAN TO FAT CLAY										
	Stiff, brownish gray, moist, trace sand			U 2			1.6	23.7	104.2		
	5.0'		5								
1035	*Grades to reddish brown with gray, moist*										
	8.0'										
	Grades to reddish brown, moist, trace silt			U 3				32.0	88.3		
	10.0'		10								
	LIMESTONE										
	Drillers note "cap rock" 11.0'										
	WEATHERED SHALE										
1030	*Olive gray with reddish brown*										
	14.0'			SS 4		5-10-18 N=28		20.5			
	Grades to olive gray		15								
	16.0'										
1025	*Grades to olive and light brown, sandy*										
			20	SS 5		19-30-50 N=80		13.0			
	CONTINUED NEXT PAGE										

WATER LEVEL OBSERVATIONS	
WD	▽ Not Encountered
IAD	▼ Not Encountered
AD	▼ Not Performed

OLSSON, INC.
1700 E. 123RD STREET
OLATHE, KANSAS 66061

STARTED:	6/26/22	FINISHED:	6/26/22
DRILL CO.:	OLSSON	DRILL RIG:	CME 75
DRILLER:	D. LUDWIG	LOGGED BY:	J. PUTNAM
METHOD: CONTINUOUS FLIGHT AUGER			

olsson

BOREHOLE REPORT NO. B-4

Sheet 2 of 2

PROJECT NAME: Lee's Summit M291 Interchange Hwy 50
CLIENT: Missouri Department of Transportion
PROJECT NUMBER: 021-04786
LOCATION: Lee's Summit, Missouri

Shelby Tube ■ Split Spoon ⊠

ELEVATION (ft)	MATERIAL DESCRIPTION	GRAPHIC LOG	DEPTH (ft)	SAMPLE TYPE NUMBER	CLASSIFICATION (USCS)	BLOWS/6" N-VALUE	UNC. STR. (tsf)	MOISTURE (%)	DRY DENSITY (pcf)	LL/PI (%)	ADDITIONAL DATA/ REMARKS
			20								
	Grades to olive and light brown, sandy (continued)										
	21.0'										
	HIGHLY WEATHERED SHALE										
1020	*Light reddish brown and gray, sandy*										
	24.5'			SS 6		24-36-50 N=86		12.7			
	SHALE		25								
	Olive gray, sandy										
	26.0'										
1015	*Grades to light gray, sandy*										
				SS 7		50/2"		8.1			
	30.0'		30								
	Grades to olive brown, sandy										
1010											
	33.6' 33.8'			SS 8		50/3"		12.4			
	SANDSTONE										
	Olive brown, pooly cemented										
	BASE OF BORING AT 33.8 FEET										

WATER LEVEL OBSERVATIONS	
WD	▽ Not Encountered
IAD	▼ Not Encountered
AD	▼ Not Performed

OLSSON, INC.
1700 E. 123RD STREET
OLATHE, KANSAS 66061

STARTED:	6/26/22	FINISHED:	6/26/22
DRILL CO.:	OLSSON	DRILL RIG:	CME 75
DRILLER:	D. LUDWIG	LOGGED BY:	J. PUTNAM
METHOD: CONTINUOUS FLIGHT AUGER			

Digitally signed by Grant Luckenbill
Date: 2025.02.28 15:05:15-06'00'

GRANT C. LUCKENBILL NUMBER PE-2012018100 LICENSED 2-28-25
GRANT C. LUCKENBILL–ENGINEER
MO# PE-2012018100

DATE PREPARED: 2/27/2025
ROUTE: 291 | STATE: MO
DISTRICT: BR | SHEET NO.: 6
COUNTY: JACKSON
JOB NO.: J4P3196
FEDERAL PROJECT NO: STB-3001(009)
PROJECT NO.:
BRIDGE NO.: A9329

DESCRIPTION | DATE

MISSOURI HIGHWAYS AND TRANSPORTATION COMMISSION
105 WEST CAPITOL
JEFFERSON CITY, MO 65102
1-888-ASK-MODOT (1-888-275-6636)

LEE'S SUMMIT MISSOURI

olsson
1301 BURLINGTON ST., STE. 100
NORTH KANSAS CITY, MO 64116
PHONE: 816.361.1177
CERT. OF AUTHORITY NO. 001592

IF A SEAL IS PRESENT ON THIS SHEET IT HAS BEEN ELECTRONICALLY SEALED AND DATED.

BORING DATA

Note: For locations of borings, see Sheet No. 1.

Detailed Sept. 2024
Checked Sept. 2024

Note: This drawing is not to scale. Follow dimensions.

F:\2021\04501-05000\021-04786\40-Design\Microstation\J4P3196\plan_sheets\20 Retaining Walls\A9329\B_A9329_006_JP43196_BORINGS 2 OF 4.dgn 5:57:39 PM 2/27/2025

olsson

BOREHOLE REPORT NO. BB-1

Sheet 1 of 2

PROJECT NAME: Lee's Summit M291 Interchange Hwy 50
CLIENT: Missouri Department of Transportion
PROJECT NUMBER: 021-04786
LOCATION: Lee's Summit, Missouri

Shelby Tube ☒ Split Spoon
Rock Core

ELEVATION (ft)	MATERIAL DESCRIPTION	GRAPHIC LOG	DEPTH (ft)	SAMPLE TYPE NUMBER	CLASSIFICATION (USCS)	BLOWS/6" N-VALUE	UNC. STR. (tsf)	MOISTURE (%)	DRY DENSITY (pcf)	LL/PI (%)	ADDITIONAL DATA/ REMARKS
	: X: 0 Y: 110										
	APPROX. SURFACE ELEV. (ft):1028		0								
	ASPHALT 0.3'										
	Thickness of 3"										
	CONCRETE 1.0'										
	Thickness of 9"										
1025	***LEAN TO FAT CLAY***										
	Very stiff to hard, grayish brown and yellowish brown, moist, trace sand, silty			U 1				28.4	97.8		PP = 3.5 tsf
			5	U 2				24.7	102.4		PP = 4.25 tsf
	7.0'										
1020	*Grades to dry, shaley*										
			10	U 3				16.9	112.4		PP = 4.5+ tsf
	12.0'										
1015	***WEATHERED SHALE***										
	Yellowish brown, silty, trace sand - Chanute Shale Formation			SS 4		12-50/5.5"		13.9			
	▽		15								
1010				SS 5		50/5"		11.9			
			20								

CONTINUED NEXT PAGE

WATER LEVEL OBSERVATIONS	
WD	▽ 16.0 ft
IAD	▼ Not Performed
AD	▼ Not Performed

OLSSON, INC.
1700 E. 123RD STREET
OLATHE, KANSAS 66061

STARTED:	12/13/22	FINISHED:	12/13/22
DRILL CO.:	OLSSON	DRILL RIG:	CME 550X
DRILLER:	D. LUDWIG	LOGGED BY:	E. CRISP
METHOD:	HOLLOW STEM AUGER / ROCK CORE		

olsson

BOREHOLE REPORT NO. BB-1

Sheet 2 of 2

PROJECT NAME: Lee's Summit M291 Interchange Hwy 50
CLIENT: Missouri Department of Transportion
PROJECT NUMBER: 021-04786
LOCATION: Lee's Summit, Missouri

Shelby Tube ☒ Split Spoon
Rock Core

ELEVATION (ft)	MATERIAL DESCRIPTION	GRAPHIC LOG	DEPTH (ft)	SAMPLE TYPE NUMBER	CLASSIFICATION (USCS)	BLOWS/6" N-VALUE	UNC. STR. (tsf)	MOISTURE (%)	DRY DENSITY (pcf)	LL/PI (%)	ADDITIONAL DATA/ REMARKS
	WEATHERED SHALE		20								
	Yellowish brown, silty, trace sand - Chanute Shale Formation (continued)										
	22.0'										
1005	*Grades to gray, sandy - Chanute Shale Formation*										
			25	SS 6		50/4"		9.6			
1000				SS 7		50/3"		10.1			
	30.0'		30								
	SANDSTONE										
	Gray - Chanute Shale Formation			RC 8							Recovery 100.0% RQD 47.5%
995			35								
990				RC 9				469.0 222.0			Recovery 100.0% RQD 66.7%
	40.0'		40								

BASE OF BORING AT 40.0 FEET

WATER LEVEL OBSERVATIONS	
WD	▽ 16.0 ft
IAD	▼ Not Performed
AD	▼ Not Performed

OLSSON, INC.
1700 E. 123RD STREET
OLATHE, KANSAS 66061

STARTED:	12/13/22	FINISHED:	12/13/22
DRILL CO.:	OLSSON	DRILL RIG:	CME 550X
DRILLER:	D. LUDWIG	LOGGED BY:	E. CRISP
METHOD:	HOLLOW STEM AUGER / ROCK CORE		

Digitally signed by Grant Luckenbill
Date: 2025.02.28 15:05:42-06'00'

GRANT C. LUCKENBILL NUMBER PE-2012018100 2-28-25
GRANT C. LUCKENBILL–ENGINEER
MO# PE-2012018100

DATE PREPARED: 2/27/2025
ROUTE: 291 | STATE: MO
DISTRICT: BR | SHEET NO.: 7
COUNTY: JACKSON
JOB NO.: J4P3196
FEDERAL PROJECT NO: STB-3001(009)
PROJECT NO.:
BRIDGE NO.: A9329

DESCRIPTION | DATE

MISSOURI HIGHWAYS AND TRANSPORTATION COMMISSION
105 WEST CAPITOL
JEFFERSON CITY, MO 65102
1-888-ASK-MODOT (1-888-275-6636)

LEE'S SUMMIT MISSOURI

olsson
1301 BURLINGTON ST., STE. 100
NORTH KANSAS CITY, MO 64116
PHONE: 816.361.1177
CERT. OF AUTHORITY NO. 001592

IF A SEAL IS PRESENT ON THIS SHEET IT HAS BEEN ELECTRONICALLY SEALED AND DATED.

BORING DATA

Note: For locations of borings, see Sheet No. 1.

Detailed Sept. 2024
Checked Sept. 2024

Note: This drawing is not to scale. Follow dimensions.

F:\2021\04501-05000\021-04786\40-Design\Microstation\J4P3196\plan_sheets\20 Retaining Walls\A9329\B_A9329_007_JP43196_BORINGS 3 OF 4.dgn 5:57:43 PM 2/27/2025

olsson

BOREHOLE REPORT NO. BB-2

Sheet 1 of 2

PROJECT NAME: Lee's Summit M291 Interchange Hwy 50
CLIENT: Missouri Department of Transportion
PROJECT NUMBER: 021-04786
LOCATION: Lee's Summit, Missouri

Shelby Tube ☒ Split Spoon
Rock Core

ELEVATION (ft)	MATERIAL DESCRIPTION	GRAPHIC LOG	DEPTH (ft)	SAMPLE TYPE NUMBER	CLASSIFICATION (USCS)	BLOWS/6" N-VALUE	UNC. STR. (tsf)	MOISTURE (%)	DRY DENSITY (pcf)	LL/PI (%)	ADDITIONAL DATA/ REMARKS
	: X: 80 Y: 110										
	APPROX. SURFACE ELEV. (ft):1028		0								
	ASPHALT 0.3'										
	Thickness of 3"										
	CONCRETE 1.0'										
	Thickness of 9"										
1025	***LEAN TO FAT CLAY***			U 1				16.2	113.2		PP = 4.5 tsf
	Hard, grayish brown and yellowish brown, moist, some sand, silty										
			5	U 2				13.3			PP = 4.5+ tsf
	7.0'										
1020	*Grades to dry, shaley*										
			10	U 3				14.8	111.0		PP = 4.5+ tsf
	12.0'										
	WEATHERED SHALE										
1015	*Yellowish brown, silty, trace sand - Chanute Shale Formation*										
	▽		15	SS 4		15-32-50/4"		13.6			
1010											
			20	SS 5		50/5.5"		11.4			

CONTINUED NEXT PAGE

WATER LEVEL OBSERVATIONS	
WD	▽ 14.0 ft
IAD	▼ Not Performed
AD	▼ Not Performed

OLSSON, INC.
1700 E. 123RD STREET
OLATHE, KANSAS 66061

STARTED:	12/13/22	FINISHED:	12/13/22
DRILL CO.:	OLSSON	DRILL RIG:	CME 550X
DRILLER:	D. LUDWIG	LOGGED BY:	E. CRISP
METHOD:	HOLLOW STEM AUGER / ROCK CORE		

olsson

BOREHOLE REPORT NO. BB-2

Sheet 2 of 2

PROJECT NAME: Lee's Summit M291 Interchange Hwy 50
CLIENT: Missouri Department of Transportion
PROJECT NUMBER: 021-04786
LOCATION: Lee's Summit, Missouri

Shelby Tube ☒ Split Spoon
Rock Core

ELEVATION (ft)	MATERIAL DESCRIPTION	GRAPHIC LOG	DEPTH (ft)	SAMPLE TYPE NUMBER	CLASSIFICATION (USCS)	BLOWS/6" N-VALUE	UNC. STR. (tsf)	MOISTURE (%)	DRY DENSITY (pcf)	LL/PI (%)	ADDITIONAL DATA/ REMARKS
	WEATHERED SHALE		20								
	Yellowish brown, silty, trace sand - Chanute Shale Formation (continued)										
	22.0'										
1005	*Grades to gray, sandy - Chanute Shale Formation*			SS 6		50/4"		9.5			
			25								
1000				SS 7		50/3"		9.7			
	30.0'		30								
	SANDSTONE										
	Gray - Chanute Shale Formation			RC 8							Recovery 100.0% RQD 54.2%
995			35								
				RC 9				76.0			Recovery 100.0% RQD 64.2%
990	40.0'		40								

BASE OF BORING AT 40.0 FEET

WATER LEVEL OBSERVATIONS	
WD	▽ 14.0 ft
IAD	▼ Not Performed
AD	▼ Not Performed

OLSSON, INC.
1700 E. 123RD STREET
OLATHE, KANSAS 66061

STARTED:	12/13/22	FINISHED:	12/13/22
DRILL CO.:	OLSSON	DRILL RIG:	CME 550X
DRILLER:	D. LUDWIG	LOGGED BY:	E. CRISP
METHOD:	HOLLOW STEM AUGER / ROCK CORE		

Digitally signed by Grant Luckenbill
Date: 2025.02.28 15:05:24-06'00'

GRANT C. LUCKENBILL NUMBER PE-2012018100 2-28-25
GRANT C. LUCKENBILL–ENGINEER
MO# PE-2012018100

DATE PREPARED: 2/27/2025
ROUTE: 291 | STATE: MO
DISTRICT: BR | SHEET NO.: 8
COUNTY: JACKSON
JOB NO.: J4P3196
FEDERAL PROJECT NO: STB-3001(009)
PROJECT NO.:
BRIDGE NO.: A9329

DESCRIPTION | DATE

MISSOURI HIGHWAYS AND TRANSPORTATION COMMISSION
105 WEST CAPITOL
JEFFERSON CITY, MO 65102
1-888-ASK-MODOT (1-888-275-6636)

LEE'S SUMMIT MISSOURI

olsson
1301 BURLINGTON ST., STE. 100
NORTH KANSAS CITY, MO 64116
PHONE: 816.361.1177
CERT. OF AUTHORITY NO. 001592

IF A SEAL IS PRESENT ON THIS SHEET IT HAS BEEN ELECTRONICALLY SEALED AND DATED.

BORING DATA

Note: For locations of borings, see Sheet No. 1.

Detailed Sept. 2024
Checked Sept. 2024

Note: This drawing is not to scale. Follow dimensions.

F:\2021\04501-05000\021-04786\40-Design\Microstation\J4P3196\plan_sheets\20 Retaining Walls\A9329\B_A9329_008_JP43196_BORINGS 4 OF 4.dgn 5:57:47 PM 2/27/2025

272' MECHANICALLY STABILIZED EARTH (MSE) RETAINING WALL SYSTEM

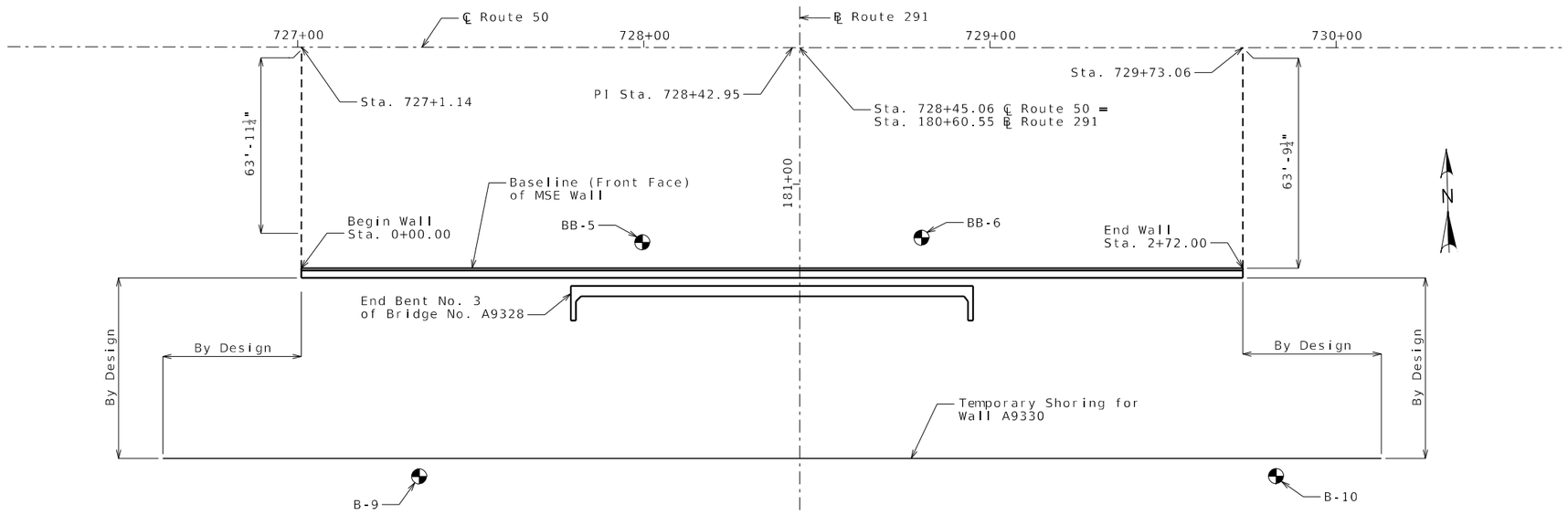

PLAN

Concrete Leveling pad and Coping not shown for clarity

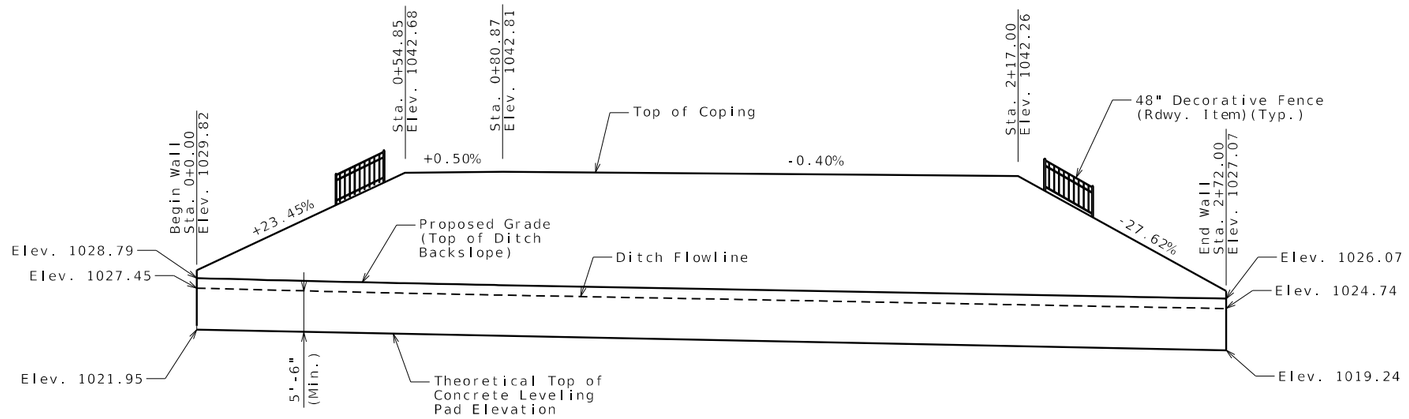

DEVELOPED ELEVATION

Concrete Leveling pad and Coping not shown for clarity. (1)
Ground Improvements not shown for clarity. (2)

(1) Wall contractor shall show the following items on the design drawings and/or on the fabricator shop drawing.

- Leveling pad horizontal.
- Leveling pad length and step elevations shall be based on wall manufacturer's recommendation. Top of leveling pad elevations shall not be higher than theoretical top of leveling pad elevations shown on these plans.

(2) See Sheet No. 3 for details of ground improvement

Designed Feb. 2023
Detailed Sept. 2024
Checked Sept. 2024

Note: This drawing is not to scale. Follow dimensions.

Sheet No. 1 of 8

SEC/SUR 8 TWP 47N RGE 31W

Indicates location of borings.

Notice and Disclaimer Regarding Boring Log Data

The locations of all subsurface borings for this structure are shown on the plan sheet(s) for this structure. The boring data for all locations indicated, as well as any other boring logs or other factual records of subsurface data and investigations performed by the department for the design of the project, are shown on Sheet(s) No. 5 thru 8 and may be included in the Electronic Bridge Deliverables. They will also be available from the Project Contact upon written request. No greater significance or weight should be given to the boring data depicted on the plan sheets than is given to the subsurface data available from the district or elsewhere.

The Commission does not represent or warrant that any such boring data accurately depicts the conditions to be encountered in constructing this project. A contractor assumes all risks it may encounter in basing its bid prices, time or schedule of performance on the boring data depicted here or those available from the district, or on any other documentation not expressly warranted, which the contractor may obtain from the Commission.

CP #3 - 1/2" REBAR W/ CONTROL POINT CAP
ELEVATION = 1034.50
NORTHING 997220.24
EASTING 2828083.97

RETAINING WALL ALONG RIGHT SIDE OF ROUTE 50

ROUTE 50 FROM ROUTE I-470 TO ROUTE 7
ABOUT 3.6 MILES SOUTHEAST OF ROUTE I-470
BEGINNING STATION 727+01.14

Digitally signed by Grant Luckenbill
Date: 2025.02.28 15:05:33-06'00'

GRANT C. LUCKENBILL NUMBER PE-2012018100 2-28-25
GRANT C. LUCKENBILL-ENGINEER
MO# PE-2012018100

DATE PREPARED 2/27/2025
ROUTE 291 | STATE MO
DISTRICT BR | SHEET NO. 1
COUNTY JACKSON
JOB NO. J4P3196
FEDERAL PROJECT NO STB-3001(009)
PROJECT NO.
BRIDGE NO. A9330

DESCRIPTION | DATE

MISSOURI HIGHWAYS AND TRANSPORTATION COMMISSION
105 WEST CAPITOL
JEFFERSON CITY, MO 65102
1-888-ASK-MODOT (1-888-275-6636)

LEE'S SUMMIT MISSOURI

olsson
1301 BURLINGTON ST., STE. 100
NORTH KANSAS CITY, MO 64116
PHONE: 816.361.1177
CERT. OF AUTHORITY NO. 001592

IF A SEAL IS PRESENT ON THIS SHEET IT HAS BEEN ELECTRONICALLY SEALED AND DATED.

F:\2021\04501-05000\021-04786\40-Design\Microstation\J4P3196\plan_sheets\20 Retaining Walls\A9330\B_A9330_001_JP43196_PLAN AND ELEV.dgn 5:57:51 PM 2/27/2025

General Notes:

Design Specifications:

2002 AASHTO LFD (17th Ed.) Standard Specifications (Section 5 ASD Design)
Seismic Performance Category = A
Acceleration Coefficient = 0.04

Design Loading:

Φ_b = 24° and Unit weight, γ_b = 120 pcf for retained backfill material to be retained by the mechanically stabilized earth wall system.

Φ_f = 32° for improved foundation ground where wall is to bear.

For improved foundation ground, the allowable bearing pressure is 5 ksf.

The maximum applied bearing pressure for the controlling design case at the foundation level shall be shown on the shop drawings and shall be less than the allowable bearing pressure for foundation ground provided herein. For seismic design the maximum applied bearing pressure shall be less than two times the allowable bearing pressure.

Allowable bearing pressure and limits of improved foundation ground shall not be adjusted from that as shown on the plans.

Contractor shall include design Φ_f (actual $\Phi_f \geq 34°$) and the total unit weight, γ_f , for the select granular backfill (reinforced backfill and wedge area backfill) for structural systems on shop drawings. Contractor shall identify source of select granular backfill material, submit proctor in accordance with AASHTO T 99 (ASTM D698) and gradation with the shop drawings. When backfill material is too coarse to develop a proctor curve the contractor shall determine the maximum dry density (relative density) in accordance with ASTM D4253 and ASTM D4254 and assume percent passing the 200 sieve for optimum water content.

Total unit weight, γ_f = (95% compaction) x (maximum dry density) x (1 + optimum water content)

Design Φ_f = 34°for the select granular backfill (reinforced backfill) only for structural systems.

Factor of safety shall be 2.0 for overturning and 1.5 for sliding.

For seismic design the factor of safety shall be 1.5 for overturning and 1.1 for sliding.

Use default values for the pullout friction factor, F^*, in accordance with AASHTO figure 5.8.5.2A and default value for scale effect correction factor, α, in accordance with AASHTO table 5.8.5.2A. For approved steel strips not shown in AASHTO figure 5.8.5.2A, use $F^* \leq 2.0$ at zero depth and $F^* \leq \text{Tan } \Phi_f$ at 20 feet depth and Φ_f design = 34°. F^* and α values shall be shown on the shop drawings.

Design Unit Stresses:

All concrete for leveling pad and coping shall be Class B or B-1 with f'c = 4000 psi.

The minimum compressive strength of concrete for precast panel shall be 4,000 psi in accordance with Sec 1052.

Miscellaneous:

The MSE wall system shall be built vertical.

The MSE wall system shall be built in accordance with Sec 720.

The MSE wall system shall be a large block wall system.

Panel, concrete block and coping (or capstone) reinforcement shall be epoxy coated.

A filter cloth meeting the requirements for a Separation Geotextile material shall be placed between the select granular backfill for structural systems and the backfill being retained by the mechanically stabilized earth wall system.

Coping shall be required on this structure. When CIP coping sections extend beyond the limits of a single panel, bond breaker (roofing felt or other approved alternate) between wall panel and coping is required. Coping joints shall use 3/4-inch chamfers and shall be sealed with 3/4-inch joint filler. Coping reinforcement shall terminate 1 1/2-inch minimum from face of coping joint.

The contractor shall be solely responsible to coordinate construction of the wall with bridge and roadway construction and ensure that the bridge and roadway construction, resulting or existing obstructions, shall not impact the construction or performance of the wall. Soil reinforcement shall be designed and placed to avoid damage by pile driving, guardrail post installation, utility and sign foundations. (See Roadway and Bridge plans.)

The contractor shall coordinate the design of the temporary shoring with the design of the MSE wall soil reinforcement.

Minimum 18" wide Geotextile strips shall be centered at vertical and horizontal joints of panel. Geotextile material shall be adhered to back face of panel using an adhesive compound supplied by the manufacturer. All edges of each fabric strip shall provide a positive seal. A minimum 18" overlap shall be provided between spliced filter fabric.

Aluminized soil reinforcement shall have edges coated with coating material per manufacturer.

Soil reinforcement shall be spaced to avoid roadway drop inlet behind wall.

All steel soil reinforcements shall be separated from other metallic elements by at least 3 inches.

The splay angle should be less than 15° and tensile capacity of splayed reinforcement shall be reduced by the cosine of the splay angle. Soil reinforcement shall clear the obstruction by at least 3 inches.

No reinforcement shall be left unconnected to the wall face or arbitrarily cut/bent in the field to avoid the obstruction.

Where interference between the vertical obstruction and the soil reinforcement is unavoidable, the design of the wall near the obstruction may be modified using one of the alternatives in FHWA-NHI-10-24, Section 5.4.2. Show detail layout on the drawings. For wall designs with horizontal obstructions in reinforced soil mass, see FHWA-NHI-10-024, Section 5.4.3.

Concrete and masonry protective coating shall be applied on all exposed concrete areas in accordance with Sec 711.

Sacrificial graffiti protective coating shall be applied on all exposed concrete areas in accordance with Sec 711.

Excavation:

Excavation quantities and pay items are given on the roadway plans. Excavation quantities are based on a soil reinforcement length of 30 ft. The soil reinforcement length may vary based upon the wall design selected by the contractor. Plan excavation quantities will be paid regardless of any actual quantities removed based on the soil reinforcement length and design selected.

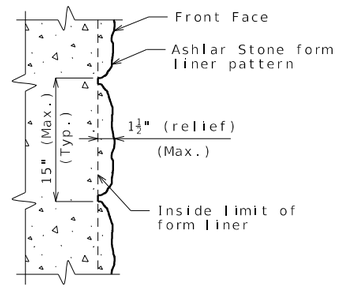

FORM LINER DETAIL
(Large Block Wall)

Notes:

The cost of form liners for MSE wall systems, complete in place, will be considered completely covered by the contract unit price for Mechanically Stabilized Earth Wall Systems.

Form liner shall be constructed in accordance with Special Provisions.

The following is a list of form liner manufacturers and types which may be used. Depth of relief for all form liner pattern's shall vary up to 1 1/2". The height of any single 'stone' shall be 15" maximum.

- Scott System, Inc.: Form liner pattern #167 "Ashlar Stone"
- Fitzgerald Formliners: Form liner pattern #16986 "Ashlar Stone"
- Greenstreak: Form liner pattern #330 "Ashlar Stone"
- Spec Formliners: Form liner pattern #1515 "Ashlar Stone"
- Customrock: Form liner pattern #12020 "Tollway Ashlar"
- An approved equal

Estimated Quantities

Item		Total
Temporary Shoring	lump sum	1
Type 5 Aggregate	cu. yard	2,158
Concrete and Masonry Protection System	lump sum	1
Sacrificial Graffiti Protection System	lump sum	1
Mechanically Stabilized Earth Wall Systems	sq. foot	5,196

MSE Wall Systems Data Table

Proprietary Wall Systems		Combination Wall Systems			
Manufacturer	System	Facing Unit Manufacturer	Facing Unit	Geogrid Manufacturer	Geogrid

MSE Wall Systems Data Table is to be completed by MoDOT construction personnel to record the manufacturer of the proprietary wall system or the manufacturers of the combination wall system that was used for constructing the MSE wall.

Detailed Sept. 2024
Checked Sept. 2024

Note: This drawing is not to scale. Follow dimensions.

Digitally signed by Grant Luckenbill
Date: 2025.02.28 15:05:06-06'00'
GRANT C. LUCKENBILL NUMBER PE-2012018100 2-28-25
GRANT C. LUCKENBILL–ENGINEER
MO# PE-2012018100

DATE PREPARED
2/27/2025

ROUTE	STATE
291	MO
DISTRICT	SHEET NO.
BR	2

COUNTY
JACKSON

JOB NO.
J4P3196

FEDERAL PROJECT NO
STB-3001(009)

PROJECT NO.

BRIDGE NO.
A9330

DATE	DESCRIPTION

IF A SEAL IS PRESENT ON THIS SHEET IT HAS BEEN ELECTRONICALLY SEALED AND DATED.

MISSOURI HIGHWAYS AND TRANSPORTATION COMMISSION
MoDOT
105 WEST CAPITOL
JEFFERSON CITY, MO 65102
1-888-ASK-MODOT (1-888-275-6636)

LEE'S SUMMIT MISSOURI

olsson
1301 BURLINGTON ST., STE. 100
NORTH KANSAS CITY, MO 64116
PHONE: 816.361.1177
CERT. OF AUTHORITY NO. 001592

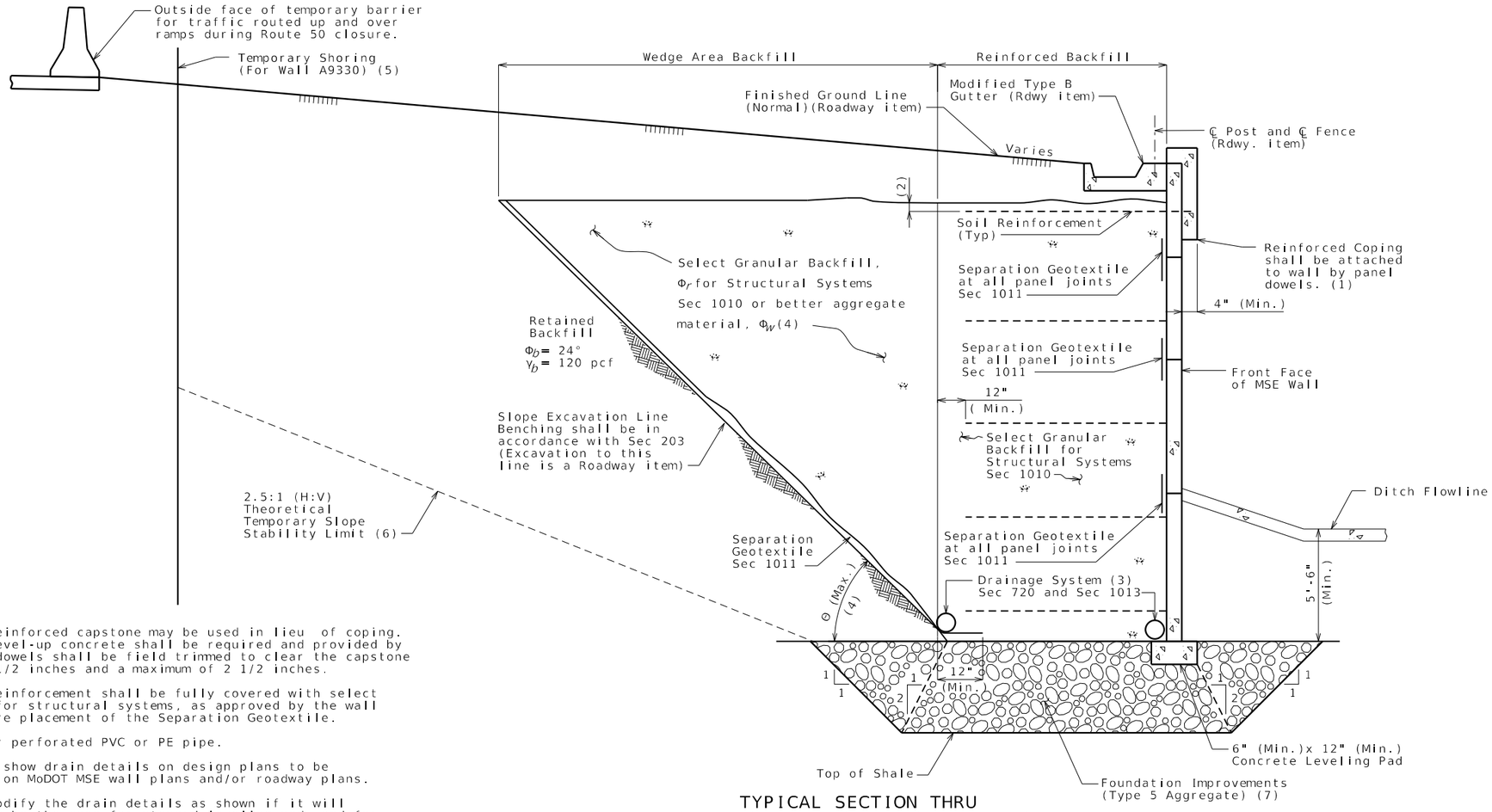

TYPICAL SECTION THRU
LARGE BLOCK WALL SHOWING FILTER CLOTH

(1) Inverted U-shape reinforced capstone may be used in lieu of coping. Panel dowels for level-up concrete shall be required and provided by manufacturer. The dowels shall be field trimmed to clear the capstone by a minimum of 1 1/2 inches and a maximum of 2 1/2 inches.

(2) Topmost layer of reinforcement shall be fully covered with select granular backfill for structural systems, as approved by the wall manufacturer, before placement of the Separation Geotextile.

(3) Minimum 6" diameter perforated PVC or PE pipe.

Manufacturer shall show drain details on design plans to be submitted as shown on MoDOT MSE wall plans and/or roadway plans.

Contractor shall modify the drain details as shown if it will improve flow as may be the case for stepped leveling pad, and for an uneven ground line (approval of the engineer required).

(4) Select granular backfill shall extend a minimum of 12" beyond the end of all soil reinforcement. Where the angle, Θ, between the retained backfill excavation/fill line and the horizontal is less than 90°, the wedge area backfill between Θ and 90° shall be filled with select granular backfill for structural systems meeting the requirements of Section 1010.

- For $(45°+ \Phi_b/3) < \Theta \leq 90°$, properties for retained backfill shall be used for active force computations.

- For $\Theta \leq (45°+ \Phi_b/3)$, contractor shall have the option to use select granular backfill, Φ_f, or better aggregate material, Φ_w for active force computations in the wedge area backfill. For active force computations, the angle of internal friction for wedge area backfill material, Φ_f or Φ_w, shall be limited to 34° unless determined otherwise in accordance with Section 1010. If Φ_f or $\Phi_w > 34°$ is desired for wedge area backfill then test report shall be submitted with shop drawings. Φ_f or Φ_w shall not be greater than 40° for computations. Final configuration of this option shall be sent to Geotechnical Section for a new overall global stability analysis. Design Φ_w shall be shown on the shop drawings if used.

(5) Contractor shall design and provide temporary shoring in accordance with Section 206. Location and length shall be designed and field verified by the Contractor. Temporary slopes shall be maintained no steeper than a 2.5:1 (H:V) to the edge of a traveled way on the ramps without being shored. See roadway plans. Temporary shoring shall be installed prior to performing excavation for MSE wall construction and built in conjunction with the roadway and bridge improvements. Temporary shoring design and shop drawings shall be provided to the Engineer for review and approval prior to ordering materials. Designs shall be completed by a professional engineer licensed in the State of Missouri. All labor and materials necessary to design and construct the temporary shoring, including removal and any additional phasing requirements, shall be completely covered by the lump sum bid item Temporary Shoring.

(6) Temporary shoring wall shall be designed and installed at locations that are steeper than 2.5:1 measured from the temporary excavation limit to the outside face of barrier.

(7) Over excavate below bottom of leveling pad to top of shale and backfill with Type 5 Aggregate. Type 5 Aggregate shall be compacted in accordance with Sec 304. The cost of over excavation, Type 5 Aggregate backfill, and compaction shall be considered completely covered by the contract unit price for Type 5 Aggregate per cubic yard. The quantity given on the plans is based on a uniform depth of Type 5 Aggregate of 5 feet. This quantity shall be under/overrun based on the conditions observed at the direction of the Engineer.

Material Properties Used in Design				
Reinf. Fill/Select Granular Backfill		Active Force Computations		Foundation
Φ°	γ (pcf)	Φ°	γ (pcf)	Φ°

Note: MSE Wall designer shall include table on shop drawings and provide values used in the design computations. Effects of cohesion shall be ignored unless approved by the engineer.

The slope excavation line shall be benched and separation geotextile shall be placed between the retained backfill and either select granular backfill or better aggregate material, and between the select granular backfill and better aggregate material.

Show range of acceptable theta (Θ) angle on shop drawings which must be consistent with design computations and proposed construction of wall. Show active force computation properties on shop drawings and in design computations. Coordination between wall designer (manufacturer) and contractor is required before shop drawing submittal.

DETAILS FOR GENERIC MSE WALL

Detailed Sept. 2024
Checked Sept. 2024

Note: This drawing is not to scale. Follow dimensions.

Digitally signed by Grant Luckenbill
Date: 2025.02.28 15:05:51 -06'00'
GRANT C. LUCKENBILL NUMBER PE-2012018100
2-28-25
GRANT C. LUCKENBILL–ENGINEER
MO# PE-2012018100

DATE PREPARED
2/27/2025

ROUTE	STATE
291	MO
DISTRICT	SHEET NO.
BR	3

COUNTY
JACKSON

JOB NO.
J4P3196

FEDERAL PROJECT NO
STB-3001(009)

PROJECT NO.

BRIDGE NO.
A9330

IF A SEAL IS PRESENT ON THIS SHEET IT HAS BEEN ELECTRONICALLY SEALED AND DATED.

DESCRIPTION

DATE

MISSOURI HIGHWAYS AND TRANSPORTATION COMMISSION
105 WEST CAPITOL
JEFFERSON CITY, MO 65102
1-888-ASK-MODOT (1-888-275-6636)

LEE'S SUMMIT MISSOURI

olsson
1301 BURLINGTON ST., STE. 100
NORTH KANSAS CITY, MO 64116
PHONE: 816.361.1177
CERT. OF AUTHORITY NO. 001592

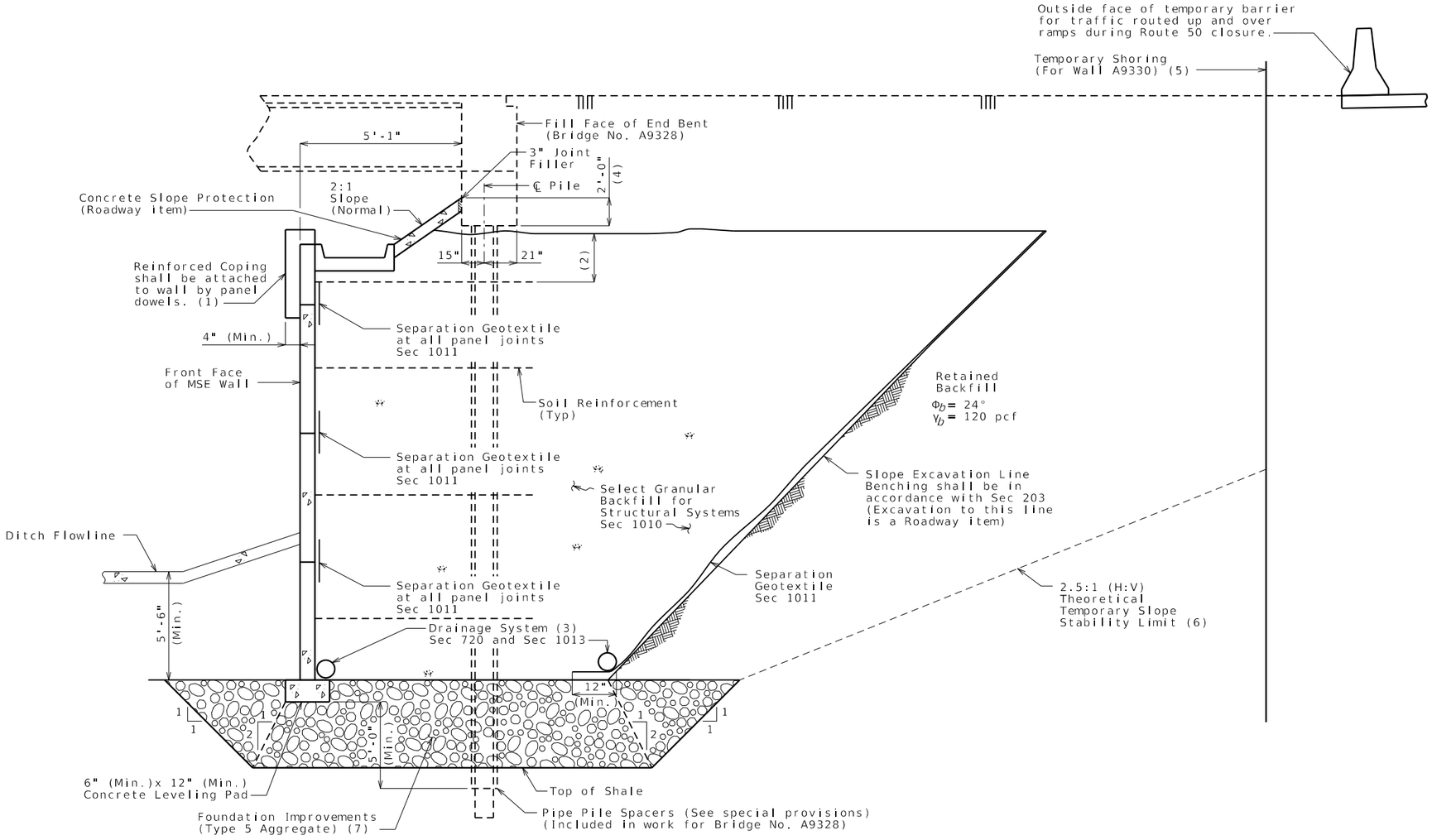

TYPICAL SECTION THRU
LARGE BLOCK WALL UNDER BRIDGE

Note: For additional information, see TYPICAL SECTION THRU LARGE BLOCK WALL SHOWING FILTER CLOTH.

(1) Inverted U-shape reinforced capstone may be used in lieu of coping. Panel dowels for level-up concrete shall be required and provided by manufacturer. The dowels shall be field trimmed toclear the capstone by a minimum of 1 1/2 inches and a maximum of 2 1/2 inches.

(2) Topmost layer of reinforcement shall be fully covered with select granular backfill for structural systems, as approved by the wall manufacturer, before placement of the Separation Geotextile.

(3) Minimum 6" diameter perforated PVC or PE pipe.

Manufacturer shall show drain details on design plans to be submitted as shown on MoDOT MSE wall plans and/or roadway plans.

Contractor shall modify the drain details as shown if it will improve flow as may be the case for stepped leveling pad, and for an uneven ground line (approval of the engineer required).

(4) See bridge plans.

(5) Contractor shall design and provide temporary shoring in accordance with Section 206. Location and length shall be designed and field verified by the Contractor. Temporary slopes shall be maintained no steeper than a 2.5:1 (H:V) to the edge of a traveled way on the ramps without being shored. See roadway plans. Temporary shoring shall be installed prior to performing excavation for MSE wall construction and built in conjunction with the roadway and bridge improvements. Temporary shoring design and shop drawings shall be provided to the Engineer for review and approval prior to ordering materials. Designs shall be completed by a professional engineer licensed in the State of Missouri. All labor and materials necessary to design and construct the temporary shoring, including removal and any additional phasing requirements, shall be completely covered by the lump sum bid item Temporary Shoring.

(6) Temporary shoring wall shall be designed and installed at locations that are steeper than 2.5:1 measured from the temporary excavation limit to the outside face of barrier.

(7) Over excavate below bottom of leveling pad to top of shale and backfill with Type 5 Aggregate. Type 5 Aggregate shall be compacted in accordance with Sec 304. The cost of over excavation, Type 5 Aggregate backfill, and compaction shall be considered completely covered by the contract unit price for Type 5 Aggregate per cubic yard. The quantity given on the plans is based on a uniform depth of Type 5 Aggregate of 5 feet. This quantity shall be under/overrun based on the conditions observed at the direction of the Engineer.

DETAILS FOR GENERIC MSE WALL

Detailed Sept. 2024
Checked Sept. 2024

Note: This drawing is not to scale. Follow dimensions.

F:\2021\04501-05000\021-04786\40-Design\Microstation\J4P3196\plan_sheets\20 Retaining Walls\A9330\B_A9330_004_JP43196_SECTION AT BRIDGE.dgn 5:57:57 PM 2/27/2025

Digitally signed by Grant Luckenbill
Date: 2025.02.28 15:04:49-06'00'

GRANT C. LUCKENBILL NUMBER PE-2012018100 2-28-25

GRANT C. LUCKENBILL-ENGINEER
MO# PE-2012018100

DATE PREPARED
2/27/2025

ROUTE	STATE
291	MO
DISTRICT	SHEET NO.
BR	4

COUNTY
JACKSON

JOB NO.
J4P3196

FEDERAL PROJECT NO
STB-3001(009)

PROJECT NO.

BRIDGE NO.
A9330

DESCRIPTION | DATE

IF A SEAL IS PRESENT ON THIS SHEET IT HAS BEEN ELECTRONICALLY SEALED AND DATED.

MISSOURI HIGHWAYS AND TRANSPORTATION COMMISSION
105 WEST CAPITOL
JEFFERSON CITY, MO 65102
1-888-ASK-MODOT (1-888-275-6636)

LEE'S SUMMIT MISSOURI

olsson

olsson

BOREHOLE REPORT NO. B-9

Sheet 1 of 2

PROJECT NAME: Lee's Summit M291 Interchange Hwy 50
CLIENT: Missouri Department of Transportion
PROJECT NUMBER: 021-04786
LOCATION: Lee's Summit, Missouri

: X: 300 Y: 0

APPROX. SURFACE ELEV. (ft): 1041

ELEVATION (ft)	MATERIAL DESCRIPTION	GRAPHIC LOG	DEPTH (ft)	SAMPLE TYPE NUMBER	CLASSIFICATION (USCS)	BLOWS/6" N-VALUE	UNC. STR. (tsf)	MOISTURE (%)	DRY DENSITY (pcf)	LL/PI (%)	ADDITIONAL DATA/ REMARKS
	ROOT ZONE 0.5'		0								
1040	***LEAN TO FAT CLAY***										
	Stiff, dark gray, moist, trace sand			U 1			1.7	32.1	90.5		
	3.0'										
	Grades to very stiff, marbled gray and yellowish brown, moist, trace sand		5	U 2				28.3	95.9		PP = 2.8 tsf
1035											
			10	U 3				32.0	89.3		PP = 2.5 tsf
1030											
			15	U 4				26.7	97.1		PP = 3.0 tsf
1025											
			20	U 5				24.6	100.9		PP = 4.5 tsf

CONTINUED NEXT PAGE

WATER LEVEL OBSERVATIONS	
WD	Not Encountered
IAD	Not Encountered
AD	Not Performed

OLSSON, INC.
1700 E. 123RD STREET
OLATHE, KANSAS 66061

STARTED:	6/21/22	FINISHED:	6/21/22
DRILL CO.:	OLSSON	DRILL RIG:	CME 75
DRILLER:	D. LUDWIG	LOGGED BY:	E. CRISP
METHOD: CONTINUOUS FLIGHT AUGER			

olsson

BOREHOLE REPORT NO. B-9

Sheet 2 of 2

PROJECT NAME: Lee's Summit M291 Interchange Hwy 50
CLIENT: Missouri Department of Transportion
PROJECT NUMBER: 021-04786
LOCATION: Lee's Summit, Missouri

ELEVATION (ft)	MATERIAL DESCRIPTION	GRAPHIC LOG	DEPTH (ft)	SAMPLE TYPE NUMBER	CLASSIFICATION (USCS)	BLOWS/6" N-VALUE	UNC. STR. (tsf)	MOISTURE (%)	DRY DENSITY (pcf)	LL/PI (%)	ADDITIONAL DATA/ REMARKS
			20								
1020	*Grades to very stiff, marbled gray and yellowish brown, moist, trace sand (continued)*										
	23.0'										
	SILTY CLAY										
	Very stiff, marbled gray and yellowish brown, moist, trace sand		25	U 6				25.5			PP = 3.8 tsf
1015											
	27.0'										
	REFUSAL AT 27.0 FEET			SS 7		50/0.5"		7.2			

WATER LEVEL OBSERVATIONS	
WD	Not Encountered
IAD	Not Encountered
AD	Not Performed

OLSSON, INC.
1700 E. 123RD STREET
OLATHE, KANSAS 66061

STARTED:	6/21/22	FINISHED:	6/21/22
DRILL CO.:	OLSSON	DRILL RIG:	CME 75
DRILLER:	D. LUDWIG	LOGGED BY:	E. CRISP
METHOD: CONTINUOUS FLIGHT AUGER			

Digitally signed by Grant Luckenbill
Date: 2025.02.28 15:04:58-06'00'

GRANT C. LUCKENBILL NUMBER PE-2012018100 2-28-25
GRANT C. LUCKENBILL–ENGINEER
MO# PE-2012018100

DATE PREPARED: 2/27/2025
ROUTE: 291 | STATE: MO
DISTRICT: BR | SHEET NO.: 5
COUNTY: JACKSON
JOB NO.: J4P3196
FEDERAL PROJECT NO: STB-3001(009)
PROJECT NO.:
BRIDGE NO.: A9330

DESCRIPTION | DATE

MISSOURI HIGHWAYS AND TRANSPORTATION COMMISSION
105 WEST CAPITOL
JEFFERSON CITY, MO 65102
1-888-ASK-MODOT (1-888-275-6636)

LEE'S SUMMIT MISSOURI

olsson
1301 BURLINGTON ST., STE. 100
NORTH KANSAS CITY, MO 64116
PHONE: 816.361.1177
CERT. OF AUTHORITY NO. 001592

IF A SEAL IS PRESENT ON THIS SHEET IT HAS BEEN ELECTRONICALLY SEALED AND DATED.

BORING DATA

Note: For locations of borings, see Sheet No. 1.

Detailed Sept. 2024
Checked Sept. 2024

Note: This drawing is not to scale. Follow dimensions.

F:\2021\04501-05000\021-04786\40-Design\Microstation\J4P3196\plan_sheets\20 Retaining Walls\A9330\B_A9330_005_JP43196_BORINGS 1 OF 4.dgn 5:58:00 PM 2/27/2025

olsson

BOREHOLE REPORT NO. B-10

Sheet 1 of 2

PROJECT NAME: Lee's Summit M291 Interchange Hwy 50
CLIENT: Missouri Department of Transportion
PROJECT NUMBER: 021-04786
LOCATION: Lee's Summit, Missouri

■ Shelby Tube ☒ Split Spoon

ELEVATION (ft)	MATERIAL DESCRIPTION	GRAPHIC LOG	DEPTH (ft)	SAMPLE TYPE NUMBER	CLASSIFICATION (USCS)	BLOWS/6" N-VALUE	UNC. STR. (tsf)	MOISTURE (%)	DRY DENSITY (pcf)	LL/PI (%)	ADDITIONAL DATA/ REMARKS
	: X: 560 Y: 0										
	APPROX. SURFACE ELEV. (ft):1043		0								
	ROOT ZONE 0.5'										
	FAT CLAY										
1040	*Very stiff, marbled gray and yellowish brown, moist, trace sand* 3.0'			U 1				26.6	97.5		PP = 3.0 tsf
	Grades to stiff, with dark gray lensing		5	U 2			1.0	27.3	97.8		
1035	7.0'										
	Grades to very stiff, gray with yellowish brown		10	U 3	CH			26.9	96.4	76/57	PP = 2.5 tsf
1030	12.0'										
	Grades to yellowish brown with gray		15	U 4				27.9	96.1		PP = 3.5 tsf
1025	17.0'										
	SILTY CLAY										
	Hard, yellowish brown with gray, moist, sandy, laminar bedding, shaley		20	U 5				15.5	118.7		PP = 4.5+ tsf
	CONTINUED NEXT PAGE										

WATER LEVEL OBSERVATIONS	
WD	▽ 31.0 ft
IAD	▼ 32.5 ft after 0 Hrs
AD	▼ Not Performed

OLSSON, INC.
1700 E. 123RD STREET
OLATHE, KANSAS 66061

STARTED:	6/22/22	FINISHED:	6/22/22
DRILL CO.:	OLSSON	DRILL RIG:	CME 75
DRILLER:	D. LUDWIG	LOGGED BY:	E. CRISP
METHOD: CONTINUOUS FLIGHT AUGER			

olsson

BOREHOLE REPORT NO. B-10

Sheet 2 of 2

PROJECT NAME: Lee's Summit M291 Interchange Hwy 50
CLIENT: Missouri Department of Transportion
PROJECT NUMBER: 021-04786
LOCATION: Lee's Summit, Missouri

■ Shelby Tube ☒ Split Spoon

ELEVATION (ft)	MATERIAL DESCRIPTION	GRAPHIC LOG	DEPTH (ft)	SAMPLE TYPE NUMBER	CLASSIFICATION (USCS)	BLOWS/6" N-VALUE	UNC. STR. (tsf)	MOISTURE (%)	DRY DENSITY (pcf)	LL/PI (%)	ADDITIONAL DATA/ REMARKS
	SILTY CLAY		20								
	Hard, yellowish brown with gray, moist, sandy, laminar bedding, shaley (continued) 22.0'										
1020	***HIGHLY WEATHERED SHALE***										
	Marbled yellowish brown and dark gray, blocky bedding, dry, trace silt and sand		25	SS 6		8-21-22 N=43		22.9			
	27.0'										
1015	***SHALE***										
	Gray, dry, silty, trace sand		30	SS 7		50/5"		12.9			
	▽										
1010	▼ 33.0'										
	Grades to olive gray and dark gray, interbedded, dry, silty, trace sand		35	SS 8		50/5"		15.5			
	35.0'										
	BASE OF BORING AT 35.0 FEET										

WATER LEVEL OBSERVATIONS	
WD	▽ 31.0 ft
IAD	▼ 32.5 ft after 0 Hrs
AD	▼ Not Performed

OLSSON, INC.
1700 E. 123RD STREET
OLATHE, KANSAS 66061

STARTED:	6/22/22	FINISHED:	6/22/22
DRILL CO.:	OLSSON	DRILL RIG:	CME 75
DRILLER:	D. LUDWIG	LOGGED BY:	E. CRISP
METHOD: CONTINUOUS FLIGHT AUGER			

Digitally signed by Grant Luckenbill
Date: 2025.02.28 15:03:48-06'00'

GRANT C. LUCKENBILL NUMBER PE-2012018100
2-28-25
GRANT C. LUCKENBILL-ENGINEER
MO# PE-2012018100

DATE PREPARED: 2/27/2025
ROUTE: 291 | STATE: MO
DISTRICT: BR | SHEET NO.: 6
COUNTY: JACKSON
JOB NO.: J4P3196
FEDERAL PROJECT NO: STB-3001(009)
PROJECT NO.:
BRIDGE NO.: A9330

DESCRIPTION | DATE

MISSOURI HIGHWAYS AND TRANSPORTATION COMMISSION
105 WEST CAPITOL
JEFFERSON CITY, MO 65102
1-888-ASK-MODOT (1-888-275-6636)

LEE'S SUMMIT MISSOURI

olsson
1301 BURLINGTON ST., STE. 100
NORTH KANSAS CITY, MO 64116
PHONE: 816.361.1177
CERT. OF AUTHORITY NO. 001592

IF A SEAL IS PRESENT ON THIS SHEET IT HAS BEEN ELECTRONICALLY SEALED AND DATED.

BORING DATA

Note: For locations of borings, see Sheet No. 1.

Detailed Sept. 2024
Checked Sept. 2024

Note: This drawing is not to scale. Follow dimensions.

olsson

BOREHOLE REPORT NO. BB-5

Sheet 1 of 2

PROJECT NAME: Lee's Summit M291 Interchange Hwy 50
CLIENT: Missouri Department of Transportion
PROJECT NUMBER: 021-04786
LOCATION: Lee's Summit, Missouri

Shelby Tube ☒ Split Spoon
Rock Core

ELEVATION (ft)	MATERIAL DESCRIPTION	GRAPHIC LOG	DEPTH (ft)	SAMPLE TYPE NUMBER	CLASSIFICATION (USCS)	BLOWS/6" N-VALUE	UNC. STR. (tsf)	MOISTURE (%)	DRY DENSITY (pcf)	LL/PI (%)	ADDITIONAL DATA/ REMARKS
	: X: 0 Y: 0										
	APPROX. SURFACE ELEV. (ft):1028		0								
	ASPHALT 0.3'										
	Thickness of 3"										
	CONCRETE 1.0'										
	Thickness of 9"										
1025	***LEAN TO FAT CLAY***			U 1				28.7	96.3		PP = 3.5 tsf
	Stiff, yellowish brown, moist										
			5	U 2				27.4	98.6		PP = 4.0 tsf
	7.0'										
1020	*Grades to hard, shaley*										
			10	U 3				19.8	108.4		PP = 4.5+ tsf
	12.0'										
	WEATHERED SHALE										
1015	*Yellowish brown, silty, trace sand - Chanute Shale Formation*			SS 4		50/2"		23.6			
	15.0'		15								
	SANDSTONE										
	Yellowish brown - Chanute Shale Formation			RC 5							Recovery 85.0% RQD 0.0%
1010	20.0'		20								

CONTINUED NEXT PAGE

WATER LEVEL OBSERVATIONS	
WD	▽ Not Encountered
IAD	▼ Not Encountered
AD	▼ Not Encountered

OLSSON, INC.
1700 E. 123RD STREET
OLATHE, KANSAS 66061

STARTED:	12/1/22	FINISHED:	12/1/22
DRILL CO.:	OLSSON	DRILL RIG:	CME 550X
DRILLER:	D. LUDWIG	LOGGED BY:	E. CRISP
METHOD:	HOLLOW STEM AUGER / ROCK CORE		

olsson

BOREHOLE REPORT NO. BB-5

Sheet 2 of 2

PROJECT NAME: Lee's Summit M291 Interchange Hwy 50
CLIENT: Missouri Department of Transportion
PROJECT NUMBER: 021-04786
LOCATION: Lee's Summit, Missouri

Shelby Tube ☒ Split Spoon
Rock Core

ELEVATION (ft)	MATERIAL DESCRIPTION	GRAPHIC LOG	DEPTH (ft)	SAMPLE TYPE NUMBER	CLASSIFICATION (USCS)	BLOWS/6" N-VALUE	UNC. STR. (tsf)	MOISTURE (%)	DRY DENSITY (pcf)	LL/PI (%)	ADDITIONAL DATA/ REMARKS
	SHALE		20								
	Yellowish brown - Chanute Shale Formation 21.5'			RC 6							Recovery 100.0% RQD 35.0%
1005	*Grades to gray - Chanute Shale Formation*										
	25.0'		25								

BASE OF BORING AT 25.0 FEET

WATER LEVEL OBSERVATIONS	
WD	▽ Not Encountered
IAD	▼ Not Encountered
AD	▼ Not Encountered

OLSSON, INC.
1700 E. 123RD STREET
OLATHE, KANSAS 66061

STARTED:	12/1/22	FINISHED:	12/1/22
DRILL CO.:	OLSSON	DRILL RIG:	CME 550X
DRILLER:	D. LUDWIG	LOGGED BY:	E. CRISP
METHOD:	HOLLOW STEM AUGER / ROCK CORE		

Digitally signed by Grant Luckenbill
Date: 2025.02.28 15:04:32-06'00'

GRANT C. LUCKENBILL NUMBER PE-2012018100 LICENSED 2-28-25
GRANT C. LUCKENBILL–ENGINEER
MO# PE-2012018100

DATE PREPARED: 2/27/2025
ROUTE: 291 | STATE: MO
DISTRICT: BR | SHEET NO.: 7
COUNTY: JACKSON
JOB NO.: J4P3196
FEDERAL PROJECT NO: STB-3001(009)
PROJECT NO.:
BRIDGE NO.: A9330

DESCRIPTION | DATE

MISSOURI HIGHWAYS AND TRANSPORTATION COMMISSION
105 WEST CAPITOL
JEFFERSON CITY, MO 65102
1-888-ASK-MODOT (1-888-275-6636)

LEE'S SUMMIT MISSOURI

olsson
1301 BURLINGTON ST., STE. 100
NORTH KANSAS CITY, MO 64116
PHONE: 816.361.1177
CERT. OF AUTHORITY NO. 001592

IF A SEAL IS PRESENT ON THIS SHEET IT HAS BEEN ELECTRONICALLY SEALED AND DATED.

BORING DATA

Note: For locations of borings, see Sheet No. 1.

Detailed Sept. 2024
Checked Sept. 2024

Note: This drawing is not to scale. Follow dimensions.

F:\2021\04501-05000\021-04786\40-Design\Microstation\J4P3196\plan_sheets\20 Retaining Walls\A9330\B_A9330_007_JP43196_BORINGS 3 OF 4.dgn 5:58:07 PM 2/27/2025

olsson

BOREHOLE REPORT NO. BB-6

Sheet 1 of 2

PROJECT NAME: Lee's Summit M291 Interchange Hwy 50
CLIENT: Missouri Department of Transportion
PROJECT NUMBER: 021-04786
LOCATION: Lee's Summit, Missouri

Shelby Tube ☒ Split Spoon
Rock Core

MATERIAL DESCRIPTION

: X: 80 Y: 0

APPROX. SURFACE ELEV. (ft):1028

ELEVATION (ft)	MATERIAL DESCRIPTION	GRAPHIC LOG	DEPTH (ft)	SAMPLE TYPE NUMBER	CLASSIFICATION (USCS)	BLOWS/6" N-VALUE	UNC. STR. (tsf)	MOISTURE (%)	DRY DENSITY (pcf)	LL/PI (%)	ADDITIONAL DATA/ REMARKS
	ASPHALT 0.3'		0								
	Thickness of 4" 1.0'										
	CONCRETE										
	Thickneess of 8"										
1025	***LEAN TO FAT CLAY***			U 1				17.1	108.7		PP = 4.5+ tsf
	Very stiff, yellowish brown, dry, trace sand			U 2				16.1	113.5		PP = 4.5+ tsf
1020			5								
	8.5'			U 3				16.1	111.5		PP = 4.5+ tsf
	SANDY CLAY		10								
	Hard, yellowish brown, dry										
	11.0'										
1015	***SHALE***			SS 4		17-32-50/4"		14.3			
	Yellowish brown and grayish brown - Chanute Shale Formation		15								
1010	▽			SS 5		50/4"		12.4			
			20								

CONTINUED NEXT PAGE

WATER LEVEL OBSERVATIONS	
WD	▽ 17.0 ft
IAD	▼ Not Encountered
AD	▼ Not Encountered

OLSSON, INC.
1700 E. 123RD STREET
OLATHE, KANSAS 66061

STARTED:	12/1/22	FINISHED:	12/1/22
DRILL CO.:	OLSSON	DRILL RIG:	CME 550X
DRILLER:	D. LUDWIG	LOGGED BY:	E. CRISP
METHOD:	HOLLOW STEM AUGER / ROCK CORE		

olsson

BOREHOLE REPORT NO. BB-6

Sheet 2 of 2

PROJECT NAME: Lee's Summit M291 Interchange Hwy 50
CLIENT: Missouri Department of Transportion
PROJECT NUMBER: 021-04786
LOCATION: Lee's Summit, Missouri

Shelby Tube ☒ Split Spoon
Rock Core

MATERIAL DESCRIPTION

ELEVATION (ft)	MATERIAL DESCRIPTION	GRAPHIC LOG	DEPTH (ft)	SAMPLE TYPE NUMBER	CLASSIFICATION (USCS)	BLOWS/6" N-VALUE	UNC. STR. (tsf)	MOISTURE (%)	DRY DENSITY (pcf)	LL/PI (%)	ADDITIONAL DATA/ REMARKS
	SHALE		20								
	Yellowish brown and grayish brown - Chanute Shale Formation (continued)										
1005	23.0'			SS 6		50/3"		10.3			
	Grades to gray - Chanute Shale Formation		25								
1000				SS 7		50/1"		10.7			
			30								
				RC 8							Recovery 98.3% RQD 73.3%
995	33.8'		35								
	SANDSTONE										
	Gray - Chanute Shale Formation			RC 9				244.0 262.0			Recovery 98.3% RQD 56.7%
990	40.0'		40								

BASE OF BORING AT 40.0 FEET

WATER LEVEL OBSERVATIONS	
WD	▽ 17.0 ft
IAD	▼ Not Encountered
AD	▼ Not Encountered

OLSSON, INC.
1700 E. 123RD STREET
OLATHE, KANSAS 66061

STARTED:	12/1/22	FINISHED:	12/1/22
DRILL CO.:	OLSSON	DRILL RIG:	CME 550X
DRILLER:	D. LUDWIG	LOGGED BY:	E. CRISP
METHOD:	HOLLOW STEM AUGER / ROCK CORE		

BORING DATA

Note: For locations of borings, see Sheet No. 1.

Note: This drawing is not to scale. Follow dimensions.

Sheet No. 8 of 8

Detailed Sept. 2024
Checked Sept. 2024

Digitally signed by Grant Luckenbill
Date: 2025.02.28 15:03:56-06'00'

GRANT C. LUCKENBILL NUMBER PE-2012018100 2-28-25
GRANT C. LUCKENBILL–ENGINEER
MO# PE-2012018100

DATE PREPARED: 2/27/2025
ROUTE: 291 | STATE: MO
DISTRICT: BR | SHEET NO.: 8
COUNTY: JACKSON
JOB NO.: J4P3196
FEDERAL PROJECT NO: STB-3001(009)
PROJECT NO.:
BRIDGE NO.: A9330

DESCRIPTION | DATE

MISSOURI HIGHWAYS AND TRANSPORTATION COMMISSION
105 WEST CAPITOL
JEFFERSON CITY, MO 65102
1-888-ASK-MODOT (1-888-275-6636)

LEE'S SUMMIT MISSOURI

olsson
1301 BURLINGTON ST., STE. 100
NORTH KANSAS CITY, MO 64116
PHONE: 816.361.1177
CERT. OF AUTHORITY NO. 001592

IF A SEAL IS PRESENT ON THIS SHEET IT HAS BEEN ELECTRONICALLY SEALED AND DATED.

F:\2021\04501-05000\021-04786\40-Design\Microstation\J4P3196\plan_sheets\20 Retaining Walls\A9330\B_A9330_008_JP43196_BORINGS 4 OF 4.dgn 5:58:11 PM 2/27/2025

186' MECHANICALLY STABILIZED EARTH (MSE) RETAINING WALL SYSTEM

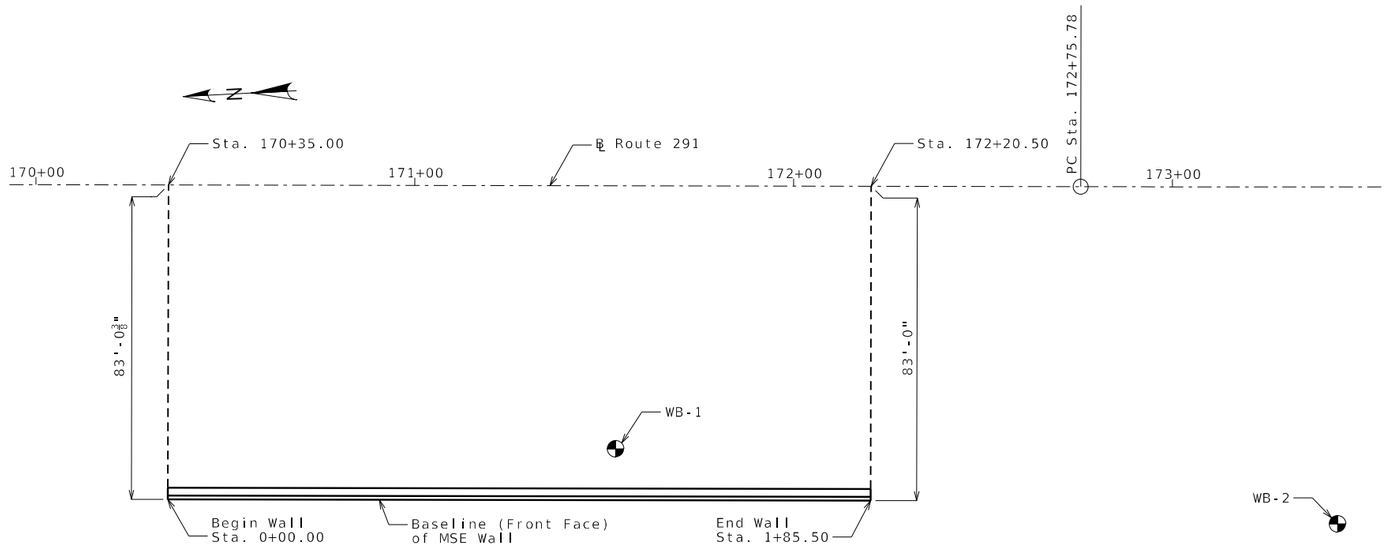

PLAN

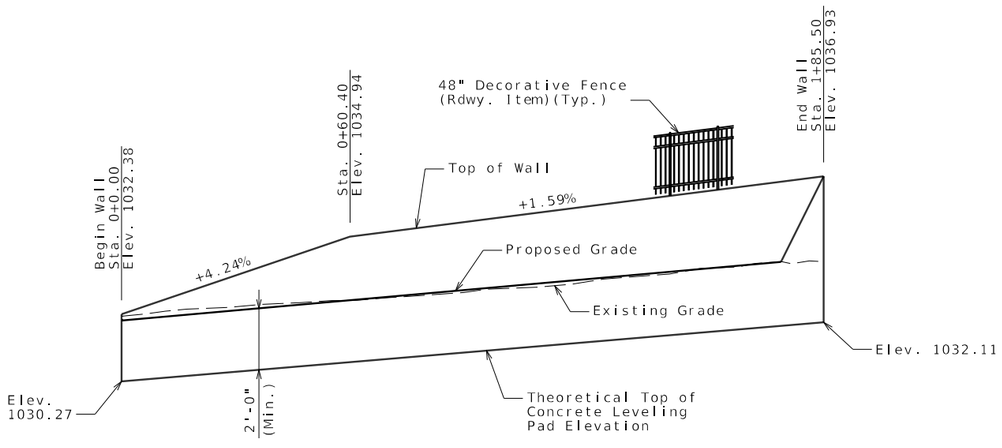

DEVELOPED ELEVATION

Concrete Leveling pad not shown for clarity. (1)

(1) Wall contractor shall show the following items on the design drawings and/or on the fabricator shop drawings.

- Leveling pad horizontal.
- Leveling pad length and step elevations shall be based on wall manufacturer's recommendation.Top of leveling pad elevations shall not be higher than theoretical top of leveling pad elevations shown on these plans.

Estimated Quantities

Item		Total
Concrete and Masonry Protection System	lump sum	1
Sacrificial Graffiti Protection System	lump sum	1
Mechanically Stabilized Earth Wall Systems	sq. foot	743

Designed Feb. 2023
Detailed Sept. 2024
Checked Sept. 2024

Indicates location of borings.

Notice and Disclaimer Regarding Boring Log Data

The locations of all subsurface borings for this structure are shown on the plan sheet(s) for this structure. The boring data for all locations indicated, as well as any other boring logs or other factual records of subsurface data and investigations performed by the department for the design of the project, are shown on Sheet(s) No. 3 and may be included in the Electronic Bridge Deliverables. They will also be available from the Project Contact upon written request. No greater significance or weight should be given to the boring data depicted on the plan sheets than is given to the subsurface data available from the district or elsewhere.

The Commission does not represent or warrant that any such boring data accurately depicts the conditions to be encountered in constructing this project. A contractor assumes all risks it may encounter in basing its bid prices, time or schedule of performance on the boring data depicted here or those available from the district, or on any other documentation not expressly warranted, which the contractor may obtain from the Commission.

MSE Wall Systems Data Table

Proprietary Wall Systems		Combination Wall Systems			
Manufacturer	System	Facing Unit Manufacturer	Facing Unit	Geogrid Manufacturer	Geogrid

MSE Wall Systems Data Table is to be completed by MoDOT construction personnel to record the manufacturer of the proprietary wall system or the manufacturers of the combination wall system that was used for constructing the MSE wall.

General Notes:

SEC/SUR 8 TWP 47N RGE 31W

Design Specifications:

2002 AASHTO LFD (17th Ed.) Standard Specifications (Section 5 ASD Design)
Seismic Performance Category = A
Acceleration Coefficient = 0.04

Design Loading:

Φ_b = 24° and Unit weight, γ_b = 120 pcf for retained backfill material to be retained by the mechanically stabilized earth wall system.

Φ_f = 24° for unimproved foundation ground where wall is to bear.

For unimproved foundation ground, the allowable bearing pressure is 2 ksf.

The maximum applied bearing pressure for the controlling design case at the foundation level shall be shown on the shop drawings and shall be less than the allowable bearing pressure for foundation ground provided herein. For seismic design the maximum applied bearing pressure shall be less than two times the allowable bearing pressure.

Allowable bearing pressure shall not be adjusted from that as shown on the plans.

Contractor shall include design Φ_r (actual $\Phi_r \geq 34°$) and the total unit weight, γ_r , for the select granular backfill (reinforced backfill and wedge area backfill) for structural systems on shop drawings. Contractor shall identify source of select granular backfill material, submit proctor in accordance with AASHTO T 99 (ASTM D698) and gradation with the shop drawings. When backfill material is too coarse to develop a proctor curve the contractor shall determine the maximum dry density (relative density) in accordance with ASTM D4253 and ASTM D4254 and assume percent passing the 200 sieve for optimum water content.

Total unit weight, γ_r = (95% compaction) x (maximum dry density) x (1 + optimum water content)

Design Φ_r = 34°for the select granular backfill (reinforced backfill) only for structural systems.

Factor of safety shall be 2.0 for overturning and 1.5 for sliding.

For seismic design the factor of safety shall be 1.5 for overturning and 1.1 for sliding.

Design Unit Stresses:

All concrete for leveling pad shall be Class B or B-1 with f'c = 4000 psi.

The minimum compressive strength of concrete for precast concrete block shall be 4,000 psi in accordance with Sec 1052.

Miscellaneous:

The MSE wall system shall be built in accordance with Sec 720.

The MSE wall system shall be a small block wall system.

A filter cloth meeting the requirements for a Separation Geotextile material shall be placed between the select granular backfill for structural systems and the backfill being retained by the mechanically stabilized earth wall system.

The top and bottom elevations are given for a vertical wall. The height of the wall shall be adjusted as necessary to fit the ground slope and the concrete leveling pad shall be adjusted as necessary to account for the wall batter. If a fence is built on an extended gutter, then the height of the wall shall be adjusted further.

The baseline of the wall shown is for a vertical wall. This baseline shall correspond to Elevation 1032.27.

The contractor shall be solely responsible to coordinate construction of the wall with bridge and roadway construction and ensure that the bridge and roadway construction, resulting or existing obstructions, shall not impact the construction or performance of the wall. Soil reinforcement shall be designed and placed to avoid damage by pile driving, guardrail post installation, utility and sign foundations. (See Roadway and Bridge plans.)

Soil reinforcement shall be spaced to avoid roadway drop inlet behind wall.

All steel soil reinforcements shall be separated from other metallic elements by at least 3 inches.

The splay angle should be less than 15° and tensile capacity of splayed reinforcement shall be reduced by the cosine of the splay angle. Soil reinforcement shall clear the obstruction by at least 3 inches.

No reinforcement shall be left unconnected to the wall face or arbitrarily cut/bent in the field to avoid the obstruction.

Where interference between the vertical obstruction and the soil reinforcement is unavoidable, the design of the wall near the obstruction may be modified using one of the alternatives in FHWA-NHI-10-24, Section 5.4.2. Show detail layout on the drawings. For wall designs with horizontal obstructions in reinforced soil mass, see FHWA-NHI-10-024, Section 5.4.3.

CP #3 - 1/2" REBAR W/ CONTROL POINT CAP
ELEVATION = 1034.50
NORTHING 997220.24
EASTING 2828083.97

RETAINING WALL ALONG RIGHT SIDE OF ROUTE 291

ROUTE 291 FROM ROUTE I-470 TO ROUTE 50
ABOUT 3.1 MILES SOUTH OF ROUTE I-470
BEGINNING STATION 170+35.00

Note: This drawing is not to scale. Follow dimensions.

Digitally signed by Grant Luckenbill
Date: 2025.02.28 15:19:59-06'00'

GRANT C. LUCKENBILL NUMBER PE-2012018100 2-28-25
GRANT C. LUCKENBILL–ENGINEER
MO# PE-2012018100

DATE PREPARED 2/27/2025

ROUTE	STATE
291	MO
DISTRICT	SHEET NO.
KC	1

COUNTY JACKSON
JOB NO. J4P3196
FEDERAL PROJECT NO STB-3001(009)
PROJECT NO.
BRIDGE NO. KC-0123

NO.	DESCRIPTION	DATE

IF A SEAL IS PRESENT ON THIS SHEET IT HAS BEEN ELECTRONICALLY SEALED AND DATED.

MISSOURI HIGHWAYS AND TRANSPORTATION COMMISSION
105 WEST CAPITOL
JEFFERSON CITY, MO 65102
1-888-ASK-MODOT (1-888-275-6636)

LEE'S SUMMIT MISSOURI

olsson
1301 BURLINGTON ST., STE. 100
NORTH KANSAS CITY, MO 64116
PHONE: 816.361.1177
CERT. OF AUTHORITY NO. 001592

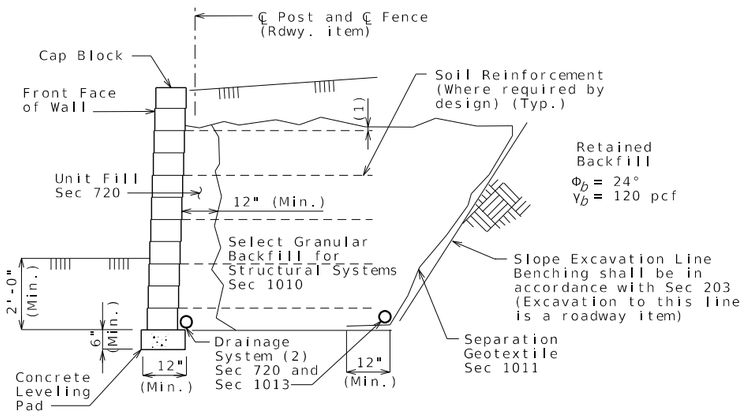

TYPICAL SECTION THRU SMALL BLOCK WALL

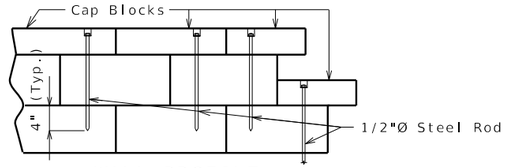

WALL PROFILE

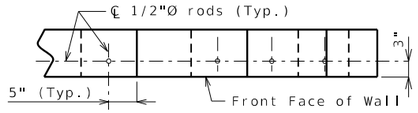

WALL PLAN

Note:

Holes shall be 5/8" round and extended 4" into the third layer of blocks, recessed 2" deep by 1 1/2" round.

Rods or reinforcing bars shall be secured by an approved resin anchor system in accordance with Sec 1039.

Recess hole shall be backfilled with non-shrink cement grout.

(1) Topmost layer of reinforcement shall be fully covered with select granular backfill for structural systems, as approved by the wall manufacturer, before placement of the Separation Geotextile.

(2) Minimum 6" diameter perforated PVC or PE pipe.

Manufacturer shall show drain details on design plans to be submitted as shown on MoDOT MSE wall plans and/or roadway plans.

Contractor shall modify the drain details as shown if it will improve flow as may be the case for stepped leveling pad, and for an uneven ground line (approval of the engineer required).

Permanent shims for Small block MSE wall:
Shims will be sparingly allowed to maintain horizontal and vertical control. The preferable shim shall be made of a plastic material that will not rust, stain, rot or leach onto the concrete and has a minimum compressive strength equal to block wall unit. Steel or wood shims will not be allowed. Shims shall not exceed 3/16" in thickness and shall distribute load in order to not induce stress into block wall units. No shim shall be used between the concrete leveling pad and the base course of the block wall.

General Notes Cont.:

Excavation:
Excavation quantities and pay items are given on the roadway plans. Excavation quantities are based on a soil reinforcement length of 4 ft. The soil reinforcement length may vary based upon the wall design selected by the contractor. Plan excavation quantities will be paid regardless of any actual quantities removed based on the soil reinforcement length and design selected.

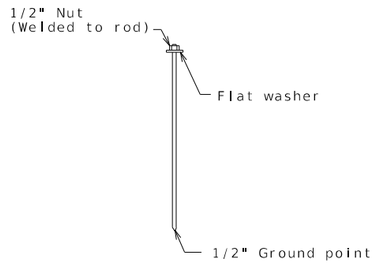

DETAILS OF 1/2" THREADED ROD OR REINFORCING ROD

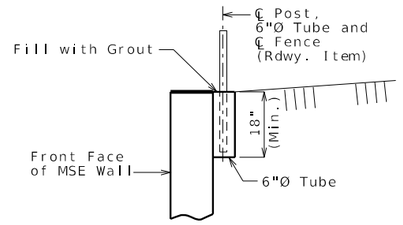

FENCE POST CONNECTION BEHIND WALL

Material Properties Used in Design				
Reinf. Fill/Select Granular Backfill		Active Force Computations		Foundation
Φ°	γ (pcf)	Φ°	γ (pcf)	Φ°

Note: MSE Wall designer shall include table on shop drawings and provide values used in the design computations. Effects of cohesion shall be ignored unless approved by the engineer.

The slope excavation line shall be benched and separation geotextile shall be placed between the retained backfill and either select granular backfill or better aggregate material, and between the select granular backfill and better aggregate material.

Show range of acceptable theta (Θ) angle on shop drawings which must be consistent with design computations and proposed construction of wall. Show active force computation properties on shop drawings and in design computations. Coordination between wall designer (manufacturer) and contractor is required before shop drawing submittal.

DETAILS FOR GENERIC MSE WALL

Detailed Sept. 2024
Checked Sept. 2024

Note: This drawing is not to scale. Follow dimensions.

F:\2021\04501-05000\021-04786\40-Design\Microstation\J4P3196\plan_sheets\20 Retaining Walls\KC-0123\B_KC-0123_002_J4P3196_TYP SEC.dgn 5:58:18 PM 2/27/2025

Digitally signed by Grant Luckenbill
Date: 2025.02.28 15:04:41-06'00'

GRANT C. LUCKENBILL NUMBER PE-2012018100 2-28-25

GRANT C. LUCKENBILL–ENGINEER
MO# PE-2012018100

DATE PREPARED
2/27/2025

ROUTE	STATE
291	MO
DISTRICT	SHEET NO.
KC	2

COUNTY
JACKSON

JOB NO.
J4P3196

FEDERAL PROJECT NO
STB-3001(009)

PROJECT NO.

BRIDGE NO.
KC-0123

DESCRIPTION

DATE

IF A SEAL IS PRESENT ON THIS SHEET IT HAS BEEN ELECTRONICALLY SEALED AND DATED.

MISSOURI HIGHWAYS AND TRANSPORTATION COMMISSION
105 WEST CAPITOL
JEFFERSON CITY, MO 65102
1-888-ASK-MODOT (1-888-275-6636)

LEE'S SUMMIT MISSOURI

olsson
1301 BURLINGTON ST., STE. 100
NORTH KANSAS CITY, MO 64116
PHONE: 816.361.1177
CERT. OF AUTHORITY NO. 001592

olsson

BOREHOLE REPORT NO. WB-1

Sheet 1 of 1

PROJECT NAME: Lee's Summit M291 Interchange Hwy 50
CLIENT: Missouri Department of Transportion
PROJECT NUMBER: 021-04786
LOCATION: Lee's Summit, Missouri

Shelby Tube ■ Split Spoon ⊠

ELEVATION (ft)	MATERIAL DESCRIPTION	GRAPHIC LOG	DEPTH (ft)	SAMPLE TYPE NUMBER	CLASSIFICATION (USCS)	BLOWS/6" N-VALUE	UNC. STR. (tsf)	MOISTURE (%)	DRY DENSITY (pcf)	LL/PI (%)	ADDITIONAL DATA/ REMARKS
1035	**APPROX. SURFACE ELEV. (ft):**1035		0								
	ROOT ZONE 0.3'										
	FAT CLAY										
	Stiff, gray and brown, mottled, moist, with silt			U 1			2.1	25.3	96.8		
1030			5	U 2			2.1	26.2	100.0		
1025			10	U 3			1.8	26.5	101.7		
	12.0'										
	WEATHERED SHALE										
	Gray, moist										
1020			15	SS 4		16-31-50 N=81		12.0			
	18.0'										
	WEATHERED SANDSTONE										
	Gray			SS 5		18-50/5"		12.9			
1015	20.0'		20								
	BASE OF BORING AT 20.0 FEET										

WATER LEVEL OBSERVATIONS	
WD	▽ Not Encountered
IAD	▼ Not Encountered
AD	▼ Not Performed

OLSSON, INC.
1700 E. 123RD STREET
OLATHE, KANSAS 66061

STARTED:	6/28/22	FINISHED:	6/28/22
DRILL CO.:	OLSSON	DRILL RIG:	CME 75
DRILLER:	D. LUDWIG	LOGGED BY:	B. GROFF
METHOD: CONTINUOUS FLIGHT AUGER			

olsson

BOREHOLE REPORT NO. WB-2

Sheet 1 of 1

PROJECT NAME: Lee's Summit M291 Interchange Hwy 50
CLIENT: Missouri Department of Transportion
PROJECT NUMBER: 021-04786
LOCATION: Lee's Summit, Missouri

Shelby Tube ■ Split Spoon ⊠

ELEVATION (ft)	MATERIAL DESCRIPTION	GRAPHIC LOG	DEPTH (ft)	SAMPLE TYPE NUMBER	CLASSIFICATION (USCS)	BLOWS/6" N-VALUE	UNC. STR. (tsf)	MOISTURE (%)	DRY DENSITY (pcf)	LL/PI (%)	ADDITIONAL DATA/ REMARKS
	APPROX. SURFACE ELEV. (ft):1041		0								
	ROOT ZONE 0.3'										
1040	***FAT CLAY***										
	Stiff, dark brown, moist, with silt			U 1			1.8	30.2	94.8		
	3.0'										
	LEAN CLAY										
	Grades to stiff, light reddish brown, moist, silty			U 2	CL		1.5	25.3	98.8	39/22	
1035			5								
	7.0'										
	Grades to stiff, light reddish brown and brown, mottled, moist			U 3			1.0	32.9	88.2		
1030			10								
	12.5'										
	HIGHLY WEATHERED SHALE										
	Olive brown, moist			SS 4		7-13-16 N=29		19.0			
1025			15								
	18.0'										
	Grades to gray			SS 5		16-35-50/5"		17.8			
	20.0'		20								
	BASE OF BORING AT 20.0 FEET										

WATER LEVEL OBSERVATIONS	
WD	▽ 13.0 ft
IAD	▼ 20.0 ft after 0 Hrs
AD	▼ Not Performed

OLSSON, INC.
1700 E. 123RD STREET
OLATHE, KANSAS 66061

STARTED:	6/28/22	FINISHED:	6/28/22
DRILL CO.:	OLSSON	DRILL RIG:	CME 75
DRILLER:	D. LUDWIG	LOGGED BY:	B. GROFF
METHOD: CONTINUOUS FLIGHT AUGER			

Digitally signed by Grant Luckenbill
Date: 2025.02.28 15:04:05-06'00'

GRANT C. LUCKENBILL NUMBER PE-2012018100 2-28-25
GRANT C. LUCKENBILL–ENGINEER
MO# PE-2012018100

DATE PREPARED: 2/27/2025
ROUTE: 291 | STATE: MO
DISTRICT: KC | SHEET NO.: 3
COUNTY: JACKSON
JOB NO.: J4P3196
FEDERAL PROJECT NO: STB-3001(009)
PROJECT NO.:
BRIDGE NO.: KC-0123

DESCRIPTION | DATE

MISSOURI HIGHWAYS AND TRANSPORTATION COMMISSION
105 WEST CAPITOL
JEFFERSON CITY, MO 65102
1-888-ASK-MODOT (1-888-275-6636)

LEE'S SUMMIT MISSOURI

olsson
1301 BURLINGTON ST., STE. 100
NORTH KANSAS CITY, MO 64116
PHONE: 816.361.1177
CERT. OF AUTHORITY NO. 001592

IF A SEAL IS PRESENT ON THIS SHEET IT HAS BEEN ELECTRONICALLY SEALED AND DATED.

BORING DATA

Note: For locations of borings, see Sheet No. 1.

Detailed Sept. 2024
Checked Sept. 2024

Note: This drawing is not to scale. Follow dimensions.

F:\2021\04501-05000\021-04786\40-Design\Microstation\J4P3196\plan_sheets\20 Retaining Walls\KC-0123\B_KC-0123_003_JP43196_BORINGS 1 OF 1.dgn 5:58:20 PM 2/27/2025

159' RETAINING WALL

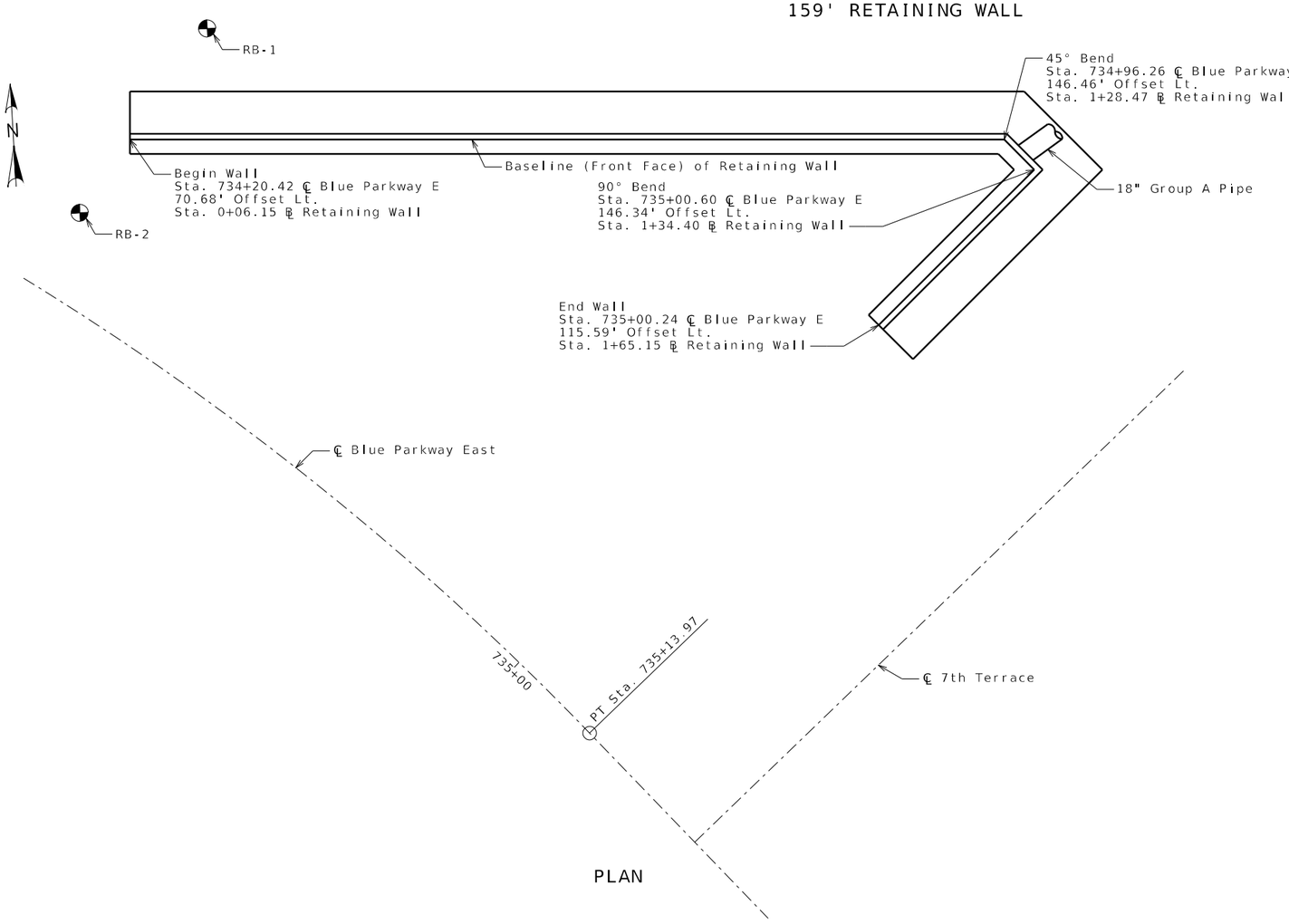

PLAN

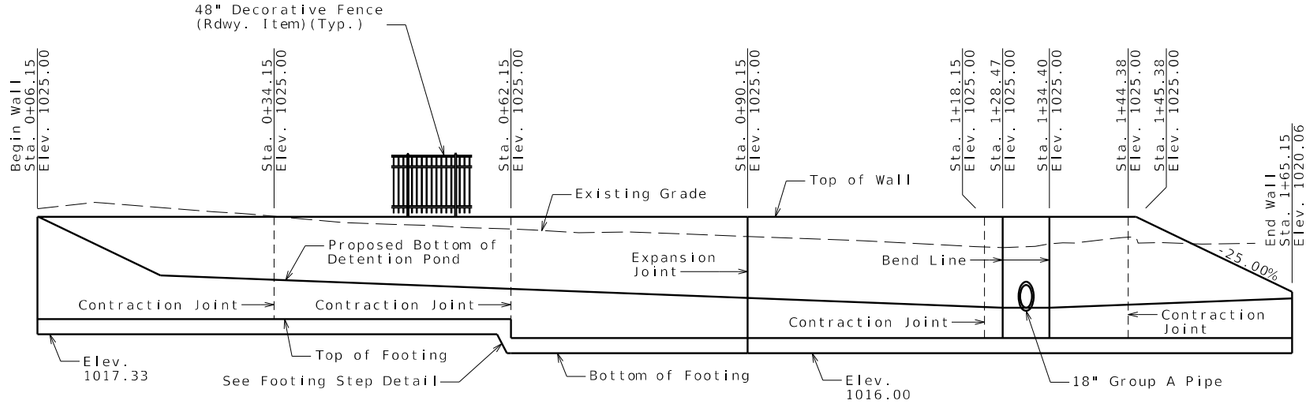

DEVELOPED ELEVATION
Form Liner not shown for clarity.

Designed Feb. 2023
Detailed Sept. 2024
Checked Sept. 2024

Note: This drawing is not to scale. Follow dimensions.

General Notes:

SEC/SUR 8 TWP 47N RGE 31W

Design Specifications:

2020 AASHTO LRFD Bridge Design Specifications (9th Ed.)
Seismic Performance Category = A
Acceleration Coefficient = 0.04

Design Loading:

Earth = 120 lb/cf
Equivalent Fluid Pressure = 90 lb/cf

Design Unit Stresses:

Class B Concrete (Retaining Wall) f'c = 3,000 psi
Reinforcing Steel (Grade 60) fy = 60,000 psi

Miscellaneous:

All reinforcement shall be epoxy coated.

Lap longitudinal #5-F1 Bars at minimum of 2'-1" at splices.

Minimum clearance to reinforcing steel shall be 2", unless otherwise shown.

Contractor to provide shop drawings that include a bill of reinforcing for approval by the Engineer prior to ordering materials.

The contractor shall be solely responsible to coordinate construction of the wall with bridge and roadway construction and ensure that the bridge and roadway construction, resulting or existing obstructions, shall not impact the construction or performance of the wall.

A filter cloth meeting the requirements for a Separation Geotextile material shall be placed between the granular backfill and the backfill being retained by the retaining wall.

Weep hole drains shall be 2" diameter PVC. A galvanized steel rodent screen and 2'x2' separation geotextile shall be centered on each drain. Adhere fabric and screen with an approved adhesive compound or approved form ties.

Granular backfill shall be a freely draining, 1" nominal limestone aggregate intended for use on structural systems, or approved equal. Granular backfill shall be installed in accordance with Sec 720.

Concrete and masonry protective coating shall be applied on all exposed concrete areas in accordance with Sec 711.

Sacrificial graffiti protective coating shall be applied on all exposed concrete areas in accordance with Sec 711.

Excavation:

Excavation quantities and pay items are given on the roadway plans. Plan excavation quantities will be paid regardless of any actual quantities removed.

If unsuitable material is encountered, excavation of unsuitable material and furnishing and placing of granular backfill shall be in accordance with sec 206.

◔ Indicates location of borings.

Notice and Disclaimer Regarding Boring Log Data

The locations of all subsurface borings for this structure are shown on the plan sheet(s) for this structure. The boring data for all locations indicated, as well as any other boring logs or other factual records of subsurface data and investigations performed by the department for the design of the project, are shown on Sheet(s) No. 3 and may be included in the Electronic Bridge Deliverables. They will also be available from the Project Contact upon written request. No greater significance or weight should be given to the boring data depicted on the plan sheets than is given to the subsurface data available from the district or elsewhere.

The Commission does not represent or warrant that any such boring data accurately depicts the conditions to be encountered in constructing this project. A contractor assumes all risks it may encounter in basing its bid prices, time or schedule of performance on the boring data depicted here or those available from the district, or on any other documentation not expressly warranted, which the contractor may obtain from the Commission.

Estimated Quantities

Item		Total
Class B Concrete (Retaining Walls)	cu. yard	58.6
Concrete and Masonry Protection System	lump sum	1
Sacrificial Graffiti Protection System	lump sum	1

Formwork, reinforcing steel, joint filler, form liner, granular backfill, flowable backfill, waterstop and compaction shall be considered completely covered by the bid item "Class B Concrete (Retaining Walls)" per cubic yard.

CP #3 - 1/2" REBAR W/ CONTROL POINT CAP
ELEVATION = 1034.50
NORTHING 997220.24
EASTING 2828083.97

RETAINING WALL ALONG LEFT SIDE OF BLUE PARKWAY EAST

BLUE PARKWAY EAST FROM ROUTE 291 TO 7TH TERRACE
ABOUT 0.1 MILES EAST OF ROUTE 291
BEGINNING STATION 734+20.42

Digitally signed by Grant Luckenbill
Date: 2025.02.28 15:19:47-06'00'

GRANT C. LUCKENBILL NUMBER PE-2012018100
2-28-25
GRANT C. LUCKENBILL–ENGINEER
MO# PE-2012018100

DATE PREPARED
2/27/2025

ROUTE	STATE
291	MO
DISTRICT	SHEET NO.
KC	1

COUNTY
JACKSON

JOB NO.
J4P3196

FEDERAL PROJECT NO
STB-3001(009)

PROJECT NO.

BRIDGE NO.
KC-0124

DESCRIPTION	DATE

IF A SEAL IS PRESENT ON THIS SHEET IT HAS BEEN ELECTRONICALLY SEALED AND DATED.

MISSOURI HIGHWAYS AND TRANSPORTATION COMMISSION
105 WEST CAPITOL
JEFFERSON CITY, MO 65102
1-888-ASK-MODOT (1-888-275-6636)

LEE'S SUMMIT MISSOURI

olsson
1301 BURLINGTON ST., STE. 100
NORTH KANSAS CITY, MO 64116
PHONE: 816.361.1177
CERT. OF AUTHORITY NO. 001592

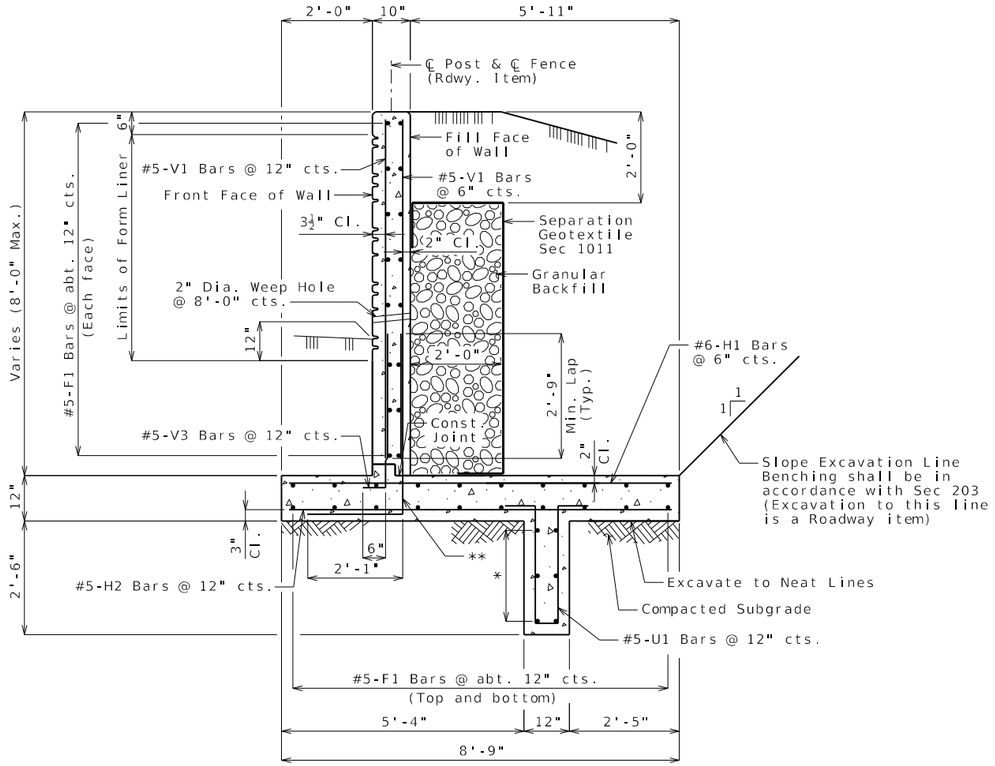

*#5-F Bars @ 12" cts. (Each face)
**#5-V2 Bars @ 6" cts.

TYPICAL SECTION THRU RETAINING WALL

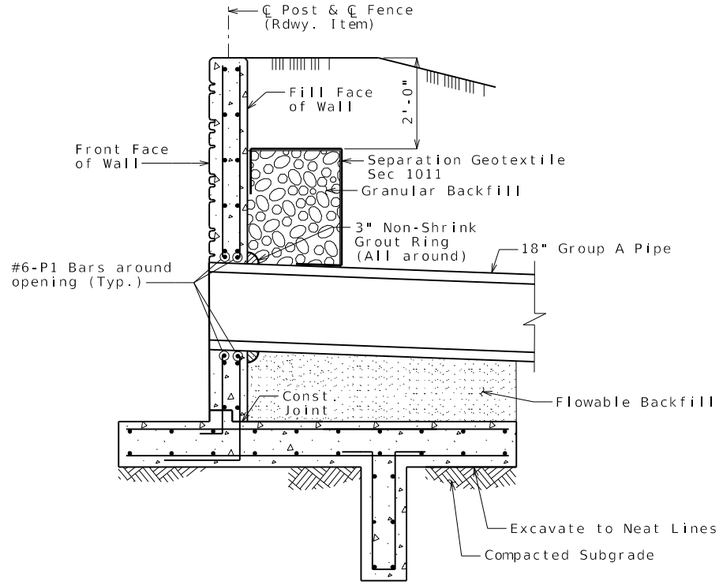

SECTION THRU RETAINING WALL AT PIPE PENETRATION
(See Typical Section Thru Retaining Wall for dimensions and reinforcement)

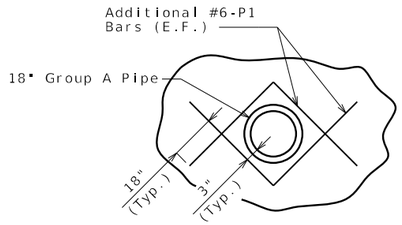

PIPE PENETRATION DETAIL
Trim reinforcing as necessary to maintain 1 1/2" min. clear around pipe penetration.

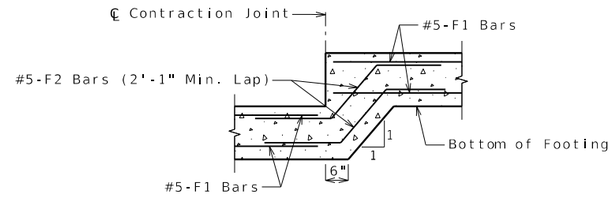

FOOTING STEP DETAIL

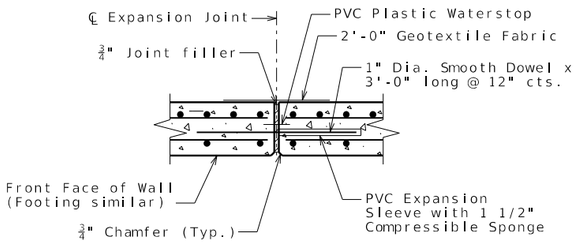

WALL AND FOOTING EXPANSION JOINT DETAIL

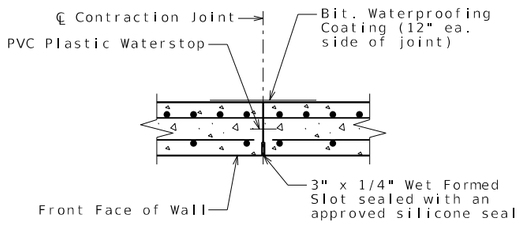

VERTICAL CONTRACTION JOINT DETAIL

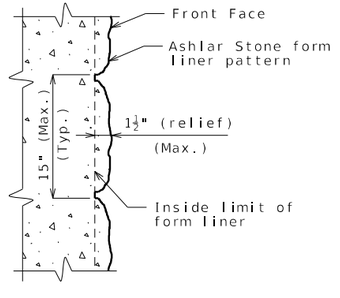

FORM LINER DETAIL

Notes:

The cost of form liners for the retaining wall, complete in place, will be considered completely covered by the contract unit price for Class B Concrete (Retaining Walls).

Form liner shall be constructed in accordance with Special Provisions.

The following is a list of form liner manufacturers and types which may be used. Depth of relief for all form liner pattern's shall vary up to 1 1/2". The height of any single 'stone' shall be 15" maximum.

- Scott System, Inc.: Form liner pattern #167 "Ashlar Stone"
- Fitzgerald Formliners: Form liner pattern #16986 "Ashlar Stone"
- Greenstreak: Form liner pattern #330 "Ashlar Stone"
- Spec Formliners: Form liner pattern #1515 "Ashlar Stone"
- Customrock: Form liner pattern #12020 "Tollway Ashlar"
- An approved equal

DETAILS FOR RETAINING WALL

Detailed Sept.2024
Checked Sept.2024

Note: This drawing is not to scale. Follow dimensions.

Digitally signed by Grant Luckenbill
Date: 2025.02.28 15:03:24-06'00'
GRANT C. LUCKENBILL NUMBER PE-2012018100
2-28-25
GRANT C. LUCKENBILL-ENGINEER
MO# PE-2012018100

DATE PREPARED 2/27/2025
ROUTE 291 | STATE MO
DISTRICT KC | SHEET NO. 2
COUNTY JACKSON
JOB NO. J4P3196
FEDERAL PROJECT NO STB-3001(009)
PROJECT NO.
BRIDGE NO. KC-0124

DESCRIPTION | DATE

MISSOURI HIGHWAYS AND TRANSPORTATION COMMISSION
105 WEST CAPITOL
JEFFERSON CITY, MO 65102
1-888-ASK-MODOT (1-888-275-6636)
LEE'S SUMMIT MISSOURI
olsson
1301 BURLINGTON ST., STE. 100
NORTH KANSAS CITY, MO 64116
PHONE: 816.361.1177
CERT. OF AUTHORITY NO. 001592

IF A SEAL IS PRESENT ON THIS SHEET IT HAS BEEN ELECTRONICALLY SEALED AND DATED.

olsson

BOREHOLE REPORT NO. RB-1

Sheet 1 of 1

PROJECT NAME: Lee's Summit M291 Interchange Hwy 50
CLIENT: Missouri Department of Transportion
PROJECT NUMBER: 021-04786
LOCATION: Lee's Summit, Missouri

Shelby Tube ■ Split Spoon ⊠

APPROX. SURFACE ELEV. (ft): 1024

ELEVATION (ft)	MATERIAL DESCRIPTION	GRAPHIC LOG	DEPTH (ft)	SAMPLE TYPE NUMBER	CLASSIFICATION (USCS)	BLOWS/6" N-VALUE	UNC. STR. (tsf)	MOISTURE (%)	DRY DENSITY (pcf)	LL/PI (%)	ADDITIONAL DATA/ REMARKS
	ASPHALT		0								
	Thickness of 14"										
	GRAVEL SUBBASE										
	Thickness of 2"										
	LEAN TO FAT CLAY										
1020	*Firm, gray with brown, moist, silt*			U 1				24.2	99.9		PP = 2.5 tsf
			5	U 2			0.8	29.0	93.8		
1015	*Grades to stiff, light brown with reddish brown, moist, sand*		10	U 3				25.7	100.7		PP = 4.0 tsf
1010	***SHALE*** *Light brown with olive, sandy*			SS 4		50		13.8			

7.0' — 12.5' — 14.0'

BASE OF BORING AT 14.0 FEET

WATER LEVEL OBSERVATIONS	
WD	▽ Not Encountered
IAD	▼ Not Encountered
AD	▼ Not Performed

OLSSON, INC.
1700 E. 123RD STREET
OLATHE, KANSAS 66061

STARTED:	6/26/22	FINISHED:	6/26/22
DRILL CO.:	OLSSON	DRILL RIG:	CME 75
DRILLER:	D. LUDWIG	LOGGED BY:	J. PUTNAM
METHOD: CONTINUOUS FLIGHT AUGER			

olsson

BOREHOLE REPORT NO. RB-2

Sheet 1 of 1

PROJECT NAME: Lee's Summit M291 Interchange Hwy 50
CLIENT: Missouri Department of Transportion
PROJECT NUMBER: 021-04786
LOCATION: Lee's Summit, Missouri

Shelby Tube ■ Split Spoon ⊠

APPROX. SURFACE ELEV. (ft): 1027

ELEVATION (ft)	MATERIAL DESCRIPTION	GRAPHIC LOG	DEPTH (ft)	SAMPLE TYPE NUMBER	CLASSIFICATION (USCS)	BLOWS/6" N-VALUE	UNC. STR. (tsf)	MOISTURE (%)	DRY DENSITY (pcf)	LL/PI (%)	ADDITIONAL DATA/ REMARKS
	ROOT ZONE		0								
	LEAN TO FAT CLAY										
1025	*Stiff, brown with gray, moist, silt*			U 1				27.3	97.0		PP = 2.5 tsf
			5	U 2				20.1	109.9		PP = 4.5+ tsf
1020	*Stiff, light gray with reddish brown, moist, shaley*		10	U 3			1.5	21.3	102.7		
1015	***SHALE*** *Grades to reddish brown with brown*			SS 4		50/4"		23.9			

0.3' — 3.0' — 6.0' — 12.0' — 13.8'

BASE OF BORING AT 13.8 FEET

WATER LEVEL OBSERVATIONS	
WD	▽ 13.6 ft
IAD	▼ 13.0 ft after 0 Hrs
AD	▼ Not Performed

OLSSON, INC.
1700 E. 123RD STREET
OLATHE, KANSAS 66061

STARTED:	6/26/22	FINISHED:	6/26/22
DRILL CO.:	OLSSON	DRILL RIG:	CME 75
DRILLER:	D. LUDWIG	LOGGED BY:	J. PUTNAM
METHOD: CONTINUOUS FLIGHT AUGER			

Digitally signed by Grant Luckenbill
Date: 2025.02.28 15:04:24-06'00'

GRANT C. LUCKENBILL NUMBER PE-2012018100 — 2-28-25
GRANT C. LUCKENBILL–ENGINEER
MO# PE-2012018100

DATE PREPARED: 2/27/2025
ROUTE: 291 | STATE: MO
DISTRICT: KC | SHEET NO.: 3
COUNTY: JACKSON
JOB NO.: J4P3196
FEDERAL PROJECT NO: STB-3001(009)
PROJECT NO.:
BRIDGE NO.: KC-0124

DESCRIPTION | DATE

IF A SEAL IS PRESENT ON THIS SHEET IT HAS BEEN ELECTRONICALLY SEALED AND DATED.

MISSOURI HIGHWAYS AND TRANSPORTATION COMMISSION
105 WEST CAPITOL
JEFFERSON CITY, MO 65102
1-888-ASK-MODOT (1-888-275-6636)

LEE'S SUMMIT MISSOURI

olsson
1301 BURLINGTON ST., STE. 100
NORTH KANSAS CITY, MO 64116
PHONE: 816.361.1177
CERT. OF AUTHORITY NO. 001592

BORING DATA

Note: For locations of borings, see Sheet No. 1.

Detailed Sept. 2024
Checked Sept. 2024

Note: This drawing is not to scale. Follow dimensions.

F:\2021\04501-05000\021-04786\40-Design\Microstation\J4P3196\plan_sheets\20 Retaining Walls\KC-0124\B_KC-0124_003_JP43196_BORINGS 1 OF 1.dgn 5:58:28 PM 2/27/2025