MISSOURI HIGHWAYS AND TRANSPORTATION COMMISSION
CONSTRUCTION PLANS FOR PROPOSED
STATE HIGHWAY
ST. CHARLES COUNTY

TOWNSHIP 46 NORTH
RANGE 3 EAST

DESIGN DESIGNATION

A.A.D.T. - 2023 = 3542
A.A.D.T. - 2043 = 4322
D.H.V. = 12%
T = 4.9%
V = 45 M.P.H.
D = 50.0% NB, 50.0% SB
FUNCTIONAL CLASSIFICATION - MAJOR COLLECTOR

TEMPORARY CONSTRUCTION & PERMANENT EASEMENTS REQUIRED

UTILITIES SERVING THE PROJECT:

COMPANY	PHONE NUMBER
PUBLIC WATER SUPPLY DISTRICT #2	636-561-3737
CITY OF O'FALLON STORM SEWERS	636-379-7632
CITY OF O'FALLON TRAFFIC	636-379-5492
AMEREN OF MISSOURI	866-992-6619
SPIRE	800-887-4173
CUIVRE RIVER ELECTRIC COOP	800-392-3709
DUCKETT CREEK SEWER DISTRICT	636-441-1244
AT&T DISTRIBUTION	636-328-6952
LUMEN / CENTURY LINK	800-603-8044
EVERSTREAM	844-733-4700
SPECTRUM/CHARTER COMMUNICATIONS	636-299-2512
MODOT	314-453-6036

CONVENTIONAL SYMBOLS
(USED IN PLANS)

	EXISTING	NEW
BUILDINGS AND STRUCTURES		
GUARD RAIL		
GUARD CABLE		
CONCRETE RIGHT-OF-WAY MARKER		
STEEL RIGHT-OF-WAY MARKER		
LOCATION SURVEY MARKER		
UTILITIES		
FIBER OPTICS	—FO—	—FO—
OVERHEAD CABLE TV	-OTV-	-OTV-
UNDERGROUND CABLE TV	-UTV-	-UTV-
OVERHEAD TELEPHONE	—OT—	—OT—
UNDERGROUND TELEPHONE	—UT—	—UT—
OVERHEAD POWER	—OE—	—OE—
UNDERGROUND POWER	—UE—	—UE—
SANITARY SEWER	—S—	—S—
STORM SEWER	—SS—	—SS—
GAS	—G—	—G—
WATER	—W—	—W—
MANHOLE	SAN	
FIRE HYDRANT	HYD	
WATER VALVE	WV	
WATER METER	WM	
DROP INLET	D	
DITCH BLOCK		
GROUND MOUNTED SIGN	SIGN	
LIGHT POLE		
H-FRAME POWER POLE		
TELEPHONE PEDESTAL	PED	
FENCE		
CHAIN LINK	—V—	
WOVEN WIRE	—X—	
GATE POST		
BENCHMARK	BM	

NOTE: DASHED OR OPEN SYMBOLS INDICATE EXISTING FEATURES

KEY MAP
LOCATION OF ST. CHARLES COUNTY

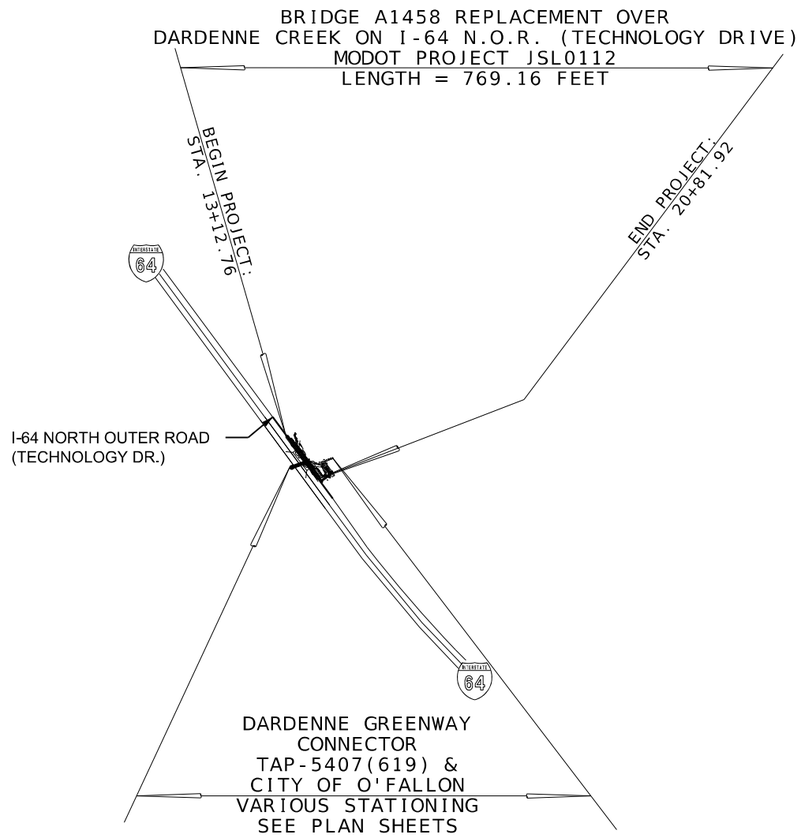

NOT TO SCALE

THE EXISTENCE AND APPROXIMATE LOCATION OF UTILITY FACILITIES KNOWN TO EXIST, AS SHOWN ON THE PLANS, ARE BASED ON THE BEST INFORMATION AVAILABLE TO THE COMMISSION AT THIS TIME. THIS INFORMATION IS PROVIDED BY THE COMMISSION "AS-IS" AND THE COMMISSION EXPRESSLY DISCLAIMS ANY REPRESENTATION OR WARRANTY AS TO THE COMPLETENESS, ACCURACY, OR SUITABILITY OF THE INFORMATION FOR ANY USE. RELIANCE UPON THIS INFORMATION IS DONE AT THE RISK AND PERIL OF THE USER, AND THE COMMISSION SHALL NOT BE LIABLE FOR ANY DAMAGES THAT MAY ARISE FROM ANY ERROR IN THE INFORMATION. IT IS, THEREFORE, THE RESPONSIBILITY OF THE CONTRACTOR TO VERIFY THE EXISTENCE, LOCATION AND STATUS OF ANY FACILITY. SUCH VERIFICATION INCLUDES DIRECT CONTACT WITH THE LISTED UTILITIES.

DISCLAIMER
THE PROFESSIONAL WHOSE SIGNATURE AND PERSONAL SEAL APPEAR HEREON ASSUMES RESPONSIBILITY ONLY FOR WHAT APPEARS IN THIS PROJECT, AND DISCLAIMS (PERSUANT TO SECTION 327.411 RSMO) SPECFIFICATION. ESTIMATES, REPORTS OR OTHER DOSCUMENTS OR INSTRUMENTS NOT SEALED BY THE UNDERSIGNED PROFESSIONAL RELATING TO OR INTENDED TO BE USED FOR ANY PART OR PARTS OF THE PROJECT TO WHICH THIS PAGE REFERS.

INDEX OF SHEETS

LENGTH OF PROJECT

BEGINNING OF PROJECT	STA.	13+12.76
END OF PROJECT	STA.	20+81.92
APPARENT LENGTH		769.16 FEET
TOTAL CORRECTIONS		0.00 FEET
NET LENGTH OF PROJECT		769.16 FEET
STATE LENGTH		0.15 MILES
FOR INFORMATION ONLY ESTIMATED DISTURBED ACRES		1.50 ACRES

STATE OF MISSOURI
Kevin Thomas Foy O'Shaughnessy
NUMBER PE-2017000345
PROFESSIONAL ENGINEER

THIS SHEET HAS BEEN SIGNED, SEALED AND DATED ELECTRONICALLY

DATE PREPARED: 4/24/2025

ROUTE	STATE
NOR	MO
DISTRICT	SHEET NO.
SL	1

COUNTY: ST. CHARLES
JOB NO.: JSL0112
CONTRACT ID.
PROJECT NO.
BRIDGE NO.

DESCRIPTION	DATE

MISSOURI HIGHWAYS AND TRANSPORTATION COMMISSION
105 WEST CAPITOL
JEFFERSON CITY, MO 65102
1-888-ASK-MODOT (1-888-275-6636)

TITLE SHEET

CDG ENGINEERS
One Campbell Plaza, St. Louis, Missouri 63139
T. 314 781 7770
F. 314 781 9015
Missouri State Certificate of Authority # 1721

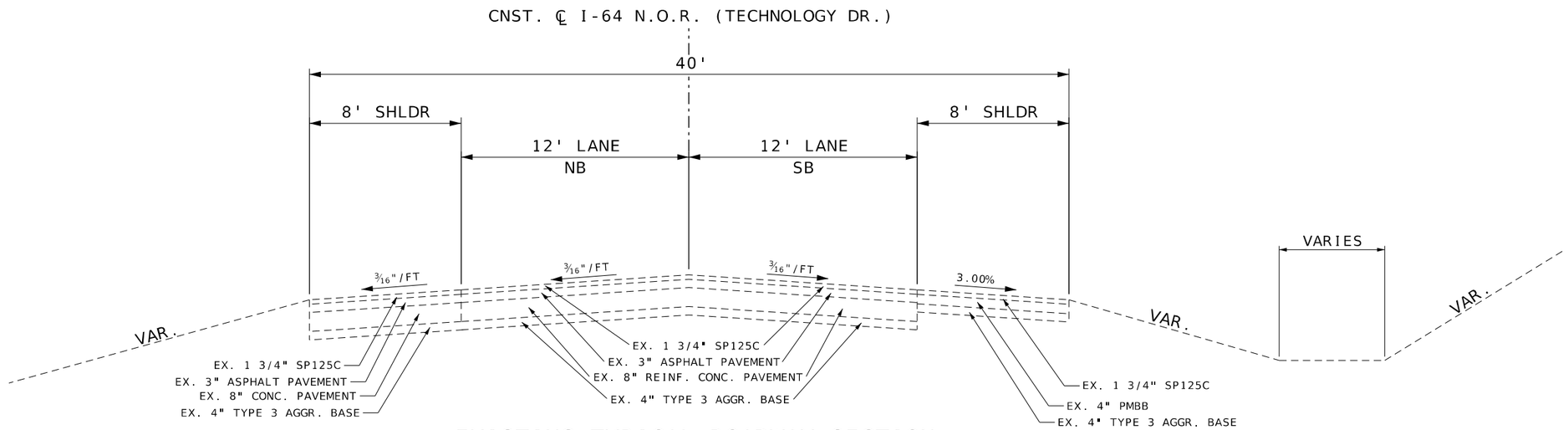

EXISTING TYPICAL ROADWAY SECTION

I-64 NORTH OUTER ROAD (TECHNOLOGY DRIVE)
STA. 13+12.76 TO STA. 14+40.07
STA. 19+28.95 TO STA. 20+10.58

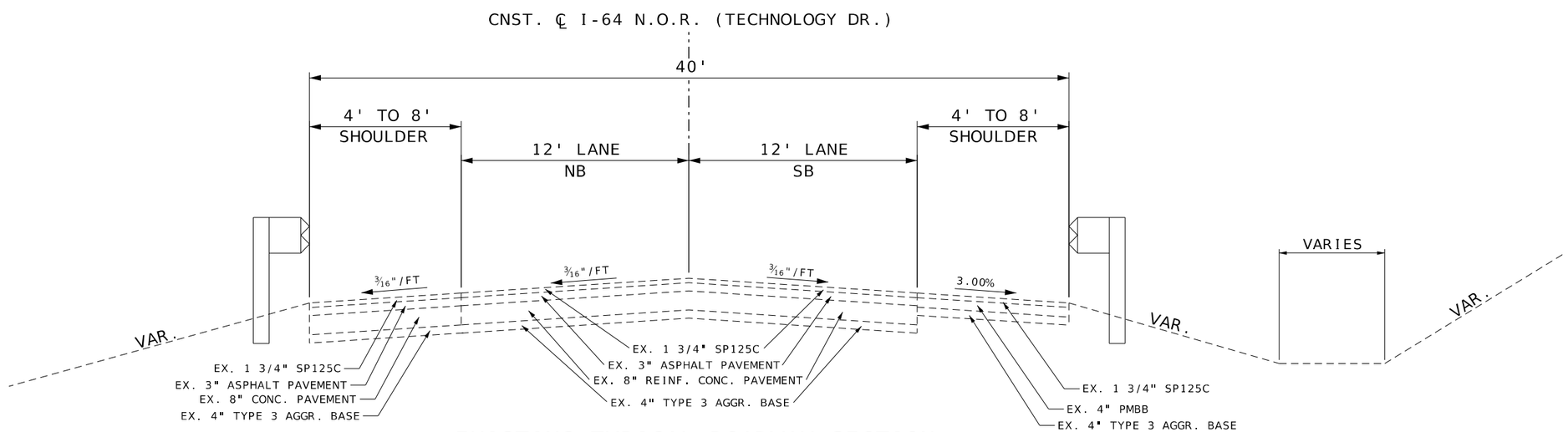

EXISTING TYPICAL ROADWAY SECTION

I-64 NORTH OUTER ROAD (TECHNOLOGY DRIVE)
STA. 14+40.07 TO STA. 15+89.67
STA. 17+77.80 TO STA. 19+28.95

DISCLAIMER
THE PROFESSIONAL WHOSE SIGNATURE AND PERSONAL SEAL APPEAR HEREON ASSUMES RESPONSIBILITY ONLY FOR WHAT APPEARS IN THIS PROJECT, AND DISCLAIMS (PERSUANT TO SECTION 327.411 RSMO) SPECFIFICATION, ESTIMATES, REPORTS OR OTHER DOSCUMENTS OR INSTRUMENTS NOT SEALED BY THE UNDERSIGNED PROFESSIONAL RELATING TO OR INTENDED TO BE USED FOR ANY PART OR PARTS OF THE PROJECT TO WHICH THIS PAGE REFERS.

NOT TO SCALE

STATE OF MISSOURI
Kevin Thomas Foy O'Shaughnessy
NUMBER PE-2017000345
PROFESSIONAL ENGINEER

THIS SHEET HAS BEEN SIGNED, SEALED AND DATED ELECTRONICALLY

DATE PREPARED	4/24/2025
ROUTE	NOR
STATE	MO
DISTRICT	SL
SHEET NO.	2
COUNTY	ST. CHARLES
JOB NO.	JSL0112
CONTRACT ID.	
PROJECT NO.	
BRIDGE NO.	

DESCRIPTION	DATE

MISSOURI HIGHWAYS AND TRANSPORTATION COMMISSION
105 WEST CAPITOL
JEFFERSON CITY, MO 65102
1-888-ASK-MODOT (1-888-275-6636)

TYPICAL SECTION
SHEET 1 OF 4

CDG ENGINEERS
One Campbell Plaza
St. Louis, Missouri 63139
T. 314 781 7770
F. 314 781 9075
Missouri State Certificate of Authority # 1721

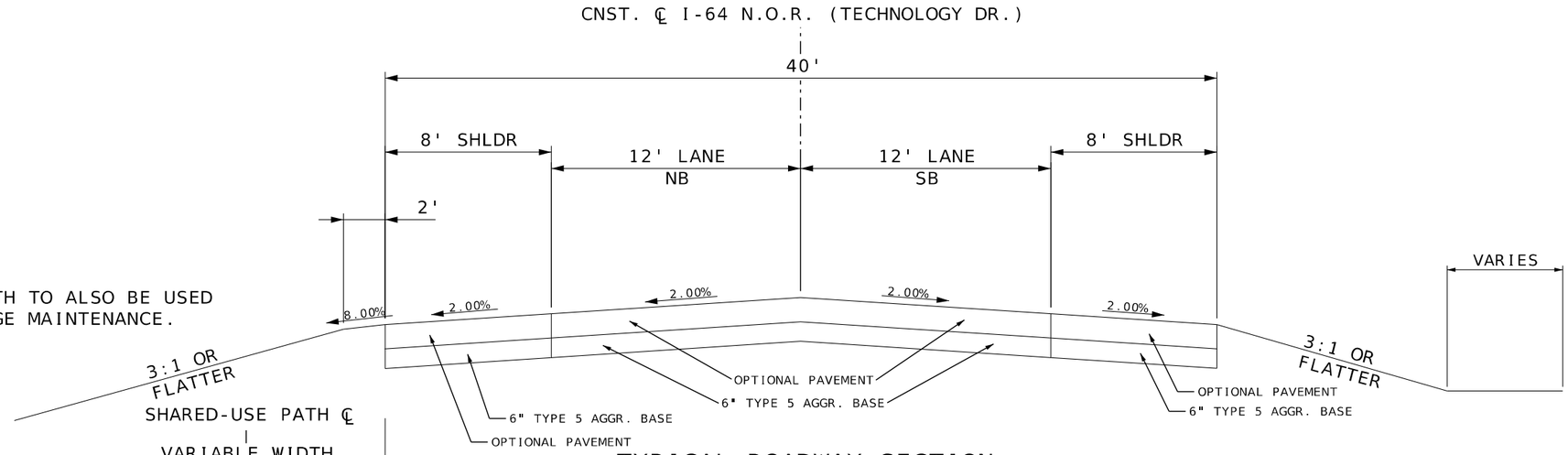

* SHARED-USE PATH TO ALSO BE USED BY MODOT BRIDGE MAINTENANCE.

TYPICAL ROADWAY SECTION

I-64 NORTH OUTER ROAD (TECHNOLOGY DRIVE)
STA. 13+12.76 TO STA. 14+28.03
STA. 19+55.81 TO STA. 20+10.58

SLOPES AND SHOULDER WIDTHS VARY
STA. 13+12.76 TO STA. 13+62.76
STA. 19+60.58 TO STA. 20+10.58

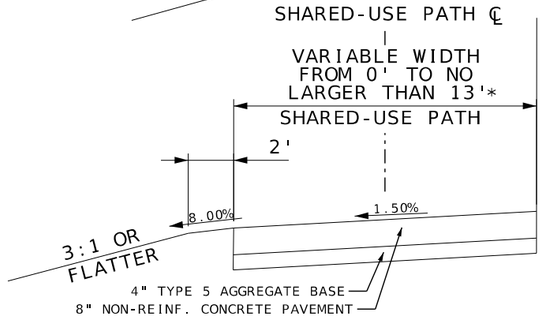

SHARED-USE PATH SECTION

SHARED-USE PATH STATIONING
STA. 30+00.00 TO STA. 30+64.89
STA. 35+92.67 TO STA. 36+63.66

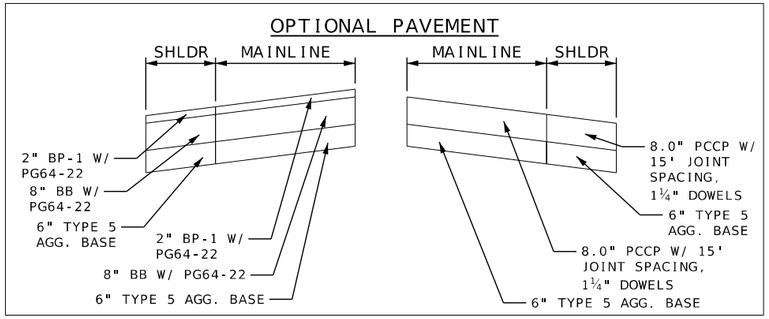

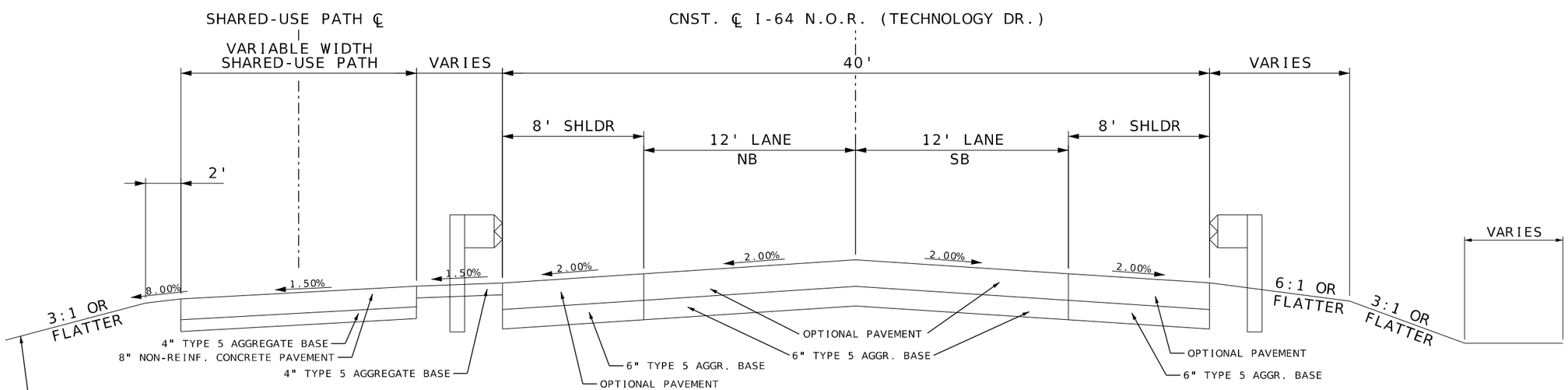

SHARED-USE PATH SECTION

SHARED-USE PATH STATIONING
STA. 30+64.89 TO STA. 32+02.69
STA. 34+54.36 TO STA. 35+92.67

MAINLINE STATIONING
STA. 14+71.84 TO STA. 15+82.03
2.5:1 OR FLATTER

TYPICAL ROADWAY SECTION

I-64 NORTH OUTER ROAD (TECHNOLOGY DRIVE)
STA. 14+28.03 TO STA. 15+58.55
STA. 18+10.22 TO STA. 19+55.81

DISCLAIMER
THE PROFESSIONAL WHOSE SIGNATURE AND PERSONAL SEAL APPEAR HEREON ASSUMES RESPONSIBILITY ONLY FOR WHAT APPEARS IN THIS PROJECT, AND DISCLAIMS (PERSUANT TO SECTION 327.411 RSMO) SPECFIFICATION. ESTIMATES, REPORTS OR OTHER DOSCUMENTS OR INSTRUMENTS NOT SEALED BY THE UNDERSIGNED PROFESSIONAL RELATING TO OR INTENDED TO BE USED FOR ANY PART OR PARTS OF THE PROJECT TO WHICH THIS PAGE REFERS.

NOT TO SCALE

STATE OF MISSOURI
Kevin Thomas Foy O'Shaughnessy
NUMBER PE-2017000345
PROFESSIONAL ENGINEER

THIS SHEET HAS BEEN SIGNED, SEALED AND DATED ELECTRONICALLY

DATE PREPARED	
4/24/2025	
ROUTE: NOR	STATE: MO
DISTRICT: SL	SHEET NO.: 2
COUNTY: ST. CHARLES	
JOB NO.: JSL0112	
CONTRACT ID.	
PROJECT NO.	
BRIDGE NO.	

DESCRIPTION	DATE

MISSOURI HIGHWAYS AND TRANSPORTATION COMMISSION
105 WEST CAPITOL
JEFFERSON CITY, MO 65102
1-888-ASK-MODOT (1-888-275-6636)

TYPICAL SECTION
SHEET 2 OF 4

CDG ENGINEERS
One Campus Drive, Suite 100, Shiloh, Illinois 62269
T. 314 781 7770
F. 314 781 9075
Missouri State Certificate of Authority # 1721

T:\Working\21228 - O'Fallon, MO-Dardenne Greenway Trail\8-CDG Drawings\MicroStation\Civil Files\002_TS_2of4_JSL0112_I05.dgn 8:08:27 AM 4/24/2025

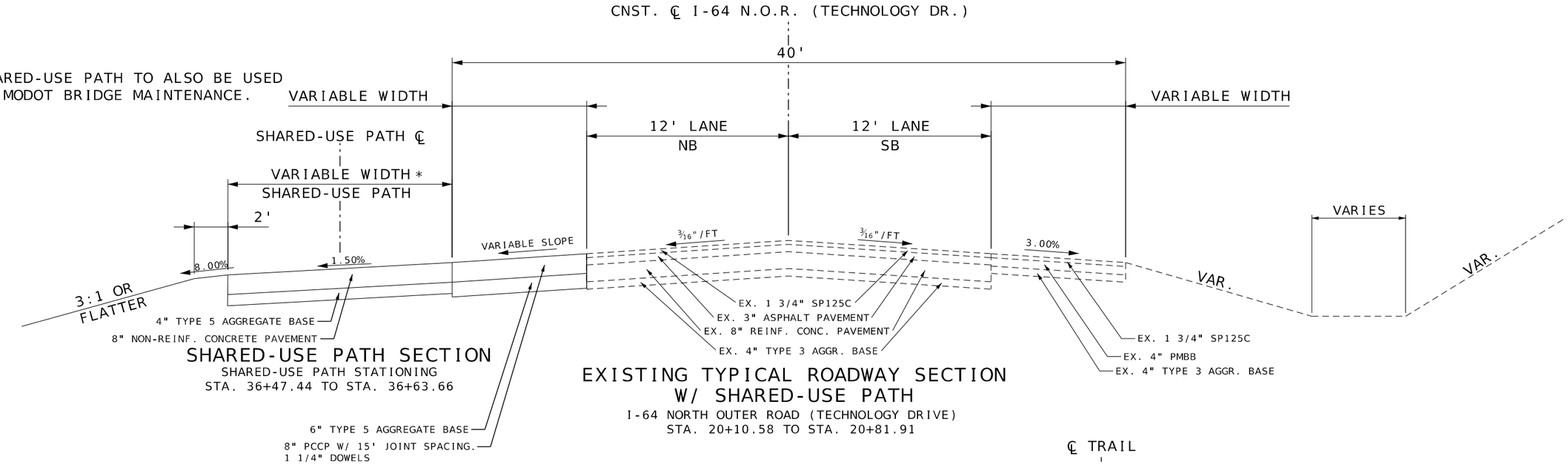

* SHARED-USE PATH TO ALSO BE USED BY MODOT BRIDGE MAINTENANCE.

SHARED-USE PATH SECTION

SHARED-USE PATH STATIONING
STA. 36+47.44 TO STA. 36+63.66

EXISTING TYPICAL ROADWAY SECTION W/ SHARED-USE PATH

I-64 NORTH OUTER ROAD (TECHNOLOGY DRIVE)
STA. 20+10.58 TO STA. 20+81.91

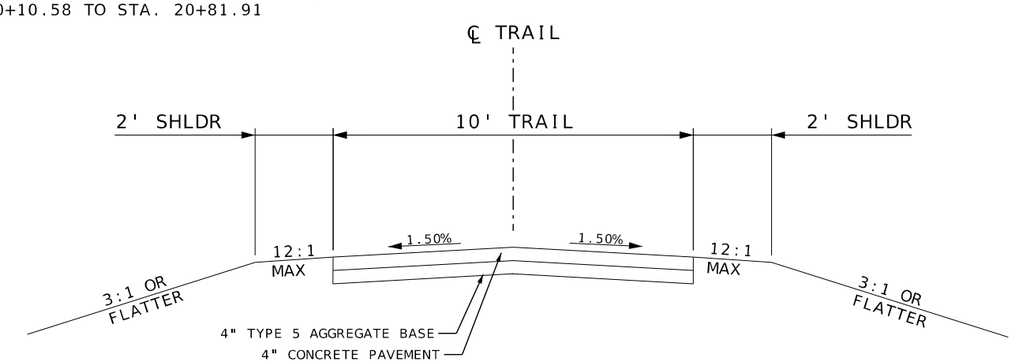

TRAIL SECTION

TRAIL STATIONING
TRAIL 1 - STA. 40+05.21 TO STA. 43+17.40
TRAIL 5 - STA. 80+05.00 TO STA. 81+48.91

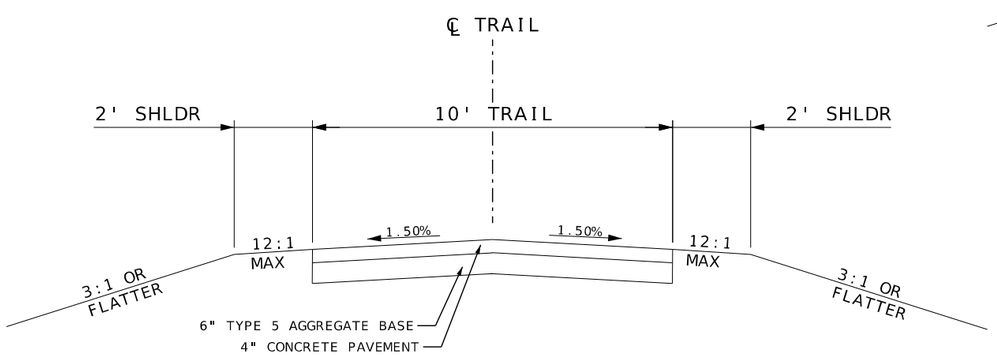

TRAIL SECTION

TRAIL STATIONING
TRAIL 3 - STA. 60+00.00 TO STA. 61+15.10
TRAIL 4 - STA. 70+60.82 TO STA. 71+75.69

NOTE:
SHARED-USE PATH AND TRAIL SECTIONS APPLY TO JOB NO. TAP-5407(619)

DISCLAIMER
THE PROFESSIONAL WHOSE SIGNATURE AND PERSONAL SEAL APPEAR HEREON ASSUMES RESPONSIBILITY ONLY FOR WHAT APPEARS IN THIS PROJECT, AND DISCLAIMS (PERSUANT TO SECTION 327.411 RSMO) SPECFIFICATION. ESTIMATES, REPORTS OR OTHER DOSCUMENTS OR INSTRUMENTS NOT SEALED BY THE UNDERSIGNED PROFESSIONAL RELATING TO OR INTENDED TO BE USED FOR ANY PART OR PARTS OF THE PROJECT TO WHICH THIS PAGE REFERS.

NOT TO SCALE

STATE OF MISSOURI
Kevin Thomas Foy O'Shaughnessy
NUMBER PE-2017000345
PROFESSIONAL ENGINEER

THIS SHEET HAS BEEN SIGNED, SEALED AND DATED ELECTRONICALLY

DATE PREPARED	
4/24/2025	
ROUTE	STATE
NOR	MO
DISTRICT	SHEET NO.
SL	2
COUNTY	
ST. CHARLES	
JOB NO.	
JSL0112	
CONTRACT ID.	
PROJECT NO.	
BRIDGE NO.	

DESCRIPTION	DATE

MISSOURI HIGHWAYS AND TRANSPORTATION COMMISSION
105 WEST CAPITOL
JEFFERSON CITY, MO 65102
1-888-ASK-MODOT (1-888-275-6636)

TYPICAL SECTION
SHEET 3 OF 4

CDG ENGINEERS
One Campbell Plaza
St. Louis, Missouri 63139
T. 314 781 7770
F. 314 781 9075
Missouri State Certificate of Authority # 1721

T:\Working\21228 - O'Fallon, MO-Dardenne Greenway Trail\8-CDG Drawings\MicroStation\Civil Files\002_TS_3of4_JSL0112_I05.dgn 8:08:28 AM 4/24/2025

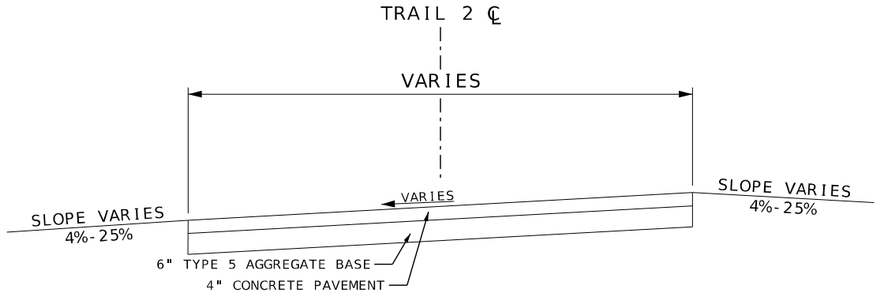

TRAIL BULB SECTION

TRAIL 2 STATIONING
STA. 50+20.80 TO STA. 50+57.90

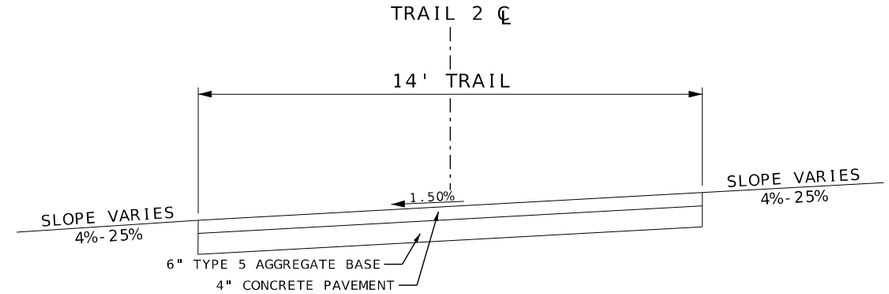

TRAIL SECTION SUPERELEVATED (14' WIDE)

TRAIL 2 STATIONING
STA. 50+57.90 TO STA. 52+78.16

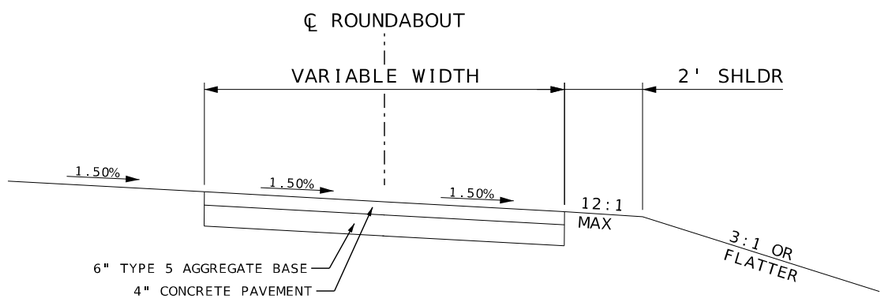

ROUNDABOUT SECTION

ROUNDABOUT STATIONING
STA. 90+00.00 TO STA. 91+57.08

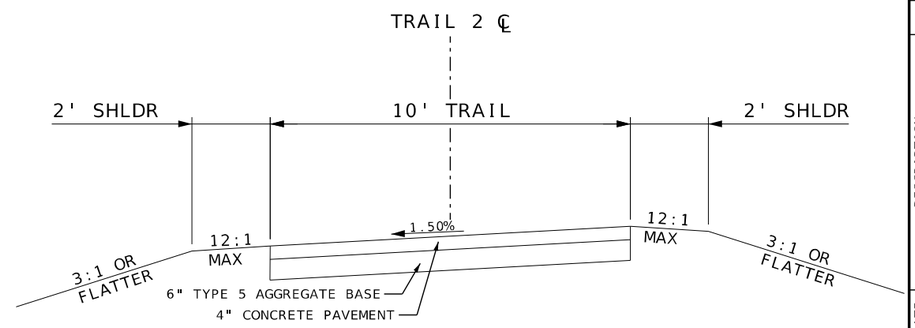

TRAIL SECTION SUPERELEVATED (10' WIDE)

TRAIL 2 STATIONING
STA. 52.88.16 TO STA. 54+18.05

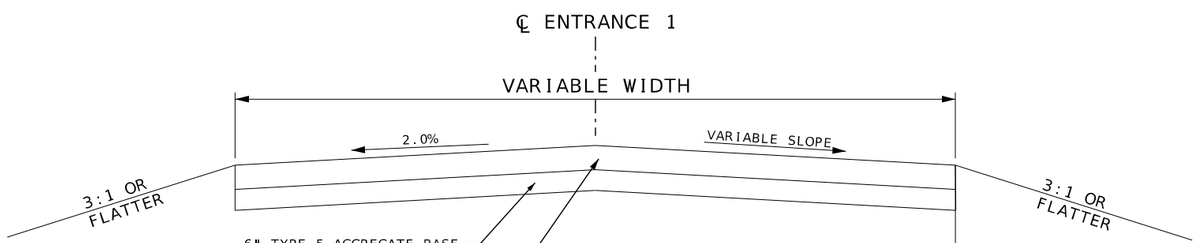

ENTRANCE 1 SECTION

ENTRANCE STATIONING
STA. 100+20.19 TO STA. 102+62.16

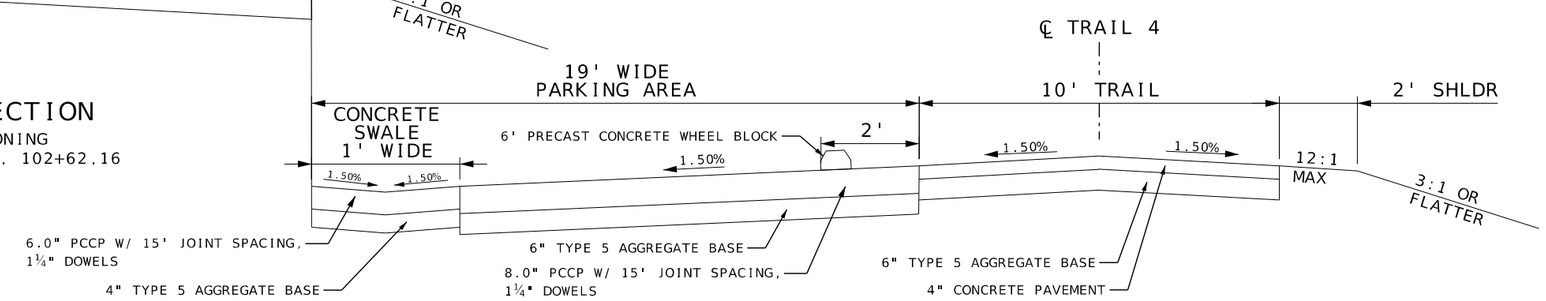

SWALE SECTION

TRAIL 4 STATIONING
STA. 70+58.65 TO STA. 71+73.80

PARKING AREA SECTION

TRAIL 4 STATIONING
STA. 70+60.82 TO STA. 71+59.83

DISCLAIMER
THE PROFESSIONAL WHOSE SIGNATURE AND PERSONAL SEAL APPEAR HEREON ASSUMES RESPONSIBILITY ONLY FOR WHAT APPEARS IN THIS PROJECT, AND DISCLAIMS (PURSUANT TO SECTION 327.411 RSMO) SPECFIFICATION. ESTIMATES, REPORTS OR OTHER DOSCUMENTS OR INSTRUMENTS NOT SEALED BY THE UNDERSIGNED PROFESSIONAL RELATING TO OR INTENDED TO BE USED FOR ANY PART OR PARTS OF THE PROJECT TO WHICH THIS PAGE REFERS.

*IN ACCESSIBLE PARKING STALLS, SLOPE SHALL BE LESS THAN 2.0%.

NOTE:
TRAIL, ENTRANCE, ROUNDABOUT AND PARKING AREA SECTIONS APPLY TO JOB NO. TAP-5407(619)

NOT TO SCALE

STATE OF MISSOURI
Kevin Thomas Foy O'Shaughnessy
NUMBER PE-2017000345
PROFESSIONAL ENGINEER

THIS SHEET HAS BEEN SIGNED, SEALED AND DATED ELECTRONICALLY

DATE PREPARED	4/24/2025
ROUTE	NOR
STATE	MO
DISTRICT	SL
SHEET NO.	2
COUNTY	ST. CHARLES
JOB NO.	JSL0112
CONTRACT ID.	
PROJECT NO.	
BRIDGE NO.	

DESCRIPTION
DATE

MISSOURI HIGHWAYS AND TRANSPORTATION COMMISSION
105 WEST CAPITOL
JEFFERSON CITY, MO 65102
1-888-ASK-MODOT (1-888-275-6636)

TYPICAL SECTION
SHEET 4 OF 4

CDG ENGINEERS
One Compass Point Plaza
St. Louis, Missouri 63139
T. 314 781 1770
F. 314 781 9075
Missouri State Certificate of Authority # 1721

T:\Working\21228 - O'Fallon, MO-Dardenne Greenway Trail\8-CDG Drawings\MicroStation\Civil Files\002_TS_4of4_JSL0112_I05.dgn 8:08:29 AM 4/24/2025

CLEARING AND GRUBBING

PLAN SHEET	ROADWAY/ TRAIL	STA	STA	LOC	FUNDING SOURCE	CLEARING GRUBBING (ACRES)	REMARKS
5	NORTH OUTER ROAD	13+37.60	14+67.13	LT	TAP-5407(619) (P)	0.04	
5,6	NORTH OUTER ROAD	14+67.13	16+64.79	LT	JSL0112	0.15	
6	NORTH OUTER ROAD	16+66.70	17+12.03	RT	TAP-5407(619) (N)	0.04	
6,7	NORTH OUTER ROAD	17+23.58	20+99.71	LT	TAP-5407(619) (P)	0.21	
6	NORTH OUTER ROAD	18+10.56	20+28.36	LT	TAP-5407(619) (P)	0.09	
					JSL0112 SUBTOTAL	0.15	
					TAP-5407(619) (P) SUBTOTAL	0.34	
					TAP-5407(619) (N) SUBTOTAL	0.04	
					JSL0112 PAYTOTAL	1.00	
					TAP-5407(619) (P) PAYTOTAL	1.00	
					TAP-5407(619) (N) PAYTOTAL	1.00	

REMOVAL OF IMPROVEMENTS

PLAN SHEET	ROADWAY/ TRAIL	STA	STA	LOC	FUNDING SOURCE	AREA (S.F.)	LENGTH (L.F.)	REMARKS
5,6	NORTH OUTER ROAD	13+12.75	15+64.20	LT & RT	JSL0112	9783		PAVEMENT
5,6	NORTH OUTER ROAD	14+40.07	15+52.42	RT	JSL0112		113	GUARDRAIL
5,6	NORTH OUTER ROAD	14+52.62	15+64.53	LT	JSL0112		113	GUARDRAIL
6	NORTH OUTER ROAD	18+03.98	19+17.19	RT	JSL0112		112	GUARDRAIL
6,7	NORTH OUTER ROAD	18+04.02	20+81.91	LT & RT	JSL0112	9079		PAVEMENT
5	NORTH OUTER ROAD	18+16.55	19+28.95	LT	JSL0112		113	GUARDRAIL
5	NORTH OUTER ROAD	19+47.67	20+40.46	LT	TAP-5407(619) (P)	4033		ENTRANCE
6,7	NORTH OUTER ROAD	19+52.73	20+87.44	LT	TAP-5407(619) (N)	5387		ENTRANCE
					JSL0112 SUBTOTAL	18862	451	
					TAP-5407(619) (P) SUBTOTAL	4033	0	
					TAP-5407(619) (N) SUBTOTAL	5387	0	
					JSL0112 PAYTOTAL	1 LUMP SUM		
					TAP-5407(619) (P) PAYTOTAL	1 LUMP SUM		
					TAP-5407(619) (N) PAYTOTAL	1 LUMP SUM		

EARTHWORK

PLAN SHEET	ROADWAY/ TRAIL	STA	STA	LOC	FUNDING SOURCE	CLASS A EXCAVATION (C.Y.)	EMBANKMENT IN PLACE (C.Y.)	COMPACTING EMBANKMENT (C.Y.)	REMARKS
28	NORTH OUTER ROAD	13+12.75	16+64.36	LT & RT	JSL0112	1027		451	
28	NORTH OUTER ROAD	13+23.66	15+78.50	LT	TAP-5407(619) (P)		1603	268	
28	NORTH OUTER ROAD	16+63.01	17+70.55	LT & RT	TAP-5407(619) (N)	775			
28	NORTH OUTER ROAD	17+54.32	21+05.06	LT	TAP-5407(619) (P)	540	734	921	
28	NORTH OUTER ROAD	17+39.59	20+10.58	LT & RT	JSL0112	670	358	469	
28	NORTH OUTER ROAD	19+36.89	20+90.72	LT	TAP-5407(619) (N)	2		52	
					JSL0112 SUBTOTAL	1697	358	920	
					TAP-5407(619) (P) SUBTOTAL	540	2337	1189	
					TAP-5407(619) (N) SUBTOTAL	777	0	52	
					TOTAL	3014	2695	2161	

SEEDING - COOL SEASON MIXTURES

PLAN SHEET	ROADWAY/ TRAIL	STA	STA	LOC	FUNDING SOURCE	AREA (ACRES)	MULCH (ACRES)	REMARKS
5	NORTH OUTER ROAD	13+12.75	14+51.28	LT	TAP-5407(619) (P)	0.2	0.2	
5,6	NORTH OUTER ROAD	13+12.77	15+52.00	RT	JSL0112	0.1	0.1	
5	NORTH OUTER ROAD	13+58.45	14+97.15	LT	TAP-5407(619) (P)	0.1	0.1	
6	NORTH OUTER ROAD	16+62.13	17+08.57	RT	TAP-5407(619) (N)	0.1	0.1	
6	NORTH OUTER ROAD	17+54.32	19+00.41	LT	TAP-5407(619) (P)	0.2	0.2	
5	NORTH OUTER ROAD	17+67.90	20+18.89	LT	TAP-5407(619) (P)	0.3	0.3	
5	NORTH OUTER ROAD	18+02.94	19+57.61	RT	JSL0112	0.1	0.1	
5	NORTH OUTER ROAD	18+67.35	19+07.35	LT	TAP-5407(619) (P)	0.1	0.1	
5	NORTH OUTER ROAD	18+82.86	20+46.95	LT	TAP-5407(619) (P)	0.2	0.2	
6,7	NORTH OUTER ROAD	18+85.24	21+05.06	LT	TAP-5407(619) (P)	0.2	0.2	
6,7	NORTH OUTER ROAD	20+66.95	20+90.72	LT	TAP-5407(619) (N)	0.1	0.1	
					JSL0112 SUBTOTAL	0.2	0.2	
					TAP-5407(619) (P) SUBTOTAL	1.3	1.3	
					TAP-5407(619) (N) SUBTOTAL	0.2	0.2	
					TOTAL	1.7	1.7	

TEMPORARY SEEDING

PLAN SHEET	ROADWAY/ TRAIL	STA	STA	LOC	FUNDING SOURCE	AREA (ACRES)	MULCH (ACRES)	REMARKS
5	NORTH OUTER ROAD	13+12.75	14+51.28	LT	TAP-5407(619) (P)	0.2	0.2	
5,6	NORTH OUTER ROAD	13+12.77	15+52.00	RT	JSL0112	0.1	0.1	
5	NORTH OUTER ROAD	13+58.45	14+97.15	LT	TAP-5407(619) (P)	0.1	0.1	
6	NORTH OUTER ROAD	16+62.13	17+08.57	RT	TAP-5407(619) (N)	0.1	0.1	
6	NORTH OUTER ROAD	17+54.32	19+00.41	LT	TAP-5407(619) (P)	0.2	0.2	
5	NORTH OUTER ROAD	17+67.90	20+18.89	LT	TAP-5407(619) (P)	0.3	0.3	
5	NORTH OUTER ROAD	18+02.94	19+57.61	RT	JSL0112	0.1	0.1	
5	NORTH OUTER ROAD	18+67.35	19+07.35	LT	TAP-5407(619) (P)	0.1	0.1	
5	NORTH OUTER ROAD	18+82.86	20+46.95	LT	TAP-5407(619) (P)	0.2	0.2	
6,7	NORTH OUTER ROAD	18+85.24	21+05.06	LT	TAP-5407(619) (P)	0.2	0.2	
6,7	NORTH OUTER ROAD	20+66.95	20+90.72	LT	TAP-5407(619) (N)	0.1	0.1	
					JSL0112 SUBTOTAL	0.2	0.2	
					TAP-5407(619) (P) SUBTOTAL	1.3	1.3	
					TAP-5407(619) (N) SUBTOTAL	0.2	0.2	
					TOTAL	1.7	1.7	

SIGNING

PLAN SHEET	ROADWAY/ TRAIL	STA	LOC	FUNDING SOURCE	GRG GX-6 PEDESTRIAN MEDIUM MULTI-DIRECTION GUIDE - NEW POLE (EACH)	GRG GX-2 VEHICULAR TRAILBLAZER - NEW POLE (EACH)	ADA PARKING SIGN (EACH)	FREE STANDING SIGN (EACH)	GRG GX-99 TRAILBLAZER GUIDE (EACH)	GRG IX-2 (EACH)	GRG IN-1 (EACH)	GRG KX-1 SECONDARY TRAILHEAD KIOSK (EACH)	REMARKS
35	TRAIL 5	80+07.94	LT	TAP-5407(619) (N)					1				
36	NORTH OUTER ROAD	18+13.55	RT	TAP-5407(619) (N)		1							
36	NORTH OUTER ROAD	18+39.40	LT	TAP-5407(619) (N)				1					
36	NORTH OUTER ROAD	23+17.05	LT	TAP-5407(619) (N)		1							
36	TRAIL 1	40+12.86	RT	TAP-5407(619) (N)					1				
36	TRAIL 1	43+10.46	LT	TAP-5407(619) (N)	1								
36	TRAIL 3	61+05.73	RT	TAP-5407(619) (N)	1								
36	TRAIL 3	61+25.48	LT	TAP-5407(619) (N)								1	
36	TRAIL 4	70+83.33	RT	TAP-5407(619) (N)			1						
36	TRAIL 4	70+08.05	LT	TAP-5407(619) (N)							1		
36	ENTRANCE 1	101+07.93	RT	TAP-5407(619) (N)						1			
				JSL0112 SUBTOTAL	0	0	0	0	0	0	0	0	
				TAP-5407(619) (P) SUBTOTAL	0	0	0	0	0	0	0	0	
				TAP-5407(619) (N) SUBTOTAL	2	2	1	1	2	1	1	1	
				TOTAL	2	2	1	1	2	1	1	1	

ROCK BLANKET

PLAN SHEET	ROADWAY/ TRAIL	STA	STA	LOC	FUNDING SOURCE	FURNISHING TYPE 2 ROCK BLANKET (C.Y.)	PLACING TYPE 2 ROCK BLANKET (C.Y.)	ROCK LINING (C.Y.)	PERM. EROSION CONTROL GEOTEXTILE (S.Y.)	REMARKS
5,6	NORTH OUTER ROAD	14+67.50	15+78.50	LT	TAP-5407(619) (P)	292	292		437	
5,6	NORTH OUTER ROAD	14+51.36	15+41.93	LT	TAP-5407(619) (P)			22	35	
5	NORTH OUTER ROAD	15+45.61	16+64.36	LT & RT	JSL0112	681	681		1021	
5	NORTH OUTER ROAD	16+63.01	17+59.40	LT & RT	TAP-5407(619) (N)	232	232		332	
5	NORTH OUTER ROAD	17+39.59	18+22.34	LT & RT	JSL0112	336	336		504	
5	NORTH OUTER ROAD	16+52.48	17+70.55	RT	TAP-5407(619) (N)	171	171		257	
5	NORTH OUTER ROAD	17+25.70	17+37.60	LT	TAP-5407(619) (N)			2	6	
5	NORTH OUTER ROAD	18+22.12	18+67.31	LT	TAP-5407(619) (P)	102	102		153	
8	TRAIL 1	43+25.53	43+21.47	LT	TAP-5407(619) (P)			2	6	
8	TRAIL 2	54+11.58	54+22.62	LT	TAP-5407(619) (P)			2	6	
8	TRAIL 3	61+03.77	61+13.65	RT	TAP-5407(619) (P)			2	6	
8	TRAIL 4	70+56.93	70+70.03	RT	TAP-5407(619) (P)			2	6	
8	TRAIL 4	71+81.20	71+89.46	RT	TAP-5407(619) (P)			2	6	
8	ENTRANCE 1	100+85.64	100+87.94	RT	TAP-5407(619) (N)			2	6	
					JSL0112 SUBTOTAL	1017	1017	0	1525	
					TAP-5407(619) (P) SUBTOTAL	394	394	32	655	
					TAP-5407(619) (N) SUBTOTAL	403	403	4	601	
					TOTAL	1814	1814	36	2781	

MOBILIZATION	TOTAL
JSL0112 PAYTOTAL	1 LUMP SUM
TAP-5407(619) (P) PAYTOTAL	1 LUMP SUM
TAP-5407(619) (N) PAYTOTAL	1 LUMP SUM

CONTRACTOR FURNISHED SURVEYING AND STAKING	TOTAL
JSL0112 PAYTOTAL	1 LUMP SUM
TAP-5407(619) (P) PAYTOTAL	1 LUMP SUM
TAP-5407(619) (N) PAYTOTAL	1 LUMP SUM

ADDITIONAL MOBILIZATION FOR SEEDING	EACH
JSL0112 SUBTOTAL	1
TAP-5407(619) (P) SUBTOTAL	1
TAP-5407(619) (N) SUBTOTAL	1

EROSION CONTROL

PLAN SHEET	ROADWAY/ TRAIL	STA	STA	LOC	FUNDING SOURCE	SILT FENCE (L.F.)	ROCK DITCH CHECK (L.F.)	TYPE C BERM (L.F.)	TYPE 3 TURF REINFORCEMENT MAT (S.Y.)	SEDIMENT REMOVAL (C.Y.)	REMARKS
30	NORTH OUTER ROAD	13+12.75	13+38.28	LT	TAP-5407(619) (P)	206				2	
30	NORTH OUTER ROAD	13+12.76	15+41.17	RT	JSL0112	237				2	
30	NORTH OUTER ROAD	13+64.06	16+01.68	LT	TAP-5407(619) (P)	243				2	
30	NORTH OUTER ROAD	17+32.94	20+10.58	RT	JSL0112	281				3	
30	NORTH OUTER ROAD	17+75.35	18+08.21	LT	TAP-5407(619) (P)	139				1	
30	NORTH OUTER ROAD	18+11.94	19+00.41	LT	TAP-5407(619) (P)	167				2	
30	NORTH OUTER ROAD	13+16.00	15+80.25	LT	JSL0112		60 (3)			3	
30	NORTH OUTER ROAD	18+07.36	20+95.20	LT	TAP-5407(619) (P)		100 (10)			5	
30	NORTH OUTER ROAD	15+41.17	16+67.94	LT & RT	JSL0112			185		5	
30	NORTH OUTER ROAD	15+01.88	16+67.94	LT	TAP-5407(619) (P)			106		5	
30	NORTH OUTER ROAD	15+50.96	17+25.04	LT & RT	TAP-5407(619) (N)			265		13	
30	NORTH OUTER ROAD	17+25.04	17+74.90	LT	TAP-5407(619) (P)			86		4	
31	NORTH OUTER ROAD	13+12.77	15+52.00	RT	JSL0112				241		
31	NORTH OUTER ROAD	13+21.19	14+51.26	LT	TAP-5407(619) (P)				601		
31	NORTH OUTER ROAD	13+58.45	14+97.15	LT	TAP-5407(619) (P)				411		
31	NORTH OUTER ROAD	17+54.32	19+00.41	LT	TAP-5407(619) (P)				589		
31	NORTH OUTER ROAD	17+67.90	20+18.89	LT	TAP-5407(619) (P)				1415		
31	NORTH OUTER ROAD	18+02.94	20+10.58	LT	JSL0112				366		
31	NORTH OUTER ROAD	18+67.35	19+07.35	LT	TAP-5407(619) (P)				148		
31	NORTH OUTER ROAD	18+82.86	20+46.95	LT	TAP-5407(619) (P)				971		
31	NORTH OUTER ROAD	18+85.24	21+05.06	LT	TAP-5407(619) (P)				613		
31	NORTH OUTER ROAD	20+66.95	20+90.72	LT	TAP-5407(619) (N)				137		
					JSL0112 SUBTOTAL	518	50	185	607	17	
					TAP-5407(619) (P) SUBTOTAL	755	100	192	4748	21	
					TAP-5407(619) (N) SUBTOTAL	0	0	265	137	13	
					TOTAL	1273	150	642	5492	51	

SITE FURNISHING

PLAN SHEET	ROADWAY/ TRAIL	STA	LOC	FUNDING SOURCE	BICYCLE REPAIR STATION (EACH)	12'x12' SHELTER (EACH)	BENCHES (EACH)	TRASH RECEPTACLES (EACH)	PICNIC TABLES TRAILBLAZER GUIDE (EACH)	BIKE RACK (EACH)	LEDGEROCK WALL (SF)	REMARKS
36	TRAIL 4	70+08.35	LT	TAP-5407(619) (N)			1					
36	TRAIL 4	70+09.84	LT	TAP-5407(619) (N)			1					
36	TRAIL 4	70+19.79	LT	TAP-5407(619) (N)		1						
36	TRAIL 4	70+15.79	LT	TAP-5407(619) (N)					1			
36	TRAIL 4	70+27.91	LT	TAP-5407(619) (N)				1				
36	TRAIL 4	70+38.36	LT	TAP-5407(619) (N)	1							
36	TRAIL 4	70+31.49 - 70+46.87	LT	TAP-5407(619) (N)							30	
36	TRAIL 4	70+40.46	LT	TAP-5407(619) (N)						1		
36	TRAIL 4	70+42.26	LT	TAP-5407(619) (N)						1		
				JSL0112 SUBTOTAL	0	0	0	0	0	0	0	
				TAP-5407(619) (P) SUBTOTAL	0	0	0	0	0	0	0	
				TAP-5407(619) (N) SUBTOTAL	1	1	2	1	1	2	30	
				TOTAL	1	1	2	1	1	2	30	

BRIDGE SUPPORT BEAM PAINTING	TOTAL
JSL0112 PAYTOTAL	0
TAP-5407(619) (P) PAYTOTAL	0
TAP-5407(619) (N) PAYTOTAL	1 LUMP SUM

LANDSCAPING

PLAN SHEET	FUNDING SOURCE	SOD (S.Y.)	SEEDING (S.Y.)	PLANTING BED PREPARATION, AMENDMENTS & MULCHING (S.Y.)	WILD FLOWER SEEDING (S.Y.)	TREES (EACH)	SHRUBS (3 GALLON) (EACH)	GRASSES (QUART) (EACH)	GRASSES (PLUG) (EACH)	REMARKS
39	TAP-5407(619) (N)	138	797		461					
40	TAP-5407(619) (N)	397	1152	225	2222	5	55	57	431	
	JSL0112 SUBTOTAL	0	0	0	0	0	0	0	0	
	TAP-5407(619) (P) SUBTOTAL	0	0	0	0	0	0	0	0	
	TAP-5407(619) (N) SUBTOTAL	535	1949	225	2683	5	55	57	431	
	TOTAL	535	1949	225	2683	5	55	57	431	

SUMMARY OF QUANTITIES
SHEET 1 OF 4

STATE OF MISSOURI
Kevin Thomas Foy O'Shaughnessy
NUMBER PE-2010000345
PROFESSIONAL ENGINEER

THIS SHEET HAS BEEN SIGNED, SEALED AND DATED ELECTRONICALLY

DATE PREPARED
4/24/2025

ROUTE	STATE
NOR	MO
DISTRICT	SHEET NO.
SL	3

COUNTY
ST. CHARLES

JOB NO.
JSL0112

CONTRACT ID.

PROJECT NO.

BRIDGE NO.

DATE	DESCRIPTION

MISSOURI HIGHWAYS AND TRANSPORTATION COMMISSION
105 WEST CAPITOL
JEFFERSON CITY, MO 65102
1-888-ASK-MODOT (1-888-275-6636)

SUMMARY OF QUANTITIES
SHEET 1 OF 4

CDG ENGINEERS
One Campbell Plaza
St. Louis, Missouri 63139
T. 314 781 1770
F. 314 781 9075
Missouri State Certificate of Authority # 1721

TYPE 5 AGGREGATE FOR BASE (4 IN. THICK)

PLAN SHEET	ROADWAY/ TRAIL	STA	STA	LOC	FUNDING SOURCE	AREA (S.Y.)	REMARKS
5,6	NORTH OUTER ROAD	13+63.15	15+70.50	LT	TAP-5407(619) (P)	223	SHARED USE PATH
5,6	NORTH OUTER ROAD	14+28.03	15+66.86	LT	JSL0112	44	GUARDRAIL
5	NORTH OUTER ROAD	18+17.50	19+55.81	LT	JSL0112	44	GUARDRAIL
5	NORTH OUTER ROAD	18+18.53	20+26.80	LT	TAP-5407(619) (P)	226	SHARED USE PATH
6,8	TRAIL 1	40+05.21	43+17.37	LT & RT	TAP-5407(619) (P)	351	TRAIL
8	TRAIL 4	71+73.80	70+58.65	LT	TAP-5407(619) (N)	13	SWALE
5	TRAIL 5	80+04.99	81+48.90	LT & RT	TAP-5407(619) (P)	169	TRAIL
					JSL0112 SUBTOTAL	88	
					TAP-5407(619) (P) SUBTOTAL	969	
					TAP-5407(619) (N) SUBTOTAL	13	
					TOTAL	1070	

TYPE 5 AGGREGATE FOR BASE (6 IN. THICK)

PLAN SHEET	ROADWAY/ TRAIL	STA	STA	LOC	FUNDING SOURCE	AREA (S.Y.)	REMARKS
5	NORTH OUTER ROAD	13+12.76	15+65.83	LT & RT	JSL0112	1098	ROADWAY
6	NORTH OUTER ROAD	18+02.94	20+10.58	LT & RT	JSL0112	890	ROADWAY
8	TRAIL 3	60+00.00	61+15.10	LT & RT	TAP-5407(619) (P)	129	TRAIL
8	TRAIL 4	70+06.18	71+63.42	LT & RT	TAP-5407(619) (P)	269	TRAIL
8	TRAIL 4	70+59.73	71+65.92	LT	TAP-5407(619) (N)	199	PARKING AREA
5	TRAIL 2	50+20.80	52+76.39	LT & RT	TAP-5407(619) (N)	432	TRAIL
6,8	TRAIL 2	52+76.39	54+17.90	LT & RT	TAP-5407(619) (P)	161	TRAIL
8	ROUNDABOUT	90+00.00	91+57.08	LT & RT	TAP-5407(619) (P)	297	ROUNDABOUT
6,8	ENTRANCE 1	100+20.19	102+62.16	LT & RT	TAP-5407(619) (N)	634	ENTRANCE
8	ENTRANCE 2	101+08.80	101+41.27	LT & RT	TAP-5407(619) (N)	53	ENTRANCE
					JSL0112 SUBTOTAL	1988	
					TAP-5407(619) (P) SUBTOTAL	856	
					TAP-5407(619) (N) SUBTOTAL	1318	
					TOTAL	4162	

MISC. (OPTIONAL PAVEMENT)

PLAN SHEET	ROADWAY/ TRAIL	STA	STA	LOC	FUNDING SOURCE	AREA (S.Y.)	REMARKS
5,6	NORTH OUTER ROAD	13+12.76	15+65.83	LT & RT	JSL0112	1098	ROADWAY
6	NORTH OUTER ROAD	18+02.94	20+10.58	LT & RT	JSL0112	890	ROADWAY
					JSL0112 SUBTOTAL	1988	
					TAP-5407(619) (P) SUBTOTAL	0	
					TAP-5407(619) (N) SUBTOTAL	0	
					TOTAL	1988	

CONCRETE PAVEMENT (8 IN. NON-REINF)

PLAN SHEET	ROADWAY/ TRAIL	STA	STA	LOC	FUNDING SOURCE	AREA (S.Y.)	REMARKS
5,6	NORTH OUTER ROAD	13+63.15	15+70.50	LT	TAP-5407(619) (P)	223	SHARED USE PATH
6	NORTH OUTER ROAD	18+18.53	20+26.80	LT	TAP-5407(619) (P)	226	SHARED USE PATH
8	TRAIL 4	70+59.73	71+65.92	LT	TAP-5407(619) (N)	199	PARKING AREA
6,8	ENTRANCE 1	100+20.19	102+62.16	LT & RT	TAP-5407(619) (N)	634	ENTRANCE
8	ENTRANCE 2	101+08.80	101+41.27	LT & RT	TAP-5407(619) (N)	53	ENTRANCE
					JSL0112 SUBTOTAL	0	
					TAP-5407(619) (P) SUBTOTAL	449	
					TAP-5407(619) (N) SUBTOTAL	886	
					TOTAL	1335	

MISC. (CONCRETE PAVEMENT (4 IN. NON-REINF))

PLAN SHEET	ROADWAY/ TRAIL	STA	STA	LOC	FUNDING SOURCE	AREA (S.Y.)	REMARKS
6,8	TRAIL 1	40+05.21	43+17.37	LT & RT	TAP-5407(619) (P)	351	TRAIL
5	TRAIL 2	50+20.80	52+76.39	LT & RT	TAP-5407(619) (N)	432	TRAIL
6,8	TRAIL 2	52+76.39	54+17.90	LT & RT	TAP-5407(619) (P)	161	TRAIL
8	TRAIL 3	60+00.00	61+15.10	LT & RT	TAP-5407(619) (P)	129	TRAIL
8	TRAIL 4	70+06.18	71+63.42	LT & RT	TAP-5407(619) (P)	269	TRAIL
5	TRAIL 5	80+04.99	81+48.90	LT & RT	TAP-5407(619) (P)	169	TRAIL
8	ROUNDABOUT	90+00.00	91+57.08	LT & RT	TAP-5407(619) (P)	297	ROUNDABOUT
					JSL0112 SUBTOTAL	0	
					TAP-5407(619) (P) SUBTOTAL	1376	
					TAP-5407(619) (N) SUBTOTAL	432	
					TOTAL	1808	

PAVEMENT MARKING

PLAN SHEET	ROADWAY/ TRAIL	STA	STA	LOC	FUNDING SOURCE	WATERBORNE TYPE P BEADS YELLOW (L.F.)	WATERBORNE TYPE P BEADS WHITE (L.F.)	THERMOPLASTIC STRAIGHT ARROW (EA.)	THERMOPLASTIC HANDICAP SYMBOL (EA.)	THERMOPLASTIC BIKE SYMBOL (EA.)	REMARKS
33	NORTH OUTER ROAD	13+12.76	20+81.91	14.00 LT	JSL0112		770				
33	NORTH OUTER ROAD	13+12.76	20+81.91	12.00 LT	JSL0112		770				
33	NORTH OUTER ROAD	13+12.76	20+81.91	0.50 LT	JSL0112	770					
33	NORTH OUTER ROAD	13+12.76	20+81.91	0.50 RT	JSL0112	770					
33	NORTH OUTER ROAD	13+12.76	20+81.91	12.00 RT	JSL0112		770				
33	NORTH OUTER ROAD	13+12.76	20+81.91	14.00 RT	JSL0112		770				
33	NORTH OUTER ROAD	13+48.72		17.00 LT	JSL0112			1			
33	NORTH OUTER ROAD	13+45.25		17.00 RT	JSL0112					1	
33	NORTH OUTER ROAD	13+56.83		17.00 LT	JSL0112					1	
33	NORTH OUTER ROAD	13+57.36		17.00 RT	JSL0112			1			
33	NORTH OUTER ROAD	20+25.64		17.00 LT	JSL0112			1			
33	NORTH OUTER ROAD	20+25.72		17.00 RT	JSL0112					1	
33	NORTH OUTER ROAD	20+33.75		17.00 LT	JSL0112					1	
33	NORTH OUTER ROAD	20+34.17		17.00 RT	JSL0112			1			
33	TRAIL 2	50+22.80	52+88.16	LT & RT	TAP-5407(619) (N)		550				
33	TRAIL 4	70+69.82	71+50.82	LT	TAP-5407(619) (N)	281					PARKING STALLS
33	TRAIL 4	70+83.66		15.22 LT	TAP-5407(619) (N)				1		
					JSL0112 SUBTOTAL	1540	3080	4	0	4	
					TAP-5407(619) (P) SUBTOTAL	0	0	0	0	0	
					TAP-5407(619) (N) SUBTOTAL	281	550	0	1	0	
					TOTAL	1821	3630	4	1	4	

MGS GUARDRAIL

PLAN SHEET	ROADWAY/ TRAIL	STA	STA	LOC	FUNDING SOURCE	MGS GUARDRAIL 6' POST L.F.	MGS BRIDGE APPROACH TRANSITION SECTION EA.	MGS TYPE A CRASHWORTHY END TERMINAL EA.	HIGH TENSION GUARD CABLE L.F.	HIGH TENSION GUARD CABLE ANCHOR ASSEMBLY EA.	AGGREGATE BEDDING FOR HIGH TENSION GUARD CABLE C.Y.	REMARKS
5,6	NORTH OUTER ROAD	14+25.84	15+63.34	RT	JSL0112	50	1	1				
5,6	NORTH OUTER ROAD	14+29.42	15+66.92	LT	JSL0112	50	1	1				
6	NORTH OUTER ROAD	17+90.87	19+28.37	RT	JSL0112	50	1	1				
6	NORTH OUTER ROAD	18+16.89	19+54.39	LT	JSL0112	50	1	1				
6	NORTH OUTER ROAD	19+13.11	20+41.02	RT	JSL0112				104	1	5	
					JSL0112 SUBTOTAL	200	4	4	104	1	5	
					TAP-5407(619) (P) SUBTOTAL	0	0	0	0	0	0	
					TAP-5407(619) (N) SUBTOTAL	0	0	0	0	0	0	
					TOTAL	200	4	4	104	1	5	

(42 IN.) DECORATIVE PEDESTRIAN FENCE (SAFETY RAILING)

PLAN SHEET	ROADWAY/ TRAIL	STA	STA	LOC	FUNDING SOURCE	LENGTH (L.F.)	REMARKS
5	NORTH OUTER ROAD	13+48.39	13+93.50	LT	TAP-5407(619) (P)	56	
5,6	NORTH OUTER ROAD	13+57.50	15+70.74	LT	TAP-5407(619) (P)	195	
6	NORTH OUTER ROAD	18+22.35	19+72.24	LT	TAP-5407(619) (P)	298	
					JSL0112 SUBTOTAL	0	
					TAP-5407(619) (P) SUBTOTAL	549	
					TAP-5407(619) (N) SUBTOTAL	0	
					TOTAL	549	

PAVED DITCH

PLAN SHEET	ROADWAY/ TRAIL	STA	STA	LOC	FUNDING SOURCE	AREA (S.Y.)	REMARKS
8	TRAIL 4	70+58.65	71+73.80	LT	TAP-5407(619) (N)	13	SWALE
					JSL0112 SUBTOTAL	0	
					TAP-5407(619) (P) SUBTOTAL	0	
					TAP-5407(619) (N) SUBTOTAL	13	
					TOTAL	13	

6' PRECAST CONCRETE WHEEL BLOCK

PLAN SHEET	ROADWAY/ TRAIL	STA	STA	LOC	FUNDING SOURCE	EACH	REMARKS
33	TRAIL 4	70+62.33	71+58.33	6.66 LT	TAP-5407(619) (N)	10	
					JSL0112 SUBTOTAL	0	
					TAP-5407(619) (P) SUBTOTAL	0	
					TAP-5407(619) (N) SUBTOTAL	10	
					TOTAL	10	

SUMMARY OF QUANTITIES
SHEET 2 OF 4

STATE OF MISSOURI
Kevin Thomas Foy O'Shaughnessy
NUMBER PE-2010000345
PROFESSIONAL ENGINEER

THIS SHEET HAS BEEN SIGNED, SEALED AND DATED ELECTRONICALLY

DATE PREPARED 4/24/2025

ROUTE	STATE
NOR	MO
DISTRICT	SHEET NO.
SL	3

COUNTY ST. CHARLES

JOB NO. JSL0112

CONTRACT ID.

PROJECT NO.

BRIDGE NO.

DESCRIPTION

DATE

MISSOURI HIGHWAYS AND TRANSPORTATION COMMISSION

105 WEST CAPITOL
JEFFERSON CITY, MO 65102
1-888-ASK-MODOT (1-888-275-6636)

SUMMARY OF QUANTITIES
SHEET 2 OF 4

CDG ENGINEERS
One Campbell Plaza
St. Louis, Missouri 63139
T. 314 781 7770
F. 314 781 9075
Missouri State Certificate of Authority # 1721

DRAINAGE STRUCTURES																		
PLAN SHEET	ROADWAY/ TRAIL	STA	LOC	NUMBER	TYPE	FUNDING SOURCE	3'x3' GRATE AND BEARING PLATE (EACH)	3'x3' PRECAST CONCRETE DROP INLET (FT)	S.MSD AREA INLET (EACH)	TYPE 1A MANHOLE FRAME AND COVER (EACH)	42" MANHOLE (FT)	12" GROUP A FES (EACH)	18" GROUP A FES (EACH)	24" GROUP A FES (EACH)	54" GROUP A FES (EACH)	CLASS 3 EXCAVATION (C.Y.)	REMARKS
6	NORTH OUTER ROAD	17+22.47	26.30 RT	2-2 FES	A FES	TAP-5407(619) (N)								1		4	
6	NORTH OUTER ROAD	17+43.59	55.06 LT	3-3 FES	A FES	TAP-5407(619) (N)							1			4	
6	NORTH OUTER ROAD	17+53.44	26.30 RT	2-1 S1	S INLET	TAP-5407(619) (N)	1	4								8	
6	NORTH OUTER ROAD	18+18.86	46.95 LT	3-2 MH	MANHOLE	TAP-5407(619) (N)				1	5					14	
8	TRAIL 1	43+20.22	6.71 RT	5-1 FES	A FES	TAP-5407(619) (P)						1				2	
8	TRAIL 1	43+21.15	10.01 LT	5-2 FES	A FES	TAP-5407(619) (P)						1				1	
8	TRAIL 2	54+13.13	15.65 LT	4-2 FES	A FES	TAP-5407(619) (P)						1				1	
8	TRAIL 2	54+14.37	12.99 RT	4-1 FES	A FES	TAP-5407(619) (P)						1				1	
8	TRAIL 3	61+04.33	13.50 LT	6-1 FES	A FES	TAP-5407(619) (P)						1				1	
8	TRAIL 3	61+04.77	18.03 RT	6-2 FES	A FES	TAP-5407(619) (P)						1				1	
8	TRAIL 4	70+55.18	12.41 LT	8-1 FES	A FES	TAP-5407(619) (P)						1				1	
8	TRAIL 4	70+57.27	6.86 RT	8-2 FES	A FES	TAP-5407(619) (P)						1				2	
8	TRAIL 4	71+81.55	8.85 LT	7-1 FES	A FES	TAP-5407(619) (P)						1				1	
8	TRAIL 4	71+81.86	14.00 RT	7-2 FES	A FES	TAP-5407(619) (P)						1				1	
5	TRAIL 5	80+25.65	41.69 RT	1-2 FES	A FES	TAP-5407(619) (P)									1	5	
5	TRAIL 5	81+29.32	30.32 LT	1-1 FES	A FES	TAP-5407(619) (P)									1	4	
5	ENTRANCE 1	100+49.42	29.53 LT	9-1 AI	S INLET	TAP-5407(619) (P)			1		3					8	
8	ENTRANCE 1	100+80.98	27.60 RT	9-2 FES	A FES	TAP-5407(619) (P)						1				1	
						JSL0112 SUBTOTAL	0	0	0	0	0	0	0	0	0	0	
						TAP-5407(619) (P) SUBTOTAL	0	0	1	0	3	11	0	0	2	30	
						TAP-5407(619) (N) SUBTOTAL	1	4	0	1	5	0	1	1	0	30	
						TOTAL	1	4	1	1	8	11	1	1	2	60	

CULVERTS														
PLAN SHEET	ROADWAY/ TRAIL	STA	LOC	STA	LOC	FROM	TO	FUNDING SOURCE	12" GROUP A PIPE (L.F.)	18" GROUP A PIPE (L.F.)	24" GROUP A PIPE (L.F.)	54" GROUP A PIPE (L.F.)	CLASS 3 EXCAVATION (C.Y.)	REMARKS
6	NORTH OUTER ROAD	17+53.44	26.30 RT	17+22.47	26.30 RT	2-1 S1	2-2 FES	TAP-5407(619) (N)			32		29	
6	NORTH OUTER ROAD	18+18.86	46.95 LT	17+43.59	55.06 LT	3-2 MH	3-3 FES	TAP-5407(619) (N)		76			69	
8	TRAIL 1	43+20.22	6.71 RT	43+21.15	10.01 LT	5-1 FES	5-2 FES	TAP-5407(619) (P)	17				6	
8	TRAIL2	54+14.37	12.99 RT	54+13.13	15.65 LT	4-1 FES	4-2 FES	TAP-5407(619) (P)	29				15	
8	TRAIL3	61+04.33	13.50 LT	61+04.77	18.03 RT	6-1 FES	6-2 FES	TAP-5407(619) (P)	32				17	
8	TRAIL4	70+55.18	12.41 LT	70+57.27	6.86 RT	8-1 FES	8-2 FES	TAP-5407(619) (P)	20				5	
8	TRAIL4	71+81.55	8.86 LT	71+81.86	14.00 RT	7-1 FES	7-2 FES	TAP-5407(619) (P)	23				8	
5	TRAIL5	81+29.32	30.32 LT	80+25.65	41.69 RT	1-1 FES	1-2 FES	TAP-5407(619) (P)				151	43	
6, 8	ENTRANCE 1	100+49.42	29.53 LT	100+80.98	27.60 RT	9-1 AI	9-2 FES	TAP-5407(619) (P)	66				49	
								JSL0112 SUBTOTAL	0	0	0	0	0	
								TAP-5407(619) (P) SUBTOTAL	187	0	0	151	143	
								TAP-5407(619) (N) SUBTOTAL	0	76	32	0	98	
								TOTAL	187	76	32	151	241	

SUMMARY OF QUANTITIES
SHEET 3 OF 4

STATE OF MISSOURI
Kevin Thomas Foy O'Shaughnessy
NUMBER PE-2017000345
PROFESSIONAL ENGINEER

THIS SHEET HAS BEEN SIGNED, SEALED AND DATED ELECTRONICALLY

DATE PREPARED
4/24/2025

ROUTE	STATE
NOR	MO
DISTRICT	SHEET NO.
SL	3

COUNTY
ST. CHARLES

JOB NO.
JSL0112

CONTRACT ID.

PROJECT NO.

BRIDGE NO.

DESCRIPTION	DATE

MISSOURI HIGHWAYS AND TRANSPORTATION COMMISSION
105 WEST CAPITOL
JEFFERSON CITY, MO 65102
1-888-ASK-MODOT (1-888-275-6636)

SUMMARY OF QUANTITIES
SHEET 3 OF 4

CDG ENGINEERS
One Campbell Plaza
St. Louis, Missouri 63139
T. 314 781 7770
F. 314 781 9075
Missouri State Certificate of Authority # 1721

SIGN	SIZE IN.	AREA SQ.FT.	QTY EACH	TOTAL AREA SQ.FT.	QTY RELOC EACH	TOTAL RELOC SQ.FT.	SIGN NUM.	DESCRIPTION
WARNING SIGNS								
WO1-1L	48X48	16.00						TURN (SYMBOL LEFT)
WO1-1R	48X48	16.00						TURN (SYMBOL RIGHT)
WO1-2L	48X48	16.00						CURVE (SYMBOL LEFT)
WO1-2R	48X48	16.00						CURVE (SYMBOL RIGHT)
WO1-3L	48X48	16.00						REVERSE TURN (SYMBOL LEFT)
WO1-3R	48X48	16.00						REVERSE TURN (SYMBOL RIGHT)
WO1-4L	48X48	16.00						REVERSE CURVE (SYMBOL LEFT)
WO1-4R	48X48	16.00						REVERSE CURVE (SYMBOL RIGHT)
WO1-4bL	48X48	16.00						DOUBLE ARROW REVERSE CURVE (SYMBOL LEFT)
WO1-4bR	48X48	16.00						DOUBLE ARROW REVERSE CURVE (SYMBOL RIGHT)
WO1-4cL	48X48	16.00						TRIPLE ARROW REVERSE CURVE (SYMBOL LEFT)
WO1-4cR	48X48	16.00						TRIPLE ARROW REVERSE CURVE (SYMBOL RIGHT)
WO1-6	60X30	12.50						HORIZONTAL ARROW (SYMBOL)
WO1-6a	72X36	18.00						HORIZ. ARROW (SYMBOL ON PERMANENT BARRICADE)
WO1-7	60X30	12.50						DOUBLE HEAD HORIZONTAL ARROW (SYMBOL)
WO1-7a	72X36	18.00						DOUBLE HEAD HORIZ. ARROW (SYMBOL ON PERM. BARR.)
WO1-8	18X24	3.00						CHEVRON (SYMBOL)
WO1-8a	30X36	7.50						CHEVRON (SYMBOL FOR DIVIDED HIGHWAYS)
WO3-1	48X48	16.00						STOP AHEAD (SYMBOL)
WO3-2	48X48	16.00						YIELD AHEAD (SYMBOL)
WO3-3	48X48	16.00						SIGNAL AHEAD (SYMBOL)
WO3-4	48X48	16.00						BE PREPARED TO STOP
WO3-5	48X48	16.00						SPEED LIMIT AHEAD
WO4-1L	48X48	16.00						MERGE (SYMBOL FROM LEFT)
WO4-1R	48X48	16.00						MERGE (SYMBOL FROM RIGHT)
WO4-1aL	48X48	16,00						MERGE (LEFT)
WO4-1aR	48X48	16,00						MERGE (RIGHT)
WO5-1	48X48	16,00						ROAD/BRIDGE/RAMP NARROWS
WO5-3	48X48	16.00						ONE LANE BRIDGE
WO5-5	48X48	16.00						NARROW LANES
WO6-1	48X48	16.00						DIVIDED HIGHWAY (SYMBOL)
WO6-2	48X48	16.00						DIVIDED HIGHWAY END (SYMBOL)
WO6-3	48X48	16.00						TWO WAY TRAFFIC (SYMBOL)
WO7-3a	30X24	5.00						NEXT XX MILES (PLAQUE)
WO8-1	48X48	16.00						BUMP
WO8-2	48X48	16.00						DIP
WO8-3	48X48	16.00						PAVEMENT ENDS
WO8-4	48X48	16.00						SOFT SHOULDER
WO8-5	48X48	16.00						SLIPPERY WHEN WET (SYMBOL)
WO8-6	48X48	16.00						TRUCK CROSSING
WO8-6c	48X48	16.00						TRUCK ENTRANCE
WO8-7	36X36	9.00						LOOSE GRAVEL
WO8-7a	36X36	9.00						FRESH OIL / LOOSE GRAVEL
WO8-9	48X48	16.00						LOW SHOULDER
WO8-11	48X48	16.00						UNEVEN LANES
WO8-12	48X48	16.00						NO CENTER LINE
WO8-15	48X48	16.00						GROOVED PAVEMENT
WO8-15P	30X24	5.00						MOTORCYCLE (PLAQUE)
WO8-17L	48X48	16.00						SHOULDER DROP-OFF (SYMBOL LEFT)
WO8-17R	48X48	16.00						SHOULDER DROP-OFF (SYMBOL RIGHT)
WO8-17P	30X24	5.00						SHOULDER DROP-OFF (PLAQUE)
W10-1	42RND.	9.62						RAILROAD CROSSING
WO12-1	24X24	4.00						DOUBLE DOWN ARROW (SYMBOL)
WO12-2	48X48	16.00						LOW CLEARANCE (SYMBOL)
WO12-2x	24X18	3.00						LOW CLEARANCE (PLAQUE)
WO12-2a	84X24	14.00						OVERHEAD LOW CLEARANCE (FEET AND INCHES)
WO12-4	120X60	50.00						LOW CLEARANCE XX FT XX IN XX MILES AHEAD
WO12-5	120X60	50.00						WIDTH RESTRICTION XX FT XX IN XX MILES AHEAD
WO13-1	30X30	6.25						ADVISORY SPEED (PLAQUE)
WO16-2	30X24	5.00						XXX FEET (PLAQUE)
WO16-3	30X24	5.00						X MILE (PLAQUE)
WO20-1	48X48	16.00						ROAD/BRIDGE/RAMP WORK AHEAD
WO20-2	48X48	16.00						DETOUR AHEAD
WO20-3	48X48	16.00	4	64				ROAD CLOSED AHEAD
WO20-4	48X48	16.00						ONE LANE ROAD AHEAD
WO20-5	48X48	16.00						RIGHT/CENTER/LEFT LANE CLOSED AHEAD
WO20-5a	48X48	16.00						2 RIGHT/CENTER/LEFT LANES CLOSED AHEAD
WO20-6a	48X48	16.00						RIGHT/CENTER/LEFT LANE CLOSED
WO20-7a	48X48	16.00						FLAGGER (SYMBOL)
WO21-2	36X36	9.00						FRESH OIL
WO21-5	48X48	16.00						SHOULDER WORK / SHOULDER WORK AHEAD
WO22-1	48X48	16.00						BLASTING ZONE AHEAD
WO22-2	42X36	10.50						TURN OFF 2-WAY RADIO AND PHONE
WO22-3	42X36	10.50						END BLASTING ZONE
GO22-1	21X15	2.19						WET PAINT (ARROW PIVOTS)

SIGN	SIZE IN.	AREA SQ.FT.	QTY EACH	TOTAL SQ.FT.	QTY RELOC EACH	TOTAL RELOC SQ.FT.	SIGN NUM.	DESCRIPTION
GUIDE SIGNS								
E05-1	36X48	12.00						GORE EXIT
E05-2	48X36	12.00						EXIT OPEN
E05-2a	48X36	12.00						EXIT CLOSED
GO20-1	60X24	10.00						ROAD WORK NEXT XX MILES
GO20-2	48X24	8.00						END ROAD WORK
GO20-4	36X18	4.50						PILOT CAR FOLLOW ME
GO20-4a	42X30	8.75						PILOT CAR IN USE WAIT & FOLLOW
GO20-4a	18X12	1.50						PILOT CAR IN USE WAIT & FOLLOW
GO20-5aP	36X24	6.00						WORK ZONE (PLAQUE)
MO4-8a	24X18	3.00	4	12				END DETOUR
MO4-9L	48X36	12.00	4	48				DETOUR (LEFT)
MO4-9R	48X36	12.00	11	132				DETOUR (RIGHT)
MO4-9P	48X12	4.00						STREET NAME (PLAQUE)
MO4-10L	48X18	6.00						DETOUR ARROW (LEFT)
MO4-10R	48X18	6.00						DETOUR ARROW (RIGHT)
REGULATORY SIGNS								
R1-1	48X48	13.25						STOP
R1-2	48TRI.	6.93						YIELD
R1-2a	36X36	9.00						TO ONCOMING TRAFFIC (PLAQUE)
R1-3P	30X12	2.50						ALL WAY (PLAQUE)
R2-1	36X48	12.00						SPEED LIMIT XX
R3-1	48X48	16.00						NO RIGHT TURN (SYMBOL)
R3-2	48X48	16.00						NO LEFT TURN (SYMBOL)
R3-3	36X36	9.00						NO TURNS
R3-4	48X48	16.00						NO U-TURN (SYMBOL)
R3-7L	30X30	6,25						LEFT LANE MUST TURN LEFT
R3-7R	30X30	6,25						RIGHT LANE MUST TURN RIGHT
R4-1	36X48	12,00						DO NOT PASS
R4-2	36X48	12.00						PASS WITH CARE
R4-7a	36X48	12.00						KEEP RIGHT (HORIZONTAL ARROW)
R4-8a	36X48	12.00						KEEP LEFT (HORIZONTAL ARROW)
R5-1	30X30	6.25						DO NOT ENTER
R5-1a	36X24	6.00						WRONG WAY
R6-1L	54X18	6.75						ONE WAY ARROW (LEFT)
R6-1R	54X18	6.75						ONE WAY ARROW (RIGHT)
R6-2L	24X30	5.00						ONE WAY (LEFT)
R6-2R	24X30	5.00						ONE WAY (RIGHT)
R9-9	24X12	2.00						SIDEWALK CLOSED
R9-11L	24X18	3.00						SIDEWALK CLOSED AHEAD, (ARROW LEFT) CROSS HERE
R9-11R	24X18	3.00						SIDEWALK CLOSED AHEAD, (ARROW RIGHT) CROSS HERE
R10-6	24X36	6.00						STOP HERE ON RED (45^ ARROW)
R11-2	48X30	10.00	2	20				ROAD CLOSED
R11-3a	60X30	12.50	4	50				ROAD CLOSED XX MILES AHEAD LOCAL TRAFFIC ONLY
R11-4	60X30	12.50	2	25				ROAD CLOSED TO THRU TRAFFIC
CONST-3A	60X48	20.00						FINE SIGN
CONST-3X	56X12	4.67						SPEEDING/PASSING (PLATE)
MISCELLANEOUS SIGNS								
CONST-5	48X36	12.00						POINT OF PRESENCE
CONST-5	96X48	32.00						POINT OF PRESENCE
CONST-8	48X36	12.00						WORK ZONE NO PHONE ZONE
MO4-9S	48X36	12.00	4	48				DETOUR ARROW (UP)
SPECIAL1	48X12	4.00	3	12				STREET NAME (TECHNOLOGY DRIVE)
SPECIAL2	72X36	18.00	6	108				TECHNOLOGY DRIVE CLOSED

616-10.05 CONSTRUCTION SIGNS	TOTAL 519
616-10.10 RELOCATED SIGNS	TOTAL 1

EFFECTIVE: 07-01-2024

ITEM NUMBER	TOTAL QTY	DESCRIPTION
6122008		IMPACT ATTENUATOR 40 MPH (SAND BARRELS)
6122009		IMPACT ATTENUATOR 45 MPH (SAND BARRELS)
6122010		IMPACT ATTENUATOR 50 MPH (SAND BARRELS)
6122012		IMPACT ATTENUATOR 55 MPH (SAND BARRELS)
6122014		IMPACT ATTENUATOR 60 MPH (SAND BARRELS)
6122017		IMPACT ATTENUATOR 65 MPH (SAND BARRELS)
6122019		IMPACT ATTENUATOR 70 MPH (SAND BARRELS)
6122020		REPLACEMENT SAND BARREL
6122030		IMPACT ATTENUATOR (RELOCATION)
6123001		TRUCK MOUNTED ATTENUATOR (TMA)
6161008		ADVANCED WARNING RAIL SYSTEM
6161012		BUOYS (BOATS KEEP OUT)
6161013		BUOYS (NO WAKE)
6161014		SPECIAL SIGN ASSEMBLY (BOATS KEEP OUT)
6161025		CHANNELIZER (TRIM LINE)
6161030	6	TYPE III MOVEABLE BARRICADE
6161033		DIRECTION INDICATOR BARRICADE
6161040		FLASHING ARROW PANEL
6161047		TYPE III OBJECT MARKER
6161055		SEQUENTIAL FLASHING WARNING LIGHT
6161070		TUBULAR MARKER
6161095		RADAR SPEED ADVISORY SYSTEM
6161096		CHANGEABLE MESSAGE SIGN, COMMISSION FURNISHED/RETAINED
6161098A		CHANGEABLE MESSAGE SIGN WITHOUT COMM. INTERFACE- CONTRACTOR FURNISHED/RETAINED
6161099	2**	CHANGEABLE MESSAGE SIGN WITH COMM, INTERFACE- CONTRACTOR FURNISHED/RETAINED
6162000A		WORK ZONE TRAFFIC SIGNAL SYSTEM
6162002		TEMPORARY LONG-TERM RUMBLE STRIPS
6173600D		TEMPORARY TRAFFIC BARRIER CONTRACTOR FURNISHED/RETAINED
6173602B		TEMPORARY TRAFFIC BARRIER CONTRACTOR FURNISHED/COMMISSION RETAINED
6174000A		TEMP. TRAFFIC BARRIER HEIGHT TRANSITION
6175010A		RELOCATING TEMPORARY TRAFFIC BARRIER
6176000B		TEMPORARY TRAFFIC BARRIER COMMISSION FURNISHED/RETAINED
6177000B		TEMP. TRAFFIC BARRIER HEIGHT TRANSITION COMMISSION FURNISHED/RETAINED
6208064A		TEMPORARY RAISED PAVEMENT MARKER
9029400		TEMPORARY TRAFFIC SIGNALS
9029401		TEMPORARY TRAFFIC SIGNALS AND LIGHTING

TEMPORARY TRAFFIC CONTROL	
PAY TOTAL =	1 LUMP SUM

**NOT INCLUDED IN TEMPORARY TRAFFIC CONTROL - 1 LUMP SUM QUANTITY

SUMMARY OF QUANTITIES
SHEET 4 OF 4

STATE OF MISSOURI
Kevin Thomas Foy O'Shaughnessy
NUMBER PE-2017000345
PROFESSIONAL ENGINEER

THIS SHEET HAS BEEN SIGNED, SEALED AND DATED ELECTRONICALLY

DATE PREPARED 4/24/2025

ROUTE	STATE
NOR	MO
DISTRICT	SHEET NO.
SL	3

COUNTY: ST. CHARLES

JOB NO. JSL0112

CONTRACT ID.

PROJECT NO.

BRIDGE NO.

DESCRIPTION	DATE

MISSOURI HIGHWAYS AND TRANSPORTATION COMMISSION

105 WEST CAPITOL
JEFFERSON CITY, MO 65102
1-888-ASK-MODOT (1-888-275-6636)

SUMMARY OF QUANTITIES
SHEET 4 OF 4

CDG ENGINEERS
One Campus Martius
St. Louis, Missouri 63139
T. 314 781 7770
F. 314 781 9075
Missouri State Certificate of Authority # 1721

NOTE:
REFER TO PLAN ON SHEET NO. 16 FOR LIMITS OF
JOB NO. JSL0112 AND JOB NO. TAP-5407(619)

1
2375 INVESTMENTS LLC
WINGHAVEN POINTE DRIVE
PARCEL ID: 4-0078-C539-00-000B.0000000
5.31 AC. ORIGINAL
0.09 AC. TEMP. CNST ESM'T (TCE)
0.01 AC. PERM. ESM'T (PE)
5.31 AC. REMAINING

WINGHAVEN RESIDENTIAL
OWNERS ASSOCIATION INC.
TECHNOLOGY DRIVE
NO TAKINGS

2
METROPOLITAN PARK &
RECREATION DISTRICT

2
METROPOLITAN PARK &
RECREATION DISTRICT
3.26 AC. ORIGINAL
0.51 AC. EX. PERM. SIGN ESM'T
0.52 AC. EX. PERM. SIGHT LINE ESM'T
3.26 AC. REMAINING (NO TAKINGS)

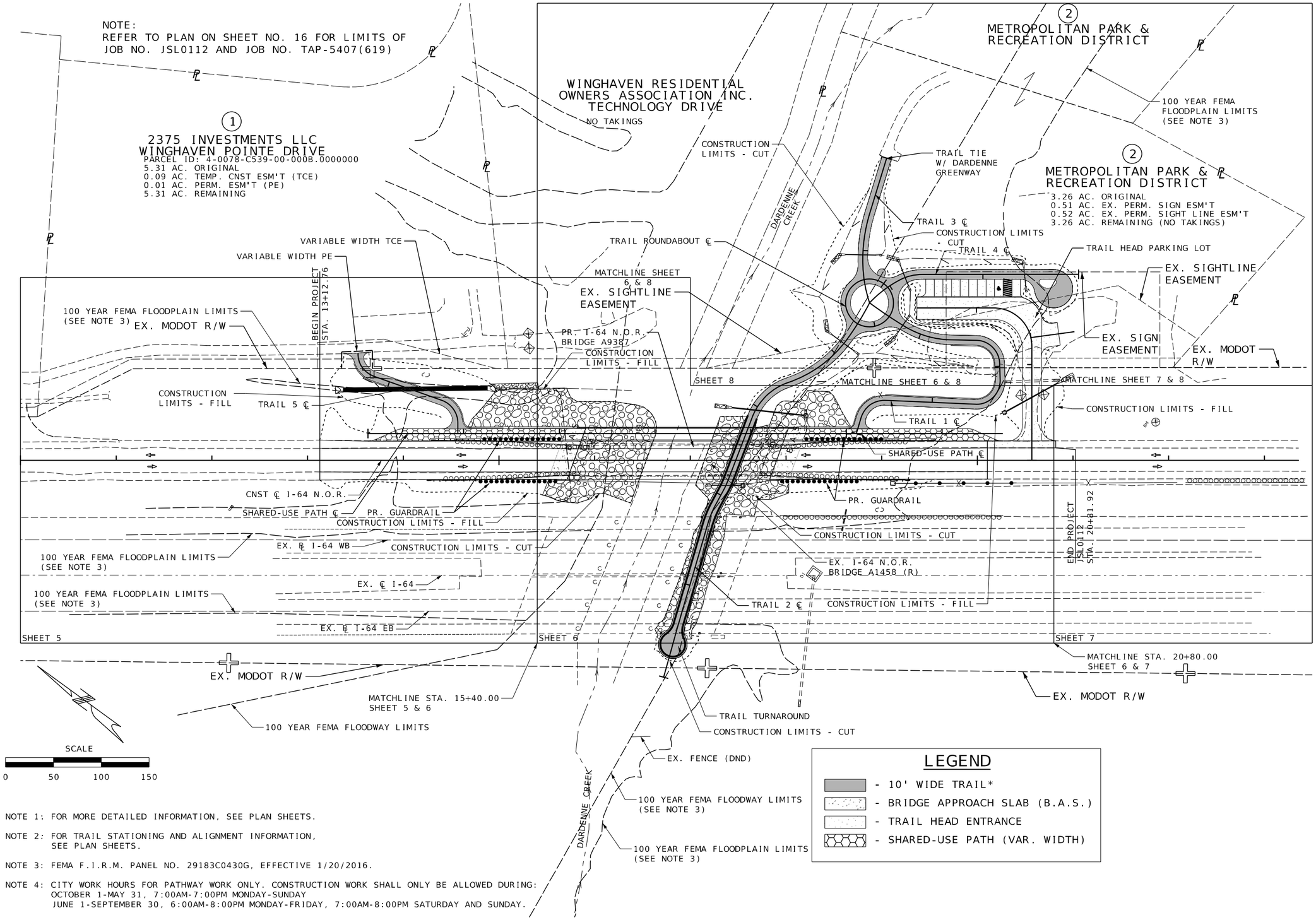

LEGEND

- 10' WIDE TRAIL*
- BRIDGE APPROACH SLAB (B.A.S.)
- TRAIL HEAD ENTRANCE
- SHARED-USE PATH (VAR. WIDTH)

NOTE 1: FOR MORE DETAILED INFORMATION, SEE PLAN SHEETS.

NOTE 2: FOR TRAIL STATIONING AND ALIGNMENT INFORMATION, SEE PLAN SHEETS.

NOTE 3: FEMA F.I.R.M. PANEL NO. 29183C0430G, EFFECTIVE 1/20/2016.

NOTE 4: CITY WORK HOURS FOR PATHWAY WORK ONLY. CONSTRUCTION WORK SHALL ONLY BE ALLOWED DURING:
OCTOBER 1-MAY 31, 7:00AM-7:00PM MONDAY-SUNDAY
JUNE 1-SEPTEMBER 30, 6:00AM-8:00PM MONDAY-FRIDAY, 7:00AM-8:00PM SATURDAY AND SUNDAY.

STATE OF MISSOURI
Kevin Thomas Foy O'Shaughnessy
NUMBER PE-2017000345
PROFESSIONAL ENGINEER

THIS SHEET HAS BEEN SIGNED, SEALED AND DATED ELECTRONICALLY

DATE PREPARED	
4/24/2025	
ROUTE	STATE
NOR	MO
DISTRICT	SHEET NO.
SL	4
COUNTY	
ST. CHARLES	
JOB NO.	
JSL0112	
CONTRACT ID.	
PROJECT NO.	
BRIDGE NO.	

DATE	DESCRIPTION

MISSOURI HIGHWAYS AND TRANSPORTATION COMMISSION
105 WEST CAPITOL
JEFFERSON CITY, MO 65102
1-888-ASK-MODOT (1-888-275-6636)

PLAN OVERVIEW

CDG ENGINEERS
One Campus Office
St. Louis, Missouri 63139
T. 314 781 7770
F. 314 781 9075
Missouri State Certificate of Authority # 1721

NOTE:
REFER TO PLAN ON SHEET NO. 17 FOR LIMITS OF
JOB NO. JSL0112 AND JOB NO. TAP-5407(619)

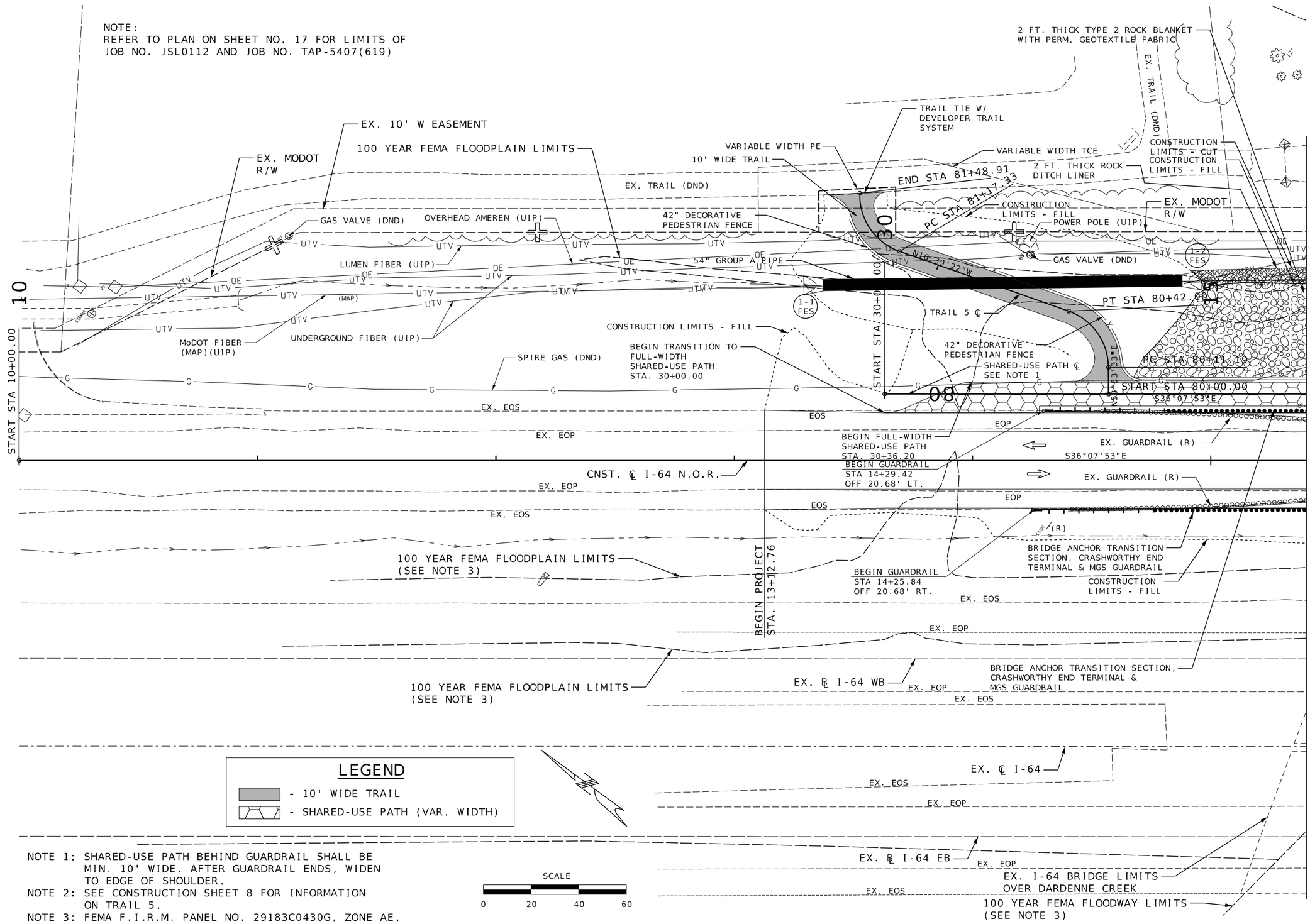

NOTE 1: SHARED-USE PATH BEHIND GUARDRAIL SHALL BE MIN. 10' WIDE. AFTER GUARDRAIL ENDS, WIDEN TO EDGE OF SHOULDER.
NOTE 2: SEE CONSTRUCTION SHEET 8 FOR INFORMATION ON TRAIL 5.
NOTE 3: FEMA F.I.R.M. PANEL NO. 29183C0430G, ZONE AE, EFFECTIVE 1/20/2016.

STATE OF MISSOURI
Kevin Thomas Foy O'Shaughnessy
NUMBER PE-2017000345
PROFESSIONAL ENGINEER

THIS SHEET HAS BEEN SIGNED, SEALED AND DATED ELECTRONICALLY

DATE PREPARED	
4/24/2025	
ROUTE	STATE
NOR	MO
DISTRICT	SHEET NO.
SL	5
COUNTY	
ST. CHARLES	
JOB NO.	
JSL0112	
CONTRACT ID.	
PROJECT NO.	
BRIDGE NO.	

DATE	DESCRIPTION

MISSOURI HIGHWAYS AND TRANSPORTATION COMMISSION
105 WEST CAPITOL
JEFFERSON CITY, MO 65102
1-888-ASK-MODOT (1-888-275-6636)

PLAN SHEET

CDG ENGINEERS
One Campus Martius
St. Louis, Missouri 63103
T. 314 781 7770
F. 314 781 9075
Missouri State Certificate of Authority # 1721

T:\Working\21228 - O'Fallon, MO-Dardenne Greenway Trail\8-CDG Drawings\MicroStation\Civil Files\005_PS_JSL0112_I20.dgn 8:10:10 AM 4/24/2025

NOTE 1: CONTRACTOR SHALL ONLY REMOVE ROCK BLANKET THAT IS IN CONFLICT WITH THE PROPOSED TRAIL UNDER I-64.

NOTE 2: SHARED-USE PATH BEHIND GUARDRAIL SHALL BE MIN. 10' WIDE. AFTER GUARDRAIL ENDS, WIDEN TO EDGE OF SHOULDER.

NOTE 3: SEE CONSTRUCTION PLANS FOR INFORMATION ON TRAILS 1-5, ENTRANCE & ROUNDABOUT.

NOTE 4: SEE REFERENCE POINTS SHEET FOR TRAIL GEOMETRY.

NOTE 5: CONTRACTOR SHALL REMOVE ROCK BLANKET & ROCK DITCH LINER TO AREA JUST BEYOND LIMITS OF SLOPE. AS DIRECTED BY THE ENGINEER.

NOTE 6: SEE SIGNING SHEETS FOR SIGN INFORMATION.

NOTE 7: FEMA F.I.R.M. PANEL NO. 29183C0430G, ZONE AE, EFFECTIVE 1/20/2016.

LEGEND

- 10' WIDE TRAIL*
- BRIDGE APPROACH SLAB (B.A.S.)
- TRAIL HEAD ENTRANCE/SHLDR REPLACEMENT
- SHARED-USE PATH (VAR. WIDTH)

* TRAIL 2 - 14' WIDE FROM STA. 50+57.90 TO STA. 52+78.16

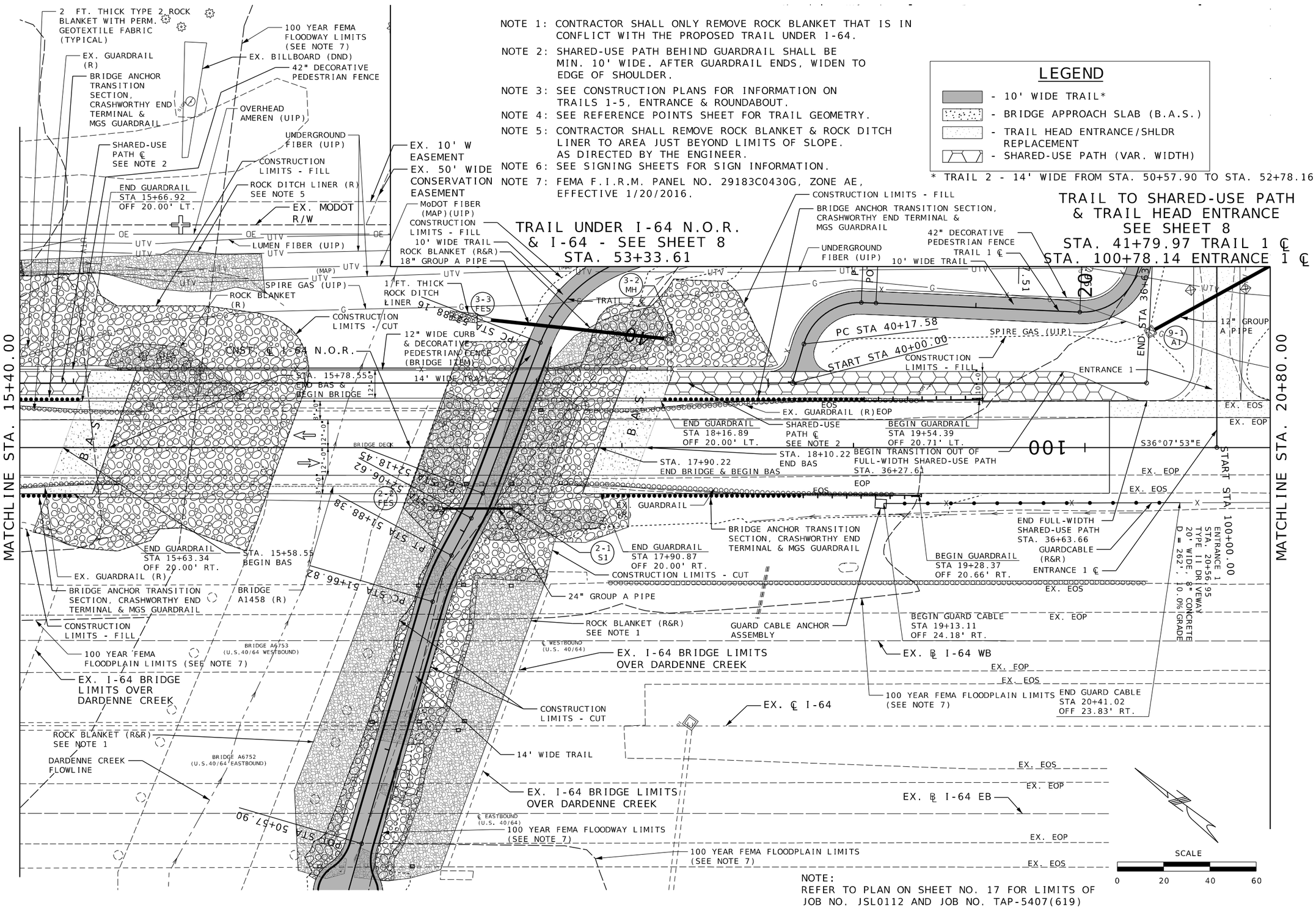

NOTE:
REFER TO PLAN ON SHEET NO. 17 FOR LIMITS OF JOB NO. JSL0112 AND JOB NO. TAP-5407(619)

STATE OF MISSOURI
Kevin Thomas Foy O'Shaughnessy
NUMBER PE-2017000345
PROFESSIONAL ENGINEER

THIS SHEET HAS BEEN SIGNED, SEALED AND DATED ELECTRONICALLY

DATE PREPARED	
4/24/2025	
ROUTE	STATE
NOR	MO
DISTRICT	SHEET NO.
SL	6
COUNTY	
ST. CHARLES	
JOB NO.	
JSL0112	
CONTRACT ID.	
PROJECT NO.	
BRIDGE NO.	

DATE	DESCRIPTION

MISSOURI HIGHWAYS AND TRANSPORTATION COMMISSION
105 WEST CAPITOL
JEFFERSON CITY, MO 65102
1-888-ASK-MODOT (1-888-275-6636)

PLAN SHEET

CDG ENGINEERS
One Campus Place
St. Louis, Missouri 63139
T. 314 786 7770
F. 314 781 9075
Missouri State Certificate of Authority # 1721

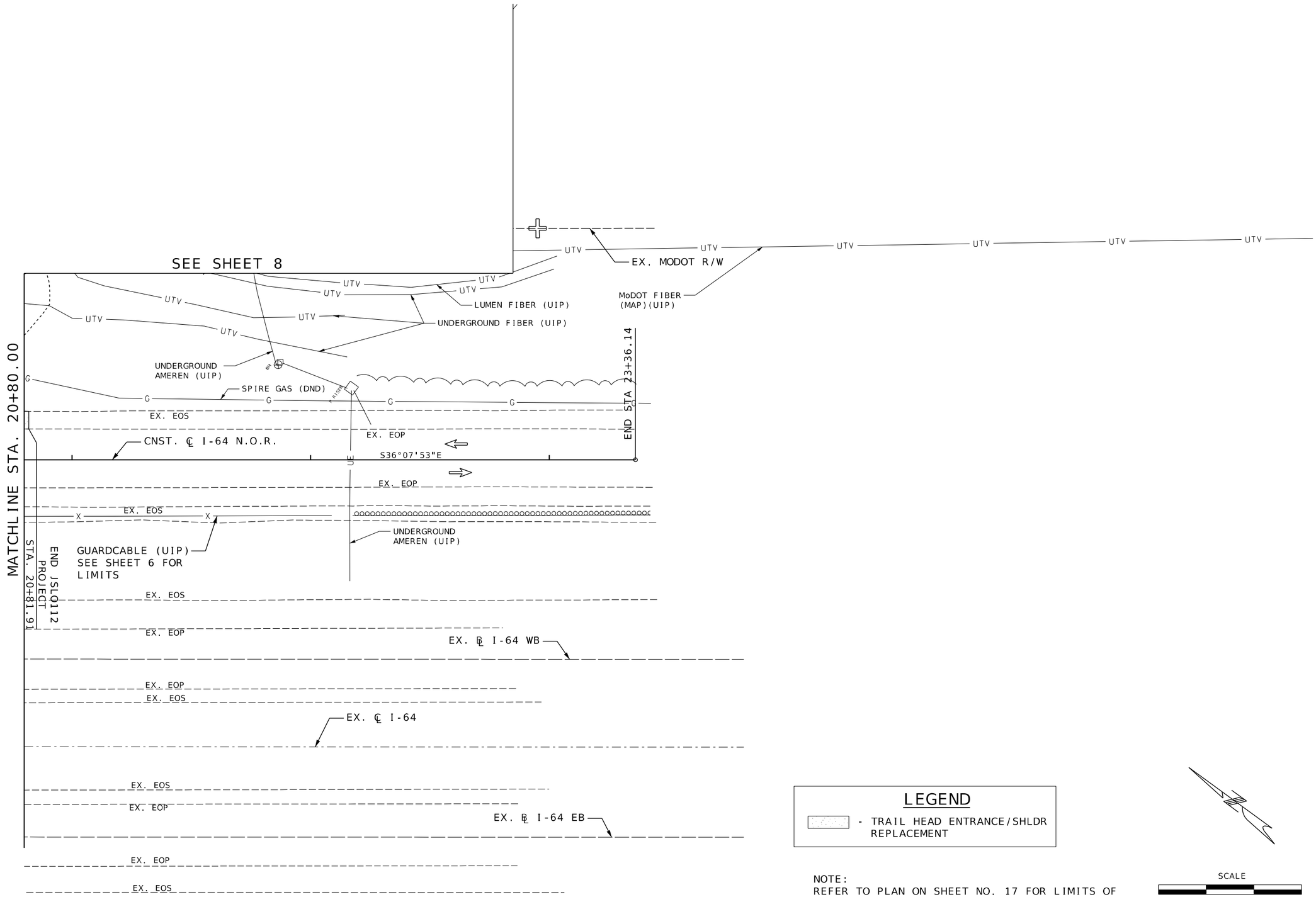

LEGEND

- TRAIL HEAD ENTRANCE/SHLDR REPLACEMENT

NOTE:
REFER TO PLAN ON SHEET NO. 17 FOR LIMITS OF JOB NO. JSL0112 AND JOB NO. TAP-5407(619)

SCALE
0 20 40 60

STATE OF MISSOURI
Kevin Thomas Foy O'Shaughnessy
NUMBER PE-2017000345
PROFESSIONAL ENGINEER

THIS SHEET HAS BEEN SIGNED, SEALED AND DATED ELECTRONICALLY

DATE PREPARED
4/24/2025

ROUTE	STATE
NOR	MO
DISTRICT	SHEET NO.
SL	7

COUNTY
ST. CHARLES

JOB NO.
JSL0112

CONTRACT ID.

PROJECT NO.

BRIDGE NO.

DESCRIPTION	DATE

MISSOURI HIGHWAYS AND TRANSPORTATION COMMISSION
105 WEST CAPITOL
JEFFERSON CITY, MO 65102
1-888-ASK-MODOT (1-888-275-6636)

PLAN SHEET

CDG ENGINEERS
One Campbell Plaza
St. Louis, Missouri 63139
T. 314 781 7770
F. 314 781 9075
Missouri State Certificate of Authority # 1721

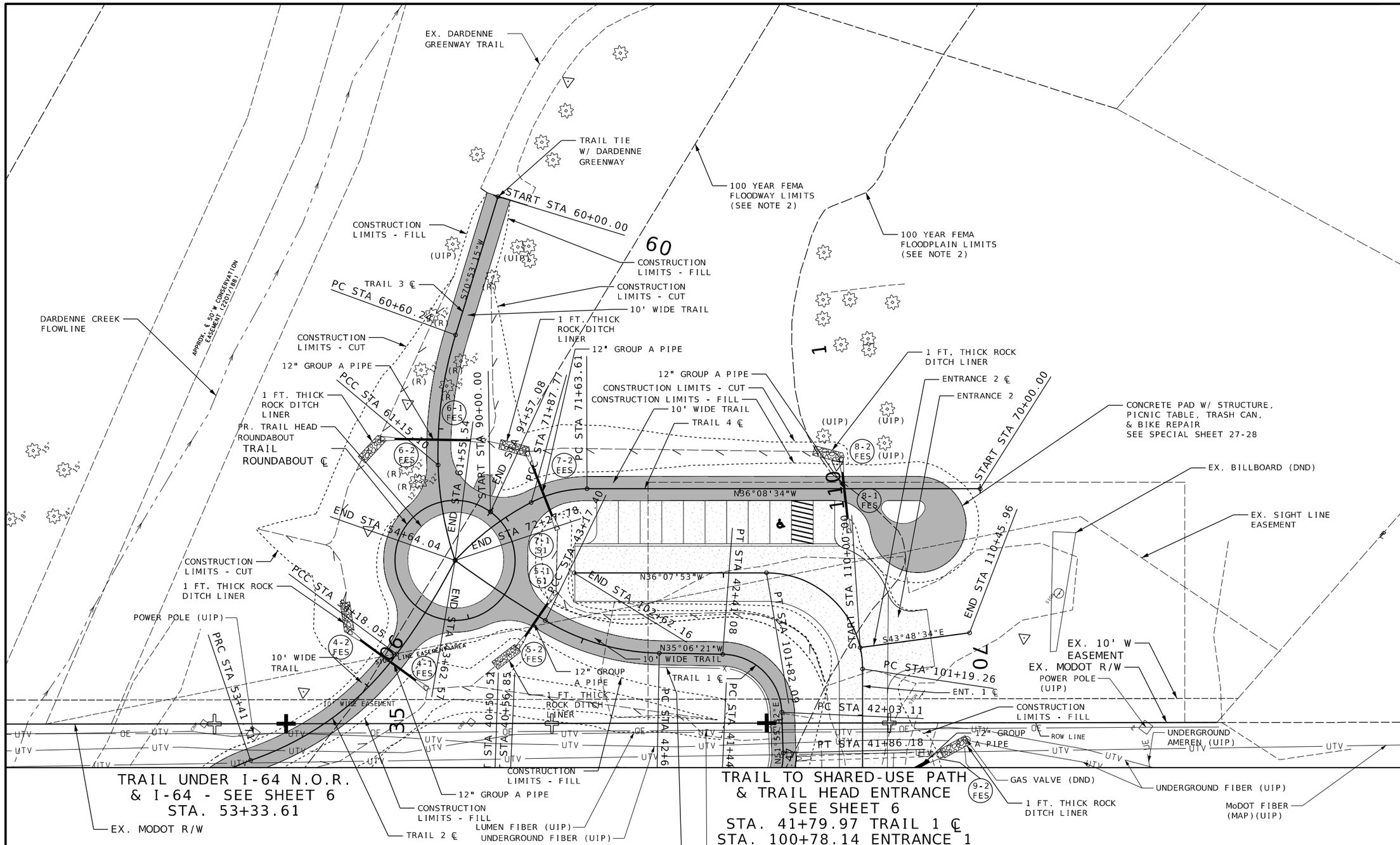

NOTE:
REFER TO PLAN ON SHEET NO. 17 FOR LIMITS OF JOB NO. JSL0112 AND JOB NO. TAP-5407(619)

* TRAIL 2 - 14' WIDE FROM STA. 50+57.90 TO STA. 52+78.16

NOTE 1: SEE CONSTRUCTION PLANS FOR INFORMATION ON TRAILS, ENTRANCE & ROUNDABOUT.

NOTE 2: FEMA F.I.R.M. PANEL NO. 29183C0430G, ZONE AE, EFFECTIVE 1/20/2016.

STATE OF MISSOURI
Kevin Thomas Foy O'Shaughnessy
NUMBER PE-2017000345
PROFESSIONAL ENGINEER

THIS SHEET HAS BEEN SIGNED, SEALED AND DATED ELECTRONICALLY

DATE PREPARED	
4/24/2025	
ROUTE	STATE
NOR	MO
DISTRICT	SHEET NO.
SL	8
COUNTY	
ST. CHARLES	
JOB NO.	
JSL0112	
CONTRACT ID.	
PROJECT NO.	
BRIDGE NO.	

DATE	DESCRIPTION

MISSOURI HIGHWAYS AND TRANSPORTATION COMMISSION
105 WEST CAPITOL
JEFFERSON CITY, MO 65102
1-888-ASK-MODOT (1-888-275-6636)

PLAN SHEET

CDG ENGINEERS
One Centre Office
St. Louis, Missouri 63139
T. 314 781 7770
F. 314 781 9075
Missouri State Certificate of Authority #1721

T:\Working\21228 - O'Fallon, MO-Dardenne Greenway Trail\8-CDG Drawings\MicroStation\Civil Files\008_PS_JSL0112_I20.dgn 8:10:19 AM 4/24/2025

TRAIL 5					
DESIGNATION	STATION	OFFSET	NORTHING	EASTING	ELEVATION
A	80+04.99	15.74' LT	1056787.900	751830.522	501.4
B	80+20.90	5.00' LT	1056788.541	751847.107	501.0
C	80+42.00	5.00' LT	1056804.784	751849.252	500.3
D	81+17.33	5.00' LT	1056876.950	751827.661	497.9
E	81+41.35	5.00' LT	1056904.184	751832.893	497.1
F	81+48.13	15.07' LT	1056917.943	751832.818	496.9
G	81+50.67	11.40' RT	1056897.296	751849.553	496.9
H	81+39.73	5.00' RT	1056896.933	751839.959	497.1
I	81+17.33	5.00' RT	1056879.816	751837.242	497.9
J	80+42.00	5.00' RT	1056807.650	751858.832	500.3
K	80+13.59	5.00' RT	1056776.598	751849.987	501.3
L	80+05.01	14.82' RT	1056763.217	751848.542	501.9

SHARED USE PATH					
DESIGNATION	STATION	OFFSET	NORTHING	EASTING	ELEVATION
M	32+07.36	5.00' LT	1056683.530	751906.718	503.5
N	32+03.72	5.00' RT	1056680.573	751896.495	503.6
O	30+64.89	5.00' RT	1056792.703	751814.635	501.4
P	30+64.89	7.83' RT	1056791.032	751812.346	501.4
Q	30+00.00	7.83' RT	1056843.438	751774.087	500.9
R	30+08.16	6.09' RT	1056837.875	751780.302	500.9
S	30+30.08	3.70' LT	1056825.947	751801.131	500.9
T	30+36.20	5.00' LT	1056821.775	751805.792	500.9

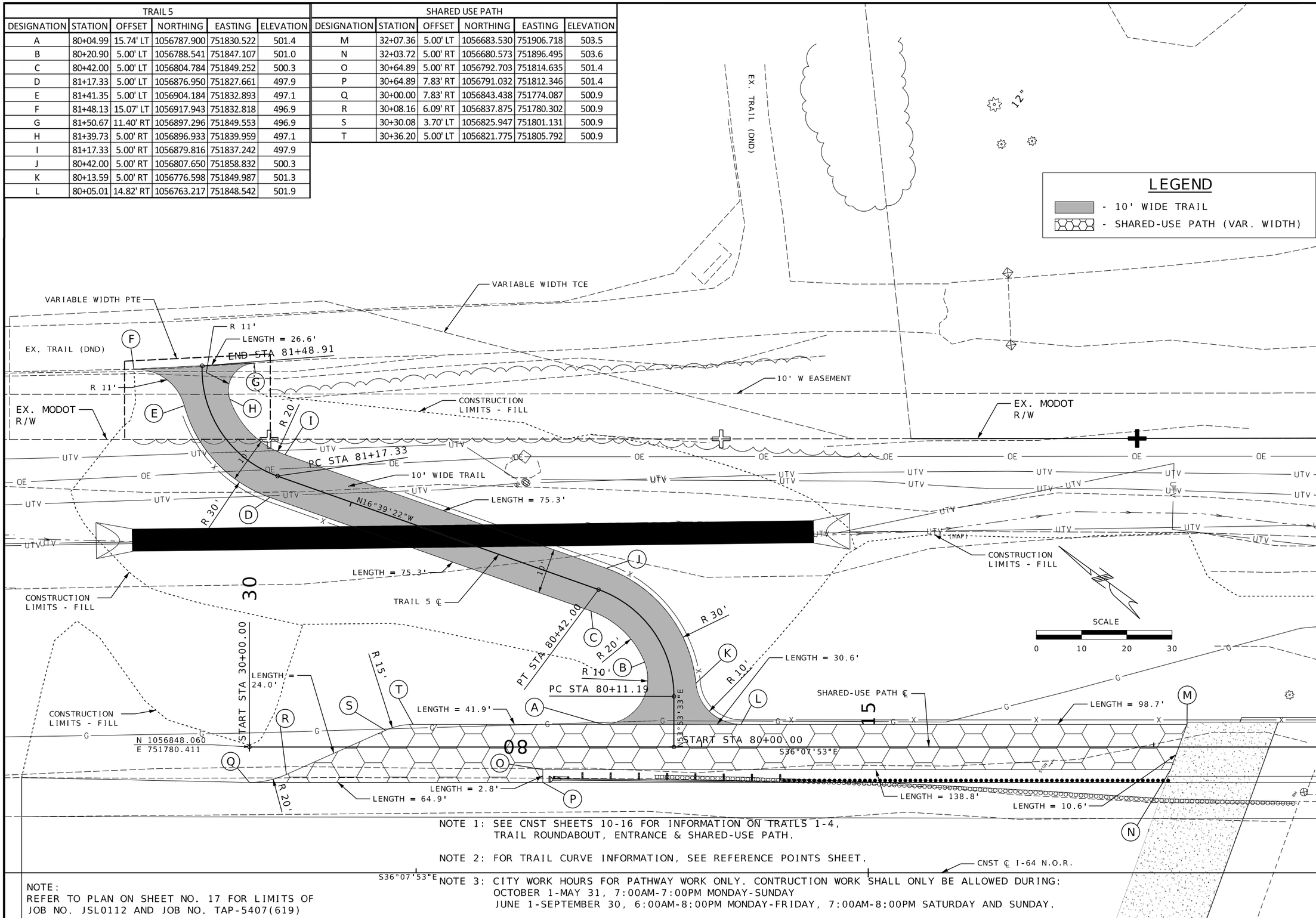

NOTE 1: SEE CNST SHEETS 10-16 FOR INFORMATION ON TRAILS 1-4, TRAIL ROUNDABOUT, ENTRANCE & SHARED-USE PATH.

NOTE 2: FOR TRAIL CURVE INFORMATION, SEE REFERENCE POINTS SHEET.

NOTE 3: CITY WORK HOURS FOR PATHWAY WORK ONLY. CONTRUCTION WORK SHALL ONLY BE ALLOWED DURING:
OCTOBER 1-MAY 31, 7:00AM-7:00PM MONDAY-SUNDAY
JUNE 1-SEPTEMBER 30, 6:00AM-8:00PM MONDAY-FRIDAY, 7:00AM-8:00PM SATURDAY AND SUNDAY.

NOTE:
REFER TO PLAN ON SHEET NO. 17 FOR LIMITS OF JOB NO. JSL0112 AND JOB NO. TAP-5407(619)

STATE OF MISSOURI
Kevin Thomas Foy O'Shaughnessy
NUMBER PE-2017000345
PROFESSIONAL ENGINEER

THIS SHEET HAS BEEN SIGNED, SEALED AND DATED ELECTRONICALLY

DATE PREPARED 4/24/2025

ROUTE	STATE
NOR	MO
DISTRICT	SHEET NO.
SL	9

COUNTY ST. CHARLES

JOB NO. JSL0112

CONTRACT ID.

PROJECT NO.

BRIDGE NO.

DATE	DESCRIPTION

MISSOURI HIGHWAYS AND TRANSPORTATION COMMISSION
105 WEST CAPITOL
JEFFERSON CITY, MO 65102
1-888-ASK-MODOT (1-888-275-6636)

CONSTRUCTION DETAILS
SHARED USE PATH
& TRAIL 5

CDG ENGINEERS
One Corporate Place
St. Louis, Missouri 63139
T. 314 781 1770
F. 314 781 9075
Missouri State Certificate of Authority # 1721

T:\Working\21228 - O'Fallon, MO-Dardenne Greenway Trail\8-CDG Drawings\MicroStation\Civil Files\009_PS_CNST_Plan_JSL0112_I10.dgn 8:10:20 AM 4/24/2025

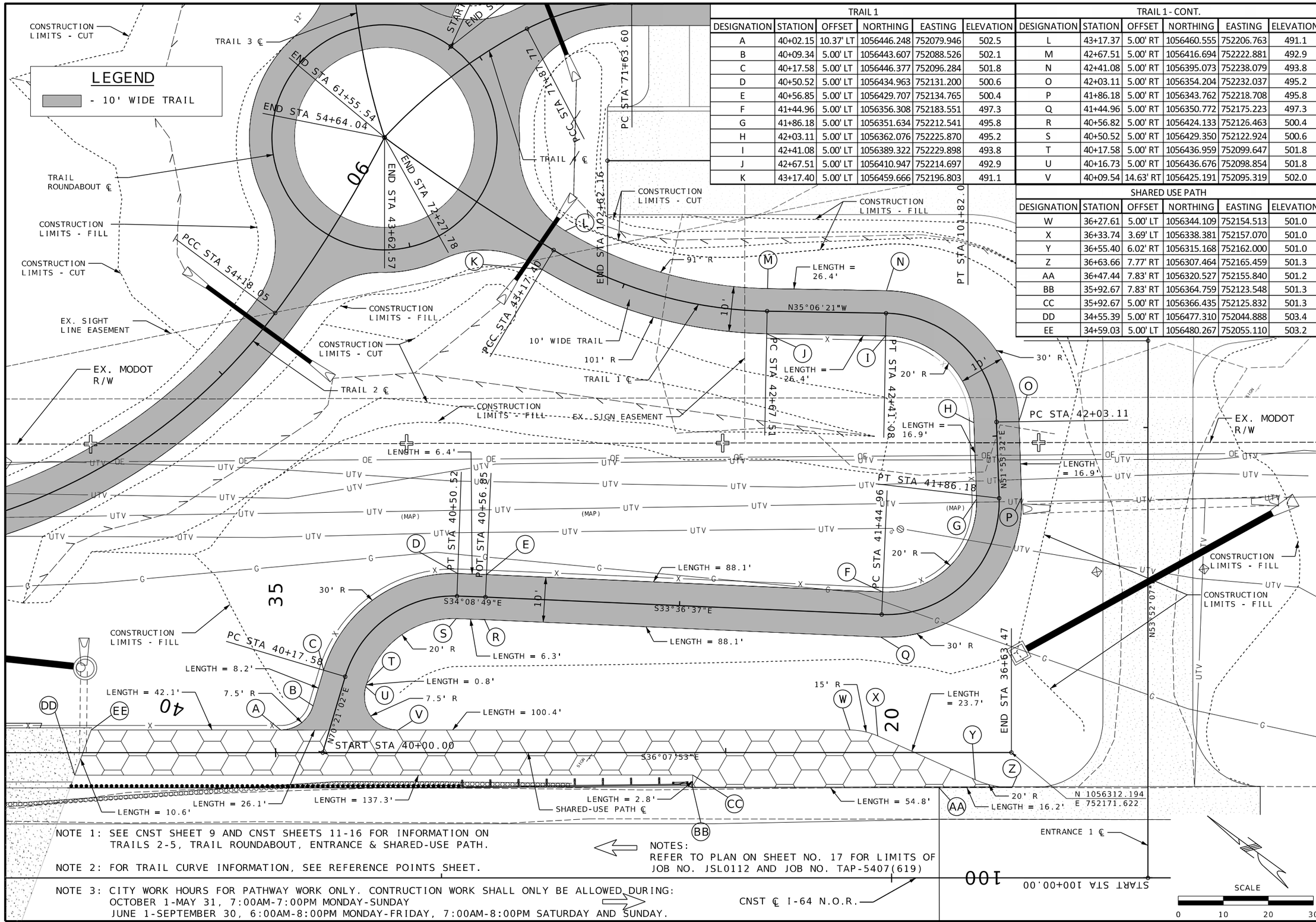

TRAIL 1					
DESIGNATION	STATION	OFFSET	NORTHING	EASTING	ELEVATION
A	40+02.15	10.37' LT	1056446.248	752079.946	502.5
B	40+09.34	5.00' LT	1056443.607	752088.526	502.1
C	40+17.58	5.00' LT	1056446.377	752096.284	501.8
D	40+50.52	5.00' LT	1056434.963	752131.200	500.6
E	40+56.85	5.00' LT	1056429.707	752134.765	500.4
F	41+44.96	5.00' LT	1056356.308	752183.551	497.3
G	41+86.18	5.00' LT	1056351.634	752212.541	495.8
H	42+03.11	5.00' LT	1056362.076	752225.870	495.2
I	42+41.08	5.00' LT	1056389.322	752229.898	493.8
J	42+67.51	5.00' LT	1056410.947	752214.697	492.9
K	43+17.40	5.00' LT	1056459.666	752196.803	491.1

TRAIL 1 - CONT.					
DESIGNATION	STATION	OFFSET	NORTHING	EASTING	ELEVATION
L	43+17.37	5.00' RT	1056460.555	752206.763	491.1
M	42+67.51	5.00' RT	1056416.694	752222.881	492.9
N	42+41.08	5.00' RT	1056395.073	752238.079	493.8
O	42+03.11	5.00' RT	1056354.204	752232.037	495.2
P	41+86.18	5.00' RT	1056343.762	752218.708	495.8
Q	41+44.96	5.00' RT	1056350.772	752175.223	497.3
R	40+56.82	5.00' RT	1056424.133	752126.463	500.4
S	40+50.52	5.00' RT	1056429.350	752122.924	500.6
T	40+17.58	5.00' RT	1056436.959	752099.647	501.8
U	40+16.73	5.00' RT	1056436.676	752098.854	501.8
V	40+09.54	14.63' RT	1056425.191	752095.319	502.0

SHARED USE PATH					
DESIGNATION	STATION	OFFSET	NORTHING	EASTING	ELEVATION
W	36+27.61	5.00' LT	1056344.109	752154.513	501.0
X	36+33.74	3.69' LT	1056338.381	752157.070	501.0
Y	36+55.40	6.02' RT	1056315.168	752162.000	501.0
Z	36+63.66	7.77' RT	1056307.464	752165.459	501.3
AA	36+47.44	7.83' RT	1056320.527	752155.840	501.2
BB	35+92.67	7.83' RT	1056364.759	752123.548	501.3
CC	35+92.67	5.00' RT	1056366.435	752125.832	501.3
DD	34+55.39	5.00' RT	1056477.310	752044.888	503.4
EE	34+59.03	5.00' LT	1056480.267	752055.110	503.2

NOTE 1: SEE CNST SHEET 9 AND CNST SHEETS 11-16 FOR INFORMATION ON TRAILS 2-5, TRAIL ROUNDABOUT, ENTRANCE & SHARED-USE PATH.

NOTE 2: FOR TRAIL CURVE INFORMATION, SEE REFERENCE POINTS SHEET.

NOTE 3: CITY WORK HOURS FOR PATHWAY WORK ONLY. CONTRUCTION WORK SHALL ONLY BE ALLOWED DURING:
OCTOBER 1-MAY 31, 7:00AM-7:00PM MONDAY-SUNDAY
JUNE 1-SEPTEMBER 30, 6:00AM-8:00PM MONDAY-FRIDAY, 7:00AM-8:00PM SATURDAY AND SUNDAY.

NOTES:
REFER TO PLAN ON SHEET NO. 17 FOR LIMITS OF JOB NO. JSL0112 AND JOB NO. TAP-5407(619)

STATE OF MISSOURI
Kevin Thomas Foy O'Shaughnessy
NUMBER PE-2017000345
PROFESSIONAL ENGINEER

THIS SHEET HAS BEEN SIGNED, SEALED AND DATED ELECTRONICALLY

DATE PREPARED 4/24/2025

ROUTE	STATE
NOR	MO
DISTRICT	SHEET NO.
SL	10

COUNTY ST. CHARLES

JOB NO. JSL0112

CONTRACT ID.

PROJECT NO.

BRIDGE NO.

DESCRIPTION

DATE

MISSOURI HIGHWAYS AND TRANSPORTATION COMMISSION

105 WEST CAPITOL
JEFFERSON CITY, MO 65102
1-888-ASK-MODOT (1-888-275-6636)

CONSTRUCTION DETAILS SHARED USE PATH & TRAIL 1

CDG ENGINEERS
One Campus Drive St. Louis, Missouri 63139
T. 314 786 7770
F. 314 786 9079
Missouri State Certificate of Authority # 1721

T:\Working\21228 - O'Fallon, MO-Dardenne Greenway Trail\8-CDG Drawings\MicroStation\Civil Files\010_PS_CNST_Plan_JSL0112_I10.dgn 8:10:28 AM 4/24/2025

TRAIL 2					
DESIGNATION	STATION	OFFSET	NORTHING	EASTING	ELEVATION
A	50+45.73	11.25' LT	1056474.970	751795.765	489.6
B	50+56.97	7.00' LT	1056474.935	751807.786	489.2
C	50+57.90	7.00' LT	1056475.278	751808.700	489.2
D	51+66.82	7.00' LT	1056512.163	751911.235	489.4
E	51+88.38	7.00' LT	1056517.679	751933.522	489.5
F	52+06.62	7.00' LT	1056520.223	751951.574	489.5
G	52+18.45	7.00' LT	1056522.424	751962.308	489.6
H	52+18.45	7.00' RT	1056508.911	751965.969	489.8
I	52+06.62	7.00' RT	1056506.360	751953.527	489.7
J	51+88.38	7.00' RT	1056503.816	751935.475	489.7
K	51+66.82	7.00' RT	1056498.989	751915.974	489.6
L	50+57.86	7.00' RT	1056462.135	751813.526	489.4
M	50+56.97	7.00' RT	1056461.825	751812.697	489.4
N	50+45.73	11.25' RT	1056453.900	751803.658	489.7

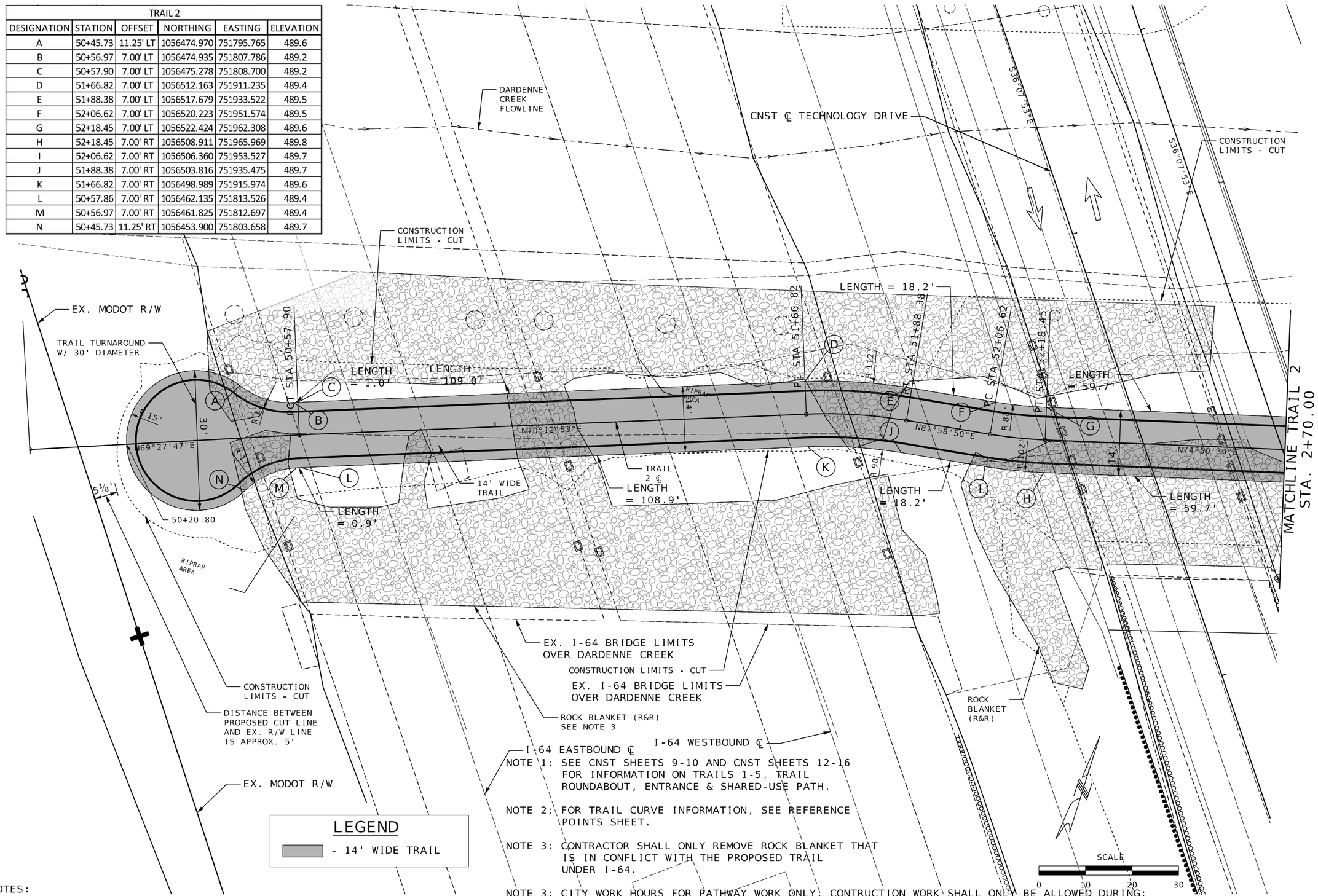

NOTE 1: SEE CNST SHEETS 9-10 AND CNST SHEETS 12-16 FOR INFORMATION ON TRAILS 1-5, TRAIL ROUNDABOUT, ENTRANCE & SHARED-USE PATH.

NOTE 2: FOR TRAIL CURVE INFORMATION, SEE REFERENCE POINTS SHEET.

NOTE 3: CONTRACTOR SHALL ONLY REMOVE ROCK BLANKET THAT IS IN CONFLICT WITH THE PROPOSED TRAIL UNDER I-64.

NOTE 3: CITY WORK HOURS FOR PATHWAY WORK ONLY. CONTRUCTION WORK SHALL ONLY BE ALLOWED DURING:
OCTOBER 1-MAY 31, 7:00AM-7:00PM MONDAY-SUNDAY
JUNE 1-SEPTEMBER 30, 6:00AM-8:00PM MONDAY-FRIDAY, 7:00AM-8:00PM SATURDAY AND SUNDAY.

LEGEND

- 14' WIDE TRAIL

NOTES:
REFER TO PLAN ON SHEET NO. 17 FOR LIMITS OF JOB NO. JSL0112 AND JOB NO. TAP-5407(619)

STATE OF MISSOURI
Kevin Thomas Foy O'Shaughnessy
NUMBER PE-2017000345
PROFESSIONAL ENGINEER

THIS SHEET HAS BEEN SIGNED, SEALED AND DATED ELECTRONICALLY

DATE PREPARED: 4/24/2025

ROUTE	STATE
NOR	MO
DISTRICT	SHEET NO.
SL	11

COUNTY: ST. CHARLES

JOB NO.: JSL0112

CONTRACT ID.

PROJECT NO.

BRIDGE NO.

DATE	DESCRIPTION

MISSOURI HIGHWAYS AND TRANSPORTATION COMMISSION
105 WEST CAPITOL
JEFFERSON CITY, MO 65102
1-888-ASK-MODOT (1-888-275-6636)

CONSTRUCTION DETAILS TRAIL 2

CDG ENGINEERS
One Campus Office 1 St. Louis, Missouri 63139 T. 314 781 7770 F. 314 781 9075
Missouri State Certificate of Authority # 1721

T:\Working\21228 - O'Fallon, MO-Dardenne Greenway Trail\8-CDG Drawings\MicroStation\Civil Files\011_PS_CNST_Plan_JSL0112_I10.dgn 8:10:41 AM 4/24/2025

NOTES:
REFER TO PLAN ON SHEET NO. 17 FOR LIMITS OF JOB NO. JSL0112 AND JOB NO. TAP-5407(619)

LEGEND

- 10' WIDE TRAIL*

* TRAIL 2 - 14' WIDE FROM STA. 0+51.00 TO STA. 2+81.39

NOTE 1: SEE CNST SHEETS 9-11, CNST SHEET 13-16 FOR INFORMATION ON TRAILS 1-5, TRAIL ROUNDABOUT, ENTRANCE & SHARED-USE PATH.

NOTE 2: FOR TRAIL CURVE INFORMATION, SEE REFERENCE POINTS SHEET.

NOTE 3: CITY WORK HOURS FOR PATHWAY WORK ONLY. CONTRUCTION WORK SHALL ONLY BE ALLOWED DURING:
OCTOBER 1-MAY 31, 7:00AM-7:00PM MONDAY-SUNDAY
JUNE 1-SEPTEMBER 30, 6:00AM-8:00PM MONDAY-FRIDAY, 7:00AM-8:00PM SATURDAY AND SUNDAY.

TRAIL 2 - CONT.					
DESIGNATION	STATION	OFFSET	NORTHING	EASTING	ELEVATION
A	52+78.16	7.00' LT	1056538.037	752019.940	489.8
B	52+88.16	5.00' LT	1056538.721	752030.115	489.8
C	53+41.71	5.00' LT	1056528.963	752085.354	490.3
D	54+17.90	5.00' LT	1056506.849	752153.935	491.1
E	54+18.05	5.00' RT	1056496.848	752153.990	491.3
F	53+41.71	5.00' RT	1056520.791	752079.590	490.4
G	52+88.16	5.00' RT	1056529.069	752032.730	490.0
H	52+78.16	7.00' RT	1056524.524	752023.600	490.0

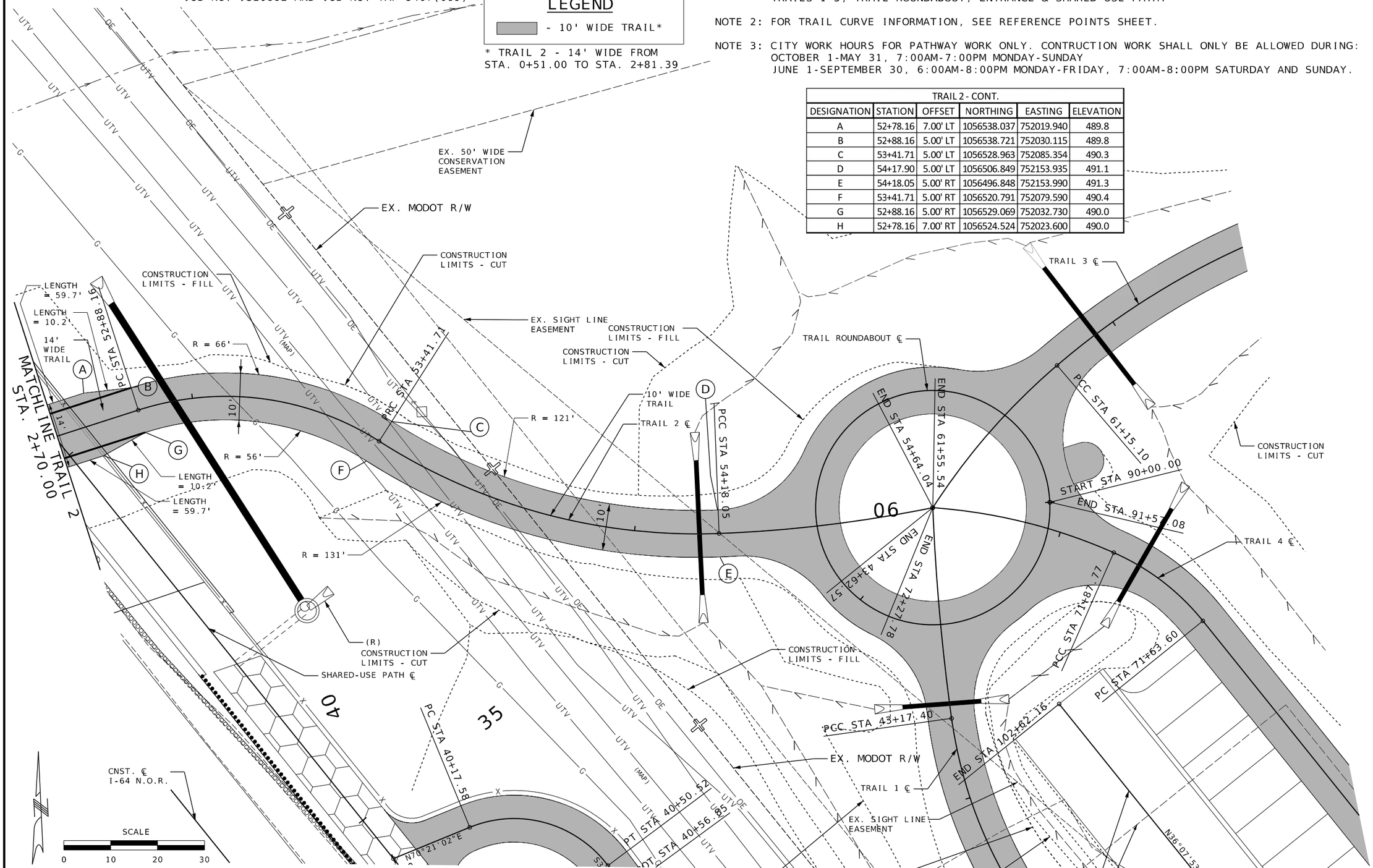

STATE OF MISSOURI
Kevin Thomas Foy O'Shaughnessy
NUMBER PE-2017000345
PROFESSIONAL ENGINEER

THIS SHEET HAS BEEN SIGNED, SEALED AND DATED ELECTRONICALLY

DATE PREPARED	
4/24/2025	
ROUTE: NOR	STATE: MO
DISTRICT: SL	SHEET NO.: 12
COUNTY: ST. CHARLES	
JOB NO.: JSL0112	
CONTRACT ID.	
PROJECT NO.	
BRIDGE NO.	

DATE	DESCRIPTION

MISSOURI HIGHWAYS AND TRANSPORTATION COMMISSION
105 WEST CAPITOL
JEFFERSON CITY, MO 65102
1-888-ASK-MODOT (1-888-275-6636)

CONSTRUCTION DETAILS TRAIL 2

CDG ENGINEERS
One Campbell Plaza St. Louis, Missouri 63139
T. 314 781 7770 F. 314 781 9075
Missouri State Certificate of Authority # 1721

T:\Working\21228 - O'Fallon, MO-Dardenne Greenway Trail\8-CDG Drawings\MicroStation\Civil Files\012_PS_CNST_Plan_JSL0112_I10.dgn 8:10:46 AM 4/24/2025

NOTE 1: SEE CNST SHEETS 9-12, CNST SHEETS 14-16 FOR INFORMATION ON TRAILS 1-2, TRAILS 4-5, TRAIL ROUNDABOUT, ENTRANCE & SHARED-USE PATH.

NOTE 2: FOR TRAIL CURVE INFORMATION, SEE REFERENCE POINTS SHEET.

NOTE 3: CITY WORK HOURS FOR PATHWAY WORK ONLY. CONTRUCTION WORK SHALL ONLY BE ALLOWED DURING:
OCTOBER 1-MAY 31, 7:00AM-7:00PM MONDAY-SUNDAY
JUNE 1-SEPTEMBER 30, 6:00AM-8:00PM MONDAY-FRIDAY,
7:00AM-8:00PM SATURDAY AND SUNDAY.

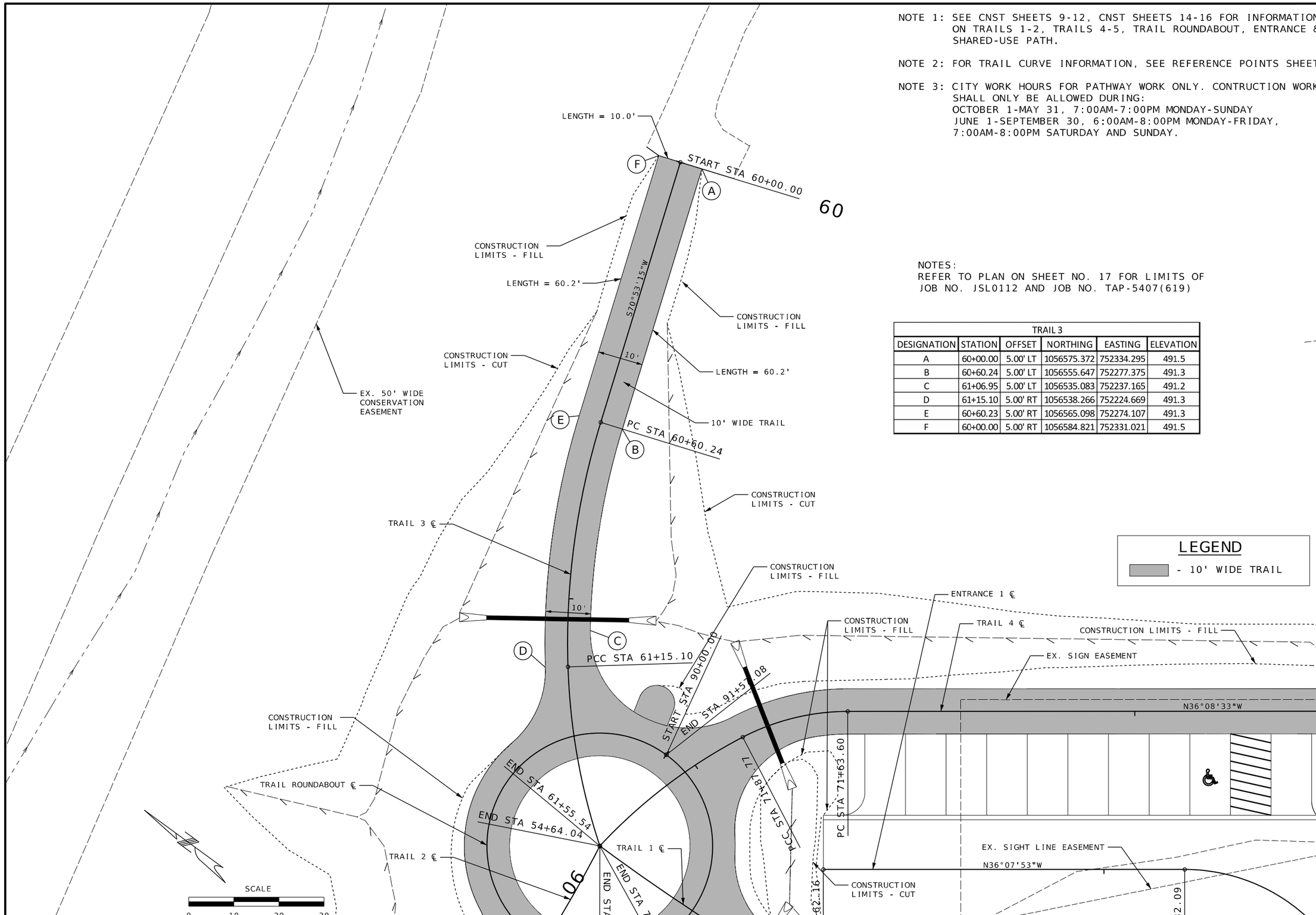

NOTES:
REFER TO PLAN ON SHEET NO. 17 FOR LIMITS OF JOB NO. JSL0112 AND JOB NO. TAP-5407(619)

TRAIL 3					
DESIGNATION	STATION	OFFSET	NORTHING	EASTING	ELEVATION
A	60+00.00	5.00' LT	1056575.372	752334.295	491.5
B	60+60.24	5.00' LT	1056555.647	752277.375	491.3
C	61+06.95	5.00' LT	1056535.083	752237.165	491.2
D	61+15.10	5.00' RT	1056538.266	752224.669	491.3
E	60+60.23	5.00' RT	1056565.098	752274.107	491.3
F	60+00.00	5.00' RT	1056584.821	752331.021	491.5

STATE OF MISSOURI
Kevin Thomas Foy O'Shaughnessy
NUMBER PE-2017000345
PROFESSIONAL ENGINEER

THIS SHEET HAS BEEN SIGNED, SEALED AND DATED ELECTRONICALLY

DATE PREPARED 4/24/2025

ROUTE	STATE
NOR	MO
DISTRICT	SHEET NO.
SL	13

COUNTY: ST. CHARLES
JOB NO.: JSL0112
CONTRACT ID.
PROJECT NO.
BRIDGE NO.

DATE	DESCRIPTION

MISSOURI HIGHWAYS AND TRANSPORTATION COMMISSION
105 WEST CAPITOL
JEFFERSON CITY, MO 65102
1-888-ASK-MODOT (1-888-275-6636)

CONSTRUCTION DETAILS
TRAIL 3

CDG ENGINEERS
One Centurion Plaza
St. Louis, Missouri 63139
T. 314 781 7770
F. 314 781 9075
Missouri State Certificate of Authority #3721

TRAIL 4					
DESIGNATION	STATION	OFFSET	NORTHING	EASTING	ELEVATION
A	70+26.19	5.00' RT	1056370.420	752341.396	492.2
B	71+63.61	5.00' RT	1056481.393	752260.347	491.3
C	71+87.77	5.00' RT	1056498.334	752240.225	491.4
D	71+72.07	5.00' LT	1056481.235	752247.273	491.3
E	71+63.61	5.00' LT	1056475.487	752252.277	491.3
F	71+59.82	5.00' LT	1056472.438	752254.504	491.3
G	70+60.82	5.00' LT	1056392.491	752312.894	491.8
H	70+45.98	17.86' LT	1056372.918	752311.267	492.0
I	70+38.46	5.00' LT	1056374.430	752326.084	492.1
J	70+26.18	5.00' LT	1056364.517	752333.325	492.2
K	70+23.55	9.44' LT	1056359.772	752331.289	492.2
L	70+41.09	9.44' LT	1056373.934	752320.945	492.1

NOTE 1: SEE CNST SHEETS 9-13, CNST SHEETS 15-16 FOR INFORMATION ON TRAILS 1-3, TRAIL 5, TRAIL ROUNDABOUT, ENTRANCE & SHARED-USE PATH.

NOTE 2: FOR TRAIL CURVE INFORMATION, SEE REFERENCE POINTS SHEET.

NOTE 3: CITY WORK HOURS FOR PATHWAY WORK ONLY. CONTRUCTION WORK SHALL ONLY BE ALLOWED DURING:
OCTOBER 1-MAY 31, 7:00AM-7:00PM MONDAY-SUNDAY
JUNE 1-SEPTEMBER 30, 6:00AM-8:00PM MONDAY-FRIDAY,
7:00AM-8:00PM SATURDAY AND SUNDAY.

LEGEND

- 10' WIDE TRAIL

NOTES:
REFER TO PLAN ON SHEET NO. 17 FOR LIMITS OF JOB NO. JSL0112 AND JOB NO. TAP-5407(619)

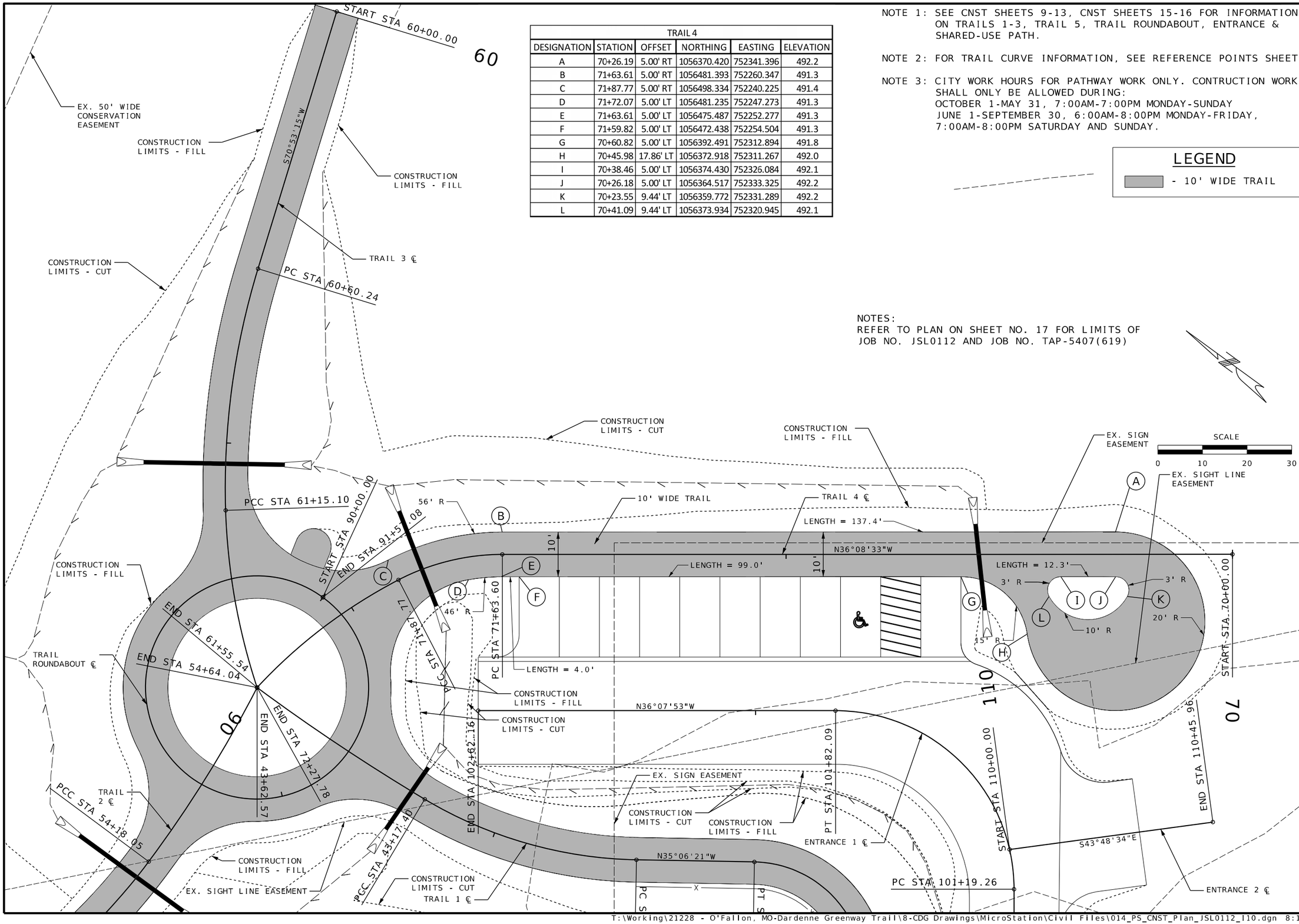

STATE OF MISSOURI
Kevin Thomas Foy O'Shaughnessy
NUMBER PE-2017000345
PROFESSIONAL ENGINEER

THIS SHEET HAS BEEN SIGNED, SEALED AND DATED ELECTRONICALLY

DATE PREPARED	
4/24/2025	
ROUTE NOR	STATE MO
DISTRICT SL	SHEET NO. 14
COUNTY ST. CHARLES	
JOB NO. JSL0112	
CONTRACT ID.	
PROJECT NO.	
BRIDGE NO.	

DATE	DESCRIPTION

MISSOURI HIGHWAYS AND TRANSPORTATION COMMISSION
105 WEST CAPITOL
JEFFERSON CITY, MO 65102
1-888-ASK-MODOT (1-888-275-6636)

CONSTRUCTION DETAILS
TRAIL 4

CDG ENGINEERS
One Cambridge Plaza T. 314 781 7770
St. Louis, Missouri 63139 F. 314 781 9075
Missouri State Certificate of Authority #3721

T:\Working\21228 - O'Fallon, MO-Dardenne Greenway Trail\8-CDG Drawings\MicroStation\Civil Files\014_PS_CNST_Plan_JSL0112_I10.dgn 8:10:54 AM 4/24/2025

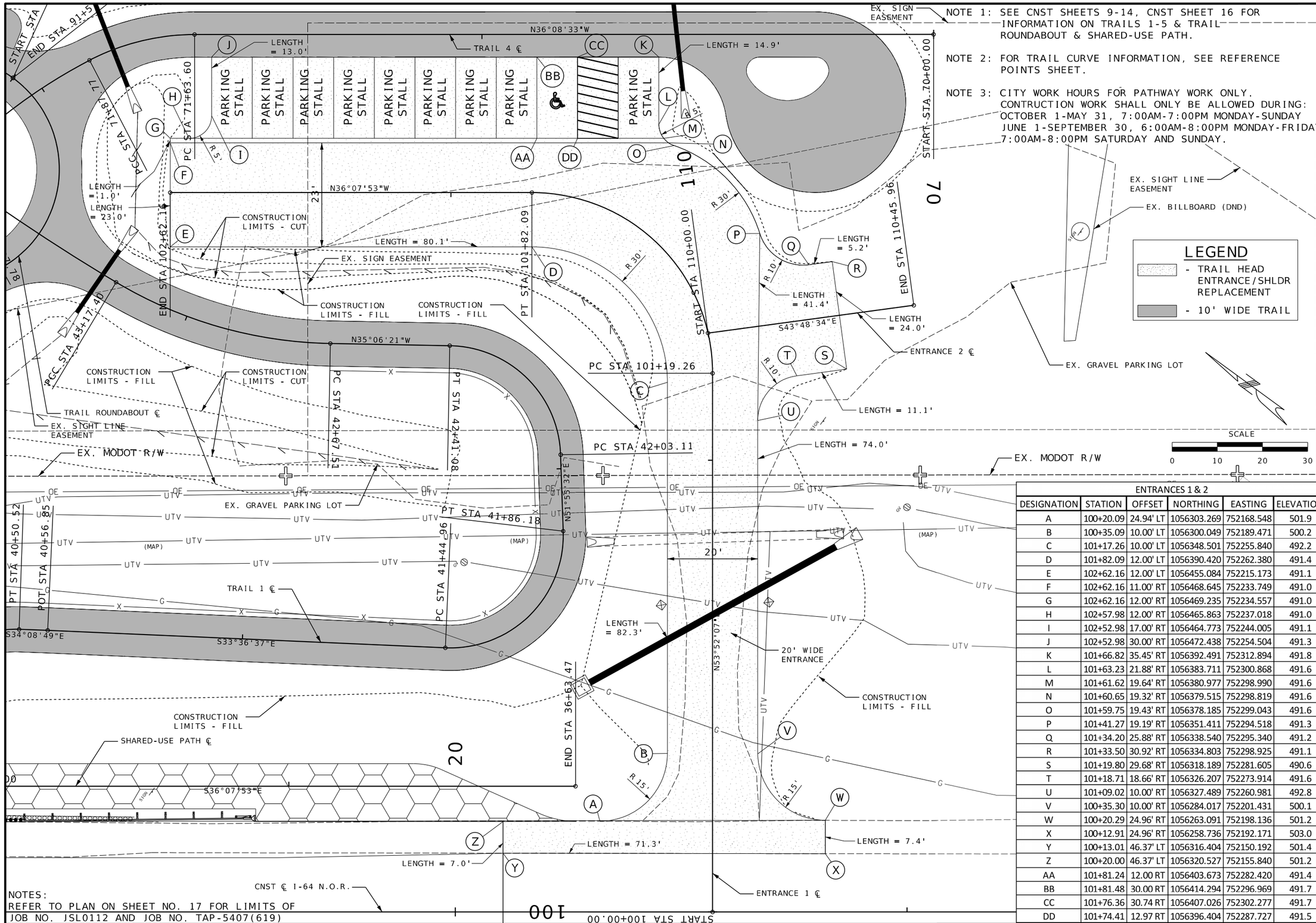

NOTE 1: SEE CNST SHEETS 9-14, CNST SHEET 16 FOR INFORMATION ON TRAILS 1-5 & TRAIL ROUNDABOUT & SHARED-USE PATH.

NOTE 2: FOR TRAIL CURVE INFORMATION, SEE REFERENCE POINTS SHEET.

NOTE 3: CITY WORK HOURS FOR PATHWAY WORK ONLY. CONTRUCTION WORK SHALL ONLY BE ALLOWED DURING: OCTOBER 1-MAY 31, 7:00AM-7:00PM MONDAY-SUNDAY JUNE 1-SEPTEMBER 30, 6:00AM-8:00PM MONDAY-FRIDAY, 7:00AM-8:00PM SATURDAY AND SUNDAY.

LEGEND

- TRAIL HEAD ENTRANCE/SHLDR REPLACEMENT
- 10' WIDE TRAIL

NOTES:
REFER TO PLAN ON SHEET NO. 17 FOR LIMITS OF JOB NO. JSL0112 AND JOB NO. TAP-5407(619)

ENTRANCES 1 & 2

DESIGNATION	STATION	OFFSET	NORTHING	EASTING	ELEVATION
A	100+20.09	24.94' LT	1056303.269	752168.548	501.9
B	100+35.09	10.00' LT	1056300.049	752189.471	500.2
C	101+17.26	10.00' LT	1056348.501	752255.840	492.2
D	101+82.09	12.00' LT	1056390.420	752262.380	491.4
E	102+62.16	12.00' LT	1056455.084	752215.173	491.1
F	102+62.16	11.00' RT	1056468.645	752233.749	491.0
G	102+62.16	12.00' RT	1056469.235	752234.557	491.0
H	102+57.98	12.00' RT	1056465.863	752237.018	491.0
I	102+52.98	17.00' RT	1056464.773	752244.005	491.1
J	102+52.98	30.00' RT	1056472.438	752254.504	491.3
K	101+66.82	35.45' RT	1056392.491	752312.894	491.8
L	101+63.23	21.88' RT	1056383.711	752300.868	491.6
M	101+61.62	19.64' RT	1056380.977	752298.990	491.6
N	101+60.65	19.32' RT	1056379.515	752298.819	491.6
O	101+59.75	19.43' RT	1056378.185	752299.043	491.6
P	101+41.27	19.19' RT	1056351.411	752294.518	491.3
Q	101+34.20	25.88' RT	1056338.540	752295.340	491.2
R	101+33.50	30.92' RT	1056334.803	752298.925	491.1
S	101+19.80	29.68' RT	1056318.189	752281.605	490.6
T	101+18.71	18.66' RT	1056326.207	752273.914	491.6
U	101+09.02	10.00' RT	1056327.489	752260.981	492.8
V	100+35.30	10.00' RT	1056284.017	752201.431	500.1
W	100+20.29	24.96' RT	1056263.091	752198.136	501.2
X	100+12.91	24.96' RT	1056258.736	752192.171	503.0
Y	100+13.01	46.37' LT	1056316.404	752150.192	501.4
Z	100+20.00	46.37' LT	1056320.527	752155.840	501.2
AA	101+81.24	12.00 RT	1056403.673	752282.420	491.4
BB	101+81.48	30.00 RT	1056414.294	752296.969	491.7
CC	101+76.36	30.74 RT	1056407.026	752302.277	491.7
DD	101+74.41	12.97 RT	1056396.404	752287.727	491.5

STATE OF MISSOURI
Kevin Thomas Foy O'Shaughnessy
NUMBER PE-2017000345
PROFESSIONAL ENGINEER

THIS SHEET HAS BEEN SIGNED, SEALED AND DATED ELECTRONICALLY

DATE PREPARED	
4/24/2025	
ROUTE	STATE
NOR	MO
DISTRICT	SHEET NO.
SL	15
COUNTY	
ST. CHARLES	
JOB NO.	
JSL0112	
CONTRACT ID.	
PROJECT NO.	
BRIDGE NO.	

DATE	DESCRIPTION

MISSOURI HIGHWAYS AND TRANSPORTATION COMMISSION
105 WEST CAPITOL
JEFFERSON CITY, MO 65102
1-888-ASK-MODOT (1-888-275-6636)

CONSTRUCTION DETAILS ENTRANCE 1 & 2

CDG ENGINEERS
One Campbell Plaza T. 314 786 7770
St. Louis, Missouri 63139 F. 314 786 9075
Missouri State Certificate of Authority #1721

T:\Working\21228 - O'Fallon, MO-Dardenne Greenway Trail\8-CDG Drawings\MicroStation\Civil Files\015_PS_CNST_Plan_JSL0112_I10.dgn 8:10:59 AM 4/24/2025

ROUNDABOUT					
DESIGNATION	STATION	OFFSET	NORTHING	EASTING	ELEVATION
A	90+77.66	20.94' RT	1056506.849	752153.935	491.1
B	90+67.06	5.00' RT	1056518.538	752172.959	491.4
C	90+33.38	5.00' RT	1056534.408	752206.854	491.4
D	90+23.16	16.31' RT	1056538.266	752224.669	491.3
E	90+16.87	22.78' RT	1056535.083	752237.165	491.2
F	90+09.55	5.65' RT	1056516.662	752228.287	491.4
G	90+09.21	9.23' RT	1056517.560	752231.790	491.3
H	90+03.35	9.23' RT	1056509.811	752233.777	491.4
I	90+06.28	5.00' RT	1056512.691	752228.909	491.4
J	90+05.93	5.00' RT	1056512.282	752229.011	491.4
K	90+02.99	5.52' RT	1056508.880	752230.148	491.4
L	91+52.87	15+82' RT	1056498.398	752240.097	491.4
M	91+52.85	15.96' RT	1056498.334	752240.225	491.4
N	91+47.69	40.03' RT	1056481.389	752260.349	491.3
O	91+44.21	35.09' RT	1056475.653	752252.156	491.3
P	91+45.37	28.15' RT	1056481.237	752247.272	491.3
Q	91+35.27	5.00' RT	1056482.259	752219.137	491.4
R	91+32.24	5.00' RT	1056480.095	752216.217	491.4
S	91+21.65	20.21' RT	1056460.555	752206.763	491.1
T	91+16.14	20.67' RT	1056459.666	752196.803	491.1
U	91+15.92	18.20' RT	1056462.160	752196.579	491.2
V	91+05.45	5.00' RT	1056478.827	752185.619	491.4
W	90+93.90	5.00' RT	1056487.947	752175.334	491.4
X	90+83.49	17.63' RT	1056496.843	752158.050	491.3
Y	90+83.06	21.62' RT	1056496.848	752153.990	491.3
Z	90+81.55	5.00' LT	1056502.837	752179.994	491.6
AA	90+21.98	5.00' LT	1056520.641	752212.607	491.6
BB	91+51.97	5.00' LT	1056501.180	752219.434	491.6
CC	91+18.19	5.00' LT	1056485.240	752200.155	491.6

NOTE 1: SEE CNST SHEETS 9-15, FOR INFORMATION ON TRAILS 1-5, ENTRANCE & SHARED-USE PATH.

NOTE 2: FOR TRAIL CURVE INFORMATION, SEE REFERENCE POINTS SHEET.

NOTE 3: CITY WORK HOURS FOR PATHWAY WORK ONLY. CONTRUCTION WORK SHALL ONLY BE ALLOWED DURING: OCTOBER 1-MAY 31, 7:00AM-7:00PM MONDAY-SUNDAY JUNE 1-SEPTEMBER 30, 6:00AM-8:00PM MONDAY-FRIDAY, 7:00AM-8:00PM SATURDAY AND SUNDAY.

LEGEND

- 10' WIDE TRAIL

NOTES:
REFER TO PLAN ON SHEET NO. 17 FOR LIMITS OF JOB NO. JSL0112 AND JOB NO. TAP-5407(619)

SCALE 0 10 20 30

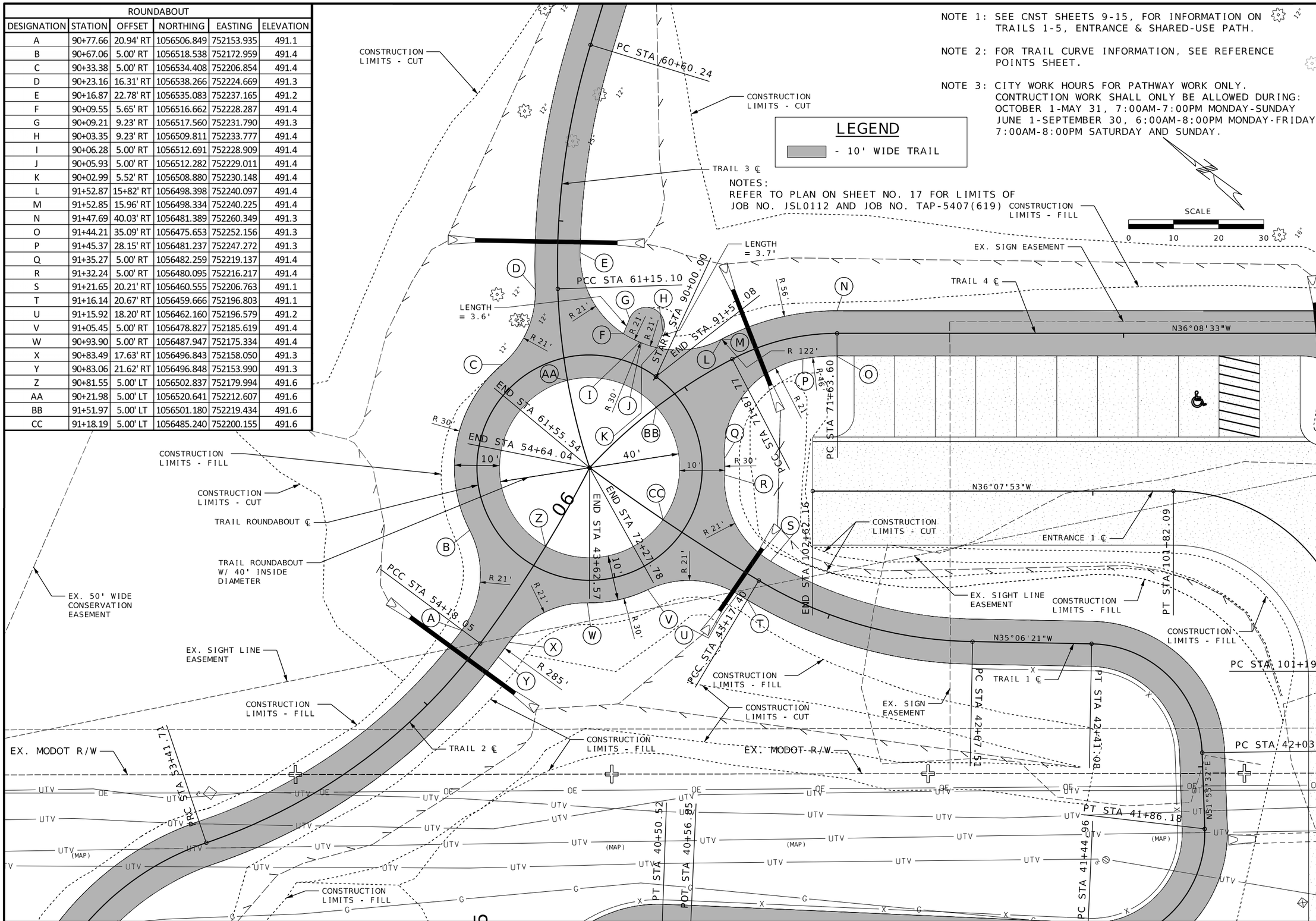

STATE OF MISSOURI
Kevin Thomas Foy O'Shaughnessy
NUMBER PE-2017000345
PROFESSIONAL ENGINEER

THIS SHEET HAS BEEN SIGNED, SEALED AND DATED ELECTRONICALLY

DATE PREPARED	
4/24/2025	
ROUTE	STATE
NOR	MO
DISTRICT	SHEET NO.
SL	16
COUNTY	
ST. CHARLES	
JOB NO.	
JSL0112	
CONTRACT ID.	
PROJECT NO.	
BRIDGE NO.	

DATE	DESCRIPTION

MISSOURI HIGHWAYS AND TRANSPORTATION COMMISSION
105 WEST CAPITOL
JEFFERSON CITY, MO 65102
1-888-ASK-MODOT (1-888-275-6636)

CONSTRUCTION DETAILS
ROUNDABOUT

CDG ENGINEERS
One Campbell Plaza
St. Louis, Missouri 63139
T. 314 781 7770
F. 314 781 9075
Missouri State Certificate of Authority # 1721

T:\Working\21228 - O'Fallon, MO-Dardenne Greenway Trail\8-CDG Drawings\MicroStation\Civil Files\016_PS_CNST_Plan_JSL0112_I10.dgn 8:11:09 AM 4/24/2025

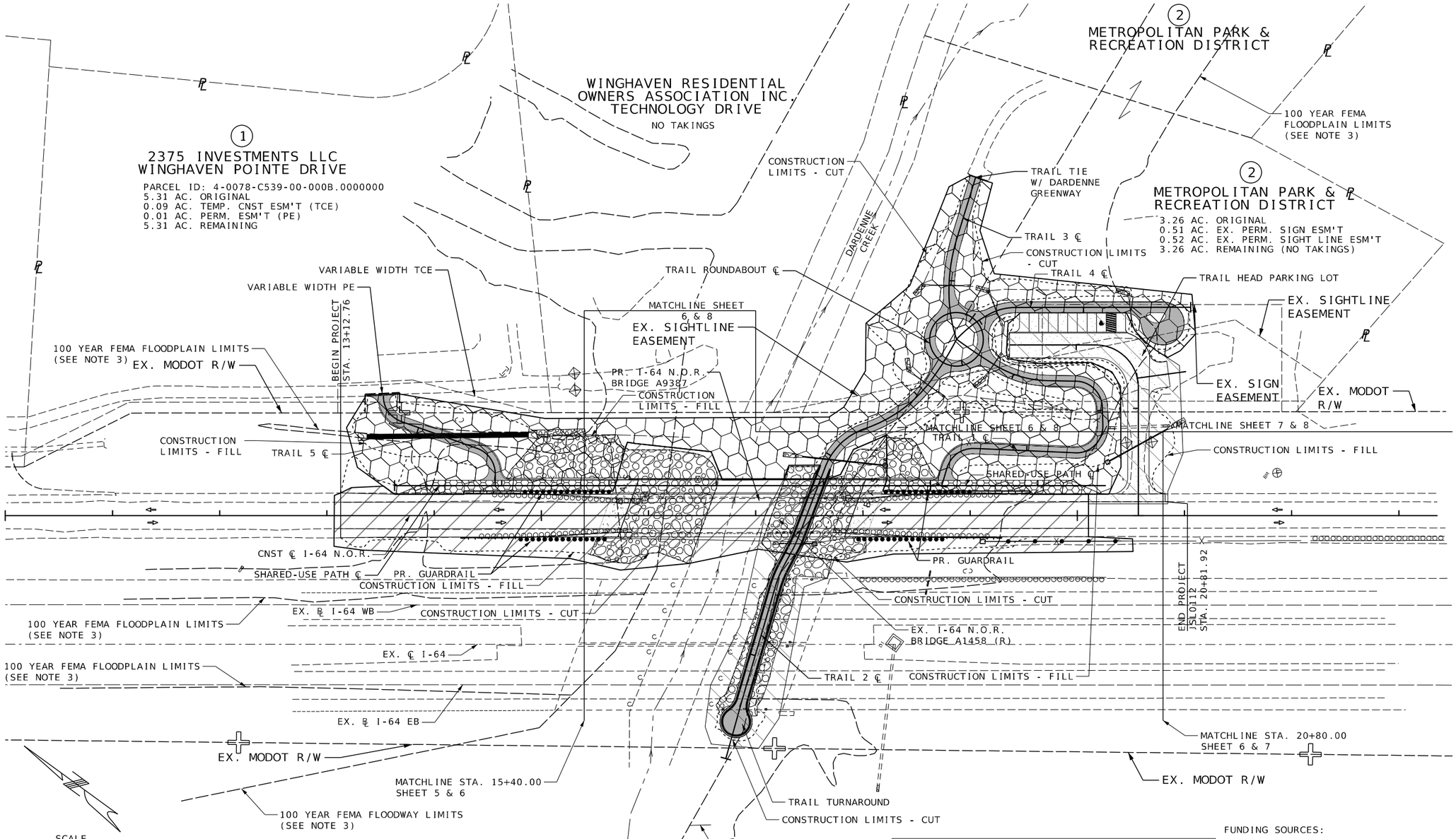

SCALE

0 50 100 150

NOTE:
REFER TO PLAN ON SHEET NO. 16 FOR LIMITS OF JOB NO. JSL0112 AND JOB NO. TAP-5407(619)

NOTE 1: FOR MORE DETAILED INFORMATION, SEE PLAN SHEETS.

NOTE 2: FOR TRAIL STATIONING AND ALIGNMENT INFORMATION, SEE PLAN SHEETS.

NOTE 3: FEMA F.I.R.M. PANEL NO. 29183C0430G, EFFECTIVE 1/20/2016.

NOTE 4: CITY WORK HOURS FOR PATHWAY WORK ONLY. CONSTRUCTION WORK SHALL ONLY BE ALLOWED DURING:
OCTOBER 1-MAY 31, 7:00AM-7:00PM MONDAY-SUNDAY
JUNE 1-SEPTEMBER 30, 6:00AM-8:00PM MONDAY-FRIDAY, 7:00AM-8:00PM SATURDAY AND SUNDAY.

NOTE 5: THIS PLAN IS FOR INFORMATION ONLY. NOT FOR CONTRACTOR USE.

LEGEND

- 10' WIDE TRAIL*
- BRIDGE APPROACH SLAB (B.A.S.)
- TRAIL HEAD ENTRANCE
- SHARED-USE PATH (VAR. WIDTH)
- MoDOT SL0112 FUNDED
- TAP 5407(619) FUNDED
- 100% CITY OF O'FALLON FUNDED

* TRAIL 2 - 14' WIDE FROM STA. 50+57.90 TO STA. 52+78.16

FUNDING SOURCES:

MoDOT SL0112:
- BRIDGE ITEMS
- TYPE 2 ROCK BLANKET
- PAVEMENT
- TRAFFIC CONTROL

TAP 5407(619):
- TRAILS 1, 3, 4, 5
- TRAIL 2 (STA. 2+90 TO STA. 4+64.04)
- ROUNDABOUT

CITY:
- TRAIL 2 (STA. 0+00 TO STA. 2+90)
- TRAIL AMENITIES, SIGNAGE, & PLANTINGS
- TYPE 2 ROCK BLANKET
- ENTRANCE
- PARKING LOT

STATE OF MISSOURI
Kevin Thomas Foy O'Shaughnessy
NUMBER PE-2017000345
PROFESSIONAL ENGINEER

THIS SHEET HAS BEEN SIGNED, SEALED AND DATED ELECTRONICALLY

DATE PREPARED	
4/24/2025	
ROUTE	STATE
NOR	MO
DISTRICT	SHEET NO.
SL	17
COUNTY	
ST. CHARLES	
JOB NO.	
JSL0112	
CONTRACT ID.	
PROJECT NO.	
BRIDGE NO.	

DATE	DESCRIPTION

MISSOURI HIGHWAYS AND TRANSPORTATION COMMISSION
105 WEST CAPITOL
JEFFERSON CITY, MO 65102
1-888-ASK-MODOT (1-888-275-6636)

PROJECT FUNDING PLAN OVERVIEW

CDG ENGINEERS
One Campus Office Place
St. Louis, Missouri 63129
T. 314 781 7770
F. 314 781 9075
Missouri State Certificate of Authority # 1721

T:\Working\21228 - O'Fallon, MO-Dardenne Greenway Trail\8-CDG Drawings\MicroStation\Civil Files\017_PS_Overview_JSL0112_I50.dgn 8:11:20 AM 4/24/2025

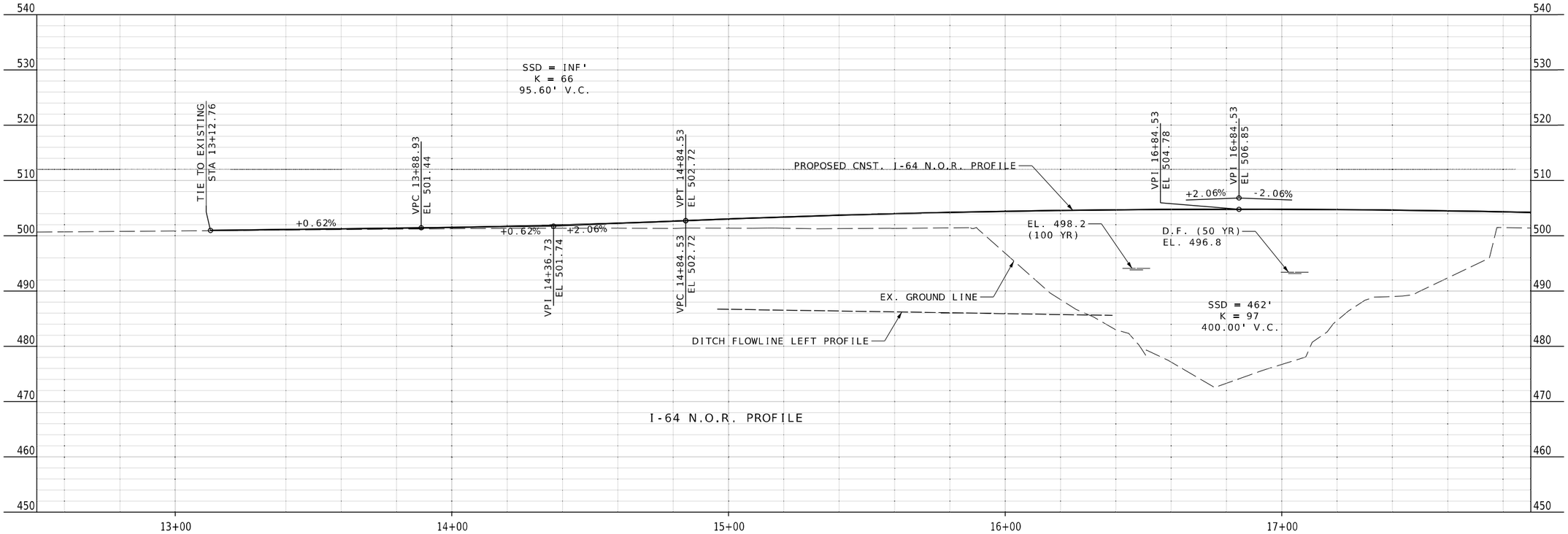

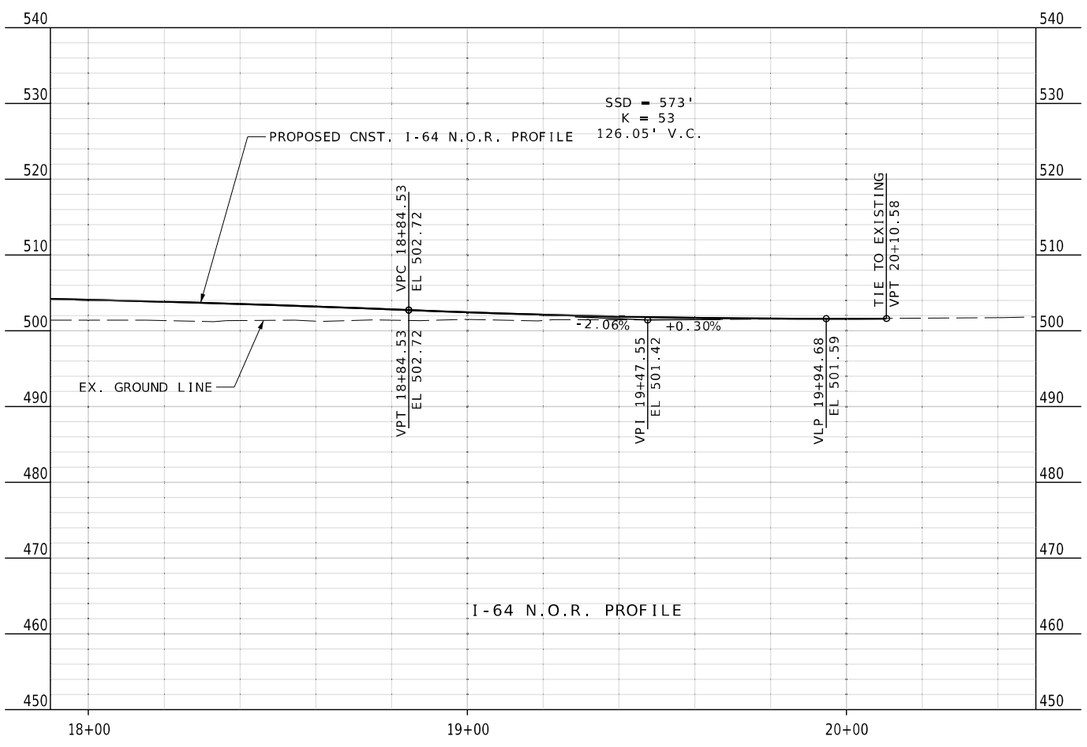

NOTES:
REFER TO PLAN ON SHEET NO. 17 FOR LIMITS OF JOB NO. JSL0112 AND JOB NO. TAP-5407(619)

STATE OF MISSOURI
Kevin Thomas Foy O'Shaughnessy
NUMBER PE-2017000345
PROFESSIONAL ENGINEER

THIS SHEET HAS BEEN SIGNED, SEALED AND DATED ELECTRONICALLY

DATE PREPARED	
4/24/2025	
ROUTE	STATE
NOR	MO
DISTRICT	SHEET NO.
SL	18
COUNTY	
ST. CHARLES	
JOB NO.	
JSL0112	
CONTRACT ID.	
PROJECT NO.	
BRIDGE NO.	

DESCRIPTION	DATE

MISSOURI HIGHWAYS AND TRANSPORTATION COMMISSION
105 WEST CAPITOL
JEFFERSON CITY, MO 65102
1-888-ASK-MODOT (1-888-275-6636)

PROFILE
I-64 N.O.R.

CDG ENGINEERS
One Campbell Plaza
St. Louis, Missouri 63139
T. 314 781 7770
F. 314 781 9075
Missouri State Certificate of Authority # 1721

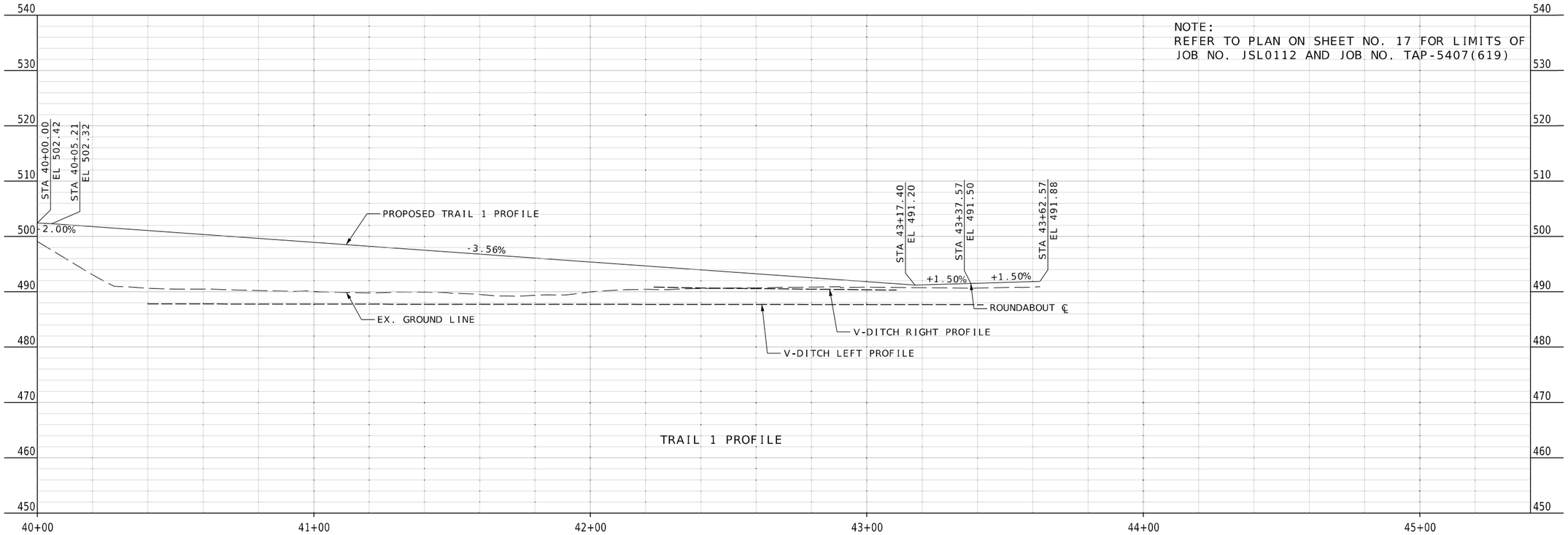

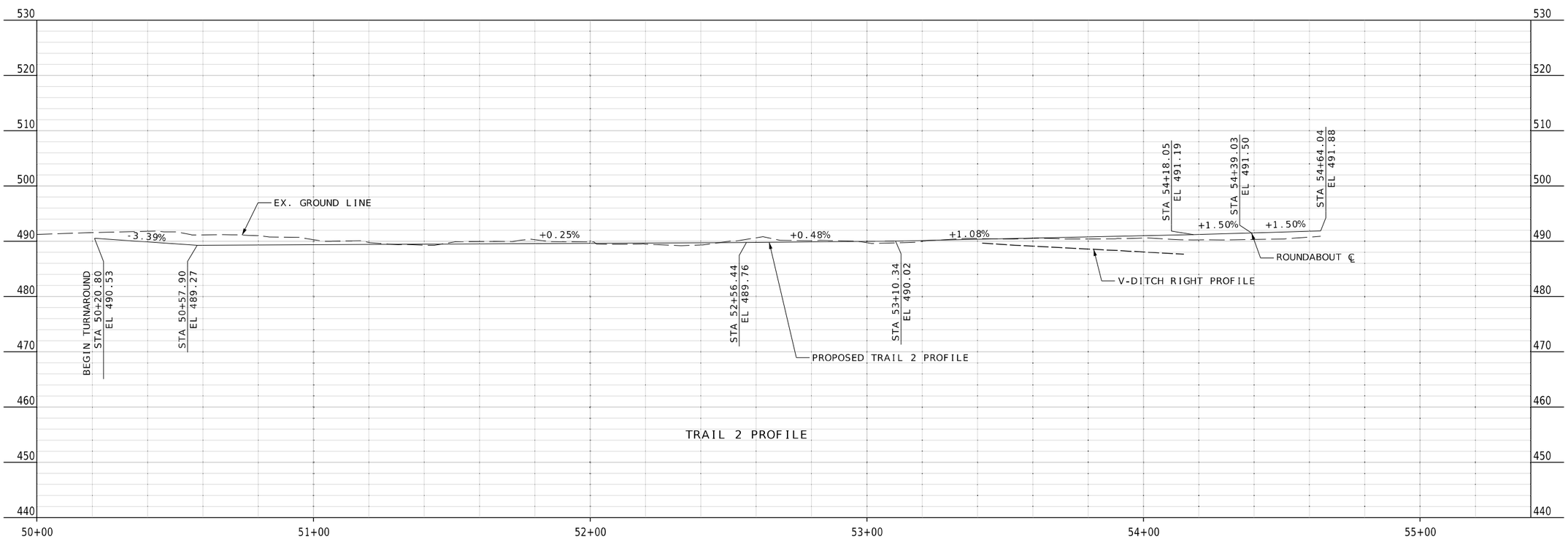

STATE OF MISSOURI
Kevin Thomas Foy O'Shaughnessy
NUMBER PE-2017000345
PROFESSIONAL ENGINEER

THIS SHEET HAS BEEN SIGNED, SEALED AND DATED ELECTRONICALLY

DATE PREPARED	
4/24/2025	
ROUTE	STATE
NOR	MO
DISTRICT	SHEET NO.
SL	19
COUNTY	
ST. CHARLES	
JOB NO.	
JSL0112	
CONTRACT ID.	
PROJECT NO.	
BRIDGE NO.	

DESCRIPTION	DATE

MISSOURI HIGHWAYS AND TRANSPORTATION COMMISSION

105 WEST CAPITOL
JEFFERSON CITY, MO 65102
1-888-ASK-MODOT (1-888-275-6636)

PROFILE
TRAILS 1 & 2

CDG ENGINEERS
One Campbell Plaza
St. Louis, Missouri 63139
T. 314 781 7770
F. 314 781 9075
Missouri State Certificate of Authority # 1721

T:\Working\21228 - O'Fallon, MO-Dardenne Greenway Trail\8-CDG Drawings\MicroStation\Civil Files\019_PR_Trail_1_2_JSL0112_I20.dgn 8:11:23 AM 4/24/2025

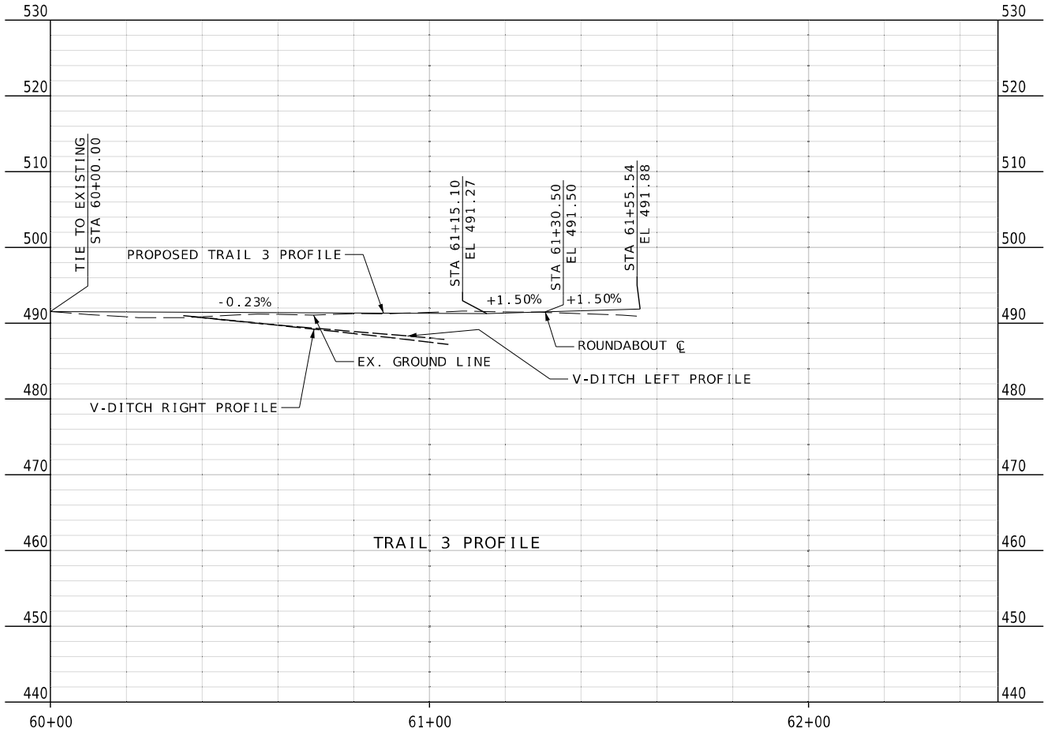

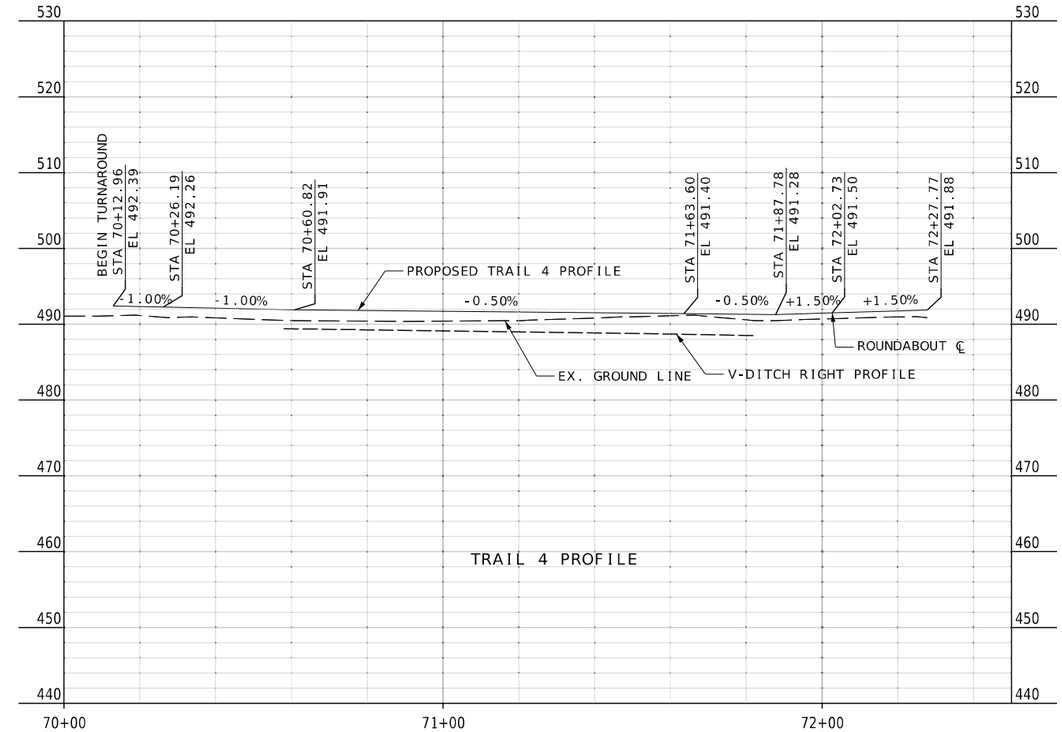

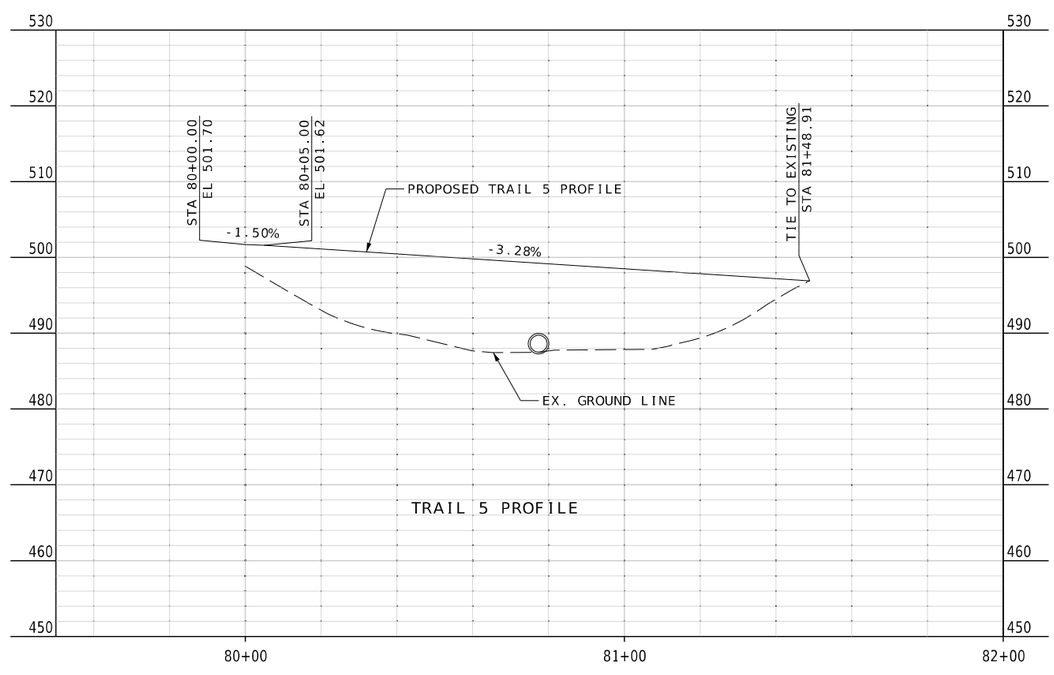

NOTE:
REFER TO PLAN ON SHEET NO. 17 FOR LIMITS OF JOB NO. JSL0112 AND JOB NO. TAP-5407(619)

STATE OF MISSOURI
Kevin Thomas Foy O'Shaughnessy
NUMBER PE-2017000345
PROFESSIONAL ENGINEER

THIS SHEET HAS BEEN SIGNED, SEALED AND DATED ELECTRONICALLY

DATE PREPARED
4/24/2025

ROUTE	STATE
NOR	MO
DISTRICT	SHEET NO.
SL	20

COUNTY
ST. CHARLES

JOB NO.
JSL0112

CONTRACT ID.

PROJECT NO.

BRIDGE NO.

DESCRIPTION	DATE

MISSOURI HIGHWAYS AND TRANSPORTATION COMMISSION
105 WEST CAPITOL
JEFFERSON CITY, MO 65102
1-888-ASK-MODOT (1-888-275-6636)

PROFILE
TRAILS 3,4 & 5

CDG ENGINEERS
One Campbell Plaza
St. Louis, Missouri 63139
T. 314 781 7770
F. 314 781 9075
Missouri State Certificate of Authority # 1721

T:\Working\21228 - O'Fallon, MO-Dardenne Greenway Trail\8-CDG Drawings\MicroStation\Civil Files\020_PR_Trails_3_4_5_JSL0112_I20.dgn 8:11:25 AM 4/24/2025

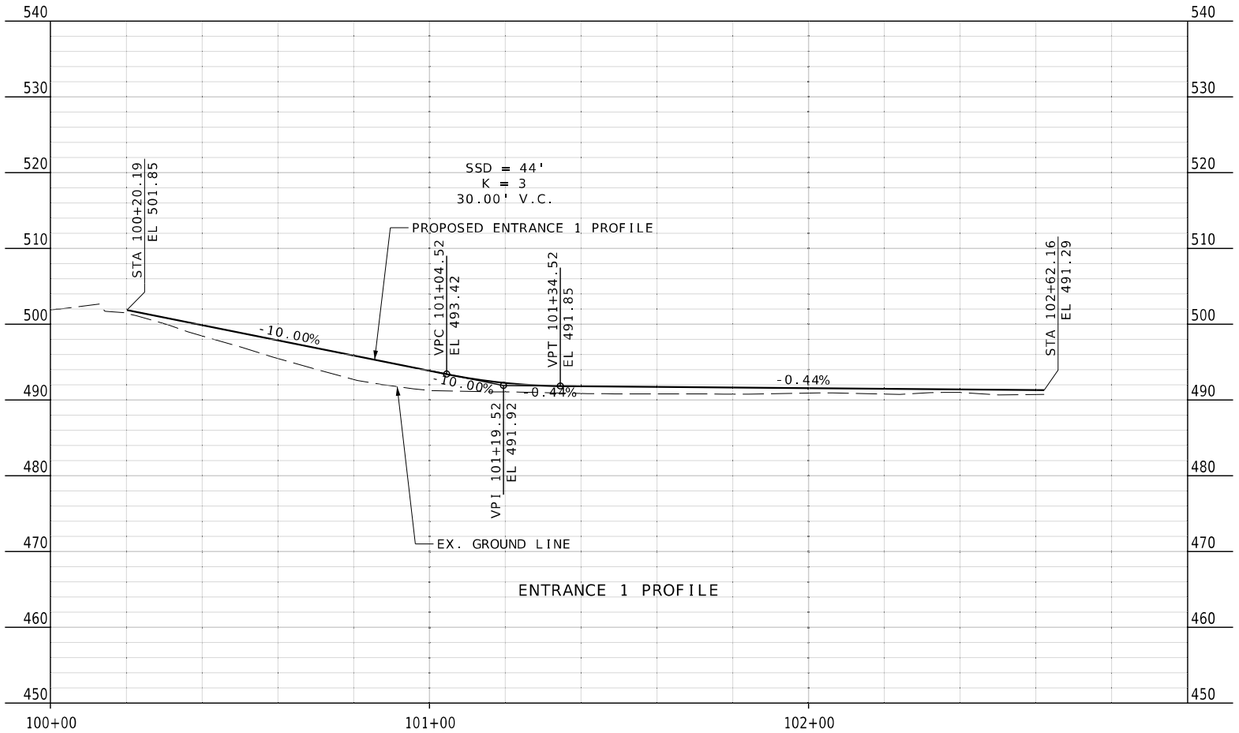

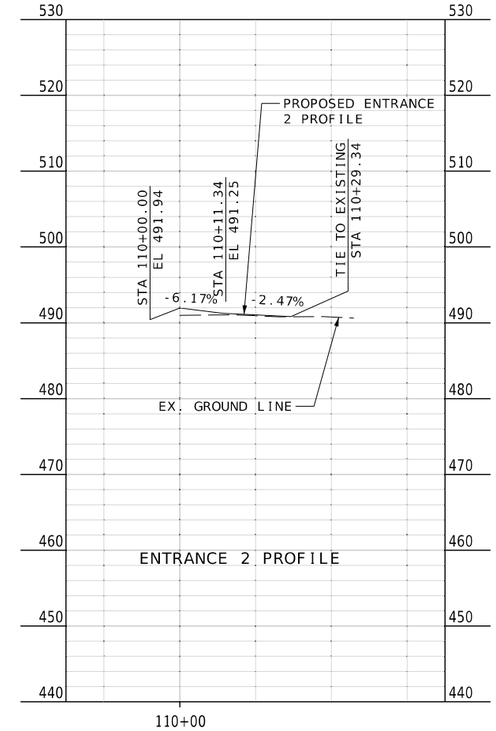

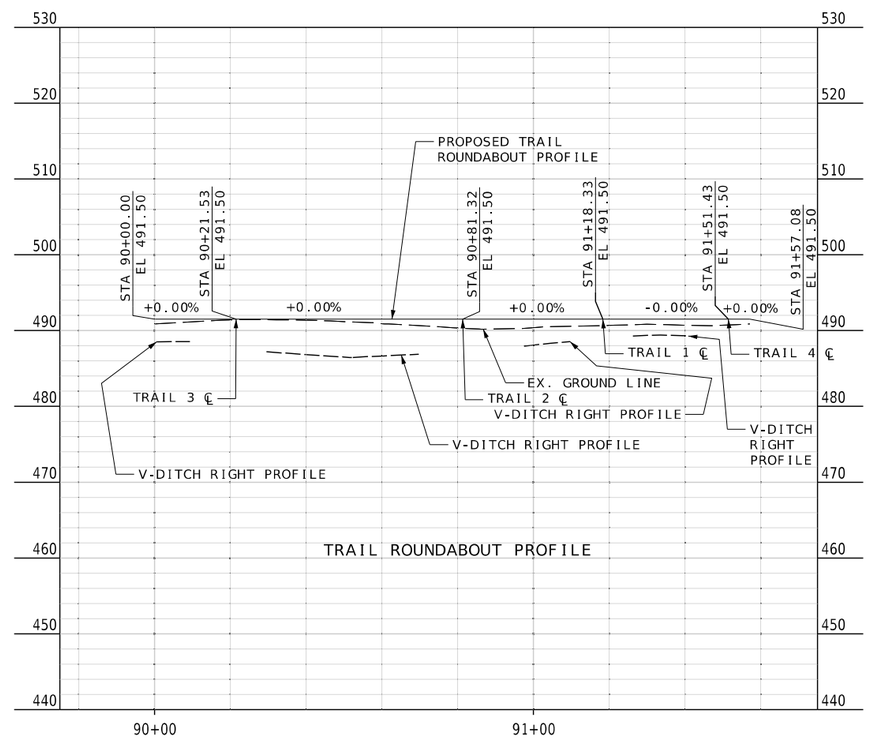

NOTE:
REFER TO PLAN ON SHEET NO. 17 FOR LIMITS OF
JOB NO. JSL0112 AND JOB NO. TAP-5407(619)

STATE OF MISSOURI
Kevin Thomas Foy O'Shaughnessy
NUMBER PE-2017000345
PROFESSIONAL ENGINEER

THIS SHEET HAS BEEN SIGNED, SEALED AND DATED ELECTRONICALLY

DATE PREPARED
4/24/2025

ROUTE	STATE
NOR	MO
DISTRICT	SHEET NO.
SL	21

COUNTY
ST. CHARLES

JOB NO.
JSL0112

CONTRACT ID.

PROJECT NO.

BRIDGE NO.

DATE	DESCRIPTION

MISSOURI HIGHWAYS AND TRANSPORTATION COMMISSION

105 WEST CAPITOL
JEFFERSON CITY, MO 65102
1-888-ASK-MODOT (1-888-275-6636)

PROFILE
ENTRANCE 1 & 2,
ROUNDABOUT

CDG ENGINEERS
One Campus Office
St. Louis, Missouri 63139
Missouri State Certificate of Authority # 1721
T. 314 781 7770
F. 314 781 9075

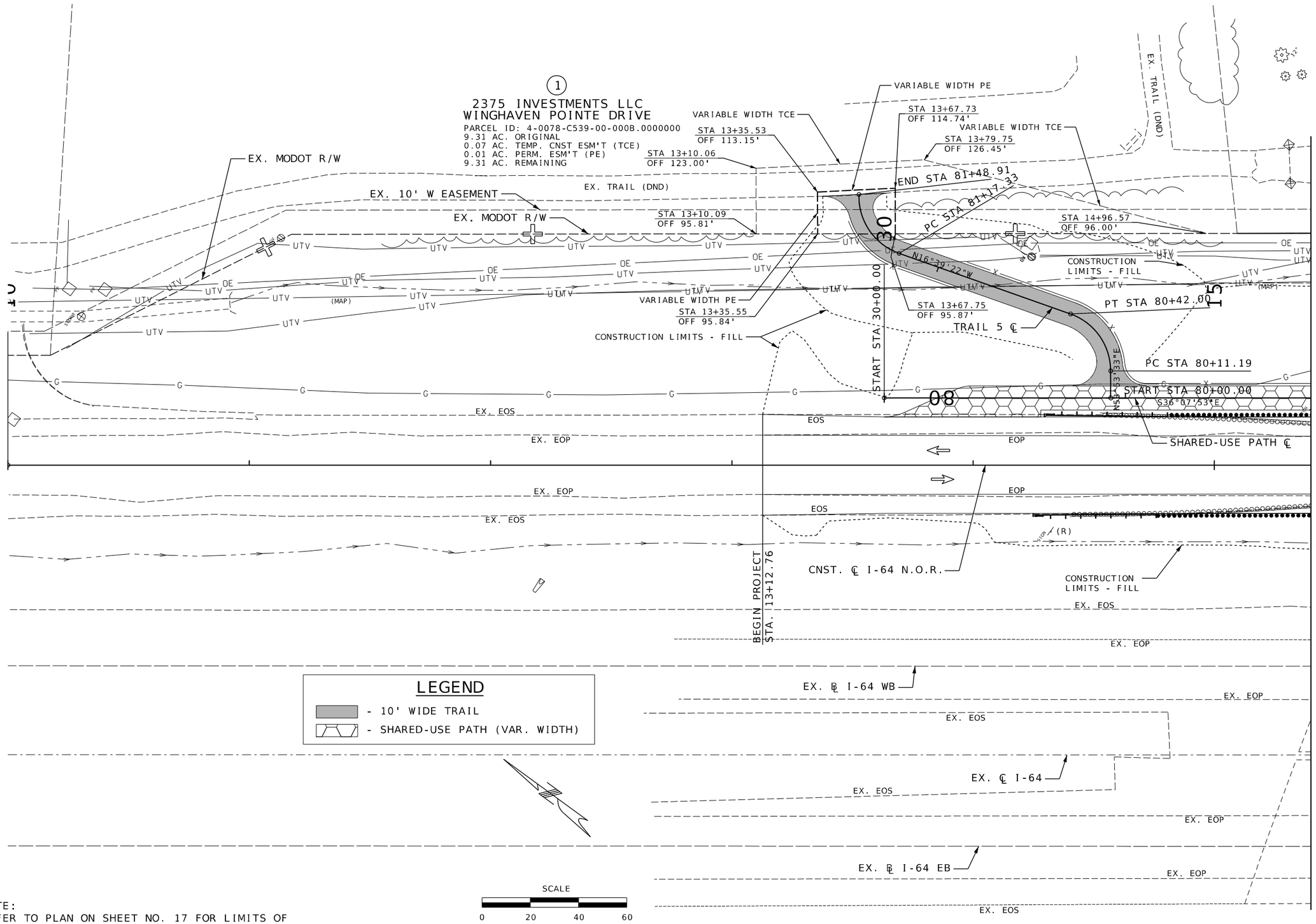

NOTE:
REFER TO PLAN ON SHEET NO. 17 FOR LIMITS OF
JOB NO. JSL0112 AND JOB NO. TAP-5407(619)

STATE OF MISSOURI
Kevin Thomas Foy O'Shaughnessy
NUMBER PE-2017000345
PROFESSIONAL ENGINEER

THIS SHEET HAS BEEN SIGNED, SEALED AND DATED ELECTRONICALLY

DATE PREPARED	
4/24/2025	
ROUTE	STATE
NOR	MO
DISTRICT	SHEET NO.
SL	22
COUNTY	
ST. CHARLES	
JOB NO.	
JSL0112	
CONTRACT ID.	
PROJECT NO.	
BRIDGE NO.	

DATE	DESCRIPTION

MISSOURI HIGHWAYS AND TRANSPORTATION COMMISSION
105 WEST CAPITOL
JEFFERSON CITY, MO 65102
1-888-ASK-MODOT (1-888-275-6636)

RIGHT-OF-WAY
PLAN SHEET

CDG ENGINEERS
One Campbell Plaza
St. Louis, Missouri 63139
T. 314 781 7770
F. 314 781 9075
Missouri State Certificate of Authority # 1721

T:\Working\21228 - O'Fallon, MO-Dardenne Greenway Trail\8-CDG Drawings\MicroStation\Civil Files\022_RW_1of4_JSL0112_I20.dgn 8:11:31 AM 4/24/2025

LEGEND

- 10' WIDE TRAIL*
- BRIDGE APPROACH SLAB (B.A.S.)
- TRAIL HEAD ENTRANCE
- SHARED-USE PATH (VAR. WIDTH)

* TRAIL 2 - 14' WIDE FROM STA. 0+51.00 TO STA. 2+81.39

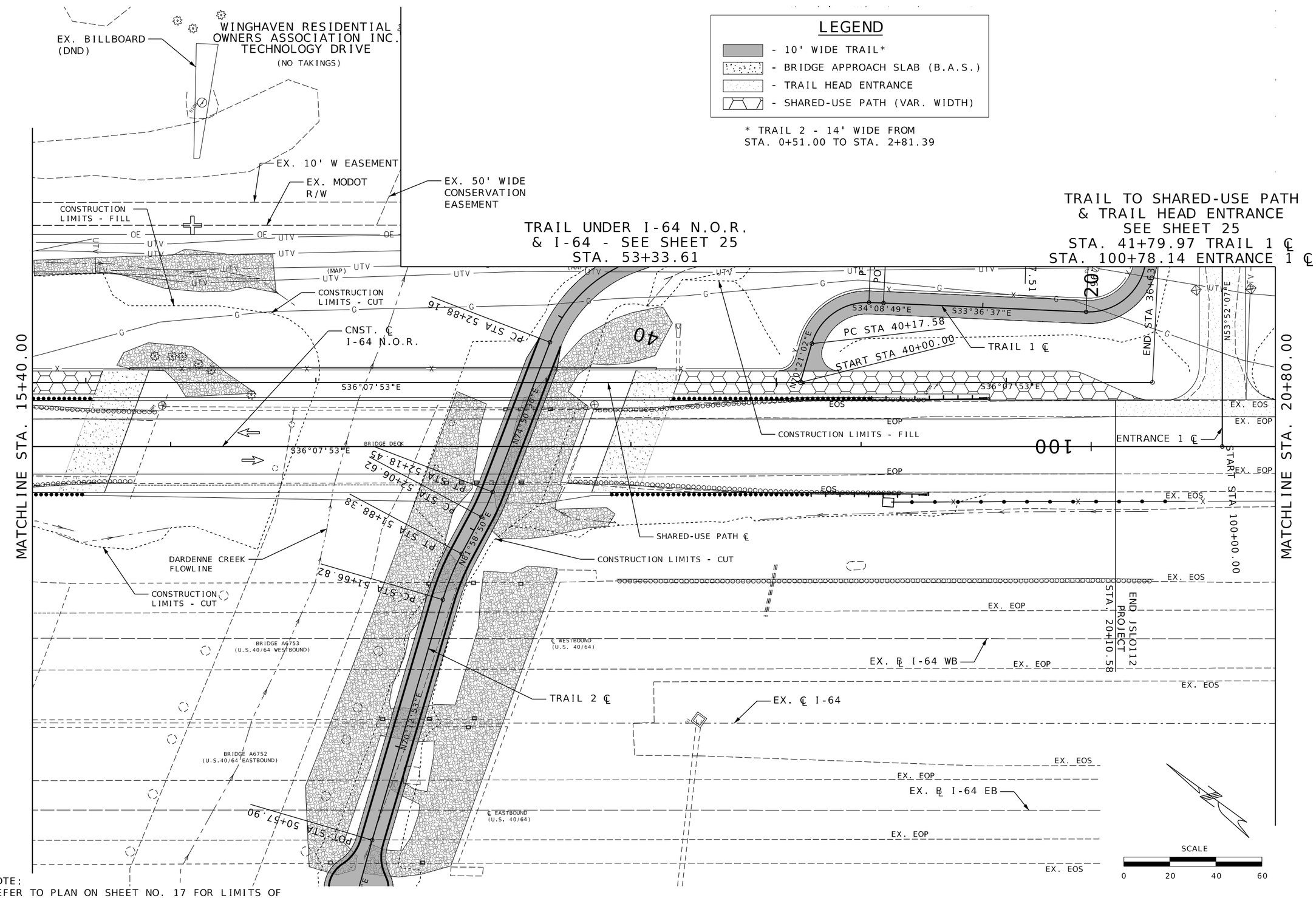

NOTE:
REFER TO PLAN ON SHEET NO. 17 FOR LIMITS OF JOB NO. JSL0112 AND JOB NO. TAP-5407(619)

STATE OF MISSOURI
Kevin Thomas Foy O'Shaughnessy
NUMBER PE-2017000345
PROFESSIONAL ENGINEER

THIS SHEET HAS BEEN SIGNED, SEALED AND DATED ELECTRONICALLY

DATE PREPARED	
4/24/2025	
ROUTE	STATE
NOR	MO
DISTRICT	SHEET NO.
SL	23
COUNTY	
ST. CHARLES	
JOB NO.	
JSL0112	
CONTRACT ID.	
PROJECT NO.	
BRIDGE NO.	

DATE	DESCRIPTION

MISSOURI HIGHWAYS AND TRANSPORTATION COMMISSION
105 WEST CAPITOL
JEFFERSON CITY, MO 65102
1-888-ASK-MODOT (1-888-275-6636)

RIGHT-OF-WAY PLAN SHEET

CDG ENGINEERS
One Compass Point
St. Louis, Missouri 63139
T. 314 781 7770
F. 314 781 9075
Missouri State Certificate of Authority # 1721

T:\Working\21228 - O'Fallon, MO-Dardenne Greenway Trail\8-CDG Drawings\MicroStation\Civil Files\023_RW_2of4_JSL0112_I20.dgn 8:11:32 AM 4/24/2025

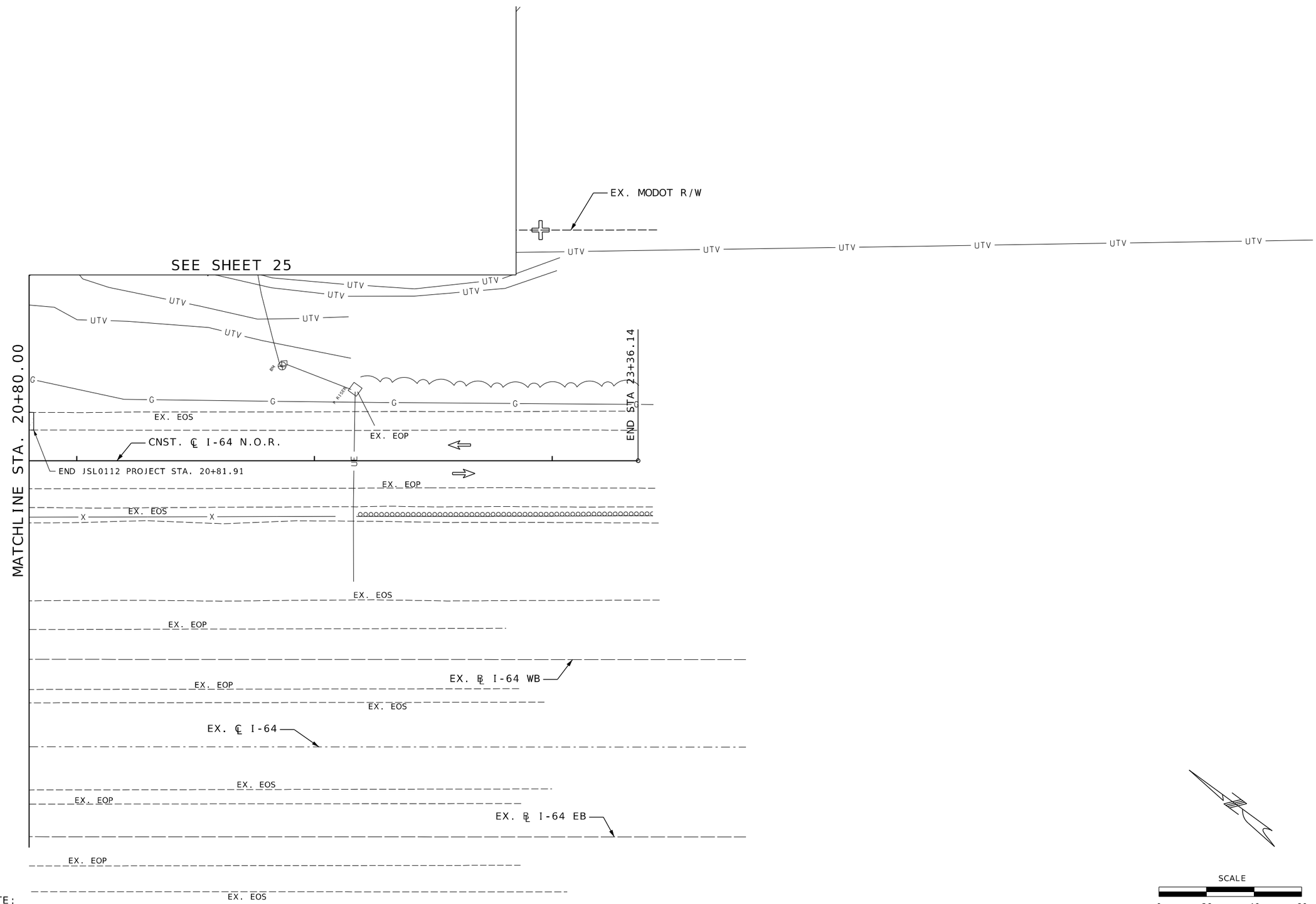

NOTE:
REFER TO PLAN ON SHEET NO. 17 FOR LIMITS OF
JOB NO. JSL0112 AND JOB NO. TAP-5407(619)

STATE OF MISSOURI
Kevin Thomas Foy O'Shaughnessy
NUMBER PE-2017000345
PROFESSIONAL ENGINEER

THIS SHEET HAS BEEN SIGNED, SEALED AND DATED ELECTRONICALLY

DATE PREPARED
4/24/2025

ROUTE	STATE
NOR	MO
DISTRICT	SHEET NO.
SL	24

COUNTY
ST. CHARLES

JOB NO.
JSL0112

CONTRACT ID.

PROJECT NO.

BRIDGE NO.

DESCRIPTION	DATE

MISSOURI HIGHWAYS AND TRANSPORTATION COMMISSION
105 WEST CAPITOL
JEFFERSON CITY, MO 65102
1-888-ASK-MODOT (1-888-275-6636)

RIGHT-OF-WAY
PLAN SHEET

CDG ENGINEERS
One Campbell Plaza
St. Louis, Missouri 63139
Missouri State Certificate of Authority #1721
T. 314 781 7770
F. 314 781 9075

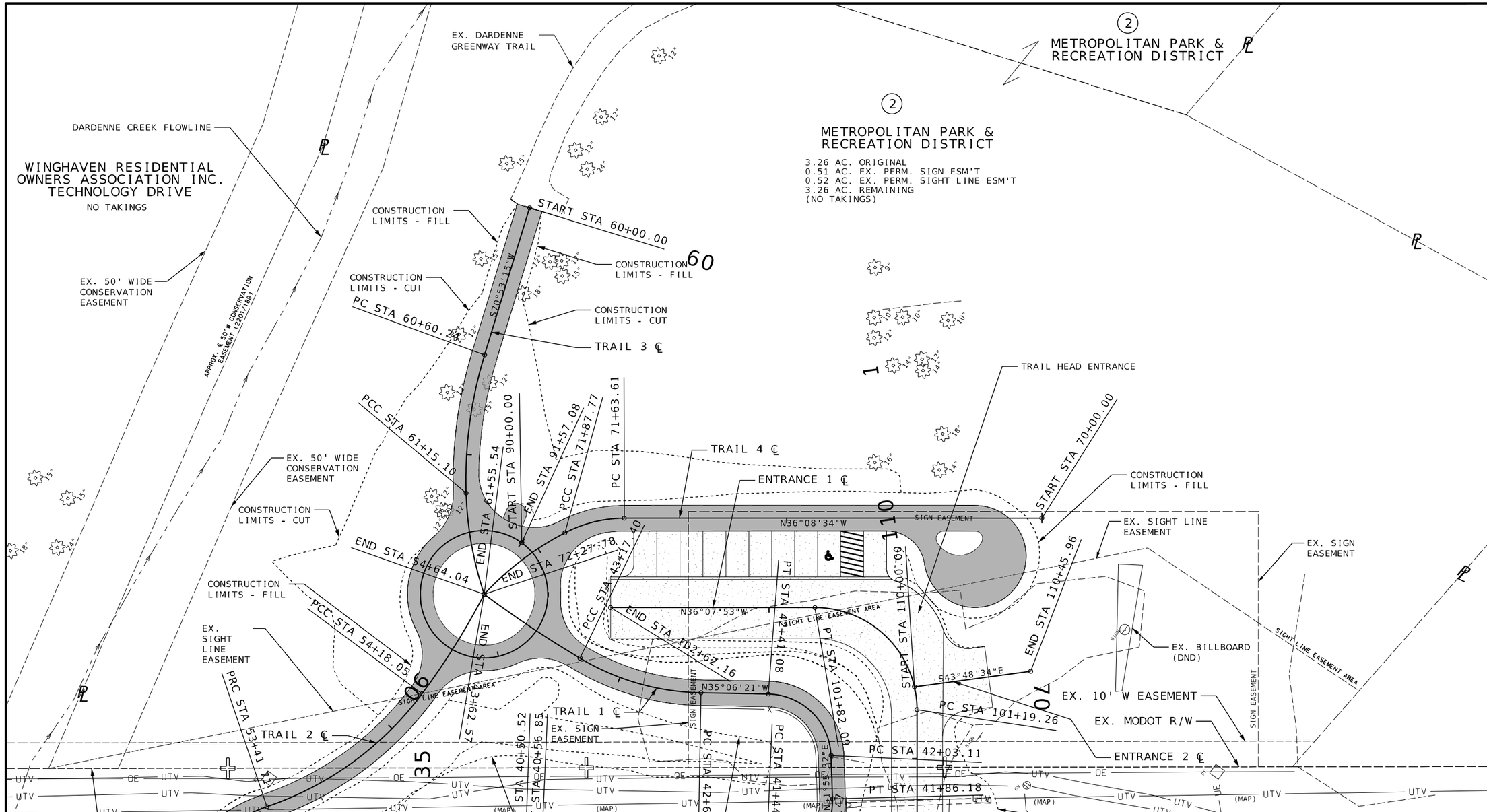

NOTE:
REFER TO PLAN ON SHEET NO. 17 FOR LIMITS OF JOB NO. JSL0112 AND JOB NO. TAP-5407(619)

STATE OF MISSOURI
Kevin Thomas Foy O'Shaughnessy
NUMBER PE-2017000345
PROFESSIONAL ENGINEER

THIS SHEET HAS BEEN SIGNED, SEALED AND DATED ELECTRONICALLY

DATE PREPARED	
4/24/2025	
ROUTE	STATE
NOR	MO
DISTRICT	SHEET NO.
SL	25
COUNTY	
ST. CHARLES	
JOB NO.	
JSL0112	
CONTRACT ID.	
PROJECT NO.	
BRIDGE NO.	

DATE	DESCRIPTION

MISSOURI HIGHWAYS AND TRANSPORTATION COMMISSION
105 WEST CAPITOL
JEFFERSON CITY, MO 65102
1-888-ASK-MODOT (1-888-275-6636)

RIGHT-OF-WAY PLAN SHEET

CDG ENGINEERS
One Compass Point Plaza
St. Louis, Missouri 63139
T. 314 781 7770
F. 314 781 9075
Missouri State Certificate of Authority # 1721

T:\Working\21228 - O'Fallon, MO-Dardenne Greenway Trail\8-CDG Drawings\MicroStation\Civil Files\025_RW_4of4_JSL0112_I20.dgn 8:11:35 AM 4/24/2025

TRAIL 1 ℄	
PI	40+36.93
PC	40+17.58
PT	40+50.52
Δ	75°30'10.6" (RT)
D	229°10'59.2"
L	32.94' (ARC)
T	19.36'
R	25.00'

TRAIL 1 ℄	
PI	41+71.99
PC	41+44.96
PT	41+86.18
Δ	94°27'50.2" (LT)
D	229°10'59.2"
L	41.22' (ARC)
T	27.03'
R	25.00'

TRAIL 1 ℄	
PI	42+26.84
PC	42+03.11
PT	42+41.08
Δ	87°1'53.2" (LT)
D	229°10'59.2"
L	37.97' (ARC)
T	23.74'
R	25.00'

TRAIL 1 ℄	
PI	42+93.03
PC	42+67.51
PT	43+17.40
Δ	29°46'21.9" (RT)
D	59°40'39.2"
L	49.89' (ARC)
T	25.52'
R	96.01'

TRAIL 1 ℄	
PI	43+40.01
PC	43+17.40
PT	43+62.57
Δ	5°39'31.9" (RT)
D	12°31'39.5"
L	45.17' (ARC)
T	22.60'
R	457.36'

TRAIL 2 ℄	
PI	51+77.64
PC	51+66.82
PT	51+88.38
Δ	11°45'57.1" (RT)
D	54°34'2.7"
L	21.56' (ARC)
T	10.82'
R	105.00'

TRAIL 2 ℄	
PI	52+12.54
PC	52+06.62
PT	52+18.45
Δ	7°8'19.6" (LT)
D	60°18'40.8"
L	11.84' (ARC)
T	5.93'
R	95.00'

TRAIL 2 ℄	
PI	53+16.80
PC	52+88.16
PT	53+41.71
Δ	50°21'12.4" (RT)
D	94°2'11.8"
L	53.55' (ARC)
T	28.64'
R	60.93'

TRAIL 2 ℄	
PI	53+81.09
PC	53+41.71
PT	54+18.05
Δ	34°42'46.7" (LT)
D	45°28'23.8"
L	76.34' (ARC)
T	39.38'
R	126.00'

TRAIL 2 ℄	
PI	54+41.09
PC	54+18.05
PT	54+64.04
Δ	9°25'32.0" (LT)
D	20°29'34.3"
L	45.99' (ARC)
T	23.05'
R	279.59'

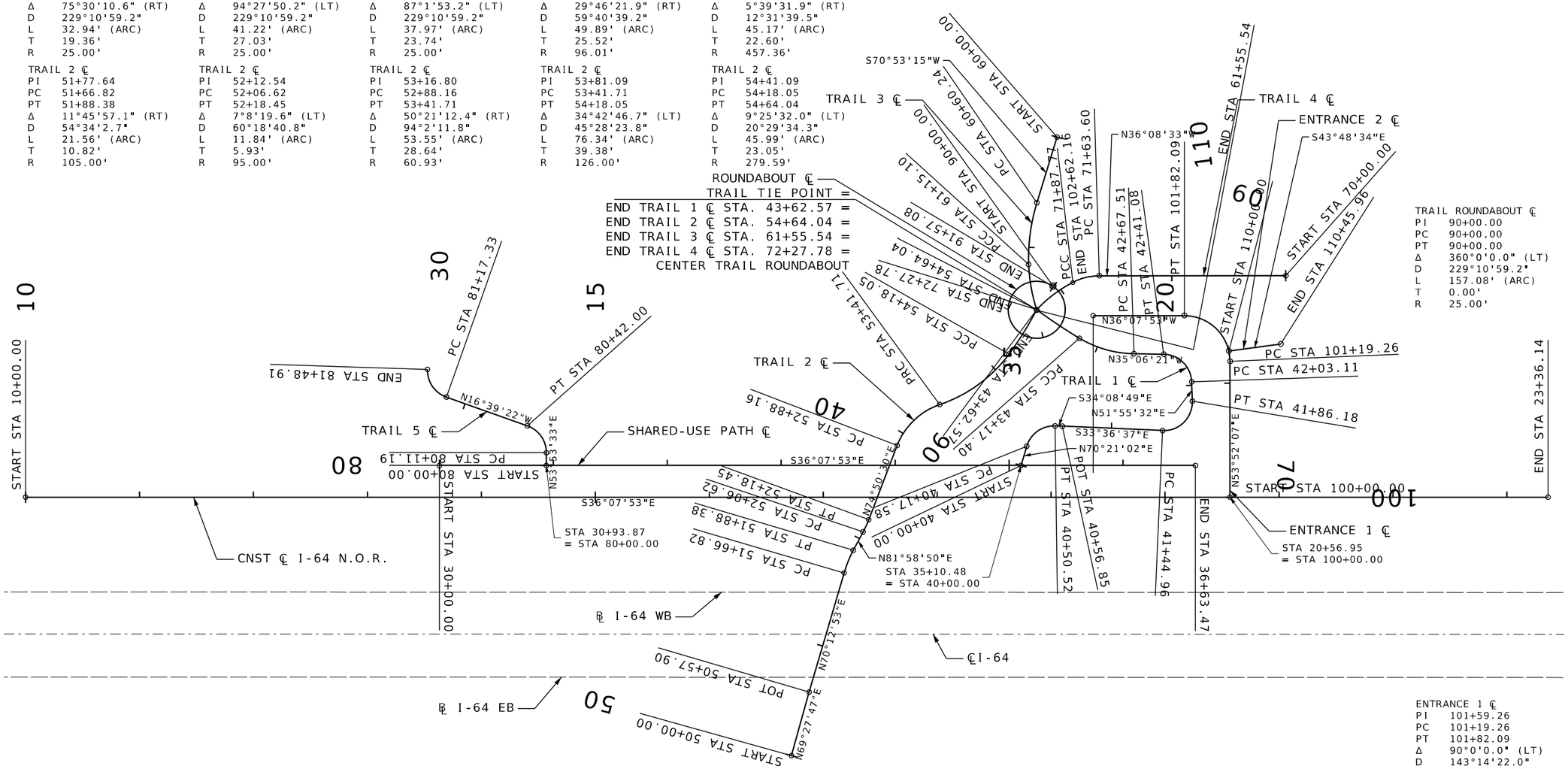

TRAIL 3 ℄	
PI	60+87.92
PC	60+60.24
PT	61+15.10
Δ	18°54'7.3" (LT)
D	34°27'19.4"
L	54.86' (ARC)
T	27.68'
R	166.29'

TRAIL 3 ℄	
PI	61+35.46
PC	61+15.10
PT	61+55.54
Δ	16°30'56.9" (LT)
D	40°50'28.7"
L	40.44' (ARC)
T	20.36'
R	140.29'

TRAIL 4 ℄	
PI	71+75.92
PC	71+63.60
PT	71+87.77
Δ	27°19'5.6" (LT)
D	113°1'27.7"
L	24.17' (ARC)
T	12.32'
R	50.69'

TRAIL 4 ℄	
PI	72+07.97
PC	71+87.77
PT	72+27.78
Δ	19°38'52.1" (LT)
D	49°6'42.8"
L	40.01' (ARC)
T	20.20'
R	116.66'

TRAIL 5 ℄	
PI	80+28.89
PC	80+11.19
PT	80+42.00
Δ	70°36'18.9" (LT)
D	229°11'0.9"
L	30.81' (ARC)
T	17.70'
R	25.00'

TRAIL 5 ℄	
PI	81+35.62
PC	81+17.33
PT	81+48.91
Δ	72°23'39.7" (RT)
D	229°11'0.9"
L	31.59' (ARC)
T	18.30'
R	25.00'

TRAIL ROUNDABOUT ℄	
PI	90+00.00
PC	90+00.00
PT	90+00.00
Δ	360°0'0.0" (LT)
D	229°10'59.2"
L	157.08' (ARC)
T	0.00'
R	25.00'

ENTRANCE 1 ℄	
PI	101+59.26
PC	101+19.26
PT	101+82.09
Δ	90°0'0.0" (LT)
D	143°14'22.0"
L	62.83' (ARC)
T	40.00'
R	40.00'

SCALE

0 50 100 150

NOTE:
REFER TO PLAN ON SHEET NO. 16 FOR LIMITS OF
JOB NO. JSL0112 AND JOB NO. TAP-5407(619)

STATE OF MISSOURI
Kevin Thomas Foy O'Shaughnessy
NUMBER PE-2017000345
PROFESSIONAL ENGINEER

THIS SHEET HAS BEEN SIGNED, SEALED AND DATED ELECTRONICALLY

DATE PREPARED	
4/24/2025	
ROUTE	STATE
NOR	MO
DISTRICT	SHEET NO.
SL	26
COUNTY	
ST. CHARLES	
JOB NO.	
JSL0112	
CONTRACT ID.	
PROJECT NO.	
BRIDGE NO.	

DATE	DESCRIPTION

MISSOURI HIGHWAYS AND TRANSPORTATION COMMISSION
105 WEST CAPITOL
JEFFERSON CITY, MO 65102
1-888-ASK-MODOT (1-888-275-6636)

REFERENCE POINT SHEET

CDG ENGINEERS
One Campus Office
St. Louis, Missouri 63139
T. 314 781 7770
F. 314 781 9075
Missouri State Certificate of Authority # 1721

Coordinate Point Listing
Missouri Coordinate System of 1983
Reciprocal Average Grid Factor : 1.0000878

SHEET NO.	STATION	LOCATION	OFFSET (USFT)	MODIFIED STATE PLANE (GROUND) NORTHING (US SURVEY FT)	EASTING (US SURVEY FT)	ELEVATION (US SURVEY FT)	DESCRIPTION
PROJECT CONTROL POINTS							
6	21+86.38	I-64 NORTH OUTER ROAD CL	39.86	1056190.253	752275.541	498.977	BM 50
5	17+84.15	I-64 NORTH OUTER ROAD CL	18.21	1056502.348	752020.881	501.762	BM 51
5	15+96.35	I-64 NORTH OUTER ROAD CL	17.85	1056653.815	751909.855	501.761	BM 52
ALIGNMENTS							
4	10+00.00	I-64 NORTH OUTER ROAD CL	0.00	1057124.946	751543.809		BEGIN CHAIN (I-64 N.O.R. CL)
4	13+12.76	I-64 NORTH OUTER ROAD CL	0.00	1056872.340	751728.224		BEGIN PROJECT
6	20+81.91	I-64 NORTH OUTER ROAD CL	0.00	1056258.736	752192.171		END PROJECT
6	23+36.14	I-64 NORTH OUTER ROAD CL	0.00	1056045.793	752331.647		END CHAIN (I-64 N.O.R. CL)
16	30+00.00	SHARED-USE PATH CL	0.00	1056848.060	751780.411		BEGIN CHAIN (SHARED-USE PATH CL)
16	36+63.47	SHARED-USE PATH CL	0.00	1056312.194	752171.622		END CHAIN (SHARED-USE PATH CL)
16	40+00.00	TRAIL 1 CL	0.00	1056435.758	752081.413		BEGIN CHAIN (TRAIL 1 CL)
16	40+17.58	TRAIL 1 CL	0.00	1056441.668	752097.966		PC (TRAIL 1 CL)
16	40+36.93	TRAIL 1 CL	0.00	1056448.178	752116.196		PI (TRAIL 1 CL)
16	40+50.52	TRAIL 1 CL	0.00	1056432.157	752127.062		PT (TRAIL 1 CL)
16	40+56.85	TRAIL 1 CL	0.00	1056426.920	752130.614		PI (TRAIL 1 CL)
16	41+44.96	TRAIL 1 CL	0.00	1056353.540	752179.387		PC (TRAIL 1 CL)
16	41+71.99	TRAIL 1 CL	0.00	1056331.031	752194.348		PI (TRAIL 1 CL)
16	41+86.18	TRAIL 1 CL	0.00	1056347.698	752215.624		PT (TRAIL 1 CL)
16	42+03.11	TRAIL 1 CL	0.00	1056358.140	752228.954		PC (TRAIL 1 CL)
16	42+26.85	TRAIL 1 CL	0.00	1056372.779	752247.640		PI (TRAIL 1 CL)
16	42+41.08	TRAIL 1 CL	0.00	1056392.198	752233.989		PT (TRAIL 1 CL)
16	42+67.51	TRAIL 1 CL	0.00	1056413.820	752218.789		PC (TRAIL 1 CL)
16	42+93.04	TRAIL 1 CL	0.00	1056434.713	752204.131		PI (TRAIL 1 CL)
16	43+17.40	TRAIL 1 CL	0.00	1056460.126	752201.781		PCC (TRAIL 1 CL)
16	43+40.00	TRAIL 1 CL	0.00	1056482.634	752199.701		PI (TRAIL 1 CL)
16	43+62.57	TRAIL 1 CL	0.00	1056505.237	752199.850		PT/END CHAIN (TRAIL 1 CL)
16	50+00.00	TRAIL 2 CL	0.00	1056448.394	751756.891		BEGIN CHAIN (TRAIL 2 CL)
16	50+57.90	TRAIL 2 CL	0.00	1056468.707	751811.113		PI (TRAIL 2 CL)
16	51+66.82	TRAIL 2 CL	0.00	1056505.576	751913.604		PC (TRAIL 2 CL)
16	51+77.64	TRAIL 2 CL	0.00	1056509.238	751923.785		PI (TRAIL 2 CL)
16	51+88.38	TRAIL 2 CL	0.00	1056510.748	751934.498		PT (TRAIL 2 CL)
16	52+06.62	TRAIL 2 CL	0.00	1056513.291	751952.550		PC (TRAIL 2 CL)
16	52+12.54	TRAIL 2 CL	0.00	1056514.118	751958.418		PI (TRAIL 2 CL)
16	52+18.45	TRAIL 2 CL	0.00	1056515.667	751964.138		PT (TRAIL 2 CL)
16	52+88.16	TRAIL 2 CL	0.00	1056533.895	752031.422		PC (TRAIL 2 CL)
16	53+16.80	TRAIL 2 CL	0.00	1056541.385	752059.067		PI (TRAIL 2 CL)
16	53+41.71	TRAIL 2 CL	0.00	1056524.877	752082.472		PRC (TRAIL 2 CL)
16	53+81.09	TRAIL 2 CL	0.00	1056502.179	752114.653		PI (TRAIL 2 CL)
16	54+18.05	TRAIL 2 CL	0.00	1056501.848	752154.032		PCC (TRAIL 2 CL)
16	54+41.09	TRAIL 2 CL	0.00	1056501.654	752177.081		PI (TRAIL 2 CL)
16	54+64.04	TRAIL 2 CL	0.00	1056505.237	752199.85		PT/END CHAIN (TRAIL 2 CL)
16	60+00.00	TRAIL 3 CL	0.00	1056580.096	752332.658		BEGIN CHAIN (TRAIL 3 CL)
16	60+60.24	TRAIL 3 CL	0.00	1056560.373	752275.741		PC (TRAIL 3 CL)
16	60+87.92	TRAIL 3 CL	0.00	1056551.343	752249.574		PI (TRAIL 3 CL)
16	61+15.10	TRAIL 3 CL	0.00	1056534.323	752227.743		PCC (TRAIL 3 CL)
16	61+35.46	TRAIL 3 CL	0.00	1056521.804	752211.686		PI (TRAIL 3 CL)
16	61+55.54	TRAIL 3 CL	0.00	1056505.237	752199.85		PT/END CHAIN (TRAIL 3 CL)
16	70+00.00	TRAIL 4 CL	0.00	1056346.320	752352.806		BEGIN CHAIN (TRAIL 4 CL)
16	71+63.61	TRAIL 4 CL	0.00	1056478.440	752256.312		PC (TRAIL 4 CL)
16	71+75.92	TRAIL 4 CL	0.00	1056488.374	752249.029		PI (TRAIL 4 CL)
16	71+87.77	TRAIL 4 CL	0.00	1056493.857	752237.999		PCC (TRAIL 4 CL)
16	72+07.97	TRAIL 4 CL	0.00	1056502.850	752219.910		PI (TRAIL 4 CL)
16	72+27.78	TRAIL 4 CL	0.00	1056505.237	752199.850		PT/END CHAIN (TRAIL 4 CL)
16	80+00.00	TRAIL 5 CL	0.00	1056772.244	751835.761		BEGIN CHAIN (TRAIL 5 CL)
16	80+11.19	TRAIL 5 CL	0.00	1056778.839	751844.803		PC (TRAIL 5 CL)
16	80+28.89	TRAIL 5 CL	0.00	1056789.257	751859.116		PI (TRAIL 5 CL)
16	80+42.00	TRAIL 5 CL	0.00	1056806.217	751854.042		PT (TRAIL 5 CL)
16	81+17.33	TRAIL 5 CL	0.00	1056878.383	751832.451		PC (TRAIL 5 CL)
16	81+35.62	TRAIL 5 CL	0.00	1056895.910	751827.207		PI (TRAIL 5 CL)
16	81+48.91	TRAIL 5 CL	0.00	1056906.210	751842.328		PT/END CHAIN (TRAIL 5 CL)
16	90+00.00	ROUNDABOUT CL	0.00	1056505.237	752224.850		PC/BEGIN CHAIN (ROUNDABOUT CL)
16	91+57.08	ROUNDABOUT CL	0.00	1056505.237	752224.85		PT/END CHAIN (ROUNDABOUT CL)
16	100+00.00	ENTRANCE 1 CL	0.00	1056271.262	752167.028		BEGIN CHAIN (ENTRANCE 1 CL)
16	101+19.26	ENTRANCE 1 CL	0.00	1056341.604	752263.351		PC (ENTRANCE 1 CL)
16	101+59.09	ENTRANCE 1 CL	0.00	1056365.189	752295.658		PI (ENTRANCE 1 CL)
16	101+82.09	ENTRANCE 1 CL	0.00	1056397.496	752272.072		PT (ENTRANCE 1 CL)
16	102+62.16	ENTRANCE 1 CL	0.00	1056462.159	752224.865		END CHAIN (ENTRANCE 1 CL)
16	110+00.00	ENTRANCE 2 CL	0.00	1056347.669	752269.955		BEGIN CHAIN (ENTRANCE 2 CL)
16	110+45.96	ENTRANCE 2 CL	0.00	1056314.502	752301.771		END CHAIN (ENTRANCE 2 CL)

COORDINATE BASE IS MODIFIED STATE PLANE, MODIFIED ABOUT THE ORIGIN OF N = 0, E = 0. RECIP. FACTOR OF 1.0000878 TO BRING GRID UP TO GROUND VALUES.

BEARING SYSTEM IS NAD'83 ESTABLISHED WITH GPS UTILIZING THE VRS NETWORK.

VERTICAL DATUM IS NAVD'88 AS BROADCAST WITH THE VRS NETWORK.

NOTE : The reciprocal of the average grid factor is used as a multiplier from state plane distance to ground distance.

STATE OF MISSOURI
Kevin Thomas Foy O'Shaughnessy
NUMBER PE-2017000345
PROFESSIONAL ENGINEER

THIS SHEET HAS BEEN SIGNED, SEALED AND DATED ELECTRONICALLY

DATE PREPARED 4/24/2025

ROUTE	STATE
NOR	MO
DISTRICT	SHEET NO.
SL	27

COUNTY ST. CHARLES

JOB NO. JSL0112

CONTRACT ID.

PROJECT NO.

BRIDGE NO.

DESCRIPTION	DATE

MISSOURI HIGHWAYS AND TRANSPORTATION COMMISSION

105 WEST CAPITOL
JEFFERSON CITY, MO 65102
1-888-ASK-MODOT (1-888-275-6636)

COORDINATE POINT SHEET

CDG ENGINEERS
One Campus Drive
St. Louis, Missouri 63129
T. 314 781 7770
F. 314 781 9075
Missouri State Certificate of Authority # 1721

REV.

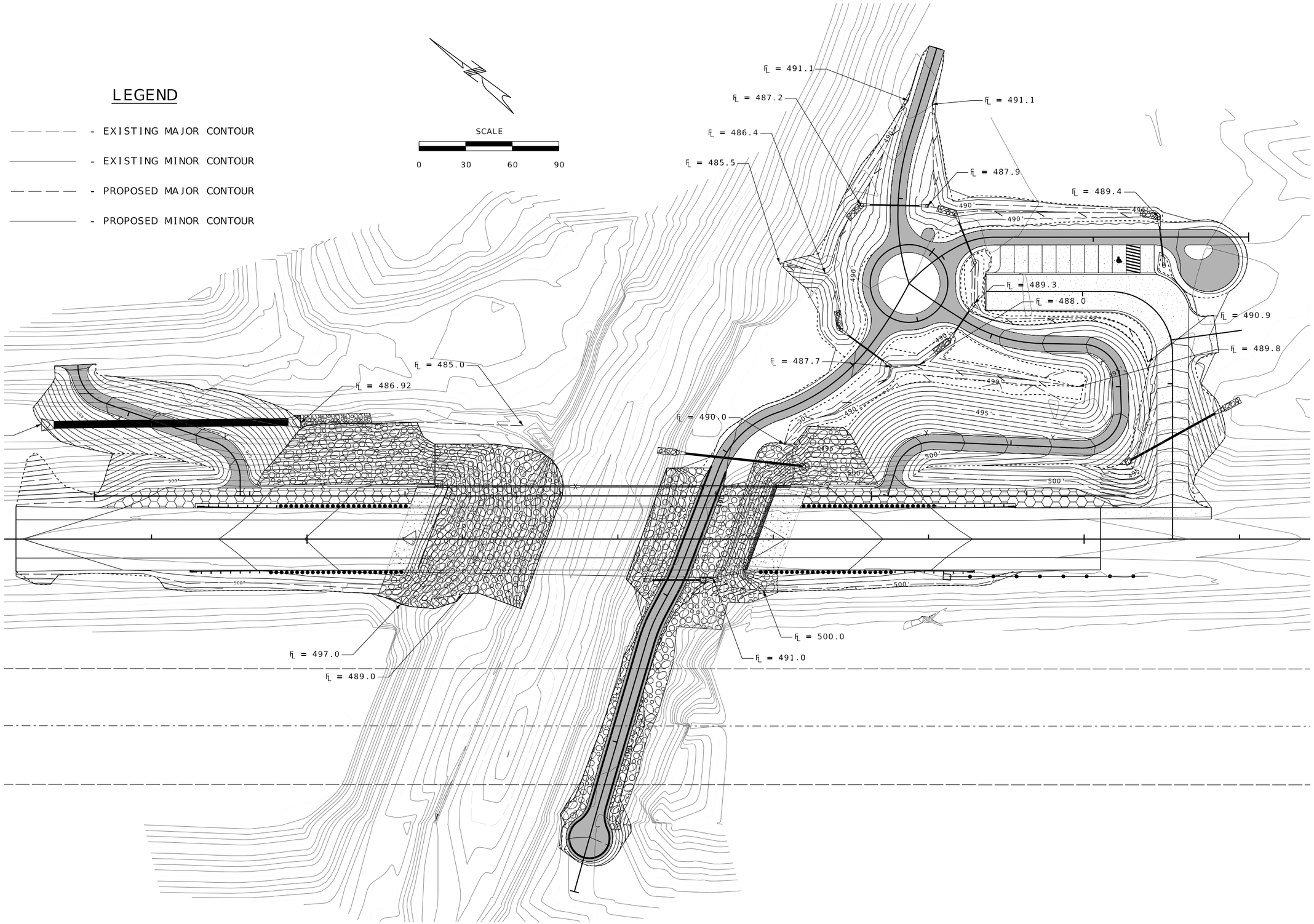

STATE OF MISSOURI
Kevin Thomas Foy O'Shaughnessy
NUMBER PE-2017000345
PROFESSIONAL ENGINEER

THIS SHEET HAS BEEN SIGNED, SEALED AND DATED ELECTRONICALLY

DATE PREPARED	
4/24/2025	
ROUTE	STATE
NOR	MO
DISTRICT	SHEET NO.
SL	28
COUNTY	
ST. CHARLES	
JOB NO.	
JSL0112	
CONTRACT ID.	
PROJECT NO.	
BRIDGE NO.	

DATE	DESCRIPTION

MISSOURI HIGHWAYS AND TRANSPORTATION COMMISSION

105 WEST CAPITOL
JEFFERSON CITY, MO 65102
1-888-ASK-MODOT (1-888-275-6636)

GRADING PLAN
SPECIAL SHEET

CDG ENGINEERS
One Campbell Plaza
St. Louis, Missouri 63139
T. 314 781 7770
F. 314 781 9075
Missouri State Certificate of Authority # 1721

T:\Working\21228 - O'Fallon, MO-Dardenne Greenway Trail\8-CDG Drawings\MicroStation\Civil Files\028_SS_JSL0112_I30.dgn 8:12:12 AM 4/24/2025

ROAD CLOSED TO THRU TRAFFIC

R11-4

51

ROAD CLOSED 1 MILES AHEAD LOCAL TRAFFIC ONLY

R11-3a

51A

ROAD CLOSED

R11-2

29

SPECIAL-1 48" X 12"

TECHNOLOGY DRIVE

DETOUR

MO4-9L

50A

SPECIAL-1 48" X 12"

TECHNOLOGY DRIVE

DETOUR

MO4-9R

50B

ROAD CLOSED AHEAD

WO20-3

20

ROAD CLOSED 500 FT

WO20-3

20A

SPECIAL-1 48" X 12"

TECHNOLOGY DRIVE

DETOUR

MO4-9S

50C

END DETOUR

MO4-8a

52

TECHNOLOGY DRIVE
CLOSED TO THROUGH TRAFFIC
LOCAL TRAFFIC ONLY

SPECIAL-2 72" X 36"

51B

TRAFFIC CONTROL LEGEND

- SIGN (SINGLE SIDED)
- TYPE III MOVEABLE BARRICADE
- CHANGEABLE MESSAGE BOARD

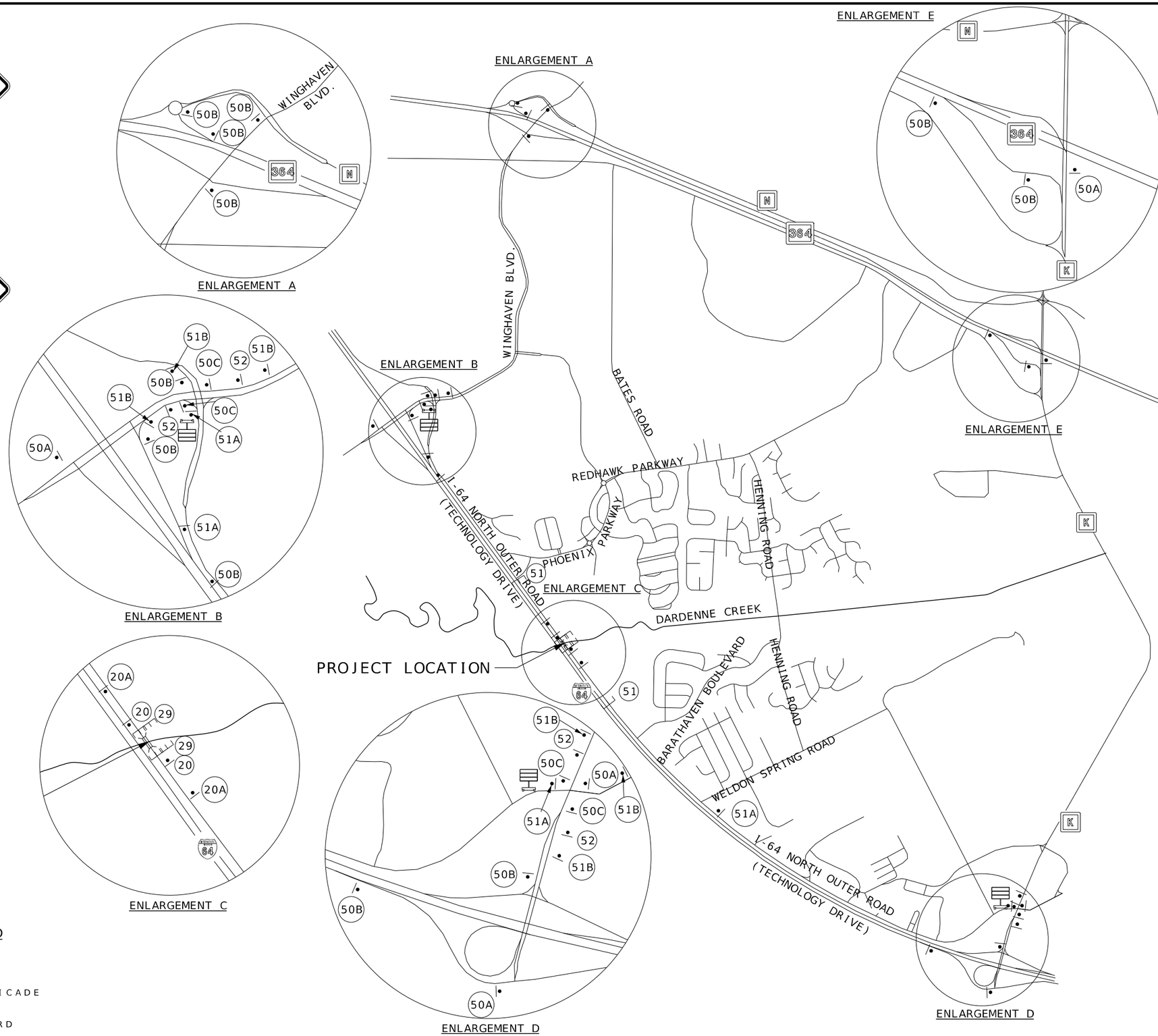

STATE OF MISSOURI
Kevin Thomas Foy O'Shaughnessy
NUMBER PE-2017000345
PROFESSIONAL ENGINEER

THIS SHEET HAS BEEN SIGNED, SEALED AND DATED ELECTRONICALLY

DATE PREPARED	
4/24/2025	
ROUTE	STATE
NOR	MO
DISTRICT	SHEET NO.
SL	29

COUNTY: ST. CHARLES

JOB NO.: JSL0112

CONTRACT ID.

PROJECT NO.

BRIDGE NO.

DATE	DESCRIPTION

MISSOURI HIGHWAYS AND TRANSPORTATION COMMISSION

105 WEST CAPITOL
JEFFERSON CITY, MO 65102
1-888-ASK-MODOT (1-888-275-6636)

TRAFFIC CONTROL

CDG ENGINEERS

One Campbell Plaza
St. Louis, Missouri 63139
T. 314 786 7770
F. 314 785 9075
Missouri State Certificate of Authority # 1721

T:\Working\21228 - O'Fallon, MO-Dardenne Greenway Trail\8-CDG Drawings\MicroStation\Civil Files\029_TC_JSL0112_I20.dgn 8:12:15 AM 4/24/2025

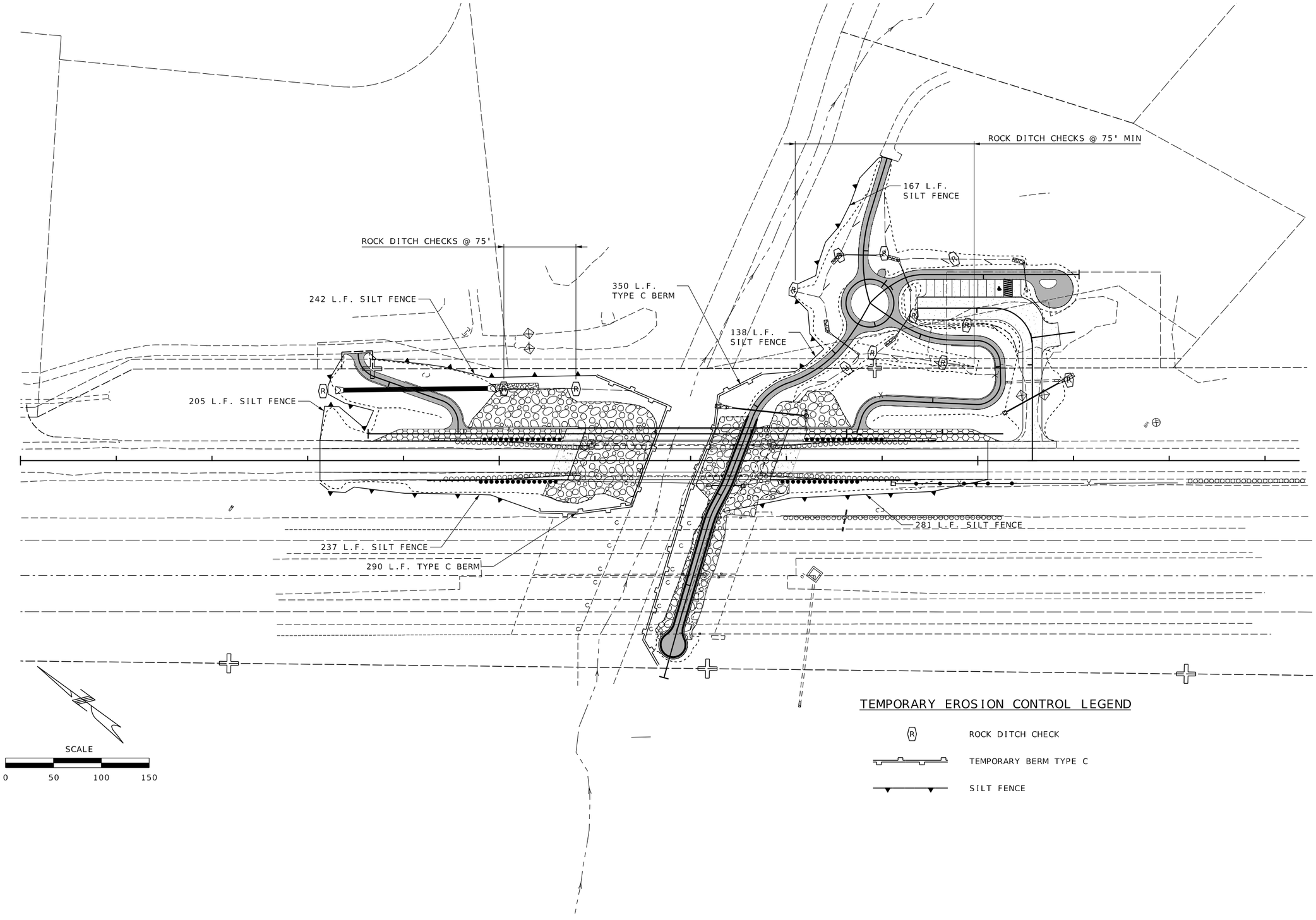

STATE OF MISSOURI
Kevin Thomas Foy O'Shaughnessy
NUMBER PE-2017000345
PROFESSIONAL ENGINEER

THIS SHEET HAS BEEN SIGNED, SEALED AND DATED ELECTRONICALLY

DATE PREPARED	
4/24/2025	
ROUTE	STATE
NOR	MO
DISTRICT	SHEET NO.
SL	30
COUNTY	
ST. CHARLES	
JOB NO.	
JSL0112	
CONTRACT ID.	
PROJECT NO.	
BRIDGE NO.	

DESCRIPTION	DATE

MISSOURI HIGHWAYS AND TRANSPORTATION COMMISSION

105 WEST CAPITOL
JEFFERSON CITY, MO 65102
1-888-ASK-MODOT (1-888-275-6636)

EROSION CONTROL
SHEET 1 OF 2

CDG ENGINEERS
One Campus Office
St. Louis, Missouri 63139
T. 314 781 7770
F. 314 781 9075
Missouri State Certificate of Authority # 1721

T:\Working\21228 - O'Fallon, MO-Dardenne Greenway Trail\8-CDG Drawings\MicroStation\Civil Files\030_EC_JSL0112_I50.dgn 8:12:19 AM 4/24/2025

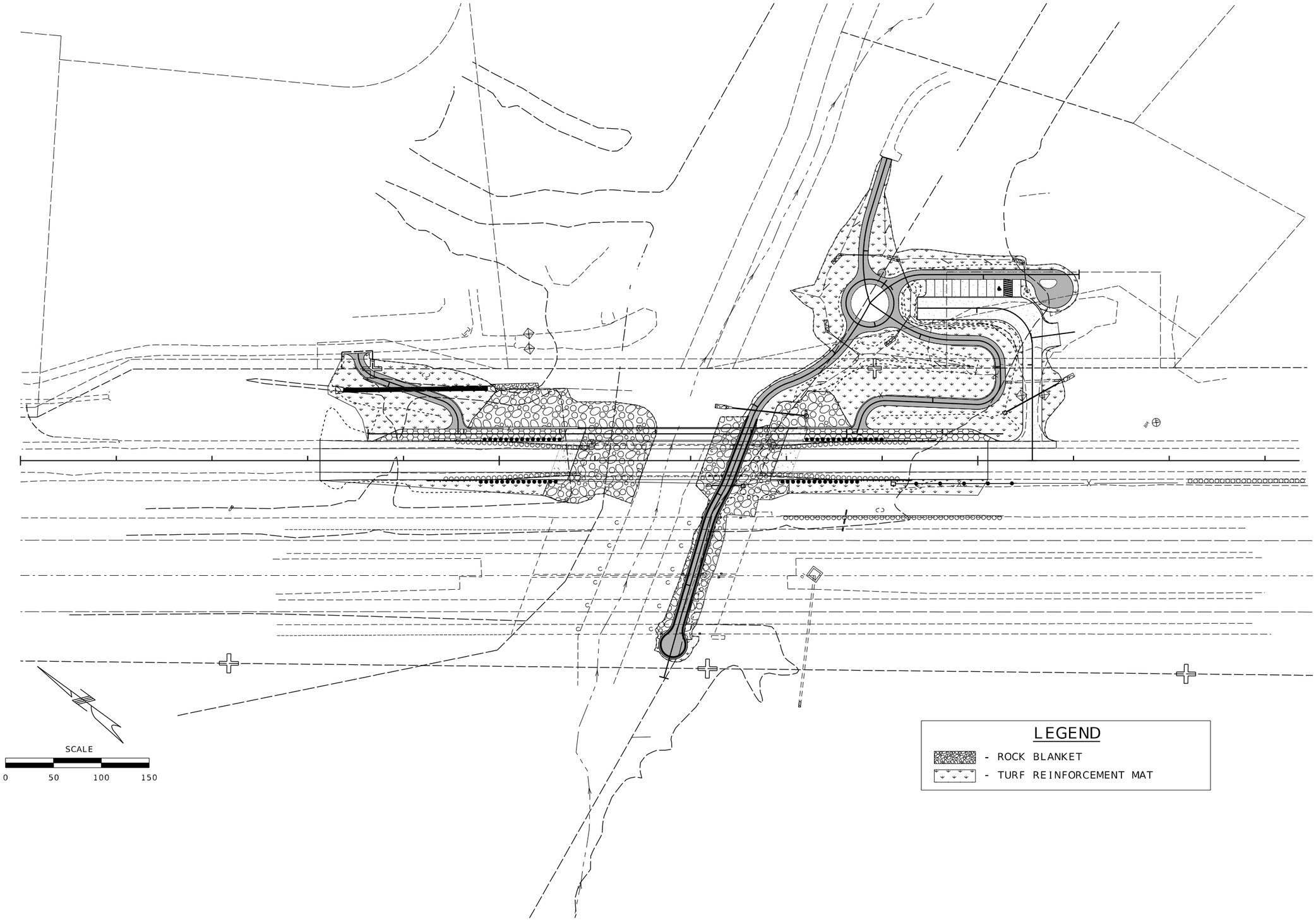

LEGEND

- ROCK BLANKET
- TURF REINFORCEMENT MAT

STATE OF MISSOURI
Kevin Thomas Foy O'Shaughnessy
NUMBER PE-2017000345
PROFESSIONAL ENGINEER

THIS SHEET HAS BEEN SIGNED, SEALED AND DATED ELECTRONICALLY

DATE PREPARED	
4/24/2025	
ROUTE	STATE
NOR	MO
DISTRICT	SHEET NO.
SL	31
COUNTY	
ST. CHARLES	
JOB NO.	
JSL0112	
CONTRACT ID.	
PROJECT NO.	
BRIDGE NO.	

DATE	DESCRIPTION

MISSOURI HIGHWAYS AND TRANSPORTATION COMMISSION

105 WEST CAPITOL
JEFFERSON CITY, MO 65102
1-888-ASK-MODOT (1-888-275-6636)

EROSION CONTROL SHEET 2 OF 2

CDG ENGINEERS
One Campus Drive
St. Louis, Missouri 63129
T. 314 781 7770
F. 314 781 9075
Missouri State Certificate of Authority # 1721

T:\Working\21228 - O'Fallon, MO-Dardenne Greenway Trail\8-CDG Drawings\MicroStation\Civil Files\031_EC_JSL0112_I50.dgn 8:12:22 AM 4/24/2025

SIGNS (902 SIGNAL SIGNS TABULATED ON D-37A SHEET)						CONCRETE FOOTINGS EMBEDDED	STRUCTURAL STEEL POSTS*						PIPE POSTS*					BACKING BARS**				U-CHANNEL POST	PERFORATED SQUARE STEEL TUBE – 2-INCH POST						2.5-INCH POST						BREAK-AWAY ASSEMBLY	REMARKS AND OTHER REQUIRED ITEMS
																		2" X 3/8" BARS AT 2.55 LBS/FT					2-INCH POST			ANCHORS			2.5-INCH POST			ANCHORS				
SIGN NO.	SIGN SIZE	STATION OR LOG MILE	HORIZ CLEAR IF NOT STD	LOCATION	SIGN DTL SHT NO.	ITEM NO. 9031010	POST DES NO.	POST NO.1	POST NO.2	POST NO.3	LBS PER FT	TOTAL ITEM NO. 9031210	PIPE SIZE	POST NO.1	POST NO.2	LBS PER FT	TOTAL ITEM NO. 9031220	NO.	LGTH	TOTAL	TOTAL	ITEM NO. 9031250A	POST NO.1	POST NO.2	TOTAL ITEM NO. 9031270A	DRIVEN 12 GA. ITEM NO. 9031271A	DRIVEN 7 GA. ITEM NO. 9031273A	CONCRETE 7 GA. ITEM NO. 9031274	POST NO.1	POST NO.2	TOTAL ITEM NO. 9031280	2.25" INSERT (6 FT) ITEM NO. 9031272A	DRIVEN 7 GA. ITEM NO. 9031281A	CONCRETE 7 GA. ITEM NO. 9031285	ITEM NO. 9031241	
						CY		LF	LF	LF		LBS	IN	LF	LF		LBS	EACH	IN.	LF	LBS	LF	LF	LF	LF	EACH	EACH	EACH	LF	LF	LF	EACH	EACH	EACH	EACH	
1	48"x33"	13+50		N.O.R.																			16.6	17.2	33.8	2										
				SUBTOTAL																					33.8	2										
				TOTAL																	**				34	2										

*BREAKAWAY ASSEMBLY IS INCIDENTAL FOR STRUCTURAL STEEL AND PIPE POSTS.
**BACKING BARS ARE TOTALED WITH STRUCTURAL STEEL OR PIPE POSTS.

EFFECTIVE: 07-01-2024

MoDOT
ADOPT-A-HIGHWAY
Litter Cleanup

CHRIS MARITIN
LIBERTY MUTUAL
INSURANCE

I9-1a

SEE SIGNAGE & SITE AMENITIES
FOR ADDITIONAL SIGN QUANTIES

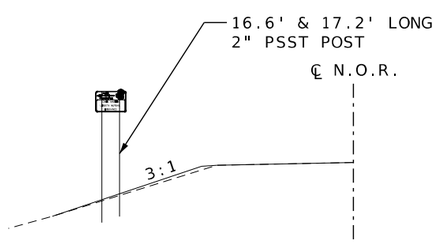

SIGN NO. 1 I9-1a
RELOCATE TO STA. 13+50

ROUND PIPE POST AND FOOTING DATA TABLE						
NOM.SIZE	WEIGHT		STUB LENGTH	FOOTING		CONCRETE
(IN.)	LBS/FT	LBS/IN		DIA.	DEPTH	C.Y.
2½	5.79	0.48	4'- 3½"	12"	4~6"	0.13
4	10.79	0.90	5'- 3½"	18"	5~6"	0.36

STRUCTURAL STEEL POST AND FOOTING DATA TABLE													
POST					FOOTING								
POST DES. NO.	NOM. SIZE	WEIGHT		STUB LENGTH	DIA.	LEVEL GROUND		6:1 GRADE		4:1 GRADE		3:1 OR 2:1 GRADE	
		LBS/FT	LBS/IN			DEPTH	C.Y.	DEPTH	C.Y.	DEPTH	C.Y.	DEPTH	C.Y.
1	W6	9.0	0.75	3'-0"	15"	3'-0"	0.14	3'-2"	0.15	3'-3"	0.16	3'-6"	0.17
2	W6	15.0	1.25	4'-0"	24"	4'-0"	0.47	4'-2"	0.50	4'-3"	0.51	4'-6"	0.54
3	W8	18.0	1.50	4'-6"	28"	4'-6"	0.71	4'-8"	0.73	4'-9"	0.74	5'-0"	0.78
4	W10	22.0	1.83	5'-0"	36"	5'-0"	1.31	5'-2"	1.36	5'-3"	1.39	5'-6"	1.45
5	W10	26.0	2.17	5'-0"	36"	5'-0"	1.31	5'-3"	1.37	5'-5"	1.43	5'-9"	1.52
6	W12	35.0	2.92	5'-6"	36"	5'-6"	1.44	5'-9"	1.52	5'-11"	1.56	6'-3"	1.65

STATE OF MISSOURI
Kevin Thomas Foy O'Shaughnessy
NUMBER PE-2017000345
PROFESSIONAL ENGINEER
THIS SHEET HAS BEEN SIGNED, SEALED AND DATED ELECTRONICALLY

DATE PREPARED: 4/24/2025
ROUTE: NOR | STATE: MO
DISTRICT: SL | SHEET NO.: 32
COUNTY: ST. CHARLES
JOB NO.: JSL0112
CONTRACT ID.
PROJECT NO.
BRIDGE NO.

DESCRIPTION | DATE

MISSOURI HIGHWAYS AND TRANSPORTATION COMMISSION
105 WEST CAPITOL
JEFFERSON CITY, MO 65102
1-888-ASK-MODOT (1-888-275-6636)

SIGNING

CDG ENGINEERS
One Corporate Office: St. Louis, Missouri 63139
T. 314 786 7770
F. 314 785 9075
Missouri State Certificate of Authority # 1721

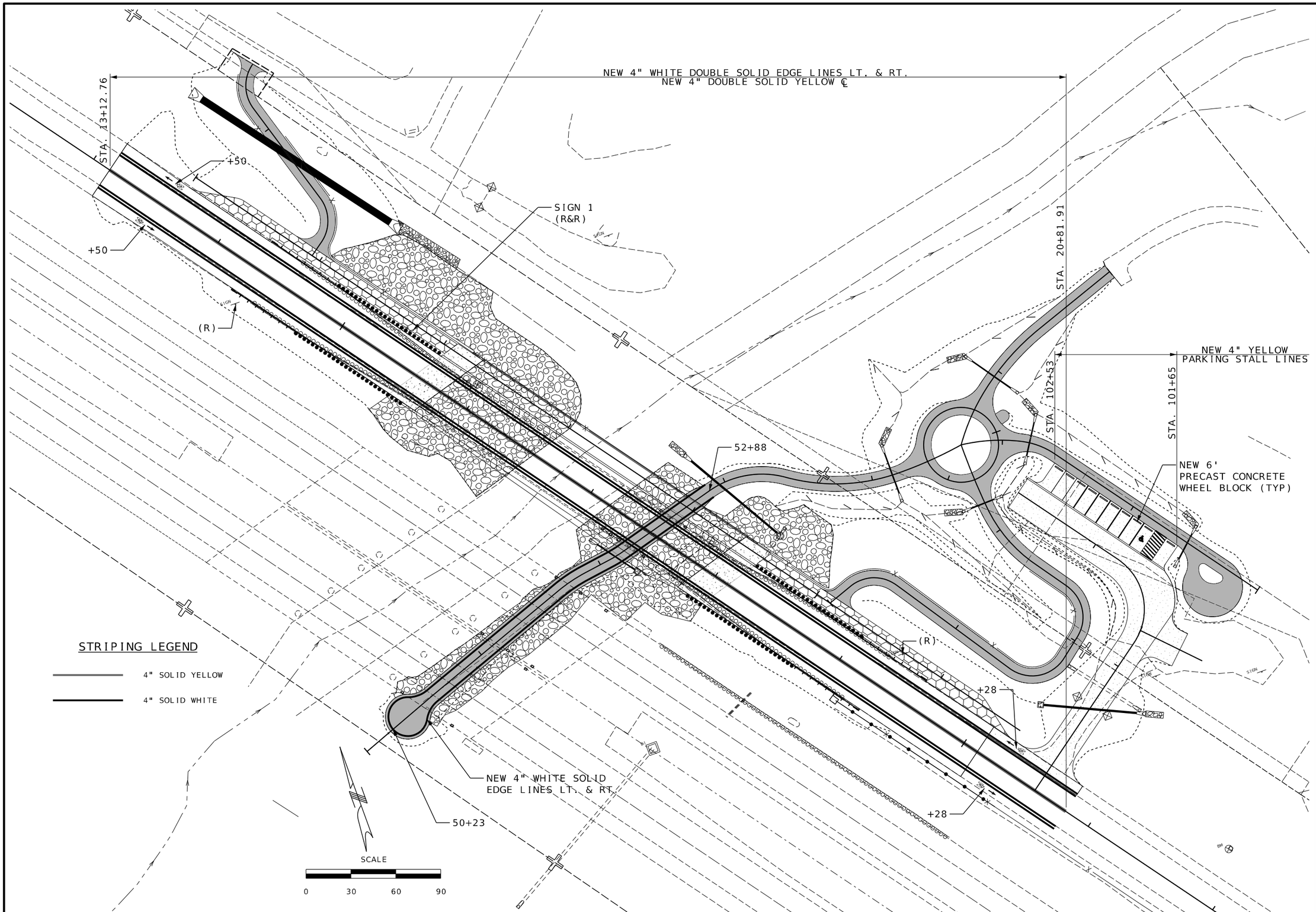

STATE OF MISSOURI
Kevin Thomas Foy O'Shaughnessy
NUMBER PE-2017000345
PROFESSIONAL ENGINEER

THIS SHEET HAS BEEN SIGNED, SEALED AND DATED ELECTRONICALLY

DATE PREPARED	4/24/2025
ROUTE	NOR
STATE	MO
DISTRICT	SL
SHEET NO.	33
COUNTY	ST. CHARLES
JOB NO.	JSL0112
CONTRACT ID.	
PROJECT NO.	
BRIDGE NO.	

DATE	DESCRIPTION

MISSOURI HIGHWAYS AND TRANSPORTATION COMMISSION
105 WEST CAPITOL
JEFFERSON CITY, MO 65102
1-888-ASK-MODOT (1-888-275-6636)

PAVEMENT MARKING

CDG ENGINEERS
One Campbell Plaza
St. Louis, Missouri 63139
T. 314 781 7770
F. 314 781 9075
Missouri State Certificate of Authority # 1721

T:\Working\21228 - O'Fallon, MO-Dardenne Greenway Trail\8-CDG Drawings\MicroStation\Civil Files\033_PM_JSL0112_I30.dgn 8:12:27 AM 4/24/2025

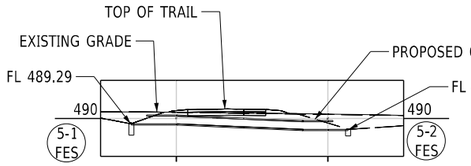

12" GROUP A FES
STA 43+20.22
OFF 6.71' RT.
CLASS III EXC. 2 CY

0+00 0+20

17 FT. 12" GROUP A PIPE @ 4.35%
Q_{25} = 0.46 CFS CLASS III EXC. 6 CY

12" GROUP A FES
STA 43+21.15
OFF 10.01' LT.
CLASS III EXC. 1 CY

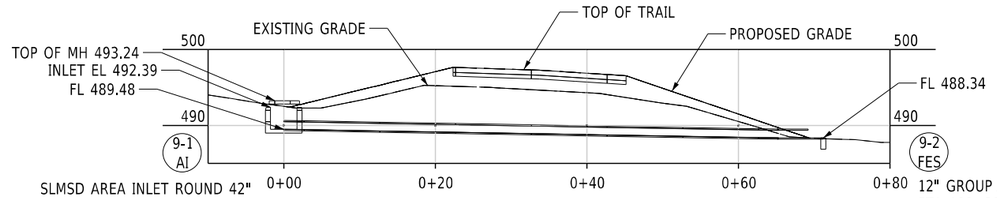

SLMSD AREA INLET ROUND 42"
STA 100+49.42
OFF 29.53' LT.
D = 3.0' CLASS III EXC. 8 CY

66' - 12" GROUP A PIPE @ 1.73%
Q_{25} = 0.63 CFS CLASS III EXC. 49 CY

12" GROUP A FES
STA 100+80.98
OFF 27.60' RT.
CLASS III EXC. 1 CY

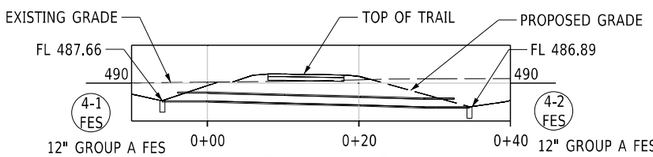

12" GROUP A FES
STA 54+14.37
OFF 12.99' RT.
CLASS III EXC. 1 CY

29 FT. 12" GROUP A PIPE @ 2.66%
Q_{25} = 1.60 CFS CLASS III EXC. 15 CY

12" GROUP A FES
STA 54+13.13
OFF 15.65' LT.
CLASS III EXC. 1 CY

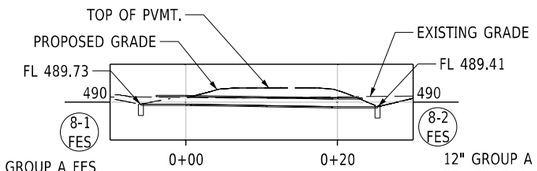

12" GROUP A FES
STA 70+55.18
OFF 12.41' LT.
CLASS III EXC. = 1 CY

20' - 12" GROUP A PIPE @ 1.60%
Q_{25} = 0.22 CFS CLASS III EXC. = 5 CY

12" GROUP A FES
STA 70+57.27
OFF 6.86' RT.
CLASS III EXC. = 2 CY

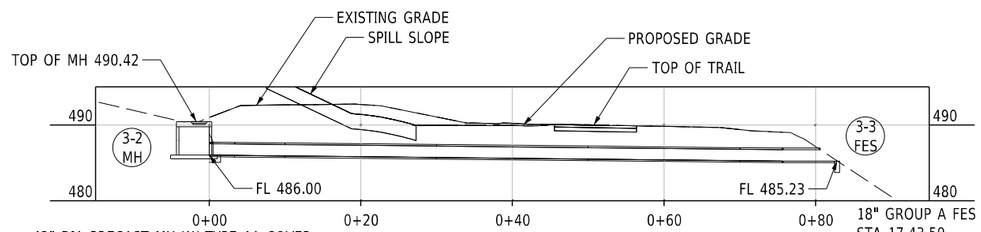

42" DIA PRECAST MH W/ TYPE 1A COVER
STA 18+18.86 OFF 46.95' LT.
D = 6.42' CLASS III EXC. = 14 CY

76' - 18" GROUP A PIPE @ 1.01%
CLASS III EXC = 69 CY

18" GROUP A FES
STA 17.43.59
OFF 55.06' LT.
CLASS III EXC = 4 CY

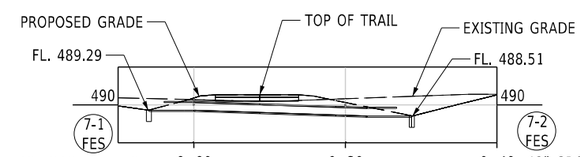

12" GROUP A FES
STA 71+81.55
OFF 8.86' LT.
CLASS III EXC. 1 CY

23' - 12" GROUP A PIPE @ 3.39%
Q15 = 0.46 CFS CLASS III EXC. 8 CY

12" GROUP A FES
STA 71+81.86
OFF 14.00' RT.
CLASS III EXC. 1 CY

NOTE:
COMPACTED GRANULAR BACKFILL TO BE USED UNDER ALL PAVEMENT INCLUDING TRAILS. EXTEND 45° OUT FROM EDGE OF PAVEMENT.

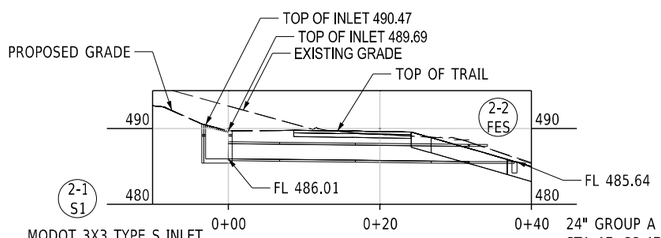

MODOT 3X3 TYPE S INLET
STA 17+53.44
OFF 26.30' RT.
CLASS III EXC. = 8 CY

32' - 24" GROUP A PIPE @ 1.15%
Q_{25} = 30.99 CFS CLASS III EXC. = 29 CY

24" GROUP A FES
STA 17+22.47
OFF 26.30' RT.
CLASS III EXC. = 4 CY

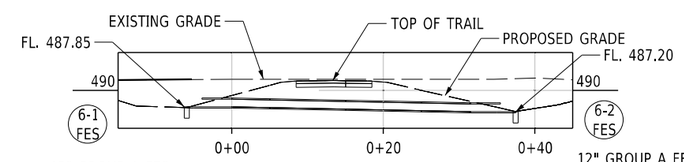

12" GROUP A FES
STA 61+04.33
OFF 13.50' RT.
CLASS III EXC. 1 C.Y.

32' - 12" GROUP A PIPE @ 2.03%
Q_{25} = 0.60 CFS CLASS III EXC. 17 C.Y.

12" GROUP A FES
STA 61+04.77
OFF 18.03' LT.
CLASS III EXC. 1 C.Y.

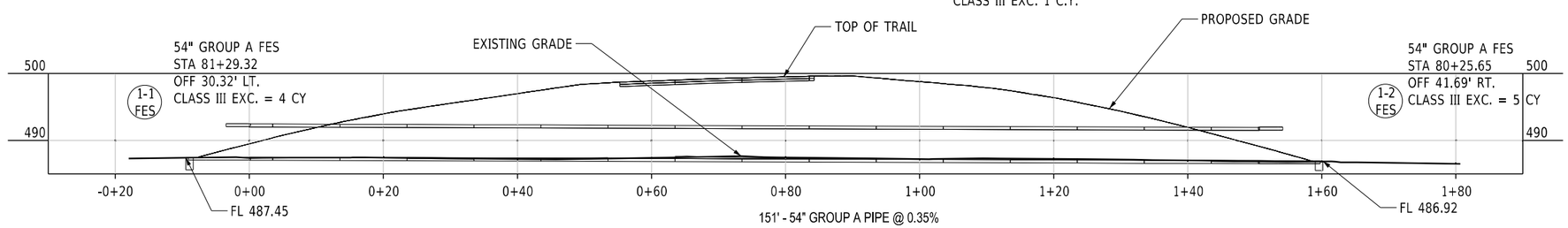

151' - 54" GROUP A PIPE @ 0.35%
Q_{25} = 497.05 CFS CLASS III EXC. = 43 CY

STATE OF MISSOURI
Kevin Thomas Foy O'Shaughnessy
NUMBER PE-2017000345
PROFESSIONAL ENGINEER

THIS SHEET HAS BEEN SIGNED, SEALED AND DATED ELECTRONICALLY

DATE PREPARED
4/24/2025

ROUTE	STATE
NOR	MO
DISTRICT	SHEET NO.
SL	34

COUNTY
ST. CHARLES

JOB NO.
JSL0112

CONTRACT ID.

PROJECT NO.

BRIDGE NO.

DATE	DESCRIPTION

IF A SEAL IS PRESENT ON THIS SHEET IT HAS BEEN ELECTRONICALLY SEALED AND DATED.

MISSOURI HIGHWAYS AND TRANSPORTATION COMMISSION
105 WEST CAPITOL
JEFFERSON CITY, MO 65102
1-888-ASK-MODOT (1-888-275-6636)

CULVERT SECTIONS

CDG ENGINEERS
One Cambridge Plaza
St. Louis, Missouri 63139
T. 314 781 7770
F. 314 781 9075
Missouri State Certificate of Authority #1721

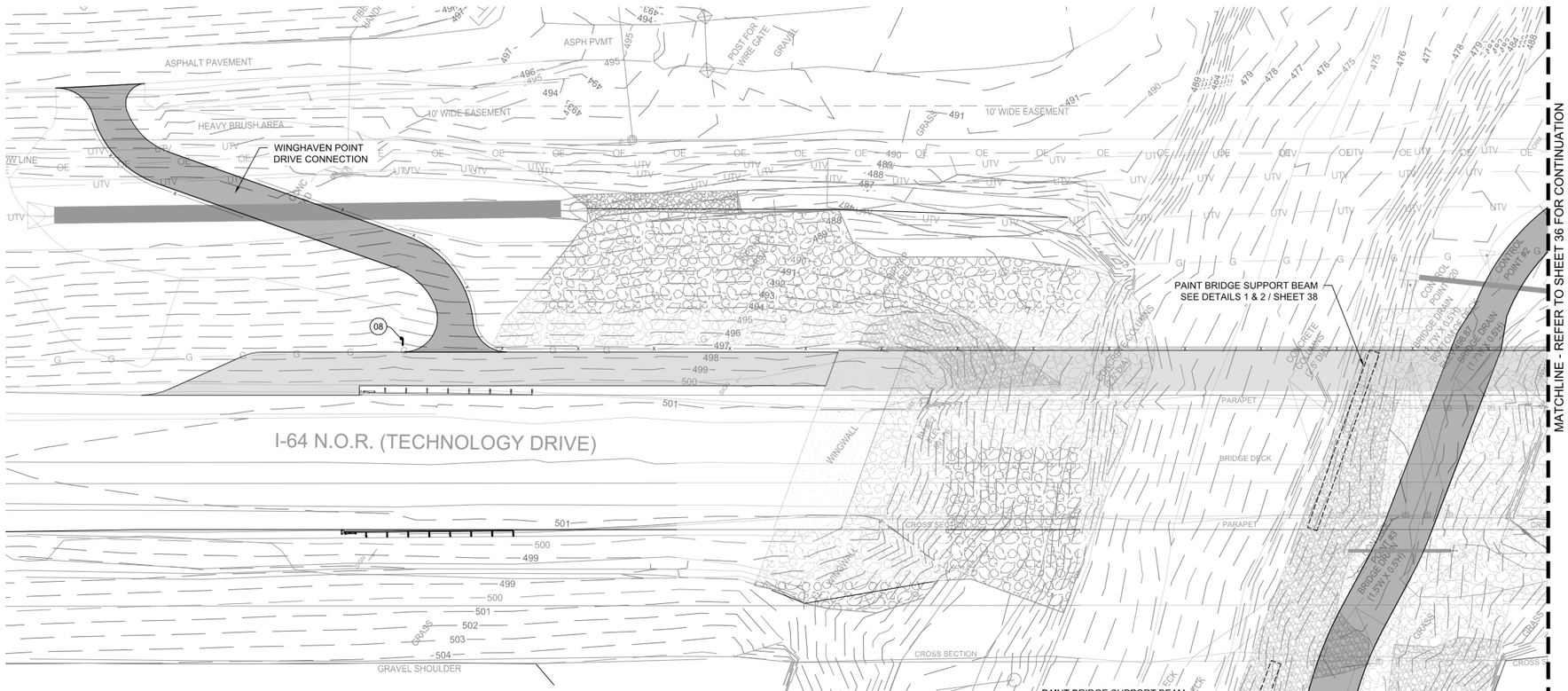

SIGNAGE NOTES

1. UNDERGROUND FACILITIES, STRUCTURES, AND UTILITIES HAVE BEEN PLOTTED FROM AVAILABLE SURVEYS AND RECORDS, AND THEREFORE, THEIR LOCATIONS MUST BE CONSIDERED APPROXIMATE ONLY. IT IS POSSIBLE THERE MAY BE OTHER UTILITIES PRESENT. THE EXISTENCE OF WHICH IS PRESENTLY NOT KNOWN OR SHOWN. IT IS THE CONTRACTOR'S RESPONSIBILITY TO DETERMINE THEIR EXISTENCE AND EXACT LOCATION AND TO AVOID DAMAGE THERETO. MISSOURI 811 SHALL BE CONTACTED TO LOCATE PUBLIC UTILITIES.
2. THE SIGNS INDICATED ON THESE PLANS ARE BASED ON THE GREAT RIVERS GREENWAY (GRG) EXTERIOR SIGN DESIGN STANDARDS, FEBRUARY 2022. THIS STANDARD SHOULD BE REFERENCED WHEN COMPLETING ALL SHOP DRAWINGS AND SUBMITTALS.
3. ALL TRAIL SIGN TYPES MUST BE LOCATED WITH A MINIMUM OF 1'-6" CLEARANCE BETWEEN THE TRAIL EDGE AND THE NEAREST EDGE OF ANY SIGN ELEMENT. 2'-0" CLEARANCE IS DESIRABLE WHERE AVAILABLE. 3'-0" IS THE MAXIMUM DISTANCE BETWEEN THE SIGN EDGE AND THE TRAIL.
4. ARTWORK FOR MAIN TRAILHEAD KIOSK SIGNS TO BE PROVIDED BY GREAT RIVERS GREENWAY.
5. THE SIGN DRAWINGS SHOW DESIGN INTENT ONLY. THE SIGN CONTRACTOR IS RESPONSIBLE FOR THE FABRICATION AND INSTALLATION OF THE SIGNS SHOWN ON THESE DRAWINGS. THE CONTRACTOR IS RESPONSIBLE FOR THE DESIGN AND ENGINEERING OF ALL STRUCTURAL, ATTACHMENT, ANCHORING AND FOUNDATION FEATURES.
6. THE CONTRACTOR SHALL SUBMIT SHOP DRAWINGS FOR REVIEW AND APPROVAL PRIOR TO THE FABRICATION AND INSTALLATION OF ANY SIGNS ON THE PROJECT. SIGNS REQUIRING STRUCTURE, FOUNDATION, AND/OR ANCHORING SHALL BE STAMPED AND SEALED BY A MISSOURI-LICENSED ENGINEER. THE CONTRACTOR WILL BE RESPONSIBLE FOR SECURING ALL NECESSARY SIGN PERMITS.
7. ALL HARDWARE AND FASTENERS ARE TO BE CONCEALED UNLESS OTHERWISE NOTED. FINISH ALL EXPOSED HARDWARE AND FASTENERS TO MATCH SURROUNDING SIGN SURFACES (COLORS) UNLESS OTHERWISE NOTED. ALL HARDWARE TO BE TAMPER RESISTANT.
8. THE CONTRACTOR AND OR SIGN FABRICATOR IS RESPONSIBLE FOR OBTAINING/PURCHASING ALL PROJECT TYPEFACES REQUIRED FOR THE PRODUCTION OF ALL THE SIGNS.
9. ALL GRG STANDARD SIGNS SHALL IDENTIFY THE GREENWAY AS DARDENNE GREENWAY UNLESS OTHERWISE NOTED. THE FINAL LOCATION OF ALL SIGNS SHALL BE STAKED IN THE FIELD AND APPROVED BY THE OWNER'S REPRESENTATIVE PRIOR TO INSTALLATION. LANDSCAPE MATERIAL SHALL BE EITHER INSTALLED OR STAKED OUT AT THE SAME TIME SO FINAL SIGN LOCATIONS CAN BE COORDINATED IN THE FIELD PRIOR TO INSTALLATION OF SIGNAGE.
10. THE CONTRACTOR IS TO VERIFY AND CONFIRM THE LOCATION OF ALL PROPERTY LINES AND UTILITIES PRIOR TO COMPLETING ANY WORK NEAR ADJACENT PROPERTIES OR IN ANY EASEMENT AREAS.

LEGEND

03 — SIGN LOCATION NUMBER (REFER TO SIGN MESSAGE SCHEDULE THIS SHEET)

0' 20' 40' 60'
One Inch = Twenty Feet

SIGNAGE MESSAGE SCHEDULE

LOCATION NUMBER	TYPE	MESSAGE	COMMENTS
1	GRG Ix-2	DARDENNE GREENWAY	MESSAGE ON SOUTH FACE OF SIGN
		DARDENNE GREENWAY	MESSAGE ON NORTH FACE OF SIGN
2	GRG IN-1	(INTERPRETIVE - DARDENNE CREEK AND DARDENE CREEK WATERSHED)	GRAPHICS TO BE PROVIDED BY GREAT RIVERS GREENWAY PRIOR TO SHOP DRAWING SUBMITTAL
3	GRG Kx-1	(MAP ON ONE SIDE AND GENERAL GREENWAY INFO ON THE OTHER SIDE)	GRAPHICS TO BE PROVIDED BY GREAT RIVERS GREENWAY PRIOR TO SHOP DRAWING SUBMITTAL
4	GRG GX-6	◄TRAILHEAD ◄DARDENNE CREEK CROSSING	MESSAGE ON NORTH FACE OF SIGN
		▲BLUEBIRD MEADOW PARK ►TRAILHEAD	MESSAGE ON SOUTH SIDE OF SIGN
5	GRG GX-6	▲DARDENNE CREEK CROSSING	MESSAGE ON NORTH SIDE OF SIGN
		▲BLUEBIRD MEADOW PARK ►TRAILHEAD	MESSAGE ON SOUTH FACE OF SIGN
6	GRG GX-99	◄BLUEBIRD MEADOW PARK ◄TRAILHEAD	MESSAGE ON WEST SIDE OF SIGN
		▲WINGHAVEN POINT DRIVE ►BLUEBIRD MEADOW PARK	MESSAGE ON EAST SIDE OF SIGN
7	GRG Gx-2	DARDENNE GREENWAY	MESSAGE ON EAST FACE OF SIGN
8	GRG GX-99	▲BLUEBIRD MEADOW PARK ◄WINGHAVEN POINT DRIVE	MESSAGE ON WEST SIDES OF SIGN
		►WINGHAVEN POINT DRIVE	MESSAGE ON EAST SIDES OF SIGN
9	GRG Gx-2	DARDENNE GREENWAY	MESSAGE ON WEST FACE OF SIGN
10	FREE-STANDING SIGN	GREAT RIVERS GREENWAY - DARDENNE GREENWAY	SEE SIGNAGE DETAIL 3, SHEET 38 FOR DETAIL (PANELS ON BOTH SIDES OF SIGN)
11	ADA PARKING SIGN	VAN ACCESSIBLE ADA PARKING SIGN	LOCATE SIGN POST CENTER OF STALL 6 INCHES OFFSET FROM TRAIL PAVEMENT

STATE OF MISSOURI
SCOTT V. EMMELKAMP
NUMBER LA-120
LANDSCAPE ARCHITECT
EXP. 12/31/2026

DATE	04/23/2025
DATE PREPARED	04/23/2025
ROUTE	NOR
STATE	MO
DISTRICT	SL
SHEET NO.	35
COUNTY	ST. CHARLES
JOB NO.	JSL0112
CONTRACT ID.	-
PROJECT NO.	-
BRIDGE NO.	-

DATE	DESCRIPTION

IF A SEAL IS PRESENT ON THIS SHEET IT HAS BEEN ELECTRONICALLY SEALED AND DATED.

MISSOURI HIGHWAYS AND TRANSPORTATION COMMISSION
105 WEST CAPITOL
JEFFERSON CITY, MO 65102
1-888-ASK-MODOT (1-888-275-6636)

SIGNAGE & SITE AMENITIES PLAN

PLANNING DESIGN STUDIO
2916 Sutton Boulevard, Suite 1
Saint Louis, Missouri 63143
T: 314.241.3600
MO State Certificate of Authority # LAC-2006001845

SIGNAGE MESSAGE SCHEDULE			
LOCATION NUMBER	TYPE	MESSAGE	COMMENTS
1	GRG Ix-2	DARDENNE GREENWAY	MESSAGE ON SOUTH FACE OF SIGN
		DARDENNE GREENWAY	MESSAGE ON NORTH FACE OF SIGN
2	GRG IN-1	(INTERPRETIVE - DARDENNE CREEK AND DARDENE CREEK WATERSHED)	GRAPHICS TO BE PROVIDED BY GREAT RIVERS GREENWAY PRIOR TO SHOP DRAWING SUBMITTAL
3	GRG Kx-1	(MAP ON ONE SIDE AND GENERAL GREENWAY INFO ON THE OTHER SIDE)	GRAPHICS TO BE PROVIDED BY GREAT RIVERS GREENWAY PRIOR TO SHOP DRAWING SUBMITTAL
4	GRG GX-6	◄TRAILHEAD ◄DARDENNE CREEK CROSSING	MESSAGE ON NORTH FACE OF SIGN
		▲BLUEBIRD MEADOW PARK ►TRAILHEAD	MESSAGE ON SOUTH SIDE OF SIGN
5	GRG GX-6	▲DARDENNE CREEK CROSSING	MESSAGE ON NORTH SIDE OF SIGN
		▲BLUEBIRD MEADOW PARK ►TRAILHEAD	MESSAGE ON SOUTH FACE OF SIGN
6	GRG GX-99	◄BLUEBIRD MEADOW PARK ◄TRAILHEAD	MESSAGE ON WEST SIDE OF SIGN
		▲WINGHAVEN POINT DRIVE ►BLUEBIRD MEADOW PARK	MESSAGE ON EAST SIDE OF SIGN
7	GRG Gx-2	DARDENNE GREENWAY	MESSAGE ON EAST FACE OF SIGN
8	GRG GX-99	▲BLUEBIRD MEADOW PARK ◄WINGHAVEN POINT DRIVE	MESSAGE ON WEST SIDES OF SIGN
		►WINGHAVEN POINT DRIVE	MESSAGE ON EAST SIDES OF SIGN
9	GRG Gx-2	DARDENNE GREENWAY	MESSAGE ON WEST FACE OF SIGN
10	FREE-STANDING SIGN	GREAT RIVERS GREENWAY - DARDENNE GREENWAY	SEE SIGNAGE DETAIL 3, SHEET 38 FOR DETAIL (PANELS ON BOTH SIDES OF SIGN)
11	ADA PARKING SIGN	VAN ACCESSIBLE ADA PARKING SIGN	LOCATE SIGN POST CENTER OF STALL 6 INCHES OFFSET FROM TRAIL PAVEMENT

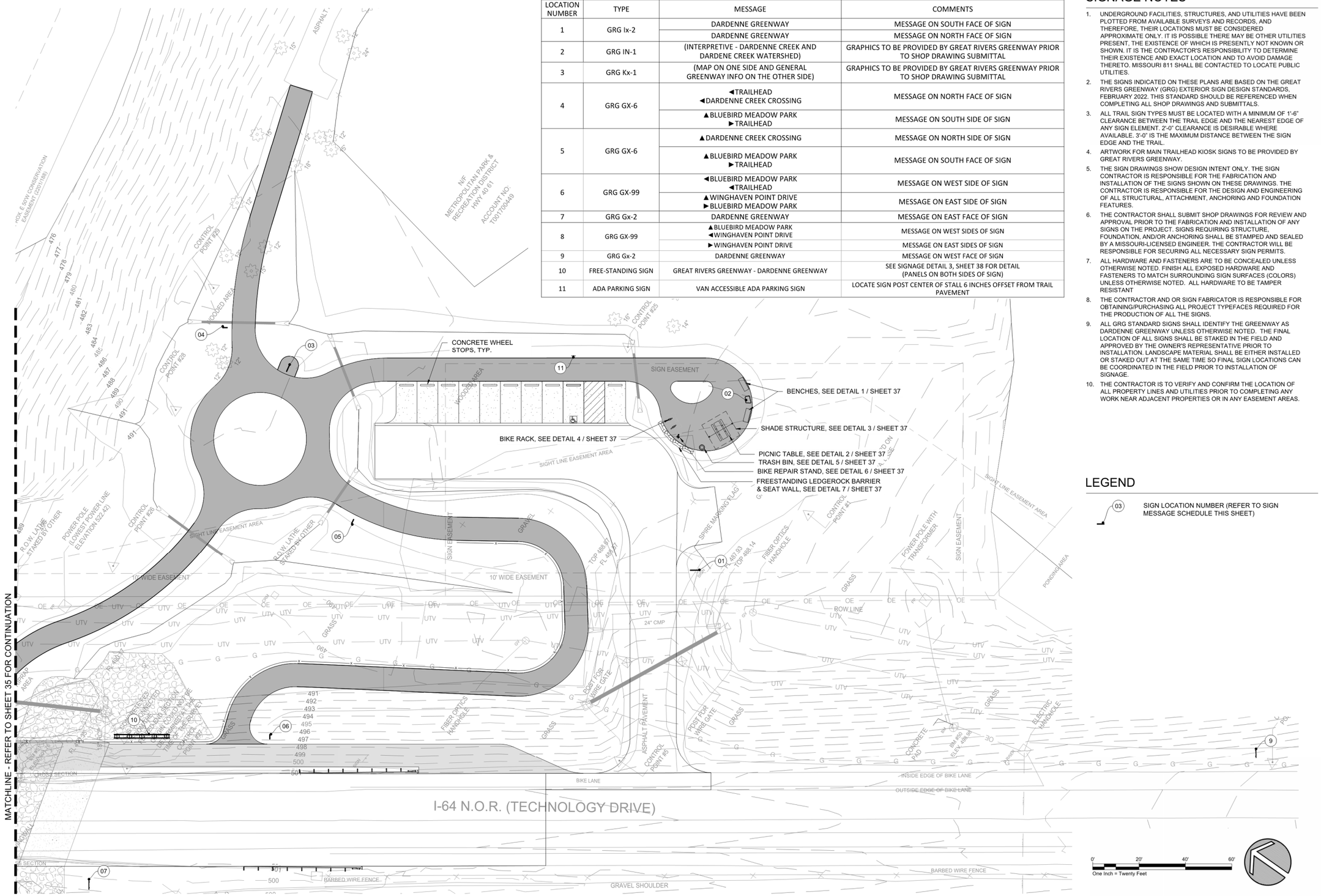

SIGNAGE NOTES

1. UNDERGROUND FACILITIES, STRUCTURES, AND UTILITIES HAVE BEEN PLOTTED FROM AVAILABLE SURVEYS AND RECORDS, AND THEREFORE, THEIR LOCATIONS MUST BE CONSIDERED APPROXIMATE ONLY. IT IS POSSIBLE THERE MAY BE OTHER UTILITIES PRESENT, THE EXISTENCE OF WHICH IS PRESENTLY NOT KNOWN OR SHOWN. IT IS THE CONTRACTOR'S RESPONSIBILITY TO DETERMINE THEIR EXISTENCE AND EXACT LOCATION AND TO AVOID DAMAGE THERETO. MISSOURI 811 SHALL BE CONTACTED TO LOCATE PUBLIC UTILITIES.
2. THE SIGNS INDICATED ON THESE PLANS ARE BASED ON THE GREAT RIVERS GREENWAY (GRG) EXTERIOR SIGN DESIGN STANDARDS, FEBRUARY 2022. THIS STANDARD SHOULD BE REFERENCED WHEN COMPLETING ALL SHOP DRAWINGS AND SUBMITTALS.
3. ALL TRAIL SIGN TYPES MUST BE LOCATED WITH A MINIMUM OF 1'-6" CLEARANCE BETWEEN THE TRAIL EDGE AND THE NEAREST EDGE OF ANY SIGN ELEMENT. 2'-0" CLEARANCE IS DESIRABLE WHERE AVAILABLE. 3'-0" IS THE MAXIMUM DISTANCE BETWEEN THE SIGN EDGE AND THE TRAIL.
4. ARTWORK FOR MAIN TRAILHEAD KIOSK SIGNS TO BE PROVIDED BY GREAT RIVERS GREENWAY.
5. THE SIGN DRAWINGS SHOW DESIGN INTENT ONLY. THE SIGN CONTRACTOR IS RESPONSIBLE FOR THE FABRICATION AND INSTALLATION OF THE SIGNS SHOWN ON THESE DRAWINGS. THE CONTRACTOR IS RESPONSIBLE FOR THE DESIGN AND ENGINEERING OF ALL STRUCTURAL, ATTACHMENT, ANCHORING AND FOUNDATION FEATURES.
6. THE CONTRACTOR SHALL SUBMIT SHOP DRAWINGS FOR REVIEW AND APPROVAL PRIOR TO THE FABRICATION AND INSTALLATION OF ANY SIGNS ON THE PROJECT. SIGNS REQUIRING STRUCTURE, FOUNDATION, AND/OR ANCHORING SHALL BE STAMPED AND SEALED BY A MISSOURI-LICENSED ENGINEER. THE CONTRACTOR WILL BE RESPONSIBLE FOR SECURING ALL NECESSARY SIGN PERMITS.
7. ALL HARDWARE AND FASTENERS ARE TO BE CONCEALED UNLESS OTHERWISE NOTED. FINISH ALL EXPOSED HARDWARE AND FASTENERS TO MATCH SURROUNDING SIGN SURFACES (COLORS) UNLESS OTHERWISE NOTED. ALL HARDWARE TO BE TAMPER RESISTANT
8. THE CONTRACTOR AND OR SIGN FABRICATOR IS RESPONSIBLE FOR OBTAINING/PURCHASING ALL PROJECT TYPEFACES REQUIRED FOR THE PRODUCTION OF ALL THE SIGNS.
9. ALL GRG STANDARD SIGNS SHALL IDENTIFY THE GREENWAY AS DARDENNE GREENWAY UNLESS OTHERWISE NOTED. THE FINAL LOCATION OF ALL SIGNS SHALL BE STAKED IN THE FIELD AND APPROVED BY THE OWNER'S REPRESENTATIVE PRIOR TO INSTALLATION. LANDSCAPE MATERIAL SHALL BE EITHER INSTALLED OR STAKED OUT AT THE SAME TIME SO FINAL SIGN LOCATIONS CAN BE COORDINATED IN THE FIELD PRIOR TO INSTALLATION OF SIGNAGE.
10. THE CONTRACTOR IS TO VERIFY AND CONFIRM THE LOCATION OF ALL PROPERTY LINES AND UTILITIES PRIOR TO COMPLETING ANY WORK NEAR ADJACENT PROPERTIES OR IN ANY EASEMENT AREAS.

LEGEND

03 — SIGN LOCATION NUMBER (REFER TO SIGN MESSAGE SCHEDULE THIS SHEET)

STATE OF MISSOURI
SCOTT V. EMMELKAMP
NUMBER LA-120
LANDSCAPE ARCHITECT
EXP. 12/31/2026

DATE	04/23/2025
DATE PREPARED	04/23/2025
ROUTE	NOR
STATE	MO
DISTRICT	SL
SHEET NO.	36
COUNTY	ST. CHARLES
JOB NO.	JSL0112
CONTRACT ID.	
PROJECT NO.	
BRIDGE NO.	

DATE	DESCRIPTION

IF A SEAL IS PRESENT ON THIS SHEET IT HAS BEEN ELECTRONICALLY SEALED AND DATED.

MISSOURI HIGHWAYS AND TRANSPORTATION COMMISSION

105 WEST CAPITOL
JEFFERSON CITY, MO 65102
1-888-ASK-MODOT (1-888-275-6636)

SIGNAGE & SITE AMENITIES PLAN

PLANNING DESIGN STUDIO
2816 Sutton Boulevard, Suite 1
Saint Louis, Missouri 63143
T: 314.241.3600
MO State Certificate of Authority # LAC-2006001845

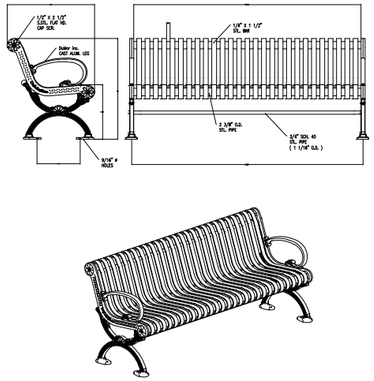

MANUFACTURER: DUMOR OR APPROVED EQUAL
MODEL: 493 SERIES (6' BENCH)
COLOR: BLACK

1 BENCHES
NTS

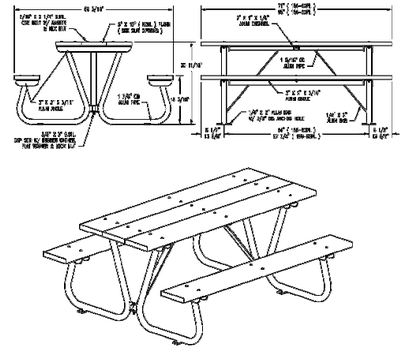

MANUFACTURER: DUMOR OR APPROVED EQUAL
MODEL: 77-60A
(ALUMINUM PICNIC TABLE)
FRAME COLOR: POWDER COATED BLACK

2 PICNIC TABLE
NTS

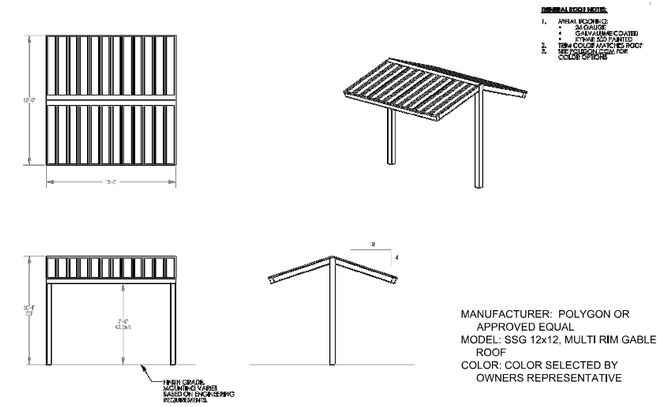

MANUFACTURER: POLYGON OR APPROVED EQUAL
MODEL: SSG 12x12, MULTI RIM GABLE ROOF
COLOR: COLOR SELECTED BY OWNERS REPRESENTATIVE

3 SHADE STRUCTURE
NTS

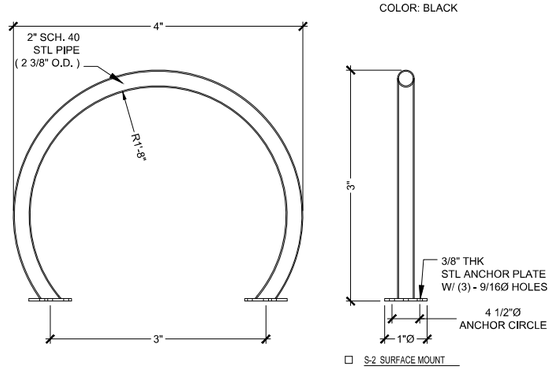

MANUFACTURER: DUMOR OR APPROVED EQUAL
MODEL: 292-00/S-3
COLOR: BLACK

4 BIKE RACK
NTS

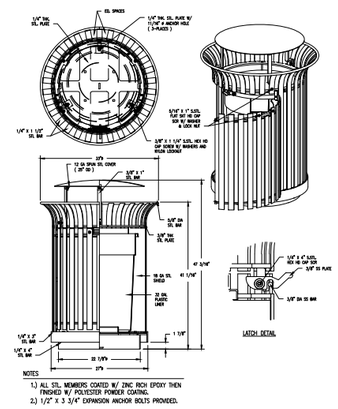

MANUFACTURER: DUMOR OR APPROVED EQUAL
MODEL: 157-32SH W/ CVB-30-FTO
COLOR: BLACK

5 TRASH BIN
NTS

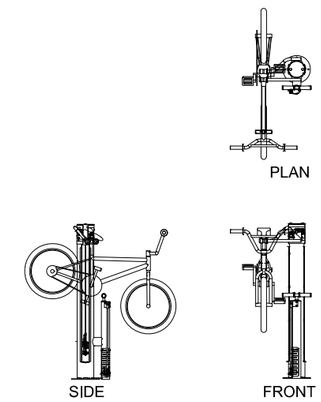

MANUFACTURER: DERO OR APPROVED EQUAL
MODEL: FIXIT PLUS, 1 BIKE CAPACITY WITH ATTACHED AIR KIT PRIME
COLOR: POWDER COAT - ORANGE

6 BIKE REPAIR STAND
NTS

NOTES:
1. LIMESTONE LEDGEROCK TO BE ADOBE BUFF LEDGEROCK FROM EARTHWORKS (573-547-9097) OR APPROVED EQUAL. ROUGH DIMENSIONS ARE 24"-30" D x 12"-14" T x 3' TO 5' L.

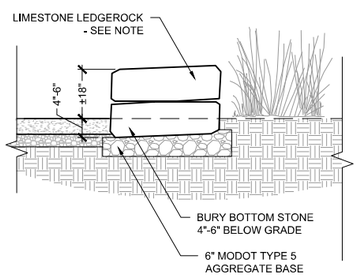

7 FREESTANDING LEDGEROCK BARRIER & SEAT WALL
NTS

STATE OF MISSOURI
SCOTT V. EMMELKAMP
NUMBER LA-120
LANDSCAPE ARCHITECT
EXP. 12/31/2026

DATE
04/23/2025
DATE PREPARED
04/23/2025

ROUTE	STATE
NOR	MO
DISTRICT	SHEET NO.
SL	37

COUNTY: ST. CHARLES
JOB NO.: JSL0112
CONTRACT ID.: -
PROJECT NO.: -
BRIDGE NO.: -

DATE	DESCRIPTION

IF A SEAL IS PRESENT ON THIS SHEET IT HAS BEEN ELECTRONICALLY SEALED AND DATED.

MISSOURI HIGHWAYS AND TRANSPORTATION COMMISSION
105 WEST CAPITOL
JEFFERSON CITY, MO 65102
1-888-ASK-MODOT (1-888-275-6636)

SIGNAGE & SITE AMENITIES DETAILS

PLANNING DESIGN STUDIO
2916 Sutton Boulevard, Suite 1
Saint Louis, Missouri 63143
T: 314.241.3030
MO State Certificate of Authority # LAC-2006001845

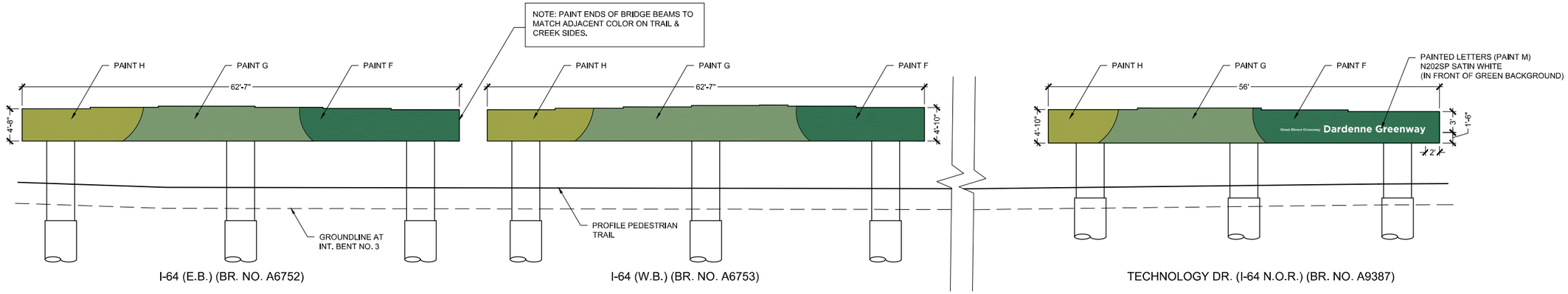

1 BRIDGE SUPPORT BEAM PAINTING ELEVATION (TRAIL SIDE)
NTS

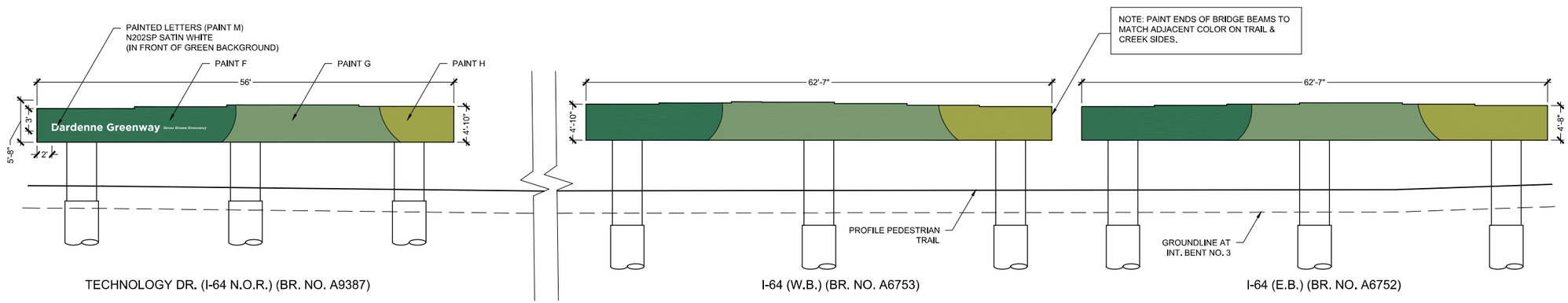

2 BRIDGE SUPPORT BEAM PAINTING ELEVATION (CREEK SIDE)
NTS

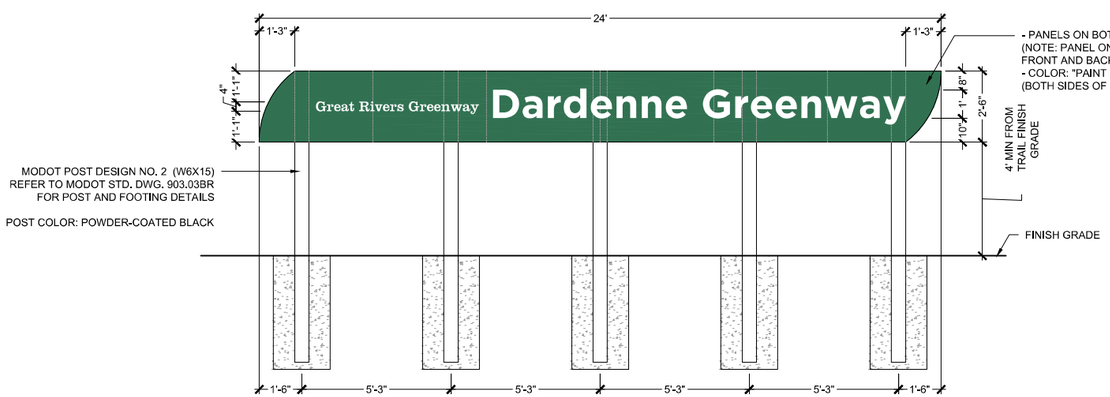

- PANELS ON BOTH SIDES OF SIGN (NOTE: PANEL ON BACK SHOULD BE OPPOSITE SO THAT THE FRONT AND BACK PANEL CURVES ALIGN)
- COLOR: "PAINT F" (BOTH SIDES OF SIGN TO BE SAME COLOR)

NOTE: MANUFACTURER TO PROVIDE SIGN SHOP DRAWINGS PRIOR TO FABRICATION

SIGN FABRICATED BY GRG'S PRE-SELECTED SIGN SUPPLIER:
ENGRAPHIX ARCHITECTURAL SIGNAGE, INC.
132 HANLEY INDUSTRIAL COURT ST. LOUIS, MO 63144
ED BRIMER, 314-740-5052, ED@ENGRAPHIX.NET

CONTRACTOR TO INSTALL SIGN

3 FREE-STANDING SIGN - ELEVATION
NTS

PAINT COLOR AND LETTERING KEY

PAINT F
SHERWIN-WILLAMS
SUMMER LAWN

PAINT G
SHERWIN-WILLAMS
TUCUMAN PARROT

PAINT H
SHERWIN-WILLAMS
HOWIE GREEN

GREENWAY NAME FONT:
GOTHAM BOLD
12" TALL

Dardenne

GRG NAME FONT:
CLARENDON ROMAN
4" TALL

Great Rivers Greenway

4 GRG GRAPHIC SIGN STANDARDS
NTS

STATE OF MISSOURI
SCOTT V. EMMELKAMP
NUMBER LA-120
LANDSCAPE ARCHITECT
EXP. 12/31/2026

DATE	04/23/2025
DATE PREPARED	04/23/2025
ROUTE	NOR
STATE	MO
DISTRICT	SL
SHEET NO.	38
COUNTY	ST. CHARLES
JOB NO.	JSL0112
CONTRACT ID.	-
PROJECT NO.	-
BRIDGE NO.	-

DATE	DESCRIPTION

IF A SEAL IS PRESENT ON THIS SHEET IT HAS BEEN ELECTRONICALLY SEALED AND DATED.

MISSOURI HIGHWAYS AND TRANSPORTATION COMMISSION
105 WEST CAPITOL
JEFFERSON CITY, MO 65102
1-888-ASK-MODOT (1-888-275-6636)

SIGNAGE & SITE AMENITIES DETAILS

PLANNING DESIGN STUDIO
2916 Sutton Boulevard, Suite 1
Saint Louis, Missouri 63143
T: 314.241.3600
MO State Certificate of Authority # LAC-2006001845

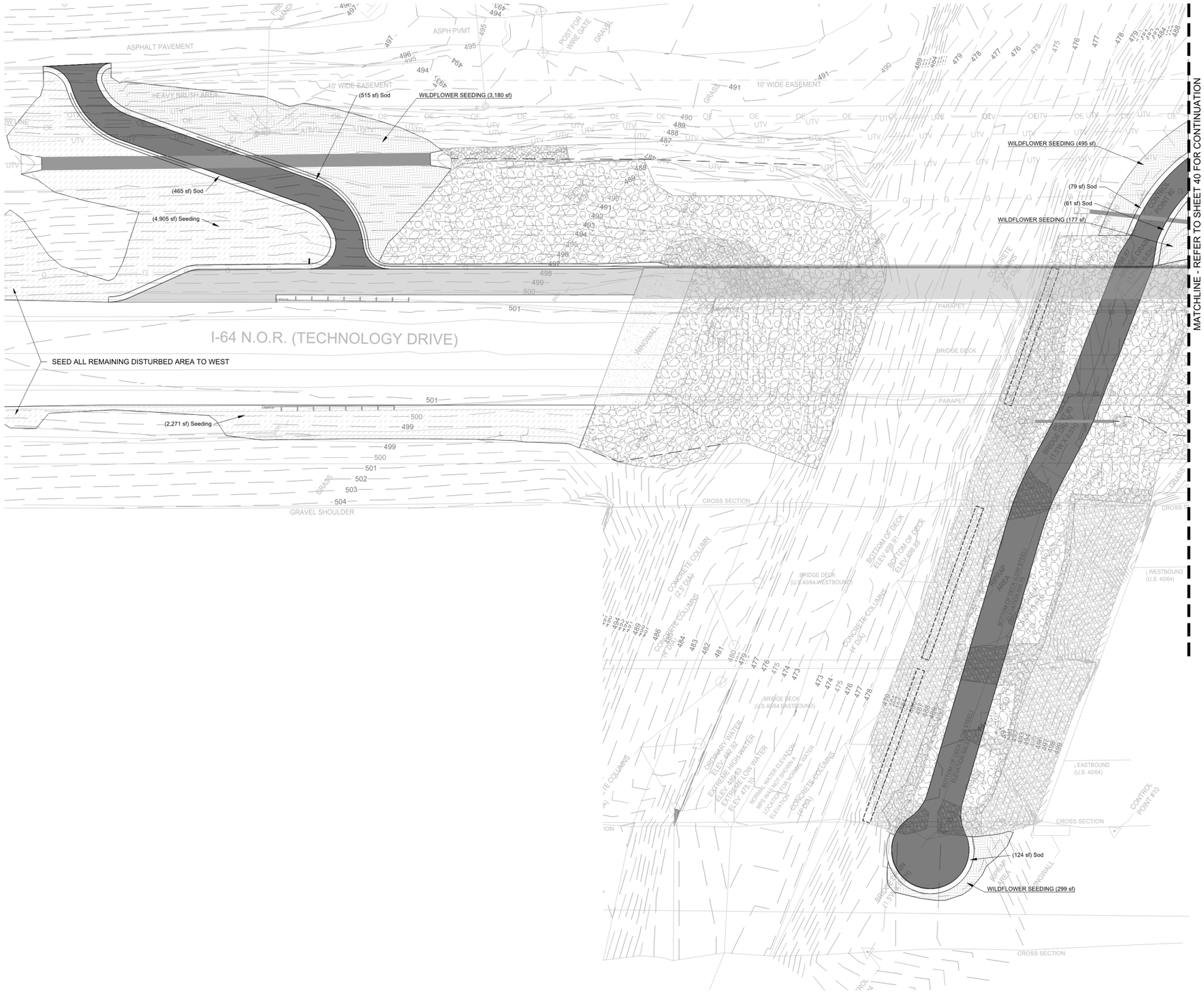

PLANTING NOTES

1. UNLESS OTHERWISE NOTED, ALL NATURAL VEGETATION SHALL BE MAINTAINED WHERE IT DOES NOT INTERFERE WITH CONSTRUCTION. PROTECT EXISTING UTILITIES, STRUCTURES OR VEGETATION FROM DAMAGE. THE CONTRACTOR SHALL MAINTAIN AND SECURE THE PROJECT SITE TO PROTECT THE PUBLIC FROM INJURY DUE TO WORK AND RELATED MATERIAL.
2. UNDERGROUND FACILITIES, STRUCTURES AND UTILITIES MUST BE CONSIDERED APPROXIMATE ONLY. THERE MAY BE OTHERS NOT PRESENTLY KNOWN OR SHOWN. THE LANDSCAPE CONTRACTOR SHALL BE RESPONSIBLE FOR DETERMINING AND VERIFYING THE EXISTENCE OF AND EXACT LOCATION OF ALL UTILITIES.
3. THE LANDSCAPE CONTRACTOR IS ADVISED TO STUDY THE PLANS AND VISIT THE SITE TO BECOME FAMILIAR WITH THE EXISTING CONDITIONS. REPORT ANY DISCREPANCIES IMMEDIATELY TO THE OWNER'S REPRESENTATIVE.
4. THE LANDSCAPE CONTRACTOR SHALL STAKE THE LOCATIONS OF ALL PROPOSED PLANT MATERIAL AND PLANTING BED EDGES FOR APPROVAL BY THE OWNER'S REPRESENTATIVE PRIOR TO INSTALLATION.
5. ALL PLANT MATERIAL SHALL BE WARRANTED FOR A PERIOD OF 12 MONTHS AFTER ACCEPTANCE BY OWNER.
6. CONTRACTOR SHALL STAKE AND BRACE TREES IMMEDIATELY FOLLOWING INSTALLATION ACCORDING TO PLANS, DETAILS, AND SPECIFICATIONS.
7. ALL PLANTING BED EDGES SHALL BE SPADE CUT UNLESS OTHERWISE INDICATED.
8. CONTRACTOR TO SEED ALL AREAS DISTURBED DUE TO CONSTRUCTION ACTIVITIES UNLESS OTHERWISE NOTED FOR SOD.
9. ALL PLANT MATERIAL SHALL BE TAGGED OR OTHERWISE APPROVED BY THE OWNER'S REPRESENTATIVE. APPROVAL IN THE NURSERY DOES NOT INDICATE FINAL ACCEPTANCE.
10. ITEMS SHOWN ON THESE DRAWINGS TAKE PRECEDENCE OVER THE MATERIAL LIST. THE LANDSCAPE CONTRACTOR SHALL VERIFY ALL QUANTITIES AND CONDITIONS PRIOR TO BIDDING AND IMPLEMENTING THE PLAN. NO SUBSTITUTIONS OF TYPES OR SIZE OF PLANT MATERIAL WILL BE ACCEPTED WITHOUT WRITTEN APPROVAL BY THE OWNER'S REPRESENTATIVE.
11. ALL PLANT MATERIAL SHALL CONFORM TO UPPER RANGE LIMITS FOR CALIPER, HEIGHT, AND ROOT BALL DIMENSIONS LISTED IN ANSI Z60.1-2014.
12. TOPSOIL EXCAVATED AND STOCKPILED ON SITE SHALL BE SPREAD TO A DEPTH OF 4" TO ALL AREAS INDICATED TO RECEIVE SEEDING AND ANY AREA DISTURBED BY CONSTRUCTION THAT WILL RECEIVE RESTORATION SEEDING.
13. THE CONTRACTOR IS TO VERIFY AND CONFIRM THE LOCATION OF ALL PROPERTY LINES AND UTILITY EASEMENTS PRIOR TO COMPLETING ANY WORK NEAR ADJACENT PROPERTIES OR IN ANY EASEMENT AREA.
14. REFER TO SHEET 41 FOR PLANTING DETAILS.
15. REFER TO PLAN SHEETS 5 THRU 8 FOR LOCATIONS OF TREES NEAR LIMITS OF WORK TO REMAIN IN PLACE (UIP).

PLANT KEY

	CODE	COMMON NAME
TREES		
	PLA OCC	American Sycamore
	BET NIG	River Birch Multi-Trunk
SHRUBS		
	Cor all	Dwarf Red Twig Dogwood
	Rhu gro	Gro-Low Fragrant Sumac
	Ile jim	Jim Dandy Winterberry
	Ile red	Red Sprite Winterberry
	Ile sha	Shamrock Inkberry Holly
GRASSES		
	Pan nor	Northwind Switch Grass

SYMBOL	CODE	COMMON NAME
GRASSES (PLUG) (EACH) ORNAMENTAL GRASS AREAS		
	Spo he2	Prairie Dropseed
GROUND COVERS		
	Seeding	Drought Tolerant Dwarf Fescue Blend
	Sod	Drought Tolerant Fescue Blend
		WILDFLOWER SEEDING

0' 20' 40' 60'
One Inch = Twenty Feet

STATE OF MISSOURI
SCOTT V. EMMELKAMP
NUMBER LA-120
LANDSCAPE ARCHITECT
EXP. 12/31/2026

DATE	04/23/2025
DATE PREPARED	04/23/2025
ROUTE	NOR
STATE	MO
DISTRICT	SL
SHEET NO.	39
COUNTY	ST. CHARLES
JOB NO.	JSL0112
CONTRACT ID.	
PROJECT NO.	
BRIDGE NO.	

DATE	DESCRIPTION

IF A SEAL IS PRESENT ON THIS SHEET IT HAS BEEN ELECTRONICALLY SEALED AND DATED.

MISSOURI HIGHWAYS AND TRANSPORTATION COMMISSION
105 WEST CAPITOL
JEFFERSON CITY, MO 65102
1-888-ASK-MODOT (1-888-275-6636)

PLANTING PLAN

PLANNING DESIGN STUDIO
2816 Sutton Boulevard, Suite 1
Saint Louis, Missouri 63143
T: 314.241.3600
MO State Certificate of Authority # LAC-2006001845

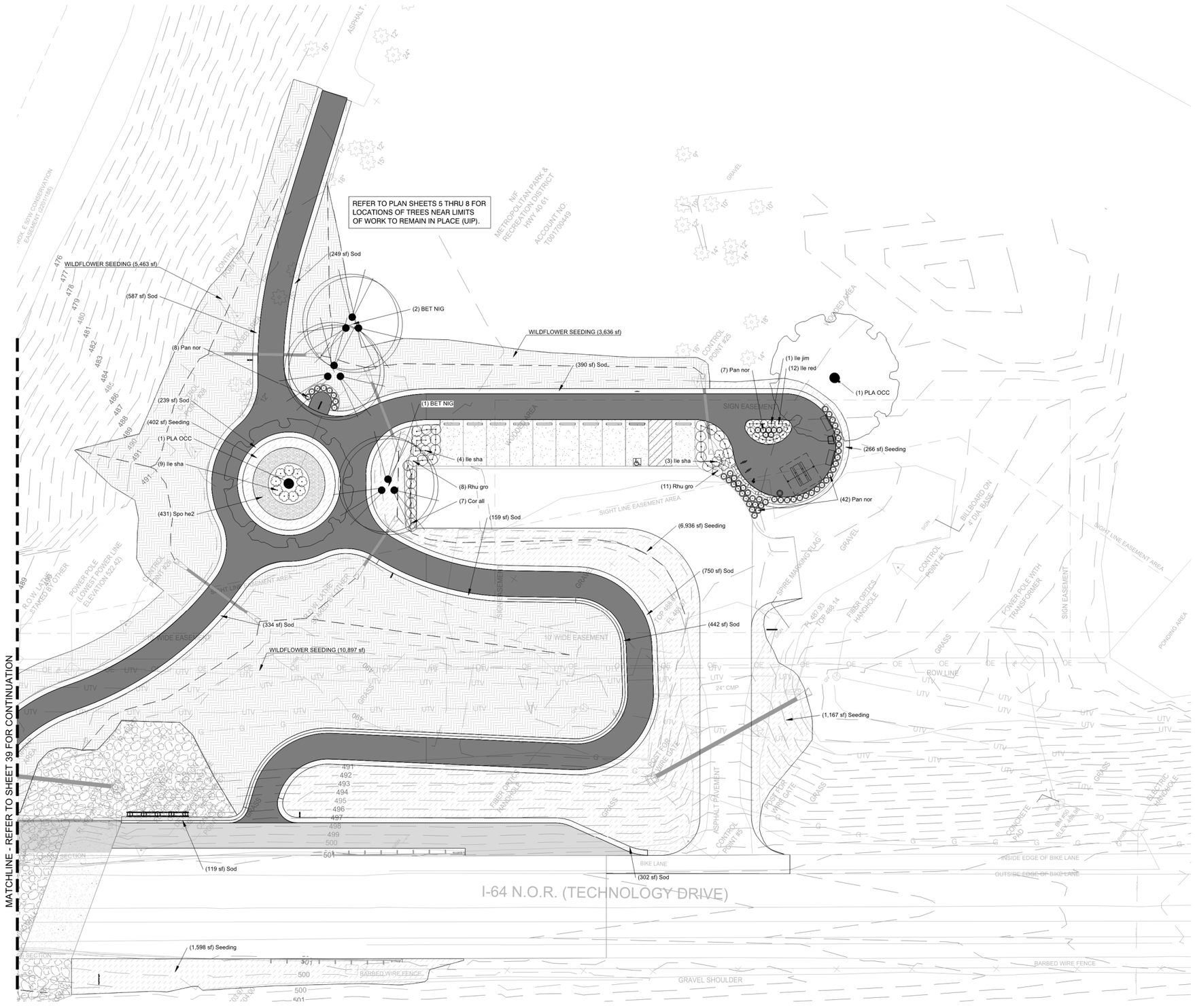

PLANTING NOTES

1. UNLESS OTHERWISE NOTED, ALL NATURAL VEGETATION SHALL BE MAINTAINED WHERE IT DOES NOT INTERFERE WITH CONSTRUCTION. PROTECT EXISTING UTILITIES, STRUCTURES OR VEGETATION FROM DAMAGE. THE CONTRACTOR SHALL MAINTAIN AND SECURE THE PROJECT SITE TO PROTECT THE PUBLIC FROM INJURY DUE TO WORK AND RELATED MATERIAL.
2. UNDERGROUND FACILITIES, STRUCTURES AND UTILITIES MUST BE CONSIDERED APPROXIMATE ONLY. THERE MAY BE OTHERS NOT PRESENTLY KNOWN OR SHOWN. THE LANDSCAPE CONTRACTOR SHALL BE RESPONSIBLE FOR DETERMINING AND VERIFYING THE EXISTENCE OF AND EXACT LOCATION OF ALL UTILITIES.
3. THE LANDSCAPE CONTRACTOR IS ADVISED TO STUDY THE PLANS AND VISIT THE SITE TO BECOME FAMILIAR WITH THE EXISTING CONDITIONS. REPORT ANY DISCREPANCIES IMMEDIATELY TO THE OWNER'S REPRESENTATIVE.
4. THE LANDSCAPE CONTRACTOR SHALL STAKE THE LOCATIONS OF ALL PROPOSED PLANT MATERIAL AND PLANTING BED EDGES FOR APPROVAL BY THE OWNER'S REPRESENTATIVE PRIOR TO INSTALLATION.
5. ALL PLANT MATERIAL SHALL BE WARRANTED FOR A PERIOD OF 12 MONTHS AFTER ACCEPTANCE BY OWNER.
6. CONTRACTOR SHALL STAKE AND BRACE TREES IMMEDIATELY FOLLOWING INSTALLATION ACCORDING TO PLANS, DETAILS, AND SPECIFICATIONS.
7. ALL PLANTING BED EDGES SHALL BE SPADE CUT UNLESS OTHERWISE INDICATED.
8. CONTRACTOR TO SEED ALL AREAS DISTURBED DUE TO CONSTRUCTION ACTIVITIES UNLESS OTHERWISE NOTED FOR SOD.
9. ALL PLANT MATERIAL SHALL BE TAGGED OR OTHERWISE APPROVED BY THE OWNER'S REPRESENTATIVE. APPROVAL IN THE NURSERY DOES NOT INDICATE FINAL ACCEPTANCE.
10. ITEMS SHOWN ON THESE DRAWINGS TAKE PRECEDENCE OVER THE MATERIAL LIST. THE LANDSCAPE CONTRACTOR SHALL VERIFY ALL QUANTITIES AND CONDITIONS PRIOR TO BIDDING AND IMPLEMENTING THE PLAN. NO SUBSTITUTIONS OF TYPES OR SIZE OF PLANT MATERIAL WILL BE ACCEPTED WITHOUT WRITTEN APPROVAL BY THE OWNER'S REPRESENTATIVE.
11. ALL PLANT MATERIAL SHALL CONFORM TO UPPER RANGE LIMITS FOR CALIPER, HEIGHT, AND ROOT BALL DIMENSIONS LISTED IN ANSI Z60.1-2014.
12. TOPSOIL EXCAVATED AND STOCKPILED ON SITE SHALL BE SPREAD TO A DEPTH OF 4" TO ALL AREAS INDICATED TO RECEIVE SEEDING AND ANY AREA DISTURBED BY CONSTRUCTION THAT WILL RECEIVE RESTORATION SEEDING.
13. THE CONTRACTOR IS TO VERIFY AND CONFIRM THE LOCATION OF ALL PROPERTY LINES AND UTILITY EASEMENTS PRIOR TO COMPLETING ANY WORK NEAR ADJACENT PROPERTIES OR IN ANY EASEMENT AREA.
14. REFER TO SHEET 41 FOR PLANTING DETAILS.
15. REFER TO PLAN SHEETS 5 THRU 8 FOR LOCATIONS OF TREES NEAR LIMITS OF WORK TO REMAIN IN PLACE (UIP).

PLANT KEY

	CODE	COMMON NAME
TREES		
	PLA OCC	American Sycamore
	BET NIG	River Birch Multi-Trunk
SHRUBS		
	Cor all	Dwarf Red Twig Dogwood
	Rhu gro	Gro-Low Fragrant Sumac
	Ile jim	Jim Dandy Winterberry
	Ile red	Red Sprite Winterberry
	Ile sha	Shamrock Inkberry Holly
GRASSES		
	Pan nor	Northwind Switch Grass

SYMBOL	CODE	COMMON NAME
GRASSES (PLUG) (EACH) ORNAMENTAL GRASS AREAS		
	Spo he2	Prairie Dropseed
GROUND COVERS		
	Seeding	Drought Tolerant Dwarf Fescue Blend
	Sod	Drought Tolerant Fescue Blend
		WILDFLOWER SEEDING

0' 20' 40' 60'
One Inch = Twenty Feet

STATE OF MISSOURI
SCOTT V. EMMELKAMP
NUMBER LA-120
LANDSCAPE ARCHITECT
EXP. 12/31/2026

DATE
04/23/2025

DATE PREPARED
04/23/2025

ROUTE	STATE
NOR	MO
DISTRICT	SHEET NO.
SL	40

COUNTY: ST. CHARLES
JOB NO.: JSL0112
CONTRACT ID.
PROJECT NO.
BRIDGE NO.

DATE	DESCRIPTION

IF A SEAL IS PRESENT ON THIS SHEET IT HAS BEEN ELECTRONICALLY SEALED AND DATED.

MISSOURI HIGHWAYS AND TRANSPORTATION COMMISSION
105 WEST CAPITOL
JEFFERSON CITY, MO 65102
1-888-ASK-MODOT (1-888-275-6636)

PLANTING PLAN

PLANNING DESIGN STUDIO
2816 Sutton Boulevard, Suite 1
Saint Louis, Missouri 63143
T: 314.241.3600
MO State Certificate of Authority # LAC-2006001845

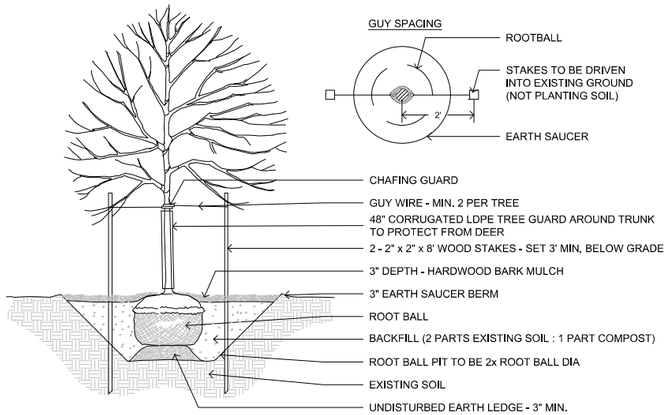

1 DECIDUOUS TREE PLANTING
NTS

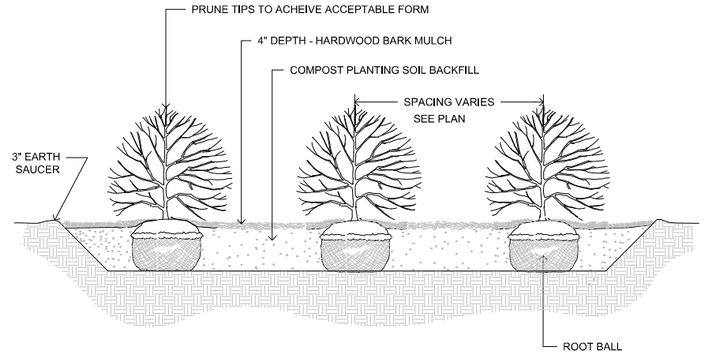

2 SHRUB PLANTING
NTS

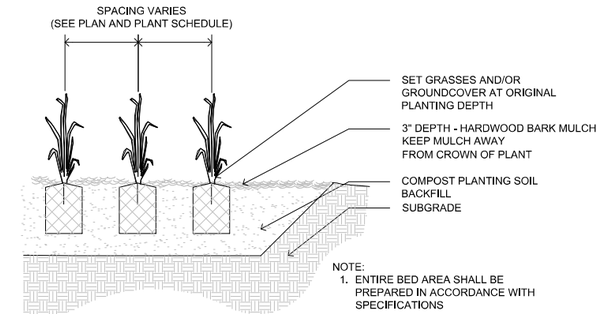

3 ORNAMENTAL GRASSES
NTS

FOR USE WITH ALL PLANT TYPES SPACED EQUIDISTANTLY

SPACING "D"	ROW "A"	NO. OF PLANTS	AREA UNIT
10" O.C.	8.66"	1.66	1 sq. ft.
12" O.C.	10.4"	1.15	
15" O.C.	13.0"	7.38	10 sq. ft.
18" O.C.	15.6"	5.12	
24" O.C.	20.8"	2.9	
30" O.C.	26.0"	1.85	
36" O.C.	30.0"	1.28	
4' O.C.	3.46'	4.61	100 sq. ft.
6' O.C.	5.2'	3.2	
8' O.C.	6.93'	1.8	
10' O.C.	8.66'	1.16	

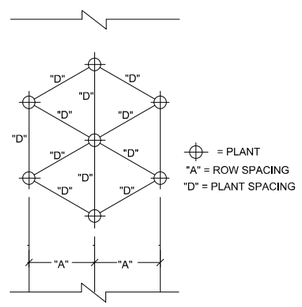

4 PLANT SPACING CHART
NTS

PLANTING BED PLANTING SOIL:

CLEAR SURFACE TO BE REASONABLY FREE OF UNSUITABLE MATERIALS AND PROPERLY DISPOSE. STONE, RUBBLE, BROKEN CONCRETE, CONSTRUCTION WASTE AND SIMILAR MATERIALS GREATER THAN 2 INCHES ARE CONSIDERED UNSUITABLE.

1. ROTOTILL TO A DEPTH OF 6-8". IF THE SOIL IS TOO DENSE FOR A ROTOTILLER, THE SOIL SHOULD FIRST BE BROKEN UP USING A SOIL RIPPER AND THEN ROTOTILLED. CLEAR SOIL TO BE REASONABLY FREE OF UNSUITABLE OBJECTS AND DISPOSE.
2. DISTRIBUTE COMPOST EVENLY TO A MINIMUM DEPTH OF 3" OVER THE SOIL SURFACE. (COMPOST TO BE ST. LOUIS COMPOST "BLACK GOLD" OR APPROVED EQUAL.)
3. RE ROTOTILL SEVERAL TIMES IN PERPENDICULAR DIRECTIONS TO INCORPORATE COMPOST AND OTHER SOIL AMENDMENTS.
4. RAKE AND SMOOTH TO FINISH GRADE, WATER THOROUGHLY, AND ALLOW SOIL TO SETTLE FOR ONE WEEK PRIOR TO INSTALLING PLANTS AND MULCH.

PLANT SCHEDULE

CODE	BOTANICAL / COMMON NAME	SIZE	CONTAINER	NATIVE		QTY	
TREES	(EACH)						
BET NIG	Betula nigra / River Birch Multi-Trunk	2" Cal.	B&B	Yes		3	
PLA OCC	Platanus occidentalis / American Sycamore	2" Cal.	B&B	Yes		2	
	SUBTOTAL:					5	
CODE	**BOTANICAL / COMMON NAME**	**SIZE**	**CONTAINER**	**NATIVE**	**SPACING**	**QTY**	
SHRUBS	(3 GALLON) (EACH)						
Cor all	Cornus sericea 'Alleman's Compact' / Dwarf Red Twig Dogwood	S3-5 RPM	Pot	Yes	48" o.c.	7	
Ile sha	Ilex glabra 'Shamrock' / Shamrock Inkberry Holly	3 gal.	Pot	Yes	48" o.c.	16	
Ile jim	Ilex verticillata 'Jim Dandy' / Jim Dandy Winterberry	3 gal.	Pot	Yes	36" o.c.	1	
Ile red	Ilex verticillata 'Red Sprite' / Red Sprite Winterberry	3 gal.	Pot	Yes	36" o.c.	12	
Rhu gro	Rhus aromatica 'Gro-Low' / Gro-Low Fragrant Sumac	S3-5 RPM	Pot	Yes	48" o.c.	19	
	SUBTOTAL:					55	
GRASSES	(QUART) (EACH)						
Pan nor	Panicum virgatum 'Northwind' / Northwind Switch Grass	Quart	Pot	Yes	30" o.c.	57	
	SUBTOTAL:					57	
GRASSES (PLUG) (EACH) ORNAMENTAL GRASS AREAS							
Spo he2	Sporobolus heterolepis / Prairie Dropseed	Plug	Plug	Yes	12" o.c.	431	
	SUBTOTAL:					431	
GROUND COVERS							
Seeding	Turf Seed / Drought Tolerant Dwarf Fescue Blend	seed				17,545 sf	1,949 sy
Sod	Turf Sod / Drought Tolerant Fescue Blend	sod				4,815 sf	535 sy
	WILDFLOWER SEEDING					24,147 sf	2,683 sy
	LOW PROFILE WILDFLOWERS SEED MIX	seed					
	SUBTOTAL:					46,507 sf	

NOTE: PLANTING BED PREPARATION, AMENDMENTS, & MULCHING SHALL BE INSTALLED IN ALL AREAS TO RECEIVE LANDSCAPE PLANTINGS (TREES, SHRUBS, AND GRASSES (QUART & PLUG)). ESTIMATED AREA FOR THIS WORK IS 225 SQUARE YARDS. REFER TO JOB SITE PROVISIONS FOR ADDITIONAL INFORMATION

WILDFLOWER SEEDING - Low Profile Wildflowers Seed Mix

11.81 pounds/acre, 70.00 Pure Live Seeds/Sqft

Latin Name	Common Name	LBS/AC - %	Plant Type
Bouteloua curtipendula	Sideoats Grama	4.6	Grass
Bouteloua gracilis	Blue Grama	2.5	Grass
Koeleria macrantha	Prairie Junegrass	0.2	Grass
Schizachyrium scoparium	Little Bluestem	7.7	Grass
Sporobolus compositus	Composite Dropseed	1.5	Grass
Carex vulpinoidea	Fox Sedge	2.3	Sedge
Carex molesta	Troublesome Sedge	0.7	Sedge
Coreopsis tinctoria	Plains Coreopsis (A)	1.4	Forb
Coreopsis lanceolata	Lanceleaf Coreopsis	10.0	Forb
Zizia aurea	Golden Alexanders	6.4	Forb
Baptisia australis	Blue Wild Indigo	3.1	Forb
Amorpha canescens	Leadplant	0.5	Forb
Echinacea purpurea	Purple Coneflower	12.8	Forb
Gaillardia pulchella	Indian Blanketflower	6.0	Forb
Echinacea pallida	Pale Purple Coneflower	7.0	Forb
Dalea purpurea	Purple Prairie Clover	6.6	Forb
Astragalus canadensis	Canada Milkvetch	5.5	Forb
Heliopsis helianthoides	False Sunflower	13.5	Forb
Helianthus mollis	Ashy Sunflower	0.3	Forb
Symphyotrichum oblongifolium	Aromatic Aster	0.3	Forb
Pycnanthemum tenuifolium	Slender Mountain Mint	0.1	Forb
Drymocallis arguta	Prairie Cinquefoil	0.3	Forb
Rudbeckia hirta	Black-Eyed Susan (B)	1.2	Forb
Penstemon grandiflorus	Large-Flowered Beardtongue	1.2	Forb
Asclepias tuberosa	Butterfly Milkweed	4.0	Forb
Solidago nemoralis	Gray Goldenrod	0.5	Forb

STATE OF MISSOURI
SCOTT V. EMMELKAMP
NUMBER LA-120
LANDSCAPE ARCHITECT
EXP. 12/31/2026

DATE	04/23/2025
DATE PREPARED	04/23/2025
ROUTE: NOR	STATE: MO
DISTRICT: SL	SHEET NO.: 41
COUNTY	ST. CHARLES
JOB NO.	JSL0112
CONTRACT ID.	-
PROJECT NO.	-
BRIDGE NO.	-

DATE	DESCRIPTION

IF A SEAL IS PRESENT ON THIS SHEET IT HAS BEEN ELECTRONICALLY SEALED AND DATED.

MISSOURI HIGHWAYS AND TRANSPORTATION COMMISSION
105 WEST CAPITOL
JEFFERSON CITY, MO 65102
1-888-ASK-MODOT (1-888-275-6636)

PLANTING DETAILS

PLANNING DESIGN STUDIO
2916 Sutton Boulevard, Suite 1
Saint Louis, Missouri 63143
T: 314.241.3600
MO State Certificate of Authority # LAC-2006001845

(63.5'-82'-63.5') PRESTRESSED CONCRETE NU-GIRDER SPANS

SEC/SUR 1669 TWP 46N RGE 3E

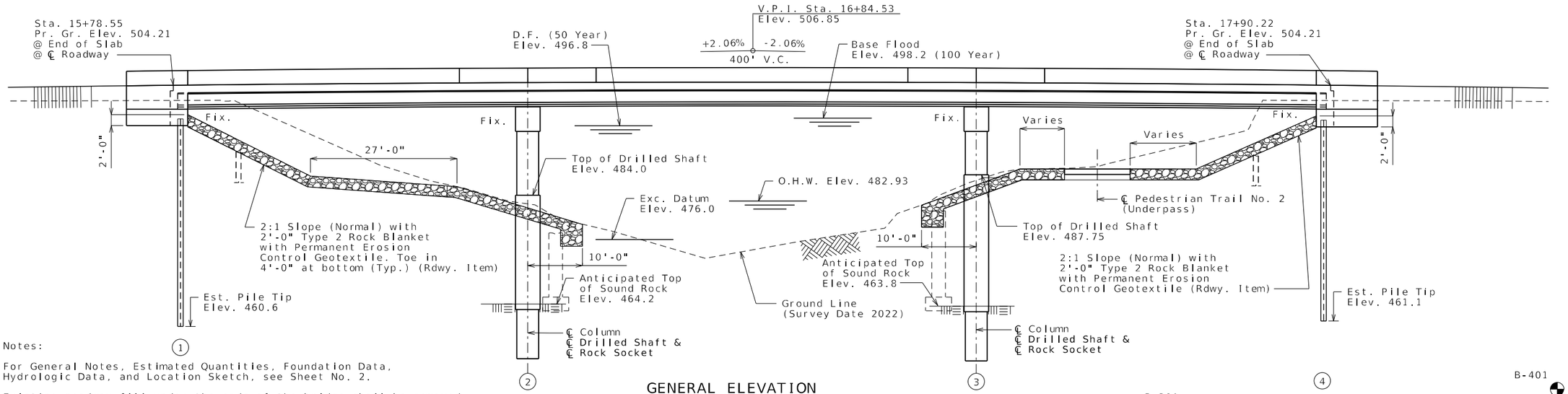

GENERAL ELEVATION

(Decorative Pedestrian Fence not shown for clarity)

Notes:

For General Notes, Estimated Quantities, Foundation Data, Hydrologic Data, and Location Sketch, see Sheet No. 2.

Existing roadway fill under the ends of the bridge shall be removed as shown. Removal of existing roadway fill will be considered completely covered by the contract unit price for roadway excavation.

Notes(cont'd):

Roadway fill shall be completed to the final roadway section and up to the elevation of the bottom of the concrete beam within the limits of the structure and for not less than 25 feet in back of the fill face of the end bents before any piles are driven for any bents falling within the embankment section.

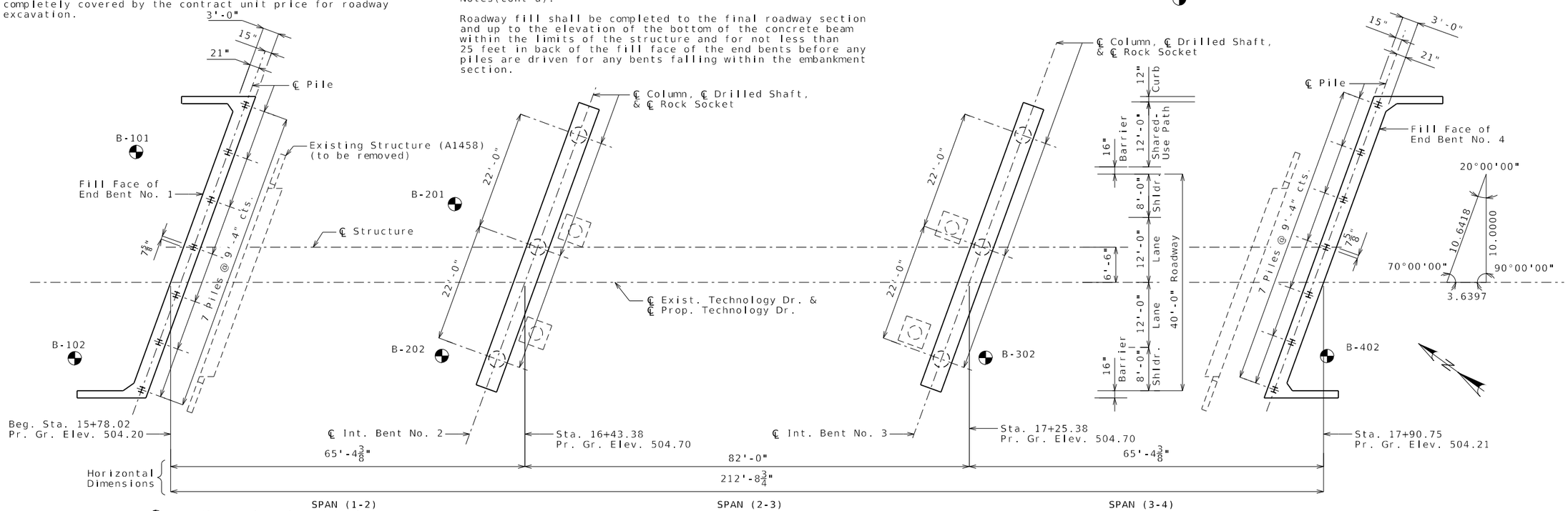

"◆" Indicates location of borings.

PLAN

B.M. #51 - SE WINGWALL (TOP) OF TECHNOLOGY DRIVE BRIDGE
STA. 17+84.15 OFFSET 18.21' LT. ELEV. 501.762

B.M. #52 - NE WINGWALL (TOP) OF TECHNOLOGY DRIVE BRIDGE
STA. 15+96.35 OFFSET 17.85' LT .ELEV. 501.761

Notice and Disclaimer Regarding Boring Log Data

The locations of all subsurface borings for this structure are shown on the plan sheet(s) for this structure. The boring data for all locations indicated, as well as any other boring logs or other factual records of subsurface data and investigations performed by Millenia Professional Services for the design of the project, are shown on Sheets No. 36 thru 44 and may be included in the Electronic Bridge Deliverables. They will also be available from the Project Contact upon written request. No greater significance or weight should be given to the boring data depicted on the plan sheets than is given to the subsurface data available from the district or elsewhere.

The Commission does not represent or warrant that any such boring data accurately depicts the conditions to be encountered in constructing this project. A contractor assumes all risks it may encounter in basing its bid prices, time or schedule of performance on the boring data depicted here or those available from the district, or on any other documentation not expressly warranted, which the contractor may obtain from the Commission.

Designed Dec. 2024
Detailed Dec. 2024
Checked Dec. 2024

Note: This drawing is not to scale. Follow dimensions.

Sheet No. 1 of 44

BRIDGE: TECHNOLOGY DRIVE (I-64 NOR) OVER DARDENNE CREEK

TECHNOLOGY DRIVE FROM ROUTE DD TO ROUTE K

ABOUT 1.2 MILES SE OF HWY DD

BEGINNING STATION 15+78.02

STATE OF MISSOURI
DAVID BURDICK
NUMBER E-24015
REGISTERED PROFESSIONAL ENGINEER
THIS SHEET HAS BEEN SIGNED, SEALED AND DATED ELECTRONICALLY

DATE PREPARED	3/3/2025
ROUTE	NOR
STATE	MO
DISTRICT	BR
SHEET NO.	1
COUNTY	ST. CHARLES
JOB NO.	JSL0112
CONTRACT ID.	
PROJECT NO.	
BRIDGE NO.	A9387

DESCRIPTION

DATE

MISSOURI HIGHWAYS AND TRANSPORTATION COMMISSION
105 WEST CAPITOL
JEFFERSON CITY, MO 65102
1-888-ASK-MODOT (1-888-275-6636)

CDG ENGINEERS
One Campbell Plaza
St. Louis, Missouri 63139
T. 314 781 7770
F. 314 781 9075
Missouri State Certificate of Authority # 1721

Estimated Quantities

Item		Substr.	Superstr.	Total
Removal of Miscellaneous ACM (Non-Friable)	sq. foot			17
Class 1 Excavation	cu. yard	85		85
Removal of Bridges (A1458)	lump sum			1
Bridge Approach Slab (Minor)	sq. yard			238
(60in) Decorative Pedestrian Fence (Structures)	linear foot		229	229
Drilled Shafts (4 ft. 6 in. Dia.)	linear foot	131.3		131.3
Rock Sockets (4 ft. 0 in. Dia.)	linear foot	81.0		81.0
Video Camera Inspection	each	6		6
Foundation Inspection Holes	linear foot	141.0		141.0
Sonic Logging Testing	each	6		6
Galvanized Structural Steel Piles (12 in.)	linear foot	532		532
Pile Point Reinforcement	each	14		14
Class B Concrete (Substructure)	cu. yard	48.3		48.3
Class B-1 Concrete (Substructure)	cu. yard	116.2		116.2
Type D Barrier	linear foot		480	480
Slab on Concrete NU-Girder	sq. yard		1,309	1,309
Pedestrian Curb	linear foot		229	229
NU 35, Prestressed Concrete NU-Girder	linear foot		1,044	1,044
Reinforcing Steel (Bridges)	pound	39,610		39,610
Slab Drain	each		25	25
Vertical Drain at End Bents	each			2
Plain Neoprene Bearing Pad	each		10	10
Laminated Neoprene Bearing Pad	each		20	20

Cost of L4x4 ASTM A709 Grade 36 HP pile anchors and 3/4-inch diameter ASTM F3125 Grade A325 Type 1 bolts, complete in place, will be considered completely covered by the contract unit price for Galvanized Structural Steel Piles (12 in.).

All concrete above the construction joint in the end bents is included in the Estimated Quantities for Slab on Concrete NU-Girder.

All reinforcement in the end bents is included in the Estimated Quantities for Slab on Concrete NU-Girder.

All reinforcement in the intermediate bent concrete diaphragms except reinforcement embedded in the beam cap is included in the Estimated Quantities for Slab on Concrete NU-Girder.

All concrete above the intermediate beam cap is included in the Estimated Quantities for Slab on Concrete NU-Girder.

Foundation Data

Type	Design Data		Bent Number 1	2	3	4
Load Bearing Pile	Pile Type and Size		HP 12x53	—	—	HP 12x53
	Number	ea	7	—	—	7
	Approximate Length Per Each	ft	38	—	—	38
	Pile Point Reinforcement	ea	All	—	—	All
	Min. Galvanized Penetration (Elev.)	ft	Full Length	—	—	Full Length
	Pile Driving Verification Method		DF	—	—	DF
	Resistance Factor		0.4	—	—	0.4
	Minimum Nominal Axial Compressive Resistance	kip	451	—	—	451
Rock Socket	Number	ea	—	3	3	—
	Layer 1 Foundation Material		—	Limestone	Limestone	—
	Layer 1 Elevation Range	ft	—	464.0-450.0	464.0-450.0	—
	Layer 1 Minimum Nominal Axial Compressive Resistance (Side Resistance)	ksf	—	14.4	14.6	—
	Minimum Nominal Axial Compressive Resistance (Tip Resistance)	ksf	—	—	—	—

Load Bearing Piles:
DF = FHWA - Modified Gates Dynamic Pile Formula

Minimum Nominal Axial Compressive Resistance = Maximum Factored Loads/Resistance Factor

Rock Socket (Drilled Shafts):
Minimum Nominal Axial Compressive Resistance (Side Resistance) = Maximum Factored Loads/Resistance Factor.

Thickness of permanent steel casing shall be in accordance with Sec 701.

Sonic logging testing shall be performed on all drilled shafts and rock sockets.

Pile point reinforcement need not be galvanized. Shop drawings will not be required for pile point reinforcement.

General Notes:

Design Specifications:
2020 AASHTO LRFD Bridge Design Specifications (9th Ed.)
2023 AASHTO Guide Specifications for LRFD Seismic Bridge Design (3rd Ed.) (Seismic Details)
Seismic Design Category = B (Seismic Details)
Design earthquake response spectral acceleration coefficient at 1.0 second period, S_{D1}= 0.195
Acceleration Coefficient (effective peak ground acceleration coefficient). A_S = 0.20

Design Loading:

Vehicular = HL-93
Future Wearing Surface = 35 lb/sf
Earth = 120 lb/cf., Equivalent Fluid Pressure = 45 lb/cf.
Superstructure: Simply-Supported, Non-Composite for dead load.
Continuous Composite for live load.

Design Unit Stresses:

Class B Concrete (Substructure)	f'c = 3,000 psi
Class B-1 Concrete (Substructure)	f'c = 4,000 psi
Class B-2 Concrete (Drilled Shafts & Rock Sockets)	f'c = 4,000 psi
Class B-2 Concrete (Superstructure, except Prestressed Girders and Barrier	f'c = 4,000 psi
Class B-1 Concrete (Barrier)	f'c = 4,000 psi
Reinforcing Steel (ASTM A706 Grade 60)	fy = 60,000 psi
Structural Steel HP Pile (ASTM A709 Grade 50S)	fy = 50,000 psi

For prestressed girder stresses, see Sheets No. 16 thru 19.

Neoprene Pads:
Neoprene Bearing Pads shall be 60 durometer and shall be in accordance with Sec 716.

Joint Filler:
All joint filler shall be in accordance with Sec 1057 for preformed sponge rubber expansion and partition joint filler, except as noted.

Reinforcing Steel:
Minimum clearance to reinforcing steel shall be 1 1/2", unless otherwise shown.

Traffic Handling:
Structure to be closed during construction. Traffic to be maintained on other routes. See roadway plans for traffic control.

Hydrologic Data

Drainage Area = 52 mi2
Design Flood Frequency = 50 years
Design Flood Discharge = 18,800 cfs
Design Flood (D.F.) Elevation = 496.8
Base Flood (100-year)
Base Flood Elevation = 498.2
Base Flood Discharge = 22,600 cfs
Estimated Backwater = 1.8 ft
Average Velocity thru Opening = 9.4 ft/s
Freeboard (50-year)
Freeboard = 3.4 ft
Roadway Overtopping
Overtopping Flood Discharge > 32,200 cfs
Overtopping Flood Frequency > 500 years
Overtopping Flood Elevation = 502.0

Estimated Quantities for Slab on Concrete NU-Girders

Item		Total
Class B-2 Concrete	cu. yard	407.7
Reinforcing Steel (Epoxy Coated)	pound	133,440

The table of Estimated Quantities for Slab on Concrete NU-Girder represents the quantities used by the State in preparing the cost estimate for concrete slabs. The area of the concrete slab will be measured to the nearest square yard longitudinally from end of slab to end of slab and transversely from out to out of bridge slab (or with the horizontal dimensions as shown on the plan of slab). Payment for stay-in-place corrugated steel forms, conventional forms, all concrete and epoxy coated reinforcing steel will be considered completely covered by the contract unit price for the slab. Variations may be encountered in the estimated quantities but the variations cannot be used for an adjustment in the contract unit price.

Method of forming the slab shall be as shown on the plans and in accordance with Sec 703. All hardware forforming the slab to be left in place as a permanent part of the structure shall be coated in accordance with ASTM A123 or ASTM B633 with a thickness class SC 4 and a finish type I, II or III.

Slab shall be cast-in-place with stay-in-place corrugated steel forms. Precast prestressed panels will not be permitted.

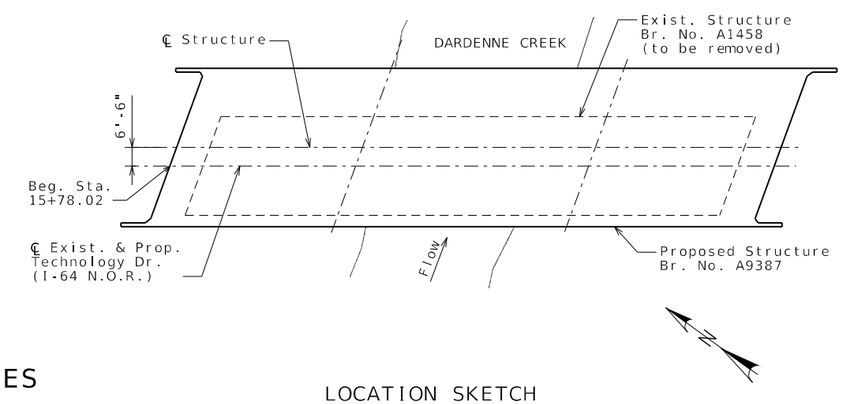

LOCATION SKETCH

STATE OF MISSOURI
DAVID BURDICK
NUMBER E-24015
REGISTERED PROFESSIONAL ENGINEER
THIS SHEET HAS BEEN SIGNED, SEALED AND DATED ELECTRONICALLY

DATE PREPARED 3/3/2025

ROUTE	STATE
NOR	MO
DISTRICT	SHEET NO.
BR	2

COUNTY ST. CHARLES
JOB NO. JSL0112
CONTRACT ID.
PROJECT NO.
BRIDGE NO. A9387

DESCRIPTION	DATE

MISSOURI HIGHWAYS AND TRANSPORTATION COMMISSION
105 WEST CAPITOL
JEFFERSON CITY, MO 65102
1-888-ASK-MODOT (1-888-275-6636)

CDG ENGINEERS
One Campbell Plaza
St. Louis, Missouri 63139
T. 314 781 7770
F. 314 781 9075
Missouri State Certificate of Authority # 1721

Detailed Dec. 2024
Checked Dec. 2024

GENERAL NOTES AND QUANTITIES

Note: This drawing is not to scale. Follow dimensions.

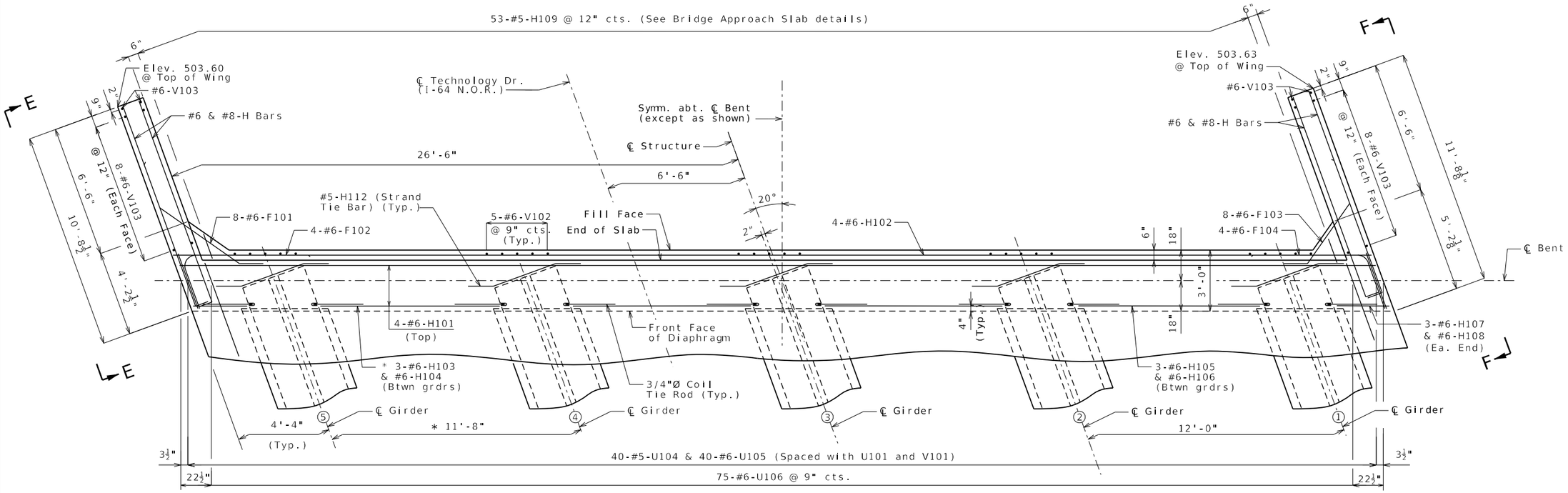

PART PLAN

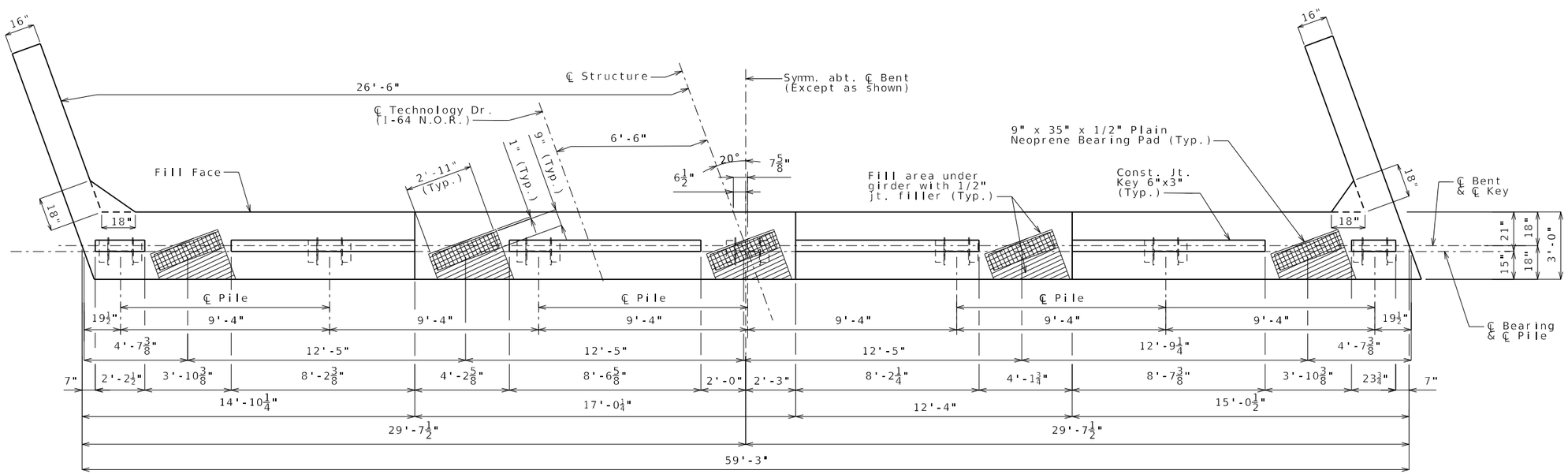

PLAN OF BEAM

General Notes:

Work this sheet with Sheets No. 4 & 5.

For Elevations E-E & F-F, see Sheet No. 5.

DETAILS OF END BENT NO. 1

Detailed Dec. 2024
Checked Dec. 2024

Note: This drawing is not to scale. Follow dimensions.

STATE OF MISSOURI DAVID BURDICK NUMBER E-24015 REGISTERED PROFESSIONAL ENGINEER
THIS SHEET HAS BEEN SIGNED, SEALED AND DATED ELECTRONICALLY

DATE PREPARED	
3/3/2025	
ROUTE NOR	STATE MO
DISTRICT BR	SHEET NO. 3
COUNTY ST. CHARLES	
JOB NO. JSL0112	
CONTRACT ID.	
PROJECT NO.	
BRIDGE NO. A9387	

DESCRIPTION

DATE

MISSOURI HIGHWAYS AND TRANSPORTATION COMMISSION
105 WEST CAPITOL
JEFFERSON CITY, MO 65102
1-888-ASK-MODOT (1-888-275-6636)

CDG ENGINEERS
One Campbell Plaza
St. Louis, Missouri 63139
T. 314 781 7770
F. 314 781 9015
Missouri State Certificate of Authority #1721

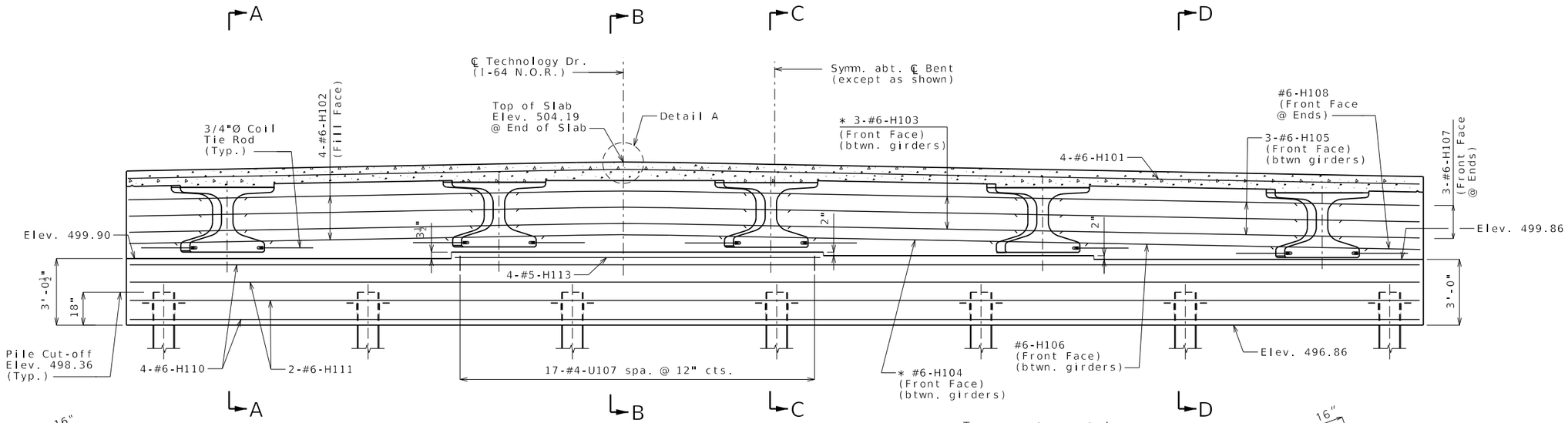

SECTION NEAR END BENT

* Typ. except as noted

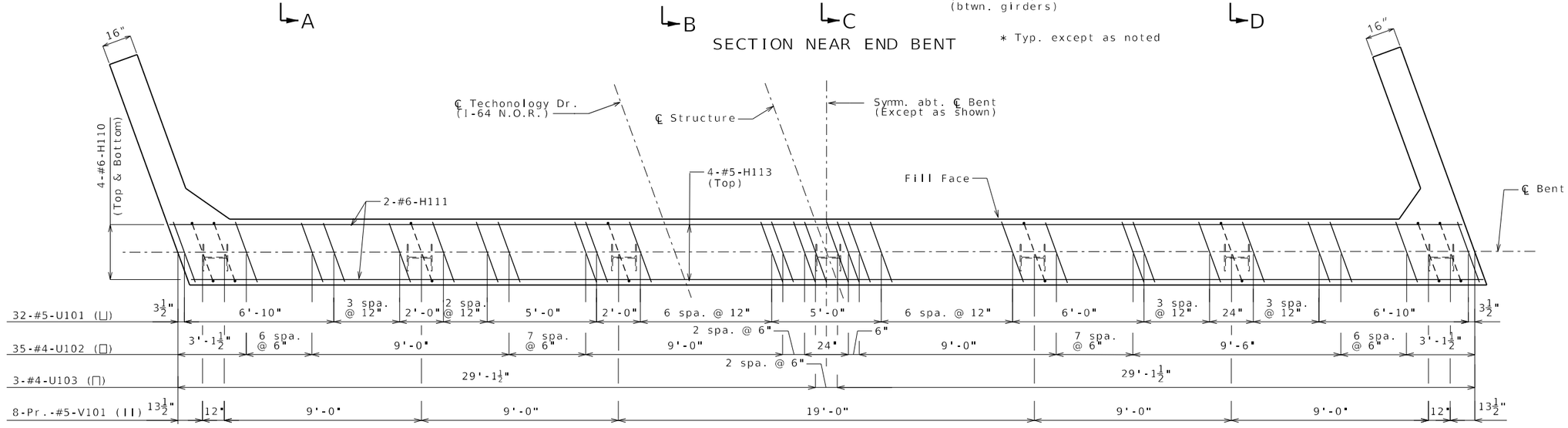

PLAN OF BEAM SHOWING REINFORCEMENT

Note: Keys and steps not shown for clarity.
U107 Bars not shown for clarity.

General Notes:

Work this sheet with Sheets No. 3 & 5.

Strands at end of girders shall be field bent or, if necessary, cut in field to maintain 1 1/2" mimimum clearance to fill face of end bent.

The #6-F101 & #6-F103 bars shall be bent in the field to clear girders.

For location of Coil Tie Rods and #5-H112 (Strand Tie Bar), see Sheets No. 16 & 17.

For details of Vertical Drain at End Bents, see Sheet No. 6.

All concrete in the end bent above top of beam and below top of slab shall be Class B-2.

All U-bars (except U107), Pairs-V bars and #5-H109 shall be placed parallel to ℄ Roadway.

All vertical reinforcing bars in the substructure beams or caps shall be field adjusted to clear piles by at least 1 1/2".

For Sections A-A, B-B, C-C & D-D, see Sheet No. 5.

For reinforcement of the Type D Barrier, see Sheets No. 27 & 28.

For reinforcement of the Pedestrian Curb, see Sheets No. 29.

For details of Bridge Approach Slab, see Sheet No. 31.

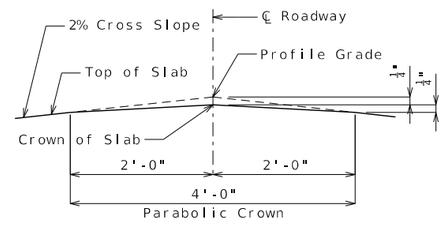

DETAIL A

Substructure Quantity Table for Bent No. 1		
Item		Quantity
Class 1 Excavation	cu. yard	40
Galvanized Structural Steel Pile (12 in.)	linear foot	266
Pile Point Reinforcement	each	7
Class B Concrete (Substructure)	cu. yard	23.5

These quantities are included in the Estimated Quantities table on Sheet No. 2.

DETAILS OF END BENT NO. 1

Detailed Dec. 2024
Checked Dec. 2024

Note: This drawing is not to scale. Follow dimensions.

STATE OF MISSOURI
DAVID BURDICK
NUMBER E-24015
REGISTERED PROFESSIONAL ENGINEER
THIS SHEET HAS BEEN SIGNED, SEALED AND DATED ELECTRONICALLY

DATE PREPARED	
3/3/2025	
ROUTE: NOR	STATE: MO
DISTRICT: BR	SHEET NO.: 4
COUNTY: ST. CHARLES	
JOB NO.: JSL0112	
CONTRACT ID.	
PROJECT NO.	
BRIDGE NO.: A9387	

DATE	DESCRIPTION

MISSOURI HIGHWAYS AND TRANSPORTATION COMMISSION
105 WEST CAPITOL
JEFFERSON CITY, MO 65102
1-888-ASK-MODOT (1-888-275-6636)

CDG ENGINEERS
One Campbell Plaza
St. Louis, Missouri 63139
T. 314 781 1770
F. 314 781 9075
Missouri State Certificate of Authority #1721

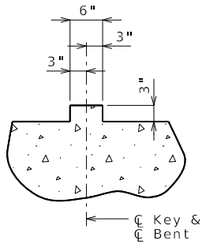

SECTION THRU KEY

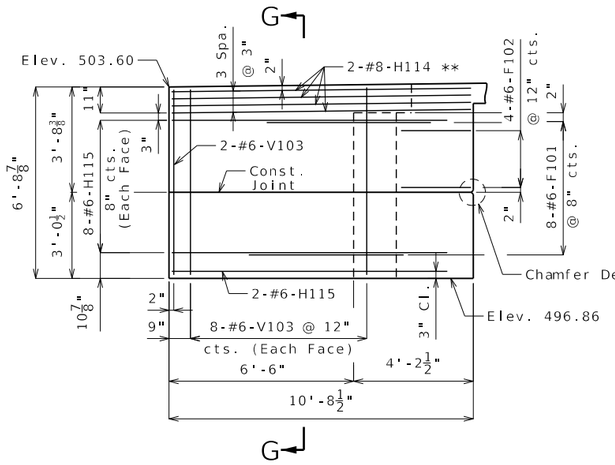

ELEVATION E-E

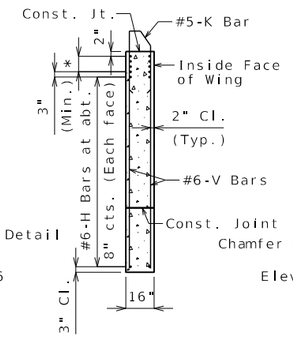

SECTION G-G

* #8-H Bars at 3" cts. (Each face)(Place with grade)

** Place with grade

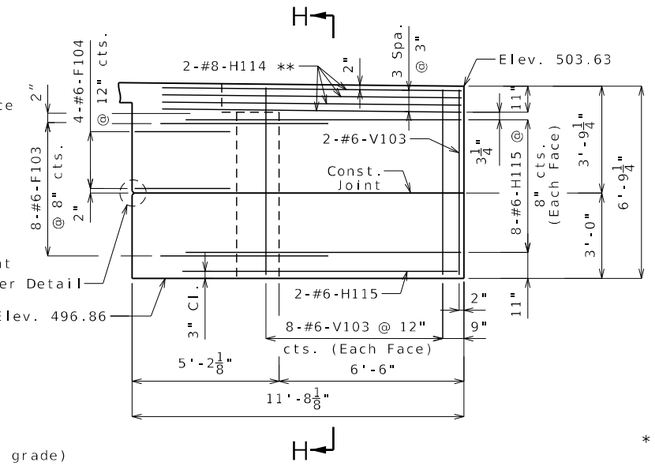

ELEVATION F-F

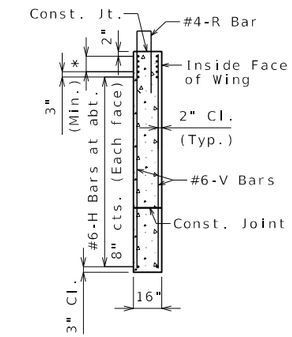

SECTION H-H

* #8-H Bars at 3" cts. (Each face)(Place with grade)

** Place with grade

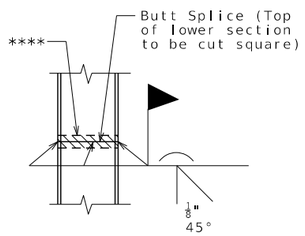

STEEL PILE SPLICE

(If required)

**** Galvanizing material shall be omitted or removed one inch clear of weld locations in accordance with Sec 702.

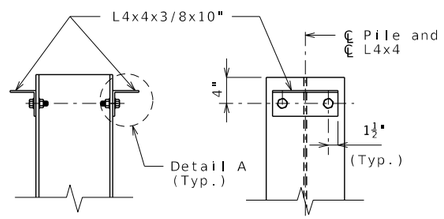

DETAILS OF HP PILE ANCHORS

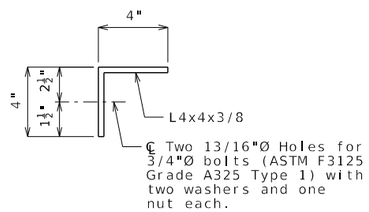

DETAIL A

Angles shall be coated with a minimum of two coats of non-aluminum epoxy mastic primer to provide a dry film thickness of 4 mils minimum, 8 mils maximum, or galvanized in accordance with Sec 1081. Bolts, washers and nuts shall be galvanized in accordance with AASHTO M 232 (ASTM A153), Class C.

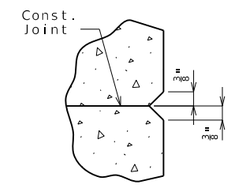

CHAMFER DETAIL

General Notes:

Work this sheet with Sheets No. 3 & 4.

For location of Elevations E-E & F-F, see Sheet No. 3.

For location of Sections A-A, B-B, C-C & D-D, see Sheet No. 4.

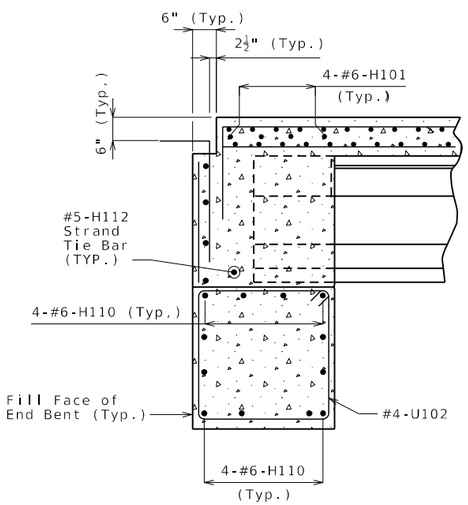

SECTION A-A

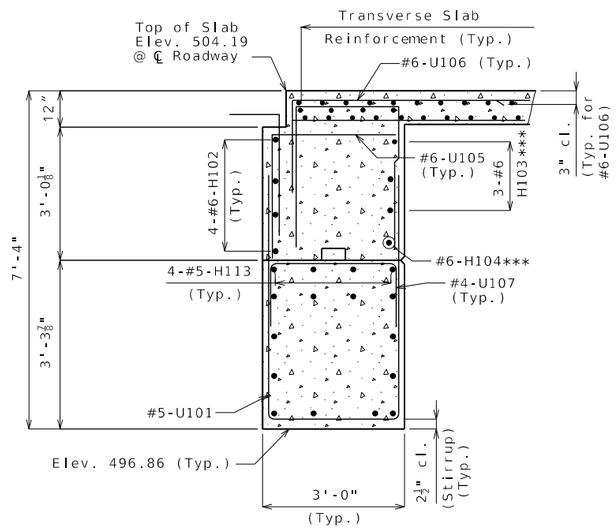

SECTION B-B

*** Typ. btwn. girders

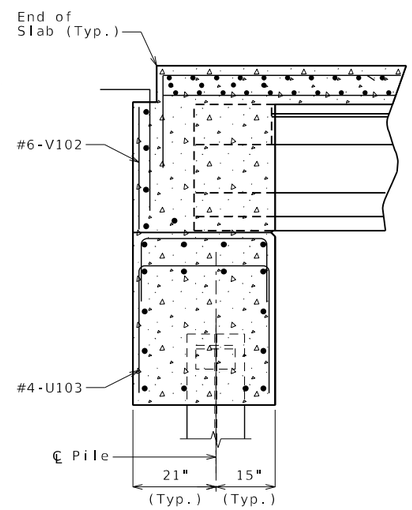

SECTION C-C

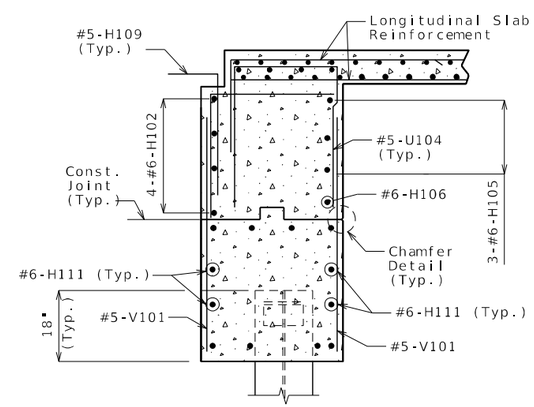

SECTION D-D

DETAILS OF END BENT NO. 1

Detailed Dec. 2024
Checked Dec. 2024

Note: This drawing is not to scale. Follow dimensions.

STATE OF MISSOURI DAVID BURDICK NUMBER E-24015 REGISTERED PROFESSIONAL ENGINEER
THIS SHEET WAS BEEN SEALED, SIGNED AND DATED ELECTRONICALLY

DATE PREPARED	
3/3/2025	
ROUTE: NOR	STATE: MO
DISTRICT: BR	SHEET NO.: 5
COUNTY: ST. CHARLES	
JOB NO.: JSL0112	
CONTRACT ID.	
PROJECT NO.	
BRIDGE NO.: A9387	

DATE	DESCRIPTION

MISSOURI HIGHWAYS AND TRANSPORTATION COMMISSION
105 WEST CAPITOL
JEFFERSON CITY, MO 65102
1-888-ASK-MODOT (1-888-275-6636)

CDG ENGINEERS
One Campbell Plaza
St. Louis, Missouri 63139
T. 314 781 7770
F. 314 781 9075
Missouri State Certificate of Authority: # 1721

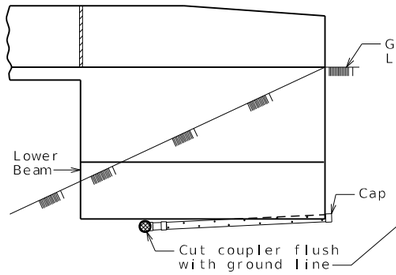

ELEVATION OF WING

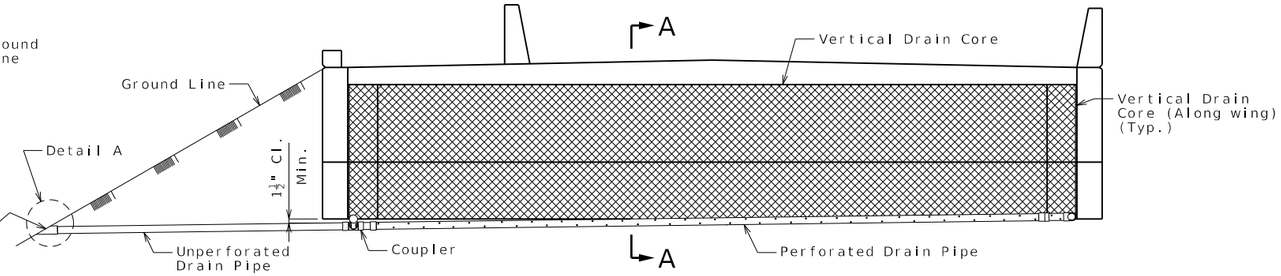

ELEVATION OF END BENT

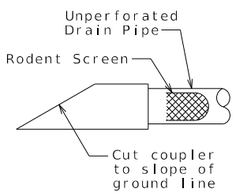

DETAIL A

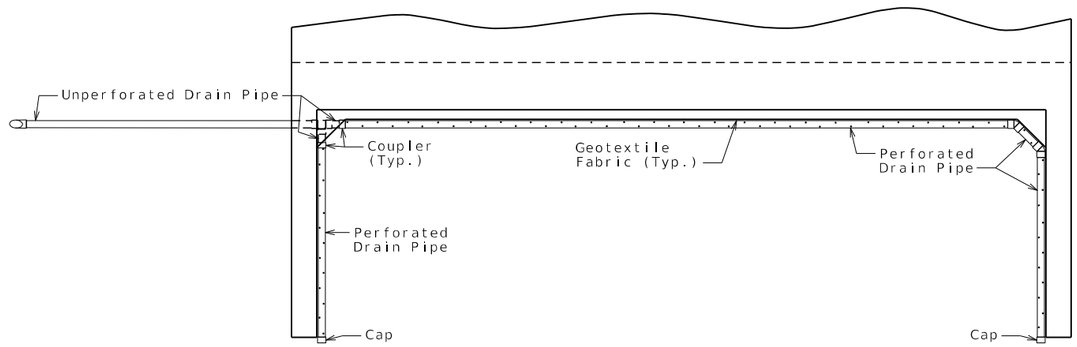

PLAN OF END BENT

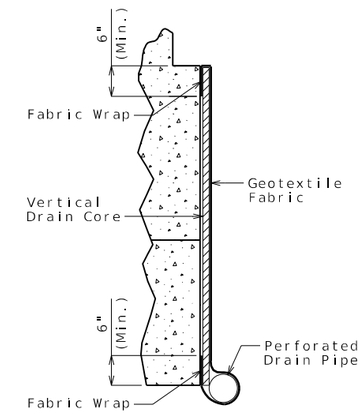

PART SECTION A-A
(Section thru wing similar)

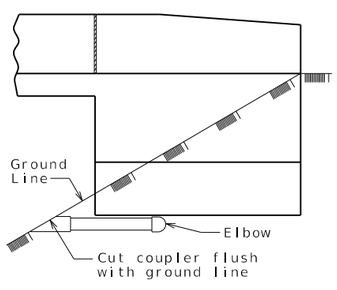

ELEVATION OF WING

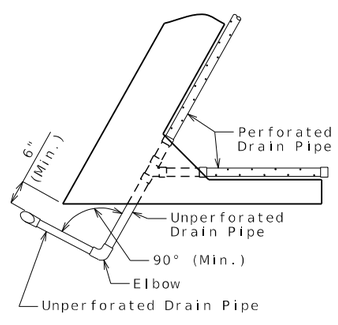

PART PLAN

OPTIONAL TURNED DRAIN
(Use only when straight drain is not practical.)

General Notes:

All drain pipe shall be sloped 1 to 2 percent.

Drain pipe may be either 6-inch diameter corrugated metallic-coated steel pipe underdrain, 4-inch diameter corrugated polyvinyl chloride (PVC) drain pipe, or 4-inch diameter corrugated polyethylene (PE) drain pipe.

Drain pipe shall be placed at fill face of end bent and inside face of wings. The pipe shall slope to lowest grade of ground line, also missing the lower beam of end bent by a minimum of 1 1/2 inches.

Perforated pipe shall be placed at fill face side and inside face of wings at the bottom of end bent and plain pipe shall be used where the vertical drain ends to the exit at ground line.

VERTICAL DRAIN AT END BENTS

(Squared end bent shown, skewed end bent similar)

Detailed Dec. 2024
Checked Dec. 2024

Note: This drawing is not to scale. Follow dimensions.

STATE OF MISSOURI DAVID BURDICK NUMBER E-24015 PROFESSIONAL ENGINEER
THIS SHEET WAS FULLY DESIGNED, SEALED AND DATED ELECTRONICALLY

DATE PREPARED	
3/3/2025	
ROUTE NOR	STATE MO
DISTRICT BR	SHEET NO. 6
COUNTY ST. CHARLES	
JOB NO. JSL0112	
CONTRACT ID.	
PROJECT NO.	
BRIDGE NO. A9387	

DESCRIPTION	DATE

MISSOURI HIGHWAYS AND TRANSPORTATION COMMISSION
105 WEST CAPITOL
JEFFERSON CITY, MO 65102
1-888-ASK-MODOT (1-888-275-6636)

CDG ENGINEERS
One Campbell Plaza
St. Louis, Missouri 63139
T. 314 781 7770
F. 314 781 9075
Missouri State Certificate of Authority # 1721

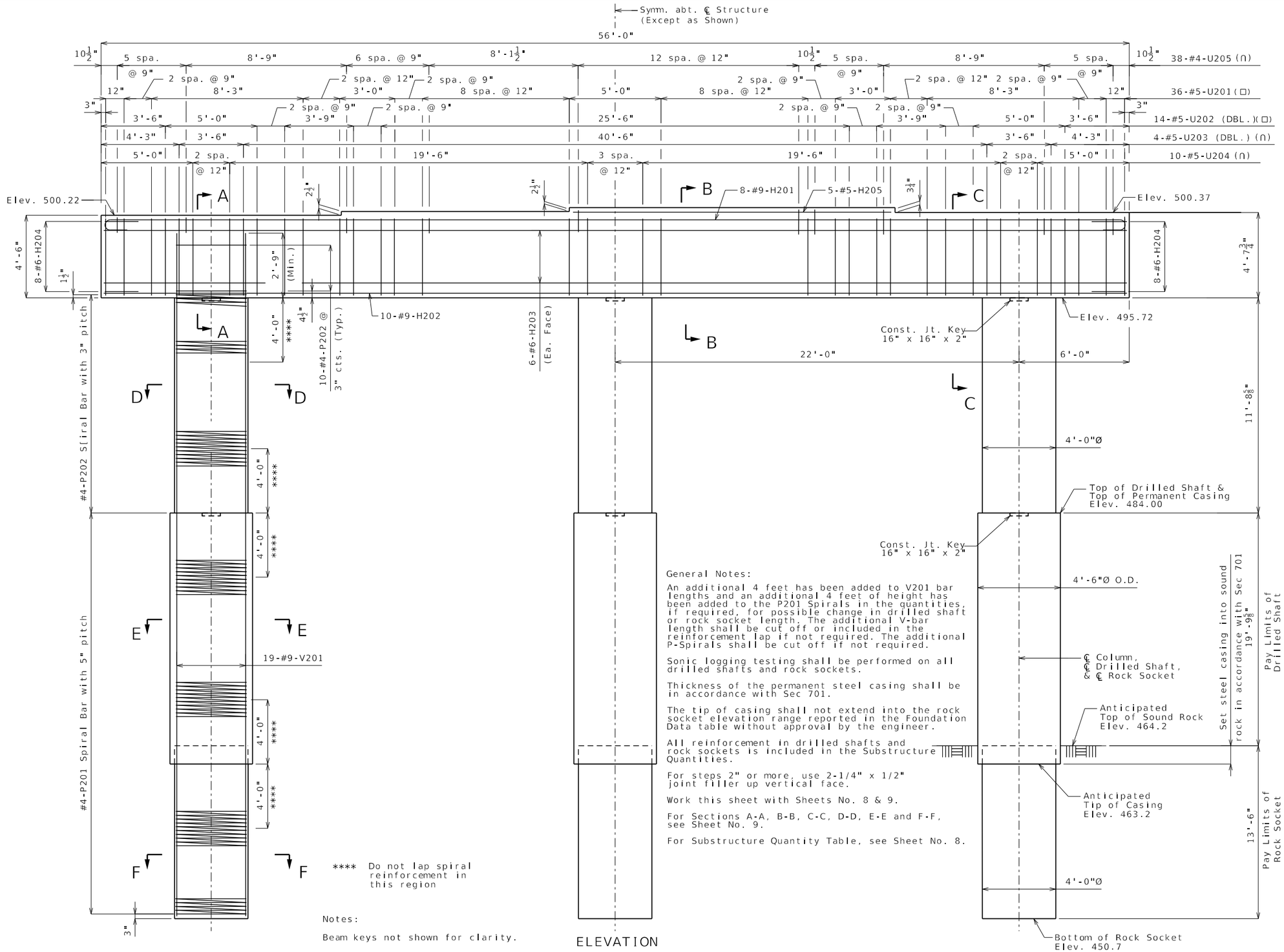

**** Do not lap spiral reinforcement in this region

Notes:

Beam keys not shown for clarity.

ELEVATION

General Notes:

An additional 4 feet has been added to V201 bar lengths and an additional 4 feet of height has been added to the P201 Spirals in the quantities, if required, for possible change in drilled shaft or rock socket length. The additional V-bar length shall be cut off or included in the reinforcement lap if not required. The additional P-Spirals shall be cut off if not required.

Sonic logging testing shall be performed on all drilled shafts and rock sockets.

Thickness of the permanent steel casing shall be in accordance with Sec 701.

The tip of casing shall not extend into the rock socket elevation range reported in the Foundation Data table without approval by the engineer.

All reinforcement in drilled shafts and rock sockets is included in the Substructure Quantities.

For steps 2" or more, use 2-1/4" x 1/2" joint filler up vertical face.

Work this sheet with Sheets No. 8 & 9.

For Sections A-A, B-B, C-C, D-D, E-E and F-F, see Sheet No. 9.

For Substructure Quantity Table, see Sheet No. 8.

DETAILS OF INTERMEDIATE BENT NO. 2

Detailed Dec. 2024
Checked Dec. 2024

Note: This drawing is not to scale. Follow dimensions.

STATE OF MISSOURI
DAVID BURDICK
NUMBER E-24015
REGISTERED PROFESSIONAL ENGINEER
THIS SHEET WAS SIGNED, SEALED AND DATED ELECTRONICALLY

DATE PREPARED	3/3/2025
ROUTE	NOR
STATE	MO
DISTRICT	BR
SHEET NO.	7
COUNTY	ST. CHARLES
JOB NO.	JSL0112
CONTRACT ID.	
PROJECT NO.	
BRIDGE NO.	A9387

DESCRIPTION

DATE

MISSOURI HIGHWAYS AND TRANSPORTATION COMMISSION

105 WEST CAPITOL
JEFFERSON CITY, MO 65102
1-888-ASK-MODOT (1-888-275-6636)

CDG ENGINEERS
One Campbell Plaza
St. Louis, Missouri 63139
T. 314 781 7770
F. 314 781 9075
Missouri State Certificate of Authority # 1721

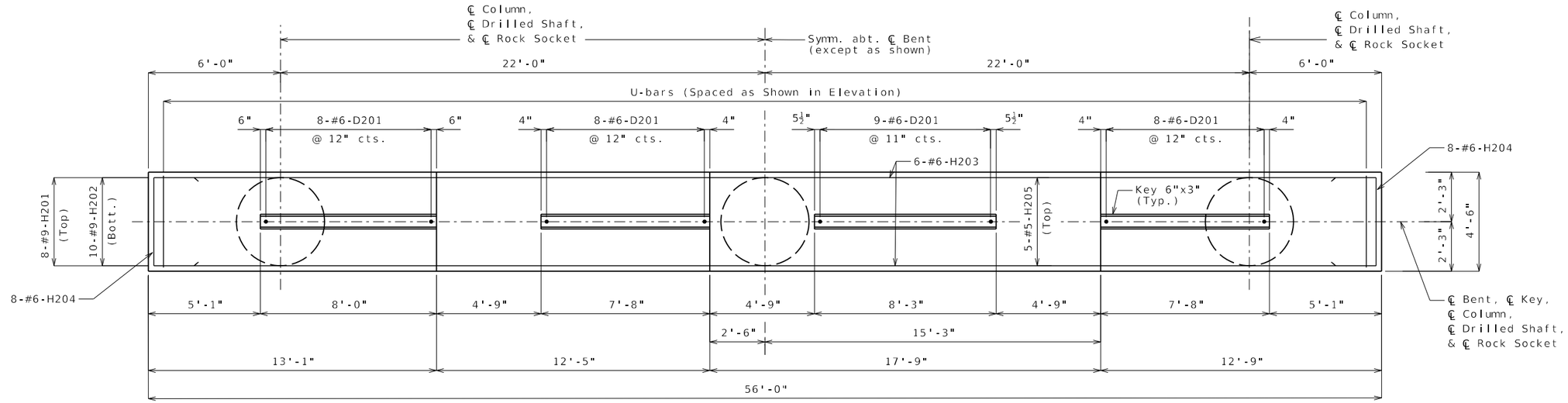

PLAN SHOWING REINFORCEMENT

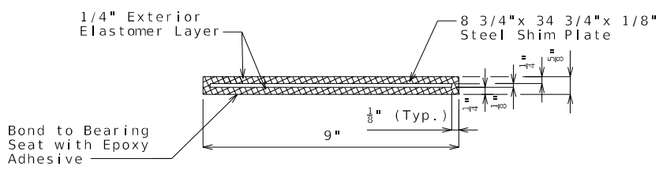

SECTION THRU LAMINATED
NEOPRENE BEARING PAD

Substructure Quantity Table for Bent No. 2		
Item		Quantity
Drilled Shafts (4 ft. 6 in. Dia.)	linear foot	59.4
Rock Sockets (4 ft. 0 in. Dia.)	linear foot	40.5
Video Camera Inspection	each	3
Foundation Inspection Holes	linear foot	70.5
Sonic Logging Testing	each	3
Class B-1 Concrete (Substructure)	cu. yard	60.5
Reinforcing Steel (Bridges)	pound	19,780

Note: These quantities are included in the estimated quantities table on Sheet No. 2.

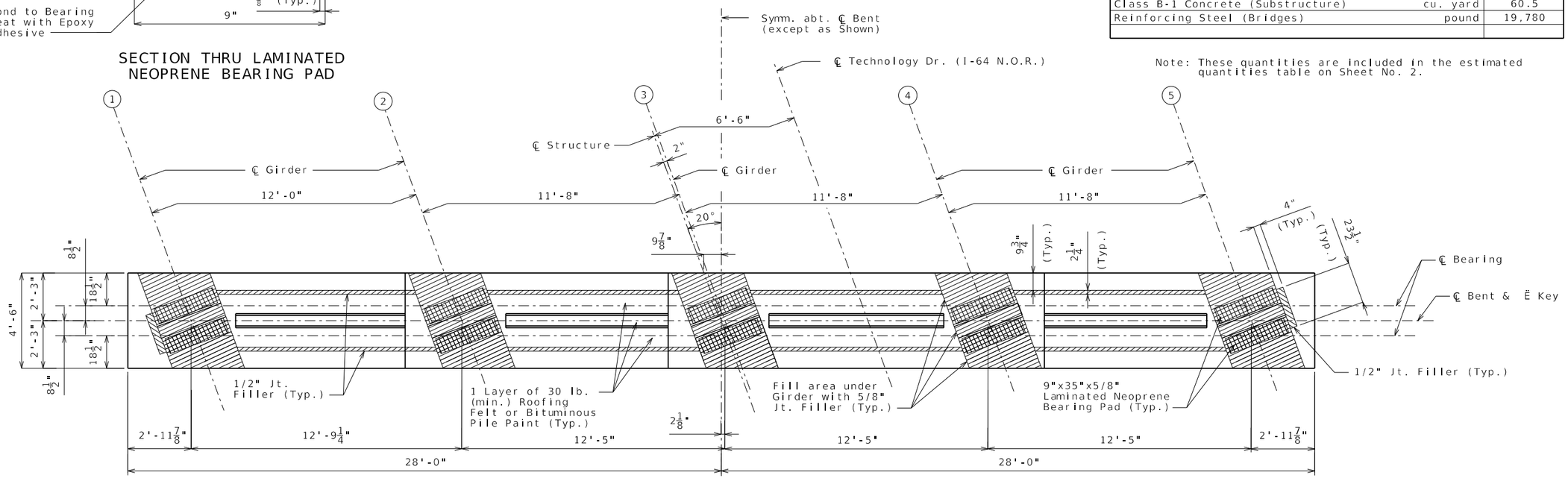

PLAN OF BEAM

Notes:
Work this sheet with Sheets No. 7 & 9.

DETAILS OF INTERMEDIATE BENT NO. 2

Detailed Dec. 2024
Checked Dec. 2024

Note: This drawing is not to scale. Follow dimensions.

STATE OF MISSOURI
DAVID BURDICK
NUMBER E-24015
REGISTERED PROFESSIONAL ENGINEER
THIS SHEET HAS BEEN SIGNED, SEALED AND DATED ELECTRONICALLY

DATE PREPARED	3/3/2025
ROUTE	NOR
STATE	MO
DISTRICT	BR
SHEET NO.	8
COUNTY	ST. CHARLES
JOB NO.	JSL0112
CONTRACT ID.	
PROJECT NO.	
BRIDGE NO.	A9387

DESCRIPTION

DATE

MISSOURI HIGHWAYS AND TRANSPORTATION COMMISSION
105 WEST CAPITOL
JEFFERSON CITY, MO 65102
1-888-ASK-MODOT (1-888-275-6636)

CDG ENGINEERS
One Campbell Plaza
St. Louis, Missouri 63139
T. 314 781 7770
F. 314 781 9075
Missouri State Certificate of Authority # 1721

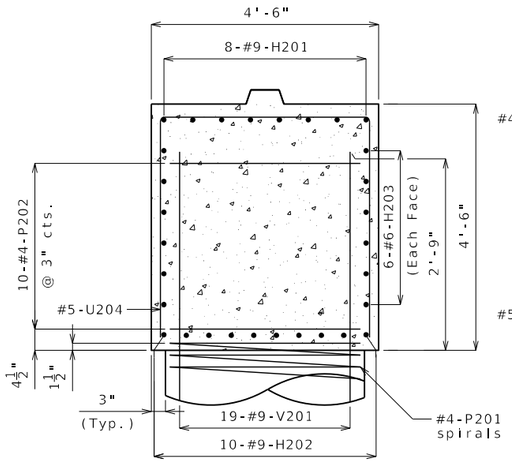

SECTION A-A

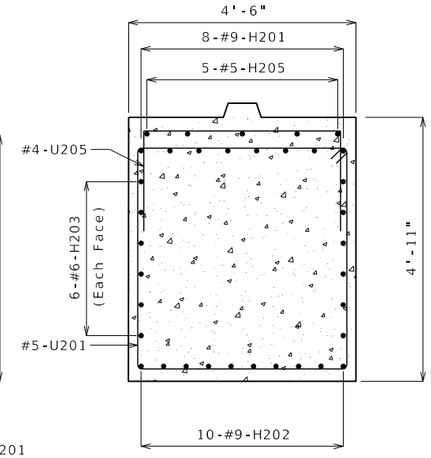

SECTION B-B

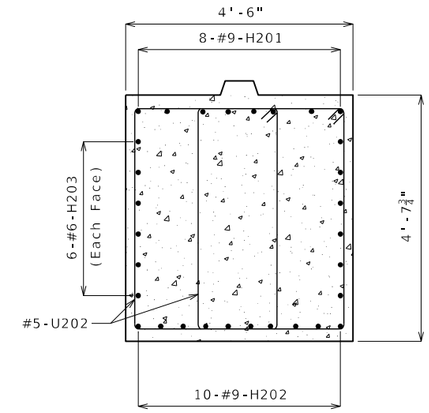

SECTION C-C

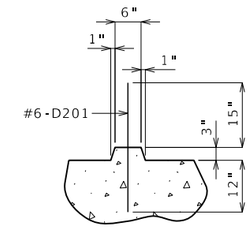

SECTION THRU KEY

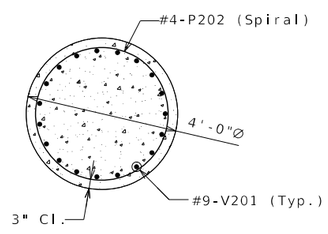

SECTION D-D
(Column)

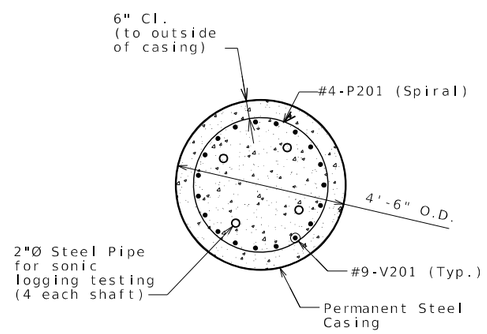

SECTION E-E
(Drilled Shaft)

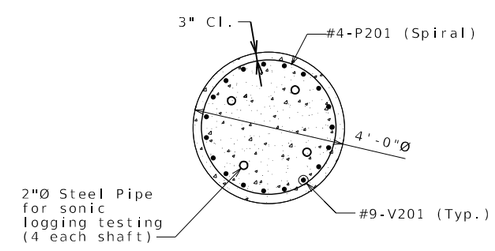

SECTION F-F
(Rock Socket)

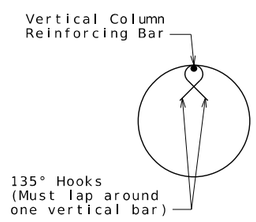

SEISMIC STIRRUP BAR

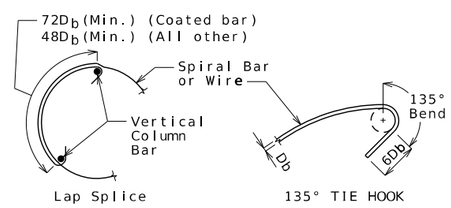

INTERMEDIATE SPLICE OF SPIRALS

Standard 135-degree tie hooks that engage vertical column reinforcing bars shall be provided at each end of splice.

Notes:

Work this sheet with Sheets No. 7 & 8.

For location of Sections A-A, B-B, C-C, D-D, E-E and F-F, see Sheet No. 7.

For Substructure Quantity Table, see Sheet No. 8.

DETAILS OF INTERMEDIATE BENT NO. 2

Detailed Dec. 2024
Checked Dec. 2024

Note: This drawing is not to scale. Follow dimensions.

STATE OF MISSOURI
DAVID BURDICK
NUMBER E-24015
REGISTERED PROFESSIONAL ENGINEER
THIS SHEET WAS BEEN SIGNED, SEALED AND DATED ELECTRONICALLY

DATE PREPARED	3/3/2025
ROUTE	NOR
STATE	MO
DISTRICT	BR
SHEET NO.	9
COUNTY	ST. CHARLES
JOB NO.	JSL0112
CONTRACT ID.	
PROJECT NO.	
BRIDGE NO.	A9387

DATE	DESCRIPTION

MISSOURI HIGHWAYS AND TRANSPORTATION COMMISSION
105 WEST CAPITOL
JEFFERSON CITY, MO 65102
1-888-ASK-MODOT (1-888-275-6636)

CDG ENGINEERS
One Campbell Plaza
St. Louis, Missouri 63139
T. 314 781 7770
F. 314 781 9075
Missouri State Certificate of Authority #1721

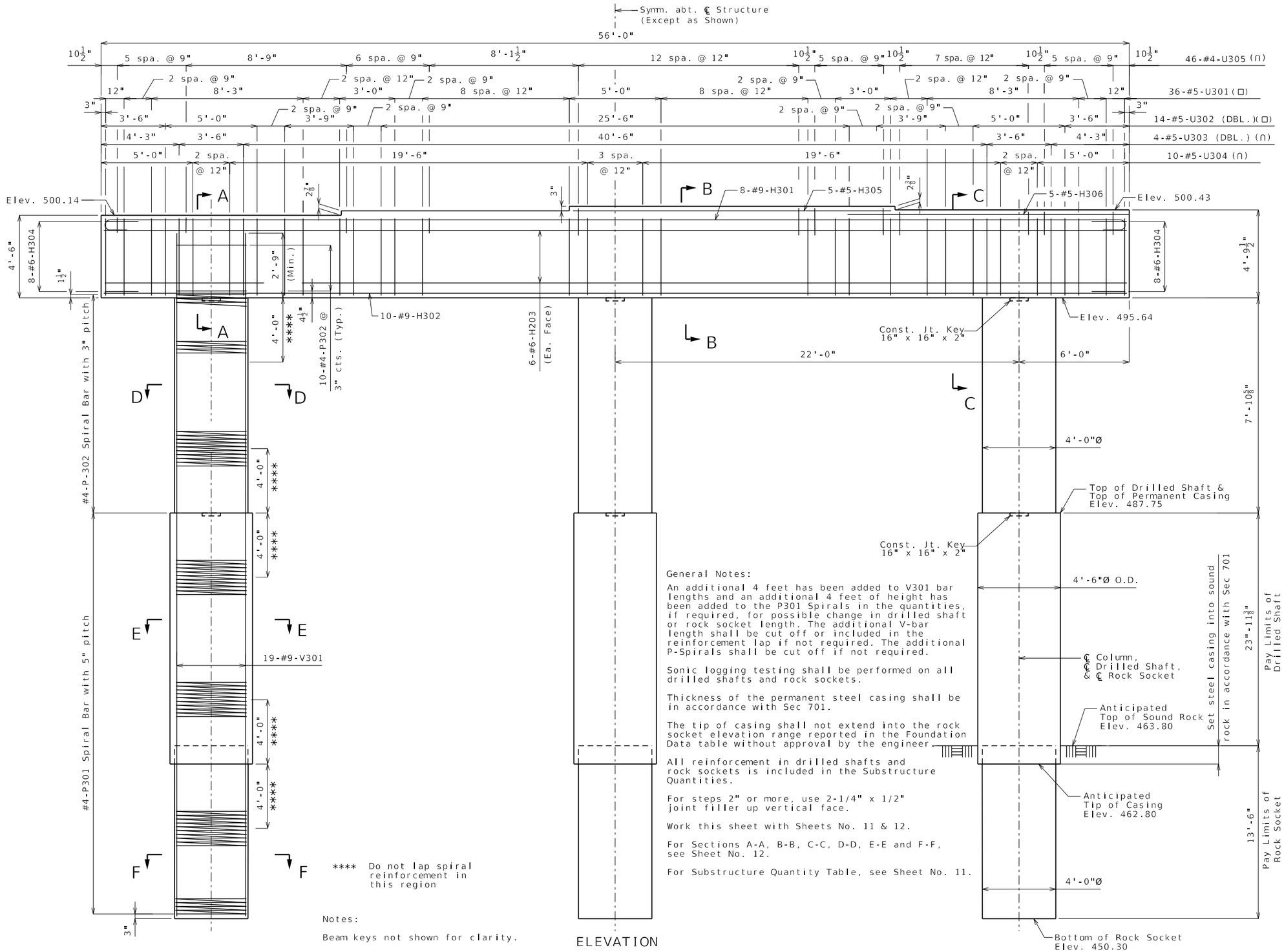

General Notes:

An additional 4 feet has been added to V301 bar lengths and an additional 4 feet of height has been added to the P301 Spirals in the quantities, if required, for possible change in drilled shaft or rock socket length. The additional V-bar length shall be cut off or included in the reinforcement lap if not required. The additional P-Spirals shall be cut off if not required.

Sonic logging testing shall be performed on all drilled shafts and rock sockets.

Thickness of the permanent steel casing shall be in accordance with Sec 701.

The tip of casing shall not extend into the rock socket elevation range reported in the Foundation Data table without approval by the engineer.

All reinforcement in drilled shafts and rock sockets is included in the Substructure Quantities.

For steps 2" or more, use 2-1/4" x 1/2" joint filler up vertical face.

Work this sheet with Sheets No. 11 & 12.

For Sections A-A, B-B, C-C, D-D, E-E and F-F, see Sheet No. 12.

For Substructure Quantity Table, see Sheet No. 11.

Notes:

Beam keys not shown for clarity.

DETAILS OF INTERMEDIATE BENT NO. 3

Detailed Dec. 2024
Checked Dec. 2024

Note: This drawing is not to scale. Follow dimensions.

STATE OF MISSOURI — DAVID BURDICK — NUMBER E-24015 — REGISTERED PROFESSIONAL ENGINEER
THIS SHEET HAS BEEN SIGNED, SEALED AND DATED ELECTRONICALLY

DATE PREPARED	3/3/2025
ROUTE	NOR
STATE	MO
DISTRICT	BR
SHEET NO.	10
COUNTY	ST. CHARLES
JOB NO.	JSL0112
CONTRACT ID.	
PROJECT NO.	
BRIDGE NO.	A9387

DESCRIPTION

DATE

MISSOURI HIGHWAYS AND TRANSPORTATION COMMISSION
105 WEST CAPITOL
JEFFERSON CITY, MO 65102
1-888-ASK-MODOT (1-888-275-6636)

CDG ENGINEERS
One Campbell Plaza
St. Louis, Missouri 63139
T. 314 781 7770
F. 314 781 9075
Missouri State Certificate of Authority # 1721

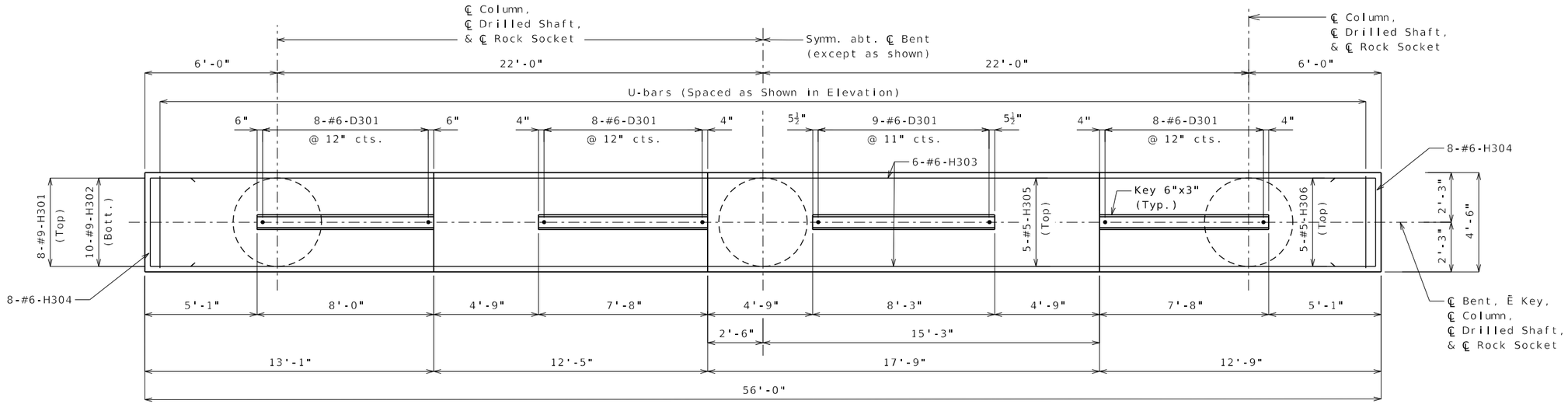

PLAN SHOWING REINFORCEMENT

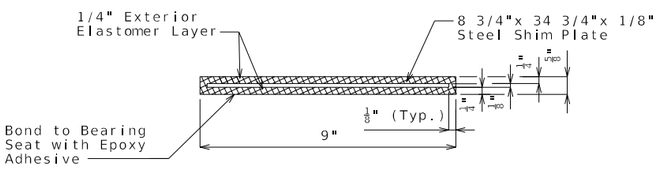

SECTION THRU LAMINATED
NEOPRENE BEARING PAD

Substructure Quantity Table for Bent No. 3		
Item		Quantity
Drilled Shafts (4 ft. 6 in. Dia.)	linear foot	71.9
Rock Sockets (4 ft. 0 in. Dia.)	linear foot	40.5
Video Camera Inspection	each	3
Foundation Inspection Holes	linear foot	70.5
Sonic Logging Testing	each	3
Class B-1 Concrete (Substructure)	cu. yard	55.7
Reinforcing Steel (Bridges)	pound	19,830

These quantities are included in the Estimated Quantities table on Sheet No. 2.

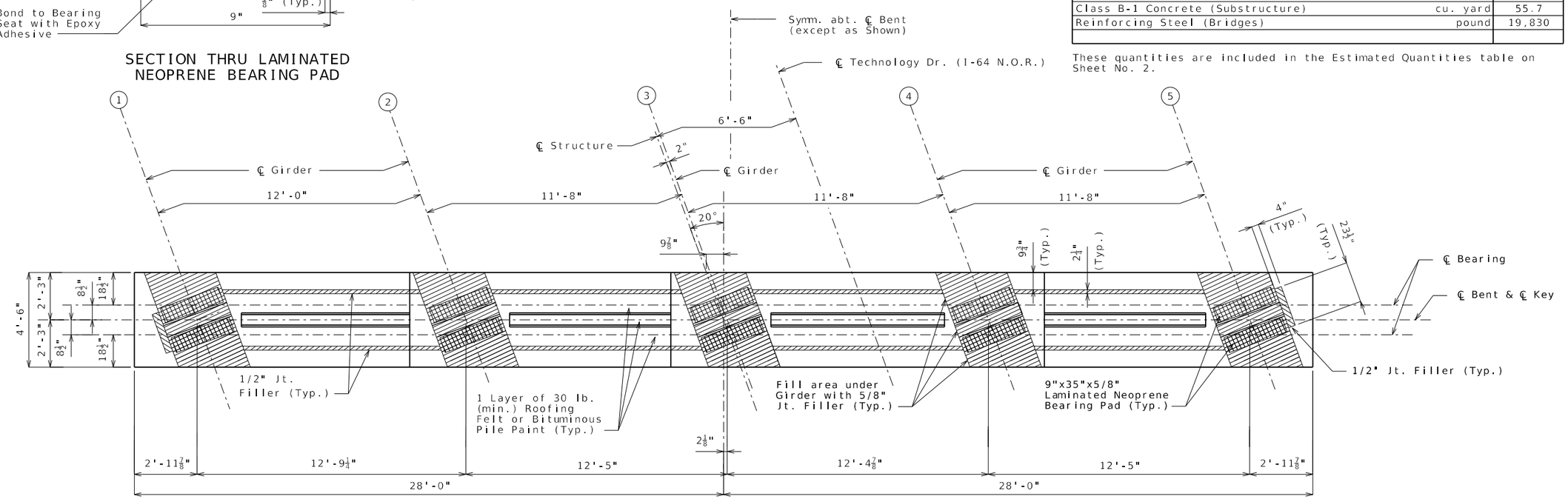

PLAN OF BEAM

Notes:
Work this sheet with Sheets No. 10 & 12.

DETAILS OF INTERMEDIATE BENT NO. 3

Detailed Dec. 2024
Checked Dec. 2024

Note: This drawing is not to scale. Follow dimensions.

STATE OF MISSOURI
DAVID BURDICK
NUMBER E-24015
REGISTERED PROFESSIONAL ENGINEER
THIS SHEET HAS BEEN SIGNED, SEALED AND DATED ELECTRONICALLY

DATE PREPARED	3/3/2025
ROUTE NOR	STATE MO
DISTRICT BR	SHEET NO. 11
COUNTY	ST. CHARLES
JOB NO.	JSL0112
CONTRACT ID.	
PROJECT NO.	
BRIDGE NO.	A9387

DESCRIPTION

DATE

MISSOURI HIGHWAYS AND TRANSPORTATION COMMISSION
105 WEST CAPITOL
JEFFERSON CITY, MO 65102
1-888-ASK-MODOT (1-888-275-6636)

CDG ENGINEERS
One Campbell Plaza
St. Louis, Missouri 63139
T. 314 781 7770
F. 314 781 9075
Missouri State Certificate of Authority # 1721

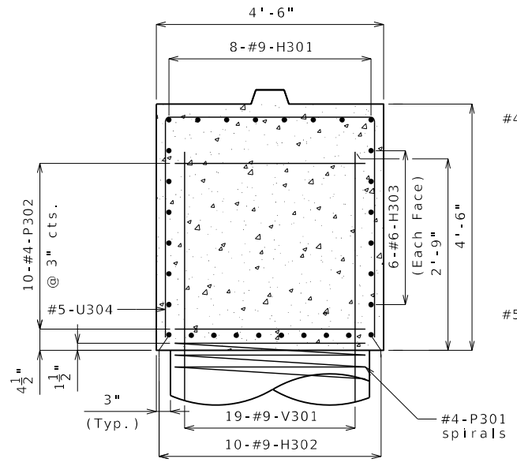

SECTION A-A

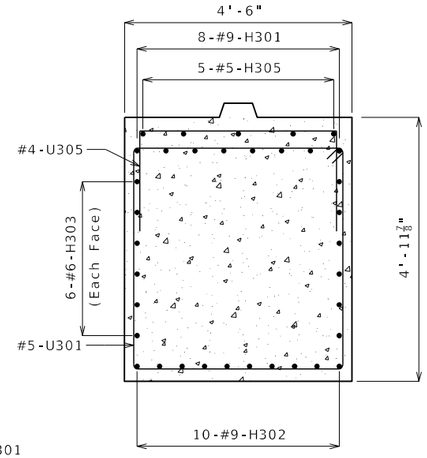

SECTION B-B

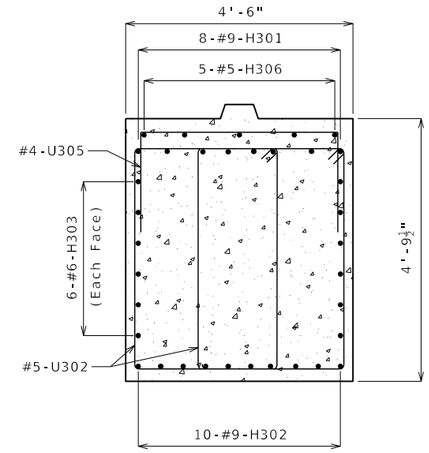

SECTION C-C

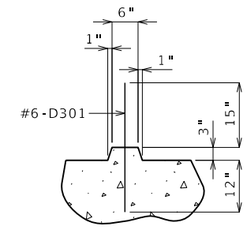

SECTION THRU KEY

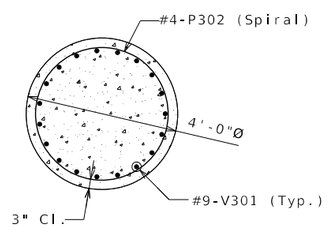

SECTION D-D
(Column)

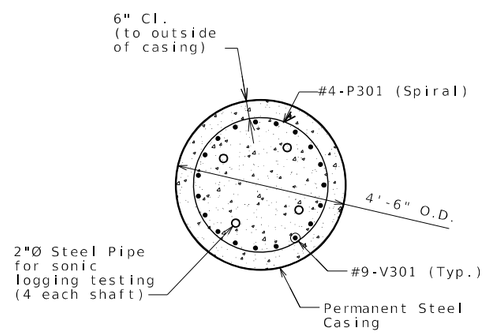

SECTION E-E
(Drilled Shaft)

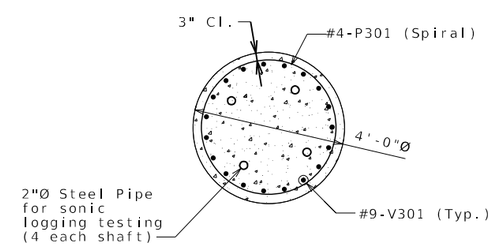

SECTION F-F
(Rock Socket)

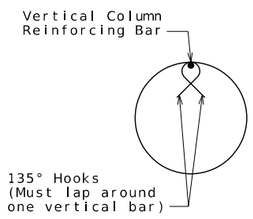

SEISMIC STIRRUP BAR

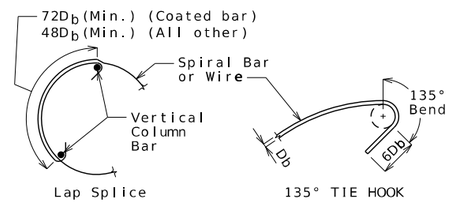

INTERMEDIATE SPLICE OF SPIRALS

Standard 135-degree tie hooks that engage vertical column reinforcing bars shall be provided at each end of splice.

Notes:

Work this sheet with Sheets No. 10 & 11.

For location of Sections A-A, B-B, C-C, D-D, E-E and F-F, see Sheet No. 10.

For Substructure Quantity Table, see Sheet No. 11.

DETAILS OF INTERMEDIATE BENT NO. 3

Detailed Dec. 2024
Checked Dec. 2024

Note: This drawing is not to scale. Follow dimensions.

STATE OF MISSOURI DAVID BURDICK NUMBER E-24015 REGISTERED PROFESSIONAL ENGINEER
THIS SHEET WAS SIGNED, SEALED AND DATED ELECTRONICALLY

DATE PREPARED	
3/3/2025	
ROUTE: NOR	STATE: MO
DISTRICT: BR	SHEET NO.: 12
COUNTY: ST. CHARLES	
JOB NO.: JSL0112	
CONTRACT ID.	
PROJECT NO.	
BRIDGE NO.: A9387	

DATE	DESCRIPTION

MISSOURI HIGHWAYS AND TRANSPORTATION COMMISSION
105 WEST CAPITOL
JEFFERSON CITY, MO 65102
1-888-ASK-MODOT (1-888-275-6636)

CDG ENGINEERS
One Campbell Plaza
St. Louis, Missouri 63139
T. 314 781 7770
F. 314 781 9075
Missouri State Certificate of Authority #1721

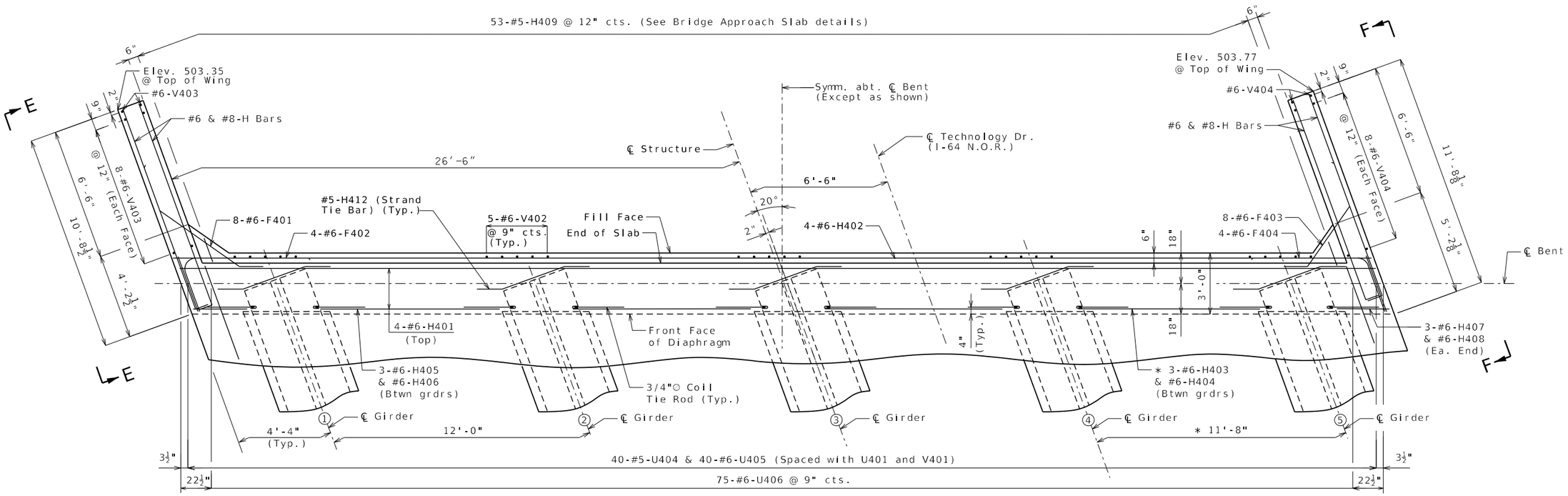

PART PLAN

* Typ. except as noted

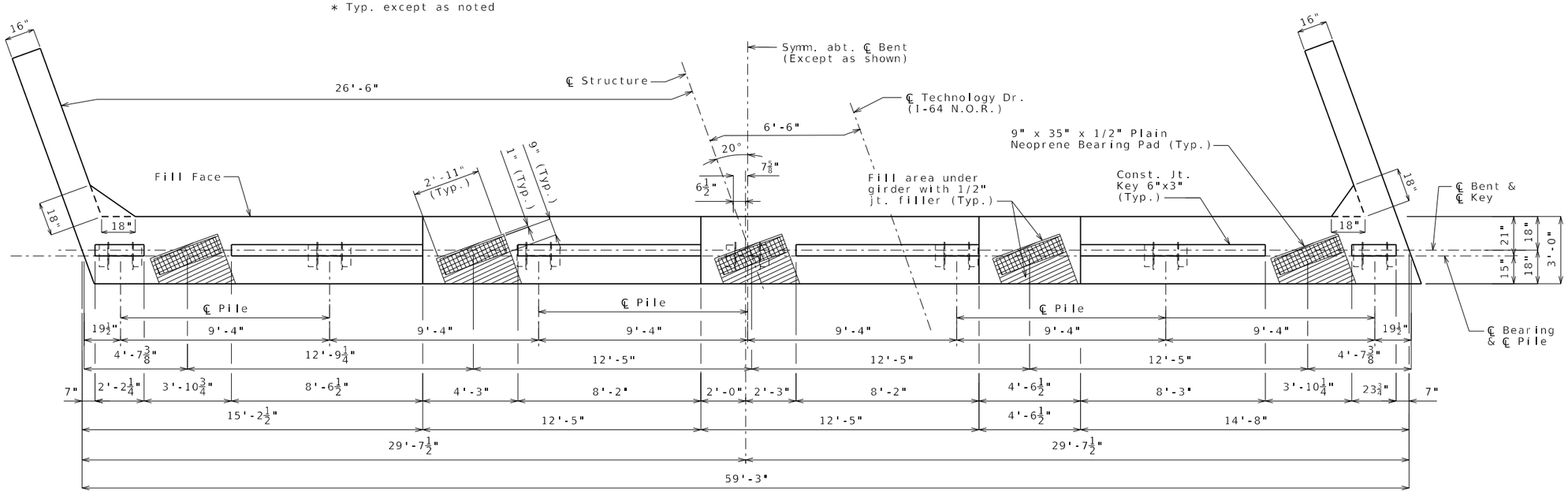

PLAN OF BEAM

General Notes:

Work this sheet with Sheets No. 14 & 15.

For Elevations E-E & F-F, see Sheet No. 15.

DETAILS OF END BENT NO. 4

Detailed Dec. 2024
Checked Dec. 2024

Note: This drawing is not to scale. Follow dimensions.

STATE OF MISSOURI DAVID BURDICK NUMBER E-24015 REGISTERED PROFESSIONAL ENGINEER
THIS SHEET WAS BEEN SIGNED, SEALED AND DATED ELECTRONICALLY

DATE PREPARED	
3/3/2025	
ROUTE NOR	STATE MO
DISTRICT BR	SHEET NO. 13
COUNTY ST. CHARLES	
JOB NO. JSL0112	
CONTRACT ID.	
PROJECT NO.	
BRIDGE NO. A9387	

DATE	DESCRIPTION

MISSOURI HIGHWAYS AND TRANSPORTATION COMMISSION
105 WEST CAPITOL
JEFFERSON CITY, MO 65102
1-888-ASK-MODOT (1-888-275-6636)

CDG ENGINEERS
One Campbell Plaza
St. Louis, Missouri 63139
T. 314 781 7770
F. 314 781 9075
Missouri State Certificate of Authority # 1721

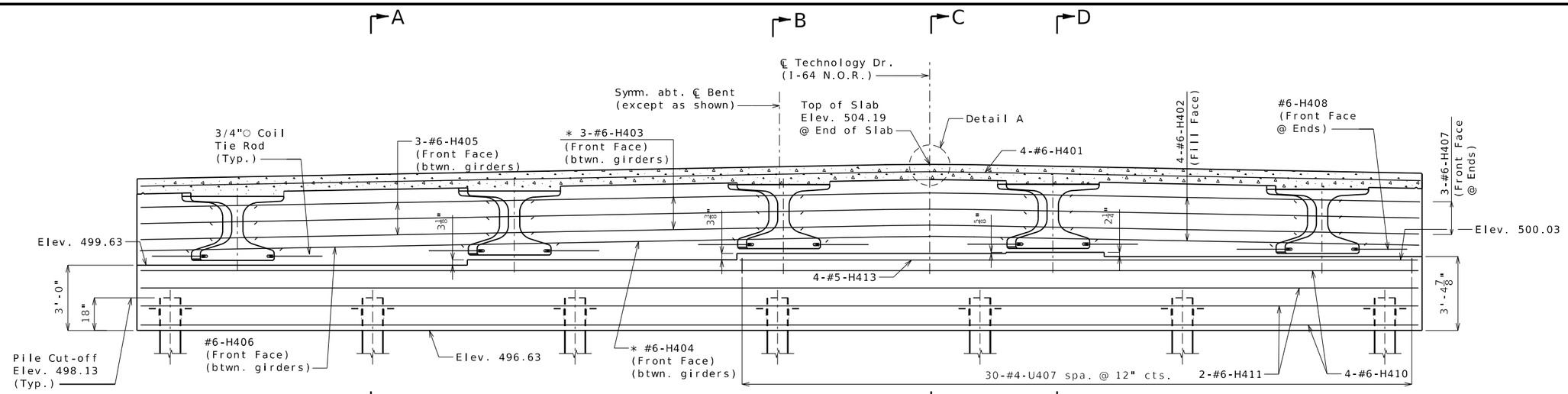

SECTION NEAR END BENT

* Typ. except as noted

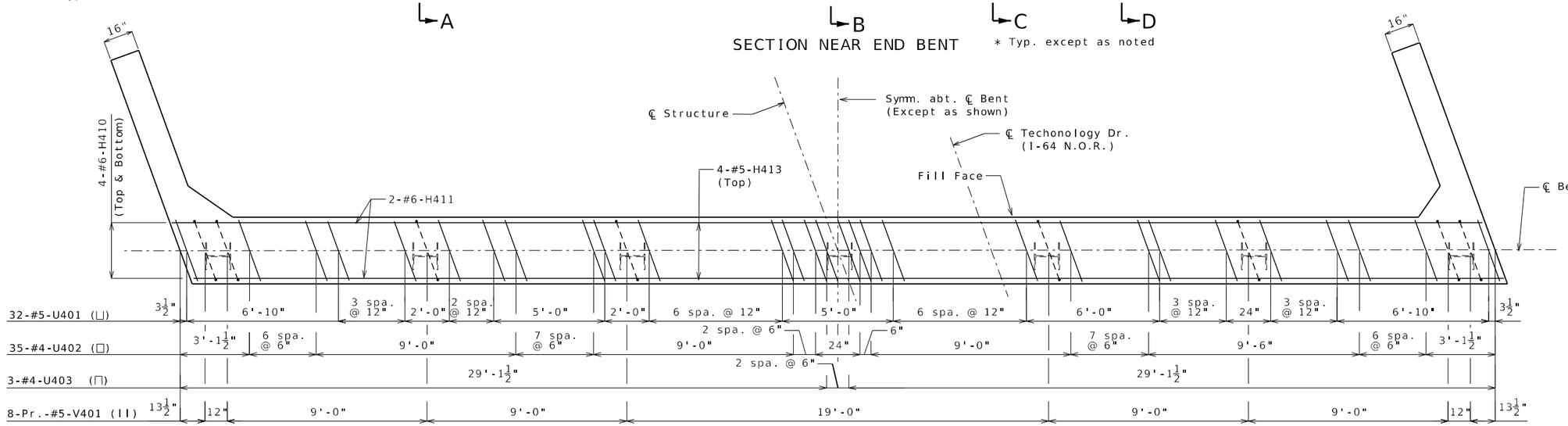

PLAN OF BEAM SHOWING REINFORCEMENT

Note: Keys and steps not shown for clarity.
U407 Bars not shown for clarity.

General Notes:

Work this sheet with Sheets No. 13 & 15.

Strands at end of girders shall be field bent or, if necessary, cut in field to maintain 1 1/2" mimimum clearance to fill face of end bent.

The #6-F401 & #6-F403 bars shall be bent in the field to clear girders.

For location of Coil Tie Rods and #5-H412 (Strand Tie Bar), see Sheets No. 16 & 17.

For details of Vertical Drain at End Bents, see Sheet No. 6.

All concrete in the end bent above top of beam and below top of slab shall be Class B-2.

All U-bars (except U407), Pairs-V bars and #5-H409 shall be placed parallel to ℄ Roadway.

All vertical reinforcing bars in the substructure beams or caps shall be field adjusted to clear piles by at least 1 1/2".

For Sections A-A, B-B, C-C & D-D, see Sheet No. 15.

For reinforcement of the Type D Barrier, see Sheets No. 27 & 28.

For reinforcement of the Pedestrian Curb, see Sheet No. 29.

For details of Bridge Approach Slab, see Sheet No. 31.

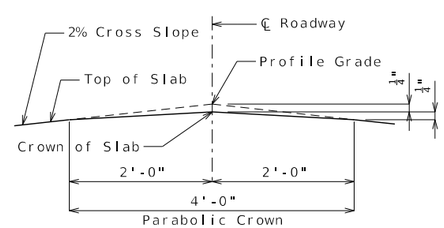

DETAIL A

Substructure Quantity Table for Bent No. 4		
Item		Quantity
Class 1 Excavation	cu. yard	45
Galvanized Structural Steel Pile (12 in.)	linear foot	266
Pile Point Reinforcement	each	7
Class B Concrete (Substructure)	cu. yard	24.8

These quantities are included in the Estimated Quantities table on Sheet No. 2.

DETAILS OF END BENT NO. 4

Detailed Dec. 2024
Checked Dec. 2024

Note: This drawing is not to scale. Follow dimensions.

STATE OF MISSOURI
DAVID BURDICK
NUMBER E-24015
REGISTERED PROFESSIONAL ENGINEER
THIS SHEET HAS BEEN SIGNED, SEALED AND DATED ELECTRONICALLY

DATE PREPARED	3/3/2025
ROUTE	NOR
STATE	MO
DISTRICT	BR
SHEET NO.	14
COUNTY	ST. CHARLES
JOB NO.	JSL0112
CONTRACT ID.	
PROJECT NO.	
BRIDGE NO.	A9387

DESCRIPTION

DATE

MISSOURI HIGHWAYS AND TRANSPORTATION COMMISSION
105 WEST CAPITOL
JEFFERSON CITY, MO 65102
1-888-ASK-MODOT (1-888-275-6636)

CDG ENGINEERS
One Campbell Plaza
St. Louis, Missouri 63139
T. 314 781 7770
F. 314 781 9015
Missouri State Certificate of Authority # 1721

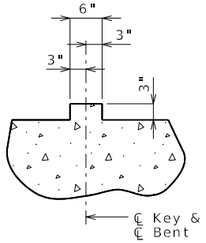

SECTION THRU KEY

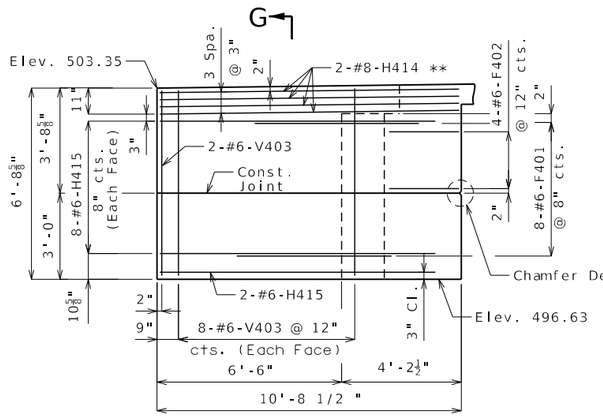

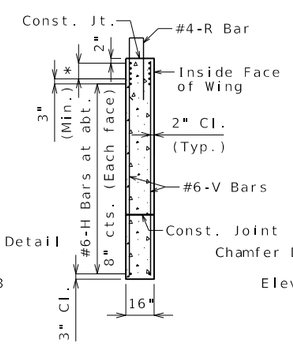

SECTION G-G

* #8-H Bars at 3" cts. (Each face)(Place with grade)

** Place with grade

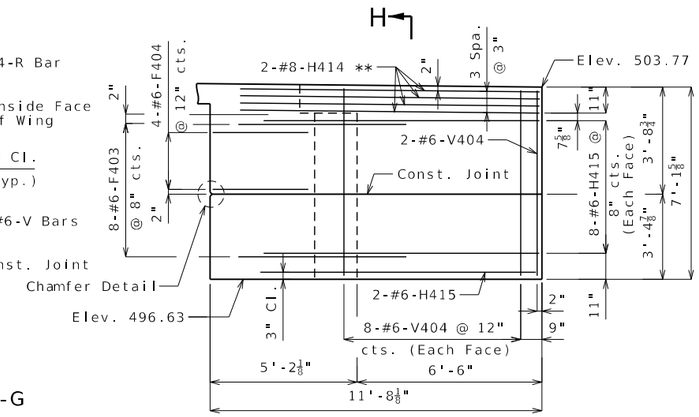

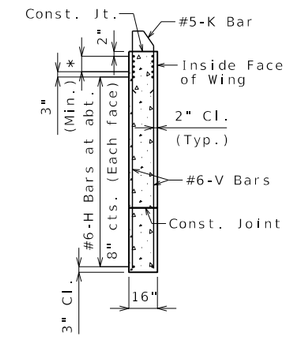

SECTION H-H

* #8-H Bars at 3" cts. (Each face)(Place with grade)

** Place with grade

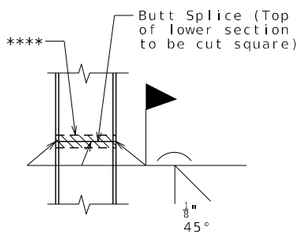

STEEL PILE SPLICE

(If required)

**** Galvanizing material shall be omitted or removed one inch clear of weld locations in accordance with Sec 702.

G

ELEVATION E-E

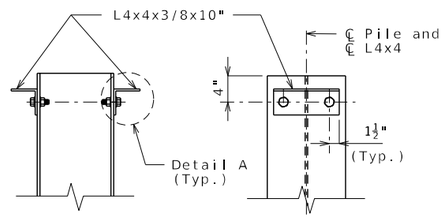

DETAILS OF HP PILE ANCHORS

H

ELEVATION F-F

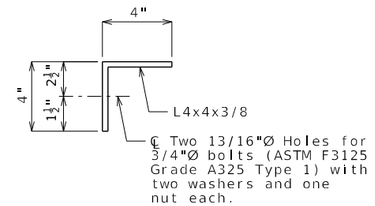

DETAIL A

Angles shall be coated with a minimum of two coats of non-aluminum epoxy epoxy mastic primer to provide a dry film thickness of 4 mils minimum, 8 mils maximum, or galvanized in accordance with Sec 1081. Bolts, washers and nuts shall be galvanized in accordance with AASHTO M 232 (ASTM A153), Class C.

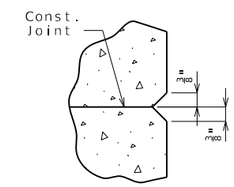

CHAMFER DETAIL

General Notes:

Work this sheet with Sheets No. 13 & 14.

For location of Elevations E-E & F-F, see Sheet No. 13.

For location of Sections A-A, B-B, C-C & D-D, see Sheet No. 14.

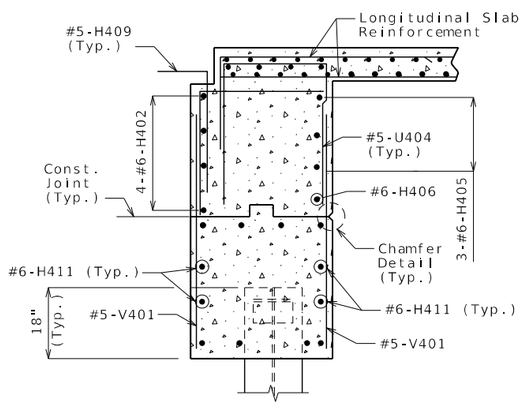

SECTION A-A

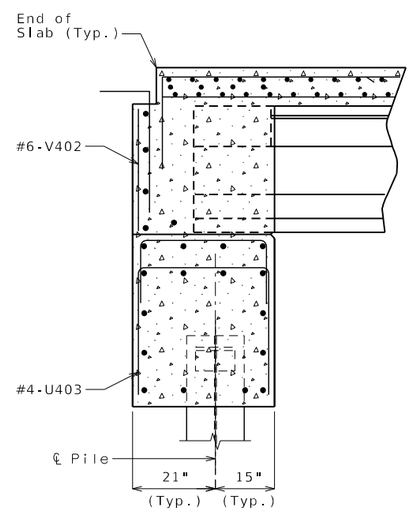

SECTION B-B

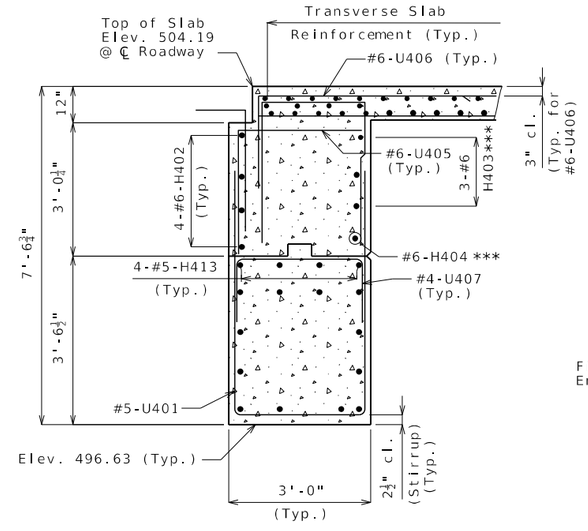

SECTION C-C

*** Typ. btwn. girders

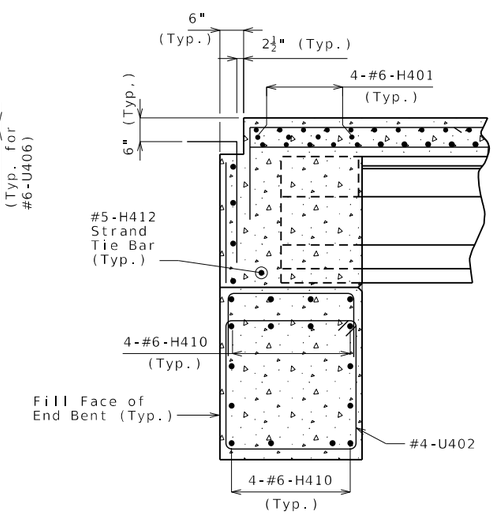

SECTION D-D

DETAILS OF END BENT NO. 4

Detailed Dec. 2024
Checked Dec. 2024

Note: This drawing is not to scale. Follow dimensions.

STATE OF MISSOURI DAVID BURDICK NUMBER E-24015 REGISTERED PROFESSIONAL ENGINEER
THIS SHEET HAS BEEN SIGNED, SEALED AND DATED ELECTRONICALLY

DATE PREPARED	3/4/2025
ROUTE NOR	STATE MO
DISTRICT BR	SHEET NO. 15
COUNTY ST. CHARLES	
JOB NO. JSL0112	
CONTRACT ID.	
PROJECT NO.	
BRIDGE NO. A9387	

DESCRIPTION

DATE

MISSOURI HIGHWAYS AND TRANSPORTATION COMMISSION

105 WEST CAPITOL
JEFFERSON CITY, MO 65102
1-888-ASK-MODOT (1-888-275-6636)

CDG ENGINEERS
One Campbell Plaza
St. Louis, Missouri 63139
T. 314 781 7770
F. 314 781 9075
Missouri State Certificate of Authority #1721

(1) Fabricator shall apply a bond breaker to this region.

(2) Outer strands tensioned to 2.02 kips/strand and inner strands to 8 kips/strand. Placed symmetrical about ℄ Girder. May be moved laterally in pairs.

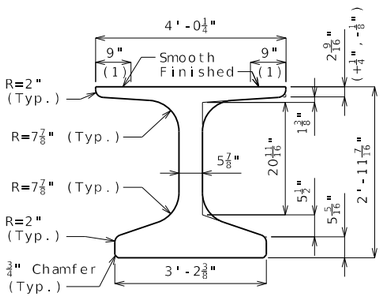

DIMENSIONS

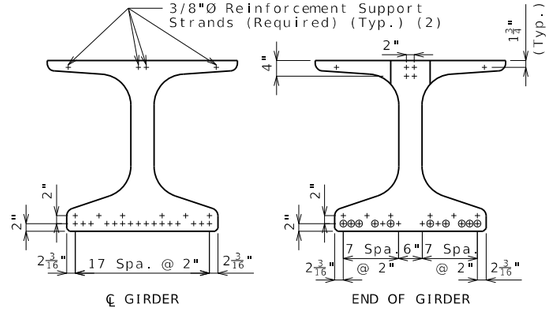

STRAND ARRANGEMENT

+ Indicates prestressing strand.

o Indicates cut & shop bend with 3'-0" projection.

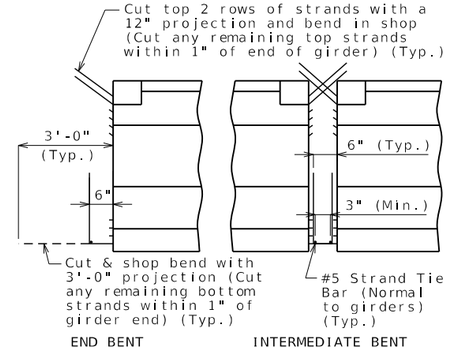

STRANDS AT GIRDER ENDS

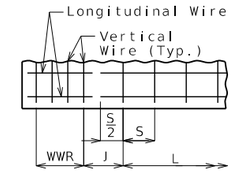

WELDED WIRE PLACEMENT

S = Vertical wire spacing

L = Length of WWR mats

J = Distance between WWR mats

Bill of Reinforcing Steel

Bars Each Girder

No.	Size/Mark		Length	Shape
86	3	G1	2'-10"	8
2	4	G3	4'-1"	20
2	4	G4	2'-3"	20
2	4	G5	2'-10"	20
2	4	G6	Varies	20

Welded Wire Each Girder

Mark	Size	S	W	L	J
WWR1	D31	4"	W12	12"	5"
WWR2	D31	6"	W12	7'-6"	7"
WWR3	D31	9"	W12	20'-3"	4½"
WWR6	D31	4"	W12	16"	2¾"

Bending Diagrams

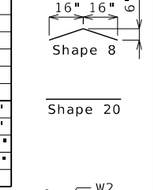

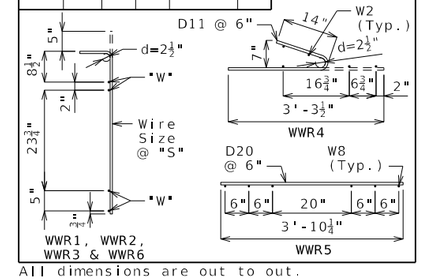

All dimensions are out to out.

Hooks and bends shall be in accordance with the CRSI Manual of Standard Practice for Detailing Reinforced Concrete Structures, Stirrup and Tie Dimensions.

Actual bar lengths are measured along centerline of bar to the nearest inch.

Minimum clearance to reinforcing shall be 1", unless otherwise shown.

All bar reinforcement shall be Grade 60.

WWR shall not be epoxy coated.

G4 and G5 not required for interior girders. Half no. of G3, G4, G5 and G6 not required for ext. girders of end spans.

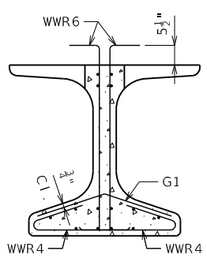

SECTION A-A

Strands not shown for clarity.

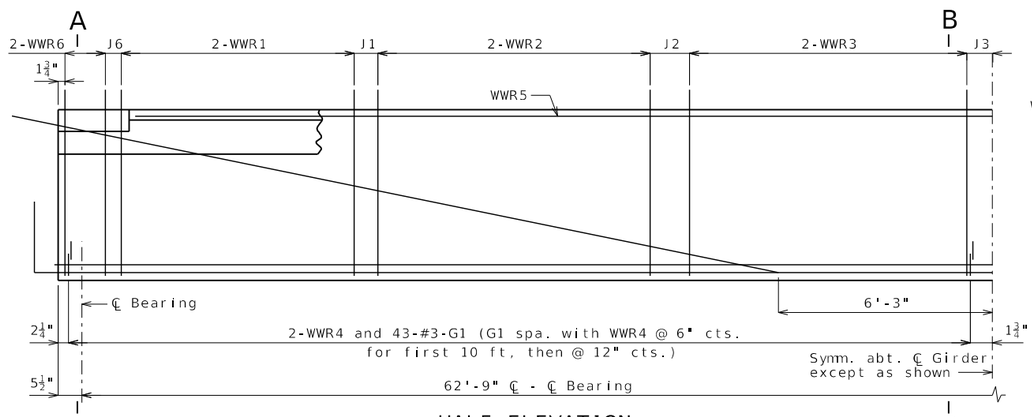

HALF ELEVATION

Reinforcement support strands not shown for clarity.

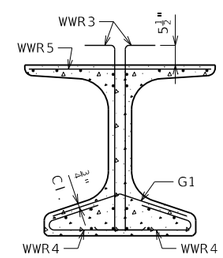

SECTION B-B

Strands not shown for clarity.

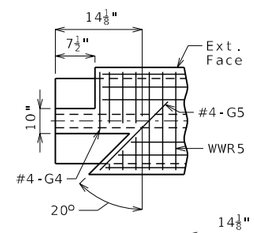

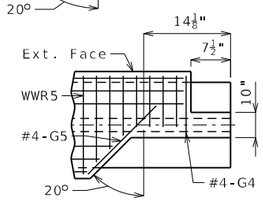

LEFT EXTERIOR GIRDER AT INTERMEDIATE BENT

Rotate 180° for right ext.

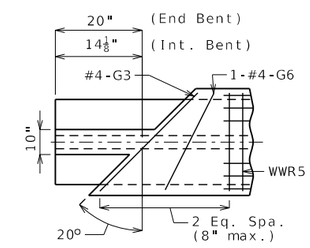

INTERIOR GIRDER AT ALL BENTS & EXTERIOR GIRDER AT END BENT

TOP FLANGE BLOCKOUT

General Notes:

Concrete for prestressed beams shall be Class A-1 with f'c = 8000 psi and f'ci = 6500 psi.

Use 22 strands, 0.6"Ø Grade 270, with an initial prestress force of 967 kips.

Pretensioned members shall be in accordance with Sec 1029.

Fabricator shall be responsible for location and design of lifting devices.

Exterior and interior girders are the same except: coil ties, top flange blockout, application of bond breaker, coil inserts for slab drains.

The contractor shall provide bracing necessary for lateral and torsional stability of the girders during construction of the concrete slab and remove the bracing after the slab has attained 75% design strength. Contractor shall not drill holes in the girders.

For Girder Camber Diagram, see Sheet No. 23.

For location of coil inserts at slab drains, see Sheets No. 21 & 22.

For location of coil ties at concrete diaphragms and integral bents, see Sheets No. 3, 13 & 20.

Alternate bar reinforcing steel details are provided and may be used. The same type of reinforcing steel shall be used for all girders in all spans.

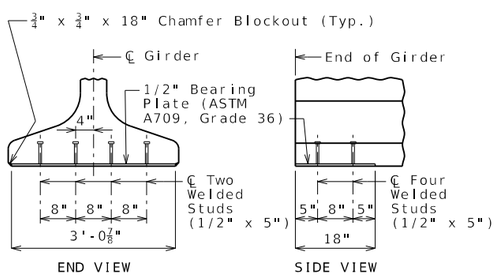

BEARING PLATE

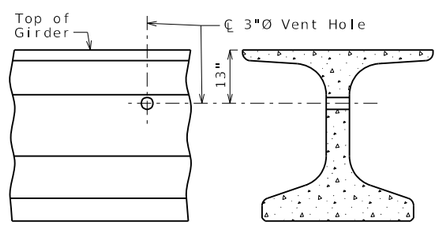

VENT HOLE

Place vent holes at or near upgrade 1/3 point of girders and clear reinforcing steel or strands by 1 1/2" minimum.

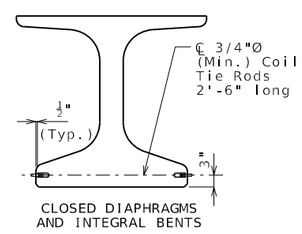

COIL TIES

Exclude coil tie at exterior face of exterior girders except at integral end bents.

NU-GIRDERS - SPANS (1-2) AND (3-4)

Detailed Dec. 2024
Checked Dec. 2024

Note: This drawing is not to scale. Follow dimensions.

STATE OF MISSOURI DAVID BURDICK NUMBER E-24015 REGISTERED PROFESSIONAL ENGINEER
THIS SHEET HAS BEEN SIGNED, SEALED AND DATED ELECTRONICALLY

DATE PREPARED	
3/3/2025	
ROUTE: NOR	STATE: MO
DISTRICT: BR	SHEET NO.: 16
COUNTY: ST. CHARLES	
JOB NO.: JSL0112	
CONTRACT ID.	
PROJECT NO.	
BRIDGE NO.: A9387	

DESCRIPTION

DATE

MISSOURI HIGHWAYS AND TRANSPORTATION COMMISSION

105 WEST CAPITOL
JEFFERSON CITY, MO 65102
1-888-ASK-MODOT (1-888-275-6636)

CDG ENGINEERS
One Campbell Plaza
St. Louis, Missouri 63139
T. 314 781 7770
F. 314 781 9075
Missouri State Certificate of Authority #1721

(1) Fabricator shall apply a bond breaker to this region.

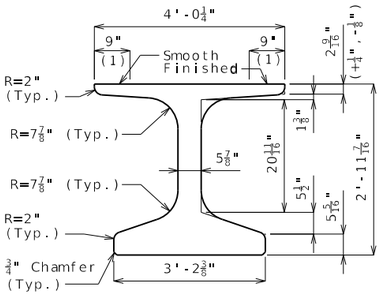

DIMENSIONS

(2) Outer strands tensioned to 2.02 kips/strand and inner strands to 8 kips/strand. Placed symmetrical about ℄ Girder. May be moved laterally in pairs.

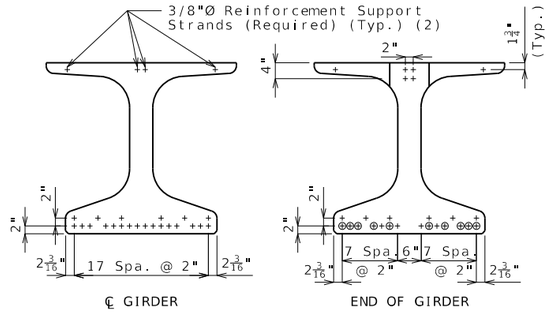

STRAND ARRANGEMENT

+ Indicates prestressing strand.

o Indicates cut & shop bend with 3'-0" projection.

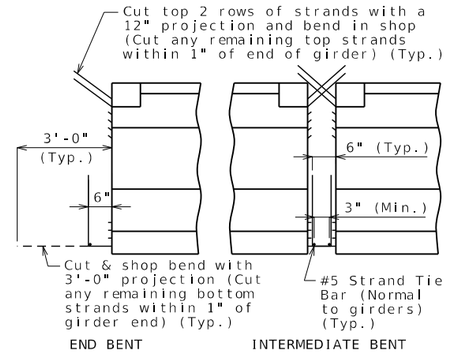

STRANDS AT GIRDER ENDS

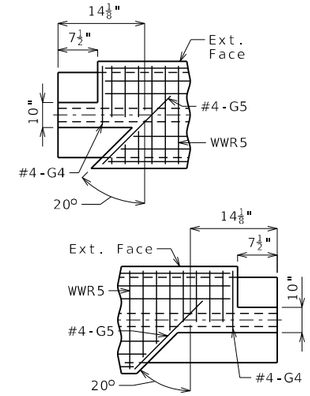

LEFT EXTERIOR GIRDER AT INTERMEDIATE BENT

Rotate 180° for right ext.

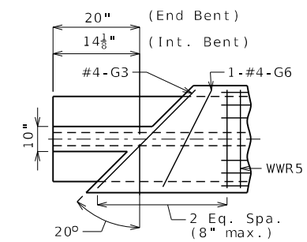

INTERIOR GIRDER AT ALL BENTS & EXTERIOR GIRDER AT END BENT

TOP FLANGE BLOCKOUT

Bill of Reinforcing Steel - Each Girder			
No.	Size/ Mark	Length	Shape
192	5 B1	4'-4"	11S
212	4 D1	4'-0"	9S
2	4 G3	4'-1"	20
2	4 G4	2'-3"	20
2	4 G5	2'-10"	20
2	4 G6	Varies	20

Bending Diagrams

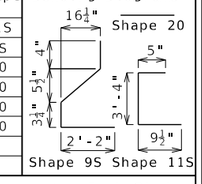

Welded Wire Reinforcement - Each Girder

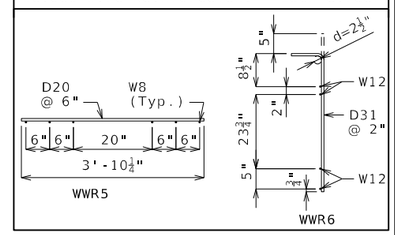

All dimensions are out to out.

Hooks and bends shall be in accordance with the CRSI Manual of Standard Practice for Detailing Reinforced Concrete Structures, Stirrup and Tie Dimensions.

Actual bar lengths are measured along centerline of bar to the nearest inch.

Minimum clearance to reinforcing shall be one inch.

All bar reinforcement shall be Grade 60.

The two D1 bars may be furnished as one bar at the fabricator's option.

All B1 bars shall be epoxy coated.

G4 and G5 not required for interior girders. Half no. of G3, G4, G5 and G6 not required for ext. girders of end spans.

General Notes:

Concrete for prestressed girders shall be Class A-1 with f'c = 8000 psi and f'ci = 6500 psi.

Use 22 strands, 0.6"Ø Grade 270, with an initial prestress force of 967 kips.

Pretensioned members shall be in accordance with Sec 1029.

Fabricator shall be responsible for location and design of lifting devices.

Exterior and interior girders are the same except: coil ties, top flange blockout, application of bond breaker, coil inserts for slab drains.

The contractor shall provide bracing necessary for lateral and torsional stability of the girders during construction of the concrete slab and remove the bracing after the slab has attained 75% design strength. Contractor shall not drill holes in the girders.

For Girder Camber Diagram, see Sheet No. 23.

For location of coil inserts at slab drains, see Sheets No. 21 & 22.

For location of coil ties at concrete diaphragms and integral bents, see Sheets No. 3, 13 & 20.

Alternate bar reinforcing steel details are provided and may be used. The same type of reinforcing steel shall be used for all girders in all spans.

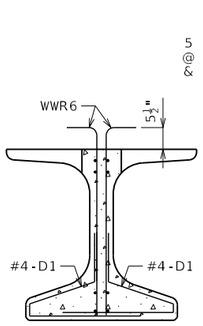

SECTION A-A

Strands not shown for clarity.

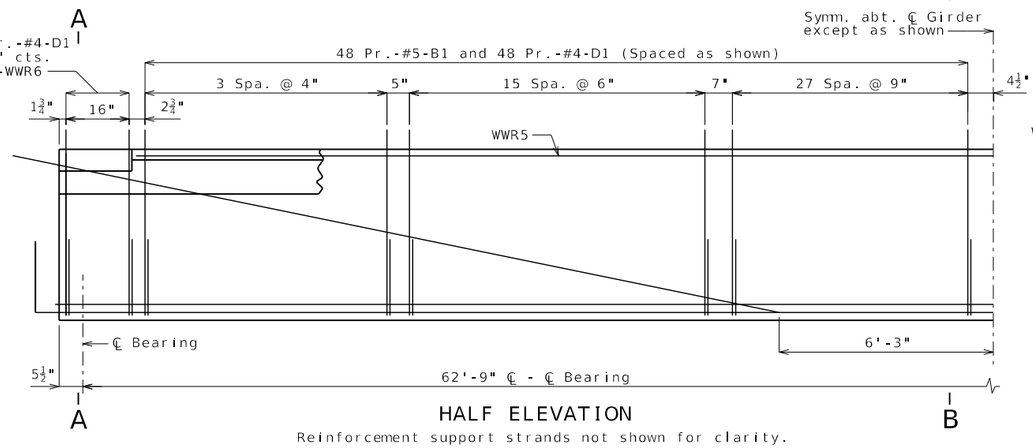

HALF ELEVATION

Reinforcement support strands not shown for clarity.

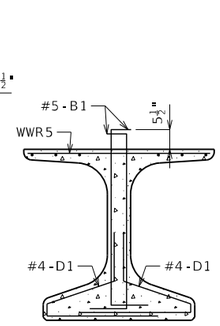

SECTION B-B

Strands not shown for clarity.

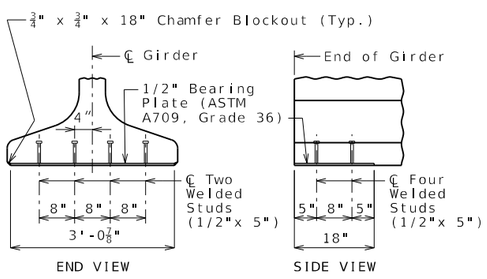

END VIEW

SIDE VIEW

BEARING PLATE

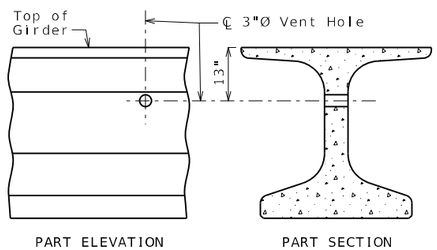

PART ELEVATION

PART SECTION

VENT HOLE

Place vent holes at or near upgrade 1/3 point of girders and clear reinforcing steel or strands by 1 1/2" minimum.

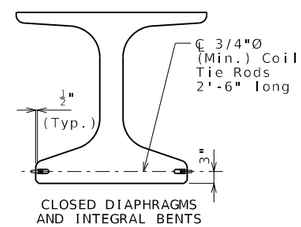

CLOSED DIAPHRAGMS AND INTEGRAL BENTS

COIL TIES

Exclude coil tie at exterior face of exterior girders except at integral end bents.

NU-GIRDERS (ALTERNATE REINFORCEMENT) - SPANS (1-2) AND (3-4)

Detailed Dec. 2024
Checked Dec. 2024

Note: This drawing is not to scale. Follow dimensions.

STATE OF MISSOURI DAVID BURDICK NUMBER E-24314 REGISTERED PROFESSIONAL ENGINEER
THIS SHEET HAS BEEN SIGNED, SEALED AND DATED ELECTRONICALLY

DATE PREPARED 3/3/2025

ROUTE	STATE
NOR	MO
DISTRICT	SHEET NO.
BR	17

COUNTY: ST. CHARLES

JOB NO.: JSL0112

CONTRACT ID.

PROJECT NO.

BRIDGE NO.: A9387

DATE	DESCRIPTION

MISSOURI HIGHWAYS AND TRANSPORTATION COMMISSION
105 WEST CAPITOL
JEFFERSON CITY, MO 65102
1-888-ASK-MODOT (1-888-275-6636)

CDG ENGINEERS
One Campbell Plaza
St. Louis, Missouri 63139
T. 314 781 7770
F. 314 781 9075
Missouri State Certificate of Authority # 1721

(1) Fabricator shall apply a bond breaker to this region.

(2) Outer strands tensioned to 2.02 kips/strand and inner strands to 8 kips/strand. Placed symmetrical about ℄ Girder. May be moved laterally in pairs.

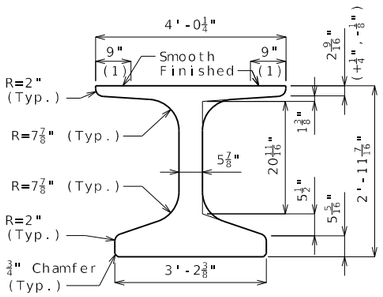

DIMENSIONS

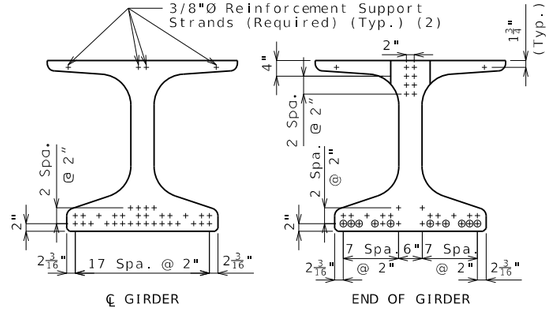

STRAND ARRANGEMENT

+ Indicates prestressing strand.

o Indicates cut & shop bend with 3'-0" projection.

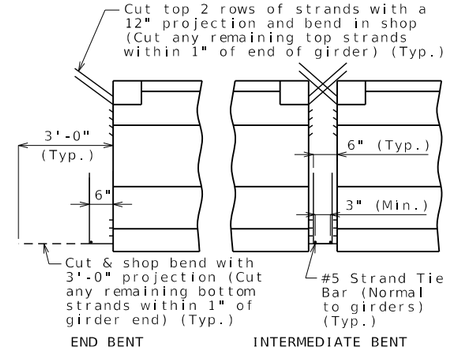

STRANDS AT GIRDER ENDS

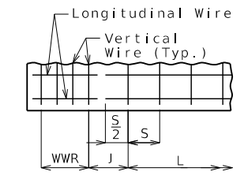

WELDED WIRE PLACEMENT

S = Vertical wire spacing

L = Length of WWR mats

J = Distance between WWR mats

Bill of Reinforcing Steel

Bars Each Girder				
No.	Size/Mark		Length	Shape
102	3	G1	2'-10"	8
2	4	G3	4'-1"	20
2	4	G4	2'-3"	20
2	4	G5	2'-10"	20
2	4	G6	Varies	20

Welded Wire Each Girder					
Mark	Size	S	W	L	J
WWR1	D31	4"	W12	3'-0"	5"
WWR2	D31	6"	W12	9'-6"	7"
WWR3	D31	9"	W12	51'-0"	–
WWR6	D31	4"	W12	16"	2¾"

Bending Diagrams

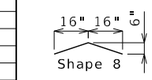

Shape 20

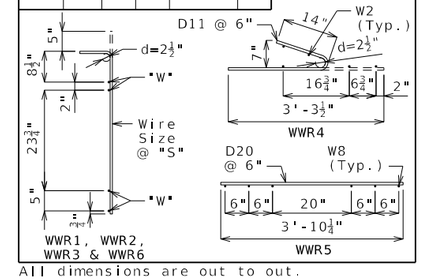

All dimensions are out to out.

Hooks and bends shall be in accordance with the CRSI Manual of Standard Practice for Detailing Reinforced Concrete Structures, Stirrup and Tie Dimensions.

Actual bar lengths are measured along centerline of bar to the nearest inch.

Minimum clearance to reinforcing shall be 1", unless otherwise shown.

All bar reinforcement shall be Grade 60.

WWR shall not be epoxy coated.

G4 and G5 not required for interior girders. G3 and G6 not required for exterior girders of intermediate spans.

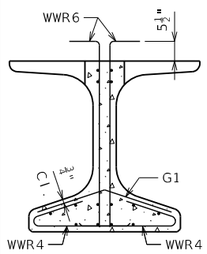

SECTION A-A

Strands not shown for clarity.

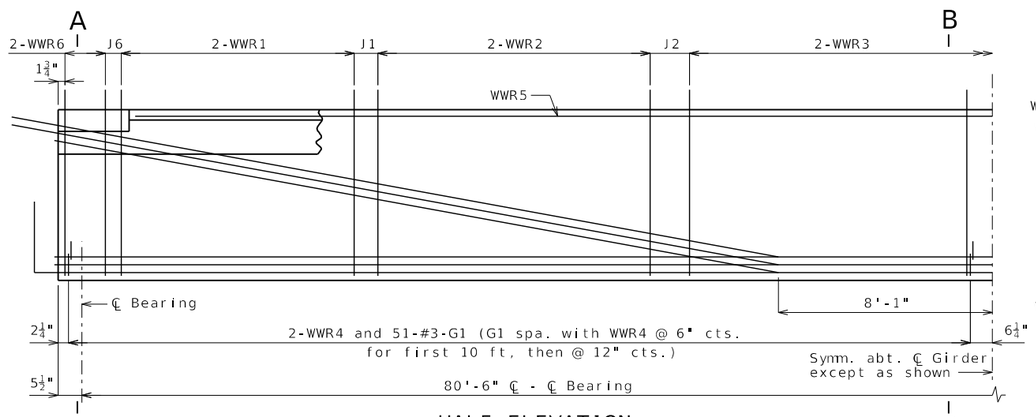

HALF ELEVATION

Reinforcement support strands not shown for clarity.

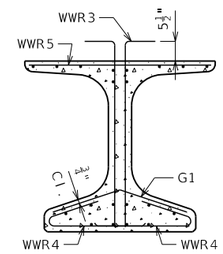

SECTION B-B

Strands not shown for clarity.

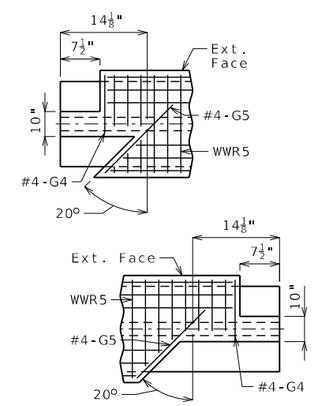

LEFT EXTERIOR GIRDER AT INTERMEDIATE BENT

Rotate 180° for right ext.

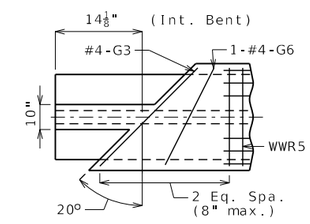

INTERIOR GIRDER AT ALL BENTS

TOP FLANGE BLOCKOUT

General Notes:

Concrete for prestressed beams shall be Class A-1 with f'c = 8000 psi and f'ci = 6500 psi.

Use 32 strands, 0.6"Ø Grade 270, with an initial prestress force of 1406 kips.

Pretensioned members shall be in accordance with Sec 1029.

Fabricator shall be responsible for location and design of lifting devices.

Exterior and interior girders are the same except: coil ties, top flange blockout, application of bond breaker, coil inserts for slab drains.

The contractor shall provide bracing necessary for lateral and torsional stability of the girders during construction of the concrete slab and remove the bracing after the slab has attained 75% design strength. Contractor shall not drill holes in the girders.

For Girder Camber Diagram, see Sheet No. 23.

For location of coil inserts at slab drains, see Sheets No. 21 & 22.

For location of coil ties at concrete diaphragms, see Sheet No. 20.

Alternate bar reinforcing steel details are provided and may be used. The same type of reinforcing steel shall be used for all girders in all spans.

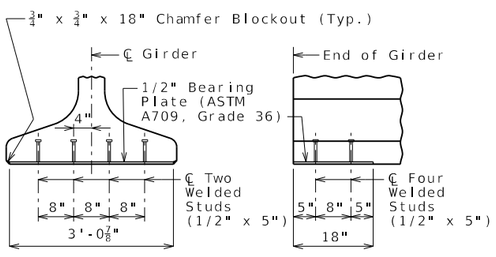

END VIEW

SIDE VIEW

BEARING PLATE

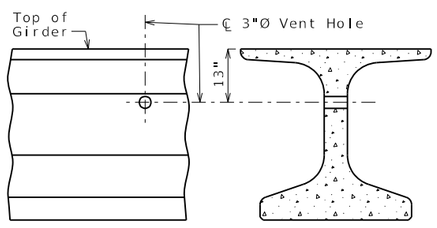

PART ELEVATION

PART SECTION

VENT HOLE

Place vent holes at or near upgrade 1/3 point of girders and clear reinforcing steel or strands by 1 1/2" minimum.

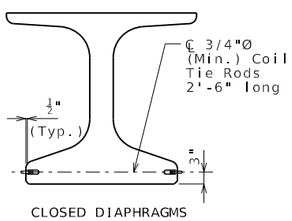

CLOSED DIAPHRAGMS

COIL TIES

Exclude coil tie at exterior face of exterior girders.

NU-GIRDERS - SPAN (2-3)

Detailed Dec. 2024
Checked Dec. 2024

Note: This drawing is not to scale. Follow dimensions.

STATE OF MISSOURI DAVID BURDICK NUMBER E-24015 REGISTERED PROFESSIONAL ENGINEER
THIS SHEET HAS BEEN SIGNED, SEALED AND DATED ELECTRONICALLY

DATE PREPARED	
3/3/2025	
ROUTE NOR	STATE MO
DISTRICT BR	SHEET NO. 18
COUNTY ST. CHARLES	
JOB NO. JSL0112	
CONTRACT ID.	
PROJECT NO.	
BRIDGE NO. A9387	

DESCRIPTION

DATE

MISSOURI HIGHWAYS AND TRANSPORTATION COMMISSION
105 WEST CAPITOL
JEFFERSON CITY, MO 65102
1-888-ASK-MODOT (1-888-275-6636)

CDG ENGINEERS
One Campbell Plaza
St. Louis, Missouri 63139
T. 314 781 7770
F. 314 781 9075
Missouri State Certificate of Authority #1721

(1) Fabricator shall apply a bond breaker to this region.

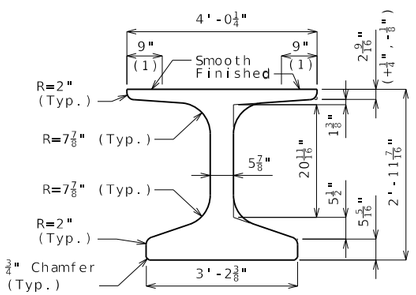

DIMENSIONS

(2) Outer strands tensioned to 2.02 kips/strand and inner strands to 8 kips/strand. Placed symmetrical about ℄ Girder. May be moved laterally in pairs.

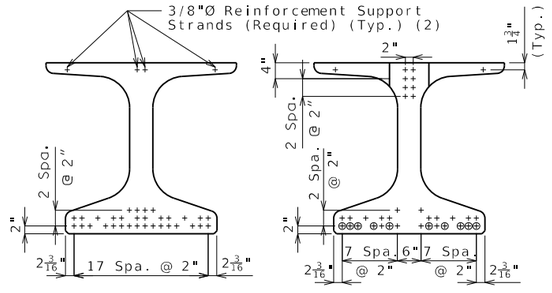

℄ GIRDER END OF GIRDER

STRAND ARRANGEMENT

+ Indicates prestressing strand.

o Indicates cut & shop bend with 3'-0" projection.

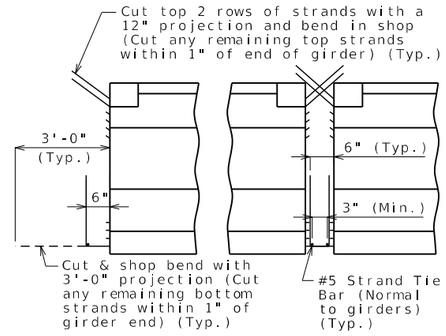

END BENT INTERMEDIATE BENT

STRANDS AT GIRDER ENDS

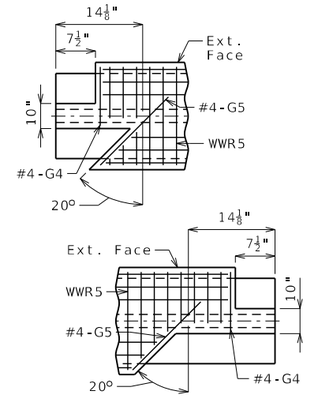

LEFT EXTERIOR GIRDER AT INTERMEDIATE BENT

Rotate 180° for right ext.

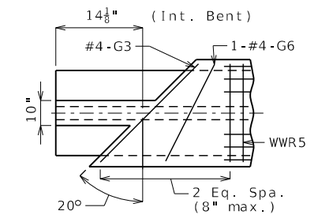

INTERIOR GIRDER AT ALL BENTS

TOP FLANGE BLOCKOUT

Bill of Reinforcing Steel - Each Girder			
No.	Size/ Mark	Length	Shape
258	5 B1	4'-4"	11S
278	4 D1	4'-0"	9S
2	4 G3	4'-1"	20
2	4 G4	2'-3"	20
2	4 G5	2'-10"	20
2	4 G6	Varies	20

Bending Diagrams

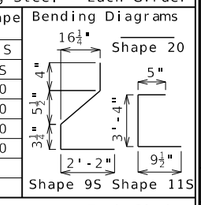

Welded Wire Reinforcement - Each Girder

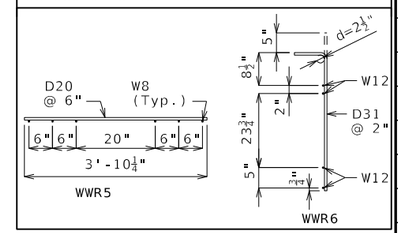

All dimensions are out to out.

Hooks and bends shall be in accordance with the CRSI Manual of Standard Practice for Detailing Reinforced Concrete Structures, Stirrup and Tie Dimensions.

Actual bar lengths are measured along centerline of bar to the nearest inch.

Minimum clearance to reinforcing shall be one inch.

All bar reinforcement shall be Grade 60.

The two D1 bars may be furnished as one bar at the fabricator's option.

All B1 bars shall be epoxy coated.

G4 and G5 not required for interior girders. G3 and G6 not required for exterior girders of intermediate spans.

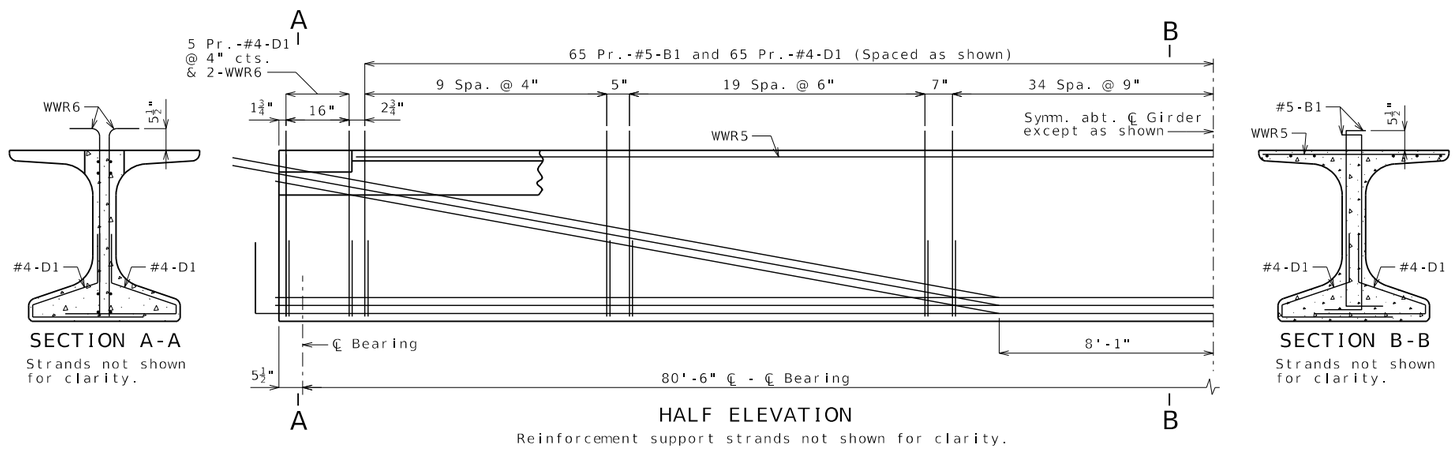

SECTION A-A

Strands not shown for clarity.

HALF ELEVATION

Reinforcement support strands not shown for clarity.

SECTION B-B

Strands not shown for clarity.

General Notes:

Concrete for prestressed girders shall be Class A-1 with f'c = 8000 psi and f'ci = 6500 psi.

Use 32 strands, 0.6"Ø Grade 270, with an initial prestress force of 1406 kips.

Pretensioned members shall be in accordance with Sec 1029.

Fabricator shall be responsible for location and design of lifting devices.

Exterior and interior girders are the same except: coil ties, top flange blockout, application of bond breaker, coil inserts for slab drains.

The contractor shall provide bracing necessary for lateral and torsional stability of the girders during construction of the concrete slab and remove the bracing after the slab has attained 75% design strength. Contractor shall not drill holes in the girders.

For Girder Camber Diagram, see Sheet No. 23.

For location of coil inserts at slab drains, see Sheets No. 21 & 22.

For location of coil ties at concrete diaphragms, see Sheets No. 20.

Alternate bar reinforcing steel details are provided and may be used. The same type of reinforcing steel shall be used for all girders in all spans.

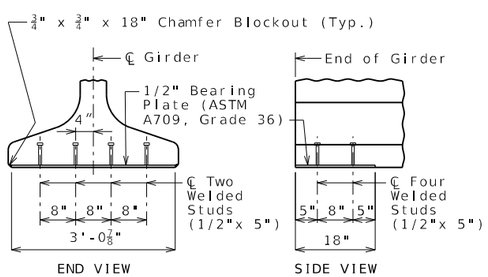

END VIEW SIDE VIEW

BEARING PLATE

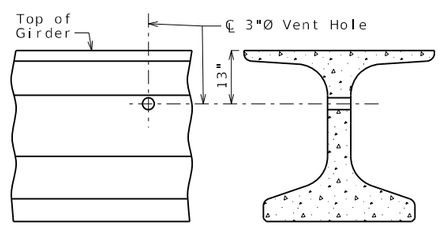

PART ELEVATION PART SECTION

VENT HOLE

Place vent holes at or near upgrade 1/3 point of girders and clear reinforcing steel or strands by 1 1/2" minimum.

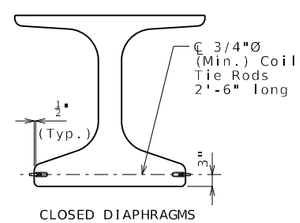

CLOSED DIAPHRAGMS

COIL TIES

Exclude coil tie at exterior face of exterior girders.

NU-GIRDERS (ALTERNATE REINFORCEMENT) - SPAN (2-3)

Detailed Dec. 2024
Checked Dec. 2024

Note: This drawing is not to scale. Follow dimensions.

STATE OF MISSOURI DAVID BURDICK NUMBER E-24015 REGISTERED PROFESSIONAL ENGINEER
THIS SHEET HAS BEEN SIGNED, SEALED AND DATED ELECTRONICALLY

DATE PREPARED	
3/3/2025	
ROUTE NOR	STATE MO
DISTRICT BR	SHEET NO. 19
COUNTY ST. CHARLES	
JOB NO. JSL0112	
CONTRACT ID.	
PROJECT NO.	
BRIDGE NO. A9387	

DESCRIPTION

DATE

MISSOURI HIGHWAYS AND TRANSPORTATION COMMISSION
105 WEST CAPITOL
JEFFERSON CITY, MO 65102
1-888-ASK-MODOT (1-888-275-6636)

CDG ENGINEERS
One Campbell Plaza
St. Louis, Missouri 63139
T. 314 781 7770
F. 314 781 9075
Missouri State Certificate of Authority # 1721

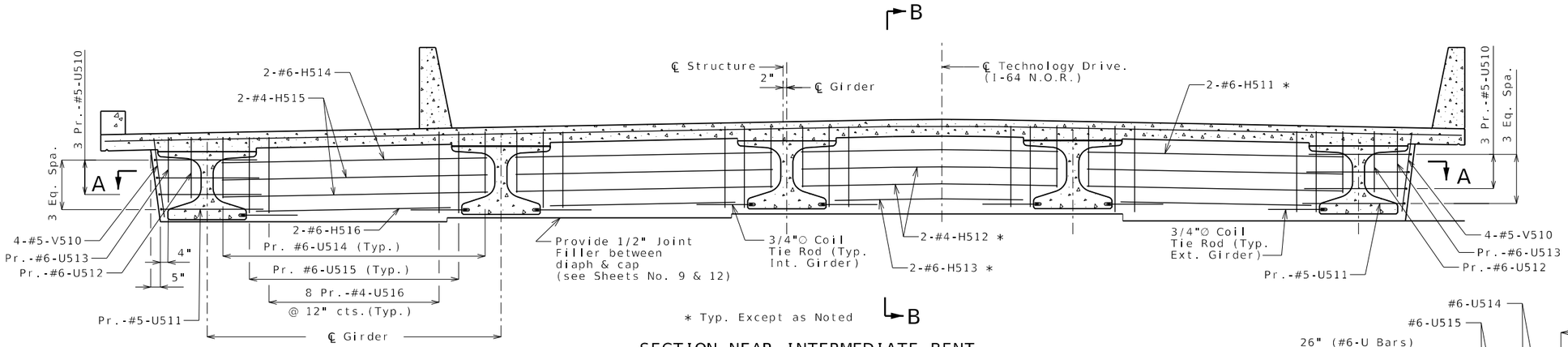

* Typ. Except as Noted

SECTION NEAR INTERMEDIATE BENT

Normal to ℄ Structure

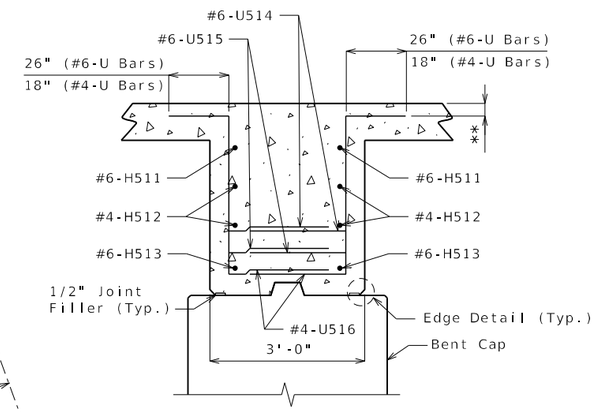

SECTION B-B

(**) 3" cl. (#6-U Bars)
$3\frac{1}{4}$" cl. (#4-U Bars)

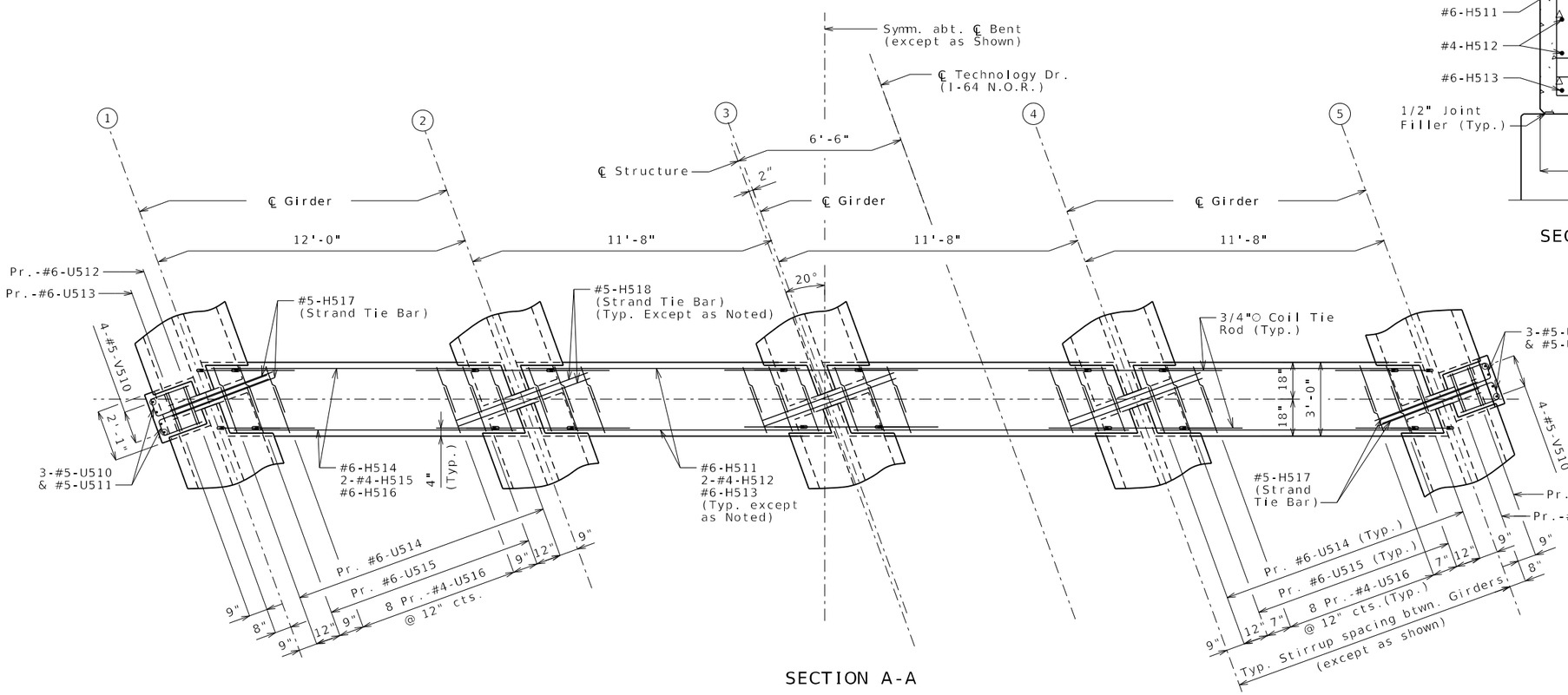

SECTION A-A

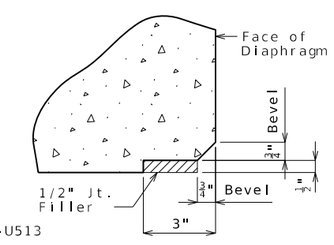

EDGE DETAIL

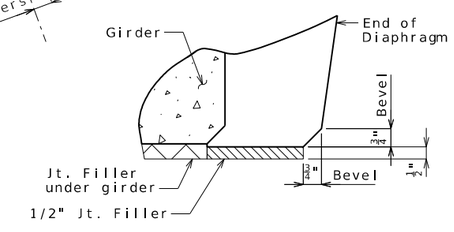

END DETAIL

Notes:

Diaphragms at intermediate bents shall be built vertical.

For location of Strand Tie Bars and Coil Tie Rods, see Sheets No. 16 thru 19.

All U bars in diaphragms shall be placed parllel to ℄ Roadway.

DETAILS OF CONCRETE DIAPHRAGM AT INTERMEDIATE BENTS NO. 2 & 3

Detailed Dec. 2024
Checked Dec. 2024

Note: This drawing is not to scale. Follow dimensions.

STATE OF MISSOURI
DAVID BURDICK
NUMBER E-24015
REGISTERED PROFESSIONAL ENGINEER
THIS SHEET WAS BEGUN ON 3/3/2025
SIGNED, SEALED AND DATED ELECTRONICALLY

DATE PREPARED	3/3/2025
ROUTE	NOR
STATE	MO
DISTRICT	BR
SHEET NO.	20
COUNTY	ST. CHARLES
JOB NO.	JSL0112
CONTRACT ID.	
PROJECT NO.	
BRIDGE NO.	A9387

DESCRIPTION

DATE

MISSOURI HIGHWAYS AND TRANSPORTATION COMMISSION
105 WEST CAPITOL
JEFFERSON CITY, MO 65102
1-888-ASK-MODOT (1-888-275-6636)

CDG ENGINEERS
One Campbell Plaza
St. Louis, Missouri 63139
T. 314 781 7770
F. 314 781 9075
Missouri State Certificate of Authority # 1721

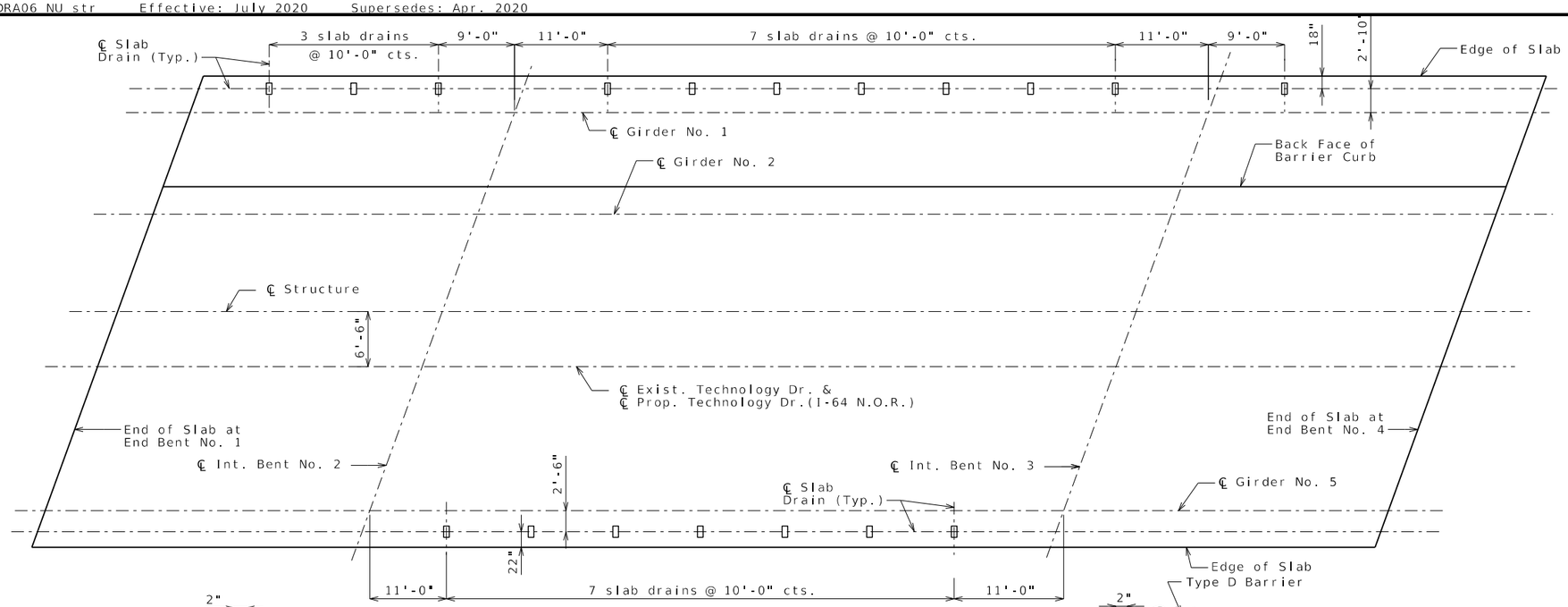

PLAN OF SLAB SHOWING SLAB DRAIN LOCATIONS

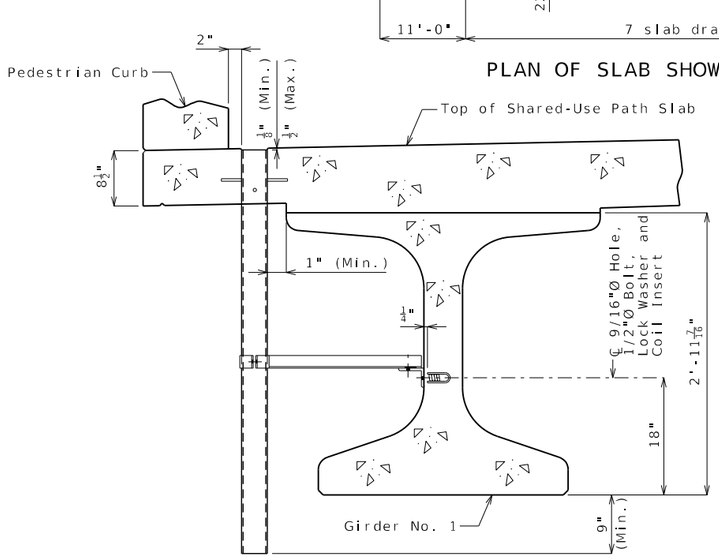

PART SECTION NEAR SHARED USE PATH DRAIN

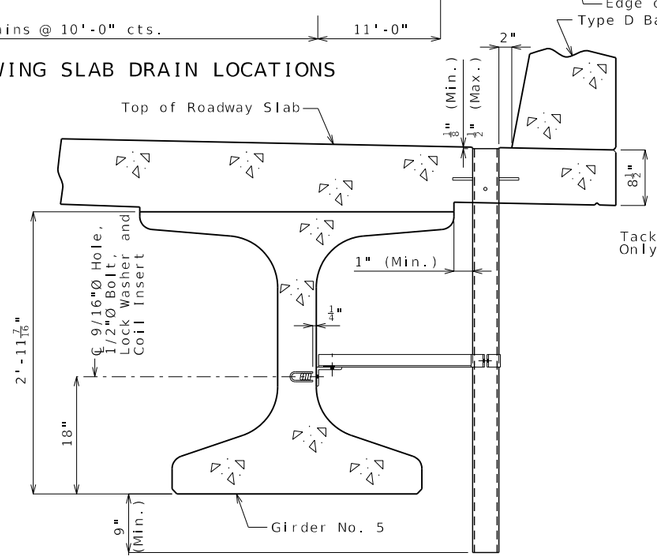

PART SECTION NEAR ROADWAY DRAIN
(Decorative Pedestrian Fence not shown for clarity)

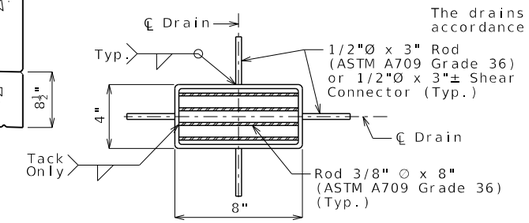

PLAN OF STEEL DRAIN NEAR GIRDER NO. 1

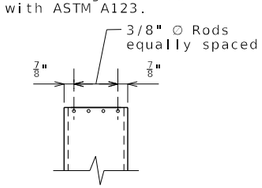

END OF DRAIN NEAR GIRDER NO. 1

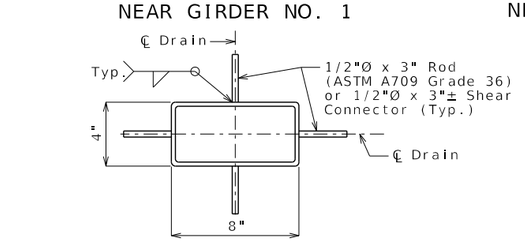

PLAN OF STEEL DRAIN NEAR GIRDER NO. 5

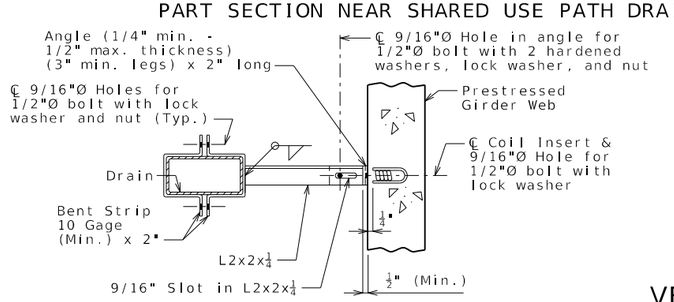

PART SECTION SHOWING BRACKET ASSEMBLY

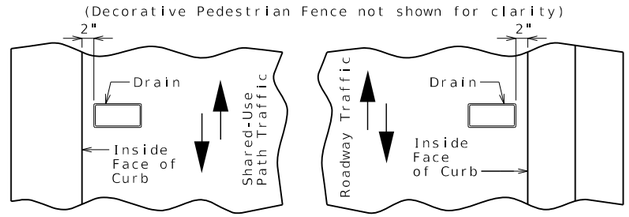

PART PLAN OF SLAB AT DRAIN

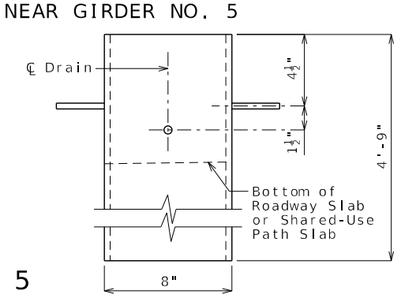

ELEVATION OF DRAIN

VERTICAL SLAB DRAINS ALONG GIRDERS NO. 1 & 5

Drain details shown are located along Girders No. 1 & 5.
For drain details located along Girder No. 2, see Sheet No. 22.

Detailed Dec. 2024
Checked Dec. 2024

Note: This drawing is not to scale. Follow dimensions.

General Notes:

All drains shall be steel. FRP slab drains will not be permitted.

Slab drain bracket assembly shall be ASTM A709 Grade 36 steel.

Locate drains in slab by dimensions shown in Part Section Near Drain.

Reinforcing steel shall be shifted to clear drains.

The coil inserts and bracket assembly shall be galvanized in accordance with ASTM A123.

All bolts, hardened washers, lock washers and nuts shall be galvanized in accordance with AASHTO M 232 (ASTM A153), Class C.

All 1/2"Ø bolts shall be ASTM A307.

Shop drawings will not be required for the slab drains and the bracket assembly.

The coil insert required for the bracket assembly attachment shall be located on the prestressed girder shop drawings.

Coil inserts shall have a concrete pull-out strength (ultimate load) of at least 2,500 pounds in 5,000 psi concrete.

The bolt required to attach the slab drain bracket assembly to the prestressed girder web shall be supplied by the prestressed girder fabricator.

Slab drains may be fabricated of either 1/4" welded sheets of ASTM A709 Grade 36 steel or from 1/4" structural steel tubing ASTM A500 or A501.

Outside dimensions of drains are 8" x 4".

The drains shall be galvanized in accordance with ASTM A123.

STATE OF MISSOURI
DAVID BURDICK
NUMBER E-24015
REGISTERED PROFESSIONAL ENGINEER
THIS SHEET HAS BEEN SIGNED, SEALED AND DATED ELECTRONICALLY

DATE PREPARED	3/3/2025
ROUTE	NOR
STATE	MO
DISTRICT	BR
SHEET NO.	21
COUNTY	ST. CHARLES
JOB NO.	JSL0112
CONTRACT ID.	
PROJECT NO.	
BRIDGE NO.	A9387

DATE	DESCRIPTION

MISSOURI HIGHWAYS AND TRANSPORTATION COMMISSION
105 WEST CAPITOL
JEFFERSON CITY, MO 65102
1-888-ASK-MODOT (1-888-275-6636)

CDG ENGINEERS
One Campbell Plaza
St. Louis, Missouri 63139
T. 314 781 7770
F. 314 781 9075
Missouri State Certificate of Authority #1721

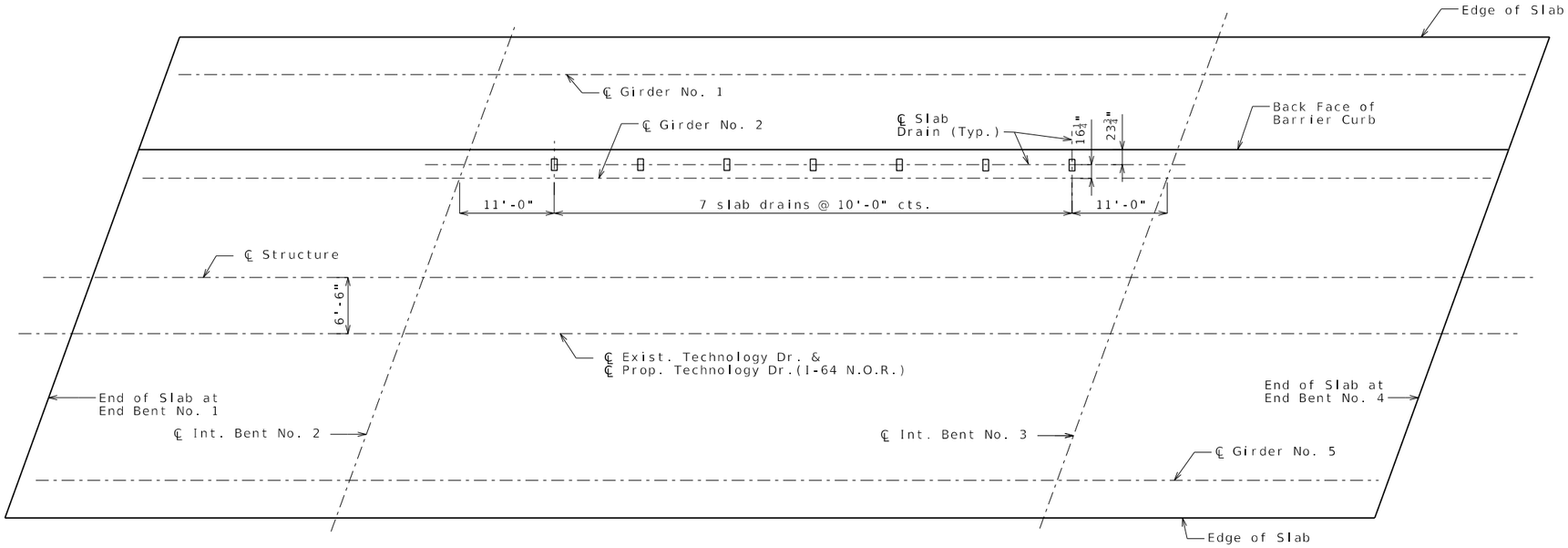

PLAN OF SLAB SHOWING SLAB DRAIN LOCATIONS

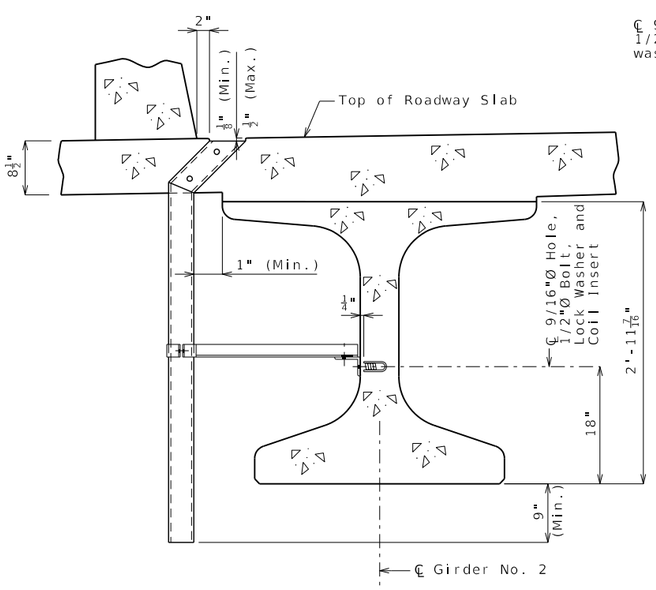

PART SECTION NEAR DRAIN

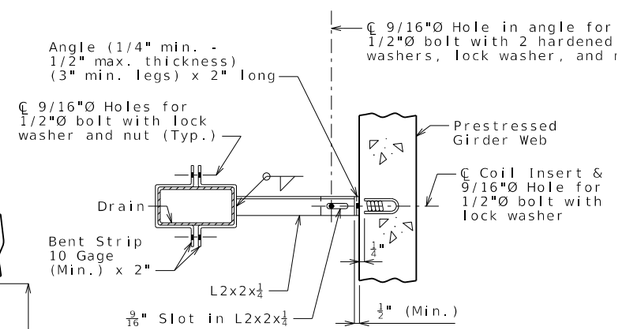

PART SECTION SHOWING BRACKET ASSEMBLY

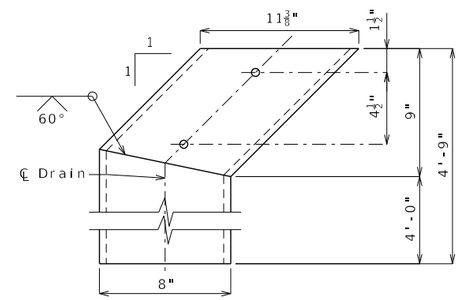

ELEVATION OF DRAIN

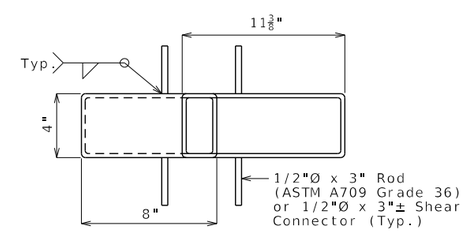

PLAN OF STEEL DRAIN OPTION

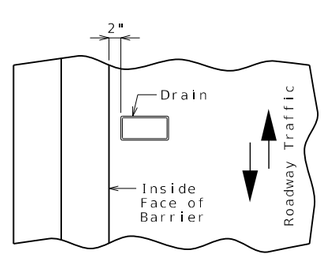

PART PLAN OF SLAB AT DRAIN

ANGLED SLAB DRAINS ALONG GIRDER NO. 2

Drain details shown are located at Girder No. 2,
For drain details located along Girders No. 1 & 5, see Sheet No.21.

General Notes:

All drains shall be steel. FRP slab drains will not be permitted.

Slab drain bracket assembly shall be ASTM A709 Grade 36 steel.

Locate drains in slab by dimensions shown in Part Section Near Drain.

Reinforcing steel shall be shifted to clear drains.

The coil inserts and bracket assembly shall be galvanized in accordance with ASTM A123.

All bolts, hardened washers, lock washers and nuts shall be galvanized in accordance with AASHTO M 232 (ASTM A153), Class C.

All 1/2"Ø bolts shall be ASTM A307.

Shop drawings will not be required for the slab drains and the bracket assembly.

The coil insert required for the bracket assembly attachment shall be located on the prestressed girder shop drawings.

Coil inserts shall have a concrete pull-out strength (ultimate load) of at least 2,500 pounds in 5,000 psi concrete.

The bolt required to attach the slab drain bracket assembly to the prestressed girder web shall be supplied by the prestressed girder fabricator.

Slab drains may be fabricated of either 1/4" welded sheets of ASTM A709 Grade 36 steel or from 1/4" structural steel tubing ASTM A500 or A501.

Outside dimensions of drains are 8" x 4".

The drains shall be galvanized in accordance with ASTM A123.

STATE OF MISSOURI
DAVID BURDICK
NUMBER E-24015
REGISTERED PROFESSIONAL ENGINEER
THIS SHEET WAS BEGIN SIGNED, SEALED AND DATED ELECTRONICALLY

DATE PREPARED	
3/3/2025	
ROUTE: NOR	STATE: MO
DISTRICT: BR	SHEET NO.: 22
COUNTY: ST. CHARLES	
JOB NO.: JSL0112	
CONTRACT ID.	
PROJECT NO.	
BRIDGE NO.: A9387	

DATE	DESCRIPTION

MISSOURI HIGHWAYS AND TRANSPORTATION COMMISSION
105 WEST CAPITOL
JEFFERSON CITY, MO 65102
1-888-ASK-MODOT (1-888-275-6636)

CDG ENGINEERS
One Campbell Plaza
St. Louis, Missouri 63139
T. 314 781 7770
F. 314 781 9075
Missouri State Certificate of Authority # 1721

Detailed Dec. 2024
Checked Dec. 2024

Note: This drawing is not to scale. Follow dimensions.

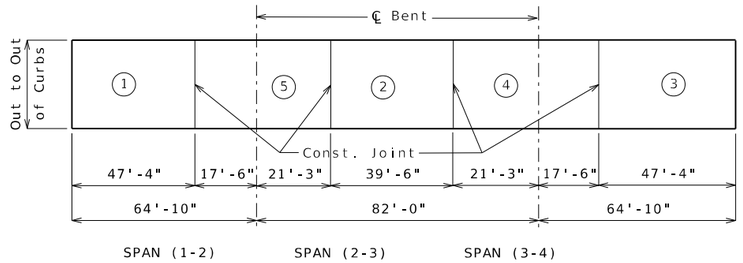

	Sequence of Pours					Min. Rate of Pour Cu. Yds./Hr.
	Direction					With Retarder
Basic Sequence	1	2	3	4	5	25
	Either Direction					
Alternate pours to the basic skip sequence are subject to the approval of the engineer in accordance with Sec 703.						
Alternate A Pours	1	5 + 2		4 + 3		38
	End to 5	1 to 4		2 to End		
Alternate B Pours	1 + 5 + 2		4 + 3			55
	End to 4		2 to End			
Alternate C Pours	1 + 5 + 2 + 4 + 3					65
	End to End					

The contractor shall furnish an approved retarder to retard the set of the concrete to 2.5 hours and shall pour and satisfactorily finish the slab pours at the rate given.

The concrete diaphragm at the intermediate bents and integral end bents shall be poured a minimum of 30 minutes and a maximum of 2 hours before the slab is poured.

SLAB POURING SEQUENCE

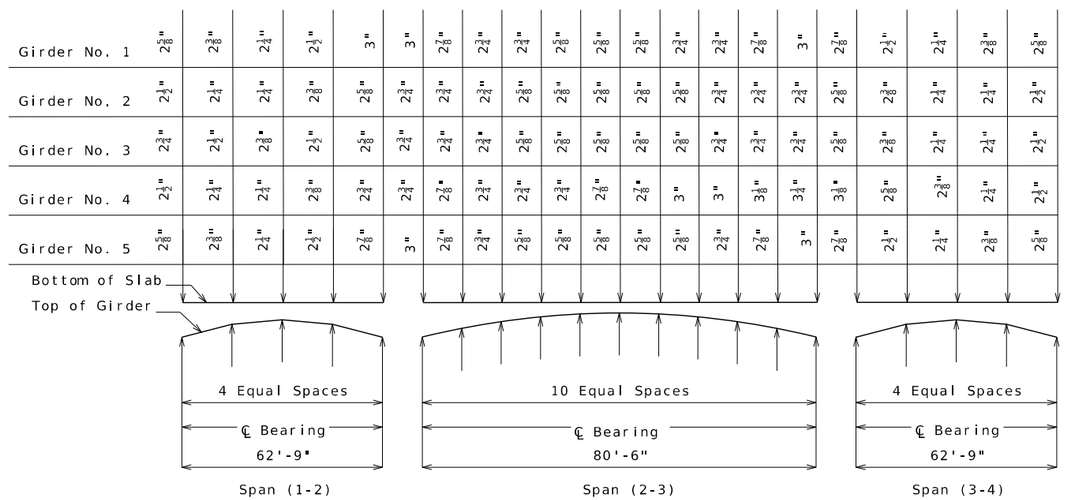

THEORETICAL SLAB HAUNCHING DIAGRAM (ESTIMATED AT 90 DAYS)

If girder camber is different from that shown in the camber diagram, in order to maintain minimum slab thickness, an adjustment of the slab haunches, an increase in slab thickness or a raise in grade uniformly throughout the structure shall be necessary. No payment will be made for additional labor or materials required for variation in haunching, slab thickness or grade adjustment.

Concrete in the slab haunches is included in the Estimated Quantities for Slab on Concrete NU-Girder.

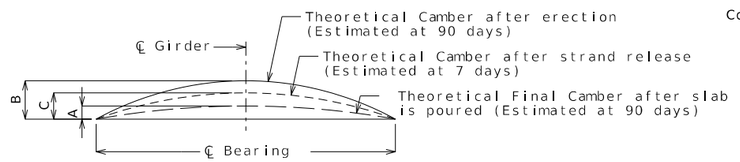

Girder	Span (1-2)			Span (2-3)			Span (3-4)		
	A	B	C	A	B	C	A	B	C
Exterior	1 1/8"	1 7/8"	1 1/8"	1 3/8"	3 5/8"	2"	1 1/8"	1 7/8"	1 1/8"
Interior	1"			1 1/8"			1"		

GIRDER CAMBER DIAGRAM

Conversion Factors for Girder Camber (Estimated at 90 days):

Spans (1-2) & (3-4) 0.25 pt. = 0.7125 x 0.5 pt.

Span (2-3) 0.1 pt. = 0.314 x 0.5 pt.
0.2 pt. = 0.593 x 0.5 pt.
0.3 pt. = 0.813 x 0.5 pt.
0.4 pt. = 0.952 x 0.5 pt.

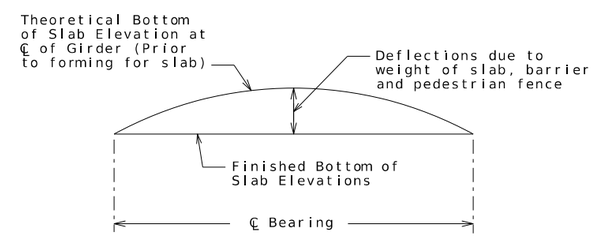

TYPICAL SLAB ELEVATIONS DIAGRAM

Theoretical Bottom of Slab Elevations at Centerline of Girder (Prior to forming for slab) (Estimated at 90 days)

Girder Number	Span (1-2) (62'-9" ℄ Brg. - ℄ Brg.)					Span (2-3) (80'-6" ℄ Brg. - ℄ Brg.)											Span (3-4) (62'-9" ℄ Brg. - ℄ Brg.)				
	℄ Brg.	.25	.50	.75	℄ Brg.	℄ Brg.	.10	.20	.30	.40	.50	.60	.70	.80	.90	℄ Brg.	℄ Brg.	.25	.50	.75	℄ Brg.
1	503.07	503.26	503.39	503.46	503.48	503.48	503.56	**503.62**	503.67	503.70	503.70	503.68	503.64	503.57	503.49	503.39	503.38	503.33	503.23	503.06	502.84
2	503.23	503.43	503.57	503.64	503.66	503.66	503.75	503.83	503.88	503.92	503.93	503.92	503.86	503.80	503.71	503.61	503.60	503.57	503.47	503.31	503.09
3	503.42	503.62	503.77	503.85	**503.87**	503.88	503.97	504.05	504.11	504.15	504.16	504.14	504.10	504.04	503.96	503.86	503.86	503.83	503.74	503.58	503.37
4	503.39	503.60	503.76	503.85	503.88	503.88	503.98	504.06	504.12	504.16	504.18	504.17	504.13	504.07	503.99	503.90	503.89	503.86	503.79	503.63	503.43
5	503.11	503.32	503.48	503.58	503.62	503.63	503.72	503.80	**503.86**	503.90	503.92	503.92	503.88	503.83	503.76	503.68	503.68	503.66	503.58	503.44	503.24

Elevations are based on a constant slab thickness of 8 1/2" and include allowance for theoretical dead load deflections due to weight of slab (including precast panel), barrier, curb and pedestrian fence.

STATE OF MISSOURI
DAVID BURDICK
NUMBER E-24015
REGISTERED PROFESSIONAL ENGINEER
THIS ELEMENT HAS BEEN SIGNED, SEALED AND DATED ELECTRONICALLY

DATE PREPARED 3/3/2025

ROUTE	STATE
NOR	MO
DISTRICT	SHEET NO.
BR	23

COUNTY ST. CHARLES
JOB NO. JSL0112
CONTRACT ID.
PROJECT NO.
BRIDGE NO. A9387

DESCRIPTION
DATE

MISSOURI HIGHWAYS AND TRANSPORTATION COMMISSION
105 WEST CAPITOL
JEFFERSON CITY, MO 65102
1-888-ASK-MODOT (1-888-275-6636)

CDG ENGINEERS
One Campbell Plaza
St. Louis, Missouri 63139
T. 314 781 7770
F. 314 781 9075
Missouri State Certificate of Authority # 1721

Detailed Dec. 2024
Checked Dec. 2024

Note: This drawing is not to scale. Follow dimensions.

B_A9387_023_JSL0112_Camber Haunch.dgn 6:05:09 AM 3/3/2025

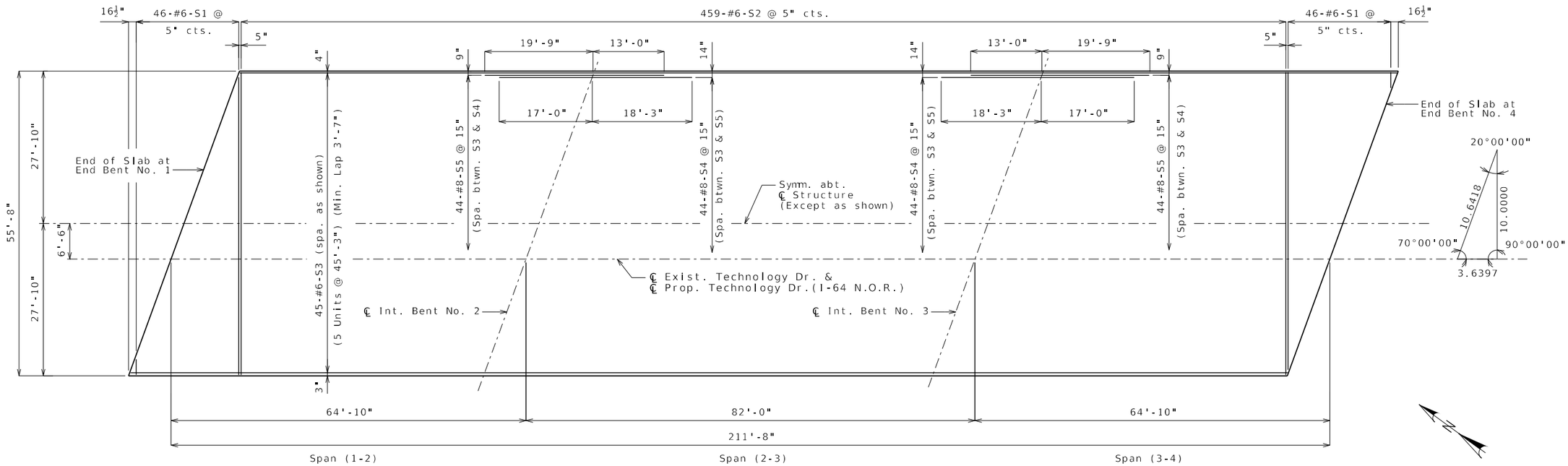

PLAN OF SLAB SHOWING TOP REINFORCEMENT

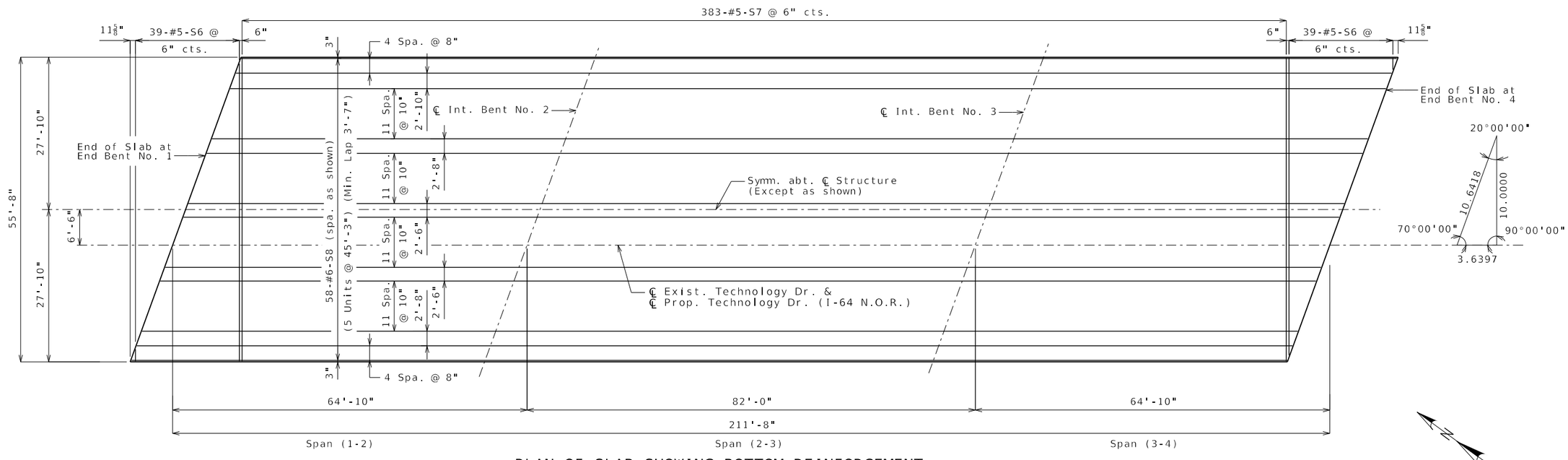

PLAN OF SLAB SHOWING BOTTOM REINFORCEMENT

General Notes:

Longitudinal slab dimensions are measured horizontally.

For Section Thru Slab, see Sheet No. 25.

For details and reinforcement of Type D Barrier Curb not shown, see Sheets No. 26 thru 28.

For details and reinforcement of Pedestrian Curb not shown, see Sheet No. 29.

General Notes (cont'd):

For Theoretical Slab Haunching Diagram, Theoretical Bottom of Slab Elevation and Slab Pouring Sequence, see Sheet No. 23.

For details and location of Vertical Slab Drains, see Sheet No. 21.

For details and location of Angled Slab Drains, see Sheet No. 22.

Shift slab reinforcement in field to avoid conflict with slab drains.

PLAN OF SLAB SHOWING REINFORCEMENT

Detailed Dec. 2024
Checked Dec. 2024

Note: This drawing is not to scale. Follow dimensions.

STATE OF MISSOURI
DAVID BURDICK
NUMBER E-24015
REGISTERED PROFESSIONAL ENGINEER
THIS SHEET HAS BEEN SIGNED, SEALED AND DATED ELECTRONICALLY

DATE PREPARED	3/3/2025
ROUTE NOR	STATE MO
DISTRICT BR	SHEET NO. 24
COUNTY	ST. CHARLES
JOB NO.	JSL0112
CONTRACT ID.	
PROJECT NO.	
BRIDGE NO.	A9387

DATE	DESCRIPTION

MISSOURI HIGHWAYS AND TRANSPORTATION COMMISSION
105 WEST CAPITOL
JEFFERSON CITY, MO 65102
1-888-ASK-MODOT (1-888-275-6636)

CDG ENGINEERS
One Campbell Plaza
St. Louis, Missouri 63139
T. 314 781 7770
F. 314 781 9075
Missouri State Certificate of Authority # 1721

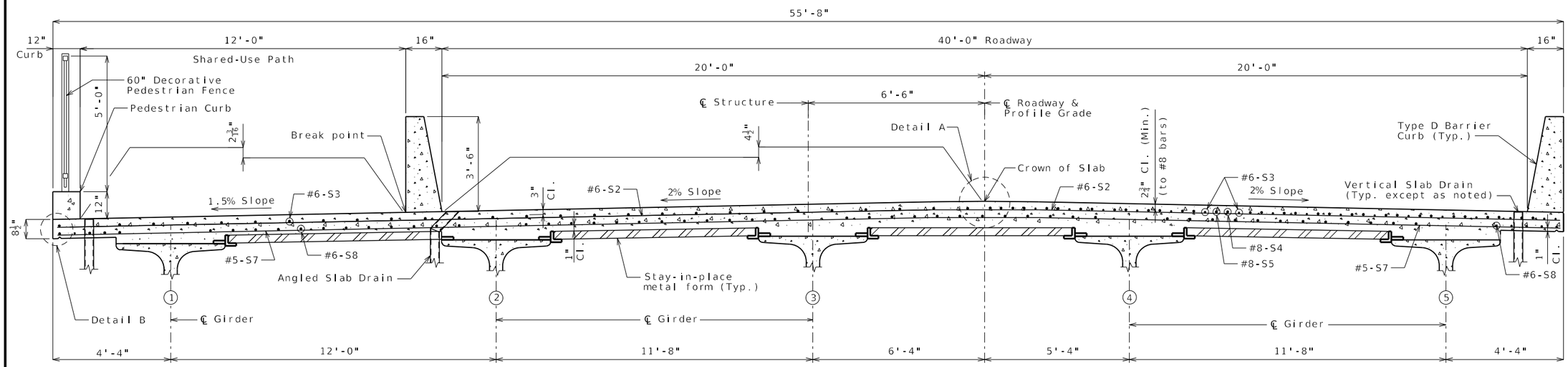

HALF SECTION NEAR MIDSPAN

HALF SECTION NEAR INTERMEDIATE BENT

SECTION THRU SLAB

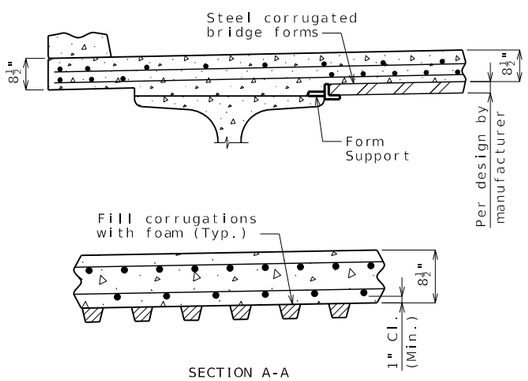

STAY-IN-PLACE FORM DETAILS

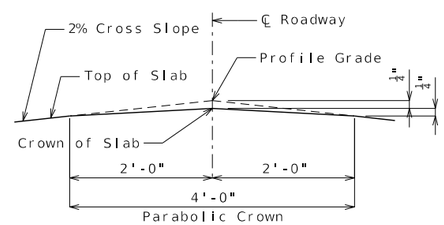

DETAIL A

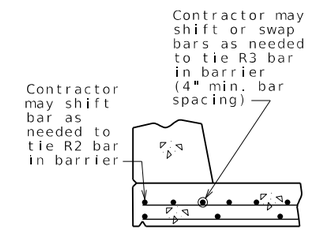

OPTIONAL SHIFTING TOP BARS AT BARRIER

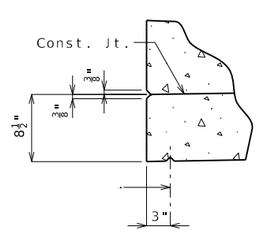

DETAIL B

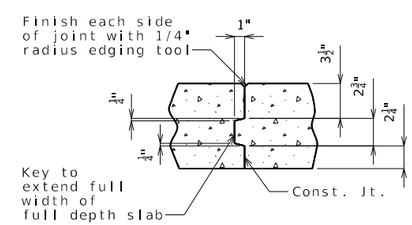

FULL DEPTH SLAB

SLAB CONSTRUCTION JOINT

SLAB DETAILS

Stay-In-Place Forms:

Corrugated steel forms, supports, closure elements and accessories shall be in accordance with grade requirement and coating designation G165 of ASTM A653. Complete shop drawings of the permanent steel deck forms shall be required in accordance with Sec 1080.

Corrugations of stay-in-place forms shall be filled with an expanded polystyrene material. The polystyrene material shall be placed in the forms with an adhesive in accordance with the manufacturer's recommendations.

Form sheets shall not rest directly on the top of girder flanges. Sheets shall be securely fastened to form supports with a minimum bearing length of one inch on each end. Form supports shall be placed in direct contact with the flange. Drilling holes in the girder flanges will not be permitted. All steel fabrication and construction shall be in accordance with Sec 1080 and 712. Certified field welders will not be required for welding of the form supports.

The design of stay-in-place corrugated steel forms is per manufacturer which shall be in accordance with Sec 703 for false work and forms. Maximum actual weight of corrugated steel forms allowed shall be 4 psf assumed for girder loading.

Notes:

For reinforcement of Type D Barrier Curb not shown, see Sheets No. 26 thru 28.

For reinforcement of Pedestrian Curb not shown, see Sheet No. 29.

For Theoretical Bottom of Slab Elevations, Girder Camber Diagram, Slab Pouring Sequence and Theoretical Slab Haunching Diagram, see Sheet No. 23.

For Plan of Slab Showing Reinforcement, see Sheet No. 24.

For details and location of Vertical Slab Drains, see Sheet No. 21.

For details and location of Angled Slab Drains, see Sheet No. 22.

Detailed Dec. 2024
Checked Dec. 2024

Note: This drawing is not to scale. Follow dimensions.

STATE OF MISSOURI DAVID BURDICK NUMBER E-24015 REGISTERED PROFESSIONAL ENGINEER
THIS SHEET HAS BEEN SIGNED, SEALED AND DATED ELECTRONICALLY

DATE PREPARED	
3/3/2025	
ROUTE NOR	STATE MO
DISTRICT BR	SHEET NO. 25
COUNTY ST. CHARLES	
JOB NO. JSL0112	
CONTRACT ID.	
PROJECT NO.	
BRIDGE NO. A9387	

DESCRIPTION

DATE

MISSOURI HIGHWAYS AND TRANSPORTATION COMMISSION
105 WEST CAPITOL
JEFFERSON CITY, MO 65102
1-888-ASK-MODOT (1-888-275-6636)

CDG ENGINEERS
One Campbell Plaza
St. Louis, Missouri 63139
T. 314 781 7770
F. 314 781 9075
Missouri State Certificate of Authority # 1721

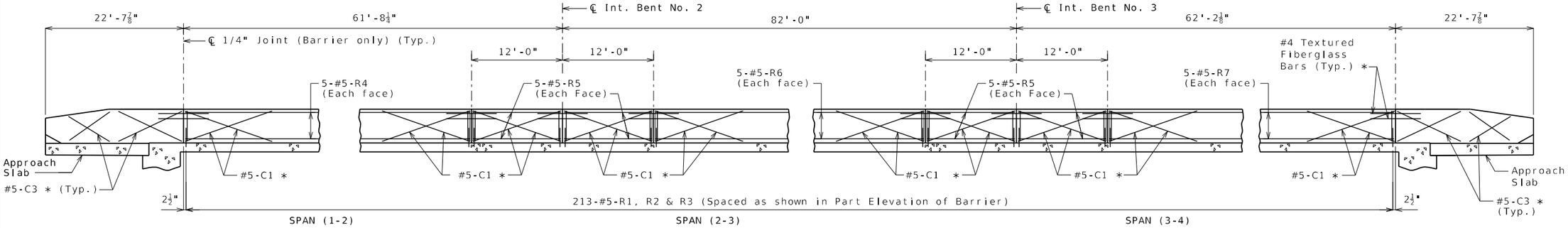

ELEVATION OF LEFT TYPE D BARRIER

Longitudinal dimensions are horizontal.

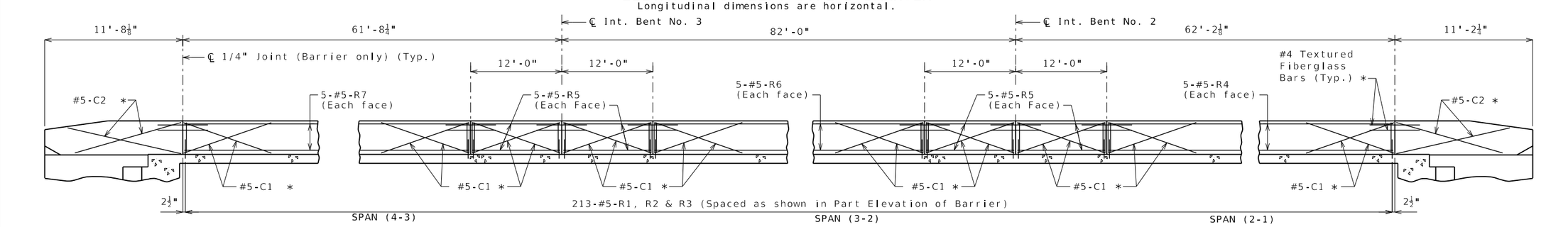

ELEVATION OF RIGHT TYPE D BARRIER

Longitudinal dimensions are horizontal.

Note:

For additional R1, R2 & R3 bars, see Sheet No. 28.

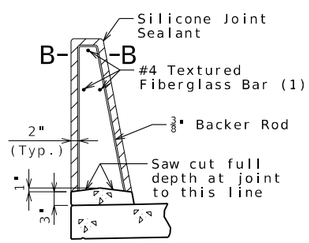

SECTION THRU SAW CUT JOINT

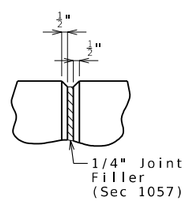

PART ELEVATION AT FORMED JOINT

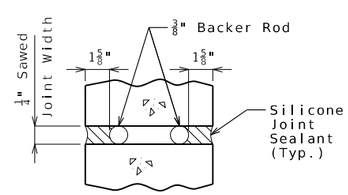

SECTION B-B

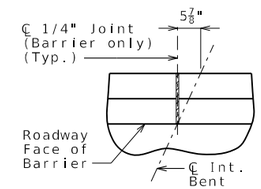

PART PLAN SHOWING JOINT LOCATION

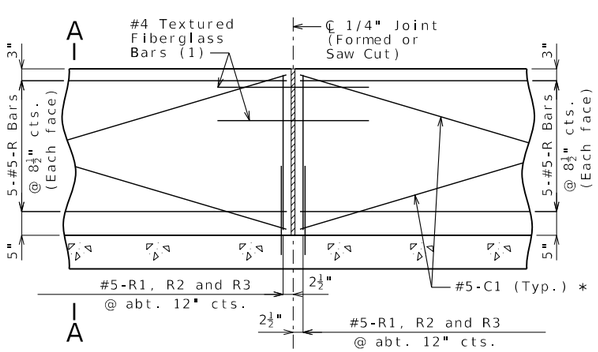

PART ELEVATION OF BARRIER

(1) Four feet long, centered on joint, slip-formed option only

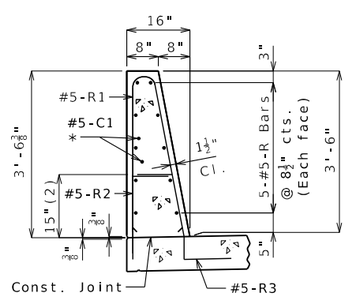

SECTION A-A

Use a minimum lap of 3'-1" for #5 horizontal barrier bars.

The cross-sectional area above the slab is 3.52 square feet.

(2) To top of bar

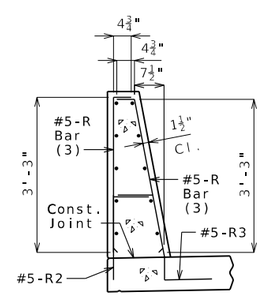

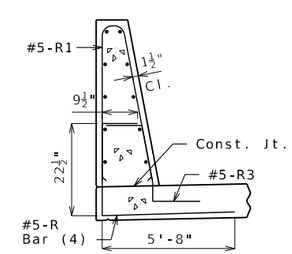

R-BAR PERMISSIBLE ALTERNATE SHAPE

(3) The R1 bar may be separated into two bars as shown, at the contractor's option, only when slip forming is not used. (All dimensions are out to out.)

(4) For the Right Type D Barrier only, the R2 bar and #5 bottom transverse slab bar in cantilever (prestressed panels only) combination may be furnished as one bar as shown, at the contractor's option.

General Notes:

* Slip-formed option only.

Conventional forming or slip forming may be used. Saw cut joints may be used with conventional forming.

Top of barrier shall be built parallel to grade and barrier joints (except at end bents for Right Type D Barrier) normal to grade.

All exposed edges of barrier shall have either a 1/2-inch radius or a 3/8-inch bevel, unless otherwise noted.

Payment for all concrete and reinforcement, complete in place, will be considered completely covered by the contract unit price for Type D Barrier per linear foot.

Concrete in barrier shall be Class B-1.

Measurement of barrier is to the nearest linear foot for each structure, measured along the outside top of slab from end of wing to end of wing (Right Type D Barrier), and end of bridge approach slab to end of bridge approach slab (Left Type D Barrier).

Concrete traffic barrier delineators shall be placed on top of the barrier as shown on Missouri Standard Plan 617.10 and in accordance with Sec 617. Delineators on bridges with two-lane, two-way traffic shall have retroreflective sheeting on both sides. Concrete traffic barrier delineators will be considered completely covered by the contract unit price for Type D Barrier.

Joint sealant and backer rods shall be in accordance with Sec 717 for silicone joint sealant for saw cut and formed joints.

For slip-formed option, both sides of barrier shall have a vertically broomed finish and the top shall have a transversely broomed finish.

TYPE D BARRIER

Detailed Dec. 2024
Checked Dec. 2024

Note: This drawing is not to scale. Follow dimensions.

STATE OF MISSOURI DAVID BURDICK NUMBER E-24015 REGISTERED PROFESSIONAL ENGINEER
THIS SHEET HAS BEEN SIGNED, SEALED AND DATED ELECTRONICALLY

DATE PREPARED	
3/3/2025	
ROUTE: NOR	STATE: MO
DISTRICT: BR	SHEET NO.: 26
COUNTY: ST. CHARLES	
JOB NO.: JSL0112	
CONTRACT ID.	
PROJECT NO.	
BRIDGE NO.: A9387	

DESCRIPTION

DATE

MISSOURI HIGHWAYS AND TRANSPORTATION COMMISSION
105 WEST CAPITOL
JEFFERSON CITY, MO 65102
1-888-ASK-MODOT (1-888-275-6636)

CDG ENGINEERS
One Campbell Plaza
St. Louis, Missouri 63139
T. 314 781 7770
F. 314 781 9075
Missouri State Certificate of Authority # 1721

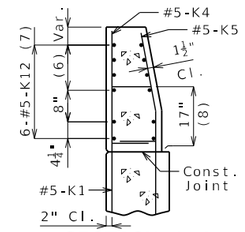

SECTION A-A

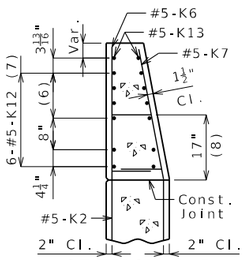

SECTION B-B

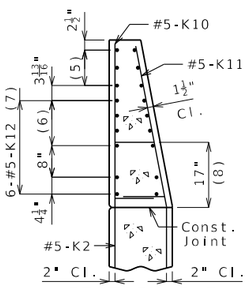

SECTION C-C

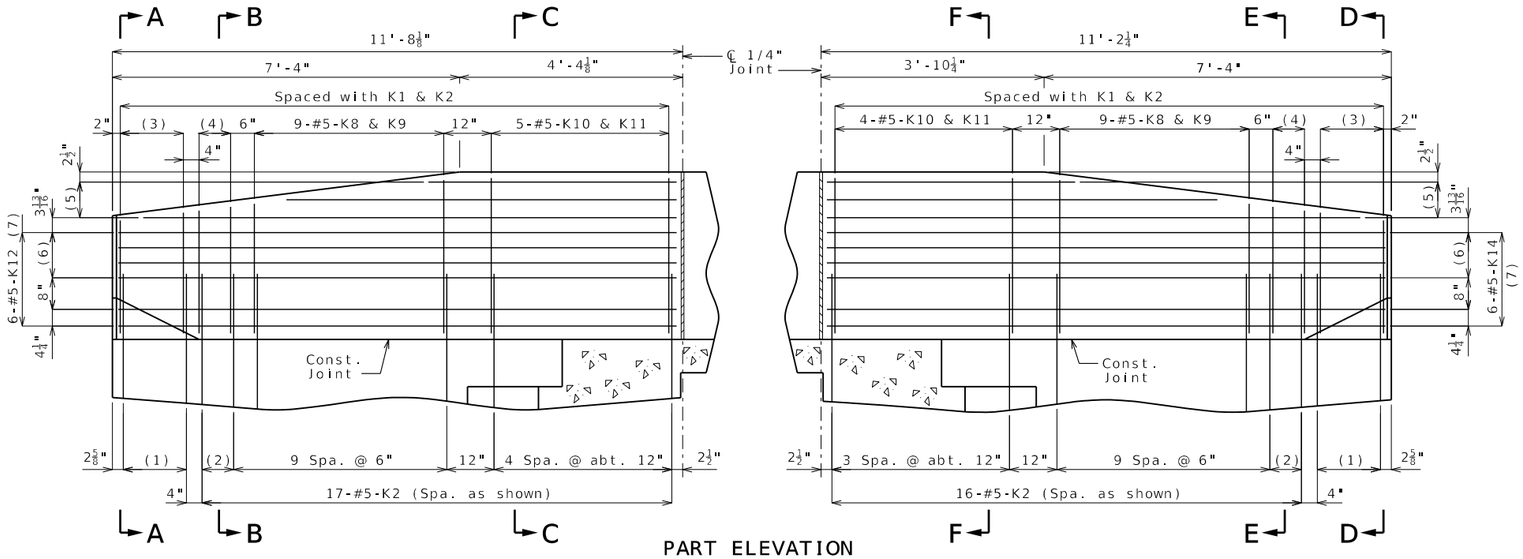

PART ELEVATION
(looking back station)

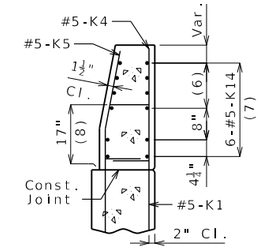

SECTION D-D

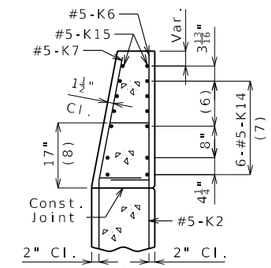

SECTION E-E

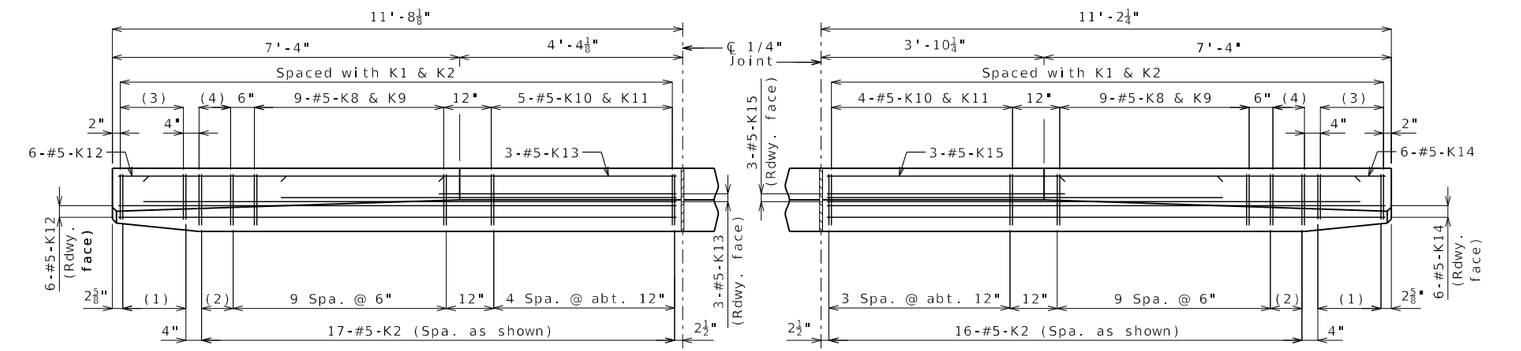

PART PLAN
(looking back station)

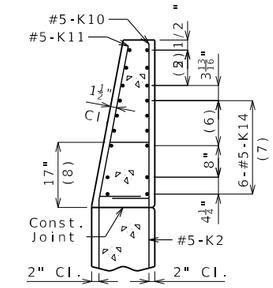

SECTION F-F

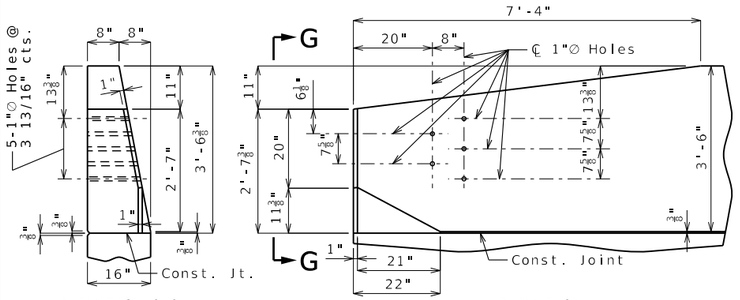

ELEVATION G-G

ELEVATION

(1) 5-#5-K1 @ 4" cts.

(2) 2 spaces @ 4"

(3) 5-#5-K4 & K5

(4) 3-#5-K6 & K7

(5) 3-#5-K13 or K15 @ 4½" cts., each face

(6) 3 spaces @ 3 13/16"

(7) Spaced as shown, each face

(8) To top of bar

K10-K11 BAR PERMISSIBLE ALTERNATE SHAPE
(Other K bars not shown for clarity)

The K10-K11 bar combination may be furnished as one bar as shown, at the contractor's option.

All dimensions are out to out.

* Transition to zero at Type A curb for gutter lines to match.

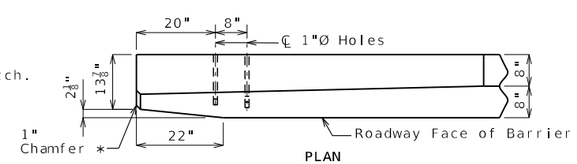

PLAN

DETAILS OF GUARD RAIL ATTACHMENT

General Notes:

Concrete traffic barrier delineators shall be placed on top of the barrier as shown on Missouri Standard Plan 617.10 and in accordance with Sec 617. Delineators on bridges with two-lane, two-way traffic shall have retroreflective sheeting on both sides. Concrete traffic barrier delineators will be considered completely covered by the contract unit price for Type D Barrier.

Reinforcing Steel:
Minimum clearance to reinforcing steel shall be 1 1/2" except as shown for bars embedded into end bent.

RIGHT TYPE D BARRIER AT END BENTS

Detailed Dec. 2024
Checked Dec. 2024

Note: This drawing is not to scale. Follow dimensions.

STATE OF MISSOURI DAVID BURDICK NUMBER E-24015 REGISTERED PROFESSIONAL ENGINEER
THIS SHEET HAS BEEN SIGNED, SEALED AND DATED ELECTRONICALLY

DATE PREPARED	
3/3/2025	
ROUTE: NOR	STATE: MO
DISTRICT: BR	SHEET NO.: 27
COUNTY: ST. CHARLES	
JOB NO.: JSL0112	
CONTRACT ID.	
PROJECT NO.	
BRIDGE NO.: A9387	

DATE	DESCRIPTION

MISSOURI HIGHWAYS AND TRANSPORTATION COMMISSION
105 WEST CAPITOL
JEFFERSON CITY, MO 65102
1-888-ASK-MODOT (1-888-275-6636)

CDG ENGINEERS
One Campbell Plaza
St. Louis, Missouri 63139
T. 314 781 7770
F. 314 781 9015
Missouri State Certificate of Authority # 1721

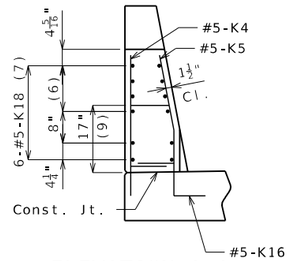

ELEVATION A-A

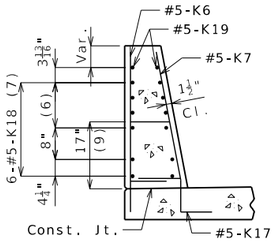

SECTION B-B

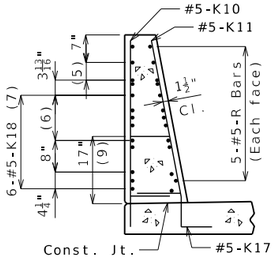

SECTION C-C

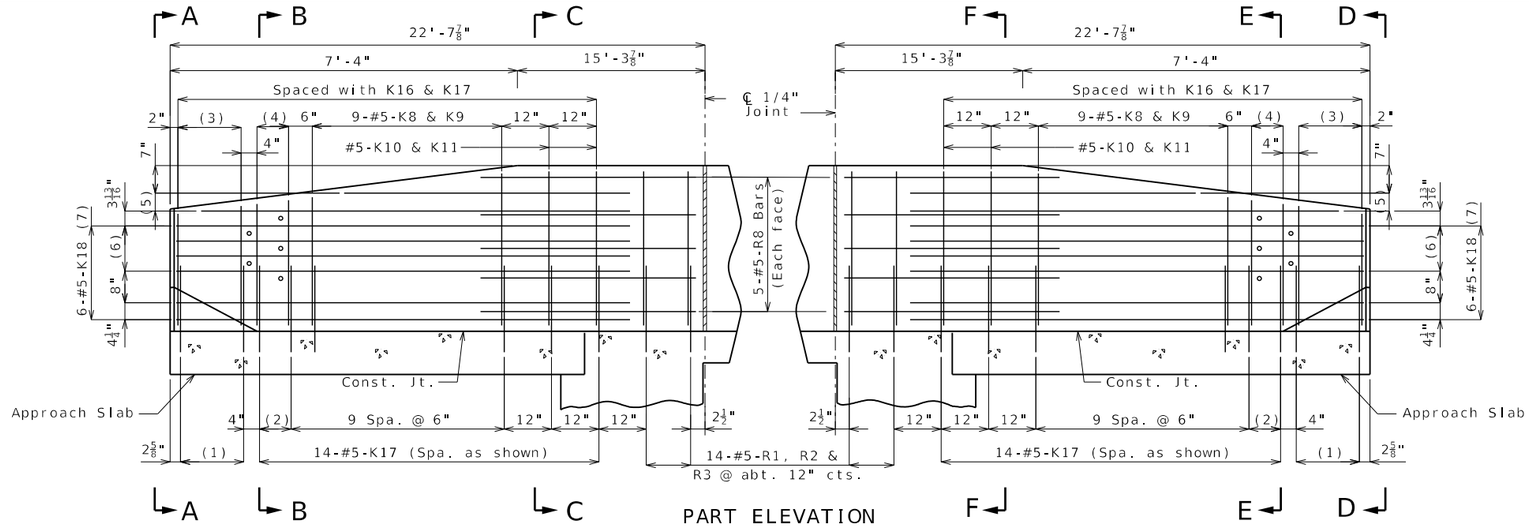

PART ELEVATION

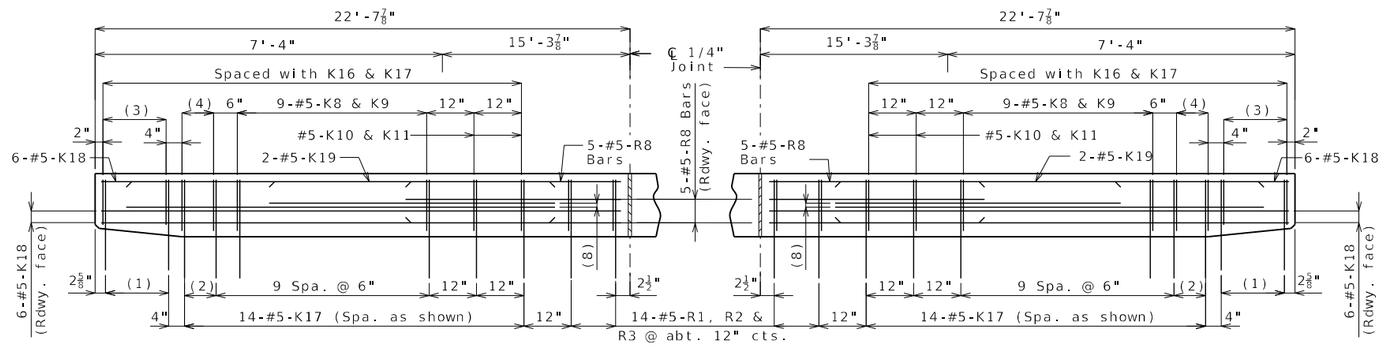

PART PLAN

(Top of barrier not shown for clarity.)

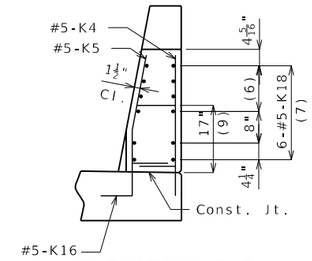

ELEVATION D-D

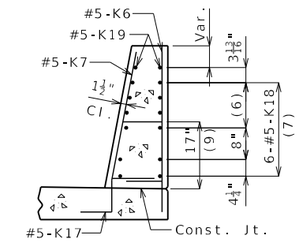

SECTION E-E

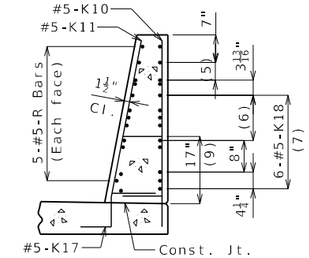

SECTION F-F

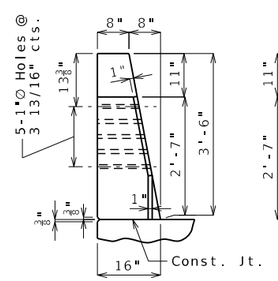

ELEVATION G-G

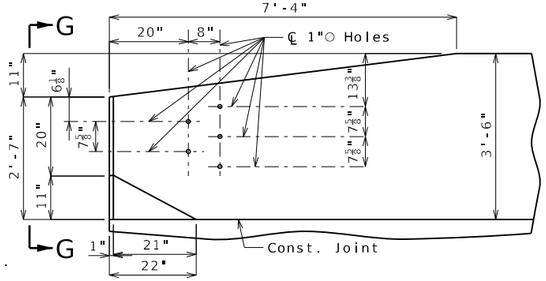

ELEVATION

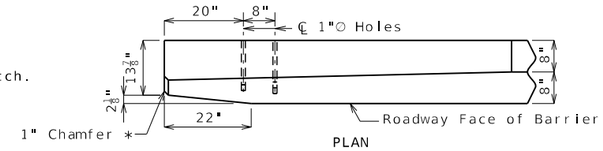

PLAN

* Transition to zero at Type A curb for gutter lines to match.

DETAILS OF GUARD RAIL ATTACHMENT

(1) 5-#5-K16 @ 4" cts.

(2) 2 spaces @ 4"

(3) 5-#5-K4 & K5

(4) 3-#5-K6 & K7

(5) 2-#5-K19 @ 4½" cts., each face

(6) 3 spaces @ 3 13/16"

(7) Spaced as shown, each face

(8) 2-#5-K19 (Roadway face)

(9) To top of bar

General Notes:

Concrete traffic barrier delineators shall be placed on top of the barrier as shown on Missouri Standard Plan 617.10 and in accordance with Sec 617. Delineators on bridges with two-lane, two-way traffic shall have retroreflective sheeting on both sides. Concrete traffic barrier delineators will be considered completely covered by the contract unit price for Type D Barrier.

Reinforcing Steel:

Minimum clearance to reinforcing steel shall be 1 1/2".

Use a minimum lap of 3'-1" between horizontal K bars and R bars.

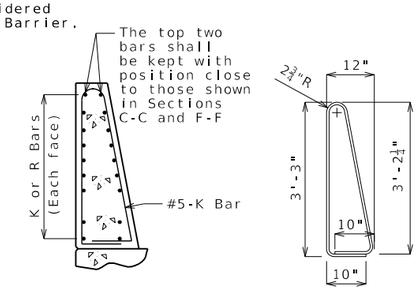

K10-K11 BAR PERMISSIBLE ALTERNATE SHAPE

(Other K bars not shown for clarity)

The K10-K11 bar combination may be furnished as one bar as shown, at the contractor's option.

All dimensions are out to out.

LEFT TYPE D BARRIER AT END BENTS

Detailed Dec. 2024
Checked Dec. 2024

Note: This drawing is not to scale. Follow dimensions.

STATE OF MISSOURI DAVID BURDICK NUMBER E-24015 REGISTERED PROFESSIONAL ENGINEER
THIS SHEET WAS BEEN SIGNED, SEALED AND DATED ELECTRONICALLY

DATE PREPARED	3/3/2025
ROUTE	NOR
STATE	MO
DISTRICT	BR
SHEET NO.	28
COUNTY	ST. CHARLES
JOB NO.	JSL0112
CONTRACT ID.	
PROJECT NO.	
BRIDGE NO.	A9387

DESCRIPTION

DATE

MISSOURI HIGHWAYS AND TRANSPORTATION COMMISSION
105 WEST CAPITOL
JEFFERSON CITY, MO 65102
1-888-ASK-MODOT (1-888-275-6636)

CDG ENGINEERS
One Campbell Plaza
St. Louis, Missouri 63139
T. 314 781 7770
F. 314 781 9075
Missouri State Certificate of Authority # 1721

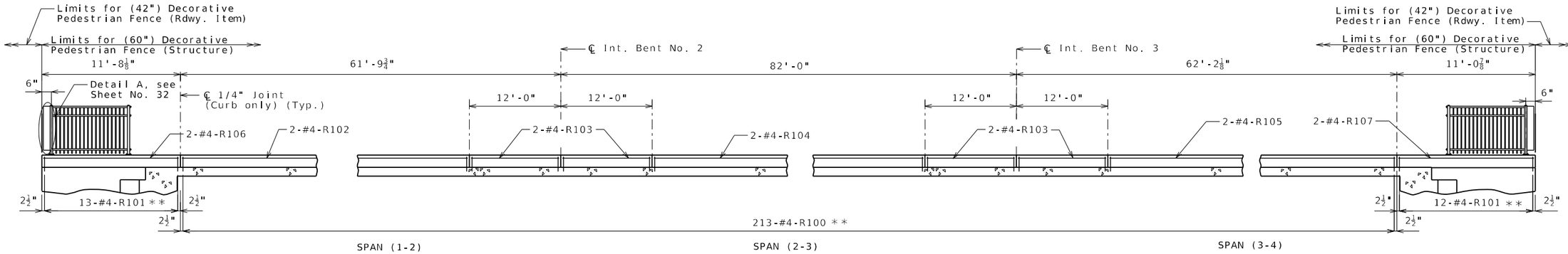

PART ELEVATION NEAR LEFT PEDESTRIAN CURB

Longitudinal dimensions are horizontal.

** Spaced as shown in Part Elevation of Pedestrian Curb at End Bent.

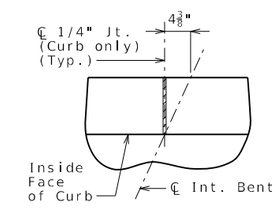

PART PLAN SHOWING JOINT LOCATION

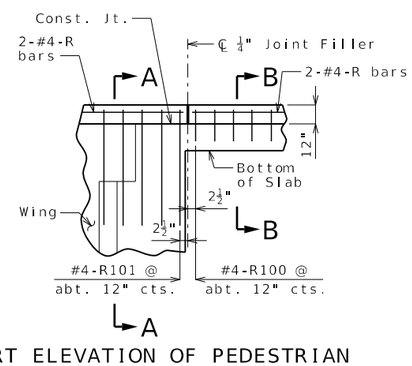

PART ELEVATION OF PEDESTRIAN CURB AT END BENT

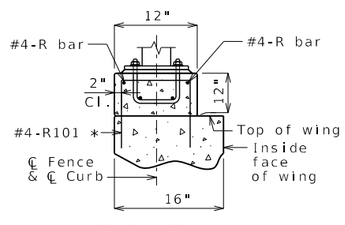

SECTION A-A

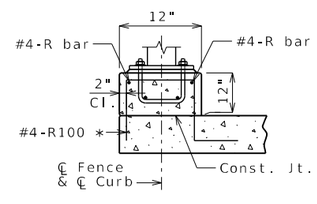

SECTION B-B

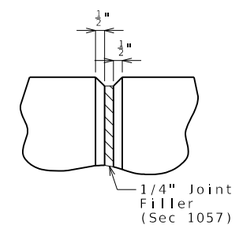

PART ELEVATION AT CURB JOINT

* Shift in field to clear U-bolts.

PEDESTRIAN CURB

Notes:

Top of curb shall be built parallel to grade and curb joints (except at end bents) normal to grade.

All exposed edges of curb shall have either a 1/2-inch radius or a 3/8-inch bevel, unless otherwise noted.

Payment for all concrete and reinforcement, complete in place, will be considered completely covered by the contract unit price for Pedestrian Curb per linear foot.

Concrete in curb shall be Class B-1.

Measurement of pedestrian curb is to the nearest linear foot for each structure, measured along the outside top of curb from end of curb to end of curb.

Center of posts shall clear curb joints or ends by at least 6 inches.

Minimum lap for longitudinal R-bars is 2'-7".

Slab reinforcement not shown for clarity.

For details and additional notes for (60 in.) Decorative Pedestrian Fence (Structure), see Sheet No. 30.

Detailed Dec. 2024
Checked Dec. 2024

Note: This drawing is not to scale. Follow dimensions.

STATE OF MISSOURI DAVID BURDICK NUMBER E-24015 REGISTERED PROFESSIONAL ENGINEER
THIS SHEET WAS DIGITALLY SIGNED, SEALED AND DATED ELECTRONICALLY

DATE PREPARED 3/3/2025	
ROUTE NOR	STATE MO
DISTRICT BR	SHEET NO. 29
COUNTY ST. CHARLES	
JOB NO. JSL0112	
CONTRACT ID.	
PROJECT NO.	
BRIDGE NO. A9387	

DATE	DESCRIPTION

MISSOURI HIGHWAYS AND TRANSPORTATION COMMISSION
105 WEST CAPITOL
JEFFERSON CITY, MO 65102
1-888-ASK-MODOT (1-888-275-6636)

CDG ENGINEERS
One Campbell Plaza
St. Louis, Missouri 63139
T. 314 781 7770
F. 314 781 9075
Missouri State Certificate of Authority # 1721

Notes:

These details are a general representation of a Decorative Pedestrian Fence. The actual fence components and component positions may be different than what is shown.

Fence shall have a gloss black finish (Federal Standard #17038). See special provisions.

Base plate shall be ASTM A709, Grade 50.

All base plates, U bolts, hex nuts and washers shall be galvanized in accordance with ASTM A123 and Sec 1081.

Measurement of pedestrian fence will be made horizontally and to the nearest linear foot along centerline fence.

Payment for furnishing and erecting the fence complete in place will be considered completely covered by the contract unit price for (60 in.) Decorative Pedestrian Fence (Structures).

All fence posts shall be vertical.

Mortar shall be placed under the post base plates in accordance with Sec 1066.

Decorative pedestrian fencing shall be in accordance with 2020-AASHTO LRFD Bridge Design Specifications, 9th Ed.

Shop drawings and structural calculations will not be required for the decorative pedestrian fences on the Bridge Pre-qualified Products List.

All materials used in fabrication and construction of the decorative pedestrian fencing shall be in accordance with the manufacturer's specifications, except as modified in the contract documents.

Decorative pedestrian fencing system shall be supplied by only one manufacturer. Decorative pedestrian fencing system shall include all components except the anchor bolts and hardware, and #4 bars welded to the anchor bolts. The assembly of the pickets to the rails and the rails to the posts shall be the same as the style mentioned for the manufacturer.

See Special Provisions for a list of approved manufacturers.

Substitution for the U-bolt cages will not be permitted.

Center of posts shall clear Curb joints or end of curb by at least 6 inches.

For details of pedestrian curb, see Sheet No. 29.

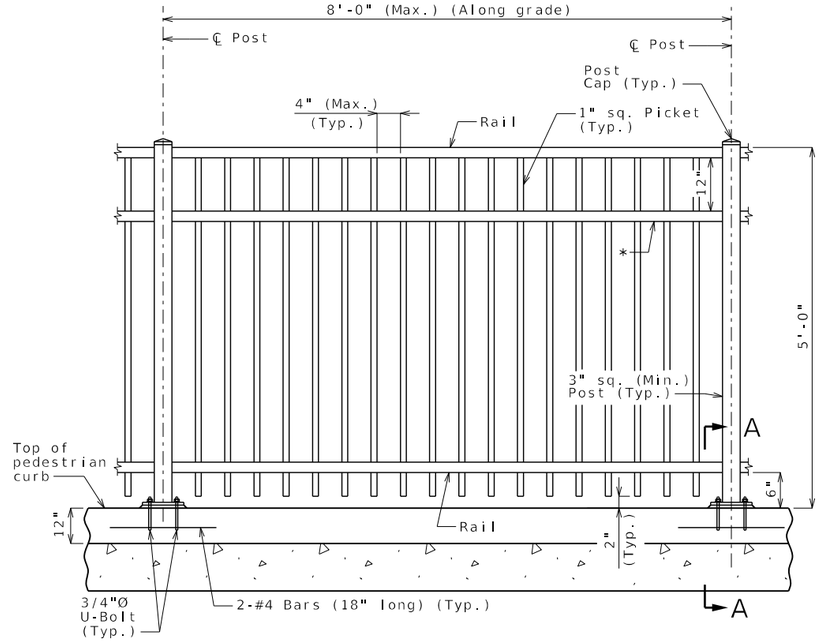

TYPICAL PART ELEVATION NEAR PEDESTRIAN CURB

* Optional rail. Need is based on design computations performed by the manufacturer and approved by MoDOT, or may be added for aesthetics.

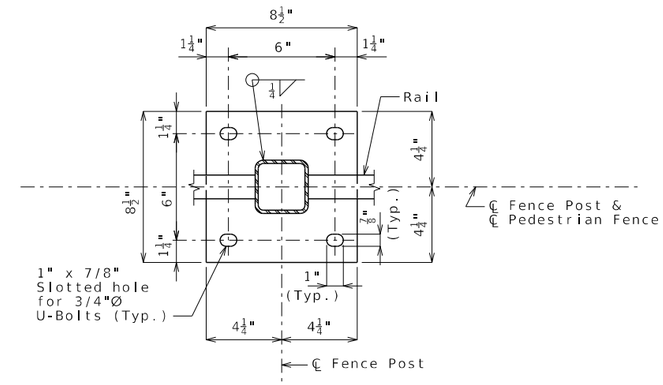

PART PLAN SHOWING BASE PLATE

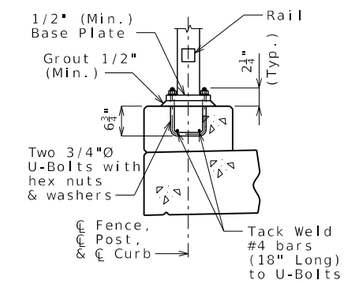

SECTION A-A

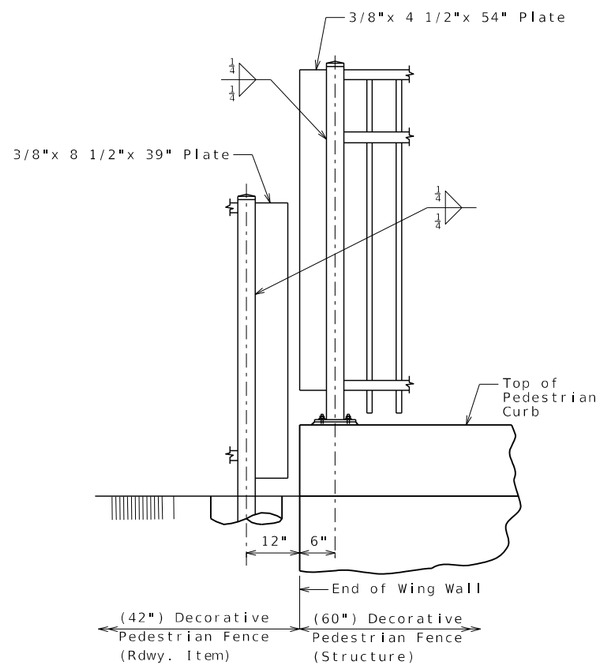

DETAIL A

DECORATIVE PEDESTRIAN FENCE

Detailed Dec. 2024
Checked Dec. 2024

Note: This drawing is not to scale. Follow dimensions.

STATE OF MISSOURI
DAVID BURDICK
NUMBER E-24015
REGISTERED PROFESSIONAL ENGINEER
THIS SHEET WAS SIGNED, SEALED AND DATED ELECTRONICALLY

DATE PREPARED	3/3/2025
ROUTE NOR	STATE MO
DISTRICT BR	SHEET NO. 30
COUNTY	ST. CHARLES
JOB NO.	JSL0112
CONTRACT ID.	
PROJECT NO.	
BRIDGE NO.	A9387

DATE	DESCRIPTION

MISSOURI HIGHWAYS AND TRANSPORTATION COMMISSION
105 WEST CAPITOL
JEFFERSON CITY, MO 65102
1-888-ASK-MODOT (1-888-275-6636)

CDG ENGINEERS
One Campbell Plaza
St. Louis, Missouri 63139
T. 314 781 7770
F. 314 781 9075
Missouri State Certificate of Authority # 1721

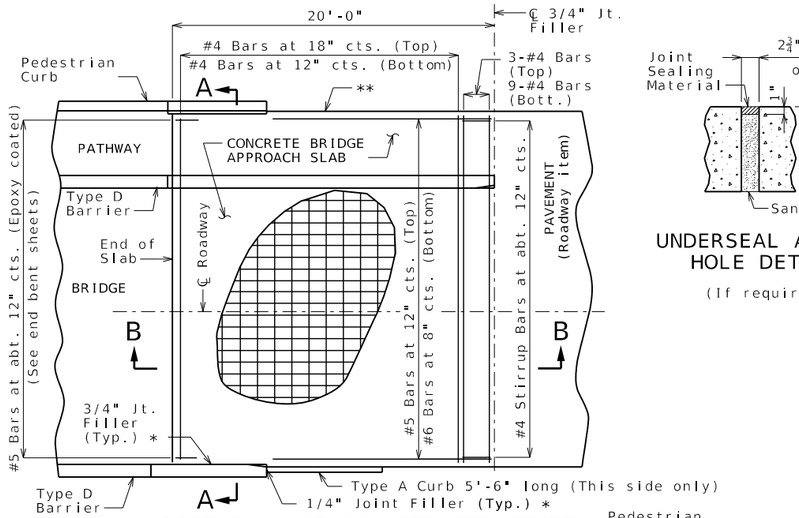

PART PLAN OF SQUARED STRUCTURE
(Skewed structure similar)

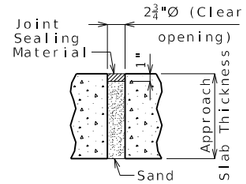

UNDERSEAL ACCESS HOLE DETAIL
(If required)

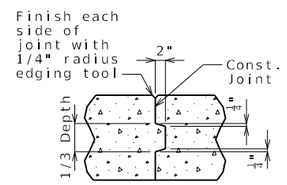

CONSTRUCTION JOINT DETAIL

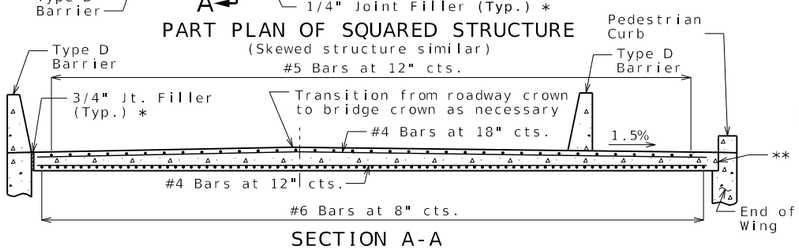

SECTION A-A

With the approval of the engineer, the contractor may crown the bottom of the approach slab to match the crown of the roadway surface.

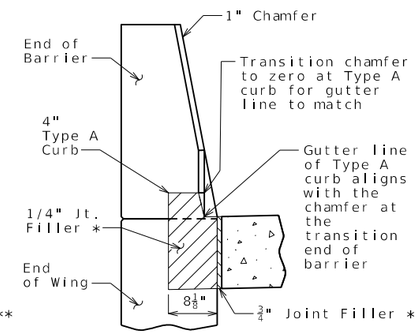

SECTION BETWEEN CURB AND TYPE D BARRIER

Notes For Concrete Slab Only:

All concrete for the bridge approach slab shall be in accordance with Sec 503 (f'c = 4,000 psi).

The reinforcing steel in the bridge approach slab shall be epoxy coated Grade 60 with fy = 60,000 psi.

Minimum clearance to reinforcing steel shall be 1 1/2", unless otherwise shown.

The reinforcing steel in the bridge approach slab shall be continuous. The transverse reinforcing steel may be made continuous by providing a minimum lap splice of 23 inches for #4 bars.

All joint filler shall be in accordance with Sec 1057 for preformed fiber expansion joint filler except as noted.

Payment for furnishing all materials, labor and excavation necessary to construct the concrete bridge approach slab, including the timber header, underdrain, Type 5 aggregate base, joint filler, and all other appurtenances and incidental work as shown on this sheet, complete in place, will be considered completely covered by the contract unit price for Bridge Approach Slab (Minor) per square yard.

See Missouri Standard Plan 609.00 for details of Type A curb.

Drain pipe may be either 6" diameter corrugated metallic-coated pipe underdrain, 4" diameter corrugated polyvinyl chloride (PVC) drain pipe, or 4" diameter corrugated polyethylene (PE) drain pipe.

* Seal joint between vertical face of approach slab and wing with sealant in accordance with Sec 717 for silicone joint sealant for saw cut and formed joints.

** Do not construct Type A Curb on Pathway side to accommodate fence posts for Pedestrian Fence (Rdwy. Item) beyond ends of wing walls and Pedestrian Curb.

General Notes:

The contractor is required to construct a concrete bridge approach slab (asphalt approach slab option is not allowed for this project).

The contractor shall pour and satisfactorily finish the bridge slab before placing the bridge approach slab.

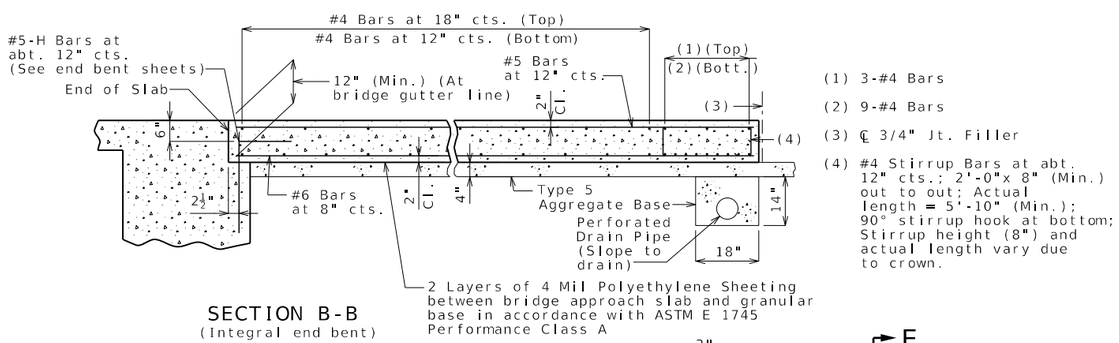

(1) 3-#4 Bars

(2) 9-#4 Bars

(3) ℄ 3/4" Jt. Filler

(4) #4 Stirrup Bars at abt. 12" cts.; 2'-0"x 8" (Min.) out to out; Actual length = 5'-10" (Min.); 90° stirrup hook at bottom; Stirrup height (8") and actual length vary due to crown.

SECTION B-B
(Integral end bent)

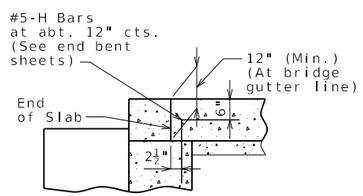

PART SECTION B-B
(Non-integral end bent)

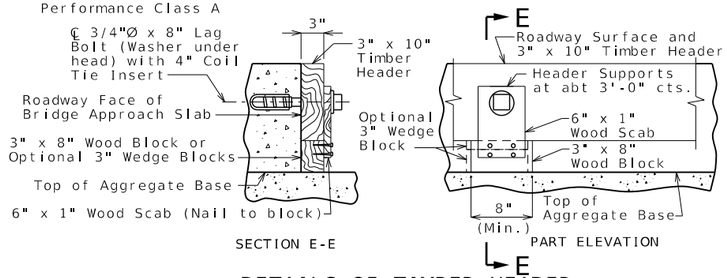

SECTION E-E

PART ELEVATION

DETAILS OF TIMBER HEADER
Remove timber header when concrete pavement is placed.

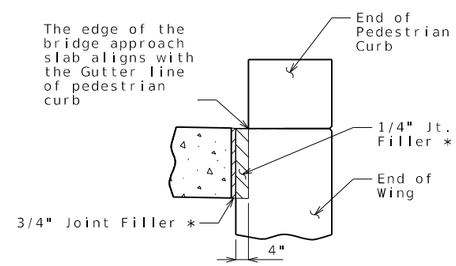

SECTION BETWEEN APPROACH SLAB AND PEDESTRIAN CURB

BRIDGE APPROACH SLAB (MINOR)

Integral end bents shown, non-integral end bent similar.

Detailed Dec. 2024
Checked Dec. 2024

Note: This drawing is not to scale. Follow dimensions.

STATE OF MISSOURI DAVID BURBICK NUMBER E-24015 REGISTERED PROFESSIONAL ENGINEER
THIS SHEET HAS BEEN SIGNED, SEALED AND DATED ELECTRONICALLY

DATE PREPARED	3/3/2025
ROUTE NOR	STATE MO
DISTRICT BR	SHEET NO. 31
COUNTY	ST. CHARLES
JOB NO.	JSL0112
CONTRACT ID.	
PROJECT NO.	
BRIDGE NO.	A9387

DESCRIPTION | DATE

MISSOURI HIGHWAYS AND TRANSPORTATION COMMISSION
105 WEST CAPITOL
JEFFERSON CITY, MO 65102
1-888-ASK-MODOT (1-888-275-6636)

CDG ENGINEERS
One Campbell Plaza
St. Louis, Missouri 63139
T. 314 781 7770
F. 314 781 9015
Missouri State Certificate of Authority # 1721

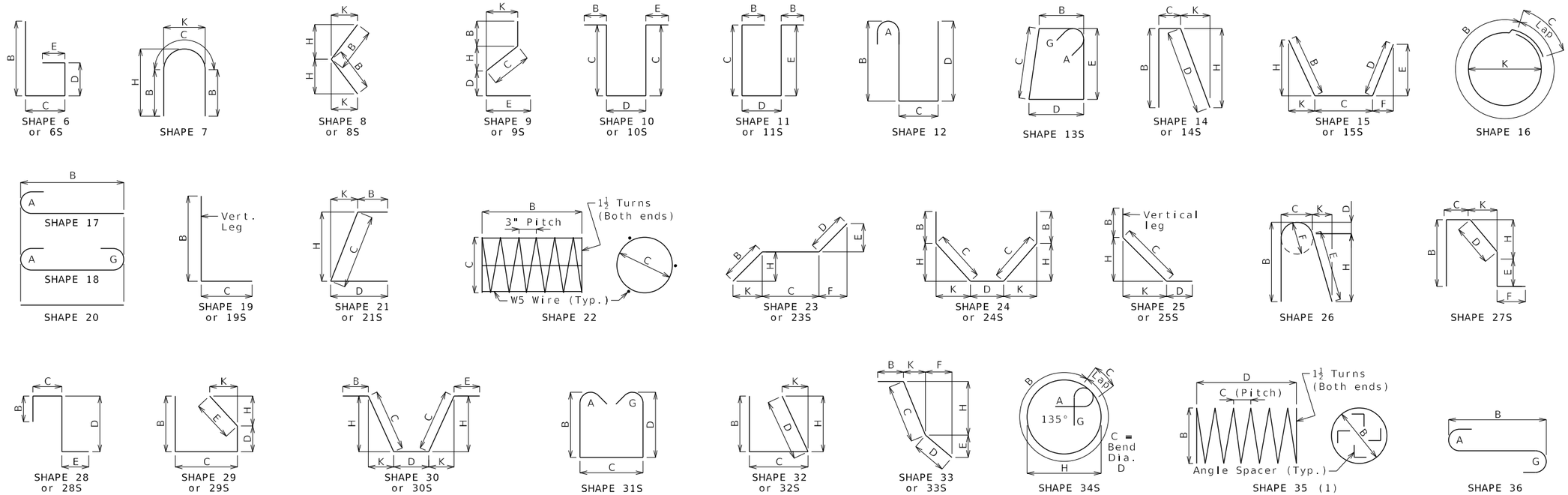

Finished Bend Diameters D and Hook Dimensions

Standard Pin Bend Shapes

Size	Case	D	A or G 90°	A or G 180°	J 180°
#4	1	3"	8"	6"	4"
#5	1	3¾"	10"	7"	5"
#6	1	4½"	12"	8¼"	6"
#7	2	5¼"	14"	9¾"	7"
	3	7"	15"	11½"	8¾"
#8	2	6"	16"	11"	8"
	3	8"	17"	13¼"	10"
#9	1	9½"	19½"	15½"	11¾"
#10	1	10¾"	22"	17½"	13¼"
#11	1	12"	24½"	19½"	14⅞"
#14	1	18¼"	31¼"	27½"	21⅝"
#18	1	24"	41½"	36¼"	28½"

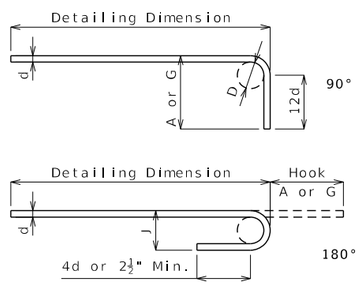

Stirrup Pin Bend Shapes (S)

Size	Case	D	A or G 90°	A or G 135°	A or G 180°	H 135°	J 180°
#4	2	2"	4½"	4½"	5"	2⅝"	3"
	3	3"	5"	5¼"	6"	3"	4"
#5	2	2½"	5¾"	5¾"	5¾"	3⅜"	3¾"
	3	3¾"	6¼"	6½"	7"	3⅞"	5"
#6	1	4½"	12"	7¾"	8¼"	4⅜"	6"

Applicable for all grades of steel.

Case 1 applies to all reinforcement. Case 2 applies to all reinforcement except for galvanized bars. Case 3 applies to galvanized bars only.

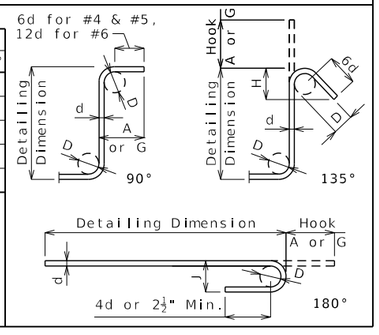

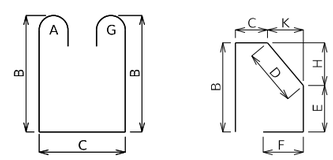

BENDING DIAGRAMS

All dimensions are out to out.

Shapes ending with an S shall be bent in accordance stirrup pin bend shapes.

Unless otherwise noted, finished bending diameter D is the same for all bends of a shape.

(1) Shall be a deformed or plain spiral bar or wire.

Four angle or channel spacers are required for each column spiral. Spacers are to be placed on inside of spirals. Length and weight of column spirals do not include splices or spacers.

Reinforcing Steel Totals (Pounds)

	Size	Substructure Plain	Substructure Epoxy	Superstructure Slab Plain	Superstructure Slab Epoxy	Superstructure Barrier	Superstructure Curb	Superstructure Slip Form	Entire Bridge Plain	Entire Bridge Epoxy
By Size	W5	0	0	0	0	0	0	0	0	0
	4	7087	0	0	1603	0	962	0	7087	2565
	5	2908	0	0	27180	12361	0	605	2908	40146
	6	2538	0	0	87675	0	0	0	2538	87675
	7	0	0	0	0	0	0	0	0	0
	8	0	0	0	16981	0	0	0	0	16981
	9	27073	0	0	0	0	0	0	27073	0
	10	0	0	0	0	0	0	0	0	0
	11	0	0	0	0	0	0	0	0	0
	14	0	0	0	0	0	0	0	0	0
	18	0	0	0	0	0	0	0	0	0
By Type		39606	0	0	133439	12361	962	605	39606	147367

All superstructure reinforcing steel shall be epoxy coated unless otherwise specified.

BENDING DIAGRAMS AND REINFORCING STEEL TOTALS

Detailed Dec. 2024
Checked Dec. 2024

Note: This drawing is not to scale. Follow dimensions.

STATE OF MISSOURI DAVID BURDICK NUMBER E-24015 REGISTERED PROFESSIONAL ENGINEER
THIS SHEET HAS BEEN SEALED AND DATED ELECTRONICALLY

DATE PREPARED 3/3/2025

ROUTE	STATE
NOR	MO
DISTRICT	SHEET NO.
BR	32

COUNTY: ST. CHARLES
JOB NO.: JSL0112
CONTRACT ID.:
PROJECT NO.:
BRIDGE NO.: A9387

DATE	DESCRIPTION

MISSOURI HIGHWAYS AND TRANSPORTATION COMMISSION
105 WEST CAPITOL
JEFFERSON CITY, MO 65102
1-888-ASK-MODOT (1-888-275-6636)

CDG ENGINEERS
One Campbell Plaza
St. Louis, Missouri 63139
T. 314 781 1770
F. 314 781 9075
Missouri State Certificate of Authority #1721

Bill of Reinforcing Steel

No Req	Size / Mark	Location	Codes C	Codes SH	Codes V	B ft in	C ft in	D ft in	E ft in	F ft in	H ft in	K ft in	Nom. Length ft in	Actual Length ft in	Weight lb
		SUBSTRUCTURE													
		INT. BENT 2													
33	6 D201	BEAM		20		2 6.000							2 6	2 6	124
8	9 H201	BEAM		18		55 9.000							58 4	58 4	1587
10	9 H202	BEAM		20		55 9.000							55 9	55 9	1896
12	6 H203	BEAM		20		55 9.000							55 9	55 9	1005
16	6 H204	BEAM		10 S			12.000	4 2.000					6 2	5 10	140
5	5 H205	BEAM		20		17 6.000							17 6	17 6	91
3	4 P201	SHAFT		35		3 6.000	5.000	37 1.000					1011 5	1011 5	2027
3	4 P202	COLUMN		35		3 6.000	3.000	11 10.000					554 4	554 4	1111
30	4 P203	BEAM		34 S		11 0.000					3 6.000		11 11	11 11	239
36	5 U201	BEAM		13 S		4 3.000	4 3.000	4 3.000	4 3.000				17 11	17 7	660
28	5 U202	BEAM		13 S		3 0.000	4 3.000	3 0.000	4 3.000				15 5	15 1	440
8	5 U203	BEAM		10 S			4 3.000	3 0.000					11 6	11 3	94
10	5 U204	BEAM		10 S			4 3.000	4 3.000					12 9	12 6	130
38	4 U205	BEAM		10 S			2 0.000	4 3.000					8 3	8 1	205
57	9 V201	SHAFT & COLUMN		20		51 9.000							51 9	51 9	10029
		INT. BENT 3													
33	6 D301	BEAM		20		2 6.000							2 6	2 6	124
8	9 H301	BEAM		18		55 9.000							58 4	58 4	1587
10	9 H302	BEAM		20		55 9.000							55 9	55 9	1896
12	6 H303	BEAM		20		55 9.000							55 9	55 9	1005
16	6 H304	BEAM		10 S			12.000	4 2.000					6 2	5 10	140
5	5 H305	BEAM		20		17 6.000							17 6	17 6	91
5	5 H306	BEAM		20		15 0.000							15 0	15 0	78
3	4 P301	SHAFT		35		3 6.000	5.000	41 2.000					1121 0	1121 0	2246
3	4 P302	COLUMN		35		3 6.000	3.000	8 0.000					385 5	385 5	772
30	4 P303	BEAM		34		11 0.000					3 6.000		11 11	11 11	239
36	5 U301	BEAM		13 S		4 3.000	4 3.000	4 3.000	4 3.000				17 11	17 7	660
28	5 U302	BEAM		13 S		3 0.000	4 3.000	3 0.000	4 3.000				15 5	15 1	440
8	5 U303	BEAM		10 S			4 3.000	3 0.000					11 6	11 3	94
10	5 U304	BEAM		10 S			4 3.000	4 3.000					12 9	12 6	130
46	4 U305	BEAM		10 S			2 0.000	4 3.000					8 3	8 1	248
57	9 V301	SHAFT & COLUMN		20		52 0.000							52 0	52 0	10078
		SUPERSTRUCTURE													
		END BENT 1													
8	6 F101	WING	E	15 S		2 3.000	4 3.000	2 3.000	15.500	22.125	15.500	22.125	8 9	8 8	104
4	6 F102	DIAPHRAGM	E	21 S			2 10.000	6 6.000			2 8.000	11.625	9 4	9 0	54
8	6 F103	WING	E	15 S		2 3.000	3 0.000	2 3.000	22.125	15.500	22.125	15.500	7 6	7 5	89
4	6 F104	DIAPHRAGM	E	21 S		6 0.000	2 10.000				2 8.000	11.625	8 10	8 9	53

Bill of Reinforcing Steel

No Req	Size / Mark	Location	Codes C	Codes SH	Codes V	B ft in	C ft in	D ft in	E ft in	F ft in	H ft in	K ft in	Nom. Length ft in	Actual Length ft in	Weight lb
		END BENT 1 (CONT'D)													
4	6 H101	SLAB	E	20		59 0.000							59 0	59 0	354
4	6 H102	DIAPHRAGM	E	20		59 0.000							59 0	59 0	354
9	6 H103	DIAPHRAGM	E	20		11 4.000							11 4	11 4	153
3	6 H104	DIAPHRAGM	E	20		8 5.000							8 5	8 5	38
3	6 H105	DIAPHRAGM	E	20		11 8.000							11 8	11 8	53
1	6 H106	DIAPHRAGM	E	20		8 9.000							8 9	8 9	13
6	6 H107	DIAPHRAGM	E	20		3 10.000							3 10	3 10	35
2	6 H108	DIAPHRAGM	E	20		2 6.000							2 6	2 6	8
53	5 H109	DIAPHRAGM	E	19		2 0.000	15.000						3 3	3 1	170
8	6 H110	BEAM	E	20		59 0.000							59 0	59 0	709
4	6 H111	BEAM	E	20		59 0.000							59 0	59 0	354
5	5 H112	STRAND TIE	E	23		15.000	3 3.000	15.000	5.125	14.125	5.125	14.125	5 9	5 9	30
4	5 H113	BEAM	E	20		16 9.000							16 9	16 9	70
16	8 H114	WING	E	6		10 8.000	16.000						12 0	11 9	502
36	6 H115	WING	E	6		9 9.000	12.000						10 9	10 7	572
32	5 U101	BEAM	E	10 S			5 5.000	2 11.000					13 9	13 6	451
35	4 U102	BEAM	E	13 S		2 11.000	2 8.000	2 11.000	2 8.000				11 11	11 8	273
3	4 U103	BEAM	E	10 S			2 8.000	2 11.000					8 3	8 1	16
40	5 U104	DIAPHRAGM	E	10 S			3 4.000	2 4.000					9 0	8 9	365
40	6 U105	DIAPHRAGM	E	19 S		2 4.000	2 11.000						5 3	5 1	305
75	6 U106	DIAPHRAGM	E	19 S		3 5.000	4 10.000						8 3	8 1	911
17	4 U107	BEAM	E	10 S			18.000	2 9.000					5 9	5 7	63
16	5 V101	BEAM	E	20		5 5.000							5 5	5 5	90
25	6 V102	DIAPHRAGM	E	20		2 3.000							2 3	2 3	54
36	6 V103	WING	E	20		6 6.000							6 6	6 6	351
		END BENT 4													
8	6 F401	WING	E	15 S		2 3.000	4 3.000	2 3.000	15.500	22.125	15.500	22.125	8 9	8 8	104
4	6 F402	DIAPHRAGM	E	21 S			2 10.000	6 6.000			2 8.000	11.625	9 4	9 0	54
8	6 F403	WING	E	15 S		2 3.000	3 0.000	2 3.000	22.125	15.500	22.125	15.500	7 6	7 5	89
4	6 F404	DIAPHRAGM	E	21 S		6 0.000	2 10.000				2 8.000	11.625	8 10	8 9	53
4	6 H401	SLAB	E	20		59 0.000							59 0	59 0	354
4	6 H402	DIAPHRAGM	E	20		59 0.000							59 0	59 0	354
9	6 H403	DIAPHRAGM	E	20		11 4.000							11 4	11 4	153
3	6 H404	DIAPHRAGM	E	20		8 5.000							8 5	8 5	38
3	6 H405	DIAPHRAGM	E	20		11 8.000							11 8	11 8	53
1	6 H406	DIAPHRAGM	E	20		8 9.000							8 9	8 9	13
6	6 H407	DIAPHRAGM	E	20		3 10.000							3 10	3 10	35
2	6 H408	DIAPHRAGM	E	20		2 6.000							2 6	2 6	8
53	5 H409	DIAPHRAGM	E	19		2 0.000	15.000						3 3	3 1	170
8	6 H410	BEAM	E	20		59 0.000							59 0	59 0	709
4	6 H411	BEAM	E	20		59 0.000							59 0	59 0	354
5	5 H412	STRAND TIE	E	23		15.000	3 3.000	15.000	5.125	14.125	5.125	14.125	5 9	5 9	30
4	5 H413	BEAM	E	20		30 3.000							30 3	30 3	126
16	8 H414	WING	E	6		10 8.000	16.000						12 0	11 9	502
36	6 H415	WING	E	6		9 9.000	12.000						10 9	10 7	572
32	5 U401	BEAM	E	10 S			5 6.000	2 11.000					13 11	13 8	456
35	4 U402	BEAM	E	13 S		2 11.000	2 8.000	2 11.000	2 8.000				11 11	11 8	273
3	4 U403	BEAM	E	10 S			2 8.000	2 11.000					8 3	8 1	16
40	5 U404	DIAPHRAGM	E	10 S			3 4.000	2 4.000					9 0	8 9	365
40	6 U405	DIAPHRAGM	E	19 S		2 4.000	2 11.000						5 3	5 1	305
75	6 U406	DIAPHRAGM	E	19 S		3 5.000	4 10.000						8 3	8 1	911
30	4 U407	BEAM	E	10 S			18.000	2 9.000					5 9	5 7	112
16	5 V401	BEAM	E	20		5 6.000							5 6	5 6	92
25	6 V402	DIAPHRAGM	E	20		2 3.000							2 3	2 3	84
18	6 V403	WING	E	20		6 6.000							6 6	6 6	176
18	6 V404	WING	E	20		7 0.000							7 0	7 0	189

Nominal lengths are based on out to out dimensions shown in bending diagrams and are listed to the nearest inch for fabricator's use. Actual lengths are measured along centerline bar to the nearest inch. Weights are based on actual lengths.

For bending diagrams and steel reinforcing totals, see Sheet No. 32.

Detailed Dec. 2024
Checked Dec. 2024

All bars shall be Grade 60.

BILL OF REINFORCING STEEL

Note: This drawing is not to scale. Follow dimensions.

Codes: C = Required coatings, where E = Epoxy Coated and G = Galvanized.

SH = Required shape, see bending diagrams.

V = Sets of varied bars and number of bars of each length. Bar dimensions vary in equal increments between dimensions shown on this line and the following line and the actual length dimension shown on this line and the following line vary by the specified increment.

STATE OF MISSOURI
DAVID BURDICK
NUMBER E-24015
REGISTERED PROFESSIONAL ENGINEER
THIS SHEET HAS BEEN SIGNED, SEALED AND DATED ELECTRONICALLY

DATE PREPARED 3/3/2025
ROUTE NOR | STATE MO
DISTRICT BR | SHEET NO. 33
COUNTY ST. CHARLES
JOB NO. JSL0112
CONTRACT ID.
PROJECT NO.
BRIDGE NO. A9387

DESCRIPTION | DATE

MISSOURI HIGHWAYS AND TRANSPORTATION COMMISSION
105 WEST CAPITOL
JEFFERSON CITY, MO 65102
1-888-ASK-MODOT (1-888-275-6636)

CDG ENGINEERS
One Campbell Plaza
St. Louis, Missouri 63139
T. 314 781 1770
F. 314 781 9015
Missouri State Certificate of Authority #1721

Bill of Reinforcing Steel

No Req	Size / Mark	Location	Codes C	Codes SH	Codes V	B ft in	C ft in	D ft in	E ft in	F ft in	H ft in	K ft in	Nom. Length ft in	Actual Length ft in	Weight lb
		DIAPHRAGMS AT													
		INT. BENTS													
12	6 H511	DIAPHRAGM	E	20		11 4.000							11 4	11 4	204
24	4 H512	DIAPHRAGM	E	20		11 4.000							11 4	11 4	182
12	6 H513	DIAPHRAGM	E	20		8 5.000							8 5	8 5	152
4	6 H514	DIAPHRAGM	E	20		11 8.000							11 8	11 8	70
8	4 H515	DIAPHRAGM	E	20		11 8.000							11 8	11 8	62
4	6 H516	DIAPHRAGM	E	20		8 9.000							8 9	8 9	53
8	5 H517	STRAND TIE	E	20		4 9.000							4 9	4 9	40
12	5 H518	STRAND TIE	E	20		5 9.000							5 9	5 9	72
24	5 U510	DIAPHRAGM	E	6 S		4 5.000	11.000	16.000					6 8	6 5	161
8	5 U511	DIAPHRAGM	E	6 S		4 5.000	11.000						5 4	5 3	44
8	6 U512	DIAPHRAGM	E	28 S			2 2.000	2 8.000	22.000				6 8	6 4	76
8	6 U513	DIAPHRAGM	E	28 S			2 2.000	2 11.000	22.000				6 11	6 7	79
32	6 U514	DIAPHRAGM	E	28 S			2 2.000	2 8.000	2 11.000				7 9	7 5	356
32	6 U515	DIAPHRAGM	E	28 S			2 2.000	3 4.000	2 11.000				8 5	8 1	389
128	4 U516	DIAPHRAGM	E	28 S			18.000	3 4.000	2 5.000				7 3	7 1	606
16	5 V510	DIAPHRAGM	E	20		3 4.000							3 4	3 4	56
		SLAB													
92	6 S1	SLAB	E	20	2	2 9.000							2 9	2 9	
		INCR. = 13.75"	E	20	2	54 4.000							54 4	54 4	3944
459	6 S2	SLAB	E	20		55 4.000							55 4	55 4	38148
225	6 S3	SLAB	E	20		45 3.000							45 3	45 3	15292
88	8 S4	SLAB	E	20		35 3.000							35 3	35 3	8282
88	8 S5	SLAB	E	20		32 9.000							32 9	32 9	7695
78	5 S6	SLAB	E	20	2	2 0.000							2 0	2 0	
		INCR. = 16.5"	E	20	2	54 3.000							54 3	54 3	2288
383	5 S7	SLAB	E	20		55 4.000							55 4	55 4	22104
290	6 S8	SLAB	E	20		45 3.000							45 3	45 3	19710
		TYPE D BARRIER													
10	5 K1	BARRIER	E	27 S		3 8.000	9.250	5.375	3 2.750		5.250	1.000	8 1	7 11	83
33	5 K2	BARRIER	E	27 S		3 8.000	9.250	14.500	2 5.750		14.250	2.750	8 2	7 11	272
20	5 K4	BARRIER	E	19 S	4	2 4.250	10.000						3 2	3 1	
		INCR. = 0.5"	E	19 S	4	2 6.250	10.000						3 4	3 3	86
20	5 K5	BARRIER	E	38 S	4			18.500	9.500	8.250	18.000	4.000	3 0	2 11	
		INCR. = 0.5"	E	38 S	4			20.500	9.500	8.250	20.000	4.500	3 2	3 1	63
12	5 K6	BARRIER	E	19 S		2 6.750	10.000						3 5	3 3	41
12	5 K7	BARRIER	E	21 S			2 6.625	10.000			2 6.000	6.250	3 5	3 3	41
36	5 K8	BARRIER	E	19 S	4	2 8.500	10.000						3 6	3 5	
		INCR. = 0.75"	E	19 S	4	3 2.500	10.000						4 0	3 11	138
36	5 K9	BARRIER	E	21 S	4		2 8.500	10.000			2 7.750	6.750	3 6	3 5	
		INCR. = 0.75"	E	21 S	4		3 2.500	10.000			3 1.750	7.750	4 0	3 11	138
13	5 K10	BARRIER	E	19 S		3 3.000	10.000						4 1	4 0	54
13	5 K11	BARRIER	E	21 S			3 3.000	10.000			3 2.250	7.750	4 1	4 0	54
12	5 K12	BARRIER	E	20		11 4.000							11 4	11 4	142
6	5 K13	BARRIER	E	20	2	4 7.000							4 7	4 7	
		INCR. = 36"	E	20	2	10 7.000							10 7	10 7	47
12	5 K14	BARRIER	E	20		10 10.000							10 10	10 10	136
6	5 K15	BARRIER	E	20	2	4 1.000							4 1	4 1	
		INCR. = 36"	E	20	2	10 1.000							10 1	10 1	44
10	5 K16	BARRIER	E	27 S		2 2.000	9.250	5.375	20.250	12.000	5.250	1.000	6 1	5 9	60
28	5 K17	BARRIER	E	27 S		2 2.000	9.250	17.250	8.500	12.000	17.000	3.250	6 1	5 9	168
24	5 K18	BARRIER	E	20		9 7.000							9 7	9 7	240
8	5 K19	BARRIER	E	20	4	5 10.000							5 10	5 10	
		INCR. = 36"	E	20	4	8 10.000							8 10	8 10	61

Bill of Reinforcing Steel

No Req	Size / Mark	Location	Codes C	Codes SH	Codes V	B ft in	C ft in	D ft in	E ft in	F ft in	H ft in	K ft in	Nom. Length ft in	Actual Length ft in	Weight lb
		TYPE D BARRIER													
		(CONT'D)													
454	5 R1	BARRIER	E	26		3 3.000	5.500	2.250	3 1.375	5.500	3 0.750	6.750	6 10	6 10	3236
454	5 R2	BARRIER	E	19 S		20.500	9.500						2 6	2 5	1144
454	5 R3	BARRIER	E	27 S			9.500	15.250	5.000	12.000	15.000	3.000	3 6	3 3	1539
20	5 R4	BARRIER	E	20		49 6.000							49 6	49 6	1033
80	5 R5	BARRIER	E	20		11 9.000							11 9	11 9	980
20	5 R6	BARRIER	E	20		57 9.000							57 9	57 9	1205
20	5 R7	BARRIER	E	20		50 0.000							50 0	50 0	1043
20	5 R8	BARRIER	E	20		16 0.000							16 0	16 0	334
		SLIP FORM													
40	5 C1	SLIP FORM	E	20		12 0.000							12 0	12 0	501
4	5 C2	SLIP FORM	E	20		8 9.000							8 9	8 9	37
8	5 C3	SLIP FORM	E	20		8 0.000							8 0	8 0	67
		PEDESTRIAN CURB													
213	4 R100	CURB	E	10 S			15.000	8.000	12.000				4 2	3 11	557
25	4 R101	CURB	E	10 S			2 10.000	8.000					6 4	6 2	103
2	4 R102	CURB	E	20		49 6.000							49 6	49 6	66
8	4 R103	CURB	E	20		11 9.000							11 9	11 9	63
2	4 R104	CURB	E	20		57 9.000							57 9	57 9	77
2	4 R105	CURB	E	20		50 0.000							50 0	50 0	67
2	4 R106	CURB	E	20		11 5.000							11 5	11 5	15
2	4 R107	CURB	E	20		10 9.000							10 9	10 9	14

Nominal lengths are based on out to out dimensions shown in bending diagrams and are listed to the nearest inch for fabricator's use. Actual lengths are measured along centerline bar to the nearest inch. Weights are based on actual lengths.

For bending diagrams and steel reinforcing totals, see Sheet No. 32.

Detailed Dec. 2024
Checked Dec. 2024

All bars shall be Grade 60.

BILL OF REINFORCING STEEL

Note: This drawing is not to scale. Follow dimensions.

Codes: C = Required coatings, where E = Epoxy Coated and G = Galvanized.

SH = Required shape, see bending diagrams.

V = Sets of varied bars and number of bars of each length. Bar dimensions vary in equal increments between dimensions shown on this line and the following line and the actual length dimension shown on this line and the following line vary by the specified increment.

STATE OF MISSOURI
DAVID BURDICK
NUMBER E-24015
REGISTERED PROFESSIONAL ENGINEER
THIS SHEET HAS BEEN SIGNED, SEALED AND DATED ELECTRONICALLY

DATE PREPARED 3/3/2025
ROUTE NOR
STATE MO
DISTRICT BR
SHEET NO. 34
COUNTY ST. CHARLES
JOB NO. JSL0112
CONTRACT ID.
PROJECT NO.
BRIDGE NO. A9387

DESCRIPTION
DATE

MISSOURI HIGHWAYS AND TRANSPORTATION COMMISSION
105 WEST CAPITOL
JEFFERSON CITY, MO 65102
1-888-ASK-MODOT (1-888-275-6636)

CDG ENGINEERS
One Campbell Plaza
St. Louis, Missouri 63139
T. 314 781 7770
F. 314 781 9015
Missouri State Certificate of Authority # 1721

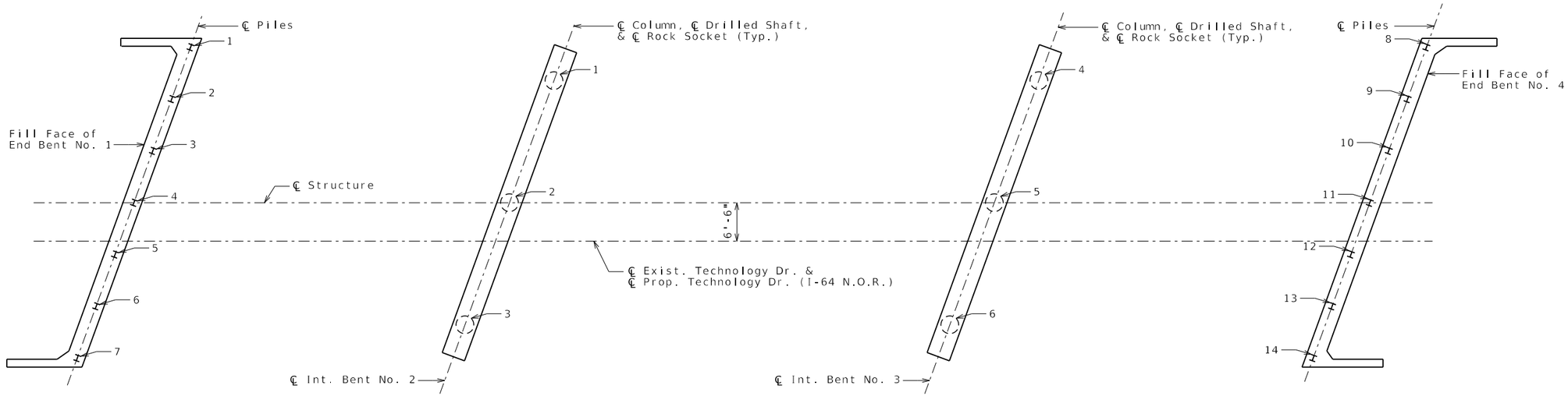

PART PLAN SHOWING PILE & DRILLED SHAFT NUMBERING FOR RECORDING AS-BUILT PILE DATA & AS-BUILT DRILLED SHAFT DATA

As-Built Pile Data

Pile No.	Length in Place (ft)	Computed Nominal Axial Compressive Resistance (kips)	Remarks
			End Bent No. 1
1			
2			
3			
4			
5			
6			
7			
			End Bent No. 4
8			
9			
10			
11			
12			
13			
14			

Note for As-Built Pile Data:
Indicate in remarks column:
A. Pile type and grade
B. Batter
C. Driven to practical refusal

This sheet to be completed by MoDOT construction personnel.

As-Built Drilled Shaft Data

Shaft No.	Top of Sound Rock (Elev.)	Tip of Casing (Elev.)	Bottom of Rock Socket (Elev.)	Remarks
				Intermediate Bent No. 2
1				
2				
3				
				Intermediate Bent No. 3
4				
5				
6				

Note for As-Built Drilled Shaft Data:

This sheet to be completed by MoDOT construction personnel.

AS-BUILT PILE AND DRILLED SHAFT DATA

Detailed Dec. 2024
Checked Dec. 2024

Note: This drawing is not to scale. Follow dimensions.

STATE OF MISSOURI
DAVID BURDICK
NUMBER E-24015
REGISTERED PROFESSIONAL ENGINEER
THIS SHEET HAS BEEN SIGNED, SEALED AND DATED ELECTRONICALLY

DATE PREPARED	3/3/2025
ROUTE	NOR
STATE	MO
DISTRICT	BR
SHEET NO.	35
COUNTY	ST. CHARLES
JOB NO.	JSL0112
CONTRACT ID.	
PROJECT NO.	
BRIDGE NO.	A9387

DESCRIPTION

DATE

MISSOURI HIGHWAYS AND TRANSPORTATION COMMISSION
105 WEST CAPITOL
JEFFERSON CITY, MO 65102
1-888-ASK-MODOT (1-888-275-6636)

CDG ENGINEERS
One Campbell Plaza
St. Louis, Missouri 63139
T. 314 781 1770
F. 314 781 9015
Missouri State Certificate of Authority #1721

BORING NUMBER B-101

Millennia Professional Services

CLIENT CDG Engineers
PROJECT NAME Technology Drive Bridge over Dardenne Creek
PROJECT NUMBER MG22013.01
PROJECT LOCATION O'Fallon, Missouri
DATE STARTED 9/19/23 **COMPLETED** 9/19/23
GROUND ELEVATION 500.1 ft **HOLE SIZE** Six inches
DRILLING CONTRACTOR Geotechnology
GROUND WATER LEVELS:
DRILLING METHOD Hollow Stem Auger, NQ Rock Core
AT TIME OF DRILLING 24.00 ft / Elev 476.1 ft
LOGGED BY B. Fisher **CHECKED BY** J. Schaeffer
AT END OF DRILLING --- N/A (coring fluid)
NOTES Northing: 1056677.423; Easting: 751900.336
AFTER DRILLING ---

DEPTH (ft)	GRAPHIC LOG	MATERIAL DESCRIPTION		SAMPLE TYPE NUMBER	RECOVERY % (RQD)	BLOW COUNTS (N VALUE)	POCKET PEN. (tsf)	DRY UNIT WT. (pcf)	MOISTURE CONTENT (%)	ATTERBERG LIMITS: LIQUID LIMIT	ATTERBERG LIMITS: PLASTIC LIMIT	ATTERBERG LIMITS: PLASTICITY INDEX	FINES CONTENT (%)
0		ASPHALT (5")	499.7										
		CONCRETE (10")	498.9										
		FILL: Grey, lean CLAY (CL) - mottled with brown to 7 ft.											
5				SS 1	72	3-8-9 (17) N_{60} = 18	>4.5		16	31	18	13	
10				SS 2	56	2-3-2 (5) N_{60} = 5	3.0		25				
		- trace fine sand below 11.5 ft.											
15		- undrained shear strength = 1.60 tsf		ST 3	83		3.0	102	19	30	18	12	
		Grey and brown, lean CLAY (CL), trace fine sand	483.4										
20				SS 4	100	1-3-2 (5) N_{60} = 6	2.5		21				
		- trace fine to coarse sand and gravel below 22 ft.											
25				SS 5	67	1-3-3 (6) N_{60} = 8	1.75		23				

(Continued Next Page)

BORING NUMBER B-101

Millennia Professional Services

CLIENT CDG Engineers
PROJECT NAME Technology Drive Bridge over Dardenne Creek
PROJECT NUMBER MG22013.01
PROJECT LOCATION O'Fallon, Missouri

DEPTH (ft)	GRAPHIC LOG	MATERIAL DESCRIPTION		SAMPLE TYPE NUMBER	RECOVERY % (RQD)	BLOW COUNTS (N VALUE)	POCKET PEN. (tsf)	DRY UNIT WT. (pcf)	MOISTURE CONTENT (%)	ATTERBERG LIMITS: LIQUID LIMIT	ATTERBERG LIMITS: PLASTIC LIMIT	ATTERBERG LIMITS: PLASTICITY INDEX	FINES CONTENT (%)
25		Grey and brown, lean CLAY (CL), trace fine sand *(continued)* - rotary wash below 25.0 ft.											
		Grey, fine to coarse SAND & GRAVEL (SW), trace chert fragments	473.4										
30				SS 6	44	4-5-6 (11) N_{60} = 14			20				
		- cherty below 32 ft.											
35				SS 7	22	6-8-3 (11) N_{60} = 15			32				
		LIMESTONE: Grey, moderately hard, highly fractured, moderately weathered, with chert nodules, trace stylolites, with vertical fractures, coarsely crystalline, thin to thick bedded	462.6	SS 8	0	50/0" N_{60} = 69							
40				RC 1	83 (0)				22				
		- retrieval and recovery issues due to cherty, highly vertically fractured material from 40 to 45 ft. - drill tooling required removal and clearing before drilling could continue; chert lodged in core barrel		RC 2	58 (0)								
45		- slightly weathered and fractured, trace chert and stylolites, slightly fossiliferous below 45 ft.											
50			450.1	RC 3	100 (80)								

Refusal at 37.5 feet.
Bottom of borehole at 50.0 feet.

DATE PREPARED 3/3/2025
ROUTE NOR STATE MO
DISTRICT BR SHEET NO. 36
COUNTY ST. CHARLES
JOB NO. JSL0112
CONTRACT ID.
PROJECT NO.
BRIDGE NO. A9387

DESCRIPTION
DATE

MISSOURI HIGHWAYS AND TRANSPORTATION COMMISSION
105 WEST CAPITOL
JEFFERSON CITY, MO 65102
1-888-ASK-MODOT (1-888-275-6636)

CDG ENGINEERS
One Campbell Plaza
St. Louis, Missouri 63139
T. 314 781 7770
F. 314 781 9075
Missouri State Certificate of Authority # 1721

BORING DATA

Note: For locations of borings, see Sheet No. 1.

Detailed Dec. 2024
Checked Dec. 2024

Note: This drawing is not to scale. Follow dimensions.

BORING NUMBER B-102

Millennia Professional Services

CLIENT CDG Engineers
PROJECT NAME Technology Drive Bridge over Dardenne Creek
PROJECT NUMBER MG22013.01
PROJECT LOCATION O'Fallon, Missouri
DATE STARTED 9/21/23 **COMPLETED** 9/21/23
GROUND ELEVATION 501.0 ft **HOLE SIZE** Six inches
DRILLING CONTRACTOR Geotechnology
GROUND WATER LEVELS:
DRILLING METHOD Continuous Flight Auger
AT TIME OF DRILLING --- Not Encountered
LOGGED BY B.Fisher **CHECKED BY** J. Schaeffer
AT END OF DRILLING --- Dry
NOTES Northing: 1056664.131; Easting: 751862.900
AFTER DRILLING ---

DEPTH (ft)	GRAPHIC LOG	MATERIAL DESCRIPTION		SAMPLE TYPE NUMBER	RECOVERY % (RQD)	BLOW COUNTS (N VALUE)	POCKET PEN. (tsf)	DRY UNIT WT. (pcf)	MOISTURE CONTENT (%)	ATTERBERG LIMITS: LIQUID LIMIT	ATTERBERG LIMITS: PLASTIC LIMIT	ATTERBERG LIMITS: PLASTICITY INDEX	FINES CONTENT (%)
0		ASPHALT (5")	500.6										
		CONCRETE (7")	500.0										
		FILL: Dark grey, silty, sandy gravel base rock	499.5										
		FILL: Dark grey, lean CLAY (CL)											
		Descriptions based on visual classifications of cuttings and the performance of drill tooling. Material transitions are approximate.											
5													
10													
15			486.0										
		Grey and brown, lean CLAY (CL)											
		Descriptions based on visual classifications of cuttings and the performance of drill tooling. Material transitions are approximate.											
20													
25													

(Continued Next Page)

BORING NUMBER B-102

Millennia Professional Services

CLIENT CDG Engineers
PROJECT NAME Technology Drive Bridge over Dardenne Creek
PROJECT NUMBER MG22013.01
PROJECT LOCATION O'Fallon, Missouri

DEPTH (ft)	GRAPHIC LOG	MATERIAL DESCRIPTION		SAMPLE TYPE NUMBER	RECOVERY % (RQD)	BLOW COUNTS (N VALUE)	POCKET PEN. (tsf)	DRY UNIT WT. (pcf)	MOISTURE CONTENT (%)	ATTERBERG LIMITS: LIQUID LIMIT	ATTERBERG LIMITS: PLASTIC LIMIT	ATTERBERG LIMITS: PLASTICITY INDEX	FINES CONTENT (%)
25		Grey and brown, lean CLAY (CL)											
		Descriptions based on visual classifications of cuttings and the performance of drill tooling. Material transitions are approximate. (continued)	473.5										
		Brown, lean CLAY (CL), with sand and gravel											
		Descriptions based on visual classifications of cuttings and the performance of drill tooling. Material transitions are approximate.											
30													
35		- gravelly, hard drilling below 35 ft.	464.0										

Refusal at 37.0 feet.
Bottom of borehole at 37.0 feet.

STATE OF MISSOURI
DAVID BURDICK
NUMBER E-24015
REGISTERED PROFESSIONAL ENGINEER
THIS SHEET HAS BEEN SIGNED, SEALED AND DATED ELECTRONICALLY

DATE PREPARED	3/3/2025
ROUTE	NOR
STATE	MO
DISTRICT	BR
SHEET NO.	37
COUNTY	ST. CHARLES
JOB NO.	JSL0112
CONTRACT ID.	
PROJECT NO.	
BRIDGE NO.	A9387

DESCRIPTION | DATE

MISSOURI HIGHWAYS AND TRANSPORTATION COMMISSION
105 WEST CAPITOL
JEFFERSON CITY, MO 65102
1-888-ASK-MODOT (1-888-275-6636)

CDG ENGINEERS
One Campbell Plaza
St. Louis, Missouri 63139
T. 314 781 7770
F. 314 781 9075
Missouri State Certificate of Authority #1721

BORING DATA

Note: For locations of borings, see Sheet No. 1.

Detailed Dec. 2024
Checked Dec. 2024

Note: This drawing is not to scale. Follow dimensions.

BORING NUMBER B-201

Millennia Professional Services

CLIENT CDG Engineers
PROJECT NAME Technology Drive Bridge over Dardenne Creek
PROJECT NUMBER MG22013.01
PROJECT LOCATION O'Fallon, Missouri
DATE STARTED 9/25/23 **COMPLETED** 9/25/23
GROUND ELEVATION 501.3 ft **HOLE SIZE** Six inches
DRILLING CONTRACTOR Geotechnology
GROUND WATER LEVELS:
DRILLING METHOD Continuous Flight Auger
AT TIME OF DRILLING --- Not Available
LOGGED BY B.Fisher **CHECKED BY** J. Schaeffer
AT END OF DRILLING --- Not Available
NOTES Northing: 1056624.262; Easting: 751927.238
AFTER DRILLING ---

DEPTH (ft)	GRAPHIC LOG	MATERIAL DESCRIPTION		SAMPLE TYPE NUMBER	RECOVERY % (RQD)	BLOW COUNTS (N VALUE)	POCKET PEN. (tsf)	DRY UNIT WT. (pcf)	MOISTURE CONTENT (%)	ATTERBERG LIMITS: LIQUID LIMIT	ATTERBERG LIMITS: PLASTIC LIMIT	ATTERBERG LIMITS: PLASTICITY INDEX	FINES CONTENT (%)
0		CONCRETE (28") - two 0.75" rebar segments encountered - 13" void with cardboard sonotube - one 1.5" rebar segment	498.9										
		Open air below bridge deck											
5													
10													
15			485.8										
		Drilling without sampling *Material descriptions unavailable due to position of drill tooling through bridge deck.*											
20		- rough drilling at 20 ft. - rough drilling at 21 ft.											
25													

(Continued Next Page)

GEOTECH BH COLUMNS - GINT STD US LAB.GDT - 10/30/23 16:29 - G:\PROJECT FILES\2022\MG22013.01 CDG TECHNOLOGY DRIVE BRIDGE OVER DARDENNE CREEK - SUPPLEMENTAL AGREEMENT #1\FIELD DATA\DARDENNE CREEK.GINT.GPJ

BORING NUMBER B-201

Millennia Professional Services

CLIENT CDG Engineers
PROJECT NAME Technology Drive Bridge over Dardenne Creek
PROJECT NUMBER MG22013.01
PROJECT LOCATION O'Fallon, Missouri

DEPTH (ft)	GRAPHIC LOG	MATERIAL DESCRIPTION		SAMPLE TYPE NUMBER	RECOVERY % (RQD)	BLOW COUNTS (N VALUE)	POCKET PEN. (tsf)	DRY UNIT WT. (pcf)	MOISTURE CONTENT (%)	ATTERBERG LIMITS: LIQUID LIMIT	ATTERBERG LIMITS: PLASTIC LIMIT	ATTERBERG LIMITS: PLASTICITY INDEX	FINES CONTENT (%)
25		Drilling without sampling *Material descriptions unavailable due to position of drill tooling through bridge deck.* (continued)											
30													
35		- rocky below 35 ft.	465.3										

Refusal at 36.0 feet.
Bottom of borehole at 36.0 feet.

GEOTECH BH COLUMNS - GINT STD US LAB.GDT - 10/30/23 16:29 - G:\PROJECT FILES\2022\MG22013.01 CDG TECHNOLOGY DRIVE BRIDGE OVER DARDENNE CREEK - SUPPLEMENTAL AGREEMENT #1\FIELD DATA\DARDENNE CREEK.GINT.GPJ

STATE OF MISSOURI
DAVID BURDICK
NUMBER E-24015
REGISTERED PROFESSIONAL ENGINEER
THIS SHEET HAS BEEN SIGNED, SEALED AND DATED ELECTRONICALLY

DATE PREPARED	3/3/2025
ROUTE	NOR
STATE	MO
DISTRICT	BR
SHEET NO.	38
COUNTY	ST. CHARLES
JOB NO.	JSL0112
CONTRACT ID.	
PROJECT NO.	
BRIDGE NO.	A9387

DESCRIPTION
DATE

MISSOURI HIGHWAYS AND TRANSPORTATION COMMISSION
105 WEST CAPITOL
JEFFERSON CITY, MO 65102
1-888-ASK-MODOT (1-888-275-6636)

CDG ENGINEERS
One Campbell Plaza
St. Louis, Missouri 63139
T. 314 781 7770
F. 314 781 9075
Missouri State Certificate of Authority # 1721

BORING DATA

Note: For locations of borings, see Sheet No. 1.

Detailed Dec. 2024
Checked Dec. 2024

Note: This drawing is not to scale. Follow dimensions.

BORING NUMBER B-202

PAGE 1 OF 3

Millennia Professional Services

CLIENT CDG Engineers
PROJECT NAME Technology Drive Bridge over Dardenne Creek
PROJECT NUMBER MG22013.01
PROJECT LOCATION O'Fallon, Missouri
DATE STARTED 9/20/23 **COMPLETED** 9/20/23
GROUND ELEVATION 501.2 ft **HOLE SIZE** Six inches
DRILLING CONTRACTOR Geotechnology
GROUND WATER LEVELS:
DRILLING METHOD Continuous Flight Auger, NQ Rock Core
AT TIME OF DRILLING --- N/A (rotary-wash)
LOGGED BY B.Fisher **CHECKED BY** J. Schaeffer
AT END OF DRILLING --- N/A (coring fluid)
NOTES Northing: 1056609.685; Easting: 751903.183
AFTER DRILLING ---

DEPTH (ft)	GRAPHIC LOG	MATERIAL DESCRIPTION	SAMPLE TYPE NUMBER	RECOVERY % (RQD)	BLOW COUNTS (N VALUE)	POCKET PEN. (tsf)	DRY UNIT WT. (pcf)	MOISTURE CONTENT (%)	ATTERBERG LIMITS: LIQUID LIMIT	ATTERBERG LIMITS: PLASTIC LIMIT	ATTERBERG LIMITS: PLASTICITY INDEX	FINES CONTENT (%)
0		CONCRETE (28")										
		- 14" void with cardboard sonotube										
		- one 1.5" rebar segment										
		498.9										
		Open air below bridge deck										
5												
10												
15		486.2										
		Casing installed to get a seal										
		482.7										
		Grey, sandy and gravelly CLAY (CL)	SS 1	50	17/1" N_{60} = 20			11				
		- SS1 N-value compromised due to setting drill casing										
		- rotary wash below 19.0 ft.										
20												
25		- no recovery at SS2; drilling was loose and gravelly, required a whole tub of drilling mud	SS 2	0	3-2-2 (4)							

N_{60} = 5

(Continued Next Page)

BORING NUMBER B-202

PAGE 2 OF 3

Millennia Professional Services

CLIENT CDG Engineers
PROJECT NAME Technology Drive Bridge over Dardenne Creek
PROJECT NUMBER MG22013.01
PROJECT LOCATION O'Fallon, Missouri

DEPTH (ft)	GRAPHIC LOG	MATERIAL DESCRIPTION	SAMPLE TYPE NUMBER	RECOVERY % (RQD)	BLOW COUNTS (N VALUE)	POCKET PEN. (tsf)	DRY UNIT WT. (pcf)	MOISTURE CONTENT (%)	ATTERBERG LIMITS: LIQUID LIMIT	ATTERBERG LIMITS: PLASTIC LIMIT	ATTERBERG LIMITS: PLASTICITY INDEX	FINES CONTENT (%)
25		Grey, sandy and gravelly CLAY (CL) *(continued)*										
		474.5										
		Grey, fine to coarse GRAVEL (GW), with sand and chert										
30			SS 3	22	8-6-7 (13)			21				
					N_{60} = 17							
		- while obtaining sample SS4, the hole had to be cleared multiple times and an additional tub of drilling mud was used	SS 4	100	50/2" N_{60} = 69			30				
		- gravel lodged in drill tooling										
35		464.2										
		LIMESTONE: Grey, moderately hard, moderately to highly weathered and fractured, cherty, with calcite-filled vugs and veins, trace stylolites, slightly fossiliferous, thin to thick bedded	RC 1	100 (50)								
40		- rock compressive strength at 39.5 ft. = 15,257 psi										
		- rock compressive strength at 41.5 ft. = 13,344 psi	RC 2	100 (88)								
		- highly fossiliferous from 42.5 to 43 ft.										
		- rock compressive strength at 44.0 ft. = 11,511 psi										
45		- trace healed fractures below 44.5 ft.										
		- rock compressive strength at 46.5 ft. = 9,909 psi	RC 3	100 (73)								
		- rock compressive strength at 48.5 ft. = 10,650 psi										
50		- moderately fossiliferous, trace vertical fractures below 49.5 ft.										
		- rock compressive strength at 50.5 ft. = 5,637 psi										
		- rock compressive strength at 52.0 ft. = 5,529 psi	RC 4	92 (77)								
		- highly fractured zone near 53 ft.										

(Continued Next Page)

DAVID BURDICK NUMBER E-24015 STATE OF MISSOURI REGISTERED PROFESSIONAL ENGINEER
THIS SHEET HAS BEEN SIGNED, SEALED AND DATED ELECTRONICALLY

DATE PREPARED	3/3/2025
ROUTE	NOR
STATE	MO
DISTRICT	BR
SHEET NO.	39
COUNTY	ST. CHARLES
JOB NO.	JSL0112
CONTRACT ID.	
PROJECT NO.	
BRIDGE NO.	A9387

DESCRIPTION

DATE

MISSOURI HIGHWAYS AND TRANSPORTATION COMMISSION
105 WEST CAPITOL
JEFFERSON CITY, MO 65102
1-888-ASK-MODOT (1-888-275-6636)

CDG ENGINEERS
One Campbell Plaza
St. Louis, Missouri 63139
T. 314 781 7770
F. 314 781 9075
Missouri State Certificate of Authority # 1721

GEOTECH BH COLUMNS - GINT STD US LAB.GDT - 10/30/23 16:29 - G:\PROJECT FILES\2022\MG22013.01 CDG TECHNOLOGY DRIVE BRIDGE OVER DARDENNE CREEK - SUPPLEMENTAL AGREEMENT #1\FIELD DATA\DARDENNE CREEK.GINT.GPJ

BORING DATA

Note: For locations of borings, see Sheet No. 1.

Detailed Dec. 2024
Checked Dec. 2024

Note: This drawing is not to scale. Follow dimensions.

BORING NUMBER B-202

PAGE 3 OF 3

Millennia Professional Services

CLIENT CDG Engineers **PROJECT NAME** Technology Drive Bridge over Dardenne Creek

PROJECT NUMBER MG22013.01 **PROJECT LOCATION** O'Fallon, Missouri

DEPTH (ft)	GRAPHIC LOG	MATERIAL DESCRIPTION	SAMPLE TYPE NUMBER	RECOVERY % (RQD)	BLOW COUNTS (N VALUE)	POCKET PEN. (tsf)	DRY UNIT WT. (pcf)	MOISTURE CONTENT (%)	ATTERBERG LIMITS: LIQUID LIMIT	ATTERBERG LIMITS: PLASTIC LIMIT	ATTERBERG LIMITS: PLASTICITY INDEX	FINES CONTENT (%)
55		LIMESTONE: Grey, moderately hard, moderately to highly weathered and fractured, cherty, with calcite-filled vugs and veins, trace stylolites, slightly fossiliferous, thin to thick bedded *(continued)* - rock compressive strength at 54.0 ft. = 4,445 psi - grey and tan, slightly vuggy, trace calcite-filled vugs and veins, trace 1" calcite-filled vugs below 54.5 ft.	RC 5	100 (52)								
60		- rock compressive strength at 60.0 ft. = 5,302 psi	RC 6	100 (50)								
		439.2										

Refusal at 37.0 feet.
Bottom of borehole at 62.0 feet.

GEOTECH BH COLUMNS - GINT STD US LAB.GDT - 10/30/23 16:29 - G:\PROJECT FILES\2022\MG22013.01 CDG TECHNOLOGY DRIVE BRIDGE OVER DARDENNE CREEK - SUPPLEMENTAL AGREEMENT #1\FIELD DATA\DARDENNE CREEK.GINT.GPJ

BORING NUMBER B-301

PAGE 1 OF 2

Millennia Professional Services

CLIENT CDG Engineers **PROJECT NAME** Technology Drive Bridge over Dardenne Creek

PROJECT NUMBER MG22013.01 **PROJECT LOCATION** O'Fallon, Missouri

DATE STARTED 9/18/23 **COMPLETED** 9/18/23 **GROUND ELEVATION** 489.8 ft **HOLE SIZE** Six inches

DRILLING CONTRACTOR Geotechnology **GROUND WATER LEVELS:**

DRILLING METHOD Hollow Stem Auger, NQ Rock Core ▽ **AT TIME OF DRILLING** 17.00 ft / Elev 472.8 ft

LOGGED BY B.Fisher **CHECKED BY** J. Schaeffer **AT END OF DRILLING** --- N/A (coring fluid)

NOTES Northing: 1056538.654; Easting: 752036.725 **AFTER DRILLING** ---

DEPTH (ft)	GRAPHIC LOG	MATERIAL DESCRIPTION	SAMPLE TYPE NUMBER	RECOVERY % (RQD)	BLOW COUNTS (N VALUE)	POCKET PEN. (tsf)	DRY UNIT WT. (pcf)	MOISTURE CONTENT (%)	ATTERBERG LIMITS: LIQUID LIMIT	ATTERBERG LIMITS: PLASTIC LIMIT	ATTERBERG LIMITS: PLASTICITY INDEX	FINES CONTENT (%)
0		TOPSOIL (3") 489.5										
		FILL: Light brown, SILT (ML), trace sand and gravel 486.8										
		FILL: Grey with brown, black and red, lean CLAY (CL), trace to with sand	SS 1	78	4-5-6 (11)	>4.5		19	29	18	11	
5		483.3			N80 = 11							
		POSSIBLE FILL: Brown, silty CLAY (CL-ML), with sand										
		- undrained shear strength = 0.90 tsf 480.8	ST 2	100		1.5	103	22	24	19	5	
10		Grey, medium grained SAND (SP)										
		478.0										
		Bluish grey, lean CLAY (CL), trace fine sand and roots	SS 3	100	1-2-3 (5)	1.5		26				
15					N80 = 6							
		473.0										
		▽ Grey, coarse SAND (SP), with gravel, trace clay										
		- Results of sieve analysis at 18.5 ft.: 33.6% retained on #4 sieve 5.0% passing #200 sieve	SS 4	28	1-2-2 (4)			20				
20					N80 = 5							
		- gravelly below 22.0 ft.										
		- Results of sieve analysis at 23.5 ft.: 38.8% retained on #4 sieve 2.4% passing #200 sieve	SS 5	67	3-3-3 (6)			24				
25					N80 = 8							

(Continued Next Page)

GEOTECH BH COLUMNS - GINT STD US LAB.GDT - 10/30/23 16:53 - G:\PROJECT FILES\2022\MG22013.01 CDG TECHNOLOGY DRIVE BRIDGE OVER DARDENNE CREEK - SUPPLEMENTAL AGREEMENT #1\FIELD DATA\DARDENNE CREEK.GINT.GPJ

STATE OF MISSOURI DAVID BURDICK NUMBER E-24015 REGISTERED PROFESSIONAL ENGINEER
THIS SHEET HAS BEEN SIGNED, SEALED AND DATED ELECTRONICALLY

DATE PREPARED	
3/3/2025	
ROUTE NOR	STATE MO
DISTRICT BR	SHEET NO. 40
COUNTY ST. CHARLES	
JOB NO. JSL0112	
CONTRACT ID.	
PROJECT NO.	
BRIDGE NO. A9387	

DESCRIPTION

DATE

MISSOURI HIGHWAYS AND TRANSPORTATION COMMISSION
105 WEST CAPITOL
JEFFERSON CITY, MO 65102
1-888-ASK-MODOT (1-888-275-6636)

CDG ENGINEERS
One Campbell Plaza
St. Louis, Missouri 63139
T. 314 781 7770
F. 314 781 9075
Missouri State Certificate of Authority # 1721

BORING DATA

Note: For locations of borings, see Sheet No. 1.

Detailed Dec. 2024
Checked Dec. 2024

Note: This drawing is not to scale. Follow dimensions.

BORING NUMBER B-301

Millennia Professional Services

CLIENT CDG Engineers
PROJECT NAME Technology Drive Bridge over Dardenne Creek
PROJECT NUMBER MG22013.01
PROJECT LOCATION O'Fallon, Missouri

DEPTH (ft)	GRAPHIC LOG	MATERIAL DESCRIPTION	SAMPLE TYPE NUMBER	RECOVERY % (RQD)	BLOW COUNTS (N VALUE)	POCKET PEN. (tsf)	DRY UNIT WT. (pcf)	MOISTURE CONTENT (%)	ATTERBERG LIMITS: LIQUID LIMIT	ATTERBERG LIMITS: PLASTIC LIMIT	ATTERBERG LIMITS: PLASTICITY INDEX	FINES CONTENT (%)
25		Grey, coarse SAND (SP), with gravel, trace clay *(continued)* 463.8										
		LIMESTONE: Grey and tan, moderately hard, trace chert nodules, trace stylolites, slightly fossiliferous, trace healed fractures, moderately to highly weathered and fractured, thin to thick bedded - fractured, moderately weathered from 26 to 31 ft.	SS 6	100	50/0" N_{50} = 66							
			RC 1	100 (58)				25				
		- rock compressive strength at 29.0 ft. = 14,110 psi										
30		- rock compressive strength at 30.0 ft. = 9,094 psi - with chert below 30 ft.										
			RC 2	100 (84)								
35		- rock compressive strength at 35.5 ft. = 8,211 psi										
			RC 3	100 (85)								
40		- rock compressive strength at 39.5 ft. = 8,128 psi - trace calcite-filled vugs, trace inclined fractures, slightly silty below 40 ft. - rock compressive strength at 40.5 ft. = 7,600 psi										
			RC 4	100 (45)								
		- rock compressive strength at 43.0 ft. = 2,984 psi										
45		- 3" calcite-filled vug at 44.5 ft. - tan with grey, open and healed vertical fractures, trace angled fractures below 45 ft.										
		- continuous vertical fracture from about 47 to 50 ft.	RC 5	100 (33)								
50		- grey and tan, cherty below 50 ft. 438.8	RC 6	100 (0)								

Refusal at 26.0 feet.
Bottom of borehole at 51.0 feet.

BORING NUMBER B-302

Millennia Professional Services

CLIENT CDG Engineers
PROJECT NAME Technology Drive Bridge over Dardenne Creek
PROJECT NUMBER MG22013.01
PROJECT LOCATION O'Fallon, Missouri
DATE STARTED 9/22/23 **COMPLETED** 9/25/23
GROUND ELEVATION 501.2 ft **HOLE SIZE** Six inches
DRILLING CONTRACTOR Geotechnology
GROUND WATER LEVELS:
DRILLING METHOD Continuous Flight Auger
AT TIME OF DRILLING ---
LOGGED BY B.Fisher **CHECKED BY** J. Schaeffer
AT END OF DRILLING ---
NOTES Northing: 1056528.452; Easting: 751962.072
AFTER DRILLING ---

DEPTH (ft)	GRAPHIC LOG	MATERIAL DESCRIPTION	SAMPLE TYPE NUMBER	RECOVERY % (RQD)	BLOW COUNTS (N VALUE)	POCKET PEN. (tsf)	DRY UNIT WT. (pcf)	MOISTURE CONTENT (%)	ATTERBERG LIMITS: LIQUID LIMIT	ATTERBERG LIMITS: PLASTIC LIMIT	ATTERBERG LIMITS: PLASTICITY INDEX	FINES CONTENT (%)
0		CONCRETE (28") - one 1.5" and one 0.75" rebar segments encountered - 14" void with cardboard sonotube - one 1.5" rebar segment 498.9										
		Open air below bridge deck										
5		- Note: Original location encountered end of sonotube void capped with a steel plate. Unable to successfully cut through the steel plate, requiring crew to offset the hole 5ft North.										
10												
		487.2										
15		Drilling without sampling *Material descriptions unavailable due to position of drill tooling through bridge deck.*										
20												
25												

(Continued Next Page)

STATE OF MISSOURI DAVID BURDICK NUMBER E-24015 REGISTERED PROFESSIONAL ENGINEER
THIS SHEET HAS BEEN SIGNED, SEALED AND DATED ELECTRONICALLY

DATE PREPARED 3/3/2025
ROUTE NOR | STATE MO
DISTRICT BR | SHEET NO. 41
COUNTY ST. CHARLES
JOB NO. JSL0112
CONTRACT ID.
PROJECT NO.
BRIDGE NO. A9387

DESCRIPTION | DATE

MISSOURI HIGHWAYS AND TRANSPORTATION COMMISSION
105 WEST CAPITOL
JEFFERSON CITY, MO 65102
1-888-ASK-MODOT (1-888-275-6636)

CDG ENGINEERS
One Campbell Plaza
St. Louis, Missouri 63139
T. 314 781 7770
F. 314 781 9075
Missouri State Certificate of Authority # 1721

BORING DATA

Note: For locations of borings, see Sheet No. 1.

Detailed Dec. 2024
Checked Dec. 2024

Note: This drawing is not to scale. Follow dimensions.

BORING NUMBER B-302

Millennia Professional Services

CLIENT CDG Engineers
PROJECT NAME Technology Drive Bridge over Dardenne Creek
PROJECT NUMBER MG22013.01
PROJECT LOCATION O'Fallon, Missouri

DEPTH (ft)	GRAPHIC LOG	MATERIAL DESCRIPTION	SAMPLE TYPE NUMBER	RECOVERY % (RQD)	BLOW COUNTS (N VALUE)	POCKET PEN. (tsf)	DRY UNIT WT. (pcf)	MOISTURE CONTENT (%)	ATTERBERG LIMITS: LIQUID LIMIT	ATTERBERG LIMITS: PLASTIC LIMIT	ATTERBERG LIMITS: PLASTICITY INDEX	FINES CONTENT (%)
25		Drilling without sampling *Material descriptions unavailable due to position of drill tooling through bridge deck.* (continued)										
30												
35		- rough drilling below 35 ft.										
		464.2										

Refusal at 37.0 feet.
Bottom of borehole at 37.0 feet.

BORING NUMBER B-401

Millennia Professional Services

CLIENT CDG Engineers
PROJECT NAME Technology Drive Bridge over Dardenne Creek
PROJECT NUMBER MG22013.01
PROJECT LOCATION O'Fallon, Missouri
DATE STARTED 9/18/23 **COMPLETED** 9/18/23
GROUND ELEVATION 490.5 ft **HOLE SIZE** Six inches
DRILLING CONTRACTOR Geotechnology
GROUND WATER LEVELS:
DRILLING METHOD Hollow Stem Auger
AT TIME OF DRILLING --- N/A
LOGGED BY B.Fisher **CHECKED BY** J. Schaeffer
AT END OF DRILLING 15.00 ft / Elev 475.5 ft
NOTES Northing: 1056486.956; Easting: 752079.655
AFTER DRILLING ---

DEPTH (ft)	GRAPHIC LOG	MATERIAL DESCRIPTION	SAMPLE TYPE NUMBER	RECOVERY % (RQD)	BLOW COUNTS (N VALUE)	POCKET PEN. (tsf)	DRY UNIT WT. (pcf)	MOISTURE CONTENT (%)	ATTERBERG LIMITS: LIQUID LIMIT	ATTERBERG LIMITS: PLASTIC LIMIT	ATTERBERG LIMITS: PLASTICITY INDEX	FINES CONTENT (%)
0		POSSIBLE FILL: Light brown, lean CLAY (CL), trace sand and gravel *Descriptions based on visual classifications of cuttings and the performance of drill tooling. Material transitions are approximate.*										
5												
		483.0										
		Grey, lean CLAY (CL) *Descriptions based on visual classifications of cuttings and the performance of drill tooling. Material transitions are approximate.*										
10												
15		475.5										
		Brown, silty lean CLAY (CL), with sand and gravel *Descriptions based on visual classifications of cuttings and the performance of drill tooling. Material transitions are approximate.*										
20												
25												

(Continued Next Page)

STATE OF MISSOURI
DAVID BURDICK
NUMBER E-24015
REGISTERED PROFESSIONAL ENGINEER
THIS SHEET HAS BEEN SIGNED, SEALED AND DATED ELECTRONICALLY

DATE PREPARED 3/3/2025
ROUTE NOR | STATE MO
DISTRICT BR | SHEET NO. 42
COUNTY ST. CHARLES
JOB NO. JSL0112
CONTRACT ID.
PROJECT NO.
BRIDGE NO. A9387

DESCRIPTION
DATE

MISSOURI HIGHWAYS AND TRANSPORTATION COMMISSION
105 WEST CAPITOL
JEFFERSON CITY, MO 65102
1-888-ASK-MODOT (1-888-275-6636)

CDG ENGINEERS
One Campbell Plaza
St. Louis, Missouri 63139
T. 314 781 7770
F. 314 781 9075
Missouri State Certificate of Authority # 1721

BORING DATA

Note: For locations of borings, see Sheet No. 1.

Detailed Dec. 2024
Checked Dec. 2024

Note: This drawing is not to scale. Follow dimensions.

BORING NUMBER B-401

Millennia Professional Services

CLIENT CDG Engineers
PROJECT NAME Technology Drive Bridge over Dardenne Creek
PROJECT NUMBER MG22013.01
PROJECT LOCATION O'Fallon, Missouri

DEPTH (ft)	GRAPHIC LOG	MATERIAL DESCRIPTION	SAMPLE TYPE NUMBER	RECOVERY % (RQD)	BLOW COUNTS (N VALUE)	POCKET PEN. (tsf)	DRY UNIT WT. (pcf)	MOISTURE CONTENT (%)	ATTERBERG LIMITS: LIQUID LIMIT	ATTERBERG LIMITS: PLASTIC LIMIT	ATTERBERG LIMITS: PLASTICITY INDEX	FINES CONTENT (%)
25		Brown, silty lean CLAY (CL), with sand and gravel *Descriptions based on visual classifications of cuttings and the performance of drill tooling. Material transitions are approximate.* *(continued)* - rocky drilling below 25 ft. 463.0										

Refusal at 27.5 feet.
Bottom of borehole at 27.5 feet.

BORING NUMBER B-402

Millennia Professional Services

CLIENT CDG Engineers
PROJECT NAME Technology Drive Bridge over Dardenne Creek
PROJECT NUMBER MG22013.01
PROJECT LOCATION O'Fallon, Missouri
DATE STARTED 9/21/23 **COMPLETED** 9/21/23
GROUND ELEVATION 501.1 ft **HOLE SIZE** Six inches
DRILLING CONTRACTOR Geotechnology
GROUND WATER LEVELS:
DRILLING METHOD Hollow Stem Auger
AT TIME OF DRILLING 23.00 ft / Elev 478.1 ft
LOGGED BY B.Fisher **CHECKED BY** J. Schaeffer
AT END OF DRILLING --- N/A (coring fluid)
NOTES Northing: 1056477.733; Easting: 751999.476
AFTER DRILLING ---

DEPTH (ft)	GRAPHIC LOG	MATERIAL DESCRIPTION	SAMPLE TYPE NUMBER	RECOVERY % (RQD)	BLOW COUNTS (N VALUE)	POCKET PEN. (tsf)	DRY UNIT WT. (pcf)	MOISTURE CONTENT (%)	ATTERBERG LIMITS: LIQUID LIMIT	ATTERBERG LIMITS: PLASTIC LIMIT	ATTERBERG LIMITS: PLASTICITY INDEX	FINES CONTENT (%)
0		ASPHALT (4") 500.8										
		CONCRETE (8") 500.1										
		BASE ROCK (10") 499.3										
		FILL: Grey, lean CLAY (CL) - Note: Two location attempts encountered stacked >1" rebar within the concrete; unable to cut through when rebar is stacked together										
			SS 1	56	5-6-6 (12)	>4.5		21				
5					N_{60} = 12							
			ST 2	25								
10												
		489.1 Grey, lean CLAY (CL), trace sand										
			SS 3	67	2-2-2 (4)	2.0		25				
15					N_{60} = 5							
		- with fine sand below 17 ft.										
			SS 4	100	0-2-1 (3)	1.0		26				
20		480.6			N_{60} = 4							
		Grey, fine to coarse grained SAND (SW), with fine to coarse gravel										
			ST 5	25								
		- clayey, gravelly, trace chert fragments below 23 ft. - rotary wash below 23.0 ft.										
25			SS 6	67	3-4-2 (6)			12				

N_{60} = 8

(Continued Next Page)

GEOTECH BH COLUMNS - GINT STD US LAB.GDT - 10/30/23 16:29 - G:\PROJECT FILES\3022\MG22013.01 CDG TECHNOLOGY DRIVE BRIDGE OVER DARDENNE CREEK - SUPPLEMENTAL AGREEMENT #1\FIELD DATA\DARDENNE CREEK.GINT.GPJ

STATE OF MISSOURI DAVID BURDICK NUMBER E-24015 REGISTERED PROFESSIONAL ENGINEER
THIS SHEET HAS BEEN SIGNED, SEALED AND DATED ELECTRONICALLY

DATE PREPARED 3/3/2025
ROUTE NOR | STATE MO
DISTRICT BR | SHEET NO. 43
COUNTY ST. CHARLES
JOB NO. JSL0112
CONTRACT ID.
PROJECT NO.
BRIDGE NO. A9387

DESCRIPTION
DATE

MISSOURI HIGHWAYS AND TRANSPORTATION COMMISSION
105 WEST CAPITOL
JEFFERSON CITY, MO 65102
1-888-ASK-MODOT (1-888-275-6636)

CDG ENGINEERS
One Campbell Plaza
St. Louis, Missouri 63139
T. 314 781 7770
F. 314 781 9075
Missouri State Certificate of Authority # 1721

BORING DATA

Note: For locations of borings, see Sheet No. 1.
Note: This drawing is not to scale. Follow dimensions.

Detailed Dec. 2024
Checked Dec. 2024

BORING NUMBER B-402

Millennia Professional Services

CLIENT CDG Engineers
PROJECT NAME Technology Drive Bridge over Dardenne Creek
PROJECT NUMBER MG22013.01
PROJECT LOCATION O'Fallon, Missouri

DEPTH (ft)	MATERIAL DESCRIPTION	SAMPLE TYPE NUMBER	RECOVERY % (RQD)	BLOW COUNTS (N VALUE)	POCKET PEN. (tsf)	DRY UNIT WT. (pcf)	MOISTURE CONTENT (%)	ATTERBERG LIMITS: LIQUID LIMIT	ATTERBERG LIMITS: PLASTIC LIMIT	ATTERBERG LIMITS: PLASTICITY INDEX	FINES CONTENT (%)
25	Grey, fine to coarse grained SAND (SW), with fine to coarse gravel *(continued)*										
471.8	Grey, silty CLAY (CL-ML), trace sand and wood fibers	SS 7	67	1-18-10 (28)	2.0		31				
30				N_{60} = 37							
469.3	Grey, fine to coarse SAND (SW), with gravel and chert fragments										
		SS 8	33	5-4-7 (11)			22				
35				N_{60} = 15							
463.1	LIMESTONE: Light grey, moderately hard, moderately weathered, highly fractured, slightly fossiliferous, trace chert nodules, thin to thick bedded - rock compressive strength at 39.5 ft. = 18,575 psi - grey and tan, trace stylolites below 39.5 ft.	SS 9	100	50/0"			24				
		RC 1	100 (0)	N_{60} = 69							
40		RC 2	100 (72)								
45	- mostly unfractured and unweathered, moderately fossiliferous, coarsely crystalline below 44.5 ft.	RC 3	100 (100)								
453.1	Refusal at 38.0 feet. Bottom of borehole at 48.0 feet.										

GEOTECH BH COLUMNS - GINT STD US LAB.GDT - 10/3/023 16:29 - G:\PROJECT FILES\2022\MG22013.01 CDG TECHNOLOGY DRIVE BRIDGE OVER DARDENNE CREEK - SUPPLEMENTAL AGREEMENT #1\FIELD DATA\DARDENNE CREEK.GINT.GPJ

STATE OF MISSOURI
DAVID BURDICK
NUMBER E-24015
REGISTERED PROFESSIONAL ENGINEER
THIS SHEET HAS BEEN SIGNED, SEALED AND DATED ELECTRONICALLY

DATE PREPARED 3/3/2025
ROUTE NOR | STATE MO
DISTRICT BR | SHEET NO. 44
COUNTY ST. CHARLES
JOB NO. JSL0112
CONTRACT ID.
PROJECT NO.
BRIDGE NO. A9387

DESCRIPTION	DATE

MISSOURI HIGHWAYS AND TRANSPORTATION COMMISSION
105 WEST CAPITOL
JEFFERSON CITY, MO 65102
1-888-ASK-MODOT (1-888-275-6636)

CDG ENGINEERS
One Campbell Plaza
St. Louis, Missouri 63139
T. 314 781 7770
F. 314 781 9075
Missouri State Certificate of Authority # 1721

BORING DATA

Note: For locations of borings, see Sheet No. 1.

Detailed Dec. 2024
Checked Dec. 2024

Note: This drawing is not to scale. Follow dimensions.

SEC/SUR 1641 TWP 46N RGE 2E

U.I.P. AND REPAIR EXISTING (67'-76'-67') PRESTRESSED CONCRETE I-GIRDER SPANS (SKEW: 20° R.A.)

General Notes:

Slab Drainage System:

For the approximate locations of drain modifications (2 places), see Plan of Slab Drain.

Modification as shown in Part Section Near Drain on Sheet No. 2.

Pipe hangers, support brackets, pipe converters and drain pipes shall be in accordance with the job special provisions for Drainage System.

Payment for all labor, equipment, materials and any other incidental work necessary to complete the installation at both locations will be considered completely covered by the contract lump sum price for Drainage System (On Structure).

Outline of old work is indicated by light dashed lines. Heavy lines indicate new work.

Contractor shall verify all dimensions in the field before ordering new material.

After removal of bracket assembly fill coil insert with a non shrink grout. Area exposed by the removal of the bracket assembly shall be coated with an approved qualified special mortar in accordance with Sec 704.

The limits of existing 4"x8" drain to be removed shall be the minimum needed for the incorporation of a closed drainage system and to ensure the 8"⌀ horizontal pipe is above the bottom of the P/S Concrete I-Girders and is sloped to drain (1% min.).

Resin Anchor System:

The contractor shall use one of the qualified resin anchor systems in accordance with Sec 1039.

Cost of furnishing and installing the resin anchor system, complete in place, will be completely covered by the contract unit price for Drainage System (On Structure A6752).

The minimum embedment depth in concrete with f'c = 4000 psi for the resin anchor system shall be that required to meet the minimum ultimate pullout strengh in accordance with Sec. 1039 but shall not be less than 5".

Resin anchors used with hangers or support brackets for the closed drainage system shall be installed in bottom of deck, bent cap, or column. Drilling into the prestresssed girders is not allowed.

Traffic Handling:

Maintain traffic on structure during construction.

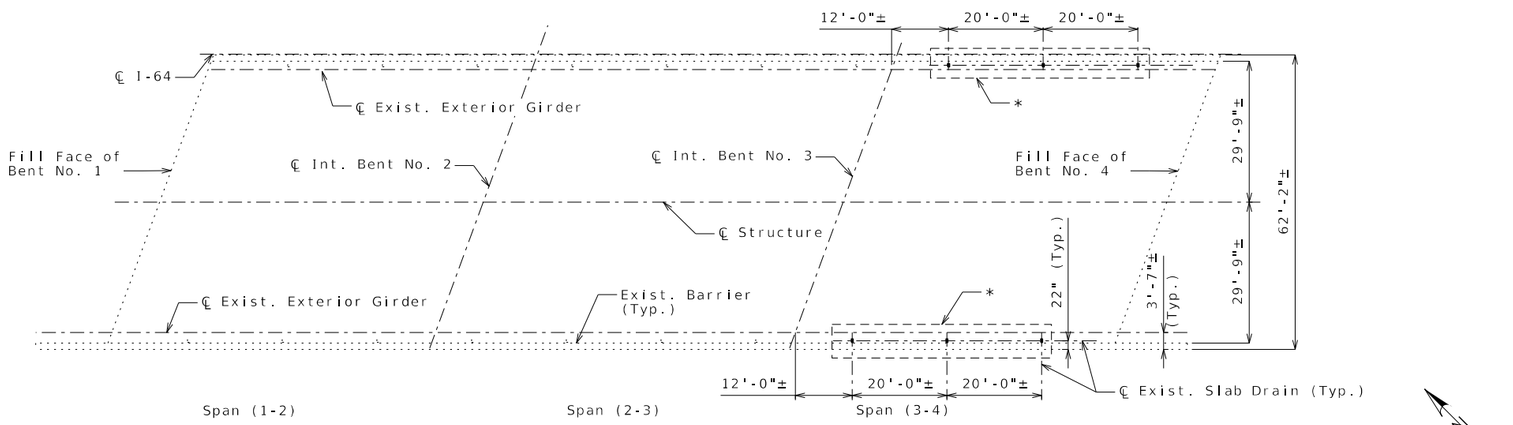

* See Sheet No. 2 for Drainage System Details

PLAN OF SLAB SHOWING DRAIN LOCATIONS

Note: Longitudinal dimensions are horizontal along ℄ exterior girder.

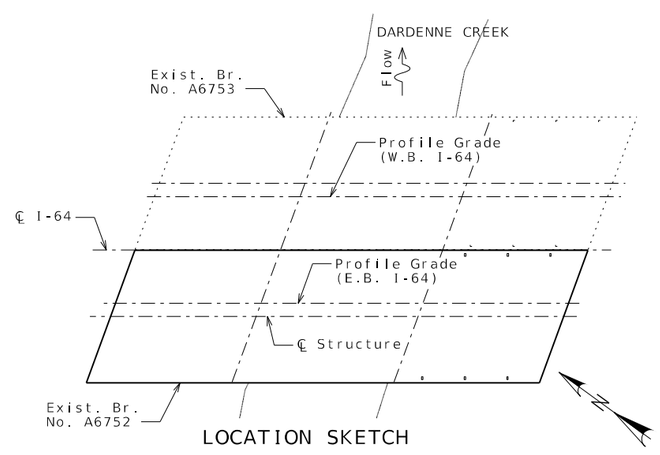

LOCATION SKETCH

Estimated Quantities		
Item		Total
Drainage System (On Structure)	lump sum	1

REPAIR TO BRIDGE: RTE. I-64 EB OVER DARDENNE CREEK

RTE. I-64 FROM ROUTE DD TO ROUTE K ABOUT 1.2 MILES EAST OF ROUTE DD STA. 371+55.82 (MATCH EXIST.)

Designed Dec. 2024
Detailed Feb. 2025
Checked Feb. 2025

Note: This drawing is not to scale. Follow dimensions.

STATE OF MISSOURI DAVID BURDICK NUMBER E-24015 PROFESSIONAL ENGINEER
THIS SHEET HAS BEEN SIGNED, SEALED AND DATED ELECTRONICALLY

DATE PREPARED 3/3/2025
ROUTE I-64 | STATE MO
DISTRICT BR | SHEET NO. 1
COUNTY ST. CHARLES
JOB NO. JSL0112
CONTRACT ID.
PROJECT NO.
BRIDGE NO. A67522

DESCRIPTION | DATE

MISSOURI HIGHWAYS AND TRANSPORTATION COMMISSION
105 WEST CAPITOL
JEFFERSON CITY, MO 65102
1-888-ASK-MODOT (1-888-275-6636)

CDG ENGINEERS
One Campbell Plaza
St. Louis, Missouri 63139
T. 314 781 7770
F. 314 781 9075
Missouri State Certificate of Authority #1721

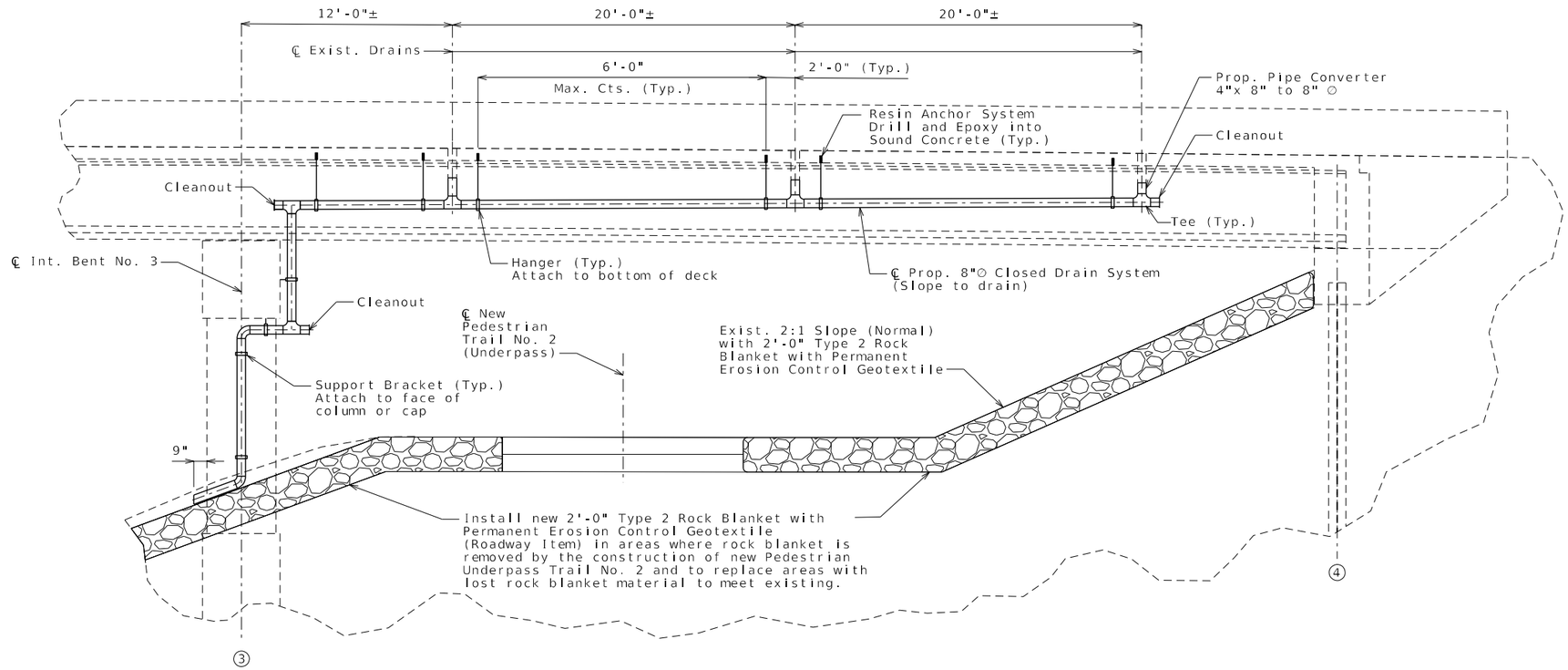

SOUTHWEST ELEVATION (SPAN 3-4)

(Southeast Elevation similar)

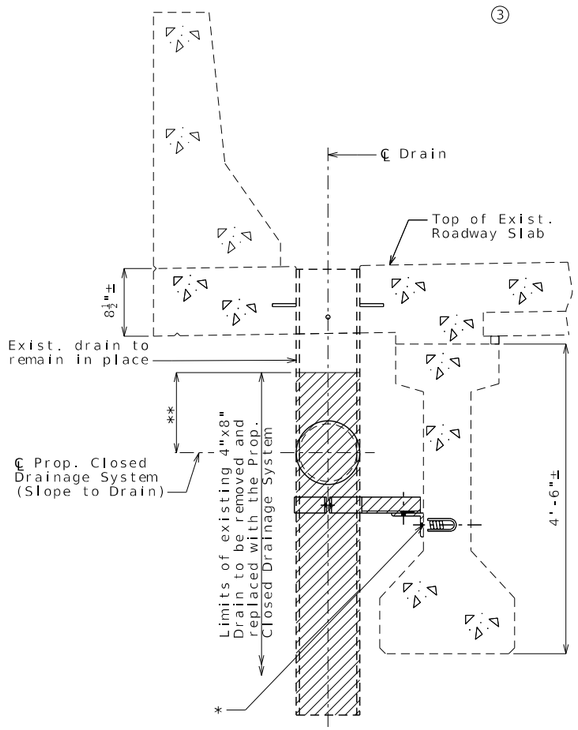

PART SECTION NEAR DRAIN

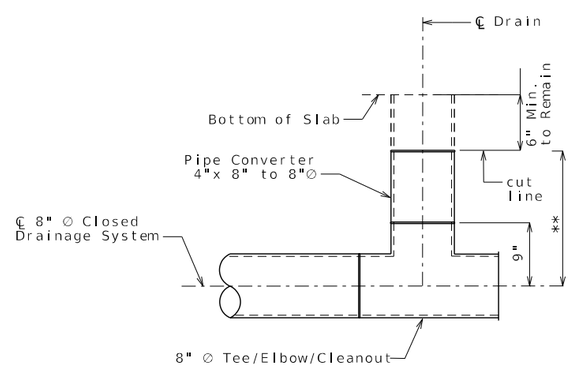

PART SECTION NEAR CLEANOUT

* After removal of bracket assembly fill coil insert with a non shrink grout. Area exposed by the removal of the bracket assembly shall be coated with an approved qualified special mortar in accorance with Sec 704.

** Minimum needed to fit pipe converter plus tee/elbow/cleanout.

Detailed Feb. 2025
Checked Feb. 2025

Note: This drawing is not to scale. Follow dimensions.

STATE OF MISSOURI
DAVID BURDICK
NUMBER E-24015
REGISTERED PROFESSIONAL ENGINEER
THIS SHEET HAS BEEN SIGNED, SEALED AND DATED ELECTRONICALLY

DATE PREPARED	3/4/2025
ROUTE	I-64
STATE	MO
DISTRICT	BR
SHEET NO.	2
COUNTY	ST. CHARLES
JOB NO.	JSL0112
CONTRACT ID.	
PROJECT NO.	
BRIDGE NO.	A67522

DATE	DESCRIPTION

MISSOURI HIGHWAYS AND TRANSPORTATION COMMISSION

105 WEST CAPITOL
JEFFERSON CITY, MO 65102
1-888-ASK-MODOT (1-888-275-6636)

CDG ENGINEERS
One Campbell Plaza
St. Louis, Missouri 63139
T. 314 781 7770
F. 314 781 9075
Missouri State Certificate of Authority # 1721

B_A67522_002_JSL0112_Closed Drain System.dgn 8:06:18 AM 3/4/2025

SEC/SUR 1641 TWP 46N RGE 2E

U.I.P. AND REPAIR EXISTING (67'-76'-67') PRESTRESSED CONCRETE I-GIRDER SPANS (SKEW: 20° R.A.)

General Notes:

Slab Drainage System:

For the approximate locations of drain modifications (2 places), see Plan of Slab Drain.

Modification as shown in Part Section Near Drain on Sheet No. 2.

Pipe hangers, support brackets, pipe converters and drain pipes shall be in accordance with the job special provisions for Drainage System.

Payment for all labor, equipment, materials and any other incidental work necessary to complete the installation at both locations will be considered completely covered by the contract lump sum price for Drainage System (On Structure).

Outline of old work is indicated by light dashed lines. Heavy lines indicate new work.

Contractor shall verify all dimensions in the field before ordering new material.

After removal of bracket assembly fill coil insert with a non shrink grout. Area exposed by the removal of the bracket assembly shall be coated with an approved qualified special mortar in accordance with Sec 704.

The limits of existing 4"x8" drain to be removed shall be the minimum needed for the incorporation of a closed drainage system and to ensure the 8"⌀ horizontal pipe is above the bottom of the P/S Concrete I-Girders and is sloped to drain (1% min.).

Resin Anchor System:

The contractor shall use one of the qualified resin anchor systems in accordance with Sec 1039.

Cost of furnishing and installing the resin anchor system, complete in place, will be completely covered by the contract unit price for Drainage System (On Structure A6752).

The minimum embedment depth in concrete with f'c = 4000 psi for the resin anchor system shall be that required to meet the minimum ultimate pullout strengh in accordance with Sec. 1039 but shall not be less than 5".

Resin anchors used with hangers or support brackets for the closed drainage system shall be installed in bottom of deck, bent cap, or column. Drilling into the prestresssed girders is not allowed.

Traffic Handling:

Maintain traffic on structure during construction.

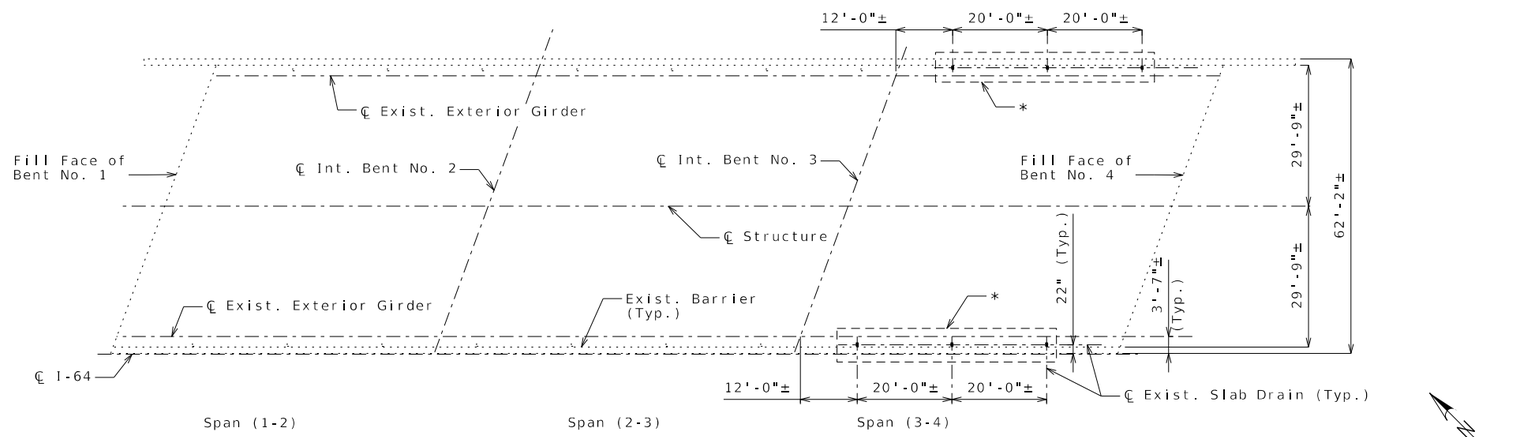

* See Sheet No. 2 for Drainage System Details

PLAN OF SLAB SHOWING DRAIN LOCATIONS

Note: Longitudinal dimensions are horizontal along ℄ exterior girder.

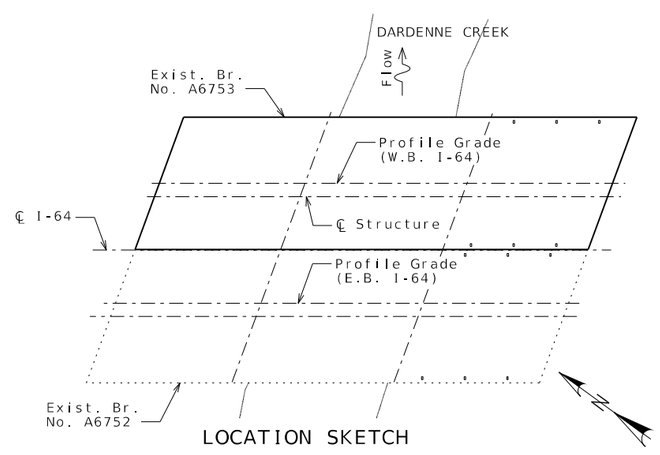

LOCATION SKETCH

Estimated Quantities		
Item		Total
Drainage System (On Structure)	lump sum	1

REPAIR TO BRIDGE: RTE. I-64 WB OVER DARDENNE CREEK

RTE. I-64 FROM ROUTE DD TO ROUTE K ABOUT 1.2 MILES EAST OF ROUTE DD STA. 370+74.02 (MATCH EXIST.)

Designed Dec. 2024
Detailed Feb. 2025
Checked Feb. 2025

Note: This drawing is not to scale. Follow dimensions.

STATE OF MISSOURI DAVID BURDICK NUMBER E-24015 REGISTERED PROFESSIONAL ENGINEER
THIS SHEET HAS BEEN SIGNED, SEALED AND DATED ELECTRONICALLY

DATE PREPARED	
3/3/2025	
ROUTE	STATE
I-64	MO
DISTRICT	SHEET NO.
BR	1
COUNTY	
ST. CHARLES	
JOB NO.	
JSL0112	
CONTRACT ID.	
PROJECT NO.	
BRIDGE NO.	
A67532	

DESCRIPTION | DATE

MISSOURI HIGHWAYS AND TRANSPORTATION COMMISSION
105 WEST CAPITOL
JEFFERSON CITY, MO 65102
1-888-ASK-MODOT (1-888-275-6636)

CDG ENGINEERS
One Campbell Plaza
St. Louis, Missouri 63139
T. 314 781 7770
F. 314 781 9075
Missouri State Certificate of Authority #1721

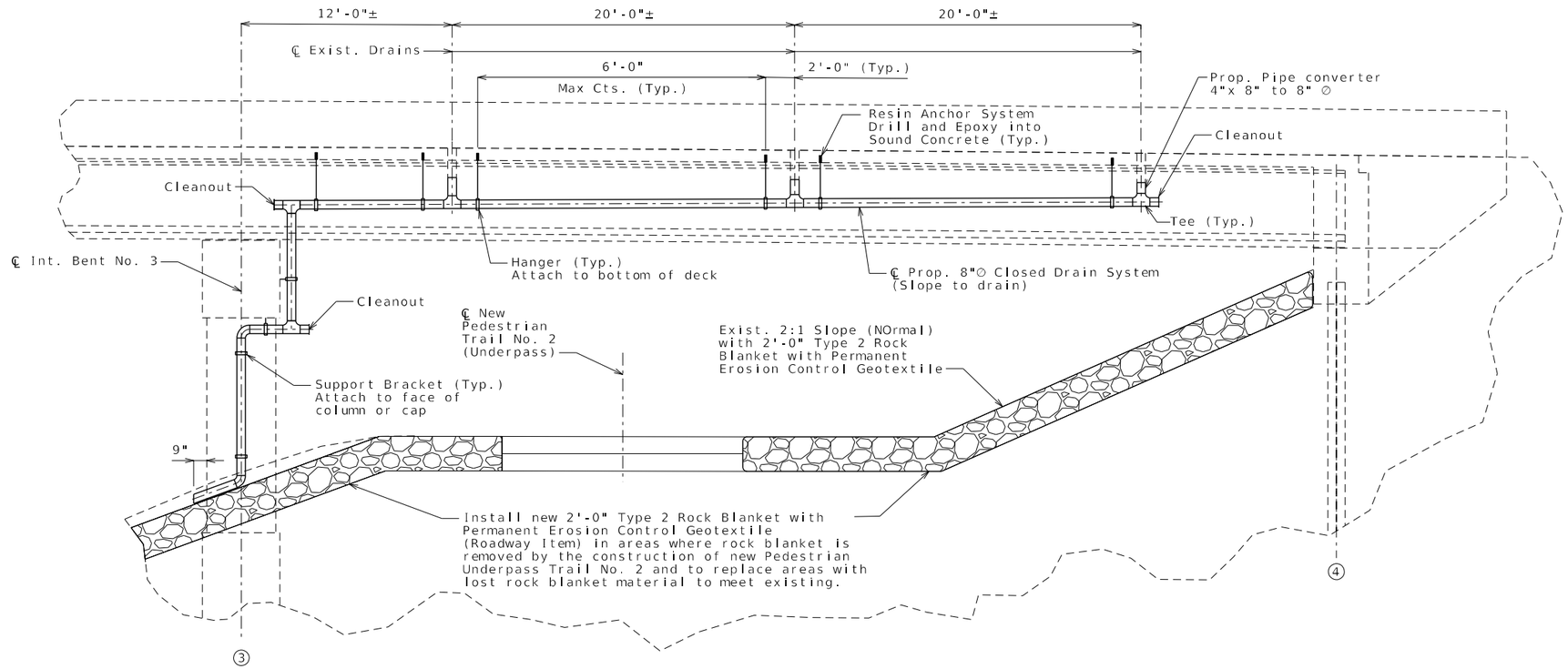

SOUTHWEST ELEVATION (SPAN 3-4)

(Southeast Elevation similar)

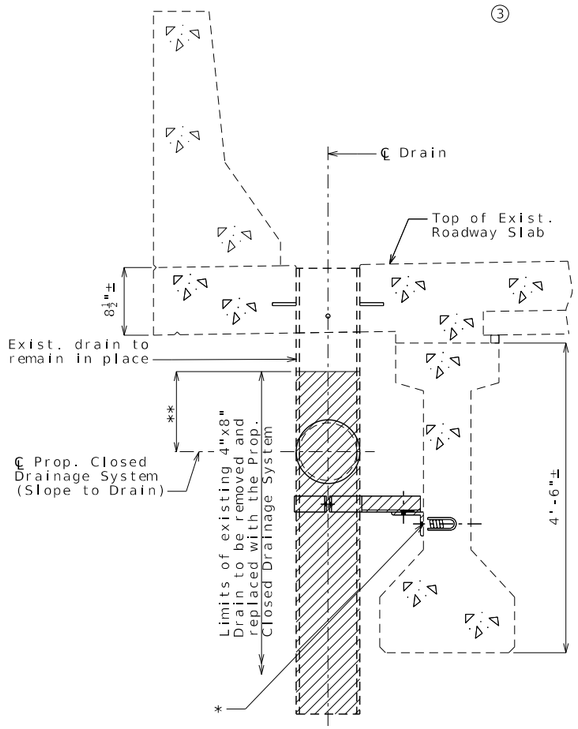

PART SECTION NEAR DRAIN

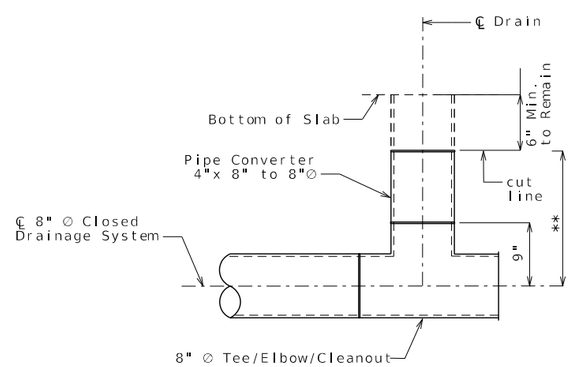

PART SECTION NEAR CLEANOUT

* After removal of bracket assembly fill coil insert with a non shrink grout. Area exposed by the removal of the bracket assembly shall be coated with an approved qualified special mortar in accorance with Sec 704.

** Minimum needed to fit pipe converter plus tee/elbow/cleanout.

Detailed Feb. 2025
Checked Feb. 2025

Note: This drawing is not to scale. Follow dimensions.

Sheet No. 2 of 2

STATE OF MISSOURI
DAVID BURDICK
NUMBER E-24015
REGISTERED PROFESSIONAL ENGINEER
THIS SHEET HAS BEEN SIGNED, SEALED AND DATED ELECTRONICALLY

DATE PREPARED	3/4/2025
ROUTE	I-64
STATE	MO
DISTRICT	BR
SHEET NO.	2
COUNTY	ST. CHARLES
JOB NO.	JSL0112
CONTRACT ID.	
PROJECT NO.	
BRIDGE NO.	A67532

DATE	DESCRIPTION

MISSOURI HIGHWAYS AND TRANSPORTATION COMMISSION
105 WEST CAPITOL
JEFFERSON CITY, MO 65102
1-888-ASK-MODOT (1-888-275-6636)

CDG ENGINEERS
One Campbell Plaza
St. Louis, Missouri 63139
T. 314 781 7770
F. 314 781 9075
Missouri State Certificate of Authority # 1721

B_A67532_002_JSL0112_Closed Drain System.dgn 8:42:55 AM 3/4/2025