MISSOURI HIGHWAYS AND TRANSPORTATION COMMISSION

PLANS FOR PROPOSED STATE HIGHWAY MACON COUNTY

T57N R14W S18,17,16,15,14,13
T57N R15W S13.12,11,10,9

KEY MAP
LOCATION OF MACON COUNTY

DESIGN DESIGNATION

W/O LONG BRANCH LAKE RD.

A.A.D.T. - 2024 = 11,483
A.A.D.T. - 2044 = 16,040
D.H.V. = 48.5%/51.5%
T = 27.45%
V = 65 M.P.H.
D = 7.56%

E/O LONG BRANCH LAKE RD.

A.A.D.T. - 2024 = 10,703
A.A.D.T. - 2044 = 18,217
D.H.V. = 49.5%/505%
T = 39.65%
V = 65 M.P.H.
D = 7.45%

FUNCTIONAL CLASSIFICATION- PRINCIPAL ARTERIAL

CONVENTIONAL SYMBOLS

(USED IN PLANS)

	EXISTING	NEW
BUILDINGS AND STRUCTURES		
GUARD RAIL		
GUARD CABLE		
CONCRETE RIGHT-OF-WAY MARKER		
STEEL RIGHT-OF-WAY MARKER		
LOCATION SURVEY MARKER		
UTILITIES		
FIBER OPTICS	—FO—	—FO—
OVERHEAD CABLE TV	—OTV—	—OTV—
UNDERGROUND CABLE TV	—UTV—	—UTV—
OVERHEAD TELEPHONE	—OT—	—OT—
UNDERGROUND TELEPHONE	—UT—	—UT—
OVERHEAD POWER	—OE—	—OE—
UNDERGROUND POWER	—UE—	—UE—
SANITARY SEWER	—S—	—S—
STORM SEWER	—SS—	—SS—
GAS	—G—	—G—
WATER	—W—	—W—
MANHOLE	SAN	
FIRE HYDRANT	HYD	
WATER VALVE	WV	
WATER METER	WM	
DROP INLET		
DITCH BLOCK		
GROUND MOUNTED SIGN	SIGN	
LIGHT POLE		
H-FRAME POWER POLE		
TELEPHONE PEDESTAL	PED	
FENCE		
CHAIN LINK	—V—	
WOVEN WIRE	—X—	
GATE POST		
BENCHMARK	BM	

NOTE: DASHED OR OPEN SYMBOLS INDICATE EXISTING FEATURES

WBL RTE 36 (7.923 MILES)
3/4" MILL WITH 2" SP125C 76-22 OVERLAY AND GUARDRAIL

L.M. 69.560 END PROJECT
L.M. 61.637 BEGIN PROJECT
(0.998 MILES)
6" MILL WITH 6" SP125C 76-22 MILL & FILL
L.M. 63.341
L.M. 62.343
BRIDGE A5513 EXEPTION
BRIDGE A3820 RESURFACING EXEPTION
BRIDGE A2041 RESURFACING EXEPTION

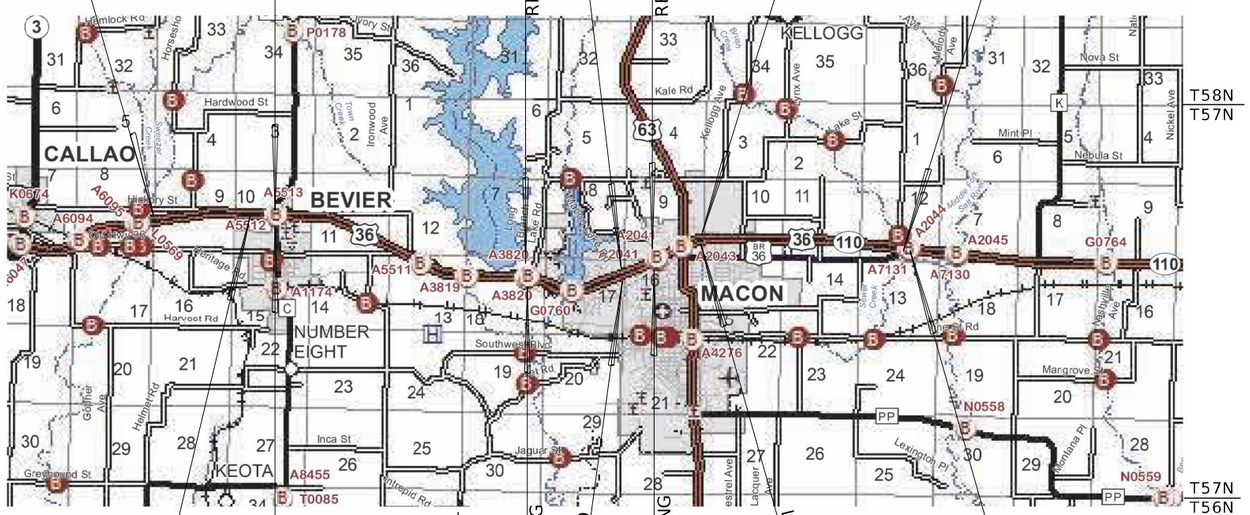

BEGIN PROJECT L.M. 124.260
BRIDGE A5512 EXEPTION
BRIDGE A3820 RESURFACING EXEPTION
L.M. 129.319
BRIDGE A2041 RESURFACING EXEPTION
L.M. 130.300
(0.981 MILES)
6" MILL WITH 6" SP125C 76-22 MILL & FILL
END PROJECT L.M. 131.100
EBL RTE 36 (6.840 MILES)
3/4" MILL WITH 2" SP125C 76-22 OVERLAY AND GUARDRAIL

THE EXISTENCE AND APPROXIMATE LOCATION OF UTILITY FACILITIES KNOWN TO EXIST, AS SHOWN ON THE PLANS, ARE BASED ON THE BEST INFORMATION AVAILABLE TO THE COMMISSION AT THIS TIME. THIS INFORMATION IS PROVIDED BY THE COMMISSION "AS-IS" AND THE COMMISSION EXPRESSLY DISCLAIMS ANY REPRESENTATION OR WARRANTY AS TO THE COMPLETENESS, ACCURACY, OR SUITABILITY OF THE INFORMATION FOR ANY USE. RELIANCE UPON THIS INFORMATION IS DONE AT THE RISK AND PERIL OF THE USER, AND THE COMMISSION SHALL NOT BE LIABLE FOR ANY DAMAGES THAT MAY ARISE FROM ANY ERROR IN THE INFORMATION. IT IS, THEREFORE, THE RESPONSIBILITY OF THE CONTRACTOR TO VERIFY THE EXISTENCE, LOCATION AND STATUS OF ANY FACILITY. SUCH VERIFICATION INCLUDES DIRECT CONTACT WITH THE LISTED UTILITIES.

INDEX OF SHEETS

LENGTH OF PROJECT

EBL RTE 36

BEGINNING OF PROJECT	L.M. 124.260
END OF PROJECT	L.M. 131.100
APPARENT LENGTH	6.840 MILES
EQUATIONS AND EXCEPTIONS:	
BRIDGE A5512	0.047 MILES

WBL RTE 36

BEGINNING OF PROJECT	L.M. 61.637
END OF PROJECT	L.M. 69.560
APPARENT LENGTH	7.923 MILES
EQUATIONS AND EXCEPTIONS:	
BRIDGE A5513	0.054 MILES

TOTAL CORRECTIONS	0.101 MILES
NET LENGTH OF PROJECT	14.662 MILES
STATE LENGTH	14.662 MILES
FOR INFORMATION ONLY ESTIMATED DISTURBED ACRES	1 ACRE

STATE OF MISSOURI
KEITH ALLEN KILLEN
NUMBER PE-2007020292
PROFESSIONAL ENGINEER
06/17/2025 1:26:52 PM
KEITH ALLEN KILLEN - CIVIL
MO-PE-2007020292

DATE PREPARED	
6/16/2025	
ROUTE 36	STATE MO
DISTRICT NE	SHEET NO. 1
COUNTY MACON	
JOB NO. JNE0120	
CONTRACT ID.	
PROJECT NO.	
BRIDGE NO.	

DATE	DESCRIPTION

MISSOURI HIGHWAYS AND TRANSPORTATION COMMISSION
105 WEST CAPITOL
JEFFERSON CITY, MO 65102
1-888-ASK-MODOT (1-888-275-6636)

TITLESHEET

ASPHALTIC CONCRETE MIXTURE PG76-22 (SP125C)	1.927 TON/YD³
BITUMINOUS PAVEMENT MIXTURE PG58-28H (BP-1)	1.948 TON/YD³
TACK COAT	.08 GAL/YD²
TACK COAT (COLDMILLED AREAS)	.10 GAL/YD²

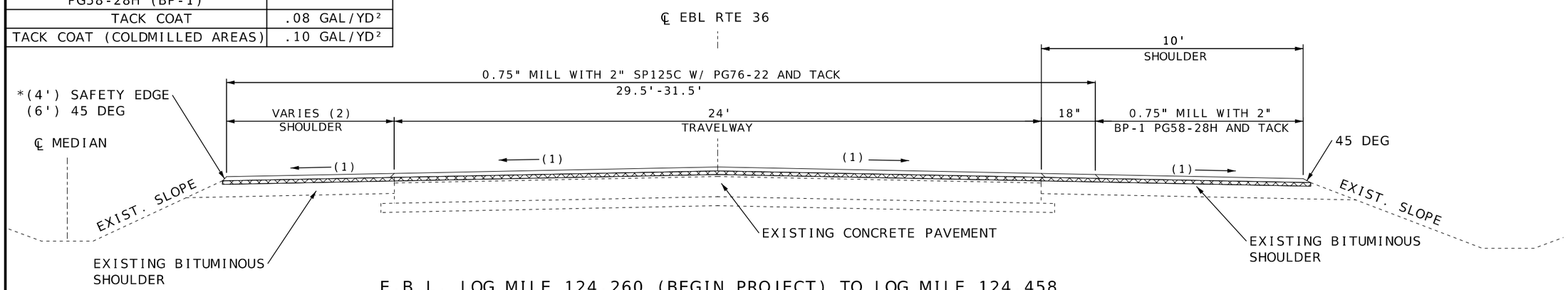

E.B.L. LOG MILE 124.260 (BEGIN PROJECT) TO LOG MILE 124.458
E.B.L. LOG MILE 124.628 TO LOG MILE 124.739 **
E.B.L. LOG MILE 124.786 TO LOG MILE 124.979
E.B.L. LOG MILE 125.159 TO LOG MILE 125.558
* E.B.L. LOG MILE 125.558 TO LOG MILE 126.660
* E.B.L. LOG MILE 126.780 TO LOG MILE 127.767
* E.B.L. LOG MILE 127.908 TO LOG MILE 128.095 **
* E.B.L. LOG MILE 128.135 TO LOG MILE 128.280
* E.B.L. LOG MILE 128.455 TO LOG MILE 129.319
* E.B.L. LOG MILE 130.300 TO LOG MILE 130.324
* E.B.L. LOG MILE 130.487 TO LOG MILE 130.886

** E.B.L. LOG MILE 124.739 TO 124.786 (BRIDGE A5515 EXCEPTION)
** E.B.L. LOG MILE 128.095 TO 128.135 (BRIDGE A3820 EXCEPTION)

NOTE:
(1) 2% CROSS-SLOPE, SEE DETAIL C SHEET 4 OF 10
(2) SHOULDER WIDTHS
*4' SHOULDER, SEE DETAIL B SHEET 4 OF 10
6' SHOULDER

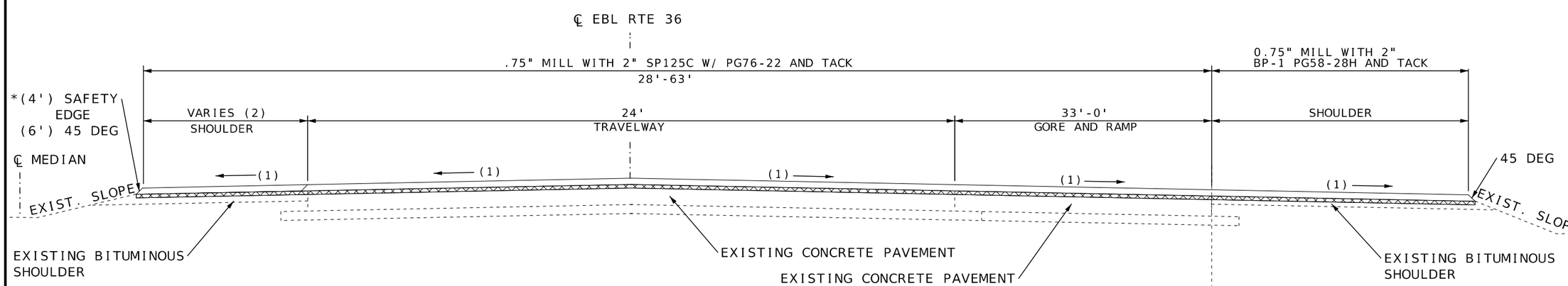

E.B.L. LOG MILE 124.458 TO LOG MILE 124.628 (RTE. C/O DECEL LANE)
E.B.L. LOG MILE 124.979 TO LOG MILE 125.159 (RTE. C/O ACCEL LANE)
* E.B.L. LOG MILE 127.767 TO LOG MILE 127.908 (LONG BRANCH DECEL LANE)
* E.B.L. LOG MILE 128.280 TO LOG MILE 128.455 (LONG BRANCH ACCEL LANE)
* E.B.L. LOG MILE 130.324 TO LOG MILE 130.487 (RTE 63 ACCEL LANE)

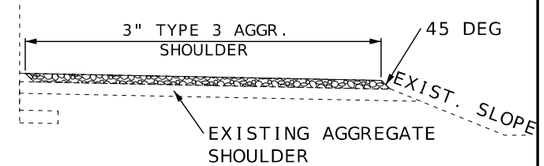

(3) * E.B.L. LOG MILE 130.324 TO LOG MILE 130.478

STATE OF MISSOURI
KEITH ALLEN KILLEN
NUMBER PE-2007020292
PROFESSIONAL ENGINEER
06/17/2025 1:28:15 PM
KEITH ALLEN KILLEN - CIVIL
MO-PE-2007020292

DATE PREPARED	6/17/2025
ROUTE	36
STATE	MO
DISTRICT	NE
SHEET NO.	2
COUNTY	MACON
JOB NO.	JNE0120
CONTRACT ID.	
PROJECT NO.	
BRIDGE NO.	

DESCRIPTION
DATE

MISSOURI HIGHWAYS AND TRANSPORTATION COMMISSION
105 WEST CAPITOL
JEFFERSON CITY, MO 65102
1-888-ASK-MODOT (1-888-275-6636)

TYPICAL SECTION SHEET
EBL RTE 36
SHEET 1 OF 10

NOTE:
(1) 2% CROSS-SLOPE, SEE DETAIL C
SHEET 4 OF 10

ASPHALTIC CONCRETE MIXTURE PG76-22 (SP125C)	1.927 TON/YD³
BITUMINOUS PAVEMENT MIXTURE PG58-28H (BP-1)	1.948 TON/YD³
TACK COAT	.08 GAL/YD²
TACK COAT (COLDMILLED AREAS)	.10 GAL/YD²

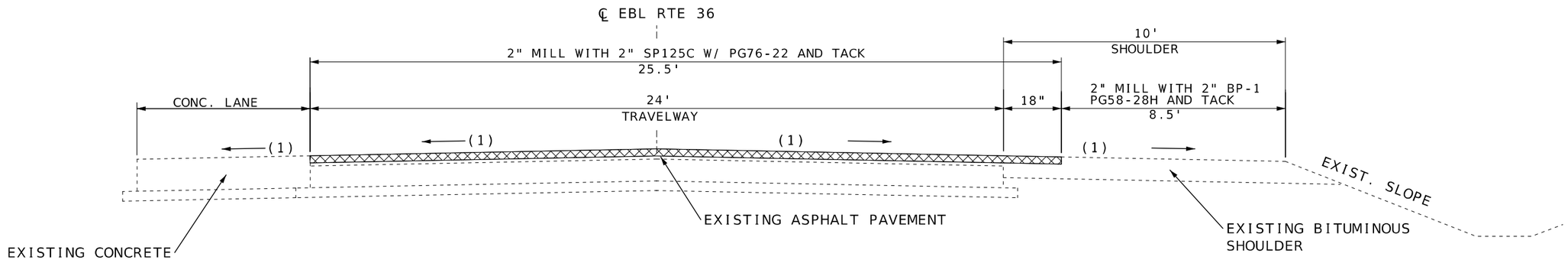

E.B.L. LOG MILE 130.886 TO LOG MILE 130.998

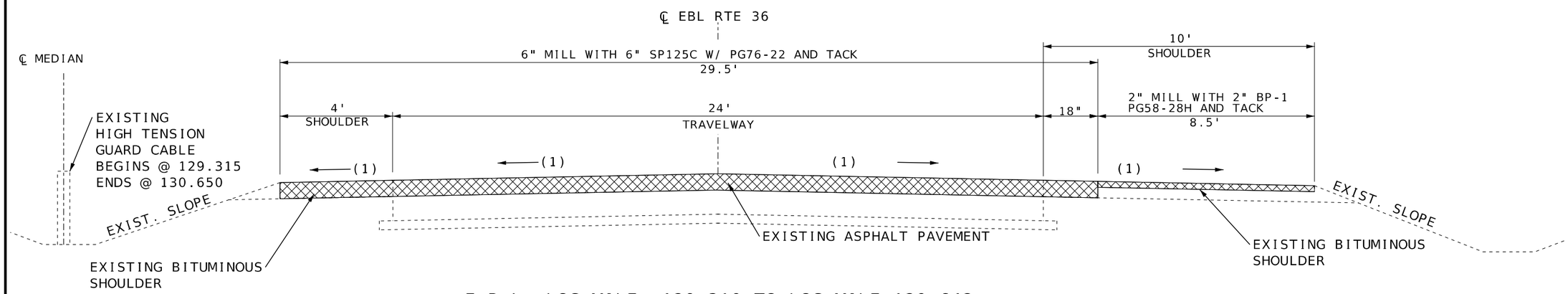

E.B.L. LOG MILE 129.319 TO LOG MILE 129.642

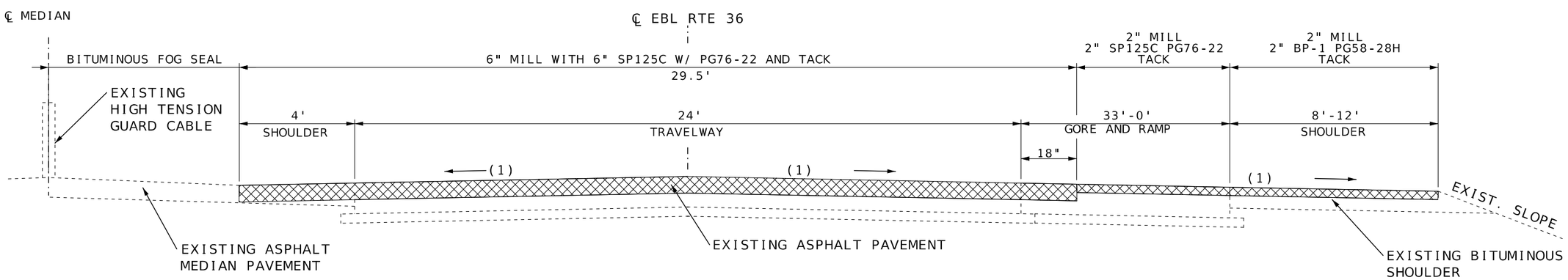

E.B.L. LOG MILE 129.980 TO LOG MILE 130.070

STATE OF MISSOURI
KEITH ALLEN KILLEN
NUMBER
PE-2007020292
PROFESSIONAL ENGINEER
06/17/2025 1:28:36 PM
KEITH ALLEN KILLEN - CIVIL
MO-PE-2007020292

DATE PREPARED: 6/17/2025
ROUTE: 36
STATE: MO
DISTRICT: NE
SHEET NO.: 2
COUNTY: MACON
JOB NO.: JNE0120
CONTRACT ID.
PROJECT NO.
BRIDGE NO.

DATE	DESCRIPTION

MISSOURI HIGHWAYS AND TRANSPORTATION COMMISSION
105 WEST CAPITOL
JEFFERSON CITY, MO 65102
1-888-ASK-MODOT (1-888-275-6636)

TYPICAL SECTION SHEET
EBL RTE 36
SHEET 2 OF 10

NOTE:
(1) 2% CROSS-SLOPE, SEE DETAIL C
SHEET 4 OF 10

ASPHALTIC CONCRETE MIXTURE PG76-22 (SP125C)	1.927 TON/YD³
BITUMINOUS PAVEMENT MIXTURE PG58-28H (BP-1)	1.948 TON/YD³
TACK COAT	.08 GAL/YD²
TACK COAT (COLDMILLED AREAS)	.10 GAL/YD²

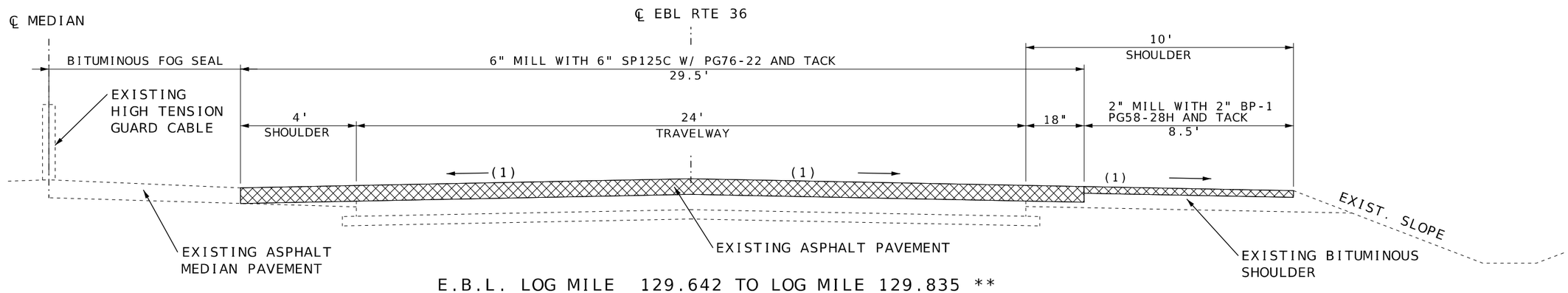

E.B.L. LOG MILE 129.642 TO LOG MILE 129.835 **
E.B.L. LOG MILE 129.855 TO LOG MILE 129.980
E.B.L. LOG MILE 130.070 TO LOG MILE 130.300

** E.B.L. LOG MILE 129.835 TO 129.855 (BRIDGE A2041 EXCEPTION)

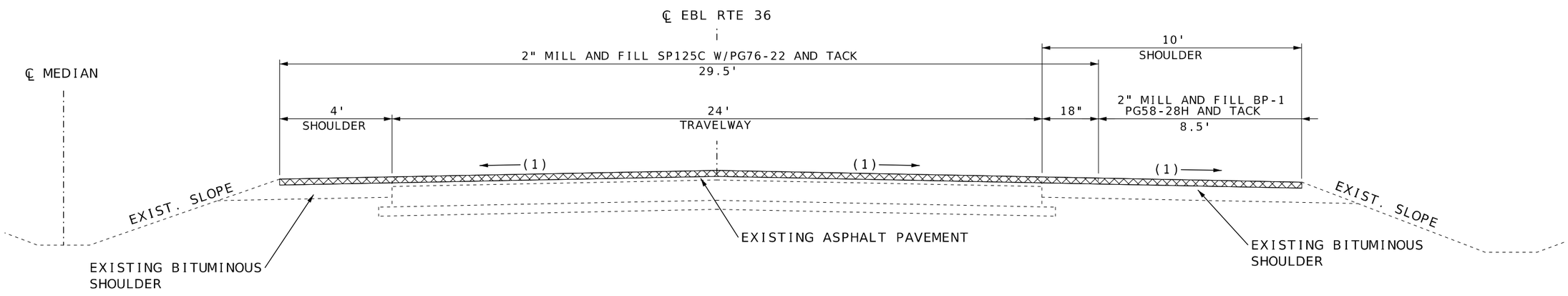

E.B.L. LOG MILE 126.660 TO LOG MILE 126.780
E.B.L. LOG MILE 130.998 TO LOG MILE 131.100 (END OF PROJECT)

STATE OF MISSOURI
KEITH ALLEN KILLEN
NUMBER
PE-2007020292
PROFESSIONAL ENGINEER
06/17/2025 1:29:00 PM
KEITH ALLEN KILLEN - CIVIL
MO-PE-2007020292

DATE PREPARED
6/17/2025

ROUTE	STATE
36	MO
DISTRICT	SHEET NO.
NE	2

COUNTY
MACON
JOB NO.
JNE0120
CONTRACT ID.
####
PROJECT NO.
####
BRIDGE NO.
####

DESCRIPTION	DATE

MISSOURI HIGHWAYS AND TRANSPORTATION COMMISSION
105 WEST CAPITOL
JEFFERSON CITY, MO 65102
1-888-ASK-MODOT (1-888-275-6636)

TYPICAL SECTION SHEET
EBL RTE 36
SHEET 3 OF 10

NOTE:

(1) GROOVING SHALL BE DONE BETWEEN EXISTING CENTERLINE AND EDGE LINE PAVEMENT MARKINGS, DO NOT DISTURB EX. PAVEMENT MARKINGS.

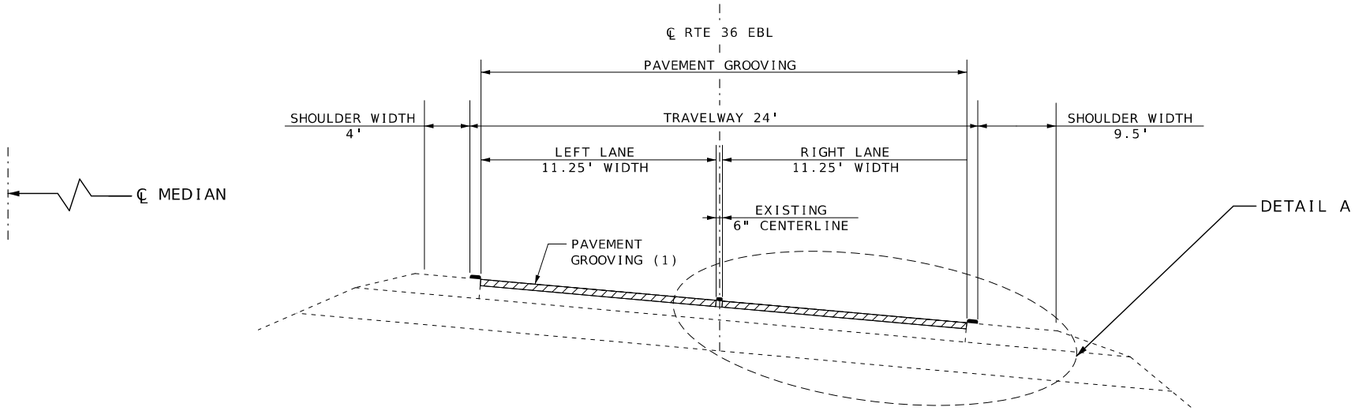

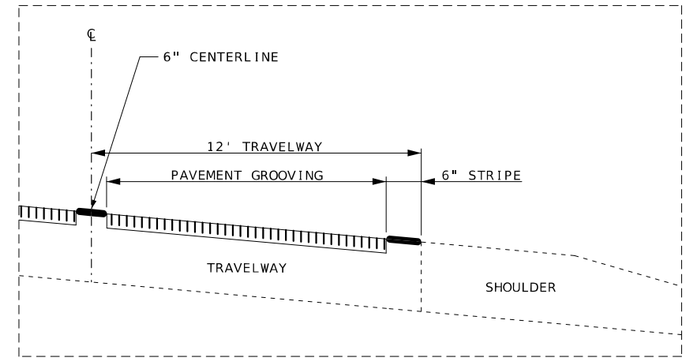

TYPICAL SECTION
PAVEMENT GROOVING
EBL 36

L.M. 128.450 TO L.M. 128.950 - 22.5' WIDTH - 6,600 SQYD

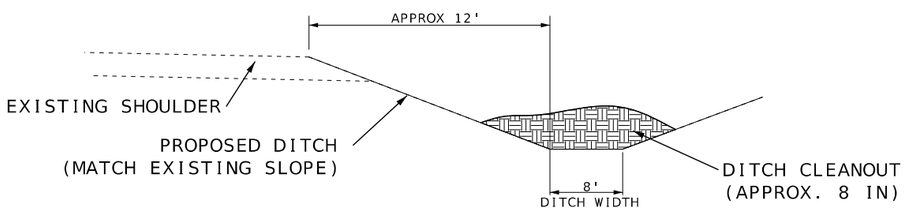

TYPICAL SECTION
LINEAR GRADING CLASS II

EBL 36 L.M. 129.939 TO L.M. 130.099
WBL 36 L.M. 62.503 TO L.M. 62.655

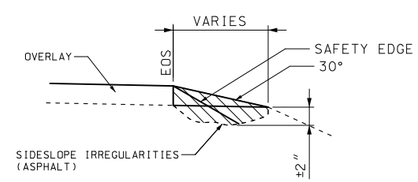

NOTE:

THE ASPHALT SAFETY EDGE/EDGE TREATMENT (ASPHALT) AS WELL AS THE SIDESLOPE IRREGULARITIES (ASPHALT) SHALL BE LAID MONOLITHICALLY WITH THE SURFACE LEVELING AND ONE PASS.

DETAIL B
SAFETY EDGE/SIDESLOPE IRREGULARTIES

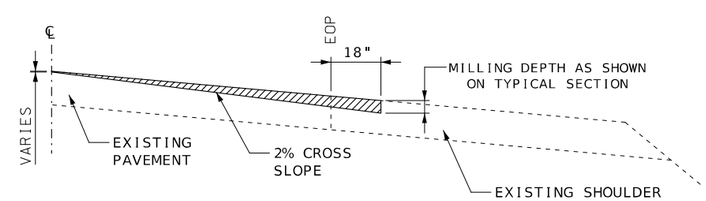

DETAIL C
TRAVELWAY COLDMILLING DETAIL

STATE OF MISSOURI
KEITH ALLEN KILLEN
NUMBER
PE-2007020292
PROFESSIONAL ENGINEER
06/17/2025 1:30:11 PM
KEITH ALLEN KILLEN - CIVIL
MO-PE-2007020292

DATE PREPARED	6/17/2025
ROUTE	36
STATE	MO
DISTRICT	NE
SHEET NO.	2
COUNTY	MACON
JOB NO.	JNE0120
CONTRACT ID.	
PROJECT NO.	
BRIDGE NO.	

DESCRIPTION

DATE

MISSOURI HIGHWAYS AND TRANSPORTATION COMMISSION

105 WEST CAPITOL
JEFFERSON CITY, MO 65102
1-888-ASK-MODOT (1-888-275-6636)

TYPICAL SECTION SHEET
EBL RTE 36
SHEET 4 OF 10

NOTE:
(1) 2% CROSS-SLOPE, SEE DETAIL C SHEET 4 OF 10

(2) SEE DETAIL B SHEET 4 OF 10

ASPHALTIC CONCRETE MIXTURE PG76-22 (SP125C)	1.927 TON/YD³
BITUMINOUS PAVEMENT MIXTURE PG58-28H (BP-1)	1.948 TON/YD³
TACK COAT	.08 GAL/YD²
TACK COAT (COLDMILLED AREAS)	.10 GAL/YD²
TYPE 1 AGGREGATE	0.058 TONS/SQ YD/IN

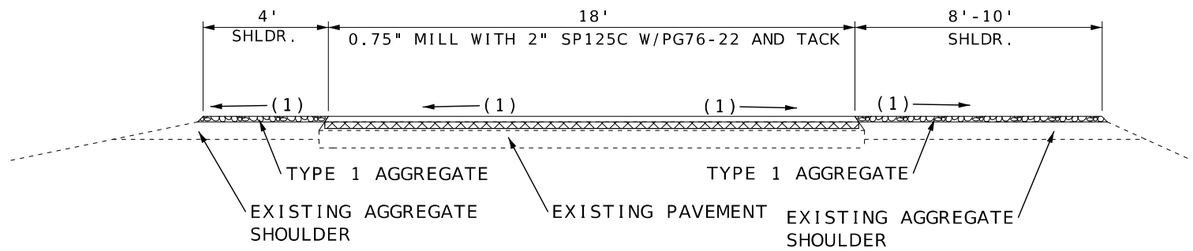

EBL RTE. C/O EXIT/ENTRANCE RAMP OVERLAY
EBL RTE. 63 ENTRANCE RAMP
WBL RTE. 63 EXIT RAMP
WBL LONG BRANCH LAKE RD ENTRANCE RAMP OVERLAY
TYPICAL

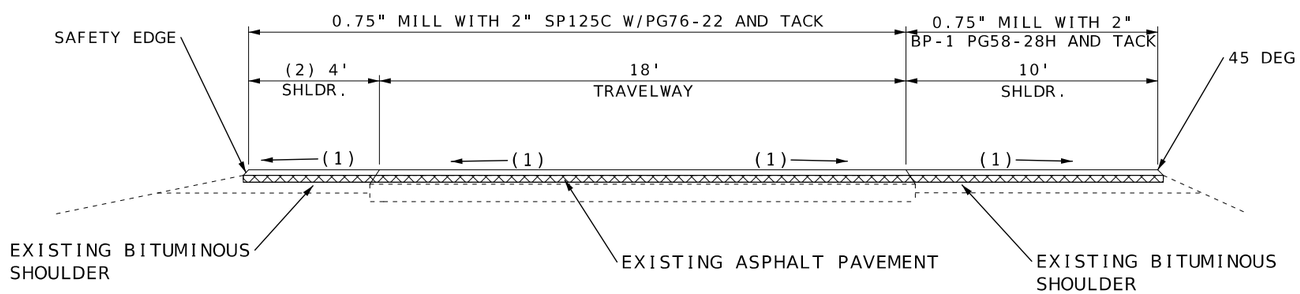

EBL LONG BRANCH LAKE RD EXIT/ENTRANCE RAMPS OVERLAY
TYPICAL

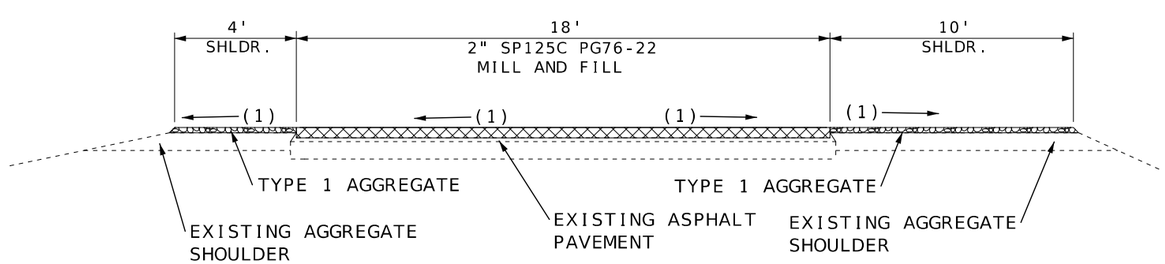

EBL RTE. 63 EXIT RAMP MILL AND FILL
WBL RTE. 63 ENTRANCE RAMP MILL AND FILL
WBL LONG BRANCH LAKE RD EXIT RAMP MILL AND FILL

STATE OF MISSOURI
KEITH ALLEN KILLEN
NUMBER PE-2007020292
PROFESSIONAL ENGINEER
06/17/2025 1:30:32 PM
KEITH ALLEN KILLEN - CIVIL
MO-PE-2007020292

DATE PREPARED
6/17/2025

ROUTE	STATE
36	MO
DISTRICT	SHEET NO.
NE	2

COUNTY
MACON

JOB NO.
JNE0120

CONTRACT ID.

PROJECT NO.

BRIDGE NO.

DATE	DESCRIPTION

MISSOURI HIGHWAYS AND TRANSPORTATION COMMISSION
105 WEST CAPITOL
JEFFERSON CITY, MO 65102
1-888-ASK-MODOT (1-888-275-6636)

TYPICAL SECTION SHEET
RTE 36 RAMPS
SHEET 5 OF 10

ASPHALTIC CONCRETE MIXTURE PG76-22 (SP125C)	1.927 TON/YD³
BITUMINOUS PAVEMENT MIXTURE PG58-28H (BP-1)	1.948 TON/YD³
TACK COAT	.08 GAL/YD²
TACK COAT (COLDMILLED AREAS)	.10 GAL/YD²

NOTE:
(1) 2% CROSS-SLOPE, SEE DETAIL C SHEET 4 OF 10

(2) SEE DETAIL B, SHEET 4 OF 10

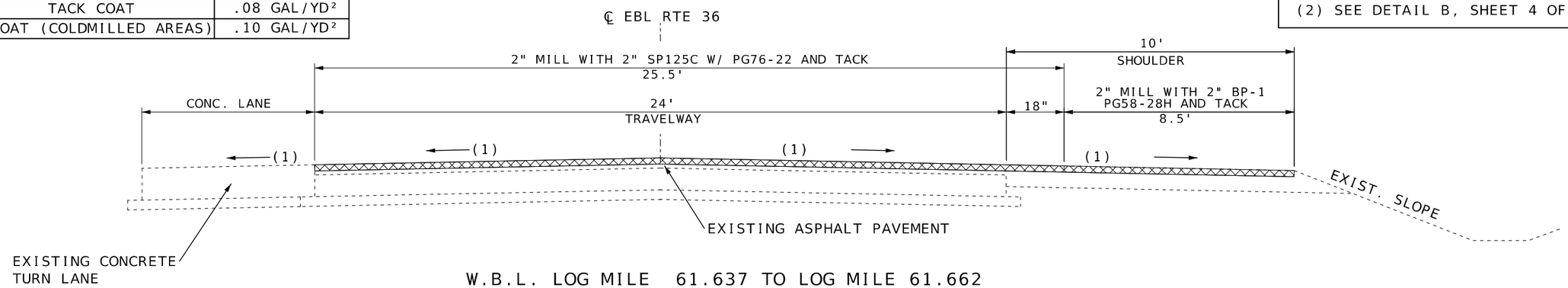

W.B.L. LOG MILE 61.637 TO LOG MILE 61.662

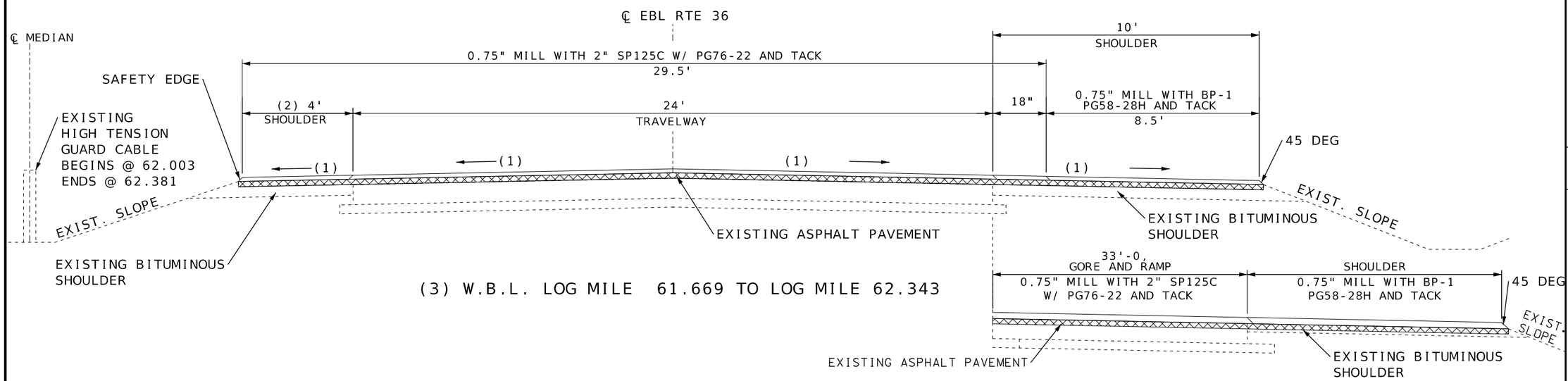

(3) W.B.L. LOG MILE 61.669 TO LOG MILE 62.343

(3) W.B.L. LOG MILE 62.202 TO LOG MILE 62.251

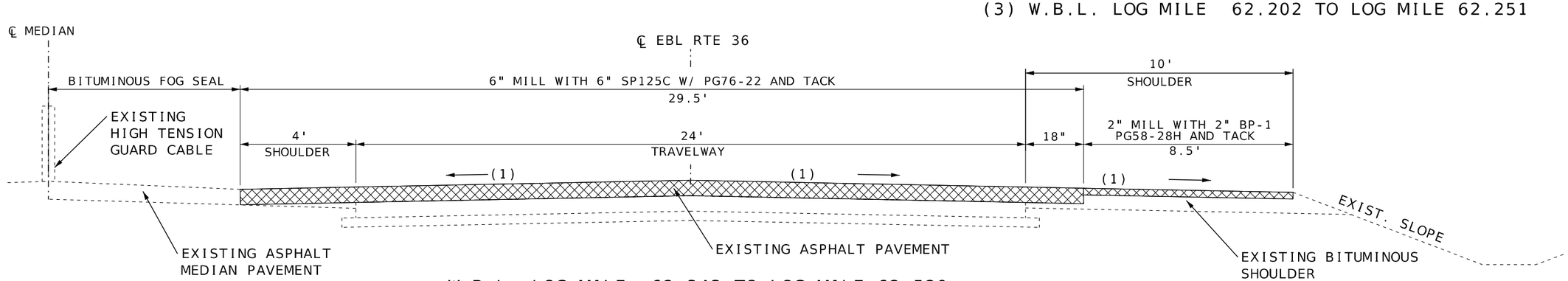

W.B.L. LOG MILE 62.343 TO LOG MILE 62.529
W.B.L. LOG MILE 62.663 TO LOG MILE 62.784 **
W.B.L. LOG MILE 62.808 TO LOG MILE 62.956

** W.B.L. LOG MILE 62.784 TO 62.808 (BRIDGE A2041 EXCEPTION)

STATE OF MISSOURI
KEITH ALLEN KILLEN
NUMBER
PE-2007020292
PROFESSIONAL ENGINEER
06/17/2025 1:31:07 PM
KEITH ALLEN KILLEN - CIVIL
MO-PE-2007020292

DATE PREPARED
6/17/2025

ROUTE	STATE
36	MO
DISTRICT	SHEET NO.
NE	2

COUNTY
MACON

JOB NO.
JNE0120

CONTRACT ID.

PROJECT NO.

BRIDGE NO.

DATE	DESCRIPTION

MISSOURI HIGHWAYS AND TRANSPORTATION COMMISSION
105 WEST CAPITOL
JEFFERSON CITY, MO 65102
1-888-ASK-MODOT (1-888-275-6636)

TYPICAL SECTION SHEET
WBL RTE 36
SHEET 6 OF 10

NOTE:
(1) 2% CROSS-SLOPE, SEE DETAIL C SHEET 4 OF 10

ASPHALTIC CONCRETE MIXTURE PG76-22 (SP125C)	1.927 TON/YD³
BITUMINOUS PAVEMENT MIXTURE PG58-28H (BP-1)	1.948 TON/YD³
TACK COAT	.08 GAL/YD²
TACK COAT (COLDMILLED AREAS)	.10 GAL/YD²

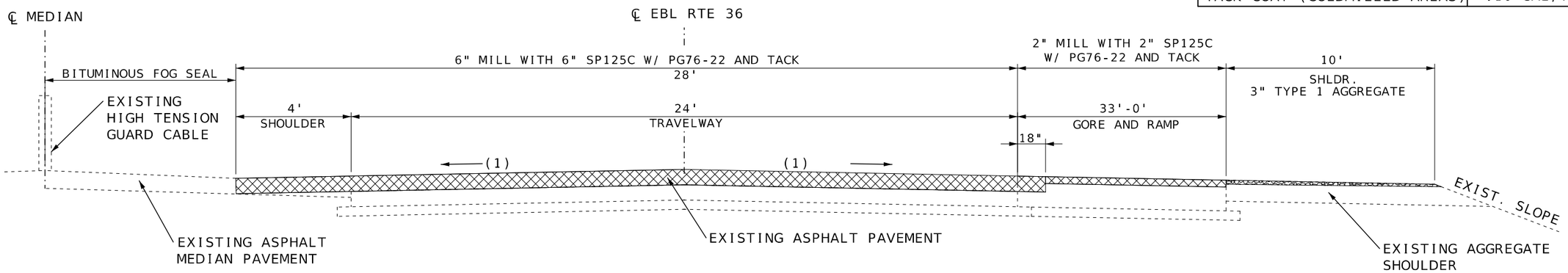

W.B.L. LOG MILE 62.529 TO LOG MILE 62.663

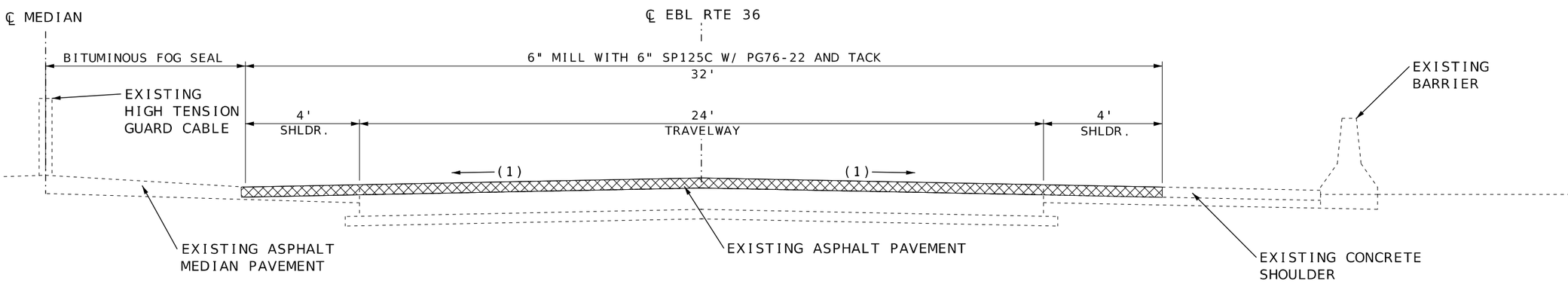

W.B.L. LOG MILE 62.956 TO LOG MILE 63.246

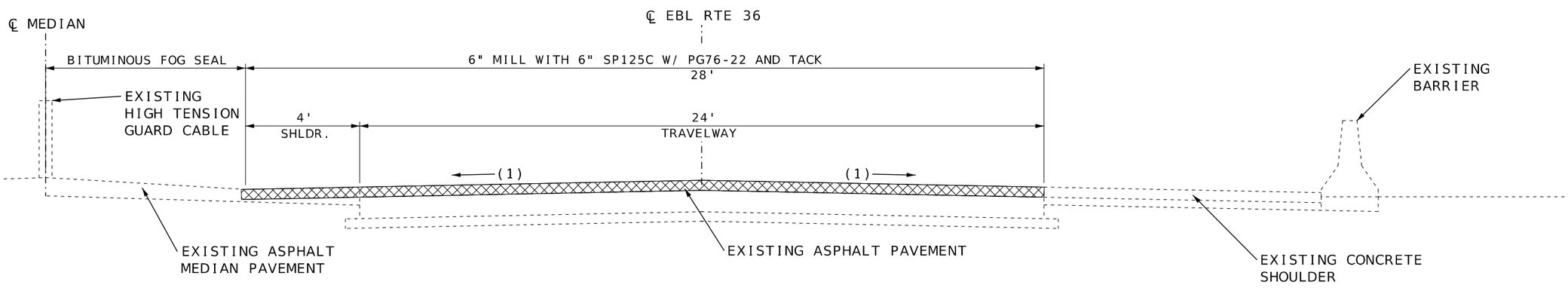

W.B.L. LOG MILE 63.246 TO LOG MILE 63.341

STATE OF MISSOURI
KEITH ALLEN KILLEN
NUMBER
PE-2007020292
PROFESSIONAL ENGINEER
06/17/2025 1:31:28 PM
KEITH ALLEN KILLEN - CIVIL
MO-PE-2007020292

DATE PREPARED	6/17/2025
ROUTE	36
STATE	MO
DISTRICT	NE
SHEET NO.	2
COUNTY	MACON
JOB NO.	JNE0120
CONTRACT ID.	####
PROJECT NO.	####
BRIDGE NO.	####

DESCRIPTION
DATE

MISSOURI HIGHWAYS AND TRANSPORTATION COMMISSION
105 WEST CAPITOL
JEFFERSON CITY, MO 65102
1-888-ASK-MODOT (1-888-275-6636)

TYPICAL SECTION SHEET
WBL RTE 36
SHEET 7 OF 10

NOTE:
(1) 2% CROSS-SLOPE, SEE DETAIL C
SHEET 4 OF 10

ASPHALTIC CONCRETE MIXTURE PG76-22 (SP125C)	1.927 TON/YD³
BITUMINOUS PAVEMENT MIXTURE PG58-28H (BP-1)	1.948 TON/YD³
TACK COAT	.08 GAL/YD²
TACK COAT (COLDMILLED AREAS)	.10 GAL/YD²

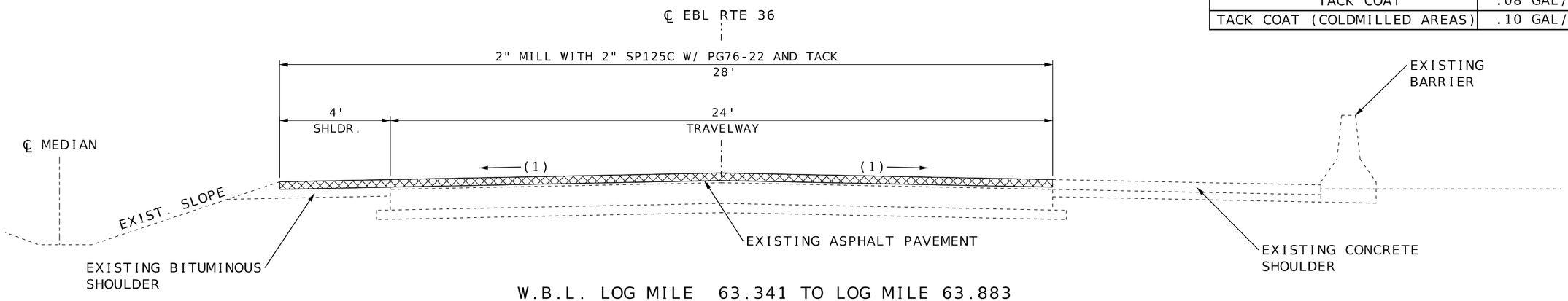

W.B.L. LOG MILE 63.341 TO LOG MILE 63.883

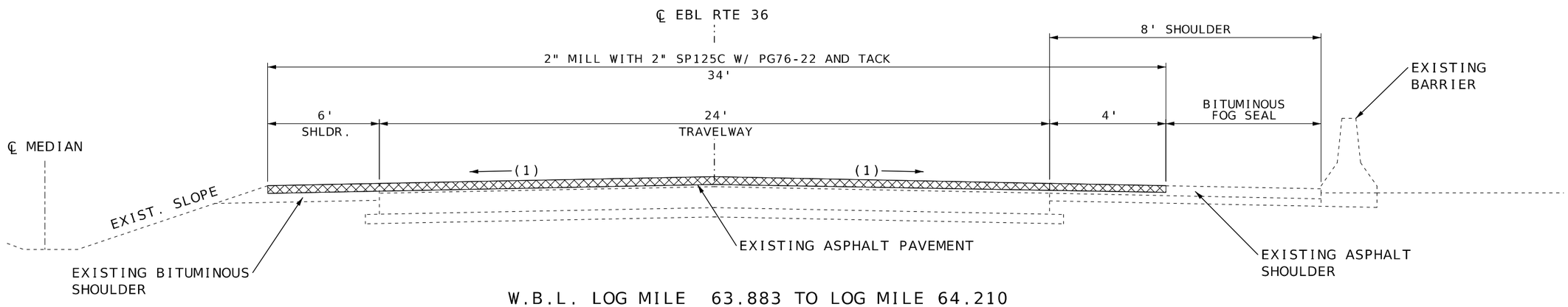

W.B.L. LOG MILE 63.883 TO LOG MILE 64.210

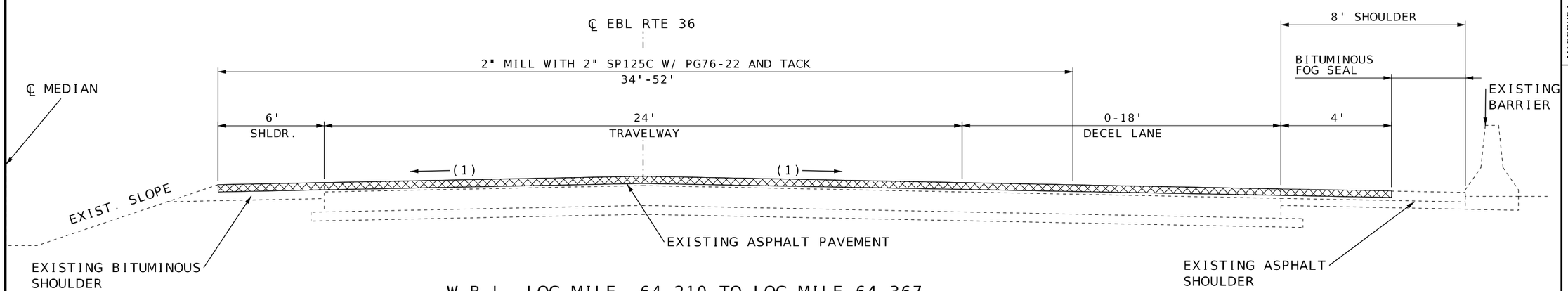

W.B.L. LOG MILE 64.210 TO LOG MILE 64.367

STATE OF MISSOURI
KEITH ALLEN KILLEN
NUMBER PE-2007020292
PROFESSIONAL ENGINEER
06/17/2025 1:32:16 PM
KEITH ALLEN KILLEN - CIVIL
MO-PE-2007020292

DATE PREPARED: 6/17/2025
ROUTE: 36 | STATE: MO
DISTRICT: NE | SHEET NO.: 2
COUNTY: MACON
JOB NO.: JNE0120
CONTRACT ID.: ####
PROJECT NO.: ####
BRIDGE NO.: ####

DATE	DESCRIPTION

MISSOURI HIGHWAYS AND TRANSPORTATION COMMISSION
105 WEST CAPITOL
JEFFERSON CITY, MO 65102
1-888-ASK-MODOT (1-888-275-6636)

TYPICAL SECTION SHEET
WBL RTE 36
SHEET 8 OF 10

ASPHALTIC CONCRETE MIXTURE PG76-22 (SP125C)	1.927 TON/YD³
BITUMINOUS PAVEMENT MIXTURE PG58-28H (BP-1)	1.948 TON/YD³
TACK COAT	.08 GAL/YD²
TACK COAT (COLDMILLED AREAS)	.10 GAL/YD²

NOTE:
(1) 2% CROSS-SLOPE, SEE DETAIL C SHEET 4 OF 10

(2) SHOULDER WIDTHS
*4' SHOULDER, SEE DETAIL B SHEET 4 OF 10
6' SHOULDER

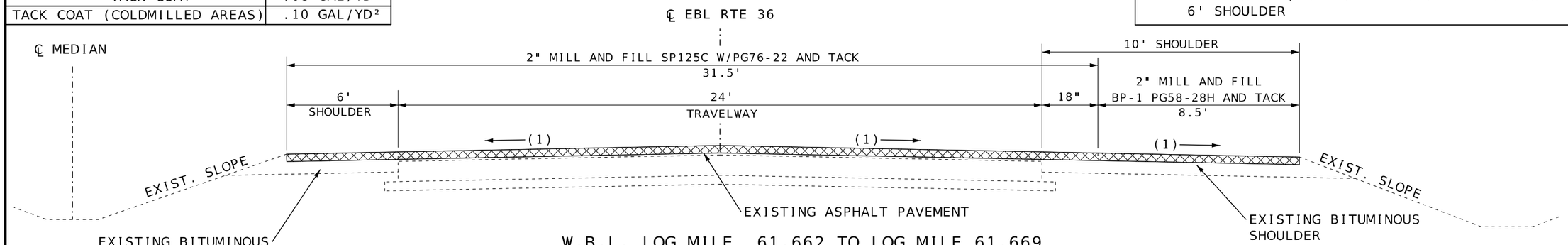

W.B.L. LOG MILE 61.662 TO LOG MILE 61.669
W.B.L. LOG MILE 64.367 TO LOG MILE 64.504 **
W.B.L. LOG MILE 65.863 TO LOG MILE 65.957

** W.B.L. LOG MILE 64.504 TO 64.562 (BRIDGE A3820 EXCEPTION)

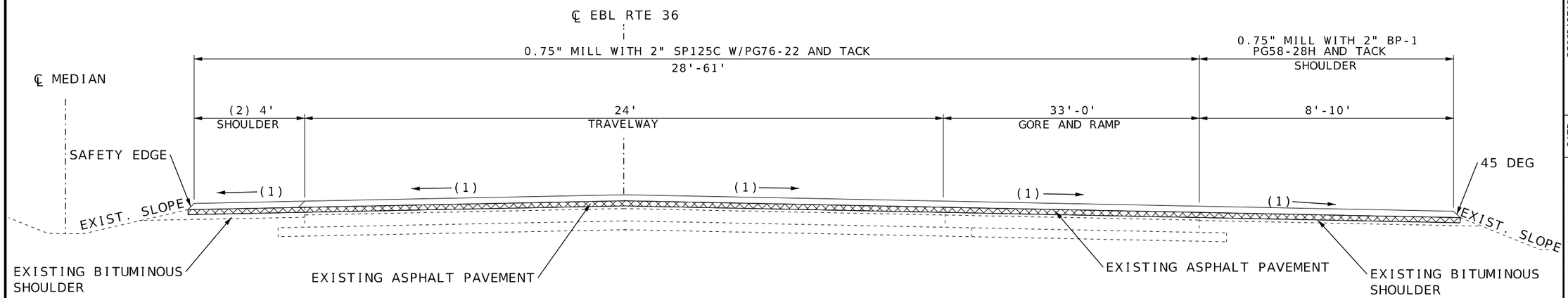

W.B.L. LOG MILE 64.646 TO LOG MILE 64.803

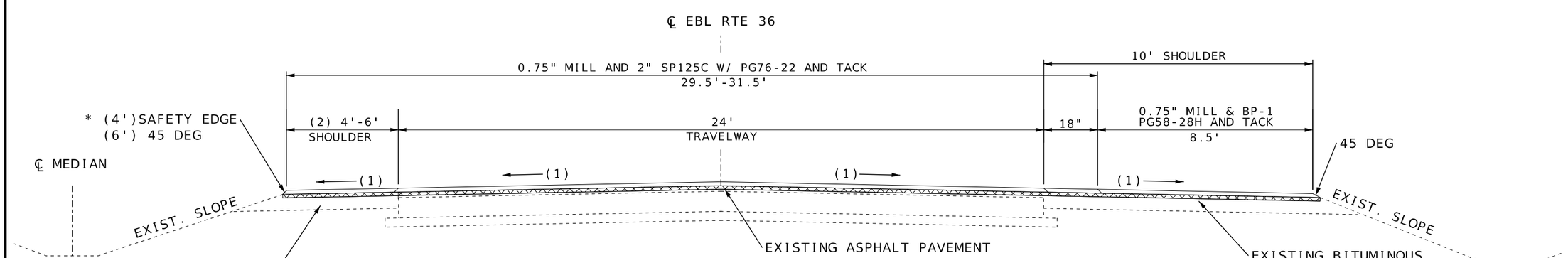

W.B.L. LOG MILE 64.562 TO LOG MILE 64.646
W.B.L. LOG MILE 64.803 TO LOG MILE 65.863
W.B.L. LOG MILE 65.957 TO LOG MILE 67.301
* W.B.L. LOG MILE 67.301 TO LOG MILE 67.500
* W.B.L. LOG MILE 68.196 TO LOG MILE 69.560 (END OF PROJECT)

STATE OF MISSOURI
KEITH ALLEN KILLEN
NUMBER PE-2007020292
PROFESSIONAL ENGINEER
06/17/2025 1:32:37 PM
KEITH ALLEN KILLEN - CIVIL
MO-PE-2007020292

DATE PREPARED	6/17/2025
ROUTE	36
STATE	MO
DISTRICT	NE
SHEET NO.	2
COUNTY	MACON
JOB NO.	JNE0120
CONTRACT ID.	
PROJECT NO.	
BRIDGE NO.	

DESCRIPTION
DATE

MISSOURI HIGHWAYS AND TRANSPORTATION COMMISSION
105 WEST CAPITOL
JEFFERSON CITY, MO 65102
1-888-ASK-MODOT (1-888-275-6636)

TYPICAL SECTION SHEET
WBL RTE 36
SHEET 9 OF 10

ASPHALTIC CONCRETE MIXTURE PG76-22 (SP125C)	1.927 TON/YD³
BITUMINOUS PAVEMENT MIXTURE PG58-28H (BP-1)	1.948 TON/YD³
TACK COAT	.08 GAL/YD²
TACK COAT (COLDMILLED AREAS)	.10 GAL/YD²

NOTE:
(1) 2% CROSS-SLOPE, SEE DETAIL C
SHEET 4 OF 10

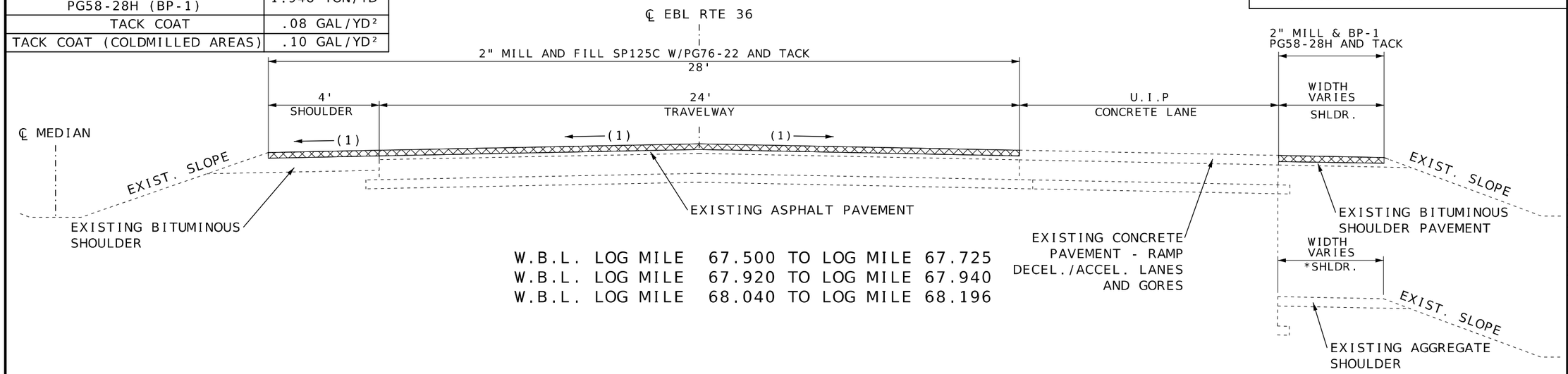

W.B.L. LOG MILE 67.500 TO LOG MILE 67.725
W.B.L. LOG MILE 67.920 TO LOG MILE 67.940
W.B.L. LOG MILE 68.040 TO LOG MILE 68.196

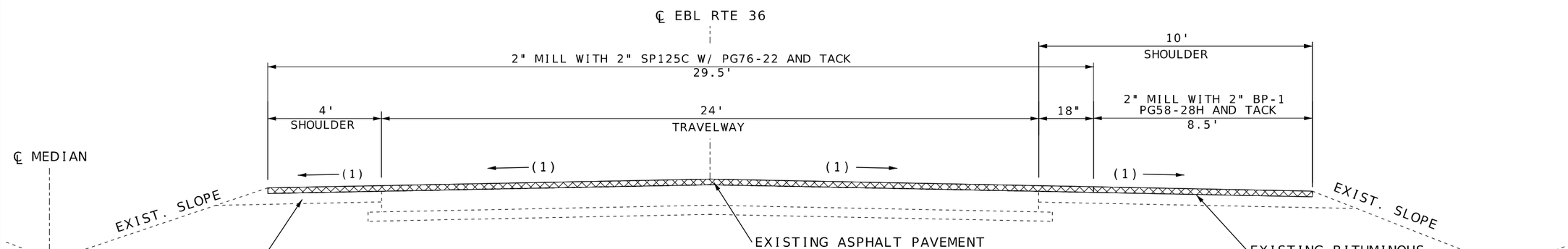

W.B.L. LOG MILE 67.725 TO LOG MILE 67.847 **
W.B.L. LOG MILE 67.940 TO LOG MILE 68.040

** W.B.L. LOG MILE 67.847 TO 67.901 (BRIDGE A5513 EXCEPTION)

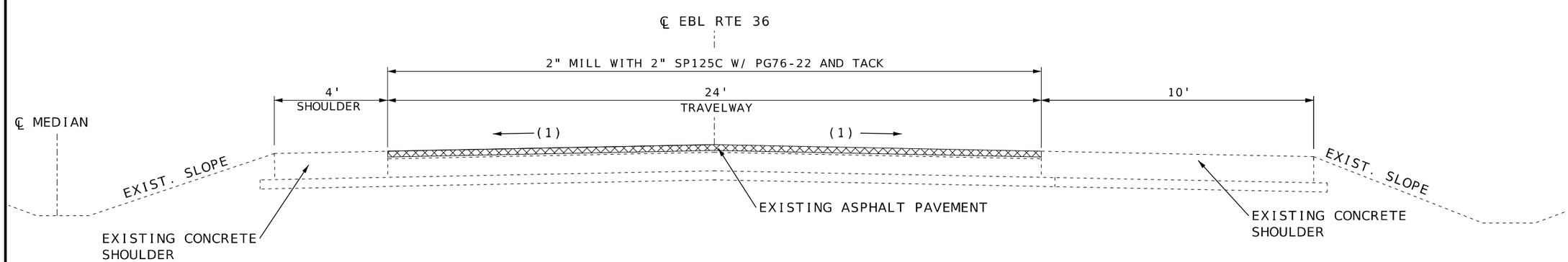

W.B.L. LOG MILE 67.901 TO LOG MILE 67.920

STATE OF MISSOURI
KEITH ALLEN KILLEN
NUMBER
PE-2007020292
PROFESSIONAL ENGINEER
06/17/2025 1:32:59 PM
KEITH ALLEN KILLEN - CIVIL
MO-PE-2007020292

DATE PREPARED	6/17/2025
ROUTE 36	STATE MO
DISTRICT NE	SHEET NO. 2
COUNTY	MACON
JOB NO.	JNE0120
CONTRACT ID.	
PROJECT NO.	
BRIDGE NO.	

DESCRIPTION	DATE

MISSOURI HIGHWAYS AND TRANSPORTATION COMMISSION
105 WEST CAPITOL
JEFFERSON CITY, MO 65102
1-888-ASK-MODOT (1-888-275-6636)

TYPICAL SECTION SHEET
WBL RTE 36
SHEET 10 OF 10

EBL RTE 36 ASPHALTIC CONTRETE MIXTURE PG76-22 (SP125C)

LOG MILE	LOG MILE	LENGTH FT.	WIDTH FT.	DEPTH INCHES	SQ. YD.	CU. YD.	QUANTITY Tons	TACK 0.05 gal/s.y.	TACK 0.10 gal/s.y.	REMARKS
124.260	124.458	1045.44	31.5	2.00	3659.04	203.28	391.72	-	365.90	BEGIN PROJECT EBL 36 LT SHOULDERS
124.458	124.628	897.60	30.0	2.00	2992.00	166.22	320.31	-	299.20	EBL 36 AND LT SHOULDER ALONG RTE. C/O DECEL LANE
124.599	124.628	150.00	VARIES	2.00	175.00	9.72	18.73	-	17.50	RTE. C/O EXIT RAMP GORE AREA
124.458	-	1025.00	0-18	2.00	1433.89	79.66	153.50	-	143.39	RTE. C/O DECEL LANE/EXIT RAMP
124.628	124.739	586.08	31.5	2.00	2051.28	113.96	219.60	-	205.13	EB RTE. 36 AND LT SHOULDER
124.739	124.786	248.16	0.0							BRIDGE A5512 EXCEPTION
124.786	124.979	1019.04	31.5	2.00	3566.64	198.15	381.84	-	356.66	EB RTE. 36 AND LT SHOULDER
124.979	125.159	950.40	30.0	2.00	3168.00	176.00	339.15	-	316.80	EBL 36 AND LT SHOULDER ALONG RTE. C/O ACCEL LANE
124.979	125.007	150.00	VARIES	2.00	100.00	5.56	10.71	-	10.00	RTE. C/O ENTRANCE RAMP GORE AREA
124.974	125.159	980.00	0-18	2.00	1375.56	76.42	147.26	-	137.56	RTE. C/O ENTRANCE RAMP/ACCEL LANE
125.159	125.558	2106.72	31.5	2.00	7373.52	409.64	789.38	-	737.35	EB RTE. 36 AND LT SHOULDER
125.558	126.660	5818.56	29.5	2.00	19071.95	1059.55	2041.75	-	1907.19	EB RTE. 36 AND LT SHOULDER
126.660	126.780	633.60	29.5	2.00	2076.80	115.38	222.34	-	207.68	EB RTE. 36 MILL/FILL UNDER BRIDGE
126.780	127.767	5211.36	29.5	2.00	17081.68	948.98	1828.68	-	1708.17	EB RTE. 36 AND LT SHOULDER
127.767	127.908	744.48	28.0	2.00	2316.16	128.68	247.97	-	231.62	EBL 36 AND LT SHOULDER ALONG LONG BRANCH LAKE ROAD DECEL LANE/EXIT RAMP
127.880	127.908	140.00	VARIES	2.00	62.22	3.46	6.67	-	6.22	LONG BRANCH LAKE ROAD EXIT RAMP GORE AREA
127.908	-	860.00	0-22	2.00	1211.11	67.28	129.65	-	121.11	LONG BRANCH LAKE ROAD DECEL LANE/EXIT RAMP
127.908	128.095	987.36	29.5	2.00	3236.35	179.80	346.47	-	323.63	EB RTE. 36 AND LT SHOULDER
128.095	128.135	211.20	0.0							BRIDGE A3820 EXCEPTION
128.135	128.280	765.60	29.5	2.00	2509.47	139.41	268.64	-	250.95	EB RTE. 36 AND LT SHOULDER
128.280	128.455	924.00	28.0	2.00	2874.67	159.70	307.74	-	287.47	EB RTE 36 AND LT SHOULDER ALONG BRANCH LAKE ROAD ACCEL LANE
128.280	128.322	225.00	VARIES	2.00	219.44	12.19	23.49	-	21.94	LONG BRANCH LAKE ROAD ENTRANCE RAMP GORE AREA
-	128.455	980.00	0-22	2.00	1629.44	90.52	174.43	-	162.94	LONG BRANCH LAKE ROAD ENTRANCE RAMP/ACCEL LANE
128.455	129.319	4561.92	29.5	2.00	14952.96	830.72	1600.80	-	1495.30	EB RTE. 36 AND LT SHOULDER
129.319	129.642	1705.44	29.50	6.00	5590.05	931.68	1795.35	559.00	559.01	EB RTE. 36 AND LT SHOULDER
129.642	129.835	1019.04	29.50	6.00	3340.19	556.70	1072.76	334.02	334.02	EBL RTE 36 AND LT SHOULDER ALONG PAVED MEDIAN
129.835	129.855	105.60								BRIDGE A2041 EXCEPTION
129.855	129.980	660.00	29.50	6.00	2163.33	360.56	694.80	216.34	216.33	EB RTE. 36 AND LT SHOULDER
129.980	130.070	475.20	29.50	6.00	1557.60	259.60	500.25	155.76	155.76	EB RTE 36 AND LT SHOULDER ALONG US 63 DECEL LANE
130.047	130.070	120.00	VARIES	2.00	105.56	5.86	11.29	-	10.56	RTE. 63 EXIT RAMP GORE AREA
129.980	-	695.00	0-18	2.00	994.44	55.25	106.47	-	99.44	RTE. 63 DECEL LANE/EXIT RAMP
130.070	130.300	1214.40	29.50	6.00	3980.53	663.42	1278.41	398.06	398.05	EBL RTE. 36 AND LT SHOULDER
130.300	130.324	126.72	29.50	2.00	415.36	23.08	44.48	-	41.54	EB RTE. 36 AND LT SHOULDER
130.324	130.487	860.64	28.00	2.00	2677.55	148.75	286.64	-	267.75	EBL RTE 36 AND LT SHOULDER ALONG RTE 63 ENTRANCE RAMP/ACCEL LANE
130.324	130.347	120.00	VARIES	2.00	94.44	5.25	10.12	-	9.44	RTE. 63 ENTRANCE RAMP GORE AREA
-	130.347	675.00	18.00	2.00	1248.33	69.35	133.64	-	124.83	RTE. 63 ENTRANCE RAMP
130.347	130.487	739.20	0-12	2.00	724.44	40.25	77.56	-	72.44	RTE. 63 ACCEL LANE
130.487	130.886	2106.72	29.50	2.00	6905.36	383.63	739.26	-	690.54	EB RTE. 36 AND LT SHOULDER
130.886	130.998	591.36	25.50	2.00	1675.52	93.08	179.37	-	167.55	EB RTE. 36 AND LT SHOULDER
130.998	131.100	538.56	29.50	2.00	1765.28	98.07	188.98	-	176.53	EB 36 AND LT/RT SHOULDER MILL/FILL TO END OF PROJECT
124.260	129.319	26711.52	-	-	-	-	317.74	-	-	SAFETY EDGE/SIDESLOPE IRREGULARITES FOR LT SHOULDER
130.300	130.886	3094.08	-	-	-	-	36.80	-	-	SAFETY EDGE/SIDESLOPE IRREGULARITES FOR LT SHOULDER
124.260	131.100	36115.20	-	-	-	-	684.00	-	-	IRREGULARITIES AND SLOPE CORRECTION
						SUBTOTAL	18128.75	1663.18	12637.50	

NOTE: FACTOR USED = 1.927 TONS PER CU.YD.

MOBILIZATION	
LUMP SUM	1

TEMPORARY PAVEMENT MARKING
TOTAL 1 LUMP SUM

EBL RTE 36 MODIFIED COLDMILLING DEPTH TRANSITION

LOG MILE	LOG MILE	LENGTH FT.	WIDTH FT.	DEPTH IN.	SQ.YD.	REMARKS
124.260	124.283	125.00	40.00	2" - 0.75"	555.6	BEGIN PROJECT- BUTT JOINT
-	-	137.50	18.00	0.75" - 2"	275.0	RTE O/C EXIT RAMP
124.716	124.739	125.00	40.00	0.75" - 2"	555.6	TO RTE O/C BRIDGE
124.786	124.809	125.00	40.00	2" - 0.75"	555.6	FROM RTE O/C BRIDGE
-	-	137.50	18.00	2" - 0.75"	275.0	RTE O/C ENTRANCE RAMP
126.637	126.660	125.00	38.00	0.75" - 2"	527.8	TRANSITION TO MILL/FILL
126.780	126.803	125.00	38.00	2" - 0.75"	527.8	TRANSITION FROM MILL/FILL
-	-	100.00	32.00	0.75" - 2"	355.6	LONG BRANCH BRIDGE EXIT RAMP
128.052	128.095	125.00	38.00	0.75" - 2"	527.8	TO LONG BRANCH BRIDGE
128.135	128.158	125.00	38.00	2" - 0.75"	527.8	FROM LONG BRANCH BRIDGE
-	-	100.00	32.00	2" - 0.75"	355.6	LONG BRANCH BRIDGE ENTRANCE RAMP
129.286	129.319	125.00	38.00	0.75" - 2"	527.8	TRANSITION TO MILL/FILL
130.300	130.324	125.00	38.00	2" - 0.75"	527.8	TRANSITION FROM MILL/FILL
130.863	130.886	125.00	38.00	0.75" - 2"	527.8	TRANSITION TO MILL/FILL
-	-	125.00	18.00	2" - 0.75"	250.0	RTE 63 ENTRANCE RAMP
				SUBTOTAL	6872.6	

BITUMINOUS FOG SEAL

LOG MILE	LOG MILE	WIDTH FT.	QUANTITY GALLONS	REMARKS
EBL RTE 36				
129.642	129.835	15.0	254.76	PAVED GUARDCABLE MEDIAN
129.835	129.855			BRIDGE A2041 EXCEPTION
129.855	130.261	15.0	535.92	PAVED GUARDCABLE MEDIAN
		SUBTOTAL	790.68	
WBL RTE 36				
63.883	64.210	4	115.10	FOG SEAL RT SHOULDER ALONG CONC. BARRIER
64.210	64.362	8	107.01	FOG SEAL RT SHOULDER ALONG CONC. BARRIER
67.667	67.722	VAR.	38.72	WBL 36 RT SHOULDER ADJACENT TO CONCRETE GORE
		SUBTOTAL	260.83	
		TOTAL	1052.0	

FACTOR: 0.15 GALLONS PER SQ.YD.

STATE OF MISSOURI
KEITH ALLEN KILLEN
NUMBER
PE-2007020292
PROFESSIONAL ENGINEER
06/17/2025 1:33:19 PM
KEITH ALLEN KILLEN - CIVIL
MO-PE-2007020292

DATE PREPARED
6/17/2025

ROUTE	STATE
36	MO
DISTRICT	SHEET NO.
NE	3

COUNTY
MACON

JOB NO.
JNE0120

CONTRACT ID.

PROJECT NO.

BRIDGE NO.

DESCRIPTION	DATE

MISSOURI HIGHWAYS AND TRANSPORTATION COMMISSION
105 WEST CAPITOL
JEFFERSON CITY, MO 65102
1-888-ASK-MODOT (1-888-275-6636)

SUMMARY OF QUANTITIES
SHEET 1 OF 7

EB 36 BITUMINOUS PAVEMENT MIXTURE PG58-28H (BP-1)

LOG MILE	LOG MILE	LENGTH FT.	WIDTH FT.	DEPTH INCHES	SQ. YD.	CU. YD.	QUANTITY Tons	TACK 0.10 gal/s.y.	REMARKS
124.260	124.458	1045.44	8.50	2.00	987.36	54.85	106.85	98.74	RT SHOULDER
124.458	-	905.00	VARIES	2.00	863.89	47.99	93.48	86.39	RT SHOULDER (RTE C/O DECEL LANE/EXIT RAMP)
124.628	124.680	274.56	VARIES	2.00	402.78	22.38	43.60	40.28	TAPERED RT SHOULDER
124.680	124.739	311.52	8.50	2.00	294.21	16.35	31.85	29.42	RT SHOULDER
124.739	124.786	248.16	-						BRIDGE A5512 EXCEPTION
124.786	124.979	1019.04	8.50	2.00	962.43	53.47	104.16	96.24	RT SHOULDER
125.000	125.159	839.52	VARIES	2.00	753.33	41.85	81.52	75.33	RT SHOULDER (RTE C/O ENTRANCE RAMP/ACCEL LANE)
125.159	126.660	7925.28	8.50	2.00	7484.99	415.83	810.04	748.50	RT SHOULDER
126.660	126.780	633.60	8.50	2.00	598.40	33.24	64.75	59.84	RT SHOULDER MILL/FILL UNDER BRIDGE
126.780	127.767	5211.36	8.50	2.00	4921.84	273.44	532.66	492.18	RT SHOULDER
127.767	-	860.00	VARIES	2.00	780.56	43.36	84.47	78.06	RT SHOULDER (LONG BRANCH DECEL LANE)
127.908	128.095	987.36	8.50	2.00	932.51	51.81	100.93	93.25	RT SHOULDER
128.095	128.135	211.20	-						BRIDGE A3820 EXCEPTION
128.135	128.280	765.60	8.50	2.00	723.07	40.17	78.25	72.31	RT SHOULDER
-	128.455	980.00	VARIES	2.00	906.67	50.37	98.12	90.67	OUTSIDE SHOULDER (LONG BRANCH ACCEL LANE)
128.455	129.319	4561.92	8.50	2.00	4308.48	239.36	466.27	430.85	RT SHOULDER
129.319	129.642	1705.44	8.50	2.00	1610.69	89.48	174.31	161.07	(MILL AND FILL) RT SHOULDER
129.642	129.835	1019.04	8.50	2.00	962.43	53.47	104.16	96.24	(MILL AND FILL) RT SHOULDER
129.835	129.855	105.60	-						BRIDGE A2041 EXCEPTION
129.855	129.980	660.00	8.50	2.00	623.33	34.63	67.46	62.33	(MILL AND FILL) RT SHOULDER
129.980	130.040	316.80	VARIES	2.00	312.22	17.35	33.80	31.22	MILL AND FILL RT SHOULDER (RTE 63 DECEL LANE)
130.070	130.300	1214.40	8.50	2.00	1146.93	63.72	124.13	114.69	(MILL AND FILL) RT SHOULDER
130.300	130.324	126.72	8.50	2.00	119.68	6.65	12.95	11.97	RT SHOULDER
130.478	130.487	47.52	10.00	2.00	52.80	2.93	5.71	5.28	RT SHOULDER (RTE 63 ACCEL LANE)
130.487	130.886	2106.72	8.50	2.00	1989.68	110.54	215.33	198.97	RT SHOULDER
130.886	130.998	591.36	8.50	2.00	558.51	31.03	60.45	55.85	(MILL AND FILL) RT SHOULDER
130.998	131.100	538.56	8.50	2.00	508.64	28.26	55.05	50.86	MILL AND FILL TO END OF PROJECT
130.984	-	50.00	VARIES	2.00	350.00	19.44	37.87	35.00	S. KELLOGG APPROACH (CO-OP RD)
124.260	129.319	26711.52	-	-	-	-	321.20	-	SAFTETY EDGE/SIDESLOPE IRREGULARITIES FOR RT SHOULDER
130.300	130.886	3094.08	-	-	-	-	37.21	-	SAFTETY EDGE/SIDESLOPE IRREGULARITIES FOR RT SHOULDER
124.260	131.100	36115.20	-	-	-	-	273.60	-	IRREGULARITIES AND SLOPE CORRECTION
						SUBTOTAL	4220.18	3315.54	

NOTE: FACTOR USED = 1.948 TONS PER CU.YD.

REMOVAL OF IMPROVEMENTS

ROADWAY	LT/RT	LOCATION	REMOVAL	QTY (FT)
EBL 36	LEFT	LONG BRANCH BRIDGE UPSTREAM	GUARDRAIL/CWET	400
EBL 36	RIGHT	LONG BRANCH BRIDGE UPSTREAM	GUARDRAIL/CWET	375
EBL 36	LEFT	GANTZ BRIDGE UPSTREAM	GUARDRAIL/CWET	100
EBL 36	RIGHT	GANTZ BRIDGE UPSTREAM	GUARDRAIL/CWET	350
EBL 36	LEFT	GANTZ BRIDGE DOWNSTREAM	GUARDRAIL/ANCHOR	80
WBL 36	LEFT	GANTZ BRIDGE DOWNSTREAM	GUARDRAIL/ANCHOR	80
EBL 36	LEFT	RTE 63 BRIDGE PIER PROTECTION	GUARDRAIL/CWET/ANCHOR	200
WBL 36	LEFT	RTE 63 BRIDGE PIER PROTECTION	GUARDRAIL/CWET/ANCHOR	200
		LUMP SUM	1	

PERMANENT PAVEMENT MARKING

LOG MILE	LOG MILE	LOCATON	CLASS 2 PAVEMENT MARKING PAINT, (25-MIL, TYPE L BEADS) SOLID 6" WHITE L.F.	INTERMITENT 6" WHITE L.F.	DOTTED 6" WHITE L.F.	SOLID 6" YELLOW L.F.	SOLID 12" WHITE L.F.	REMARKS
		EBL RTE 36						
124.260	131.100	EBL RTE 36	36115	9029	-	36115	-	TRAVELWAY LT/RT EDGE, CENTERLINE
		RTE C/O EXIT LANE/RAMP	365	-	159	115	470	LANE LINE, GORE, RAMP LT/RT EDGELINES
		RTE C/O ENTRANCE LANE/RAMP	250	93	185	38	370	LANE LINE, GORE, RAMP LT/RT EDGELINES
		LONG BRANCH EXIT LANE/RAMP	310	-	135	100	550	LANE LINE, GORE, RAMP LT/RT EDGELINES
		LONG BRANCH ENTRANCE LANE/RAMP	375	56	153	90	540	LANE LINE, GORE, RAMP LT/RT EDGELINES
		RTE 63 EXIT LANE/RAMP	430	-	85	300	275	GORE, RAMP LT/RT EDGELINES
		RTE 63 ENTRANCE LANE/RAMP	715	59	169	560	265	LANE LINE, GORE, RAMP LT/RT EDGELINES
124.260	131.100	EBL RTE 36	2760	-	-	-	-	RT EDGELINES EXCEPTIONS
		SUBTOTAL	35800	9237	886	37318	2470	
		WBL RTE 36						
61.637	69.560	WBL RTE 36	41833	10458	-	41833	-	TRAVELWAY LT/RT EDGE, CENTERLINE
		RTE 63 EXIT RAMP	700	-	38	425	280	GORE, RAMP LT/RT EDGELINES
		RTE 63 ENTRANCE LANE/RAMP	635	145	138	480	260	LANE LINE, GORE, RAMP LT/RT EDGELINES
		LONG BRANCH EXIT LANE/RAMP	450	-	160	250	350	LANE LINE, GORE, RAMP LT/RT EDGELINES
		LONG BRANCH ENTRANCE LANE/RAMP	400	215	160	175	350	LANE LINE, GORE, RAMP LT/RT EDGELINES
		RTE C/O EXIT LANE/RAMP	275	-	185	-	500	LANE LINE, GORE, RAMP LT/RT EDGELINES
		RTE C/O ENTRANCE LANE/RAMP	210	200	190	-	420	LANE LINE, GORE, RAMP LT/RT EDGELINES
61.637	69.560	WBL RTE 36	1410	-	-	-	-	RT EDGELINES EXCEPTIONS
		SUBTOTAL	43093	11018	871	43163	2160	
		TOTAL	78893	20255	1757	80481	4630	
		USE		100905		80481	4630	

NOTE: SEE STANDARD PLAN 620.00 FOR PAVEMENT MARKING GUIDANCE, FIELD VERIFY LENGTHS.

MGS GUARDRAIL

LOG MILE	ROADWAY	LT/RT	BRIDGE	MGS BRIDGE ANCHOR TRANSITION SECTION (EA)	MGS GUARDRAIL LENGTH (FT)	MGS GUARDRAIL END ANCHOR (EA)	TYPE A CRASHWORTHY END TERMINAL (MASH) (EA)	SHAPING SLOPES CLASS III (STA)	REMARKS
128.100	EBL 36	RIGHT	LONG BRACH BRIDGE (A38201)	1	187.5	-	1	3	UPSTREAM
128.100	EBL 36	LEFT	LONG BRACH BRIDGE (A38201)	1	237.5	-	1	3	UPSTREAM
129.840	EBL 36	RIGHT	GANTZ BRIDGE (A20413)	1	187.5	-	1	3	UPSTREAM
129.840	EBL 36	LEFT	GANTZ BRIDGE (A20413)	1	137.5	-	1	-	UPSTREAM
129.859	EBL 36	LEFT	GANTZ BRIDGE (A20413)	1	-	1	-	-	DOWNSTREAM
130.214	EBL 36	LEFT	UNDER HWY 63 BRIDGE	-	150	1	1	-	PIER PROTECTION
62.435	WBL 36	LEFT	UNDER HWY 63 BRIDGE	-	150	1	1	-	PIER PROTECTION
62.823	WBL 36	LEFT	GANTZ BRIDGE (A20414)	1	-	1	-	-	DOWNSTREAM
			TOTAL	6	1050	4	6	9	

STATE OF MISSOURI
KEITH ALLEN KILLEN
NUMBER PE-2007020292
PROFESSIONAL ENGINEER
06/17/2025 1:33:45 PM
KEITH ALLEN KILLEN - CIVIL
MO-PE-2007020292

DATE PREPARED 6/17/2025

ROUTE	STATE
36	MO
DISTRICT	SHEET NO.
NE	3

COUNTY: MACON
JOB NO.: JNE0120
CONTRACT ID.
PROJECT NO.
BRIDGE NO.

DESCRIPTION	DATE

MISSOURI HIGHWAYS AND TRANSPORTATION COMMISSION
105 WEST CAPITOL
JEFFERSON CITY, MO 65102
1-888-ASK-MODOT (1-888-275-6636)

SUMMARY OF QUANTITIES
SHEET 2 OF 7

EBL RTE 36 COLDMILLING BITUMINOUS PAVEMENT FOR REMOVAL OF SURFACING (3" THICK OR LESS)

LOG MILE	LOG MILE	LENGTH FT.	WIDTH FT.	DEPTH IN.	SQ.YD.	REMARKS
124.283	124.458	924.00	40.00	0.75	4106.67	BEGIN PROJECT EBL 36 LT/RT SHOULDERS
124.458	124.628	897.60	30.00	0.75	2992.00	EBL 36 AND LT SHOULDER ALONG RTE. C/O DECEL LANE
124.599	124.628	150.00	VARIES	0.75	175.00	RTE. C/O EXIT RAMP GORE AREA
124.458	-	1025.00	0-18	0.75	1211.11	RTE. C/O DECEL LANE/EXIT RAMP
124.458	-	905.00	VARIES	0.75	863.89	RT SHOULDER (RTE C/O DECEL LANE/EXIT RAMP)
124.628	124.680	274.56	31.50	0.75	960.96	EB RTE. 36 AND LT SHOULDER
124.628	124.680	274.56	VARIES	0.75	402.78	TAPERED RT SHOULDER
124.680	124.716	190.08	40.00	0.75	844.80	EB RTE. 36 AND LT/RT SHOULDER
124.739	124.786	-				BRIDGE A5512 EXCEPTION
124.809	124.979	897.60	40.00	0.75	3989.33	EB RTE. 36 AND LT/RT SHOULDER
124.979	125.159	950.40	30.00	0.75	3168.00	EBL 36 AND LT SHOULDER ALONG RTE. C/O ACCEL LANE
124.979	125.007	150.00	VARIES	0.75	100.00	RTE. C/O ENTRANCE RAMP GORE AREA
125.007	125.159	802.56	0-18	0.75	1044.44	RTE. C/O ENTRANCE RAMP/ACCEL LANE
125.000	125.159	839.52	VARIES	0.75	753.33	RT SHOULDER (RTE C/O ENTRANCE RAMP/ACCEL LANE)
125.159	125.558	2106.72	40.00	0.75	9363.20	EB RTE. 36 AND LT/RT SHOULDER
125.558	126.637	5697.12	38.00	0.75	24054.51	EB RTE. 36 TO DEPTH TRANSITION UNDER BRIDGE
126.660	126.780	633.60	38.00	2.00	2675.20	EB RTE. 36 MILL/FILL UNDER BRIDGE
126.803	127.767	5089.92	38.00	0.75	21490.77	FROM DEPTH TRANSITION EB RTE. 36
127.767	127.908	744.48	28.00	0.75	2316.16	EBL 36 AND LT SHOULDER ALONG LONG BRANCH LAKE ROAD DECEL LANE/EXIT RAMP
127.880	127.908	140.00	VARIES	0.75	62.22	LONG BRANCH LAKE RD EXIT RAMP GORE AREA
127.767	127.908	744.48	0-22	0.75	1039.44	LONG BRANCH LAKE ROAD DECEL LANE/EXIT RAMP
127.767	127.908	744.48	VARIES	0.75	696.11	RT SHOULDER (LONG BRANCH DECEL LANE)
127.908	128.052	760.32	38.00	0.75	3210.24	EB RTE. 36 AND LT/RT SHOULDER
128.095	128.135	-				BRIDGE A3820 EXCEPTION
128.158	128.280	644.16	38.00	0.75	2719.79	EB RTE. 36 AND LT/RT SHOULDER
128.280	128.455	924.00	28.00	0.75	2874.67	EB RTE 36 AND LT SHOULDER ALONG BRANCH LAKE ROAD ACCEL LANE
128.280	128.322	225.00	VARIES	0.75	219.44	LONG BRANCH LAKE RD ENTRANCE RAMP GORE AREA
128.280	128.455	880.00	0-22	0.75	1386.11	LONG BRANCH LAKE ROAD ENTRANCE RAMP/ACCEL LANE
128.280	128.455	880.00	VARIES	0.75	808.33	RT SHOULDER (LONG BRANCH ACCEL LANE)
128.455	129.319	4561.92	38.00	0.75	19261.44	EB RTE. 36 AND LT/RT SHOULDER
129.319	129.642	1705.44	8.50	2.00	1610.69	OUTSIDE SHOULDER MILL/FILL
129.642	129.835	1019.04	8.50	2.00	962.43	OUTSIDE SHOULDER MILL/FILL
129.835	129.855	-				BRIDGE A2041 EXCEPTION
129.855	129.980	660.00	8.50	2.00	623.33	OUTSIDE SHOULDER MILL/FILL
129.980	-	695.00	VARIES	2.00	994.44	US 63 DECEL LANE/EXIT RAMP
130.047	130.070	120.00	VARIES	2.00	105.56	RTE 63 EXIT RAMP GORE AREA
129.980	130.047	353.76	VARIES	2.00	312.22	RT SHOULDER (RTE 63 DECEL LANE)
130.070	130.300	1214.40	8.50	2.00	1146.93	OUTSIDE SHOULDER TO END OF GUARDCABLE W/PAVED MEDIAN
130.324	130.487	860.64	28.00	0.75	2677.55	EBL RTE 36 AND LT SHOULDER ALONG RTE 63 ENTRANCE RAMP/ACCEL LANE
130.324	130.347	120.00	VARIES	0.75	94.44	RTE 63 ENTRANCE RAMP GORE AREA
-	130.347	550.00	18.00	0.75	1011.11	RTE. 63 ENTRANCE RAMP
130.347	130.487	739.20	0-12	0.75	724.44	RTE. 63 ACCEL LANE
130.478	130.487	47.52	10.00	0.75	52.80	RT SHOULDER (RTE. 63 ACCEL LANE)
130.487	130.853	1932.48	38.00	0.75	8159.36	EB RTE. 36 AND LT/RT SHOULDER
130.886	130.998	591.36	34.00	2.00	2234.03	EB RTE. 36 AND RT SHOULDER MILL/FILL
130.998	131.100	538.56	38.00	2.00	2273.92	EB 36 AND LT/RT SHOULDER MILL/FILL TO END OF PROJECT
130.984	-	50.00	VARIES	2.00	215.00	S. KELLOGG APPROACH (CO-OP RD)
				SUBTOTAL	135988.2	

AGGREGATE UNDERDRAINS

LOG MILE	LOCATION	QUANTITY EA	LENGTH FT.	REMARKS
128.08	EBL 36	1.00	15.0	BEFORE LONG BRANCH BRIDGE
128.149	EBL 36	1.00	15.0	AFTER LONG BRANCH BRIDGE
129.585	EBL 36	1.00	15.0	EBL 36
129.679	EBL 36	1.00	15.0	EBL 36
129.699	EBL 36	1.00	15.0	EBL 36
129.773	EBL 36	1.00	15.0	EBL 36
129.879	EBL 36	1.00	15.0	AFTER GANTZ BRIDGE
129.919	EBL 36	1.00	15.0	EBL 36
129.959	EBL 36	1.00	15.0	EBL 36
129.979	EBL 36	1.00	15.0	DECEL LANE RTE 63
130.019	EBL 36	1.00	15.0	DECEL LANE RTE 63
130.059	EBL 36	1.00	15.0	DECEL LANE RTE 63
130.119	EBL 36	1.00	15.0	BEFORE RTE 36 BRIDGE
130.161	EBL 36	1.00	15.0	BEFORE RTE 36 BRIDGE
130.199	EBL 36	1.00	15.0	UNDER RTE 36 BRIDGE
130.219	EBL 36	1.00	15.0	UNDER RTE 63 BRIDGE
62.423	WBL 36	1.00	15.0	UNDER RTE 63 BRIDGE
62.441	WBL 36	1.00	15.0	AFTER RTE 63 BRIDGE
62.481	WBL 36	1.00	15.0	AFTER RTE 63 BRIDGE
62.542	WBL 36	1.00	15.0	ACCEL LANE FROM RTE 63
62.582	WBL 36	1.00	15.0	ACCEL LANE FROM RTE 63
62.602	WBL 36	1.00	15.0	ACCEL LANE FROM RTE 63
62.641	WBL 36	1.00	15.0	ACCEL LANE FROM RTE 63
62.681	WBL 36	1.00	15.0	WBL 36
62.761	WBL 36	1.00	15.0	BEFORE GANTZ BRIDGE
62.822	WBL 36	1.00	15.0	AFTER GANTZ BRIDGE
62.861	WBL 36	1.00	15.0	AFTER GANTZ BRIDGE
62.901	WBL 36	1.00	15.0	WBL 36
62.941	WBL 36	1.00	15.0	WBL 36
64.562	WBL 36	1.00	15.0	AFTER LONG BRANCH BRIDGE
		TOTAL	450	

COLDMILLING BITUMINOUS PAVEMENT FOR REMOVAL OF SURFACING (GREATER THAN 3")

LOG MILE	LOG MILE	LENGTH FT.	WIDTH FT.	DEPTH IN.	QUANTITY SQ.YD.	REMARKS
	EBL RTE 36					
129.319	129.642	1705.44	29.50	6.00	5590.05	EB 36 AND LT SHOULDER
129.642	129.835	1019.04	29.50	6.00	3340.19	EB 36 AND LT SHOULDER ALONG PAVED MEDIAN
129.835	129.855	-	-	-	-	BRIDGE A2041 EXCEPTION
129.855	129.980	660.00	29.50	6.00	2163.33	EB 36 AND LT SHOULDER
129.980	130.070	475.20	29.50	6.00	1557.60	EB 36 AND LT SHOULDER ALONG US 63 DECEL LANE
130.070	130.300	1214.40	29.50	6.00	3980.53	EB 36 AND LT SHOULDER
		SUBTOTAL			16631.70	
	WBL RTE 36					
62.343	62.529	982.08	29.50	6.00	3219.04	WB 36 AND LT SHOULDER
62.529	62.663	707.52	29.50	6.00	2319.09	WB 36 AND LT SHOULDER ALONG RTE 63 ACCEL LANE
62.663	62.784	638.88	29.50	6.00	2094.11	WB 36 & LT. SHOULDER
62.784	62.808	-	-	-	-	BRIDGE A2041 EXCEPTION
62.808	62.956	781.44	29.50	6.00	2561.39	WB 36 AND LT SHOULDER
62.956	63.246	1531.20	32.00	6.00	5444.27	WB 36 AND LT SHOULDER
63.246	63.341	501.60	28.00	6.00	1560.53	WB 36 AND LT SHOULDER
		SUBTOTAL			17198.43	
		TOTAL			33830.1	

MISC. TYPE 1 AGGREGATE

LENGTH FT.	WIDTH FT.	THICK IN	QUANTITY TONS	REMARKS
EBL RTE 36				
120.0	14	3	32.50	RTE. C/O EXIT RAMP RT/LT SHOULDER AGGREGATE
160.0	14	3	43.30	RTE. C/O ENTRANCE RAMP RT/LT SHOULDER AGGREGATE
480.0	10	3	92.80	RTE. 63 EXIT RAMP RT SHOULDER AGGREGATE
275.0	4	3	21.30	RTE. 63 EXIT RAMP LT SHOULDER AGGREGATE
1335.0	10	3	258.10	RTE. 63 ENTRANCE RAMP RT SHOULDER AGGREGATE
570.0	4	3	44.10	RTE. 63 ENTRANCE RAMP LT SHOULDER AGGREGATE
		SUBTOTAL	492.1	
WBL RTE 36				
535.00	4	3	41.38	RTE. 63 EXIT RAMP LT SHOULDER AGGREGATE
700.00	10	3	135.34	RTE. 63 EXIT RAMP RT SHOULDER AGGREGATE
475.00	4	3	36.73	RTE. 63 ENTRANCE RAMP LT SHOULDER AGGREGATE
1050.00	10	3	203.01	RTE. 63 ENTRANCE RAMP RT SHOULDER AGGREGATE
260.00	14	3	70.37	LONG BRANCH RD. EXIT RAMP AGGR. RT/LT SHOULDER AGGREGATE
185.00	14	3	50.08	LONG BRANCH RD. ENTRANCE RAMP AGGR. RT/LT SHOULDER AGGREGATE
		SUBTOTAL	537.0	
		TOTAL	1029.1	

NOTE: FACTOR USED = 0.058 TONS PER SQ.YD./INCH

STATE OF MISSOURI
KEITH ALLEN KILLEN
NUMBER
PE-2007020292
PROFESSIONAL ENGINEER

06/17/2025 1:34:28 PM
KEITH ALLEN KILLEN - CIVIL
MO-PE-2007020292

DATE PREPARED
6/17/2025

ROUTE	STATE
36	MO
DISTRICT	SHEET NO.
NE	3

COUNTY
MACON

JOB NO.
JNE0120

CONTRACT ID.

PROJECT NO.

BRIDGE NO.

DESCRIPTION	DATE

MISSOURI HIGHWAYS AND TRANSPORTATION COMMISSION

105 WEST CAPITOL
JEFFERSON CITY, MO 65102
1-888-ASK-MODOT (1-888-275-6636)

SUMMARY OF QUANTITIES
SHEET 3 OF 7

WB 36 ASPHALTIC CONCRETE - MIXTURE PG76-22 (SP125C)

LOG MILE	LOG MILE	LENGTH FT.	WIDTH FT.	DEPTH INCHES	SQ. YD.	CU. YD.	QUANTITY Tons	TACK 0.05	TACK 0.1	REMARKS
61.637	61.662	135.00	25.50	2.00	382.50	21.25	40.95	-	38.25	(MILL/FILL) WB 36 BEGIN PROJECT
61.662	61.669	36.96	29.50	2.00	121.15	6.73	12.97	-	12.11	WB 36 AND LT SHOULDER
61.669	62.202	2814.24	29.50	2.00	9224.45	512.47	987.53	-	922.45	WB 36 AND LT SHOULDER
62.202	62.251	258.72	28.00	2.00	804.91	44.72	86.18	-	80.49	WB 36 AND LT SHOULDER
62.224	62.251	142.56	VARIES	2.00	108.33	6.02	11.60	-	10.83	RTE. 63 EXIT RAMP GORE AREA
62.202	-	695.00	18.00	2.00	1390.00	77.22	148.80	-	139.00	RTE. 63 EXIT RAMP
62.251	62.343	485.76	29.50	2.00	1592.21	88.46	170.46	-	159.22	WB 36 AND LT SHOULDER
62.343	62.529	982.08	29.50	6.00	3219.04	536.51	1033.85	321.90	321.90	(MILL/FILL) WB 36 AND LT SHOULDER
62.529	62.663	707.52	29.50	6.00	2319.09	386.52	744.82	231.90	231.91	(MILL/FILL) WB 36 AND LT SHOULDER
62.529	62.546	89.76	VARIES	2.00	55.56	3.09	5.95	-	5.56	RTE. 63 ENTRANCE RAMP GORE AREA
-	62.529	490.00	18.00	2.00	980.00	54.44	104.91	-	98.00	RTE. 63 ENTRANCE RAMP
62.529	62.663	500.00	0-12	2.00	811.11	45.06	86.83	-	81.11	RTE. 63 ACCEL LANE
62.663	62.784	638.88	29.50	6.00	2094.11	349.02	672.56	209.42	209.41	(MILL/FILL) WB 36 AND LT SHOULDER
62.784	62.808	126.72	-							GANTZ ST. BRIDGE EXCEPTION
62.808	62.956	781.44	29.50	6.00	2561.39	426.90	822.64	256.14	256.14	(MILL/FILL) WB 36 AND LT SHOULDER
62.956	63.246	1531.20	32.00	6.00	5444.27	907.38	1748.52	544.42	544.43	(MILL/FILL) WB 36 AND LT/RT (4') SHOULDER
63.246	63.341	501.60	28.00	6.00	1560.53	260.09	501.19	156.06	156.05	(MILL/FILL) WB 36 AND LT SHOULDER
63.341	63.883	2861.76	28.00	2.00	8903.25	494.63	953.15	-	890.33	(MILL/FILL) WB 36 AND LT SHOULDER
63.883	64.210	1726.56	34.00	2.00	6522.56	362.36	698.27	-	652.26	(MILL/FILL) WB 36 AND LT/RT (4') SHOULDER
64.210	64.367	828.96	30.00	2.00	2763.20	153.51	295.81	-	276.32	(MILL/FILL) WB 36 AND LT SHOULDER
64.342	64.367	132.00	VARIES	2.00	111.11	6.17	11.89	-	11.11	LONG BRANCH LAKE RD. EXIT RAMP GORE AREA
64.210	64.367	828.96	0-22	2.00	1605.56	89.20	171.89	-	160.56	(MILL/FILL) LONG BRANCH LAKE RD DECEL LANE AND RT (4') SHOULDER
64.367	-	260.00	18.00	2.00	520.00	28.89	55.67	-	52.00	LONG BRANCH LAKE ROAD EXIT RAMP
64.367	64.504	723.36	31.50	2.00	2531.76	140.65	271.03	-	253.18	(MILL/FILL) WB 36 AND LT SHOULDER
64.504	64.562	306.24	-							LONG BRANCH BRIDGE EXCEPTION
64.562	64.646	443.52	31.50	2.00	1552.32	86.24	166.18	-	155.23	WB 36 AND LT SHOULDER
64.646	64.803	828.96	30.00	2.00	2763.20	153.51	295.81	-	276.32	TRAVELWAY,LT SHOULDER, ACCEL. LANE PAVEMENT
64.646	64.670	126.72	VARIES	2.00	77.78	4.32	8.32	-	7.78	LONG BRANCH LAKE RD. ENTRANCE RAMP GORE AREA
64.646	-	1015.00	0-18	2.00	1455.56	80.86	155.82	-	145.56	LONG BRANCH LAKE ROAD ENTRANCE RAMP/ACCEL LANE
64.803	65.863	5596.80	31.50	2.00	19588.80	1088.27	2097.10	-	1958.88	WB 36 AND LT SHOULDER
65.863	65.957	496.32	31.50	2.00	1737.12	96.51	185.97	-	173.71	WB 36 AND LT SHOULDER
65.957	67.301	7096.32	31.50	2.00	24837.12	1379.84	2658.95	-	2483.71	WB 36 AND LT SHOULDER
67.301	67.500	1050.72	29.50	2.00	3444.03	191.33	368.69	-	344.40	WB 36 AND LT SHOULDER
67.500	67.725	1188.00	28.00	2.00	3696.00	205.33	395.67	-	369.60	WB 36 AND LT SHOULDER
67.725	67.847	644.16	29.50	2.00	2111.41	117.30	226.04	-	211.14	WB 36 AND LT SHOULDER
67.847	67.901	285.12	-							RTE. O/C BRIDGE EXCEPTION
67.901	67.920	100.32	24.00	2.00	267.52	14.86	28.64	-	26.75	(MILL/FILL) WB 36
67.920	67.940	105.60	28.00	2.00	328.53	18.25	35.17	-	32.85	(MILL/FILL) WB 36 AND LT SHOULDER
67.940	68.022	432.96	29.50	2.00	1419.15	78.84	151.92	-	141.91	(MILL/FILL) TRAVELWAY AND LT SHOULDER PAVEMENT
68.022	68.196	918.72	28.00	2.00	2858.24	158.79	305.99	-	285.82	(MILL/FILL) WB 36 AND LT SHOULDER
68.022	68.040	95.04	VARIES	2.00	94.44	5.25	10.12	-	9.44	(MILL/FILL) RTE C/O ENTRANCE RAMP GORE AREA
68.196	69.560	7201.92	29.50	2.00	23606.29	1311.46	2527.18	-	2360.63	WB 36 AND LT SHOULDER TO END OF PROJECT
61.669	62.343	3558.72	-	-	-	-	42.33	-	-	SAFTETY EDGE/SIDESLOPE IRREGULARITIES FOR LT SHOULDER
64.562	67.500	15512.64	-	-	-	-	184.52	-	-	SAFTETY EDGE/SIDESLOPE IRREGULARITIES FOR LT SHOULDER
68.022	68.040	95.04	-	-	-	-	1.13	-	-	SAFTETY EDGE/SIDESLOPE IRREGULARITIES FOR LT SHOULDER
61.637	69.560	41833.44	-	-	-	-	792.30	-	-	IRREGULARITIES AND SLOPE CORRECTION
						TOTAL	20275.32	1719.84	14546.35	

NOTE: FACTOR USED = 1.927 TONS PER CU.YD.

QUANTITY TOTALS

LOG MILE	LOG MILE	LOCATION	SP125C PG76-22 TONS	BP-1 PG58-28H TONS	TACK GALS	TYPE 1 AGGR TONS	MODIFIED COLDMILLING SQYD	COLDMILLING LESS THAN 3" SQYD
124.260	131.100	EBL 36	18128.75	4220.18	17616.24	492.10	6872.60	135988.20
61.637	69.560	WBL 36	20275.32	4385.39	19348.87	537.00	5055.80	155239.00
		TOTAL	38404.1	8605.6	36965.1	1029.1	11928.4	291227.2
		USE	38404.1	8605.6	36966	1029	11928	291227

WB 36 MODIFIED COLDMILLING DEPTH TRANSITION

LOG MILE	LOG MILE	LENGTH FT.	WIDTH FT.	DEPTH IN.	SQ.YD.	REMARKS
61.669	61.692	125.00	38.00	2" - 0.75"	527.8	TRANSITION FROM 2" MILL/FILL TO OVELAY
-	-	125.00	18.00	0.75" - 2"	250.0	EXIT RAMP @ 63 BUTT JOINT (MATCH NEW CONSTRUCTION LINE)
62.320	62.343	125.00	38.00	0.75" - 2"	527.8	TRANSITION TO MILL/FILL
-	-	125.00	18.00	2" - 0.75"	250.0	TOP OF ENTRANCE RAMP APPROACH @ 63 TOP OF EXIT RAMP APPROACH @ 63 0.75"-2"
64.562	64.585	125.00	40.00	2" - 0.75"	555.6	LONG BRANCH BRIDGE 2" TO 0.75" MILL TRANSITION
-	-	125.00	18.00	2" - 0.75"	250.0	LONG BRANCH RD. ENTRANCE RAMP
65.840	65.863	125.00	40.00	0.75" - 2"	555.6	DEPTH TRASITION TO MILL/FILL UNDER BRIDGE
65.957	65.980	125.00	40.00	2" - 0.75"	555.6	DEPTH TRASITION FROM MILL/FILL UNDER BRIDGE
67.477	67.500	125.00	38.00	0.75" - 2"	527.8	0.75" OVERLAY TO 2" M & F
68.201	68.224	125.00	38.00	2" - 0.75"	527.8	TRANSITION FROM 2" MILL/FILL TO 3/4" MILL
69.527	69.560	125.00	38.00	0.75" - 2"	527.8	END PROJECT TRANSITION
				SUBTOTAL	5055.8	

BITUMINOUS SHOULDER RUMBLE STRIP

LOG MILE	LOG MILE	LOCATION	QUANTITY STA.	DESCRIPTION
EBL RTE 36				
124.260	131.100	RTE 36	361.15	INSIDE SHOULDER
124.260	131.100	RTE 36	361.15	OUTSIDE SHOULDER
		RTE 36	59.85	OUTSIDE SHOULDER EXCEPTIONS
		RTE 36	11.75	INSIDE SHOULDER EXCEPTIONS
		SUBTOTAL	650.7	
WBL RTE 36				
61.650	69.560	RTE 36	417.6	RT SHOULDER
61.650	69.560	RTE 36	417.6	LT SHOULDER
		RTE 36	90.3	OUTSIDE SHOULDER EXCEPTIONS
		RTE 36	7.2	INSIDE SHOULDER EXCEPTIONS
		SUBTOTAL	737.7	
		TOTAL	1388.4	

NOTE: QUANTITIES REFLECT EXCEPTIONS AT SIDE ROADS, RAMPS, AND BRIDGES

STATE OF MISSOURI
KEITH ALLEN KILLEN
NUMBER PE-2007020292
PROFESSIONAL ENGINEER
06/17/2025 1:34:55 PM
KEITH ALLEN KILLEN - CIVIL
MO-PE-2007020292

DATE PREPARED: 6/17/2025
ROUTE: 36 | STATE: MO
DISTRICT: NE | SHEET NO.: 3
COUNTY: MACON
JOB NO.: JNE0120
CONTRACT ID.
PROJECT NO.
BRIDGE NO.

DESCRIPTION	DATE

MISSOURI HIGHWAYS AND TRANSPORTATION COMMISSION
105 WEST CAPITOL
JEFFERSON CITY, MO 65102
1-888-ASK-MODOT (1-888-275-6636)

SUMMARY OF QUANTITIES
SHEET 4 OF 7

WB 36 COLDMILLING BITUMINOUS PAVEMENT FOR REMOVAL OF SURFACING (3" THICK OR LESS)

LOG MILE	LOG MILE	LENGTH FT.	WIDTH FT.	DEPTH IN.	QUANTITY SQ.YD.	REMARKS
61.637	61.669	169.00	34-38	2.00	666.67	(MILL/FILL) BEGIN PROJECT THRU KELLOGG AVE.
61.653	-	40.00	VARIES	2.00	200.00	(MILL/FILL) N. KELLOGG APPROACH
61.692	62.202	2692.80	38.00	0.75	11369.60	WB RTE. 36 AND LT/RT SHOULDERS
62.202	62.251	258.72	28.00	0.75	804.91	WB RTE. 36 AND LT SHOULDER
62.202	62.218	90.00	VARIES	0.75	75.56	RT SHOULDER AT RTE. 63 EXIT RAMP
62.224	62.251	142.56	VARIES	0.75	105.56	GORE AREA AT RTE. 63 EXIT RAMP
62.202	-	570.00	18.00	0.75	1140.00	RTE. 63 EXIT RAMP
62.251	62.320	364.32	38.00	0.75	1538.24	WB RTE. 36 AND LT/RT SHOULDERS
62.343	62.529	982.08	8.50	2.00	927.52	(MILL/FILL) RT SHOULDER ONLY
62.529	62.546	89.76	VARIES	2.00	46.67	(MILL/FILL) RTE. 63 ENTRANCE RAMP GORE AREA
-	62.529	490.00	18.00	2.00	980.00	(MILL/FILL) RTE. 63 ENTRANCE RAMP
62.529	62.663	707.52	0-12	2.00	811.11	(MILL/FILL) ACCEL LANE AT RTE. 63
62.663	62.784	638.88	8.50	2.00	603.39	(MILL/FILL) RT SHOULDER ONLY
62.784	62.808	-				BRIDGE A2041 EXCEPTION
62.808	62.956	781.44	8.50	2.00	738.03	(MILL/FILL) RT SHOULDER ONLY
63.341	63.883	2861.76	28.00	2.00	8903.25	(MILL/FILL) WB 36 AND LT SHOULDER
63.883	64.210	1726.56	34.00	2.00	6522.56	(MILL/FILL) WBL 36 AND LT/ 4' RT SHOULDER ALONG CONCRETE MEDIAN BARRIER
64.210	64.367	828.96	30.00	2.00	2763.20	WBL 36 LONG BRACH DECEL LANE & PART RT SHOULDER ALONG MEDIAN BARRIER
64.210	64.367	828.96	4-22	2.00	1605.56	(MILL/FILL) LONG BRANCH LAKE RD DECEL LANE/RT SHOULDER
64.342	64.367	132.00	VARIES	2.00	111.11	(MILL/FILL) LONG BRANCH LAKE RD. EXIT RAMP GORE AREA
64.367	-	260.00	18.00	2.00	520.00	(MILL/FILL) LONG BRANCH LAKE ROAD EXIT RAMP
64.367	64.504	723.36	40.00	2.00	3214.93	(MILL/FILL) WB 36 AND LT/RT SHOULDER
64.504	64.562	-				BRIDGE A3820 EXCEPTION
64.562	64.646	443.52	40.00	0.75	1971.20	WB 36 AND LT/RT SHOULDER
64.646	64.803	828.96	30.00	0.75	2763.20	WB 36 AND LT SHOULDER
64.646	64.670	126.72	VARIES	0.75	77.78	LONG BRANCH LAKE RD. ENTRANCE RAMP GORE AREA
64.646	64.803	828.96	VARIES	0.75	844.44	RT SHOULDER
64.646		890.00	0-18	0.75	1211.11	LONG BRANCH LAKE ROAD ENTRANCE RAMP/ACCEL LANE
64.803	65.840	5475.36	40.00	0.75	24334.93	WB AND LT/RT SHOULDER
65.863	65.957	496.32	40.00	2.00	2205.87	WB 36 AND LT/RT SHOULDER MILL/FILL UNDER BRIDGE
65.980	67.301	6974.88	40.00	0.75	30999.47	WB 36 AND LT/RT SHOULDER
67.301	67.477	929.28	38.00	0.75	3923.63	WB 36 AND LT/RT SHOULDER
67.500	67.725	1188.00	28.00	2.00	3696.00	(MILL/FILL) WB 36 AND LT SHOULDER ALONG CONC. EXIT RAMP @ RTE. C/O
67.500	67.652	802.56	VARIES	2.00	966.67	(MILL/FILL) RT SHOULDER ALONG CONC. RTE. C/O EXIT RAMP
67.725	67.847	644.16	38.00	2.00	2719.79	(MILL/FILL) WB RTE. 36 & LT/RT SHOULDER
67.847	67.901	-				BRIDGE A5513 EXCEPTION
67.901	67.920	100.32	24.00	2.00	267.52	(MILL/FILL) WB RTE. 36
67.920	67.940	105.60	28.00	2.00	328.53	(MILL/FILL) WB RTE. 36 & LT SHOULDER
67.940	68.022	432.96	38.00	2.00	1828.05	(MILL/FILL) WB RTE. 36 & BOTH SHOULDERS
68.022	68.196	918.72	28.00	2.00	2858.24	(MILL/FILL) WB 36 AND LT SHOULDER
68.022	68.040	95.04	VARIES	2.00	77.78	(MILL/FILL) RTE C/O ENTRANCE RAMP GORE AREA
68.079	68.196	617.76	VARIES	2.00	844.44	(MILL/FILL) RT SHOULDER (RTE C/O ACCEL LANE)
68.196	69.527	7027.68	38.00	0.75	29672.43	WB 36 LT/RT SHOULDER TO END OF PROJECT
		SUBTOTAL			155239.0	

WB 36 BITUMINOUS PAVEMENT MIXTURE PG58-28H (BP-1)

LOG MILE	LOG MILE	LENGTH FT.	WIDTH FT.	DEPTH INCHES	SQ. YDS.	CU. YDS.	QUANTITY Tons	TACK 0.1	REMARKS
61.637	61.669	135.00	8.50	2.00	127.50	7.08	13.79	12.75	(MILL/FILL) RT SHOULDER
61.644	-	40.000	VARIES	2.00	390.00	21.67	42.21	39.00	N. KELLOGG APPROACH
61.669	62.202	2814.24	8.50	2.00	2657.89	147.66	287.64	265.79	RT SHOULDER
62.202	62.218	90.00	VARIES	2.00	75.56	4.20	8.18	7.56	RT SHOULDER (RTE 63 EXIT RAMP)
62.251	62.343	485.76	8.50	2.00	458.77	25.49	49.65	45.88	RT SHOULDER
62.343	62.529	982.08	8.50	2.00	927.52	51.53	100.38	92.75	RT SHOULDER
62.663	62.784	638.88	8.50	2.00	603.39	33.52	65.30	60.34	RT SHOULDER
62.784	62.808	126.72	-						GANTZ ST. BRIDGE EXCEPTION
62.808	62.956	781.44	8.50	2.00	738.03	41.00	79.87	73.80	RT SHOULDER
62.956	64.367	7450.08	-						MILL/FILL THRU CONCRETE MEDIAN SECTION
64.367	64.504	723.36	8.50	2.00	683.17	37.95	73.93	68.32	RT SHOULDER
64.504	64.562	306.24	-						LONG BRANCH BRIDGE EXCEPTION
64.562	64.646	443.52	8.50	2.00	418.88	23.27	45.33	41.89	RT SHOULDER
64.663	64.803	739.20	VARIES	2.00	844.44	46.91	91.38	84.44	RT SHOULDER (LONG BRANCH LAKE RD ACCEL LANE)
64.803	65.863	5596.80	8.50	2.00	5285.87	293.66	572.05	528.59	RT SHOULDER
65.863	65.957	496.32	8.50	2.00	468.75	26.04	50.73	46.87	RT SHOULDER PAVEMENT MILL/FILL UNDER BRIDGE
65.957	67.301	7096.32	8.50	2.00	6702.08	372.34	725.32	670.21	RT SHOULDER
67.301	67.500	1050.72	8.50	2.00	992.35	55.13	107.39	99.23	RT SHOULDER
67.500	67.652	802.56	VARIES	2.00	966.67	53.70	104.61	96.67	RT SHOULDER ALONG CONC EXIT LANE @ RTE C/O
67.725	67.847	644.16	8.50	2.00	608.37	33.80	65.84	60.84	RT SHOULDER
67.847	67.901	285.12	-						RTE C/O BRIDGE EXCEPTION
67.940	68.022	432.96	8.50	2.00	408.91	22.72	44.26	40.89	RT SHOULDER
68.079	68.196	617.76	VARIES	2.00	666.67	37.04	72.15	66.67	(MILL/FILL) RT SHOULDER (RTE C/O ACCEL LANE)
68.196	69.560	7201.92	8.50	2.00	6801.81	377.88	736.11	680.18	RT SHOULDER TO END OF PROJECT
61.669	62.343	3558.72	-	-	-	-	42.79	-	SAFETY EDGE/SIDESLOPE IRREGULARITES FOR RT SHOULDER
64.562	67.500	15512.64	-	-	-	-	186.53	-	SAFETY EDGE/SIDESLOPE IRREGULARITES FOR RT SHOULDER
61.637	69.560	41833.44	-	-	-	-	503.03	-	SAFETY EDGE/SIDESLOPE IRREGULARITES FOR RT SHOULDER
61.637	69.560	41833.44	-	-	-	-	316.92	-	IRREGULARITIES AND SLOPE CORRECTION
						SUBTOTAL	4385.39	3082.67	

NOTE: FACTOR USED = 1.948 TONS PER CU.YD.

LINEAR GRADING CLASS II

LOG MILE	LOG MILE	ROUTE	DEPTH IN	QUANTITY STA	REMARKS
129.939	130.099	36 EBL	8	8.45	DITCH CUTTING ALONG DECEL LANE
62.503	62.655	36 WBL	8	8.03	DITCH CUTTING ALONG ACCEL LANE
			TOTAL	16.48	
			USE	16.5	

MISC. SEEDING AND MULCHING

LOG MILE	LOG MILE	LOCATION	LENGTH (FT)	QTY APPROX. (ACRES)	REMARKS
129.939	130.099	US 36 EBL	873	0.50	DITCH AREA FROM LINEAR GRADING
62.503	62.655	US 36 WBL	824	0.47	DITCH AREA FROM LINEAR GRADING
			TOTAL	1 LUMP SUM	

EROSION CONTROL

LOG MILE	LOG MILE	LOCATION	LENGTH (FT)	ROCK DITCH CHECK (LF)	REMARKS
129.939	130.099	US 36 EBL	873	72	DITCH AREA OF LINEAR GRADING
62.503	62.655	US 36 WBL	824	72	DITCH AREA OF LINEAR GRADING
		TOTAL		144	

WB 36 GRAVEL A CRUSHED STONE B

SHEET	LOG MILE	WIDTH FT.	QUANTITY TONS	REMARKS
6	63.367	30	6.50	EMERGENCY CROSSOVER VAR. AGGREGATE
6	67.327	30	6.50	EMERGENCY CROSSOVER VAR. AGGREGATE
6	69.107	30	6.50	EMERGENCY CROSSOVER VAR. AGGREGATE
	TOTAL		19.50	
	USE		20	

NOTE: FACTOR USED = 0.039 TONS PER S.Y./INCH

STATE OF MISSOURI
KEITH ALLEN KILLEN
NUMBER
PE-2007020292
PROFESSIONAL ENGINEER

06/17/2025 1:35:18 PM
KEITH ALLEN KILLEN - CIVIL
MO-PE-2007020292

DATE PREPARED: 6/17/2025

ROUTE	STATE
36	MO
DISTRICT	SHEET NO.
NE	3

COUNTY: MACON

JOB NO.: JNE0120

CONTRACT ID.

PROJECT NO.

BRIDGE NO.

DATE	DESCRIPTION

MISSOURI HIGHWAYS AND TRANSPORTATION COMMISSION

105 WEST CAPITOL
JEFFERSON CITY, MO 65102
1-888-ASK-MODOT (1-888-275-6636)

SUMMARY OF QUANTITIES
SHEET 5 OF 7

WBL RTE 36 CL. C PAVEMENT REPAIR (6.5" SP190 PG70-22)

LOG MILE	PANEL LENGTH FT	PANEL WIDTH FT	REMOVAL FOR CL. C REPAIR QUANTITY SQ. YD.	FURNISHING AND PLACING CL. C REPAIR QUANTITY TONS	REMARKS
61.714	6	30	20.0	7.01	WB - BOTH LANES
61.725	6	30	20.0	7.0	WB - BOTH LANES
61.772	6	30	20.0	7.0	WB - BOTH LANES
61.773	6	30	20.0	7.0	WB - BOTH LANES
61.782	6	30	20.0	7.0	WB - BOTH LANES
61.806	6	30	20.0	7.0	WB - BOTH LANES
61.828	6	30	20.0	7.0	WB - BOTH LANES
61.840	6	30	20.0	7.0	WB - BOTH LANES
61.862	6	30	20.0	7.0	WB - BOTH LANES
61.968	10	30	33.3	11.7	WB - BOTH LANES
61.979	6	30	20.0	7.0	WB - BOTH LANES
62.203	6	30	20.0	7.0	WB - BOTH LANES
62.224	10	30	33.3	11.7	WB - BOTH LANES
62.266	6	30	20.0	7.0	WB - BOTH LANES
62.282	6	30	20.0	7.0	WB - BOTH LANES
62.400	6	30	20.0	7.0	WB - BOTH LANES
62.415	6	30	20.0	7.0	WB - BOTH LANES
62.431	6	30	20.0	7.0	WB - BOTH LANES
62.438	6	30	20.0	7.0	WB - BOTH LANES
62.451	6	30	20.0	7.0	WB - BOTH LANES
62.462	6	30	20.0	7.0	WB - BOTH LANES
62.485	6	30	20.0	7.0	WB - BOTH LANES
62.497	6	30	20.0	7.0	WB - BOTH LANES
62.508	6	30	20.0	7.0	WB - BOTH LANES
62.519	6	30	20.0	7.0	WB - BOTH LANES
62.531	8	30	26.7	9.3	WB - BOTH LANES
62.542	6	30	20.0	7.0	WB - BOTH LANES
62.554	6	40	26.7	9.3	WB RAMP @ MACON 3 LANES + INSIDE SHLDR.
62.566	6	40	26.7	9.3	WB BOTH LANES +ACCEL LANE
62.577	6	40	26.7	9.3	WB BOTH LANES +ACCEL LANE
62.612	6	40	26.7	9.3	WB BOTH LANES +ACCEL LANE
62.706	8	30	26.7	9.3	WB - BOTH LANES
62.762	6	30	20.0	7.0	WB - BOTH LANES
62.767	10	30	33.3	11.7	WB - BOTH LANES
62.778	6	30	20.0	7.0	WB - BOTH LANES
62.783	6	30	20.0	7.0	WB - BOTH LANES
62.819	6	30	20.0	7.0	WB - BOTH LANES
62.831	6	30	20.0	7.0	WB - BOTH LANES
62.842	6	30	20.0	7.0	WB - BOTH LANES
62.853	8	30	26.7	9.3	WB - BOTH LANES
62.865	6	30	20.0	7.0	WB - BOTH LANES
62.878	8	30	26.7	9.3	WB - BOTH LANES
62.889	8	30	26.7	9.3	WB - BOTH LANES
62.901	6	30	20.0	7.0	WB - BOTH LANES
62.914	6	30	20.0	7.0	WB - BOTH LANES
62.959	6	30	20.0	7.0	WB - BOTH LANES
62.97	6	30	20.0	7.0	WB - BOTH LANES
62.981	6	30	20.0	7.0	WB - BOTH LANES
62.992	6	30	20.0	7.0	WB - BOTH LANES
63	6	30	20.0	7.0	WB - BOTH LANES
63.003	6	30	20.0	7.0	WB - BOTH LANES
63.01	6	30	20.0	7.0	WB - BOTH LANES
63.014	6	30	20.0	7.0	WB - BOTH LANES
63.032	6	30	20.0	7.0	WB - BOTH LANES
63.049	6	30	20.0	7.0	WB - BOTH LANES
63.06	6	30	20.0	7.0	WB - BOTH LANES
63.13	6	30	20.0	7.0	WB - BOTH LANES
63.141	6	30	20.0	7.0	WB - BOTH LANES
63.164	6	30	20.0	7.0	WB - BOTH LANES
63.175	10	30	33.3	11.7	WB - BOTH LANES
63.187	6	30	20.0	7.0	WB - BOTH LANES
63.198	6	30	20.0	7.0	WB - BOTH LANES
63.207	6	30	20.0	7.0	WB - BOTH LANES
63.221	6	30	20.0	7.0	WB - BOTH LANES
63.223	6	30	20.0	7.0	WB - BOTH LANES
63.23	6	30	20.0	7.0	WB - BOTH LANES
63.234	6	30	20.0	7.0	WB - BOTH LANES
63.84	6	30	20.0	7.0	WB - BOTH LANES
64.506	12	85	113.3	39.7	WB - DRIVING
64.536	25	38	105.6	37.0	BRIDGE APPROACH REPAIR
64.562	6	30	20.0	7.0	WB - BOTH LANES
64.666	6	30	20.0	7.0	WB - BOTH LANES
65.009	6	30	20.0	7.0	WB - BOTH LANES
65.239	6	30	20.0	7.0	WB - BOTH LANES
65.501	6	30	20.0	7.0	WB - BOTH LANES

WBL RTE 36 CL. C PAVEMENT REPAIR (6.5" SP190 PG70-22)

LOG MILE	PANEL LENGTH FT	PANEL WIDTH FT	REMOVAL FOR CL. C REPAIR QUANTITY SQ. YD.	FURNISHING AND PLACING CL. C REPAIR QUANTITY TONS	REMARKS
67.394	6	30	20.0	7.0	WB - BOTH LANES
67.545	6	30	20.0	7.0	WB - BOTH LANES
67.816	8	30	26.7	9.3	WB - BOTH LANES
67.838	8	30	26.7	9.3	WB - BOTH LANES
67.85	6	30	20.0	7.0	WB - BOTH LANES
67.852	6	30	20.0	7.0	WB - BOTH LANES
68.201	15	30	50.0	17.5	WB - BOTH LANES
			197.6	69.1	ADDITIONAL AT 10%
	WBL SUBTOTAL		2173.40	760.41	

NOTE: FACTOR USED 1.940 TONS/CU. YD.

PAVEMENT GROOVING SURFACE

LOG MILE	LOG MILE	LOCATION	NET LENGTH FEET	AVERAGE WIDTH FEET	PAVEMENT GROOVING SURFACE S.Y.	REMARKS
128.450	128.950	US 36 EBL	2640.0	22.5	6600	
				TOTAL	6600	

EB 36 CL. C PAVEMENT REPAIR (6.5" SP190 PG70-22)

LOG MILE	PANEL LENGTH FT	PANEL WIDTH FT	REMOVAL FOR CL. C REPAIR QUANTITY SQ.YD.	FURNISHING AND PLACING FOR CL. C REPAIR QUANTITY TONS	REMARKS
124.293	6	30	20.0	7.01	BOTH LANES
124.440	6	30	20.0	7.01	BOTH LANES
124.442	6	30	20.0	7.01	BOTH LANES
124.451	6	30	20.0	7.01	BOTH LANES
124.724	12	14	18.7	6.54	DRIVING LANE
124.741	12	30	40.0	14.01	BOTH LANES
124.742	6	30	20.0	7.01	BOTH LANES
124.745	6	30	20.0	7.01	BOTH LANES
124.747	6	30	20.0	7.01	BOTH LANES
124.750	6	30	20.0	7.01	BOTH LANES
124.812	6	30	20.0	7.01	BOTH LANES
124.828	8	30	26.7	9.34	BOTH LANES
124.840	6	30	20.0	7.01	BOTH LANES
125.159	6	30	20.0	7.01	BOTH LANES
125.422	12	30	40.0	14.01	BOTH LANES
126.196	8	30	26.7	9.34	BOTH LANES
128.100	6	30	20.0	7.01	BOTH LANES
128.117	6	30	20.0	7.01	BOTH LANES
128.151	25	38	105.6	36.97	BRIDGE APPROACH CONCRETE REPAIR LONG BRANCH
128.157	30	30	100.0	35.03	BOTH LANES
128.165	6	30	20.0	7.01	BOTH LANES
128.168	6	30	20.0	7.01	BOTH LANES
129.690	12	50	66.7	23.35	DRIVING LANE
129.744	6	30	20.0	7.01	BOTH LANES
129.772	6	30	20.0	7.01	BOTH LANES
129.774	6	30	20.0	7.01	BOTH LANES
129.783	6	30	20.0	7.01	BOTH LANES
129.830	6	30	20.0	7.01	BOTH LANES
129.842	3	6	2.0	0.70	BRIDGE CONCRETE DECK REPAIR - HIGHWAY PATROL
129.873	6	30	20.0	7.01	BOTH LANES
129.914	12	50	66.7	23.35	DRIVING LANE
129.958	6	30	20.0	7.01	BOTH LANES
129.958	12	150	200.0	70.06	DRIVING LANE
130.070	12	30	40.0	14.01	DRIVING LANE
130.157	6	30	20.0	7.01	BOTH LANES
130.214	15	30	50.0	17.51	BOTH LANES
130.215	6	30	20.0	7.01	BOTH LANES
130.313	6	30	20.0	7.01	BOTH LANES
130.707	8	30	26.7	9.34	BOTH LANES
130.798	6	30	20.0	7.01	BOTH LANES
130.964	6	30	20.0	7.01	BOTH LANES
130.074	6	30.0	20.0	7.01	BOTH LANES
			137.0	48.0	ADDITIONAL 10% FOR OTHERS
		EBL SUBTOTAL	1506.80	527.84	
		WBL SUBTOTAL	2173.40	760.50	
		TOTAL	3680.20	1288.30	

NOTE: FACTOR USED 1.940 TONS/CU. YD.

STATE OF MISSOURI
KEITH ALLEN KILLEN
NUMBER PE-2007020292
PROFESSIONAL ENGINEER

06/17/2025 1:35:44 PM
KEITH ALLEN KILLEN - CIVIL
MO-PE-2007020292

DATE PREPARED
6/17/2025

ROUTE	STATE
36	MO
DISTRICT	SHEET NO.
NE	3

COUNTY
MACON

JOB NO.
JNE0120

CONTRACT ID.

PROJECT NO.

BRIDGE NO.

DESCRIPTION	DATE

MISSOURI HIGHWAYS AND TRANSPORTATION COMMISSION

105 WEST CAPITOL
JEFFERSON CITY, MO 65102
1-888-ASK-MODOT (1-888-275-6636)

SUMMARY OF QUANTITIES
SHEET 6 OF 7

SIGN	SIZE IN.	AREA SQ.FT.	QTY EACH	TOTAL AREA SQ.FT.	QTY RELOC EACH	TOTAL RELOC SQ.FT.	SIGN NO.	DESCRIPTION
WARNING SIGNS								
WO1-1L	48X48	16.00						TURN (SYMBOL LEFT)
WO1-1R	48X48	16.00						TURN (SYMBOL RIGHT)
WO1-2L	48X48	16.00						CURVE (SYMBOL LEFT)
WO1-2R	48X48	16.00						CURVE (SYMBOL RIGHT)
WO1-3L	48X48	16.00						REVERSE TURN (SYMBOL LEFT)
WO1-3R	48X48	16.00						REVERSE TURN (SYMBOL RIGHT)
WO1-4L	48X48	16.00						REVERSE CURVE (SYMBOL LEFT)
WO1-4R	48X48	16.00						REVERSE CURVE (SYMBOL RIGHT)
WO1-4bL	48X48	16.00						DOUBLE ARROW REVERSE CURVE (SYMBOL LEFT)
WO1-4bR	48X48	16.00						DOUBLE ARROW REVERSE CURVE (SYMBOL RIGHT)
WO1-4cL	48X48	16.00						TRIPLE ARROW REVERSE CURVE (SYMBOL LEFT)
WO1-4cR	48X48	16.00						TRIPLE ARROW REVERSE CURVE (SYMBOL RIGHT)
WO1-6	60X30	12.50						HORIZONTAL ARROW (SYMBOL)
WO1-6a	72X36	18.00						HORIZ. ARROW (SYMBOL ON PERMANENT BARRICADE)
WO1-7	60X30	12.50						DOUBLE HEAD HORIZONTAL ARROW (SYMBOL)
WO1-7a	72X36	18.00						DOUBLE HEAD HORIZ. ARROW (SYMBOL ON PERM. BARR.)
WO1-8	18X24	3.00						CHEVRON (SYMBOL)
WO1-8a	30X36	7.50						CHEVRON (SYMBOL FOR DIVIDED HIGHWAYS)
WO3-1	48X48	16.00						STOP AHEAD (SYMBOL)
WO3-2	48X48	16.00	2	32.00			40	YIELD AHEAD (SYMBOL)
WO3-3	48X48	16.00						SIGNAL AHEAD (SYMBOL)
WO3-4	48X48	16.00						BE PREPARED TO STOP
WO3-5	48X48	16.00						SPEED LIMIT AHEAD
WO4-1L	48X48	16.00						MERGE (SYMBOL FROM LEFT)
WO4-1R	48X48	16.00	2	32.00			55	MERGE (SYMBOL FROM RIGHT)
WO4-1aL	48X48	16.00	2	32.00			6A	MERGE (LEFT)
WO4-1aR	48X48	16.00						MERGE (RIGHT)
WO5-1	48X48	16.00	2	32.00			43	ROAD/BRIDGE/RAMP NARROWS
WO5-3	48X48	16.00						ONE LANE BRIDGE
WO5-5	48X48	16.00						NARROW LANES
WO6-1	48X48	16.00						DIVIDED HIGHWAY (SYMBOL)
WO6-2	48X48	16.00						DIVIDED HIGHWAY END (SYMBOL)
WO6-3	48X48	16.00						TWO WAY TRAFFIC (SYMBOL)
WO7-3a	30X24	5.00						NEXT XX MILES (PLAQUE)
WO8-1	48X48	16.00	2	32.00			50	BUMP
WO8-2	48X48	16.00						DIP
WO8-3	48X48	16.00						PAVEMENT ENDS
WO8-4	48X48	16.00						SOFT SHOULDER
WO8-5	48X48	16.00						SLIPPERY WHEN WET (SYMBOL)
WO8-6	48X48	16.00						TRUCK CROSSING
WO8-6c	48X48	16.00						TRUCK ENTRANCE
WO8-7	36X36	9.00						LOOSE GRAVEL
WO8-7a	36X36	9.00						FRESH OIL / LOOSE GRAVEL
WO8-9	48X48	16.00						LOW SHOULDER
WO8-11	48X48	16.00	10	160.00			36	UNEVEN LANES
WO8-12	48X48	16.00						NO CENTER LINE
WO8-15	48X48	16.00	2	32.00				GROOVED PAVEMENT
WO8-15P	30X24	5.00						MOTORCYCLE (PLAQUE)
WO8-17L	48X48	16.00						SHOULDER DROP-OFF (SYMBOL LEFT)
WO8-17R	48X48	16.00	9	144.00			23	SHOULDER DROP-OFF (SYMBOL RIGHT)
WO8-17P	30X24	5.00	9	45.00			23	SHOULDER DROP-OFF (PLAQUE)
W10-1	42RND.	9.62						RAILROAD CROSSING
WO12-1	24X24	4.00						DOUBLE DOWN ARROW (SYMBOL)
WO12-2	48X48	16.00						LOW CLEARANCE (SYMBOL)
WO12-2x	24X18	3.00						LOW CLEARANCE (PLAQUE)
WO12-2a	84X24	14.00						OVERHEAD LOW CLEARANCE (FEET AND INCHES)
WO12-4	120X60	50.00						LOW CLEARANCE XX FT XX IN XX MILES AHEAD
WO12-5	120X60	50.00						WIDTH RESTRICTION XX FT XX IN XX MILES AHEAD
WO13-1	30X30	6.25						ADVISORY SPEED (PLAQUE)
WO16-2	30X24	5.00						XXX FEET (PLAQUE)
WO16-3	30X24	5.00						X MILE (PLAQUE)
WO20-1	48X48	16.00	12	192.00			2	ROAD/BRIDGE/RAMP WORK AHEAD
WO20-2	48X48	16.00						DETOUR AHEAD
WO20-3	48X48	16.00	2	32.00			8	ROAD CLOSED AHEAD
WO20-4	48X48	16.00						ONE LANE ROAD AHEAD
WO20-5	48X48	16.00	4	64.00			5	RIGHT/CENTER/LEFT LANE CLOSED AHEAD
WO20-5a	48X48	16.00						2 RIGHT/CENTER/LEFT LANES CLOSED AHEAD
WO20-6a	48X48	16.00	4	64.00			6	RIGHT/CENTER/LEFT LANE CLOSED
WO20-7a	48X48	16.00						FLAGGER (SYMBOL)
WO21-2	36X36	9.00						FRESH OIL
WO21-5	48X48	16.00	4	64.00			21	SHOULDER WORK / SHOULDER WORK AHEAD
WO22-1	48X48	16.00						BLASTING ZONE AHEAD
WO22-2	42X36	10.50						TURN OFF 2-WAY RADIO AND PHONE
WO22-3	42X36	10.50						END BLASTING ZONE
GO22-1	21X15	2.19	2	4.38				WET PAINT (ARROW PIVOTS)

SIGN	SIZE IN.	AREA SQ.FT.	QTY EACH	TOTAL SQ.FT.	QTY RELOC EACH	TOTAL RELOC SQ.FT.	SIGN NO.	DESCRIPTION
GUIDE SIGNS								
E05-1	36X48	12.00	2	24.00			49	GORE EXIT
E05-2	48X36	12.00						EXIT OPEN
E05-2a	48X36	12.00	1	12.00			56	EXIT CLOSED
GO20-1	60X24	10.00	4	40.00			1	ROAD WORK NEXT 7, 8 MILES
GO20-2	48X24	8.00	4	32.00			26	END ROAD WORK
GO20-4	36X18	4.50						PILOT CAR FOLLOW ME
GO20-4a	42X30	8.75						PILOT CAR IN USE WAIT & FOLLOW
GO20-4a	18X12	1.50						PILOT CAR IN USE WAIT & FOLLOW
GO20-5aP	36X24	6.00	4	24.00			54	WORK ZONE (PLAQUE)
MO4-8a	24X18	3.00						END DETOUR
MO4-9L	48X36	12.00						DETOUR (LEFT)
MO4-9R	48X36	12.00						DETOUR (RIGHT)
MO4-9P	48X12	4.00						STREET NAME (PLAQUE)
MO4-10L	48X18	6.00						DETOUR ARROW (LEFT)
MO4-10R	48X18	6.00						DETOUR ARROW (RIGHT)
REGULATORY SIGNS								
R1-1	48X48	13.25						STOP
R1-2	48TRI.	6.93	2	13.86			13	YIELD
R1-2a	36X36	9.00						TO ONCOMING TRAFFIC (PLAQUE)
R1-3P	30X12	2.50						ALL WAY (PLAQUE)
R2-1	36X48	12.00	8	96.00			4, 25	SPEED LIMIT 55, 65
R3-1	48X48	16.00						NO RIGHT TURN (SYMBOL)
R3-2	48X48	16.00						NO LEFT TURN (SYMBOL)
R3-3	36X36	9.00						NO TURNS
R3-4	48X48	16.00						NO U-TURN (SYMBOL)
R3-7L	30X30	6.25						LEFT LANE MUST TURN LEFT
R3-7R	30X30	6.25						RIGHT LANE MUST TURN RIGHT
R4-1	36X48	12.00	4	48.00			46	DO NOT PASS
R4-2	36X48	12.00	4	48.00			46A	PASS WITH CARE
R4-7a	36X48	12.00						KEEP RIGHT (HORIZONTAL ARROW)
R4-8a	36X48	12.00						KEEP LEFT (HORIZONTAL ARROW)
R5-1	30X30	6.25						DO NOT ENTER
R5-1a	36X24	6.00						WRONG WAY
R6-1L	54X18	6.75						ONE WAY ARROW (LEFT)
R6-1R	54X18	6.75						ONE WAY ARROW (RIGHT)
R6-2L	24X30	5.00						ONE WAY (LEFT)
R6-2R	24X30	5.00						ONE WAY (RIGHT)
R9-9	24X12	2.00						SIDEWALK CLOSED
R9-11L	24X18	3.00						SIDEWALK CLOSED AHEAD, (ARROW LEFT) CROSS HERE
R9-11R	24X18	3.00						SIDEWALK CLOSED AHEAD, (ARROW RIGHT) CROSS HERE
R10-6	24X36	6.00						STOP HERE ON RED (45^ ARROW)
R11-2	48X30	10.00	1	10.00				ROAD CLOSED
R11-3a	60X30	12.50						ROAD CLOSED XX MILES AHEAD LOCAL TRAFFIC ONLY
R11-4	60X30	12.50						ROAD CLOSED TO THRU TRAFFIC
CONST-3A	60X48	20.00	4	80.00			53	FINE SIGN
CONST-3X	56X12	4.67	4	18.68			53A	SPEEDING/PASSING (PLATE)
MISCELLANEOUS SIGNS								
CONST-5	48X36	12.00						POINT OF PRESENCE
CONST-5	96X48	32.00						POINT OF PRESENCE
CONST-8	48X36	12.00	4	48.00			51	WORK ZONE NO PHONE ZONE
CONST-5P	42X6	21.00						COMPLETED AS PROMISED
SPECIAL	96X24	16.00	2	32.00				CLOSED

616-10.05 CONSTRUCTION SIGNS	TOTAL 1488*	
616-10.10 RELOCATED SIGNS		TOTAL

EFFECTIVE: 07-01-2025

ITEM NUMBER	TOTAL QTY	DESCRIPTION
6122008		IMPACT ATTENUATOR 40 MPH (SAND BARRELS)
6122009		IMPACT ATTENUATOR 45 MPH (SAND BARRELS)
6122010		IMPACT ATTENUATOR 50 MPH (SAND BARRELS)
6122012		IMPACT ATTENUATOR 55 MPH (SAND BARRELS)
6122014		IMPACT ATTENUATOR 60 MPH (SAND BARRELS)
6122017		IMPACT ATTENUATOR 65 MPH (SAND BARRELS)
6122019		IMPACT ATTENUATOR 70 MPH (SAND BARRELS)
6122020		REPLACEMENT SAND BARREL
6122030		IMPACT ATTENUATOR (RELOCATION)
6122040		WORK ZONE CRASH CUSHION (NARROW)
6122041		WORK ZONE CRASH CUSHION (RELOCATION)
6123001	1	TRUCK MOUNTED ATTENUATOR (TMA)
6161012		BUOYS (BOATS KEEP OUT)
6161013		BUOYS (NO WAKE)
6161014		SPECIAL SIGN ASSEMBLY (BOATS KEEP OUT)
6161020		CHANNELIZER (DRUM-LIKE)
6161022		CHANNELIZER (CONE)
6161025	400*	CHANNELIZER (TRIM-LINE)
6161026		CHANNELIZER (VERTICAL PANEL)
6161030	15*	TYPE 3 MOVEABLE BARRICADE
6161033	62*	DIRECTION INDICATOR BARRICADE
6161040	4*	FLASHING ARROW PANEL
6161047		TYPE 3 OBJECT MARKER
6161055		SEQUENTIAL FLASHING WARNING LIGHT
6161070		TUBULAR MARKER
6161095		RADAR SPEED ADVISORY SYSTEM
6161096		CHANGEABLE MESSAGE SIGN, COMMISSION FURNISHED/RETAINED
6161098A	2	CHANGEABLE MESSAGE SIGN WITHOUT COMM. INTERFACE, CONTRACTOR FURNISHED/RETAINED
6161099		CHANGEABLE MESSAGE SIGN WITH COMM. INTERFACE, CONTRACTOR FURNISHED/RETAINED
6162000A		WORK ZONE TRAFFIC SIGNAL SYSTEM
6162002		TEMPORARY LONG-TERM RUMBLE STRIPS
6173600D		TEMPORARY TRAFFIC BARRIER, CONTRACTOR FURNISHED/RETAINED
6173700B		TEMP. TRAFFIC BARRIER ANCHORED, CONTRACTOR FURNISHED/RETAINED
6173706		TEMP. TRAFFIC BARRIER STIFFNESS TRANSITION CONTRACTOR FURNISHED/RETAINED
6174000A		TEMP. TRAFFIC BARRIER HEIGHT TRANSITION, CONTRACTOR FURNISHED/RETAINED
6175010A		RELOCATING TEMPORARY TRAFFIC BARRIER
6175011B		RELOCATING TEMP. TRAFFIC BARRIER ANCHORED
6175013		RELOCATING TEMP. TRAFFIC BARRIER STIFFNESS
6175020A		RELOCATING TEMP. TRAFFIC BARRIER HEIGHT
6208064A		TEMPORARY RAISED PAVEMENT MARKER
9029400		TEMPORARY TRAFFIC SIGNALS
9029401		TEMPORARY TRAFFIC SIGNALS AND LIGHTING

616-99.01	1	LUMP SUM TEMPORARY TRAFFIC CONTROL (*ITEM INCLUDED)

STATE OF MISSOURI
KEITH ALLEN KILLEN
NUMBER PE-2007020292
PROFESSIONAL ENGINEER
06/02/2025 1:48:39 PM
KEITH ALLEN KILLEN - CIVIL
MO-PE-2007020292

DATE PREPARED 6/2/2025

ROUTE	STATE
36	MO
DISTRICT	SHEET NO.
NE	3

COUNTY MACON

JOB NO. JNE0120

CONTRACT ID.

PROJECT NO.

BRIDGE NO.

DESCRIPTION

DATE

MISSOURI HIGHWAYS AND TRANSPORTATION COMMISSION

105 WEST CAPITOL
JEFFERSON CITY, MO 65102
1-888-ASK-MODOT (1-888-275-6636)

SUMMARY OF QUANTITIES
SHEET 7 OF 7

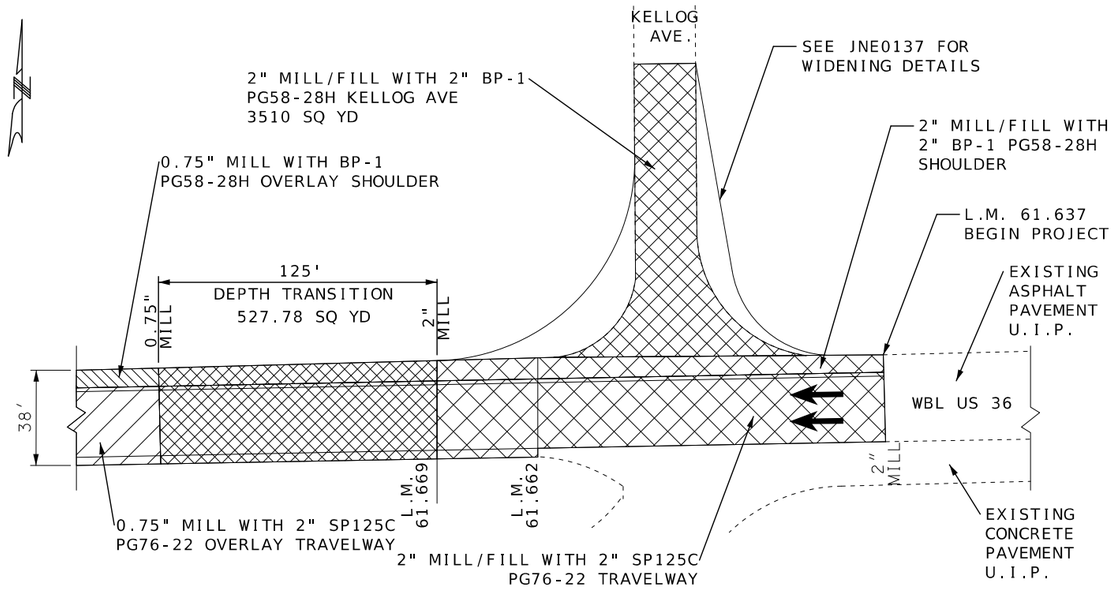

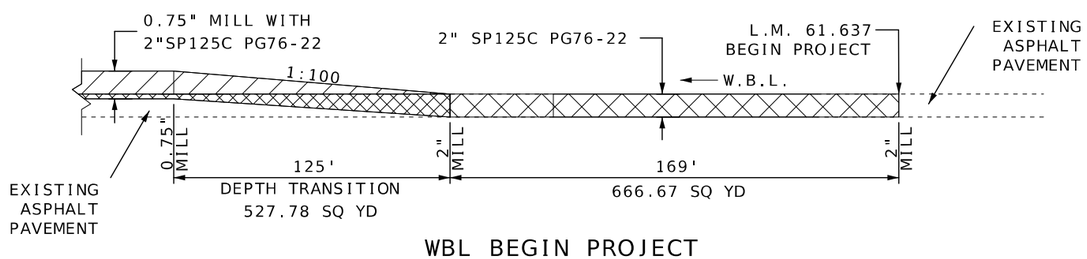

WBL BEGIN PROJECT

- BP-1 OVERLAY
- SP125 OVERLAY
- MODIFIED COLDMILLING AND OVERLAY
- TYPE 1 AGGREGATE
- FULL DEPTH COLDMILLING AND OVERLAY

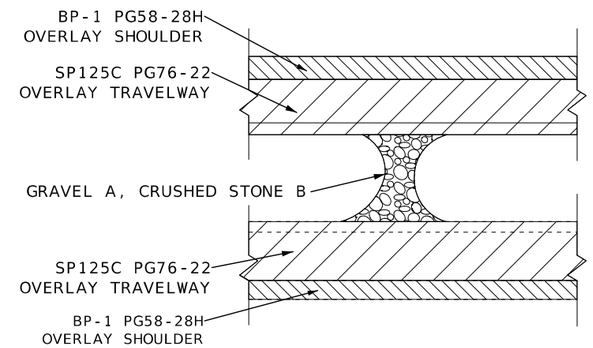

EMERGENCY CROSSOVERS @
L.M. 63.382
L.M. 67.342
L.M. 69.122

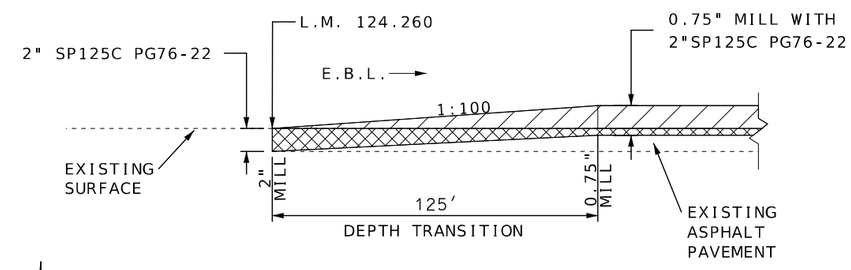

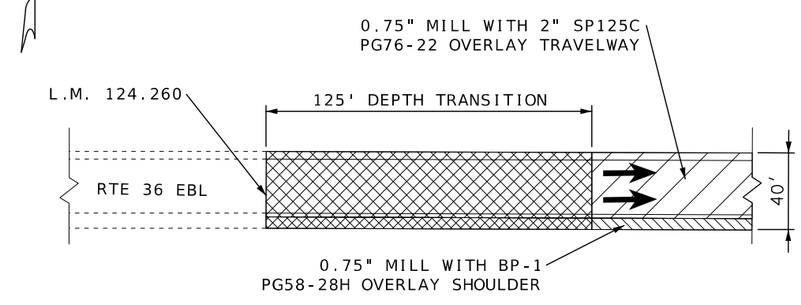

EBL BEGIN PROJECT

NOT TO SCALE

STATE OF MISSOURI
KEITH ALLEN KILLEN
NUMBER PE-2007020292
PROFESSIONAL ENGINEER
06/17/2025 11:06:54 AM
KEITH ALLEN KILLEN - CIVIL
MO-PE-2007020292

DATE PREPARED	6/16/2025
ROUTE	36
STATE	MO
DISTRICT	NE
SHEET NO.	4
COUNTY	MACON
JOB NO.	JNE0120
CONTRACT ID.	
PROJECT NO.	
BRIDGE NO.	

DATE	DESCRIPTION

MISSOURI HIGHWAYS AND TRANSPORTATION COMMISSION
105 WEST CAPITOL
JEFFERSON CITY, MO 65102
1-888-ASK-MODOT (1-888-275-6636)

SPECIAL SHEET
SHEET 1 OF 11

BP-1 OVERLAY

SP125 OVERLAY

MODIFIED COLDMILLING AND OVERLAY

TYPE 1 AGGREGATE

FULL DEPTH COLDMILLING AND OVERLAY

BITUMINOUS FOG SEAL

NOT TO SCALE

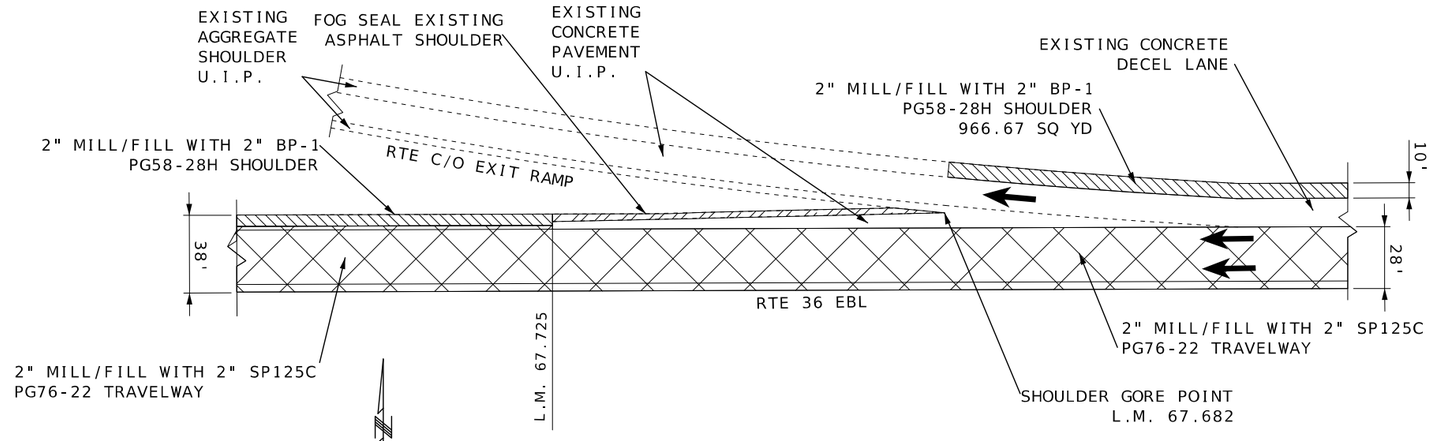

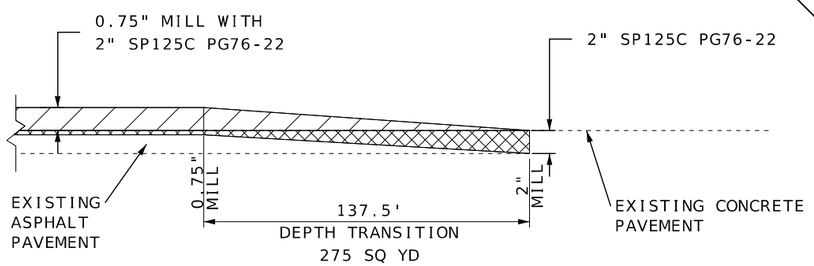

SECTION A-A

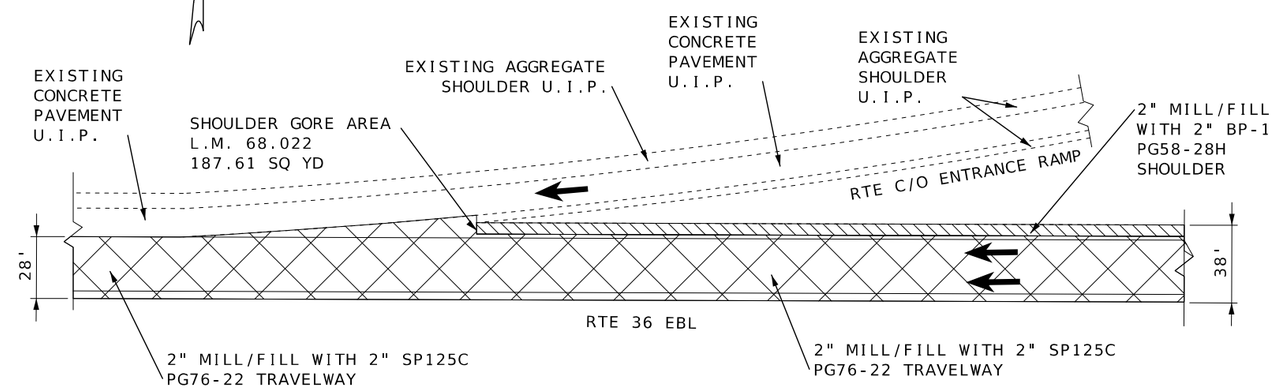

WBL RAMPS AT RTE. C/O INTERCHANGE

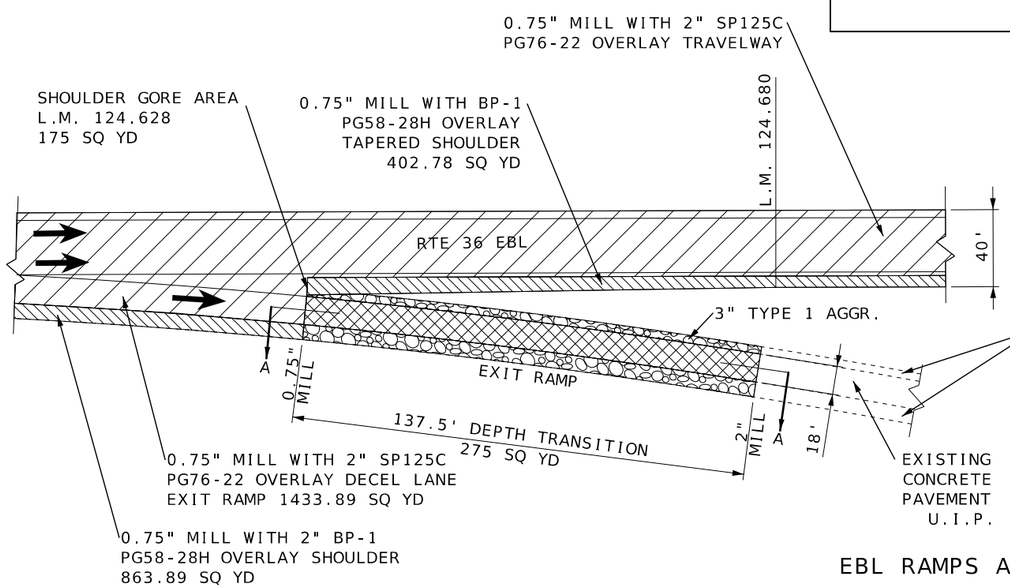

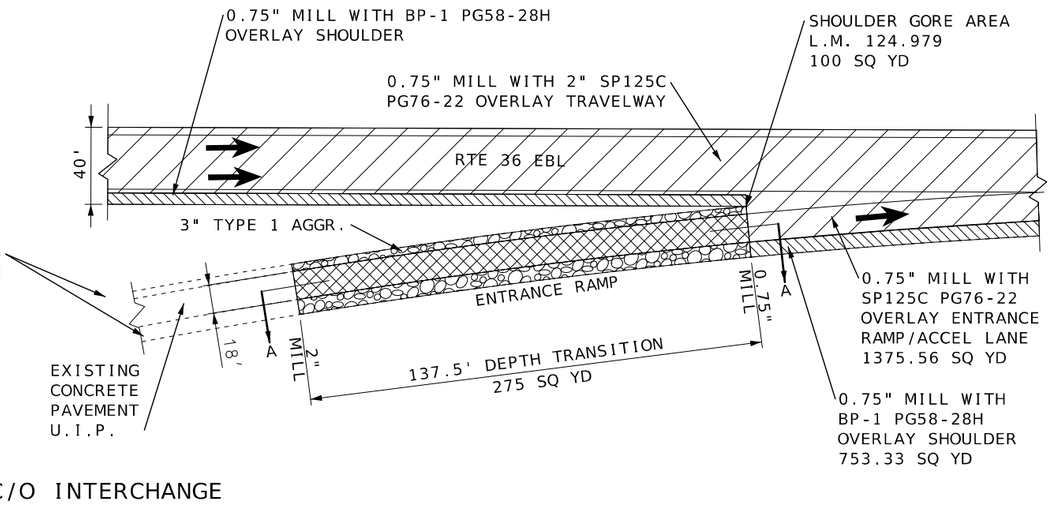

EBL RAMPS AT RTE. C/O INTERCHANGE

STATE OF MISSOURI
KEITH ALLEN KILLEN
NUMBER PE-2007020292
PROFESSIONAL ENGINEER

06/17/2025 11:06:54 AM
KEITH ALLEN KILLEN - CIVIL
MO-PE-2007020292

DATE PREPARED	6/16/2025
ROUTE	36
STATE	MO
DISTRICT	NE
SHEET NO.	5
COUNTY	MACON
JOB NO.	JNE0120
CONTRACT ID.	
PROJECT NO.	
BRIDGE NO.	

DATE	DESCRIPTION

MISSOURI HIGHWAYS AND TRANSPORTATION COMMISSION

105 WEST CAPITOL
JEFFERSON CITY, MO 65102
1-888-ASK-MODOT (1-888-275-6636)

SPECIAL SHEET
SHEET 2 OF 11

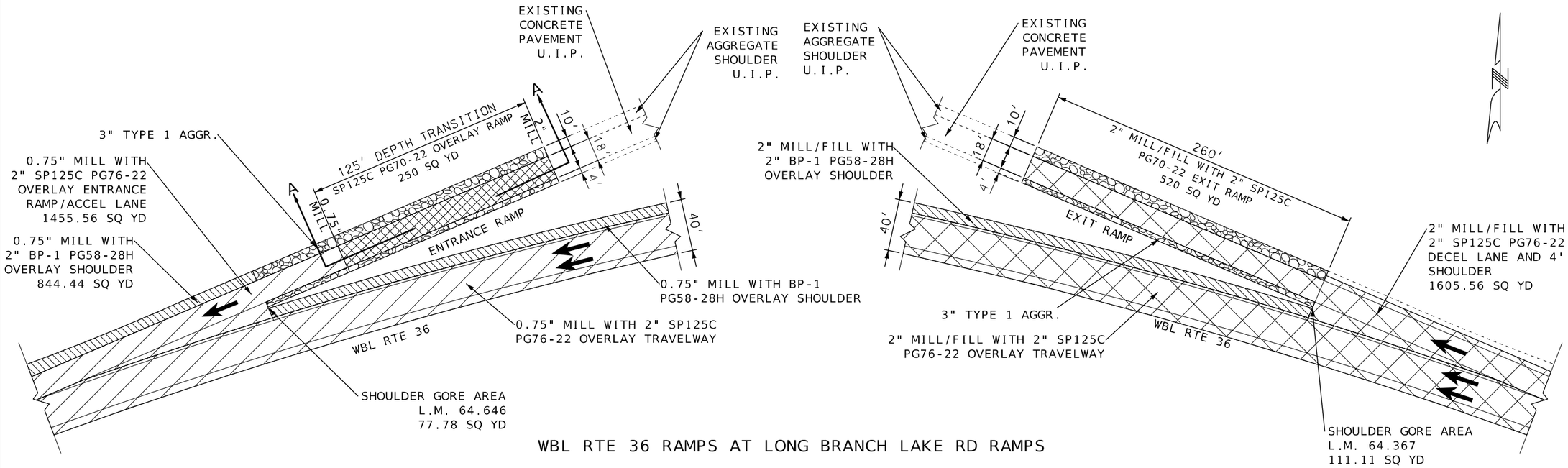

WBL RTE 36 RAMPS AT LONG BRANCH LAKE RD RAMPS

BP-1 OVERLAY

SP125 OVERLAY

MODIFIED COLDMILLING AND OVERLAY

TYPE 1 AGGREGATE

FULL DEPTH COLDMILLING AND OVERLAY

NOT OT SCALE

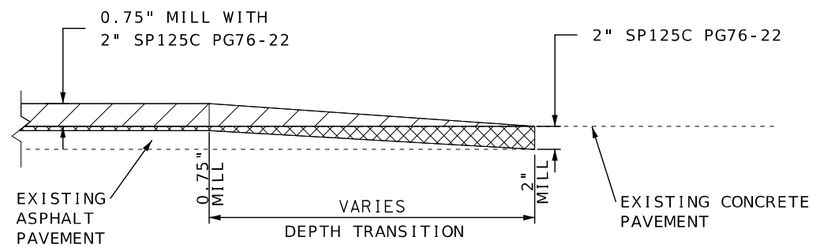

SECTION A-A

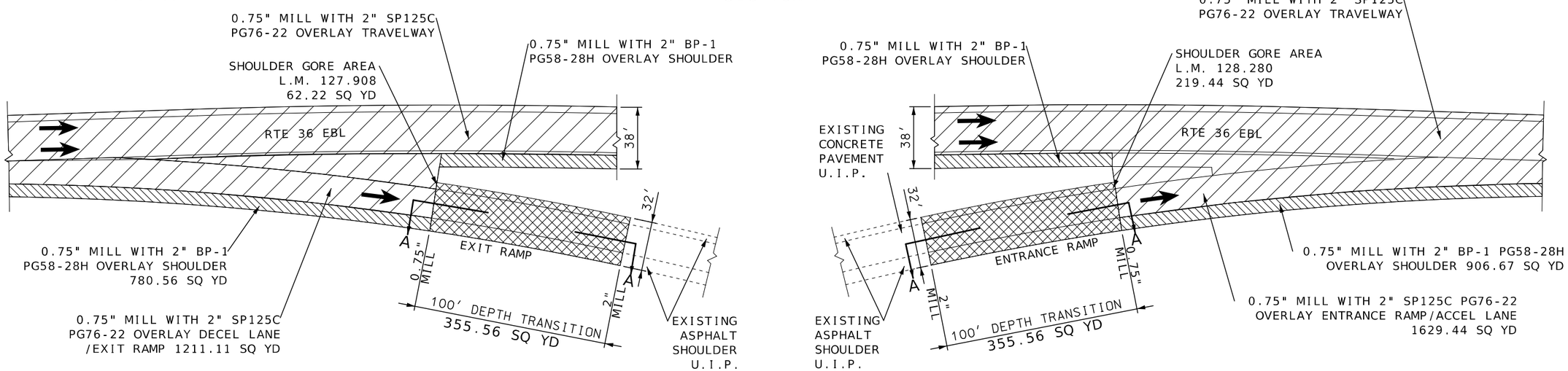

EBL RTE 36 RAMPS AT LONG BRANCH LAKE RD RAMPS

STATE OF MISSOURI
KEITH ALLEN KILLEN
NUMBER
PE-2007020292
PROFESSIONAL ENGINEER
06/17/2025 11:06:54 AM
KEITH ALLEN KILLEN - CIVIL
MO-PE-2007020292

DATE PREPARED	6/16/2025
ROUTE 36	STATE MO
DISTRICT NE	SHEET NO. 6
COUNTY MACON	
JOB NO. JNE0120	
CONTRACT ID.	
PROJECT NO.	
BRIDGE NO.	

DATE	DESCRIPTION

MISSOURI HIGHWAYS AND TRANSPORTATION COMMISSION

105 WEST CAPITOL
JEFFERSON CITY, MO 65102
1-888-ASK-MODOT (1-888-275-6636)

SPECIAL SHEET
SHEET 3 OF 11

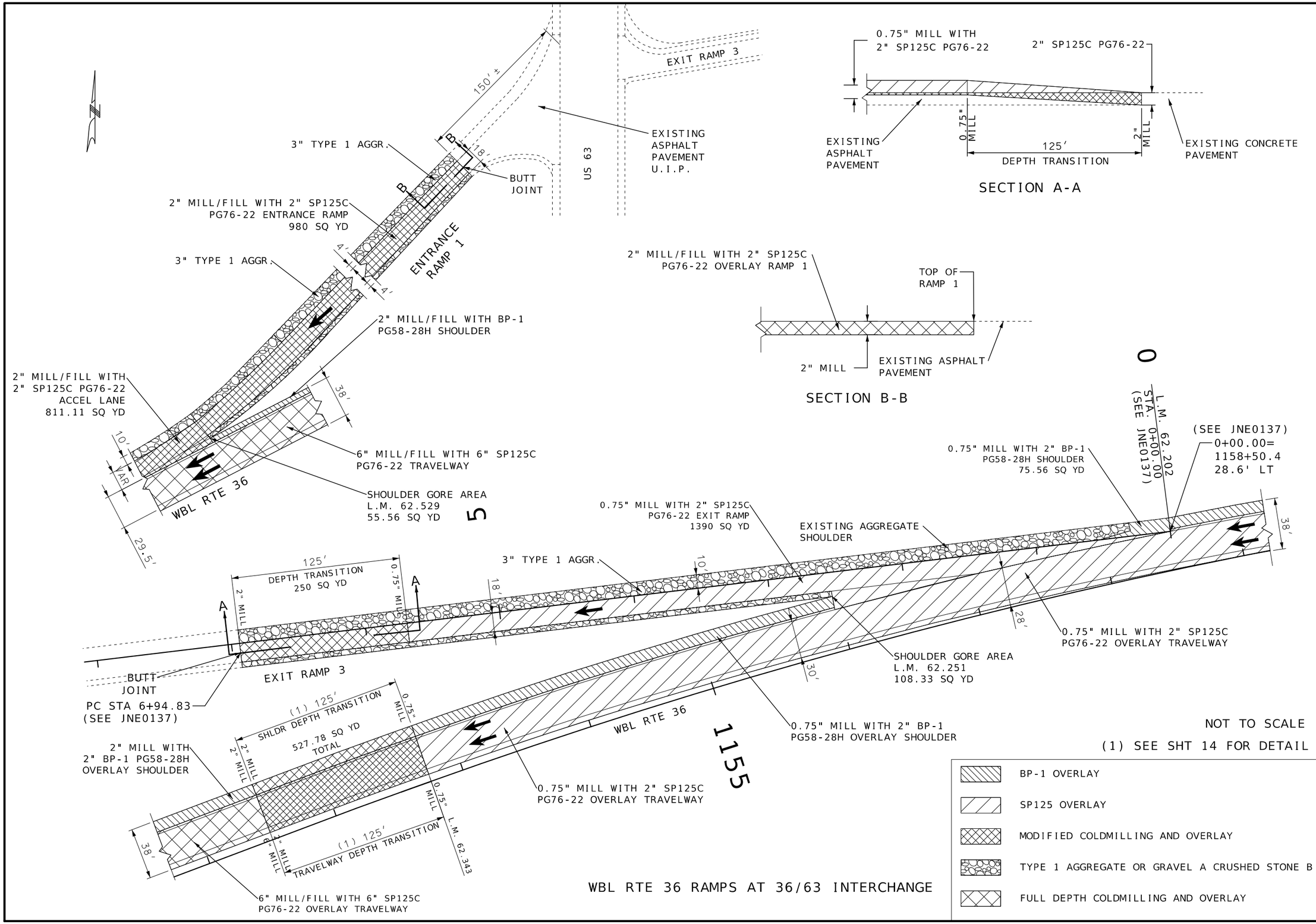

WBL RTE 36 RAMPS AT 36/63 INTERCHANGE

STATE OF MISSOURI
KEITH ALLEN KILLEN
NUMBER PE-2007020292
PROFESSIONAL ENGINEER
06/17/2025 11:06:54 AM
KEITH ALLEN KILLEN - CIVIL
MO-PE-2007020292

DATE PREPARED	6/16/2025
ROUTE 36	STATE MO
DISTRICT NE	SHEET NO. 7
COUNTY	MACON
JOB NO.	JNE0120
CONTRACT ID.	
PROJECT NO.	
BRIDGE NO.	

DESCRIPTION

DATE

MISSOURI HIGHWAYS AND TRANSPORTATION COMMISSION
105 WEST CAPITOL
JEFFERSON CITY, MO 65102
1-888-ASK-MODOT (1-888-275-6636)

SPECIAL SHEET
SHEET 4 OF 11

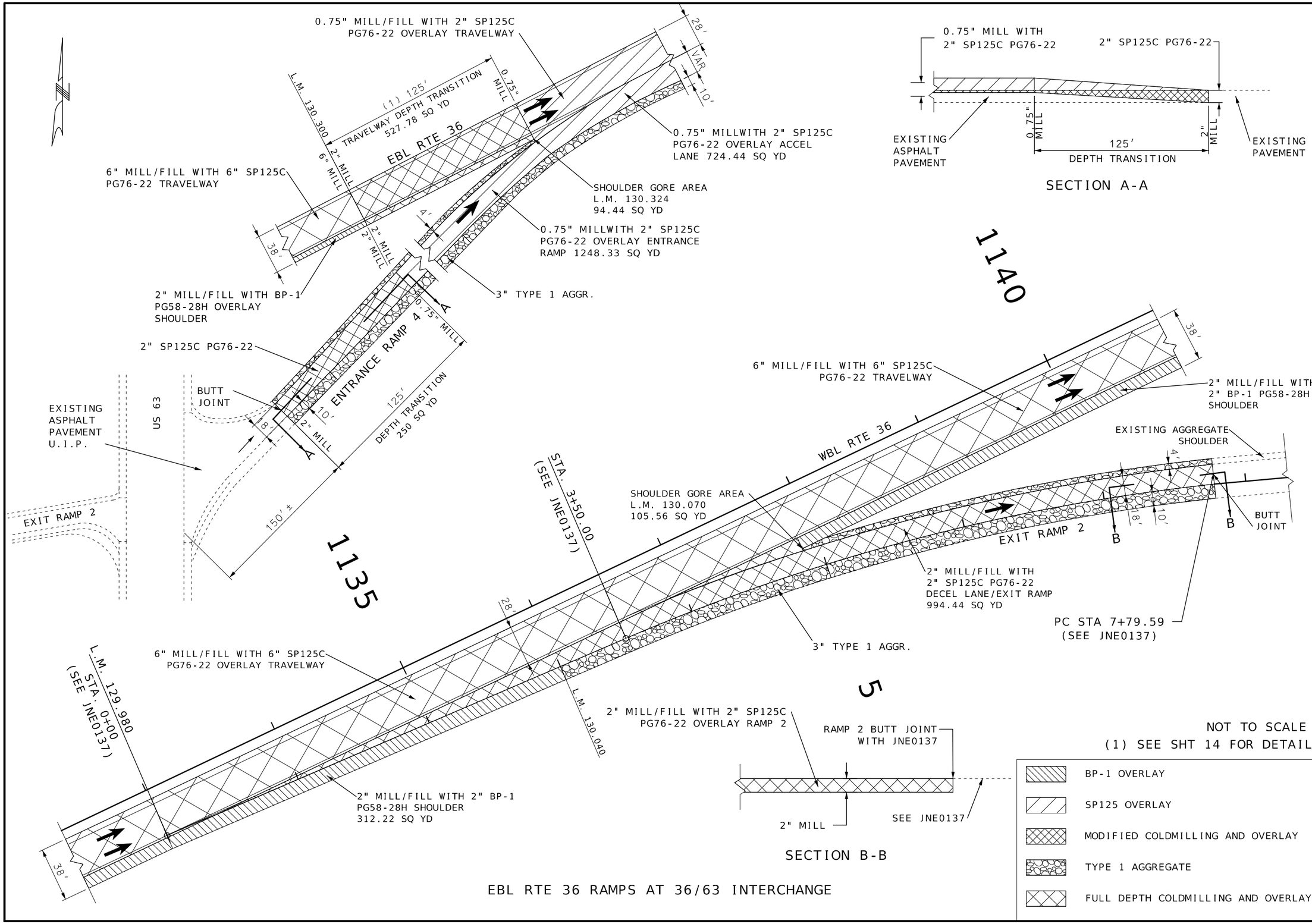

EBL RTE 36 RAMPS AT 36/63 INTERCHANGE

STATE OF MISSOURI
KEITH ALLEN KILLEN
NUMBER
PE-2007020292
PROFESSIONAL ENGINEER
06/17/2025 11:06:54 AM
KEITH ALLEN KILLEN - CIVIL
MO-PE-2007020292

DATE PREPARED	6/16/2025
ROUTE 36	STATE MO
DISTRICT NE	SHEET NO. 8
COUNTY MACON	
JOB NO. JNE0120	
CONTRACT ID.	
PROJECT NO.	
BRIDGE NO.	

DESCRIPTION

DATE

MISSOURI HIGHWAYS AND TRANSPORTATION COMMISSION

105 WEST CAPITOL
JEFFERSON CITY, MO 65102
1-888-ASK-MODOT (1-888-275-6636)

SPECIAL SHEET
SHEET 5 OF 11

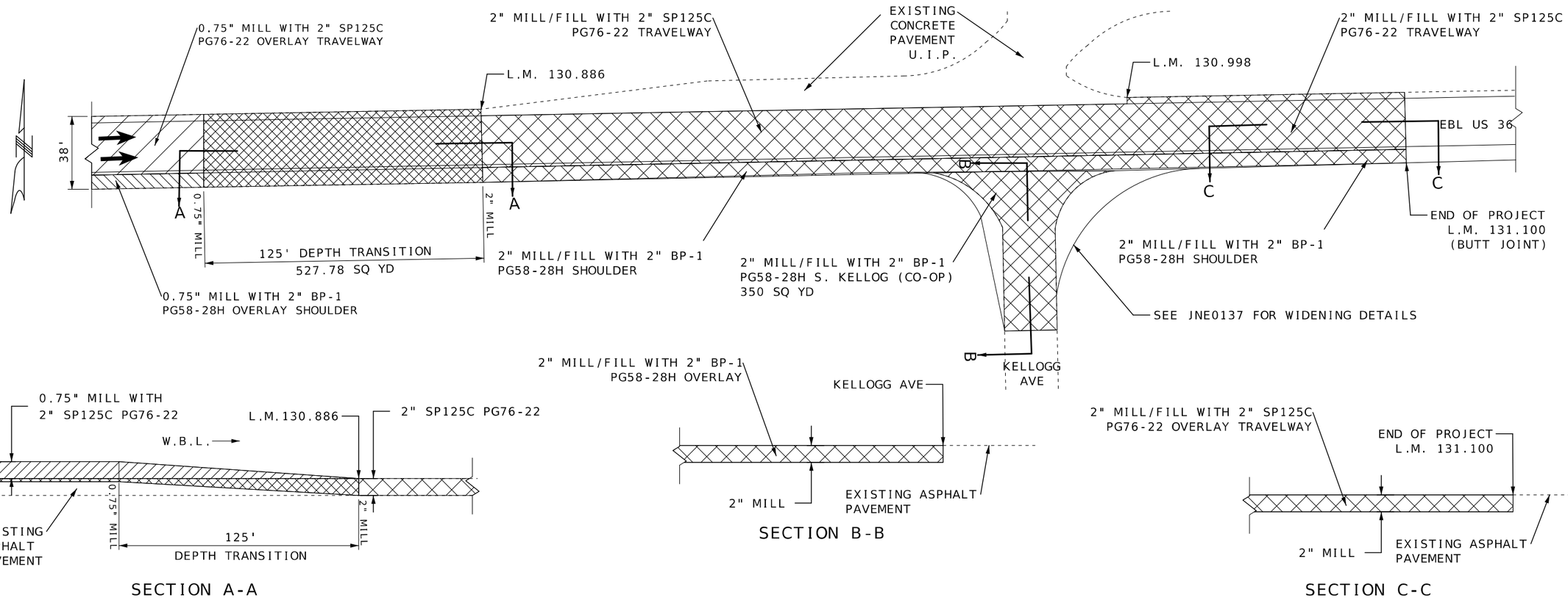

EBL RTE 36 END PROJECT

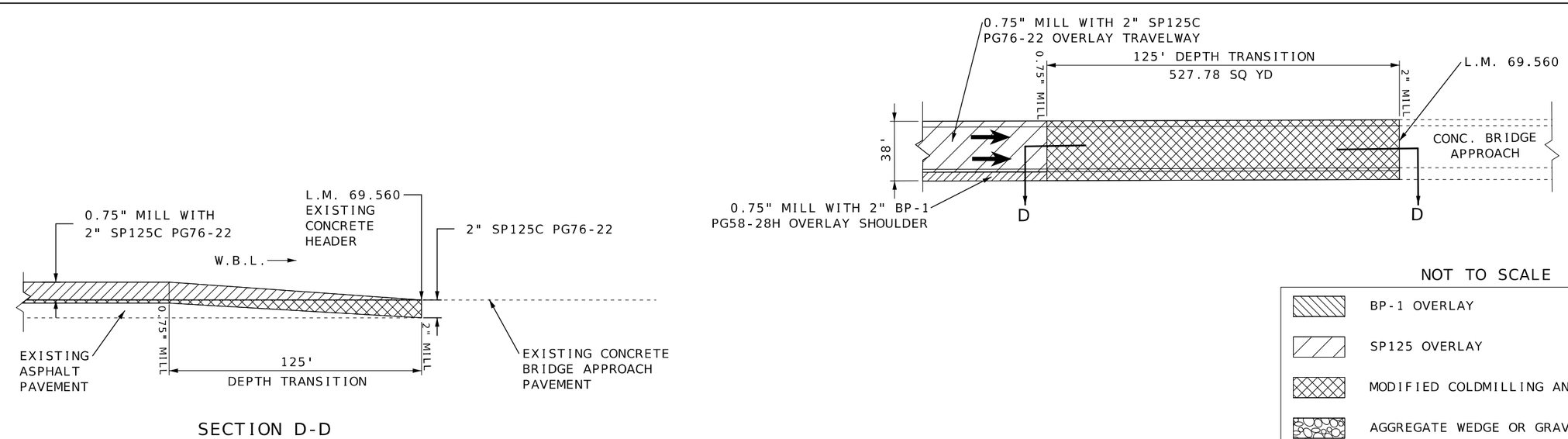

WBL RTE 36 END PROJECT

NOT TO SCALE

- BP-1 OVERLAY
- SP125 OVERLAY
- MODIFIED COLDMILLING AND OVERLAY
- AGGREGATE WEDGE OR GRAVEL A
- FULL DEPTH COLDMILLING AND OVERLAY

STATE OF MISSOURI
KEITH ALLEN KILLEN
NUMBER
PE-2007020292
PROFESSIONAL ENGINEER

05/17/2025 11:06:54 AM
KEITH ALLEN KILLEN - CIVIL
MO-PE-2007020292

DATE PREPARED	
6/16/2025	
ROUTE 36	STATE MO
DISTRICT NE	SHEET NO. 9
COUNTY MACON	
JOB NO. JNE0120	
CONTRACT ID. ####	
PROJECT NO. ####	
BRIDGE NO. ####	

DATE	DESCRIPTION

MISSOURI HIGHWAYS AND TRANSPORTATION COMMISSION
105 WEST CAPITOL
JEFFERSON CITY, MO 65102
1-888-ASK-MODOT (1-888-275-6636)

SPECIAL SHEET
SHEET 6 OF 11

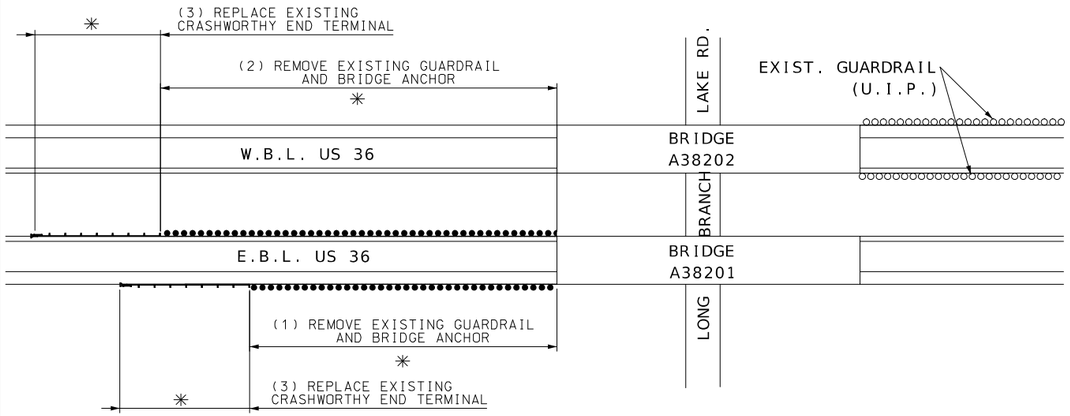

NOTE:

(1) - MGS BRIDGE ANCHOR TRANSITION AND MGS GUARDRAIL - 225'
(2) - MGS BRIDGE ANCHOR TRANSITION AND MGS GUARDRAIL - 275'
(3) - MGS CRASHWORTHY END TERMINAL - 50'±

* SHAPING SLOPES CLASS III REQUIRED

NEW BRIDGE ANCHOR, GUARDRAIL AND CRASHWORTHY END TERMINALS (MASH)

LONG BRANCH BRIDGE EBL RTE 36 L.M. 128.035

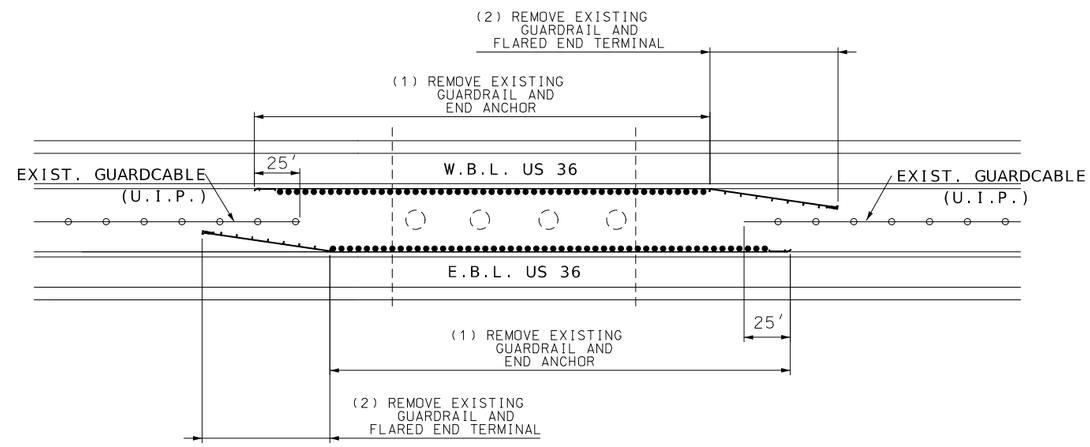

NOTE:

(1) - MGS GUARDRAIL AND END TERMINAL ANCHOR - 150'
(2) - MGS CRASHWORTHY END TERMINAL - 50'±

NEW PIER PROTECTION AT RTE 63 BRIDGE EBL RTE 36 LOG MILE 130.214

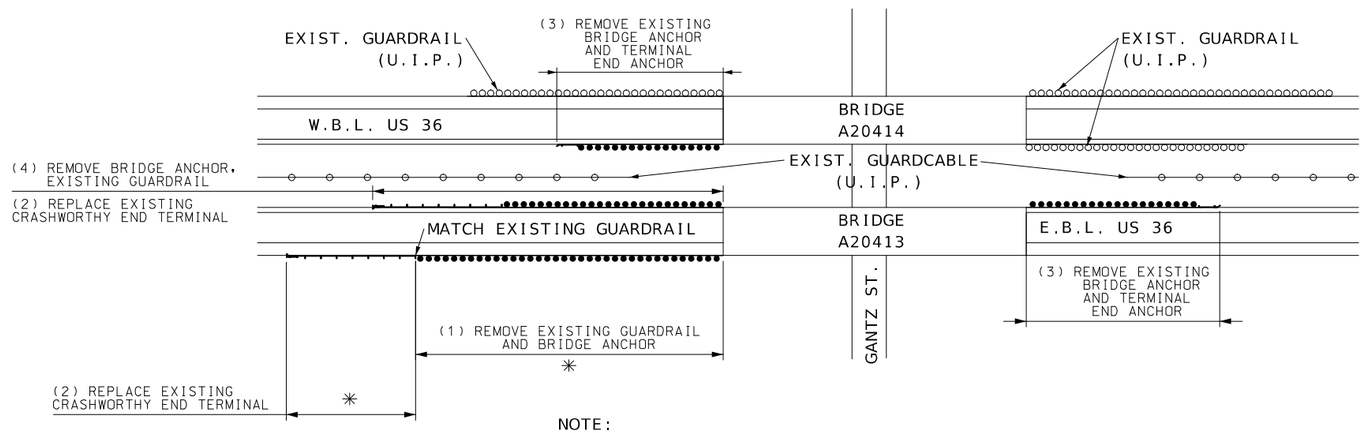

NOTE:

(1) - MGS BRIDGE ANCHOR TRANSITION AND GUARDRAIL - 225'
(2) - MGS CRASHWORTHY END TERMINAL - 50'±
(3) - MGS BRIDGE ANCHOR TRANSITION AND TERMINAL END ANCHOR
(4) - MGS BRIDGE ANCHOR TRANSITION AND GUARDRAIL - 175'
* SHAPING SLOPES CLASS III REQUIRED

NEW BRIDGE ANCHOR, GUARDRAIL AND CRASHWORTHY END TERMINALS (MASH) OR END ANCHORS

GANTZ ST. BRIDGE EBL RTE 36 L.M. 129.815

NOT TO SCALE

- NEW GUARDRAIL
- EXISTING GUARDRAIL
- CRASHWORTHY END TERMINAL (MASH)
- END TERMINAL ANCHOR
- EXISTING GUARDCABLE

STATE OF MISSOURI
KEITH ALLEN KILLEN
NUMBER PE-2007020292
PROFESSIONAL ENGINEER
06/17/2025 11:06:54 AM
KEITH ALLEN KILLEN - CIVIL
MO-PE-2007020292

DATE PREPARED	
6/16/2025	
ROUTE 36	STATE MO
DISTRICT NE	SHEET NO. 10
COUNTY MACON	
JOB NO. JNE0120	
CONTRACT ID.	
PROJECT NO.	
BRIDGE NO.	

DATE	DESCRIPTION

MISSOURI HIGHWAYS AND TRANSPORTATION COMMISSION
105 WEST CAPITOL
JEFFERSON CITY, MO 65102
1-888-ASK-MODOT (1-888-275-6636)

SPECIAL SHEET
SHEET 7 OF 11

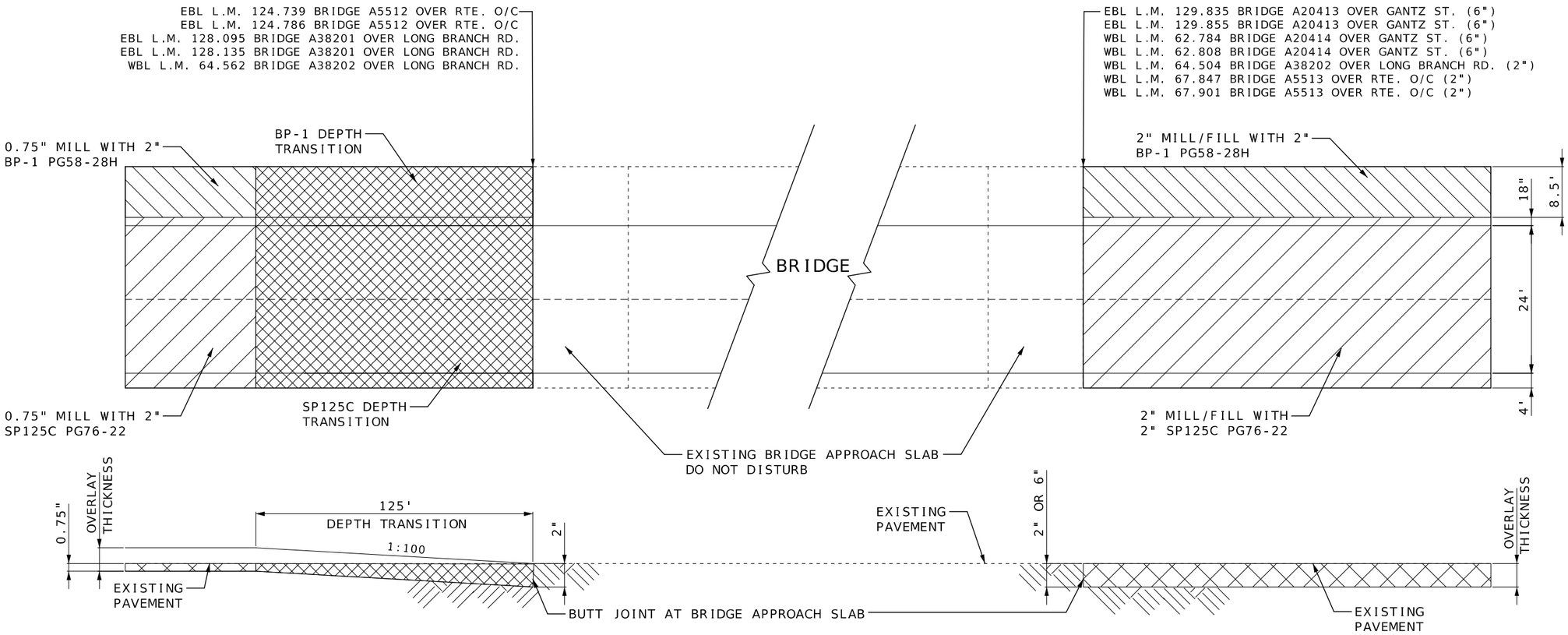

TYPICAL BRIDGE APPROACH

- BP-1 OVERLAY
- SP125 OVERLAY
- MODIFIED COLDMILLING AND OVERLAY
- TYPE 1 AGGREGATE
- FULL DEPTH COLDMILLING AND OVERLAY

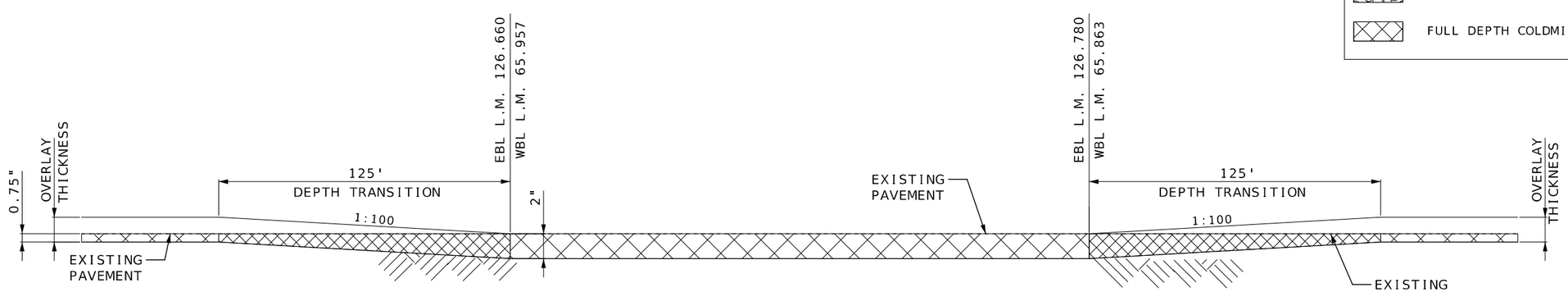

MILL/FILL UNDER HICKORY ST. BRIDGE

NOT TO SCALE

STATE OF MISSOURI
KEITH ALLEN KILLEN
NUMBER
PE-2007020292
PROFESSIONAL ENGINEER

06/17/2025 11:06:54 AM
KEITH ALLEN KILLEN - CIVIL
MO-PE-2007020292

DATE PREPARED	6/16/2025
ROUTE	36
STATE	MO
DISTRICT	NE
SHEET NO.	11
COUNTY	MACON
JOB NO.	JNE0120
CONTRACT ID.	
PROJECT NO.	
BRIDGE NO.	

DATE	DESCRIPTION

MISSOURI HIGHWAYS AND TRANSPORTATION COMMISSION
105 WEST CAPITOL
JEFFERSON CITY, MO 65102
1-888-ASK-MODOT (1-888-275-6636)

SPECIAL SHEET
SHEET 8 OF 11

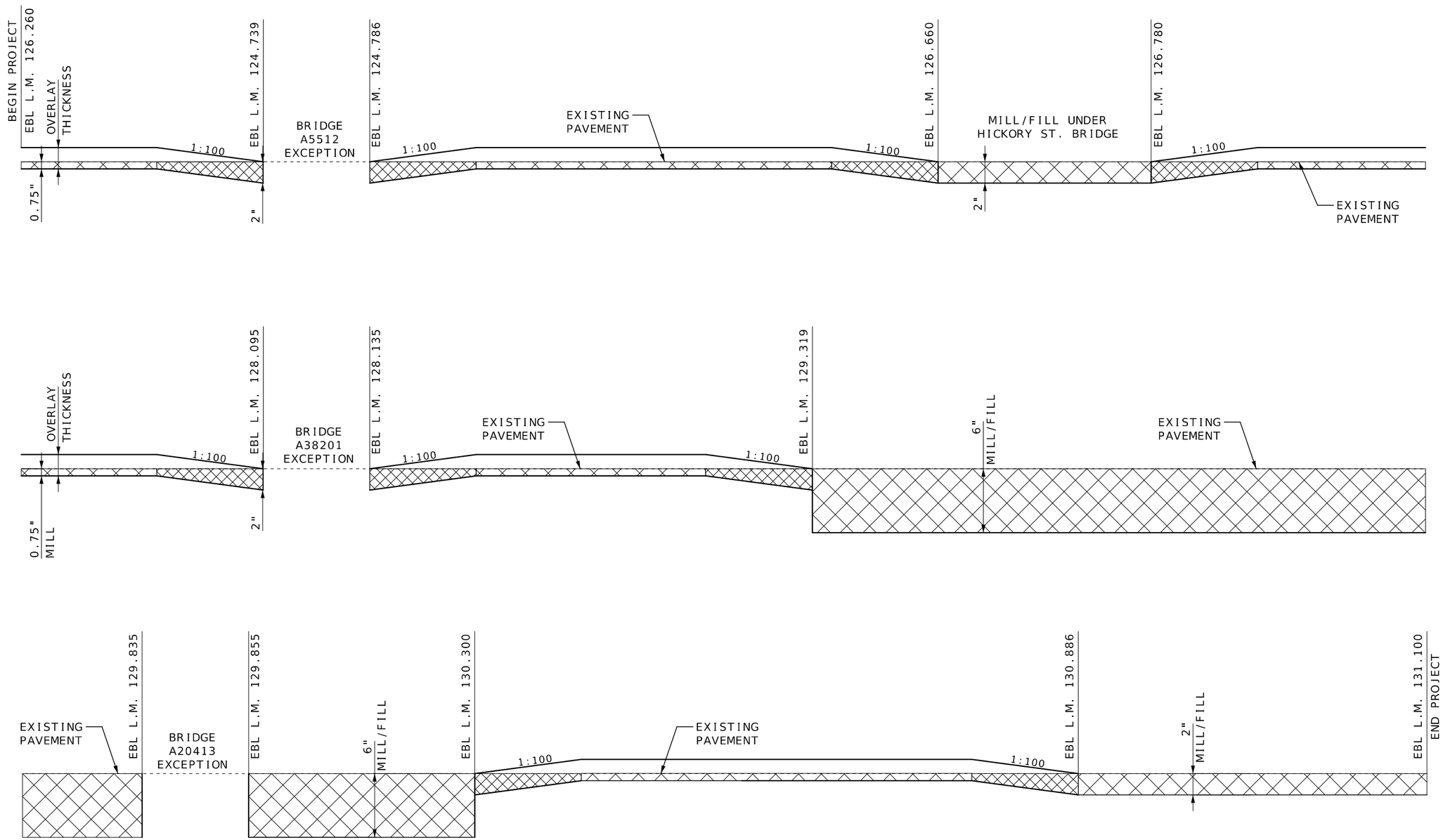

EBL RTE 36 LONGITUDINAL DIAGRAM

NOT TO SCALE

MODIFIED COLDMILLING AND OVERLAY

FULL DEPTH COLDMILLING AND OVERLAY

STATE OF MISSOURI
KEITH ALLEN KILLEN
NUMBER PE-2007020292
PROFESSIONAL ENGINEER

06/17/2025 11:06:54 AM
KEITH ALLEN KILLEN - CIVIL
MO-PE-2007020292

DATE PREPARED	
6/16/2025	
ROUTE 36	STATE MO
DISTRICT NE	SHEET NO. 12
COUNTY MACON	
JOB NO. JNE0120	
CONTRACT ID.	
PROJECT NO.	
BRIDGE NO.	

DATE	DESCRIPTION

MISSOURI HIGHWAYS AND TRANSPORTATION COMMISSION

105 WEST CAPITOL
JEFFERSON CITY, MO 65102
1-888-ASK-MODOT (1-888-275-6636)

SPECIAL SHEET
SHEET 9 OF 11

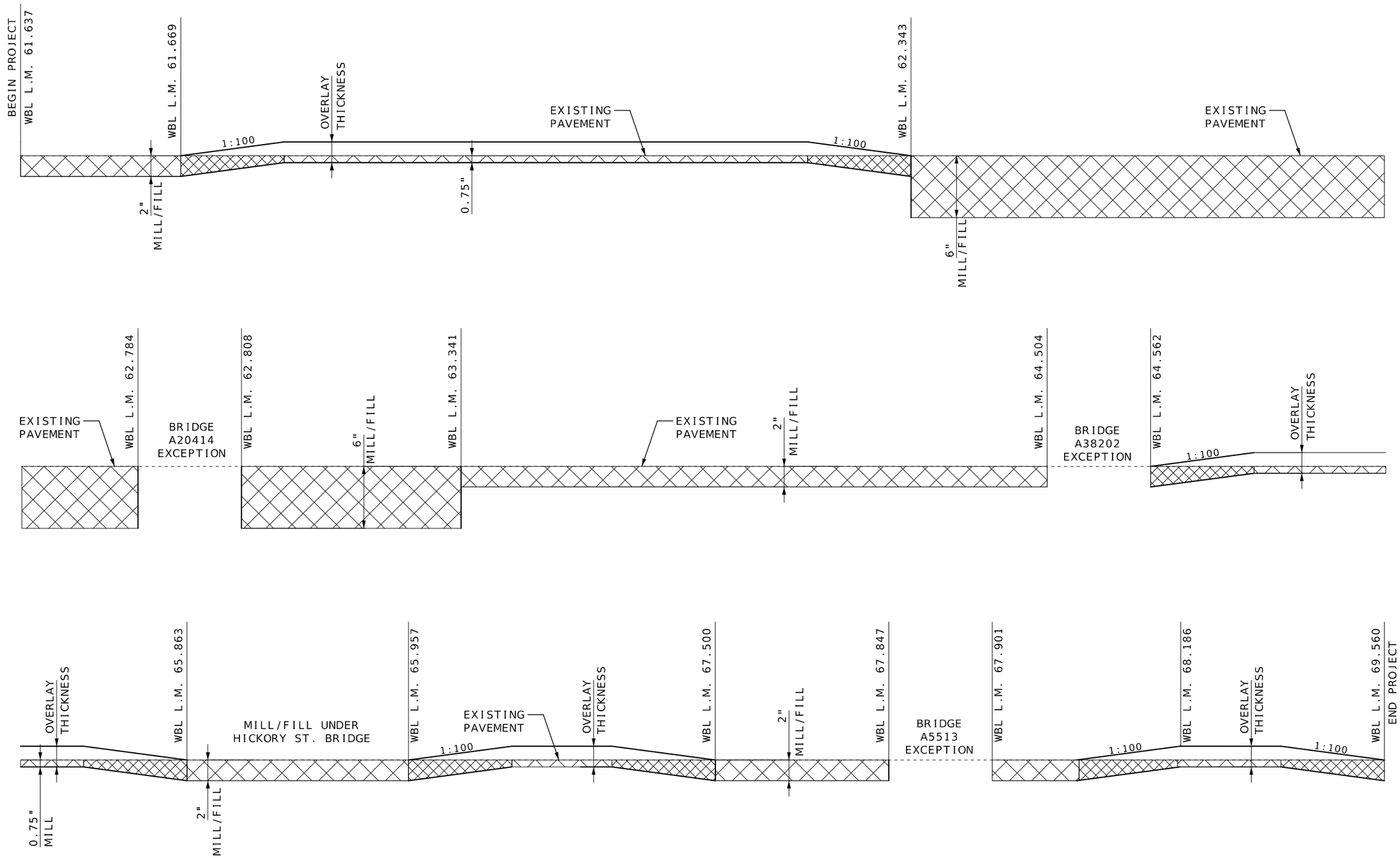

WBL RTE 36 LONGITUDINAL DIAGRAM

NOT TO SCALE

MODIFIED COLDMILLING AND OVERLAY

FULL DEPTH COLDMILLING AND OVERLAY

STATE OF MISSOURI
KEITH ALLEN KILLEN
NUMBER
PE-2007020292
PROFESSIONAL ENGINEER

06/17/2025 11:06:54 AM
KEITH ALLEN KILLEN - CIVIL
MO-PE-2007020292

DATE PREPARED	
6/16/2025	
ROUTE 36	STATE MO
DISTRICT NE	SHEET NO. 13
COUNTY MACON	
JOB NO. JNE0120	
CONTRACT ID.	
PROJECT NO.	
BRIDGE NO.	

DATE	DESCRIPTION

MISSOURI HIGHWAYS AND TRANSPORTATION COMMISSION

105 WEST CAPITOL
JEFFERSON CITY, MO 65102
1-888-ASK-MODOT (1-888-275-6636)

SPECIAL SHEET
SHEET 10 OF 11

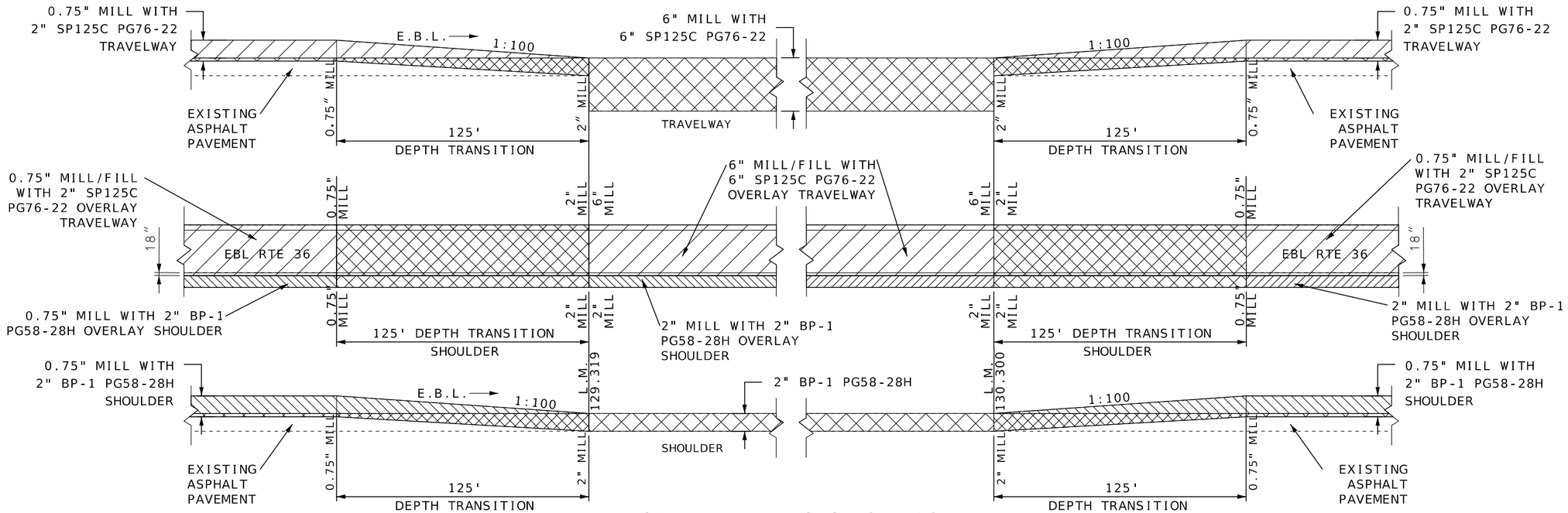

6" MILL/FILL SECTION FROM
EBL L.M. 129.319 TO L.M. 130.300

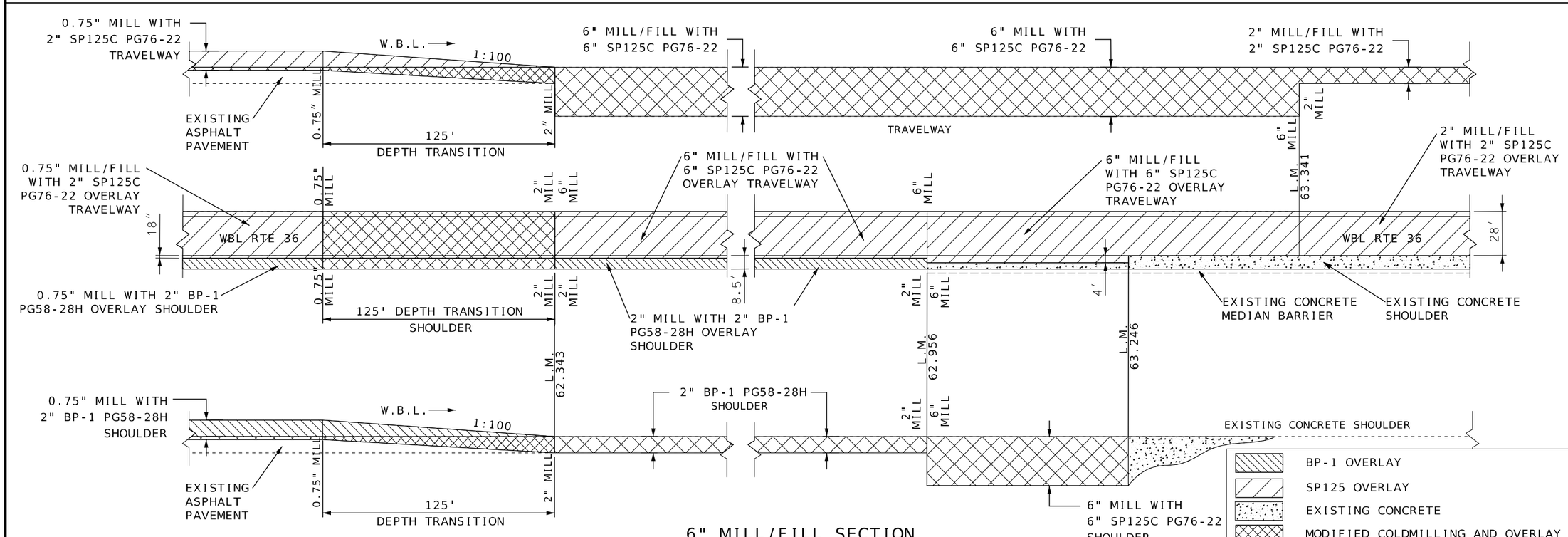

6" MILL/FILL SECTION
WBL L.M. 62.343 TO L.M. 63.341

NOT TO SCALE

STATE OF MISSOURI
KEITH ALLEN KILLEN
NUMBER PE-2007020292
PROFESSIONAL ENGINEER
06/17/2025 11:06:54 AM
KEITH ALLEN KILLEN - CIVIL
MO-PE-2007020292

DATE PREPARED	6/16/2025
ROUTE 36	STATE MO
DISTRICT NE	SHEET NO. 14
COUNTY MACON	
JOB NO. JNE0120	
CONTRACT ID.	
PROJECT NO.	
BRIDGE NO.	

DATE	DESCRIPTION

MISSOURI HIGHWAYS AND TRANSPORTATION COMMISSION
105 WEST CAPITOL
JEFFERSON CITY, MO 65102
1-888-ASK-MODOT (1-888-275-6636)

SPECIAL SHEET
SHEET 11 OF 11

TRAFFIC CONTROL LEGEND

- SIGN (SINGLE SIDED)
- CHANNELIZER
- BARRICADE
- CHANGEABLE MESSAGE BOARD

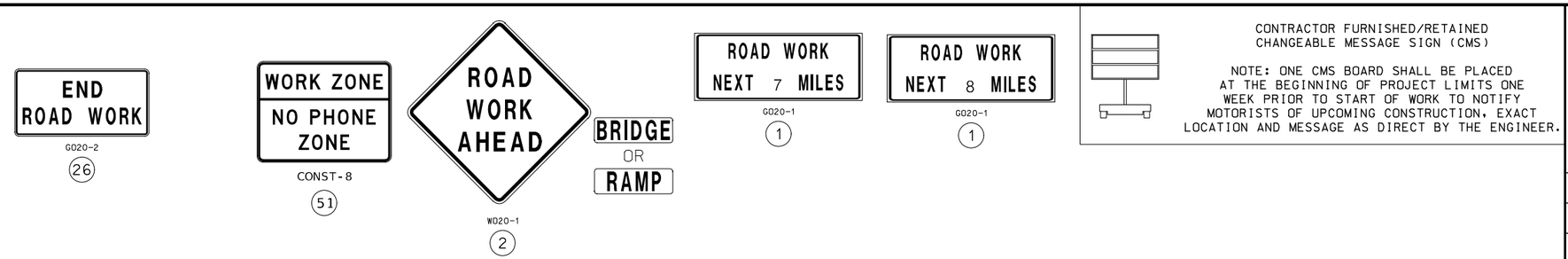

CONTRACTOR FURNISHED/RETAINED CHANGEABLE MESSAGE SIGN (CMS)

NOTE: ONE CMS BOARD SHALL BE PLACED AT THE BEGINNING OF PROJECT LIMITS ONE WEEK PRIOR TO START OF WORK TO NOTIFY MOTORISTS OF UPCOMING CONSTRUCTION, EXACT LOCATION AND MESSAGE AS DIRECT BY THE ENGINEER.

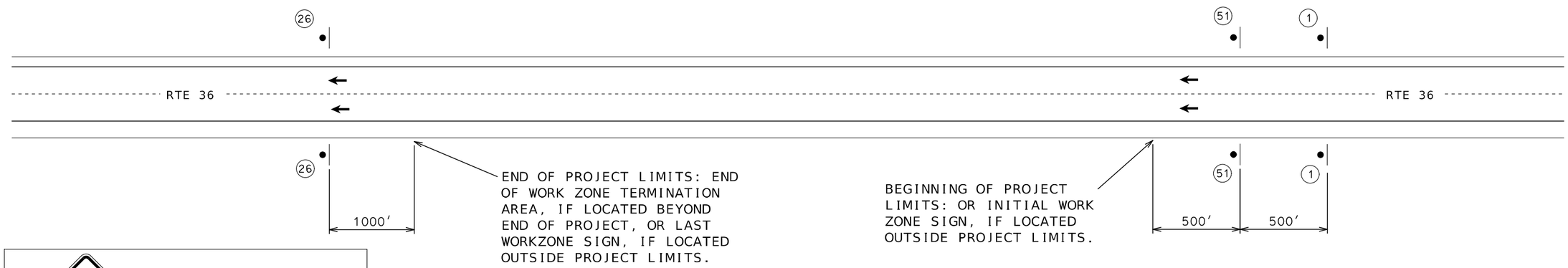

END OF PROJECT LIMITS: END OF WORK ZONE TERMINATION AREA, IF LOCATED BEYOND END OF PROJECT, OR LAST WORKZONE SIGN, IF LOCATED OUTSIDE PROJECT LIMITS.

BEGINNING OF PROJECT LIMITS: OR INITIAL WORK ZONE SIGN, IF LOCATED OUTSIDE PROJECT LIMITS.

BEGIN AND END OF PROJECT

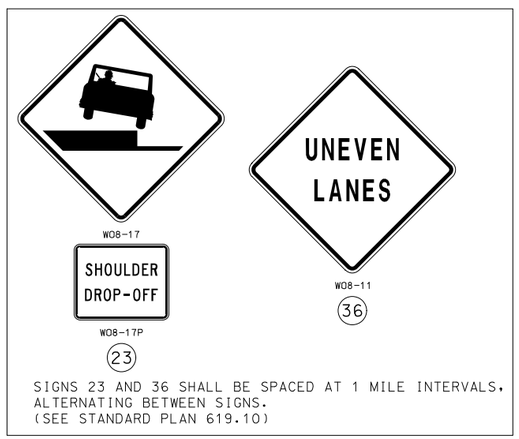

SIGNS 23 AND 36 SHALL BE SPACED AT 1 MILE INTERVALS, ALTERNATING BETWEEN SIGNS. (SEE STANDARD PLAN 619.10)

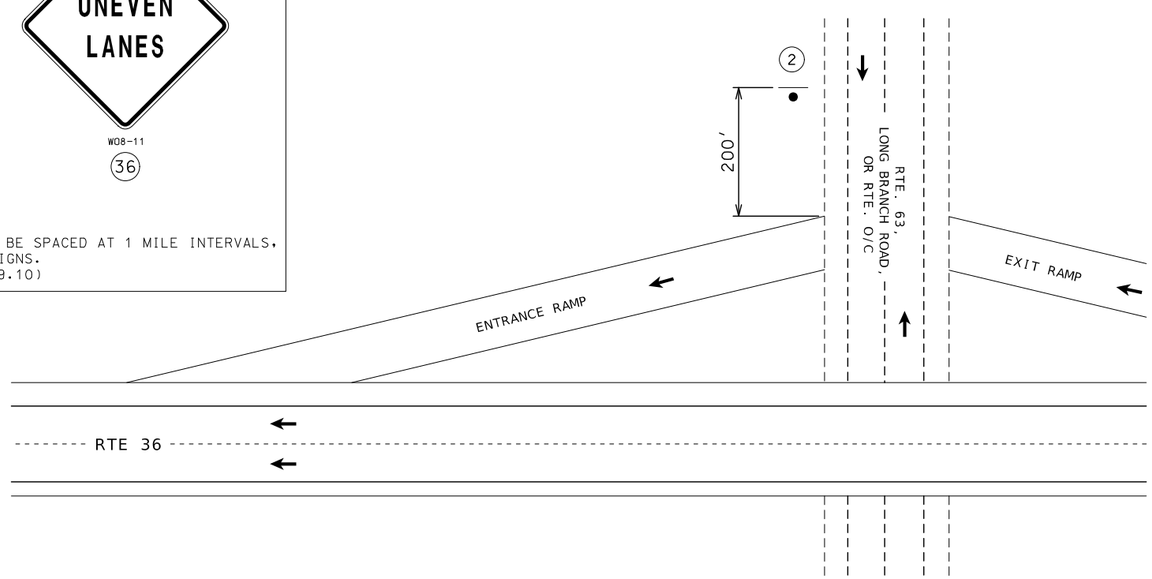

STATE ROUTE OR SIDE ROAD AT INTERCHANGE

DURATION OF PROJECT

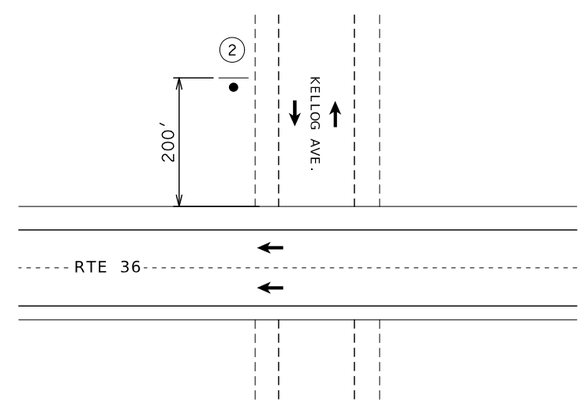

SIDE ROAD INTERSECTION

NOTES:

ALL EXISTING SIGNS THAT CONFLICT WITH THE PROPOSED TRAFFIC CONTROL PLAN SHALL BE COVERED, NO DIRECT PAY.

ALL SIGNS AND DEVICES ARE CONSIDERED PORTABLE. NO DIRECT PAYMENT WILL BE MADE FOR ANY RELOCATIONS OF SIGNS AND DEVICES.

ADJUST CHANNELIZER SPACING, SIGN SPACING AND LOCATION AS REQUIRED BY FIELD CONDITIONS AS DIRECTED BY THE ENGINEER.

STATE OF MISSOURI
KEITH ALLEN KILLEN
NUMBER PE-2007020292
PROFESSIONAL ENGINEER
06/17/2025 11:06:54 AM
KEITH ALLEN KILLEN - CIVIL
MO-PE-2007020292

DATE PREPARED	
6/16/2025	
ROUTE 36	STATE MO
DISTRICT NE	SHEET NO. 15
COUNTY MACON	
JOB NO. JNE0120	
CONTRACT ID.	
PROJECT NO.	
BRIDGE NO.	

DESCRIPTION	DATE

MISSOURI HIGHWAYS AND TRANSPORTATION COMMISSION
105 WEST CAPITOL
JEFFERSON CITY, MO 65102
1-888-ASK-MODOT (1-888-275-6636)

TRAFFIC CONTROL
SHEET 1 OF8

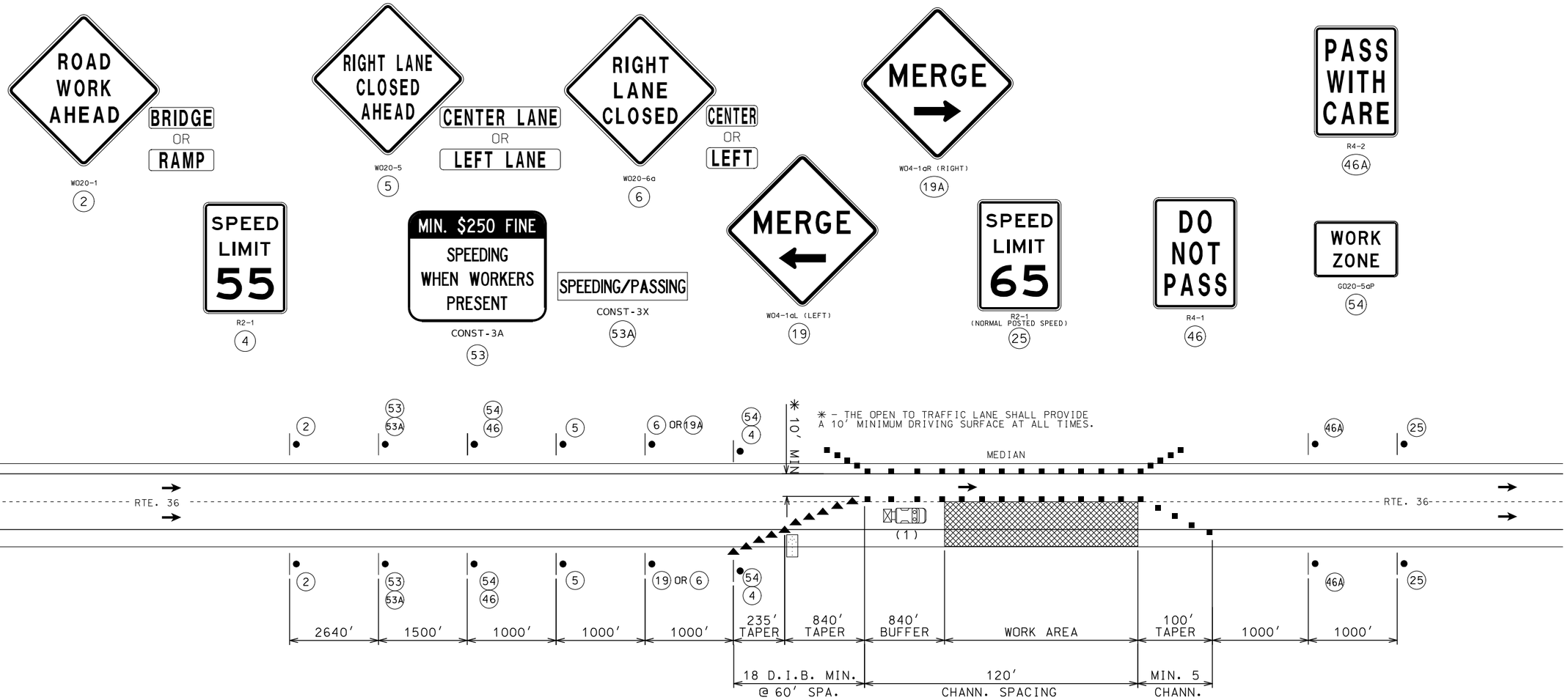

NOTES:

ANY EXISTING SIGNING THAT CONFLICTS WITH THE PROPOSED TRAFFIC CONTROL PLAN SHALL BE COMPLETELY COVERED OR REMOVED. NO DIRECT PAY.

ALL SIGNS AND DEVICES ARE CONSIDERED PORTABLE. NO DIRECT PAYMENT WILL BE MADE FOR ANY RELOCATIONS OF SIGNS AND DEVICES.

ADJUST CHANNELIZER SPACING, SIGN SPACING AND LOCATION AS REQUIRED BY FIELD CONDITIONS AS DIRECTED BY THE ENGINEER.

TWO LANE CLOSURE SIGN PACKAGES ARE INCLUDED IN THE PLANS. ADDITIONAL QUANTITIES WILL BE AT THE CONTRACTORS EXPENSE.

(1) WORK VEHICLE WITH TRUCK MOUNTED ATTENUATOR IS REQUIRED AT LEAST 500' IN ADVANCE OF GUARDRAIL WORK. IT IS OPTIONAL IN ALL OTHER OPERATIONS.

NOT TO SCALE

TRAFFIC CONTROL LEGEND

- WORK AREA
- SIGN (SINGLE SIDED)
- CHANNELIZER (TRIM LINE)
- DIRECTIONAL INDICATOR BARRICADE
- TYPE III MOVABLE BARRICADE
- FLASHING ARROW PANEL
- TRUCK MOUNTED ATTENUATOR

STATIONARY LEFT OR RIGHT LANE CLOSURE WITH SPEED REDUCTION - DIVIDED HIGHWAY

STATE OF MISSOURI
KEITH ALLEN KILLEN
NUMBER PE-2007020292
PROFESSIONAL ENGINEER
06/02/2025 2:30:46 PM
KEITH ALLEN KILLEN - CIVIL
MO-PE-2007020292

DATE PREPARED	
6/2/2025	
ROUTE 36	STATE MO
DISTRICT NE	SHEET NO. 16
COUNTY MACON	
JOB NO. JNE0120	
CONTRACT ID.	
PROJECT NO.	
BRIDGE NO.	

DESCRIPTION

DATE

MISSOURI HIGHWAYS AND TRANSPORTATION COMMISSION

105 WEST CAPITOL
JEFFERSON CITY, MO 65102
1-888-ASK-MODOT (1-888-275-6636)

TRAFFIC CONTROL
SHEET 2 OF 8

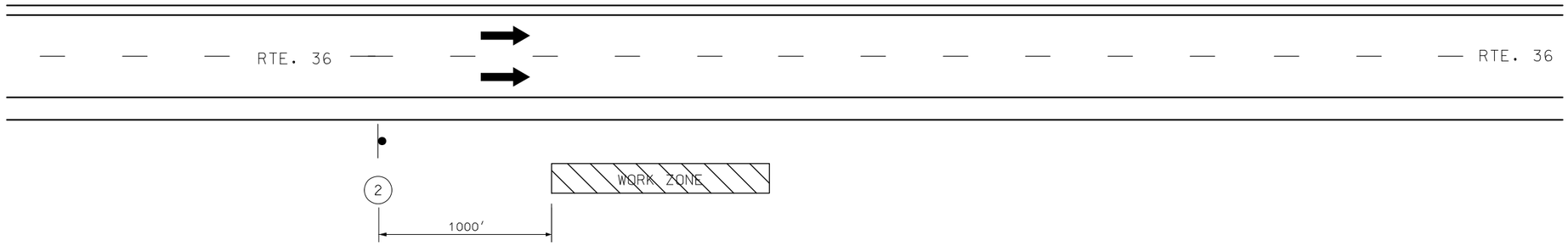

STATIONARY WORK BEYOND THE SHOULDER (DIVIDED HIGHWAY)

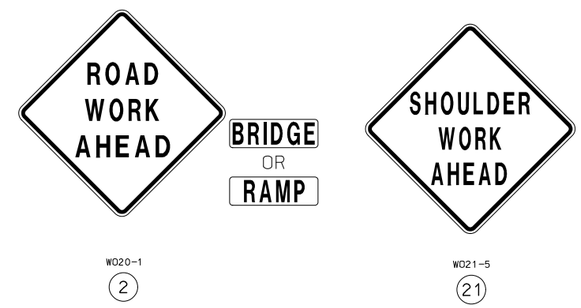

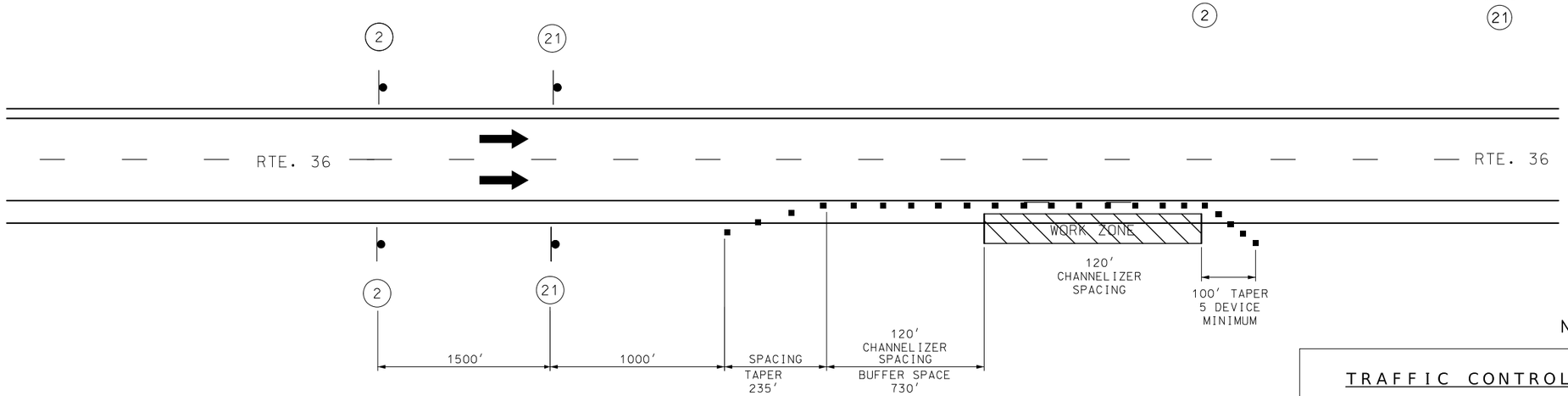

NOT TO SCALE

GENERAL NOTES

1. USE IN PLACE ALL SIGNS WHICH DO NOT CONFLICT WITH THIS PLAN. COVER OR REMOVE CONFLICTING SIGNS.
2. SPACING MAY BE ADJUSTED AS NECESSARY TO MEET FIELD CONDITIONS.
3. ROAD WORK AHEAD SIGN NOT NEEDED IF SHOULDER WORK IS LOCATED WITHIN THE LIMITS OF AN ACTIVITY AREA WHERE ANOTHER ROAD WORK AHEAD SIGN IS ALREADY USED.
4. SIGN #21 DOES NOT NEED AN AWRS IF SHOULDER WORK IS LOCATED WITHIN THE LIMITS OF AN ACTIVITY AREA WHERE ANOTHER ROAD WORK AHEAD SIGN IS ALREADY USED.

SHOULDER WORK (DIVIDED HIGHWAY)

TRAFFIC CONTROL LEGEND

- WORK AREA
- SIGN (SINGLE SIDED)
- FLASHING ARROW PANEL
- TRUCK MOUNTED ATTENUATOR
- CHANNELIZER
- TYPE III MOVABLE BARRICADE
- CHANGEABLE MESSAGE BOARD

STATE OF MISSOURI
KEITH ALLEN KILLEN
NUMBER PE-2007020292
PROFESSIONAL ENGINEER

06/02/2025 2:18:35 PM
KEITH ALLEN KILLEN - CIVIL
MO-PE-2007020292

DATE PREPARED	
6/2/2025	
ROUTE 36	STATE MO
DISTRICT NE	SHEET NO. 17
COUNTY MACON	
JOB NO. JNE0120	
CONTRACT ID.	
PROJECT NO.	
BRIDGE NO.	

DATE	DESCRIPTION

MISSOURI HIGHWAYS AND TRANSPORTATION COMMISSION
105 WEST CAPITOL
JEFFERSON CITY, MO 65102
1-888-ASK-MODOT (1-888-275-6636)

TRAFFIC CONTROL
SHEET 3 OF 8

✱ - THE OPEN TO TRAFFIC LANE SHALL PROVIDE A 10' MINIMUM DRIVING SURFACE AT ALL TIMES.

NOTES:
RAMP CONSTRUCTION SHALL BE STAGED TO ENSURE A 10' MINIMUM LANE WIDTH AT ALL TIMES. CONTRACTOR SHALL PROVIDE PROPER SIGNING AND APPROVAL FROM ENGINEER TO CONDUCT NIGHT OPERATIONS. IF CONGRUENT ENTRANCE AND EXIT RAMP SETUP THEN STRETCH CHANNELIZERS TO KEEP ONE LANE THROUGHOUT ENTIRE WORKZONE.

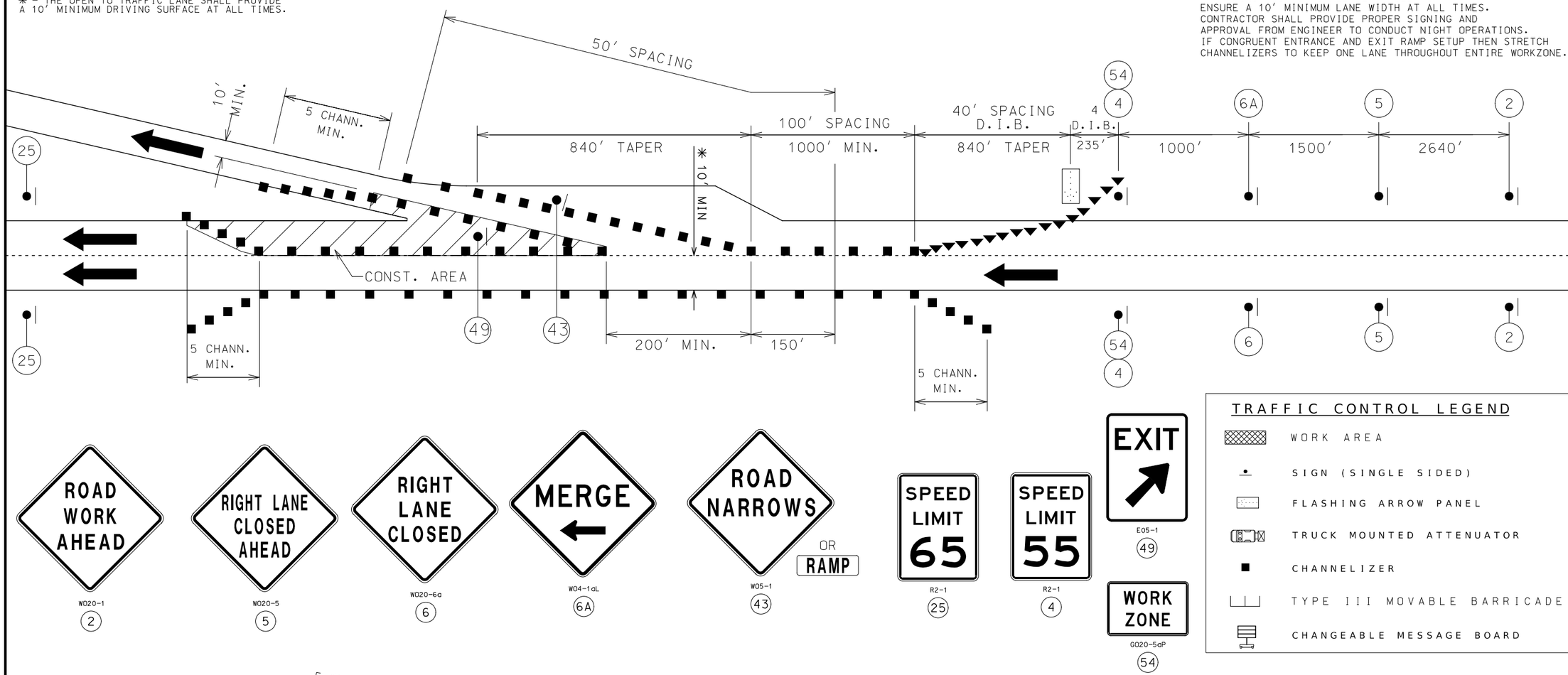

TRAFFIC CONTROL LEGEND

- WORK AREA
- SIGN (SINGLE SIDED)
- FLASHING ARROW PANEL
- TRUCK MOUNTED ATTENUATOR
- CHANNELIZER
- TYPE III MOVABLE BARRICADE
- CHANGEABLE MESSAGE BOARD

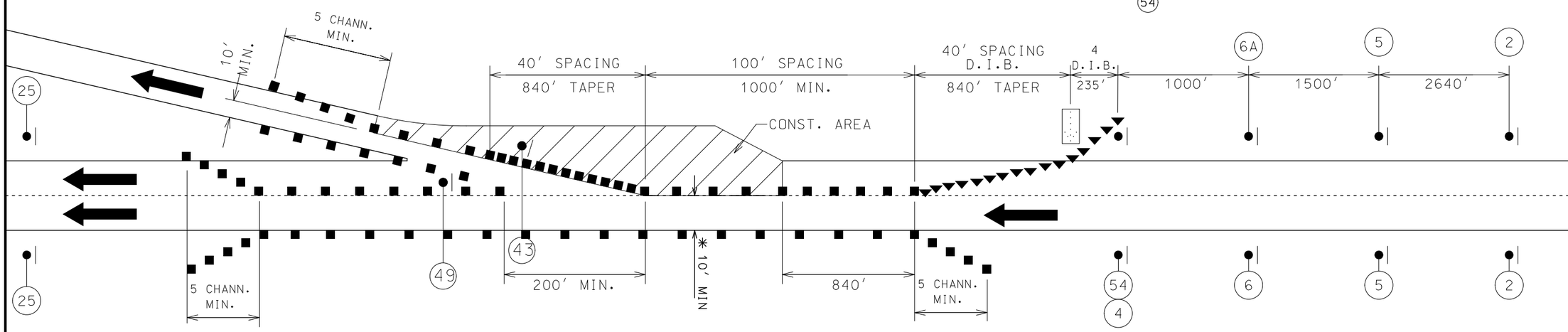

WORK IN THE VICINITY OF AN EXIT RAMP
(DIVIDED HIGHWAY)

NOT TO SCALE

STATE OF MISSOURI
KEITH ALLEN KILLEN
NUMBER PE-2007020292
PROFESSIONAL ENGINEER
06/02/2025 2:19:38 PM
KEITH ALLEN KILLEN - CIVIL
MO-PE-2007020292

DATE PREPARED	6/2/2025
ROUTE	36
STATE	MO
DISTRICT	NE
SHEET NO.	18
COUNTY	MACON
JOB NO.	JNE0120
CONTRACT ID.	
PROJECT NO.	
BRIDGE NO.	

DATE	DESCRIPTION

MISSOURI HIGHWAYS AND TRANSPORTATION COMMISSION
105 WEST CAPITOL
JEFFERSON CITY, MO 65102
1-888-ASK-MODOT (1-888-275-6636)

TRAFFIC CONTROL
SHEET 4 OF 8

NOTES:
RAMP CONSTRUCTION SHALL BE STAGED TO ENSURE A 10' MINIMUM LANE WIDTH AT ALL TIMES.
CONTRACTOR SHALL PROVIDE PROPER SIGNING AND APPROVAL FROM ENGINEER TO CONDUCT NIGHT OPERATIONS.
IF CONGRUENT ENTRANCE AND EXIT RAMP SETUP THEN STRETCH CHANNELIZERS TO KEEP ONE LANE THROUGHOUT ENTIRE WORKZONE.

✳ - THE OPEN TO TRAFFIC LANE SHALL PROVIDE A 10' MINIMUM DRIVING SURFACE AT ALL TIMES.

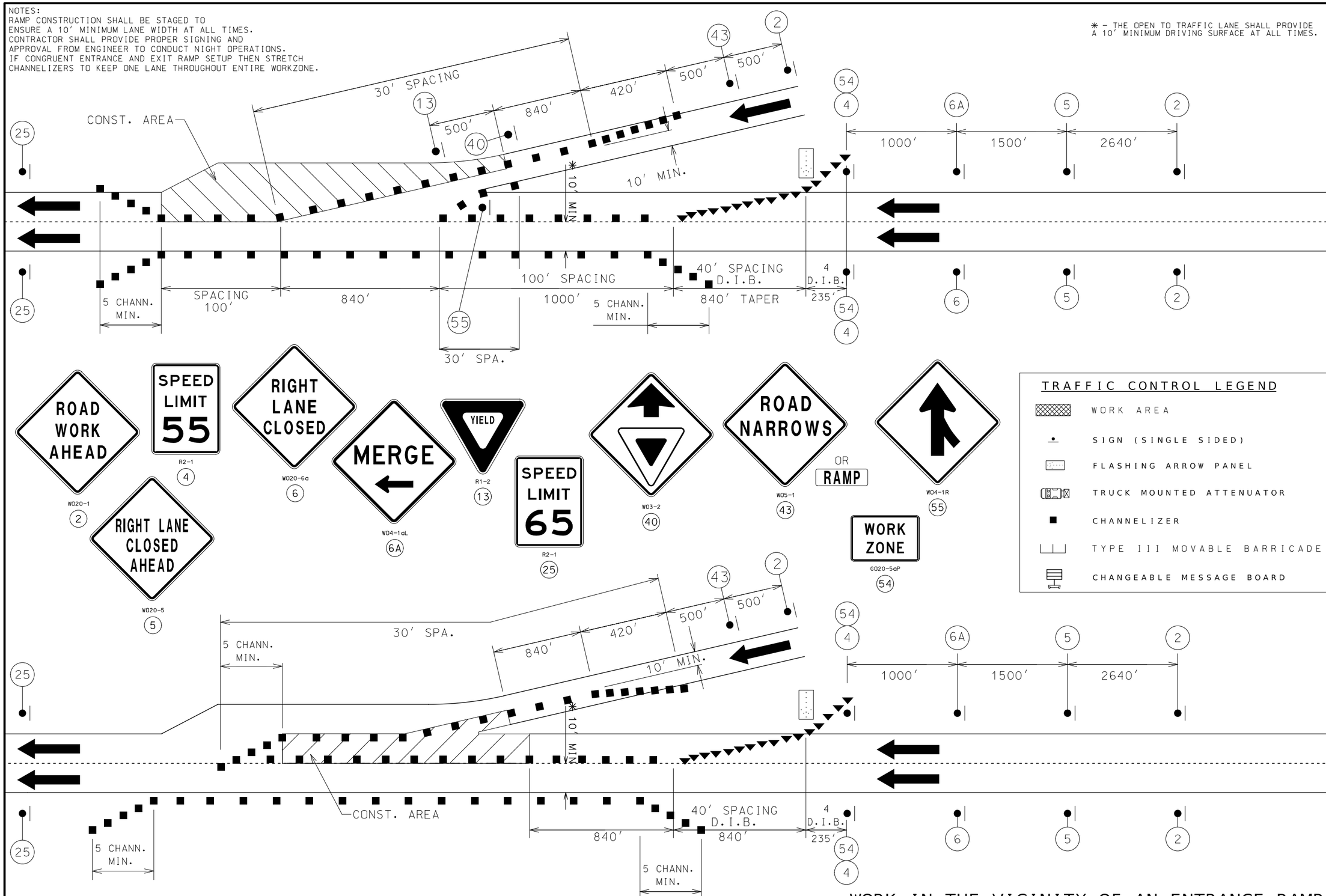

NOT TO SCALE

WORK IN THE VICINITY OF AN ENTRANCE RAMP (DIVIDED HIGHWAY)

STATE OF MISSOURI
KEITH ALLEN KILLEN
NUMBER PE-2007020292
PROFESSIONAL ENGINEER
06/02/2025 2:19:57 PM
KEITH ALLEN KILLEN - CIVIL
MO-PE-2007020292

DATE PREPARED	6/2/2025
ROUTE	36
STATE	MO
DISTRICT	NE
SHEET NO.	19
COUNTY	MACON
JOB NO.	JNE0120
CONTRACT ID.	
PROJECT NO.	
BRIDGE NO.	

DESCRIPTION

DATE

MISSOURI HIGHWAYS AND TRANSPORTATION COMMISSION
105 WEST CAPITOL
JEFFERSON CITY, MO 65102
1-888-ASK-MODOT (1-888-275-6636)

TRAFFIC CONTROL
SHEET 5 OF 8

TRAFFIC CONTROL LEGEND

- SIGN (SINGLE SIDED)
- CHANNELIZER
- BARRICADE
- CHANGEABLE MESSAGE SIGN
- WORK AREA

SPECIAL SHF-FLAT SHEET FLOURESCENT; 1.500" Radius, No border, Orange;
[CLOSED] Black E Mod;
Table of letter and object lefts.

C	L	O	S	E	D
4.500	19.625	33.875	49.500	65.250	79.500

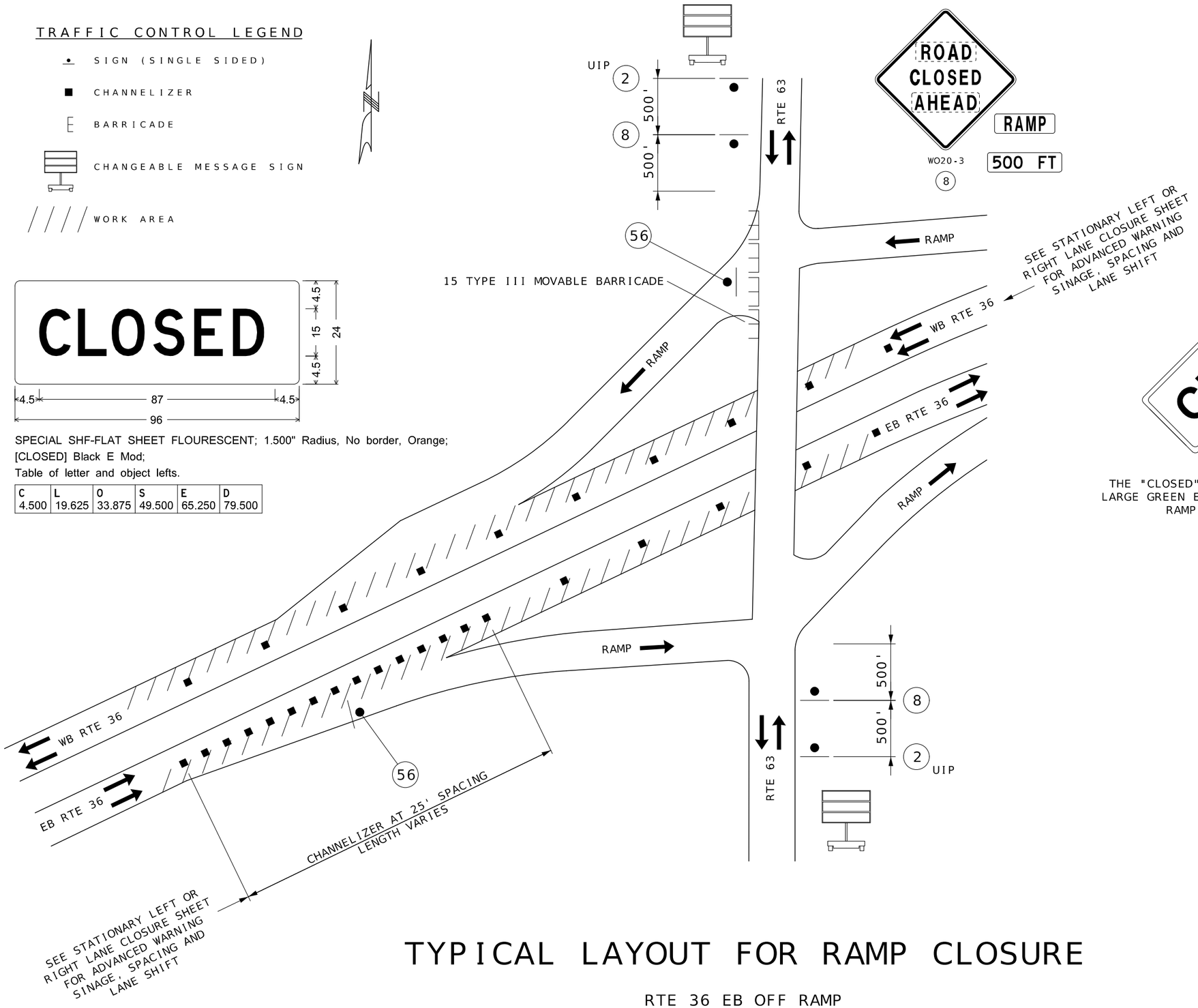

THE "CLOSED" PLAQUE SHALL BE PLACED ON THE LARGE GREEN EXIT GUIDE SIGNS UPSTREAM OF THE RAMP CLOSURE AT A 45° ANGLE

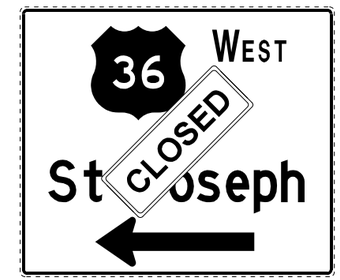

TYPICAL LAYOUT FOR RAMP CLOSURE

RTE 36 EB OFF RAMP
RTE 36 WB ON RAMP

NOT TO SCALE

STATE OF MISSOURI
KEITH ALLEN KILLEN
NUMBER PE-2007020292
PROFESSIONAL ENGINEER
06/02/2025 2:30:19 PM
KEITH ALLEN KILLEN - CIVIL
MO-PE-2007020292

DATE PREPARED	
6/2/2025	
ROUTE 36	STATE MO
DISTRICT NE	SHEET NO. 20
COUNTY MACON	
JOB NO. JNE0120	
CONTRACT ID.	
PROJECT NO.	
BRIDGE NO.	

DESCRIPTION

DATE

MISSOURI HIGHWAYS AND TRANSPORTATION COMMISSION
105 WEST CAPITOL
JEFFERSON CITY, MO 65102
1-888-ASK-MODOT (1-888-275-6636)

TRAFFIC CONTROL
SHEET 6 OF 8

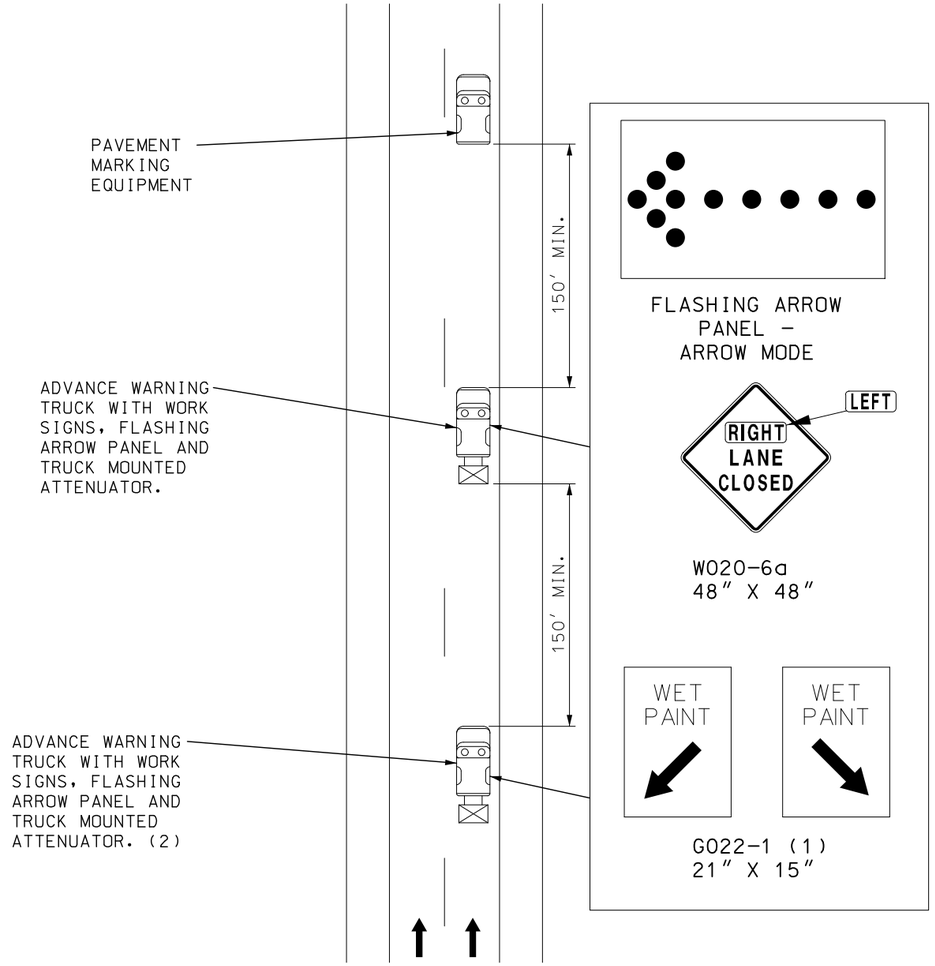

MULTI-LANE DIVIDED HIGHWAY
PAVEMENT MARKING
MOVING OPERATION ON HIGHWAY OPEN TO TRAFFIC

NOTES:
UPON ARRIVAL OF THE ENGINEER, THE CONTRACTOR MAY PROVIDE ADDITIONAL PROTECTIVE TRUCKS EQUIPPED WITH PROPER WARNING DEVICES.

PROTECTIVE TRUCK AND WORK VEHICLES SHALL DISPLAY HIGH-INTENSITY ROTATING, FLASHING, OSCILLATING, OR STROBE LIGHTS.

VEHICLE HAZARD WARNING SIGNALS SHALL NOT BE USED INSTEAD OF THE VEHICLE'S HIGH-INTENSITY ROTATING, FLASHING, OSCILLATING, OR STROBE LIGHTS.

(1) WET PAINT SIGNS ARE INSTALLED TO INDICATE THE SIDE IN WHICH THE PAVEMENT MARKING MATERIAL IS BEING APPLIED. AT THE CONTRACTOR'S OPTION, A FRONT FACING WET PAINT SIGN MAY BE INSTALLED ON THE LEFT SIDE OF THE PAVEMENT MARKING EQUIPMENT.

(2) ADVANCE WARNING TRUCK IS POSITIONED AT THE NO TRACK POINT OF THE PAVEMENT MARKING MATERIAL OR SPACING SHOWN, WHICH EVER IS GREATER.

FLASHING ARROW PANELS SHALL, AS A MINIMUM, BE TYPE B, WITH SIZE OF 60 X 30 INCHES.

VEHICLE-MOUNTED SIGNS SHALL BE MOUNTED IN A MANNER SUCH THAT THEY ARE NOT OBSCURED BY EQUIPMENT OR SUPPLIES. SIGN LEGENDS ON VEHICLE-MOUNTED SIGNS SHALL BE COVERED OR TURNED FROM VIEW WHEN WORK IS NOT IN PROGRESS.

AN FLASHING ARROW BOARD SHALL BE USED WHEN FREEWAY LANE IS CLOSED. WHEN MORE THAN ONE LANE CLOSED, A SEPERATE FLASHING ARROW BOARD SHALL BE USED FOR EACH CLOSED LANE.

STATE OF MISSOURI
KEITH ALLEN KILLEN
NUMBER
PE-2007020292
PROFESSIONAL ENGINEER
06/02/2025 2:20:40 PM
KEITH ALLEN KILLEN - CIVIL
MO-PE-2007020292

DATE PREPARED	6/2/2025
ROUTE	36
STATE	MO
DISTRICT	NE
SHEET NO.	21
COUNTY	MACON
JOB NO.	JNE0120
CONTRACT ID.	
PROJECT NO.	
BRIDGE NO.	

DESCRIPTION	DATE

MISSOURI HIGHWAYS AND TRANSPORTATION COMMISSION
105 WEST CAPITOL
JEFFERSON CITY, MO 65102
1-888-ASK-MODOT (1-888-275-6636)

TRAFFIC CONTROL
SHEET 7 OF 8

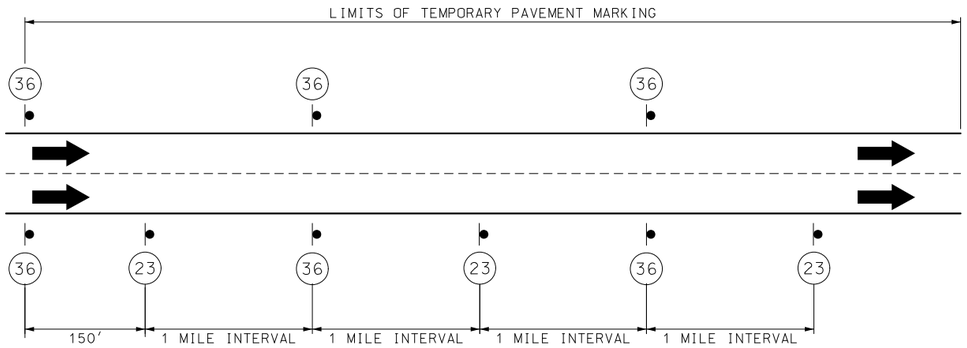

SIGN SPACING FOR DIVIDED OR MULTI-LANE HIGHWAY

(DETAIL SHOWN IS BASED ON A PROJECT MEETING CONDITIONS OF UNEVEN LANES AND SHOULDER DROP-OFF)
WHEN BOTH UNEVEN LANES AND SHOULDER DROP-OFF SIGNS ARE USED, BOTH SIGNS SHEALL STAY IN PLACE UNTIL BOTH CONDITION NO LONGER EXISTS.
WHEN ONLY ONE CONDITION EXISTS (UNEVE LANES OR SHOULDER DROP-OFF), SHEN SPACING SHALL BE AT 1 MILE INTERVALS

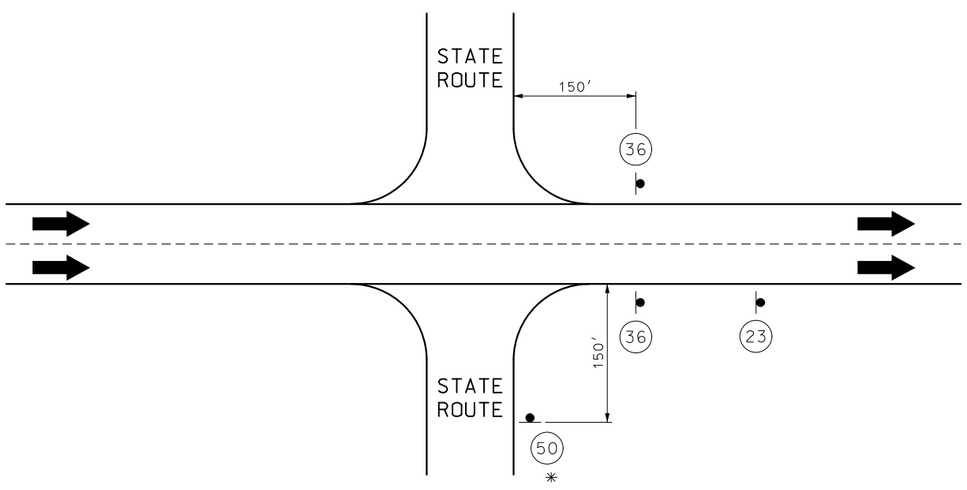

SIGN SPACING AT STATE ROUTE INTERSECTIONS

* BUMP SIGN SHOULD BE IN ACCORDANCE WITH STANDARD PLANS 619.10

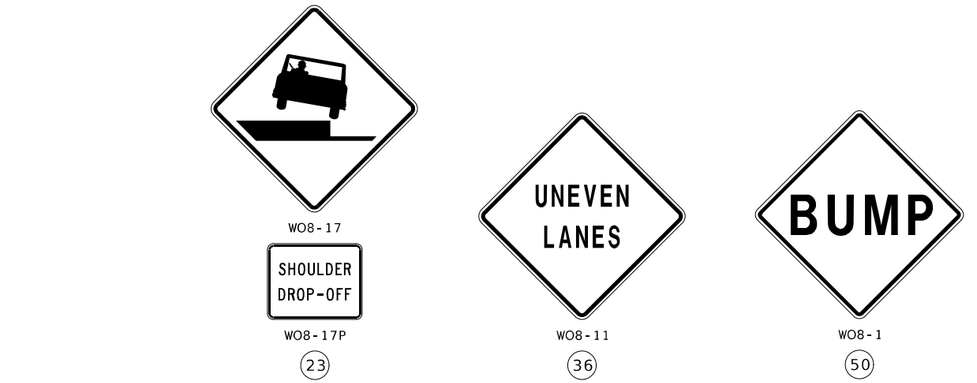

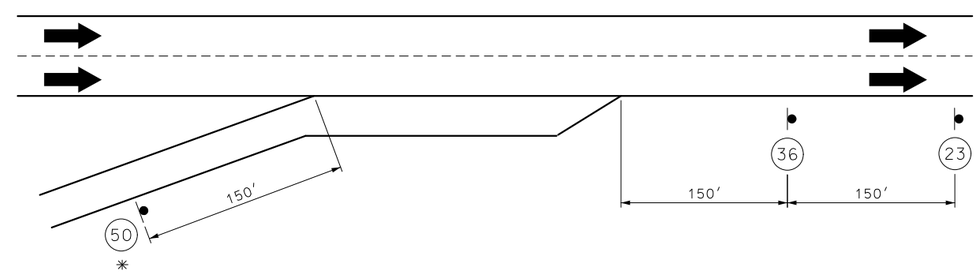

SIGN SPACING AT RAMPS

* BUMP SIGN SHOULD BE IN ACCORDANCE WITH STANDARD PLANS 619.10

GENERAL NOTES:

FOR DETAILS OF TEMPORARY PAVEMENT MARKING, SEE SHEET 1 OF 5 STD. PLAN 620.10

ALL SIGNS SHALL BE POST MOUNTED AND IN ACCORDANCE WITH STANDARD PLANS 616.10 AND 903.03

WHEN SHOULDER DROP-OFF SIGNS ARE IN PLACE FOR GREATER THAN THREE DAYS, THE SHOULDER DROP-OFF PLAQUE SHOULD BE USED IN ADDITION WITH THE SHOULDER DROP-OFF SIGN.

NOT TO SCALE

STATE OF MISSOURI
KEITH ALLEN KILLEN
NUMBER
PE-2007020292
PROFESSIONAL ENGINEER
06/02/2025 2:20:58 PM
KEITH ALLEN KILLEN - CIVIL
MO-PE-2007020292

DATE PREPARED	
6/2/2025	
ROUTE 36	STATE MO
DISTRICT NE	SHEET NO. 22
COUNTY MACON	
JOB NO. JNE0120	
CONTRACT ID.	
PROJECT NO.	
BRIDGE NO.	

DATE	DESCRIPTION

MISSOURI HIGHWAYS AND TRANSPORTATION COMMISSION
105 WEST CAPITOL
JEFFERSON CITY, MO 65102
1-888-ASK-MODOT (1-888-275-6636)

TRAFFIC CONTROL
SHEET 8 OF 8

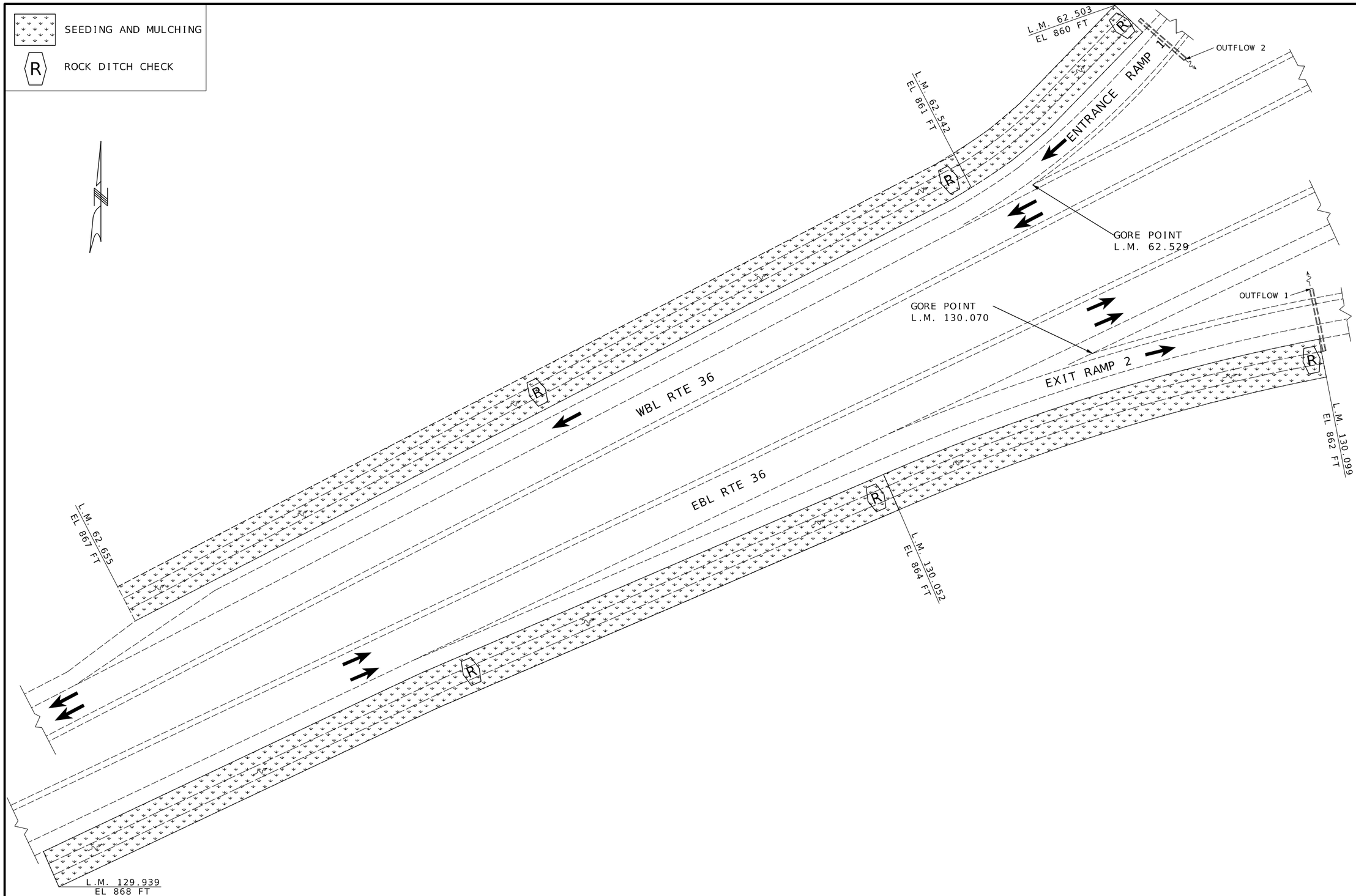

EROSION CONTROL AT WEST RAMPS AT 36/63 INTERCHANGE

NOT TO SCALE

STATE OF MISSOURI
KEITH ALLEN KILLEN
NUMBER
PE-2007020292
PROFESSIONAL ENGINEER

06/02/2025 2:21:19 PM
KEITH ALLEN KILLEN - CIVIL
MO-PE-2007020292

DATE PREPARED	
6/2/2025	
ROUTE 36	STATE MO
DISTRICT NE	SHEET NO. 23
COUNTY MACON	
JOB NO. JNE0120	
CONTRACT ID.	
PROJECT NO.	
BRIDGE NO.	

DATE	DESCRIPTION

MISSOURI HIGHWAYS AND TRANSPORTATION COMMISSION

105 WEST CAPITOL
JEFFERSON CITY, MO 65102
1-888-ASK-MODOT (1-888-275-6636)

EROSION CONTROL SHEET
SHEET 1 OF 1

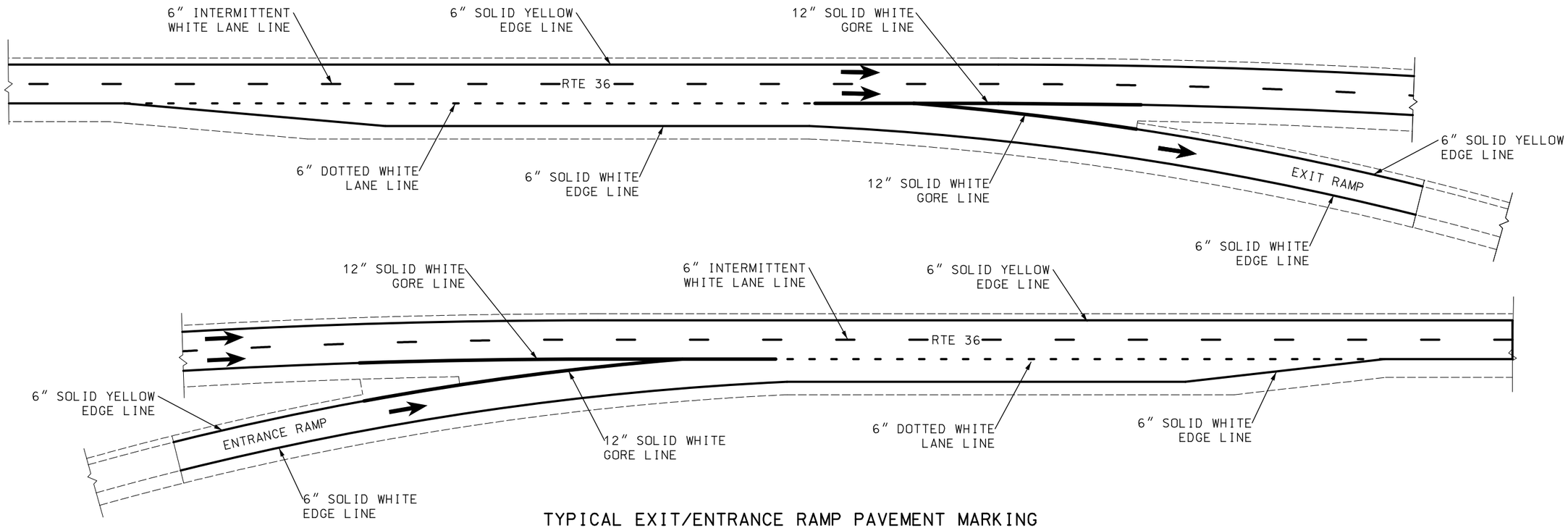

TYPICAL EXIT/ENTRANCE RAMP PAVEMENT MARKING

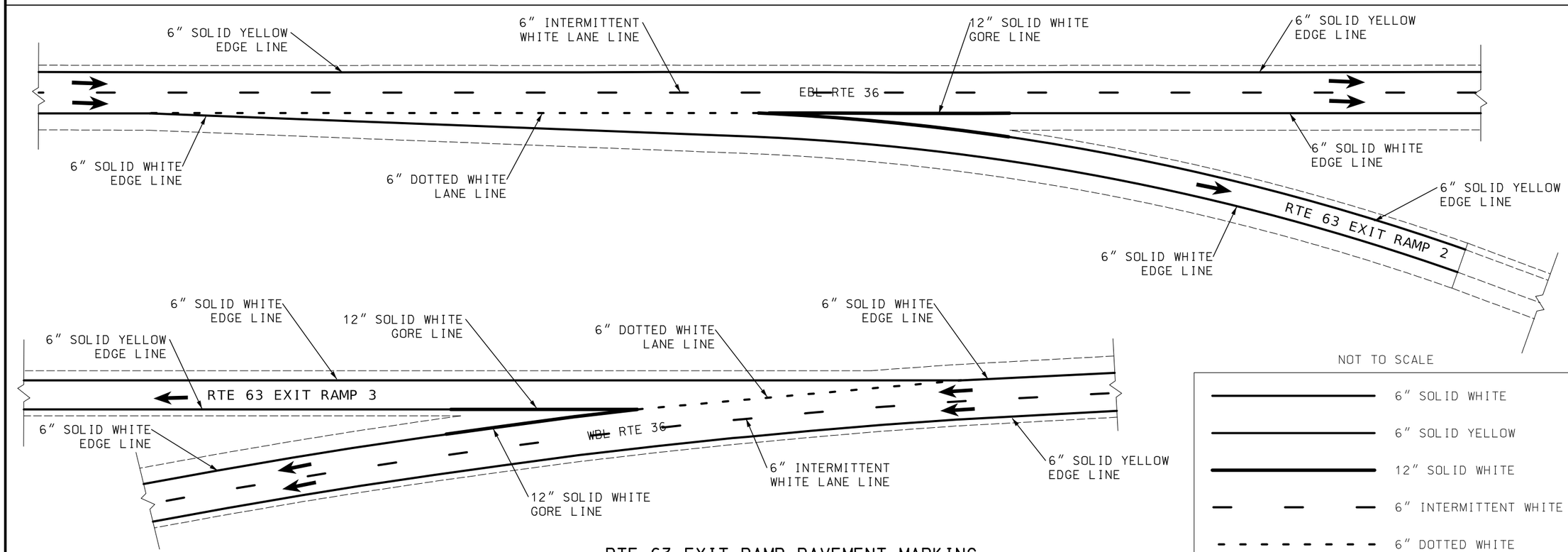

RTE 63 EXIT RAMP PAVEMENT MARKING

STATE OF MISSOURI
KEITH ALLEN KILLEN
NUMBER PE-2007020292
PROFESSIONAL ENGINEER
06/02/2025 2:21:39 PM
KEITH ALLEN KILLEN - CIVIL
MO-PE-2007020292

DATE PREPARED	6/2/2025
ROUTE	36
STATE	MO
DISTRICT	NE
SHEET NO.	24
COUNTY	MACON
JOB NO.	JNE0120
CONTRACT ID.	
PROJECT NO.	
BRIDGE NO.	

DESCRIPTION

DATE

MISSOURI HIGHWAYS AND TRANSPORTATION COMMISSION

105 WEST CAPITOL
JEFFERSON CITY, MO 65102
1-888-ASK-MODOT (1-888-275-6636)

PAVEMENT MARKING
SHEET 1 OF 1

SEC/SUR 16 TWP 57N RGE 14W

U.I.P. AND REHABILITATE EXISTING (35'-51'-33') CONTINUOUS CONCRETE VOIDED SLAB SPANS

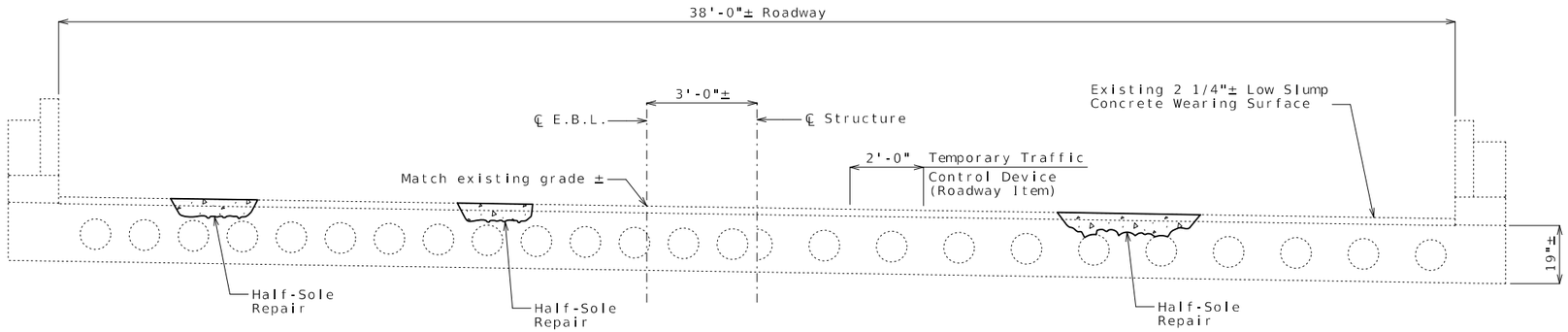

TYPICAL HALF SECTION NEAR CENTER OF SPAN

TYPICAL HALF SECTION NEAR INT. BENT

TYPICAL SECTION THRU EXISTING DECK

Estimated Quantities		
Item		Total
Half-Sole Repair	sq. foot	50

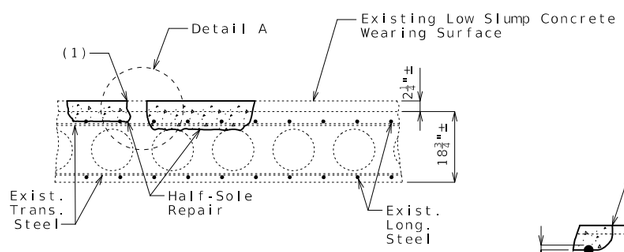

HALF-SOLE REPAIR
(Bridge Deck)

(1) 1" vertical side shall be established outside the deteriorated area.

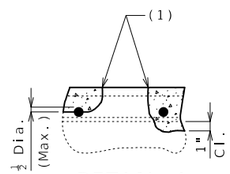

DETAIL A

Clearance around top bar and around bottom bar at the intersection of top bar shall be required when more than half the diameter of the top bar is exposed.

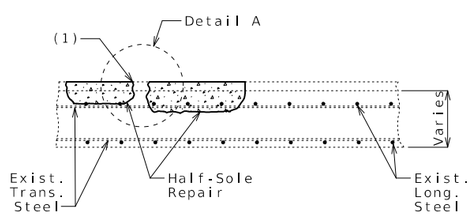

HALF-SOLE REPAIR
(Approach Slab)

General Notes:

Design Specifications:

2002 AASHTO LFD (17th Ed.) Standard Specifications
Bridge Deck Rating = 7

Design Loading:

HS20-44 (1965)

Design Unit Stresses:

Class B-1 Concrete (Half-Sole Repair) f'c = 4,000 psi

Miscellaneous:

Roadway surfacing adjacent to bridge ends shall match existing bridge wearing surface (Roadway Item).

All concrete repairs shall be in accordance with Sec 704, unless otherwise noted.

Outline of existing work is indicated by light dashed lines. Heavy lines indicate new work.

Traffic Handling:

Traffic to be maintained on structure during construction. See roadway plans for traffic control.

REPAIRS TO BRIDGE: ROUTE 36 E.B.L.
OVER GANTZ STREET

ROUTE 36 FROM ROUTE C TO ROUTE 63
ABOUT 0.4 MILES WEST OF ROUTE 63
BEGINNING STATION 1126+13.20± (Match Existing)

Detailed Jan. 2025
Checked Feb. 2025

Note: This drawing is not to scale. Follow dimensions.

STATE OF MISSOURI
TYLER R. LINDSAY
NUMBER PE-2019000128
PROFESSIONAL ENGINEER
04/16/2025 6:14:26 AM
TYLER R. LINDSAY - CIVIL
MO-PE-2019000128

DATE PREPARED 4/15/2025

ROUTE	STATE
36	MO
DISTRICT	SHEET NO.
BR	1

COUNTY MACON
JOB NO. JNE0120
CONTRACT ID.
PROJECT NO.
BRIDGE NO. A20413

DATE	DESCRIPTION

MISSOURI HIGHWAYS AND TRANSPORTATION COMMISSION
105 WEST CAPITOL
JEFFERSON CITY, MO 65102
1-888-ASK-MODOT (1-888-275-6636)

SEC/SUR 16 TWP 57N RGE 14W

U.I.P. AND REHABILITATE EXISTING (35'-51'-33') CONTINUOUS CONCRETE VOIDED SLAB SPANS

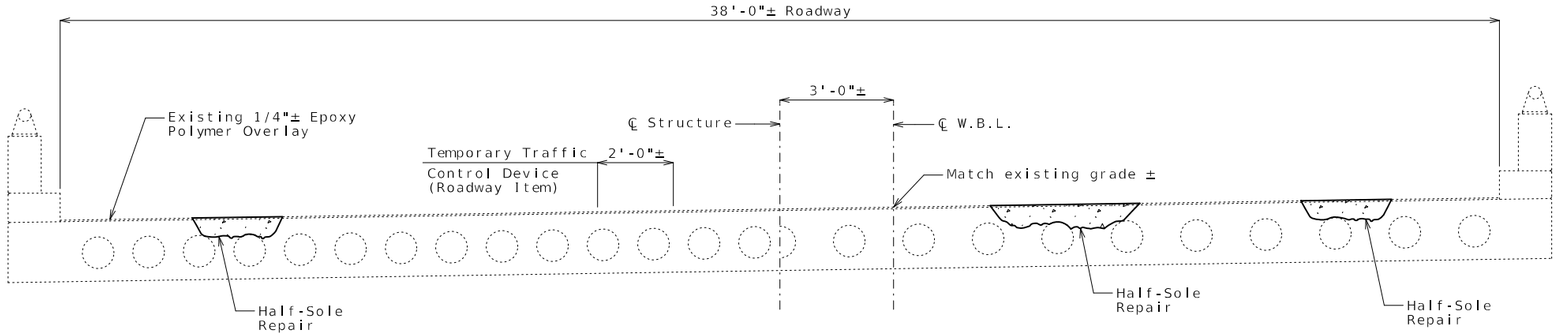

TYPICAL HALF SECTION NEAR CENTER OF SPAN

TYPICAL HALF SECTION NEAR INT. BENT

TYPICAL SECTION THRU EXISTING DECK

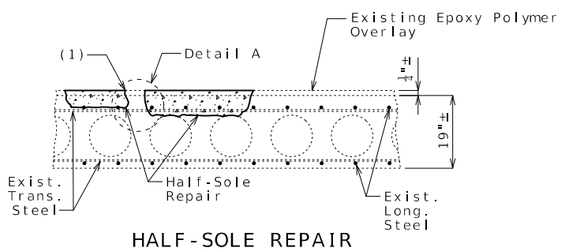

HALF-SOLE REPAIR
(Bridge Deck)

(1) 1" vertical side shall be established outside the deteriorated area.

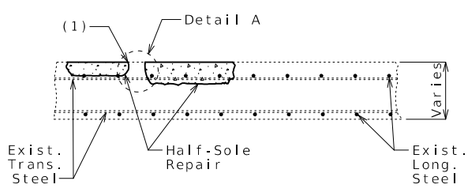

HALF-SOLE REPAIR
(Approach Slab)

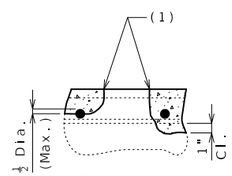

DETAIL A

Clearance around top bar and around bottom bar at the intersection of top bar shall be required when more than half the diameter of the top bar is exposed.

Estimated Quantities

Item		Total
Half-Sole Repair	sq. foot	50

General Notes:

Design Specifications:

2002 AASHTO LFD (17th Ed.) Standard Specifications
Bridge Deck Rating = 7

Design Loading:

HS20-44 (1965)

Design Unit Stresses:

Class B-1 Concrete (Half-Sole Repair) f'c = 4,000 psi

Miscellaneous:

Roadway surfacing adjacent to bridge ends shall match existing bridge wearing surface (Roadway Item).

All concrete repairs shall be in accordance with Sec 704, unless otherwise noted.

Outline of existing work is indicated by light dashed lines. Heavy lines indicate new work.

Traffic Handling:

Traffic to be maintained on structure during construction. See roadway plans for traffic control.

REPAIRS TO BRIDGE: ROUTE 36 W.B.L. OVER GANTZ STREET

ROUTE 36 FROM ROUTE 63 TO ROUTE C
ABOUT 0.4 MILES WEST OF ROUTE 63
BEGINNING STATION 1126+13.20± (Match Existing)

Detailed Jan. 2025
Checked Feb. 2025

Note: This drawing is not to scale. Follow dimensions.

STATE OF MISSOURI
TYLER R. LINDSAY
NUMBER PE-2019000128
PROFESSIONAL ENGINEER
04/16/2025 6:14:30 AM
TYLER R. LINDSAY - CIVIL
MO-PE-2019000128

DATE PREPARED	
4/15/2025	
ROUTE 36	STATE MO
DISTRICT BR	SHEET NO. 1
COUNTY MACON	
JOB NO. JNE0120	
CONTRACT ID.	
PROJECT NO.	
BRIDGE NO. A20414	

DATE	DESCRIPTION

MISSOURI HIGHWAYS AND TRANSPORTATION COMMISSION
105 WEST CAPITOL
JEFFERSON CITY, MO 65102
1-888-ASK-MODOT (1-888-275-6636)

SEC/SUR 18 TWP 57N RGE 14W

U.I.P. AND REHABILITATE EXISTING (46'-53'-46') PRESTRESSED CONCRETE I-GIRDER SPANS (SKEW: 10°00'00" L.A.)

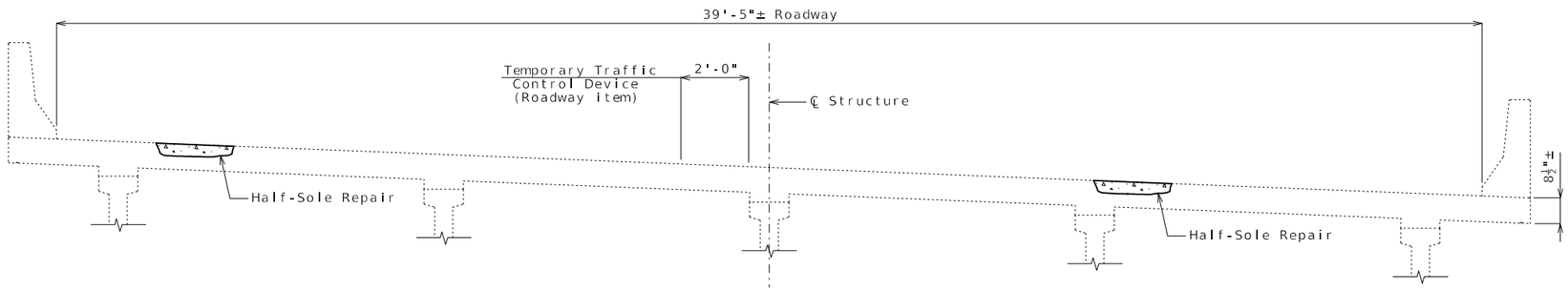

TYPICAL SECTION THRU EXISTING DECK

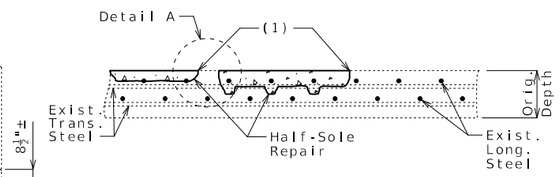

HALF-SOLE REPAIR
(Bridge Deck)

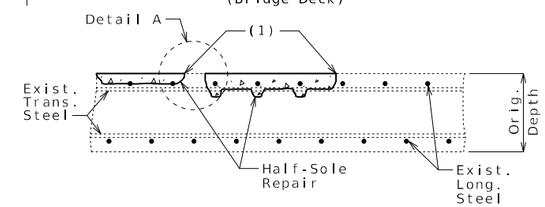

HALF-SOLE REPAIR
(Approach Slab)

Estimated Quantities		
	Item	Total
	Half-Sole Repair sq. foot	50
**	Open Cell Foam Joint Seal linear foot	83

** Includes saw cutting new joint required to install seal.

General Notes:

Design Specifications:

2002 AASHTO LFD (17th Ed.) Standard Specifications
Bridge Deck Rating = 7

Design Loading:

HS20-44 Modified (1977)

Design Unit Stresses:

Class B-2 Concrete (Half-Sole Repair) f'c = 4,000 psi

Miscellaneous:

Roadway surfacing adjacent to bridge ends shall match new bridge wearing surface (roadway item).

All concrete repairs shall be in accordance with Sec 704, unless otherwise noted.

Outline of existing work is indicated by light dashed lines. Heavy lines indicate new work.

Open cell foam joint seal size (width and depth) shall be determined by the manufacturer. Manufacturer recommended seal size shall meet the movvement and installation gap requirements and skew effect.

The open cell foam joint seal shall be installed according to the manufactuer's recommendations.

The installation temperature shall be taken as the actual air temperature averaged over the 24-hour period immediately preceding installation.

Traffic Handling:

Traffic to be maintained on structure during construction. See roadway plans for traffic control.

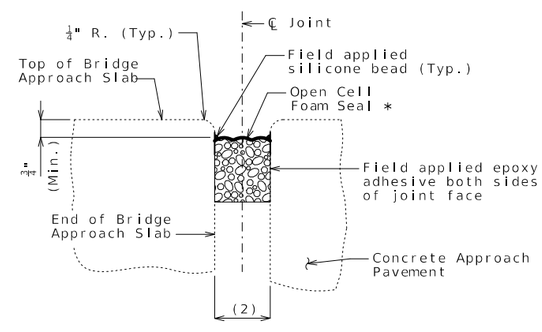

SECTION THRU JOINT AT END OF BRIDGE APPROACH SLAB

SKEW = 10°

* Manufacturer's recommended size

Extend seal full width of approach slab.

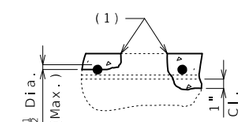

DETAIL A

Clearance around top bar and around bottom bar at the intersection of top bar shall be required when more than half the diameter of the top bar is exposed.

(1) 1" vertical side shall be established outside the deteriorated area.

(2) Allowed installation gap (±) normal to joint at roadway surface (See Table)

Movement Parallel to Rdwy	Movement Normal to Joint	Min. Jt. Width (Normal to Joint)	Max. Jt. Width (Normal to Joint)	(1) Allowed Installation Gap (±) Normal to Joint at Roadway Surface at Air/Surface Temperature				Manufacturer	Seal Name
				@ 40°F	@ 50°F	@ 60°F	@ 70°F		
0.85"	0.84"	1.65"	2.49"	2⅛"	2 1/16"	2"	1 15/16"		

MoDOT construction personnel will record the manufacturer and seal name that was used.

REPAIRS TO BRIDGE: ROUTE 36 E.B.L. OVER LONG BRANCH LAKE ROAD

ROUTE 36 FROM ROUTE C TO ROUTE 63
ABOUT 1.9 MILES WEST OF ROUTE 63
BEGINNING STATION 1034+85.75± (MATCH EXISTING)

Detailed Mar. 2025
Checked Mar. 2025

Note: This drawing is not to scale. Follow dimensions.

STATE OF MISSOURI
TYLER R. LINDSAY
NUMBER PE-2019000128
PROFESSIONAL ENGINEER
04/15/2025 12:22:45 PM
TYLER R LINDSAY - CIVIL
MO-PE-2019000128

DATE PREPARED 4/15/2025

ROUTE	STATE
36	MO
DISTRICT	SHEET NO.
BR	1

COUNTY MACON
JOB NO. JNE0120
CONTRACT ID.
PROJECT NO.
BRIDGE NO. A38201

DATE	DESCRIPTION

MISSOURI HIGHWAYS AND TRANSPORTATION COMMISSION
105 WEST CAPITOL
JEFFERSON CITY, MO 65102
1-888-ASK-MODOT (1-888-275-6636)

SEC/SUR	18	TWP	57N	RGE	14W

U.I.P. AND REHABILITATE EXISTING (46'-53'-46') PRESTRESSED CONCRETE I-GIRDER SPANS (SKEW: 10°00'00" L.A.)

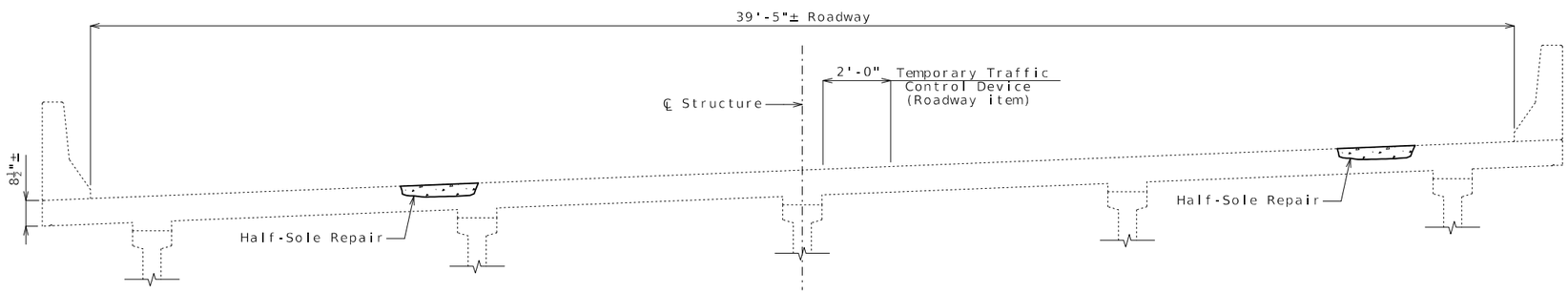

TYPICAL SECTION THRU EXISTING DECK

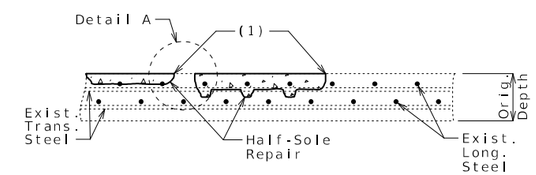

HALF-SOLE REPAIR
(Bridge Deck)

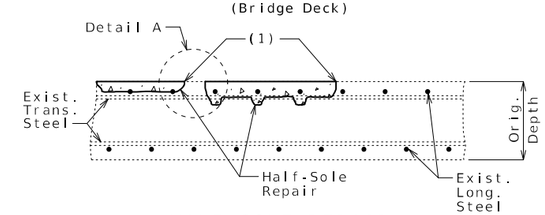

HALF-SOLE REPAIR
(Approach Slab)

Estimated Quantities		
Item		Total
Half-Sole Repair	sq. foot	50
** Open Cell Foam Joint Seal	linear foot	83

** Includes saw cutting new joint required to install seal.

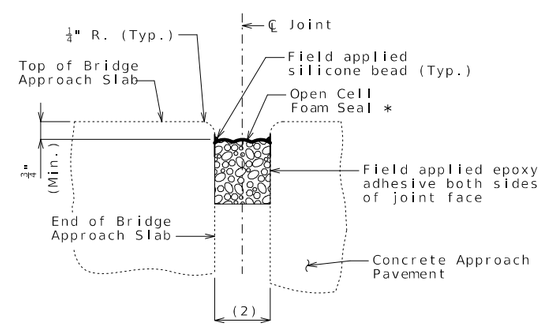

SECTION THRU JOINT AT END OF BRIDGE APPROACH SLAB

SKEW = 10°

* Manufacturer's recommended size

Extend seal full width of approach slab.

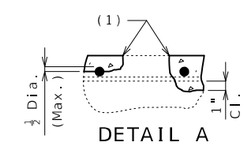

DETAIL A

Clearance around top bar and around bottom bar at the intersection of top bar shall be required when more than half the diameter of the top bar is exposed.

(1) 1" vertical side shall be established outside the deteriorated area.

(2) Allowed installation gap (±) normal to joint at roadway surface (See Table)

General Notes:

Design Specifications:

2002 AASHTO LFD (17th Ed.) Standard Specifications
Bridge Deck Rating = 7

Design Loading:

HS20-44 Modified (1977)

Design Unit Stresses:

Class B-2 Concrete (Half-Sole Repair) f'c = 4,000 psi

Miscellaneous:

Roadway surfacing adjacent to bridge ends shall match new bridge wearing surface (roadway item).

All concrete repairs shall be in accordance with Sec 704, unless otherwise noted.

Outline of existing work is indicated by light dashed lines. Heavy lines indicate new work.

Open cell foam joint seal size (width and depth) shall be determined by the manufacturer. Manufacturer recommended seal size shall meet the movvement and installation gap requirements and skew effect.

The open cell foam joint seal shall be installed according to the manufactuer's recommendations.

The installation temperature shall be taken as the actual air temperature averaged over the 24-hour period immediately preceding installation.

Traffic Handling:

Traffic to be maintained on structure during construction. See roadway plans for traffic control.

Movement Parallel to Rdwy	Movement Normal to Joint	Min. Jt. Width (Normal to Joint)	Max. Jt. Width (Normal to Joint)	(1) Allowed Installation Gap (±) Normal to Joint at Roadway Surface at Air/Surface Temperature				Manufacturer	Seal Name
				@ 40°F	@ 50°F	@ 60°F	@ 70°F		
0.85"	0.84"	1.65"	2.49"	2⅛"	2 1/16"	2"	1 15/16"		

MoDOT construction personnel will record the manufacturer and seal name that was used.

REPAIRS TO BRIDGE: ROUTE 36 W.B.L.
OVER LONG BRANCH LAKE ROAD

ROUTE 36 FROM ROUTE 63 TO ROUTE C
ABOUT 1.9 MILES WEST OF ROUTE 63
BEGINNING STATION 1034+85.75± (MATCH EXISTING)

Detailed Mar. 2025
Checked Mar. 2025

Note: This drawing is not to scale. Follow dimensions.

STATE OF MISSOURI
TYLER R. LINDSAY
NUMBER PE-2019000128
PROFESSIONAL ENGINEER
04/15/2025 12:22:54 PM
TYLER R. LINDSAY - CIVIL
MO-PE-2019000128

DATE PREPARED	
4/15/2025	
ROUTE 36	STATE MO
DISTRICT BR	SHEET NO. 1
COUNTY MACON	
JOB NO. JNE0120	
CONTRACT ID.	
PROJECT NO.	
BRIDGE NO. A38202	

DATE	DESCRIPTION

MISSOURI HIGHWAYS AND TRANSPORTATION COMMISSION
105 WEST CAPITOL
JEFFERSON CITY, MO 65102
1-888-ASK-MODOT (1-888-275-6636)

MISSOURI HIGHWAYS AND TRANSPORTATION COMMISSION

PLANS FOR PROPOSED
STATE HIGHWAY
MACON COUNTY
ROUTE 63

DESIGN DESIGNATION

ROUTE 63
A.A.D.T. - 2022 = 14,086
A.A.D.T. - 2042 = 17,185
D.H.V. = 8.6%
T = 11.6%
V = 35 M.P.H.
D = 50%
FUNCTIONAL CLASSIFICATION-PRINCIPAL ARTERIAL

ROUTE 36
A.A.D.T. - 2022 = 10,079
A.A.D.T. - 2042 = 12,269
D.H.V. = 9.3%
T = 36.4%
V = 65 M.P.H.
D = 50%
FUNCTIONAL CLASSIFICATION-PRINCIPAL ARTERIAL

NO RIGHT OF WAY TO BE ACQUIRED FOR THIS JOB

CONVENTIONAL SYMBOLS
(USED IN PLANS)

	EXISTING	NEW
BUILDINGS AND STRUCTURES		
GUARD RAIL		
GUARD CABLE		
CONCRETE RIGHT-OF-WAY MARKER		
STEEL RIGHT-OF-WAY MARKER		
LOCATION SURVEY MARKER		
UTILITIES		
FIBER OPTICS	FO	FO
OVERHEAD CABLE TV	OTV	OTV
UNDERGROUND CABLE TV	UTV	UTV
OVERHEAD TELEPHONE	OT	OT
UNDERGROUND TELEPHONE	UT	UT
OVERHEAD POWER	OE	OE
UNDERGROUND POWER	UE	UE
SANITARY SEWER	S	S
STORM SEWER	SS	SS
GAS	G	G
WATER	W	W
MANHOLE	SAN	
FIRE HYDRANT	HYD	
WATER VALVE	WV	
WATER METER	WM	
DROP INLET	DI	
DITCH BLOCK		
GROUND MOUNTED SIGN	SIGN	
LIGHT POLE		
H-FRAME POWER POLE		
TELEPHONE PEDESTAL	PED	
FENCE		
CHAIN LINK	V	
WOVEN WIRE	X	
GATE POST		
BENCHMARK	BM	

NOTE: DASHED OR OPEN SYMBOLS INDICATE EXISTING FEATURES

KEY MAP
LOCATION OF MACON COUNTY

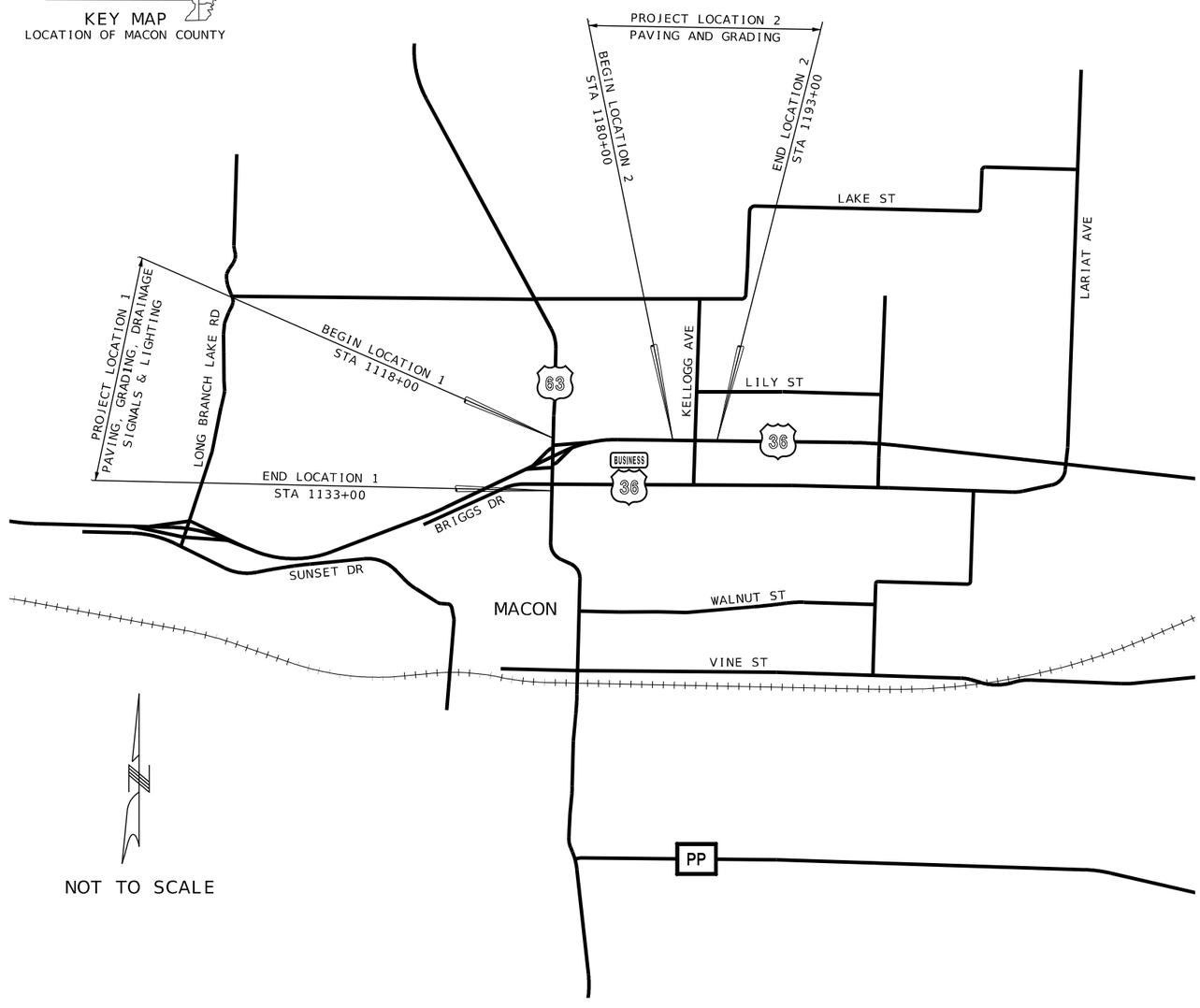

THE EXISTENCE AND APPROXIMATE LOCATION OF UTILITY FACILITIES KNOWN TO EXIST, AS SHOWN ON THE PLANS, ARE BASED ON THE BEST INFORMATION AVAILABLE TO THE COMMISSION AT THIS TIME. THIS INFORMATION IS PROVIDED BY THE COMMISSION "AS-IS" AND THE COMMISSION EXPRESSLY DISCLAIMS ANY REPRESENTATION OR WARRANTY AS TO THE COMPLETENESS, ACCURACY, OR SUITABILITY OF THE INFORMATION FOR ANY USE. RELIANCE UPON THIS INFORMATION IS DONE AT THE RISK AND PERIL OF THE USER, AND THE COMMISSION SHALL NOT BE LIABLE FOR ANY DAMAGES THAT MAY ARISE FROM ANY ERROR IN THE INFORMATION. IT IS, THEREFORE, THE RESPONSIBILITY OF THE CONTRACTOR TO VERIFY THE EXISTENCE, LOCATION AND STATUS OF ANY FACILITY. SUCH VERIFICATION INCLUDES DIRECT CONTACT WITH THE LISTED UTILITIES.

INDEX OF SHEETS

LENGTH OF PROJECT

BEGINNING OF PROJECT LOCATION 1	STA. 1118+00.00
END OF PROJECT	STA. 1133+00.00
APPARENT LENGTH	1500.00 FEET
EQUATIONS AND EXCEPTIONS:	
BEGINNING OF PROJECT LOCATION 2	STA. 1180+00.00
END OF PROJECT	STA. 1193+00.00
APPARENT LENGTH	1300.00 FEET
EQUATIONS AND EXCEPTIONS:	
TOTAL CORRECTIONS	0.00 FEET
NET LENGTH OF PROJECT	2800.00 FEET
STATE LENGTH	0.530 MILES
FOR INFORMATION ONLY ESTIMATED DISTURBED ACRES	1.4 ACRES

STATE OF MISSOURI
PAUL JOSEPH KRONLAGE
NUMBER
EN-023328
REGISTERED PROFESSIONAL ENGINEER

05/29/2025 12:50:58 PM
Paul J. Kronlage - Civil
MO PE - 023328

DATE PREPARED	
5/28/2025	
ROUTE: 63	STATE: MO
DISTRICT: NE	SHEET NO.: 1
COUNTY: MACON	
JOB NO.: JNE0137	
CONTRACT ID.	
PROJECT NO.	
BRIDGE NO.	

DATE	DESCRIPTION

MISSOURI HIGHWAYS AND TRANSPORTATION COMMISSION
105 WEST CAPITOL
JEFFERSON CITY, MO 65102
1-888-ASK-MODOT (1-888-275-6636)

EFK•Moen
Civil Engineering Design
13523 Barrett Parkway Dr
Suite 250
St. Louis, MO 63021
Phone 314-394-3100
Fax 314-394-3199
Missouri Certificate of Authority: 001578

(1) FULL DEPTH SHOULDER STA 10+88 TO STA 11+73 RAMP 2, RT. SIDE
(2) FULL DEPTH SHOULDER STA 10+50 TO STA 11+43 RAMP 3, RT. SIDE
(3) SEPARATE LIFT

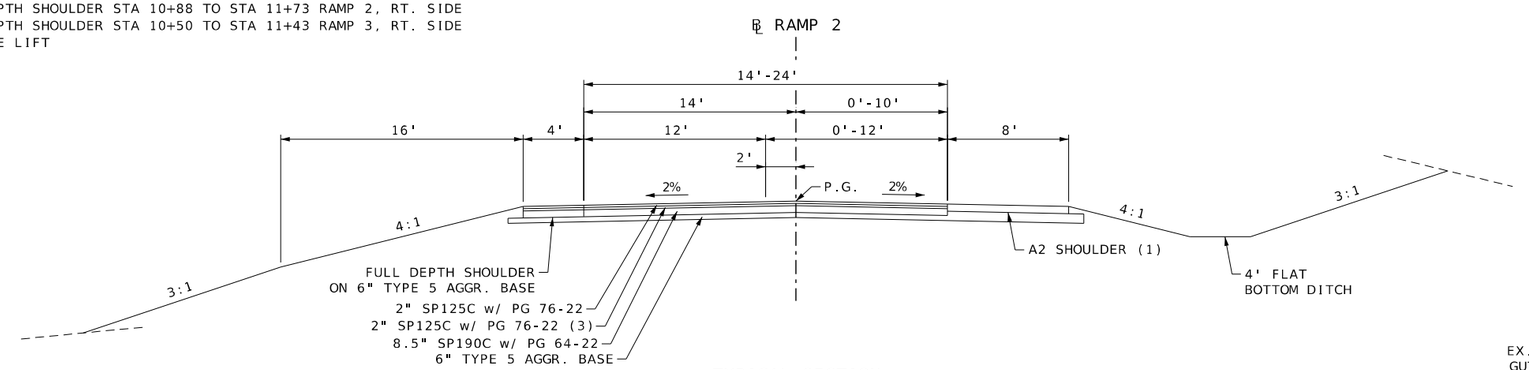

TYPICAL SECTION
RAMP 2
STA 7+80 TO STA 11+73

OPTIONAL PAVEMENT FOR RAMPS
CONCRETE
11" PCCP 15 FT. JOINTS AND 1.25" DOWELS

OPTIONAL TEMPORARY PAVEMENT
ASPHALT
2" BP-2 OVER 6" OF BIT. BASE W/ 4" TYPE 5 AGG. BASE
CONCRETE
8" PCCP W/ 4" TYPE 5 AGG. BASE

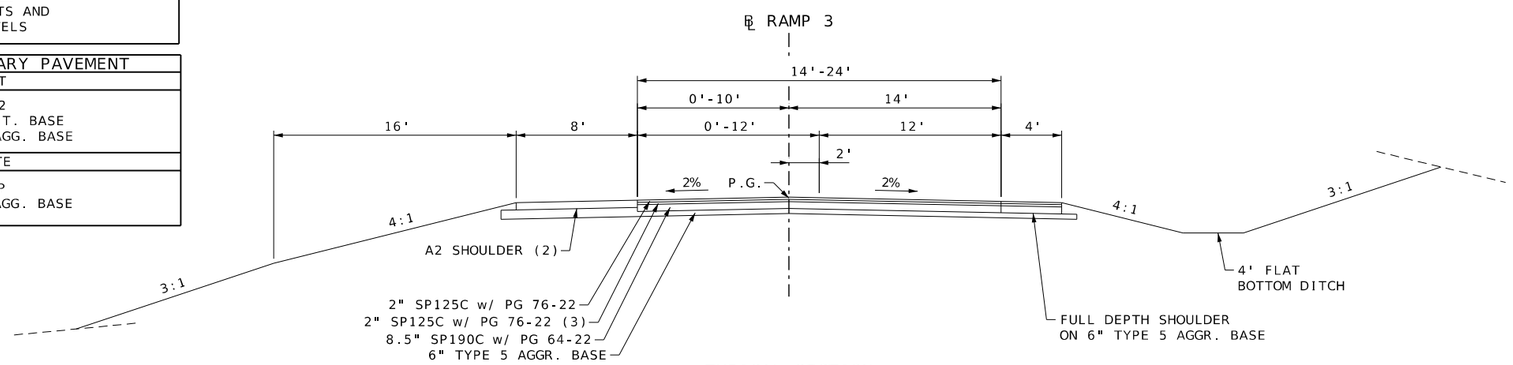

TYPICAL SECTION
RAMP 3
STA 6+95 TO STA 11+43

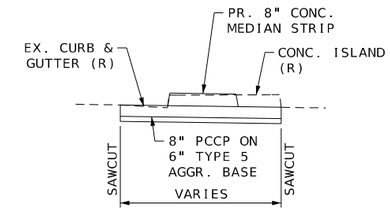

TYPICAL SECTION
ISLAND REPLACEMENT
ROUTE 63 AT BUSINESS ROUTE 36
CONCRETE OPTION ONLY
STA 1130+51 TO STA 1131+62

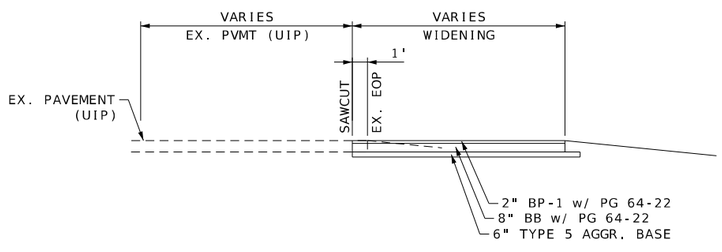

TYPICAL SECTION
ROUTE 36 MEDIAN AT KELLOGG
SECTION ALONG RTE 36 CENTERLINE

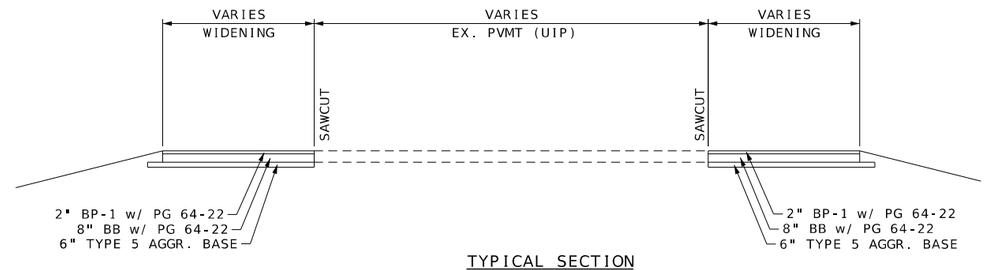

TYPICAL SECTION
WIDENING AT KELLOGG
SECTION THRU KELLOGG CENTERLINE

OPTIONAL PAVEMENT FOR KELLOGG WIDENING
CONCRETE
8" PCCP 15 FT. JOINTS AND 1.25" DOWELS

TYPICAL SECTIONS
SHEET 1 OF 1

DISCLAIMER
THE PROFESSIONAL WHOSE SIGNATURE AND PERSONAL SEAL APPEAR HEREON ASSUMES RESPONSIBILITY ONLY FOR WHAT APPEARS ON THIS PAGE, AND DISCLAIMS (PURSUANT TO SECTION 327.411 RSMO) SPECIFICATION, ESTIMATES, REPORTS, OR OTHER DOCUMENTS OR INSTRUMENTS NOT SEALED BY THE UNDERSIGNED PROFESSIONAL RELATING TO OR INTENDED TO BE USED FOR ANY PART OR PARTS OF THE PROJECT TO WHICH THIS PAGE REFERS.

STATE OF MISSOURI
PAUL JOSEPH KRONLAGE
NUMBER EN023328
REGISTERED PROFESSIONAL ENGINEER

07/01/2025 1:56:12 PM
Paul J. Kronlage - Civil
MO PE - 023328

DATE PREPARED	
7/1/2025	
ROUTE 63	STATE MO
DISTRICT NE	SHEET NO. 2
COUNTY MACON	
JOB NO. JNE0137	
CONTRACT ID.	
PROJECT NO.	
BRIDGE NO.	

DESCRIPTION	DATE

MISSOURI HIGHWAYS AND TRANSPORTATION COMMISSION
105 WEST CAPITOL
JEFFERSON CITY, MO 65102
1-888-ASK-MODOT (1-888-275-6636)

EFK•Moen
Civil Engineering Design
13523 Barrett Parkway Dr
Suite 250
St. Louis, MO 63021
Phone 314-394-3100
Fax 314-394-3199
Missouri Certificate of Authority: 001578

REMOVAL OF IMPROVEMENTS

SHEET NO	ROADWAY	STA	STA	LOC	LF	SF	EACH	REMARKS
4	RTE 63	1119+74		LT			1	SIGNS, POST, FOOTINGS
4	RTE 63	1119+79		LT			1	SIGNS, POST, FOOTINGS
4	RTE 63	1121+04		LT			1	SIGNS, POST, FOOTINGS
4	RTE 63	1120+40	1121+76	LT	136			GUARDRAIL, END TERMINAL, BRIDGE ATTACHEMENT
4	RTE 63	1121+91		RT			1	LIGHT, POST, FOUNDATION
4	RAMP 3	10+00	11+27	RT		2607.4		PAVEMENT
4	RAMP 3	10+31		RT			1	SIGNS, POST, FOOTINGS
4	RAMP 3	10+75		LT		25.9		24" PIPE HEADWALL CONCRETE
4	RAMP 3	10+73	10+99	LT		592.7		CONCRETE DITCH
4	RAMP 3	11+04		LT		57.2		36" PIPE HEADWALL CONCRETE
5	RTE 63	1124+55		LT			1	LIGHT, POST, FOUNDATION
5	RTE 63	1124+68	1125+94	RT	128			GUARDRAIL, END TERMINAL, BRIDGE ATTACHEMENT
5	RAMP 2	10+82		RT			1	SIGNS, POST, FOOTINGS
5	RAMP 2	11+17		RT			2	SIGNS, POST, FOOTINGS
5	RAMP 2	11+05	11+35	RT	77			CURB AND GUTTER
5	RAMP 2	10+50	11+61	RT		2866.1		PAVEMENT
6	RTE 63	1130+14		RT			1	LIGHT, POST, FOUNDATION
6	RTE 63	1130+51		LT			1	SIGNAL CONTROLLER AND BASE
6	RTE 63	1130+52	1130+89	RT		819.4		CONCRETE ISLAND AND PAVEMENT
6	RTE 63	1130+59	1130+91	LT		470.9		CONCRETE ISLAND AND PAVEMENT
6	RTE 63	1130+70		LT			1	LIGHT, POST, FOUNDATION
6	RTE 63	1130+76		LT			1	PULLBOX
6	RTE 63	1130+76		RT			1	SIGNS, POST, FOOTINGS
6	RTE 63	1130+77	1130+87	RT	11			15" PIPE
6	RTE 63	1130+79		RT			1	PULLBOX
6	RTE 63	1130+80		LT			1	SIGNAL, POST, FOUNDATION
6	RTE 63	1130+83	1130+86	LT	12			CURB AND GUTTER
6	RTE 63	1130+83		RT			1	SIGNAL, POST, FOUNDATION
6	RTE 63	1130+87		RT	24			CURB AND GUTTER
6	RTE 63	1130+87		RT			1	INLET
6	RTE 63	1131+20		LT			1	SIGNAL, POST, FOUNDATION
6	RTE 63	1131+24		LT	24			CURB AND GUTTER
6	RTE 63	1131+25	1131+61	LT		818.2		CONCRETE ISLAND AND PAVEMENT
6	RTE 63	1131+26	1131+58	RT		580.5		CONCRETE ISLAND AND PAVEMENT
6	RTE 63	1131+27	1131+36	LT	11			12" PIPE
6	RTE 63	1131+27		LT			1	INLET
6	RTE 63	1131+28	1131+32	RT	20			CURB AND GUTTER
6	RTE 63	1131+33		RT			1	SIGNAL, POST, FOUNDATION
6	RTE 63	1131+35		LT			1	PULLBOX
6	RTE 63	1131+37		LT			1	SIGNS, POST, FOOTINGS
6	RTE 63	1131+47		RT			1	LIGHT, POST, FOUNDATION
6	RTE 63	1132+01		LT			1	LIGHT, POST, FOUNDATION
7	RAMP 3	8+77		RT			1	SIGNS, POST, FOOTINGS
7	RAMP 3	9+83		RT			1	SIGNS, POST, FOOTINGS
8	RAMP 2	9+26		RT			1	SIGNS, POST, FOOTINGS
8	RAMP 2	10+20		RT			1	SIGNS, POST, FOOTINGS
9	RTE 36	1185+76		RT			1	SIGNS, POST, FOOTINGS
9	RTE 36	1186+48		LT			1	SIGNS, POST, FOOTINGS
9	RTE 36	1186+82		LT			1	SIGNS, POST, FOOTINGS
9	RTE 36	1186+83		LT			1	SIGNS, POST, FOOTINGS
9	RTE 36	1186+85		RT			1	SIGNS, POST, FOOTINGS
9	RTE 36	1186+68		RT			1	SIGNS, POST, FOOTINGS
9	RTE 36	1187+20		RT			1	SIGNS, POST, FOOTINGS
9	RTE 36	1187+21		RT			1	SIGNS, POST, FOOTINGS
4	RTE 63	1119+29	1120+82	LT	163			SAWCUT
5	RTE 63	1125+60	1127+02	RT	142			SAWCUT
6	RTE 63	1130+52	1130+89	RT	123			SAWCUT
6	RTE 63	1130+59	1130+91	LT	95			SAWCUT
6	RTE 63	1131+25	1131+61	LT	123			SAWCUT
6	RTE 63	1131+25	1131+58	RT	102			SAWCUT
7	RAMP 3	6+30		LT&RT	18			SAWCUT
8	RAMP 2	7+75		LT&RT	18			SAWCUT
9	RTE 36	1186+14	1186+93	LT	149			SAWCUT
9	RTE 36	1186+39	1186+87	RT	124			SAWCUT
9	RTE 36	1187+13	1187+93	RT	118			SAWCUT
9	RTE 36	1187+18	1187+70	LT	149			SAWCUT
9	RTE 36	1187+21	1187+91	RT	122			SAWCUT
6	RTE 63	1160+46		LT			1	EX. LIGHTING CONTROLLER, METER BOX, AND DISCONNECT
			PAY TOTAL	1 LUMP SUM				

SUMMARY OF QUANTITIES
SHEET 1 OF 5

STATE OF MISSOURI
PAUL JOSEPH KRONLAGE
NUMBER EN 023328
REGISTERED PROFESSIONAL ENGINEER

07/01/2025 1:56:28 PM
Paul J. Kronlage - Civil
MO PE - 023328

DATE PREPARED
7/1/2025

ROUTE	STATE
63	MO
DISTRICT	SHEET NO.
NE	3

COUNTY
MACON

JOB NO.
JNE0137

CONTRACT ID.

PROJECT NO.

BRIDGE NO.

DESCRIPTION	DATE

MISSOURI HIGHWAYS AND TRANSPORTATION COMMISSION
105 WEST CAPITOL
JEFFERSON CITY, MO 65102
1-888-ASK-MODOT (1-888-275-6636)

EFK•Moen
Civil Engineering Design
13523 Barrett Parkway Dr
Suite 250
St. Louis, MO 63021
Phone 314-394-3100
Fax 314-394-3199
Missouri Certificate of Authority: 001578

PAVEMENT, SHOULDER, BASE, CURB AND MEDIAN STRIP

SHEET NO	ROADWAY	STA	STA	LOC	OPTIONAL PAVEMENT	8-IN CONCRETE PAVEMENT	TYPE A2 SHOULDER	8 IN CONCRETE MEDIAN STRIP	TYPE 5 AGGREGATE FOR BASE (6 IN THICK)	6 IN OR UNDER TYPE S OR A CURB	REMARKS
					S.Y.	S.Y.	S.Y.	S.Y.	S.Y.	L.F	
4 & 7	RAMP 3	6+30	11+49	LT&RT	1671.5		375.14	49.16	2046.6		
5 & 8	RAMP 2	7+75	11+78	LT&RT	1408.2		279.71	38.09	1687.9	130.0	
6	RTE 63	1130+52	1131+61	LT&RT		298.78		107.26	298.8		INTERSECTION OF BUS 36 WITH BRIGGS
9	RTE 36	1186+12	1187+68	LT	219.9				219.9		
9	RTE 36	1186+82	1187+89	RT		64.54			64.5		KELLOGG MEDIAN CROSSOVER
9	RTE 36	1186+37	1187+91	RT	196.3				196.3		
			SUBTOTAL		3495.9	363.3	654.9	194.5	4514.0	130.0	
			PAY TOTAL		3495.9	363.3	654.9	194.5	4514	130	

EARTHWORK

XS SHEET NO	ROADWAY	LOC.	CLASS A EXCAVATION	COMPACTING EMBANKMENT	COMPACTING IN CUT	REMARKS
			C.Y.	C.Y.	STA.	
1-9	RAMP 2	LT&RT	687.5	274.9	4.02	
10-20	RAMP 3	LT&RT	1111.7	905.1	5.19	OBTAIN 18 C.Y. FROM RAMP 2 FOR FILL NEEDS
		SUBTOTALS	1799.2	1180.0	9.21	
		PAY TOTALS	1799	1180	9.2	

NOTE: ASSUMING 20% SHRINKAGE

SEEDING	1.4 ACRES
TEMPORARY SEEDING	0.8 ACRES
MULCHING	2.2 ACRES
MOBILIZATION	1 LUMP SUM
CONTRACTOR FURNISHED SURVEYING AND STAKING	1 LUMP SUM
ADDITIONAL MOBILIZATION FOR SEEDING	4 EA.

LINEAR GRADING

SHEET NO	ROADWAY	STA	STA	LOC	LINEAR GRADING CLASS 2	REMARKS
					STA.	
6	RTE 63	1130+52	1130+91	LT&RT	0.39	
6	RTE 63	1131+26	1131+61	LT&RT	0.35	
9	RTE 36	1186+12	1187+68	LT	1.15	
9	RTE 36	1186+82	1187+89	RT	0.54	KELLOGG MEDIAN CROSSOVER
9	RTE 36	1186+37	1187+91	RT	0.94	
24	RAMP 2	6+78	10+33	BL	7.10	INSTALL AND REMOVE TEMP. PAVEMENT
25	RAMP 3	5+08	10+35	BL	10.54	INSTALL AND REMOVE TEMP. PAVEMENT
			SUBTOTAL		21.01	
			PAY TOTAL		21.0	

EROSION CONTROL

PLAN SHEET	ROADWAY	LOC	CROSS STREET	SILT FENCE	ALTERNATE DITCH CHECK	SEDIMENT REMOVAL	REMARKS
				L.F.	LF.	C.Y	
26	RT. 63	LT & RT	KELLOGG	650	40	47	
27	RT. 63	EB OFF-RAMP	RT. 36	905	80	89	
27	RT. 63	WB-OFF RAMP	RT. 36	1150	220	232	
			TOTAL	2705	340	368	
			PAY TOTAL	2705	340	368	

TEMPORARY PAVEMENT MARKING TAPE

SHEET	ROADWAY	STA	STA	LOC	4-INCH TEMPORARY PAVEMENT MARKING TAPE YELLOW	4-INCH TEMPORARY PAVEMENT MARKING TAPE WHITE	PAVEMENT MARKING REMOVAL	REMARKS
					L.F.	L.F.	L.F.	
24	RTE. 36	5+00	11+40	RAMP 2	1020	1320	1950	BL EB OFF-RP-3 STAGES
25	RTE. 36	2+50	11+00	RAMP 3	1140	2120	2690	BL WB-OFF RAMP -3 STAGES
21	RTE.63	1115+00	1130+00	CL	1670	2590	3070	EB TRAFFIC CONTROL STAGE
22	RTE. 63	1115+00	1130+00	CL	1700	2880	8840	WB TRAFFIC CONTROL STAGE
				SUBTOTAL	5530	8910	16550	
				PAY TOTAL	5530	8910	*	

*SEE PAVEMENT MARKING REMOVALS FOR TOTAL

SUMMARY OF QUANTITIES
SHEET 2 OF 5

STATE OF MISSOURI
PAUL JOSEPH KRONLAGE
NUMBER
EN 023328
REGISTERED PROFESSIONAL ENGINEER

Paul J. Kronlage

07/01/2025 1:56:59 PM
Paul J. Kronlage - Civil
MO PE - 023328

DATE PREPARED
7/1/2025

ROUTE	STATE
63	MO
DISTRICT	SHEET NO.
NE	3

COUNTY
MACON

JOB NO.
JNE0137

CONTRACT ID.

PROJECT NO.

BRIDGE NO.

DESCRIPTION	DATE

MISSOURI HIGHWAYS AND TRANSPORTATION COMMISSION
105 WEST CAPITOL
JEFFERSON CITY, MO 65102
1-888-ASK-MODOT (1-888-275-6636)

EFK•Moen
Civil Engineering Design
13523 Barrett Parkway Dr
Suite 250
St. Louis, MO 63021
Phone 314-394-3100
Fax 314-394-3199
Missouri Certificate of Authority: 001578

PERMANENT PAVEMENT MARKING

SHEET NO.	ROADWAY	BEGIN STA 1	BEGIN STA 2	LOC	CLASS 2 PAVEMENT MARKING PAINT, TYPE L BEADS						PREFORMED THERMOPLASTIC 24-INCH WHITE	PREFORMED THERMOPLASTIC LEFT/RIGHT ARROW	PREFORMED THERMOPLASTIC WORD (ONLY)	REMARKS
					6-INCH YELLOW	4-INCH YELLOW	6-INCH WHITE			8-INCH WHITE				
					SOLID	INTERMITTENT	SOLID	INTERMITTENT	DOTTED	SOLID				
					L.F.	L.F.	L.F.	L.F.	L.F.	L.F.	L.F.	EA.	EA.	
56	RAMP 2	5+82	11+83	LT/RT	606		1041			81	12	5		
56	RAMP 3	5+00	11+56	LT/RT	724		1196			94	12	5		
56	RTE 63	1113+79	1129+69	LT/RT	2997	474	3099	420			152	11	2	
57	RTE 63	1129+69	1131+72	LT/RT	171		252	12	101	257	103			
57	RTE 36	1186+41	1187+86	LT/RT	1122		790				81			
				SUBTOTAL	5620	474	6378	432	101	432	360	21	2	
				PAY TOTAL	6094		6911			432	360	21	2	

STRUCTURES & LIDS

SHEET NO.	ROADWAY	STA	LOC	TOP ELEV.	FLOWLINE ELEV.	ACTUAL DEPTH FT	PAVEMENT THICKNESS IN.	STR. NO.	72" PRECAST CONC. MANHOLE	2' x 2' PRECAST INLET TYPE A	72" MANHOLE FRAME & COVER TYPE 2	2' x 2' CURVED VANE GRATE & FRAME	CURB INLET	CLASS III EXC.	REMARKS
									L.F.	L.F.	EA.	EA.	EA.	C.Y.	
4	RAMP 3	10+70	LT	868.00	861.21	6.76	0	1-2	7		1			3	
6	RTE 63	1131+36	LT	869.72	867.78	1.94	9	2-2		2		1	1	5	
6	RTE 63	1130+77	RT	869.72	866.09	3.62	9	3-2		4		1	1	7	
6	RTE 63	1131+57	LT	-	866.95	2.36	9	2-3				1	1		
6	RTE 63	1130+49	RT	-	865.09	3.91	9	3-3				1	1		
								SUBTOTAL	7	6	1	4	4	15	
								SUBTOTAL FROM STORM PIPES	-	-	-	-	-	13	
								PAY TOTAL	7	6	1	4	4	28	

STORM PIPES

SHEET NO.	ROADWAY	FROM STRUCTURE	TO STRUCTURE	STA	STA	LOC	GROUP A PIPE			CONNECT TO EX DRAIN SYSTEM	TYPE A PIPE COLLAR	48 IN. CLASS III REINFORCED CONCRETE FLARED END SECTION	CLASS 3 EXCAVATION	REMARKS
							24"	36"	48"					
							L.F.	L.F.	L.F.	EA.	EA.	EA.	C.Y.	
4	RAMP 3	EX. PIPE	1-2	10+70	10+70	LT	32			1	1		4	
4	RAMP 3	EX. PIPE	1-2	11+03	10+70	LT		35		1	1		7	
4	RAMP 3	1-2	1-3	10+70	10+65	LT			2			1	2	
					SUBTOTAL		32	35	2	2	2	1	13	
					PAY TOTAL		32	35	2		2	1	*	

* SEE STRUCTURES & LIDS FOR TOTAL QUANTITY

TEMPORARY PAVEMENT

SHEET NO	ROADWAY	STA	STA	LOC	OPTIONAL TEMPORARY PAVEMENT	TYPE 5 AGGREGATE FOR BASE (4 IN THICK)	REMARKS
					S.Y.	S.Y.	
24	RAMP 2	6+30	11+49	LT&RT	360.8	360.8	
25	RAMP 3	7+75	11+78	LT&RT	515.8	515.8	
				SUBTOTAL	876.6	876.6	
				PAY TOTAL	876.6	877	

PAVEMENT MARKING REMOVALS

SHEET NO.	ROADWAY	BEGIN STA 1	BEGIN STA 2	LOC	6-INCH SOLID WHITE REMOVALS	6-INCH DOUBLE SOLID YELLOW REMOVALS	24-INCH WHITE REMOVALS	REMARKS
					L.F.	L.F.	L.F.	
56	RTE 63	1130+54	1131+73	LT/RT	41	44	412 *	*MULTIPLIED BY 4
				SUBTOTAL	41	44	412	
SUBTOTAL FROM TEMP. PAVEMENT MARKING TAPE					16550			
				PAY TOTAL	17047			

SUMMARY OF QUANTITIES
SHEET 3 OF 5

STATE OF MISSOURI
PAUL JOSEPH KRONLAGE
NUMBER
EN 023328
REGISTERED PROFESSIONAL ENGINEER

07/01/2025 1:57:19 PM
Paul J. Kronlage - Civil
MO PE - 023328

DATE PREPARED: 7/1/2025
ROUTE: 63 | STATE: MO
DISTRICT: NE | SHEET NO.: 3
COUNTY: MACON
JOB NO.: JNE0137
CONTRACT ID.
PROJECT NO.
BRIDGE NO.

DESCRIPTION | DATE

MISSOURI HIGHWAYS AND TRANSPORTATION COMMISSION
105 WEST CAPITOL
JEFFERSON CITY, MO 65102
1-888-ASK-MODOT (1-888-275-6636)

EFK•Moen
Civil Engineering Design
13523 Barrett Parkway Dr
Suite 250
St. Louis, MO 63021
Phone 314-394-3100
Fax 314-394-3199
Missouri Certificate of Authority: 001578

SIGN	SIZE IN.	AREA SQ.FT.	QTY EACH	TOTAL AREA SQ.FT.	QTY RELOC EACH	TOTAL RELOC SQ.FT.	SIGN NUM.	DESCRIPTION
WARNING SIGNS								
WO1-1L	48X48	16.00						TURN (SYMBOL LEFT)
WO1-1R	48X48	16.00						TURN (SYMBOL RIGHT)
WO1-2L	48X48	16.00						CURVE (SYMBOL LEFT)
WO1-2R	48X48	16.00						CURVE (SYMBOL RIGHT)
WO1-3L	48X48	16.00						REVERSE TURN (SYMBOL LEFT)
WO1-3R	48X48	16.00						REVERSE TURN (SYMBOL RIGHT)
WO1-4L	48X48	16.00	2	32.00			15L	REVERSE CURVE (SYMBOL LEFT)
WO1-4R	48X48	16.00	2	32.00			15R	REVERSE CURVE (SYMBOL RIGHT)
WO1-4bL	48X48	16.00						DOUBLE ARROW REVERSE CURVE (SYMBOL LEFT)
WO1-4bR	48X48	16.00						DOUBLE ARROW REVERSE CURVE (SYMBOL RIGHT)
WO1-4cL	48X48	16.00						TRIPLE ARROW REVERSE CURVE (SYMBOL LEFT)
WO1-4cR	48X48	16.00						TRIPLE ARROW REVERSE CURVE (SYMBOL RIGHT)
WO1-6	60X30	12.50						HORIZONTAL ARROW (SYMBOL)
WO1-6a	72X36	18.00						HORIZ. ARROW (SYMBOL ON PERMANENT BARRICADE)
WO1-7	60X30	12.50						DOUBLE HEAD HORIZONTAL ARROW (SYMBOL)
WO1-7a	72X36	18.00						DOUBLE HEAD HORIZ. ARROW (SYMBOL ON PERM. BARR.)
WO1-8	18X24	3.00						CHEVRON (SYMBOL)
WO1-8a	30X36	7.50						CHEVRON (SYMBOL FOR DIVIDED HIGHWAYS)
WO3-1	48X48	16.00						STOP AHEAD (SYMBOL)
WO3-2	48X48	16.00						YIELD AHEAD (SYMBOL)
WO3-3	48X48	16.00						SIGNAL AHEAD (SYMBOL)
WO3-4	48X48	16.00						BE PREPARED TO STOP
WO3-5	48X48	16.00						SPEED LIMIT AHEAD
WO4-1L	48X48	16.00						MERGE (SYMBOL FROM LEFT)
WO4-1R	48X48	16.00						MERGE (SYMBOL FROM RIGHT)
WO4-1aL	48X48	16.00	1	16.00			6A	MERGE (LEFT)
WO4-1aR	48X48	16.00	1	16.00			6B	MERGE (RIGHT)
WO5-1	48X48	16.00	6	96.00			43	ROAD/BRIDGE/RAMP NARROWS
WO5-3	48X48	16.00						ONE LANE BRIDGE
WO5-5	48X48	16.00						NARROW LANES
WO6-1	48X48	16.00						DIVIDED HIGHWAY (SYMBOL)
WO6-2	48X48	16.00						DIVIDED HIGHWAY END (SYMBOL)
WO6-3	48X48	16.00						TWO WAY TRAFFIC (SYMBOL)
WO7-3a	30X24	5.00						NEXT XX MILES (PLAQUE)
WO8-1	48X48	16.00						BUMP
WO8-2	48X48	16.00						DIP
WO8-3	48X48	16.00						PAVEMENT ENDS
WO8-4	48X48	16.00						SOFT SHOULDER
WO8-5	48X48	16.00						SLIPPERY WHEN WET (SYMBOL)
WO8-6	48X48	16.00						TRUCK CROSSING
WO8-6c	48X48	16.00						TRUCK ENTRANCE
WO8-7	36X36	9.00						LOOSE GRAVEL
WO8-7a	36X36	9.00						FRESH OIL / LOOSE GRAVEL
WO8-9	48X48	16.00						LOW SHOULDER
WO8-11	48X48	16.00						UNEVEN LANES
WO8-12	48X48	16.00						NO CENTER LINE
WO8-15	48X48	16.00						GROOVED PAVEMENT
WO8-15P	30X24	5.00						MOTORCYCLE (PLAQUE)
WO8-17L	48X48	16.00						SHOULDER DROP-OFF (SYMBOL LEFT)
WO8-17R	48X48	16.00						SHOULDER DROP-OFF (SYMBOL RIGHT)
WO8-17P	30X24	5.00						SHOULDER DROP-OFF (PLAQUE)
W10-1	42RND.	9.62						RAILROAD CROSSING
WO12-1	24X24	4.00						DOUBLE DOWN ARROW (SYMBOL)
WO12-2	48X48	16.00						LOW CLEARANCE (SYMBOL)
W012-2x	24X18	3.00						LOW CLEARANCE (PLAQUE)
WO12-2a	84X24	14.00						OVERHEAD LOW CLEARANCE (FEET AND INCHES)
WO12-4	120X60	50.00						LOW CLEARANCE XX FT XX IN XX MILES AHEAD
WO12-5	120X60	50.00						WIDTH RESTRICTION XX FT XX IN XX MILES AHEAD
WO13-1	30X30	6.25						ADVISORY SPEED (PLAQUE)
WO16-2	30X24	5.00						XXX FEET (PLAQUE)
WO16-3	30X24	5.00						X MILE (PLAQUE)
WO20-1	48X48	16.00	6	96.00			2	ROAD/BRIDGE/RAMP WORK AHEAD
WO20-2	48X48	16.00						DETOUR AHEAD
WO20-3	48X48	16.00	4	64.00			20,20a	ROAD CLOSED AHEAD
WO20-4	48X48	16.00						ONE LANE ROAD AHEAD
WO20-5	48X48	16.00	2	32.00			5	RIGHT/CENTER/LEFT LANE CLOSED AHEAD
WO20-5a	48X48	16.00						2 RIGHT/CENTER/LEFT LANES CLOSED AHEAD
WO20-6a	48X48	16.00	1	16.00			6	RIGHT/CENTER/LEFT LANE CLOSED
WO20-7a	48X48	16.00						FLAGGER (SYMBOL)
WO21-2	36X36	9.00						FRESH OIL
WO21-5	48X48	16.00	1	16.00			21	SHOULDER WORK / SHOULDER WORK AHEAD
WO22-1	48X48	16.00						BLASTING ZONE AHEAD
WO22-2	42X36	10.50						TURN OFF 2-WAY RADIO AND PHONE
WO22-3	42X36	10.50						END BLASTING ZONE
GO22-1	21X15	2.19						WET PAINT (ARROW PIVOTS)

SIGN	SIZE IN.	AREA SQ.FT.	QTY EACH	TOTAL SQ.FT.	QTY RELOC EACH	TOTAL RELOC SQ.FT.	SIGN NUM.	DESCRIPTION
GUIDE SIGNS								
E05-1	36X48	12.00	2	24.00			49	GORE EXIT
E05-2	48X36	12.00	2	24.00			73	EXIT OPEN
E05-2a	48X36	12.00						EXIT CLOSED
GO20-1	60X24	10.00						ROAD WORK NEXT XX MILES
GO20-2	48X24	8.00						END ROAD WORK
GO20-4	36X18	4.50						PILOT CAR FOLLOW ME
GO20-4a	42X30	8.75						PILOT CAR IN USE WAIT & FOLLOW
GO20-4a	18X12	1.50						PILOT CAR IN USE WAIT & FOLLOW
GO20-5aP	36X24	6.00	4	24.00			54	WORK ZONE (PLAQUE)
MO4-8a	24X18	3.00						END DETOUR
MO4-9L	30X24	5.00						DETOUR (LEFT)
MO4-9R	30X324	5.00						DETOUR (RIGHT)
MO4-9P	48X12	4.00						STREET NAME (PLAQUE)
MO4-10L	48X18	6.00						DETOUR ARROW (LEFT)
MO4-10R	48X18	6.00						DETOUR ARROW (RIGHT)
REGULATORY SIGNS								
R1-1	48X48	13.25						STOP
R1-2	48TRI.	6.93						YIELD
R1-2a	36X36	9.00						TO ONCOMING TRAFFIC (PLAQUE)
R1-3P	30X12	2.50						ALL WAY (PLAQUE)
R2-1	36X48	12.00	2	24.00			4,25	SPEED LIMIT XX
R3-1	36X48	12.00	4	48.00			61	NO RIGHT TURN (SYMBOL)
R3-2	36X48	12.00	4	48.00			60	NO LEFT TURN (SYMBOL)
R3-3	36X36	12.00						NO TURNS
R3-4	48X48	16.00						NO U-TURN (SYMBOL)
R3-7L	30X30	6.25						LEFT LANE MUST TURN LEFT
R3-7R	30X30	6.25						RIGHT LANE MUST TURN RIGHT
R4-1	36X48	12.00						DO NOT PASS
R4-2	36X48	12.00	4	48.00			46A	PASS WITH CARE
R4-7a	36X48	12.00						KEEP RIGHT (HORIZONTAL ARROW)
R4-8a	36X48	12.00						KEEP LEFT (HORIZONTAL ARROW)
R5-1	30X30	6.25						DO NOT ENTER
R5-1a	36X24	6.00						WRONG WAY
R6-1L	54X18	6.75						ONE WAY ARROW (LEFT)
R6-1R	54X18	6.75						ONE WAY ARROW (RIGHT)
R6-2L	24X30	5.00						ONE WAY (LEFT)
R6-2R	24X30	5.00						ONE WAY (RIGHT)
R9-9	24X12	2.00						SIDEWALK CLOSED
R9-11L	24X18	3.00						SIDEWALK CLOSED AHEAD, (ARROW LEFT) CROSS HERE
R9-11R	24X18	3.00						SIDEWALK CLOSED AHEAD, (ARROW RIGHT) CROSS HERE
R10-6	24X36	6.00						STOP HERE ON RED (45^ ARROW)
R11-2	48X30	10.00	6	60.00			29	ROAD CLOSED
R11-3a	60X30	12.50						ROAD CLOSED XX MILES AHEAD LOCAL TRAFFIC ONLY
R11-4	60X30	12.50	2	25.00			63	ROAD CLOSED TO THRU TRAFFIC
CONST-3A	60X48	20.00						FINE SIGN
CONST-3X	56X12	4.67						SPEEDING/PASSING (PLATE)
MISCELLANEOUS SIGNS								
CONST-5	48X36	12.00						POINT OF PRESENCE
CONST-5	96X48	32.00						POINT OF PRESENCE
CONST-8	48X36	12.00						WORK ZONE NO PHONE ZONE
MO5-1L	21x15	2.19						ADVANCE TURN ARROW
WO16-7P-L	30X18	3.75						DOWNWARD DIAGONAL ARROW (LEFT)
WO16-7P-R	30X18	3.75						DOWNWARD DIAGONAL ARROW (RIGHT)
R9-10	24X18	3						SIDEWALK CLOSED, (DUAL ARROW) USE OTHER SIDE
WO11-2	48X48	16						PEDESTRIAN (SYMBOL)
MO4-9bL	30X24	5						PEDESTRIAN (SYMBOL) DETOUR (ARROW LEFT)
MO4-9bL	30X24	5						PEDESTRIAN (SYMBOL) DETOUR (ARROW LEFT)

616-10.05 CONSTRUCTION SIGNS	TOTAL	741*
616-10.10 RELOCATED SIGNS	TOTAL	0

DISCLAIMER
THE PROFESSIONAL WHOSE SIGNATURE AND PERSONAL SEAL APPEAR HEREON ASSUMES RESPONSIBILITY ONLY FOR WHAT APPEARS ON THIS PAGE, AND DISCLAIMS (PURSUANT TO SECTION 327.411 RSMO) SPECIFICATION, ESTIMATES, REPORTS, OR OTHER DOCUMENTS OR INSTRUMENTS NOT SEALED BY THE UNDERSIGNED PROFESSIONAL RELATING TO OR INTENDED TO BE USED FOR ANY PART OR PARTS OF THE PROJECT TO WHICH THIS PAGE REFERS.

ITEM NUMBER	TOTAL QTY	EFFECTIVE: 07-01-2024 DESCRIPTION
6122008	2	IMPACT ATTENUATOR 40 MPH (SAND BARRELS)
6122009		IMPACT ATTENUATOR 45 MPH (SAND BARRELS)
6122010		IMPACT ATTENUATOR 50 MPH (SAND BARRELS)
6122012		IMPACT ATTENUATOR 55 MPH (SAND BARRELS)
6122014		IMPACT ATTENUATOR 60 MPH (SAND BARRELS)
6122017		IMPACT ATTENUATOR 65 MPH (SAND BARRELS)
6122019		IMPACT ATTENUATOR 70 MPH (SAND BARRELS)
6122020	10	REPLACEMENT SAND BARREL
6122030	2	IMPACT ATTENUATOR (RELOCATION)
6123001	1	TRUCK MOUNTED ATTENUATOR (TMA)
6161008		ADVANCED WARNING RAIL SYSTEM
6161012		BUOYS (BOATS KEEP OUT)
6161013		BUOYS (NO WAKE)
6161014		SPECIAL SIGN ASSEMBLY (BOATS KEEP OUT)
6161025	400*	CHANNELIZER (TRIM LINE)
6161030	19*	TYPE III MOVEABLE BARRICADE
6161033	49*	DIRECTION INDICATOR BARRICADE
6161040	4*	FLASHING ARROW PANEL
6161047		TYPE III OBJECT MARKER
6161055		SEQUENTIAL FLASHING WARNING LIGHT
6161070		TUBULAR MARKER
6161095		RADAR SPEED ADVISORY SYSTEM
6161096		CHANGEABLE MESSAGE SIGN, COMMISSION FURNISHED/RETAINED
6161098A	6	CHANGEABLE MESSAGE SIGN WITHOUT COMM. INTERFACE- CONTRACTOR FURNISHED/RETAINED
6161099		CHANGEABLE MESSAGE SIGN WITH COMM. INTERFACE- CONTRACTOR FURNISHED/RETAINED
6162000A		WORK ZONE TRAFFIC SIGNAL SYSTEM
6162002		TEMPORARY LONG-TERM RUMBLE STRIPS
6173600D	350	TEMPORARY TRAFFIC BARRIER CONTRACTOR FURNISHED/RETAINED
6173602B		TEMPORARY TRAFFIC BARRIER CONTRACTOR FURNISHED/COMMISSION RETAINED
6174000A		TEMP. TRAFFIC BARRIER HEIGHT TRANSITION
6175010A	350	RELOCATING TEMPORARY TRAFFIC BARRIER
6176000B		TEMPORARY TRAFFIC BARRIER COMMISSION FURNISHED/RETAINED
6177000B		TEMP. TRAFFIC BARRIER HEIGHT TRANSITION COMMISSION FURNISHED/RETAINED
6208064A		TEMPORARY RAISED PAVEMENT MARKER
9029400		TEMPORARY TRAFFIC SIGNALS
9029401		TEMPORARY TRAFFIC SIGNALS AND LIGHTING
6199902		ADA COMPLIANT TYPE III MOVABLE BARRICADE
6191000	2160	PAVEMENT EDGE TREATMENT

TEMPORARY TRAFFIC CONTROL
616-99.01
1 LUMP SUM

* INDICATES ITEM IS INCLUDED IN LUMP SUM TEMPORARY TRAFFIC CONTROL.

** NO DIRECT PAY WILL BE MADE FOR THE RELOCATION OF TEMPORARY SIGNING AND/OR TEMPORARY TRAFFIC CONTROL DEVICES.

NOTES:
ALL TRAFFIC CONTROL ITEMS INCLUDED IN PAY ITEM 616-99.01 TEMPORARY TRAFFIC CONTROL LUMP SUM, UNLESS NOTED OTHERWISE IN THE PLANS. THESE QUANTITIES ARE ONLY AN ESTIMATE AND ARE SUBJECT TO CHANGE BASED ON FIELD CONDITIONS.

SIGN QUANTITIES HAVE BEEN ESTIMATED BASED ON THE STAGING SHOWN ON THE PLANS. IF THE CONTRACTOR CHOOSES TO SETUP TRAFFIC CONTROL DIFFERENT FROM WHAT IS PROVIDED, ANY ADDITIONAL COSTS SHALL BE THE RESPONSIBILITY OF THE CONTRACTOR. TEMPORARY TRAFFIC CONTROL SHALL FOLLOW, AT A MINIMUM, MUTCD STANDARDS, LATEST EDITION.

ALL WARNING SIGNS SHALL HAVE FLUORESCENT SHEETING.

SUMMARY OF QUANTITIES
SHEET 5 OF 5

STATE OF MISSOURI
PAUL JOSEPH KRONLAGE
NUMBER EN 023328
REGISTERED PROFESSIONAL ENGINEER

Paul J. Kronlage
07/01/2025 1:57:38 PM
Paul J. Kronlage - Civil
MO PE - 023328

DATE PREPARED
7/1/2025

ROUTE	STATE
63	MO
DISTRICT	SHEET NO.
NE	3

COUNTY
MACON

JOB NO.
JNE0137

CONTRACT ID.

PROJECT NO.

BRIDGE NO.

DESCRIPTION	DATE

MISSOURI HIGHWAYS AND TRANSPORTATION COMMISSION
105 WEST CAPITOL
JEFFERSON CITY, MO 65102
1-888-ASK-MODOT (1-888-275-6636)

EFK•Moen
Civil Engineering Design
13523 Barrett Parkway Dr
Suite 250
St. Louis, MO 63021
Phone 314-394-3100
Fax 314-394-3199
Missouri Certificate of Authority: 001578

THE EXISTENCE AND APPROXIMATE LOCATION OF UTILITY FACILITIES KNOWN TO EXIST, AS SHOWN ON THE PLANS, ARE BASED ON THE BEST INFORMATION AVAILABLE TO THE COMMISSION AT THIS TIME. THIS INFORMATION IS PROVIDED BY THE COMMISSION "AS-IS" AND THE COMMISSION EXPRESSLY DISCLAIMS ANY REPRESENTATION OR WARRANTY AS TO THE COMPLETENESS, ACCURACY, OR SUITABILITY OF THE INFORMATION FOR ANY USE. RELIANCE UPON THIS INFORMATION IS DONE AT THE RISK AND PERIL OF THE USER, AND THE COMMISSION SHALL NOT BE LIABLE FOR ANY DAMAGES THAT MAY ARISE FROM ANY ERROR IN THE INFORMATION. IT IS, THEREFORE, THE RESPONSIBILITY OF THE CONTRACTOR TO VERIFY THE EXISTENCE, LOCATION AND STATUS OF ANY FACILITY. SUCH VERIFICATION INCLUDES DIRECT CONTACT WITH THE LISTED UTILITIES.

DISCLAIMER
THE PROFESSIONAL WHOSE SIGNATURE AND PERSONAL SEAL APPEAR HEREON ASSUMES RESPONSIBILITY ONLY FOR WHAT APPEARS ON THIS PAGE, AND DISCLAIMS (PURSUANT TO SECTION 327.411 RSMO) SPECIFICATION, ESTIMATES, REPORTS, OR OTHER DOCUMENTS OR INSTRUMENTS NOT SEALED BY THE UNDERSIGNED PROFESSIONAL RELATING TO OR INTENDED TO BE USED FOR ANY PART OR PARTS OF THE PROJECT TO WHICH THIS PAGE REFERS.

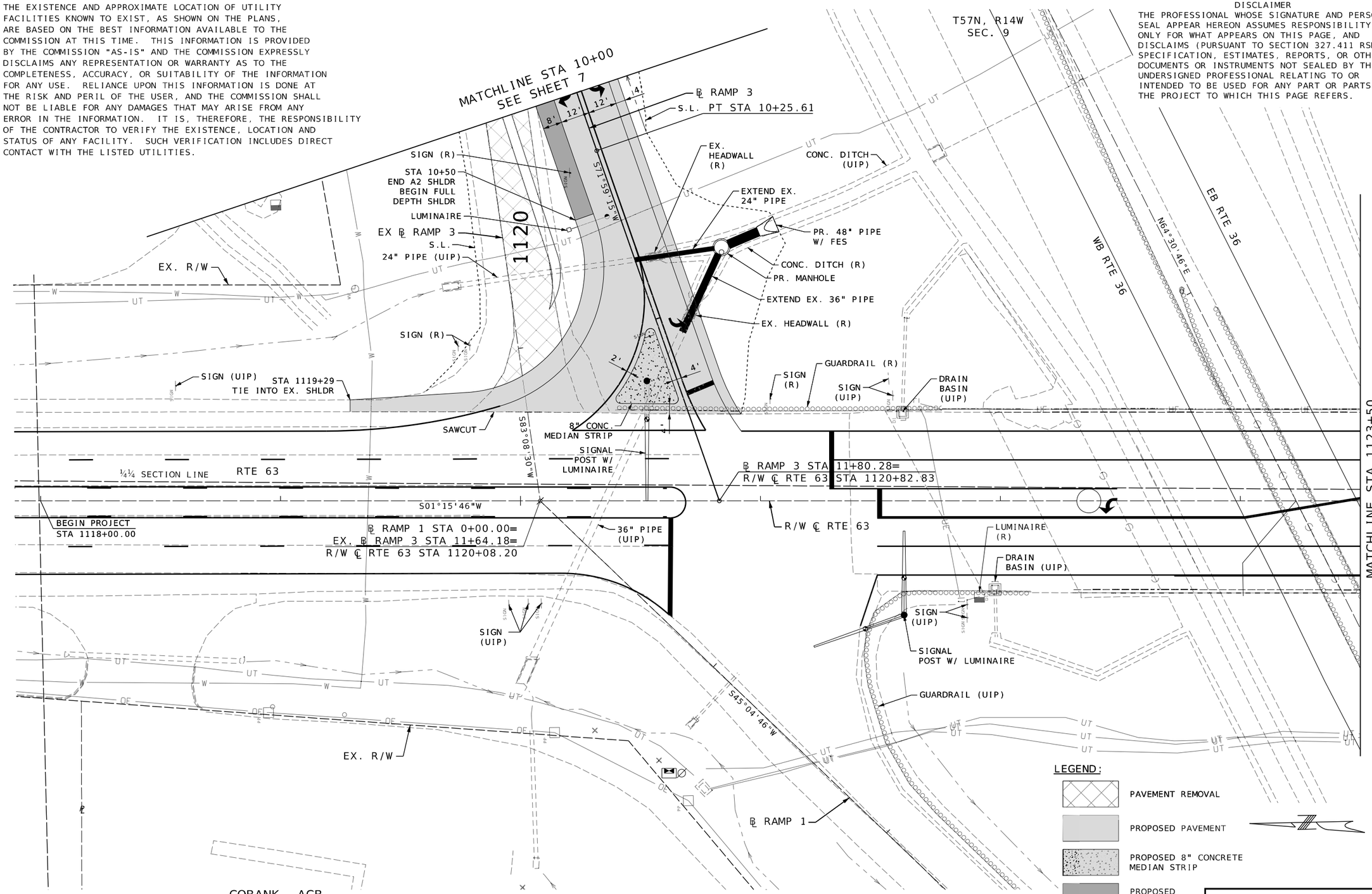

COBANK, ACB
MFA INCORPORATED
MISSOURI FUTURE ADVANCE DEED OF TRUST

LEGEND:

- PAVEMENT REMOVAL
- PROPOSED PAVEMENT
- PROPOSED 8" CONCRETE MEDIAN STRIP
- PROPOSED A2 SHOULDER

SCALE
0 20 40 60

GENERAL NOTES:

1. ANY WORK INDICATED ON THE PLANS THAT EXTENDS BEYOND THE PROJECT LIMITS IS CONSIDERED INCIDENTAL TO AND A PART OF THE CONSTRUCTION OF THIS PROJECT.

2. ALL BEARINGS BASED ON MISSOURI STATE PLANE CENTRAL ZONE.

PLAN
SHEET 1 OF 6

STATE OF MISSOURI
PAUL JOSEPH KRONLAGE
NUMBER
EN 023328
REGISTERED PROFESSIONAL ENGINEER

07/01/2025 2:10:21 PM
Paul J. Kronlage - Civil
MO PE - 023328

DATE PREPARED	
7/1/2025	
ROUTE 63	STATE MO
DISTRICT NE	SHEET NO. 4
COUNTY MACON	
JOB NO. JNE0137	
CONTRACT ID.	
PROJECT NO.	
BRIDGE NO.	

DATE	DESCRIPTION

MISSOURI HIGHWAYS AND TRANSPORTATION COMMISSION
105 WEST CAPITOL
JEFFERSON CITY, MO 65102
1-888-ASK-MODOT (1-888-275-6636)

EFK•Moen
Civil Engineering Design
13523 Barrett Parkway Dr
Suite 250
St. Louis, MO 63021
Phone 314-394-3100
Fax 314-394-3199
Missouri Certificate of Authority: 001578

O:\2022R3\MoDOT_ORD_v10.12.02.04\23046 MoDOT NE0137 Route 63-36 Interchange\DGN\Roadway\Final- Kellogg Island Removal\Plotsheets\004_PL_NE0137_i20.dgn 1:47:01 PM 7/1/2025

DISCLAIMER
THE PROFESSIONAL WHOSE SIGNATURE AND PERSONAL SEAL APPEAR HEREON ASSUMES RESPONSIBILITY ONLY FOR WHAT APPEARS ON THIS PAGE, AND DISCLAIMS (PURSUANT TO SECTION 327.411 RSMO) SPECIFICATION, ESTIMATES, REPORTS, OR OTHER DOCUMENTS OR INSTRUMENTS NOT SEALED BY THE UNDERSIGNED PROFESSIONAL RELATING TO OR INTENDED TO BE USED FOR ANY PART OR PARTS OF THE PROJECT TO WHICH THIS PAGE REFERS.

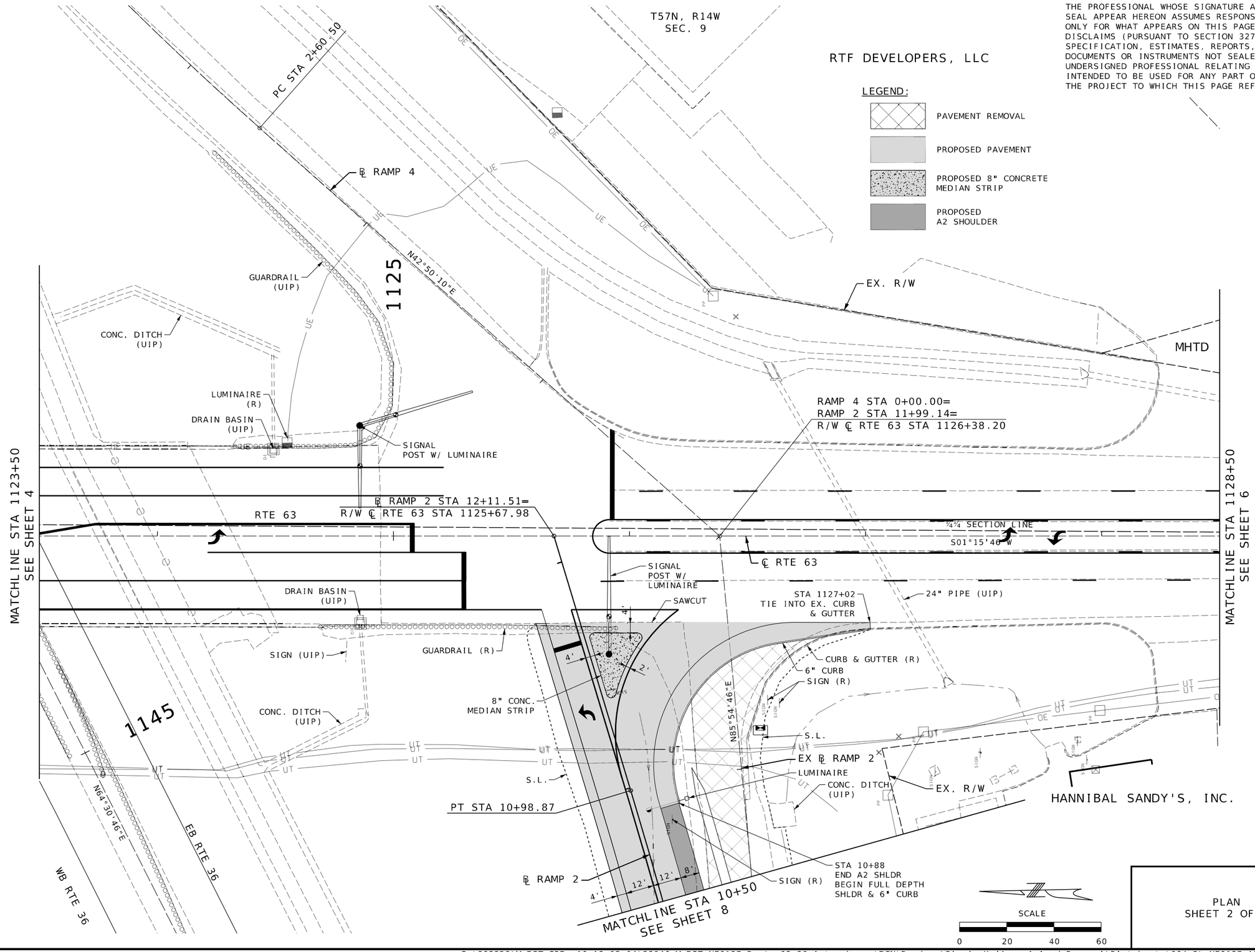

PLAN
SHEET 2 OF 6

STATE OF MISSOURI
PAUL JOSEPH KRONLAGE
NUMBER EN 023328
REGISTERED PROFESSIONAL ENGINEER

07/01/2025 2:10:35 PM
Paul J. Kronlage - Civil
MO PE - 023328

DATE PREPARED	
7/1/2025	
ROUTE 63	STATE MO
DISTRICT NE	SHEET NO. 5
COUNTY MACON	
JOB NO. JNE0137	
CONTRACT ID.	
PROJECT NO.	
BRIDGE NO.	

DESCRIPTION	DATE

MISSOURI HIGHWAYS AND TRANSPORTATION COMMISSION
105 WEST CAPITOL
JEFFERSON CITY, MO 65102
1-888-ASK-MODOT (1-888-275-6636)

EFK•Moen
Civil Engineering Design
13523 Barrett Parkway Dr
Suite 250
St. Louis, MO 63021
Phone 314-394-3100
Fax 314-394-3199
Missouri Certificate of Authority: 001578

DISCLAIMER
THE PROFESSIONAL WHOSE SIGNATURE AND PERSONAL SEAL APPEAR HEREON ASSUMES RESPONSIBILITY ONLY FOR WHAT APPEARS ON THIS PAGE, AND DISCLAIMS (PURSUANT TO SECTION 327.411 RSMO) SPECIFICATION, ESTIMATES, REPORTS, OR OTHER DOCUMENTS OR INSTRUMENTS NOT SEALED BY THE UNDERSIGNED PROFESSIONAL RELATING TO OR INTENDED TO BE USED FOR ANY PART OR PARTS OF THE PROJECT TO WHICH THIS PAGE REFERS.

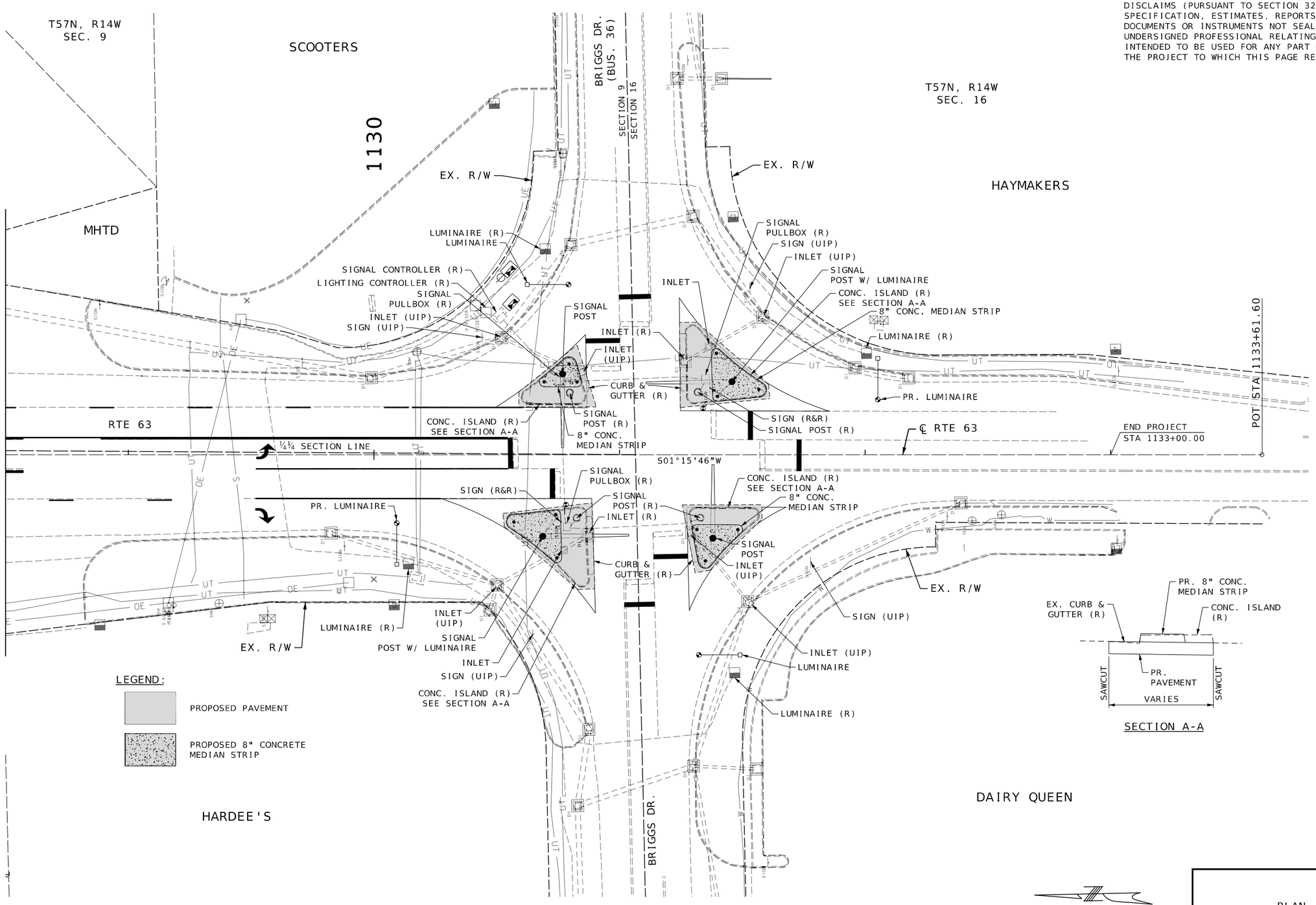

PLAN
SHEET 3 OF 6

STATE OF MISSOURI
PAUL JOSEPH KRONLAGE
NUMBER
EN 023328
REGISTERED PROFESSIONAL ENGINEER

Paul J. Kronlage

07/01/2025 2:10:49 PM
Paul J. Kronlage - Civil
MO PE - 023328

DATE PREPARED	
7/1/2025	
ROUTE 63	STATE MO
DISTRICT NE	SHEET NO. 6
COUNTY MACON	
JOB NO. JNE0137	
CONTRACT ID.	
PROJECT NO.	
BRIDGE NO.	

DATE	DESCRIPTION

MISSOURI HIGHWAYS AND TRANSPORTATION COMMISSION
105 WEST CAPITOL
JEFFERSON CITY, MO 65102
1-888-ASK-MODOT (1-888-275-6636)

EFK•Moen
Civil Engineering Design
13523 Barrett Parkway Dr
Suite 250
St. Louis, MO 63021
Phone 314-394-3100
Fax 314-394-3199
Missouri Certificate of Authority: 001578

RAMP 3		RAMP 3	
PI	9+21.87	PI	6+59.08
PC	8+17.94	PC	5+00.00
PT	10+25.61	PT	8+17.94
Δ	5°56'57.7" (LT)	Δ	5°12'17.2" (LT)
D	2°51'53.2"	D	1°38'13.3"
L	207.67' (ARC)	L	317.94' (ARC)
T	103.93'	T	159.08'
R	2,000.00'	R	3,500.00'

T57N, R14W
SEC. 9

LEGEND:

- PAVEMENT REMOVAL
- PROPOSED PAVEMENT
- PROPOSED A2 SHOULDER

DISCLAIMER
THE PROFESSIONAL WHOSE SIGNATURE AND PERSONAL SEAL APPEAR HEREON ASSUMES RESPONSIBILITY ONLY FOR WHAT APPEARS ON THIS PAGE, AND DISCLAIMS (PURSUANT TO SECTION 327.411 RSMO) SPECIFICATION, ESTIMATES, REPORTS, OR OTHER DOCUMENTS OR INSTRUMENTS NOT SEALED BY THE UNDERSIGNED PROFESSIONAL RELATING TO OR INTENDED TO BE USED FOR ANY PART OR PARTS OF THE PROJECT TO WHICH THIS PAGE REFERS.

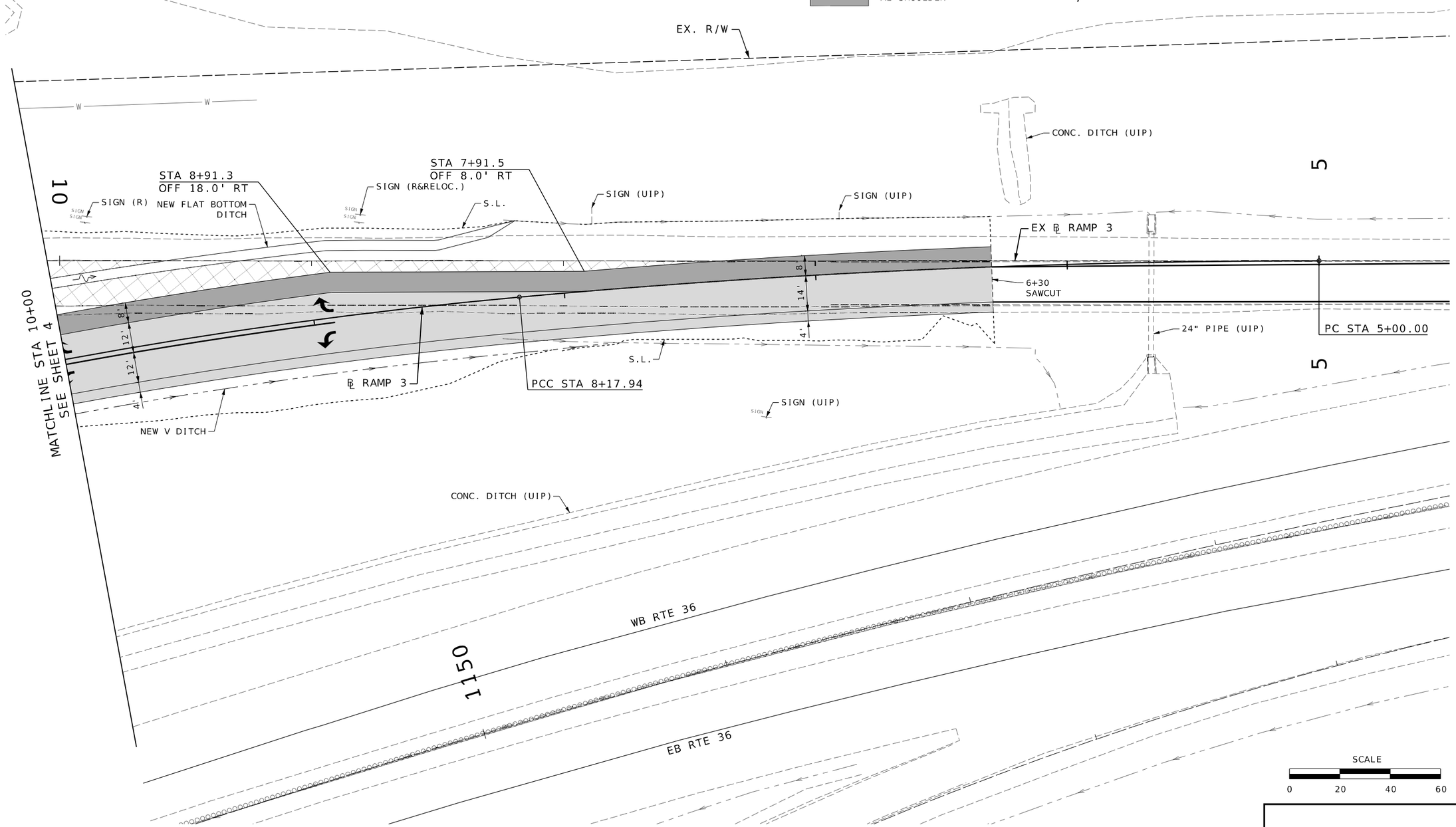

PLAN
SHEET 4 OF 6

STATE OF MISSOURI
PAUL JOSEPH KRONLAGE
NUMBER EN 023328
REGISTERED PROFESSIONAL ENGINEER

05/29/2025 1:03:02 PM
Paul J. Kronlage - Civil
MO PE - 023328

DATE PREPARED	
5/28/2025	
ROUTE 63	STATE MO
DISTRICT NE	SHEET NO. 7
COUNTY MACON	
JOB NO. JNE0137	
CONTRACT ID.	
PROJECT NO.	
BRIDGE NO.	

DATE	DESCRIPTION

MISSOURI HIGHWAYS AND TRANSPORTATION COMMISSION
105 WEST CAPITOL
JEFFERSON CITY, MO 65102
1-888-ASK-MODOT (1-888-275-6636)

EFK•Moen
Civil Engineering Design
13523 Barrett Parkway Dr
Suite 250
St. Louis, MO 63021
Phone 314-394-3100
Fax 314-394-3199
Missouri Certificate of Authority: 001578

DISCLAIMER
THE PROFESSIONAL WHOSE SIGNATURE AND PERSONAL SEAL APPEAR HEREON ASSUMES RESPONSIBILITY ONLY FOR WHAT APPEARS ON THIS PAGE, AND DISCLAIMS (PURSUANT TO SECTION 327.411 RSMO) SPECIFICATION, ESTIMATES, REPORTS, OR OTHER DOCUMENTS OR INSTRUMENTS NOT SEALED BY THE UNDERSIGNED PROFESSIONAL RELATING TO OR INTENDED TO BE USED FOR ANY PART OR PARTS OF THE PROJECT TO WHICH THIS PAGE REFERS.

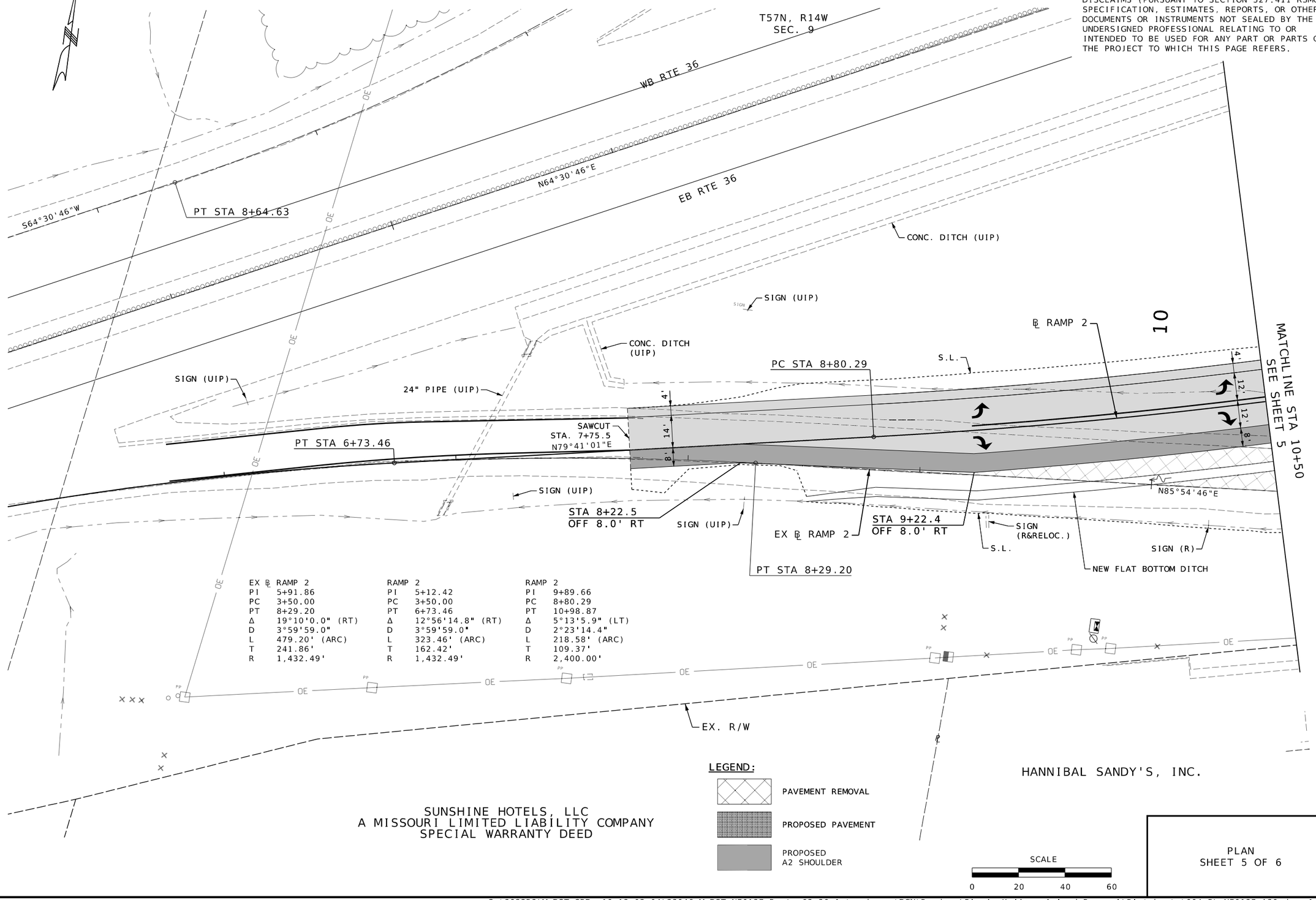

EX ℄ RAMP 2		RAMP 2		RAMP 2	
PI	5+91.86	PI	5+12.42	PI	9+89.66
PC	3+50.00	PC	3+50.00	PC	8+80.29
PT	8+29.20	PT	6+73.46	PT	10+98.87
Δ	19°10'0.0" (RT)	Δ	12°56'14.8" (RT)	Δ	5°13'5.9" (LT)
D	3°59'59.0"	D	3°59'59.0"	D	2°23'14.4"
L	479.20' (ARC)	L	323.46' (ARC)	L	218.58' (ARC)
T	241.86'	T	162.42'	T	109.37'
R	1,432.49'	R	1,432.49'	R	2,400.00'

PLAN
SHEET 5 OF 6

STATE OF MISSOURI
PAUL JOSEPH KRONLAGE
NUMBER EN 023328
REGISTERED PROFESSIONAL ENGINEER

07/01/2025 2:11:07 PM
Paul J. Kronlage - Civil
MO PE - 023328

DATE PREPARED	
7/1/2025	
ROUTE 63	STATE MO
DISTRICT NE	SHEET NO. 8
COUNTY MACON	
JOB NO. JNE0137	
CONTRACT ID.	
PROJECT NO.	
BRIDGE NO.	

DATE	DESCRIPTION

MISSOURI HIGHWAYS AND TRANSPORTATION COMMISSION
105 WEST CAPITOL
JEFFERSON CITY, MO 65102
1-888-ASK-MODOT (1-888-275-6636)

EFK•Moen
Civil Engineering Design
13523 Barrett Parkway Dr
Suite 250
St. Louis, MO 63021
Phone 314-394-3100
Fax 314-394-3199
Missouri Certificate of Authority: 001578

O:\2022R3\MoDOT_ORD_v10.12.02.04\23046 MoDOT NE0137 Route 63-36 Interchange\DGN\Roadway\Final- Kellogg Island Removal\Plotsheets\004_PL_NE0137_i20.dgn 1:47:04 PM 7/1/2025

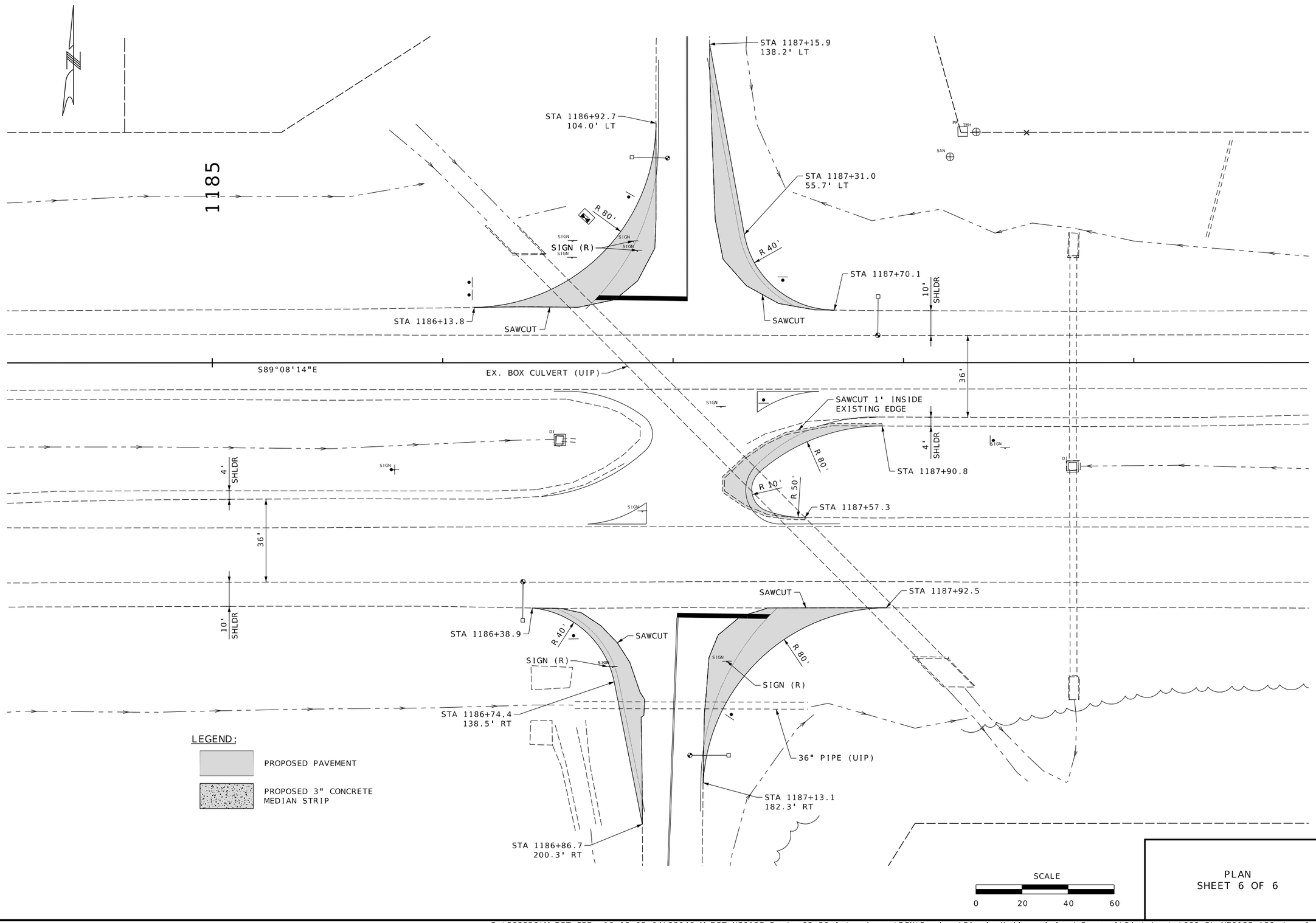

PLAN
SHEET 6 OF 6

STATE OF MISSOURI
PAUL JOSEPH KRONLAGE
NUMBER
EN 023328
REGISTERED PROFESSIONAL ENGINEER

07/01/2025 2:11:26 PM
Paul J. Kronlage - Civil
MO PE - 023328

DATE PREPARED	
7/1/2025	
ROUTE 63	STATE MO
DISTRICT NE	SHEET NO. 9
COUNTY MACON	
JOB NO. JNE0137	
CONTRACT ID.	
PROJECT NO.	
BRIDGE NO.	

DATE	DESCRIPTION

MISSOURI HIGHWAYS AND TRANSPORTATION COMMISSION
105 WEST CAPITOL
JEFFERSON CITY, MO 65102
1-888-ASK-MODOT (1-888-275-6636)

EFK•Moen
Civil Engineering Design
13523 Barrett Parkway Dr
Suite 250
St. Louis, MO 63021
Phone 314-394-3100
Fax 314-394-3199
Missouri Certificate of Authority: 001578

DISCLAIMER
THE PROFESSIONAL WHOSE SIGNATURE AND PERSONAL SEAL APPEAR HEREON ASSUMES RESPONSIBILITY ONLY FOR WHAT APPEARS ON THIS PAGE, AND DISCLAIMS (PURSUANT TO SECTION 327.411 RSMO) SPECIFICATION, ESTIMATES, REPORTS, OR OTHER DOCUMENTS OR INSTRUMENTS NOT SEALED BY THE UNDERSIGNED PROFESSIONAL RELATING TO OR INTENDED TO BE USED FOR ANY PART OR PARTS OF THE PROJECT TO WHICH THIS PAGE REFERS.

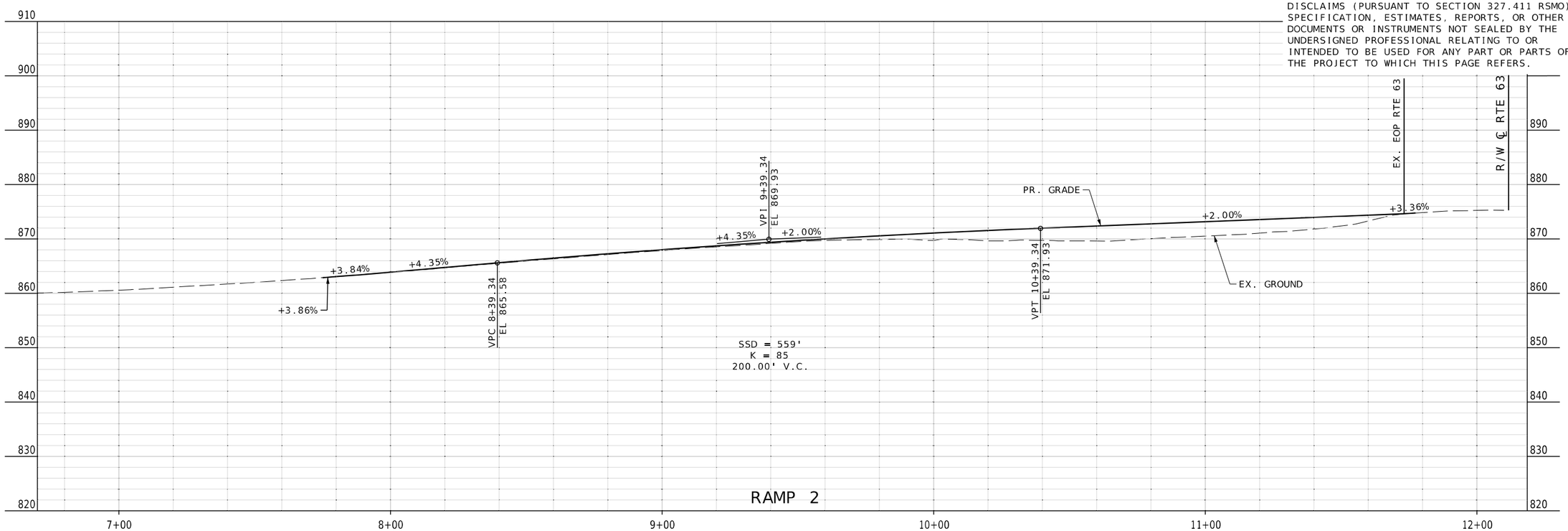

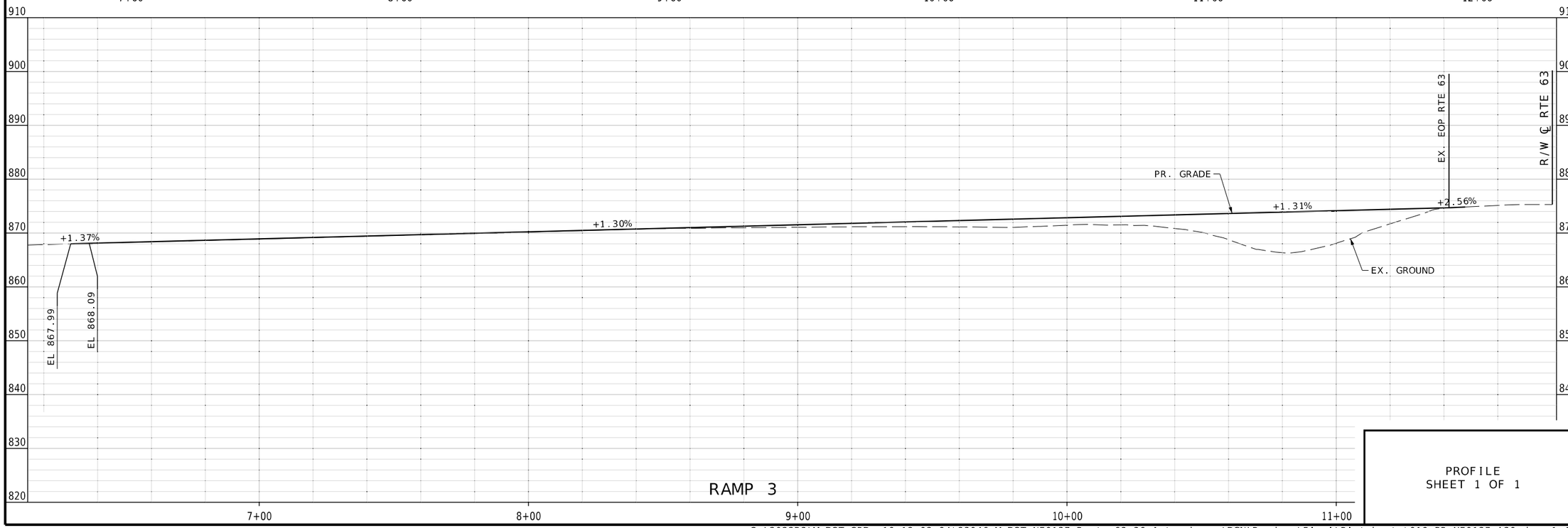

PROFILE
SHEET 1 OF 1

STATE OF MISSOURI
PAUL JOSEPH KRONLAGE
NUMBER
EN 023328
REGISTERED PROFESSIONAL ENGINEER

05/29/2025 1:04:27 PM
Paul J. Kronlage - Civil
MO PE - 023328

DATE PREPARED	
5/28/2025	
ROUTE	STATE
63	MO
DISTRICT	SHEET NO.
NE	10
COUNTY	
MACON	
JOB NO.	
JNE0137	
CONTRACT ID.	
PROJECT NO.	
BRIDGE NO.	

DATE	DESCRIPTION

MISSOURI HIGHWAYS AND TRANSPORTATION COMMISSION
105 WEST CAPITOL
JEFFERSON CITY, MO 65102
1-888-ASK-MODOT (1-888-275-6636)

EFK•Moen
Civil Engineering Design
13523 Barrett Parkway Dr
Suite 250
St. Louis, MO 63021
Phone 314-394-3100
Fax 314-394-3199
Missouri Certificate of Authority: 001578

O:\2022R3\MoDOT_ORD_v10.12.02.04\23046 MoDOT NE0137 Route 63-36 Interchange\DGN\Roadway\Final\Plotsheets\010_PR_NE0137_i20.dgn 1:43:14 PM 5/28/2025

DISCLAIMER
THE PROFESSIONAL WHOSE SIGNATURE AND PERSONAL SEAL APPEAR HEREON ASSUMES RESPONSIBILITY ONLY FOR WHAT APPEARS ON THIS PAGE, AND DISCLAIMS (PURSUANT TO SECTION 327.411 RSMO) SPECIFICATION, ESTIMATES, REPORTS, OR OTHER DOCUMENTS OR INSTRUMENTS NOT SEALED BY THE UNDERSIGNED PROFESSIONAL RELATING TO OR INTENDED TO BE USED FOR ANY PART OR PARTS OF THE PROJECT TO WHICH THIS PAGE REFERS.

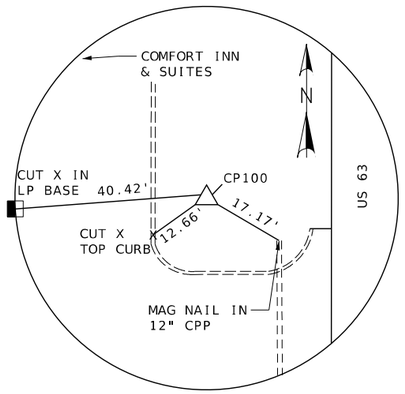

CONTROL POINT 100
SET 5/8" REBAR
N: 1428895.677
E: 1649429.699
EL: 878.70

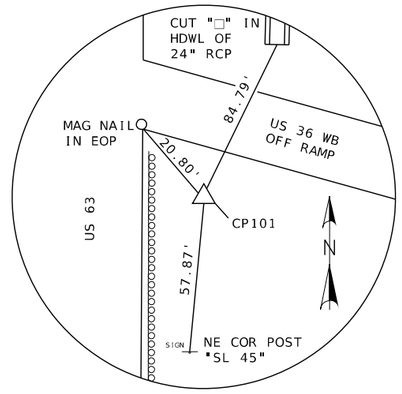

CONTROL POINT 101
SET 5/8" REBAR
N: 1427987.924
E: 1649524.331
EL: 874.11

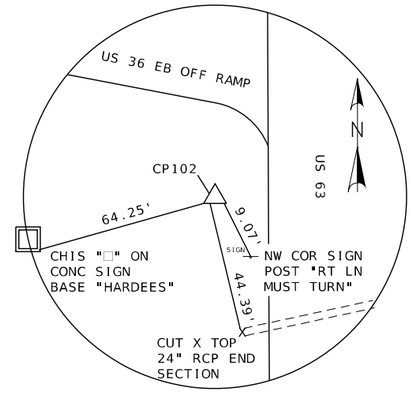

CONTROL POINT 102
SET 5/8" REBAR
N: 1427344.201
E: 1649419.266
EL: 873.92

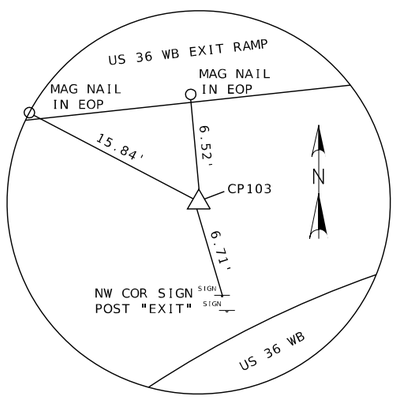

CONTROL POINT 103
SET 5/8" REBAR
N: 1428095.033
E: 1650244.496
EL: 865.50

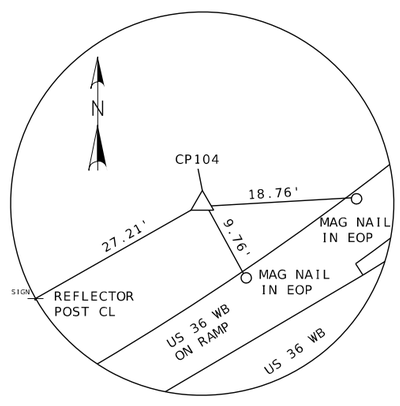

CONTROL POINT 104
SET 5/8" REBAR
N: 1427533.944
E: 1648947.467
EL: 857.66

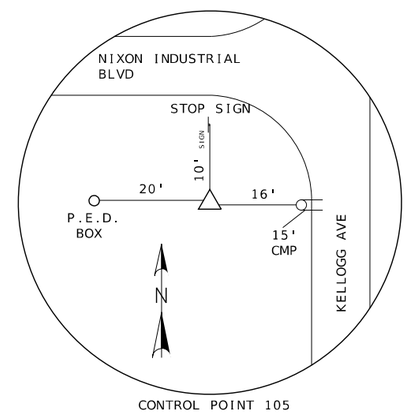

CONTROL POINT 105
I-ROD WITH PLASTIC MODOT
CAP. .3' DEEP
N: 1428705.532
E: 1653570.950
EL: 837.46

REFERENCE POINTS
SHEET 1 OF 1

STATE OF MISSOURI
PAUL JOSEPH KRONLAGE
NUMBER
EN023328
REGISTERED PROFESSIONAL ENGINEER

05/29/2025 1:04:45 PM
Paul J. Kronlage - Civil
MO PE - 023328

DATE PREPARED	
5/28/2025	
ROUTE 63	STATE MO
DISTRICT NE	SHEET NO. 11
COUNTY MACON	
JOB NO. JNE0137	
CONTRACT ID.	
PROJECT NO.	
BRIDGE NO.	

DATE	DESCRIPTION

MISSOURI HIGHWAYS AND TRANSPORTATION COMMISSION
105 WEST CAPITOL
JEFFERSON CITY, MO 65102
1-888-ASK-MODOT (1-888-275-6636)

EFK•Moen
Civil Engineering Design
13523 Barrett Parkway Dr
Suite 250
St. Louis, MO 63021
Phone 314-394-3100
Fax 314-394-3199
Missouri Certificate of Authority: 001578

ALL PROJECT COORDINATES HAVE BEEN PROJECTED FROM THE MISSOURI STATE PLANE COORDINATE (SPC) SYSTEM OF 1983 USING AN AVERAGE PROJECT PROJECTION (GRID TO GROUND) FACTOR. TO GET BACK TO STATE PLANE COORDINATES, MULTIPY THE PROJECT COORDINATES BY THE AVERAGE GRID FACTOR AS SHOWN IN THE "REFERENCE CONTROL INFORMATION" PORTION OF THIS TABLE.

PROJECT COORDINATE INFORMATION

COORDINATE SYSTEM	MODIFIED STATE PLANE
HORIZONTAL DATUM	NAD 83
VERTICAL DATUM	NAVD 88
GEOID MODEL	18 US
ELEVATIONS DETERMINED BY	MoDOT GNSS
PROJECT PROJECTION FACTOR	1.000061822

REFERENCE CONTROL INFORMATION

COORDINATE SYSTEM	MISSOURI STATE PLANE 1983
CONTROL STATION	MONC
DESIGNATION	MoDOT NEW CAMBRIA CORS ARP
CORS_ID	MONC
PID	DM4684
LATITUDE	39°45'31.12308"
LONGITUDE	92°44'33.9716"
NORTHING (M)	435680.239
EASTING (M)	479197.514
ZONE	CENTRAL
PROJECT AVERAGE GRID FACTOR	0.999938178

EXAMPLE OF PROJECT COORDINATE TO S.P.C.

PROJECT NORTHING X AVERAGE GRID FACTOR
= STATE PLANE NORTHING
PROJECT EASTING X AVERAGE GRID FACTOR
= STATE PLANE EASTING

EXAMPLE: CONTROL POINT #100
N 1,428,895.68 X 0.999938178 = N 1,428,807.34
E 1,649,429.70 X 0.999938178 = E 1,649,327.73

LINEAR UNIT CONVERSION

1 METER = 3.280833333 US SURVEY FEET (USFT)

SURVEY NOTES:

1.HORIZONTAL CONTROL STATEMENT: STATE PLANE COORDINATES ON THIS PROJECT WERE ESTABLISHED UTILIZING THE MISSOURI HIGHWAYS AND TRANSPORTATION COMMISSION GLOBAL NAVIGATION SATELLITE REAL TIME NETWORK FOR CONTINUOUSLY OPERATING REFERENCE STATIONS DURING JANUARY 2022, AND ARE BASED ON THE MISSOURI COORDINATE SYSTEM OF 1983, CENTRAL ZONE. GF=0.9999381779

2.VERTICAL DATUM IS NAVD 88. ELEVATION FOR CONTROL POINT 102 WAS BASED ON THE MISSOURI HIGHWAYS AND TRANSPORTATION COMMISSION GLOBAL NAVIGATION SATELLITE REAL TIME NETWORK FOR CONTINUOUS OPERATING REFERENCE STATIONS.

PROJECT BENCHMARKS: BM O-CHISELED SQUARE ON ORSCHELN FARM & HOME SIGN, ON
THE WEST SIDE OF CONC BASE. EL=872.53
BM H-CHISELED SQUARE ON HARDEE'S SIGN. SE CORNER OF CONC BASE. EL=871.76
BM M-CHISELED SQUARE ON MFA SIGN. NE CORNER OF CONC BASE. EL=874.51
BM C-CHISELED SQUARE ON CL OF 24" RCP HEADWALL. NORTH OFF RAMP OF
WB 36 & EB 63. SW OF JOHN DEERE DEALERSHIP. EL=870.27

3.THE UNDERGROUND UTILITIES SHOWN HEREON ARE TAKEN FROM UTILITY LOCATIONS AS MARKED IN THE FIELD. TICKET NUMBERS: 230551968, 230552019, 230552068, 230552085, 230552102, 230552113, 230552129, 230552150, 230552193 & 230552218.

THE GENERAL CONTRACTOR SHALL BE RESPONSIBLE FOR VERIFYING THE ACTUAL LOCATION OF ALL UNDERGROUND UTILITIES, SHOWN OR NOT SHOW, AND SHALL BE LOCATED IN THE FIELD PRIOR TO ANY GRADING, EXCAVATION, OR CONSTRUCTION OF IMPROVEMENTS. THESE PROVISIONS SHALL IN NO WAY ABSOLVE ANY PARTY FROM COMPLYING WITH THE UNDERGROUND FACILITY SAFETY AND DAMAGE PREVENTION ACT, CHAPTER 319, RSMO.

COORDINATE POINT LISTING

SHEET NO	STATION	LOCATION	OFFSET (USFT)	MODIFIED STATE PLANE (GROUND) NORTHING (US SURVEY FT)	EASTING (US SURVEY FT)	ELEVATION (US SURVEY FT)	DESCRIPTION	GPK POINT ID
PROJECT CONTROL POINTS								
	1111+40.20	℄ RTE 63 RT	69.13	1,428,895.68	1,649,429.70	878.70	SET 5/8" REBAR	100
	1120+45.70	℄ RTE 63 RT	45.49	1,427,987.92	1,649,524.33	874.11	SET 5/8" REBAR	101
	1126+91.62	℄ RTE 63 RT	45.37	1,427,344.20	1,649,419.27	873.92	SET 5/8" REBAR	102
	1154+58.17	℄ RTE 36 LT	59.2	1,428,095.03	1,650,244.50	865.50	SET 5/8" REBAR	103
	1140+52.20	℄ RTE 36 LT	65.75	1,427,533.94	1,648,947.47	857.66	SET 5/8" REBAR	104
	1186+78.44	℄ RTE 36 LT	414.38	1,428,705.53	1,653,570.95	837.46	I-ROD W/ PLASTIC MODOT CAP. .3' DEEP	105
ALIGNMENTS								
	1107+00.00	℄ RTE 63	0	1,429,422.59	1,649,610.49	-	BEGIN PROJECT ALIGNMENT	
	1133+61.60	℄ RTE 63	0	1,426,761.63	1,649,551.84	-	END PROJECT ALIGNMENT	
	00+00.00	℄ RAMP 1	0	1,428,114.71	1,649,581.66	-	BEGIN ALIGNMENT	
	5+40.83	℄ RAMP 1	0	1,427,732.81	1,649,198.71	-	END ALIGNMENT	
	3+50.00	℄ RAMP 2	0	1,427,345.77	1,648,735.32	-	BEGIN ALIGNMENT, PC	
	6+73.46	℄ RAMP 2	0	1,427,438.98	1,649,044.34	-	PT	
	8+80.29	℄ RAMP 2	0	1,427,476.02	1,649,247.83	-	PC	
	10+98.87	℄ RAMP 2	0	1,427,524.89	1,649,460.80	-	PT	
	12+11.51	℄ RAMP 2	0	1,427,555.06	1,649,569.33	-	END ALIGNMENT	
	5+00.00	℄ RAMP 3	0	1,428,194.02	1,650,241.09	-	BEGIN ALIGNMENT, PC	
	8+17.94	℄ RAMP 3	0	1,428,141.78	1,649,927.58	-	PCC	
	10+25.61	℄ RAMP 3	0	1,428,087.92	1,649,727.11	-	PT	
	11+80.28	℄ RAMP 3	0	1,428,040.09	1,649,580.02	-	END ALIGNMENT	
	0+00.00	℄ RAMP 4	0	1,427,484.86	1,649,567.78	-	BEGIN ALIGNMENT	
	2+60.50	℄ RAMP 4	0	1,427,675.88	1,649,744.89	-	PC	
	10+60.71	℄ RAMP 4	0	1,428,086.82	1,650,419.70	-	PCC	
	14+60.71	℄ RAMP 4	0	1,428,170.59	1,650,810.61	-	END ALIGNMENT, PT	
	0+00.00	℄ EX. RAMP 2	0	1,427,207.58	1,648,413.76	-	BEGIN ALIGNMENT	
	3+50.00	℄ EX. RAMP 2	0	1,427,345.77	1,648,735.32	-	PC	
	8+29.20	℄ EX. RAMP 2	0	1,427,438.98	1,649,044.34	-	PT	
	11+99.14	℄ EX. RAMP 2	0	1,427,484.86	1,649,567.78	-	END ALIGNMENT	
	0+00.00	℄ EX. RAMP 3	0	1,428,253.72	1,650,737.51	-	BEGIN ALIGNMENT	
	11+64.18	℄ EX. RAMP 3	0	1,428,114.71	1,649,581.66	-	END ALIGNMENT	
	1168+15.52	℄ RTE 36	0	1,428,319.25	1,651,702.00	-	BEGIN ALIGNMENT	
	1227+23.40	℄ RTE 36	0	1,428,230.29	1,657,609.21	-	END ALIGNMENT	

COORDINATE POINTS
SHEET 1 OF 1

STATE OF MISSOURI
PAUL JOSEPH KRONLAGE
NUMBER EN-023328
REGISTERED PROFESSIONAL ENGINEER

05/29/2025 1:05:04 PM
Paul J. Kronlage - Civil
MO PE - 023328

DATE PREPARED	5/28/2025
ROUTE	63
STATE	MO
DISTRICT	NE
SHEET NO.	12
COUNTY	MACON
JOB NO.	JNE0137
CONTRACT ID.	
PROJECT NO.	
BRIDGE NO.	

DESCRIPTION

DATE

MISSOURI HIGHWAYS AND TRANSPORTATION COMMISSION
105 WEST CAPITOL
JEFFERSON CITY, MO 65102
1-888-ASK-MODOT (1-888-275-6636)

EFK•Moen
Civil Engineering Design
13523 Barrett Parkway Dr
Suite 250
St. Louis, MO 63021
Phone 314-394-3100
Fax 314-394-3199
Missouri Certificate of Authority: 001578

DISCLAIMER
THE PROFESSIONAL WHOSE SIGNATURE AND PERSONAL SEAL APPEAR HEREON ASSUMES RESPONSIBILITY ONLY FOR WHAT APPEARS ON THIS PAGE, AND DISCLAIMS (PURSUANT TO SECTION 327.411 RSMO) SPECIFICATION, ESTIMATES, REPORTS, OR OTHER DOCUMENTS OR INSTRUMENTS NOT SEALED BY THE UNDERSIGNED PROFESSIONAL RELATING TO OR INTENDED TO BE USED FOR ANY PART OR PARTS OF THE PROJECT TO WHICH THIS PAGE REFERS.

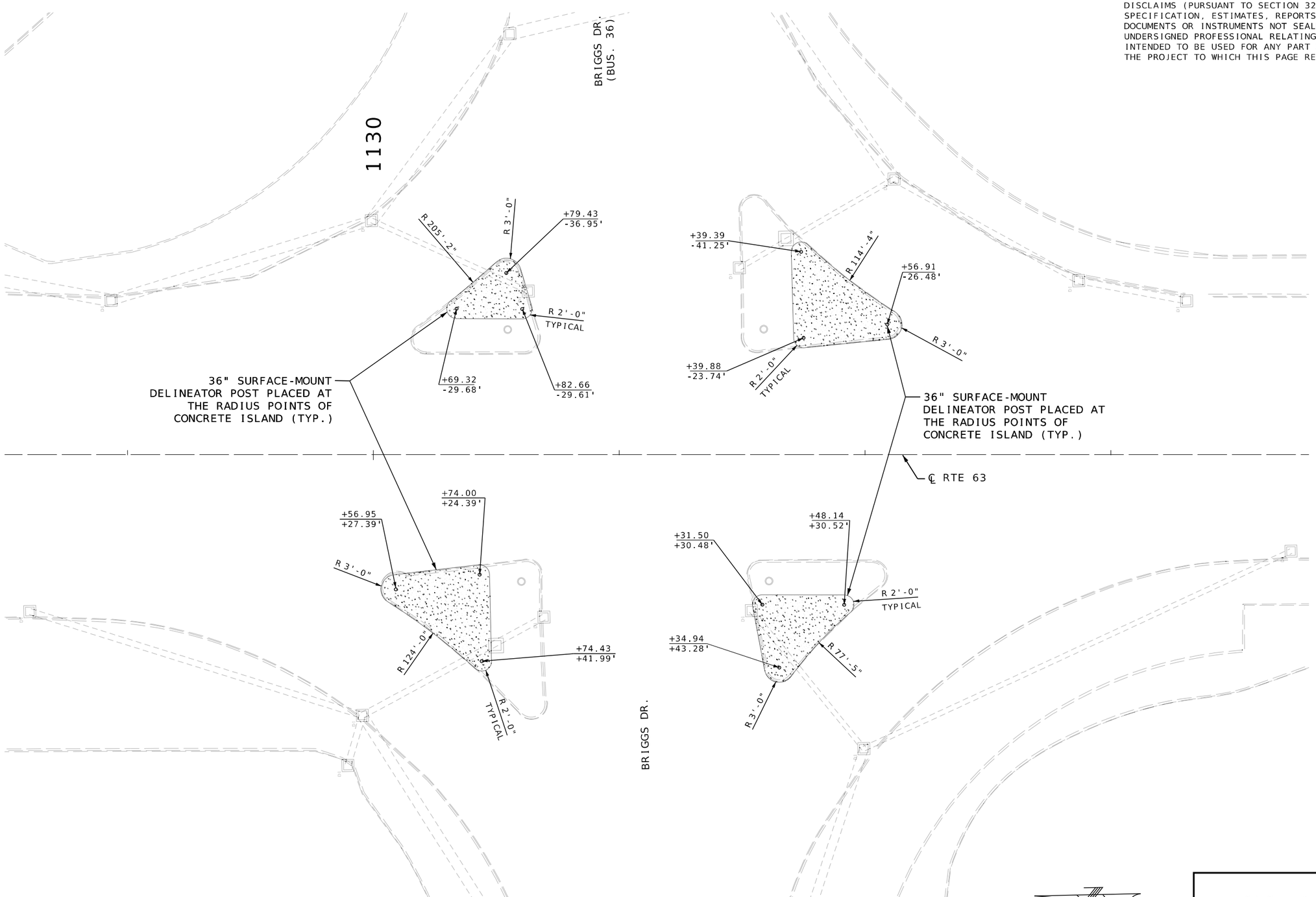

SPECIAL SHEET
ISLAND DETAILS
SHEET 1 OF 4

STATE OF MISSOURI
PAUL JOSEPH KRONLAGE
NUMBER
EN 023328
REGISTERED PROFESSIONAL ENGINEER

05/29/2025 1:06:13 PM
Paul J. Kronlage - Civil
MO PE - 023328

DATE PREPARED	
5/28/2025	
ROUTE 63	STATE MO
DISTRICT NE	SHEET NO. 13
COUNTY MACON	
JOB NO. JNE0137	
CONTRACT ID.	
PROJECT NO.	
BRIDGE NO.	

DATE	DESCRIPTION

MISSOURI HIGHWAYS AND TRANSPORTATION COMMISSION
105 WEST CAPITOL
JEFFERSON CITY, MO 65102
1-888-ASK-MODOT (1-888-275-6636)

EFK•Moen
Civil Engineering Design
13523 Barrett Parkway Dr
Suite 250
St. Louis, MO 63021
Phone 314-394-3100
Fax 314-394-3199
Missouri Certificate of Authority: 001578

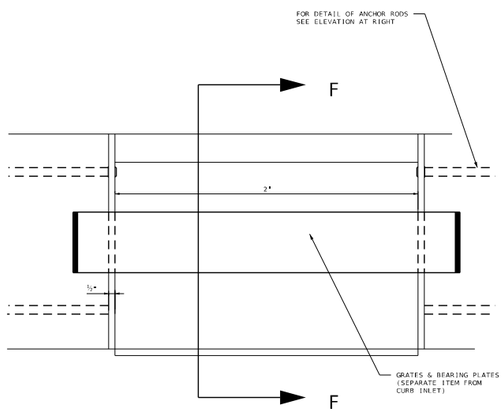

FRONT ELEVATION

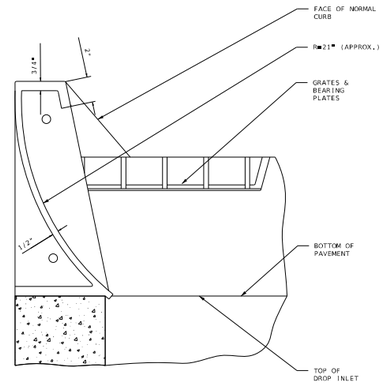

SECTION F-F

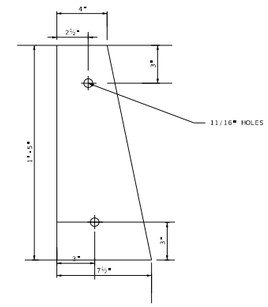

END ELEVATION

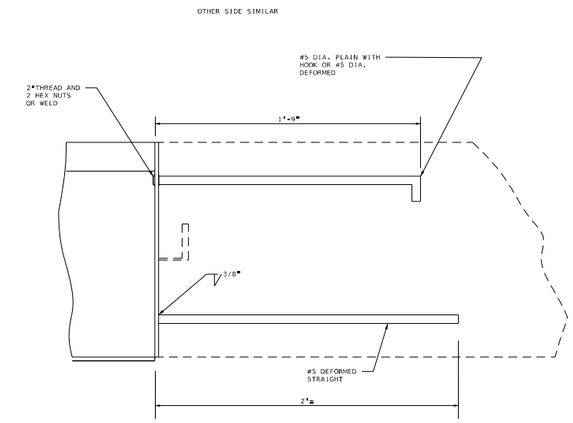

SHOWING ANCHOR RODS
HALF ELEVATION

CURB INLET

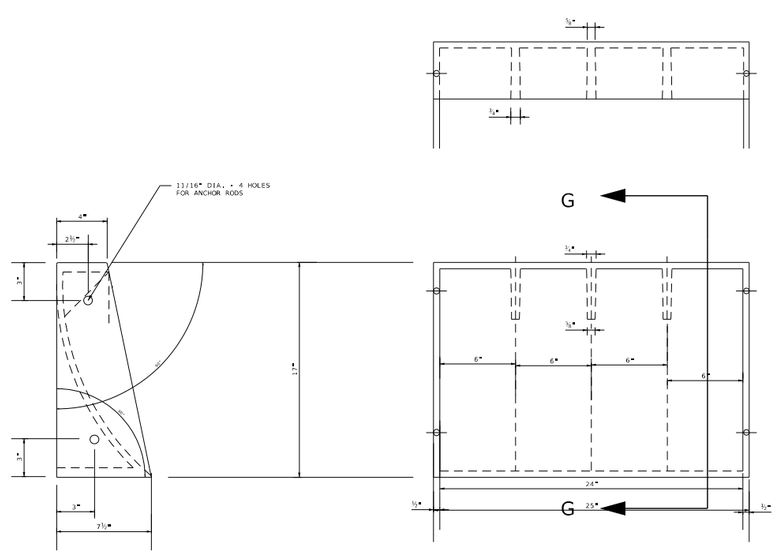

ALTERNATE SHAPE

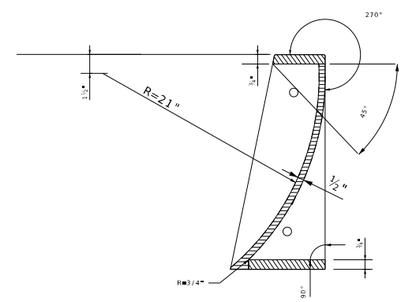

SECTION G-G

SPECIAL SHEET
CURB INLET DETAILS
SHEET 2 OF 4

STATE OF MISSOURI
PAUL JOSEPH KRONLAGE
NUMBER
EN 023328
REGISTERED PROFESSIONAL ENGINEER

07/01/2025 2:38:08 PM
Paul J. Kronlage - Civil
MO PE - 023328

DATE PREPARED	
7/1/2025	
ROUTE 63	STATE MO
DISTRICT NE	SHEET NO. 14
COUNTY MACON	
JOB NO. JNE0137	
CONTRACT ID.	
PROJECT NO.	
BRIDGE NO.	

DESCRIPTION	DATE

MISSOURI HIGHWAYS AND TRANSPORTATION COMMISSION
105 WEST CAPITOL
JEFFERSON CITY, MO 65102
1-888-ASK-MODOT (1-888-275-6636)

EFK•Moen
Civil Engineering Design
13523 Barrett Parkway Dr
Suite 250
St. Louis, MO 63021
Phone 314-394-3100
Fax 314-394-3199
Missouri Certificate of Authority: 001578

REV.

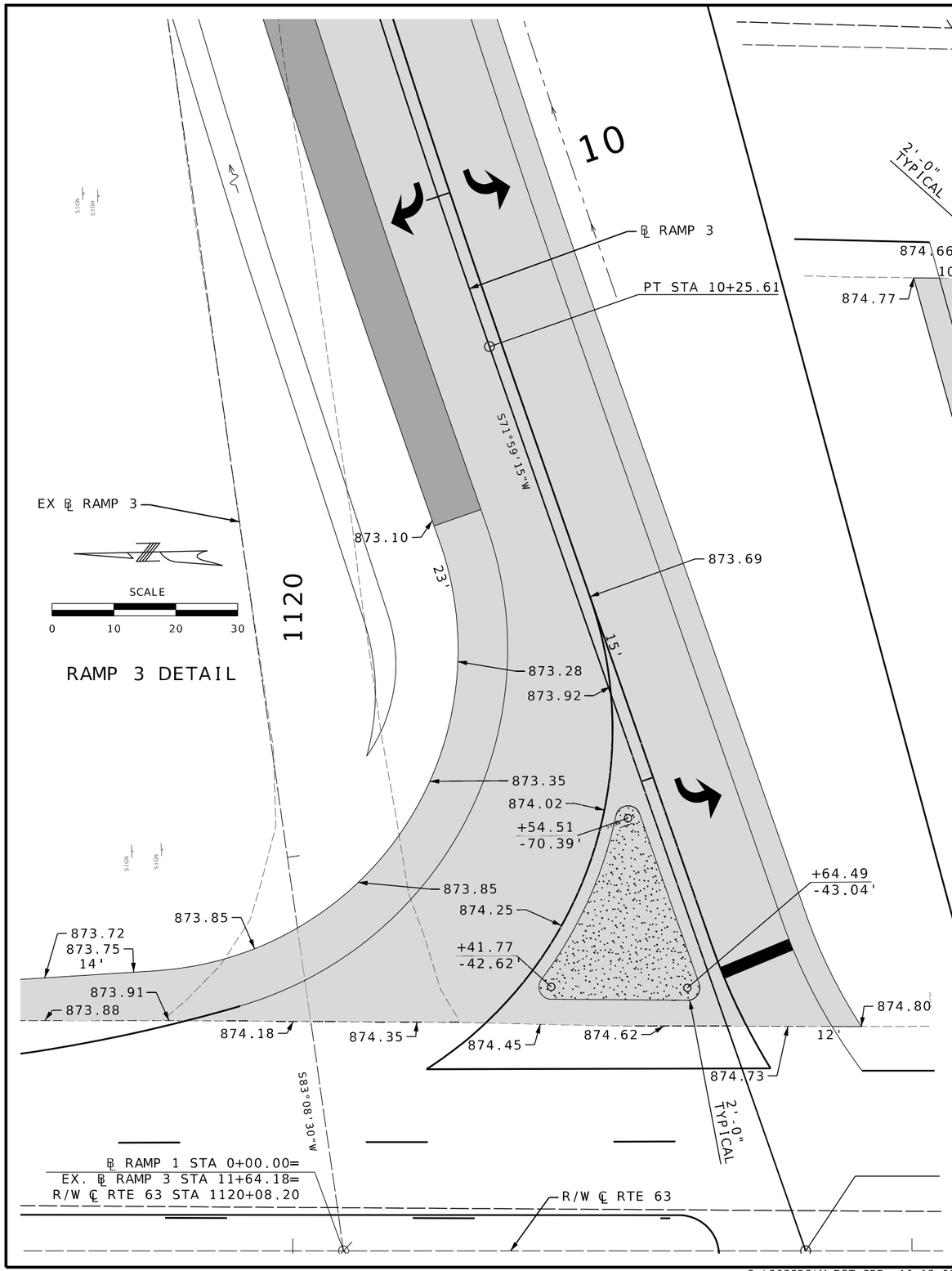

DISCLAIMER
THE PROFESSIONAL WHOSE SIGNATURE AND PERSONAL SEAL APPEAR HEREON ASSUMES RESPONSIBILITY ONLY FOR WHAT APPEARS ON THIS PAGE, AND DISCLAIMS (PURSUANT TO SECTION 327.411 RSMO) SPECIFICATION, ESTIMATES, REPORTS, OR OTHER DOCUMENTS OR INSTRUMENTS NOT SEALED BY THE UNDERSIGNED PROFESSIONAL RELATING TO OR INTENDED TO BE USED FOR ANY PART OR PARTS OF THE PROJECT TO WHICH THIS PAGE REFERS.

NOTE: SPACING BETWEEN EACH ELEVATION IS 20' UNLESS OTHERWISE NOTED.

SCALE
0 10 20 30

RAMP 2 DETAIL

SPECIAL SHEET
RAMP WARPING
SHEET 3 OF 4

STATE OF MISSOURI
PAUL JOSEPH KRONLAGE
NUMBER EN 023328
REGISTERED PROFESSIONAL ENGINEER

05/29/2025 1:09:26 PM
Paul J. Kronlage - Civil
MO PE - 023328

DATE PREPARED	
5/29/2025	
ROUTE 63	STATE MO
DISTRICT NE	SHEET NO. 15
COUNTY MACON	
JOB NO. JNE0137	
CONTRACT ID.	
PROJECT NO.	
BRIDGE NO.	

DATE	DESCRIPTION

MISSOURI HIGHWAYS AND TRANSPORTATION COMMISSION
105 WEST CAPITOL
JEFFERSON CITY, MO 65102
1-888-ASK-MODOT (1-888-275-6636)

EFK•Moen
Civil Engineering Design
13523 Barrett Parkway Dr
Suite 250
St. Louis, MO 63021
Phone 314-394-3100
Fax 314-394-3199
Missouri Certificate of Authority: 001578

DISCLAIMER
THE PROFESSIONAL WHOSE SIGNATURE AND PERSONAL SEAL APPEAR HEREON ASSUMES RESPONSIBILITY ONLY FOR WHAT APPEARS ON THIS PAGE, AND DISCLAIMS (PURSUANT TO SECTION 327.411 RSMO) SPECIFICATION, ESTIMATES, REPORTS, OR OTHER DOCUMENTS OR INSTRUMENTS NOT SEALED BY THE UNDERSIGNED PROFESSIONAL RELATING TO OR INTENDED TO BE USED FOR ANY PART OR PARTS OF THE PROJECT TO WHICH THIS PAGE REFERS.

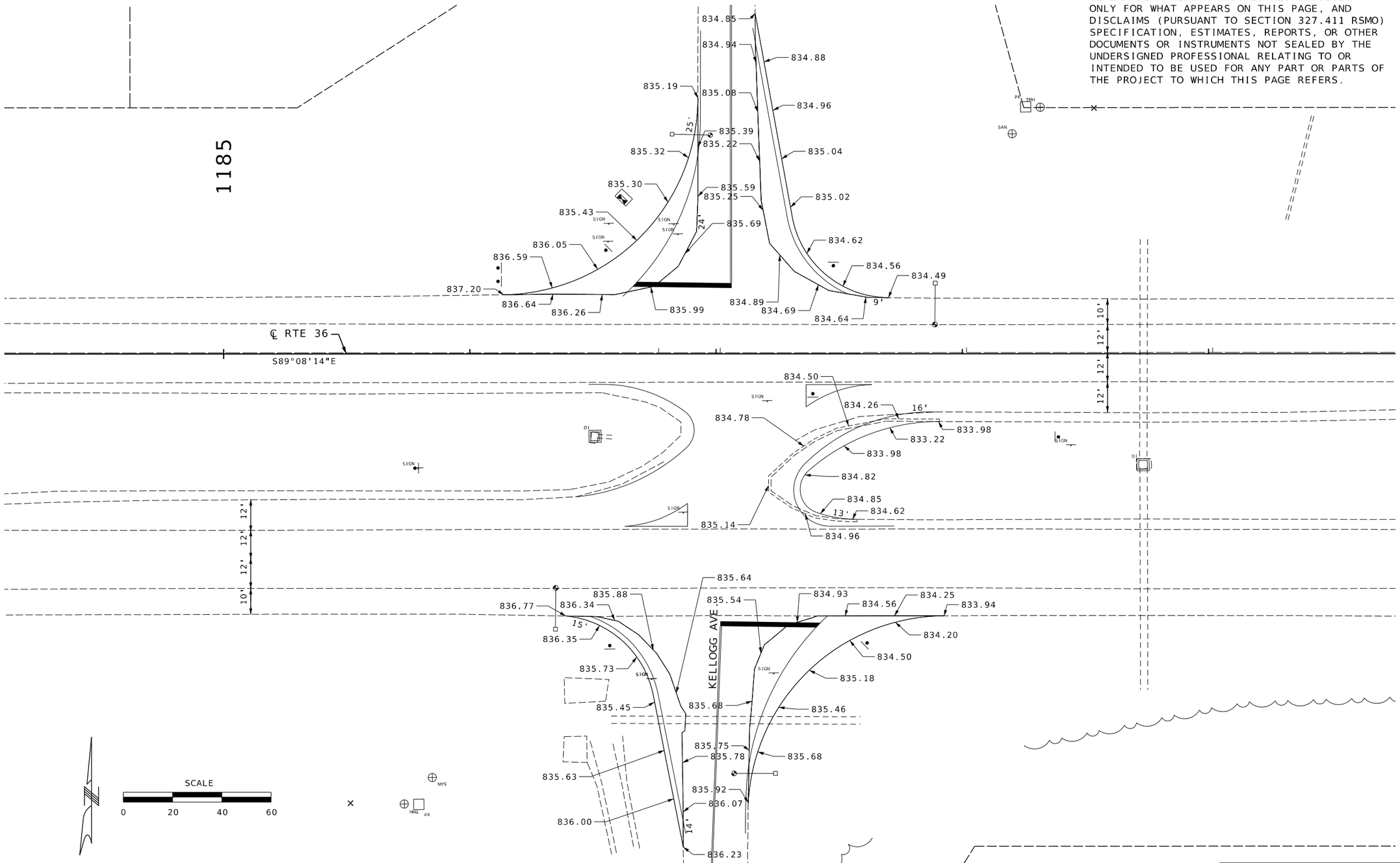

NOTE: SPACING BETWEEN EACH ELEVATION IS 20' UNLESS OTHERWISE NOTED.

SPECIAL SHEET
KELLOGG WARPING
SHEET 4 OF 4

STATE OF MISSOURI
PAUL JOSEPH KRONLAGE
NUMBER EN 023328
REGISTERED PROFESSIONAL ENGINEER

07/01/2025 2:02:10 PM
Paul J. Kronlage - Civil
MO PE - 023328

DATE PREPARED	
7/1/2025	
ROUTE 63	STATE MO
DISTRICT NE	SHEET NO. 16
COUNTY MACON	
JOB NO. JNE0137	
CONTRACT ID.	
PROJECT NO.	
BRIDGE NO.	

DESCRIPTION	DATE

MISSOURI HIGHWAYS AND TRANSPORTATION COMMISSION
105 WEST CAPITOL
JEFFERSON CITY, MO 65102
1-888-ASK-MODOT (1-888-275-6636)

EFK•Moen
Civil Engineering Design
13523 Barrett Parkway Dr
Suite 250
St. Louis, MO 63021
Phone 314-394-3100
Fax 314-394-3199
Missouri Certificate of Authority: 001578

NOT TO SCALE

SPEED	SIGN SPACING (ft.)	TAPER LENGTH (ft.)		RECOMMENDED	CHANNELIZER SPACING (ft.)	
Permanent Posted (mph)	Divided (S)	Shoulder (1) (T1)	Lane (2) (T2)	Buffer Length (ft.) (B)	Tapers	Buffer/ Work Areas
0-35	200	70	245	250	35	40
40-45	500	150	540	360	40	80
50-55	1000	185	660	495	50	80
60-70	SA-1000 SB-1500 SC-2640	235	840	730	60	120

1. Shoulder taper length based on 10 ft. (standard shoulder width) offset. 2. Lane taper length basde on 12 ft. (standard lane width) offset.

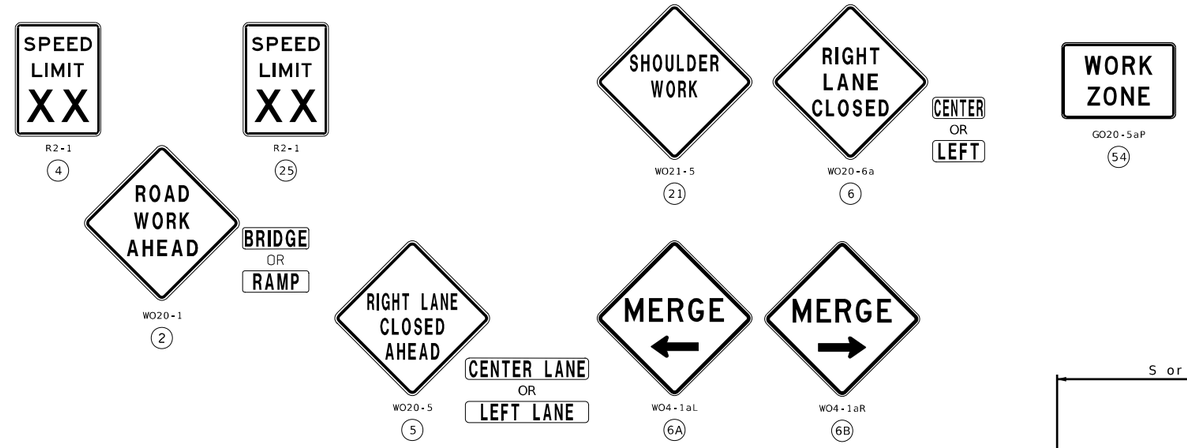

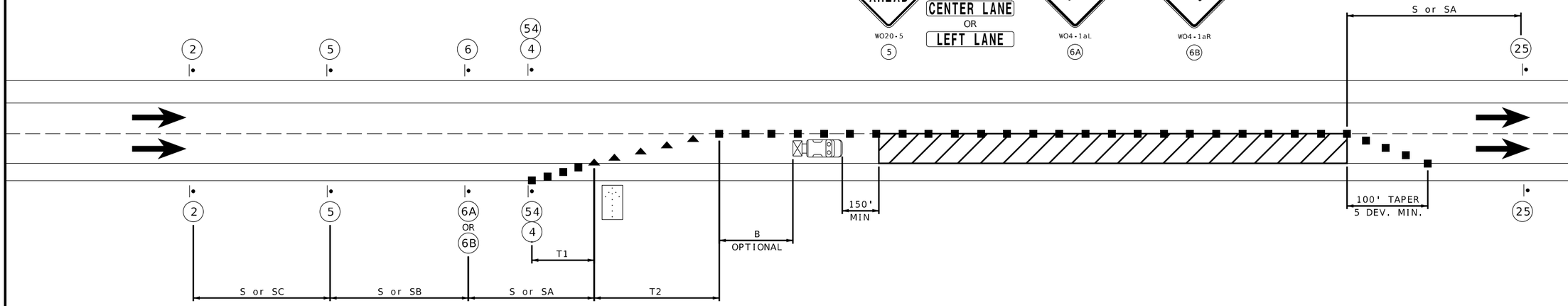

SINGLE LANE CLOSURE (LEFT OR RIGHT)

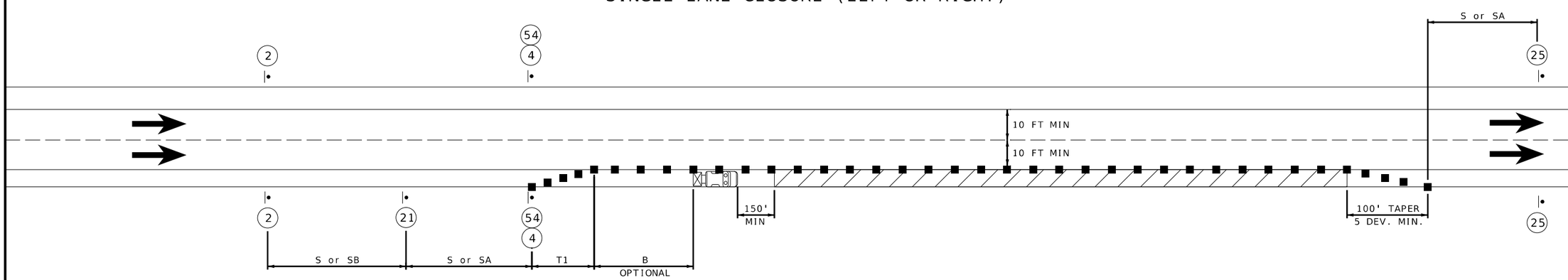

SHOULDER WORK (LEFT OR RIGHT)

LEGEND

PROTECTIVE VEHICLE WITH TRUCK MOUNTED ATTENUATOR (TMA)

SIGN

FLASHING ARROW PANEL

CHANNELIZERS

WORK AREA

DIRECTIONAL INDICATOR BARRICADE

DISCLAIMER
THE PROFESSIONAL WHOSE SIGNATURE AND PERSONAL SEAL APPEAR HEREON ASSUMES RESPONSIBILITY ONLY FOR WHAT APPEARS ON THIS PAGE, AND DISCLAIMS (PURSUANT TO SECTION 327.411 RSMO) SPECIFICATION, ESTIMATES, REPORTS, OR OTHER DOCUMENTS OR INSTRUMENTS NOT SEALED BY THE UNDERSIGNED PROFESSIONAL RELATING TO OR INTENDED TO BE USED FOR ANY PART OR PARTS OF THE PROJECT TO WHICH THIS PAGE REFERS.

TRAFFIC CONTROL
SHEET 1 OF 9

STATE OF MISSOURI
PAUL JOSEPH KRONLAGE
NUMBER
EN 023328
REGISTERED PROFESSIONAL ENGINEER

05/29/2025 1:12:07 PM
Paul J. Kronlage - Civil
MO PE - 023328

DATE PREPARED	5/29/2025
ROUTE	63
STATE	MO
DISTRICT	NE
SHEET NO.	17
COUNTY	MACON
JOB NO.	JNE0137
CONTRACT ID.	
PROJECT NO.	
BRIDGE NO.	

DESCRIPTION

DATE

MISSOURI HIGHWAYS AND TRANSPORTATION COMMISSION
105 WEST CAPITOL
JEFFERSON CITY, MO 65102
1-888-ASK-MODOT (1-888-275-6636)

EFK•Moen
Civil Engineering Design
13523 Barrett Parkway Dr
Suite 250
St. Louis, MO 63021
Phone 314-394-3100
Fax 314-394-3199
Missouri Certificate of Authority: 001578

REV.

O:\2022R3\MoDOT_ORD_v10.12.02.04\23046 MoDOT NE0137 Route 63-36 Interchange\DGN\Roadway\Final\Plotsheets\017_TC_01_NE0137_i1_Single Lane_Shldr.dgn 9:33:33 AM 5/29/2025

RIGHT LANE CLOSURE AT INTERSECTION WORK ON NEAR OR FAR SIDE

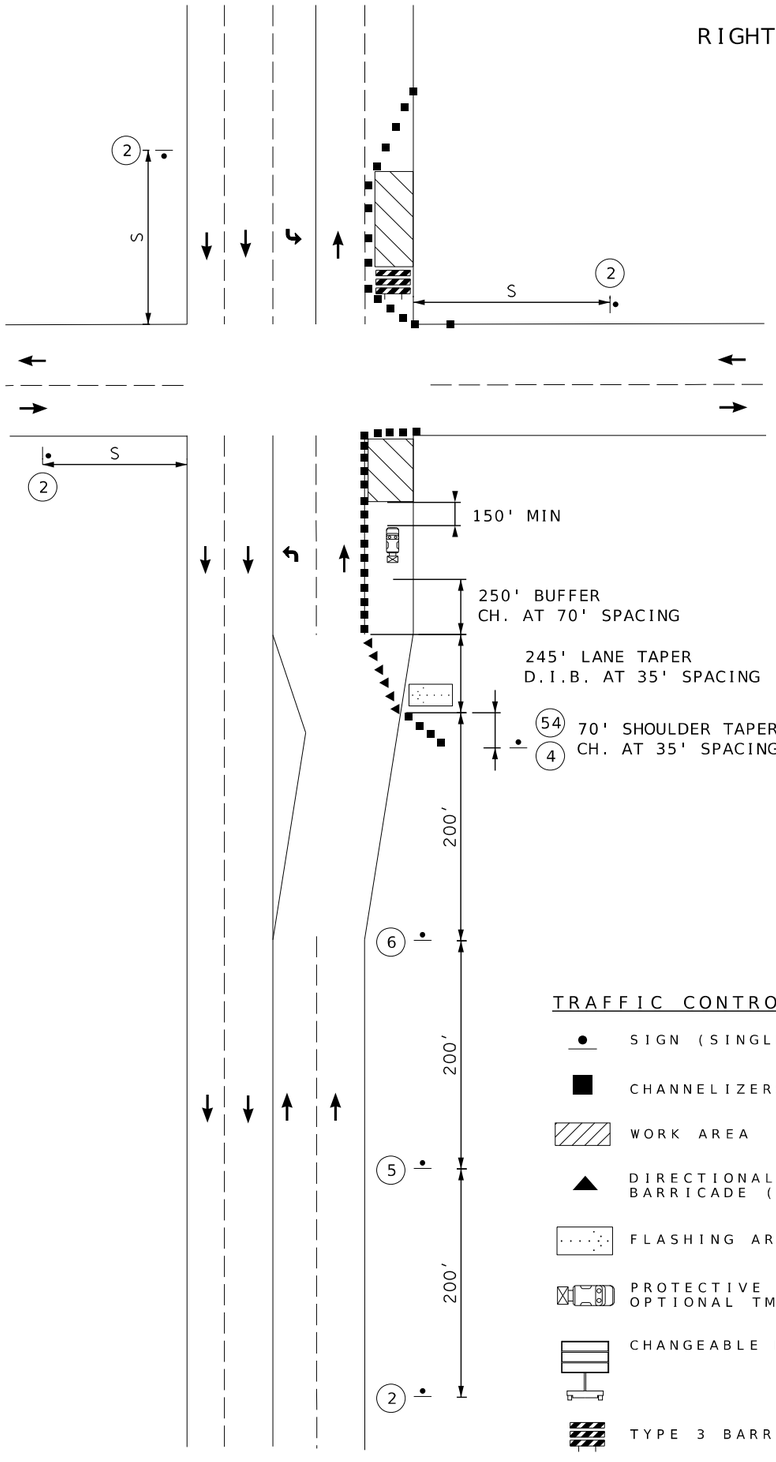

WO20-1

2

G020-5aP

54

WO20-5

5

R2-1

4

WO20-6a

6

NOTES:

1. SIGN SPACINGS MAY BE ADJUSTED AS NECESSARY TO MEET FIELD CONDITIONS.

2. THE CONTRACTOR IS RESPONSIBLE FOR COMPLETELY COVERING OR REMOVING ALL EXISTING SIGNING, PAVEMENT MARKING, OR SIGNALS THAT CONFLICT WITH THE TEMPORARY TRAFFIC CONTROL.

3. NO DIRECT PAYMENT WILL BE MADE FOR RELOCATING, COVERING, UNCOVERING, OR REMOVING OF TCP SIGNS.

4. CHANNELIZER LENGTHS MAY BE REDUCED AT INTERSECTIONS OR OTHER SPOTS TO DISCOURAGE TRAFFIC ENCROACHMENT.

TRAFFIC CONTROL LEGEND

- SIGN (SINGLE SIDED)
- CHANNELIZERS (TRIMLINE)
- WORK AREA
- DIRECTIONAL INDICATOR BARRICADE (D.I.B.)
- FLASHING ARROW PANEL(FAP)
- PROTECTIVE VEHICLES WITH FAP AND OPTIONAL TMA
- CHANGEABLE MESSAGE SIGN
- TYPE 3 BARRICADE

NOT TO SCALE

TRAFFIC CONTROL
SHEET 2 OF 9

STATE OF MISSOURI
PAUL JOSEPH KRONLAGE
NUMBER EN 023328
REGISTERED PROFESSIONAL ENGINEER

05/29/2025 1:12:32 PM
Paul J. Kronlage - Civil
MO PE - 023328

DATE PREPARED	
5/29/2025	
ROUTE 63	STATE MO
DISTRICT NE	SHEET NO. 18
COUNTY MACON	
JOB NO. JNE0137	
CONTRACT ID.	
PROJECT NO.	
BRIDGE NO.	

DATE	DESCRIPTION

MISSOURI HIGHWAYS AND TRANSPORTATION COMMISSION
105 WEST CAPITOL
JEFFERSON CITY, MO 65102
1-888-ASK-MODOT (1-888-275-6636)

EFK•Moen
Civil Engineering Design
13523 Barrett Parkway Dr
Suite 250
St. Louis, MO 63021
Phone 314-394-3100
Fax 314-394-3199
Missouri Certificate of Authority: 001578

REV.

DISCLAIMER
THE PROFESSIONAL WHOSE SIGNATURE AND PERSONAL SEAL APPEAR HEREON ASSUMES RESPONSIBILITY ONLY FOR WHAT APPEARS ON THIS PAGE, AND DISCLAIMS (PURSUANT TO SECTION 327.411 RSMO) SPECIFICATION, ESTIMATES, REPORTS, OR OTHER DOCUMENTS OR INSTRUMENTS NOT SEALED BY THE UNDERSIGNED PROFESSIONAL RELATING TO OR INTENDED TO BE USED FOR ANY PART OR PARTS OF THE PROJECT TO WHICH THIS PAGE REFERS.

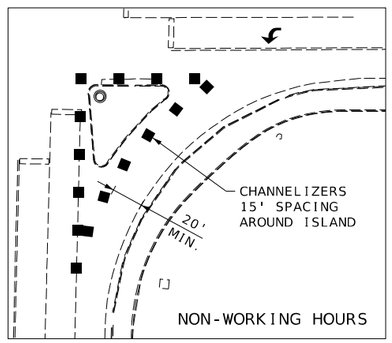

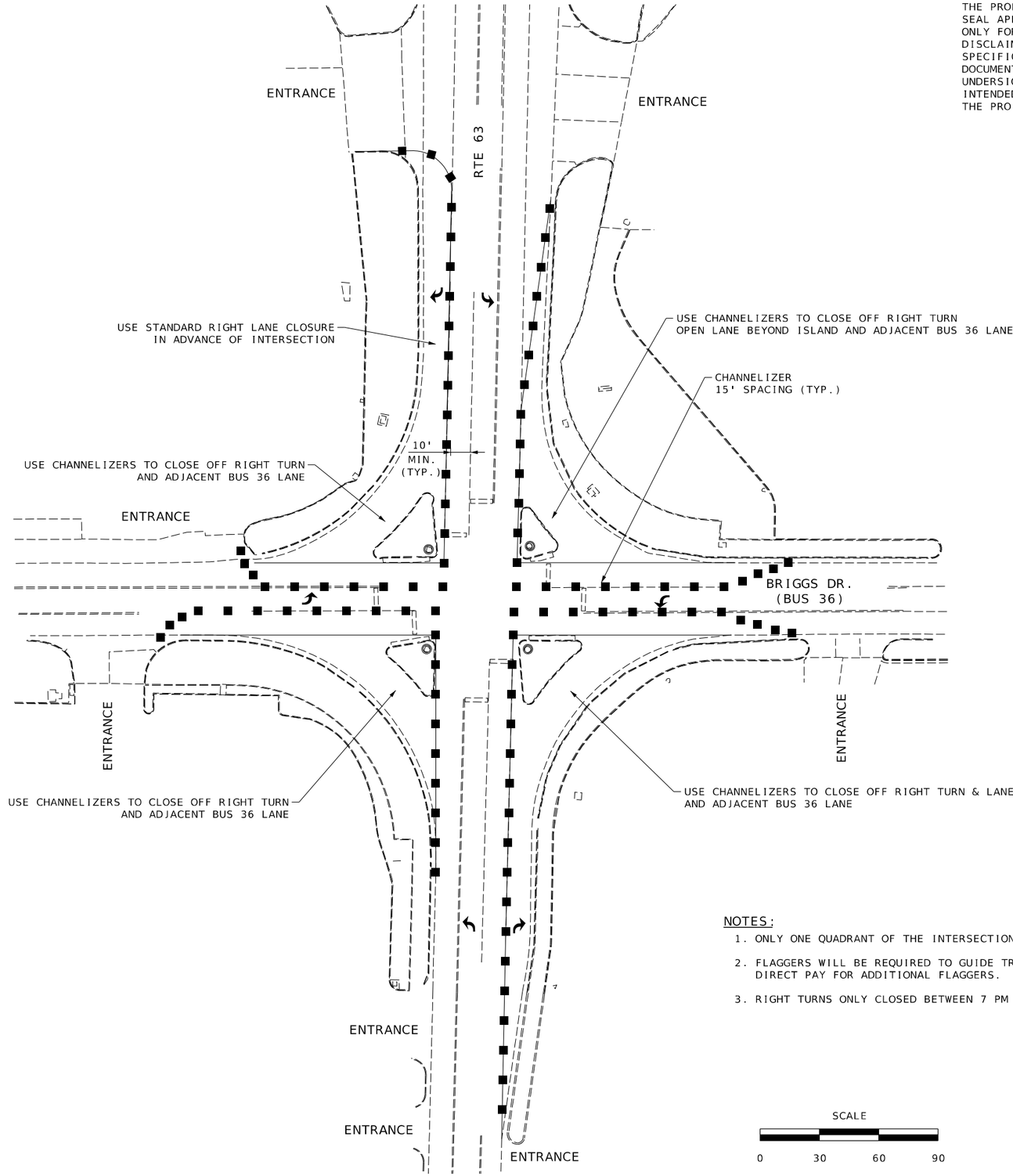

NOTES:

1. ONLY ONE QUADRANT OF THE INTERSECTION SHALL BE CLOSED AT A TIME.
2. FLAGGERS WILL BE REQUIRED TO GUIDE TRAFFIC THROUGH WORK ZONES. NO DIRECT PAY FOR ADDITIONAL FLAGGERS.
3. RIGHT TURNS ONLY CLOSED BETWEEN 7 PM AND 7 AM, MONDAY THRU SUNDAY

TRAFFIC CONTROL
SHEET 3 OF 9

STATE OF MISSOURI
PAUL JOSEPH KRONLAGE
NUMBER
EN023328
REGISTERED PROFESSIONAL ENGINEER

07/03/2025 6:33:13 AM
Paul J. Kronlage - Civil
MO PE - 023328

DATE PREPARED	
7/2/2025	
ROUTE	STATE
63	MO
DISTRICT	SHEET NO.
NE	19
COUNTY	
MACON	
JOB NO.	
JNE0137	
CONTRACT ID.	
PROJECT NO.	
BRIDGE NO.	

DESCRIPTION	DATE

MISSOURI HIGHWAYS AND TRANSPORTATION COMMISSION
105 WEST CAPITOL
JEFFERSON CITY, MO 65102
1-888-ASK-MODOT (1-888-275-6636)

EFK•Moen
Civil Engineering Design
13523 Barrett Parkway Dr
Suite 250
St. Louis, MO 63021
Phone 314-394-3100
Fax 314-394-3199
Missouri Certificate of Authority: 001578

WORK IN THE VICINITY OF AN EXIT RAMP

NOT TO SCALE

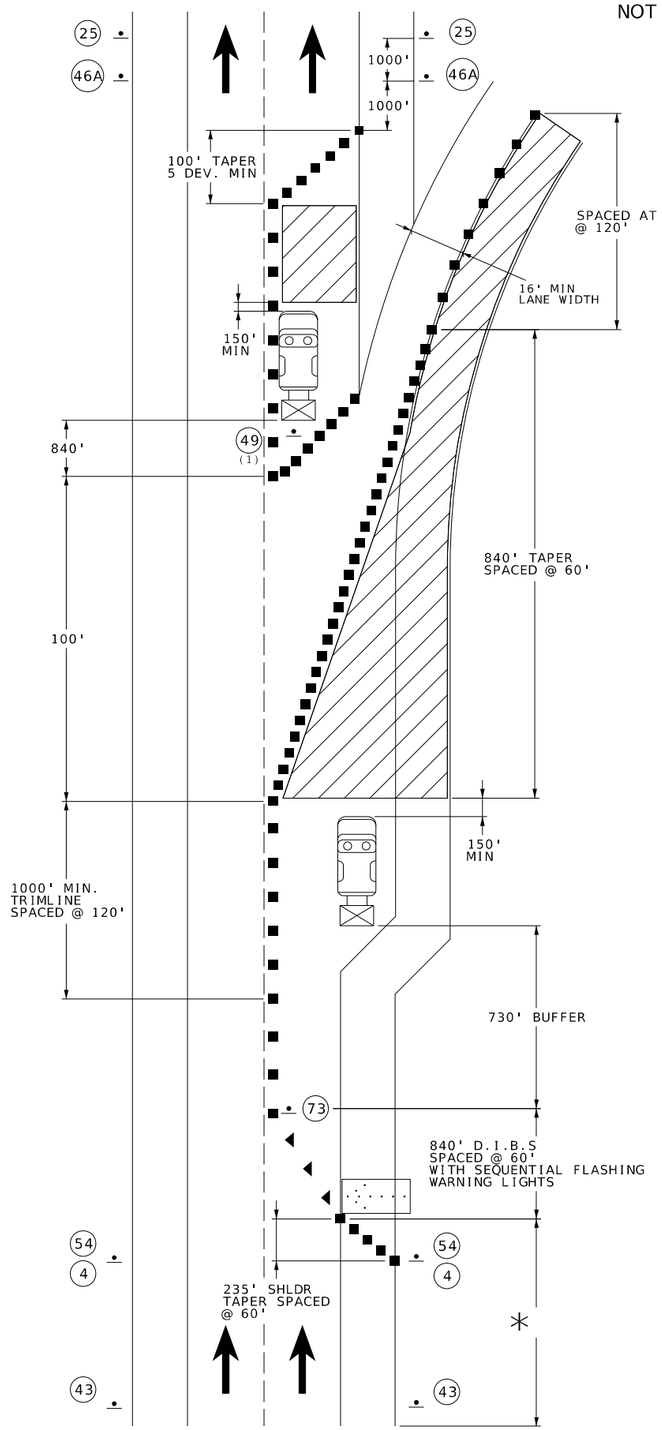

*FOR DETAILS ON THE ADVANCE SIGNING AREA,
SEE "SINGLE LANE CLOSURE" TYPICAL APPLICATIONS

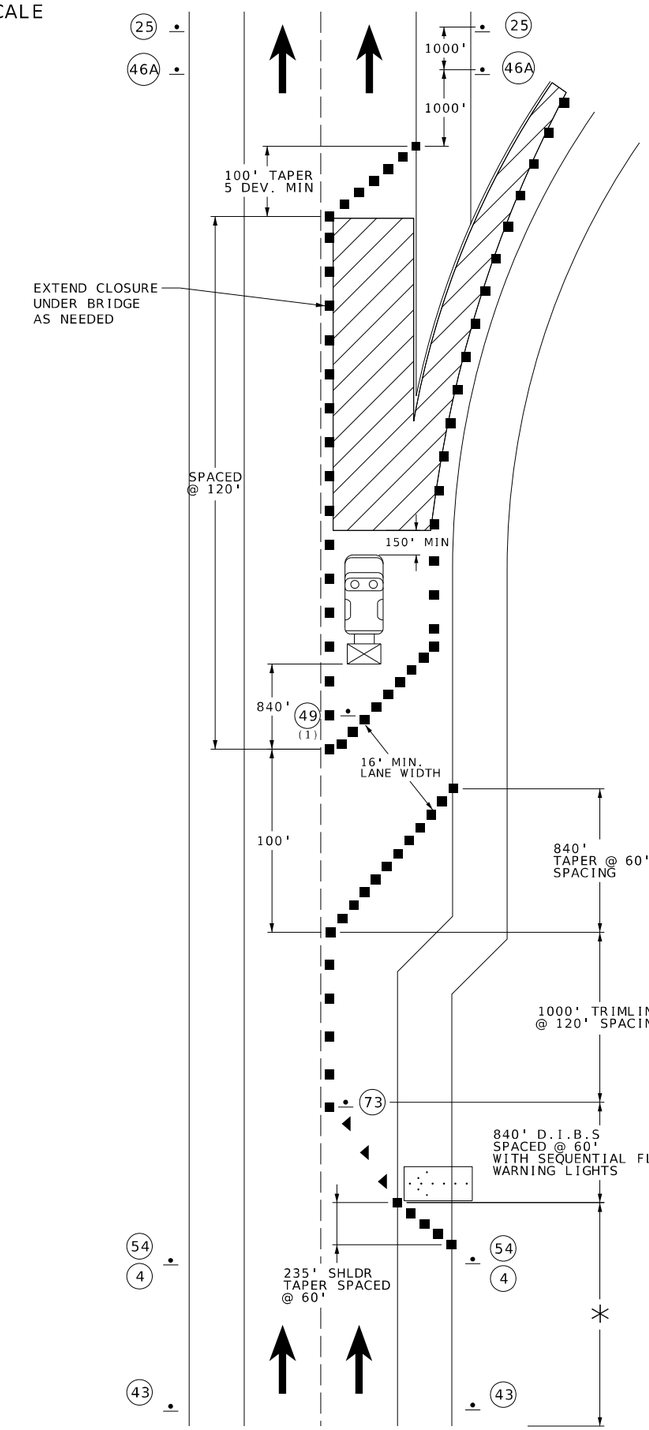

*FOR DETAILS ON THE ADVANCE SIGNING AREA,
SEE "SINGLE LANE CLOSURE" TYPICAL APPLICATIONS

DISCLAIMER

THE PROFESSIONAL WHOSE SIGNATURE AND PERSONAL SEAL APPEAR HEREON ASSUMES RESPONSIBILITY ONLY FOR WHAT APPEARS ON THIS PAGE, AND DISCLAIMS (PURSUANT TO SECTION 327.411 RSMO) SPECIFICATION, ESTIMATES, REPORTS, OR OTHER DOCUMENTS OR INSTRUMENTS NOT SEALED BY THE UNDERSIGNED PROFESSIONAL RELATING TO OR INTENDED TO BE USED FOR ANY PART OR PARTS OF THE PROJECT TO WHICH THIS PAGE REFERS.

LEGEND

FLASHING ARROW PANEL

CHANNELIZERS

DIRECTIONAL INDICATOR BARRICADE

PROTECTIVE VEHICLE WITH TRUCK MOUNTED ATTENUATOR (TMA)

SIGN

WORK AREA

NOTES:

(1) PLACE TEMPORARY SIGN AT A MOUNTING HEIGHT OF 7' WITHIN THE TEMPORARY GORE

(3) 5 CHANNELIZER DEVICES MINIMUM

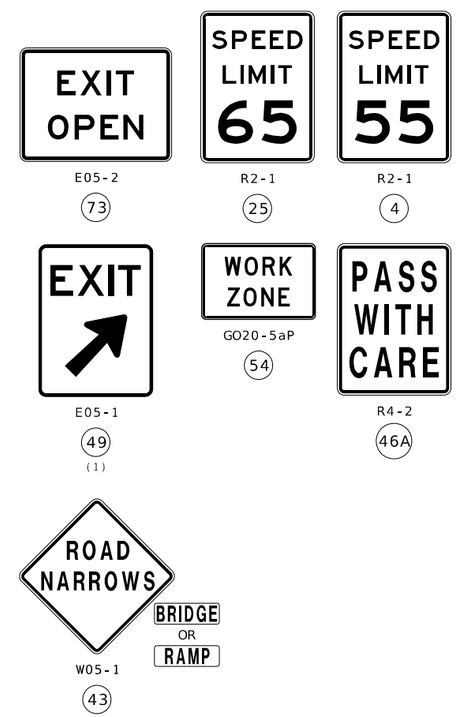

TRAFFIC CONTROL
SHEET 4 OF 9

STATE OF MISSOURI
PAUL JOSEPH KRONLAGE
NUMBER
EN 023328
REGISTERED PROFESSIONAL ENGINEER

05/29/2025 1:13:22 PM
Paul J. Kronlage - Civil
MO PE - 023328

DATE PREPARED	
5/29/2025	
ROUTE 63	STATE MO
DISTRICT NE	SHEET NO. 20
COUNTY MACON	
JOB NO. JNE0137	
CONTRACT ID.	
PROJECT NO.	
BRIDGE NO.	

DATE	DESCRIPTION

MISSOURI HIGHWAYS AND TRANSPORTATION COMMISSION
105 WEST CAPITOL
JEFFERSON CITY, MO 65102
1-888-ASK-MODOT (1-888-275-6636)

EFK•Moen
Civil Engineering Design
13523 Barrett Parkway Dr
Suite 250
St. Louis, MO 63021
Phone 314-394-3100
Fax 314-394-3199
Missouri Certificate of Authority: 001578

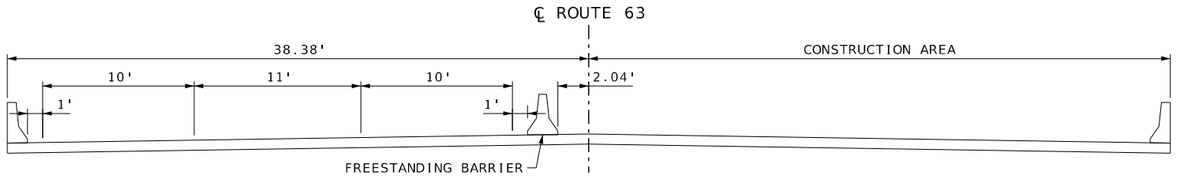

BRIDGE TRAFFIC CONTROL TYPICAL

DISCLAIMER

THE PROFESSIONAL WHOSE SIGNATURE AND PERSONAL SEAL APPEAR HEREON ASSUMES RESPONSIBILITY ONLY FOR WHAT APPEARS ON THIS PAGE, AND DISCLAIMS (PURSUANT TO SECTION 327.411 RSMO) SPECIFICATION, ESTIMATES, REPORTS, OR OTHER DOCUMENTS OR INSTRUMENTS NOT SEALED BY THE UNDERSIGNED PROFESSIONAL RELATING TO OR INTENDED TO BE USED FOR ANY PART OR PARTS OF THE PROJECT TO WHICH THIS PAGE REFERS.

LEGEND

- SIGN
- TRIM LINE CHANNELIZERS
- WORK AREA
- TYPE III MOVABLE BARRICADE

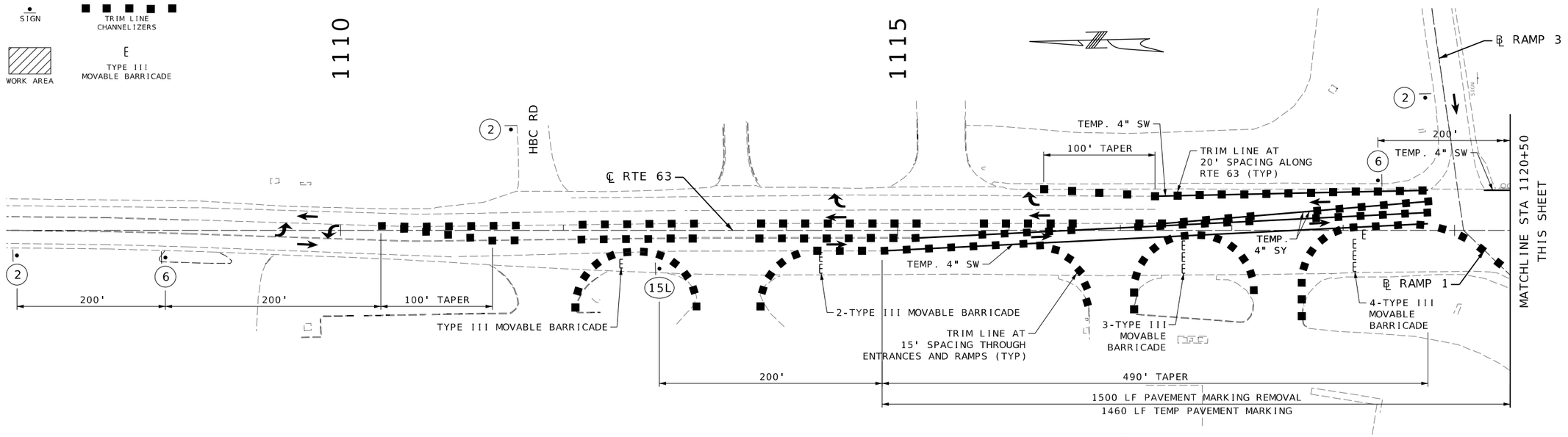

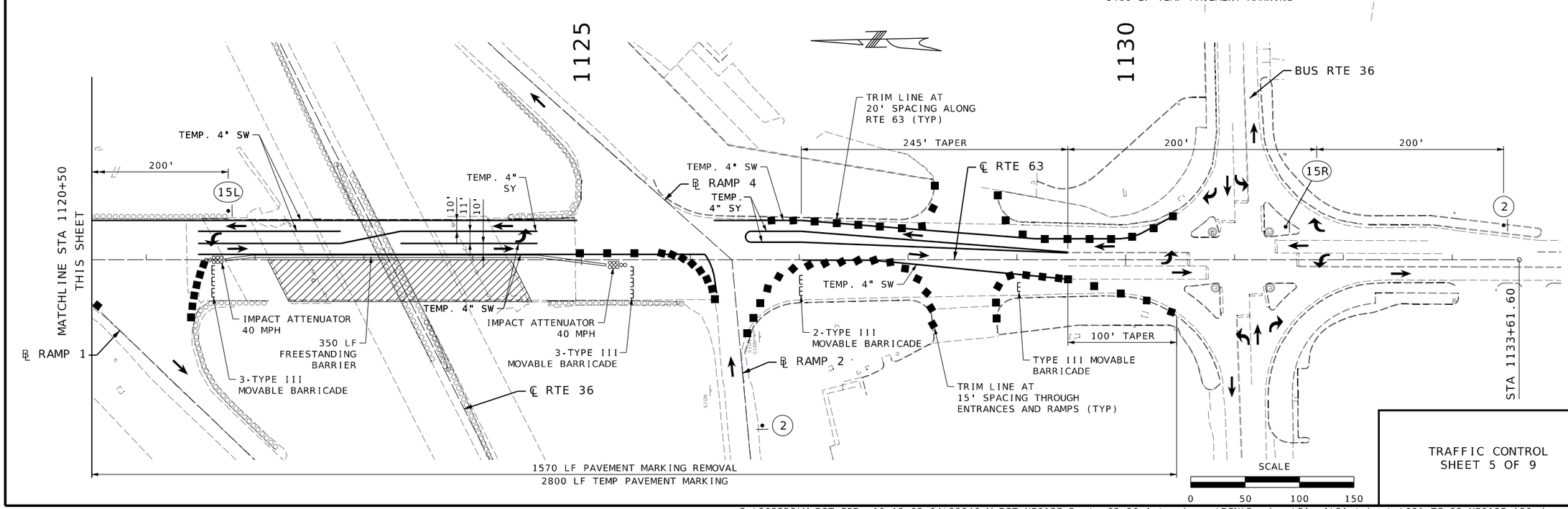

TRAFFIC CONTROL
SHEET 5 OF 9

STATE OF MISSOURI
PAUL JOSEPH KRONLAGE
NUMBER
EN 023328
REGISTERED PROFESSIONAL ENGINEER

05/29/2025 1:13:58 PM
Paul J. Kronlage - Civil
MO PE - 023328

DATE PREPARED	
5/29/2025	
ROUTE 63	STATE MO
DISTRICT NE	SHEET NO. 21
COUNTY MACON	
JOB NO. JNE0137	
CONTRACT ID.	
PROJECT NO.	
BRIDGE NO.	

DATE	DESCRIPTION

MISSOURI HIGHWAYS AND TRANSPORTATION COMMISSION
105 WEST CAPITOL
JEFFERSON CITY, MO 65102
1-888-ASK-MODOT (1-888-275-6636)

EFK•Moen
Civil Engineering Design
13523 Barrett Parkway Dr
Suite 250
St. Louis, MO 63021
Phone 314-394-3100
Fax 314-394-3199
Missouri Certificate of Authority: 001578

O:\2022R3\MoDOT_ORD_v10.12.02.04\23046 MoDOT NE0137 Route 63-36 Interchange\DGN\Roadway\Final\Plotsheets\021_TC_05_NE0137_i50.dgn 9:33:36 AM 5/29/2025

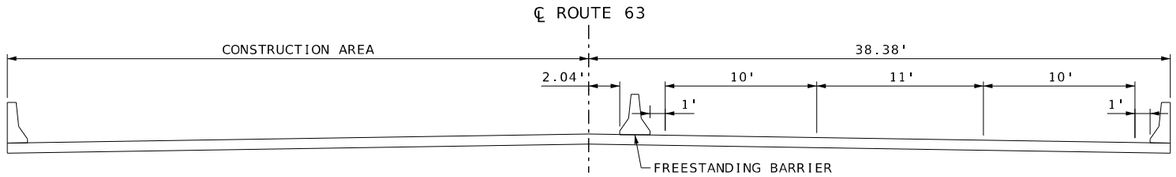

BRIDGE TRAFFIC CONTROL TYPICAL

DISCLAIMER

THE PROFESSIONAL WHOSE SIGNATURE AND PERSONAL SEAL APPEAR HEREON ASSUMES RESPONSIBILITY ONLY FOR WHAT APPEARS ON THIS PAGE, AND DISCLAIMS (PURSUANT TO SECTION 327.411 RSMO) SPECIFICATION, ESTIMATES, REPORTS, OR OTHER DOCUMENTS OR INSTRUMENTS NOT SEALED BY THE UNDERSIGNED PROFESSIONAL RELATING TO OR INTENDED TO BE USED FOR ANY PART OR PARTS OF THE PROJECT TO WHICH THIS PAGE REFERS.

LEGEND

- SIGN
- TRIM LINE CHANNELIZERS
- WORK AREA
- TYPE III MOVABLE BARRICADE

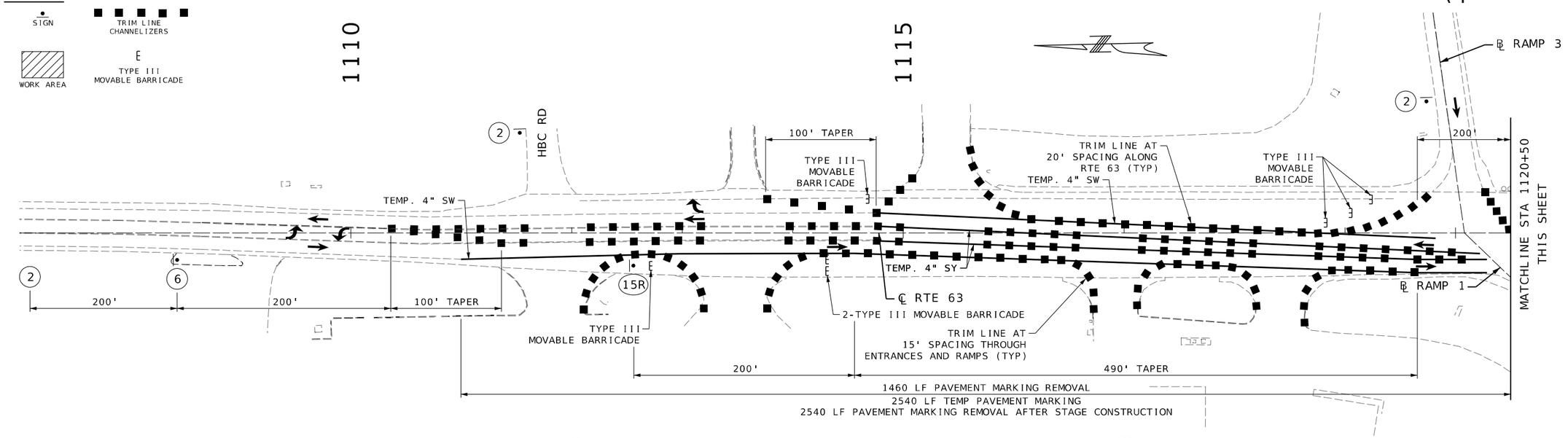

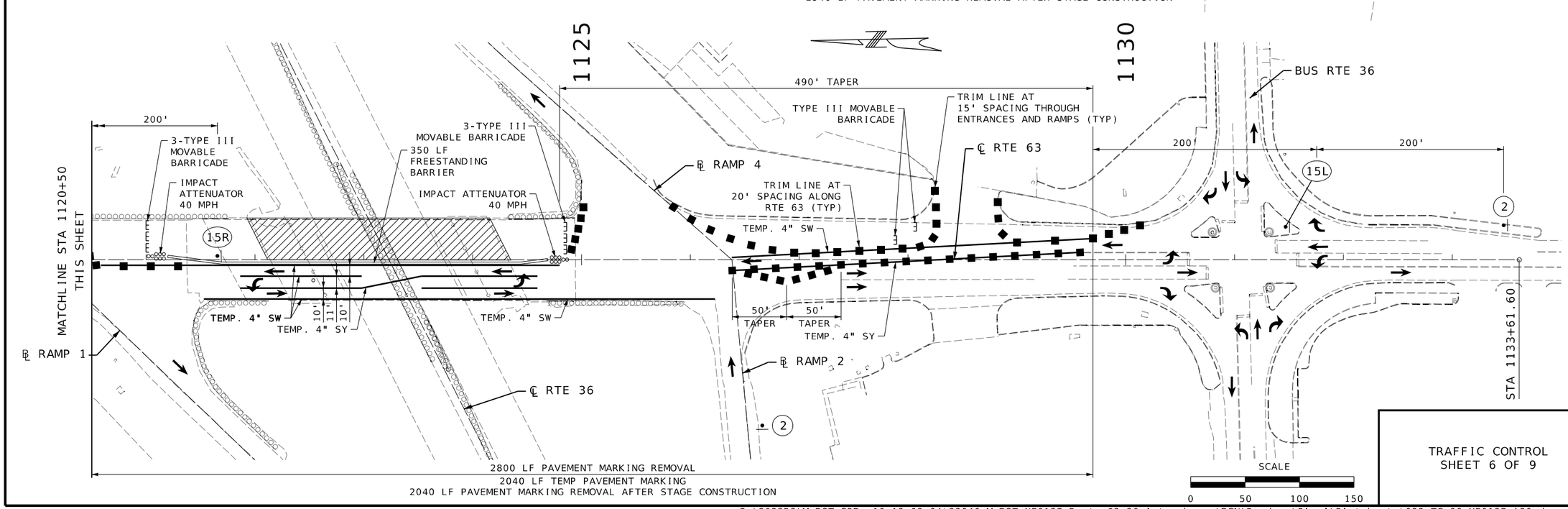

TRAFFIC CONTROL SHEET 6 OF 9

STATE OF MISSOURI
PAUL JOSEPH KRONLAGE NUMBER EN 023328
REGISTERED PROFESSIONAL ENGINEER

05/29/2025 1:14:15 PM
Paul J. Kronlage - Civil
MO PE - 023328

DATE PREPARED	
5/29/2025	
ROUTE 63	STATE MO
DISTRICT NE	SHEET NO. 22
COUNTY MACON	
JOB NO. JNE0137	
CONTRACT ID.	
PROJECT NO.	
BRIDGE NO.	

DATE	DESCRIPTION

MISSOURI HIGHWAYS AND TRANSPORTATION COMMISSION
105 WEST CAPITOL
JEFFERSON CITY, MO 65102
1-888-ASK-MODOT (1-888-275-6636)

EFK•Moen
Civil Engineering Design
13523 Barrett Parkway Dr
Suite 250
St. Louis, MO 63021
Phone 314-394-3100
Fax 314-394-3199
Missouri Certificate of Authority: 001578

O:\2022R3\MoDOT_ORD_v10.12.02.04\23046 MoDOT NE0137 Route 63-36 Interchange\DGN\Roadway\Final\Plotsheets\022_TC_06_NE0137_i50.dgn 9:33:37 AM 5/29/2025

DISCLAIMER
THE PROFESSIONAL WHOSE SIGNATURE AND PERSONAL SEAL APPEAR HEREON ASSUMES RESPONSIBILITY ONLY FOR WHAT APPEARS ON THIS PAGE, AND DISCLAIMS (PURSUANT TO SECTION 327.411 RSMO) SPECIFICATION, ESTIMATES, REPORTS, OR OTHER DOCUMENTS OR INSTRUMENTS NOT SEALED BY THE UNDERSIGNED PROFESSIONAL RELATING TO OR INTENDED TO BE USED FOR ANY PART OR PARTS OF THE PROJECT TO WHICH THIS PAGE REFERS.

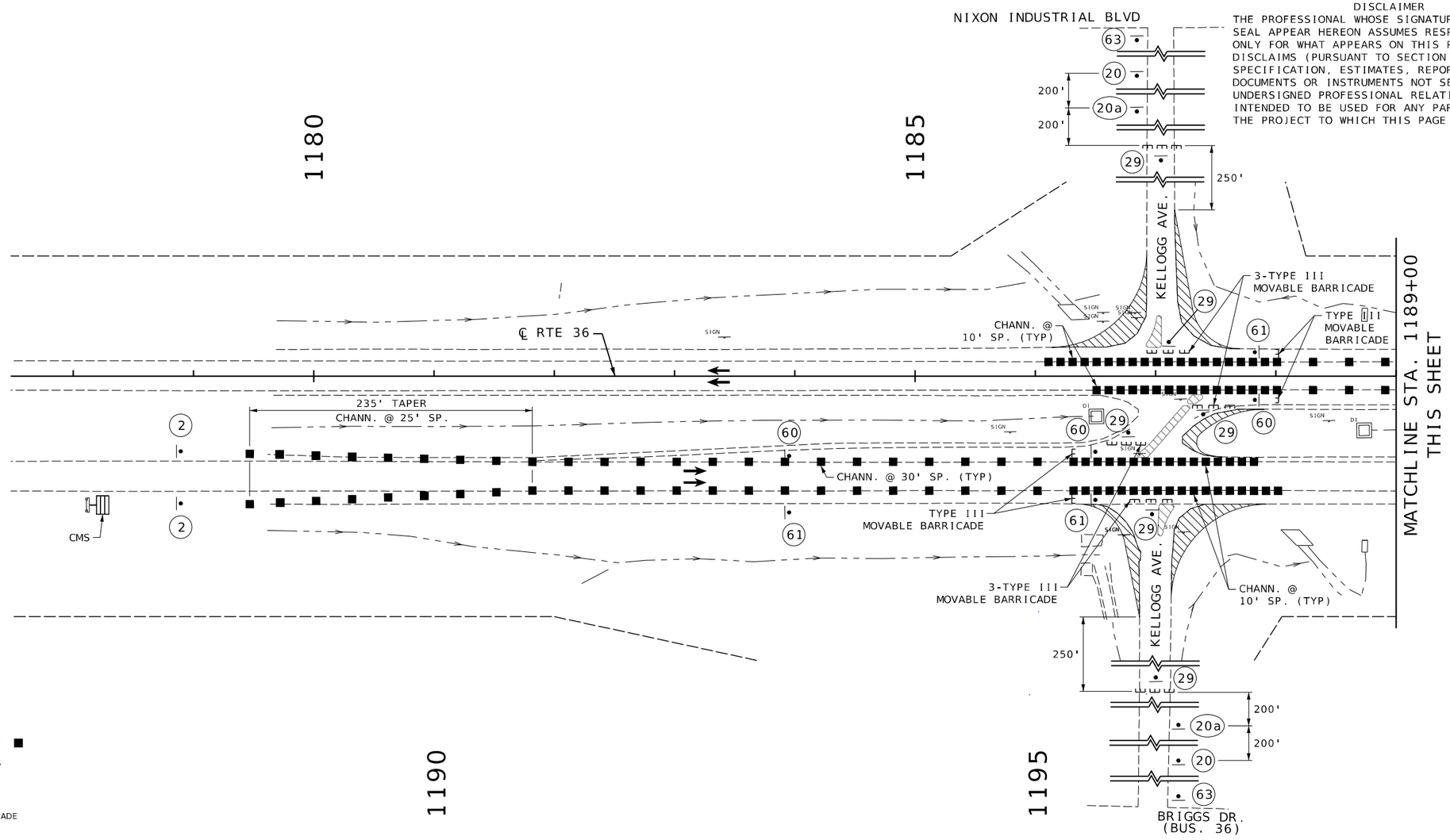

LEGEND

- SIGN
- TRIM LINE CHANNELIZERS
- WORK AREA
- TYPE III MOVABLE BARRICADE

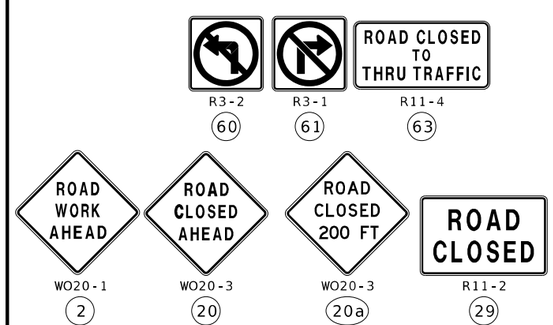

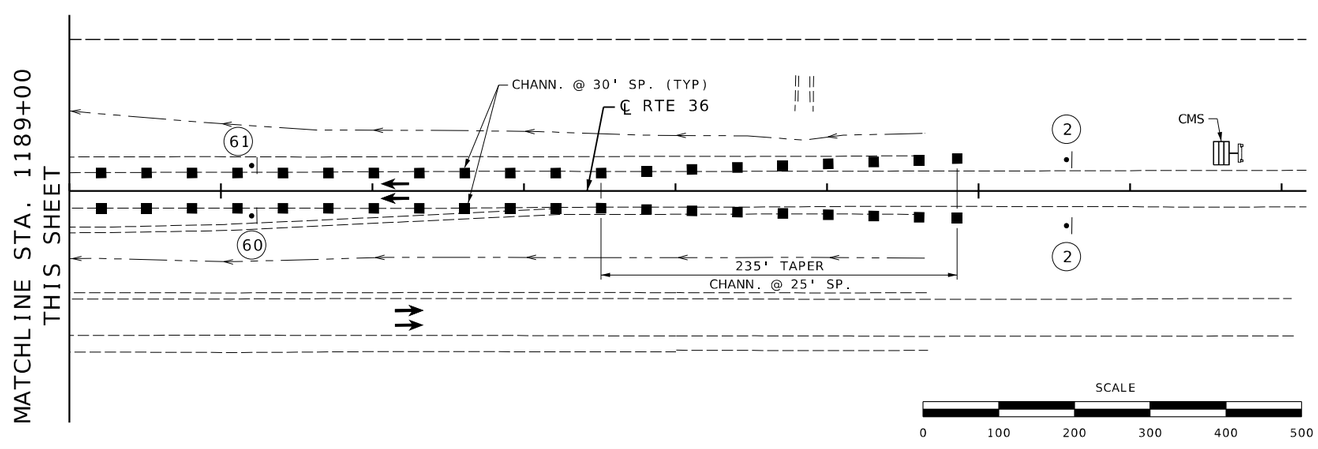

TRAFFIC CONTROL
SHEET 7 OF 9

STATE OF MISSOURI
PAUL JOSEPH KRONLAGE
NUMBER EN 023328
REGISTERED PROFESSIONAL ENGINEER

05/29/2025 1:14:42 PM
Paul J. Kronlage - Civil
MO PE - 023328

DATE PREPARED	
5/29/2025	
ROUTE 63	STATE MO
DISTRICT NE	SHEET NO. 23
COUNTY MACON	
JOB NO. JNE0137	
CONTRACT ID.	
PROJECT NO.	
BRIDGE NO.	

DESCRIPTION	DATE

MISSOURI HIGHWAYS AND TRANSPORTATION COMMISSION
105 WEST CAPITOL
JEFFERSON CITY, MO 65102
1-888-ASK-MODOT (1-888-275-6636)

EFK•Moen
Civil Engineering Design
13523 Barrett Parkway Dr
Suite 250
St. Louis, MO 63021
Phone 314-394-3100
Fax 314-394-3199
Missouri Certificate of Authority: 001578

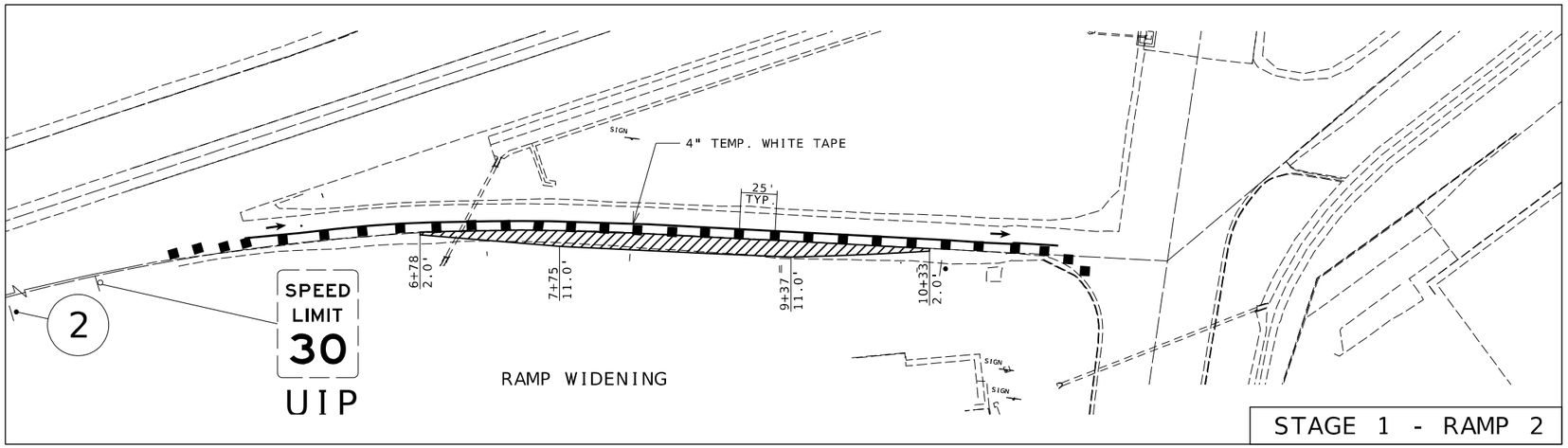

STAGE 1 - RAMP 2

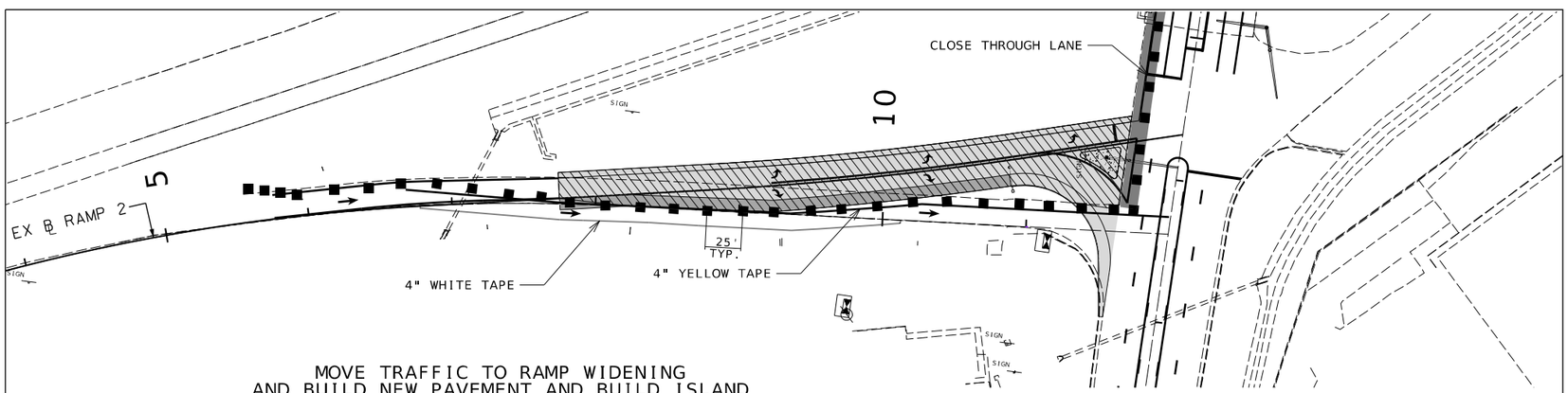

STAGE 2 - RAMP 2

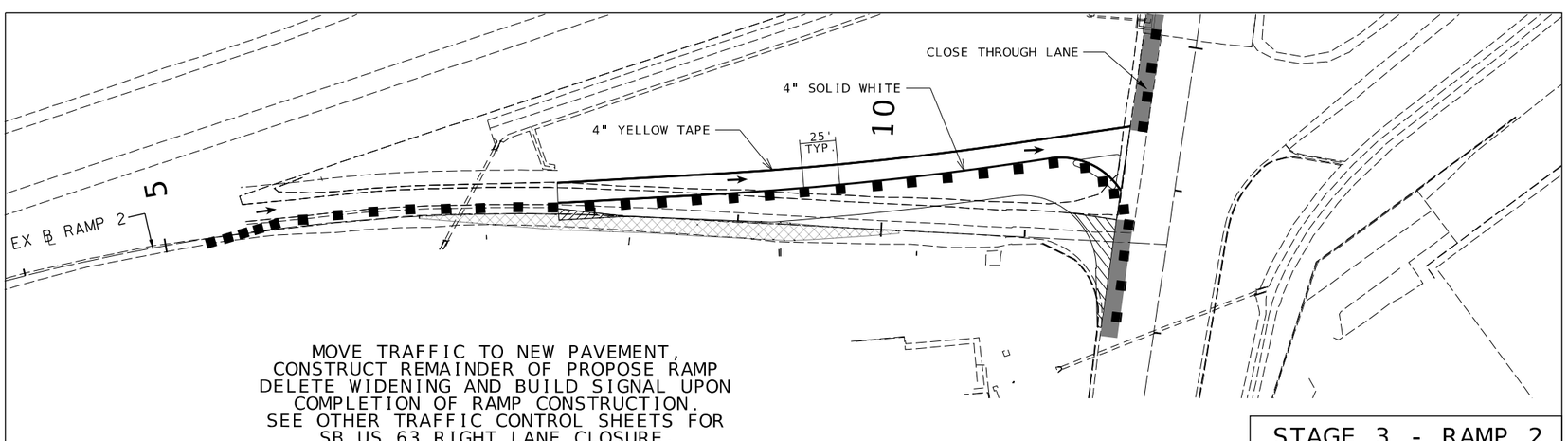

STAGE 3 - RAMP 2

NEW PAVEMENT

PAVEMENT REMOVAL

WO20-1

2

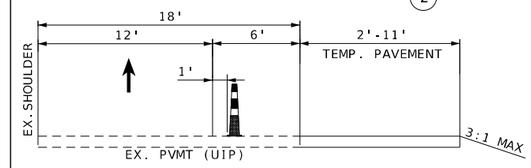

STAGE 1

DISCLAIMER

THE PROFESSIONAL WHOSE SIGNATURE AND PERSONAL SEAL APPEAR HEREON ASSUMES RESPONSIBILITY ONLY FOR WHAT APPEARS ON THIS PAGE, AND DISCLAIMS (PURSUANT TO SECTION 327.411 RSMO) SPECIFICATION, ESTIMATES, REPORTS, OR OTHER DOCUMENTS OR INSTRUMENTS NOT SEALED BY THE UNDERSIGNED PROFESSIONAL RELATING TO OR INTENDED TO BE USED FOR ANY PART OR PARTS OF THE PROJECT TO WHICH THIS PAGE REFERS.

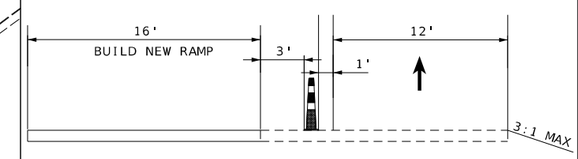

STAGE 2

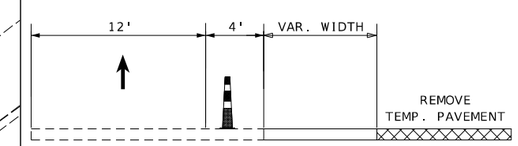

STAGE 3

SCALE

0 50 100 150

TRAFFIC CONTROL SHEET
EB OFF-RAMPS ROUTE 36
STAGES 1 - 3
SHEET 8 OF 9

STATE OF MISSOURI
PAUL JOSEPH KRONLAGE
NUMBER
EN 023328
REGISTERED PROFESSIONAL ENGINEER

05/29/2025 1:15:02 PM
Paul J. Kronlage - Civil
MO PE - 023328

DATE PREPARED	
5/29/2025	
ROUTE 63	STATE MO
DISTRICT NE	SHEET NO. 24
COUNTY MACON	
JOB NO. JNE0137	
CONTRACT ID.	
PROJECT NO.	
BRIDGE NO.	

DATE	DESCRIPTION

MISSOURI HIGHWAYS AND TRANSPORTATION COMMISSION
105 WEST CAPITOL
JEFFERSON CITY, MO 65102
1-888-ASK-MODOT (1-888-275-6636)

EFK•Moen
Civil Engineering Design
13523 Barrett Parkway Dr
Suite 250
St. Louis, MO 63021
Phone 314-394-3100
Fax 314-394-3199
Missouri Certificate of Authority: 001578

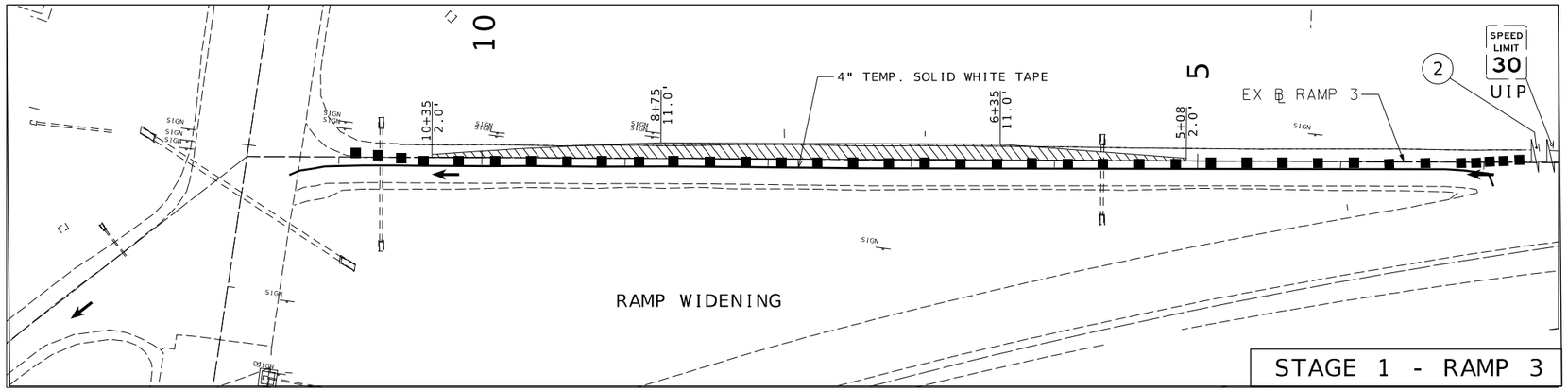

NEW PAVEMENT

PAVEMENT REMOVAL

WO20-1

2

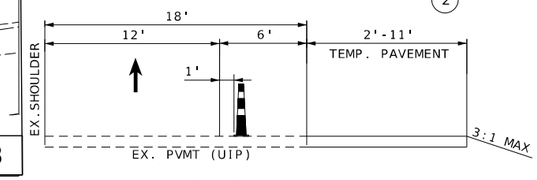

STAGE 1

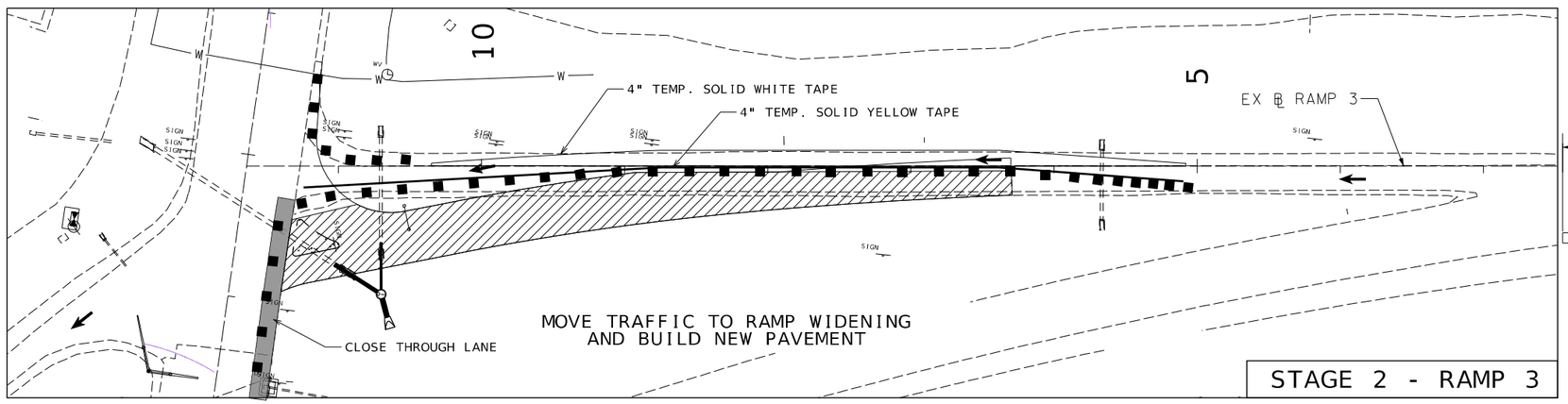

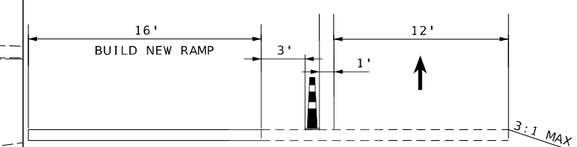

STAGE 2

DISCLAIMER

THE PROFESSIONAL WHOSE SIGNATURE AND PERSONAL SEAL APPEAR HEREON ASSUMES RESPONSIBILITY ONLY FOR WHAT APPEARS ON THIS PAGE, AND DISCLAIMS (PURSUANT TO SECTION 327.411 RSMO) SPECIFICATION, ESTIMATES, REPORTS, OR OTHER DOCUMENTS OR INSTRUMENTS NOT SEALED BY THE UNDERSIGNED PROFESSIONAL RELATING TO OR INTENDED TO BE USED FOR ANY PART OR PARTS OF THE PROJECT TO WHICH THIS PAGE REFERS.

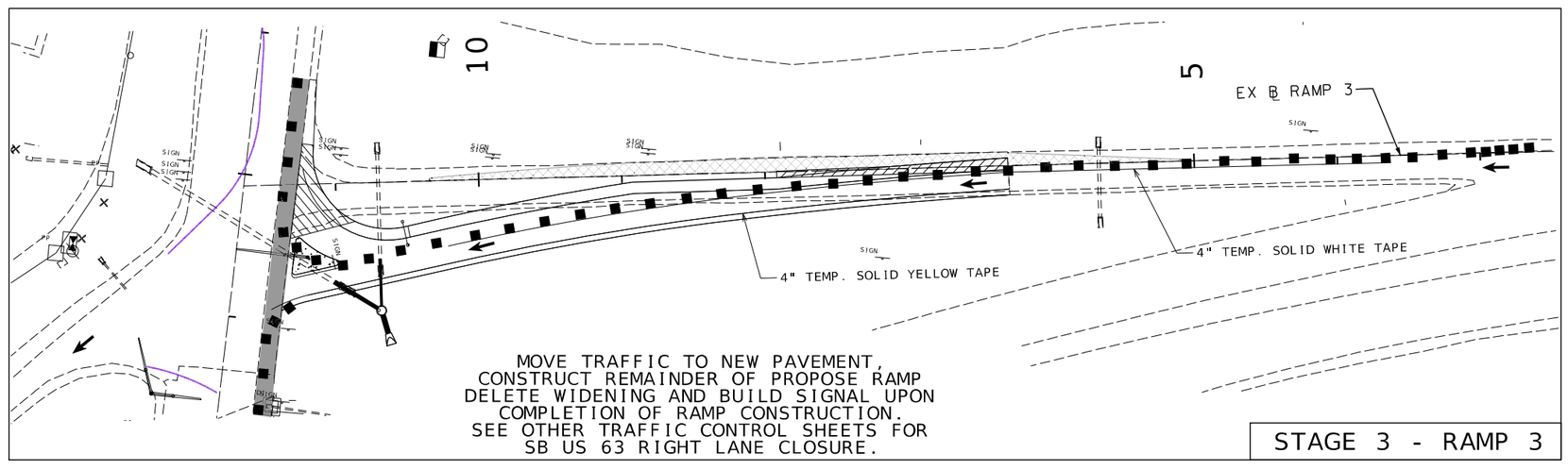

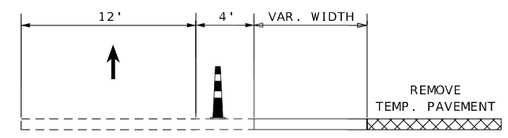

STAGE 3

SCALE

0 50 100 150

TRAFFIC CONTROL SHEET
WB OFF-RAMP ROUTE 36
STAGES 1 - 3
SHEET 9 OF 9

STATE OF MISSOURI
PAUL JOSEPH KRONLAGE
NUMBER EN 023328
REGISTERED PROFESSIONAL ENGINEER

05/29/2025 1:15:24 PM
Paul J. Kronlage - Civil
MO PE - 023328

DATE PREPARED	
5/29/2025	
ROUTE 63	STATE MO
DISTRICT NE	SHEET NO. 25
COUNTY MACON	
JOB NO. JNE0137	
CONTRACT ID.	
PROJECT NO.	
BRIDGE NO.	

DATE	DESCRIPTION

MISSOURI HIGHWAYS AND TRANSPORTATION COMMISSION
105 WEST CAPITOL
JEFFERSON CITY, MO 65102
1-888-ASK-MODOT (1-888-275-6636)

EFK•Moen
Civil Engineering Design
13523 Barrett Parkway Dr
Suite 250
St. Louis, MO 63021
Phone 314-394-3100
Fax 314-394-3199
Missouri Certificate of Authority: 001578

TEMPORARY EROSION CONTROL LEGEND

(A)	ALTERNATE DITCH CHECK
(R)	ROCK DITCH CHECK
▼——▼	SILT FENCE

1855' SILT FENCE
28 ALTERNATE DITCH CHECKS

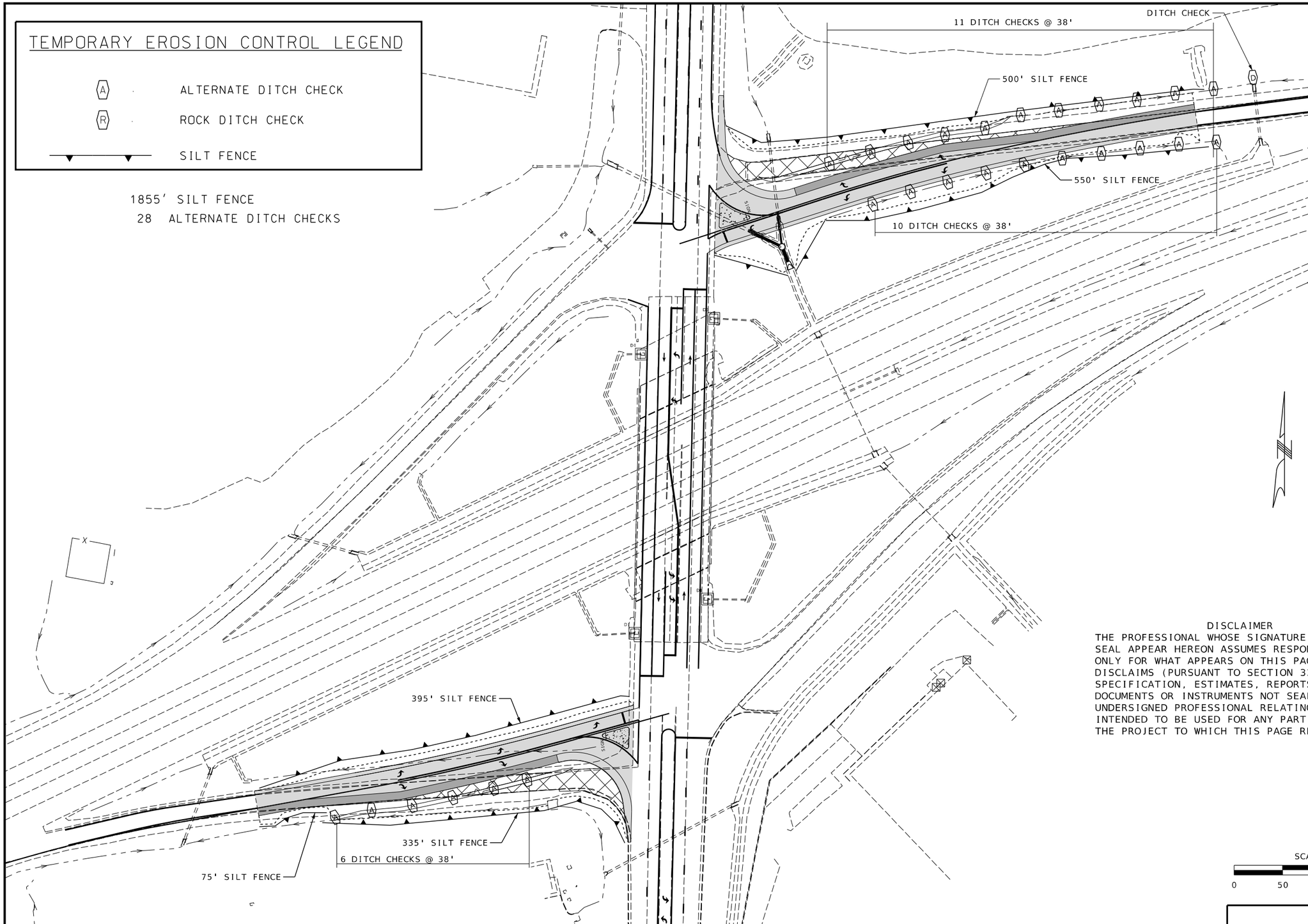

DISCLAIMER
THE PROFESSIONAL WHOSE SIGNATURE AND PERSONAL SEAL APPEAR HEREON ASSUMES RESPONSIBILITY ONLY FOR WHAT APPEARS ON THIS PAGE, AND DISCLAIMS (PURSUANT TO SECTION 327.411 RSMO) SPECIFICATION, ESTIMATES, REPORTS, OR OTHER DOCUMENTS OR INSTRUMENTS NOT SEALED BY THE UNDERSIGNED PROFESSIONAL RELATING TO OR INTENDED TO BE USED FOR ANY PART OR PARTS OF THE PROJECT TO WHICH THIS PAGE REFERS.

SCALE
0 50 100 150

EROSION CONTROL SHEET
RTE. 63 RAMPS
SHEET 1 OF 2

STATE OF MISSOURI
PAUL JOSEPH KRONLAGE
NUMBER
EN 023328
REGISTERED PROFESSIONAL ENGINEER

05/29/2025 1:15:43 PM
Paul J. Kronlage - Civil
MO PE - 023328

DATE PREPARED	
5/29/2025	
ROUTE 63	STATE MO
DISTRICT NE	SHEET NO. 26
COUNTY MACON	
JOB NO. JNE0137	
CONTRACT ID.	
PROJECT NO.	
BRIDGE NO.	

DATE	DESCRIPTION

MISSOURI HIGHWAYS AND TRANSPORTATION COMMISSION
105 WEST CAPITOL
JEFFERSON CITY, MO 65102
1-888-ASK-MODOT (1-888-275-6636)

EFK•Moen
Civil Engineering Design
13523 Barrett Parkway Dr
Suite 250
St. Louis, MO 63021
Phone 314-394-3100
Fax 314-394-3199
Missouri Certificate of Authority: 001578

TEMPORARY EROSION CONTROL LEGEND

(A)	ALTERNATE DITCH CHECK
(R)	ROCK DITCH CHECK
▼——▼	SILT FENCE

630' SILT FENCE
3 ALTERNATE DITCH CHECKS

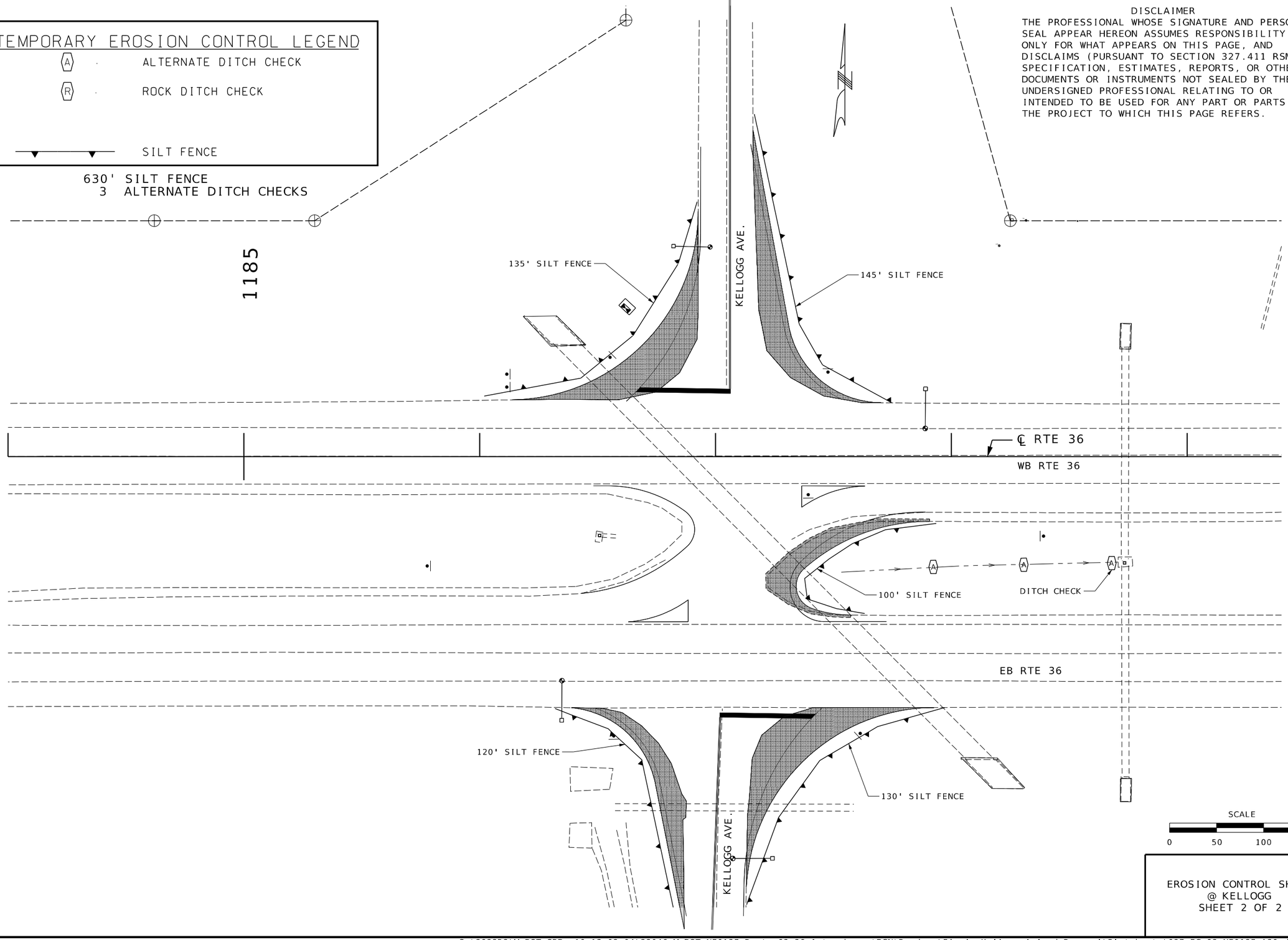

DISCLAIMER
THE PROFESSIONAL WHOSE SIGNATURE AND PERSONAL SEAL APPEAR HEREON ASSUMES RESPONSIBILITY ONLY FOR WHAT APPEARS ON THIS PAGE, AND DISCLAIMS (PURSUANT TO SECTION 327.411 RSMO) SPECIFICATION, ESTIMATES, REPORTS, OR OTHER DOCUMENTS OR INSTRUMENTS NOT SEALED BY THE UNDERSIGNED PROFESSIONAL RELATING TO OR INTENDED TO BE USED FOR ANY PART OR PARTS OF THE PROJECT TO WHICH THIS PAGE REFERS.

EROSION CONTROL SHEET
@ KELLOGG
SHEET 2 OF 2

STATE OF MISSOURI
PAUL JOSEPH KRONLAGE
NUMBER EN 023328
REGISTERED PROFESSIONAL ENGINEER

07/01/2025 2:02:50 PM
Paul J. Kronlage - Civil
MO PE - 023328

DATE PREPARED	
7/1/2025	
ROUTE 63	STATE MO
DISTRICT NE	SHEET NO. 27
COUNTY MACON	
JOB NO. JNE0137	
CONTRACT ID.	
PROJECT NO.	
BRIDGE NO.	

DATE	DESCRIPTION

MISSOURI HIGHWAYS AND TRANSPORTATION COMMISSION
105 WEST CAPITOL
JEFFERSON CITY, MO 65102
1-888-ASK-MODOT (1-888-275-6636)

EFK•Moen
Civil Engineering Design
13523 Barrett Parkway Dr
Suite 250
St. Louis, MO 63021
Phone 314-394-3100
Fax 314-394-3199
Missouri Certificate of Authority: 001578

DISCLAIMER
THE PROFESSIONAL WHOSE SIGNATURE AND PERSONAL SEAL APPEAR HEREON ASSUMES RESPONSIBILITY ONLY FOR WHAT APPEARS ON THIS PAGE, AND DISCLAIMS (PURSUANT TO SECTION 327.411 RSMO) SPECIFICATION, ESTIMATES, REPORTS, OR OTHER DOCUMENTS OR INSTRUMENTS NOT SEALED BY THE UNDERSIGNED PROFESSIONAL RELATING TO OR INTENDED TO BE USED FOR ANY PART OR PARTS OF THE PROJECT TO WHICH THIS PAGE REFERS.

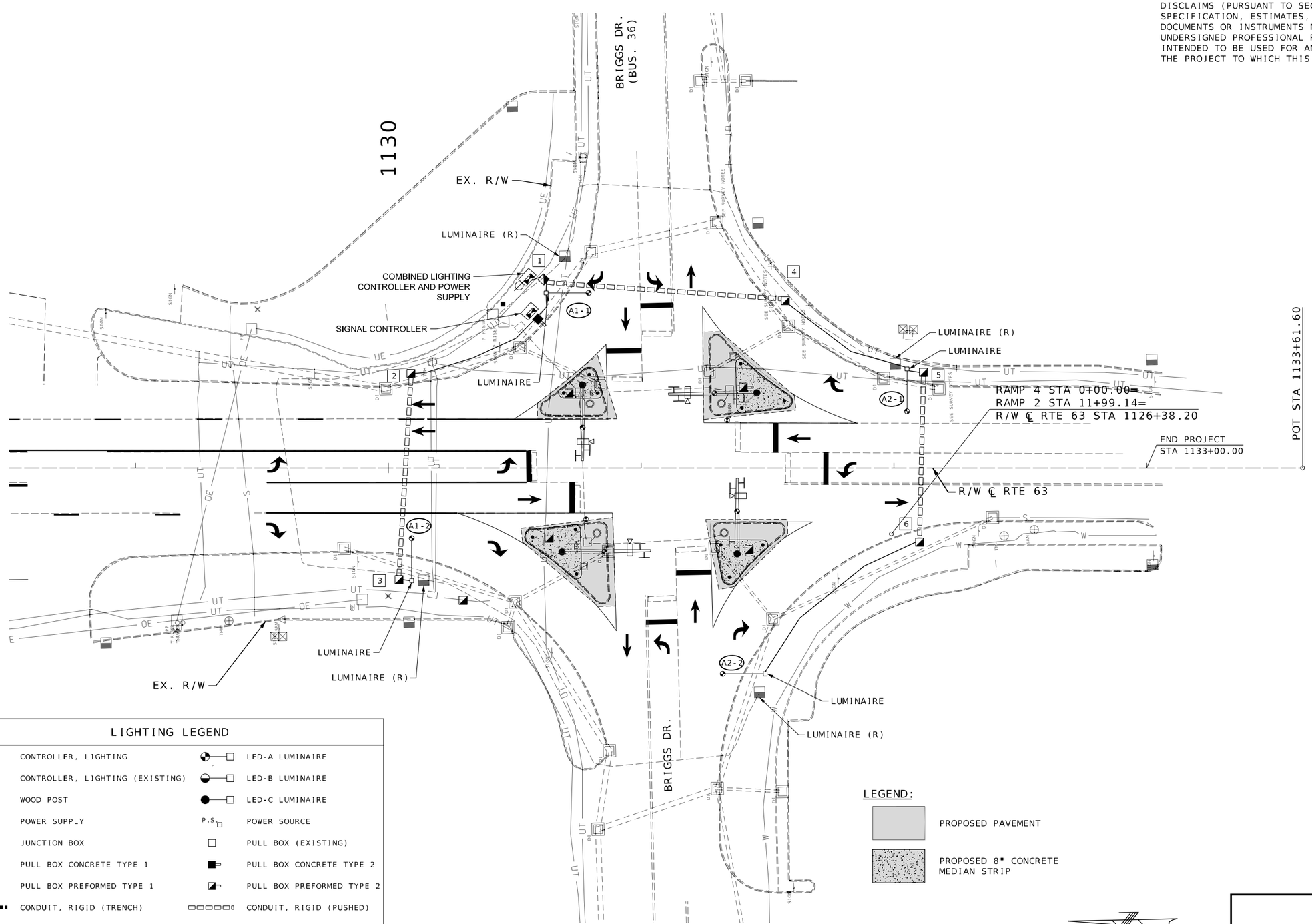

LIGHTING LEGEND

	CONTROLLER, LIGHTING		LED-A LUMINAIRE
	CONTROLLER, LIGHTING (EXISTING)		LED-B LUMINAIRE
	WOOD POST		LED-C LUMINAIRE
	POWER SUPPLY	P.S	POWER SOURCE
JCT	JUNCTION BOX		PULL BOX (EXISTING)
	PULL BOX CONCRETE TYPE 1		PULL BOX CONCRETE TYPE 2
	PULL BOX PREFORMED TYPE 1		PULL BOX PREFORMED TYPE 2
	CONDUIT, RIGID (TRENCH)		CONDUIT, RIGID (PUSHED)
M	CONDUIT, RIGID (MEDIAN)	B	CONDUIT, RIGID (BRIDGE)
	CONDUIT, RIGID (EXISTING)		CABLE-CONDUIT (EXISTING)
			CABLE-CONDUIT

LIGHTING PLAN
SHEET 1 OF 2

STATE OF MISSOURI
PAUL JOSEPH KRONLAGE
NUMBER EN 023328
REGISTERED PROFESSIONAL ENGINEER

05/29/2025 1:16:26 PM
Paul J. Kronlage - Civil
MO PE - 023328

DATE PREPARED	
5/29/2025	
ROUTE 63	STATE MO
DISTRICT NE	SHEET NO. 28
COUNTY MACON	
JOB NO. JNE0137	
CONTRACT ID.	
PROJECT NO.	
BRIDGE NO.	

DATE	DESCRIPTION

MISSOURI HIGHWAYS AND TRANSPORTATION COMMISSION
105 WEST CAPITOL
JEFFERSON CITY, MO 65102
1-888-ASK-MODOT (1-888-275-6636)

EFK•Moen
Civil Engineering Design
13523 Barrett Parkway Dr
Suite 250
St. Louis, MO 63021
Phone 314-394-3100
Fax 314-394-3199
Missouri Certificate of Authority: 001578

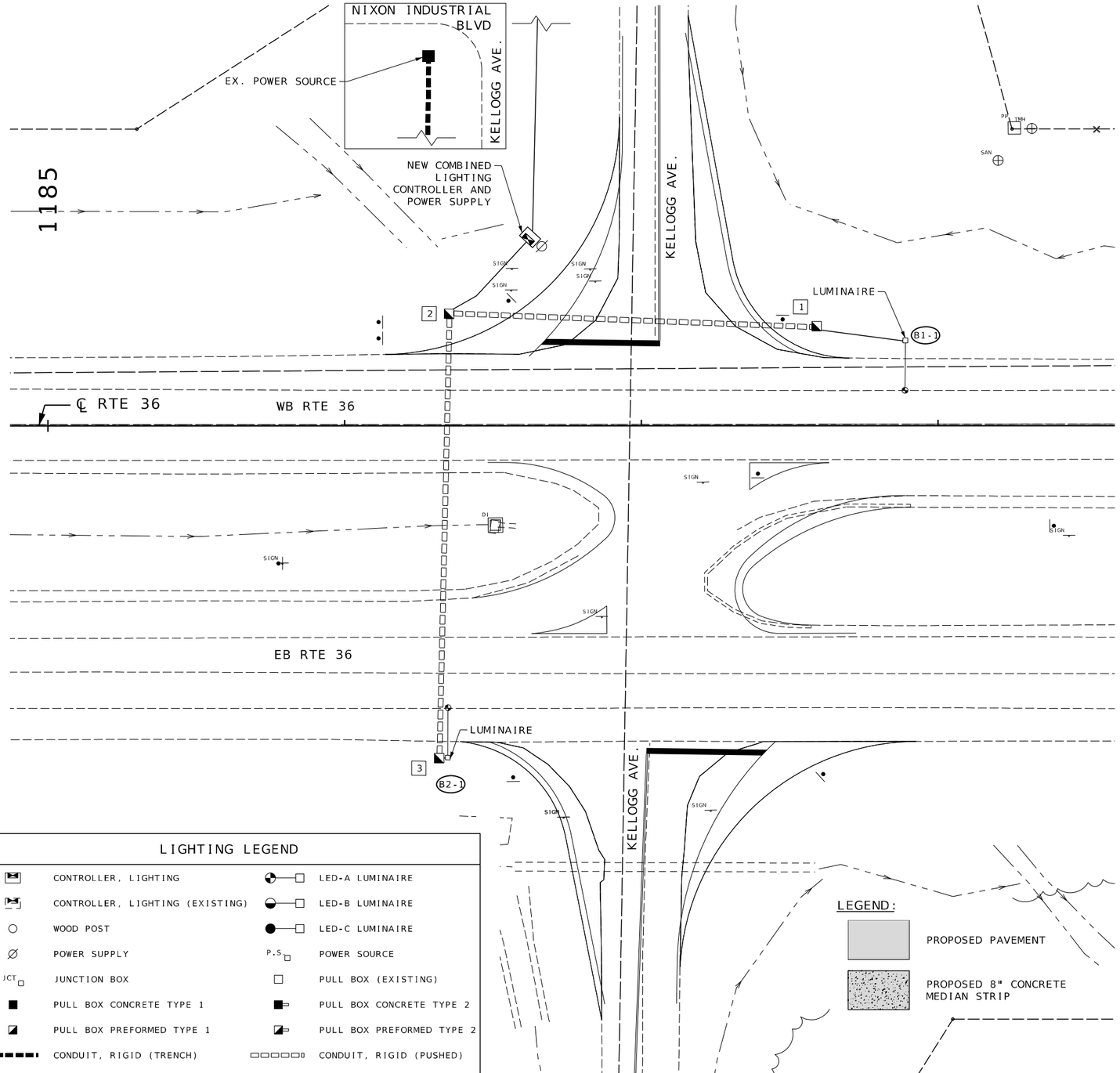

DISCLAIMER

THE PROFESSIONAL WHOSE SIGNATURE AND PERSONAL SEAL APPEAR HEREON ASSUMES RESPONSIBILITY ONLY FOR WHAT APPEARS ON THIS PAGE, AND DISCLAIMS (PURSUANT TO SECTION 327.411 RSMO) SPECIFICATION, ESTIMATES, REPORTS, OR OTHER DOCUMENTS OR INSTRUMENTS NOT SEALED BY THE UNDERSIGNED PROFESSIONAL RELATING TO OR INTENDED TO BE USED FOR ANY PART OR PARTS OF THE PROJECT TO WHICH THIS PAGE REFERS.

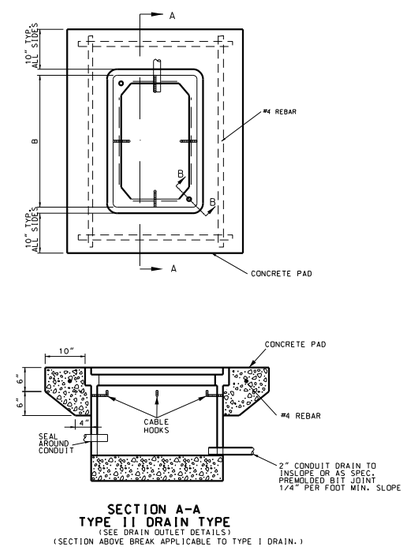

SECTION A-A
TYPE II DRAIN TYPE
(SEE DRAIN OUTLET DETAILS)
(SECTION ABOVE BREAK APPLICABLE TO TYPE I DRAIN.)

PREFORMED PULL BOX

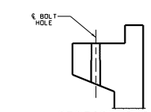

SECTION B-B
TYPICAL BOLT CLEANOUT

PREFORMED PULL BOX CONCRETE PAD DETAIL
FOR TRAFFIC SIGNAL AND LIGHTING PREFORMED PULL BOXES

LIGHTING LEGEND

	CONTROLLER, LIGHTING		LED-A LUMINAIRE
	CONTROLLER, LIGHTING (EXISTING)		LED-B LUMINAIRE
	WOOD POST		LED-C LUMINAIRE
	POWER SUPPLY	P.S	POWER SOURCE
JCT	JUNCTION BOX		PULL BOX (EXISTING)
	PULL BOX CONCRETE TYPE 1		PULL BOX CONCRETE TYPE 2
	PULL BOX PREFORMED TYPE 1		PULL BOX PREFORMED TYPE 2
	CONDUIT, RIGID (TRENCH)		CONDUIT, RIGID (PUSHED)
M	CONDUIT, RIGID (MEDIAN)	B	CONDUIT, RIGID (BRIDGE)
	CONDUIT, RIGID (EXISTING)		CABLE-CONDUIT (EXISTING)
			CABLE-CONDUIT

SCALE
0 20 40 60

LIGHTING SHEET
SHEET 2 OF 2

STATE OF MISSOURI
PAUL JOSEPH KRONLAGE
NUMBER EN 023328
REGISTERED PROFESSIONAL ENGINEER

Paul J. Kronlage
07/01/2025 2:03:24 PM
Paul J. Kronlage - Civil
MO PE - 023328

DATE PREPARED	
7/1/2025	
ROUTE 63	STATE MO
DISTRICT NE	SHEET NO. 29
COUNTY MACON	
JOB NO. JNE0137	
CONTRACT ID.	
PROJECT NO.	
BRIDGE NO.	

DATE	DESCRIPTION

MISSOURI HIGHWAYS AND TRANSPORTATION COMMISSION
105 WEST CAPITOL
JEFFERSON CITY, MO 65102
1-888-ASK-MODOT (1-888-275-6636)

EFK•Moen
Civil Engineering Design
13523 Barrett Parkway Dr
Suite 250
St. Louis, MO 63021
Phone 314-394-3100
Fax 314-394-3199
Missouri Certificate of Authority: 001578

O:\2022R3\MoDOT_ORD_v10.12.02.04\23046 MoDOT NE0137 Route 63-36 Interchange\DGN\Roadway\Final- Kellogg Island Removal\Plotsheets\029_LT_02_NE0137_i20.dgn 12:45:05 PM 7/1/2025

THE EXISTENCE AND APPROXIMATE LOCATION OF UTILITY FACILITIES KNOWN TO EXIST, AS SHOWN ON THE PLANS, ARE BASED ON THE BEST INFORMATION AVAILABLE TO THE COMMISSION AT THIS TIME. THIS INFORMATION IS PROVIDED BY THE COMMISSION "AS-IS" AND THE COMMISSION EXPRESSLY DISCLAIMS ANY REPRESENTATION OR WARRANTY AS TO THE COMPLETENESS, ACCURACY, OR SUITABILITY OF THE INFORMATION FOR ANY USE. RELIANCE UPON THIS INFORMATION IS DONE AT THE RISK AND PERIL OF THE USER, AND THE COMMISSION SHALL NOT BE LIABLE FOR ANY DAMAGES THAT MAY ARISE FROM ANY ERROR IN THE INFORMATION. IT IS, THEREFORE, THE RESPONSIBILITY OF THE CONTRACTOR TO VERIFY THE EXISTENCE, LOCATION AND STATUS OF ANY FACILITY. SUCH VERIFICATION INCLUDES DIRECT CONTACT WITH THE LISTED UTILITIES.

DISCLAIMER
THE PROFESSIONAL WHOSE SIGNATURE AND PERSONAL SEAL APPEAR HEREON ASSUMES RESPONSIBILITY ONLY FOR WHAT APPEARS ON THIS PAGE, AND DISCLAIMS (PURSUANT TO SECTION 327.411 RSMO) SPECIFICATION, ESTIMATES, REPORTS, OR OTHER DOCUMENTS OR INSTRUMENTS NOT SEALED BY THE UNDERSIGNED PROFESSIONAL RELATING TO OR INTENDED TO BE USED FOR ANY PART OR PARTS OF THE PROJECT TO WHICH THIS PAGE REFERS.

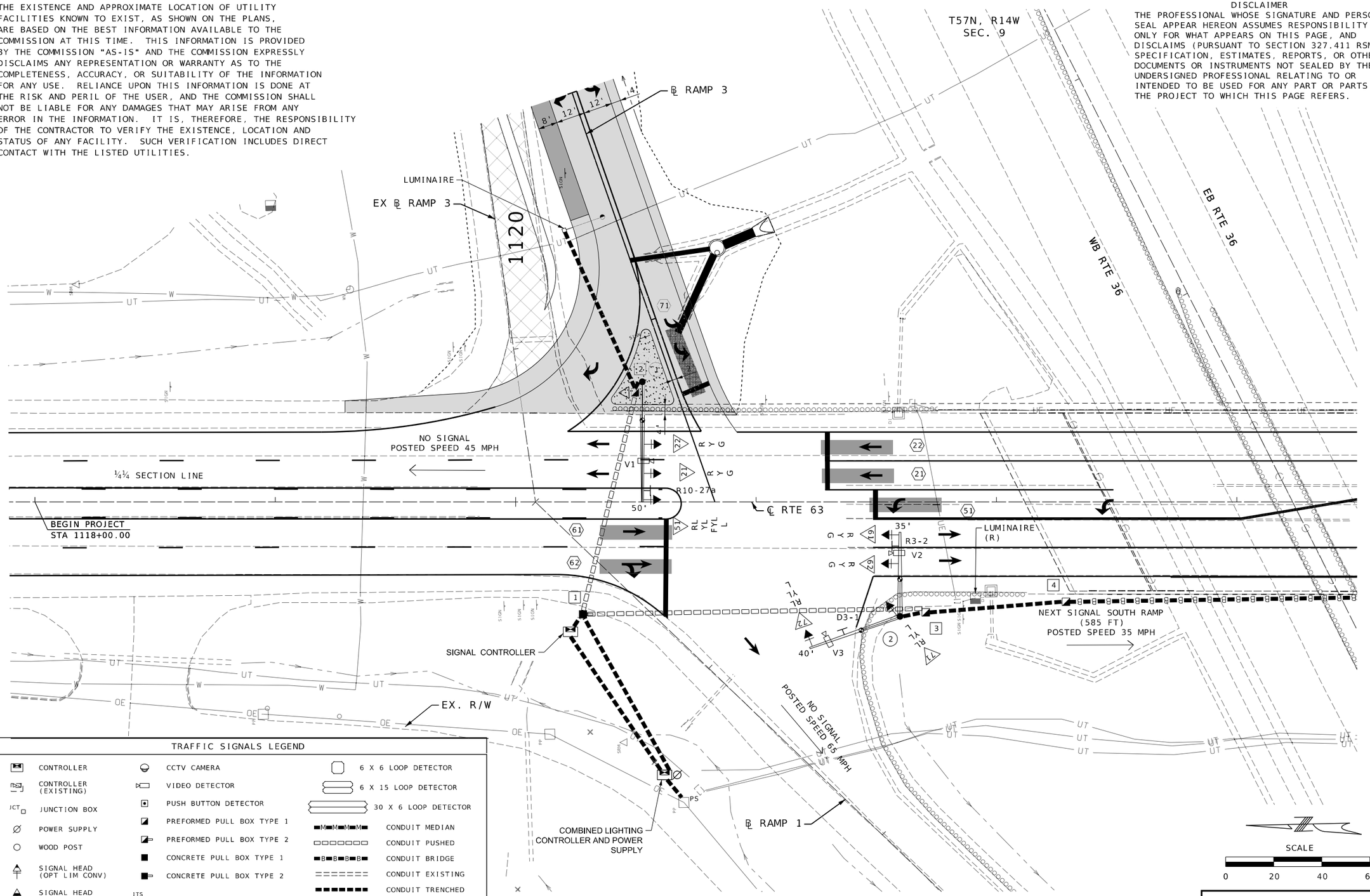

TRAFFIC SIGNALS LEGEND

CONTROLLER	CCTV CAMERA	6 X 6 LOOP DETECTOR
CONTROLLER (EXISTING)	VIDEO DETECTOR	6 X 15 LOOP DETECTOR
JCT JUNCTION BOX	PUSH BUTTON DETECTOR	30 X 6 LOOP DETECTOR
POWER SUPPLY	PREFORMED PULL BOX TYPE 1	CONDUIT MEDIAN
WOOD POST	PREFORMED PULL BOX TYPE 2	CONDUIT PUSHED
SIGNAL HEAD (OPT LIM CONV)	CONCRETE PULL BOX TYPE 1	CONDUIT BRIDGE
SIGNAL HEAD (OPT LIM)	CONCRETE PULL BOX TYPE 2	CONDUIT EXISTING
SIGNAL HEAD (PEDESTRIAN)	ITS PULL BOX TYPE 2	CONDUIT TRENCHED
SIGNAL HEAD (STANDARD)	ITS PULL BOX TYPE 5	SPAN WIRE
	DETECTION ZONE	MAST ARM - TYPE A BASE
		MAST ARM - TYPE C BASE
		MAST ARM - TYPE F BASE

LEGEND:

PAVEMENT REMOVAL

GENERAL NOTES:

1. ANY WORK INDICATED ON THE PLANS THAT EXTENDS BEYOND THE PROJECT LIMITS IS CONSIDERED INCIDENTAL TO AND A PART OF THE CONSTRUCTION OF THIS PROJECT.

2. ALL BEARINGS BASED ON MISSOURI STATE PLANE CENTRAL ZONE.

SIGNAL PLAN
SHEET 1 OF 21

STATE OF MISSOURI
PAUL JOSEPH KRONLAGE
NUMBER
EN 023328
REGISTERED PROFESSIONAL ENGINEER

07/01/2025 2:14:42 PM
Paul J. Kronlage - Civil
MO PE - 023328

DATE PREPARED	
7/1/2025	
ROUTE 63	STATE MO
DISTRICT NE	SHEET NO. 30
COUNTY MACON	
JOB NO. JNE0137	
CONTRACT ID.	
PROJECT NO.	
BRIDGE NO.	

DATE	DESCRIPTION

MISSOURI HIGHWAYS AND TRANSPORTATION COMMISSION
105 WEST CAPITOL
JEFFERSON CITY, MO 65102
1-888-ASK-MODOT (1-888-275-6636)

EFK•Moen
Civil Engineering Design
13523 Barrett Parkway Dr
Suite 250
St. Louis, MO 63021
Phone 314-394-3100
Fax 314-394-3199
Missouri Certificate of Authority: 001578

EFFECTIVE: 07/01/2018

LOCATION / BASE / PULL BOX

POST NUMBER	PULL BOX NUMBER	APPROACH	STATION	OFFSET	BASE A 9	A 9.5	A 10	A 10.5	A 11	A 12	F 9	F 9.5	F 10	F 10.5	F 11	F 12	C	CONCRETE** (CU. YDS.)	PREFORMED CLASS 1	CLASS 2	CLASS 3	CLASS 5	CONCRETE STANDARD	DOUBLE, TYPE A	DOUBLE, TYPE B	DRAIN TYPE* I	II A	II B	II C
1		RTE 63	1120+52.7	50.0' LT				1										3.27											
2		RTE 63	1121+59.8	47.6' RT						1								3.67											
	1	RTE 63	1120+28.1	46.7' RT														0.70						1		1			
	2	RTE 63	1120+49.7	45.6' LT														0.35	1							1			
	3	RTE 63	1121+70.6	45.9' RT														0.35	1							1			
	4	RTE 63	1122+28.9	41.5' RT														0.35	1							1			
		RTE 63	CONTROLLER (SEE D-37C)															1.95											
SUBTOTAL																		10.99	3					1		▨	▨	▨	▨
TOTAL																		11.0	3					1		▨	▨	▨	▨

POST

POST NUMBER	PULL BOX NUMBER	TOP MOUNT POST 8 FT.	15 FT.	TYPE C & CL ARM LENGTH A	A	A	A	SIGNAL SPACING B	C	D	D'	SIGN SPACING B	C	D	D'
1				50				26	12	11		45			
2															
	1														
	2														
	3														
	4														
SUBTOTAL				1				▨	▨	▨	▨	▨	▨	▨	▨
TOTAL				1				▨	▨	▨	▨	▨	▨	▨	▨

POST NUMBER	PULL BOX NUMBER	TYPE B & BL ARM LENGTH E	K	E	K	E	K	LEFT ARM E SIGNAL SPACING F	G	H	H'	LEFT ARM E SIGN SPACING F	G	H	H'	RIGHT ARM K SIGNAL SPACING L	M	N	N'	RIGHT ARM K SIGN SPACING L	M	N	N'	INCLUDED ANGLE	LUMINAIRE BRACKET ARM* 4 FT.	6 FT.	8 FT.	10 FT.	12 FT.	15 FT.
1																														1
2		35	40					22	12			29				0	39			24				111						2
	1																													
	2																													
	3																													
	4																													
SUBTOTAL		1						▨	▨	▨	▨	▨	▨	▨	▨	▨	▨	▨	▨	▨	▨	▨	▨	▨	▨	▨	▨	▨	▨	▨
TOTAL		1						▨	▨	▨	▨	▨	▨	▨	▨	▨	▨	▨	▨	▨	▨	▨	▨	▨	▨	▨	▨	▨	▨	▨

SIGNAL HEADS

SPAN NUMBER	POST NUMBER	FACE NUMBER	LED A TOP MOUNTED LUMINAIRE	INDICATIONS * 12" LENS CONVENTIONAL R	RL	Y	YL	FYL	FYR	G	S	L	Rt	✋🚶	12" LENS OPTICAL LIMITING R	Y	YL	YRt	YL	YRt	G	S	L	Rt	VISORS * 12" LENS	PED.
	1	51	1		1		1	1				1													4	
	1	21		1		1				1															3	
	1	22		1		1				1															3	
	2	61	2	1		1				1															3	
	2	62		1		1				1															3	
	2	71			1		1					1													3	
	2	72			1		1					1													3	
SUBTOTAL			3																							
TOTAL			3																							

SPAN NUMBER	POST NUMBER	FACE NUMBER	LOUVERS * A	B	C	D	E	F	BACKPLATE* LENSES 1	2	3	4	5	RETROREFLECTIVE BACKPLATE* LENSES 1	2	3	4	5	BRACKET* TYPE I	II	III
	1	51										1							1		
	1	21									1								1		
	1	22									1								1		
	2	61									1								1		
	2	62									1								1		
	2	71									1								1		
	2	72									1								1		

SPAN NUMBER	POST NUMBER	FACE NUMBER	ONE-FACE SECTION 1- T	1- S	1- C	1- B	3- T	3- S	3- C	3- B	4- T	4- S	4- C	4- B	5- T	5- S	5- C	5- B	TWO-FACE SECTIONS 11- T	11- S	11- B	33- T	33- S	33- C	33- B	34- S	34- B	35- S	35- B	44- S	44- B	45- S	45- B
	1	51												1																			
	1	21								1																							
	1	22								1																							
	2	61								1																							
	2	62								1																							
	2	71						1																									
	2	72								1																							
SUBTOTAL OPTICALLY LIMITED																																	
SUBTOTAL CONVENTIONAL								1		5				1																			
SUBTOTAL COMBINATION OL & CONV																																	
TOTAL OPTICALLY LIMITED																																	
TOTAL CONVENTIONAL								1		5				1																			
TOTAL COMBINATION OL & CONV																																	


R3-2

R10-27a

D3-1
POST 2

SIGNAL SIGNS

QUANTITY	MUTCD SIGN NUMBER	SIZE	AREA	SIGN TOTAL AREA ITEM NO. 90208.33	SIGNAL SIGN MOUNTING HARDWARE ITEM NO. 90208.34
		INCHES	SQ.FT.	SQ.FT.	EA.
1	R3-2	24 X 24	4	4	1
1	R10-27a	30 X 36	7.5	7.5	1
1	D3-1 (MISSOURI ST)	90 X 18	11.3	11.3	1
			SUBTOTAL	22.8	3
			TOTAL	23	3

REMARKS

ALL LENGTHS AND SPACINGS ARE IN FEET UNLESS OTHERWISE INDICATED.

* ITEMS FOR WHICH SEPARATE PAYMENT WILL NOT BE MADE.

** SEE STANDARD PLANS 902.10 AND 902.30 FOR CONCRETE REQUIREMENTS ON BASES.

*** USE D3-16 FOR ONE LINE. USE D3-18 FOR TWO LINE.

SIGNAL STRUCTURES WHICH WILL EXCEED THE DIMENSION LIMITS SHOWN ON STANDARD PLAN SHEETS IN SECTION 902 AND ANY OTHER INSTALLATION WHERE THE DETAILS OF CONSTRUCTION ARE NOT FURNISHED IN THE CONTRACT PLANS, SHALL BE DESIGNED BY A PROFESSIONAL ENGINEER IN ACCORDANCE WITH THE 2001 AASHTO STANDARD SPECIFICATIONS FOR STRUCTURAL SUPPORTS FOR HIGHWAY SIGNS, LUMINAIRES AND TRAFFIC SIGNALS, 4TH EDITION, AND LATEST INTERIMS. THE STRUCTURE SHALL BE DESIGNED AS IMPORTANCE CATEGORY I FOR FATIGUE WITH A 50-YEAR DESIGN LIFE. THE CONTRACTOR SHALL SUBMIT A SET OF SHOP DETAIL DRAWINGS INCLUDING WELD PROCEDURE SPECIFICATIONS AND DESIGN COMPUTATIONS FOR MODOT RECORDS AND REFERENCE. THE SUBMITTED DRAWINGS AND CALCULATIONS SHALL BE SIGNED AND SEALED IN ACCORDANCE WITH THE LAWS RELATING TO ARCHITECTS AND PROFESSIONAL ENGINEERS (CHAPTER 327, RSMO.), AND SHALL INCLUDE A TITLE BLOCK OR SUMMARY SHEET WHICH LISTS AND CERTIFIES THAT THE PRODUCT MEETS ALL OF THE SPECIFIED DESIGN CRITERIA.

LEGEND

T - TOP MOUNT
S - SIDE MOUNT
C - SPANWIRE MOUNT
B - MAST ARM MOUNT

RTE 63 & RTE 36 WB RAMPS
INTERSECTION

D-37A

SIGNAL PLAN
SHEET 2 OF 21

PAUL JOSEPH KRONLAGE
NUMBER EN 023328
Paul J. Kronlage
05/29/2025 1:24:09 PM
Paul J. Kronlage - Civil
MO PE - 023328

DATE PREPARED
5/29/2025

ROUTE 63
STATE MO
DISTRICT NE
SHEET NO. 31
COUNTY MACON
JOB NO. JNE0137
CONTRACT ID.
PROJECT NO.
BRIDGE NO.

DESCRIPTION
DATE

MISSOURI HIGHWAYS AND TRANSPORTATION COMMISSION
105 WEST CAPITOL
JEFFERSON CITY, MO 65102
1-888-ASK-MODOT (1-888-275-6636)

EFK•Moen
Civil Engineering Design
13523 Barrett Parkway Dr
Suite 250
St. Louis, MO 63021
Phone 314-394-3100
Fax 314-394-3199
Missouri Certificate of Authority: 001578

EFFECTIVE: 10-01-2015

CONDUIT (WITH #14 TRACER WIRE)

FROM	TO	CENTER TO CENTER DISTANCE	LOOP DET.	TRENCH				PUSHED			MEDIAN			ON STRUCTURE			REMARKS
			1"	2"	3"	4"		2"	3"	4"	2"	3"	4"	2"	3"		
		71		79													
	1	75			78												
	1	9			24												2-3" TRENCHED CONDUIT
1	2	95							93								
2	1	5			6												
1	3	143							141								
3	2	11			12												
3	4	58		56													
4	3*	232												230			* PULLBOX ON SHEET 5
2	LT	74			77												
SUBTOTALS				135	197				236					230			
TOTALS				135	197				236					230			

CABLE

FROM	TO	CENTER TO CENTER DISTANCE	POWER		CONTROL			CCTV CAMERA CABLE	VIDEO DETECTION	LUMINAIRE		DETECTOR		24 FIBER		REMARKS
			1c #2	1c #6	2c #16	5c #16	7c #16		VIDEO CABLE (DET.)	CONTROL 2c #12	POLE & BRACKET 1c #10	1c #14 IN DUCT	2c #14 LEAD-IN CABLE	18 SINGLE-MODE	6 MULTI-MODE	
		71		199												3-87' CABLES
	51	109					199									
	21	109					200									INCLUDES JUMPER CABLES
	61	163					250									INCLUDES JUMPER CABLES
	71	163					243									
	1	176								196	90					INCLUDES JUMPER CABLES
	2	228								496	180					2 LUMINAIRES
	*	626												802**		* CONTROLLER ON SHEET 5
	LT	243								268	90					
	V1	109							188							
	V2	163							232							
	V3	163							236							
SUBTOTALS				199			892		656	960	360			802		
TOTALS				210			940		***	1010	380			850		INCLUDES 5% FOR SNAKING

**WIRE FOR INTERCONNECT
***WIRE INCLUDED IN COST OF VIDEO DETECTION SYSTEM

STATE OF MISSOURI
PAUL JOSEPH KRONLAGE
NUMBER EN 023328
REGISTERED PROFESSIONAL ENGINEER

05/29/2025 2:00:59 PM
Paul J. Kronlage - Civil
MO PE - 023328

DATE PREPARED: 5/29/2025

ROUTE	STATE
63	MO
DISTRICT	SHEET NO.
NE	32

COUNTY: MACON
JOB NO.: JNE0137
CONTRACT ID.
PROJECT NO.
BRIDGE NO.

DESCRIPTION
DATE

MISSOURI HIGHWAYS AND TRANSPORTATION COMMISSION
105 WEST CAPITOL
JEFFERSON CITY, MO 65102
1-888-ASK-MODOT (1-888-275-6636)

EFK•Moen
Civil Engineering Design
13523 Barrett Parkway Dr
Suite 250
St. Louis, MO 63021
Phone 314-394-3100
Fax 314-394-3199
Missouri Certificate of Authority: 001578

SIGNAL PLAN
SHEET 3 OF 21

INTERSECTION RTE 63 & RTE 36 WB RAMPS

D-37B

O:\2022R3\MoDOT_ORD_v10.12.02.04\23046 MoDOT NE0137 Route 63-36 Interchange\DGN\Roadway\Final\Plotsheets\032_SG_03_North_Ramp_D37B_NE0137_i1.dgn 1:43:10 PM 5/29/2025

EFFECTIVE 04-01-2018

POWER SUPPLY

LOCATION			POWER SUPPLY ASSEMBLY		CIRCUIT BREAKER TRIP RATING*				LIGHTING CONTROL * (ON POWER SUPPLY)		SERVICE POLE	
					CONTROLLER		POWER SUPPLY DISCONNECT					
							MAIN BREAKER					
APPROACH	STATION	OFFSET	DRAWING 902.15	DRAWING JSP AA	AUXILIARY BREAKER	CONT & SIGNAL LAMPS	SIGNALS	LIGHTING	120 VOLT CONTROL CABINET	MAIN BREAKER	CONTRACT FURNISH	UTILITY COMPANY
RTE 36 WB ON RAMP	1+22.3	44.0'RT	Type	1 (3)	15 Amps	40 Amps	100 Amps	40 Amps	1	40 Amps	Cl. Ft.	MACON MUNICIPAL UTILITIES
			Type		15 Amps	Amps	Amps	Amps		Amps	Cl. Ft.	

CONTROLLER ASSEMBLY AND AUXILIARY EQUIPMENT

LOCATION			SYSTEM MASTER (CLOSED LOOP)		ACTUATED		ON-OFF* SWITCH TYPE		COORDINATION INTERFACE *						TIME * CLOCK	NEMA CABINET TYPE *			170 CABINET TYPE *		170 SOFTWARE *	
									12C/7C HARDWIRE (1)		TIME BASE	CLOSED LOOP		FIBER								
APPROACH	STATION	OFFSET	NEMA	170	NEMA	170	I	II	MASTER	LOCAL		NEMA	170			E	P	DOUBLE	332	336S	BITRAN	WAPITI
RTE 63	1120+22.8	54.0'RT			1									1			1					

ALL COMPONENTS SHALL BE COMPATIBLE WITH COMMISSION FURISHED MCCAIN TRAFFIC CONTROLLER

NEMA DETECTOR ASSIGNMENT

		CARD POSITION							
		1	2	3	4	5	6	7	8
CHANNEL	1	21	61	51	71				
	2	22	62						

TOTAL NUMBER OF DETECTOR CARDS(2-CHANNEL) = 4 (2)

DETECTOR SCHEDULE

DETECTOR NUMBER	APPROACH	TYPE				
		PUSH BUTTON	INDUCTION LOOP (2)			VIDEO DETECTION SYSTEM (4)
			STANDARD	DELAY/ EXTEND *	CALL UNIT *	
21	RTE 63					1 EACH
22	RTE 63					
51	RTE 63					
61	RTE 63					
62	RTE 63					
71	RTE 36 WB OFF RAMP					
TOTAL						

* ITEMS FOR WHICH SEPARATE PAYMENT WILL NOT BE MADE.

*** USE D3-1 FOR ONE LINE. USE D3-1B FOR TWO LINE.

(1) MoDOT "D" PLUG SHALL BE WIRED INTO ALL NEMA CONTROLLERS WITH 7C HARDWIRE INTERCONNECT.

(2) PAYMENT IS MADE FOR THE NUMBER OF 2-CHANNEL DETECTOR CARDS AS SHOWN BELOW THE ASSIGNMENT CHART.

(3) SEE SPECIAL SHEETS, PAD MOUNTED 120V/240V POWER SUPPLY & LIGHTING CONTROLLER W/UNINTERRUPTIBLE POWER SUPPLY, REFER TO POWER SUPPLY W/UPS JSP.

(4) VIDEO DETECTION SYSTEM PAID FOR EACH INTERSECTION.

(5) INSTALL NETWORK CONNECTED SIGNAL MONITOR: 1 EA

NEMA LOAD SWITCH ASSIGNMENTS

1	2	3	4	5	6	7	8	9	10	11	12

170 OUTPUT FILE ASSIGNMENTS

FR1							MONITOR
FR2							
FR3							
FR4							

170 INPUT FILE ASSIGNMENTS

	CHANNEL	1	2	3	4	5	6	7	8	9	10	11	12	13	14
"I"	U														
	L														
"J"	U														
	L														

TOTAL NUMBER OF DETECTOR CARDS(2-CHANNEL) = (2)

170 AUXILIARY OUTPUT FILE

FR5							
FR6							

RTE 63 & RTE 36 WB RAMPS

INTERSECTION

D-37C

SIGNAL PLAN
SHEET 4 OF 21

STATE OF MISSOURI
PAUL JOSEPH KRONLAGE
NUMBER E-N 023328
REGISTERED PROFESSIONAL ENGINEER

07/03/2025 6:32:09 AM
Paul J. Kronlage - Civil
MO PE - 023328

DATE PREPARED 7/2/2025

ROUTE	STATE
63	MO
DISTRICT	SHEET NO.
NE	33

COUNTY: MACON

JOB NO.: JNE0137

CONTRACT ID.

PROJECT NO.

BRIDGE NO.

DESCRIPTION	DATE

MISSOURI HIGHWAYS AND TRANSPORTATION COMMISSION
105 WEST CAPITOL
JEFFERSON CITY, MO 65102
1-888-ASK-MODOT (1-888-275-6636)

EFK•Moen
Civil Engineering Design
13523 Barrett Parkway Dr
Suite 250
St. Louis, MO 63021
Phone 314-394-3100
Fax 314-394-3199
Missouri Certificate of Authority: 001578

EFFECTIVE 12-01-17

WIRING DIAGRAM

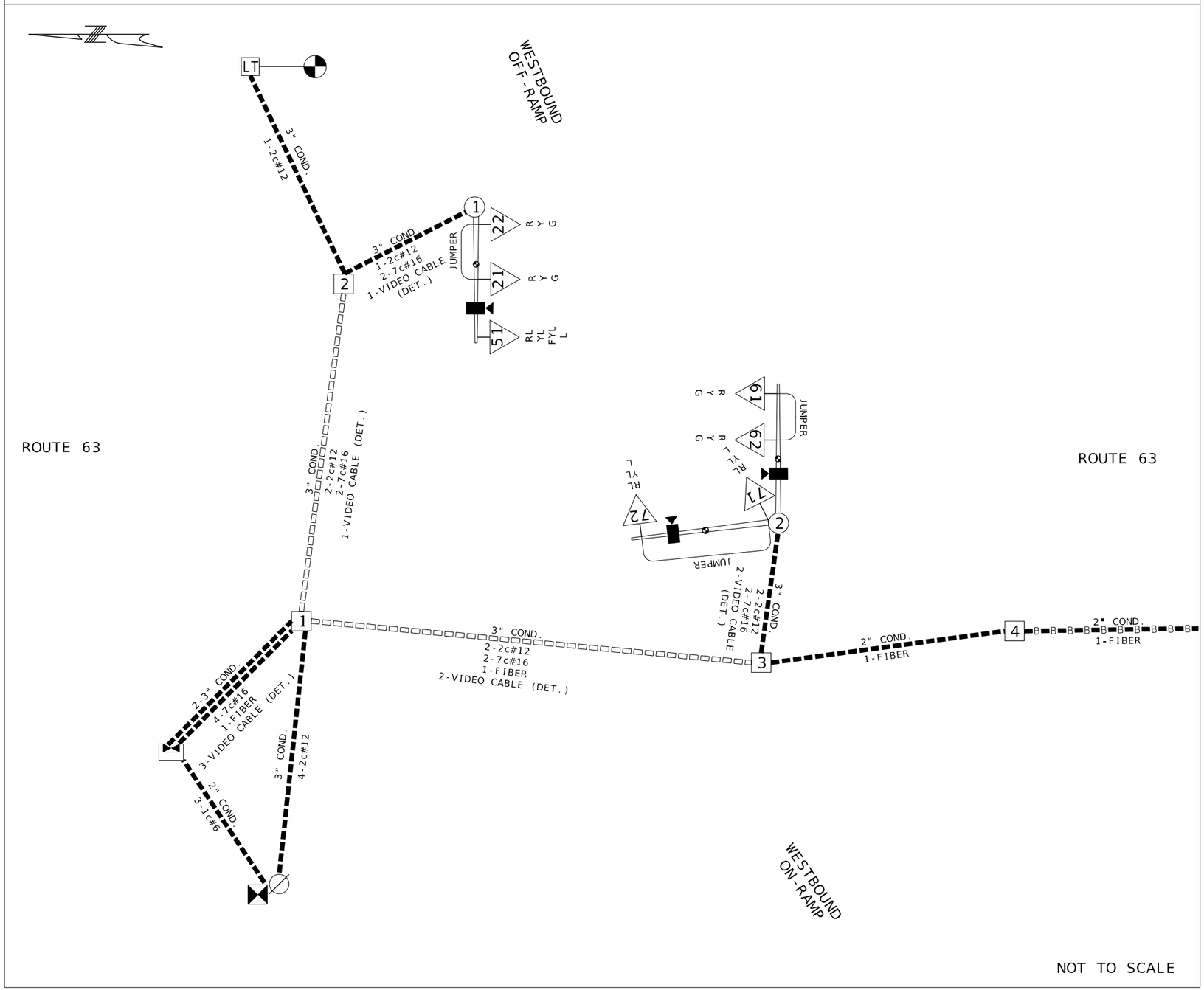

LEGEND

3"	CONDUIT CONTAINING CABLE WITH SIZE
	CABLE
X-Xc	MULTI-CONDUCTOR CABLE #16 AWG (UNLESS OTHERWISE INDICATED)
LIC	#14 AWG DETECTOR LEAD-IN CABLE (2C TWISTED SHIELDED)
X	PULL BOX WITH NUMBER
X	POST WITH NUMBER
X	POST WITH MAST ARM
X	POST WITH MAST ARM AND LUMINAIRE
X	DETECTOR WITH NUMBER
X	SIGNAL HEAD WITH NUMBER
	SIGNAL CONTROLLER
	POWER SUPPLY ASSEMBLY
	LIGHTING CONTROLLER
	POWER SOURCE
	VIDEO DETECTION
	CCTV CAMERA

STATE OF MISSOURI
PAUL JOSEPH KRONLAGE
NUMBER
EN023328
REGISTERED PROFESSIONAL ENGINEER

05/29/2025 1:25:27 PM
Paul J. Kronlage - Civil
MO PE - 023328

DATE PREPARED	
5/29/2025	
ROUTE 63	STATE MO
DISTRICT NE	SHEET NO. 34
COUNTY MACON	
JOB NO. JNE0137	
CONTRACT ID.	
PROJECT NO.	
BRIDGE NO.	

DATE	DESCRIPTION

MISSOURI HIGHWAYS AND TRANSPORTATION COMMISSION
105 WEST CAPITOL
JEFFERSON CITY, MO 65102
1-888-ASK-MODOT (1-888-275-6636)

EFK•Moen
Civil Engineering Design
13523 Barrett Parkway Dr
Suite 250
St. Louis, MO 63021
Phone 314-394-3100
Fax 314-394-3199
Missouri Certificate of Authority: 001578

RTE 63 & RTE 36 WB RAMPS

INTERSECTION

D-37D

SIGNAL PLAN
SHEET 5 OF 21

EFFECTIVE 12/01/2017

SIGNAL FACE LOCATION

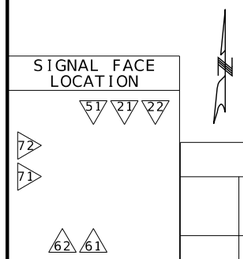

TRAFFIC PHASING AND COLOR SEQUENCE - ACTUATED CONTROLLERS

	PHASE 1	PHASE 2	PHASE 3	PHASE 4	PHASE 5	PHASE 6	PHASE 7	PHASE 8	PED Ø OVERLAP	PED Ø OVERLAP	PED Ø OVERLAP	PED Ø OVERLAP	OLC	FACE NUMBERS
FACE NUMBERS		21 22			51	61 62	71 72						51	FACE NUMBERS
SIGNAL INDICATIONS R		R R				R	RL						RL	R
SIGNAL INDICATIONS Y		Y Y				Y	YL						YL	Y
SIGNAL INDICATIONS FYL													FYL	FYL
SIGNAL INDICATIONS G		G G			L	G	L							G
DETECTOR ASSIGNMENTS														DETECTOR ASSIGNMENTS
DETECTOR ASSIGNMENTS (PEDS. ONLY)														
OVERLAP PARENT PHASES													6	

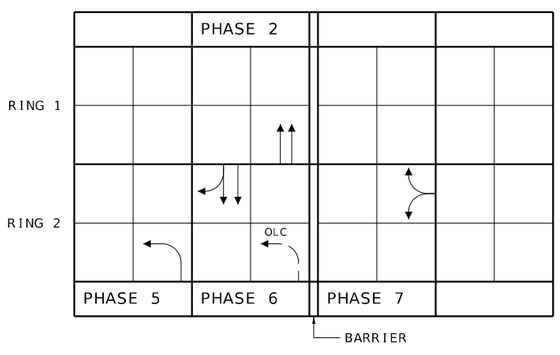

RING STRUCTURE

IF CALLED, ALL NON-CONFLICTING PHASES SHALL COMBINE AND TIME CONCURRENTLY. TIME TO BE DETERMINED BY THE ENGINEER AT SIGNAL TURN ON AND SET IN THE CONTROLLER BY THE CONTRACTOR.

LEGEND

- ACTUATED VEHICULAR MOVEMENT
- PARTIALLY RESTRICTED ACTUATED VEHICULAR MOVEMENT
- NON-ACTUATED VEHICULAR MOVEMENT
- PARTIALLY RESTRICTED NON-ACTUATED VEHICULAR MOVEMENT
- ACTUATED PEDESTRIAN MOVEMENT
- NON-ACTUATED PEDESTRIAN MOVEMENT
- VEHICLE STOPPED
- FDW — FLASHING DON'T WALK
- W — WALK
- DW — DON'T WALK
- R/W — RIGHT OF WAY INTERVAL
- YRt — YELLOW RIGHT ARROW
- RT. — GREEN RIGHT ARROW
- LY -YL — YELLOW LEFT ARROW
- L — GREEN LEFT ARROW
- S — GREEN STRAIGHT AHEAD ARROW
- G — CIRCULAR GREEN
- Y — CIRCULAR YELLOW
- R — CIRCULAR RED
- RL — RED LEFT ARROW
- Ø — TRAFFIC PHASE
- AO — ALL OTHERS
- FR — FLASHING RED
- FY — FLASHING CIRCULAR YELLOW
- FYL — FLASHING YELLOW LEFT ARROW

FLASHING OPERATION	
ALL	FR
	FY

CONTROLLER TYPE	

TRAFFIC SIGNAL CONTROL OPERATION

INTERSECTION OF
RTE 63
WITH
RTE 36 WB RAMPS

SIGNAL PLAN
SHEET 6 OF 21

D-38A

STATE OF MISSOURI
PAUL JOSEPH KRONLAGE
NUMBER
EN 023328
REGISTERED PROFESSIONAL ENGINEER

05/29/2025 1:25:48 PM
Paul J. Kronlage - Civil
MO PE - 023328

DATE PREPARED	
5/29/2025	
ROUTE 63	STATE MO
DISTRICT NE	SHEET NO. 35
COUNTY MACON	
JOB NO. JNE0137	
CONTRACT ID.	
PROJECT NO.	
BRIDGE NO.	

DESCRIPTION	DATE

MISSOURI HIGHWAYS AND TRANSPORTATION COMMISSION
105 WEST CAPITOL
JEFFERSON CITY, MO 65102
1-888-ASK-MODOT (1-888-275-6636)

EFK•Moen
Civil Engineering Design
13523 Barrett Parkway Dr
Suite 250
St. Louis, MO 63021
Phone 314-394-3100
Fax 314-394-3199
Missouri Certificate of Authority: 001578

DISCLAIMER
THE PROFESSIONAL WHOSE SIGNATURE AND PERSONAL SEAL APPEAR HEREON ASSUMES RESPONSIBILITY ONLY FOR WHAT APPEARS ON THIS PAGE, AND DISCLAIMS (PURSUANT TO SECTION 327.411 RSMO) SPECIFICATION, ESTIMATES, REPORTS, OR OTHER DOCUMENTS OR INSTRUMENTS NOT SEALED BY THE UNDERSIGNED PROFESSIONAL RELATING TO OR INTENDED TO BE USED FOR ANY PART OR PARTS OF THE PROJECT TO WHICH THIS PAGE REFERS.

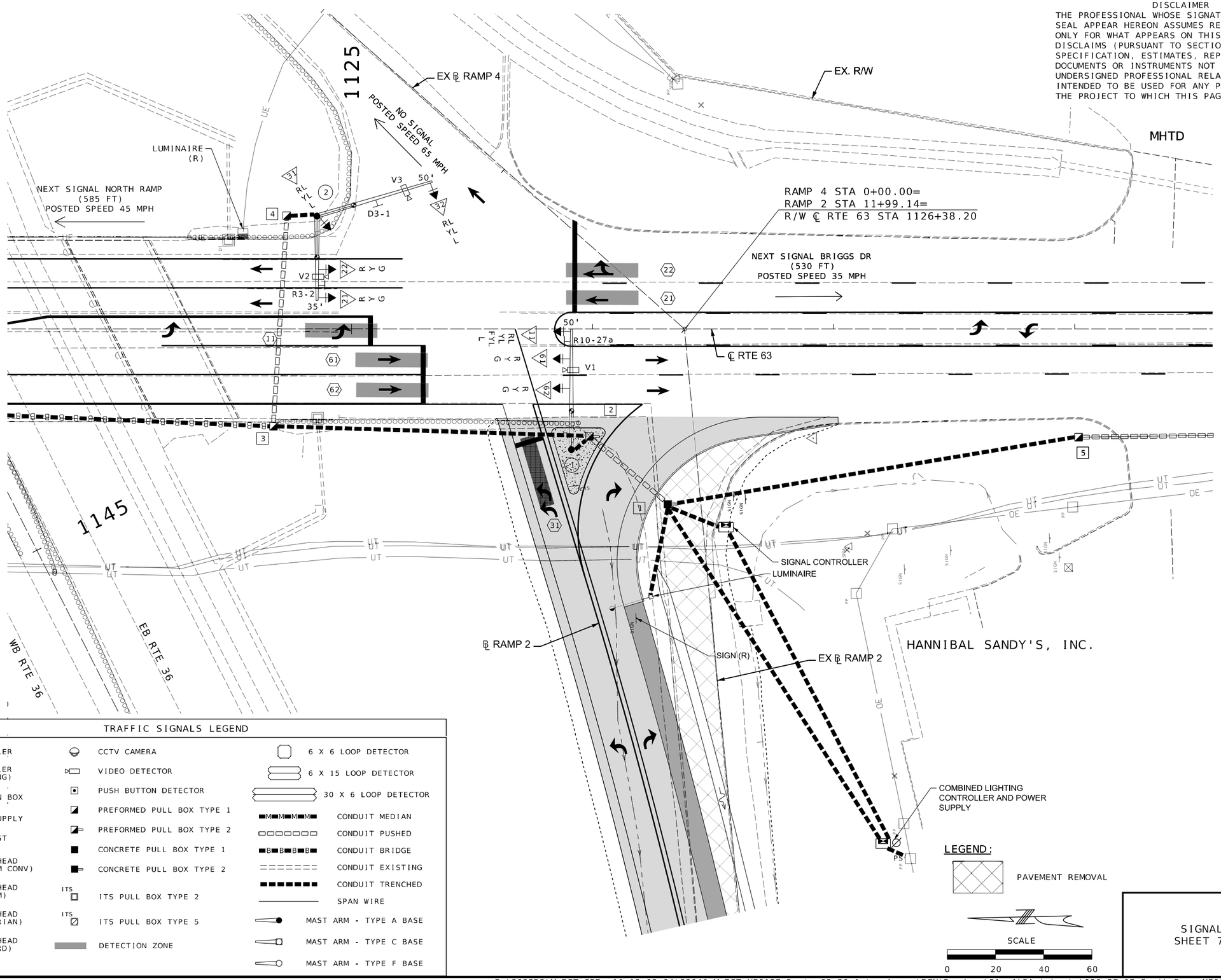

TRAFFIC SIGNALS LEGEND

CONTROLLER	CCTV CAMERA	6 X 6 LOOP DETECTOR
CONTROLLER (EXISTING)	VIDEO DETECTOR	6 X 15 LOOP DETECTOR
JUNCTION BOX	PUSH BUTTON DETECTOR	30 X 6 LOOP DETECTOR
POWER SUPPLY	PREFORMED PULL BOX TYPE 1	CONDUIT MEDIAN
WOOD POST	PREFORMED PULL BOX TYPE 2	CONDUIT PUSHED
SIGNAL HEAD (OPT LIM CONV)	CONCRETE PULL BOX TYPE 1	CONDUIT BRIDGE
SIGNAL HEAD (OPT LIM)	CONCRETE PULL BOX TYPE 2	CONDUIT EXISTING
SIGNAL HEAD (PEDESTRIAN)	ITS PULL BOX TYPE 2	CONDUIT TRENCHED
SIGNAL HEAD (STANDARD)	ITS PULL BOX TYPE 5	SPAN WIRE
	DETECTION ZONE	MAST ARM - TYPE A BASE
		MAST ARM - TYPE C BASE
		MAST ARM - TYPE F BASE

SIGNAL PLAN
SHEET 7 OF 21

STATE OF MISSOURI
PAUL JOSEPH KRONLAGE
NUMBER EN 023328
REGISTERED PROFESSIONAL ENGINEER

05/29/2025 1:26:18 PM
Paul J. Kronlage - Civil
MO PE - 023328

DATE PREPARED	
5/29/2025	
ROUTE 63	STATE MO
DISTRICT NE	SHEET NO. 36
COUNTY MACON	
JOB NO. JNE0137	
CONTRACT ID.	
PROJECT NO.	
BRIDGE NO.	

DATE	DESCRIPTION

MISSOURI HIGHWAYS AND TRANSPORTATION COMMISSION
105 WEST CAPITOL
JEFFERSON CITY, MO 65102
1-888-ASK-MODOT (1-888-275-6636)

EFK•Moen
Civil Engineering Design
13523 Barrett Parkway Dr
Suite 250
St. Louis, MO 63021
Phone 314-394-3100
Fax 314-394-3199
Missouri Certificate of Authority: 001578

EFFECTIVE: 07/01/2018

POST NUMBER	PULL BOX NUMBER	LOCATION			BASE														PULL BOX										
		APPROACH	STATION	OFFSET	A						F						C	CONCRETE** (CU. YDS.)	PREFORMED				CONCRETE			DRAIN TYPE*			
					9	9.5	10	10.5	11	12	9	9.5	10	10.5	11	12			CLASS 1	CLASS 2	CLASS 3	CLASS 5	STANDARD	DOUBLE, TYPE A	DOUBLE, TYPE B	I	II		
																											A	B	C
1		RTE 63	1125+91.3	50.1' RT				1										3.27											
2		RTE 63	1124+85.7	46.9' LT						1								3.67											
	1	RTE 63	1126+31.1	72.7' RT														0.70						1		1			
	2	RTE 63	1125+98.7	44.6' RT														0.35		1						1			
	3	RTE 63	1124+67.6	40.4' RT														0.35	1							1			
	4	RTE 63	1124+73.0	47.0' LT														0.35	1							1			
	5	RTE 63	1128+01.5	44.9' RT														0.35	1							1			
		RTE 63	CONTROLLER (SEE D37-C)															1.95											
SUBTOTAL																		10.99	3	1				1					
TOTAL																		11.0	3	1				1					

POST NUMBER	PULL BOX NUMBER	POST																																										
		TOP MOUNT POST		TYPE C & CL												TYPE B & BL																							LUMINAIRE BRACKET ARM*					
		8 FT.	15 FT.	ARM LENGTH				SIGNAL SPACING				SIGN SPACING				ARM LENGTH						LEFT ARM E								RIGHT ARM K								INCLUDED ANGLE	4 FT.	6 FT.	8 FT.	10 FT.	12 FT.	15 FT.
				A	A	A	A	B	C	D	D'	B	C	D	D'	E	K	E	K	E	K	SIGNAL SPACING				SIGN SPACING				SIGNAL SPACING				SIGN SPACING										
																						F	G	H	H'	F	G	H	H'	L	M	N	N'	L	M	N	N'							
1				50				26	12	11		45																																1
2																35	50					22	12			29				0	49			25				108						2
	1																																											
	2																																											
	3																																											
	4																																											
	5																																											
SUBTOTAL				1												1																												
TOTAL				1												1																												

SIGNAL HEADS

SPAN NUMBER	POST NUMBER	FACE NUMBER	LED A TOP MOUNTED LUMINAIRE	INDICATIONS *																					VISORS *		LOUVERS *					
				12" LENS CONVENTIONAL											12" LENS OPTICAL LIMITING										12" LENS	PED.						
				R	RL	Y	YL	FYL	FYR	G	S	L	Rt	✋🚶	R	Y	YL	YRt	YL	YRt	G	S	L	Rt			A	B	C	D	E	F
	1	11	1		1		1	1				1													4							
	1	61		1		1				1															3							
	1	62		1		1				1															3							
	2	21	2	1		1				1															3							
	2	22		1		1				1															3							
	2	31			1		1					1													3							
	2	32			1		1					1													3							
SUBTOTAL			3																													
TOTAL			3																													

POST NUMBER	FACE NUMBER	BACKPLATE*					RETROREFLECTIVE BACKPLATE*					BRACKET*			ONE-FACE																TWO-FACE														
		LENSES					LENSES					TYPE			SECTION																SECTIONS														
		1	2	3	4	5	1	2	3	4	5	I	II	III	1-				3-				4-				5-				11-			33-				34-		35-		44-		45-	
															T	S	C	B	T	S	C	B	T	S	C	B	T	S	C	B	T	S	B	T	S	C	B	S	B	S	B	S	B	S	B
1	11				1							1														1																			
1	61			1								1										1																							
1	62			1								1										1																							
2	21			1								1										1																							
2	22			1								1										1																							
2	31			1								1								1																									
2	32			1								1										1																							

	1-				3-				4-				5-				11-			33-				34-		35-		44-		45-	
	T	S	C	B	T	S	C	B	T	S	C	B	T	S	C	B	T	S	B	T	S	C	B	S	B	S	B	S	B	S	B
SUBTOTAL OPTICALLY LIMITED																															
SUBTOTAL CONVENTIONAL						1		5				1																			
SUBTOTAL COMBINATION OL & CONV																															
TOTAL OPTICALLY LIMITED																															
TOTAL CONVENTIONAL						1		5				1																			
TOTAL COMBINATION OL & CONV																															

SIGNAL SIGNS

QUANTITY	MUTCD SIGN NUMBER	SIZE	AREA	SIGN TOTAL AREA ITEM NO. 90208.33	SIGNAL SIGN MOUNTING HARDWARE ITEM NO. 90208.34
		INCHES	SQ.FT.	SQ.FT.	EA.
1	R3-2	24 X 24	4	4	1
1	R10-27a	30 X 36	7.5	7.5	1
1	D3-1 (MISSOURI ST)	90 X 18	11.3	11.3	1
			SUBTOTAL	22.8	3
			TOTAL	23	3

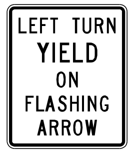

R10-27a

R3-2

D3-1
POST 2

REMARKS

ALL LENGTHS AND SPACINGS ARE IN FEET UNLESS OTHERWISE INDICATED.

* ITEMS FOR WHICH SEPARATE PAYMENT WILL NOT BE MADE.

** SEE STANDARD PLANS 902.10 AND 902.30 FOR CONCRETE REQUIREMENTS ON BASES.

*** USE D3-16 FOR ONE LINE. USE D3-18 FOR TWO LINE.

SIGNAL STRUCTURES WHICH WILL EXCEED THE DIMENSION LIMITS SHOWN ON STANDARD PLAN SHEETS IN SECTION 902 AND ANY OTHER INSTALLATION WHERE THE DETAILS OF CONSTRUCTION ARE NOT FURNISHED IN THE CONTRACT PLANS, SHALL BE DESIGNED BY A PROFESSIONAL ENGINEER IN ACCORDANCE WITH THE 2001 AASHTO STANDARD SPECIFICATIONS FOR STRUCTURAL SUPPORTS FOR HIGHWAY SIGNS, LUMINAIRES AND TRAFFIC SIGNALS, 4TH EDITION, AND LATEST INTERIMS. THE STRUCTURE SHALL BE DESIGNED AS IMPORTANCE CATEGORY I FOR FATIGUE WITH A 50-YEAR DESIGN LIFE. THE CONTRACTOR SHALL SUBMIT A SET OF SHOP DETAIL DRAWINGS INCLUDING WELD PROCEDURE SPECIFICATIONS AND DESIGN COMPUTATIONS FOR MODOT RECORDS AND REFERENCE. THE SUBMITTED DRAWINGS AND CALCULATIONS SHALL BE SIGNED AND SEALED IN ACCORDANCE WITH THE LAWS RELATING TO ARCHITECTS AND PROFESSIONAL ENGINEERS (CHAPTER 327, RSMO.), AND SHALL INCLUDE A TITLE BLOCK OR SUMMARY SHEET WHICH LISTS AND CERTIFIES THAT THE PRODUCT MEETS ALL OF THE SPECIFIED DESIGN CRITERIA.

LEGEND

T - TOP MOUNT
S - SIDE MOUNT
C - SPANWIRE MOUNT
B - MAST ARM MOUNT

RTE 63 & RTE 36 EB RAMPS
INTERSECTION

D-37A

SIGNAL PLAN
SHEET 8 OF 21

PAUL JOSEPH KRONLAGE
NUMBER
EN 023328

05/29/2025 1:26:43 PM
Paul J. Kronlage - Civil
MO PE - 023328

DATE PREPARED	
5/29/2025	
ROUTE 63	STATE MO
DISTRICT NE	SHEET NO. 37
COUNTY MACON	
JOB NO. JNE0137	
CONTRACT ID.	
PROJECT NO.	
BRIDGE NO.	

DATE	DESCRIPTION

MISSOURI HIGHWAYS AND TRANSPORTATION
COMMISSION

105 WEST CAPITOL
JEFFERSON CITY, MO 65102
1-888-ASK-MODOT (1-888-275-6636)

EFK•Moen
Civil Engineering Design
13523 Barrett Parkway Dr
Suite 250
St. Louis, MO 63021
Phone 314-394-3100
Fax 314-394-3199
Missouri Certificate of Authority: 001578

EFFECTIVE: 10-01-2015

CONDUIT (WITH #14 TRACER WIRE)

FROM	TO	CENTER TO CENTER DISTANCE	LOOP DET. 1"	TRENCH 2"	TRENCH 3"	TRENCH 4"		PUSHED 2"	PUSHED 3"	PUSHED 4"	MEDIAN 2"	MEDIAN 3"	MEDIAN 4"	ON STRUCTURE 2"	ON STRUCTURE 3"		REMARKS
⋈/∅	⋈	147		155													
⋈/∅	1	167			170												
⋈	1	26			58												2-3" TRENCHED CONDUIT
1	2	43							41								
2	(1)	9			10												
2	3	131			129												
3	4	88							86								
4	(2)	13			14												
1	5	175		173													
5	6*	91							89								* PULLBOX ON SHEET 6
1	LT	39			42												
SUBTOTALS				328	423				216								
TOTALS				328	423				216								

CABLE

FROM	TO	CENTER TO CENTER DISTANCE	POWER 1c #2	POWER 1c #6	CONTROL 2c #16	CONTROL 5c #16	CONTROL 7c #16	CCTV CAMERA CABLE	VIDEO DETECTION VIDEO CABLE (DET.)	LUMINAIRE CONTROL 2c #12	LUMINAIRE POLE & BRACKET 1c #10	DETECTOR 1c #14 IN DUCT	DETECTOR 2c #14 LEAD-IN CABLE	24 FIBER 18 SINGLE-MODE	24 FIBER 6 MULTI-MODE	REMARKS
⋈/∅	⋈	147		489												3- 163' CABLES
⋈	11	79					169									
⋈	61	79					170									INCLUDES JUMPER CABLES
⋈	21	300					399									INCLUDES JUMPER CABLES
⋈	31	300					402									INCLUDES JUMPER CABLES
⋈	(1)	219								237	90					
⋈	(2)	441								946	180					2 LUMINAIRES
⋈	⋈*	572												758**		* CONTROLLER ON SHEET 6
⋈	LT	208								227	90					
⋈	V1	62							141							
⋈	V2	285							367							
⋈	V3	285							378							
SUBTOTALS				489			1140		886	845	360			758		
TOTALS				520			1200		***	890	380			800		INCLUDES 5% FOR SNAKING

**WIRE FOR INTERCONNECT
***WIRE INCLUDED IN COST OF VIDEO DETECTION SYSTEM

STATE OF MISSOURI
PAUL JOSEPH KRONLAGE
NUMBER EN023328
REGISTERED PROFESSIONAL ENGINEER

05/29/2025 2:01:40 PM
Paul J. Kronlage - Civil
MO PE - 023328

DATE PREPARED: 5/29/2025
ROUTE: 63 | STATE: MO
DISTRICT: NE | SHEET NO.: 38
COUNTY: MACON
JOB NO.: JNE0137
CONTRACT ID.
PROJECT NO.
BRIDGE NO.

DESCRIPTION | DATE

MISSOURI HIGHWAYS AND TRANSPORTATION COMMISSION
105 WEST CAPITOL
JEFFERSON CITY, MO 65102
1-888-ASK-MODOT (1-888-275-6636)

EFK•Moen
Civil Engineering Design
13523 Barrett Parkway Dr
Suite 250
St. Louis, MO 63021
Phone 314-394-3100
Fax 314-394-3199
Missouri Certificate of Authority: 001578

SIGNAL PLAN
SHEET 9 OF 21

INTERSECTION RTE 63 & RTE 36 EB RAMPS

D-37B

O:\2022R3\MoDOT_ORD_v10.12.02.04\23046 MoDOT NE0137 Route 63-36 Interchange\DGN\Roadway\Final\Plotsheets\038_SG_09_South_Ramp_D37B_NE0137_i1.dgn 1:43:11 PM 5/29/2025

EFFECTIVE 04-01-2018

POWER SUPPLY

LOCATION			POWER SUPPLY ASSEMBLY		CIRCUIT BREAKER TRIP RATING*				LIGHTING CONTROL * (ON POWER SUPPLY)		SERVICE POLE	
					CONTROLLER		POWER SUPPLY DISCONNECT					
							MAIN BREAKER					
APPROACH	STATION	OFFSET	DRAWING 902.15	DRAWING JSP AA	AUXILIARY BREAKER	CONT & SIGNAL LAMPS	SIGNALS	LIGHTING	120 VOLT CONTROL CABINET	MAIN BREAKER	CONTRACT FURNISH	UTILITY COMPANY
RTE 36 EB OFF RAMP	9+77.7	64.3' RT	Type	1 (3)	15 Amps	40 Amps	100 Amps	40 Amps	1	40 Amps	Cl. Ft.	MACON MUNICIPAL UTILITIES
			Type		15 Amps	Amps	Amps	Amps		Amps	Cl. Ft.	

CONTROLLER ASSEMBLY AND AUXILIARY EQUIPMENT

LOCATION			SYSTEM MASTER (CLOSED LOOP)		ACTUATED		ON-OFF* SWITCH TYPE		COORDINATION INTERFACE *						TIME * CLOCK	NEMA CABINET TYPE *			170 CABINET TYPE *		170 SOFTWARE *	
									12C/7C HARDWIRE (1)		TIME BASE	CLOSED LOOP		FIBER								
APPROACH	STATION	OFFSET	NEMA	170	NEMA	170	I	II	MASTER	LOCAL		NEMA	170			E	P	DOUBLE	332	336S	BITRAN	WAPITI
RTE 63	1126+38.9	79.4'RT	1		1									1			1					

ALL COMPONENTS SHALL BE COMPATIBLE WITH COMMISSION FURISHED MCCAIN TRAFFIC CONTROLLER

NEMA DETECTOR ASSIGNMENT

		CARD POSITION							
		1	2	3	4	5	6	7	8
CHANNEL	1	21	61	11	31				
	2	22	62						

TOTAL NUMBER OF DETECTOR CARDS(2-CHANNEL) = 4 (2)

DETECTOR SCHEDULE

DETECTOR NUMBER	APPROACH	TYPE: PUSH BUTTON	INDUCTION LOOP (2): STANDARD	INDUCTION LOOP (2): DELAY/ EXTEND *	INDUCTION LOOP (2): CALL UNIT *	VIDEO DETECTION SYSTEM (4)
11	RTE 63					1 EACH
21	RTE 63					
22	RTE 63					
31	RTE 36 EB OFF RAMP					
61	RTE 63					
62	RTE 63					
TOTAL						

* ITEMS FOR WHICH SEPARATE PAYMENT WILL NOT BE MADE.

*** USE D3-1 FOR ONE LINE. USE D3-1B FOR TWO LINE.

(1) MoDOT "D" PLUG SHALL BE WIRED INTO ALL NEMA CONTROLLERS WITH 7C HARDWIRE INTERCONNECT.

(2) PAYMENT IS MADE FOR THE NUMBER OF 2-CHANNEL DETECTOR CARDS AS SHOWN BELOW THE ASSIGNMENT CHART.

(3) SEE SPECIAL SHEETS, PAD MOUNTED 120V/240V POWER SUPPLY & LIGHTING CONTROLLER W/UNINTERRUPTIBLE POWER SUPPLY, REFER TO POWER SUPPLY W/UPS JSP.

(4) VIDEO DETECTION SYSTEM PAID FOR EACH INTERSECTION.

(5) INSTALL NETWORK CONNECTED SIGNAL MONITOR: 1 EA

NEMA LOAD SWITCH ASSIGNMENTS

1	2	3	4	5	6	7	8	9	10	11	12

170 OUTPUT FILE ASSIGNMENTS

FR1							MONITOR
FR2							
FR3							
FR4							

170 INPUT FILE ASSIGNMENTS

	CHANNEL	1	2	3	4	5	6	7	8	9	10	11	12	13	14
"I"	U														
	L														
"J"	U														
	L														

TOTAL NUMBER OF DETECTOR CARDS(2-CHANNEL) = (2)

170 AUXILIARY OUTPUT FILE

FR5							
FR6							

RTE 63 & RTE 36 EB RAMPS

INTERSECTION

D-37C

SIGNAL PLAN
SHEET 10 OF 21

STATE OF MISSOURI
PAUL JOSEPH KRONLAGE
NUMBER EN 023328
REGISTERED PROFESSIONAL ENGINEER

07/01/2025 2:04:13 PM
Paul J. Kronlage - Civil
MO PE - 023328

DATE PREPARED: 7/1/2025

ROUTE	STATE
63	MO

DISTRICT	SHEET NO.
NE	39

COUNTY: MACON

JOB NO.: JNE0137

CONTRACT ID.

PROJECT NO.

BRIDGE NO.

DESCRIPTION	DATE

MISSOURI HIGHWAYS AND TRANSPORTATION COMMISSION
105 WEST CAPITOL
JEFFERSON CITY, MO 65102
1-888-ASK-MODOT (1-888-275-6636)

EFK•Moen
Civil Engineering Design
13523 Barrett Parkway Dr
Suite 250
St. Louis, MO 63021
Phone 314-394-3100
Fax 314-394-3199
Missouri Certificate of Authority: 001578

EFFECTIVE 12-01-17

WIRING DIAGRAM

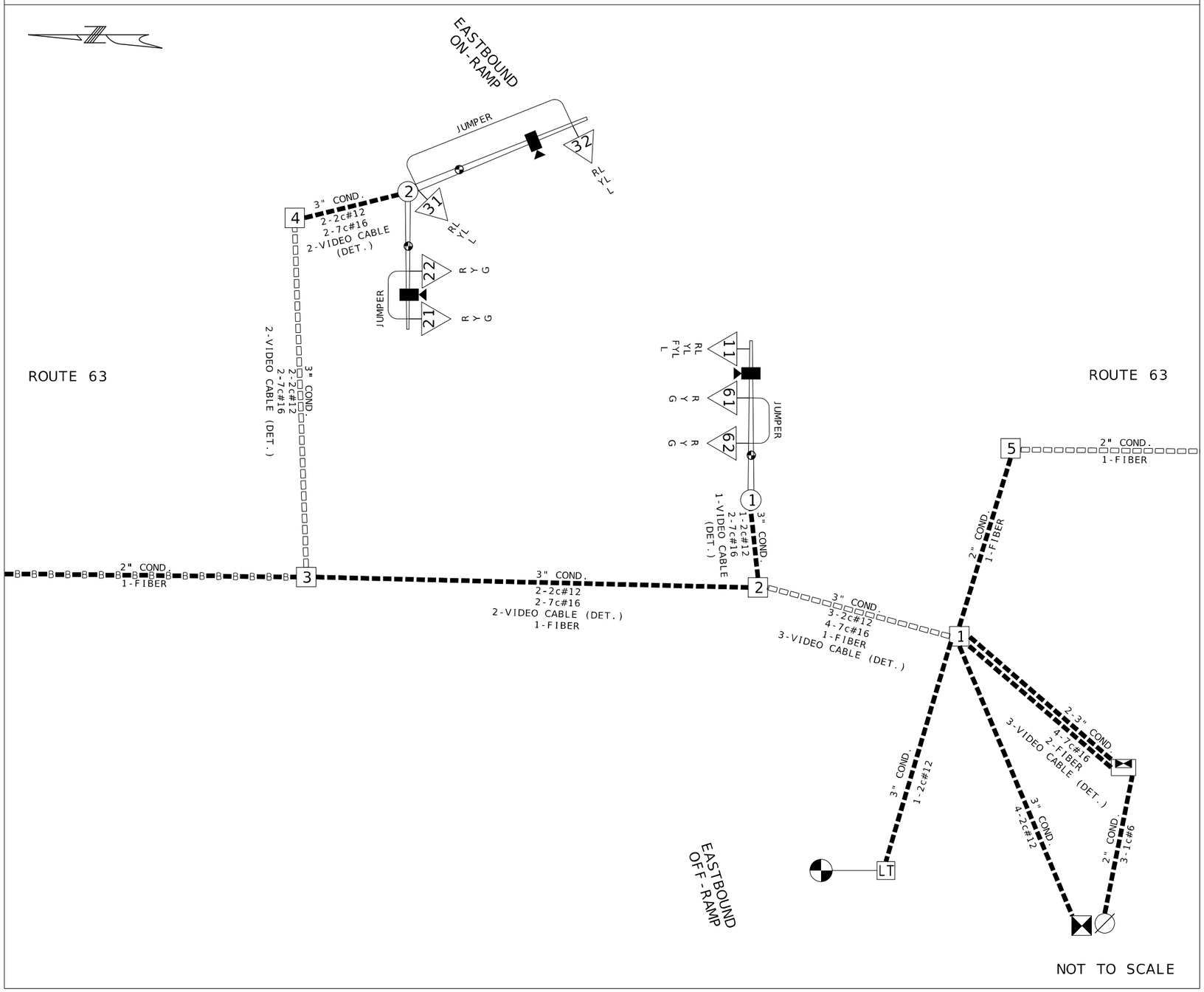

NOT TO SCALE

LEGEND

3"	CONDUIT CONTAINING CABLE WITH SIZE
	CABLE
X-Xc	MULTI-CONDUCTOR CABLE #16 AWG (UNLESS OTHERWISE INDICATED)
LIC	#14 AWG DETECTOR LEAD-IN CABLE (2C TWISTED SHIELDED)
X	PULL BOX WITH NUMBER
X	POST WITH NUMBER
X	POST WITH MAST ARM
X	POST WITH MAST ARM AND LUMINAIRE
X	DETECTOR WITH NUMBER
X	SIGNAL HEAD WITH NUMBER
	SIGNAL CONTROLLER
	POWER SUPPLY ASSEMBLY
	LIGHTING CONTROLLER
	POWER SOURCE
	VIDEO DETECTION
	CCTV CAMERA

STATE OF MISSOURI
PAUL JOSEPH KRONLAGE
NUMBER
EN 023328
REGISTERED PROFESSIONAL ENGINEER

05/29/2025 1:27:52 PM
Paul J. Kronlage - Civil
MO PE - 023328

DATE PREPARED	5/29/2025
ROUTE 63	STATE MO
DISTRICT NE	SHEET NO. 40
COUNTY	MACON
JOB NO.	JNE0137
CONTRACT ID.	
PROJECT NO.	
BRIDGE NO.	

DATE	DESCRIPTION

MISSOURI HIGHWAYS AND TRANSPORTATION COMMISSION
105 WEST CAPITOL
JEFFERSON CITY, MO 65102
1-888-ASK-MODOT (1-888-275-6636)

EFK•Moen
Civil Engineering Design
13523 Barrett Parkway Dr
Suite 250
St. Louis, MO 63021
Phone 314-394-3100
Fax 314-394-3199
Missouri Certificate of Authority: 001578

RTE 63 & RTE 36 EB RAMPS

INTERSECTION

SIGNAL PLAN
SHEET 11 OF 21

D-37D

EFFECTIVE 12/01/2017

SIGNAL FACE LOCATION

21 22 31 32 62 61 11

TRAFFIC PHASING AND COLOR SEQUENCE - ACTUATED CONTROLLERS

	PHASE 1	PHASE 2	PHASE 3	PHASE 4	PHASE 5	PHASE 6	PHASE 7	PHASE 8	PED Ø OVERLAP	PED Ø OVERLAP	PED Ø OVERLAP	PED Ø OVERLAP	OLA		
FACE NUMBERS	11	21	31			61	62						11		FACE NUMBERS
		22	32												
SIGNAL INDICATIONS R		R	RL			R	R						RL		R
SIGNAL INDICATIONS Y		Y	YL			Y	Y						YL		Y
SIGNAL INDICATIONS FYL													FYL		FYL
SIGNAL INDICATIONS G	L	G	L			G	G								G
DETECTOR ASSIGNMENTS															DETECTOR ASSIGNMENTS
DETECTOR ASSIGNMENTS (PEDS. ONLY)															
OVERLAP PARENT PHASES													2		

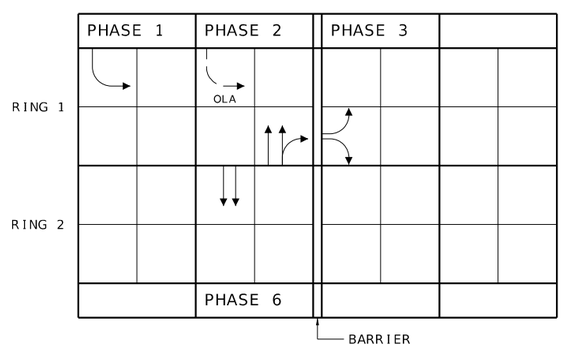

RING STRUCTURE

IF CALLED, ALL NON-CONFLICTING PHASES SHALL COMBINE AND TIME CONCURRENTLY. TIME TO BE DETERMINED BY THE ENGINEER AT SIGNAL TURN ON AND SET IN THE CONTROLLER BY THE CONTRACTOR.

LEGEND

- ACTUATED VEHICULAR MOVEMENT
- PARTIALLY RESTRICTED ACTUATED VEHICULAR MOVEMENT
- NON-ACTUATED VEHICULAR MOVEMENT
- PARTIALLY RESTRICTED NON-ACTUATED VEHICULAR MOVEMENT
- ACTUATED PEDESTRIAN MOVEMENT
- NON-ACTUATED PEDESTRIAN MOVEMENT
- VEHICLE STOPPED
- FDW — FLASHING DON'T WALK
- W — WALK
- DW — DON'T WALK
- R/W — RIGHT OF WAY INTERVAL
- YRt — YELLOW RIGHT ARROW
- RT. — GREEN RIGHT ARROW
- LY -YL — YELLOW LEFT ARROW
- L — GREEN LEFT ARROW
- S — GREEN STRAIGHT AHEAD ARROW
- G — CIRCULAR GREEN
- Y — CIRCULAR YELLOW
- R — CIRCULAR RED
- RL — RED LEFT ARROW
- Ø — TRAFFIC PHASE
- AO — ALL OTHERS
- FR — FLASHING RED
- FY — FLASHING CIRCULAR YELLOW
- FYL — FLASHING YELLOW LEFT ARROW

FLASHING OPERATION	
ALL	FR
	FY

CONTROLLER TYPE	

TRAFFIC SIGNAL CONTROL OPERATION

INTERSECTION OF
RTE 63
WITH
RTE 36 EB RAMPS

SIGNAL PLAN
SHEET 12 OF 21

D-38A

STATE OF MISSOURI
PAUL JOSEPH KRONLAGE
NUMBER
EN 023328
REGISTERED PROFESSIONAL ENGINEER

05/29/2025 1:28:10 PM
Paul J. Kronlage - Civil
MO PE - 023328

DATE PREPARED 5/29/2025

ROUTE	STATE
63	MO
DISTRICT	SHEET NO.
NE	41

COUNTY: MACON
JOB NO.: JNE0137
CONTRACT ID.
PROJECT NO.
BRIDGE NO.

DESCRIPTION | DATE

MISSOURI HIGHWAYS AND TRANSPORTATION COMMISSION
105 WEST CAPITOL
JEFFERSON CITY, MO 65102
1-888-ASK-MODOT (1-888-275-6636)

EFK•Moen
Civil Engineering Design
13523 Barrett Parkway Dr
Suite 250
St. Louis, MO 63021
Phone 314-394-3100
Fax 314-394-3199
Missouri Certificate of Authority: 001578

DISCLAIMER
THE PROFESSIONAL WHOSE SIGNATURE AND PERSONAL SEAL APPEAR HEREON ASSUMES RESPONSIBILITY ONLY FOR WHAT APPEARS ON THIS PAGE, AND DISCLAIMS (PURSUANT TO SECTION 327.411 RSMO) SPECIFICATION, ESTIMATES, REPORTS, OR OTHER DOCUMENTS OR INSTRUMENTS NOT SEALED BY THE UNDERSIGNED PROFESSIONAL RELATING TO OR INTENDED TO BE USED FOR ANY PART OR PARTS OF THE PROJECT TO WHICH THIS PAGE REFERS.

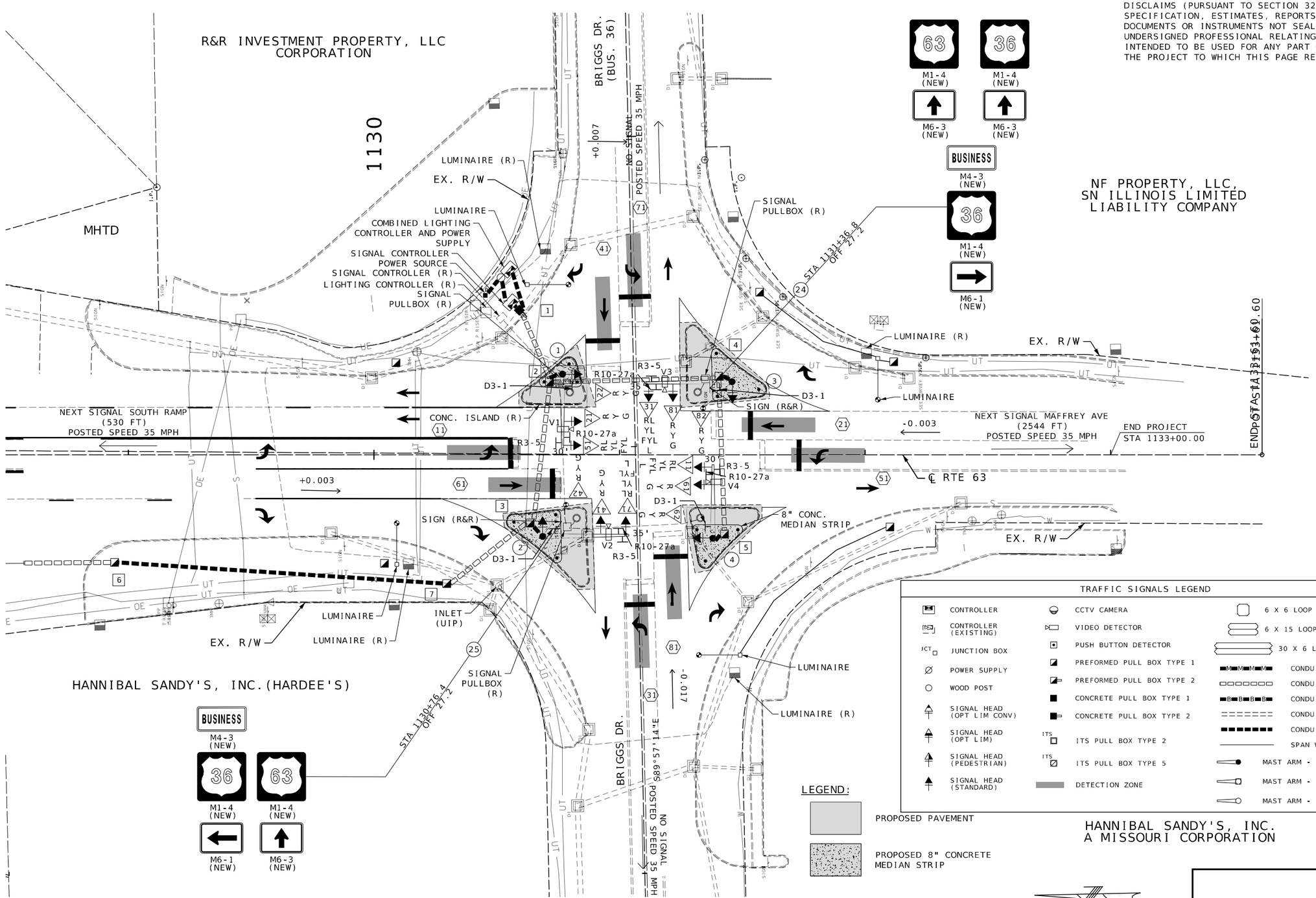

TRAFFIC SIGNALS LEGEND

CONTROLLER	CCTV CAMERA	6 X 6 LOOP DETECTOR
CONTROLLER (EXISTING)	VIDEO DETECTOR	6 X 15 LOOP DETECTOR
JUNCTION BOX	PUSH BUTTON DETECTOR	30 X 6 LOOP DETECTOR
POWER SUPPLY	PREFORMED PULL BOX TYPE 1	CONDUIT MEDIAN
WOOD POST	PREFORMED PULL BOX TYPE 2	CONDUIT PUSHED
SIGNAL HEAD (OPT LIM CONV)	CONCRETE PULL BOX TYPE 1	CONDUIT BRIDGE
SIGNAL HEAD (OPT LIM)	CONCRETE PULL BOX TYPE 2	CONDUIT EXISTING
SIGNAL HEAD (PEDESTRIAN)	ITS PULL BOX TYPE 2	CONDUIT TRENCHED
SIGNAL HEAD (STANDARD)	ITS PULL BOX TYPE 5	SPAN WIRE
	DETECTION ZONE	MAST ARM - TYPE A BASE
		MAST ARM - TYPE C BASE
		MAST ARM - TYPE F BASE

SIGNAL PLAN
SHEET 13 OF 21

STATE OF MISSOURI
PAUL JOSEPH KRONLAGE
NUMBER EN 023328
REGISTERED PROFESSIONAL ENGINEER

05/29/2025 1:33:55 PM
Paul J. Kronlage - Civil
MO PE - 023328

DATE PREPARED	
5/29/2025	
ROUTE 63	STATE MO
DISTRICT NE	SHEET NO. 42
COUNTY MACON	
JOB NO. JNE0137	
CONTRACT ID.	
PROJECT NO.	
BRIDGE NO.	

DATE	DESCRIPTION

MISSOURI HIGHWAYS AND TRANSPORTATION COMMISSION
105 WEST CAPITOL
JEFFERSON CITY, MO 65102
1-888-ASK-MODOT (1-888-275-6636)

EFK•Moen
Civil Engineering Design
13523 Barrett Parkway Dr
Suite 250
St. Louis, MO 63021
Phone 314-394-3100
Fax 314-394-3199
Missouri Certificate of Authority: 001578

O:\2022R3\MoDOT_ORD_v10.12.02.04\23046 MoDOT NE0137 Route 63-36 Interchange\DGN\Roadway\Final\Plotsheets\042_SG_13_Briggs_NE0137_i20.dgn 9:35:13 AM 5/29/2025

EFFECTIVE: 07/01/2018

POST NUMBER	PULL BOX NUMBER	LOCATION			BASE													CONCRETE** (CU. YDS.)	PULL BOX										
		APPROACH	STATION	OFFSET	A						F						C		PREFORMED				CONCRETE			DRAIN TYPE*			
					9	9.5	10	10.5	11	12	9	9.5	10	10.5	11	12			CLASS 1	CLASS 2	CLASS 3	CLASS 5	STANDARD	DOUBLE, TYPE A	DOUBLE, TYPE B	I	II A	II B	II C
1		RTE 63	1130+76.8	32.8' LT		1												3.01											
2		RTE 63	1130+68.7	33.3' RT		1												3.01											
3		RTE 63	1131+45.8	29.7' LT		1												3.01											
4		RTE 63	1131+38.0	34.0' RT		1												3.01											
	1	RTE 63	1130+59.2	58.9' LT														0.70						1		1			
	2	RTE 63	1130+71.5	29.7' LT														0.35		1						1			
	3	RTE 63	1130+63.6	27.8' RT														0.35	1							1			
	4	RTE 63	1131+40.4	31.9' LT														0.35		1						1			
	5	RTE 63	1131+42.7	32.4' RT														0.35	1							1			
	6	RTE 63	1128+94.4	43.8' RT														0.35	1							1			
	7	RTE 63	1130+29.6	52.4' RT														0.35	1							1			
		RTE 63	CONTROLLER (SEE D-37A)															1.95											
SUBTOTAL																		16.79	4	2				1					
TOTAL																		16.8	4	2				1					

POST NUMBER	PULL BOX NUMBER	TOP MOUNT POST		TYPE C & CL												LUMINAIRE BRACKET ARM*					
				ARM LENGTH				SIGNAL SPACING				SIGN SPACING									
		8 FT.	15 FT.	A	A	A	A	B	C	D	D'	B	C	D	D'	4 FT.	6 FT.	8 FT.	10 FT.	12 FT.	15 FT.
1				30				0	19	10		5	21	2*							
2					35			0	24	10		5	26	2*							1
3					35			0	24	10		5	26	2*							1
4				30				0	22	7		5	21	2*							
SUBTOTAL				2	2																
TOTAL				2	2																

POST NUMBER	TYPE B & BL																						
	ARM LENGTH						LEFT ARM E								RIGHT ARM K								INCLUDED ANGLE
							SIGNAL SPACING				SIGN SPACING				SIGNAL SPACING				SIGN SPACING				
	E	K	E	K	E	K	F	G	H	H'	F	G	H	H'	L	M	N	N'	L	M	N	N'	
SUBTOTAL																							
TOTAL																							

*SIGN R3-5 TO BE LOCATED ON THE OPPOSITE SIDE OF THE SIGNAL ARM FROM THE VEHICLE HEADS

R3-5L

R10-27a

D3-1
POST 1 & 4

D3-1
POST 2 & 3

SIGNAL HEADS

SPAN NUMBER	POST NUMBER	FACE NUMBER	LED A TOP MOUNTED LUMINAIRE	INDICATIONS *																					VISORS *		LOUVERS *					
				12" LENS CONVENTIONAL											12" LENS OPTICAL LIMITING										12" LENS	PED.						
				R	RL	Y	YL	FYL	FYR	G	S	L	Rt	✋🚶	R	Y	YL	YRt	YL	YRt	G	S	L	Rt			A	B	C	D	E	F
	1	51			1		1	1				1													4							
	1	21		1		1				1															3							
	1	22		1		1				1															3							
	2	71	1		1		1	1				1													4							
	2	41		1		1				1															3							
	2	42		1		1				1															3							
	3	31	1		1		1	1				1													4							
	3	81		1		1				1															3							
	3	82		1		1				1															3							
	4	11			1		1	1				1													4							
	4	61		1		1				1															3							
	4	62		1		1				1															3							
SUBTOTAL			2																													
TOTAL			2																													

POST NUMBER	FACE NUMBER	BACKPLATE*					RETROREFLECTIVE BACKPLATE*					BRACKET*		
		LENSES					LENSES					TYPE		
		1	2	3	4	5	1	2	3	4	5	I	II	III
1	51				1							1		
1	21			1								1		
1	22			1								1		
2	71				1							1		
2	41			1								1		
2	42			1								1		
3	31				1							1		
3	81			1								1		
3	82			1								1		
4	11				1							1		
4	61			1								1		
4	62			1								1		

POST NUMBER	FACE NUMBER	ONE-FACE SECTION																TWO-FACE SECTIONS														
		1-				3-				4-				5-				11-			33-				34-		35-		44-		45-	
		T	S	C	B	T	S	C	B	T	S	C	B	T	S	C	B	T	S	B	T	S	C	B	S	B	S	B	S	B	S	B
1	51												1																			
1	21								1																							
1	22						1																									
2	71												1																			
2	41								1																							
2	42						1																									
3	31												1																			
3	81								1																							
3	82						1																									
4	11												1																			
4	61								1																							
4	62						1																									
SUBTOTAL OPTICALLY LIMITED																																
SUBTOTAL CONVENTIONAL							4		4				4																			
SUBTOTAL COMBINATION OL & CONV																																
TOTAL OPTICALLY LIMITED																																
TOTAL CONVENTIONAL							4		4				4																			
TOTAL COMBINATION OL & CONV																																

SIGNAL SIGNS

QUANTITY	MUTCD SIGN NUMBER	SIZE	AREA	SIGN TOTAL AREA ITEM NO. 90208.33	SIGNAL SIGN MOUNTING HARDWARE ITEM NO. 90208.34
		INCHES	SQ.FT.	SQ.FT.	EA.
4	R3-5L	30 X 36	7.5	30	4
4	R10-27a	30 X 36	7.5	30	4
2	D3-1 (BRIGGS DR)	66 X 18	8.3	16.6	2
2	D3-1 (MISSOURI ST)	90 X 18	11.3	22.6	2
			SUBTOTAL	99.2	12
			TOTAL	99	12

REMARKS

ALL LENGTHS AND SPACINGS ARE IN FEET UNLESS OTHERWISE INDICATED.

* ITEMS FOR WHICH SEPARATE PAYMENT WILL NOT BE MADE.

** SEE STANDARD PLANS 902.10 AND 902.30 FOR CONCRETE REQUIREMENTS ON BASES.

*** USE D3-16 FOR ONE LINE. USE D3-18 FOR TWO LINE.

SIGNAL STRUCTURES WHICH WILL EXCEED THE DIMENSION LIMITS SHOWN ON STANDARD PLAN SHEETS IN SECTION 902 AND ANY OTHER INSTALLATION WHERE THE DETAILS OF CONSTRUCTION ARE NOT FURNISHED IN THE CONTRACT PLANS, SHALL BE DESIGNED BY A PROFESSIONAL ENGINEER IN ACCORDANCE WITH THE 2001 AASHTO STANDARD SPECIFICATIONS FOR STRUCTURAL SUPPORTS FOR HIGHWAY SIGNS, LUMINAIRES AND TRAFFIC SIGNALS, 4TH EDITION, AND LATEST INTERIMS. THE STRUCTURE SHALL BE DESIGNED AS IMPORTANCE CATEGORY I FOR FATIGUE WITH A 50-YEAR DESIGN LIFE. THE CONTRACTOR SHALL SUBMIT A SET OF SHOP DETAIL DRAWINGS INCLUDING WELD PROCEDURE SPECIFICATIONS AND DESIGN COMPUTATIONS FOR MODOT RECORDS AND REFERENCE. THE SUBMITTED DRAWINGS AND CALCULATIONS SHALL BE SIGNED AND SEALED IN ACCORDANCE WITH THE LAWS RELATING TO ARCHITECTS AND PROFESSIONAL ENGINEERS (CHAPTER 327, RSMO.), AND SHALL INCLUDE A TITLE BLOCK OR SUMMARY SHEET WHICH LISTS AND CERTIFIES THAT THE PRODUCT MEETS ALL OF THE SPECIFIED DESIGN CRITERIA.

LEGEND

T - TOP MOUNT
S - SIDE MOUNT
C - SPANWIRE MOUNT
B - MAST ARM MOUNT

RTE 63 & BRIGGS DR
INTERSECTION

SIGNAL PLAN
SHEET 14 OF 21

D-37A

PAUL JOSEPH KRONLAGE
NUMBER
EN 023328

05/29/2025 1:34:19 PM
Paul J. Kronlage - Civil
MO PE - 023328

DATE PREPARED	5/29/2025
ROUTE	63
STATE	MO
DISTRICT	NE
SHEET NO.	43
COUNTY	MACON
JOB NO.	JNE0137
CONTRACT ID.	
PROJECT NO.	
BRIDGE NO.	

DATE	DESCRIPTION

MISSOURI HIGHWAYS AND TRANSPORTATION COMMISSION
105 WEST CAPITOL
JEFFERSON CITY, MO 65102
1-888-ASK-MODOT (1-888-275-6636)

EFK•Moen
Civil Engineering Design
13523 Barrett Parkway Dr
Suite 250
St. Louis, MO 63021
Phone 314-394-3100
Fax 314-394-3199
Missouri Certificate of Authority: 001578

EFFECTIVE: 10-01-2015

CONDUIT (WITH #14 TRACER WIRE)

FROM	TO	CENTER TO CENTER DISTANCE	LOOP DET.	TRENCH				PUSHED			MEDIAN			ON STRUCTURE			REMARKS
			1"	2"	3"	4"		2"	3"	4"	2"	3"	4"	2"	3"		
		13		21													
	1	19			22												
	1	5			16												2-3" TRENCHED CONDUIT
1	2	32							30								
2	1	6			7												
2	3	58							56								
3	2	7			8												
3	7	42							40								
7	6	136		134													
2	4	69							67								
4	3	6			7												
4	5	64							62								
SUBTOTALS				155	60				255								
TOTALS				155	60				255								

CABLE

FROM	TO	CENTER TO CENTER DISTANCE	POWER		CONTROL			CCTV CAMERA CABLE	VIDEO DETECTION	LUMINAIRE		DETECTOR		24 FIBER		REMARKS
			1c #2	1c #6	2c #16	5c #16	7c #16		VIDEO CABLE (DET.)	CONTROL 2c #12	POLE & BRACKET 1c #10	1c #14 IN DUCT	2c #14 LEAD-IN CABLE	18 SINGLE-MODE	6 MULTI-MODE	
		13		87												3- 29' CABLES
	51	43					113									
22		43					76									
22	21	0					27									
	21	102					183									
	42	102					141									
42	41	0					32									
	31	112					193									
	82	112					151									
82	81	0					32									
	11	175					257									
	62	175					220									
62	61	0					30									
	2	118								144	90					
	3	128								154	90					
	V1	43							108							
	V2	102							178							
	V3	112							188							
	V4	175							254							
SUBTOTALS				87			1455		728	298	180					
TOTALS				100			1530		*	320	190					INCLUDES 5% FOR SNAKING

*WIRE INCLUDED IN COST OF VIDEO DETECTION SYSTEM

SIGNAL PLAN
SHEET 15 OF 21

INTERSECTION RTE 63 & BRIGGS DR

D-37B

STATE OF MISSOURI
PAUL JOSEPH KRONLAGE
NUMBER EN 023328
REGISTERED PROFESSIONAL ENGINEER

05/29/2025 2:02:14 PM
Paul J. Kronlage - Civil
MO PE - 023328

DATE PREPARED
5/29/2025

ROUTE	STATE
63	MO

DISTRICT	SHEET NO.
NE	44

COUNTY
MACON

JOB NO.
JNE0137

CONTRACT ID.

PROJECT NO.

BRIDGE NO.

DESCRIPTION	DATE

MISSOURI HIGHWAYS AND TRANSPORTATION COMMISSION
105 WEST CAPITOL
JEFFERSON CITY, MO 65102
1-888-ASK-MODOT (1-888-275-6636)

EFK•Moen
Civil Engineering Design
13523 Barrett Parkway Dr
Suite 250
St. Louis, MO 63021
Phone 314-394-3100
Fax 314-394-3199
Missouri Certificate of Authority: 001578

EFFECTIVE 04-01-2018

POWER SUPPLY

LOCATION			POWER SUPPLY ASSEMBLY		CIRCUIT BREAKER TRIP RATING*				LIGHTING CONTROL * (ON POWER SUPPLY)		SERVICE POLE	
					CONTROLLER		POWER SUPPLY DISCONNECT					
							MAIN BREAKER					
APPROACH	STATION	OFFSET	DRAWING 902.15	DRAWING JSP AA	AUXILIARY BREAKER	CONT & SIGNAL LAMPS	SIGNALS	LIGHTING	120 VOLT CONTROL CABINET	MAIN BREAKER	CONTRACT FURNISH	UTILITY COMPANY
RTE 63	1130+49.2	62.1' LT	Type	1 (3)	15 Amps	40 Amps	100 Amps	40 Amps	1	40 Amps	Cl. Ft.	MACON MUNICIPAL UTILITIES
			Type		15 Amps	Amps	Amps	Amps		Amps	Cl. Ft.	

CONTROLLER ASSEMBLY AND AUXILIARY EQUIPMENT

LOCATION			SYSTEM MASTER (CLOSED LOOP)		ACTUATED		ON-OFF* SWITCH TYPE		COORDINATION INTERFACE *						TIME * CLOCK	NEMA CABINET TYPE *			170 CABINET TYPE *		170 SOFTWARE *	
									12C/7C HARDWIRE (1)		TIME BASE	CLOSED LOOP		FIBER								
APPROACH	STATION	OFFSET	NEMA	170	NEMA	170	I	II	MASTER	LOCAL		NEMA	170			E	P	DOUBLE	332	336S	BITRAN	WAPITI
RTE 63	1130+55.8	62.0'LT			1									1			1					

ALL COMPONENTS SHALL BE COMPATIBLE WITH COMMISSION FURISHED MCCAIN TRAFFIC CONTROLLER

NEMA DETECTOR ASSIGNMENT

		CARD POSITION							
		1	2	3	4	5	6	7	8
CHANNEL	1	11	21	31	41				
	2	61	51	81	71				

TOTAL NUMBER OF DETECTOR CARDS(2-CHANNEL) = 4 (2)

NEMA LOAD SWITCH ASSIGNMENTS

1	2	3	4	5	6	7	8	9	10	11	12

DETECTOR SCHEDULE

DETECTOR NUMBER	APPROACH	TYPE				
		PUSH BUTTON	INDUCTION LOOP (2)			VIDEO DETECTION SYSTEM (4)
			STANDARD	DELAY/ EXTEND *	CALL UNIT *	
11	RTE 63					1 EACH
21	RTE 63					
31	BRIGGS DR					
41	BRIGGS DR					
51	RTE 63					
61	RTE 63					
71	BRIGGS DR					
81	BRIGGS DR					
TOTAL						

* ITEMS FOR WHICH SEPARATE PAYMENT WILL NOT BE MADE.

*** USE D3-1 FOR ONE LINE. USE D3-1B FOR TWO LINE.

(1) MoDOT "D" PLUG SHALL BE WIRED INTO ALL NEMA CONTROLLERS WITH 7C HARDWIRE INTERCONNECT.

(2) PAYMENT IS MADE FOR THE NUMBER OF 2-CHANNEL DETECTOR CARDS AS SHOWN BELOW THE ASSIGNMENT CHART.

(3) SEE SPECIAL SHEETS, PAD MOUNTED 120V/240V POWER SUPPLY & LIGHTING CONTROLLER W/UNINTERRUPTIBLE POWER SUPPLY, REFER TO POWER SUPPLY W/UPS JSP.

(4) VIDEO DETECTION SYSTEM PAID FOR EACH INTERSECTION.

(5) INSTALL NETWORK CONNECTED SIGNAL MONITOR: 1 EA

170 OUTPUT FILE ASSIGNMENTS

FR1							MONITOR
FR2							
FR3							
FR4							

170 INPUT FILE ASSIGNMENTS

	CHANNEL	1	2	3	4	5	6	7	8	9	10	11	12	13	14
"I"	U														
	L														
"J"	U														
	L														

TOTAL NUMBER OF DETECTOR CARDS(2-CHANNEL) = (2)

170 AUXILIARY OUTPUT FILE

FR5							X
FR6							

RTE 63 & BRIGGS DR

INTERSECTION

D-37C

SIGNAL PLAN
SHEET 16 OF 21

STATE OF MISSOURI
PAUL JOSEPH KRONLAGE
NUMBER EN 023328
REGISTERED PROFESSIONAL ENGINEER

07/01/2025 2:04:27 PM
Paul J. Kronlage - Civil
MO PE - 023328

DATE PREPARED 7/1/2025

ROUTE	STATE
63	MO
DISTRICT	SHEET NO.
NE	45

COUNTY MACON

JOB NO. JNE0137

CONTRACT ID.

PROJECT NO.

BRIDGE NO.

DESCRIPTION	DATE

MISSOURI HIGHWAYS AND TRANSPORTATION COMMISSION
105 WEST CAPITOL
JEFFERSON CITY, MO 65102
1-888-ASK-MODOT (1-888-275-6636)

EFK•Moen
Civil Engineering Design
13523 Barrett Parkway Dr
Suite 250
St. Louis, MO 63021
Phone 314-394-3100
Fax 314-394-3199
Missouri Certificate of Authority: 001578

EFFECTIVE 12-01-17

WIRING DIAGRAM

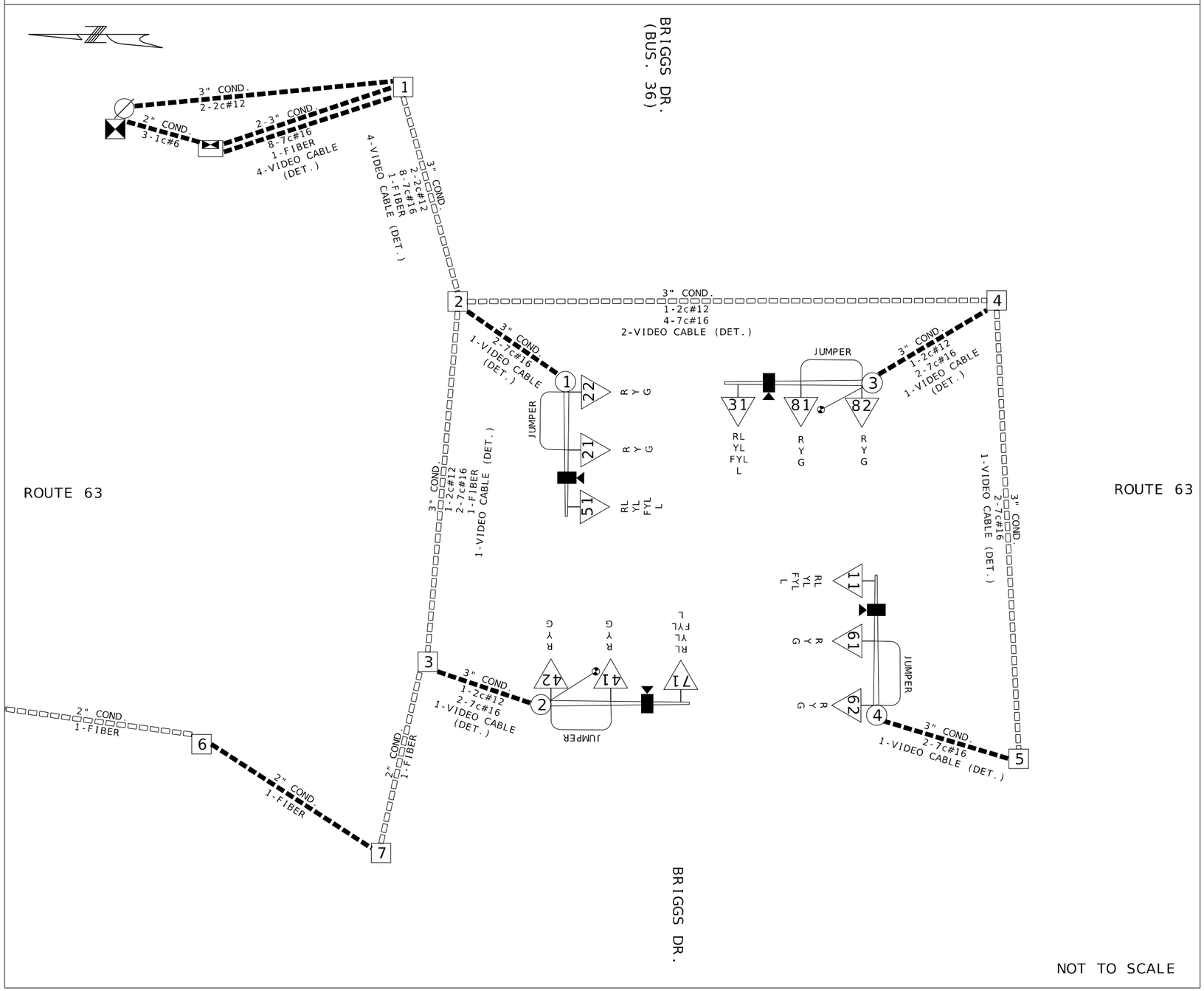

NOT TO SCALE

LEGEND

3"	CONDUIT CONTAINING CABLE WITH SIZE
	CABLE
X-Xc	MULTI-CONDUCTOR CABLE #16 AWG (UNLESS OTHERWISE INDICATED)
LIC	#14 AWG DETECTOR LEAD-IN CABLE (2C TWISTED SHIELDED)
X	PULL BOX WITH NUMBER
X	POST WITH NUMBER
X	POST WITH MAST ARM
X	POST WITH MAST ARM AND LUMINAIRE
X	DETECTOR WITH NUMBER
X	SIGNAL HEAD WITH NUMBER
	SIGNAL CONTROLLER
	POWER SUPPLY ASSEMBLY
	LIGHTING CONTROLLER
	POWER SOURCE
	VIDEO DETECTION
	CCTV CAMERA

US 63 & BRIGGS DR

INTERSECTION

D-37D

SIGNAL PLAN
SHEET 17 OF 21

STATE OF MISSOURI
PAUL JOSEPH KRONLAGE
NUMBER
EN 023328
REGISTERED PROFESSIONAL ENGINEER

05/29/2025 1:39:05 PM
Paul J. Kronlage - Civil
MO PE - 023328

DATE PREPARED	
5/29/2025	
ROUTE 63	STATE MO
DISTRICT NE	SHEET NO. 46
COUNTY MACON	
JOB NO. JNE0137	
CONTRACT ID.	
PROJECT NO.	
BRIDGE NO.	

DATE	DESCRIPTION

MISSOURI HIGHWAYS AND TRANSPORTATION COMMISSION
105 WEST CAPITOL
JEFFERSON CITY, MO 65102
1-888-ASK-MODOT (1-888-275-6636)

EFK•Moen
Civil Engineering Design
13523 Barrett Parkway Dr
Suite 250
St. Louis, MO 63021
Phone 314-394-3100
Fax 314-394-3199
Missouri Certificate of Authority: 001578

EFFECTIVE 12/01/2017

SIGNAL FACE LOCATION

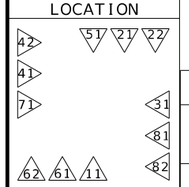

TRAFFIC PHASING AND COLOR SEQUENCE - ACTUATED CONTROLLERS

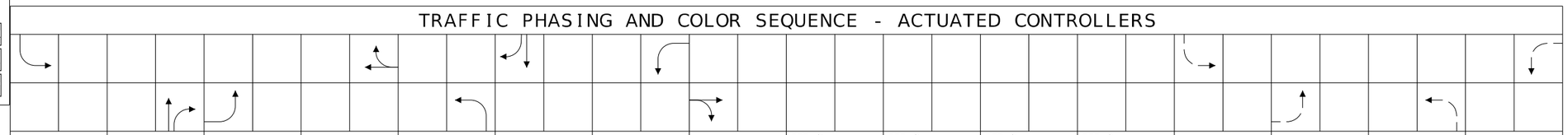

	PHASE 1	PHASE 2	PHASE 3	PHASE 4	PHASE 5	PHASE 6	PHASE 7	PHASE 8	PED Ø OVERLAP	PED Ø OVERLAP	PED Ø OVERLAP	PED Ø OVERLAP	OLA	OLB	OLC	OLD	
FACE NUMBERS	11	21	31	41	51	61	72	82					11	31	51	71	FACE NUMBERS
		22		42		62		82									
SIGNAL INDICATIONS R		R		R		R		R					RL	RL	RL	RL	R
SIGNAL INDICATIONS Y		Y		Y		Y		Y					YL	YL	YL	YL	Y
SIGNAL INDICATIONS FYL													FYL	FYL	FYL	FYL	FYL
SIGNAL INDICATIONS G	L	G	L	G	L	G	L	G									G
DETECTOR ASSIGNMENTS																	DETECTOR ASSIGNMENTS
DETECTOR ASSIGNMENTS (PEDS. ONLY)																	
OVERLAP PARENT PHASES													2	4	6	8	

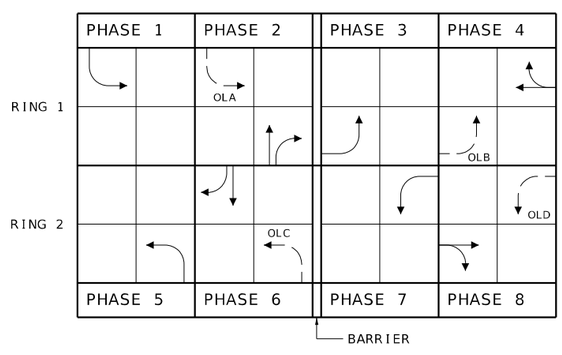

RING STRUCTURE

IF CALLED, ALL NON-CONFLICTING PHASES SHALL COMBINE AND TIME CONCURRENTLY. TIME TO BE DETERMINED BY THE ENGINEER AT SIGNAL TURN ON AND SET IN THE CONTROLLER BY THE CONTRACTOR.

LEGEND

- ACTUATED VEHICULAR MOVEMENT
- PARTIALLY RESTRICTED ACTUATED VEHICULAR MOVEMENT
- NON-ACTUATED VEHICULAR MOVEMENT
- PARTIALLY RESTRICTED NON-ACTUATED VEHICULAR MOVEMENT
- ACTUATED PEDESTRIAN MOVEMENT
- NON-ACTUATED PEDESTRIAN MOVEMENT
- VEHICLE STOPPED
- FDW — FLASHING DON'T WALK
- W — WALK
- DW — DON'T WALK
- R/W — RIGHT OF WAY INTERVAL
- YRt — YELLOW RIGHT ARROW
- RT. — GREEN RIGHT ARROW
- LY -YL — YELLOW LEFT ARROW
- L — GREEN LEFT ARROW
- S — GREEN STRAIGHT AHEAD ARROW
- G — CIRCULAR GREEN
- Y — CIRCULAR YELLOW
- R — CIRCULAR RED
- RL — RED LEFT ARROW
- Ø — TRAFFIC PHASE
- AO — ALL OTHERS
- FR — FLASHING RED
- FY — FLASHING CIRCULAR YELLOW
- FYL — FLASHING YELLOW LEFT ARROW

FLASHING OPERATION	
ALL	FR
	FY

CONTROLLER TYPE	

TRAFFIC SIGNAL CONTROL OPERATION

INTERSECTION OF
RTE 63
WITH
BRIGGS DR

D-38A

SIGNAL PLAN
SHEET 18 OF 21

STATE OF MISSOURI
PAUL JOSEPH KRONLAGE
NUMBER
EN 023328
REGISTERED PROFESSIONAL ENGINEER

05/29/2025 1:39:24 PM
Paul J. Kronlage - Civil
MO PE - 023328

DATE PREPARED	
5/29/2025	
ROUTE 63	STATE MO
DISTRICT NE	SHEET NO. 47
COUNTY MACON	
JOB NO. JNE0137	
CONTRACT ID.	
PROJECT NO.	
BRIDGE NO.	

DESCRIPTION	DATE

MISSOURI HIGHWAYS AND TRANSPORTATION COMMISSION
105 WEST CAPITOL
JEFFERSON CITY, MO 65102
1-888-ASK-MODOT (1-888-275-6636)

EFK•Moen
Civil Engineering Design
13523 Barrett Parkway Dr
Suite 250
St. Louis, MO 63021
Phone 314-394-3100
Fax 314-394-3199
Missouri Certificate of Authority: 001578

GENERAL NOTES:

1. ALTERNATE CABINET DIMENSIONS WILL BE ALLOWED AS APPROVED BY THE ENGINEER. INTERIOR CABINET VOLUME SHALL BE EQUAL TO OR GREATER THAN THAT SHOWN ON PLANS AND PROPER CLEARANCES SHALL BE PROVIDED FOR ALL EQUIPMENT. CONCRETE BASE DIMENSIONS SHALL BE MODIFIED TO FIT THE CABINET SUPPLIER.
2. PLACEMENT OF ALL ITEMS SHALL BE APPROVED BY THE ENGINEER.
3. SCHEMATIC DIAGRAM SHALL BE MOUNTED ON INSIDE OF CABINET DOOR.
4. THE UTILITY SHALL BE NOTIFIED IN WRITING 30 DAYS PRIOR TO DATE SERVICE WILL BE REQUIRED.
5. ALL CABINET OPENINGS SHALL BE COVERED AND SEALED WITH LIFETIME SILICONE CAULK.
6. ALL MATERIALS REQUIRED EXCLUDING REFERENCE ITEMS AS SHOWN ON THE DRAWING SHALL BE INCLUDED IN PRICE BID FOR 'PAD MOUNTED POWER SUPPLY AND LIGHTING CONTROLLER WITH UNINTERRUPTIBLE POWER SUPPLY.' CABLE AND CONDUIT FROM POWER SUPPLY ASSEMBLY TO UTILITY COMPANY FACILITIES SHALL BE INCLUDED IN THE BID PRICE.
7. REFER TO PLAN SHEET DETAIL TO DETERMINE IF A UTILITY POLE OR PEDESTAL WILL BE REQUIRED.
8. CABINET SHALL BE LOCATED WITH A MINIMUM 36" CLEARANCE, FRONT, BACK, AND SIDES.
9. SEE CABINET MANUFACTURER FOR MOUNTING BASE DIMENSIONS AND ANCHOR BOLT LOCATIONS.

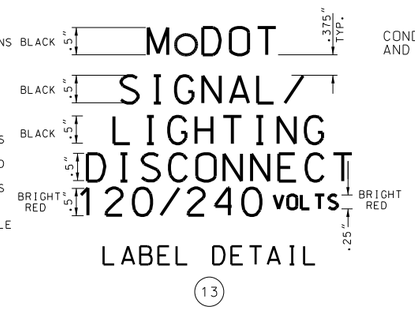

LABEL DETAIL

(13)

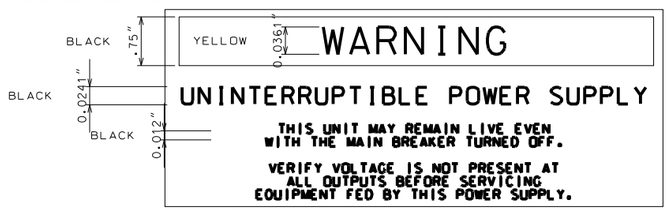

5" x 3 1/2" YELLOW LABEL
(UNDER SIGNAL METER ON LOWER DOOR)

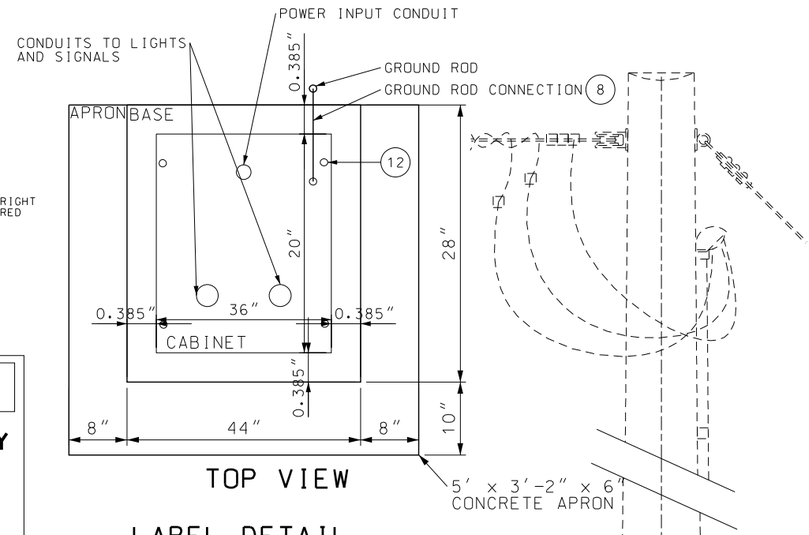

TOP VIEW

LABEL DETAIL

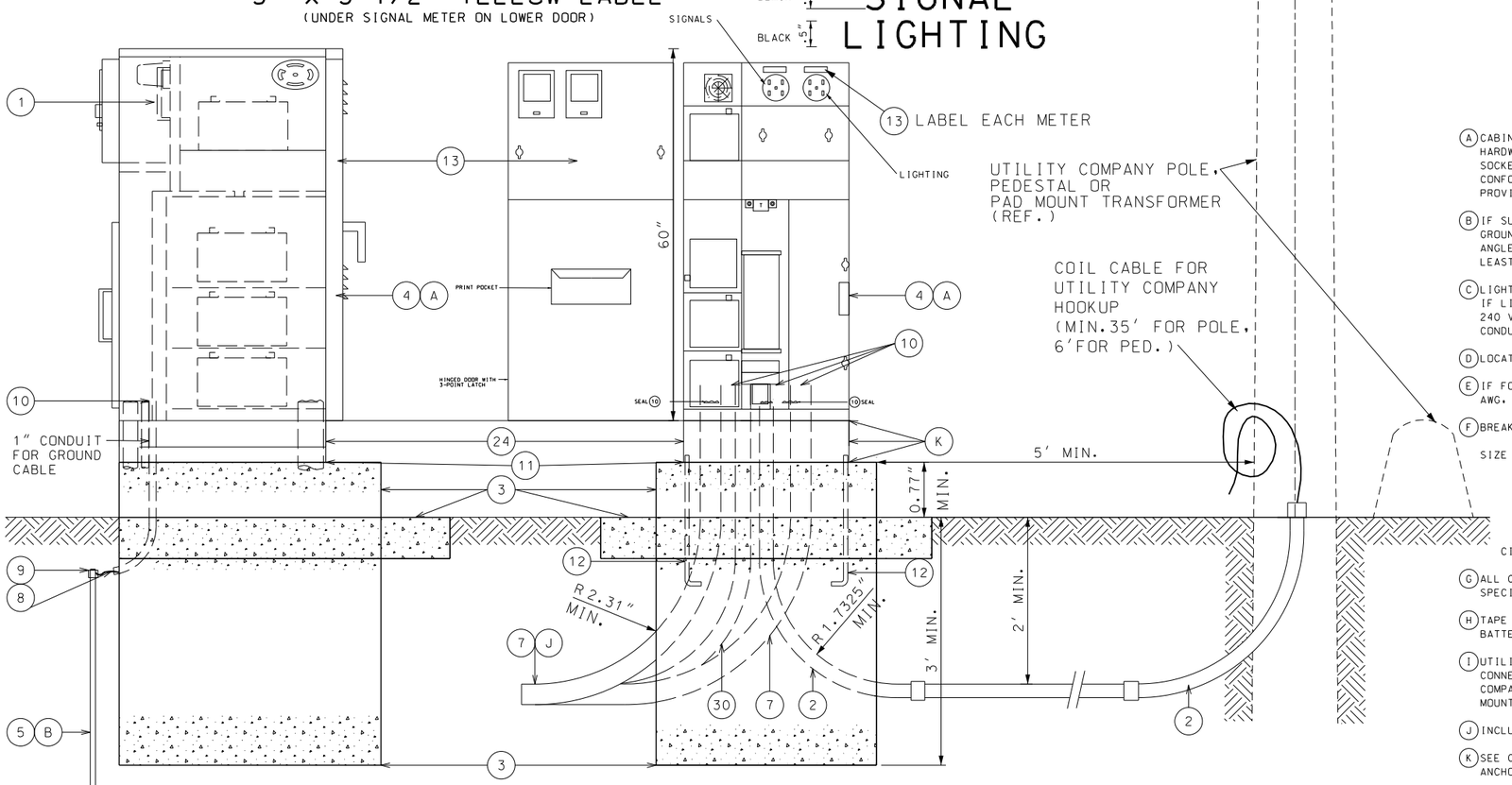

SIDE VIEW

FRONT VIEW

NOT TO SCALE

NOTE: CONDUITS RUNNING INTO CONC. BASE SHALL BE STUBBED 1" ABOVE TOP OF BASE.

DISCLAIMER

THE PROFESSIONAL WHOSE SIGNATURE AND PERSONAL SEAL APPEAR HEREON ASSUMES RESPONSIBILITY ONLY FOR WHAT APPEARS ON THIS PAGE, AND DISCLAIMS (PURSUANT TO SECTION 327.411 RSMO) SPECIFICATION, ESTIMATES, REPORTS, OR OTHER DOCUMENTS OR INSTRUMENTS NOT SEALED BY THE UNDERSIGNED PROFESSIONAL RELATING TO OR INTENDED TO BE USED FOR ANY PART OR PARTS OF THE PROJECT TO WHICH THIS PAGE REFERS.

LIST OF MATERIALS

ITEM	DESCRIPTION
1	METER SOCKET, 200 AMP, WITH LEVER TEST BYPASS
2	RIGID STEEL CONDUIT, 2" MIN. TO UTILITY CO. FACILITIES
3	CLASS B CONCRETE, 1.3 cu. yd. (MIN.)
4	NEMA 3R, DUST-TIGHT, WATERTIGHT CABINET
5	GROUND ROD, 3/4" DIA. x 8' MIN. (MIN. 8' IN SOIL)
6	PHOTOELECTRIC SWITCH AND SOCKET, 105/285 V., 1000 WATT
7	2" MIN. SCH 40 PVC CONDUIT (REF.)
8	#2 AWG MIN., 600 V., GROUND CABLE
9	EXOTHERMIC WELD WIRE TO ROD
10	PLIABLE SEALANT
11	LIFETIME SILICONE CAULK
12	ANCHOR BOLTS, 5/8-11 x 18" LONG BOLTS, HOT DIP GALVANIZED, 4 REQUIRED
13	WEATHERPROOF ADHESIVE LABEL, VINYL RAISED LETTERING (OR EQUIVALENT, SEE DETAIL)
14	INSULATED TERMINAL BLOCK
15	2-POLE, 20 AMP, 120V COIL LIGHTING CONTACTOR
16	2-POLE, 650 VOLT LIGHTNING ARRESTER
17	1-POLE, 15 AMP, TYPE B BREAKER TO PHOTOELECTRIC SWITCH
18	MANUAL-AUTO SWITCH
19	INSULATED GROUNDABLE NEUTRAL, 100 AMP
20	2-POLE, TYPE A MAIN BREAKER
21	2-POLE, 15 AMP (MIN), TYPE A BREAKERS TO LIGHTING CIRCUITS *
22	1-POLE, 15 AMP (MIN.), TYPE A BREAKER TO SIGNALS *
23	#2 AWG MIN., 600 V., POWER CABLE *
24	6" PEDESTAL RISER
25	12V GEL CELL BATTERIES IN SERIES (4 MINIMUM)
26	30A GENERATOR MALE BASE
27	INVERTER (1100VA MINIMUM)
28	1-POLE, 40 AMP, TYPE B UPS BREAKER
29	1-POLE, 15 AMP, TYPE B FAN BREAKER
30	1 ½" CONDUIT OUT TO SIGNAL CABINET (CAT 6E AND CONTROL WIRING)
*	SEE PLANS FOR SIZE

NOTES

(A) CABINET WITH POWER SUPPLY SHALL BE ALUMINUM OR STAINLESS STEEL. ALL HARDWARE, HINGES, CATCHES, ETC. SHALL BE STAINLESS STEEL. METER SOCKET AND OTHER EQUIPMENT AND MATERIALS SHALL BE U.L. APPROVED AND CONFORM TO THE REQUIREMENTS OF THE UTILITY COMPANY OR MUNICIPALITY PROVIDING POWER.

(B) IF SUBSURFACE CONDITIONS EXIST WHICH PROHIBIT THE PLACEMENT OF THE GROUND ROD IN A VERTICAL POSITION, THE ROD MAY BE DRIVEN AT AN OBLIQUE ANGLE NOT TO EXCEED 45 DEGREES FROM VERTICAL OR BURIED IN A TRENCH AT LEAST 30 INCHES DEEP. CONNECTION TO GROUND ROD SHALL BE CAD WELDED.

(C) LIGHTING SYSTEM VOLTAGE AS SPECIFIED ON PLANS (120 OR 240 VOLTS). IF LIGHTS ARE TO BE MOUNTED ON SIGNAL POSTS, VOLTAGE MUST BE 120 VOLTS. 240 VOLT LIGHTS ARE NOT TO BE MOUNTED ON OR WIRED THROUGH SIGNAL POSTS, CONDUIT, OR PULL BOXES.

(D) LOCATE PHOTOELECTRIC SWITCH AT CENTER OF WINDOW.

(E) IF FOR REASONS OF VOLTAGE DROP A WIRE SIZE IS SPECIFIED LARGER THAN #2 AWG, A LARGER TERMINAL BLOCK SHALL BE INSTALLED FOR THAT CIRCUIT.

(F) BREAKER SIZING:

SIZE (AMPS)	240V TOTAL CIRCUIT LOAD (WATTS)	120V TOTAL CIRCUIT LOAD (WATTS)
15	0-2800	0-1390
20	2850-3700	1400-1850
25	3750-4600	1860-2320
30	4650-5500	2330-2780
35	5550-6500	-
40	6550-7400	-

CIRCUIT LOAD INCLUDES LOAD DUE TO LINE LOSS, LAMP, AND BALLAST LOAD.

(G) ALL CIRCUIT BREAKERS SHALL CONFORM TO SECTION 901.4 OF THE STANDARD SPECIFICATIONS.

(H) TAPE BATTERY TEMPERATURE SENSOR TO THE SIDE OF EITHER BATTERY #2 OR BATTERY #3. SENSOR SHOULD BE TO THE MIDDLE OF THE BATTERY BANK.

(I) UTILITY COMPANY SHALL DECIDE IF LIGHTNING ARRESTORS ARE TO BE CONNECTED ON THE LINE SIDE OR THE LOAD SIDE OF THE METER. THE UTILITY COMPANY SHALL ALSO DETERMINE WHERE THE LIGHTNING ARRESTOR SHALL BE MOUNTED.

(J) INCLUDE ADDITIONAL CONDUITS AS NECESSARY FOR AUXILIARY CIRCUITS.

(K) SEE CABINET MANUFACTURER FOR MOUNTING BASE DIMENSIONS AND ANCHOR BOLT LOCATIONS.

SIGNAL SHEET
CONTROLLER DETAIL
SHEET 19 OF 21

STATE OF MISSOURI
PAUL JOSEPH KRONLAGE
NUMBER
EN 023328
REGISTERED PROFESSIONAL ENGINEER

Paul J. Kronlage

05/29/2025 1:39:42 PM
Paul J. Kronlage - Civil
MO PE - 023328

DATE PREPARED	
5/29/2025	
ROUTE 63	STATE MO
DISTRICT NE	SHEET NO. 48
COUNTY MACON	
JOB NO. JNE0137	
CONTRACT ID.	
PROJECT NO.	
BRIDGE NO.	

DESCRIPTION

DATE

MISSOURI HIGHWAYS AND TRANSPORTATION COMMISSION

105 WEST CAPITOL
JEFFERSON CITY, MO 65102
1-888-ASK-MODOT (1-888-275-6636)

EFK•Moen
Civil Engineering Design
13523 Barrett Parkway Dr
Suite 250
St. Louis, MO 63021
Phone 314-394-3100
Fax 314-394-3199
Missouri Certificate of Authority: 001578

REV.

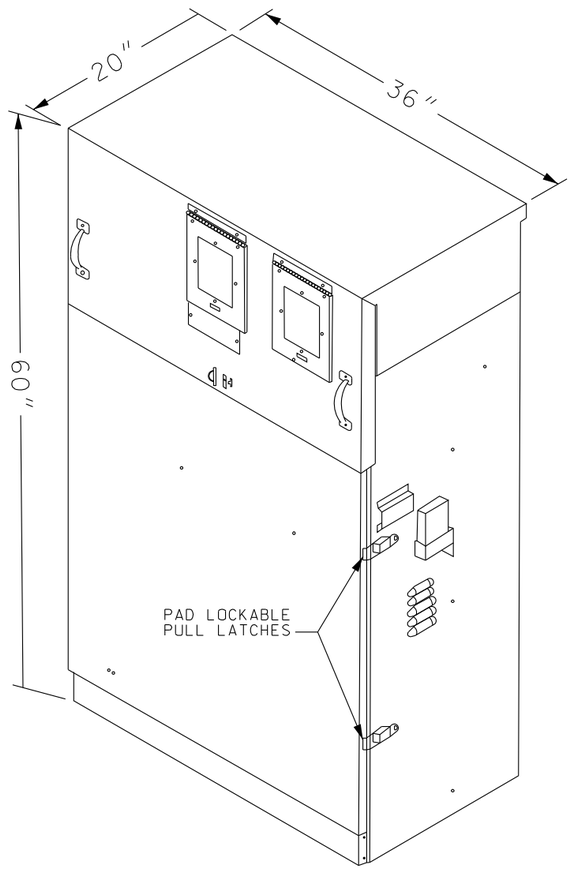

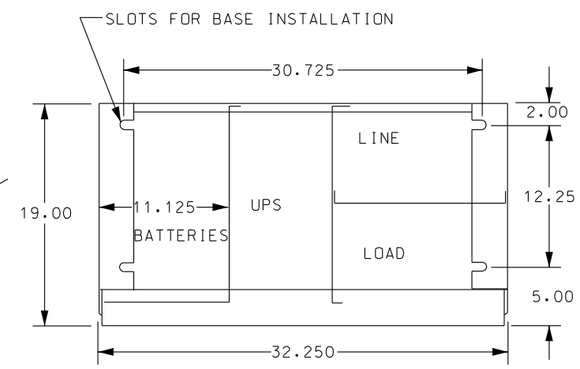

PEDESTAL PLAN VIEW

MOUNTING SLOT DETAIL

DISCLAIMER

THE PROFESSIONAL WHOSE SIGNATURE AND PERSONAL SEAL APPEAR HEREON ASSUMES RESPONSIBILITY ONLY FOR WHAT APPEARS ON THIS PAGE, AND DISCLAIMS (PURSUANT TO SECTION 327.411 RSMO) SPECIFICATION, ESTIMATES, REPORTS, OR OTHER DOCUMENTS OR INSTRUMENTS NOT SEALED BY THE UNDERSIGNED PROFESSIONAL RELATING TO OR INTENDED TO BE USED FOR ANY PART OR PARTS OF THE PROJECT TO WHICH THIS PAGE REFERS.

NOTE: WHERE SPACE PROVIDES, UPS SHALL HAVE ADDITIONAL LABELS DENOTING 'LIGHTING' CONTROLS

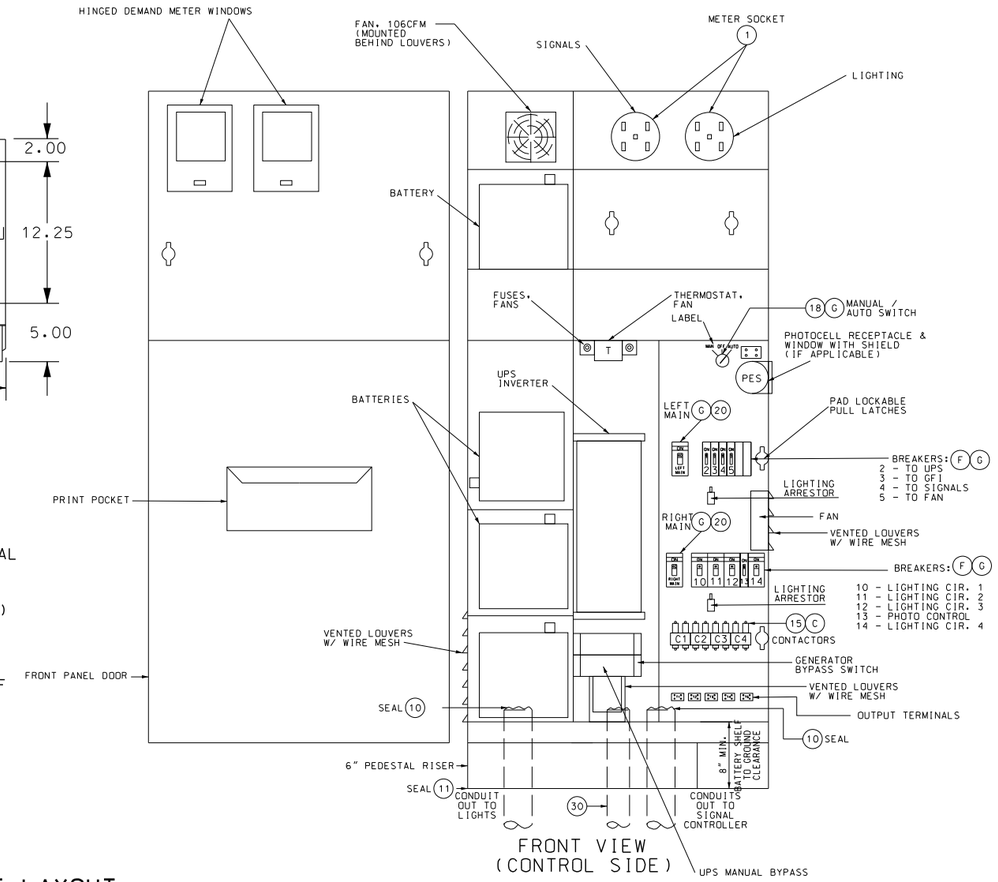

FRONT VIEW
(CONTROL SIDE)

NOTE: CONDUITS RUNNING INTO CONC. BASE SHALL BE STUBBED 1" ABOVE TOP OF BASE.

EQUIPMENT LAYOUT

NOT TO SCALE

LIST OF MATERIALS			
ITEM	DESCRIPTION		
1	METER SOCKET, 200 AMP, WITH LEVER TEST BYPASS		
2	RIGID STEEL CONDUIT, 2" MIN. TO UTILITY CO. FACILITIES		
3	CLASS B CONCRETE, 1.3 cu. yd. (MIN.)		
4	NEMA 3R, DUST-TIGHT, WATERTIGHT CABINET		
5	GROUND ROD, 3/4" DIA. x 8' MIN. (MIN. 8' IN SOIL)		
6	PHOTOELECTRIC SWITCH AND SOCKET, 105/285 V., 1000 WATT		
7	2" MIN. SCH 40 PVC CONDUIT (REF.)		
8	#2 AWG MIN., 600 V., GROUND CABLE		
9	EXOTHERMIC WELD WIRE TO ROD		
10	PLIABLE SEALANT		
11	LIFETIME SILICONE CAULK		
12	ANCHOR BOLTS, 5/8-11 x 18" LONG BOLTS, HOT DIP GALVANIZED, 4 REQUIRED		
13	WEATHERPROOF ADHESIVE LABEL, VINYL RAISED LETTERING (OR EQUIVALENT, SEE DETAIL)		
14	INSULATED TERMINAL BLOCK		
15	2-POLE, 20 AMP, 120V COIL LIGHTING CONTACTOR		
16	2-POLE, 650 VOLT LIGHTNING ARRESTER		
17	1-POLE, 15 AMP, TYPE B BREAKER TO PHOTOELECTRIC SWITCH		
18	MANUAL-AUTO SWITCH		
19	INSULATED GROUNDABLE NEUTRAL, 100 AMP		
20	2-POLE, TYPE A MAIN BREAKER	26	30A GENERATOR MALE BASE
21	2-POLE, 15 AMP (MIN), TYPE A BREAKERS TO LIGHTING CIRCUITS ✳	27	INVERTER (1100VA MINIMUM)
22	1-POLE, 15 AMP (MIN.), TYPE A BREAKER TO SIGNALS ✳	28	1-POLE, 40 AMP, TYPE B UPS BREAKER
23	#2 AWG MIN., 600 V., POWER CABLE ✳	29	1-POLE, 15 AMP, TYPE B FAN BREAKER
24	6" PEDESTAL RISER	30	1 ½" CONDUIT OUT TO SIGNAL CABINET (CAT 6E AND CONTROL WIRING)
25	12V GEL CELL BATTERIES IN SERIES (4 MINIMUM)	✳	SEE PLANS FOR SIZE

NOTES

(A) CABINET WITH POWER SUPPLY SHALL BE ALUMINUM OR STAINLESS STEEL. ALL HARDWARE, HINGES, CATCHES, ETC. SHALL BE STAINLESS STEEL. METER SOCKET AND OTHER EQUIPMENT AND MATERIALS SHALL BE U.L. APPROVED AND CONFORM TO THE REQUIREMENTS OF THE UTILITY COMPANY OR MUNICIPALITY PROVIDING POWER.

(B) IF SUBSURFACE CONDITIONS EXIST WHICH PROHIBIT THE PLACEMENT OF THE GROUND ROD IN A VERTICAL POSITION, THE ROD MAY BE DRIVEN AT AN OBLIQUE ANGLE NOT TO EXCEED 45 DEGREES FROM VERTICAL OR BURIED IN A TRENCH AT LEAST 30 INCHES DEEP. CONNECTION TO GROUND ROD SHALL BE CAD WELDED.

(C) LIGHTING SYSTEM VOLTAGE AS SPECIFIED ON PLANS (120 OR 240 VOLTS). IF LIGHTS ARE TO BE MOUNTED ON SIGNAL POSTS, VOLTAGE MUST BE 120 VOLTS. 240 VOLT LIGHTS ARE NOT TO BE MOUNTED ON OR WIRED THROUGH SIGNAL POSTS, CONDUIT, OR PULL BOXES.

(D) LOCATE PHOTOELECTRIC SWITCH AT CENTER OF WINDOW.

(E) IF FOR REASONS OF VOLTAGE DROP A WIRE SIZE IS SPECIFIED LARGER THAN #2 AWG, A LARGER TERMINAL BLOCK SHALL BE INSTALLED FOR THAT CIRCUIT.

(F) BREAKER SIZING:

SIZE (AMPS)	240V TOTAL CIRCUIT LOAD (WATTS)	120V TOTAL CIRCUIT LOAD (WATTS)
15	0-2800	0-1390
20	2850-3700	1400-1850
25	3750-4600	1860-2320
30	4650-5500	2330-2780
35	5550-6500	-
40	6550-7400	-

CIRCUIT LOAD INCLUDES LOAD DUE TO LINE LOSS, LAMP, AND BALLAST LOAD.

(G) ALL CIRCUIT BREAKERS SHALL CONFORM TO SECTION 901.4 OF THE STANDARD SPECIFICATIONS.

(H) TAPE BATTERY TEMPERATURE SENSOR TO THE SIDE OF EITHER BATTERY #2 OR BATTERY #3. SENSOR SHOULD BE TO THE MIDDLE OF THE BATTERY BANK.

(I) UTILITY COMPANY SHALL DECIDE IF LIGHTNING ARRESTORS ARE TO BE CONNECTED ON THE LINE SIDE OR THE LOAD SIDE OF THE METER. THE UTILITY COMPANY SHALL ALSO DETERMINE WHERE THE LIGHTNING ARRESTOR SHALL BE MOUNTED.

(J) INCLUDE ADDITIONAL CONDUITS AS NECESSARY FOR AUXILIARY CIRCUITS.

(K) SEE CABINET MANUFACTURER FOR MOUNTING BASE DIMENSIONS AND ANCHOR BOLT LOCATIONS.

SIGNAL SHEET
CONTROLLER DETAIL
SHEET 20 OF 21

STATE OF MISSOURI
PAUL JOSEPH KRONLAGE
NUMBER
EN 023328
REGISTERED PROFESSIONAL ENGINEER

05/29/2025 1:40:05 PM
Paul J. Kronlage - Civil
MO PE - 023328

DATE PREPARED	
5/29/2025	
ROUTE 63	STATE MO
DISTRICT NE	SHEET NO. 49
COUNTY MACON	
JOB NO. JNE0137	
CONTRACT ID.	
PROJECT NO.	
BRIDGE NO.	

DATE	DESCRIPTION

MISSOURI HIGHWAYS AND TRANSPORTATION COMMISSION
105 WEST CAPITOL
JEFFERSON CITY, MO 65102
1-888-ASK-MODOT (1-888-275-6636)

EFK•Moen
Civil Engineering Design
13523 Barrett Parkway Dr
Suite 250
St. Louis, MO 63021
Phone 314-394-3100
Fax 314-394-3199
Missouri Certificate of Authority: 001578

REV.

DISCLAIMER

THE PROFESSIONAL WHOSE SIGNATURE AND PERSONAL SEAL APPEAR HEREON ASSUMES RESPONSIBILITY ONLY FOR WHAT APPEARS ON THIS PAGE, AND DISCLAIMS (PURSUANT TO SECTION 327.411 RSMO) SPECIFICATION, ESTIMATES, REPORTS, OR OTHER DOCUMENTS OR INSTRUMENTS NOT SEALED BY THE UNDERSIGNED PROFESSIONAL RELATING TO OR INTENDED TO BE USED FOR ANY PART OR PARTS OF THE PROJECT TO WHICH THIS PAGE REFERS.

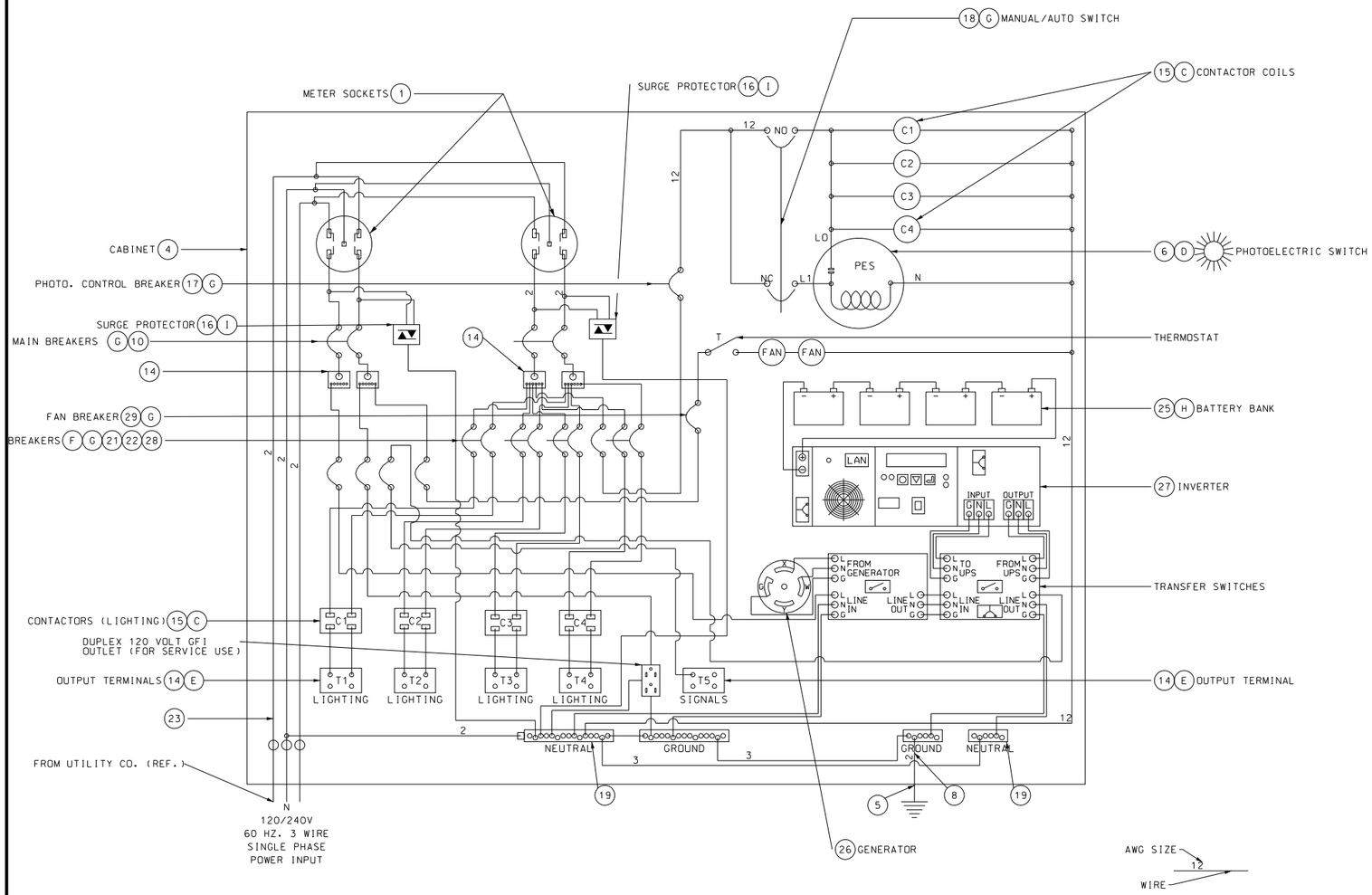

WIRING DIAGRAM

LIST OF MATERIALS	
ITEM	DESCRIPTION
1	METER SOCKET, 200 AMP, WITH LEVER TEST BYPASS
2	RIGID STEEL CONDUIT, 2" MIN. TO UTILITY CO. FACILITIES
3	CLASS B CONCRETE, 1.3 cu. yd. (MIN.)
4	NEMA 3R, DUST-TIGHT, WATERTIGHT CABINET
5	GROUND ROD, 3/4" DIA. x 8' MIN. (MIN. 8' IN SOIL)
6	PHOTOELECTRIC SWITCH AND SOCKET, 105/285 V., 1000 WATT
7	2" MIN. SCH 40 PVC CONDUIT (REF.)
8	#2 AWG MIN., 600 V., GROUND CABLE
9	EXOTHERMIC WELD WIRE TO ROD
10	PLIABLE SEALANT
11	LIFETIME SILICONE CAULK
12	ANCHOR BOLTS, 5/8-11 x 18" LONG BOLTS, HOT DIP GALVANIZED, 4 REQUIRED
13	WEATHERPROOF ADHESIVE LABEL, VINYL RAISED LETTERING (OR EQUIVALENT, SEE DETAIL)
14	INSULATED TERMINAL BLOCK
15	2-POLE, 20 AMP, 120V COIL LIGHTING CONTACTOR
16	2-POLE, 650 VOLT LIGHTNING ARRESTER
17	1-POLE, 15 AMP, TYPE B BREAKER TO PHOTOELECTRIC SWITCH
18	MANUAL-AUTO SWITCH
19	INSULATED GROUNDABLE NEUTRAL, 100 AMP
20	2-POLE, TYPE A MAIN BREAKER
21	2-POLE, 15 AMP (MIN), TYPE A BREAKERS TO LIGHTING CIRCUITS ✳
22	1-POLE, 15 AMP (MIN.), TYPE A BREAKER TO SIGNALS ✳
23	#2 AWG MIN., 600 V., POWER CABLE ✳
24	6" PEDESTAL RISER
25	12V GEL CELL BATTERIES IN SERIES (4 MINIMUM)
26	30A GENERATOR MALE BASE
27	INVERTER (1100VA MINIMUM)
28	1-POLE, 40 AMP, TYPE B UPS BREAKER
29	1-POLE, 15 AMP, TYPE B FAN BREAKER
30	1 ½" CONDUIT OUT TO SIGNAL CABINET (CAT 6E AND CONTROL WIRING)
✳	SEE PLANS FOR SIZE

NOTES

(A) CABINET WITH POWER SUPPLY SHALL BE ALUMINUM OR STAINLESS STEEL. ALL HARDWARE, HINGES, CATCHES, ETC. SHALL BE STAINLESS STEEL. METER SOCKET AND OTHER EQUIPMENT AND MATERIALS SHALL BE U.L. APPROVED AND CONFORM TO THE REQUIREMENTS OF THE UTILITY COMPANY OR MUNICIPALITY PROVIDING POWER.

(B) IF SUBSURFACE CONDITIONS EXIST WHICH PROHIBIT THE PLACEMENT OF THE GROUND ROD IN A VERTICAL POSITION, THE ROD MAY BE DRIVEN AT AN OBLIQUE ANGLE NOT TO EXCEED 45 DEGREES FROM VERTICAL OR BURIED IN A TRENCH AT LEAST 30 INCHES DEEP. CONNECTION TO GROUND ROD SHALL BE CAD WELDED.

(C) LIGHTING SYSTEM VOLTAGE AS SPECIFIED ON PLANS (120 OR 240 VOLTS). IF LIGHTS ARE TO BE MOUNTED ON SIGNAL POSTS, VOLTAGE MUST BE 120 VOLTS. 240 VOLT LIGHTS ARE NOT TO BE MOUNTED ON OR WIRED THROUGH SIGNAL POSTS, CONDUIT, OR PULL BOXES.

(D) LOCATE PHOTOELECTRIC SWITCH AT CENTER OF WINDOW.

(E) IF FOR REASONS OF VOLTAGE DROP A WIRE SIZE IS SPECIFIED LARGER THAN #2 AWG, A LARGER TERMINAL BLOCK SHALL BE INSTALLED FOR THAT CIRCUIT.

(F) BREAKER SIZING:

SIZE (AMPS)	240V TOTAL CIRCUIT LOAD (WATTS)	120V TOTAL CIRCUIT LOAD (WATTS)
15	0-2800	0-1390
20	2850-3700	1400-1850
25	3750-4600	1860-2320
30	4650-5500	2330-2780
35	5550-6500	-
40	6550-7400	-

CIRCUIT LOAD INCLUDES LOAD DUE TO LINE LOSS, LAMP, AND BALLAST LOAD.

(G) ALL CIRCUIT BREAKERS SHALL CONFORM TO SECTION 901.4 OF THE STANDARD SPECIFICATIONS.

(H) TAPE BATTERY TEMPERATURE SENSOR TO THE SIDE OF EITHER BATTERY #2 OR BATTERY #3. SENSOR SHOULD BE TO THE MIDDLE OF THE BATTERY BANK.

(I) UTILITY COMPANY SHALL DECIDE IF LIGHTNING ARRESTORS ARE TO BE CONNECTED ON THE LINE SIDE OR THE LOAD SIDE OF THE METER. THE UTILITY COMPANY SHALL ALSO DETERMINE WHERE THE LIGHTNING ARRESTOR SHALL BE MOUNTED.

(J) INCLUDE ADDITIONAL CONDUITS AS NECESSARY FOR AUXILIARY CIRCUITS.

(K) SEE CABINET MANUFACTURER FOR MOUNTING BASE DIMENSIONS AND ANCHOR BOLT LOCATIONS.

SIGNAL SHEET
CONTROLLER DETAIL
SHEET 21 OF 21

STATE OF MISSOURI
PAUL JOSEPH KRONLAGE
NUMBER EN 023328
REGISTERED PROFESSIONAL ENGINEER

05/29/2025 1:40:21 PM
Paul J. Kronlage - Civil
MO PE - 023328

DATE PREPARED	
5/29/2025	
ROUTE 63	STATE MO
DISTRICT NE	SHEET NO. 50
COUNTY MACON	
JOB NO. JNE0137	
CONTRACT ID.	
PROJECT NO.	
BRIDGE NO.	

DATE	DESCRIPTION

MISSOURI HIGHWAYS AND TRANSPORTATION COMMISSION
105 WEST CAPITOL
JEFFERSON CITY, MO 65102
1-888-ASK-MODOT (1-888-275-6636)

EFK•Moen
Civil Engineering Design
13523 Barrett Parkway Dr
Suite 250
St. Louis, MO 63021
Phone 314-394-3100
Fax 314-394-3199
Missouri Certificate of Authority: 001578

REV.

DISCLAIMER
THE PROFESSIONAL WHOSE SIGNATURE AND PERSONAL SEAL APPEAR HEREON ASSUMES RESPONSIBILITY ONLY FOR WHAT APPEARS ON THIS PAGE, AND DISCLAIMS (PURSUANT TO SECTION 327.411 RSMO) SPECIFICATION, ESTIMATES, REPORTS, OR OTHER DOCUMENTS OR INSTRUMENTS NOT SEALED BY THE UNDERSIGNED PROFESSIONAL RELATING TO OR INTENDED TO BE USED FOR ANY PART OR PARTS OF THE PROJECT TO WHICH THIS PAGE REFERS.

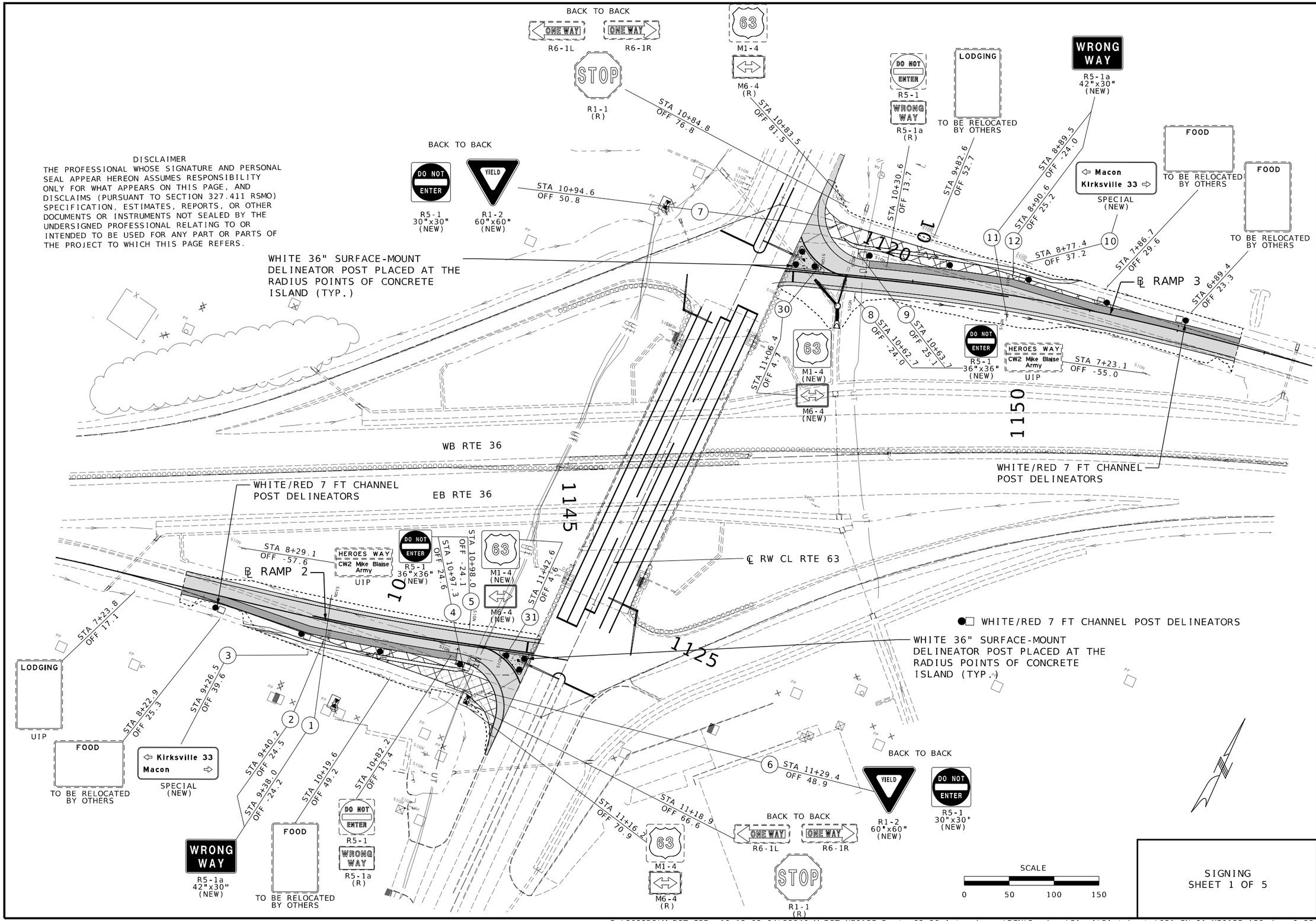

SIGNING
SHEET 1 OF 5

STATE OF MISSOURI
PAUL JOSEPH KRONLAGE
NUMBER EN 023328
REGISTERED PROFESSIONAL ENGINEER

05/29/2025 1:40:42 PM
Paul J. Kronlage - Civil
MO PE - 023328

DATE PREPARED	
5/29/2025	
ROUTE 63	STATE MO
DISTRICT NE	SHEET NO. 51
COUNTY MACON	
JOB NO. JNE0137	
CONTRACT ID.	
PROJECT NO.	
BRIDGE NO.	

DATE	DESCRIPTION

MISSOURI HIGHWAYS AND TRANSPORTATION COMMISSION
105 WEST CAPITOL
JEFFERSON CITY, MO 65102
1-888-ASK-MODOT (1-888-275-6636)

EFK•Moen
Civil Engineering Design
13523 Barrett Parkway Dr
Suite 250
St. Louis, MO 63021
Phone 314-394-3100
Fax 314-394-3199
Missouri Certificate of Authority: 001578

O:\2022R3\MoDOT_ORD_v10.12.02.04\23046 MoDOT NE0137 Route 63-36 Interchange\DGN\Roadway\Final\Plotsheets\051_SN_01_NE0137_i50.dgn 9:35:40 AM 5/29/2025

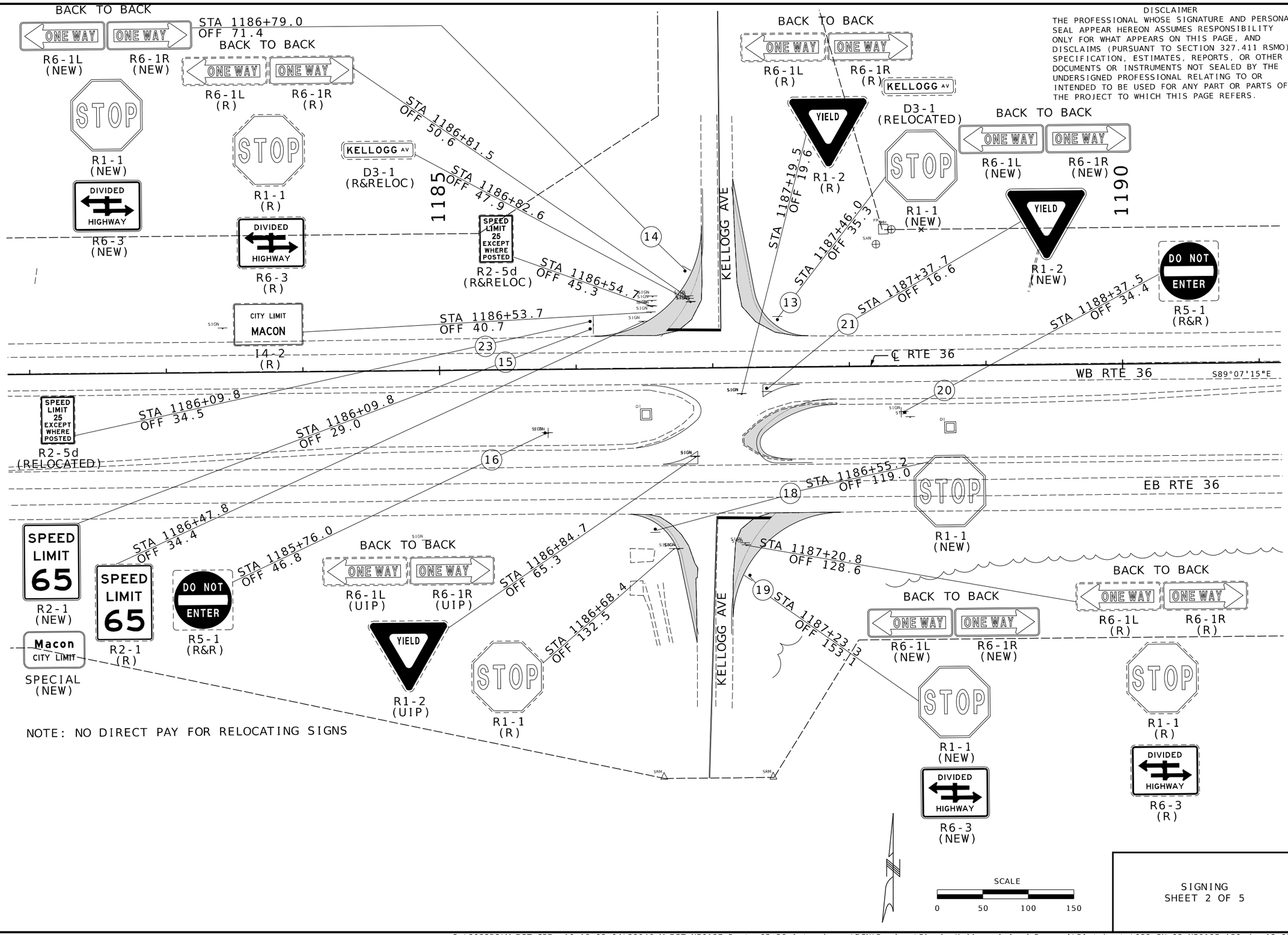

NOTE: NO DIRECT PAY FOR RELOCATING SIGNS

DISCLAIMER
THE PROFESSIONAL WHOSE SIGNATURE AND PERSONAL SEAL APPEAR HEREON ASSUMES RESPONSIBILITY ONLY FOR WHAT APPEARS ON THIS PAGE, AND DISCLAIMS (PURSUANT TO SECTION 327.411 RSMO) SPECIFICATION, ESTIMATES, REPORTS, OR OTHER DOCUMENTS OR INSTRUMENTS NOT SEALED BY THE UNDERSIGNED PROFESSIONAL RELATING TO OR INTENDED TO BE USED FOR ANY PART OR PARTS OF THE PROJECT TO WHICH THIS PAGE REFERS.

STATE OF MISSOURI
PAUL JOSEPH KRONLAGE
NUMBER EN 023328
REGISTERED PROFESSIONAL ENGINEER

07/09/2025 1:04:30 PM
Paul J. Kronlage - Civil
MO PE - 023328

DATE PREPARED	
7/9/2025	
ROUTE 63	STATE MO
DISTRICT NE	SHEET NO. 52
COUNTY MACON	
JOB NO. JNE0137	
CONTRACT ID.	
PROJECT NO.	
BRIDGE NO.	

DATE	DESCRIPTION

MISSOURI HIGHWAYS AND TRANSPORTATION COMMISSION
105 WEST CAPITOL
JEFFERSON CITY, MO 65102
1-888-ASK-MODOT (1-888-275-6636)

EFK•Moen
Civil Engineering Design
13523 Barrett Parkway Dr
Suite 250
St. Louis, MO 63021
Phone 314-394-3100
Fax 314-394-3199
Missouri Certificate of Authority: 001578

SIGNING
SHEET 2 OF 5

O:\2022R3\MoDOT_ORD_v10.12.02.04\23046 MoDOT NE0137 Route 63-36 Interchange\DGN\Roadway\Final- Kellogg Island Removal\Plotsheets\052_SN_02_NE0137_i50.dgn 12:57:33 PM 7/9/2025

EFFECTIVE: 07-01-2024

SIGNS (902 SIGNAL SIGNS TABULATED ON D-37A SHEET)						CONCRETE FOOTINGS EMBEDDED	STRUCTURAL STEEL POSTS*						PIPE POSTS*					BACKING BARS**				U-CHANNEL POST	PERFORATED SQUARE STEEL TUBE: 2-INCH POST						2.5-INCH POST						BREAK-AWAY	REMARKS AND OTHER REQUIRED ITEMS
																		2" X 3/8" BARS AT 2.55 LBS/FT							TOTAL	ANCHORS					TOTAL	2.25" INSERT (6 FT)	ANCHORS				
SIGN NO.	SIGN SIZE	STATION OR LOG MILE	HORIZ CLEAR IF NOT STD	LOCATION	SIGN DTL SHT NO.	ITEM NO. 9031010	POST DES NO.	POST NO. 1	POST NO. 2	POST NO. 3	LBS PER FT	TOTAL ITEM NO. 9031210	PIPE SIZE	POST NO. 1	POST NO. 2	LBS PER FT	TOTAL ITEM NO. 9031220	NO.	LGTH	TOTAL	TOTAL	ITEM NO. 9031250A	POST NO. 1	POST NO. 2	ITEM NO. 9031270A	DRIVEN 12 GA. ITEM NO. 9031271A	DRIVEN 7 GA. ITEM NO. 9031273A	CONCRETE 7 GA. ITEM NO. 9031274	POST NO. 1	POST NO. 2	ITEM NO. 9031280	ITEM NO. 9031272A	DRIVEN 7 GA. ITEM NO. 9031281A	CONCRETE 7 GA. ITEM NO. 9031285	ASSEMBLY ITEM NO. 9031241	
						CY		LF	LF	LF		LBS	IN	LF	LF		LBS	EACH	IN.	LF	LBS	LF	LF	LF	LF	EACH	EACH	EACH	LF	LF	LF	EACH	EACH	EACH	EACH	
1	42"x30"	9+38.0		RAMP 2																									16	16	32			2		
2	42"x30"	9+40.2		RAMP 2																									16	16	32			2		
3	EXISTING	9+26.5		RAMP 2																									16	16	32			2	2	
4	36"x36"	10+97.3		RAMP 2																									16		16			1		
5	36"x36"	10+98.0		RAMP 2																									16		16			1		
6	ASSY	11+29.4		RAMP 2																									16		16			1		
7	ASSY	10+94.6		RAMP 3																									16		16			1		
8	36"x36"	10+62.7		RAMP 3																									16		16			1		
9	36"x36"	10+63.7		RAMP 3																									16		16			1		
10	EXISTING	8+77.4		RAMP 3																									16	16	32			2	2	
11	42"x30"	8+89.5		RAMP 3																									16	16	32			2		
12	42"x30"	8+90.6		RAMP 3																									16	16	32			2		
13	ASSY	1187+46.0		RTE 36																									16		16			1		
14	ASSY	1186+79.0		RTE 36																									16		16			1		
15	ASSY	1186+09.8		RTE 36																									16		16			1		
16	36"x36"	1185+76.0		RTE 36																									16		16			1		
18	36"x36"	1186+55.2		RTE 36																									16		16			1		
19	ASSY	1187+23.3		RTE 36																									16		16			1		
20	36"x36"	1188+37.5		RTE 36																									16		16			1		
21	ASSY	1187+37.7		RTE 36																									16		16			1		
23	EXISTING	1186+09.8		RTE 36																									16		16			1		
24	ASSY	1131+36.8		RTE 63														6	48	288.00	734.40								16		16			1		
25	ASSY	1130+76.4		RTE 63														6	52	312.00	795.60								16		16			1		
30	ASSY	11+06.4		RAMP 3																									16		16			1		
31	ASSY	11+42.6		RAMP 2																									16		16			1		
				SUBTOTAL								0.0									1530.0										496			31	4	
				TOTAL								1530									**										496			31	4	

*BREAKAWAY ASSEMBLY IS INCIDENTAL FOR STRUCTURAL STEEL AND PIPE POSTS.
**BACKING BARS ARE TOTALED WITH STRUCTURAL STEEL OR PIPE POSTS.

ROUND PIPE POST AND FOOTING DATA TABLE

NOM. SIZE (IN.)	WEIGHT LBS/FT	WEIGHT LBS/IN	STUB LENGTH	FOOTING DIA.	FOOTING DEPTH	CONCRETE C.Y.
2½	5.79	0.48	4'- 3½"	12"	4-6"	0.13
4	10.79	0.90	5'- 3½"	18"	5-6"	0.36

STRUCTURAL STEEL POST AND FOOTING DATA TABLE

POST DES. NO.	POST NOM. SIZE	POST WEIGHT LBS/FT	POST WEIGHT LBS/IN	POST STUB LENGTH	FOOTING DIA.	LEVEL GROUND DEPTH	LEVEL GROUND C.Y.	6:1 GRADE DEPTH	6:1 GRADE C.Y.	4:1 GRADE DEPTH	4:1 GRADE C.Y.	3:1 OR 2:1 GRADE DEPTH	3:1 OR 2:1 GRADE C.Y.
1	W6	9.0	0.75	3'-0"	15"	3'-0"	0.14	3'-2"	0.15	3'-3"	0.16	3'-6"	0.17
2	W6	15.0	1.25	4'-0"	24"	4'-0"	0.47	4'-2"	0.50	4'-3"	0.51	4'-6"	0.54
3	W8	18.0	1.50	4'-6"	28"	4'-6"	0.71	4'-8"	0.73	4'-9"	0.74	5'-0"	0.78
4	W10	22.0	1.83	5'-0"	36"	5'-0"	1.31	5'-2"	1.36	5'-3"	1.39	5'-6"	1.45
5	W10	26.0	2.17	5'-0"	36"	5'-0"	1.31	5'-3"	1.37	5'-5"	1.43	5'-9"	1.52
6	W12	35.0	2.92	5'-6"	36"	5'-6"	1.44	5'-9"	1.52	5'-11"	1.56	6'-3"	1.65

SIGNING SHEET 3 OF 5

D-29

STATE OF MISSOURI — PAUL JOSEPH KRONLAGE NUMBER EN 023328 — REGISTERED PROFESSIONAL ENGINEER

07/01/2025 2:26:49 PM
Paul J. Kronlage - Civil
MO PE - 023328

DATE PREPARED: 7/1/2025
ROUTE: 63 | STATE: MO
DISTRICT: NE | SHEET NO.: 53
COUNTY: MACON
JOB NO.: JNE0137
CONTRACT ID.
PROJECT NO.
BRIDGE NO.

DESCRIPTION	DATE

MISSOURI HIGHWAYS AND TRANSPORTATION COMMISSION
105 WEST CAPITOL
JEFFERSON CITY, MO 65102
1-888-ASK-MODOT (1-888-275-6636)

EFK•Moen
Civil Engineering Design
13523 Barrett Parkway Dr
Suite 250
St. Louis, MO 63021
Phone 314-394-3100
Fax 314-394-3199
Missouri Certificate of Authority: 001578

STANDARD SIGN ASSEMBLIES

SIGN, TYPE, DESIGNATION, SIZE & NUMBER OF EACH

SIGN NO.	STATION OR LOG MILE	LOCATION	R1-2 60"x60"	R5-1 30"x30"	R5-1 36"x36"	R5-1a 42"x30"	R1-1 36"x36"	R6-1L 54"x18"	R6-1R 54"x18"	R2-1 36"x48"	R1-2 36"x36"	M1-4 24"x24"	M1-4 24"x24"	M6-1 21"x15"	M6-3 21"x15"	M4-3 24"x12"	SPECIAL 120"x48"	SPECIAL 120"x48"	SPECIAL 60"x36"	R6-3 36"x30"	M6-4 21"x15"
			YIELD	DO NOT ENTER	DO NOT ENTER	WRONG WAY	STOP	ONE WAY	ONE WAY	SPEED LIMIT 65	YIELD	63	36			BUSINESS	Kirksville 22 Macon	Macon Kirksville 33	Macon CITY LIMIT	DIVIDED HIGHWAY	
1	9+38.0	RAMP 2				1															
2	9+40.2	RAMP 2				1															
3	9+26.5	RAMP 2															1				
4	10+97.3	RAMP 2			1																
5	10+98.0	RAMP 2			1																
6	11+29.4	RAMP 2	1	1																	
7	10+94.6	RAMP 3	1	1																	
8	10+62.7	RAMP 3			1																
9	10+63.7	RAMP 3			1																
10	8+77.4	RAMP 3																1			
11	8+89.5	RAMP 3				1															
12	8+90.6	RAMP 3				1															
13	1187+46.0	RTE 36					1														
14	1186+79.0	RTE 36					1	1	1											1	
15	1186+09.8	RTE 36								1									1		
16	1185+76.0	RTE 36			1																
18	1186+55.2	RTE 36					1														
19	1187+23.3	RTE 36					1	1	1											1	
20	1188+37.5	RTE 36			1																
21	1187+37.7	RTE 36						1	1		1										
24	1131+36.8	RTE 63										1	2	1	2	1					
25	1130+76.4	RTE 63										1	1	1	1	1					
30	11+06.4	RAMP 3										1									1
31	11+42.6	RAMP 2										1									1
		TOTALS	2	2	6	4	4	3	3	1	1	4	3	2	3	2	1	1	1	2	2

DELINEATORS

SHEET	ROADWAY	STA	STA	LOCATION	36 IN. SURFACE-MOUNT DELINEATOR POST EACH	WHITE/RED 7 FT CHANNEL POST DELINEATORS EACH
40	RAMP 3	6+88.0	11+35.3	RT	3	5
40	RAMP 2	8+10.8	11+67.3	RT	3	4
13	RTE 36	1130+09	1132+10	LT/RT	12	
				TOTALS	18	9

SIGN SUMMARY

EFFECTIVE: 10-01-2016

STANDARD OR SPECIAL SIGN DESIGNATION	SIGN DTL. SHT. NO.	NO. EACH	SIGN SIZE	TYPE & SQUARE FEET: FLAT SHEET SH ITEM NO. 9035004A	FLAT SHEET FLUORESCENT SHF* ITEM NO. 9035069A	STRUCTURAL ST ITEM NO. 9035011A	STRUCTURAL FLUORESCENT STF* ITEM NO. 9035071A
R1-2		2	60"x60"	50.00			
R5-1		2	30"x30"	12.50			
R5-1		6	36"x36"	54.00			
R5-1a		4	42"x30"	35.00			
R1-1		4	36"x36"	36.00			
R6-1L		3	54"x18"	20.25			
R6-1R		3	54"x18"	20.25			
R2-1		1	36"x48"	12.00			
R1-2		1	36"x36"	9.00			
M1-4		4	24"x24"	16.00			
M1-4		3	24"x24"	12.00			
M6-1		2	21"x15"	4.38			
M6-3		3	21"x15"	6.56			
M4-3		2	24"x12"	4.00			
SPECIAL	1	1	120"x48"			48.00	
SPECIAL	1	1	120"x48"			48.00	
SPECIAL	1	1	60"x36"			15.00	
R6-3		2	36"x30"	15.00			
M6-4		2	21"x15"	4.38			
			TOTALS	311.32		111.00	
			PAY TOTALS	311		111	

*ORANGE, YELLOW AND YELLOW-GREEN

SIGNING
SHEET 4 OF 5

D-30

STATE OF MISSOURI
PAUL JOSEPH KRONLAGE
NUMBER EN 023328
REGISTERED PROFESSIONAL ENGINEER

07/08/2025 11:26:38 AM
Paul J. Kronlage - Civil
MO PE - 023328

DATE PREPARED: 7/8/2025
ROUTE: 63 | STATE: MO
DISTRICT: NE | SHEET NO.: 54
COUNTY: MACON
JOB NO.: JNE0137
CONTRACT ID.
PROJECT NO.
BRIDGE NO.

DATE	DESCRIPTION

MISSOURI HIGHWAYS AND TRANSPORTATION COMMISSION
105 WEST CAPITOL
JEFFERSON CITY, MO 65102
1-888-ASK-MODOT (1-888-275-6636)

EFK•Moen
Civil Engineering Design
13523 Barrett Parkway Dr
Suite 250
St. Louis, MO 63021
Phone 314-394-3100
Fax 314-394-3199
Missouri Certificate of Authority: 001578

FINAL PLANS

REV.

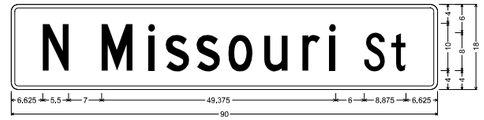

D3-1 SH-FLAT SHEET:
1.500" Radius, 0.750" Border, White on, Green:
"N Missouri", C: "St", C:
Table of letter and object lefts

N	M	I	S	S	S	g	u	r	i	S	I	I
6,625	19,125	28,875	32,625	39,125	45,875	53,500	61,500	67,125	74,500	80,250		

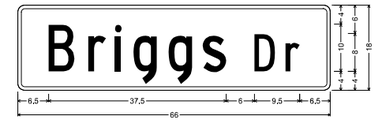

D3-1 SH-FLAT SHEET:
1.500" Radius, 0.750" Border, White on, Green:
"Briggs", C: "Dr", C:
Table of letter and object lefts

B	r	i	g	g	s	s	D	r	
6,500	14,875	20,500	24,500	31,875	39,125	50,000	56,500		

SEE SIGNAL SHEETS FOR LOCATIONS

SIGN 3: RAMP 2

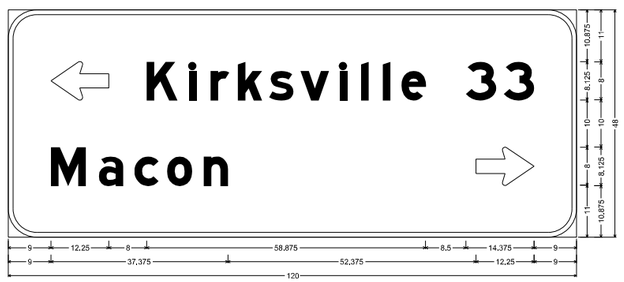

D1-2a ST-STRUCTURAL:
6,000" Radius, 1,000" Border, White on, Green:
Standard Arrow Custom 12,250" X 8,125" 180"; "Kirksville", E Mod; "33", E Mod; "Macon", E Mod; Standard Arrow Custom 12,250" X 8,125" 0";
Table of letter and object lefts

⇦	K	i	r	k	s	v	i	i	i	e	3	3
9,000	29,250	38,125	42,750	48,500	55,125	61,750	69,875	74,500	79,125	83,000	96,625	104,625
M	a	c	o	n	⇨							
9,000	19,125	26,625	33,500	41,250	98,750							

SIGN 10: RAMP 3

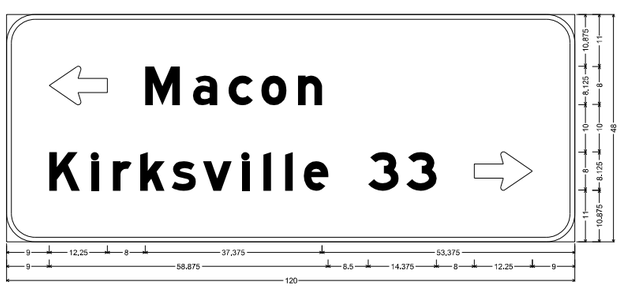

D1-2a ST-STRUCTURAL:
6,000" Radius, 1,000" Border, White on, Green:
Standard Arrow Custom 12,250" X 8,125" 180"; "Macon", E Mod; "Kirksville", E Mod; "33", E Mod; Standard Arrow Custom 12,250" X 8,125" 0";
Table of letter and object lefts

⇦	M	a	c	o	n	
9,000	29,250	39,375	46,875	53,750	61,500	
K	i	r	k	s	v	i
9,000	17,875	22,500	28,250	34,875	41,500	49,625

i	l	l	e	3	3	⇨					
54,250	58,875	62,750	76,375	84,375	98,750						

SIGN 15: RTE 36

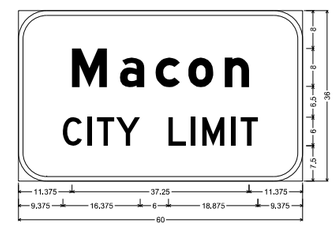

M-1 ST-STRUCTURAL:
6,000" Radius, 1,000" Border, White on, Green:
"Macon", E Mod; "CITY LIMIT", D:
Table of letter and object lefts

M	a	c	o	n
11,375	21,500	26,000	35,875	43,625

C	I	T	Y	L	I	M	I	T	
9,375	14,500	16,625	20,625	31,750	36,500	38,875	44,875	47,000	

NOTE:
ALL DIMENSIONS ARE IN INCHES UNLESS OTHERWISE NOTED.

D-31

SIGNING
SHEET 5 OF 5

STATE OF MISSOURI
PAUL JOSEPH KRONLAGE
NUMBER
EN 023328
REGISTERED PROFESSIONAL ENGINEER

05/29/2025 1:42:09 PM
Paul J. Kronlage - Civil
MO PE - 023328

DATE PREPARED	
5/29/2025	
ROUTE 63	STATE MO
DISTRICT NE	SHEET NO. 55
COUNTY MACON	
JOB NO. JNE0137	
CONTRACT ID.	
PROJECT NO.	
BRIDGE NO.	

DATE	DESCRIPTION

MISSOURI HIGHWAYS AND TRANSPORTATION COMMISSION
105 WEST CAPITOL
JEFFERSON CITY, MO 65102
1-888-ASK-MODOT (1-888-275-6636)

EFK•Moen
Civil Engineering Design
13523 Barrett Parkway Dr
Suite 250
St. Louis, MO 63021
Phone 314-394-3100
Fax 314-394-3199
Missouri Certificate of Authority: 001578

FINAL PLANS

REV.

DISCLAIMER
THE PROFESSIONAL WHOSE SIGNATURE AND PERSONAL SEAL APPEAR HEREON ASSUMES RESPONSIBILITY ONLY FOR WHAT APPEARS ON THIS PAGE, AND DISCLAIMS (PURSUANT TO SECTION 327.411 RSMO) SPECIFICATION, ESTIMATES, REPORTS, OR OTHER DOCUMENTS OR INSTRUMENTS NOT SEALED BY THE UNDERSIGNED PROFESSIONAL RELATING TO OR INTENDED TO BE USED FOR ANY PART OR PARTS OF THE PROJECT TO WHICH THIS PAGE REFERS.

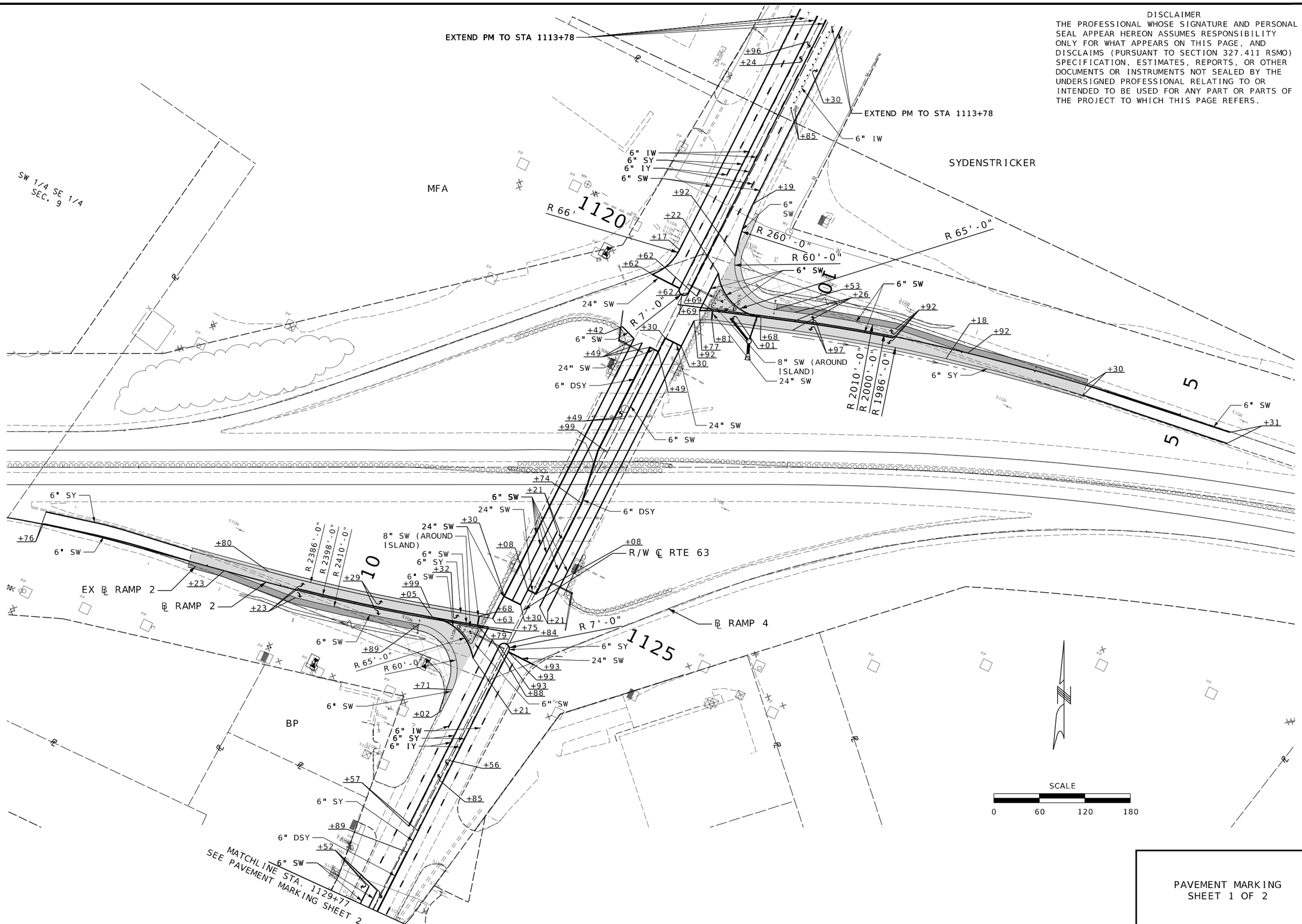

PAVEMENT MARKING
SHEET 1 OF 2

STATE OF MISSOURI
PAUL JOSEPH KRONLAGE
NUMBER
EN 023328
REGISTERED PROFESSIONAL ENGINEER

07/01/2025 2:40:42 PM
Paul J. Kronlage - Civil
MO PE - 023328

DATE PREPARED	
7/1/2025	
ROUTE	STATE
63	MO
DISTRICT	SHEET NO.
NE	56
COUNTY	
MACON	
JOB NO.	
JNE0137	
CONTRACT ID.	
PROJECT NO.	
BRIDGE NO.	

DATE	DESCRIPTION

MISSOURI HIGHWAYS AND TRANSPORTATION COMMISSION
105 WEST CAPITOL
JEFFERSON CITY, MO 65102
1-888-ASK-MODOT (1-888-275-6636)

EFK•Moen
Civil Engineering Design
13523 Barrett Parkway Dr
Suite 250
St. Louis, MO 63021
Phone 314-394-3100
Fax 314-394-3199
Missouri Certificate of Authority: 001578

DISCLAIMER
THE PROFESSIONAL WHOSE SIGNATURE AND PERSONAL SEAL APPEAR HEREON ASSUMES RESPONSIBILITY ONLY FOR WHAT APPEARS ON THIS PAGE, AND DISCLAIMS (PURSUANT TO SECTION 327.411 RSMO) SPECIFICATION, ESTIMATES, REPORTS, OR OTHER DOCUMENTS OR INSTRUMENTS NOT SEALED BY THE UNDERSIGNED PROFESSIONAL RELATING TO OR INTENDED TO BE USED FOR ANY PART OR PARTS OF THE PROJECT TO WHICH THIS PAGE REFERS.

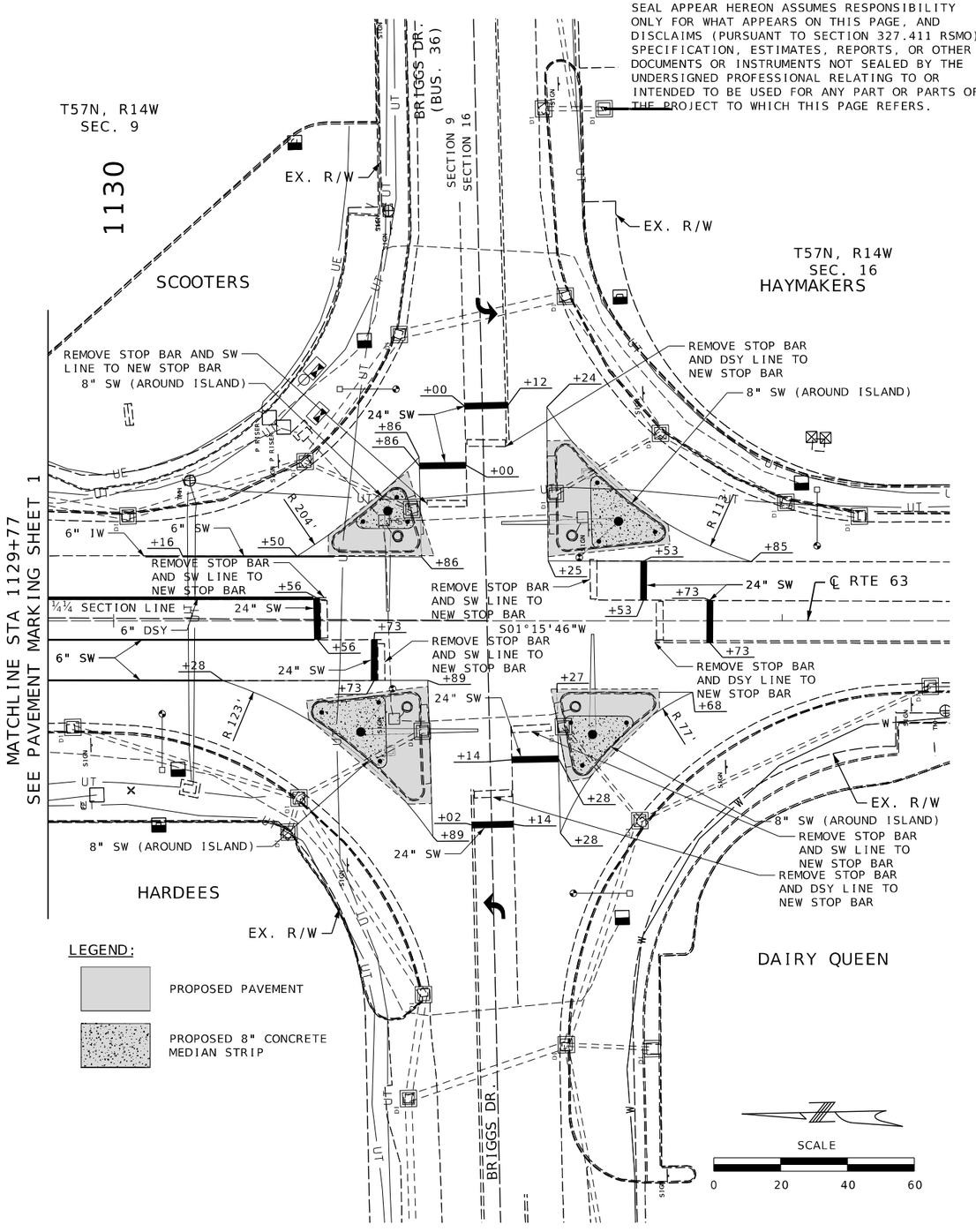

BRIGGS INTERSECTION

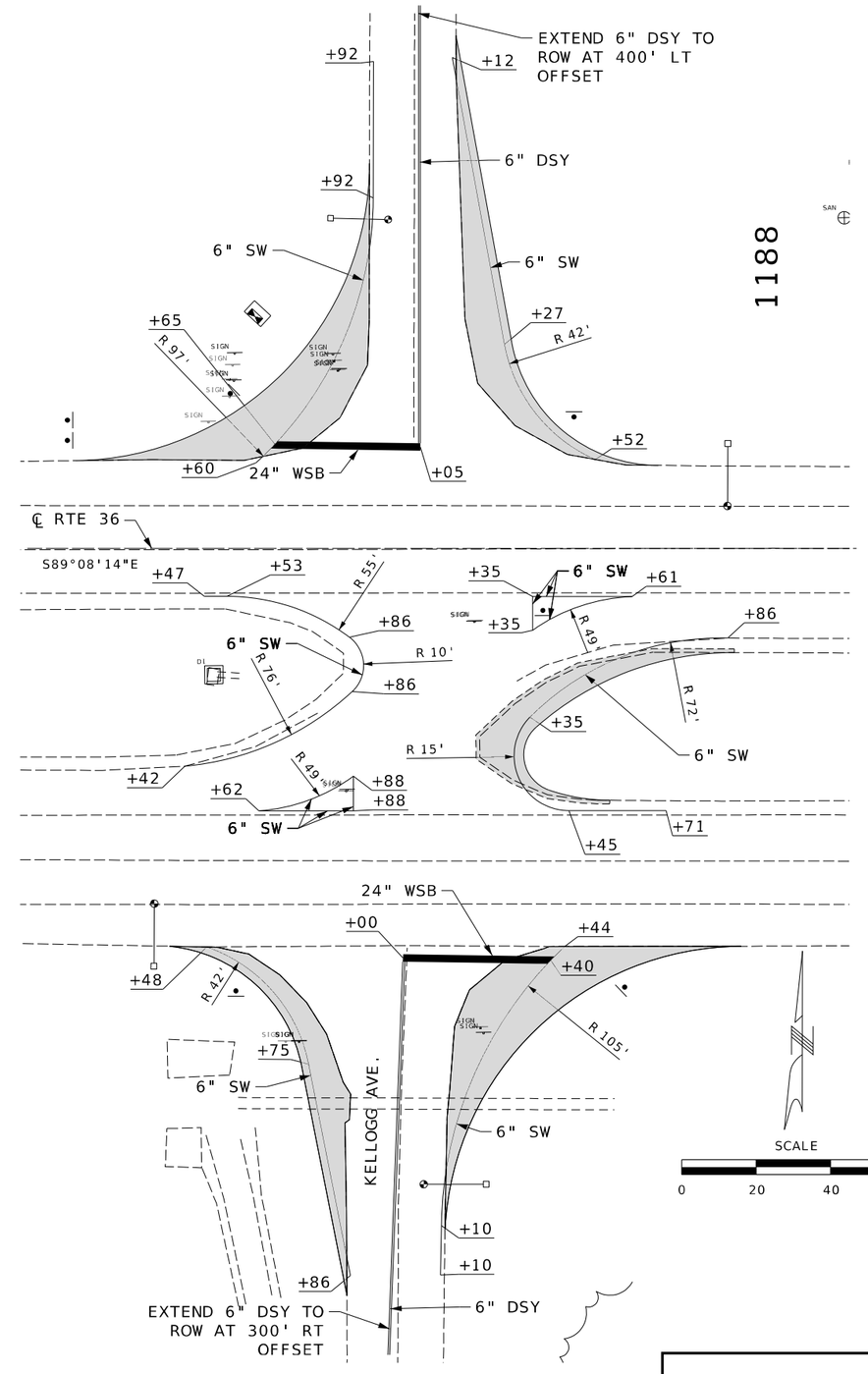

KELLOGG AVE./ US 36 INTERSECTION

PAVEMENT MARKING SHEET 2 OF 2

STATE OF MISSOURI
PAUL JOSEPH KRONLAGE
NUMBER EN 023328
REGISTERED PROFESSIONAL ENGINEER

07/01/2025 2:05:37 PM
Paul J. Kronlage - Civil
MO PE - 023328

DATE PREPARED	
7/1/2025	
ROUTE 63	STATE MO
DISTRICT NE	SHEET NO. 57
COUNTY MACON	
JOB NO. JNE0137	
CONTRACT ID.	
PROJECT NO.	
BRIDGE NO.	

DATE	DESCRIPTION

MISSOURI HIGHWAYS AND TRANSPORTATION COMMISSION
105 WEST CAPITOL
JEFFERSON CITY, MO 65102
1-888-ASK-MODOT (1-888-275-6636)

EFK•Moen
Civil Engineering Design
13523 Barrett Parkway Dr
Suite 250
St. Louis, MO 63021
Phone 314-394-3100
Fax 314-394-3199
Missouri Certificate of Authority: 001578

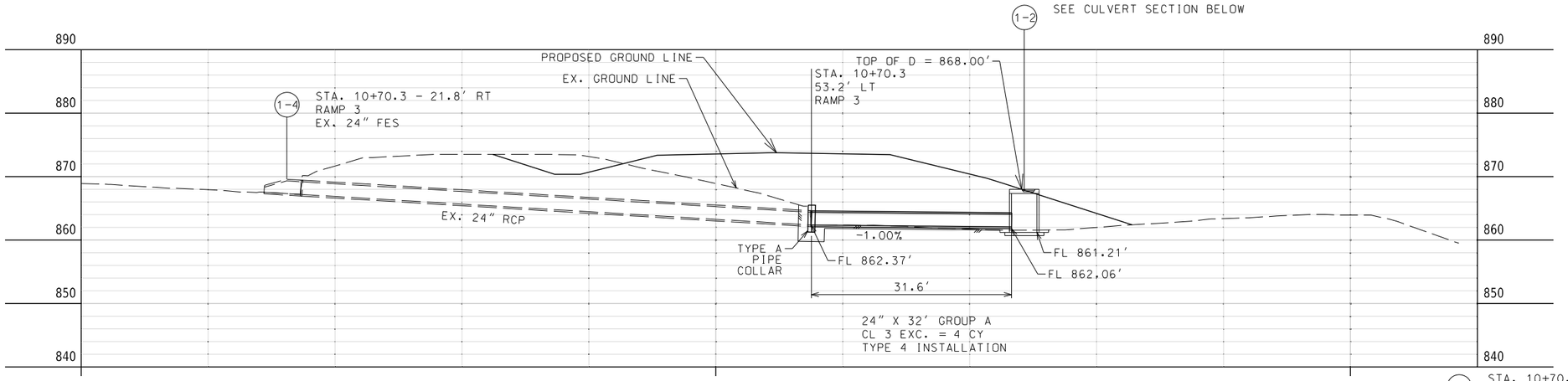

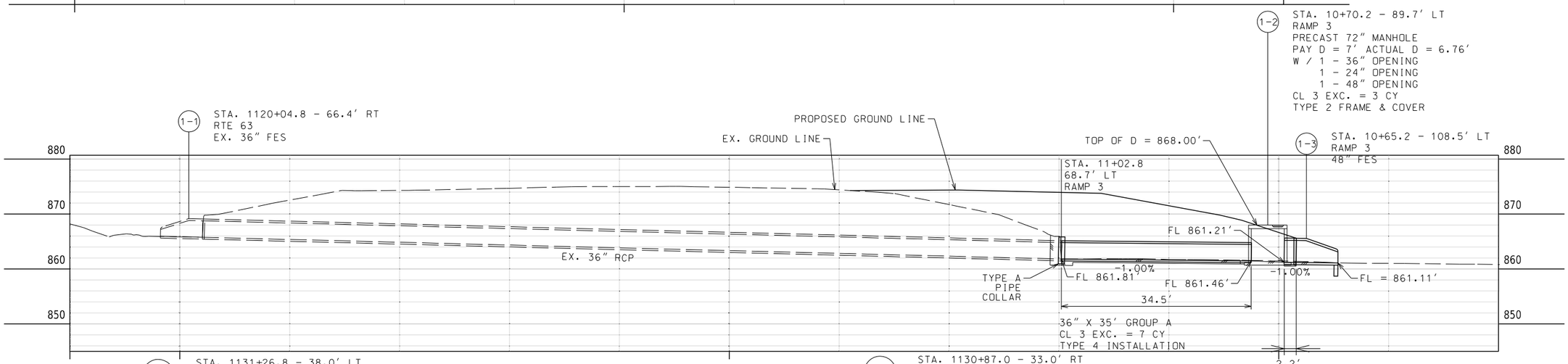

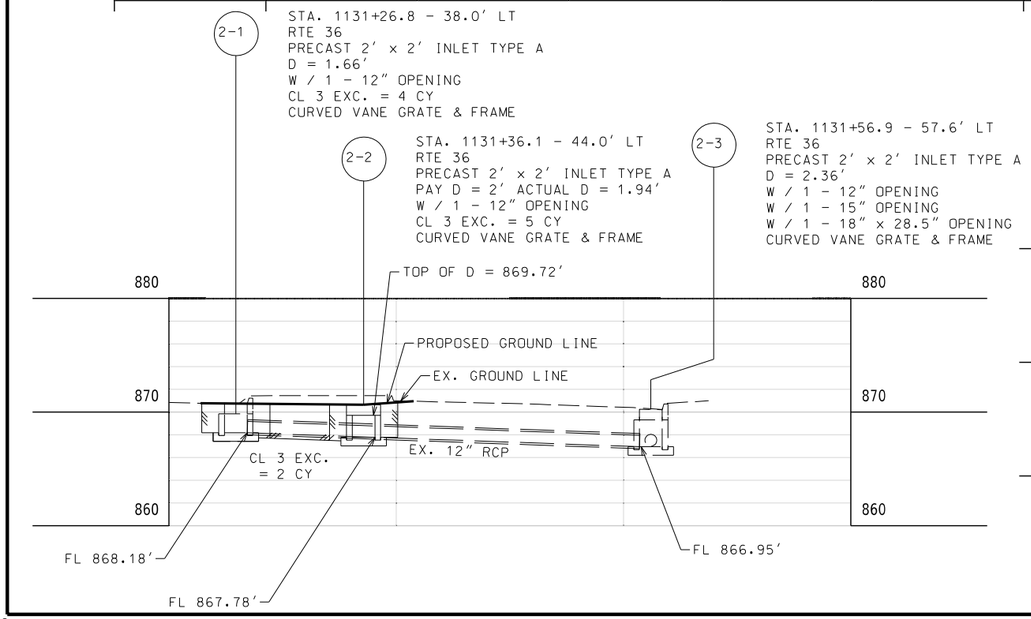

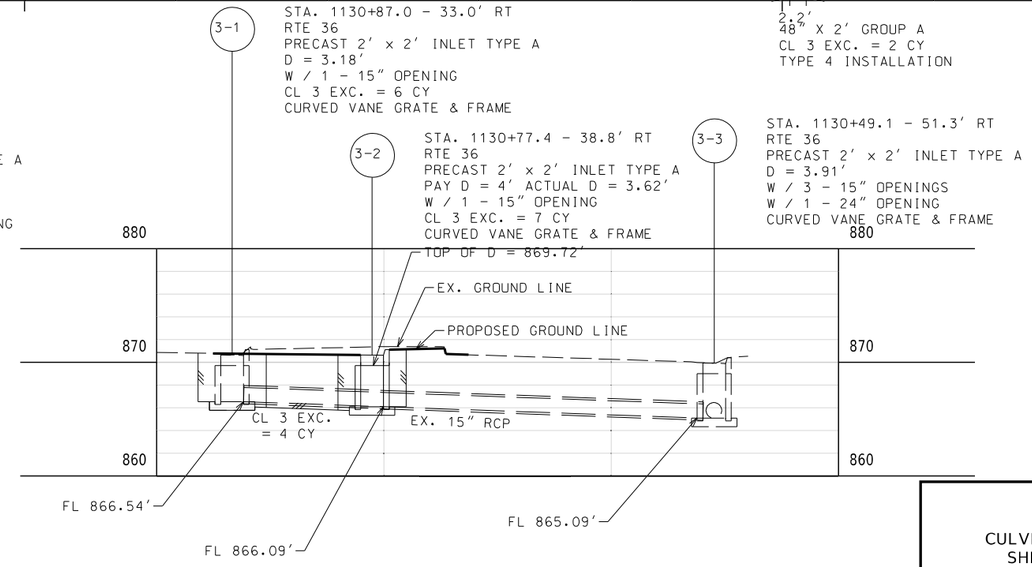

CULVERT SECTIONS
SHEET 1 OF 1

STATE OF MISSOURI
PAUL JOSEPH KRONLAGE
NUMBER EN 023328
REGISTERED PROFESSIONAL ENGINEER

05/29/2025 12:53:34 PM
Paul J. Kronlage - Civil
MO PE - 023328

DATE PREPARED	
5/29/2025	
ROUTE 63	STATE MO
DISTRICT NE	SHEET NO. 58
COUNTY MACON	
JOB NO. JNE0137	
CONTRACT ID.	
PROJECT NO.	
BRIDGE NO.	

DATE	DESCRIPTION

MISSOURI HIGHWAYS AND TRANSPORTATION COMMISSION
105 WEST CAPITOL
JEFFERSON CITY, MO 65102
1-888-ASK-MODOT (1-888-275-6636)

EFK•Moen
Civil Engineering Design
13523 Barrett Parkway Dr
Suite 250
St. Louis, MO 63021
Phone 314-394-3100
Fax 314-394-3199
Missouri Certificate of Authority: 001578

SEC/SUR 9 TWP 57N RGE 14W

U.I.P. AND REHABILITATE EXISTING (33'-6")(2'-6" CANTILEVER-75'-75'-2'-6" CANTILEVER)(33'-6") CONTINOUS COMPOSITE PLATE GIRDER/WIDE FLANGE SPANS (26°45'00" R.A.)

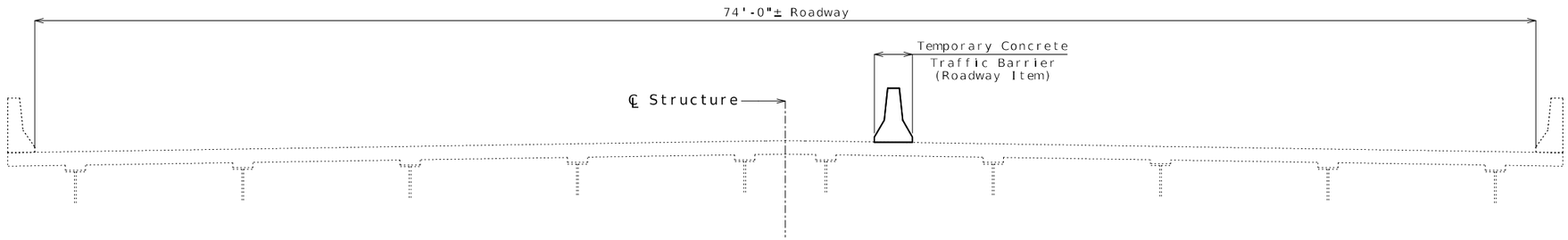

TYPICAL SECTION THRU EXISTING DECK
(Center spans shown, end spans similar)

General Notes:

Design Specifications:

2002 AASHTO LFD (17th Ed.) Standard Specifications
Bridge Deck Rating = 7

Design Loading:

HS20-44 (1965) HS20-44 (2001 & New Construction)

Design Unit Stresses:

Class B-1 Concrete (Barrier)	f'c = 4,000 psi
Class B-2 Concrete (Superstructure, except Barrier)	f'c = 4,000 psi
Reinforcing Steel (ASTM A615 Grade 60)	fy = 60,000 psi
Structural Stteel (ASTM A709 Grade 50)	fy = 50,000 psi

Fabricated Steel Connection:

Field connections shall be made with 3/4-inch diameter ASTM F3125 Grade A325 Type 1 bolts and 13/16-inch diameter holes, except as noted.

High strength bolts, nuts and washers will be sampled for quality assurance as specified in Sec. 106.

Miscellaneous:

All concrete repairs shall be in accodance with Sec 704, unless otherwise noted.

Outline of existing work is indicated by light dashed lines. Heavy lines indicate new work.

Constractor shall verify all dimensions in field before ordering new material.

Bars bonded in existing concrete not removed shall be cleanly stripped and embedded into new concrete where possible. If length is available, existing bars shall extend into new concrete at least 40 diameters for plain bars and 30 diameters for deformed bars, unless otherwise noted.

Reinforcing Steel:

Minimum clearance to reinforcing steel shall be 1 1/2", unless otherwise noted.

MBS refers to mechanical bar splices. Mechanical bar splices shall be in accordance with Sec 706 or 710 except that no measurement will be made for mechanical bar splices and they will be considered completely covered by the contract unit price for other items.

Traffic Handling:

Traffic to be maintained on structure during construction. See roadway plans for traffic control.

Vertical clearance for Route 36 traffic during construction shall be 15'-9" minimum over a 24'-0" wide horizontal opening of the roadway in each direction.

Structural Steel Protective Coatings:

Protective Coating: System G in accordance with Sec 1081.

Prime Coat: The cost of the inorganic zinc prime coat will be considered completely covered by the contract unit price for the girder catch system.

Estimated Quantities

Item		Total
Removal of Existing Expansion Joint & Adjacent Concrete	linear foot	332
Remove and Replace Barrier	linear foot	32
Class B-2 Concrete	cu. yd.	38.5
Reinforcing Steel (Epoxy Coated)	pound	5150
Girder Catch System	each	20
Plug Weld Replacement with Bolt	each	211
Strip Seal Expansion Joint System	linear foot	332

Detailed Mar. 2025
Checked Mar. 2025

Note: This drawing is not to scale. Follow dimensions.

Sheet No. 1 of 10

REPAIRS TO BRIDGE: ROUTE 63 OVER ROUTE 36
ROUTE 63 FROM STATE ROUTE DD TO STATE ROUTE PP
ABOUT 3.4 MILES SOUTH OF STATE ROUTE DD
BEGINNING STATION 1122+10.22± (Match Existing)

STATE OF MISSOURI
ALEX BENZ
NUMBER PE-2018003121
PROFESSIONAL ENGINEER

Alex C. Benz
05/23/2025 7:00:09 AM
Alex Benz - Civil
MO PE-2018003121

DATE PREPARED	
5/23/2025	
ROUTE 63	STATE MO
DISTRICT BR	SHEET NO. 1
COUNTY MACON	
JOB NO. JNE0137	
CONTRACT ID.	
BRIDGE NO. A20432	

MISSOURI HIGHWAYS AND TRANSPORTATION COMMISSION
105 WEST CAPITOL
JEFFERSON CITY, MO 65102
1-888-ASK-MODOT (1-888-275-6636)

EFK•Moen
Civil Engineering Design
13523 Barrett Parkway Dr
Suite 250
St. Louis, MO 63021
Phone 314-394-3100
Fax 314-394-3199
Missouri Certificate of Authority: 001578

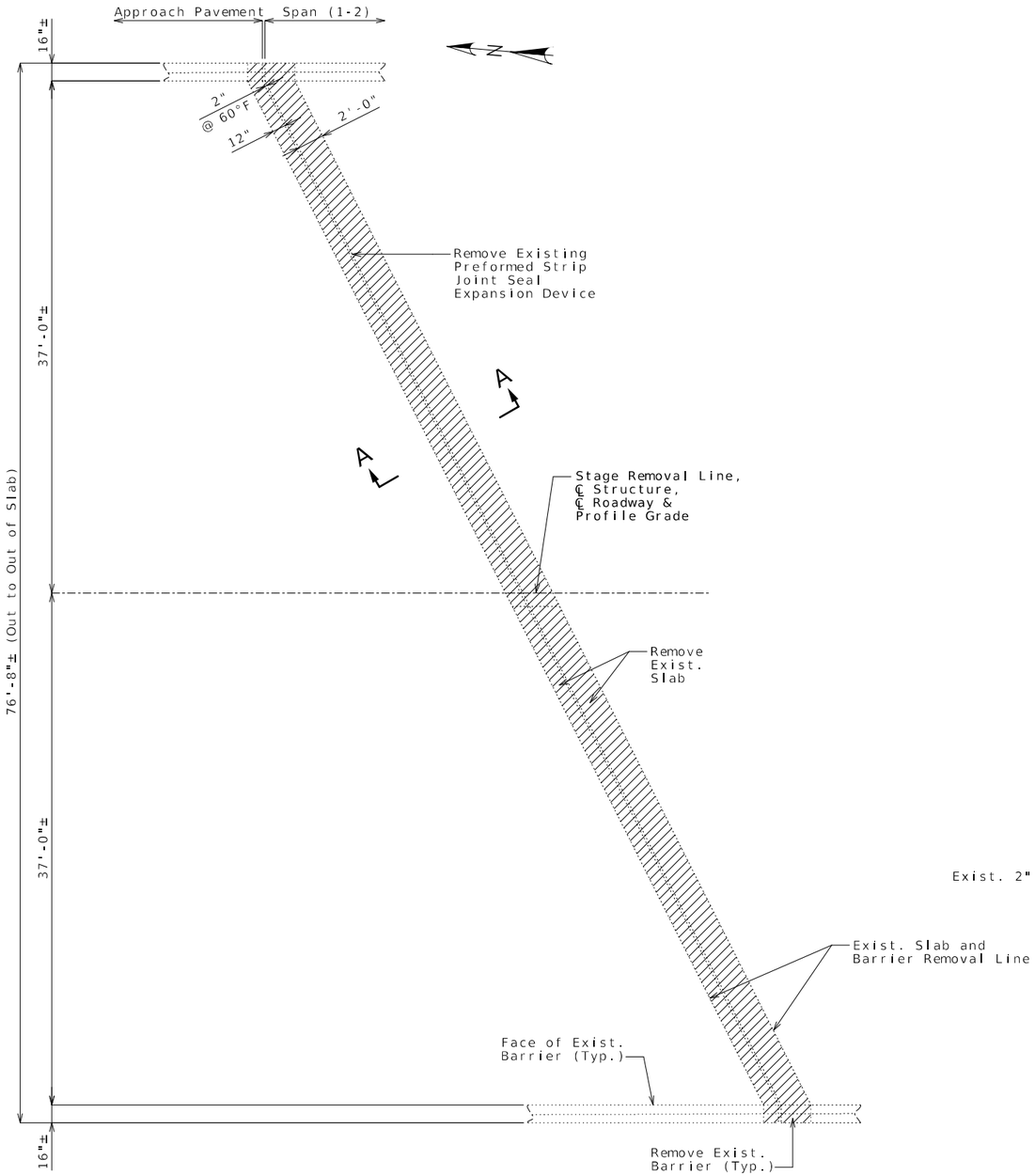

PART PLAN OF SLAB
AT END BENTS NO. 1 & 5

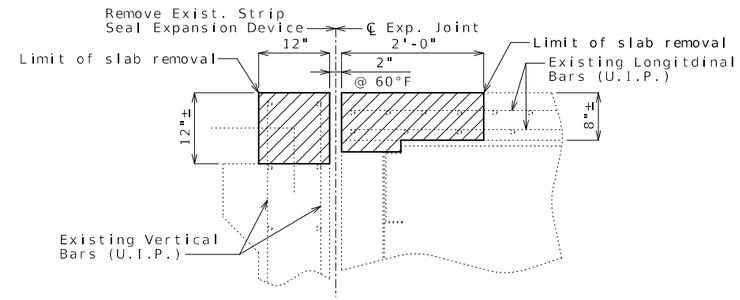

SECTION A-A

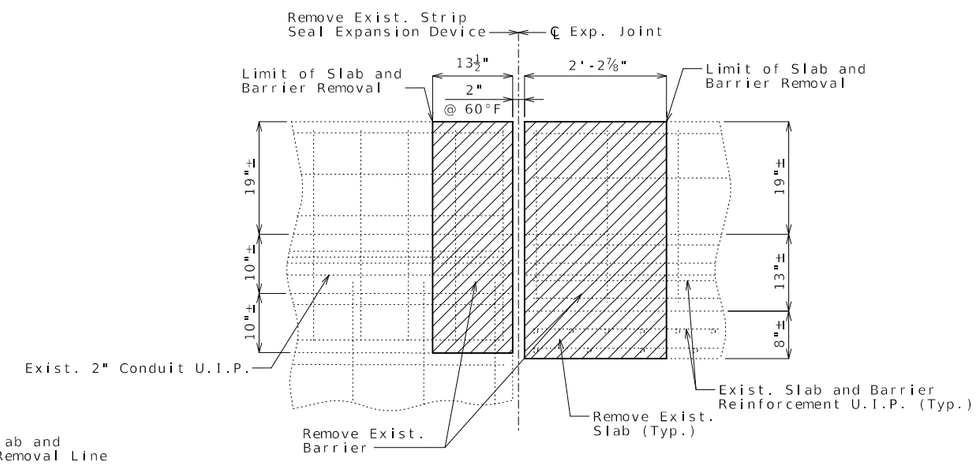

PART ELEVATION OF BARRIER
REMOVAL AT END BENTS NO. 1 & 5

Note:

Remove existing stirrups within limits of Barrier Removal.

REMOVAL DETAILS AT END BENTS NO. 1 & 5

(End Bent No. 1 shown, End Bent No. 5 similar)

Detailed Mar. 2025
Checked Mar. 2025

Note: This drawing is not to scale. Follow dimensions.

STATE OF MISSOURI
ALEX BENZ
NUMBER PE-2018003121
PROFESSIONAL ENGINEER

Alex C. Benz

05/23/2025 6:59:59 AM
Alex Benz - Civil
MO PE-2018003121

DATE PREPARED	5/23/2025
ROUTE	63
STATE	MO
DISTRICT	BR
SHEET NO.	2
COUNTY	MACON
JOB NO.	JNE0137
CONTRACT ID.	
BRIDGE NO.	A20432

MISSOURI HIGHWAYS AND TRANSPORTATION COMMISSION
105 WEST CAPITOL
JEFFERSON CITY, MO 65102
1-888-ASK-MODOT (1-888-275-6636)

EFK•Moen
Civil Engineering Design
13523 Barrett Parkway Dr
Suite 250
St. Louis, MO 63021
Phone 314-394-3100
Fax 314-394-3199
Missouri Certificate of Authority: 001578

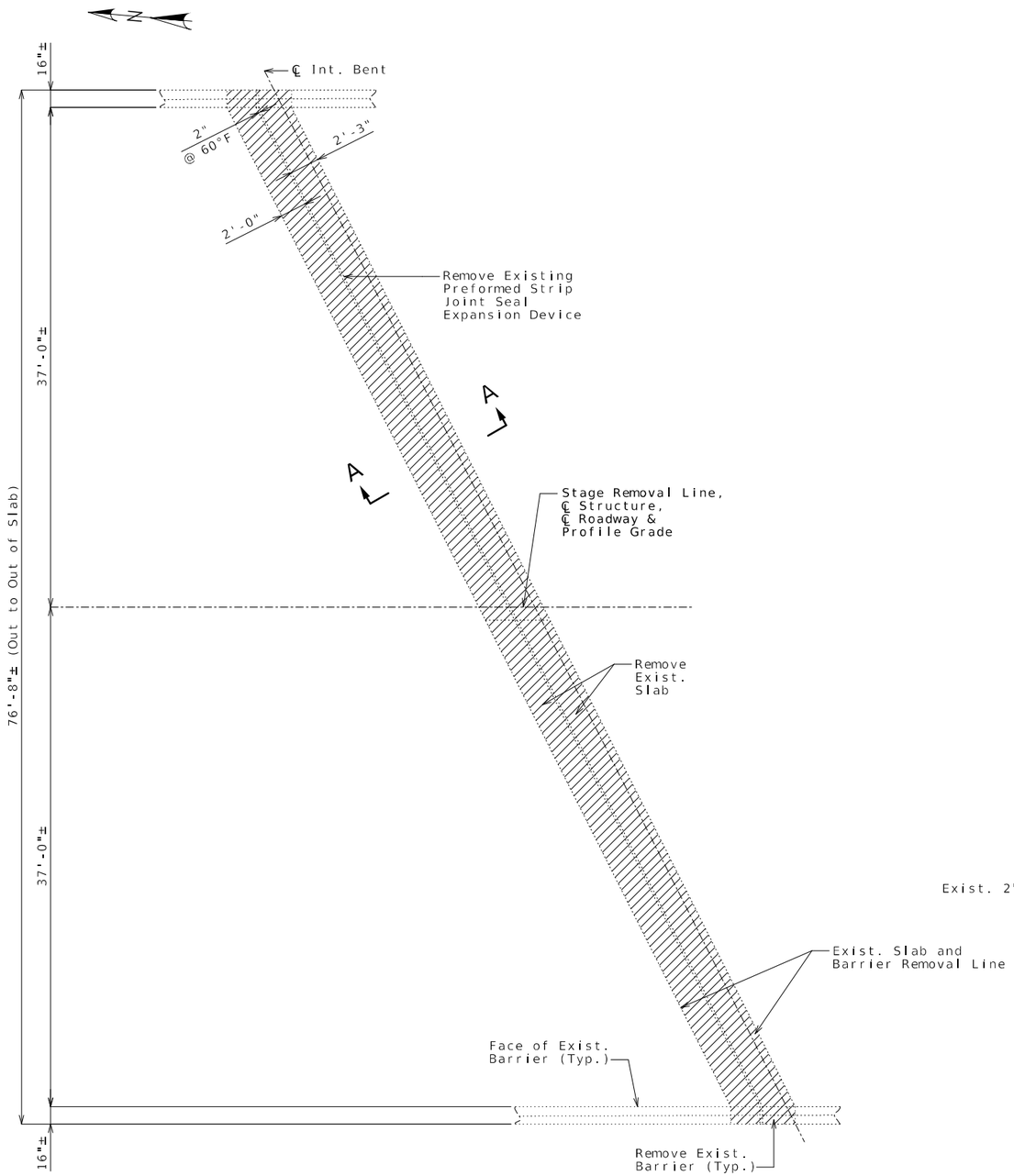

PART PLAN OF SLAB AT
INTERMEDIATE BENTS NO. 2 & 4

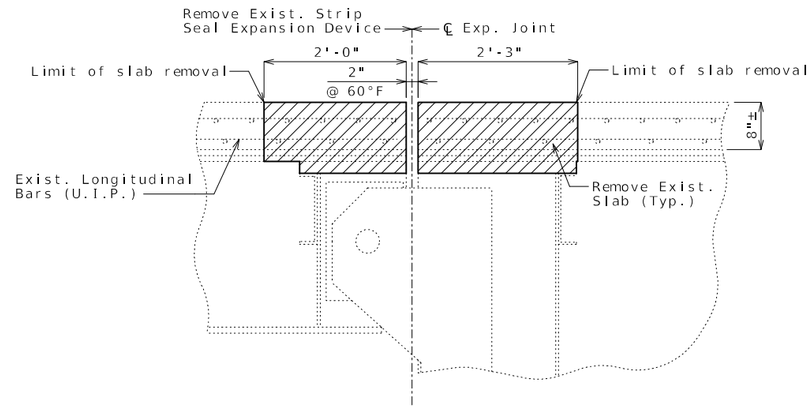

SECTION A-A

(Interior girder/beam shown, exterior girder/beam similar)

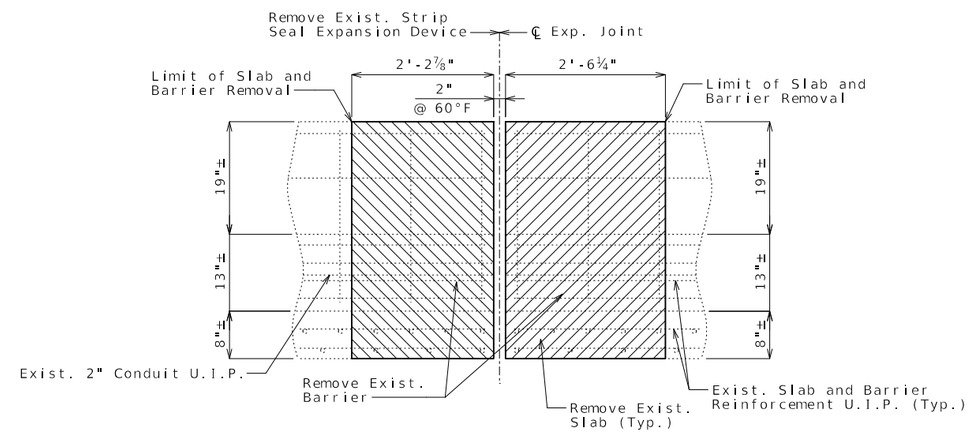

PART ELEVATION OF BARRIER
REMOVAL AT INTERMEDIATE BENTS NO. 2 & 4

Note:

Remove existing stirrups within limits of Barrier Removal.

REMOVAL DETAILS AT INTERMEDIATE BENTS NO. 2 & 4

(Int. Bent No. 2 shown, Int. Bent No .4 similar)

Detailed Mar. 2025
Checked Mar. 2025

Note: This drawing is not to scale. Follow dimensions.

STATE OF MISSOURI
ALEX BENZ
NUMBER PE-2018003121
PROFESSIONAL ENGINEER

Alex C. Benz
05/23/2025 6:59:49 AM
Alex Benz - Civil
MO PE-2018003121

DATE PREPARED	
5/23/2025	
ROUTE 63	STATE MO
DISTRICT BR	SHEET NO. 3
COUNTY MACON	
JOB NO. JNE0137	
CONTRACT ID.	
BRIDGE NO. A20432	

MISSOURI HIGHWAYS AND TRANSPORTATION COMMISSION
105 WEST CAPITOL
JEFFERSON CITY, MO 65102
1-888-ASK-MODOT (1-888-275-6636)

EFK•Moen
Civil Engineering Design
13523 Barrett Parkway Dr
Suite 250
St. Louis, MO 63021
Phone 314-394-3100
Fax 314-394-3199
Missouri Certificate of Authority: 001578

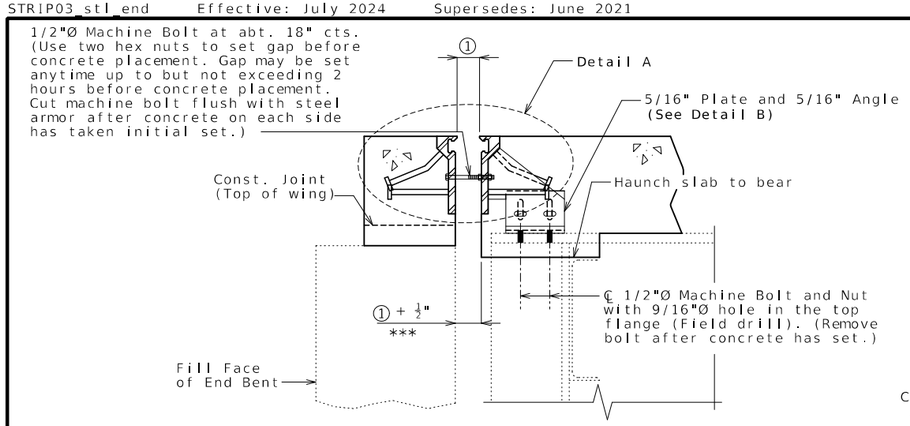

SECTION A-A

Strip seal gland not shown for clarity.

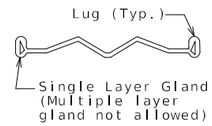

DETAIL OF GLAND

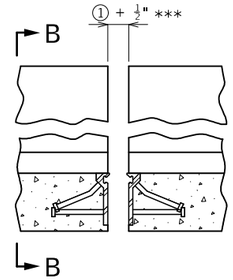

PART ELEVATION OF BARRIER

Strip seal gland not shown for clarity.

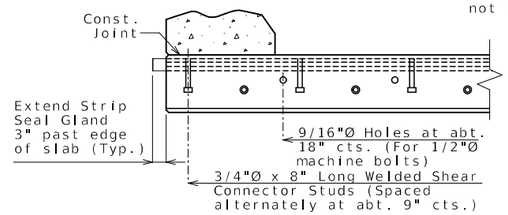

PART SECTION B-B

GENERAL NOTES:

Expansion joint system shall be fabricated in one section, except for staged construction and when the length is over 50 feet. A complete joint penetration groove welded splice shall be required. Welds shall be ground flush to provide a smooth surface. The expansion joint system shall be fabricated and installed to the crown and grade of the roadway.

The strip seal gland shall be installed in joints in one continuous piece without field splices. Factory splicing will be permitted for joints in excess of 53 feet.

Structural steel for the expansion joint system shall be ASTM A709 Grade 36 except the steel armor may be ASTM A709 Grade 50W. Anchors for the expansion joint system shall be in accordance with Sec 1037. Strip seal expansion joint system shall be in accordance with Sec 717.

Structural steel for the expansion joint system shall be coated with a minimum of two coats of inorganic zinc primer to provide a total dry film thickness of 4 mils minimum, 6 mils maximum, or galvanized in accordance with ASTM A123. Anchors need not be protected from overspray.

Longitudinal reinforcing steel shall be cut/bent so that ends shall be 1" from the vertical leg of the steel armor at the expansion joint system.

Concrete shall be forced under and around steel armor and anchors. Proper consolidation of the concrete shall be achieved by localized internal vibration.

② The installation temperature shall be taken as the actual air temperature averaged over the 24-hour period immediately preceding installation.

③ MoDOT Construction personnel will indicate the strip seal expansion joint system installed.

Steel armor may also be referred to as extrusion or rail.

The terms P and R rail are used for identification only, and are not endorsements for any particular manufacturer.

*** Because of variation in armor dimensions, the concrete opening will vary if the optional R rail is used. Dimensions shown are based on the P rail option.

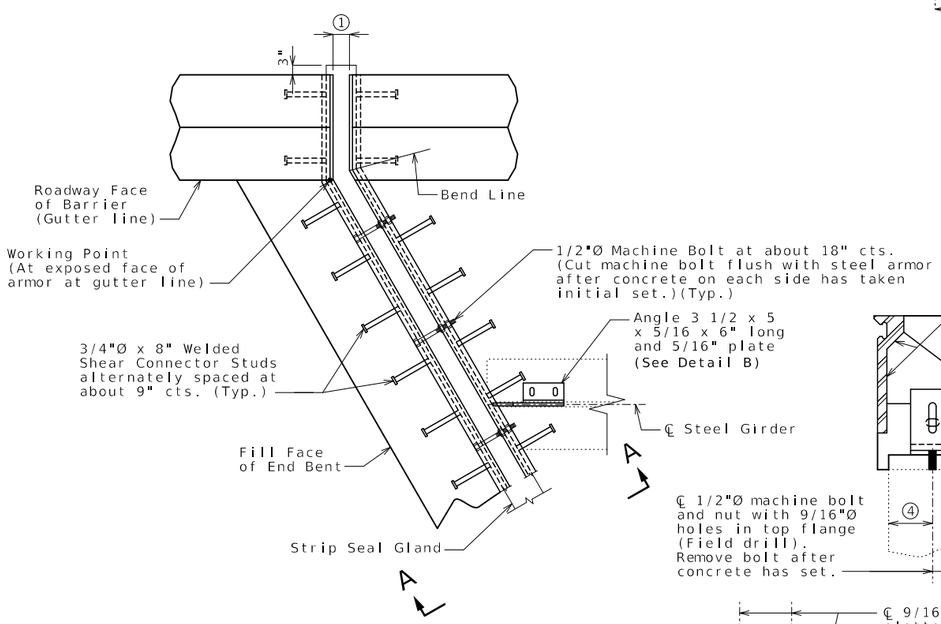

PART PLAN

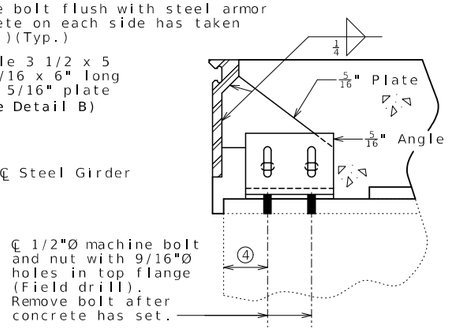

④ Field verify and reuse existing holes or adjust as needed and field drill

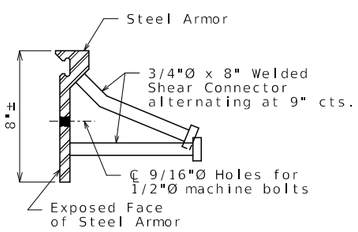

DETAIL OF JOINT ARMOR

(P Rail)

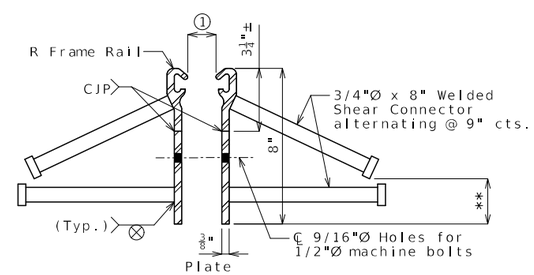

** Bend stud in shop if necessary to maintain 1" min. from bottom of vertical plate.

OPTIONAL R RAIL DETAIL

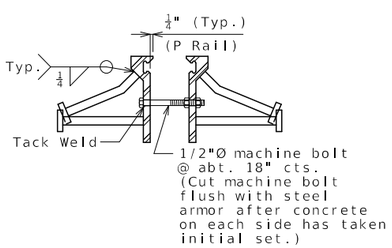

DETAIL A

(P Rail shown, R Rail similar)

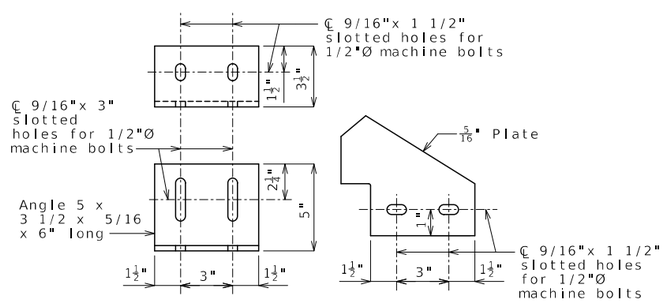

DETAIL B

Table of Allowed Transverse Strip Seal Expansion Joint System

Manufacturer	Strip Seal System (Designated Name)	Movement Parallel to RDWY	Allowed Installation Gap ① Normal to Joint at RDWY Surface @ Air/Surface Temperature ②						③
			@ 40°F	@ 50°F	@ 60°F	@ 70°F	@ 80°F	@ 90°F	
D S Brown	Strip seal L2-400	2 1/2"	2 1/8"	2 1/8"	2"	2"	2"	2"	☐
D S Brown	Strip seal L2-500	2 1/2"	2 1/8"	2 1/8"	2"	2"	2"	2"	☐
Watson Bowman Acme (Wabo)	Strip seal SE-300	2 1/2"	2 1/8"	2 1/8"	2"	2"	2"	2"	☐
Watson Bowman Acme (Wabo)	Strip seal SE-400	2 1/2"	2 1/8"	2 1/8"	2"	2"	2"	2"	☐
Watson Bowman Acme (Wabo)	Strip seal SE-500	2 1/2"	2 1/8"	2 1/8"	2"	2"	2"	2"	☐

STRIP SEAL EXPANSION JOINT SYSTEM AT END BENTS NO. 1 & 5

Detailed Mar. 2025
Checked Mar. 2025

Note: This drawing is not to scale. Follow dimensions.

STATE OF MISSOURI ALEX BENZ NUMBER PE-2018003121 PROFESSIONAL ENGINEER
Alex C. Benz
05/23/2025 6:59:39 AM
Alex Benz - Civil
MO PE-2018003121

DATE PREPARED	
5/23/2025	
ROUTE 63	STATE MO
DISTRICT BR	SHEET NO. 4
COUNTY MACON	
JOB NO. JNE0137	
CONTRACT ID.	
BRIDGE NO. A20432	

MISSOURI HIGHWAYS AND TRANSPORTATION COMMISSION
105 WEST CAPITOL
JEFFERSON CITY, MO 65102
1-888-ASK-MODOT (1-888-275-6636)

EFK•Moen
Civil Engineering Design
13523 Barrett Parkway Dr Suite 250 St. Louis, MO 63021
Phone 314-394-3100
Fax 314-394-3199
Missouri Certificate of Authority: 001578

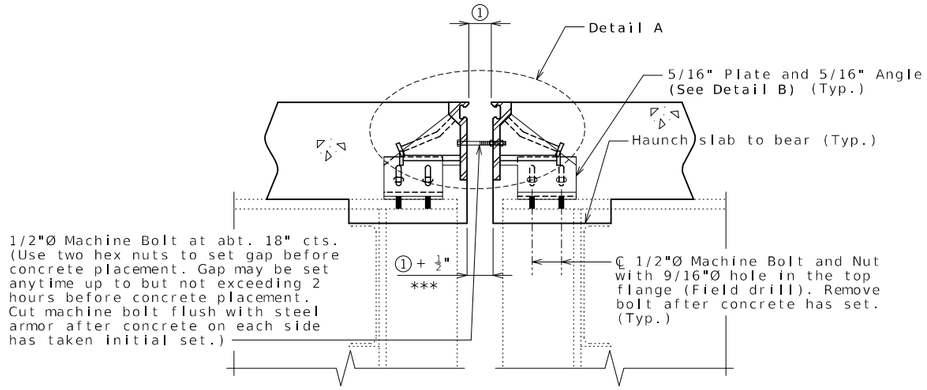

SECTION A-A

Strip seal gland not shown for clarity.

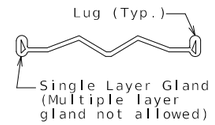

DETAIL OF GLAND

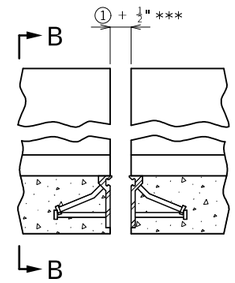

PART ELEVATION OF BARRIER

Strip seal gland not shown for clarity.

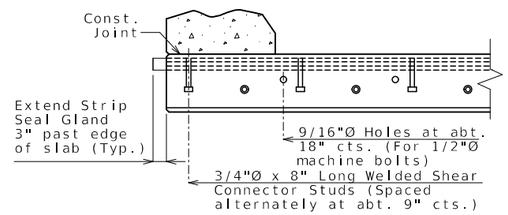

PART SECTION B-B

GENERAL NOTES:

Expansion joint system shall be fabricated in one section, except for staged construction and when the length is over 50 feet. A complete joint penetration groove welded splice shall be required. Welds shall be ground flush to provide a smooth surface. The expansion joint system shall be fabricated and installed to the crown and grade of the roadway.

The strip seal gland shall be installed in joints in one continuous piece without field splices. Factory splicing will be permitted for joints in excess of 53 feet.

Structural steel for the expansion joint system shall be ASTM A709 Grade 36 except the steel armor may be ASTM A709 Grade 50W. Anchors for the expansion joint system shall be in accordance with Sec 1037. Strip seal expansion joint system shall be in accordance with Sec 717.

Structural steel for the expansion joint system shall be coated with a minimum of two coats of inorganic zinc primer to provide a total dry film thickness of 4 mils minimum, 6 mils maximum, or galvanized in accordance with ASTM A123. Anchors need not be protected from overspray.

Longitudinal reinforcing steel shall be cut/bent so that ends shall be 1" from the vertical leg of the steel armor at the expansion joint system.

Concrete shall be forced under and around steel armor and anchors. Proper consolidation of the concrete shall be achieved by localized internal vibration.

② The installation temperature shall be taken as the actual air temperature averaged over the 24-hour period immediately preceding installation.

③ MoDOT Construction personnel will indicate the strip seal expansion joint system installed.

Steel armor may also be referred to as extrusion or rail.

The terms P and R rail are used for identification only, and are not endorsements for any particular manufacturer.

*** Because of variation in armor dimensions, the concrete opening will vary if the optional R rail is used. Dimensions shown are based on the P rail option.

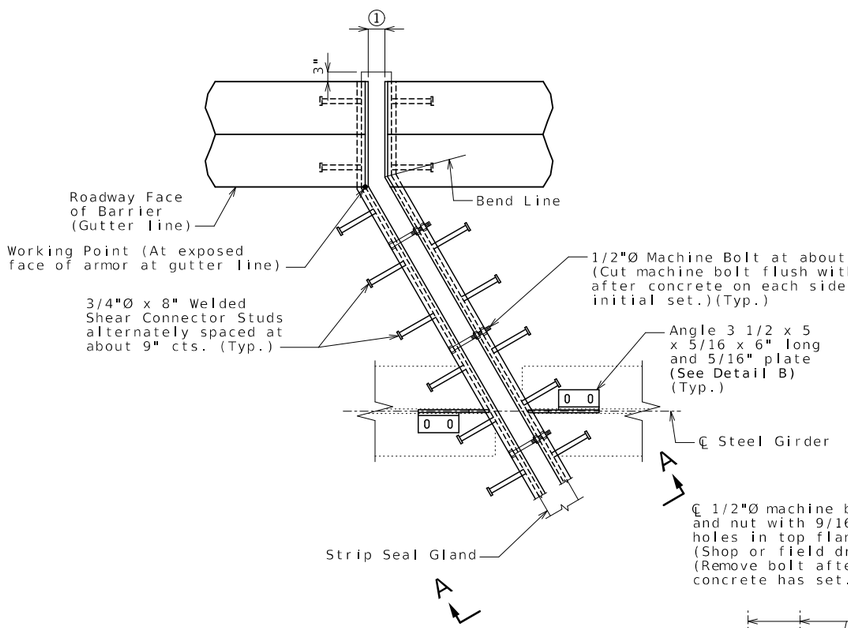

PART PLAN

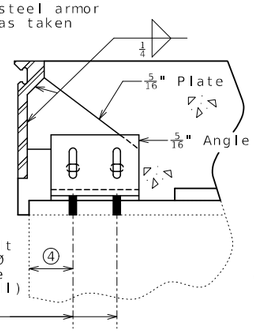

④ Field verify and reuse existing holes or adjust as needed and field drill

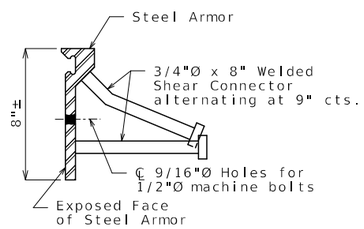

DETAIL OF JOINT ARMOR

(P Rail)

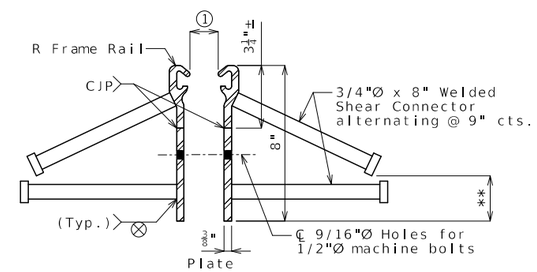

** Bend stud in shop if necessary to maintain 1" min. from bottom of vertical plate.

OPTIONAL R RAIL DETAIL

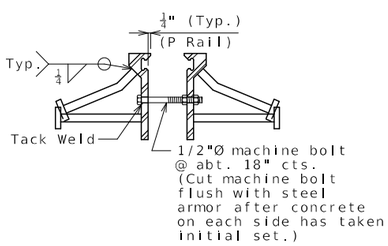

DETAIL A

(P Rail shown, R Rail similar)

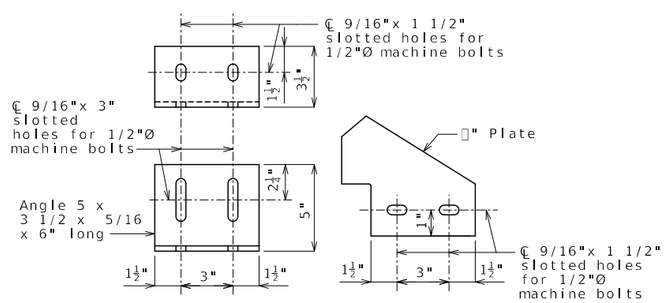

DETAIL B

Table of Allowed Transverse Strip Seal Expansion Joint System

Manufacturer	Strip Seal System (Designated Name)	Movement Parallel to RDWY	Allowed Installation Gap ① Normal to Joint at RDWY Surface @ Air/Surface Temperature ②						③
			@ 40°F	@ 50°F	@ 60°F	@ 70°F	@ 80°F	@ 90°F	
D S Brown	Strip seal L2-400	3"	2 1/4"	2 1/8"	2"	2"	1 7/8"	1 3/4"	□
D S Brown	Strip seal L2-500	3"	2 1/4"	2 1/8"	2"	2"	1 7/8"	1 3/4"	□
Watson Bowman Acme (Wabo)	Strip seal SE-300	3"	2 1/4"	2 1/8"	2"	2"	1 7/8"	1 3/4"	□
Watson Bowman Acme (Wabo)	Strip seal SE-400	3"	2 1/4"	2 1/8"	2"	2"	1 7/8"	1 3/4"	□
Watson Bowman Acme (Wabo)	Strip seal SE-500	3"	2 1/4"	2 1/8"	2"	2"	1 7/8"	1 3/4"	□

STRIP SEAL EXPANSION JOINT SYSTEM AT INTERMEDIATE BENTS NO. 2 & 4

Detailed Mar. 2025
Checked Mar. 2025

Note: This drawing is not to scale. Follow dimensions.

STATE OF MISSOURI ALEX BENZ NUMBER PE-2018003121 PROFESSIONAL ENGINEER

Alex C. Benz
05/23/2025 6:59:31 AM
Alex Benz - Civil
MO PE-2018003121

DATE PREPARED	
5/23/2025	
ROUTE 63	STATE MO
DISTRICT BR	SHEET NO. 5
COUNTY MACON	
JOB NO. JNE0137	
CONTRACT ID.	
PROJECT NO.	
BRIDGE NO. A20432	

MISSOURI HIGHWAYS AND TRANSPORTATION COMMISSION
105 WEST CAPITOL
JEFFERSON CITY, MO 65102
1-888-ASK-MODOT (1-888-275-6636)

EFK•Moen
Civil Engineering Design
13523 Barrett Parkway Dr
Suite 250
St. Louis, MO 63021
Phone 314-394-3100
Fax 314-394-3199
Missouri Certificate of Authority: 001578

*Field bend H1, S1 and S2 bars as required

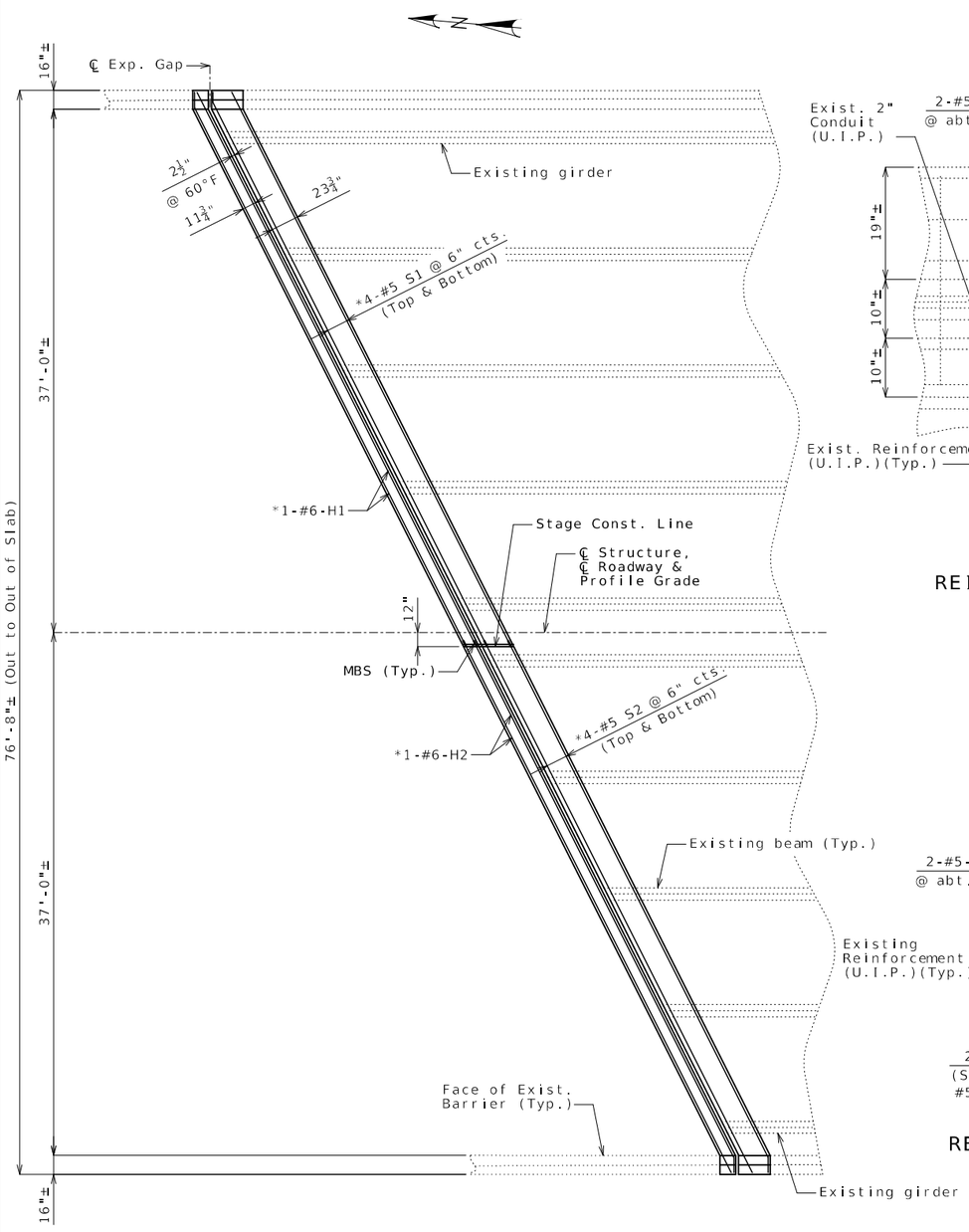

PART PLAN OF SLAB SHOWING REINFORCEMENT AT END BENT NO. 1

End Bent No. 5 similar
Existing reinforcement not shown for clarity

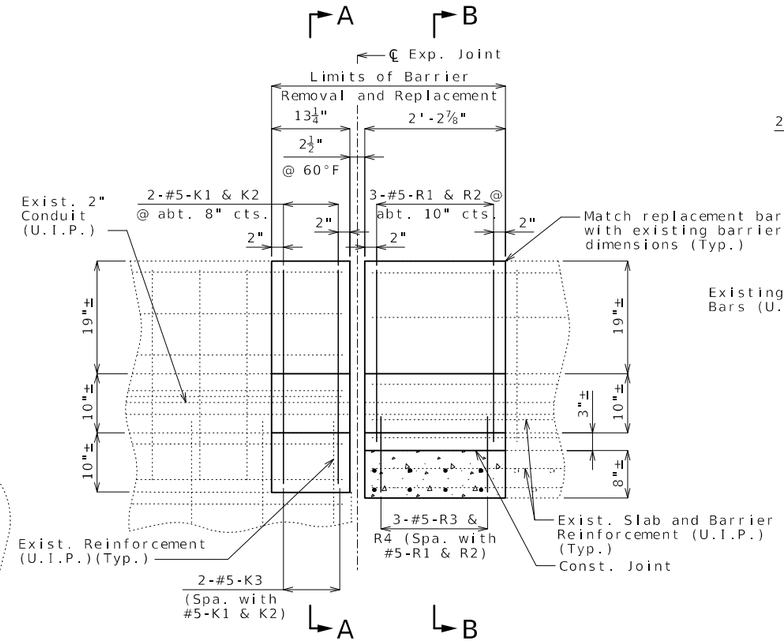

ELEVATION SHOWING BARRIER REINFORCEMENT AT END BENT NO. 1

(End Bent No. 5 similar)

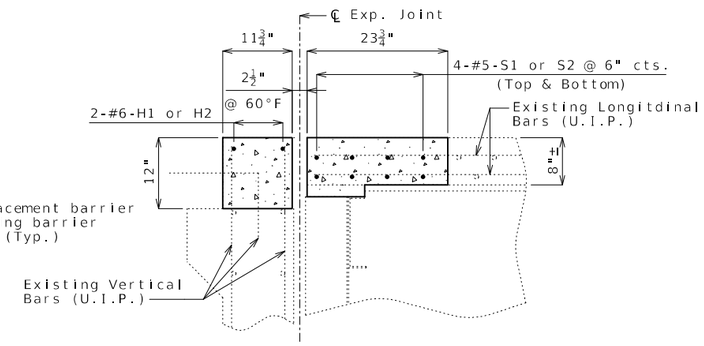

ELEVATION SHOWING SLAB REINFORCEMENT AT END BENT NO. 1

(End Bent No. 5 similar)

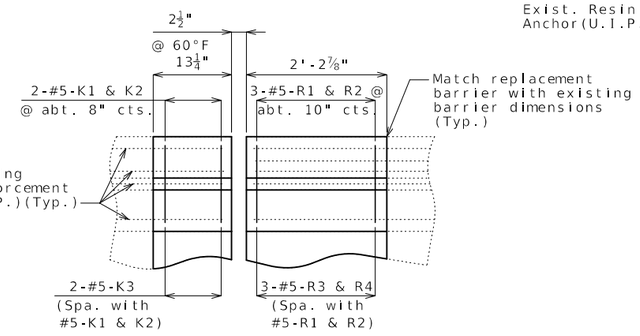

PART PLAN SHOWING BARRIER REINFORCEMENT AT END BENT NO. 1

(End Bent No. 5 similar)

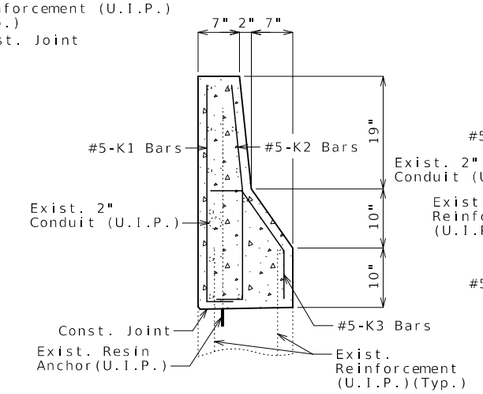

SECTION A-A

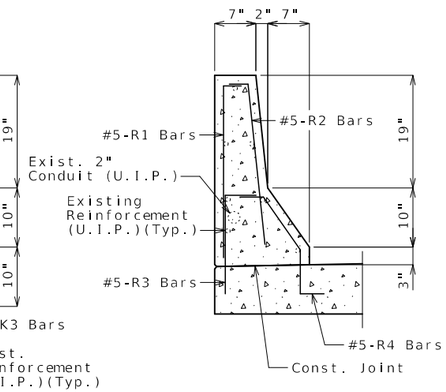

SECTION B-B

Notes:

MBS refers to mechanical bar splices. Mechanical bar splices shall be in accordance with Sec 706 or 710 except that no measurement will be made for mechanical bar splices and they will be considered completely covered by the contract unit price for other items.

Top of Barrier shall be built parallel to the grade with barrier joints normal to grade.

All exposed edges of Barrier shall have either a 1/2" radius or a 3/8" bevel, unless otherwise noted.

Payment for all concrete and reinforcement in Barrier, complete in place will be considered completely covered by the contract unit price for Remove and Replace Barrier.

Concrete in Barrier shall be Class B-1.

Concrete in Slab shall be Class B-2.

Measurement of Remove and Replace Barrier is to the nearest linear foot for each structure, measured along the outside of slab.

All exposed edges of new Barrier shall match existing barrier.

DETAILS OF STRIP SEAL REPLACEMENT CONCRETE AT END BENTS NO. 1 & 5

Detailed Mar. 2025
Checked Mar. 2025

Note: This drawing is not to scale. Follow dimensions.

STATE OF MISSOURI — ALEX BENZ — NUMBER PE-2018003121 — PROFESSIONAL ENGINEER

Alex C. Benz
05/23/2025 6:59:19 AM
Alex Benz - Civil
MO PE-2018003121

DATE PREPARED	
5/23/2025	
ROUTE 63	STATE MO
DISTRICT BR	SHEET NO. 6
COUNTY MACON	
JOB NO. JNE0137	
CONTRACT ID.	
BRIDGE NO. A20432	

MISSOURI HIGHWAYS AND TRANSPORTATION COMMISSION
105 WEST CAPITOL
JEFFERSON CITY, MO 65102
1-888-ASK-MODOT (1-888-275-6636)

EFK•Moen
Civil Engineering Design
13523 Barrett Parkway Dr
Suite 250
St. Louis, MO 63021
Phone 314-394-3100
Fax 314-394-3199
Missouri Certificate of Authority: 001578

*Field bend S1 and S2 bars as required

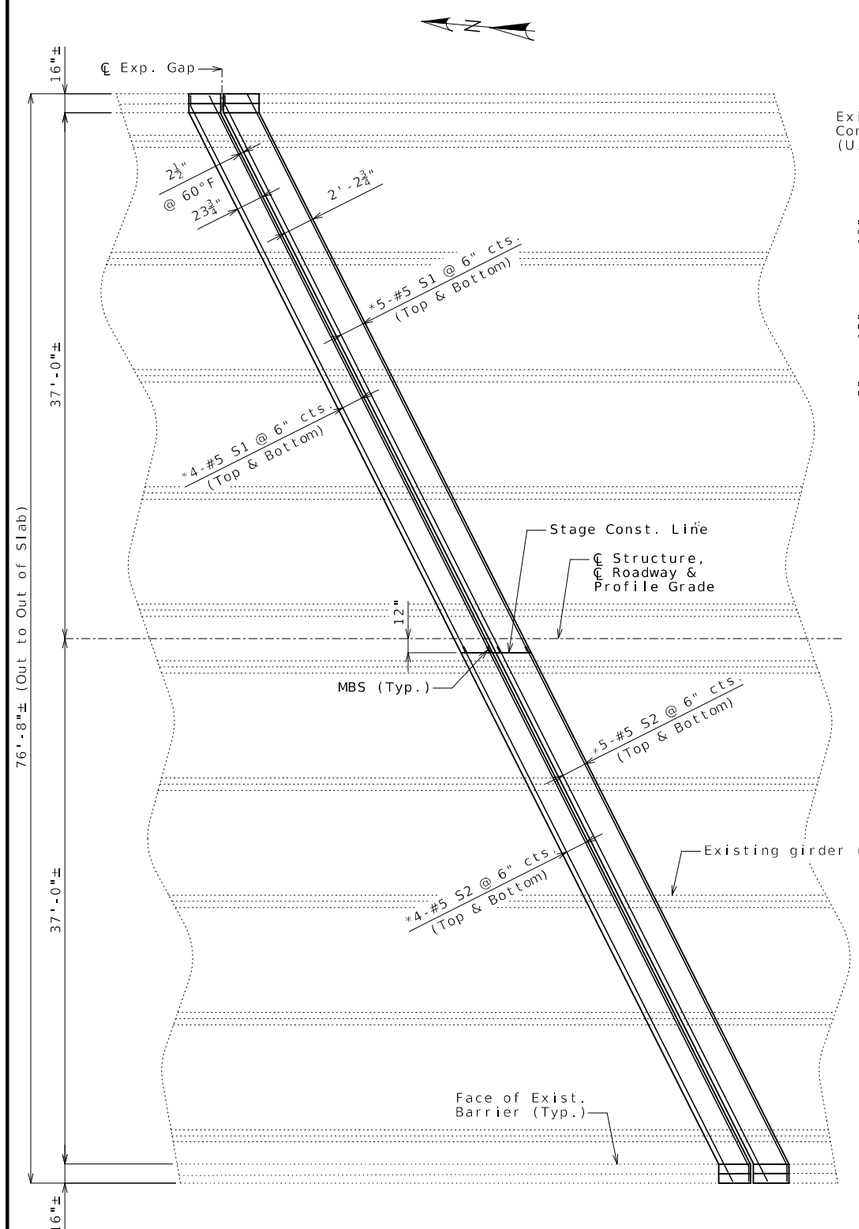

PART PLAN OF SLAB SHOWING
REINFORCEMENT AT INTERMEDIATE BENT NO. 2

Intermediate Bent No. 4 similar
Existing reinforcement not shown for clarity

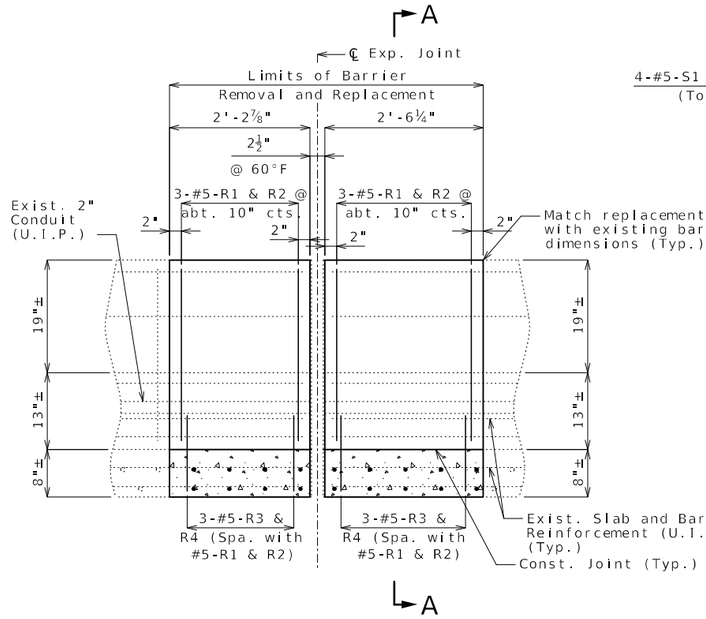

ELEVATION SHOWING BARRIER
REINFORCEMENT AT INTERMEDIATE BENT NO. 2

(Intermediate Bent No. 4 similar)

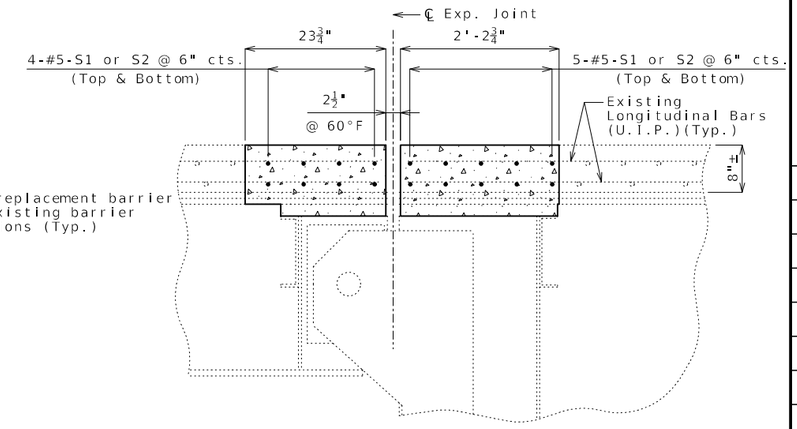

ELEVATION SHOWING SLAB
REINFORCEMENT AT INTERMEDIATE BENT NO. 2

(Intermediate Bent No. 4 similar)

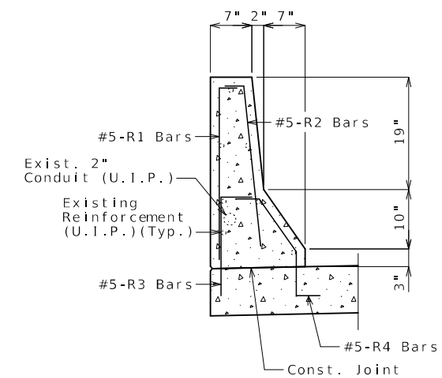

SECTION A-A

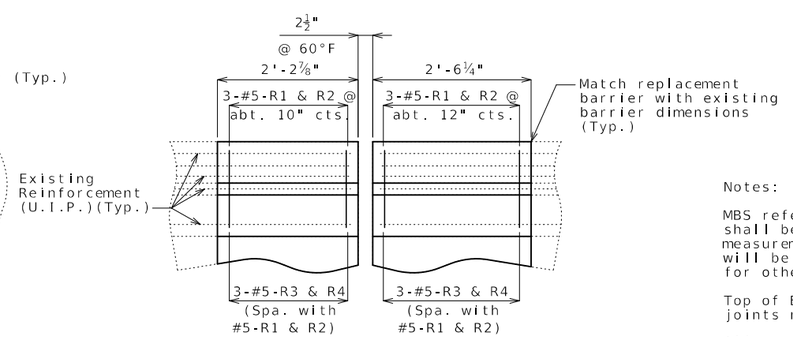

PART PLAN SHOWING BARRIER
REINFORCEMENT AT INTERMEDIATE BENT NO. 2

(Intermediate Bent No. 4 similar)

Notes:

MBS refers to mechanical bar splices. Mechanical bar splices shall be in accordance with Sec 706 or 710 except that no measurement will be made for mechanical bar splices and they will be considered completely covered by the contract unit price for other items.

Top of Barrier shall be built parallel to the grade with barrier joints normal to grade.

All exposed edges of Barrier shall have either a 1/2" radius or a 3/8" bevel, unless otherwise noted.

Payment for all concrete and reinforcement in Barrier, complete in place will be considered completely covered by the contract unit price for Remove and Replace Barrier.

Concrete in Barrier shall be Class B-1.

Concrete in Slab shall be Class B-2.

Measurement of Remove and Replace Barrier is to the nearest linear foot for each structure, measured along the outside of slab.

All exposed edges of new Barrier shall match existing barrier.

DETAILS OF STRIP SEAL REPLACEMENT CONCRETE AT INTERMEDIATE BENTS NO. 2 & 4

Detailed Mar. 2025
Checked Mar. 2025

Note: This drawing is not to scale. Follow dimensions.

STATE OF MISSOURI ALEX BENZ NUMBER PE-2018003121 PROFESSIONAL ENGINEER
Alex C. Benz
05/23/2025 6:58:59 AM
Alex Benz - Civil
MO PE-2018003121

DATE PREPARED 5/23/2025	
ROUTE 63	STATE MO
DISTRICT BR	SHEET NO. 7
COUNTY MACON	
JOB NO. JNE0137	
CONTRACT ID.	
BRIDGE NO. A20432	

MISSOURI HIGHWAYS AND TRANSPORTATION COMMISSION
105 WEST CAPITOL
JEFFERSON CITY, MO 65102
1-888-ASK-MODOT (1-888-275-6636)

EFK•Moen
Civil Engineering Design
13523 Barrett Parkway Dr
Suite 250
St. Louis, MO 63021
Phone 314-394-3100
Fax 314-394-3199
Missouri Certificate of Authority: 001578

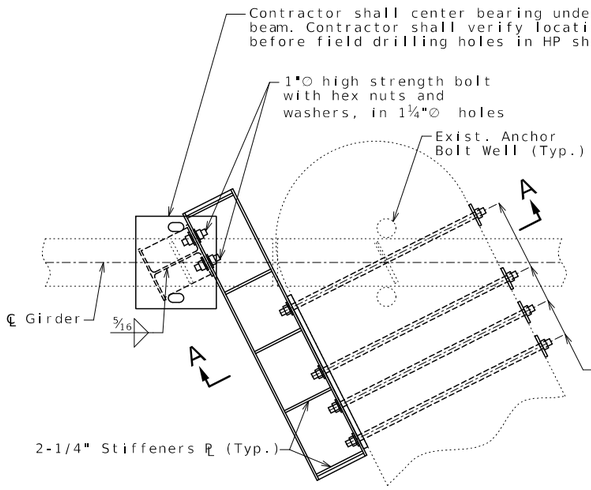

PARTIAL PLAN AT
GIRDER 1 AT
INT. BENT NO .2

Girder 10 at Int. Bent No. 4 similar

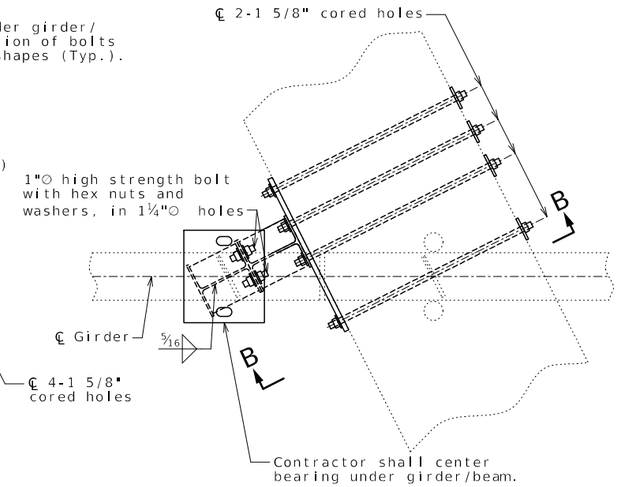

PARTIAL PLAN
AT GIRDERS 2 THRU 10
AT INT. BENT NO .2

Girder 1 thru 9 at Int. Bent No. 4 similar

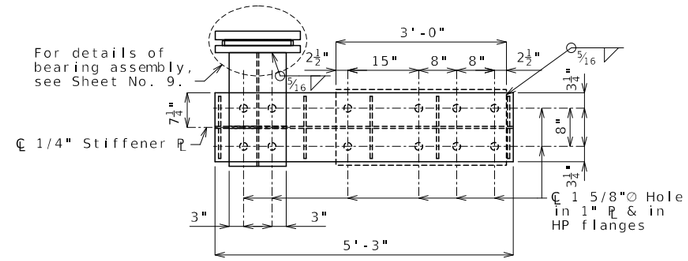

VIEW C-C

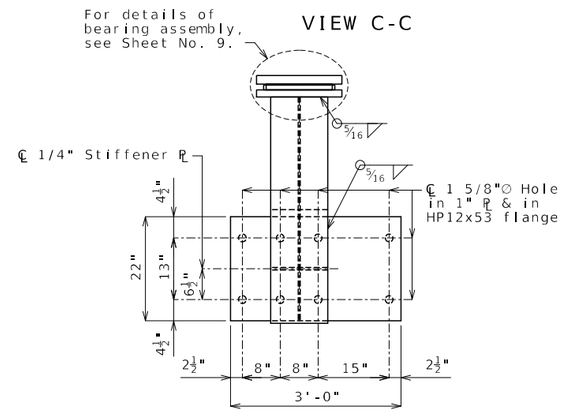

VIEW D-D

Notes:

All structural steel shall be fabricated from ASTM A709 Gr. 50 steel and in accordance with Sec 1080 and 1081.

Resin anchor system shall be in accordance with Sec 1039.

Girder Catch System shall be installed vertically, and within 1/16" (Typ.) to bottom of bridge girders.

All threaded rods, bolts, hardened washers, plate washers and nuts shall be galvanized in accordance with Sec 1080.

1 5/8"∅ cored holes shall be completely filled with 4000 psi non-shrink grout or epoxy resin.

Cost of furnishing and installing the resin anchor systems, complete in place, will be considered completely covered by contract unit price for Girder Catch System.

The minimum embedment depth in concrete for the resin anchor systems shall be that required to meet the minimum ultimate pullout strength of 30,000 lbs. but shall not be less than 12".

All strutural steel, bolts, nuts, washers, laminated neoprene bearing pad assembly, plates, cross bracing and paint for the Girder Catch System, complete in place, shall be considered completely covered by the contract unit price for Girder Catch System per each.

Notch toughness is required for all HP shapes.

The contractor shall field locate and mark existing reinforcing steel in the intermediate bent cap using non destructive scanning methods prior to coring holes into concrete. The cored holes shall be located vertically to avoid all horizontal bars and shall be adjusted horizontally within 1"to best avoid vertical stirrups.

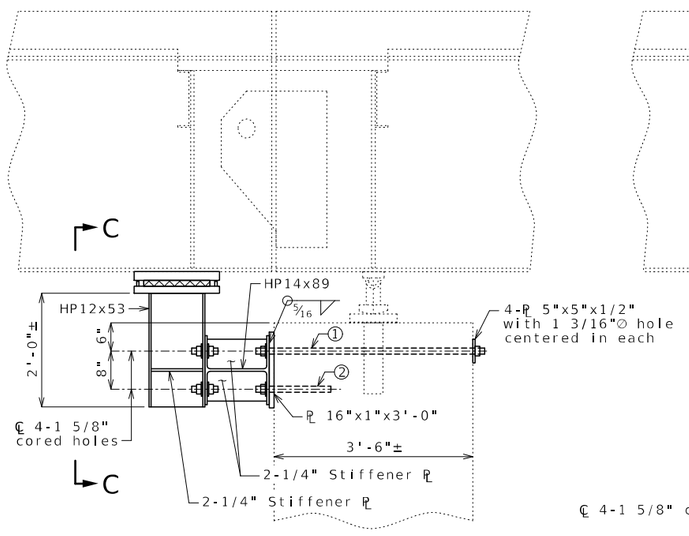

SECTION A-A
AT EXTERIOR GIRDER 1
AT INT. BENT NO. 2

Girder 10 at Int. Bent No. 4 similar

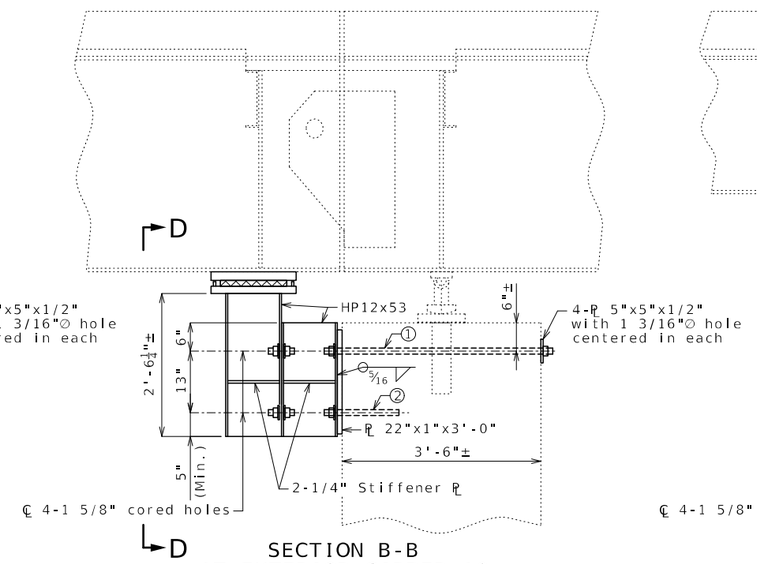

SECTION B-B
AT EXTERIOR GIRDER 10
AT INT. BENT NO. 2

Girder 1 at Int. Bent No. 4 similar

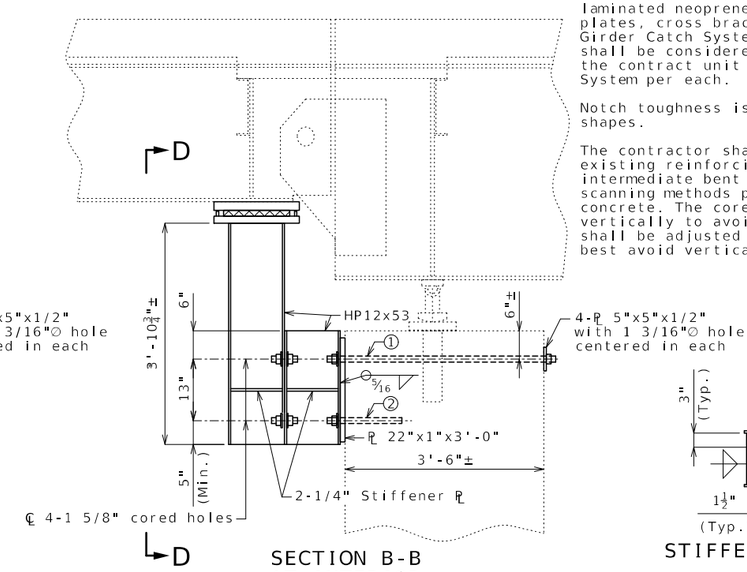

SECTION B-B
AT INTERIOR
GIRDERS

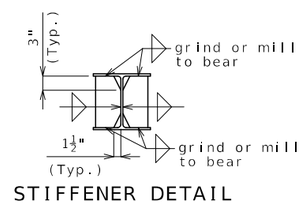

STIFFENER DETAIL

① ℄ 4 Cored holes 1 5/8"∅ in beam cap (Typ.);
4 Threaded rods 1 1/8"∅ ASTM F1554 Grade 105;
Torqued to 700 lb-ft (30 kips)(each)
4 3"x3"x5/16" plate washer with 1 3/16"∅ hole;
8 Hardened washers; 8 hex nuts; burr threads

② ℄ 4 Resin Anchor Systems include:
4 Cored holes 1 5/8"∅ in beam cap (Typ.);
4 Threaded rods 1 1/8"∅ ASTM F1554 Grade 105;
with 12" embedment (Typ.) in beam cap;
4 3"x3"x5/16" plate washer with 1 3/16"∅ hole;
8 Hardened washers; 8 hex nuts; burr threads

DETAILS OF GIRDER CATCH SYSTEM AT INT. BENTS NO. 2 & 4

Detailed Mar. 2025
Checked Mar. 2025

Note: This drawing is not to scale. Follow dimensions.

Sheet No. 8 of 10

STATE OF MISSOURI
ALEX BENZ
NUMBER PE-2018003121
PROFESSIONAL ENGINEER

Alex C. Benz
05/23/2025 6:58:50 AM
Alex Benz - Civil
MO PE-2018003121

DATE PREPARED	
5/23/2025	
ROUTE 63	STATE MO
DISTRICT BR	SHEET NO. 8
COUNTY MACON	
JOB NO. JNE0137	
CONTRACT ID.	
BRIDGE NO. A20432	

MISSOURI HIGHWAYS AND TRANSPORTATION COMMISSION
105 WEST CAPITOL
JEFFERSON CITY, MO 65102
1-888-ASK-MODOT (1-888-275-6636)

EFK•Moen
Civil Engineering Design
13523 Barrett Parkway Dr
Suite 250
St. Louis, MO 63021
Phone 314-394-3100
Fax 314-394-3199
Missouri Certificate of Authority: 001578

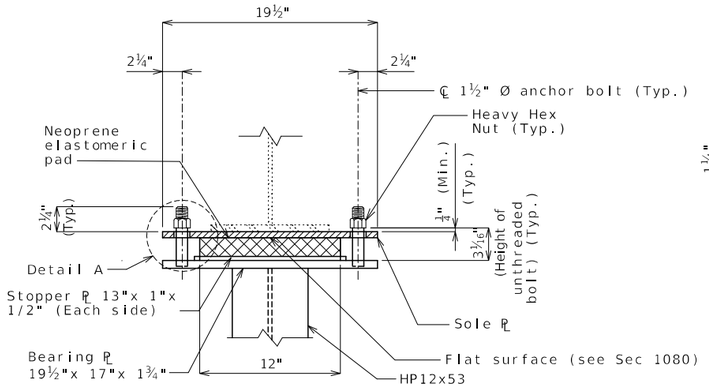

END VIEW

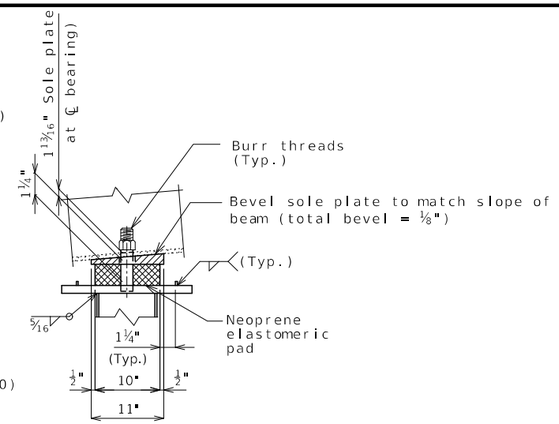

SIDE VIEW

Ahead Sta.

Bent 2

Bent 4

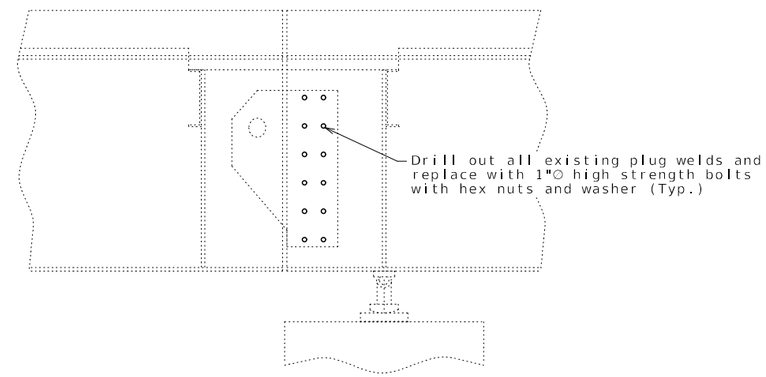

PLUG WELD REPLACEMENT NEAR INT. BENTS NO. 2 & 4

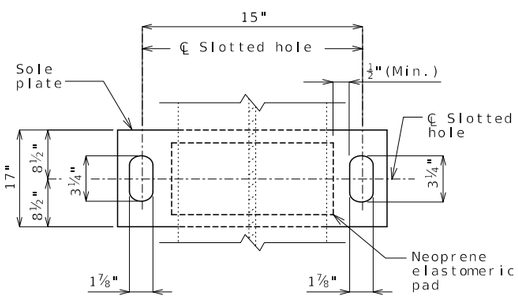

PART PLAN

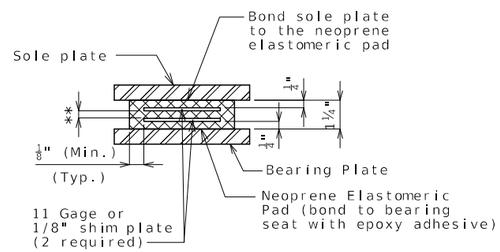

** Layers of 1/2" elastomer alternating with 11 gage or 1/8" shim plate

NEOPRENE ELASTOMERIC PAD

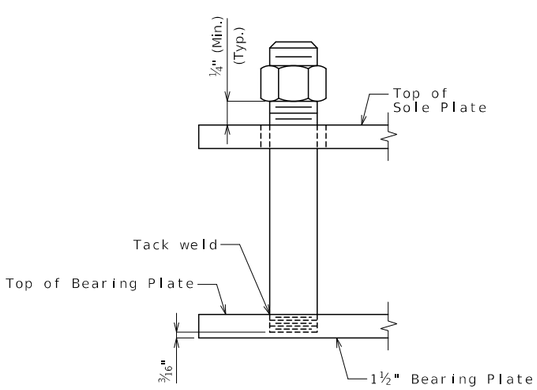

DETAIL A

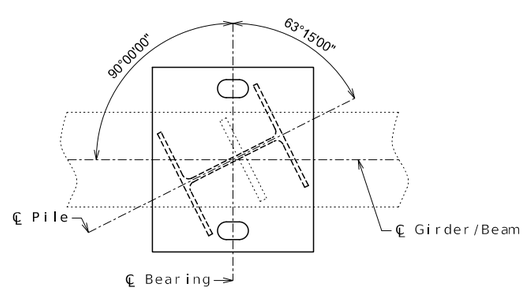

BEARING AND PILE LAYOUT

GENERAL NOTES:

Anchor bolts shall be 1 1/2" Ø ASTM F1554 Grade 55 bolts with ASTM A563 Grade A DH Heavy Hex nuts. Actual manufacturer's certified mill test reports(chemical and mechanical) shall be provided.

All structural steel for the anchor bolts and heavy hexagon nuts shall be coated with a minimum of two coats of inorganic zinc primer (5 mils minimum).

Neoprene Elastomeric Pads shall be 60 Durometer.

Structural steel for sole plate, bearing plate and stopper plates shall be ASTM A709 Grade 50 and shall be coated with a minimum of two coats of inorganic zinc primer to provide a total dry film thickness of 4 mils minimum, 6 mils maximum.

Laminated Neoprene Bearing Pad Assembly shall be in accordance with Sec 716.

The 1 1/2" bearing plate shall be tapped to receive the 1 1/2"∅ anchor bolts.

DETAILS OF GIRDER CATCH SYSTEM AT INT. BENTS NO. 2 & 4

Detailed Mar. 2025
Checked Mar. 2025

Note: This drawing is not to scale. Follow dimensions.

Sheet No. 9 of 10

STATE OF MISSOURI
ALEX BENZ
NUMBER PE-2018003121
PROFESSIONAL ENGINEER

Alex C. Benz
05/23/2025 6:58:36 AM
Alex Benz - Civil
MO PE-2018003121

DATE PREPARED	
5/23/2025	
ROUTE 63	STATE MO
DISTRICT BR	SHEET NO. 9
COUNTY MACON	
JOB NO. JNE0137	
CONTRACT ID.	
BRIDGE NO. A20432	

MISSOURI HIGHWAYS AND TRANSPORTATION COMMISSION
105 WEST CAPITOL
JEFFERSON CITY, MO 65102
1-888-ASK-MODOT (1-888-275-6636)

EFK•Moen
Civil Engineering Design
13523 Barrett Parkway Dr
Suite 250
St. Louis, MO 63021
Phone 314-394-3100
Fax 314-394-3199
Missouri Certificate of Authority: 001578

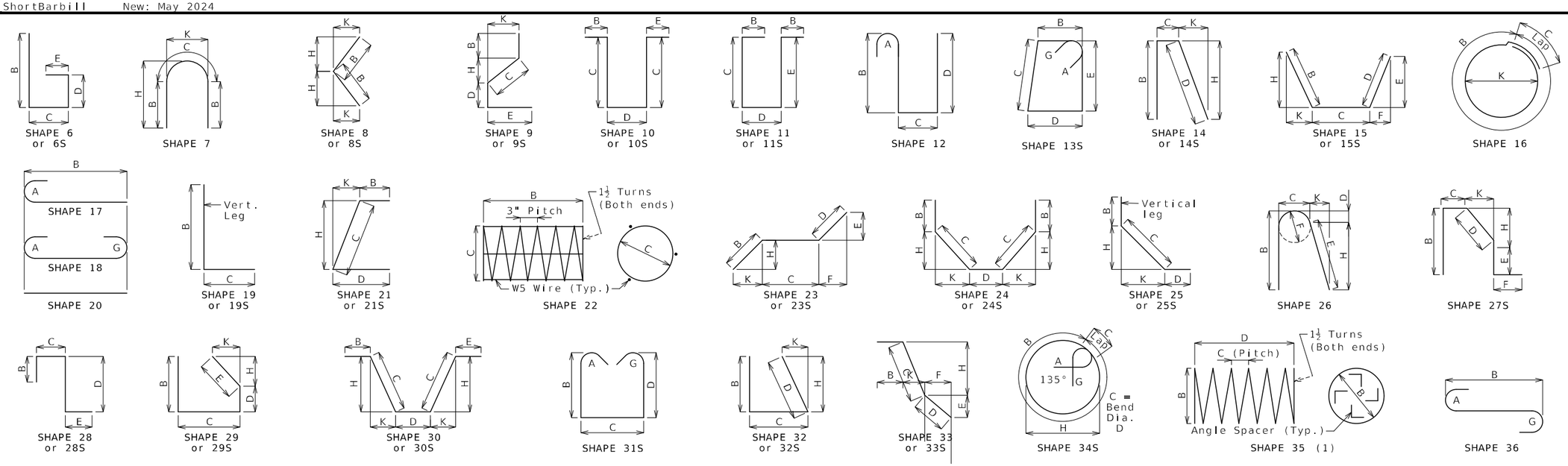

BENDING DIAGRAMS

Nominal lengths are based on out to out dimensions shown in bending diagrams and are listed to the nearest inch for fabricator's use. Actual lengths are measured along centerline bar to the nearest inch. Weights are based on actual lengths.

All bars shall be Grade 60.

Codes: C = Required coatings, where E = Epoxy Coated and G = Galvanized.

SH = Required shape, see bending diagrams.

V = Sets of varied bars and number of bars of each length. Bar dimensions vary in equal increments between dimensions shown on this line and the following line and the actual length dimension shown on this line and the following line vary by the specified increment.

All dimensions are out to out.

Shapes ending with an S shall be bent in accordance with stirrup pin bend shapes.

Unless otherwise noted, finished bending diameter D is the same for all bends of a shape.

(1) Shall be a deformed or plain spiral bar or wire.

Four angle or channel spacers are required for each column spiral. Spacers are to be placed on inside of spirals. Length and weight of column spirals do not include splices or spacers.

Finished Bend Diameters D and Hook Dimensions

Standard Pin Bend Shapes

Size	Case	D	A or G 90°	A or G 180°	J 180°
#4	1	3"	8"	6"	4"
#5	1	3¾"	10"	7"	5"
#6	1	4½"	12"	8¼"	6"
#7	2	5¼"	14"	9¾"	7"
	3	7"	15"	11½"	8¾"
#8	2	6"	16"	11"	8"
	3	8"	17"	13¼"	10"
#9	1	9½"	19½"	15½"	11¾"
#10	1	10¾"	22"	17½"	13¼"
#11	1	12"	24½"	19½"	14⅞"
#14	1	18¼"	31¼"	27¼"	21⅝"
#18	1	24"	41½"	36¼"	28½"

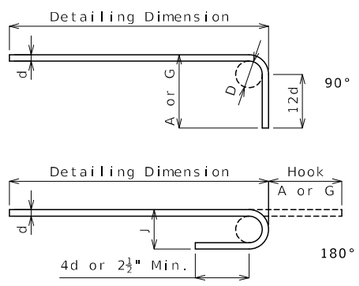

Stirrup Pin Bend Shapes (S)

Size	Case	D	A or G 90°	A or G 135°	A or G 180°	H 135°	J 180°
#4	2	2"	4½"	4½"	5"	2⅞"	3"
	3	3"	5"	5¼"	6"	3"	4"
#5	2	2½"	5¾"	5¾"	5¾"	3⅝"	3¾"
	3	3¾"	6¼"	6½"	7"	3⅞"	5"
#6	1	4½"	12"	7¾"	8¼"	4⅝"	6"

Applicable for all grades of steel.

Case 1 applies to all reinforcement. Case 2 applies to all reinforcement except for galvanized bars. Case 3 applies to galvanized bars only.

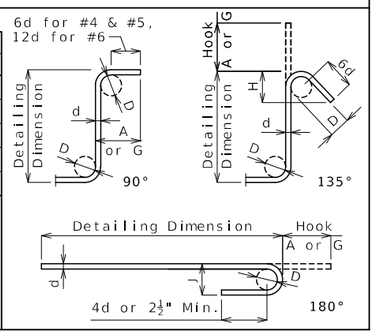

Reinforcing Steel Totals (Pounds)

	Size	Substructure Plain	Substructure Epoxy	Superstructure Slab	Superstructure Barrier	Superstructure Slip Form	Entire Bridge Plain	Entire Bridge Epoxy
By Size	W5	0	0	0	0	0	0	0
	4	0	0	0	0	0	0	0
	5	0	0	4633	491	0	0	5124
	6	0	0	513	0	0	0	513
	7	0	0	0	0	0	0	0
By Type		0	0	5146	491	0	0	5637

All superstructure reinforcing steel shall be epoxy coated unless otherwise specified.

Bill of Reinforcing Steel

No. Req.	Size/ Mark	Location	Codes C	Codes SH	Codes V	B ft in.	C ft in.	D ft in.	E ft in.	F ft in.	H ft in.	K ft in.	Nom. Length ft in.	Actual Length ft in.	Weight lb
4	6 H1	SLAB	E	20		43 9.000							43 9	43 9	263
4	6 H2	SLAB	E	20		41 8.000							41 8	41 8	250
52	5 S1	SLAB	E	20		43 9.000							43 9	43 9	2373
52	5 S2	SLAB	E	20		41 8.000							41 8	41 8	2260
8	5 K1	BARRIER	E	19 S		3 0.500	5.125						3 6	3 4	28
8	5 K2	BARRIER	E	14 S		5.125	19.125	18.000			2.000	17.875	3 6	3 5	29
8	5 K3	BARRIER	E	27 S		3 1.500	5.125	12.000	2 3.625		9.875	6.875	6 10	6 8	56
36	5 R1	BARRIER	E	19 S		2 6.000	3.500						2 10	2 8	100
36	5 R2	BARRIER	E	15 S		2 6.125	3.500				2 6.000	3.000	2 10	2 9	103
36	5 R3	BARRIER	E	19 S		17.000	6.000						1 11	1 10	69
36	5 R4	BARRIER	E	27 S			6.000	11.250	7.000	12.000	9.250	6.375	3 0	2 10	106

BENDING DIAGRAMS AND REINFORCING STEEL TOTALS

Detailed Mar. 2025
Checked Mar. 2025

Note: This drawing is not to scale. Follow dimensions.

STATE OF MISSOURI ALEX BENZ NUMBER PE-2018003121 PROFESSIONAL ENGINEER

Alex C. Benz
05/23/2025 6:58:20 AM
Alex Benz - Civil
MO PE-2018003121

DATE PREPARED	
5/23/2025	
ROUTE 63	STATE MO
DISTRICT BR	SHEET NO. 10
COUNTY MACON	
JOB NO. JNE0137	
CONTRACT ID.	
BRIDGE NO. A20432	

MISSOURI HIGHWAYS AND TRANSPORTATION COMMISSION
105 WEST CAPITOL
JEFFERSON CITY, MO 65102
1-888-ASK-MODOT (1-888-275-6636)

EFK•Moen
Civil Engineering Design
13523 Barrett Parkway Dr
Suite 250
St. Louis, MO 63021
Phone 314-394-3100
Fax 314-394-3199
Missouri Certificate of Authority: 001578