MISSOURI HIGHWAYS AND TRANSPORTATION COMMISSION

PLANS FOR PROPOSED STATE HIGHWAY

DUNKLIN COUNTY

DESIGN DESIGNATION

A.A.D.T. - 2026 = 1,128
A.A.D.T. - 2046 = 1,247
D.H.V. = 9%
T = 13%
V (MO) = 55 M.P.H.
V (AR) = 45 M.P.H.
FUNCTIONAL CLASSIFICATION - MINOR ARTERIAL

NO RIGHT OF WAY REQUIRED

KEY MAP
LOCATION OF DUNKLIN COUNTY

NOT TO SCALE

BEGIN PROJECT
STA 50+47.97

PROJECT LOCATION

GRADING, DRAINAGE, PAVING AND REPLACEMENT OF BRIDGE H0927 OVER THE ST FRANCIS RIVER

END PROJECT
STA 16+84.17

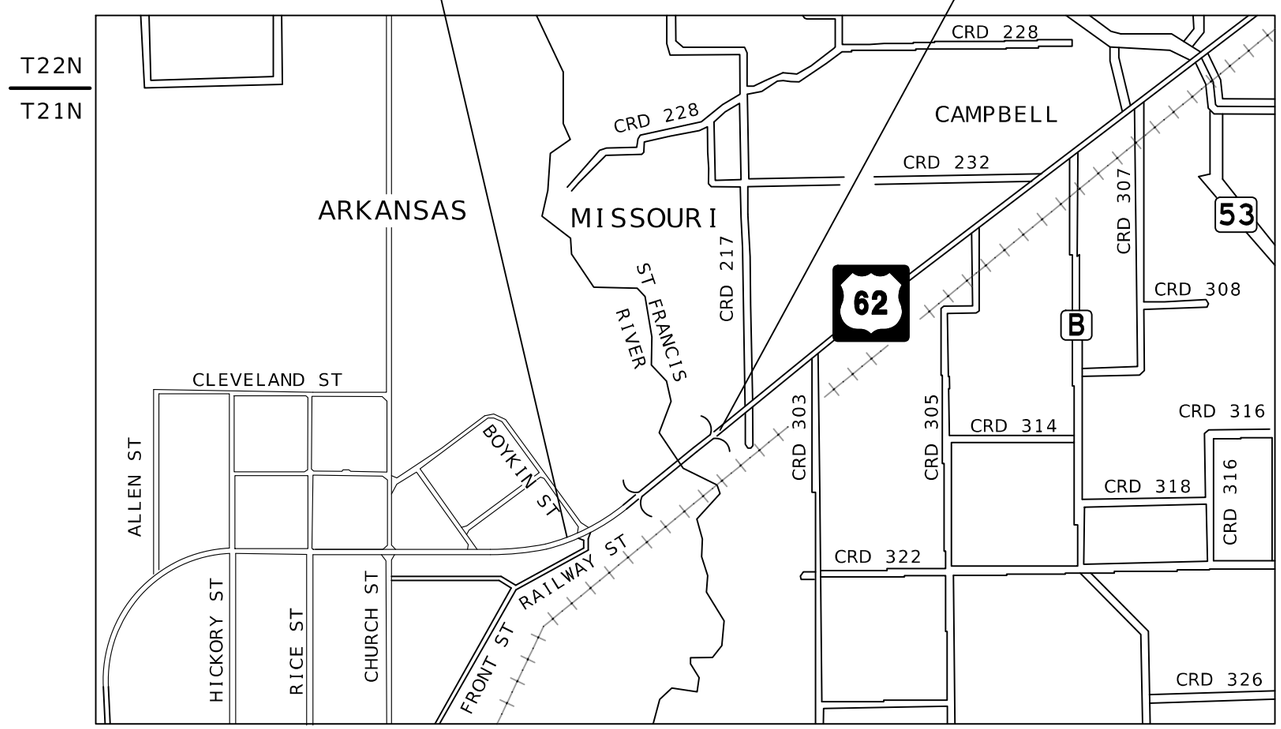

CONVENTIONAL SYMBOLS
(USED IN PLANS)

	EXISTING	NEW
BUILDINGS AND STRUCTURES		
GUARD RAIL		
GUARD CABLE		
CONCRETE RIGHT-OF-WAY MARKER		
STEEL RIGHT-OF-WAY MARKER		
LOCATION SURVEY MARKER		
UTILITIES		
FIBER OPTICS	—FO—	~~FO~~
OVERHEAD CABLE TV	-OTV-	~~OTV~~
UNDERGROUND CABLE TV	-UTV-	~~UTV~~
OVERHEAD TELEPHONE	—OT—	~~OT~~
UNDERGROUND TELEPHONE	—UT—	~~UT~~
OVERHEAD POWER	—OE—	~~OE~~
UNDERGROUND POWER	—UE—	~~UE~~
SANITARY SEWER	—S—	~~S~~
STORM SEWER	—SS—	~~SS~~
GAS	—G—	~~G~~
WATER	—W—	~~W~~
MANHOLE	SAN	
FIRE HYDRANT	HYD	
WATER VALVE	WV	
WATER METER	WM	
DROP INLET	D	
DITCH BLOCK		
GROUND MOUNTED SIGN	SIGN	
LIGHT POLE		
H-FRAME POWER POLE		
TELEPHONE PEDESTAL	PED	
FENCE		
CHAIN LINK	—V—	
WOVEN WIRE	—X—	
GATE POST		
BENCHMARK	BM	

NOTE: DASHED OR OPEN SYMBOLS INDICATE EXISTING FEATURES

THE EXISTENCE AND APPROXIMATE LOCATION OF UTILITY FACILITIES KNOWN TO EXIST, AS SHOWN ON THE PLANS, ARE BASED ON THE BEST INFORMATION AVAILABLE TO THE COMMISSION AT THIS TIME. THIS INFORMATION IS PROVIDED BY THE COMMISSION "AS-IS" AND THE COMMISSION EXPRESSLY DISCLAIMS ANY REPRESENTATION OR WARRANTY AS TO THE COMPLETENESS, ACCURACY, OR SUITABILITY OF THE INFORMATION FOR ANY USE. RELIANCE UPON THIS INFORMATION IS DONE AT THE RISK AND PERIL OF THE USER, AND THE COMMISSION SHALL NOT BE LIABLE FOR ANY DAMAGES THAT MAY ARISE FROM ANY ERROR IN THE INFORMATION. IT IS, THEREFORE, THE RESPONSIBILITY OF THE CONTRACTOR TO VERIFY THE EXISTENCE, LOCATION AND STATUS OF ANY FACILITY. SUCH VERIFICATION INCLUDES DIRECT CONTACT WITH THE LISTED UTILITIES.

INDEX OF SHEETS

LENGTH OF PROJECT

BEGINNING OF PROJECT	STA. 50+47.97	
END OF PROJECT	STA. 16+84.17	
APPARENT LENGTH:	-3,363.80	FEET
EQUATIONS AND EXCEPTIONS:		
EQ STA 52+90.81 BK= STA 1+11.00 AH	5,179.81	FEET
TOTAL CORRECTIONS	5,179.81	FEET
NET LENGTH OF PROJECT	1,816.01	FEET
STATE LENGTH	0.344	MILES
FOR INFORMATION ONLY ESTIMATED DISTURBED ACRES	1	ACRE

STATE OF MISSOURI
DONALD THOMAS SAKO
NUMBER PE-28475
PROFESSIONAL ENGINEER
THIS SHEET HAS BEEN SIGNED, SEALED AND DATED ELECTRONICALLY.

DATE PREPARED
7/8/2025

ROUTE	STATE
62	MO
DISTRICT	SHEET NO.
SE	1

COUNTY
DUNKLIN

JOB NO.
JSE0155

CONTRACT ID.

PROJECT NO.

BRIDGE NO.

DESCRIPTION	DATE

MISSOURI HIGHWAYS AND TRANSPORTATION COMMISSION
105 WEST CAPITOL
JEFFERSON CITY, MO 65102
1-888-ASK-MODOT (1-888-275-6636)

GARVER, LLC.
7509 NW TIFFANY SPRINGS
PARKWAY, SUITE 200
KANSAS CITY, MO 64153
PHONE: (816) 298-6465
CERTIFICATE OF AUTHORITY
NO. 2008013090

* STA. EQUATION: 52+90.81 BK = 1+11.00 AH

□ STA. 52+17.83 TO 1+30.00 RT*
SLOPE = 3:1. NO ROCK BLANKET.
STA. 15+00.00 TO 15+83.05 LT
SLOPE = 3:1. NO ROCK BLANKET.

□□ STA. 52+56.51 TO 1+26.70 LT*
SLOPE TRANSITION FROM 3:1 TO 1.5:1
STA. 1+26.70 TO 1+57.06 LT
SLOPE = 1.5:1

□□□ SEE SHEET 8 FOR PAVEMENT TRANSITION DETAILS INCLUDING ASPHALT, CONCRETE, AND MOMENT SLAB LIMITS.

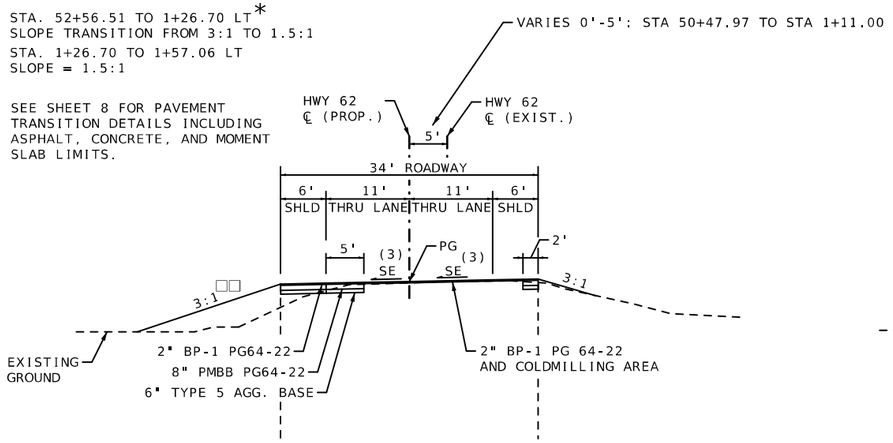

SECTION ON SUPERELEVATED CURVE

STA. 50+47.97 TO STA. 1+32.06*

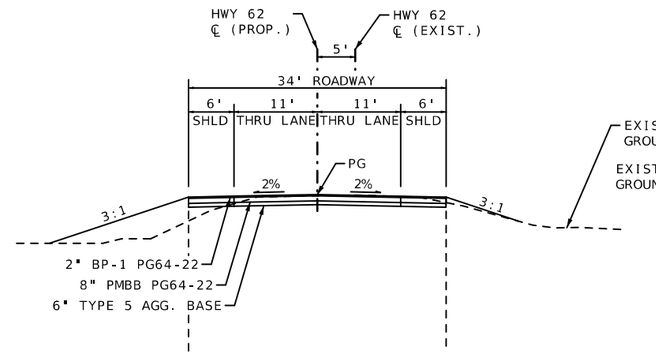

SECTION ON TANGENT □□□

STA. 1+32.06 TO STA. 1+57.06
STA. 12+64.14 TO STA. 12+89.14

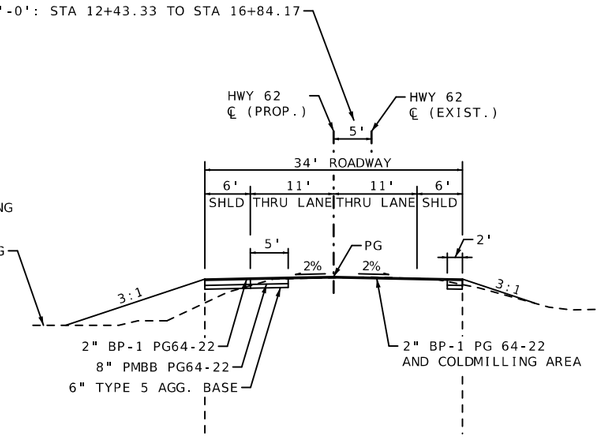

SECTION ON TANGENT

STA. 12+89.14 TO STA. 16+84.17

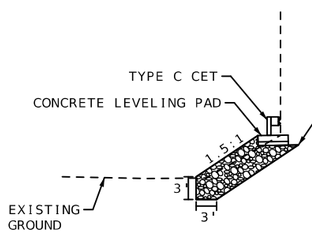

STA. 1+22.06 TO STA. 1+44.06 LT

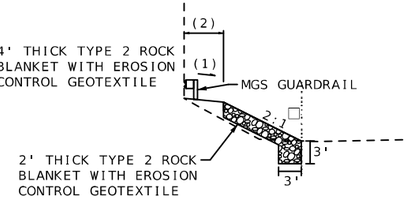

STA. 52+17.83 TO STA. 1+57.06 RT*

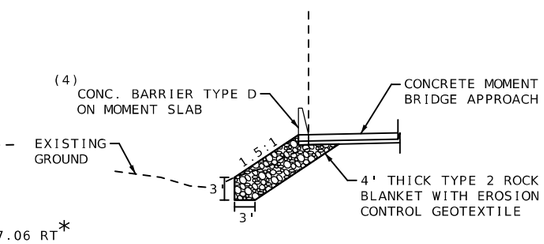

STA. 1+44.06 TO STA. 1+69.06 LT

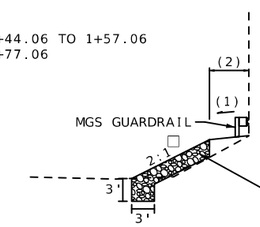

STA. 12+64.14 TO STA. 15+83.05 LT

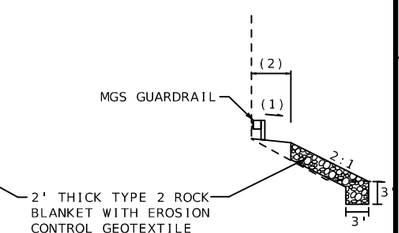

STA. 12+64.14 TO STA. 13+58.51 RT

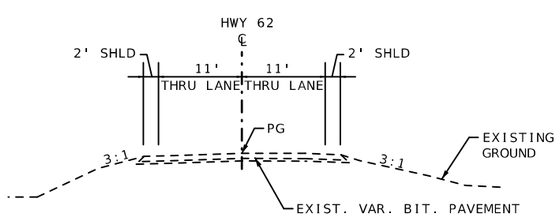

EXISTING TYPICAL SECTION - HWY 62

STA. 50+47.97 TO STA. 1+76.56*
STA. 12+44.64 TO STA. 16+84.17

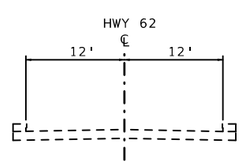

EXISTING TYPICAL SECTION - BRIDGE H0927

STA. 1+66.43 TO STA. 12+55.14

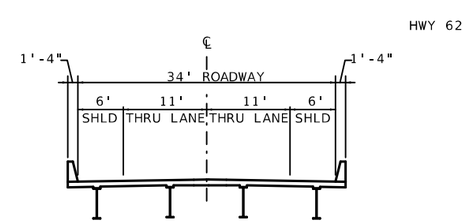

PROPOSED TYPICAL SECTION - BRIDGE A9436

STA. 1+76.56 TO STA. 12+44.64

(1) 10:1 OR FLATTER

(2) WIDENING FOR GUARDRAIL WIDTH VARIES SEE STD PLANS 606.81

(3) REFER TO SUPERELEVATION DIAGRAM ON PROFILE FOR CROSS SLOPE INFORMATION IN SECTION ON CURVE

(4) SEE STD PLANS 617.10

TYPICAL SECTIONS
SHEET 1 OF 1

STATE OF MISSOURI
DONALD THOMAS SAKO
NUMBER PE-28475
PROFESSIONAL ENGINEER
THIS SHEET HAS BEEN SIGNED, SEALED AND DATED ELECTRONICALLY.

DATE PREPARED	
7/10/2025	
ROUTE 62	STATE MO
DISTRICT SE	SHEET NO. 2
COUNTY DUNKLIN	
JOB NO. JSE0155	
CONTRACT ID.	
PROJECT NO.	
BRIDGE NO.	

DATE	DESCRIPTION

MISSOURI HIGHWAYS AND TRANSPORTATION COMMISSION
105 WEST CAPITOL
JEFFERSON CITY, MO 65102
1-888-ASK-MODOT (1-888-275-6636)

GARVER, LLC.
7509 NW TIFFANY SPRINGS PARKWAY, SUITE 200
KANSAS CITY, MO 64153
PHONE: (816) 298-6465
CERTIFICATE OF AUTHORITY NO. 2008013090

REMOVAL OF IMPROVEMENTS

SHEET	ROADWAY	STA	STA	LOCATION	DESCRIPTION	UNIT	AMOUNT	REMARKS
4	HWY 62	52+38.00		LT	ARKANSAS STATE SIGN	EA	1.0	RELOCATE SIGN, REPLACE POSTS
4	HWY 62	1+18.00		LT	SPEED LIMIT SIGN	EA	1.0	REMOVE AND REPLACE
4	HWY 62	1+37.00		LT	OBJECT MARKER SIGN	EA	1.0	
4	HWY 62	1+38.00	1+64.00	LT	GUARDRAIL	LF	30.0	
4	HWY 62	1+38.00	1+64.00	RT	GUARDRAIL	LF	30.0	
4	HWY 62	1+61.00		LT	CLAY COUNTY SIGN	EA	1.0	RELOCATE SIGN, REPLACE POSTS
4	HWY 62	1+62.00		RT	OBJECT MARKER SIGN	EA	1.0	
4	HWY 63	1+62.00		RT	RIVER SIGN	EA	1.0	RELOCATE SIGN, REPLACE POSTS
4	HWY 62	1+62.00		RT	SPEED LIMIT SIGN	EA	1.0	RELOCATE SIGN, REPLACE POSTS
4	HWY 62	1+66.00		LT	OBJECT MARKER SIGN	EA	1.0	
5	HWY 62	12+57.00		LT	OBJECT MARKER SIGN	EA	1.0	
5	HWY 62	12+57.00		LT	RIVER SIGN	EA	1.0	REMOVE AND REPLACE
5	HWY 62	12+57.00		RT	OBJECT MARKER SIGN	EA	1.0	
5	HWY 62	12+57.00	12+84.00	RT	GUARDRAIL	LF	30.0	
5	HWY 62	12+57.00	12+84.00	LT	GUARDRAIL	LF	30.0	
PROJECT TOTAL							LUMP SUM	

MOBILIZATION

LUMP SUM

CONTRACTOR FURNISHED SURVEYING AND STAKING

LUMP SUM

GRAVEL ENTRANCE

SHEET	ROADWAY	BEGIN STA.	LOCATION	GRAVEL A OR CRUSHED STONED B (6 IN) (1.75TON/CY) (CY)	TON	REMARKS
5	HWY 62	17+11.70	LT	14.1	24.7	
PROJECT TOTAL				14	25	

MODIFIED LINEAR GRADING CLASS II

SHEET NO	ROADWAY	BEGIN STA.	END STA.	LOCATION	LENGTH (LF)	MODIFIED LINEAR GRADING CLASS II (STA)	REMARKS
4	HWY 62	50+47.97	1+57.06	℄	288.90	2.89	INCLUDES STA. EQU.
4	HWY 62	1+78.06	1+99.47	℄	21.41	0.21	SPILL SLOPE
5	HWY 62	12+06.32	12+43.14	℄	36.82	0.37	SPILL SLOPE
5	HWY 62	12+64.14	16+84.17	℄	420.03	4.20	
PROJECT TOTAL					767	7.7	

SEEDING

SHEET NO	ROADWAY	BEGIN STA.	END STA.	LOCATION	SEEDING COOL SEASON MIXTURES (ACRE)	REMARKS
4	HWY 62	50+47.97	52+56.51	LT	0.02	
4	HWY 62	50+47.97	1+76.56	RT	0.01	INCLUDES GR PLATFORM
5	HWY 62	12+44.64	16+84.17	LT	0.05	INCLUDES GR PLATFORM
5	HWY 62	12+44.64	16+84.17	RT	0.02	INCLUDES GR PLATFORM
PROJECT TOTAL					0.1	

FULL DEPTH PAVEMENT

SHEET	ROADWAY	STA.	STA.	LOCATION	PG 64-22 (BP-1) (2 IN) (2.0 TON/CY) (CY)	TON	PG 64-22 (PMBB) (8 IN) (2.0 TON/CY) (CY)	TON	CONCRETE PAVEMENT (10") (SY)	TYPE 5 AGGREGATE FOR BASE (6") (SY)	REMARKS
4	HWY 62	50+47.97	1+32.06	LT	10.6	191.5	42.5	85.0		192	
4	HWY 62	51+18.74		LT	7.4	14.8	29.5	59.0		133	BOYKIN ST
4	HWY 62	50+47.97	1+32.06	RT	5.4	10.8	21.5	43.0		97	
4	HWY 62	51+27.90		RT	9.8	19.6	39.0	78.0		176	BOYKIN ST*
4	HWY 62	1+32.06	1+44.06	LT/RT	2.5	5.0	10.1	20.2		45	APPROACH PVMT
4	HWY 62	1+44.06	1+57.06	LT/RT					49.1	49	MOMENT SLAB
5	HWY 62	12+64.14	12+89.14	LT/RT	5.2	10.4	21.0	42.0		94	APPROACH PVMT
5	HWY 62	12+89.14	16+84.17	LT	20.0	40.0	80.1	160.2		361	
5	HWY 62	12+89.14	16+84.17	RT	11.1	22.2	44.4	88.8		200	
SUBTOTAL					72.0	314.3	288.1	576.2	49.1	1,347	
PROJECT TOTAL					SEE SHEET 1	SEE SHEET 1	288.1	576.2	49.1	1,347	

*NOTE: INCLUDES WEST CONNECTION

RESURFACING

SHEET	ROADWAY	BEGIN STA.	END STA.	LOCATION	AVG WIDTH (FT)	COLDMILLING 3 IN THICK OR LESS (SY)	TACK COAT 0.08 GAL/SY (GAL)	PG 64-22 (BP-1) (2 IN) (2.0 TON/CY) (CY)	TON	REMARKS
4	HWY 62	50+47.97	1+57.06	LT/RT	21	623.4	49.9	34.6	69.2	
5	HWY 62	12+89.14	16+84.17	LT/RT	21	932.1	74.6	51.8	103.6	
SUBTOTAL						1,556	125	86.4	172.8	
SUBTOTAL SHEET 1						-	-	72.0	314.3	
PROJECT TOTAL						1,556	125	158	487	

GUARDRAIL

SHEET	ROADWAY	BEGIN STA.	END STA.	LOCATION	MGS GUARDRAIL (LF)	MGS BRIDGE APPROACH TRANSITION SECTION (EACH)	TYPE A CRASHWORTHY END TERMINAL (MASH) (EACH)	TYPE C* CRASHWORTHY END TERMINAL (EACH)	REMARKS
4	HWY 62	52+48.42	1+69.66	RT	25	1	1		
4	HWY 62	1+22.06	1+44.06	LT				1	
5	HWY 62	12+51.52	15+52.56	LT	225	1	1		
5	HWY 62	12+51.68	13+27.94	RT		1	1		
PROJECT TOTAL					250	3	3	1	

*NOTE: LEVELING PAD IS INCIDENTAL AND TO BE INCLUDED IN THE COST OF THE TYPE C CET

SUMMARY OF QUANTITIES
SHEET 1 OF 3

STATE OF MISSOURI
DONALD THOMAS SAKO
NUMBER PE-28475
PROFESSIONAL ENGINEER
THIS SHEET HAS BEEN SIGNED, SEALED AND DATED ELECTRONICALLY.

DATE PREPARED 7/10/2025

ROUTE	STATE
62	MO
DISTRICT	SHEET NO.
SE	3

COUNTY DUNKLIN

JOB NO. JSE0155

CONTRACT ID.

PROJECT NO.

BRIDGE NO.

DESCRIPTION

DATE

MISSOURI HIGHWAYS AND TRANSPORTATION COMMISSION

105 WEST CAPITOL
JEFFERSON CITY, MO 65102
1-888-ASK-MODOT (1-888-275-6636)

GARVER, LLC.
7509 NW TIFFANY SPRINGS PARKWAY, SUITE 200
KANSAS CITY, MO 64153
PHONE: (816) 298-6465
CERTIFICATE OF AUTHORITY NO. 2008013090

PERMANENT EROSION CONTROL

SHEET	ROADWAY	BEGIN STA.	END STA.	LOCATION	TYPE 2 ROCK BLANKET FURNISHING (CY)	TYPE 2 ROCK BLANKET PLACING (CY)	PERM EROSION CONTROL GEOTEXTILE (SY)	REMARKS
4	HWY 62	52+40.00	1+57.06	RT	5	5	7	
4	HWY 62	52+56.51	1+69.06	LT	105	105	79	4 LF DEPTH
4	HWY 62	1+57.06	1+99.47	LT/RT	133	133	200	
5	HWY 62	12+06.32	12+64.14	LT/RT	271	271	407	
5	HWY 62	12+64.14	15+83.05	LT	540	540	810	
5	HWY 62	12+64.14	13+58.51	RT	17	17	25	
PROJECT TOTAL					1,071	1,071	1,528	

TEMPORARY EROSION CONTROL

SHEET	ROADWAY	BEGIN STA.	END STA.	LOCATION	SILT FENCE (LF)	TYPE C BERM (LF)	ROCK* DITCH CHECK (LF)	SEDIMENT REMOVAL (CY)	REMARKS
12-13	HWY 62	50+47.94	16+84.17	LT/RT			100	5	
12	HWY 62	50+47.94	51+06.00	LT	67			1	
12	HWY 62	50+47.94	50+84.78	RT	38			1	
12	HWY 62	51+34.52	1+69.06	LT	226			3	
12	HWY 62	52+17.92	1+57.06	RT	122			2	
12	HWY 62	1+57.06	2+01.47	LT/RT		143		2	
13	HWY 62	12+04.12	12+64.14	LT/RT		185		2	
13	HWY 62	12+64.14	16+84.17	RT	421			5	
13	HWY 62	12+64.14	16+84.17	LT	452			5	
PROJECT TOTAL					1,326	328	100	26	

* NOTE: USE ROCK DITCH CHECKS AT ENGINEER'S DISCRETION. ASSUMED 5 DITCH CHECKS AT 20 LF/DITCH CHECK

CONCRETE TRAFFIC BARRIER

SHEET	ROADWAY	BEGIN STA.	END STA.	LOCATION	CONCRETE TRAFFIC BARRIER TYPE D MOMENT SLAB LF	REMARKS
4	HWY 62	1+44.06	1+69.06	LT	25	SEE STD. 617.10
PROJECT TOTAL					25	

PAVEMENT MARKING

ROADWAY	BEGIN STA.	END STA.	LOCATION	4" WHITE WATERBORNE PAVEMENT MARKING PAINT, TYPE P BEADS SOLID (LF)	4" YELLOW WATERBORNE PAVEMENT MARKING PAINT, TYPE P BEADS SOLID (LF)	REMARKS
HWY 62	50+47.97	16+84.17	LT/RT	3632.02		LT & RT EDGE LINES
HWY 62	50+47.97	16+84.17	℄		3632.02	DOUBLE SOLID YELLOW
PROJECT TOTAL				3,632	3,632	

SUMMARY OF QUANTITIES
SHEET 2 OF 3

STATE OF MISSOURI
DONALD THOMAS SAKO
NUMBER PE-28475
PROFESSIONAL ENGINEER
THIS SHEET HAS BEEN SIGNED, SEALED AND DATED ELECTRONICALLY.

DATE PREPARED 7/10/2025
ROUTE 62 | STATE MO
DISTRICT SE | SHEET NO. 3
COUNTY DUNKLIN
JOB NO. JSE0155
CONTRACT ID.
PROJECT NO.
BRIDGE NO.

DESCRIPTION | DATE

MISSOURI HIGHWAYS AND TRANSPORTATION COMMISSION
105 WEST CAPITOL
JEFFERSON CITY, MO 65102
1-888-ASK-MODOT (1-888-275-6636)

GARVER, LLC.
7509 NW TIFFANY SPRINGS PARKWAY, SUITE 200
KANSAS CITY, MO 64153
PHONE: (816) 298-6465
CERTIFICATE OF AUTHORITY NO. 2008013090

SIGN	SIZE IN.	AREA SQ.FT.	QTY EACH	TOTAL AREA SQ.FT.	QTY RELOC EACH	TOTAL RELOC SQ.FT.	SIGN NUM.	DESCRIPTION
WARNING SIGNS								
WO1-1L	48X48	16.00						TURN (SYMBOL LEFT)
WO1-1R	48X48	16.00						TURN (SYMBOL RIGHT)
WO1-2L	48X48	16.00						CURVE (SYMBOL LEFT)
WO1-2R	48X48	16.00						CURVE (SYMBOL RIGHT)
WO1-3L	48X48	16.00						REVERSE TURN (SYMBOL LEFT)
WO1-3R	48X48	16.00						REVERSE TURN (SYMBOL RIGHT)
WO1-4L	48X48	16.00						REVERSE CURVE (SYMBOL LEFT)
WO1-4R	48X48	16.00						REVERSE CURVE (SYMBOL RIGHT)
WO1-4bL	48X48	16.00						DOUBLE ARROW REVERSE CURVE (SYMBOL LEFT)
WO1-4bR	48X48	16.00						DOUBLE ARROW REVERSE CURVE (SYMBOL RIGHT)
WO1-4cL	48X48	16.00						TRIPLE ARROW REVERSE CURVE (SYMBOL LEFT)
WO1-4cR	48X48	16.00						TRIPLE ARROW REVERSE CURVE (SYMBOL RIGHT)
WO1-6	60X30	12.50						HORIZONTAL ARROW (SYMBOL)
WO1-6a	72X36	18.00						HORIZ. ARROW (SYMBOL ON PERMANENT BARRICADE)
WO1-7	60X30	12.50						DOUBLE HEAD HORIZONTAL ARROW (SYMBOL)
WO1-7a	72X36	18.00						DOUBLE HEAD HORIZ. ARROW (SYMBOL ON PERM. BARR.)
WO1-8	18X24	3.00						CHEVRON (SYMBOL)
WO1-8a	30X36	7.50						CHEVRON (SYMBOL FOR DIVIDED HIGHWAYS)
WO3-1	48X48	16.00						STOP AHEAD (SYMBOL)
WO3-2	48X48	16.00						YIELD AHEAD (SYMBOL)
WO3-3	48X48	16.00						SIGNAL AHEAD (SYMBOL)
WO3-4	48X48	16.00						BE PREPARED TO STOP
WO3-5	48X48	16.00						SPEED LIMIT AHEAD
WO4-1L	48X48	16.00						MERGE (SYMBOL FROM LEFT)
WO4-1R	48X48	16.00						MERGE (SYMBOL FROM RIGHT)
WO4-1aL	48X48	16.00						MERGE (LEFT)
WO4-1aR	48X48	16.00						MERGE (RIGHT)
WO5-1	48X48	16.00						ROAD/BRIDGE/RAMP NARROWS
WO5-3	48X48	16.00						ONE LANE BRIDGE
WO5-5	48X48	16.00						NARROW LANES
WO6-1	48X48	16.00						DIVIDED HIGHWAY (SYMBOL)
WO6-2	48X48	16.00						DIVIDED HIGHWAY END (SYMBOL)
WO6-3	48X48	16.00						TWO WAY TRAFFIC (SYMBOL)
WO7-3a	30X24	5.00						NEXT XX MILES (PLAQUE)
WO8-1	48X48	16.00						BUMP
WO8-2	48X48	16.00						DIP
WO8-3	48X48	16.00						PAVEMENT ENDS
WO8-4	48X48	16.00						SOFT SHOULDER
WO8-5	48X48	16.00						SLIPPERY WHEN WET (SYMBOL)
WO8-6	48X48	16.00						TRUCK CROSSING
WO8-6c	48X48	16.00						TRUCK ENTRANCE
WO8-7	36X36	9.00						LOOSE GRAVEL
WO8-7a	36X36	9.00						FRESH OIL / LOOSE GRAVEL
WO8-9	48X48	16.00						LOW SHOULDER
WO8-11	48X48	16.00						UNEVEN LANES
WO8-12	48X48	16.00						NO CENTER LINE
WO8-15	48X48	16.00						GROOVED PAVEMENT
WO8-15P	30X24	5.00						MOTORCYCLE (PLAQUE)
WO8-17L	48X48	16.00						SHOULDER DROP-OFF (SYMBOL LEFT)
WO8-17R	48X48	16.00						SHOULDER DROP-OFF (SYMBOL RIGHT)
WO8-17P	30X24	5.00						SHOULDER DROP-OFF (PLAQUE)
W10-1	42RND.	9.62						RAILROAD CROSSING
WO12-1	24X24	4.00						DOUBLE DOWN ARROW (SYMBOL)
WO12-2	48X48	16.00						LOW CLEARANCE (SYMBOL)
WO12-2x	24X18	3.00						LOW CLEARANCE (PLAQUE)
WO12-2a	84X24	14.00						OVERHEAD LOW CLEARANCE (FEET AND INCHES)
WO12-4	120X60	50.00						LOW CLEARANCE XX FT XX IN XX MILES AHEAD
WO12-5	120X60	50.00						WIDTH RESTRICTION XX FT XX IN XX MILES AHEAD
WO13-1	30X30	6.25						ADVISORY SPEED (PLAQUE)
WO16-2	30X24	5.00						XXX FEET (PLAQUE)
WO16-3	30X24	5.00						X MILE (PLAQUE)
WO20-1	48X48	16.00	4	64.00				ROAD/BRIDGE/RAMP WORK AHEAD
WO20-2	48X48	16.00	11	176.00			18	DETOUR AHEAD
WO20-3	48X48	16.00	4	64.00			20/20A	ROAD CLOSED AHEAD
WO20-4	48X48	16.00						ONE LANE ROAD AHEAD
WO20-5	48X48	16.00						RIGHT/CENTER/LEFT LANE CLOSED AHEAD
WO20-5a	48X48	16.00						2 RIGHT/CENTER/LEFT LANES CLOSED AHEAD
WO20-6a	48X48	16.00						RIGHT/CENTER/LEFT LANE CLOSED
WO20-7a	48X48	16.00						FLAGGER (SYMBOL)
WO21-2	36X36	9.00						FRESH OIL
WO21-5	48X48	16.00						SHOULDER WORK / SHOULDER WORK AHEAD
WO22-1	48X48	16.00						BLASTING ZONE AHEAD
WO22-2	42X36	10.50						TURN OFF 2-WAY RADIO AND PHONE
WO22-3	42X36	10.50						END BLASTING ZONE
GO22-1	21X15	2.19						WET PAINT (ARROW PIVOTS)

SIGN	SIZE IN.	AREA SQ.FT.	QTY EACH	TOTAL SQ.FT.	QTY RELOC EACH	TOTAL RELOC SQ.FT.	SIGN NUM.	DESCRIPTION
GUIDE SIGNS								
E05-1	36X48	12.00						GORE EXIT
E05-2	48X36	12.00						EXIT OPEN
E05-2a	48X36	12.00						EXIT CLOSED
GO20-1	60X24	10.00						ROAD WORK NEXT XX MILES
GO20-2	48X24	8.00						END ROAD WORK
GO20-4	36X18	4.50						PILOT CAR FOLLOW ME
GO20-4a	42X30	8.75						PILOT CAR IN USE WAIT & FOLLOW
GO20-4a	18X12	1.50						PILOT CAR IN USE WAIT & FOLLOW
GO20-5aP	36X24	6.00						WORK ZONE (PLAQUE)
MO4-8a	24X18	3.00	3	9.00			52	END DETOUR
MO4-9L	48X36	12.00						DETOUR (LEFT)
MO4-9R	48X36	12.00						DETOUR (RIGHT)
MO4-9P	48X12	4.00						STREET NAME (PLAQUE)
MO4-10L	48X18	6.00						DETOUR ARROW (LEFT)
MO4-10R	48X18	6.00						DETOUR ARROW (RIGHT)
REGULATORY SIGNS								
R1-1	48X48	13.25						STOP
R1-2	48TRI.	6.93						YIELD
R1-2a	36X36	9.00						TO ONCOMING TRAFFIC (PLAQUE)
R1-3P	30X12	2.50						ALL WAY (PLAQUE)
R2-1	36X48	12.00						SPEED LIMIT XX
R3-1	48X48	16.00						NO RIGHT TURN (SYMBOL)
R3-2	48X48	16.00						NO LEFT TURN (SYMBOL)
R3-3	36X36	9.00						NO TURNS
R3-4	48X48	16.00						NO U-TURN (SYMBOL)
R3-7L	30X30	6.25						LEFT LANE MUST TURN LEFT
R3-7R	30X30	6.25						RIGHT LANE MUST TURN RIGHT
R4-1	36X48	12.00						DO NOT PASS
R4-2	36X48	12.00						PASS WITH CARE
R4-7a	36X48	12.00						KEEP RIGHT (HORIZONTAL ARROW)
R4-8a	36X48	12.00						KEEP LEFT (HORIZONTAL ARROW)
R5-1	30X30	6.25						DO NOT ENTER
R5-1a	36X24	6.00						WRONG WAY
R6-1L	54X18	6.75						ONE WAY ARROW (LEFT)
R6-1R	54X18	6.75						ONE WAY ARROW (RIGHT)
R6-2L	24X30	5.00						ONE WAY (LEFT)
R6-2R	24X30	5.00						ONE WAY (RIGHT)
R9-9	24X12	2.00						SIDEWALK CLOSED
R9-11L	24X18	3.00						SIDEWALK CLOSED AHEAD, (ARROW LEFT) CROSS HERE
R9-11R	24X18	3.00						SIDEWALK CLOSED AHEAD, (ARROW RIGHT) CROSS HERE
R10-6	24X36	6.00						STOP HERE ON RED (45^ ARROW)
R11-2	48X30	10.00	2	20.00			29	ROAD CLOSED
R11-3a	60X30	12.50	2	25.00			55A-B	ROAD CLOSED XX MILES AHEAD LOCAL TRAFFIC ONLY
R11-4	60X30	12.50	2	25.00			55	ROAD CLOSED TO THRU TRAFFIC
CONST-3A	60X48	20.00						FINE SIGN
CONST-3X	56X12	4.67						SPEEDING/PASSING (PLATE)
MISCELLANEOUS SIGNS								
CONST-5	48X36	12.00						POINT OF PRESENCE
CONST-5	96X48	32.00						POINT OF PRESENCE
CONST-8	48X36	12.00						WORK ZONE NO PHONE ZONE
SPECIAL	36X78	19.50	27	526.50			50A-L	DETOUR SIGNS
SPECIAL	36X78	19.50	26	507.00			50M-V	TRUCK DETOUR SIGNS

616-10.05 CONSTRUCTION SIGNS	TOTAL	1417
616-10.10 RELOCATED SIGNS	TOTAL	0

EFFECTIVE: 07-01-2024

ITEM NUMBER	TOTAL QTY	DESCRIPTION
6122008		IMPACT ATTENUATOR 40 MPH (SAND BARRELS)
6122009		IMPACT ATTENUATOR 45 MPH (SAND BARRELS)
6122010		IMPACT ATTENUATOR 50 MPH (SAND BARRELS)
6122012		IMPACT ATTENUATOR 55 MPH (SAND BARRELS)
6122014		IMPACT ATTENUATOR 60 MPH (SAND BARRELS)
6122017		IMPACT ATTENUATOR 65 MPH (SAND BARRELS)
6122019		IMPACT ATTENUATOR 70 MPH (SAND BARRELS)
6122020		REPLACEMENT SAND BARREL
6122030		IMPACT ATTENUATOR (RELOCATION)
6123001		TRUCK MOUNTED ATTENUATOR (TMA)
6161008		ADVANCED WARNING RAIL SYSTEM
6161012		BUOYS (BOATS KEEP OUT)
6161013		BUOYS (NO WAKE)
6161014		SPECIAL SIGN ASSEMBLY (BOATS KEEP OUT)
6161025	25	CHANNELIZER (TRIM LINE)
6161030	15	TYPE III MOVEABLE BARRICADE
6161033		DIRECTION INDICATOR BARRICADE
6161040		FLASHING ARROW PANEL
6161047		TYPE III OBJECT MARKER
6161055		SEQUENTIAL FLASHING WARNING LIGHT
6161070		TUBULAR MARKER
6161095		RADAR SPEED ADVISORY SYSTEM
6161096		CHANGEABLE MESSAGE SIGN, COMMISSION FURNISHED/RETAINED
6161098A		CHANGEABLE MESSAGE SIGN WITHOUT COMM. INTERFACE- CONTRACTOR FURNISHED/RETAINED
6161099	8	CHANGEABLE MESSAGE SIGN WITH COMM. INTERFACE- CONTRACTOR FURNISHED/RETAINED
6162000A		WORK ZONE TRAFFIC SIGNAL SYSTEM
6162002		TEMPORARY LONG-TERM RUMBLE STRIPS
6173600D		TEMPORARY TRAFFIC BARRIER CONTRACTOR FURNISHED/RETAINED
6173602B		TEMPORARY TRAFFIC BARRIER CONTRACTOR FURNISHED/COMMISSION RETAINED
6174000A		TEMP. TRAFFIC BARRIER HEIGHT TRANSITION
6175010A		RELOCATING TEMPORARY TRAFFIC BARRIER
6176000B		TEMPORARY TRAFFIC BARRIER COMMISSION FURNISHED/RETAINED
6177000B		TEMP. TRAFFIC BARRIER HEIGHT TRANSITION COMMISSION FURNISHED/RETAINED
6208064A		TEMPORARY RAISED PAVEMENT MARKER
9029400		TEMPORARY TRAFFIC SIGNALS
9029401		TEMPORARY TRAFFIC SIGNALS AND LIGHTING
6161012	8	BOUYS (BOATS KEEP OUT)
6161014	4	SPECIAL SIGN ASSEMBLY (BRIDGE WORK AHEAD)

SUMMARY OF QUANTITIES
SHEET 3 OF 3

STATE OF MISSOURI
JASON MICHAEL SHAFER
NUMBER PE-2010019596
PROFESSIONAL ENGINEER

DATE PREPARED 5/7/2025

ROUTE	STATE
62	MO
DISTRICT	SHEET NO.
SE	3

COUNTY: DUNKLIN

JOB NO. JSE0155

CONTRACT ID.

PROJECT NO.

BRIDGE NO.

DESCRIPTION	DATE

MISSOURI HIGHWAYS AND TRANSPORTATION COMMISSION
105 WEST CAPITOL
JEFFERSON CITY, MO 65102
1-888-ASK-MODOT (1-888-275-6636)

TREKK DESIGN GROUP, LLC
1411 East 104th St.
Kansas City, MO 64131
Tel (816) 874-4655
Fax (816) 874-4675
www.trekkdesigngroup.com
Missouri Cert. of Authority 2002010300

IF A SEAL IS PRESENT ON THIS SHEET IT HAS BEEN ELECTRONICALLY SEALED AND DATED.

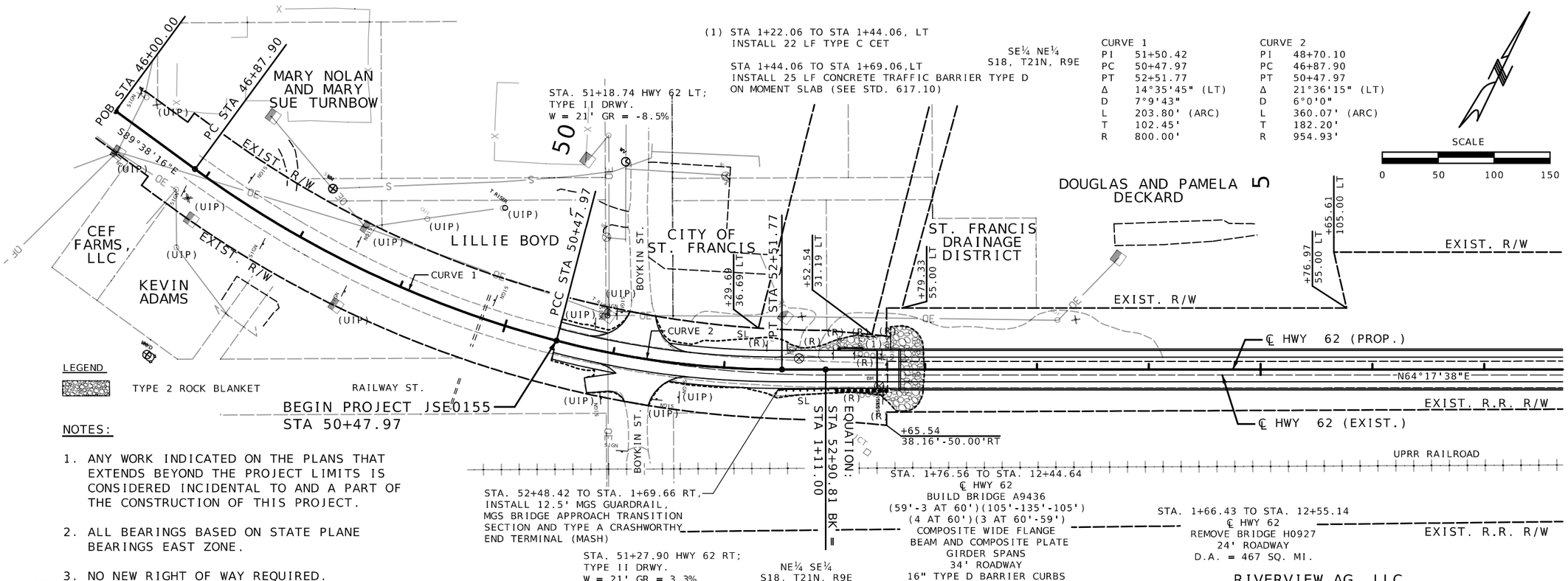

(1) STA 1+22.06 TO STA 1+44.06, LT
INSTALL 22 LF TYPE C CET

STA 1+44.06 TO STA 1+69.06,LT
INSTALL 25 LF CONCRETE TRAFFIC BARRIER TYPE D
ON MOMENT SLAB (SEE STD. 617.10)

SE¼ NE¼
S18, T21N, R9E

CURVE 1		CURVE 2	
PI	51+50.42	PI	48+70.10
PC	50+47.97	PC	46+87.90
PT	52+51.77	PT	50+47.97
Δ	14°35'45" (LT)	Δ	21°36'15" (LT)
D	7°9'43"	D	6°0'0"
L	203.80' (ARC)	L	360.07' (ARC)
T	102.45'	T	182.20'
R	800.00'	R	954.93'

STA. 51+18.74 HWY 62 LT;
TYPE II DRWY.
W = 21' GR = -8.5%

STA. 52+48.42 TO STA. 1+69.66 RT,
INSTALL 12.5' MGS GUARDRAIL,
MGS BRIDGE APPROACH TRANSITION
SECTION AND TYPE A CRASHWORTHY
END TERMINAL (MASH)

STA. 51+27.90 HWY 62 RT;
TYPE II DRWY.
W = 21' GR = 3.3%

NE¼ SE¼
S18, T21N, R9E

STA. 1+76.56 TO STA. 12+44.64
℄ HWY 62
BUILD BRIDGE A9436
(59'-3 AT 60')(105'-135'-105')
(4 AT 60')(3 AT 60'-59')
COMPOSITE WIDE FLANGE
BEAM AND COMPOSITE PLATE
GIRDER SPANS
34' ROADWAY
16" TYPE D BARRIER CURBS
D.A. = 467 SQ. MI.

STA. 1+66.43 TO STA. 12+55.14
℄ HWY 62
REMOVE BRIDGE H0927
24' ROADWAY
D.A. = 467 SQ. MI.

LEGEND

TYPE 2 ROCK BLANKET

NOTES:

1. ANY WORK INDICATED ON THE PLANS THAT EXTENDS BEYOND THE PROJECT LIMITS IS CONSIDERED INCIDENTAL TO AND A PART OF THE CONSTRUCTION OF THIS PROJECT.
2. ALL BEARINGS BASED ON STATE PLANE BEARINGS EAST ZONE.
3. NO NEW RIGHT OF WAY REQUIRED.

BENCHMARKS

EASTERN ZONE
NAD83 HORIZONTAL DATUM
NAVD88 VERTICAL DATUM
PROJECTION FACTOR: 0.99993647
GRID FACTOR: 1.000063534

B.M.1 - ℄ HWY 62 (EXISTING)
STA. 52+67.12, 14.60' LT
ELEV. = 303.32
MAG. NAIL IN ASPH. SHOULDER

B.M.2 - ℄ HWY 62 (EXISTING)
STA. 1+58.89, 9.70' RT
ELEV. = 306.02
TOP OF CONC. CURB
SW CORNER BRIDGE

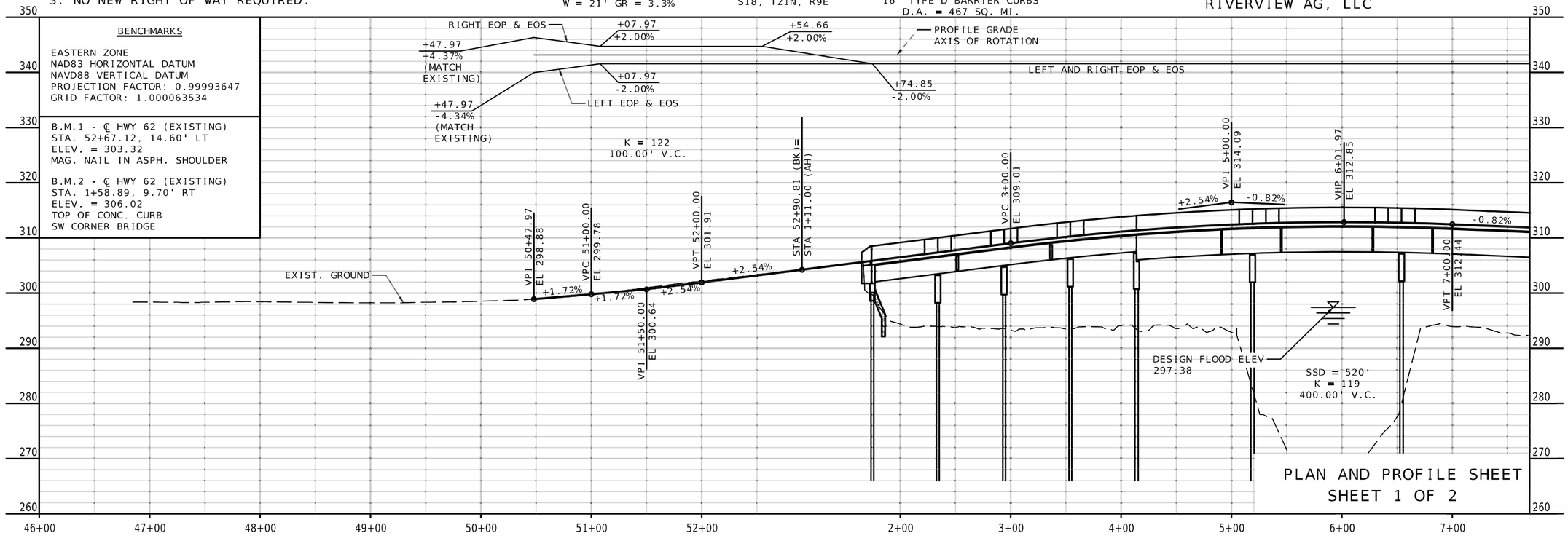

PLAN AND PROFILE SHEET
SHEET 1 OF 2

STATE OF MISSOURI
DONALD THOMAS SAKO
NUMBER PE-28475
PROFESSIONAL ENGINEER
THIS SHEET HAS BEEN SIGNED, SEALED AND DATED ELECTRONICALLY.

DATE PREPARED	
7/10/2025	
ROUTE 62	STATE MO
DISTRICT SE	SHEET NO. 4
COUNTY DUNKLIN	
JOB NO. JSE0155	
CONTRACT ID.	
PROJECT NO.	
BRIDGE NO.	

DESCRIPTION

DATE

MISSOURI HIGHWAYS AND TRANSPORTATION COMMISSION
105 WEST CAPITOL
JEFFERSON CITY, MO 65102
1-888-ASK-MODOT (1-888-275-6636)

GARVER, LLC.
7509 NW TIFFANY SPRINGS
PARKWAY, SUITE 200
KANSAS CITY, MO 64153
PHONE: (816) 298-6465
CERTIFICATE OF AUTHORITY
NO. 2008013090

c:\projectwise\garver-pw.bentley.com_garver-pw-01\eric.mutabazi\dms81924\004_PP_01_JSE0155_I50.dgn 11:40:52 AM 7/10/2025

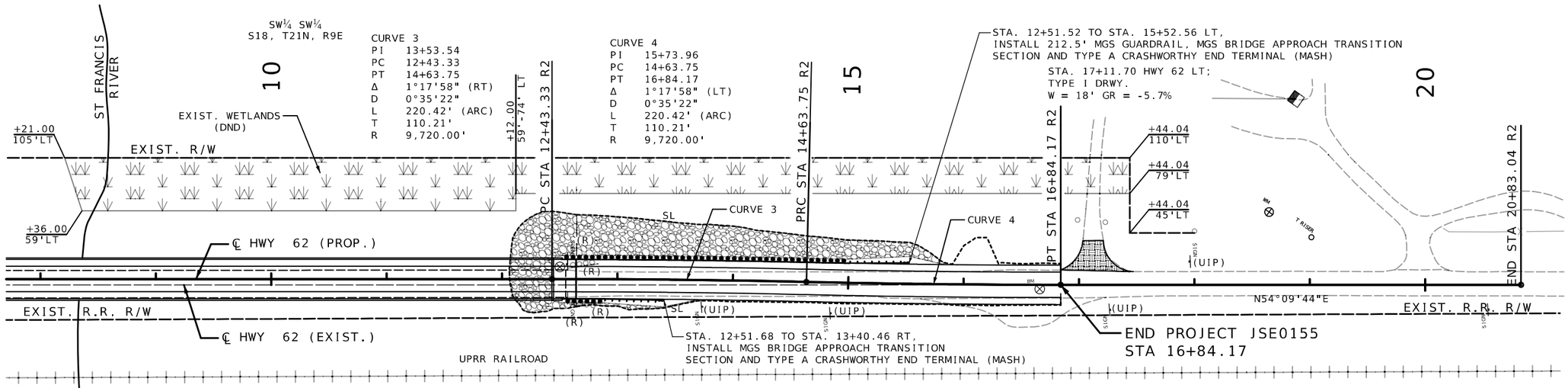

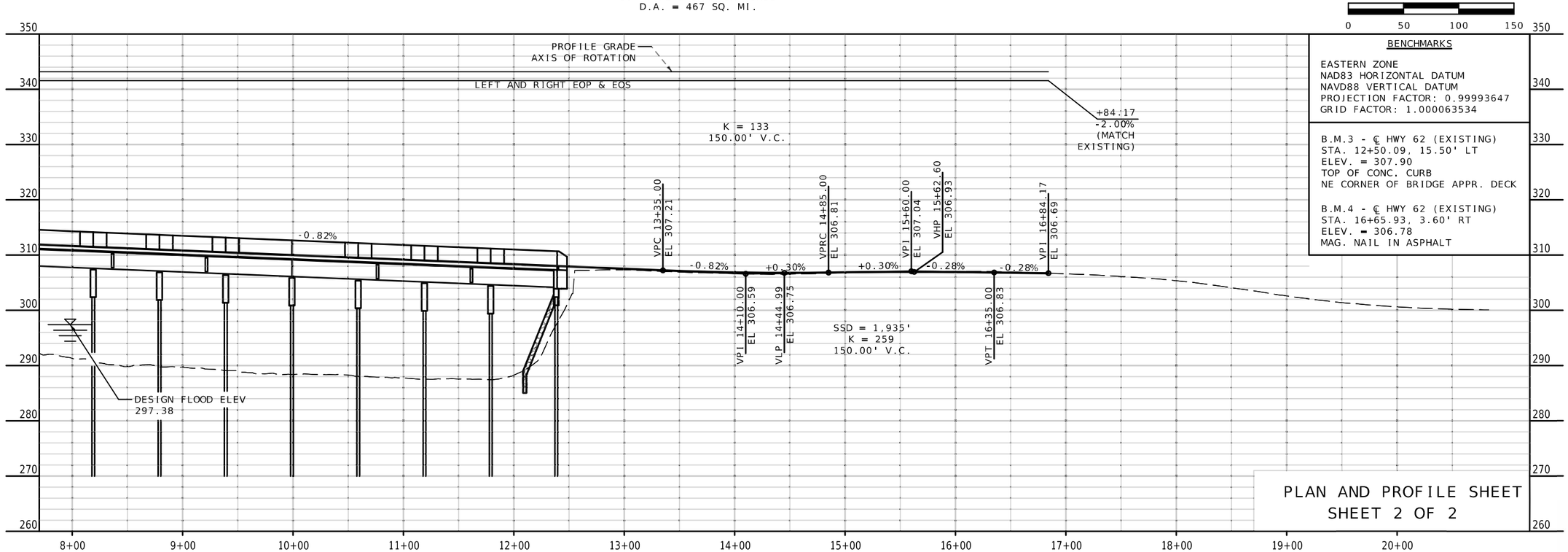

BENCHMARKS

EASTERN ZONE
NAD83 HORIZONTAL DATUM
NAVD88 VERTICAL DATUM
PROJECTION FACTOR: 0.99993647
GRID FACTOR: 1.000063534

B.M.3 - ℄ HWY 62 (EXISTING)
STA. 12+50.09, 15.50' LT
ELEV. = 307.90
TOP OF CONC. CURB
NE CORNER OF BRIDGE APPR. DECK

B.M.4 - ℄ HWY 62 (EXISTING)
STA. 16+65.93, 3.60' RT
ELEV. = 306.78
MAG. NAIL IN ASPHALT

PLAN AND PROFILE SHEET
SHEET 2 OF 2

STATE OF MISSOURI
DONALD THOMAS SAKO
NUMBER PE-28475
PROFESSIONAL ENGINEER
THIS SHEET HAS BEEN SIGNED, SEALED AND DATED ELECTRONICALLY.

DATE PREPARED	
7/10/2025	
ROUTE 62	STATE MO
DISTRICT SE	SHEET NO. 5
COUNTY DUNKLIN	
JOB NO. JSE0155	
CONTRACT ID.	
PROJECT NO.	
BRIDGE NO.	

DESCRIPTION

DATE

MISSOURI HIGHWAYS AND TRANSPORTATION COMMISSION
105 WEST CAPITOL
JEFFERSON CITY, MO 65102
1-888-ASK-MODOT (1-888-275-6636)

GARVER, LLC.
7509 NW TIFFANY SPRINGS
PARKWAY, SUITE 200
KANSAS CITY, MO 64153
PHONE: (816) 298-6465
CERTIFICATE OF AUTHORITY
NO. 2008013090

c:\projectwise\garver-pw.bentley.com_garver-pw-01\eric.mutabazi\dms81924\005_PP_02_JSE0155_I50.dgn 9:32:38 AM 7/10/2025

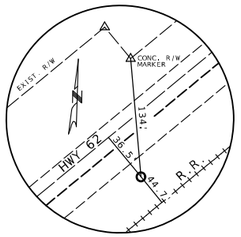

CONTROL POINT #1
SET 5/8" REBAR W/ ALUM. CAP
N: 227357.44
E: 927640.73
ELEV. 305.09'
℄ HWY 62
STA. 16+24.13, 35.53' RT

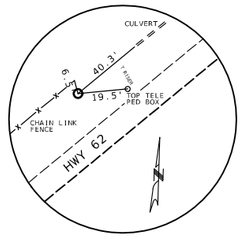

CONTROL POINT #2
SET 5/8" REBAR W/ ALUM. CAP
N: 227712.03
E: 928003.46
ELEV. 298.42'
℄ HWY 62
STA. 21+25.57, 39.75' LT

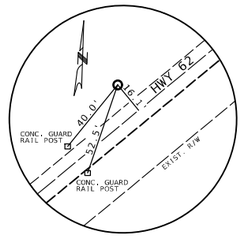

CONTROL POINT #3
SET 5/8" REBAR W/ ALUM. CAP
N: 227224.37
E: 927366.09
ELEV. 305.97'
℄ HWY 62
STA. 13+23.20, 12.91' LT

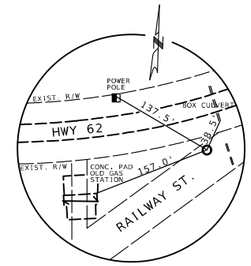

CONTROL POINT #4
SET 5/8" REBAR W/ ALUM. CAP
N: 226298.12
E: 926104.59
ELEV. 247.64'
℄ HWY 62
STA. 49+51.67, 58.08' RT

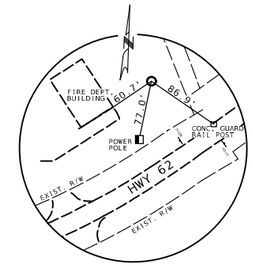

CONTROL POINT #5
SET 5/8" REBAR W/ ALUM. CAP
N: 226598.39
E: 926349.91
ELEV. 301.01'
℄ HWY 62
STA. 1+33.01, 100.08' LT

REFERENCE POINT SHEET
SHEET 1 OF 1

STATE OF MISSOURI
DONALD THOMAS SAKO
NUMBER PE-28475
PROFESSIONAL ENGINEER

THIS SHEET HAS BEEN SIGNED, SEALED AND DATED ELECTRONICALLY.

DATE PREPARED	
7/8/2025	
ROUTE	STATE
62	MO
DISTRICT	SHEET NO.
SE	6
COUNTY	
DUNKLIN	
JOB NO.	
JSE0155	
CONTRACT ID.	
PROJECT NO.	
BRIDGE NO.	

DESCRIPTION	DATE

MISSOURI HIGHWAYS AND TRANSPORTATION COMMISSION
105 WEST CAPITOL
JEFFERSON CITY, MO 65102
1-888-ASK-MODOT (1-888-275-6636)

GARVER, LLC.
7509 NW TIFFANY SPRINGS PARKWAY, SUITE 200
KANSAS CITY, MO 64153
PHONE: (816) 298-6465
CERTIFICATE OF AUTHORITY NO. 2008013090

ALL PROJECT COORDINATES HAVE BEEN PROJECTED FROM THE MISSOURI STATE PLANE COORDINATE (SPC) SYSTEM OF 1983 USING AN AVERAGE PROJECT PROJECTION (GRID TO GROUND) FACTOR. TO GET BACK TO STATE PLANE COORDINATES MULTIPY THE PROJECT COORDINATES BY THE AVERAGE GRID FACTOR AS SHOWN IN THE "REFERENCE CONTROL INFORMATION" PORTION OF THIS TABLE.

PROJECT COORDINATE INFORMATION

COORDINATE SYSTEM	MODIFIED MISSOURI STATE PLANE SYSTEM OF 1983
HORIZONTAL DATUM	NAD 83 (2011)
VERTICAL DATUM	NAVD 88
GEOID MODEL	GEOID 18
ELEVATIONS DETERMINED BY	GPS OBSERVATION AND DIFFERENTIAL LEVELING
PROJECT PROJECTION FACTOR	0.99993647

REFERENCE CONTROL INFORMATION

COORDINATE SYSTEM	MISSOURI COORDINATE SYSTEM OF 1983
CONTROL STATION	MO KE
DESIGNATION	MODOT KENNET CORS ARP
CORS_ID	MO KE
PID	DL 6892
LATITUDE	36°13'17.10465"N
LONGITUDE	90°04'24.46779"N
NORTHING (M)	43143.1560
EASTING (M)	288347.8830
ZONE	MISSOURI EAST 2401
PROJECT AVERAGE GRID FACTOR	1.000063534

EXAMPLE OF PROJECT COORDINATE TO S.P.C.

PROJECT NORTHING X AVERAGE GRID FACTOR
= STATE PLANE NORTHING
PROJECT EASTING X AVERAGE GRID FACTOR
= STATE PLANE EASTING

EXAMPLE: CONTROL POINT # 1
N 227357.444 X 0.99993647 = N 227343.0000
E 927640.734 X 0.99993647 = E 927581.8010

LINEAR UNIT CONVERSION

1 METER = 3.280833333 US SURVEY FEET (USFT)

COORDINATE POINT LISTING

SHEET NO	STATION	LOCATION	OFFSET (USFT)	MODIFIED STATE PLANE (GROUND) NORTHING (US SURVEY FT)	EASTING (US SURVEY FT)	ELEVATION (US SURVEY FT)	DESCRIPTION	GPK POINT ID
PROJECT CONTROL POINTS								
5	16+24.13	HWY 62	35.53 RT	227357.4440	927640.7340	305.09	CONTROL POINT 1	
5	21+25.57	HWY 62	39.75 LT	227712.0340	928003.4580	298.42	CONTROL POINT 2	
5	13+23.20	HWY 62	12.91 LT	227224.3650	927366.0890	305.97	CONTROL POINT 3	
4	49+51.67	HWY 62	58.08 RT	226298.1240	926104.5910	247.64	CONTROL POINT 4	
4	1+33.01	HWY 62	100.08 LT	226598.3920	926349.9050	301.01	CONTROL POINT 5	
4	52+67.12	HWY 62	14.60 LT	226498.4951	926365.6194	303.32	BENCHMARK 1	
4	1+58.89	HWY 62	9.70 RT	226520.4928	926438.0932	306.02	BENCHMARK 2	
5	12+50.09	HWY 62	15.50 LT	227179.8111	927307.9506	307.90	BENCHMARK 3	
5	16+65.93	HWY 62	3.60 RT	227407.7983	927656.2458	306.78	BENCHMARK 4	
ALIGNMENTS								
-	46+87.90	HWY 62	-	226319.5469	925828.4494		PC	
4	48+70.10	HWY 62	16.80 RT	226319.2159	926012.7335		PI	
4	50+47.97	HWY 62	-	226384.5504	926180.4079		PCC (BEGIN PROJECT)	
4	51+50.42	HWY 62	6.46 RT	226421.8572	926276.4100		PI	
4	52+51.77	HWY 62	-	226481.5116	926359.0124		PT	
4	52+90.81	HWY 62	-	226504.3705	926390.6631		STA. BK	
4	1+11.00	HWY 62	-	226504.3705	926390.6631		STA. AH	
5	12+43.33	HWY 62	-	227167.3401	927308.6168		PC	
5	13+53.54	HWY 62	0.63 LT	227346.1221	927562.1216		PI	
5	14+63.75	HWY 62	-	227294.5432	927489.0244		PRC	
5	15+73.96	HWY 62	0.63 RT	227356.8441	927579.5455		PI	
5	16+84.17	HWY 62	-	227421.6799	927668.9420		PT (END PROJECT)	

COORDINATE POINT SHEET
SHEET 1 OF 1

STATE OF MISSOURI
DONALD THOMAS SAKO
NUMBER PE-28475
PROFESSIONAL ENGINEER

THIS SHEET HAS BEEN SIGNED, SEALED AND DATED ELECTRONICALLY.

DATE PREPARED 7/8/2025

ROUTE	STATE
62	MO
DISTRICT	SHEET NO.
SE	7

COUNTY: DUNKLIN

JOB NO. JSE0155

CONTRACT ID.

PROJECT NO.

BRIDGE NO.

DESCRIPTION	DATE

MISSOURI HIGHWAYS AND TRANSPORTATION COMMISSION
105 WEST CAPITOL
JEFFERSON CITY, MO 65102
1-888-ASK-MODOT (1-888-275-6636)

GARVER, LLC.
7300 NW TIFFANY SPRINGS
PARKWAY, SUITE 2200
KANSAS CITY, MO 64153
PHONE: (816) 228-8455
CERTIFICATE OF AUTHORITY
NO. 2008003 03090

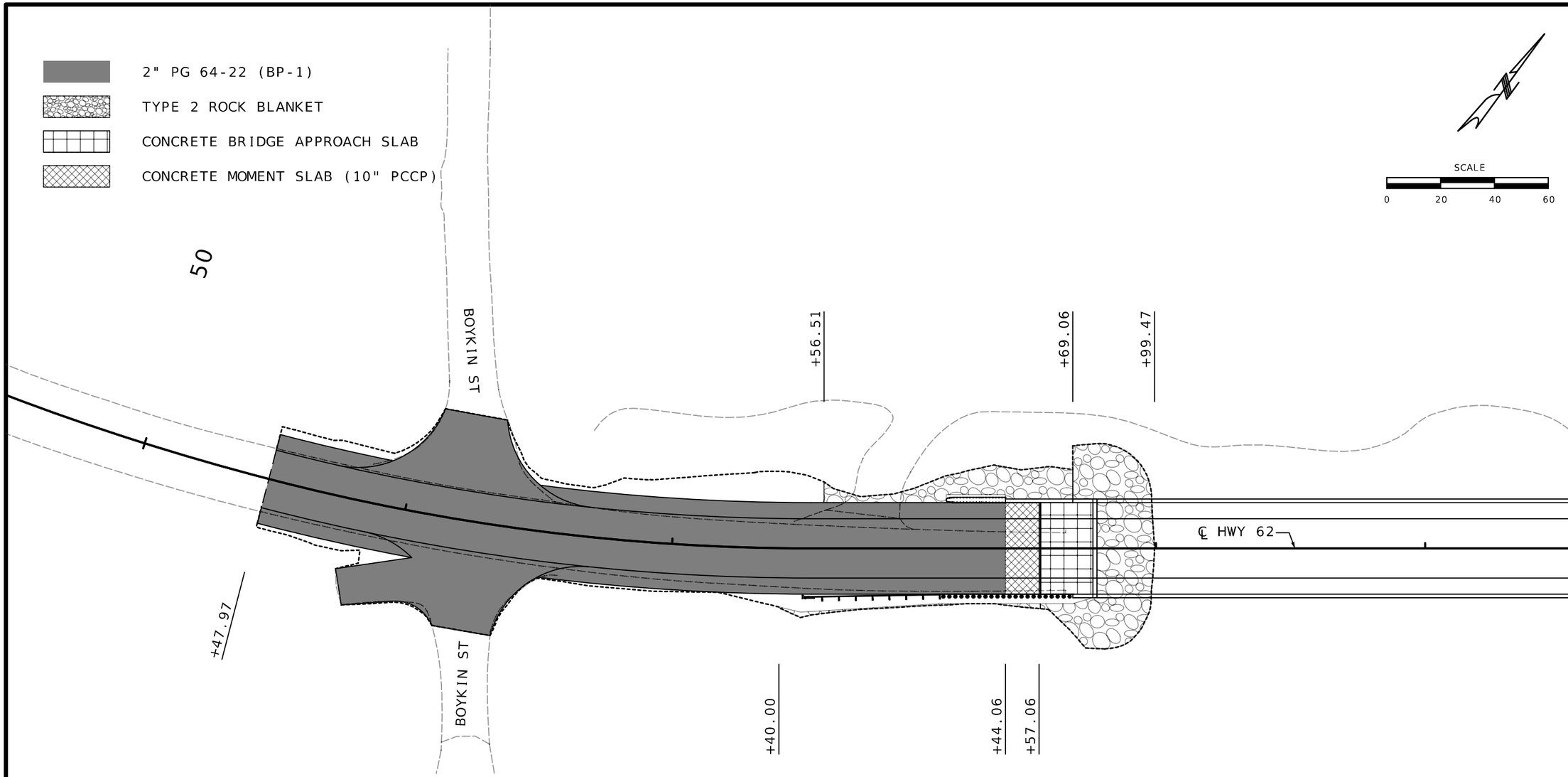

* REFER TO TYPICAL SECTIONS FOR FULL DEPTH PAVEMENT AREAS.

PAVEMENT TRANSITION

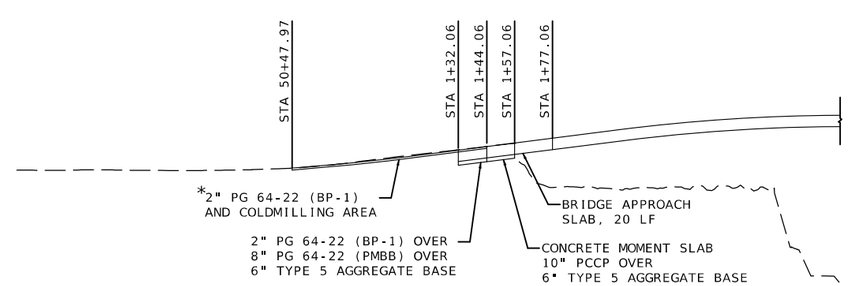

N.T.S

SPECIAL SHEET
PAVING DETAILS
SHEET 1 OF 2

STATE OF MISSOURI
DONALD THOMAS SAIKO
NUMBER PE-28475
PROFESSIONAL ENGINEER
THIS SHEET HAS BEEN SIGNED, SEALED AND DATED ELECTRONICALLY.

DATE PREPARED	7/10/2025
ROUTE	62
STATE	MO
DISTRICT	SE
SHEET NO.	8
COUNTY	DUNKLIN
JOB NO.	JSE0155
CONTRACT ID.	
PROJECT NO.	
BRIDGE NO.	

DESCRIPTION	DATE

MISSOURI HIGHWAYS AND TRANSPORTATION COMMISSION
105 WEST CAPITOL
JEFFERSON CITY, MO 65102
1-888-ASK-MODOT (1-888-275-6636)

GARVER, LLC.
7509 NW TIFFANY SPRINGS PARKWAY, SUITE 200
KANSAS CITY, MO 64153
PHONE: (816) 298-6465
CERTIFICATE OF AUTHORITY NO. 2008013090

c:\projectwise\garver-pw.bentley.com_garver-pw-01\eric.mutabazi\dms81924\008_SS_01_JSE0155_I20.dgn 11:32:08 AM 7/10/2025

2" PG 64-22 (BP-1)

TYPE 2 ROCK BLANKET

CONCRETE BRIDGE APPROACH SLAB

6" GRAVEL (A) OR CRUSHED STONE B

SCALE

0 20 40 60

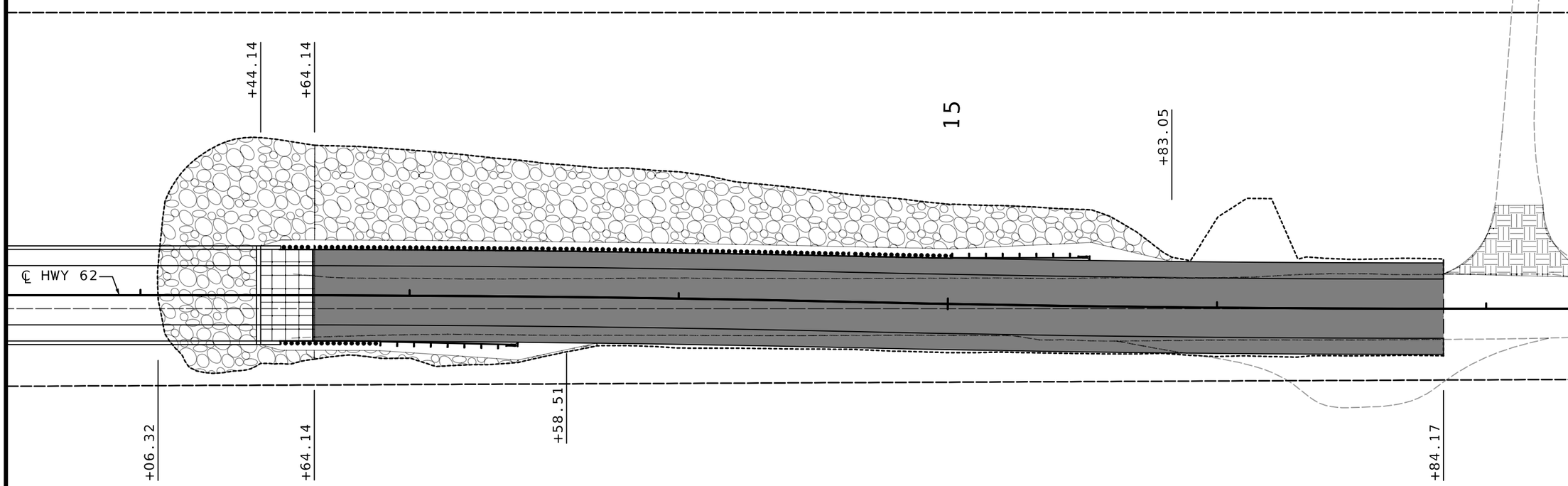

* REFER TO TYPICAL SECTIONS FOR FULL DEPTH PAVEMENT AREAS.

PAVEMENT TRANSITION

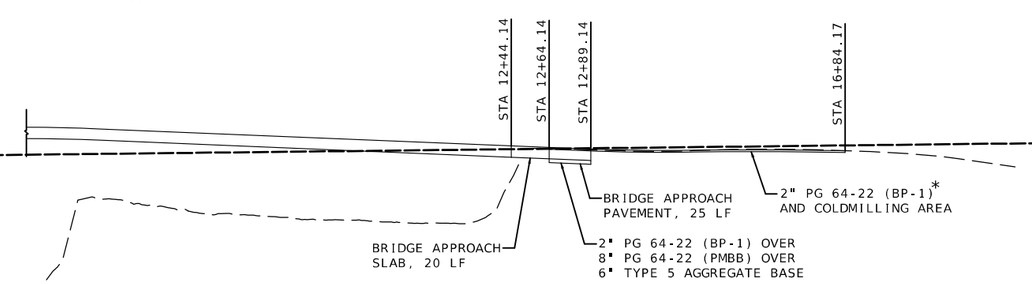

N.T.S

SPECIAL SHEET
PAVING DETAILS
SHEET 2 OF 2

STATE OF MISSOURI
DONALD THOMAS SAKO
NUMBER PE-28475
PROFESSIONAL ENGINEER

THIS SHEET HAS BEEN SIGNED, SEALED AND DATED ELECTRONICALLY.

DATE PREPARED	7/10/2025
ROUTE	62
STATE	MO
DISTRICT	SE
SHEET NO.	9
COUNTY	DUNKLIN
JOB NO.	JSE0155
CONTRACT ID.	
PROJECT NO.	
BRIDGE NO.	

DESCRIPTION	DATE

MISSOURI HIGHWAYS AND TRANSPORTATION COMMISSION

105 WEST CAPITOL
JEFFERSON CITY, MO 65102
1-888-ASK-MODOT (1-888-275-6636)

GARVER, LLC.
7509 NW TIFFANY SPRINGS
PARKWAY, SUITE 200
KANSAS CITY, MO 64153
PHONE: (816) 298-6465
CERTIFICATE OF AUTHORITY
NO. 2008013090

c:\projectwise\garver-pw.bentley.com_garver-pw-01\eric.mutabazi\dms81924\009_SS_02_JSE0155_i20.dgn 9:35:02 AM 7/10/2025

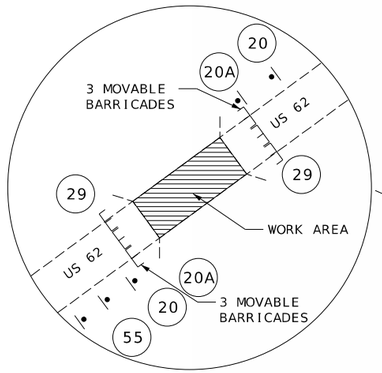

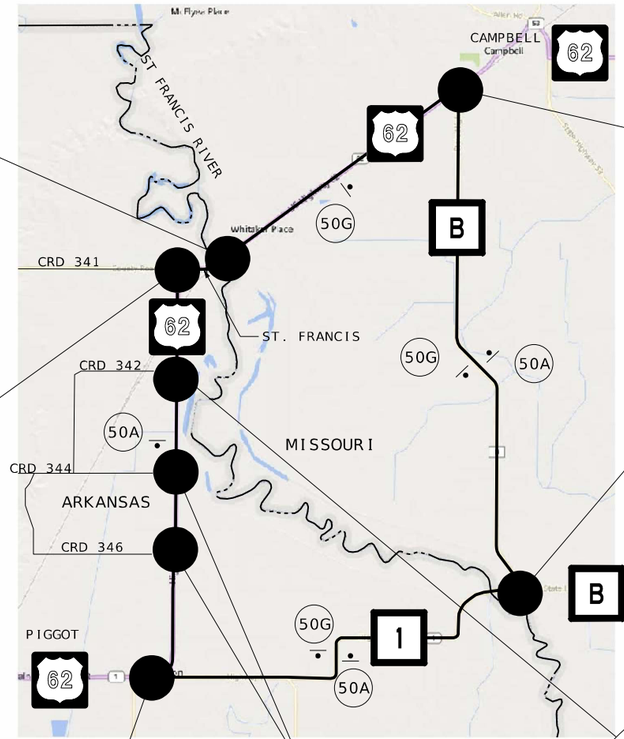

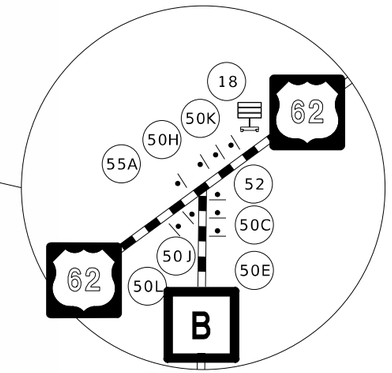

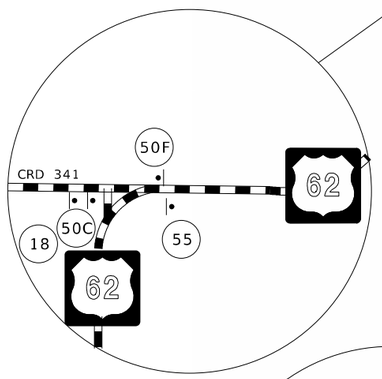

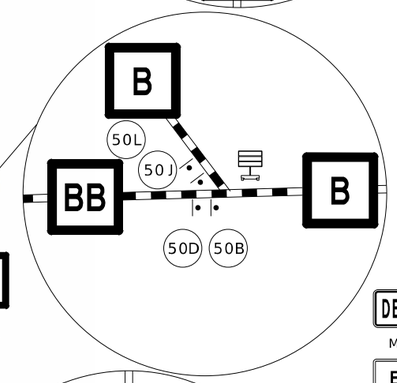

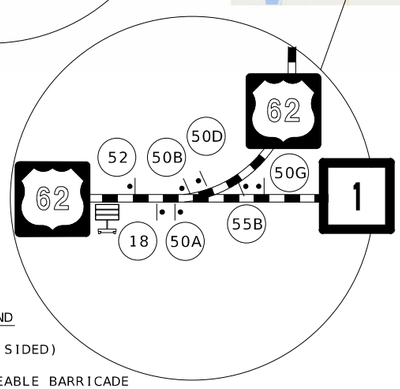

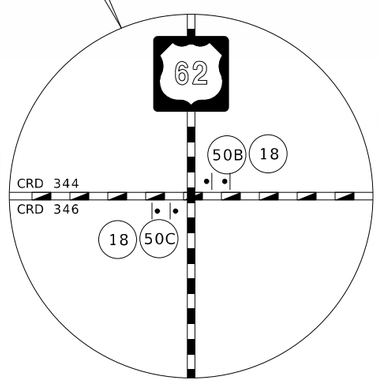

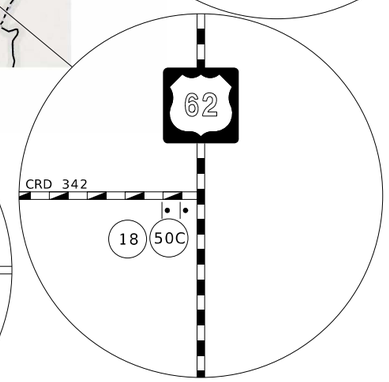

WO20-3 20A | WO20-3 20 | WO20-2 18

R11-2 29

MO4-8a 52

R11-3a 55A

R11-3a 55B

R11-4 55

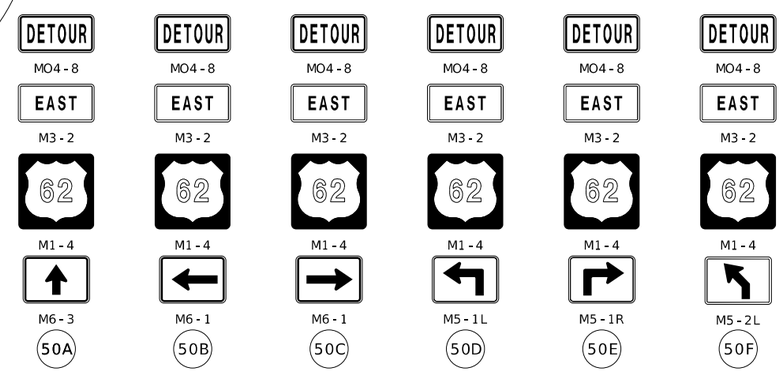

M4-8 M3-2 M1-4 M6-3 50A | M4-8 M3-2 M1-4 M6-1 50B | M4-8 M3-2 M1-4 M6-1 50C | M4-8 M3-2 M1-4 M5-1L 50D | M4-8 M3-2 M1-4 M5-1R 50E | M4-8 M3-2 M1-4 M5-2L 50F

M4-8 M3-4 M1-4 M6-3 50G | M4-8 M3-4 M1-4 M6-1 50H | M4-8 M3-4 M1-4 M6-1 50J | M4-8 M3-4 M1-4 M5-1L 50K | M4-8 M3-4 M1-4 M5-1R 50L

N.T.S

TRAFFIC CONTROL LEGEND

SIGN (SINGLE SIDED)

TYPE III MOVEABLE BARRICADE

NOTES:

LOCATE SIGNS 100' FROM INTERSECTIONS AND WILL REMAIN IN PLACE FOR DURATION OF PROJECT.

SIGN SPACING IS 500'. DISTANCE MAY BE ADJUSTED TO FIELD CONDITIONS.

USE IN PLACE ALL SIGNS WHICH DO NOT CONFLICT WITH THIS PLAN. COVER AND/OR REMOVE CONFLICTING SIGNS.

ALL STATIONS, SPACING, AND DISTANCES OF TRAFFIC CONTROL DEVICES ARE APPROXIMATE AND MAY BE REVISED AS DIRECTED BY THE ENGINEER TO FIT FIELD CONDITIONS.

TYPE III BARRICADE

SIGN 29 SHALL BE INSTALLED ON THE BARRICADES OR SEPERATE SUPPORTS ADJACENT TO THE BARRICADES IN ACCORDACE WITH STD PLAN 616.10

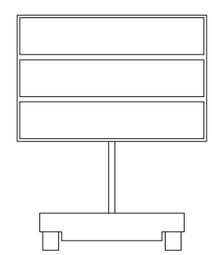

CONTRACTOR FURNISHED/RETAINED CHANGEABLE MESSAGE SIGN (CMS)

LOCATION AND MESSAGE TO BE DETERMINED BY ENGINEER

DETOUR
TRAFFIC CONTROL
SHEET 1 OF 4

STATE OF MISSOURI
JASON MICHAEL SHAFER
NUMBER PE-2010019596
PROFESSIONAL ENGINEER

DATE PREPARED	
5/7/2025	
ROUTE 62	STATE MO
DISTRICT SE	SHEET NO. 1.0
COUNTY DUNKLIN	
JOB NO. JSE0155	
CONTRACT ID. .	
PROJECT NO. .	
BRIDGE NO. .	

DESCRIPTION	DATE
.	.
.	.
.	.
.	.
.	.
.	.

MISSOURI HIGHWAYS AND TRANSPORTATION COMMISSION
105 WEST CAPITOL
JEFFERSON CITY, MO 65102
1-888-ASK-MODOT (1-888-275-6636)

TREK DESIGN GROUP, LLC
1411 East 134th St.
Kansas City, MO 64145
Tel (816) 874-4655
Fax (816) 874-4675
www.trekdesigngroup.com
Missouri Cert. of Authority 2002010300

IF A SEAL IS PRESENT ON THIS SHEET IT HAS BEEN ELECTRONICALLY SEALED AND DATED.

c:\projectwise\garver-pw.bentley.com_garver-pw-01\dms81924\010_TC_01_JSE0155_i1000.dgn 10:25:41 AM 5/7/2025

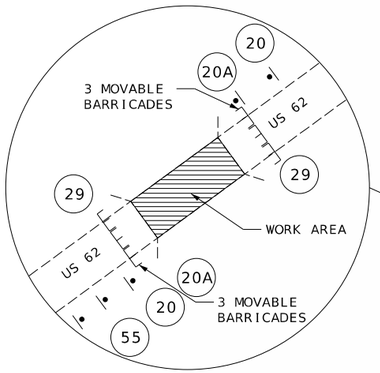

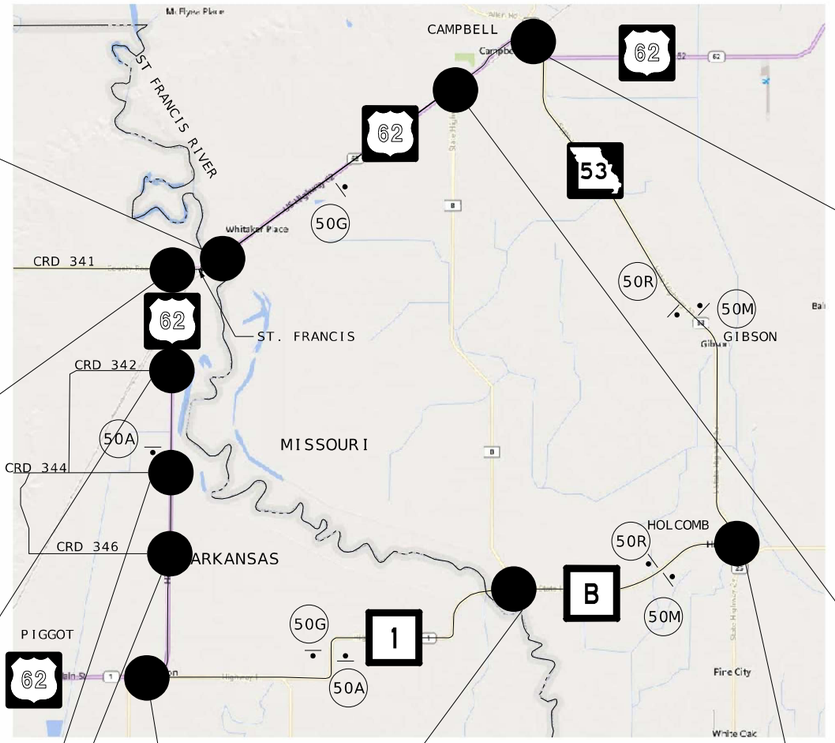

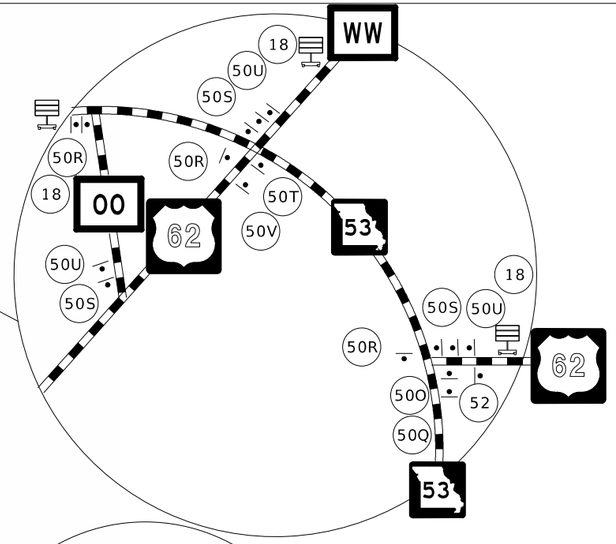

N.T.S

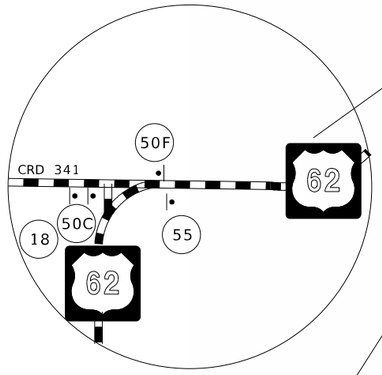

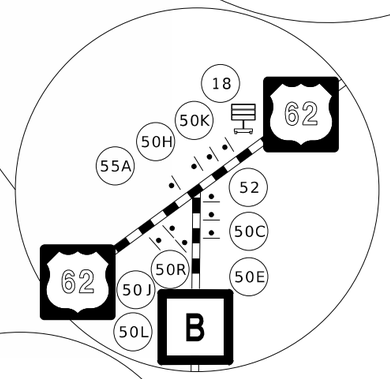

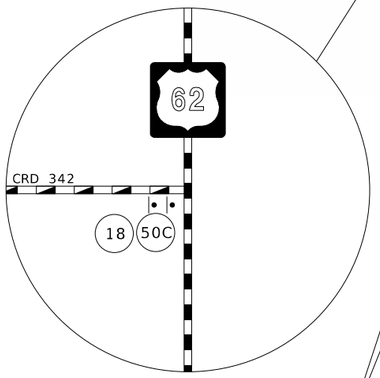

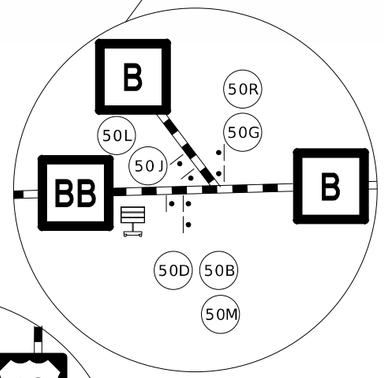

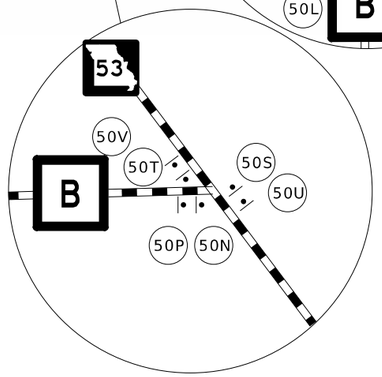

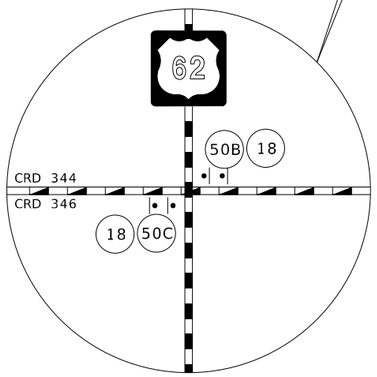

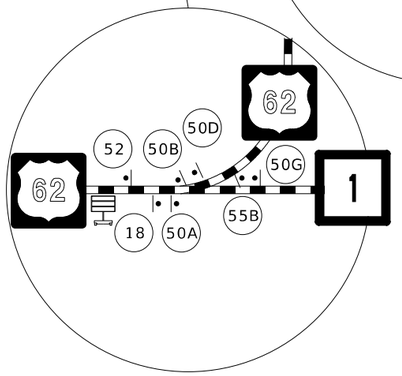

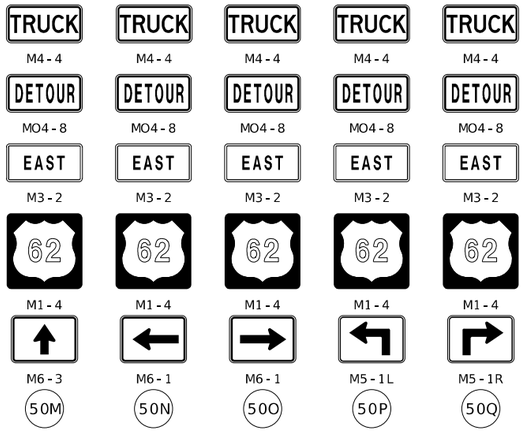

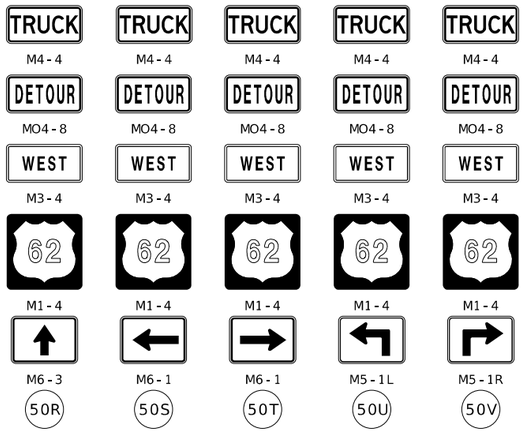

TRUCK DETOUR
TRAFFIC CONTROL
SHEET 2 OF 4

STATE OF MISSOURI
JASON MICHAEL SHAFER
NUMBER PE-2010019596
PROFESSIONAL ENGINEER

DATE PREPARED	
5/7/2025	
ROUTE 62	STATE MO
DISTRICT SE	SHEET NO. 11
COUNTY DUNKLIN	
JOB NO. JSE0155	
CONTRACT ID.	
PROJECT NO.	
BRIDGE NO.	

DATE	DESCRIPTION

MISSOURI HIGHWAYS AND TRANSPORTATION COMMISSION

MoDOT

105 WEST CAPITOL
JEFFERSON CITY, MO 65102
1-888-ASK-MODOT (1-888-275-6636)

TREKK DESIGN GROUP, LLC

1411 East 104th St.
Kansas City, MO 64131
Tel (816) 874-4665
Fax (816) 874-4675
www.trekkdesigngroup.com

Missouri Cert. of Authority 2002010300

IF A SEAL IS PRESENT ON THIS SHEET IT HAS BEEN ELECTRONICALLY SEALED AND DATED.

c:\projectwise\garver-pw.bentley.com_garver-pw-01\dms81924\011_TC_02_JSE0155_i1000.dgn 10:28:37 AM 5/7/2025

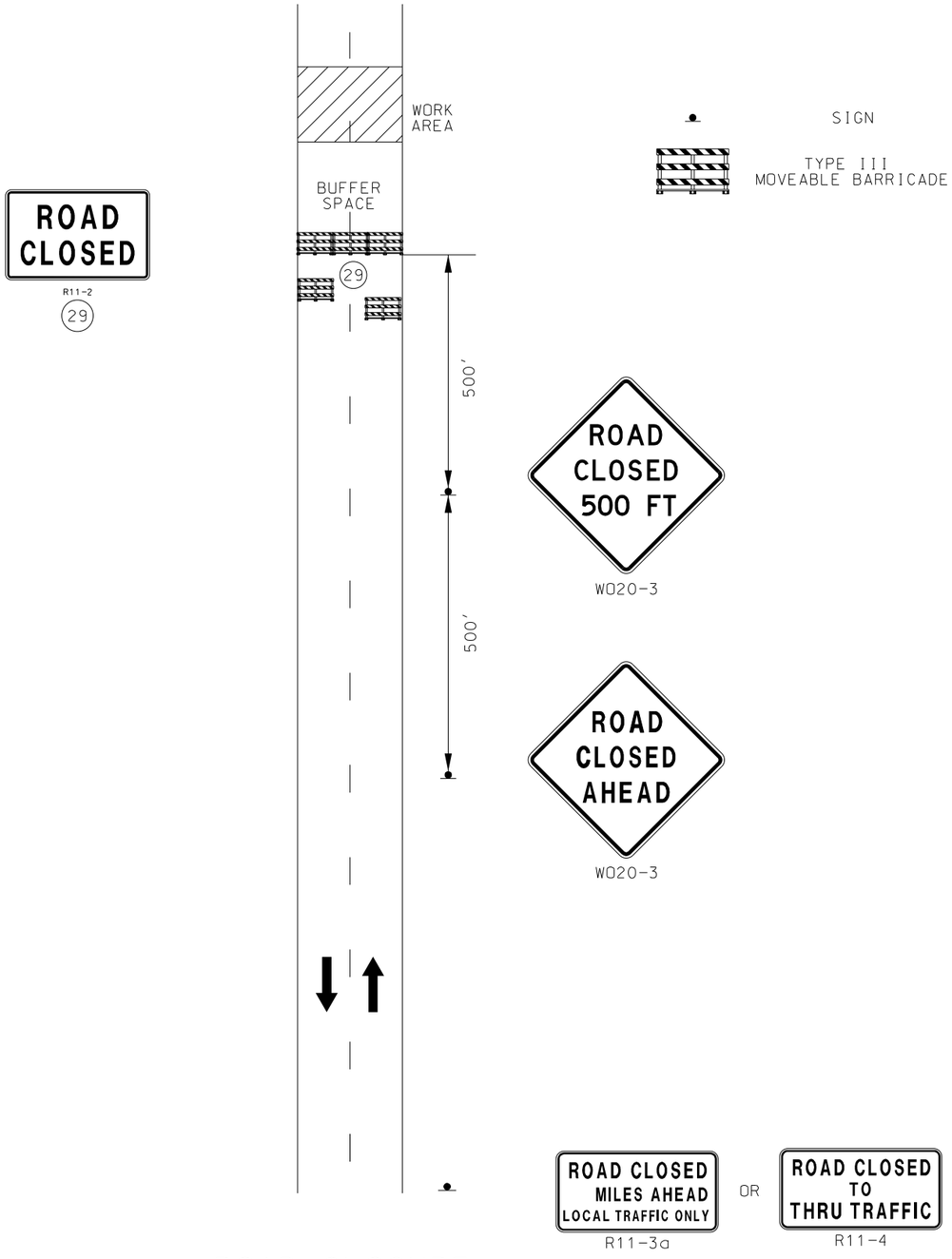

ROAD CLOSURE
ON TWO LANE ROAD

NOTES:

WHEN A SIDE ROAD INTERSECTS THE HIGHWAY WITHIN THE TTC ZONE ADDITIONAL TTC DEVICES SHALL BE PLACED AS NEEDED.

"ROAD CLOSED" SIGN MAY BE PLACED 7-10 FEET BEHIND THE BARRICADES AND AT A SIGN HEIGHT APPROPRIATE TO THE TYPE OF ROADWAY. ONE BARRICADE SHOULD BE REQUIRED TO COMPLETELY CLOSE EACH 8-FEET OF PAVEMENT. PAVED SHOULDERS SHALL BE INCLUDED IN THE AREA TO BE CLOSED.

IF USED, THE "ROAD CLOSED XX MILES AHEAD LOCAL TRAFFIC ONLY" OR "ROAD CLOSED TO THRU TRAFFIC" SIGN SHOULD BE LOCATED AT THE FIRST STATE ROUTE OR, UPON THE DISCRETION OF THE ENGINEER, ANY OTHER INTERSECTION IN ADVANCE OF THE CLOSURE. ADDITIONAL BARRICADES MAY BE USED AND OFFSET TO FACILITATE ACCESS FOR WORK VEHICLES, LOCAL TRAFFIC, ETC.

TRAFFIC CONTROL SHOULD BE REMOVED AS SOON AS PRACTICAL AFTER CONDITION FOR THE CLOSURE NO LONGER EXISTS.

SEE STANDARD PLAN 616.10 FOR USE OF THE BARRICADES AND SIGNS.

THE OPPOSITE SIDE OF THE WORK SPACE WILL HAVE THE SAME ROADWAY/BRIDGE CLOSURE SET-UP.

EXTRA BARRICADES TO BE USED FOR CLOSURE AT BOYKIN STREET AS DIRECTED BY ENGINEER.

TAPER LENGTHS AND SPACING OF CHANNELIZING DEVICES

SPEED (P) MPH	MINIMUM TAPER LENGTHS (L) FOR LANE WIDTHS (W)			MINIMUM TAPER SHOULDER (T1)	MAXIMUM CHANNELIZER SPACING	
	10 FT	11 FT	12 FT		THROUGH TAPER	THROUGH WORK AREA
0-35	205 FT	225 FT	245 FT	70	35 FT	50 FT
40-45	450 FT	495 FT	540 FT	150	40 FT	100 FT
50-55	550 FT	605 FT	660 FT	185	50 FT	100 FT
60-70	700 FT	770 FT	840 FT	235	60 FT	100 FT

(1) SHOULDER TAPER LENGTH BASED ON 10' (STANDARD SHOULDER WIDTH) OFFSETS.

(2) TAPER LENGTHS MA BE ADJUSTED TO ACCOMODATE CROSSROADS, CURVES, RAMPS, INTERSECTIONS, OR OTHER GEOMETRIC FEATURES.

(3) SPACING MAY BE REDUCED TO DISCOURAGE TRAFFIC ENCROACHMENT.

(4) SPACING REDUCED TO ONE-HALF AT INTERSECTIONS.

(5) SPACING MAY BE REDUCED TO ONE-HALF AT INTERSECTIONS.

SIGN SPACING FOR ADVANCE SIGN SERIES (1) (2)

SPEED (P) MPH	NON-DIVIDED HIGHWAYS (S)	DIVIDED HIGHWAYS (S)
0-35	200 FT	200 FT
40-45	350 FT	500 FT
50-55	500 FT	1000 FT
60-70	SA-1000 FT, SB-1500 FT, SC-2640 FT **	

(1) SPACING BETWEEN SIGNS ANS SPACING BETWEEN LAST SIGN AND FLAGGER, BEGINNING OF TAPER, OF SIGNED CONDITION.

(2) SPACING MAY BE ADJUSTED AS NECESSARY TO MEET FIELD CONDITIONS.

TRAFFIC CONTROL
SHEET 3 OF 4

STATE OF MISSOURI
JASON MICHAEL SHAFER
NUMBER PE-2010019596
PROFESSIONAL ENGINEER

DATE PREPARED 5/7/2025
ROUTE 62 | STATE MO
DISTRICT SE | SHEET NO. 12
COUNTY DUNKLIN
JOB NO. JSE0155
CONTRACT ID.
PROJECT NO.
BRIDGE NO.

DESCRIPTION	DATE

MISSOURI HIGHWAYS AND TRANSPORTATION COMMISSION
105 WEST CAPITOL
JEFFERSON CITY, MO 65102
1-888-ASK-MODOT (1-888-275-6636)

TREKK DESIGN GROUP, LLC
1411 East 104th St.
Kansas City, MO 64131
Tel (816) 874-4855
Fax (816) 874-4875
www.trekkdesigngroup.com
Missouri Cert. of Authority 2002010300

IF A SEAL IS PRESENT ON THIS SHEET IT HAS BEEN ELECTRONICALLY SEALED AND DATED.

REV.

c:\projectwise\garver-pw.bentley.com_garver-pw-01\dms81924\012_TC_03_JSE0155_i1.dgn 10:30:30 AM 5/7/2025

LEGEND

○ - BRIDGE WORK AHEAD (SIGN)

● - BOATS KEEP OUT (BUOY)

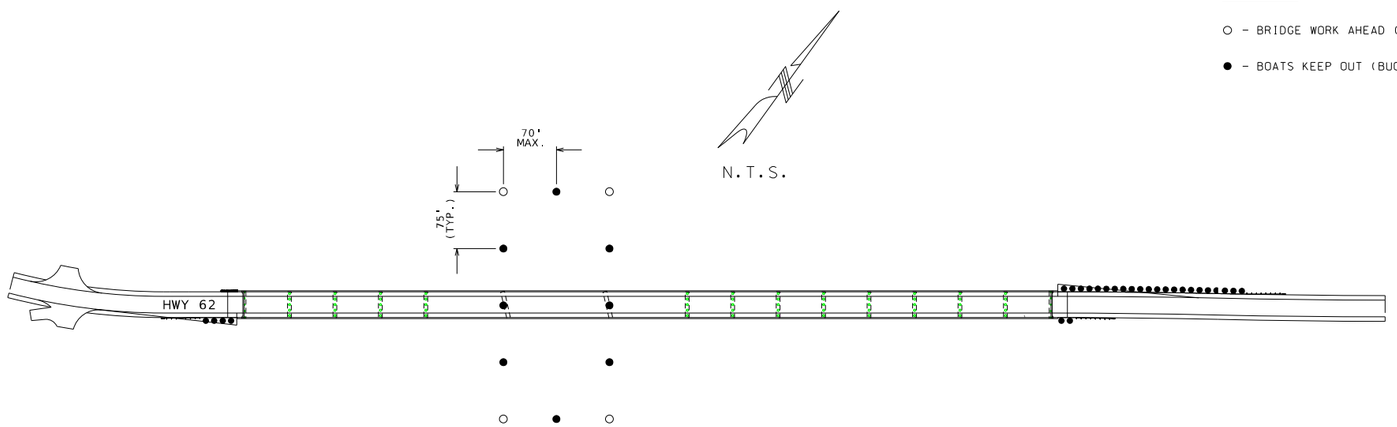

GENERAL NOTES:

INFORMATION SHOWN IS SCHEMATIC ONLY. FINAL LOCATION AND NUMBER OF SIGNS AND BUOYS IS SUBJECT TO APPROVAL OF MISSOURI STATE WATER PATROL

THE DETAILS SHOWN ARE FOR BIDDING PURPOSES ONLY. ALL MATERIALS AND LABOR NECESSARY TO INSTALL AND REMOVE SIGNS SHALL BE INCIDENTAL TO OTHER ITEMS

THE CONTRACTOR IS RESPONSIBLE FOR BUOY MAINTENANCE THROUGHOUT CONSTRUCTION AND FOR DETERMINING ANTICIPATED WATER LEVELS DURING CONSTRUCTION. EACH SIGN AND BUOY SHALL BE ANCHORED TO BOTTOM OF RIVER.

SIGNS SHALL BE DOUBLE FACED

EACH SIGN SHALL BE EQUIPPED WITH TWO (2) FLASHING LIGHT UNITS WITH AMBER LENS. FLASHING LIGHT UNITS SHALL BE FURNISHED AND MAINTAINED BY THE CONTRACTOR

ALL LETTERING TO BE BLACK IN COLOR IN BLOCK FORM.

FOR OTHER INFORMATION AND LOCATION OF SIGNS AND BUOYS SEE SPECIAL PROVISIONS.

COLOR:
- BACKGROUND - WHITE
- LEGEND - BLACK
- 2" REFLECTIVE BAND AND SYMBOL - INTERNATIONAL ORANGE

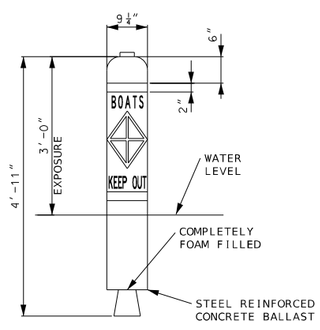

51 POUND ANCHOR TACKLE PERMITTED

CONTROLLED AREA BUOY

("BOATS KEEP OUT")

(8 REQUIRED - ROADWAY ITEM)

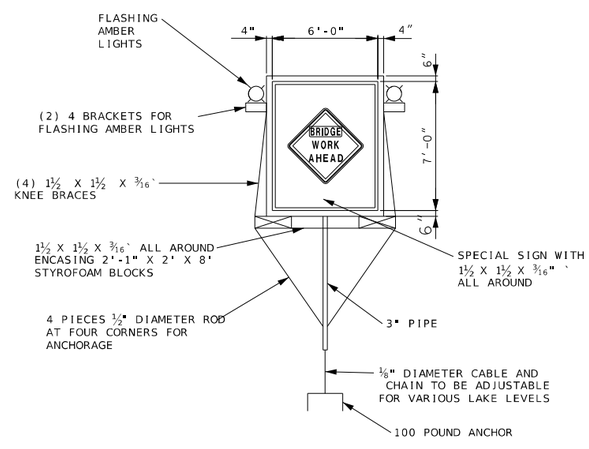

SPECIAL SIGN ASSEMBLY

("BRIDGE WORK AHEAD")
W020-1
(4 REQUIRED - ROADWAY ITEM)

BOAT TRAFFIC
TRAFFIC CONTROL
SHEET 4 OF 4

STATE OF MISSOURI
JASON MICHAEL SHAFER
NUMBER PE-2010019596
PROFESSIONAL ENGINEER

DATE PREPARED	5/7/2025
ROUTE	62
STATE	MO
DISTRICT	SE
SHEET NO.	13
COUNTY	DUNKLIN
JOB NO.	JSE0155
CONTRACT ID.	
PROJECT NO.	
BRIDGE NO.	

DATE	DESCRIPTION

MISSOURI HIGHWAYS AND TRANSPORTATION COMMISSION
105 WEST CAPITOL
JEFFERSON CITY, MO 65102
1-888-ASK-MODOT (1-888-275-6636)

TREK DESIGN GROUP, LLC
1411 East 104th St.
Kansas City, MO 64131
Tel (816) 874-4655
Fax (816) 874-4675
www.trekdesigngroup.com
Missouri Cert. of Authority 2002010300

IF A SEAL IS PRESENT ON THIS SHEET IT HAS BEEN ELECTRONICALLY SEALED AND DATED.

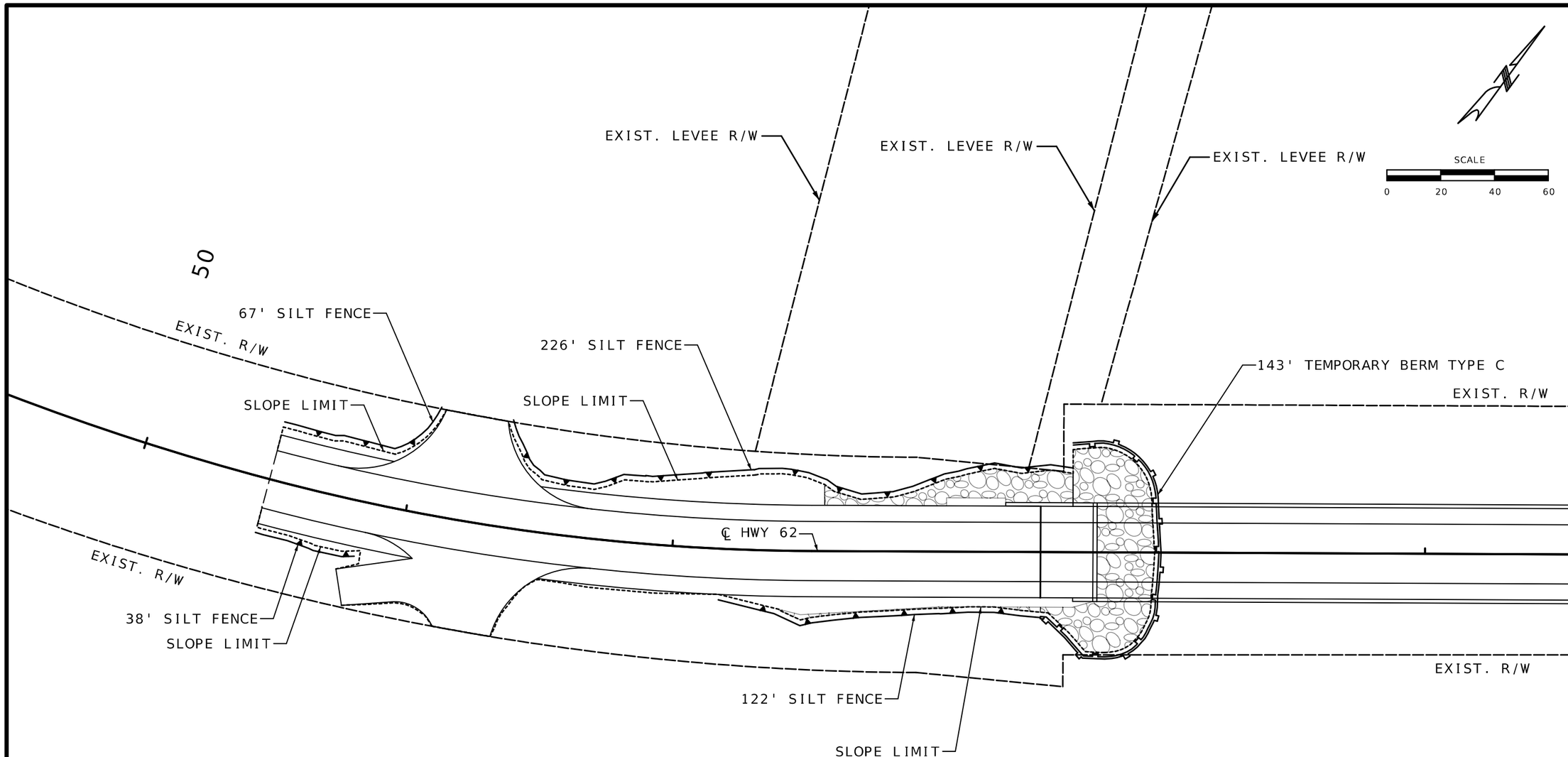

TEMPORARY EROSION CONTROL LEGEND

- TEMPORARY BERM TYPE C
- SILT FENCE
- TYPE 2 ROCK BLANKET

EROSION CONTROL
SHEET 1 OF 2

STATE OF MISSOURI
DONALD THOMAS SAKO
NUMBER PE-28475
PROFESSIONAL ENGINEER

THIS SHEET HAS BEEN SIGNED, SEALED AND DATED ELECTRONICALLY.

DATE PREPARED	7/10/2025
ROUTE 62	STATE MO
DISTRICT SE	SHEET NO. 14
COUNTY	DUNKLIN
JOB NO.	JSE0155
CONTRACT ID.	
PROJECT NO.	
BRIDGE NO.	

DESCRIPTION | DATE

MISSOURI HIGHWAYS AND TRANSPORTATION COMMISSION
105 WEST CAPITOL
JEFFERSON CITY, MO 65102
1-888-ASK-MODOT (1-888-275-6636)

GARVER, LLC.
7509 NW TIFFANY SPRINGS PARKWAY, SUITE 200
KANSAS CITY, MO 64153
PHONE: (816) 298-6465
CERTIFICATE OF AUTHORITY NO. 2008013090

c:\projectwise\garver-pw.bentley.com_garver-pw-01\eric.mutabazi\dms81924\014_EC_01_JSE0155_i20.dgn 11:45:53 AM 7/10/2025

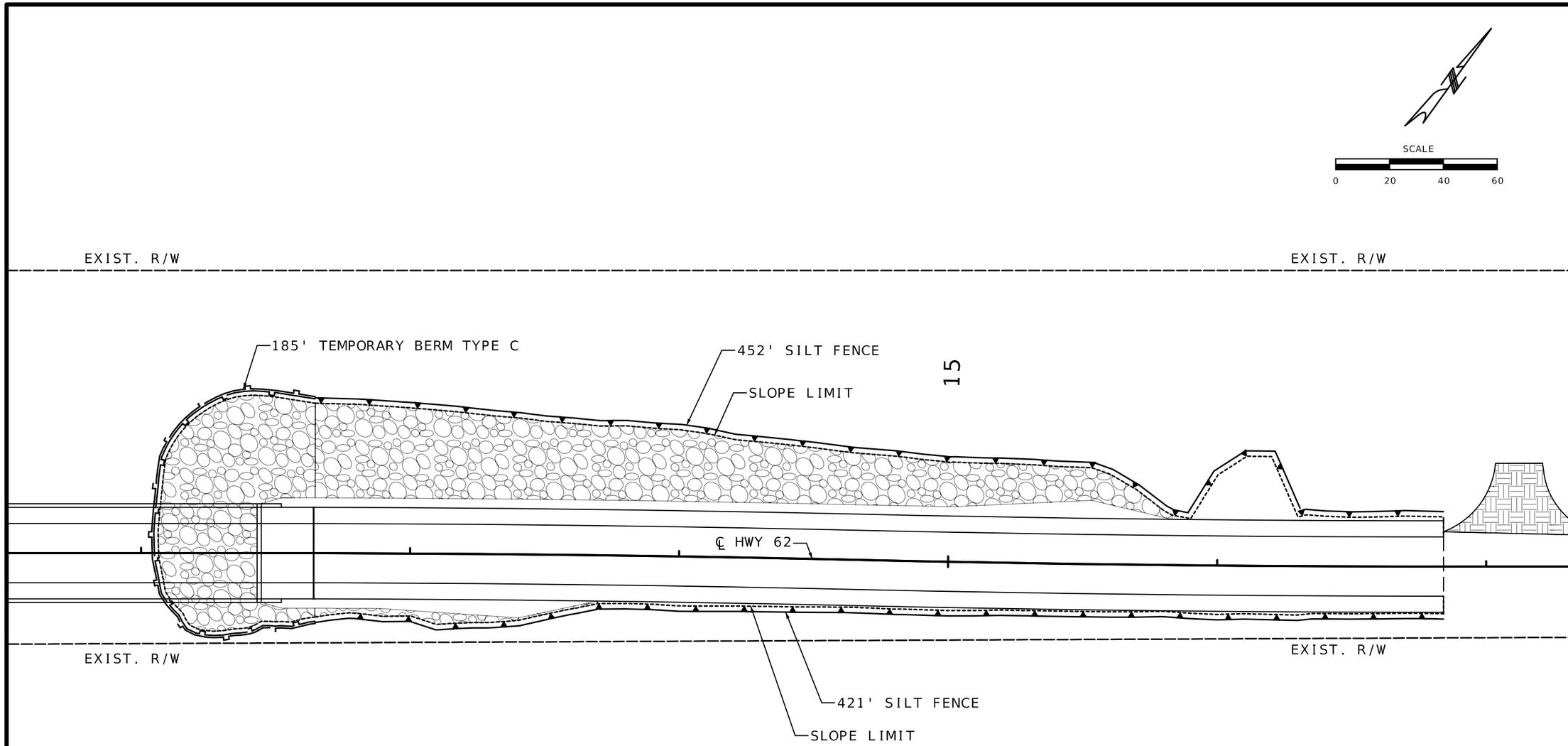

TEMPORARY EROSION CONTROL LEGEND

- TEMPORARY BERM TYPE C
- SILT FENCE
- TYPE 2 ROCK BLANKET

EROSION CONTROL
SHEET 2 OF 2

STATE OF MISSOURI
DONALD THOMAS SAKO
NUMBER PE-28475
PROFESSIONAL ENGINEER

THIS SHEET HAS BEEN SIGNED, SEALED AND DATED ELECTRONICALLY.

DATE PREPARED	
7/10/2025	
ROUTE 62	STATE MO
DISTRICT SE	SHEET NO. 15
COUNTY DUNKLIN	
JOB NO. JSE0155	
CONTRACT ID.	
PROJECT NO.	
BRIDGE NO.	

DESCRIPTION	DATE

MISSOURI HIGHWAYS AND TRANSPORTATION COMMISSION
105 WEST CAPITOL
JEFFERSON CITY, MO 65102
1-888-ASK-MODOT (1-888-275-6636)

GARVER, LLC.
7509 NW TIFFANY SPRINGS PARKWAY, SUITE 200
KANSAS CITY, MO 64153
PHONE: (816) 298-6465
CERTIFICATE OF AUTHORITY NO. 2008013090

c:\projectwise\garver-pw.bentley.com_garver-pw-01\eric.mutabazi\dms81924\015_EC_02_JSE0155_i20.dgn 9:36:59 AM 7/10/2025

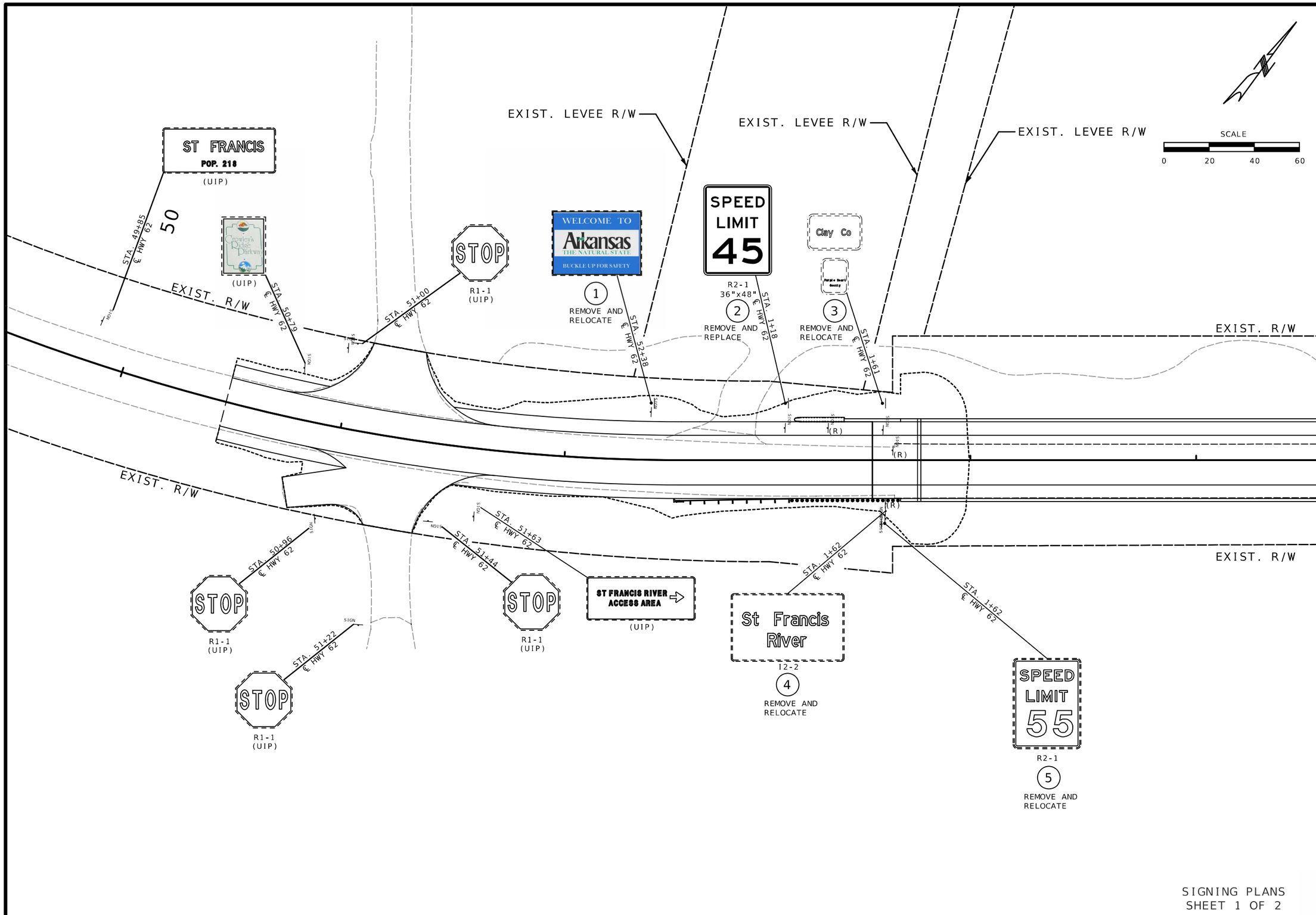

SIGNING PLANS
SHEET 1 OF 2

STATE OF MISSOURI
DONALD THOMAS SAIKO
NUMBER PE-28475
PROFESSIONAL ENGINEER
THIS SHEET HAS BEEN SIGNED, SEALED AND DATED ELECTRONICALLY.

DATE PREPARED	7/8/2025
ROUTE	62
STATE	MO
DISTRICT	SE
SHEET NO.	16
COUNTY	DUNKLIN
JOB NO.	JSE0155
CONTRACT ID.	
PROJECT NO.	
BRIDGE NO.	

DESCRIPTION

DATE

MISSOURI HIGHWAYS AND TRANSPORTATION COMMISSION
105 WEST CAPITOL
JEFFERSON CITY, MO 65102
1-888-ASK-MODOT (1-888-275-6636)

GARVER, LLC.
7509 NW TIFFANY SPRINGS PARKWAY, SUITE 200
KANSAS CITY, MO 64153
PHONE: (816) 298-6465
CERTIFICATE OF AUTHORITY NO. 2008013090

c:\projectwise\garver-pw.bentley.com_garver-pw-01\eric.mutabazi\dms81924\016_SN_01_JSE0155_i20.dgn 7:36:55 PM 7/8/2025

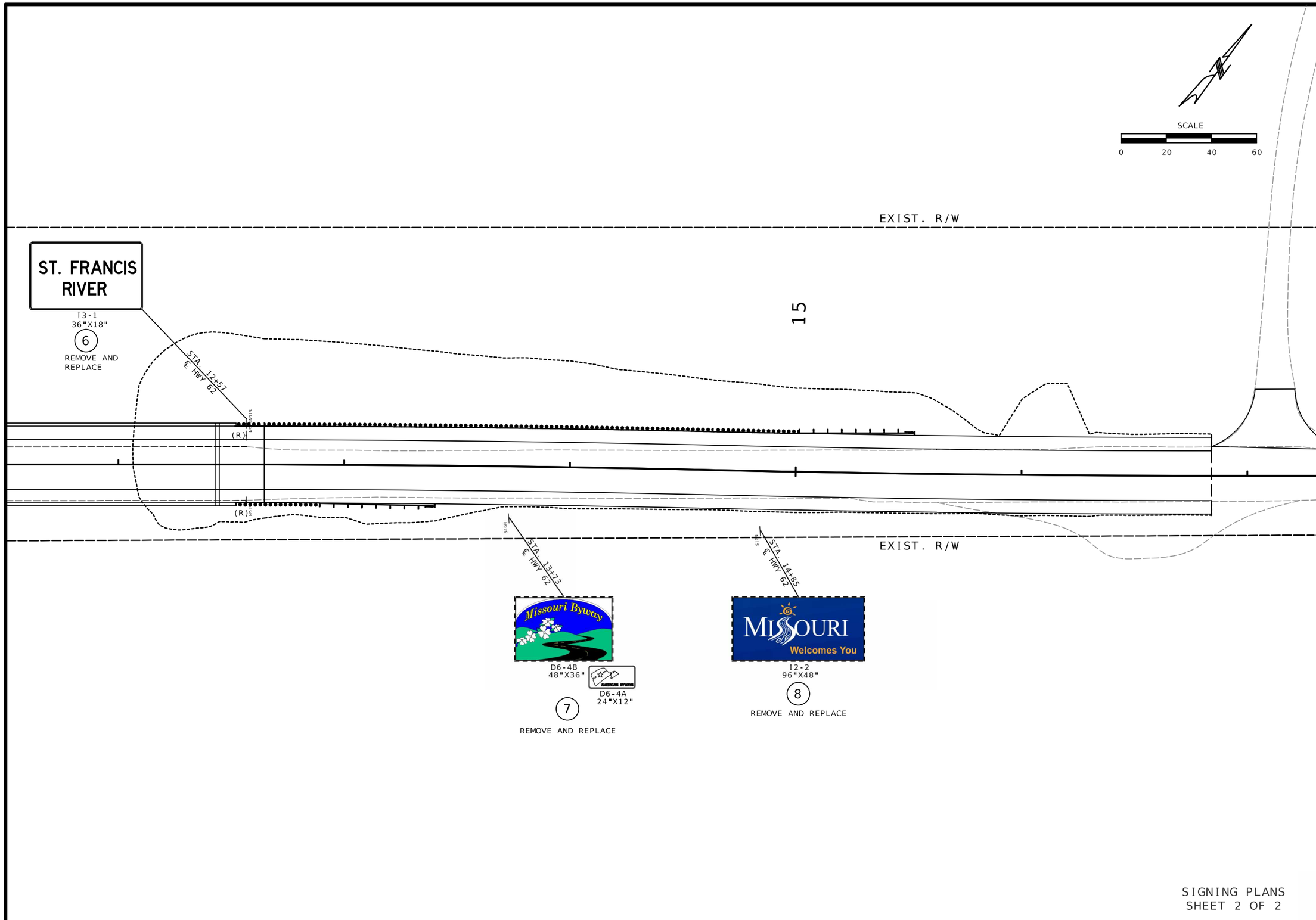

SIGNING PLANS
SHEET 2 OF 2

STATE OF MISSOURI
DONALD THOMAS SAIKO
NUMBER PE-28475
PROFESSIONAL ENGINEER

THIS SHEET HAS BEEN SIGNED, SEALED AND DATED ELECTRONICALLY.

DATE PREPARED	7/8/2025
ROUTE	62
STATE	MO
DISTRICT	SE
SHEET NO.	17
COUNTY	DUNKLIN
JOB NO.	JSE0155
CONTRACT ID.	
PROJECT NO.	
BRIDGE NO.	

DESCRIPTION	DATE

MISSOURI HIGHWAYS AND TRANSPORTATION COMMISSION

105 WEST CAPITOL
JEFFERSON CITY, MO 65102
1-888-ASK-MODOT (1-888-275-6636)

GARVER, LLC.
7509 NW TIFFANY SPRINGS
PARKWAY, SUITE 200
KANSAS CITY, MO 64153
PHONE: (816) 298-6465
CERTIFICATE OF AUTHORITY
NO. 2008013090

c:\projectwise\garver-pw.bentley.com_garver-pw-01\eric.mutabazi\dms81924\017_SN_02_JSE0155_i20.dgn 7:37:53 PM 7/8/2025

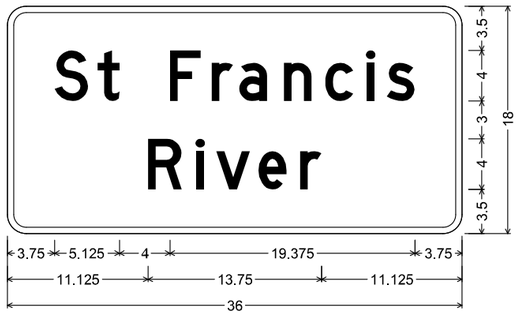

I3-1 SH-FLAT SHEET;
1.500" Radius, 0.500" Border, White on, Green;
"St Francis", D; "River", D;
Table of letter and object lefts

S 3.750	t 7.125

F 12.875	r 16.125	a 18.375	n 21.875	c 25.125	l 28.500	s 30.000

R 11.125	i 15.000	v 16.500	e 19.875	r 23.125

I2-2 ST-STRUCTURAL;
6.000" Radius, 1.000" Border, White on, Blue;
"Missouri", Cambria, Italic, Bold 300% spacing;
"Welcomes" Yellow, Cambria, Italic, Bold 300% spacing, "You" Yellow, Cambria, Italic, Bold 300% spacing.
Table of letter and object lefts

M 8.000	i 23.750	s 28.375	s 36.500	o 47.000	u 61.125	r 74.000	i 82.500

W 8.000	e 45.500	l 52.250	c 57.250	o 63.250	m 64.500	e 70.375	s 79.750	Y 84.000

o 59.375	u 63.300	u 69.625

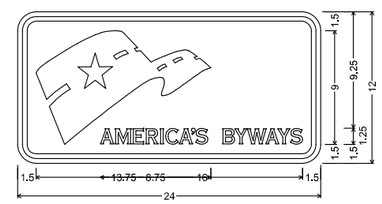

D6-4a SH-FLAT SHEET;
1.500" Radius, 0.375" Border, 0.375" Indent, Blue on, White;
Table of letter and object lefts

1.500	6.500

NOTE: PLEASE CONTACT MATTHEW.LACKMAN@MODOT.MO.GOV
FOR ADDITIONAL INFORMATION

SIGN DETAILS
SHEET 1 OF 1

STATE OF MISSOURI
DONALD THOMAS SAIKO
NUMBER PE-28475
PROFESSIONAL ENGINEER

THIS SHEET HAS BEEN SIGNED, SEALED AND DATED ELECTRONICALLY.

DATE PREPARED
7/8/2025

ROUTE	STATE
62	MO
DISTRICT	SHEET NO.
SE	18

COUNTY
DUNKLIN

JOB NO.
JSE0155

CONTRACT ID.

PROJECT NO.

BRIDGE NO.

DATE	DESCRIPTION

MISSOURI HIGHWAYS AND TRANSPORTATION COMMISSION
105 WEST CAPITOL
JEFFERSON CITY, MO 65102
1-888-ASK-MODOT (1-888-275-6636)

GARVER, LLC.
7509 NW TIFFANY SPRINGS
PARKWAY, SUITE 200
KANSAS CITY, MO 64153
PHONE: (816) 298-6465
CERTIFICATE OF AUTHORITY
NO. 2008013090

c:\projectwise\garver-pw.bentley.com_garver-pw-01\eric.mutabazi\dms81924\018_SN_03_JSE0155_i1.dgn 7:38:34 PM 7/8/2025

EFFECTIVE: 07-01-2024

SIGNS						CONCRETE FOOTINGS EMBEDDED	STRUCTURAL STEEL POSTS *						PIPE POSTS *					BACKING BARS **				U-CHANNEL POST	PERFORATED SQUARE STEEL TUBE												BREAK-AWAY ASSEMBLY	REMARKS AND OTHER REQUIRED ITEMS
902 SIGNAL SIGNS TABULATED ON D-37A SHEET																							2 IN. POST						2.5 IN. POST							
																										ANCHORS						ANCHORS				
SIGN NO.	SIGN SIZE	STATION	HORZ CLEAR IF NOT STD	LOCATION	SIGN DTL. SHT. NO.	ITEM NO. 9031010	POST DES NO.	POST NO.1	POST NO.2	POST NO.3	LBS PER FT	TOTAL ITEM NO. 9031210	PIPE SIZE	POST NO.1	POST NO.2	LBS PER FT	TOTAL ITEM NO. 9031220	2" X 3/8" BARS @ 2.55 LBS PER FT NO. EACH	LGTH	TOTAL	TOTAL	ITEM NO. 9031250A	POST NO.1	POST NO.2	TOTAL ITEM NO. 9031270A	DRIVEN 12-GA. ITEM NO. 9031271A	DRIVEN 7-GA. ITEM NO. 9031273A	CONCRETE 7-GA. ITEM NO. 9031274	POST NO.1	POST NO.2	TOTAL ITEM NO. 9031280	2.25" INSERT (6 FT) ITEM NO. 9031272A	DRIVEN 7-GA. ITEM NO. 9031281A	CONCRETE 7-GA. ITEM NO. 9031285	ITEM NO. 9031241	
						CY		LF	LF	LF		LBS	IN.	LF	LF		LBS		IN.	LF	LBS	LF	LF	LF	LF	EA	EA	EA	LF	LF	LF	EA	EA	EA	EA	
1	48"x36"	52+38		HWY 62 LT																		29.00														
2	36"x48"	1+18		HWY 62 LT																		31.25														
3	36"x18"	1+61		HWY 62 LT																		17.00														
	12"x18"	1+61		HWY 62 LT																																
4	42"x18"	1+62		HWY 62 RT																		13.00														
5	24"x30"	1+62		HWY 62 RT																		20.00														
6	36"x18"	12+57		HWY 62 LT																			9.75		9.75	1										
7	48"x36"	13+73		HWY 62 RT																			11.25	12.75	24.00	2										
	24"x12"	13+73		HWY 62 RT																																
8	36"x18"	14+85		HWY 62 RT																			11.00	13.00	24.00	2										
				SUBTOTAL																		110.25			57.75	5										
				TOTAL																	**	110.0			58.00	5										

* BREAKAWAY ASSEMBLY IS INCIDENTAL FOR STRUCTURAL STEEL AND PIPE POSTS.
** BACKING BARS ARE TOTALED WITH STRUCTURAL STEEL OR PIPE POSTS.

ROUND PIPE POST AND FOOTING DATA TABLE

NOM.SIZE	WEIGHT		STUB LENGTH	FOOTING		CONCRETE
(IN.)	LBS/FT	LBS/IN		DIA.	DEPTH	C.Y.
2½	5.79	0.48	4'- 3½"	12"	4~6"	0.13
3	7.58	0.63	4'- 3½"	12"	4~6"	0.13
4	10.79	0.90	5'- 3½"	18"	5~6"	0.36

STRUCTURAL STEEL POST AND FOOTING DATA TABLE

POST					FOOTING									
POST DES NO.	NOM. SIZE	WEIGHT LBS/FT	WEIGHT LBS/IN	STUB LENGTH	DIA.	LEVEL GROUND DEPTH	LEVEL GROUND C.Y.	6:1 GRADE DEPTH	6:1 GRADE C.Y.	4:1 GRADE DEPTH	4:1 GRADE C.Y.	3:1 OR 2:1 GRADE DEPTH	3:1 OR 2:1 GRADE C.Y.
1	W6	9.0	0.75	3'-0"	15"	3'-0"	0.14	3'-2"	0.15	3'-3"	0.16	3'-6"	0.17
2	W6	15.0	1.25	4'-0"	24"	4'-0"	0.47	4'-2"	0.50	4'-3"	0.51	4'-6"	0.54
3	W8	18.0	1.50	4'-6"	28"	4'-6"	0.71	4'-8"	0.73	4'-9"	0.74	5'-0"	0.78
4	W10	22.0	1.83	5'-0"	36"	5'-0"	1.31	5'-2"	1.36	5'-3"	1.39	5'-6"	1.45
5	W10	26.0	2.17	5'-0"	36"	5'-0"	1.31	5'-3"	1.37	5'-5"	1.43	5'-9"	1.52
6	W12	35.0	2.92	5'-6"	36"	5'-6"	1.44	5'-9"	1.52	5'-11"	1.56	6'-3"	1.65

STATE OF MISSOURI
DONALD THOMAS SAKO
NUMBER PE-28475
PROFESSIONAL ENGINEER
THIS SHEET HAS BEEN SIGNED, SEALED AND DATED ELECTRONICALLY.

DATE PREPARED 7/8/2025
ROUTE 62 | STATE MO
DISTRICT SE | SHEET NO. 19
COUNTY DUNKLIN
JOB NO. JSE0155
CONTRACT ID.
PROJECT NO.
BRIDGE NO.

DESCRIPTION | DATE

MISSOURI HIGHWAYS AND TRANSPORTATION COMMISSION
105 WEST CAPITOL
JEFFERSON CITY, MO 65102
1-888-ASK-MODOT (1-888-275-6636)

GARVER, LLC.
7509 NW TIFFANY SPRINGS PARKWAY, SUITE 200
KANSAS CITY, MO 64153
PHONE: (816) 298-6465
CERTIFICATE OF AUTHORITY NO. 2008013090

EFFECTIVE: 10-01-2016

STANDARD SIGN ASSEMBLIES

SIGN NUMBER	STATION	LOCATION	TYPE: R2-1 36"x48" (SPEED LIMIT 45)	I3-1 36"x18" (ST. FRANCIS RIVER)	D6-4B 48"x36"	D6-4A 24"x12"	I2-2 96"x48" (Missouri)
2	1+18	HWY 62 LT	1				
6	12+57	HWY 62 LT		1			
7	13+73	HWY 62 RT			1		
7	13+73	HWY 62 RT				1	
8	14+85	HWY 62 RT					1

SIGN SUMMARY

STANDARD SIGN OR SPECIAL SIGN NUMBER		SIGN DETAIL SHEET NO.	NO. EACH	SIZE	FLAT SHEET SH ITEM NO. 9035004A	FLAT SHEET FLUORESCENT SHF * ITEM NO. 9035069A	STRUCTURAL ST ITEM NO. 9035011A	STRUCTURAL FLUORESCENT STF * ITEM NO. 9035071A
R2-1	SPEED LIMIT		1	36 x 48	12.00			
I3-1	STREAM/RIVER		1	36 x 18	4.50			
D6-4B	MISSOURI BYWAY		1	48 x 36	12.00			
D6-4A	AMERICA'S BYWAYS		1	24 x 12	2.00			
I2-2	WELCOME SIGN		1	96 x 48	32.00			
				TOTAL	63			

* ORANGE, YELLOW & YELLOW/GREEN

STATE OF MISSOURI
DONALD THOMAS SAKO
NUMBER PE-28475
PROFESSIONAL ENGINEER

THIS SHEET HAS BEEN SIGNED, SEALED AND DATED ELECTRONICALLY.

DATE PREPARED 7/8/2025

ROUTE	STATE
62	MO
DISTRICT	SHEET NO.
SE	20

COUNTY: DUNKLIN

JOB NO. JSE0155

CONTRACT ID.

PROJECT NO.

BRIDGE NO.

DESCRIPTION

DATE

MISSOURI HIGHWAYS AND TRANSPORTATION COMMISSION

105 WEST CAPITOL
JEFFERSON CITY, MO 65102
1-888-ASK-MODOT (1-888-275-6636)

GARVER, LLC.
7509 NW TIFFANY SPRINGS
PARKWAY, SUITE 200
KANSAS CITY, MO 64153
PHONE: (816) 298-6465
CERTIFICATE OF AUTHORITY
NO. 2008013090

GARVER

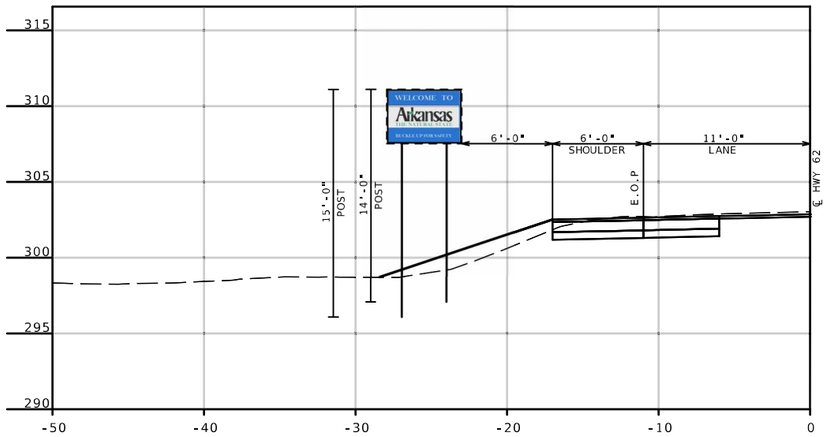

1

HWY 62 STA. 52+38.00 LT.
2-U-CHANNEL POSTS, 15 LF AND 14 LF

RE-USE EXISTING HORIZONTAL
U-CHANNEL SUPPORTS LOCATED
ON BACK OF SIGN.

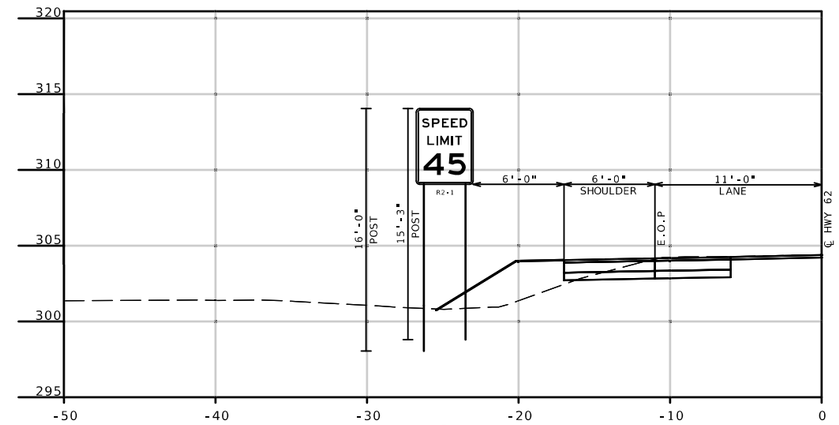

2

HWY 62 STA. 1+18.00 LT.
R2-1 (36"x48")
2-U-CHANNEL POSTS, 16 LF AND 15.25 LF

RE-USE EXISTING HORIZONTAL
U-CHANNEL SUPPORTS LOCATED
ON BACK OF SIGN.

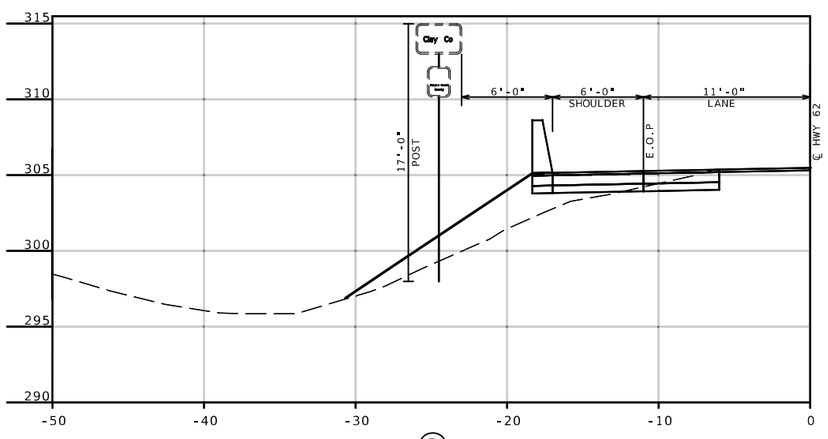

3

HWY 62 STA. 1+61.00 LT.
1-U-CHANNEL POST, 17 LF

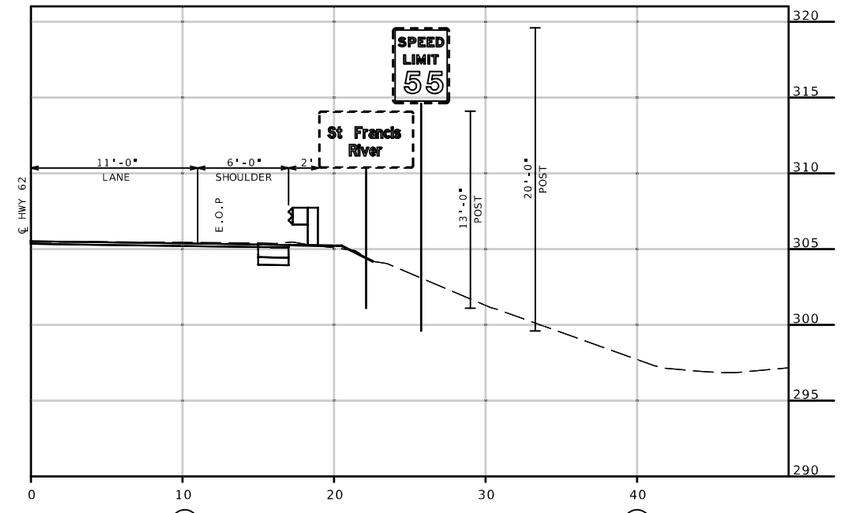

4

HWY 62 STA. 1+62.00 RT.
1 U-CHANNEL POST, 13 LF

5

HWY 62 STA. 1+62.00 RT.
1 U-CHANNEL POST, 20 LF

SIGN SECTIONS
SHEET 1 OF 2

STATE OF MISSOURI
DONALD THOMAS SAKO
NUMBER PE-28475
PROFESSIONAL ENGINEER

THIS SHEET HAS BEEN SIGNED, SEALED AND DATED ELECTRONICALLY.

DATE PREPARED	7/8/2025
ROUTE 62	STATE MO
DISTRICT SE	SHEET NO. 21
COUNTY	DUNKLIN
JOB NO.	JSE0155
CONTRACT ID.	
PROJECT NO.	
BRIDGE NO.	

DESCRIPTION	DATE

MISSOURI HIGHWAYS AND TRANSPORTATION COMMISSION
105 WEST CAPITOL
JEFFERSON CITY, MO 65102
1-888-ASK-MODOT (1-888-275-6636)

GARVER, LLC.
7509 NW TIFFANY SPRINGS
PARKWAY, SUITE 200
KANSAS CITY, MO 64153
PHONE: (816) 298-6465
CERTIFICATE OF AUTHORITY
NO. 2008013090

c:\projectwise\garver-pw.bentley.com_garver-pw-01\eric.mutabazi\dms81924\021_SN_06_JSE0155_i5.dgn 7:41:32 PM 7/8/2025

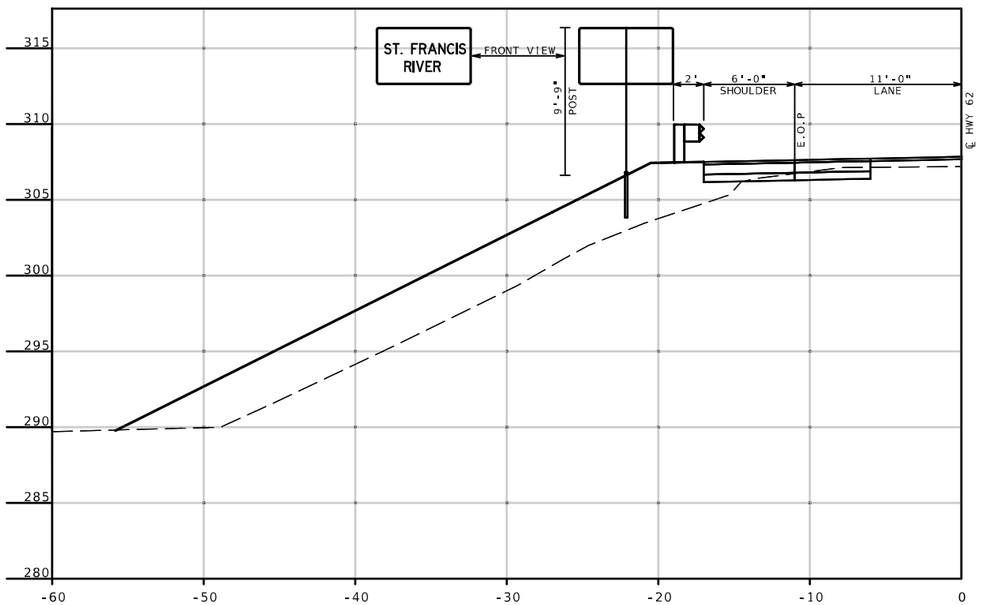

⑥

HWY 62 STA. 12+57.00 LT.
I3-1 (36"x 18")
1 - 2" 12 GA PSST, 9.75 LF

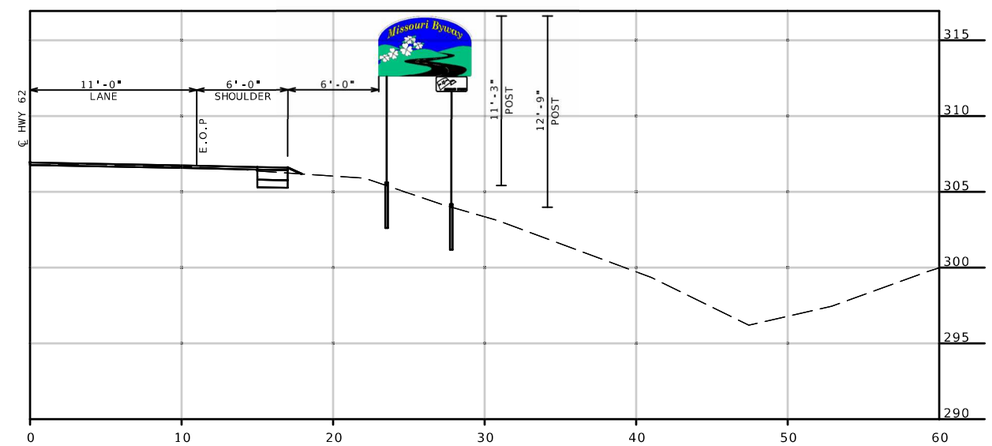

⑦

HWY 62 STA. 13+73.00 RT.
D6-4B (48"x36") AND D6-4A (24"x 12")
2 - 2" 12 GA PSST, 11.25 LF AND 12.75 LF

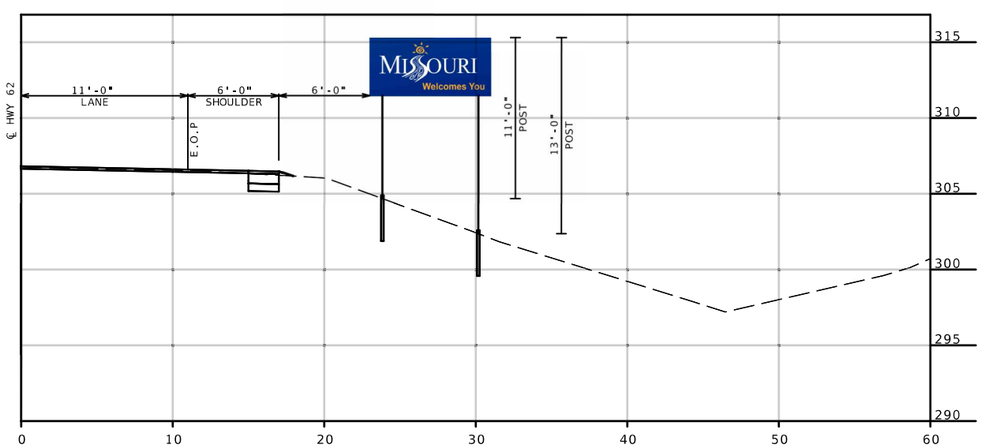

⑧

HWY 62 STA. 14+85.00 RT.
I2-2 (96"x 48")
2 - 2" 12 GA PSST, 11.00 LF AND 13.00 LF

SIGN SECTIONS
SHEET 2 OF 2

STATE OF MISSOURI
DONALD THOMAS SAKO
NUMBER PE-28475
PROFESSIONAL ENGINEER

THIS SHEET HAS BEEN SIGNED, SEALED AND DATED ELECTRONICALLY.

DATE PREPARED
7/8/2025

ROUTE	STATE
62	MO
DISTRICT	SHEET NO.
SE	22

COUNTY
DUNKLIN

JOB NO.
JSE0155

CONTRACT ID.

PROJECT NO.

BRIDGE NO.

DATE	DESCRIPTION

MISSOURI HIGHWAYS AND TRANSPORTATION COMMISSION
105 WEST CAPITOL
JEFFERSON CITY, MO 65102
1-888-ASK-MODOT (1-888-275-6636)

GARVER, LLC.
7509 NW TIFFANY SPRINGS PARKWAY, SUITE 200
KANSAS CITY, MO 64153
PHONE: (816) 298-6465
CERTIFICATE OF AUTHORITY NO. 2008013090

c:\projectwise\garver-pw.bentley.com_garver-pw-01\eric.mutabazi\dms81924\022_SN_07_JSE0155_i5.dgn 7:42:33 PM 7/8/2025

(59'-3 @ 60') CONTINUOUS COMPOSITE WIDE FLANGE BEAM SPANS - UNIT 1
(105'-135'-105') CONTINUOUS COMPOSITE PLATE GIRDER SPANS - UNIT 2
(4 @ 60') CONTINUOUS COMPOSITE WIDE FLANGE BEAM SPANS - UNIT 3
(3 @ 60'-59') CONTINUOUS COMPOSITE WIDE FLANGE BEAM SPANS - UNIT 4

SEC/SUR 18 TWP 21N RGE 9E

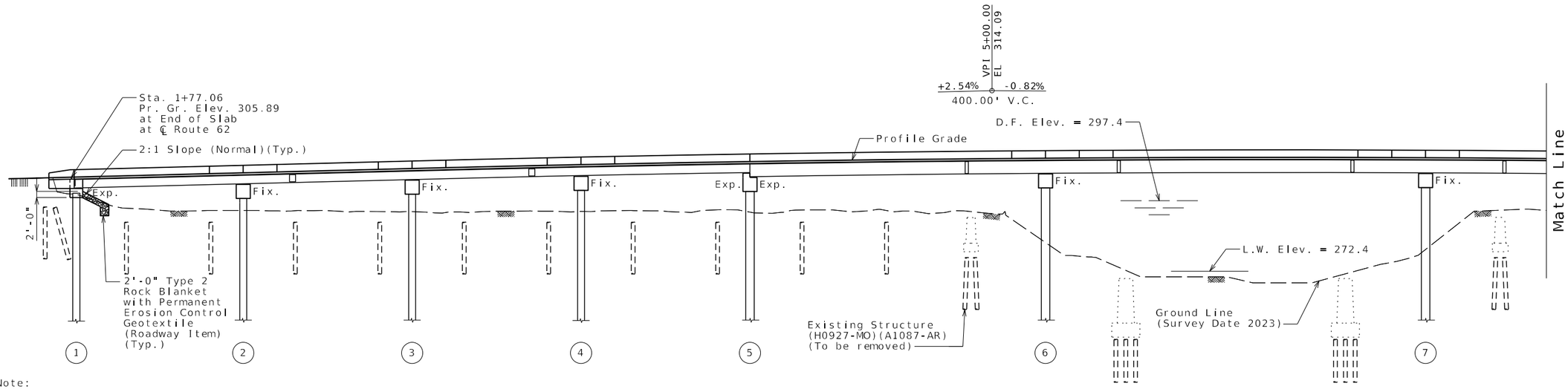

PART GENERAL ELEVATION

Note:

Roadway fill shall be completed to the final roadway section and up to the elevation of the bottom of the concrete beam within the limits of the structure and for not less than 25 feet in back of the fill face of the end bents before any piles are driven for any bents falling within the embankment section.

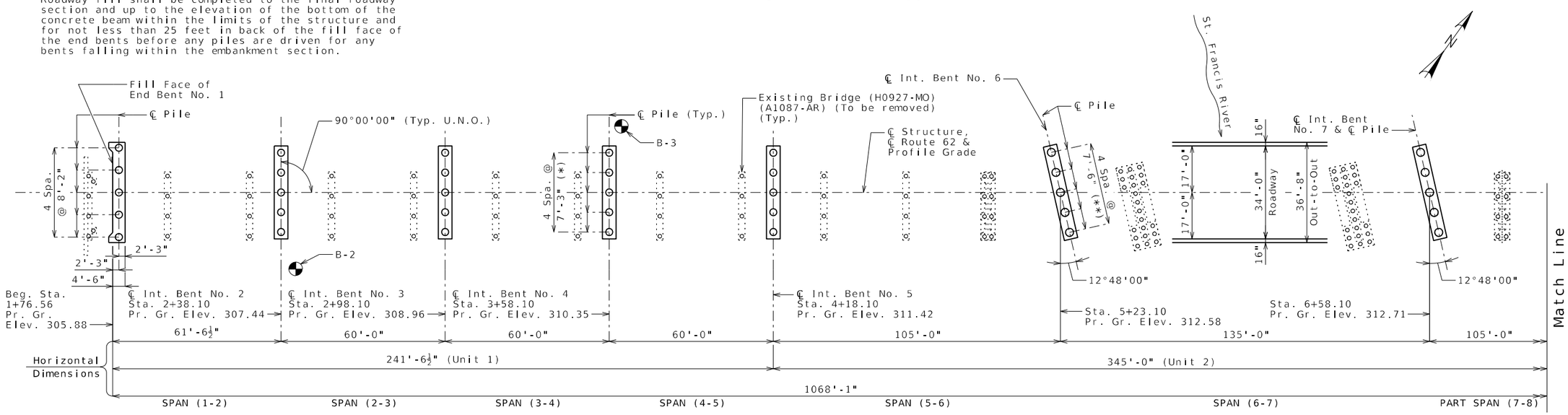

PART PLAN

* Applies to Bents No. 2-5 & 8-15

** Applies to Bents No. 6 & 7

Notes:

For Part Plan and Part General Elevation not shown, see Sheet No. 2.

For General Notes, Estimated Quantities and Estimated Quantities for Slab on Steel, see Sheet No. 3.

For Hydrologic Data, Location Sketch and Foundation Data, see Sheet No. 4.

U.N.O. - Unless Noted Otherwise

◐ Indicates location of borings.

The locations of all subsurface borings for this structure are shown on the plan sheet(s) for this structure. The boring data for all locations indicated, as well as any other boring logs or other factual records of subsurface data and investigations performed by the department for the design of the project, are shown on Sheet(s) No. 54 thru 61 and may be included in the Electronic Bridge Deliverables. They will also be available from the Project Contact upon written request. No greater significance or weight should be given to the boring data depicted on the plan sheets than is given to the subsurface data available from the district or elsewhere.

The Commission does not represent or warrant that any such boring data accurately depicts the conditions to be encountered in constructing this project. A contractor assumes all risks it may encounter in basing its bid prices, time or schedule of performance on the boring data depicted here or those available from the district, or on any other documentation not expressly warranted, which the contractor may obtain from the Commission.

C.P. #1 STA. 16+24.13, 35.53' RT., ELEV. 305.09'
5/8" REBAR W/ ALUM. CAP

B.M. #1 STA. 52+67.12, 14.6' LT., ELEV. 303.32'
MAG NAIL IN ASP SHOULDER 12

C.P. #3 STA. 13+23.20, 12.91' LT., ELEV. 305.97'
5/8" REBAR W/ ALUM. CAP

B.M. #4 STA. 16+65.93, 3.6' RT., ELEV. 306.78'
MAG NAIL IN ASP

C.P. #5 STA. 1+33.01, 100.08' LT., ELEV. 301.01'
5/8" REBAR W/ ALUM. CAP

BRIDGE: ROUTE 62 OVER ST. FRANCIS RIVER

ROUTE 62 FROM ST. FRANCIS (AR) TO ROUTE B
ABOUT 3.3 MILES WEST OF ROUTE B
BEGIN STATION 1+76.56

Designed Oct. 2024
Detailed Nov. 2024
Checked Jan. 2025

PLAN AND GENERAL ELEVATION

Note: This drawing is not to scale. Follow dimensions.

STATE OF MISSOURI
DEREK S. BUTLER
NUMBER PE-2016009628
PROFESSIONAL ENGINEER

THIS SHEET HAS BEEN SIGNED, SEALED AND DATED ELECTRONICALLY

DATE PREPARED	
7/11/2025	
ROUTE 62	STATE MO
DISTRICT BR	SHEET NO. 1
COUNTY DUNKLIN	
JOB NO. JSE0155	
CONTRACT ID.	
PROJECT NO.	
BRIDGE NO. A9436	

DATE	DESCRIPTION

IF A SEAL IS PRESENT ON THIS SHEET IT HAS BEEN ELECTRONICALLY SEALED AND DATED.

MISSOURI HIGHWAYS AND TRANSPORTATION COMMISSION
105 WEST CAPITOL
JEFFERSON CITY, MO 65102
1-888-ASK-MODOT (1-888-275-6636)

GARVER, LLC.
7509 NW TIFFANY SPRINGS
PARKWAY, SUITE 200
KANSAS CITY, MO 64153
PHONE: (816) 298-6465
CERTIFICATE OF AUTHORITY
NO. 2008013090

B_A9436_001_SE0155_GEP_1.dgn 3:35:23 PM 7/11/2025

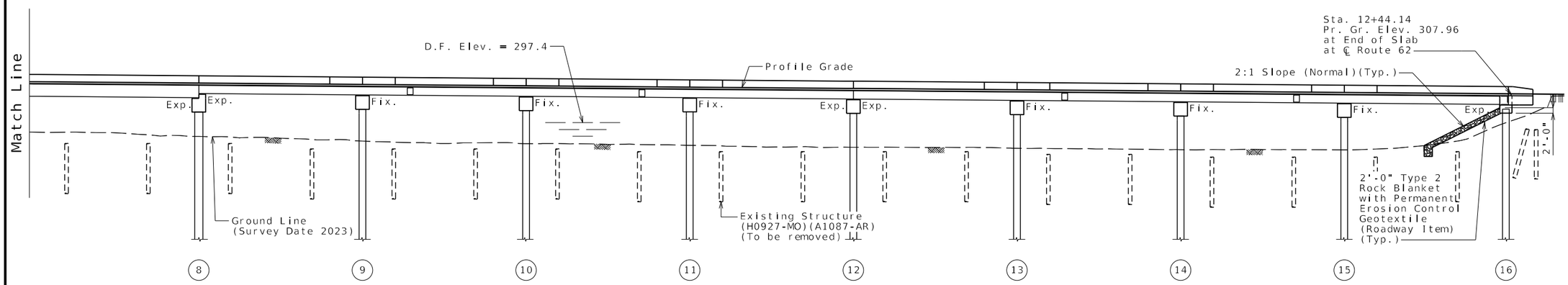

PART GENERAL ELEVATION

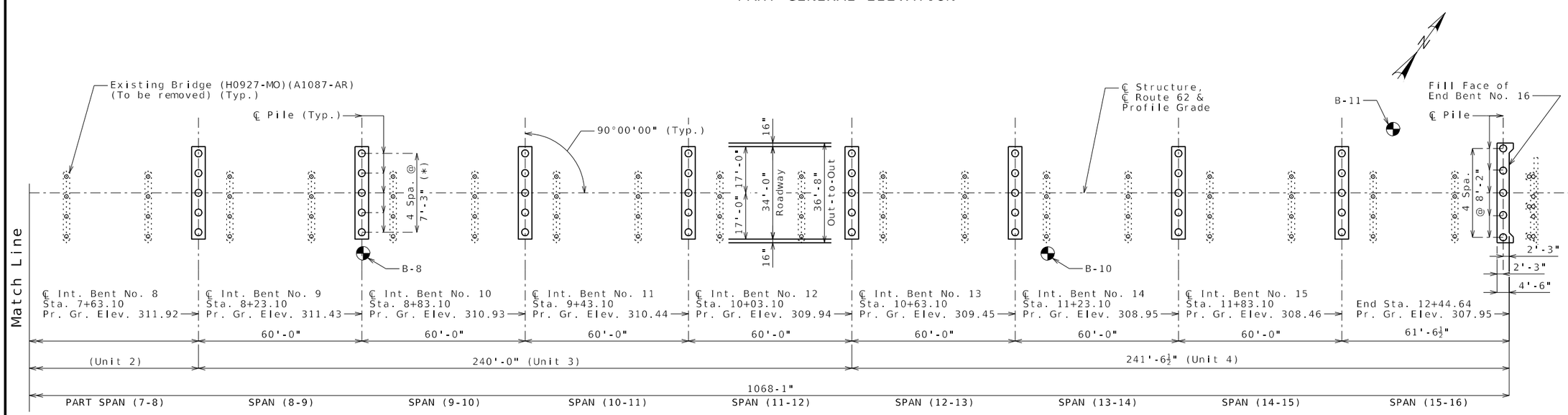

* Applies to Bents No. 2-5 & 8-15

PART PLAN

Notes:

For Part Plan and Part General Elevation not shown, see Sheet No. 1.

For General Notes, Estimated Quantities and Estimated Quantities for Slab on Steel, see Sheet No. 3.

For Hydrologic Data, Location Sketch and Foundation Data, see Sheet No. 4.

PLAN AND GENERAL ELEVATION

Detailed Nov. 2024
Checked Jan. 2025

Note: This drawing is not to scale. Follow dimensions.

STATE OF MISSOURI
DEREK S. BUTLER
NUMBER PE-2016009628
PROFESSIONAL ENGINEER

THIS SHEET HAS BEEN SIGNED, SEALED AND DATED ELECTRONICALLY

DATE PREPARED	
7/11/2025	
ROUTE 62	STATE MO
DISTRICT BR	SHEET NO. 2
COUNTY DUNKLIN	
JOB NO. JSE0155	
CONTRACT ID.	
PROJECT NO.	
BRIDGE NO. A9436	

DESCRIPTION	DATE

MISSOURI HIGHWAYS AND TRANSPORTATION COMMISSION
105 WEST CAPITOL
JEFFERSON CITY, MO 65102
1-888-ASK-MODOT (1-888-275-6636)

GARVER, LLC.
7509 NW TIFFANY SPRINGS
PARKWAY, SUITE 200
KANSAS CITY, MO 64153
PHONE: (816) 298-6465
CERTIFICATE OF AUTHORITY
NO. 2008013090

IF A SEAL IS PRESENT ON THIS SHEET IT HAS BEEN ELECTRONICALLY SEALED AND DATED.

General Notes:

Design Specifications:
2020 AASHTO LRFD Bridge Design Specifications (9th Edition)
2011 AASHTO Guide Specifications for LRFD Seismic Bridge Design (2nd Ed.)
and 2014 Interim Revisions (Seismic)
Seismic Design Category = C
Design earthquake response spectral acceleration coefficient at 1.0 second period, S_{D1} = 0.706g
Acceleration Coefficient (effective peak ground acceleration coefficient), A_S= 0.534g

Design Loading:
Vehicular = HL-93
Future Wearing Surface = 35 lb/sf
Earth = 120 lb/cf
Equivalent Fluid Pressure = 45 lb/cf (Min.)

Design Unit Stresses:

Class B Concrete (Substructure, except CIP Concrete Piles)	f'c = 3,000 psi
Class B-1 Concrete (Type D Barrier and CIP Concrete Piles)	f'c = 4,000 psi
Class B-2 Concrete (Superstructure, except Type D Barrier)	f'c = 4,000 psi
Reinforcing Steel (ASTM A706 Grade 60)	fy = 60,000 psi
Structural Steel (ASTM A709 Grade 50W)	fy = 50,000 psi
Welded or Seamless steel shell (pipe) for CIP pile (ASTM A252 Modified Grade 3)	fy = 50,000 psi

Neoprene Pads:
Neoprene bearing pads shall be 60 durometer and shall be in accordance with Sec 716.

Fabricated Steel Connections:
Field connections shall be made with 7/8-inch diameter ASTM F3125 Grade A325 Type 3 bolts and 15/16-inch diameter holes, except as noted.

Joint Filler:
All joint filler shall be in accordance with Section 1057 for preformed sponge rubber expansion and partition joint filler, except as noted.

Reinforcing Steel:
Minimum clearance to reinforcing steel shall be 1 1/2", unless otherwise shown.

Traffic Handling:
Structure to be closed during construction. Traffic to be maintained on other routes. See roadway plans for traffic control.

Coating New Steel:
Protective coating: System G in accordance with Sec 1081. The following weathering steel surfaces shall be coated:

All steel surfaces within 10 feet of bridge deck expansion joints, including cross frames, stiffeners, connection bolts and bearings.

All steel surfaces exposed to the outside face of the bridge, including outside faces and bottom of the exterior beams and girders, splice plates and bolts, stiffeners, drip bars and bearings.

Prime Coat:
The cost of the inorganic zinc prime coat will be considered completely covered by the contract unit price for the fabricated structural steel.

Field Coat(s): The color of the field coats shall be Gray (Federal Standard #26373).
The cost of the intermediate and finish field coats will be completely covered by the contract unit price for the fabricated structural steel.

At the option of the contractor, the intermediate and finish field coats may be applied in the shop. The contractor shall exercise extreme care during all phases of loading, hauling, handling, erection and pouring of the slab to minimize damage and shall be fully responsible for all repairs and cleaning of the coating systems as required by the engineer.

Concrete Protective Coatings:
Temporary coating for concrete bents and piers (weathering steel) shall be applied on all concrete surfaces above the ground line or low water elvation on all abutments and intermediate bents in accordance with Sec 711.

Protective coating for concrete bents and piers (Epoxy) shall be applied as shown on the bridge plans and in accordance with Sec 711.

Miscellaneous:
High strength bolts, nuts and washers will be sampled for quality assurance as specified in Sec 106.

Pile Driving:
Dynamic Pile Restrike Testing shall be performed at least 1 hr after the completion of driving to evaluate pile relaxation.

The first three production piles driven and dynamically tested shall be as follows: one from pile numbers 8, 13, 18 or 23, one from 28 or 33, and one from 43, 48, 53, 58, 63, 68 or 73. For pile numbers, see As-Built Pile Data on Sheets No. 52 & 53.

The test pile at each bent shall be driven completely and tested prior to installing or driving the remaining piles for that bent. The test pile at each bent shall be the center pile.

Abbreviations:
E.F. - Each Face

Estimated Quantities

Item		Substr.	Superstr.	Total
Removal of Bridges (H0927-MO)(A1087-AR)	lump sum			1
Bridge Approach Slab (Minor)	sq. yard			152
Dynamic Pile Testing	each	16		16
Dynamic Pile Restrike Testing	each	16		16
Pile Point Reinforcement	each	80		80
Galvanized Cast-In-Place Concrete Piles (30 in.)	linear foot	7,605		7,605
Galvanized Cast-In-Place Concrete Piles (36 in.)	linear foot	1,185		1,185
Class B Concrete (Substructure)	cu. yard	471.2		471.2
Slab on Steel	sq. yard		4,348	4,348
Type D Barrier	linear foot		2,165	2,165
Reinforcing Steel (Bridges)	pound	74,140		74,140
Reinforcing Steel (Epoxy Coated)	pound	42,900		42,900
Protective Coating - Concrete Bents and Piers (Epoxy)	lump sum			1
Temporary Coating - Concrete Bents and Piers (Weathering Steel)	lump sum			1
Expansion Device (Finger Plate)	linear foot		74	74
Fabricated Structural Low Alloy Steel (I-Beam) A709, Grade 50W	pound		515,570	515,570
Fabricated Structural Low Alloy Steel (Plate Girder) A709, Grade 50W	pound		405,370	405,370
Slab Drain	each		18	18
Vertical Drain at End Bents	each			2
Laminated Neoprene Bearing Pad Assembly	each		76	76
Strip Seal Expansion Joint System	linear foot		110	110

Concrete above the upper construction joint in the backwall at End Bents No. 1 and 16 is included with Class B-2 Concrete Quantities.

All reinforcement in cast-in-place piles at non-integral end bents and intermediate bents is included in the substructure quantities.

Cost of any required excavation for bridge will be considered completely covered by the contract unit price for other items.

Estimated Quantities for Slab on Steel

Item		Total
Class B-2 Concrete	cu. yard	1,059
Reinforcing Steel (Epoxy Coated)	pound	373,780

The table of Estimated Quantities for Slab on Steel represents the quantities used by the State in preparing the cost estimate for concrete slabs. The area of the concrete slab will be measured to the nearest square yard longitudinally from end of slab to end of slab and transversely from out to out of bridge slab (or with the horizontal dimensions as shown on the plan of slab). Payment for stay-in-place corrugated steel forms, conventional forms, all concrete and epoxy coated reinforcing steel will be considered completely covered by the contract unit price for the slab. Variations may be encountered in the estimated quantities but the variations cannot be used for an adjustment in the contract unit price.

Method of forming the slab shall be as shown on the plans and in accordance with Sec 703. All hardware for forming the slab to be left in place as a permanent part of the structure shall be coated in accordance with ASTM A123 or ASTM B633 with a thickness class SC 4 and a finish type I, II or III.

Slab shall be cast-in-place with conventional forms or stay-in-place corrugated steel forms. Precast prestressed panels will not be permitted.

GENERAL NOTES AND QUANTITIES

Detailed Nov. 2024
Checked Jan. 2025

Note: This drawing is not to scale. Follow dimensions.

STATE OF MISSOURI
DEREK S. BUTLER
NUMBER PE-2016009828
PROFESSIONAL ENGINEER

THIS SHEET HAS BEEN SIGNED, SEALED AND DATED ELECTRONICALLY

DATE PREPARED 7/11/2025
ROUTE 62 | STATE MO
DISTRICT BR | SHEET NO. 3
COUNTY DUNKLIN
JOB NO. JSE0155
CONTRACT ID.
PROJECT NO.
BRIDGE NO. A9436

DESCRIPTION | DATE

MISSOURI HIGHWAYS AND TRANSPORTATION COMMISSION
105 WEST CAPITOL
JEFFERSON CITY, MO 65102
1-888-ASK-MODOT (1-888-275-6636)

GARVER, LLC.
7509 NW TIFFANY SPRINGS
PARKWAY, SUITE 200
KANSAS CITY, MO 64153
PHONE: (816) 298-6465
CERTIFICATE OF AUTHORITY
NO. 2008013090

IF A SEAL IS PRESENT ON THIS SHEET IT HAS BEEN ELECTRONICALLY SEALED AND DATED.

Hydrologic Data
Drainage Area = 467 mi^2
Design Flood Frequency = 50 years
Design Flood Discharge = 28,300 cfs
Design Flood (D.F.) Elevation = 297.4
Base Flood (100-year)
Base Flood Elevation = 298.0
Base Flood Discharge = 32,000 cfs
Estimated Backwater = 0.3 ft
Average Velocity thru Opening = 3.0 ft/s
Freeboard (50-year)
Freeboard = 4.6 ft
Roadway Overtopping
Overtopping Flood Discharge = N/A cfs
Overtopping Flood Frequency = > 500 years
500-Year Flood Elevation = 299.5

Foundation Data

Type	Design Data		Bent Number 1	2	3	4	5	6	7	8
Load Bearing Pile	Pile Type and Size		CECIP 30"	CECIP 30"	CECIP 30"	CECIP 30"	CECIP 30"	CECIP 36"	CECIP 36"	CECIP 30"
	Number	ea	5	5	5	5	5	5	5	5
	Approximate Length Per Each	ft	70	113	115	116	115	127	110	106
	Pile Point Reinforcement	ea	All	All	All	All	All	All	All	All
	Min. Galvanized Penetration (Elev.)	ft	275.0	273.9	273.3	273.6	273.0	261.0	259.5	272.3
	Est. Max. Scour Depth 100-Year (Elev.)	ft	295.0	286.4	285.6	285.8	285.2	275.5	272.0	282.4
	Minimum Tip Penetration (Elev.)	ft	225.0	214.0	214.0	214.0	214.0	204.0	195.0	208.0
	Criteria for Min. Tip Penetration		Scour	Uplift	Uplift	Uplift	Uplift	Uplift	Uplift	Uplift
	Pile Driving Verification Method		DT	DT	DT	DT	DT	DT	DT	DT
	Resistance Factor		0.65	0.65	0.65	0.65	0.65	0.65	0.65	0.65
	Minimum Nominal Axial Compressive Resistance	kip	588	846	846	846	846	1133	1133	846

Type	Design Data		Bent Number 9	10	11	12	13	14	15	16
Load Bearing Pile	Pile Type and Size		CECIP 30"	CECIP 30"	CECIP 30"	CECIP 30"	CECIP 30"	CECIP 30"	CECIP 30"	CECIP 30"
	Number	ea	5	5	5	5	5	5	5	5
	Approximate Length Per Each	ft	108	108	119	119	118	118	117	79
	Pile Point Reinforcement	ea	All	All	All	All	All	All	All	All
	Min. Galvanized Penetration (Elev.)	ft	270.5	269.6	269.0	268.3	268.0	267.4	267.5	272.0
	Est. Max. Scour Depth 100-Year (Elev.)	ft	280.3	279.2	279.6	278.8	276.6	275.0	274.2	292.0
	Minimum Tip Penetration (Elev.)	ft	208.0	208.0	196.0	196.0	196.0	196.0	196.0	225.0
	Criteria for Min. Tip Penetration		Uplift	Uplift	Uplift	Uplift	Uplift	Uplift	Uplift	Scour
	Pile Driving Verification Method		DT	DT	DT	DT	DT	DT	DT	DT
	Resistance Factor		0.65	0.65	0.65	0.65	0.65	0.65	0.65	0.65
	Minimum Nominal Axial Compressive Resistance	kip	846	846	846	846	846	846	846	588

$$\text{Minimum Nominal Axial Compressive Resistance} = \frac{\text{Maximum Factored Loads}}{\text{Resistance Factor}}$$

DT = Dynamic Testing

CECIP = Closed Ended Cast-In-Place concrete pile

All piles shall be galvanized down to the minimum galvanized penetration (elevation).

Pile point reinforcement need not be galvanized. Shop drawings will not be required for pile point reinforcement.

The contractor shall make every effort to achieve the minimum galvanized penetration (elevation) shown on the plans for all the piles. Deviations in penetration less than 5 feet of the minimum will be considered acceptable provided the contractor makes the necessary corrections to ensure the minimum penetration is achieved on subsequent piles.

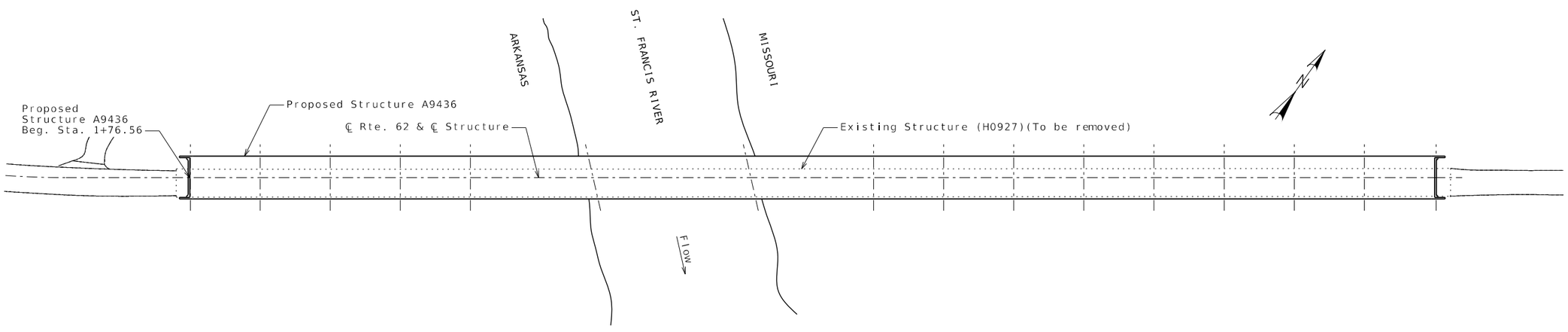

LOCATION SKETCH

GENERAL NOTES AND QUANTITIES

Detailed Nov. 2024
Checked Jan. 2025

Note: This drawing is not to scale. Follow dimensions.

STATE OF MISSOURI
DEREK S. BUTLER
NUMBER PE-2016009628
PROFESSIONAL ENGINEER

THIS SHEET HAS BEEN SIGNED, SEALED AND DATED ELECTRONICALLY

DATE PREPARED 5/19/2025
ROUTE 62 | STATE MO
DISTRICT BR | SHEET NO. 4
COUNTY DUNKLIN
JOB NO. JSE0155
CONTRACT ID.
PROJECT NO.
BRIDGE NO. A9436

DESCRIPTION	DATE

MISSOURI HIGHWAYS AND TRANSPORTATION COMMISSION
105 WEST CAPITOL
JEFFERSON CITY, MO 65102
1-888-ASK-MODOT (1-888-275-6636)

GARVER, LLC.
7509 NW TIFFANY SPRINGS
PARKWAY, SUITE 200
KANSAS CITY, MO 64153
PHONE: (816) 298-6465
CERTIFICATE OF AUTHORITY
NO. 2008013090

IF A SEAL IS PRESENT ON THIS SHEET IT HAS BEEN ELECTRONICALLY SEALED AND DATED.

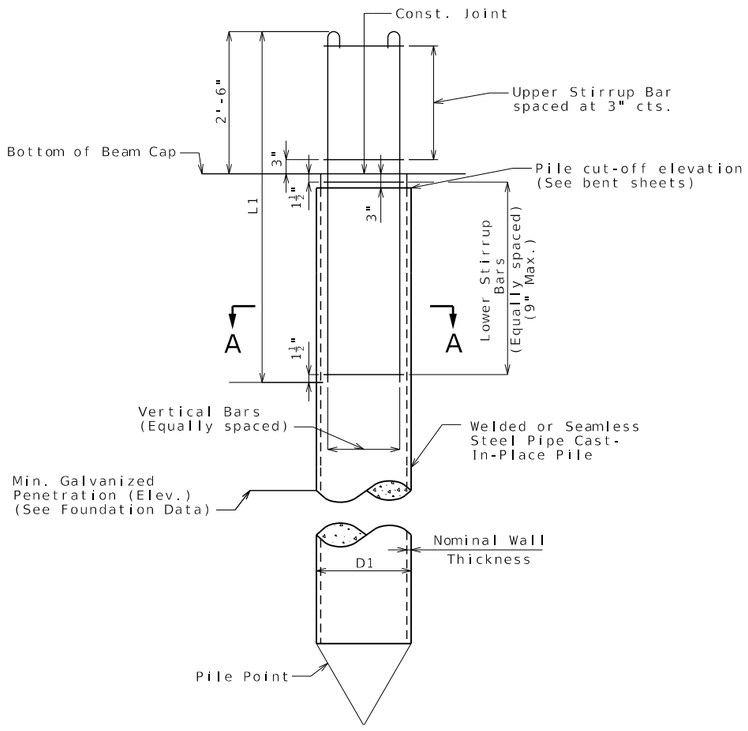

GALVANIZED CLOSED ENDED CAST-IN-PLACE (CECIP) CONCRETE PILE

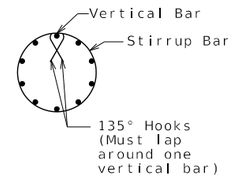

DETAILS OF SEISMIC STIRRUP BAR

(See Section A-A for actual number of vertical bars)

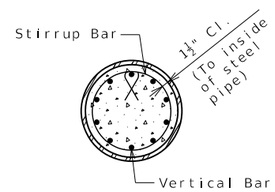

SECTION A-A

(Intermediate Bents No. 2 thru 5, 8 thru 15)

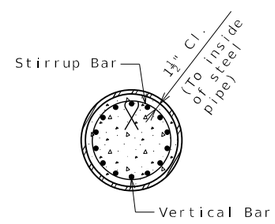

SECTION A-A

(Intermediate Bents No. 6 & 7)

Galvanized Closed Ended Cast-In-Place (CECIP) Concrete Pile Data				
Bent Number	***	5 & 8	6 & 7	12
D1, CECIP Pile (O.D.)	30"	30"	36"	30"
Min. Nominal Wall Thickness	3/4"	3/4"	1"	3/4"
Pile Point Reinforcement	Conical	Conical	Conical	Conical
Vertical Bars	10-#9-V200	10-#9-V500	14-#9-V600	10-#9-V1200
L1, Length of Vertical Bars	11'-8"	12'-11"	11'-8"	12'-11"
Upper Stirrup Bars	9-#5-P200	9-#5-P500	9-#5-P600	9-#5-P1200
Lower Stirrup Bars	13-#5-P200	15-#5-P500	13-#5-P600	15-#5-P1200

*** 2-4, 9-11, 13-15

Notes:

Welded or seamless steel shell (pipe) shall be ASTM A252 Modified Grade 3 (fy = 50,000 psi) with physical and chemical requirements that meet ASTM A572 Grade 50. Pipe certification and source material certification shall be required.

Concrete for cast-in-place pile shall be Class B-1.

Steel casting for conical pile point reinforcement shall be ASTM A27 Grade 65-35.

The minimum wall thickness of any spot or local area of any type shall not be more than 12.5% under the specified nominal wall thickness.

The contractor shall determine the pile wall thickness required to avoid damage from all driving activities, but wall thickness shall not be less than the minimum specified. No additional payment will be made for furnishing a thicker pile wall than specified on the plans.

Splices of pipe for cast-in-place concrete pile shall be made watertight and to the full strength of the pipe above and below the splice to permit hard driving without damage. Pipe damaged during driving shall be replaced without cost to the state. Pipe sections used for splicing shall be at least 5 feet in length.

The hooks of vertical bars embedded in the beam cap should not be turned outward, away from the pile core.

Reinforcing steel for cast-in-place piles is included in the Bill of Reinforcing Steel.

All reinforcement for cast-in-place pile is included in the estimated quantities for bents.

For Foundation Data table, see Sheet No. 4.

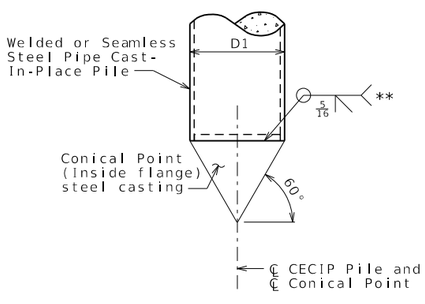

MANUFACTURED CONICAL PILE POINT

(Omit closure plate)

** If the conical pile point is not pre-beveled, place a 3/8" bevel at 40 degrees on the pipe.

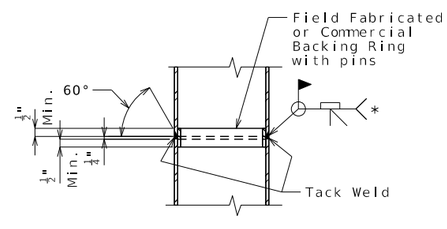

STEEL PIPE PILE SPLICE

* Galvanizing material shall be omitted or removed one inch clear of weld locations in accordance with Sec 702.

GALVANIZED CLOSED ENDED CAST-IN-PLACE (CECIP) CONCRETE PILE AT INT. BENTS

Detailed Jan. 2025
Checked Jan. 2025

Note: This drawing is not to scale. Follow dimensions.

STATE OF MISSOURI
DEREK S. BUTLER
NUMBER PE-2016009628
PROFESSIONAL ENGINEER

THIS SHEET HAS BEEN SIGNED, SEALED AND DATED ELECTRONICALLY

DATE PREPARED 5/19/2025
ROUTE 62 | STATE MO
DISTRICT BR | SHEET NO. 5
COUNTY DUNKLIN
JOB NO. JSE0155
CONTRACT ID.
PROJECT NO.
BRIDGE NO. A9436

DESCRIPTION	DATE

IF A SEAL IS PRESENT ON THIS SHEET IT HAS BEEN ELECTRONICALLY SEALED AND DATED.

MISSOURI HIGHWAYS AND TRANSPORTATION COMMISSION
105 WEST CAPITOL
JEFFERSON CITY, MO 65102
1-888-ASK-MODOT (1-888-275-6636)

GARVER, LLC.
7509 NW TIFFANY SPRINGS PARKWAY, SUITE 200
KANSAS CITY, MO 64153
PHONE: (816) 298-6465
CERTIFICATE OF AUTHORITY NO. 2008013090

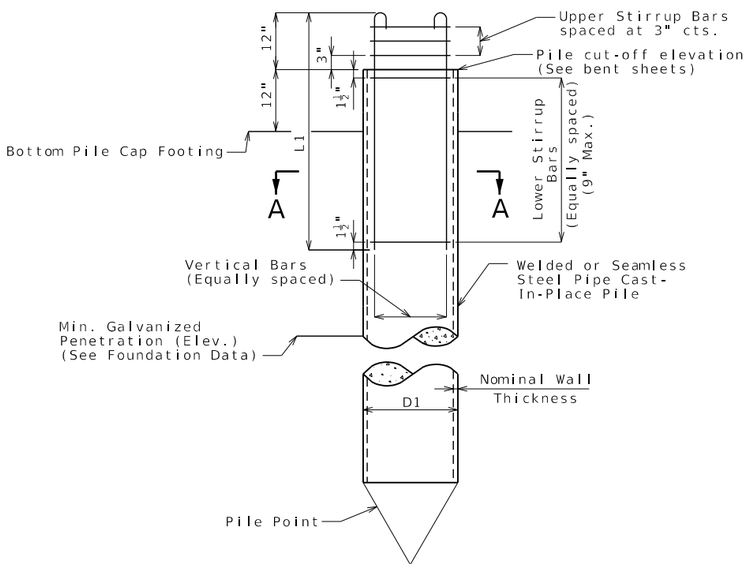

GALVANIZED CLOSED ENDED CAST-IN-PLACE (CECIP) CONCRETE PILE

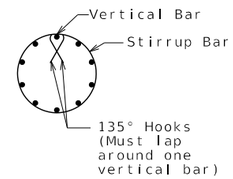

DETAIL OF SEISMIC STIRRUP BAR

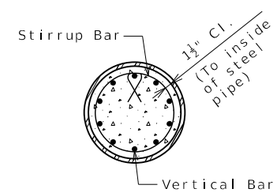

SECTION A-A

Galvanized Closed Ended Cast-In-Place (CECIP) Concrete Pile Data		
Bent Number	1	16
D1, CECIP Pile (O.D.)	30"	30"
Min. Nominal Wall Thickness	3/4"	3/4"
Pile Point Reinforcement	Conical	Conical
Vertical Bars	10-#9-V104	10-#9-V1604
L1, Length of Vertical Bars	12'-11"	12'-11"
Upper Stirrup Bars	3-#5-P100	3-#5-P1600
Lower Stirrup Bars	17-#5-P100	17-#5-P1600

Notes:

Welded or seamless steel shell (pipe) shall be ASTM A252 Modified Grade 3 (fy = 50,000 psi) with physical and chemical requirements that meet ASTM A572 Grade 50. Pipe certification and source material certification shall be required.

Concrete for cast-in-place pile shall be Class B-1.

Steel casting for conical pile point reinforcement shall be ASTM A27 Grade 65-35.

The minimum wall thickness of any spot or local area of any type shall not be more than 12.5% under the specified nominal wall thickness.

The contractor shall determine the pile wall thickness required to avoid damage from all driving activities, but wall thickness shall not be less than the minimum specified. No additional payment will be made for furnishing a thicker pile wall than specified on the plans.

Splices of pipe for cast-in-place concrete pile shall be made watertight and to the full strength of the pipe above and below the splice to permit hard driving without damage. Pipe damaged during driving shall be replaced without cost to the state. Pipe sections used for splicing shall be at least 5 feet in length.

The hooks of vertical bars embedded in the beam cap should not be turned outward, away from the pile core.

Reinforcing steel for cast-in-place piles is included in the Bill of Reinforcing Steel.

All reinforcement for cast-in-place pile is included in the estimated quantities for bents.

For Foundation Data table, see Sheet No. 4.

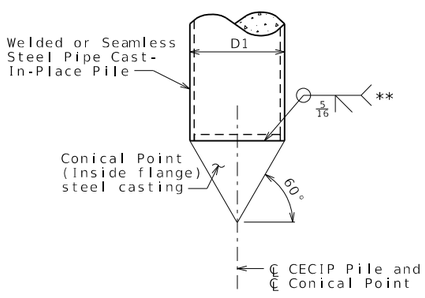

MANUFACTURED CONICAL PILE POINT

(Omit closure plate)

** If the conical pile point is not pre-beveled, place a 3/8" bevel at 40 degrees on the pipe.

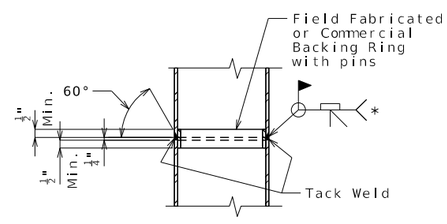

STEEL PIPE PILE SPLICE

* Galvanizing material shall be omitted or removed one inch clear of weld locations in accordance with Sec 702.

GALVANIZED CLOSED ENDED CAST-IN-PLACE (CECIP) CONCRETE PILE AT END BENTS

Detailed Jan. 2025
Checked Jan. 2025

Note: This drawing is not to scale. Follow dimensions.

STATE OF MISSOURI
DEREK S. BUTLER
NUMBER PE-2016009628
PROFESSIONAL ENGINEER

THIS SHEET HAS BEEN SIGNED, SEALED AND DATED ELECTRONICALLY

DATE PREPARED 5/29/2025
ROUTE 62 | STATE MO
DISTRICT BR | SHEET NO. 6
COUNTY DUNKLIN
JOB NO. JSE0155
CONTRACT ID.
PROJECT NO.
BRIDGE NO. A9436

DESCRIPTION | DATE

IF A SEAL IS PRESENT ON THIS SHEET IT HAS BEEN ELECTRONICALLY SEALED AND DATED.

MISSOURI HIGHWAYS AND TRANSPORTATION COMMISSION
105 WEST CAPITOL
JEFFERSON CITY, MO 65102
1-888-ASK-MODOT (1-888-275-6636)

GARVER, LLC.
7509 NW TIFFANY SPRINGS PARKWAY, SUITE 200
KANSAS CITY, MO 64153
PHONE: (816) 298-6465
CERTIFICATE OF AUTHORITY NO. 2008013090

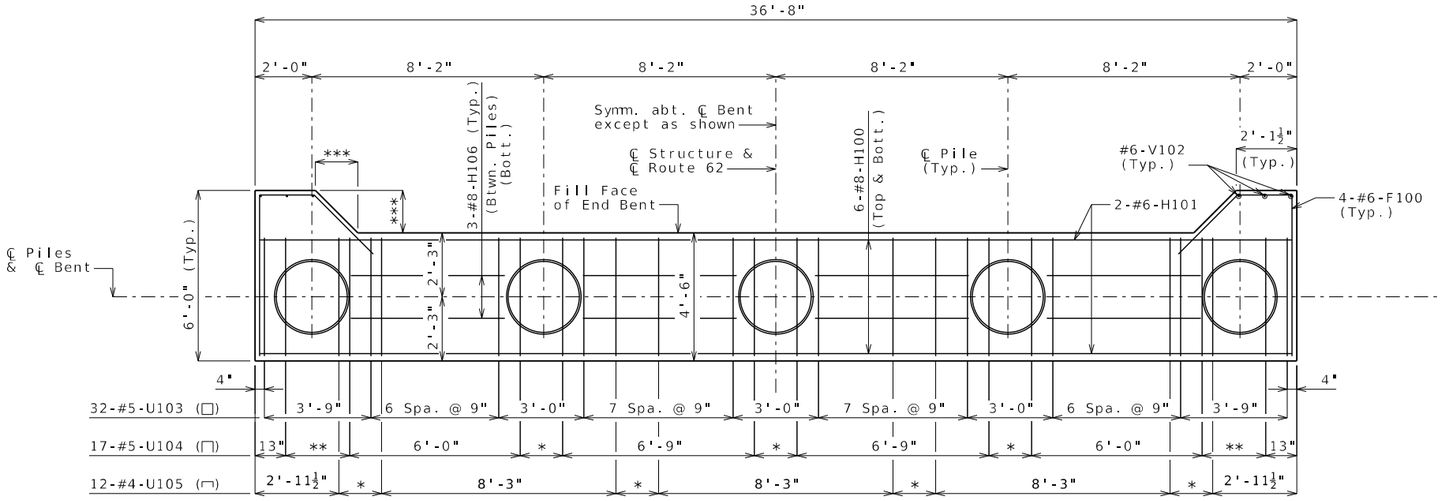

PLAN OF BEAM SHOWING PILE SPACING AND REINFORCEMENT
(Keys & steps not shown for clarity)

* 2 Spa. @ 9"

** 3 Spa. @ 9"

*** 18" (Typ.)

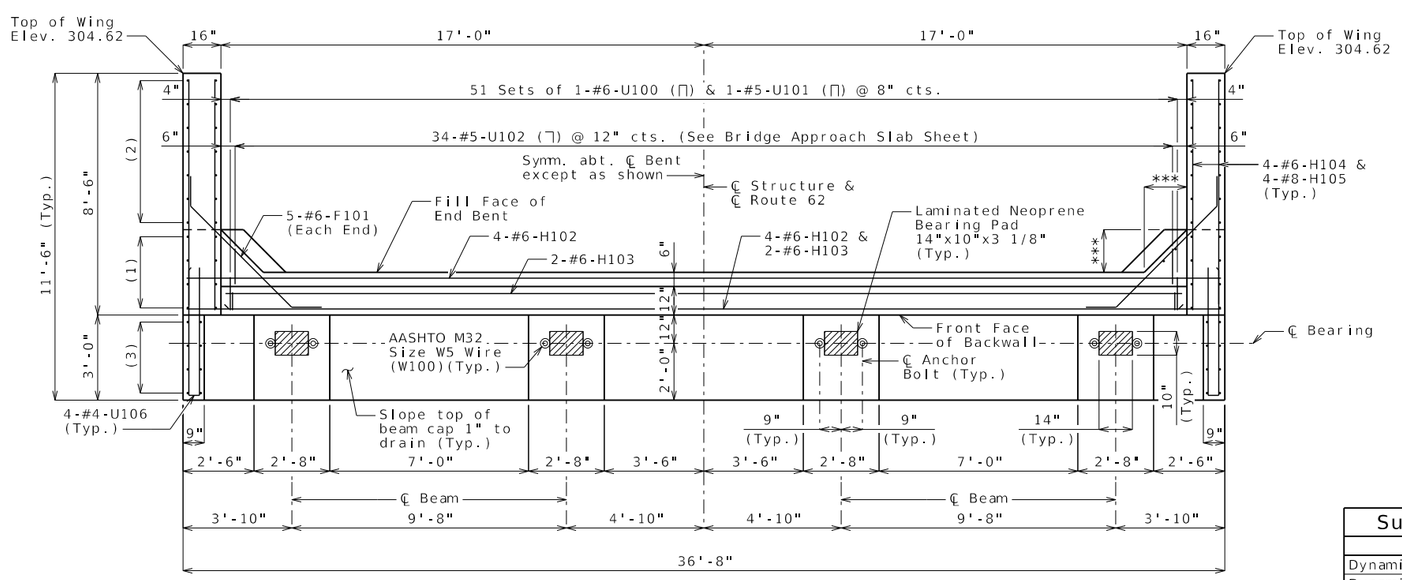

(1) 4-#6-V100 @ 10" cts. (E.F.)(Typ.)

(2) 7-#6-V101 @ 10" cts. (E.F.)(Typ.)

(3) 4-#4-V103 @ 10" cts. (E.F.)(Typ.)

PART PLAN

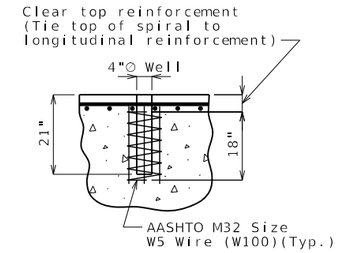

ANCHOR BOLT WELLS

Notes:

Work this sheet with Sheets No. 8 & 9.

For details of vertical drain at end bents, see Sheet No. 10.

For details of bridge approach slab, see Sheet No. 48.

For details of Type D Barrier, see Sheet No. 47.

For details of Laminated Neoprene Bearing Pad Assembly, see Sheet No. 22.

For details of galvanized cast-in-place concrete piles, see Sheet No. 6.

All concrete above the upper construction joint in the backwall shall be Class B-2.

Top of backwall for End Bent No. 1 shall be formed to the crown and grade of the roadway. Backwall above upper construction joint shall not be poured until the superstructure slab has been poured in the adjacent span.

Reinforcing steel shall be shifted to clear piles. U bars shall be shifted to clear piles by at least 1 1/2 inches.

Reinforcing steel in beam cap and cast-in-place piles shall be shifted where necessary to clear anchor bolt wells by at least 1/2".

Seal the following surfaces with Protective Coating - Concrete Bents and Piers (Epoxy): backwall; top and front of beam cap; all sides and top of curtain walls; outside of beam cap above ground line; and outside of wingwalls for 2 ft beyond curtain walls.

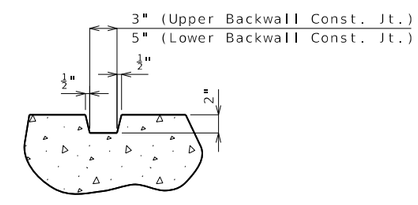

SECTION THRU KEY

Substructure Quantity Table for End Bent No. 1		
Item		Quantity
Dynamic Pile Testing	each	1
Dynamic Pile Restrike Testing	each	1
Pile Point Reinforcement	each	5
Galvanized Cast-In-Place Concrete Pile (30 in.)	linear foot	350
Class B Concrete (Substructure)	cu. yard	29.5
Reinforcing Steel (Epoxy Coated)	pound	8,690

These quantities are included in the Estimated Quantities table on Sheet No. 3.

DETAILS OF END BENT NO. 1

Detailed Nov. 2024
Checked Jan. 2025

Note: This drawing is not to scale. Follow dimensions.

STATE OF MISSOURI
DEREK S. BUTLER
NUMBER PE-2016009626
PROFESSIONAL ENGINEER

THIS SHEET HAS BEEN SIGNED, SEALED AND DATED ELECTRONICALLY

DATE PREPARED	
5/29/2025	
ROUTE 62	STATE MO
DISTRICT BR	SHEET NO. 7
COUNTY DUNKLIN	
JOB NO. JSE0155	
CONTRACT ID.	
PROJECT NO.	
BRIDGE NO. A9436	

DATE	DESCRIPTION

IF A SEAL IS PRESENT ON THIS SHEET IT HAS BEEN ELECTRONICALLY SEALED AND DATED.

MISSOURI HIGHWAYS AND TRANSPORTATION COMMISSION
105 WEST CAPITOL
JEFFERSON CITY, MO 65102
1-888-ASK-MODOT (1-888-275-6636)

GARVER, LLC.
7509 NW TIFFANY SPRINGS PARKWAY, SUITE 200
KANSAS CITY, MO 64153
PHONE: (816) 298-6465
CERTIFICATE OF AUTHORITY NO. 2008013090

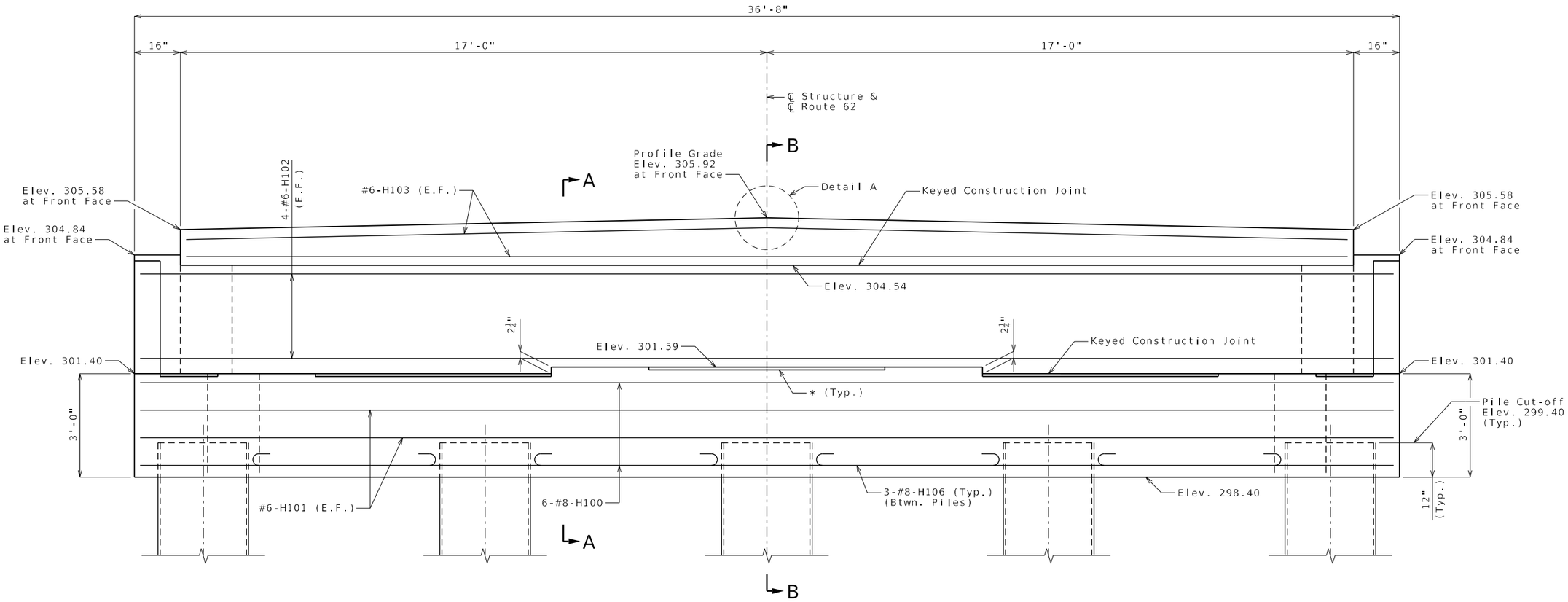

SECTION NEAR END BENT

(Looking Back Station)

* Slope top of beam cap 1" to drain, from front face of backwall to front face of beam cap.

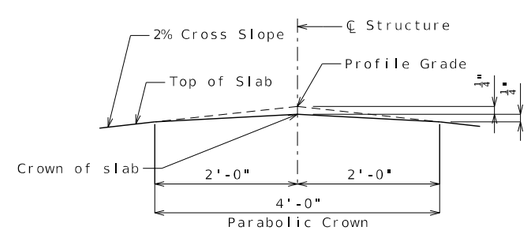

DETAIL A

Notes:

Work this sheet with Sheets No. 7 & 9.

For Wingwall Elevation and Sections A-A & B-B, see Sheet No. 9.

For additional notes, See Sheet No. 7.

DETAILS OF END BENT NO. 1

Detailed Nov. 2024
Checked Jan. 2025

Note: This drawing is not to scale. Follow dimensions.

STATE OF MISSOURI
DEREK S. BUTLER
NUMBER PE-2016009626
PROFESSIONAL ENGINEER

THIS SHEET HAS BEEN SIGNED, SEALED AND DATED ELECTRONICALLY

DATE PREPARED	5/29/2025
ROUTE	62
STATE	MO
DISTRICT	BR
SHEET NO.	8
COUNTY	DUNKLIN
JOB NO.	JSE0155
CONTRACT ID.	
PROJECT NO.	
BRIDGE NO.	A9436

DATE	DESCRIPTION

MISSOURI HIGHWAYS AND TRANSPORTATION COMMISSION

105 WEST CAPITOL
JEFFERSON CITY, MO 65102
1-888-ASK-MODOT (1-888-275-6636)

GARVER, LLC.
7509 NW TIFFANY SPRINGS
PARKWAY, SUITE 200
KANSAS CITY, MO 64153
PHONE: (816) 298-6465
CERTIFICATE OF AUTHORITY
NO. 2008013090

IF A SEAL IS PRESENT ON THIS SHEET IT HAS BEEN ELECTRONICALLY SEALED AND DATED.

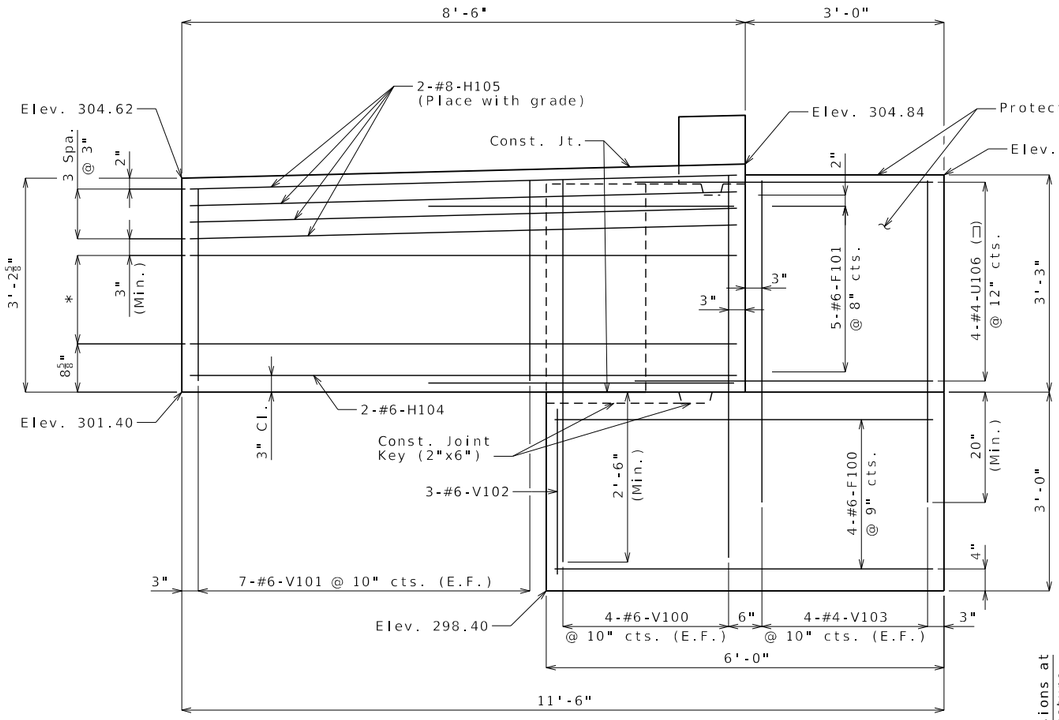

WINGWALL ELEVATION

* 3-#6-H104 @ 8" cts. (E.F.)
** 4-#6-H102 @ 10" cts. (E.F.)(Typ.)
*** #8-H Bars @ 3" cts. (E.F.)(Place with grade)

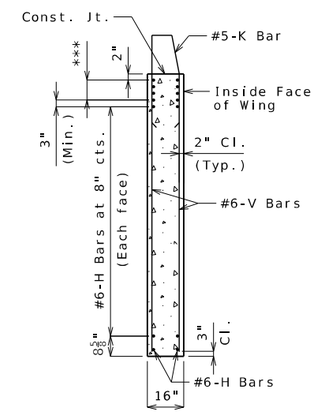

TYPICAL SECTION THRU WING

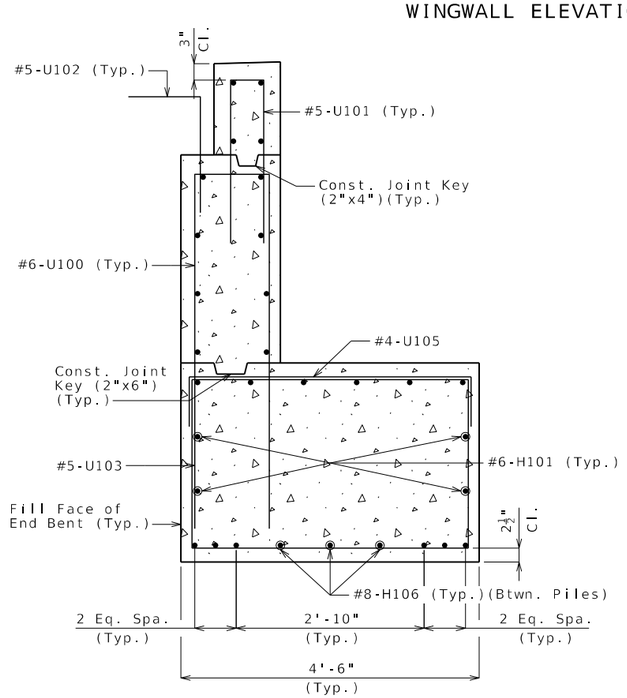

SECTION A-A

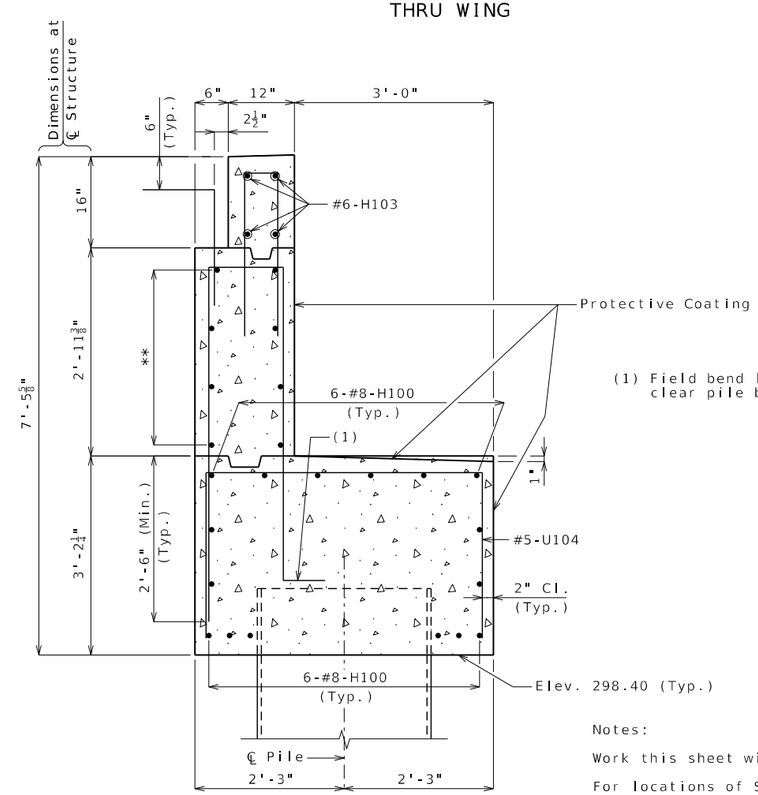

(1) Field bend leg of U100 to clear pile by 1 1/2 inches.

SECTION B-B

Notes:

Work this sheet with Sheets No. 7 & 8.

For locations of Sections A-A & B-B, see Sheet No. 8.

For additional notes, see Sheet No. 7.

DETAILS OF END BENT NO. 1

Detailed Nov. 2024
Checked Jan. 2025

Note: This drawing is not to scale. Follow dimensions.

STATE OF MISSOURI
DEREK S. BUTLER
NUMBER PE-2016009626
PROFESSIONAL ENGINEER

THIS SHEET HAS BEEN SIGNED, SEALED AND DATED ELECTRONICALLY

DATE PREPARED	
5/29/2025	
ROUTE 62	STATE MO
DISTRICT BR	SHEET NO. 9
COUNTY DUNKLIN	
JOB NO. JSE0155	
CONTRACT ID.	
PROJECT NO.	
BRIDGE NO. A9436	

DATE	DESCRIPTION

MISSOURI HIGHWAYS AND TRANSPORTATION COMMISSION
105 WEST CAPITOL
JEFFERSON CITY, MO 65102
1-888-ASK-MODOT (1-888-275-6636)

GARVER, LLC.
7509 NW TIFFANY SPRINGS PARKWAY, SUITE 200
KANSAS CITY, MO 64153
PHONE: (816) 298-6465
CERTIFICATE OF AUTHORITY NO. 2008013090

IF A SEAL IS PRESENT ON THIS SHEET IT HAS BEEN ELECTRONICALLY SEALED AND DATED.

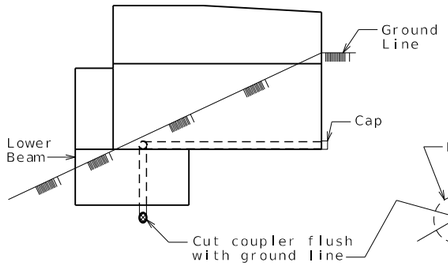

ELEVATION OF WING

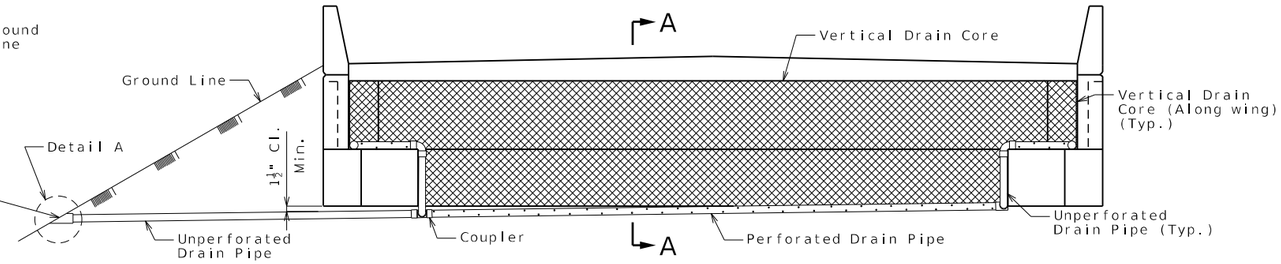

ELEVATION OF END BENT

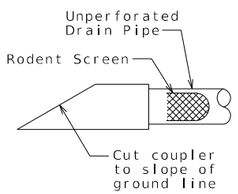

DETAIL A

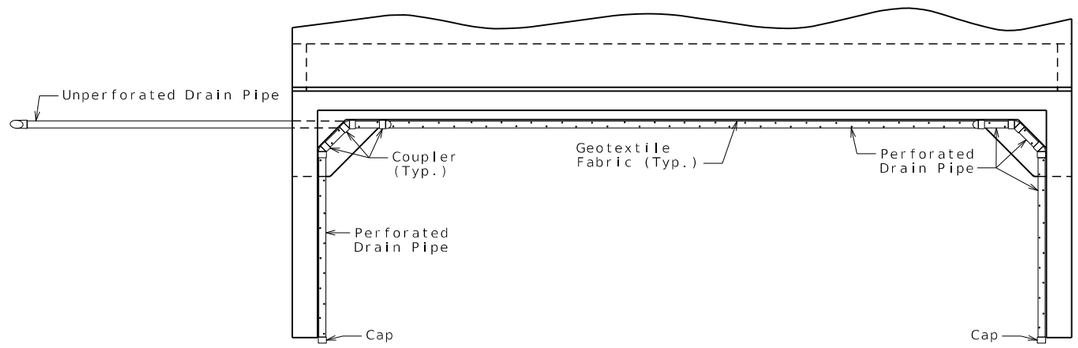

PLAN OF END BENT

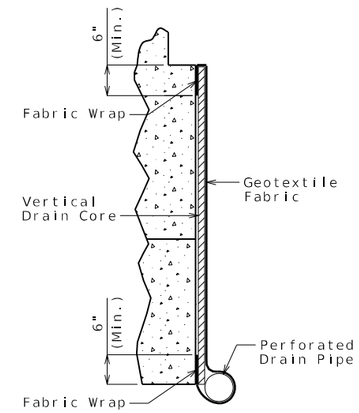

PART SECTION A-A
(Section thru wing similar)

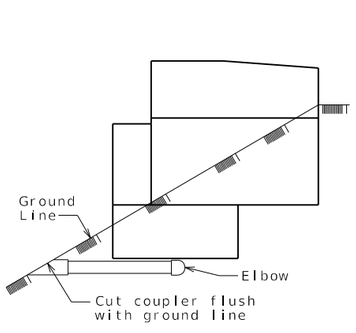

ELEVATION OF WING

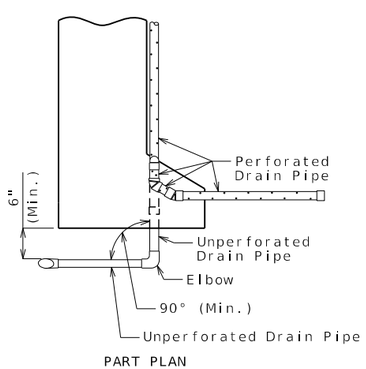

PART PLAN

OPTIONAL TURNED DRAIN
(Use only when straight drain is not practical.)

General Notes:

All drain pipe shall be sloped 1 to 2 percent.

Drain pipe may be either 6-inch diameter corrugated metallic-coated steel pipe underdrain, 4-inch diameter corrugated polyvinyl chloride (PVC) drain pipe, or 4-inch diameter corrugated polyethylene (PE) drain pipe.

Drain pipe shall be placed at fill face of end bent and inside face of wings. The pipe shall slope to lowest grade of ground line, also missing the lower beam of end bent by a minimum of 1 1/2 inches.

Perforated pipe shall be placed at fill face side and inside face of wings at the bottom of end bent and plain pipe shall be used where the vertical drain ends to the exit at ground line.

VERTICAL DRAIN AT END BENTS

Detailed Nov. 2024
Checked Jan. 2025

Note: This drawing is not to scale. Follow dimensions.

STATE OF MISSOURI
DEREK S. BUTLER
NUMBER PE-2016009828
PROFESSIONAL ENGINEER

THIS SHEET HAS BEEN SIGNED, SEALED AND DATED ELECTRONICALLY

DATE PREPARED	
5/19/2025	
ROUTE 62	STATE MO
DISTRICT BR	SHEET NO. 10
COUNTY DUNKLIN	
JOB NO. JSE0155	
CONTRACT ID.	
PROJECT NO.	
BRIDGE NO. A9436	

DATE	DESCRIPTION

MISSOURI HIGHWAYS AND TRANSPORTATION COMMISSION
105 WEST CAPITOL
JEFFERSON CITY, MO 65102
1-888-ASK-MODOT (1-888-275-6636)

GARVER, LLC.
7509 NW TIFFANY SPRINGS PARKWAY, SUITE 200
KANSAS CITY, MO 64153
PHONE: (816) 298-6465
CERTIFICATE OF AUTHORITY NO. 2008013090

IF A SEAL IS PRESENT ON THIS SHEET IT HAS BEEN ELECTRONICALLY SEALED AND DATED.

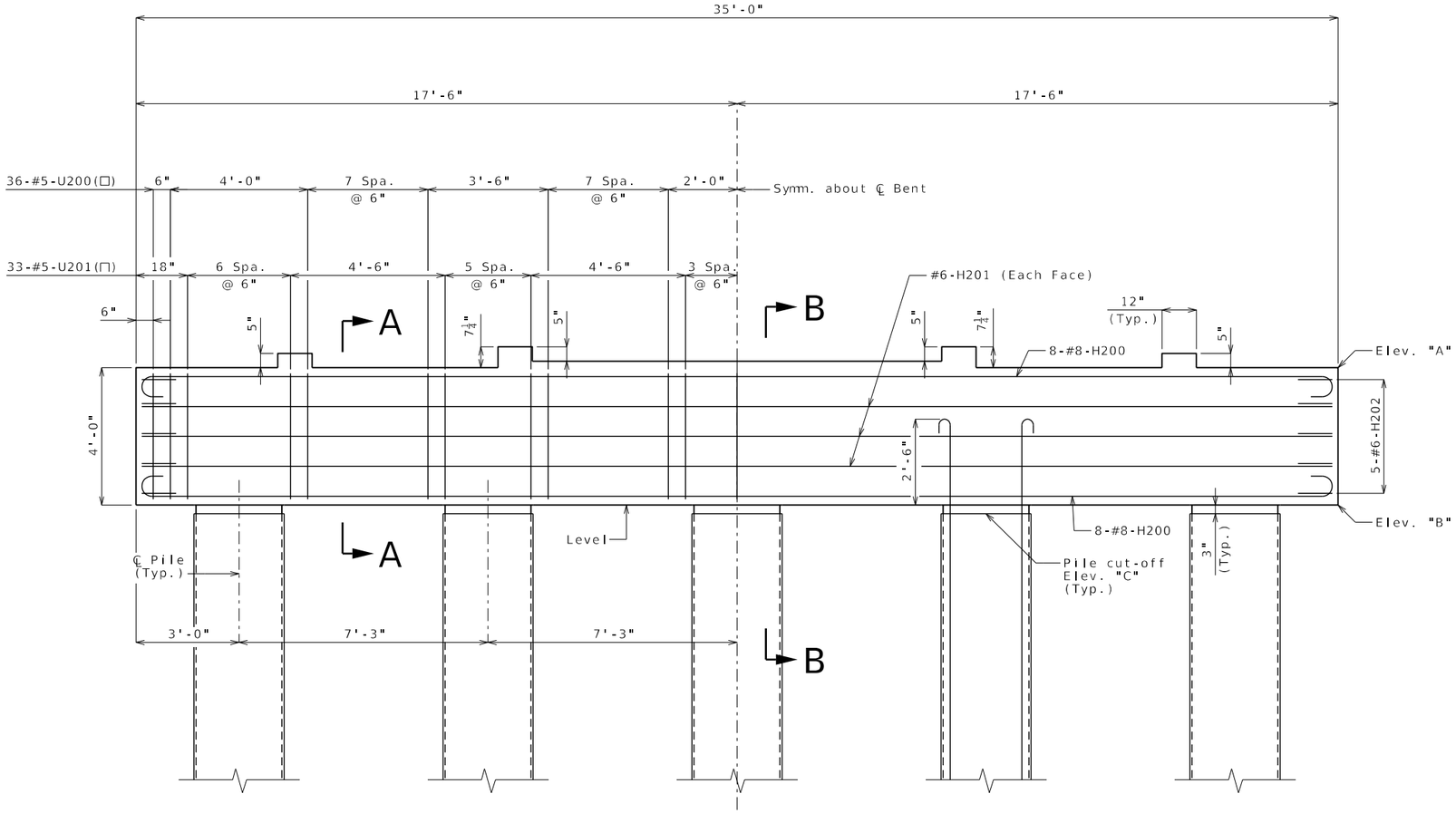

ELEVATION

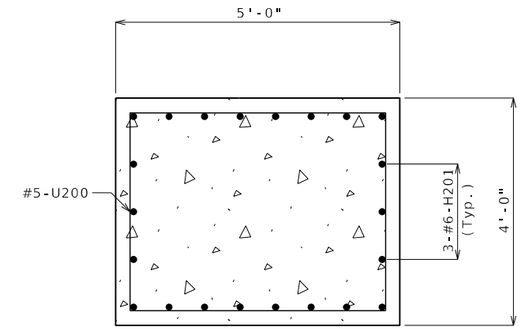

SECTION A-A

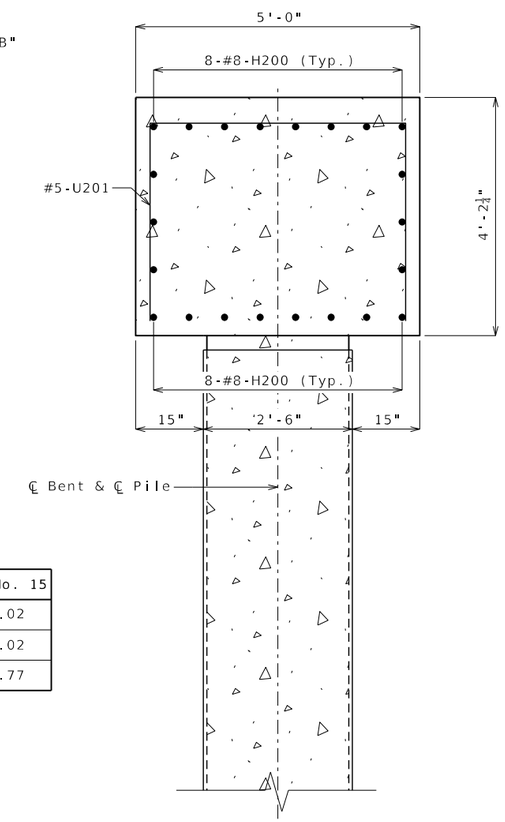

SECTION B-B

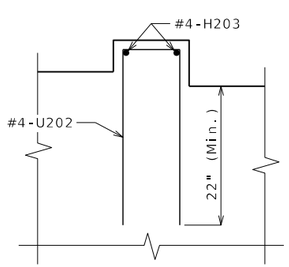

PART ELEVATION OF SHEAR BLOCK

	Bent No. 2	Bent No. 3	Bent No. 4	Bent No. 9	Bent No. 10	Bent No. 11	Bent No. 13	Bent No. 14	Bent No. 15
"A"	303.00	304.53	305.91	306.99	306.49	306.00	305.01	304.52	304.02
"B"	299.00	300.53	301.91	302.99	302.49	302.00	301.01	300.52	300.02
"C"	298.75	300.28	301.66	302.74	302.24	301.75	300.76	300.27	299.77

Notes:

Work this sheet with Sheet No. 12.

For details of cast-in-place concrete pile, see Sheet No. 5.

DETAILS OF INTERMEDIATE BENTS NO. 2-4, 9-11 & 13-15

Detailed Dec. 2024
Checked Jan. 2025

Note: This drawing is not to scale. Follow dimensions.

STATE OF MISSOURI
DEREK S. BUTLER
NUMBER PE-2016009626
PROFESSIONAL ENGINEER

THIS SHEET HAS BEEN SIGNED, SEALED AND DATED ELECTRONICALLY

DATE PREPARED	
5/19/2025	
ROUTE 62	STATE MO
DISTRICT BR	SHEET NO. 11
COUNTY DUNKLIN	
JOB NO. JSE0155	
CONTRACT ID.	
PROJECT NO.	
BRIDGE NO. A9436	

DATE	DESCRIPTION

MISSOURI HIGHWAYS AND TRANSPORTATION COMMISSION
105 WEST CAPITOL
JEFFERSON CITY, MO 65102
1-888-ASK-MODOT (1-888-275-6636)

GARVER, LLC.
7509 NW TIFFANY SPRINGS PARKWAY, SUITE 200
KANSAS CITY, MO 64153
PHONE: (816) 298-6465
CERTIFICATE OF AUTHORITY NO. 2008013090

IF A SEAL IS PRESENT ON THIS SHEET IT HAS BEEN ELECTRONICALLY SEALED AND DATED.

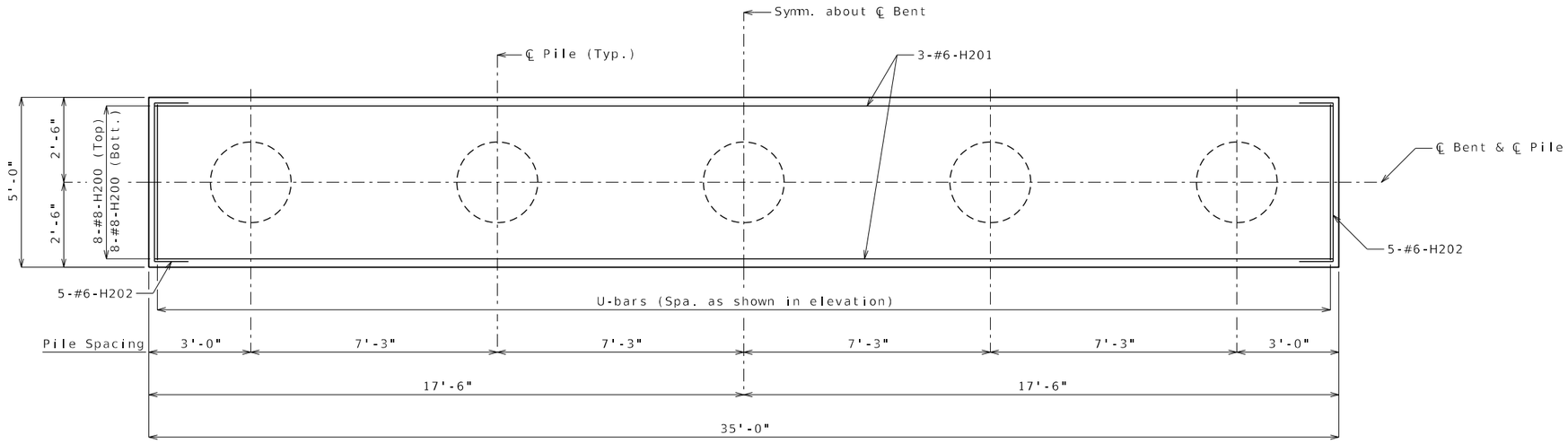

PLAN SHOWING REINFORCEMENT & PILES

(Shear Keys not shown for clarity)

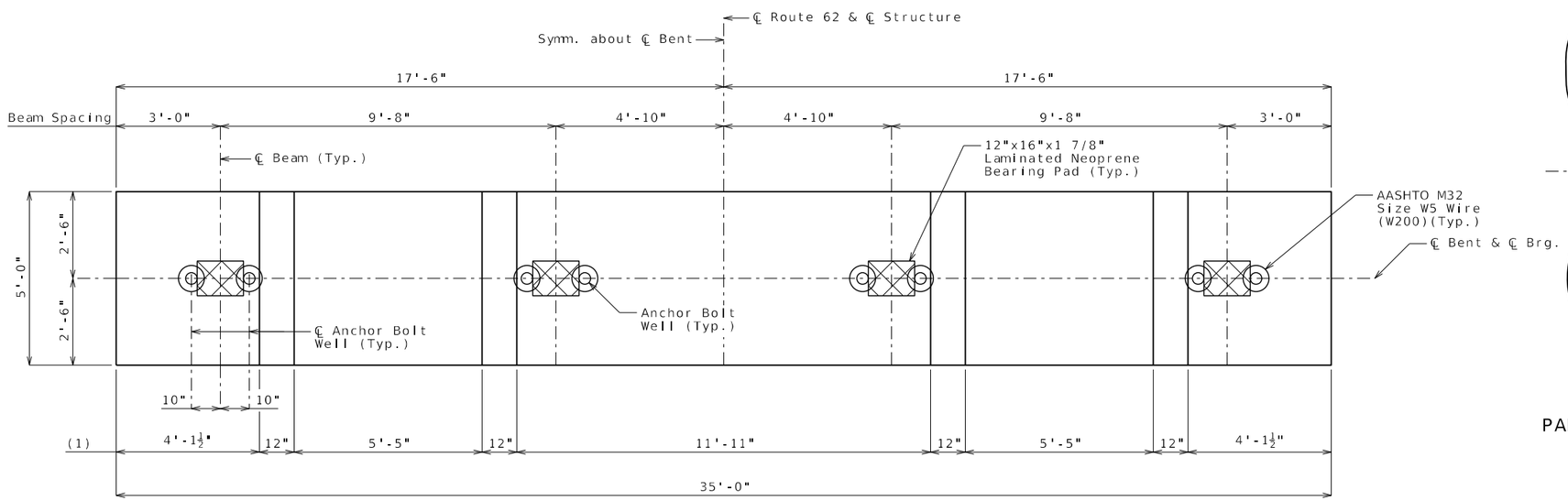

PLAN OF BEAM

(1) Shear Block Spacing

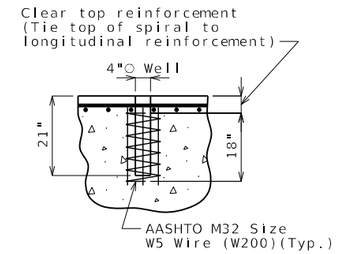

ANCHOR BOLT WELLS

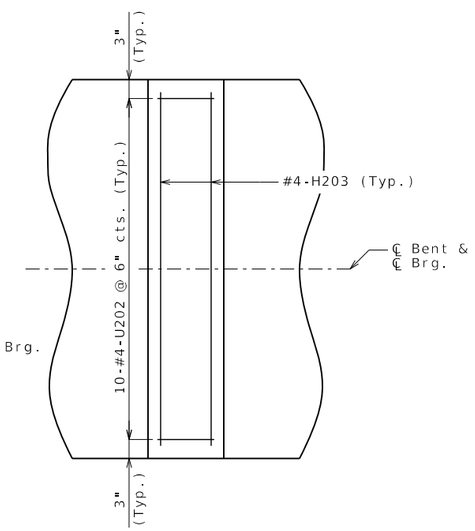

PART PLAN OF SHEAR BLOCK

Substructure Quantity Table for Intermediate Bents No. 2-4, 9-11 & 13-15

Item		Quantity								
		Bent No. 2	Bent No. 3	Bent No. 4	Bent No. 9	Bent No. 10	Bent No. 11	Bent No. 13	Bent No. 14	Bent No. 15
Dynamic Pile Testing	each	1	1	1	1	1	1	1	1	1
Dyamic Pile Restrike Testing	each	1	1	1	1	1	1	1	1	1
Pile Point Reinforcement	each	5	5	5	5	5	5	5	5	5
Galvanized Cast-in-Place Concrete Piles (30 in.)	linear foot	565	575	580	540	540	595	590	590	585
Class B Concrete (Substructure)	cu. yard	26.7	26.7	26.7	26.7	26.7	26.7	26.7	26.7	26.7
Reinforcing Steel (Bridges)	pound	6,340	6,330	6,340	6,330	6,340	6,330	6,340	6,330	6,340

These quantities are included in the Estimated Quantities table on Sheet No. 3.

Notes:

For details of Laminated Neoprene Bearing Pad Assembly, see Sheet No. 22.

Reinforcing steel shall be shifted to clear anchor bolt wells by at least 1/2".

DETAILS OF INTERMEDIATE BENTS NO. 2-4, 9-11 & 13-15

Detailed Dec. 2024
Checked Jan. 2025

Note: This drawing is not to scale. Follow dimensions.

STATE OF MISSOURI
DEREK S. BUTLER
NUMBER PE-2016009628
PROFESSIONAL ENGINEER

THIS SHEET HAS BEEN SIGNED, SEALED AND DATED ELECTRONICALLY

IF A SEAL IS PRESENT ON THIS SHEET IT HAS BEEN ELECTRONICALLY SEALED AND DATED.

DATE PREPARED	
5/19/2025	
ROUTE 62	STATE MO
DISTRICT BR	SHEET NO. 12
COUNTY DUNKLIN	
JOB NO. JSE0155	
CONTRACT ID.	
PROJECT NO.	
BRIDGE NO. A9436	

DESCRIPTION	DATE

MISSOURI HIGHWAYS AND TRANSPORTATION COMMISSION
105 WEST CAPITOL
JEFFERSON CITY, MO 65102
1-888-ASK-MODOT (1-888-275-6636)

GARVER, LLC.
7509 NW TIFFANY SPRINGS
PARKWAY, SUITE 200
KANSAS CITY, MO 64153
PHONE: (816) 298-6465
CERTIFICATE OF AUTHORITY
NO. 2008013090

B_A9436_012_SE0155_Int_Bent_2.dgn 9:24:36 AM 5/19/2025

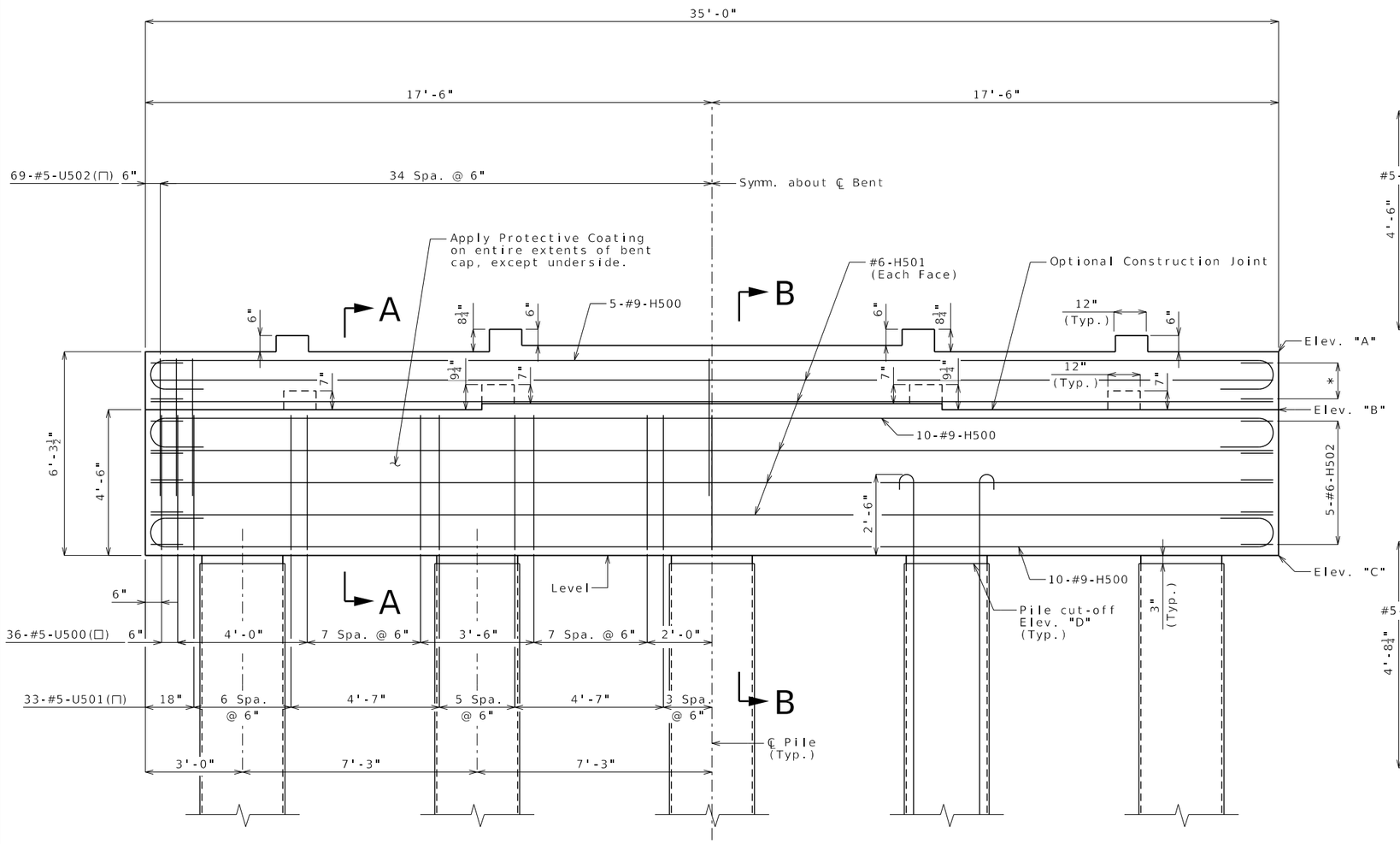

ELEVATION
(Looking ahead station)
(Intermediate Bent No. 5 shown, Intermediate Bent No. 8 opposite hand)

∗ 2-#6-H503

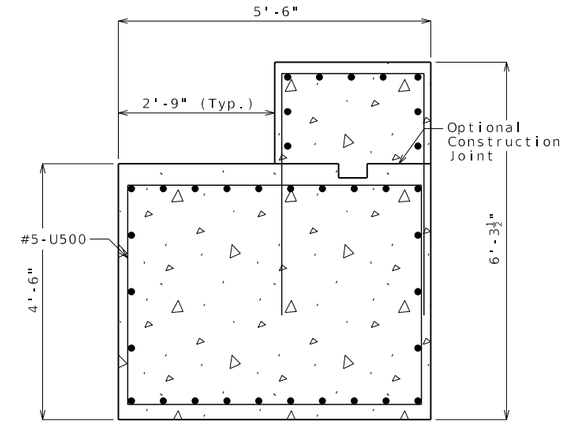

SECTION A-A

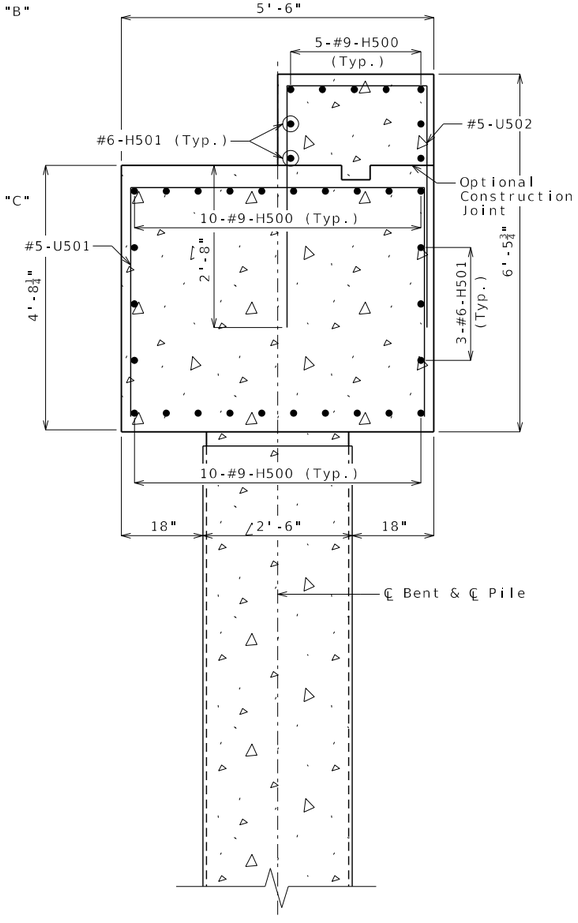

SECTION B-B

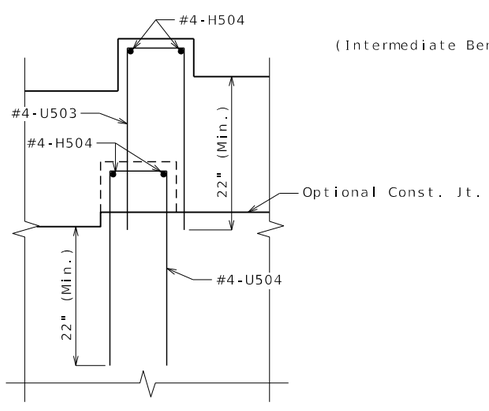

PART ELEVATION OF SHEAR BLOCK

	Bent No. 5	Bent No. 8
"A"	306.87	307.37
"B"	305.08	305.57
"C"	300.58	301.07
"D"	300.33	300.82

Notes:

Work this sheet with Sheet No. 14.

For details of cast-in-place concrete pile, see Sheet No. 5.

DETAILS OF INTERMEDIATE BENTS NO. 5 & 8

Detailed Dec. 2024
Checked Jan. 2025

Note: This drawing is not to scale. Follow dimensions.

STATE OF MISSOURI
DEREK S. BUTLER
NUMBER PE-2016009628
PROFESSIONAL ENGINEER

THIS SHEET HAS BEEN SIGNED, SEALED AND DATED ELECTRONICALLY

DATE PREPARED	
5/19/2025	
ROUTE 62	STATE MO
DISTRICT BR	SHEET NO. 13
COUNTY DUNKLIN	
JOB NO. JSE0155	
CONTRACT ID.	
PROJECT NO.	
BRIDGE NO. A9436	

DATE	DESCRIPTION

MISSOURI HIGHWAYS AND TRANSPORTATION COMMISSION
105 WEST CAPITOL
JEFFERSON CITY, MO 65102
1-888-ASK-MODOT (1-888-275-6636)

GARVER, LLC.
7509 NW TIFFANY SPRINGS PARKWAY, SUITE 200
KANSAS CITY, MO 64153
PHONE: (816) 298-6465
CERTIFICATE OF AUTHORITY NO. 2008013090

IF A SEAL IS PRESENT ON THIS SHEET IT HAS BEEN ELECTRONICALLY SEALED AND DATED.

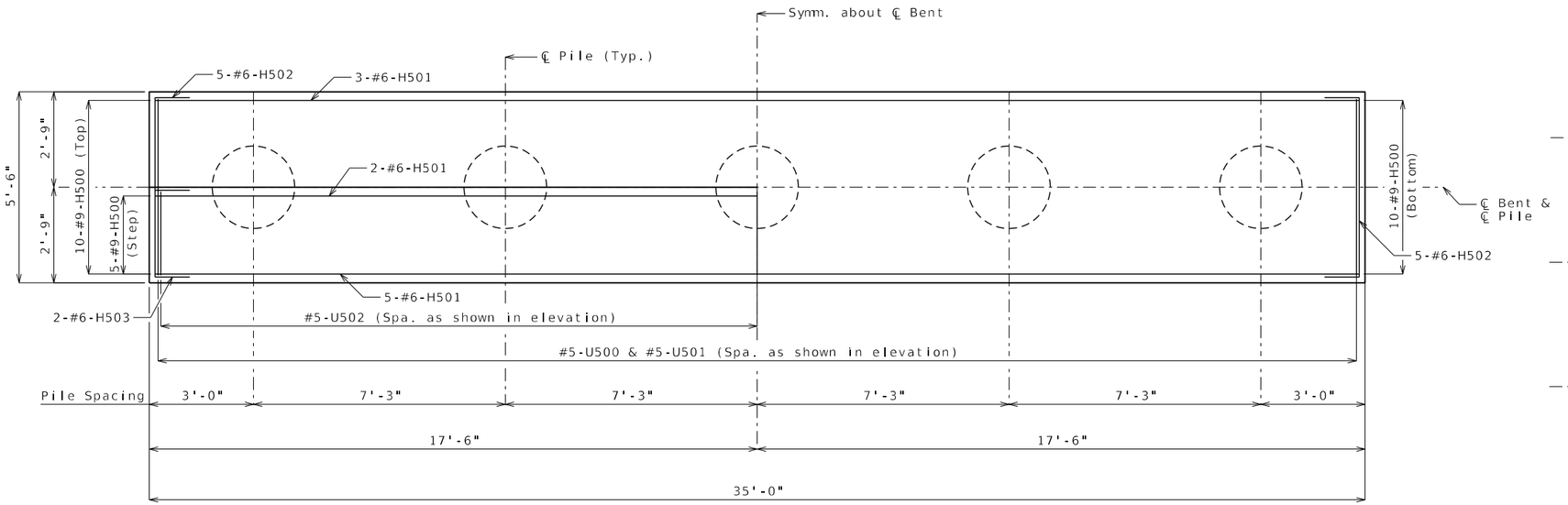

TOP REINFORCEMENT & PILES

BOTTOM REINFORCEMENT & PILES

PLAN SHOWING REINFORCEMENT

(Intermediate Bent No. 5 shown, Intermediate Bent No. 8 opposite hand)

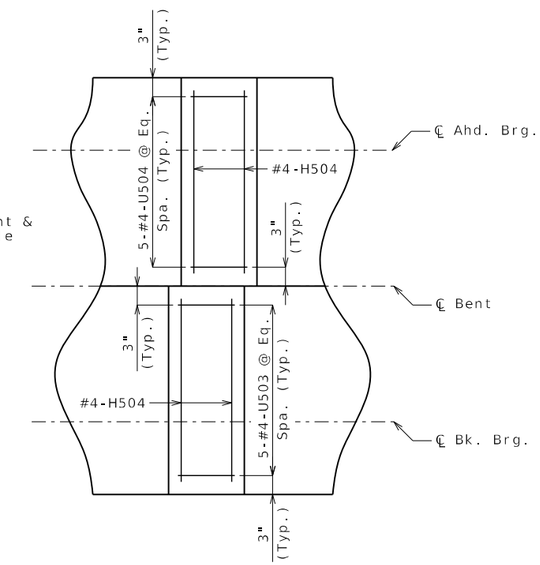

PART PLAN OF SHEAR BLOCK

(Intermediate Bent No. 5 shown, Intermediate Bent No. 8 opposite hand)

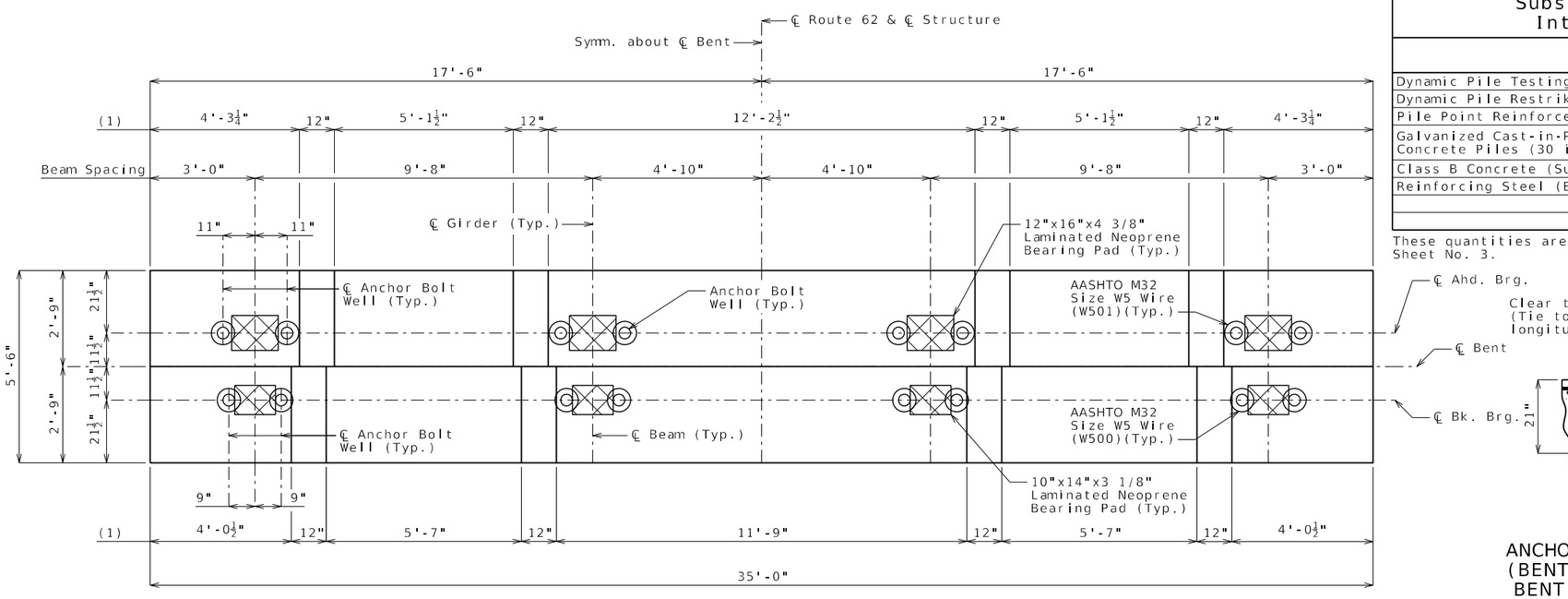

PLAN OF BEAM

(Intermediate Bent No. 5 shown, Intermediate Bent No. 8 opposite hand)

(1) Shear Block Spacing

Substructure Quantity Table for Intermediate Bents No. 5 & 8

Item		Quantity	
		Bent No. 5	Bent No. 8
Dynamic Pile Testing	each	1	1
Dynamic Pile Restrike Testing	each	1	1
Pile Point Reinforcement	each	5	5
Galvanized Cast-in-Place Concrete Piles (30 in.)	linear foot	575	530
Class B Concrete (Substructure)	cu. yard	39.4	39.4
Reinforcing Steel (Epoxy Coated)	pound	9,420	9,420

These quantities are included in the Estimated Quantities table on Sheet No. 3.

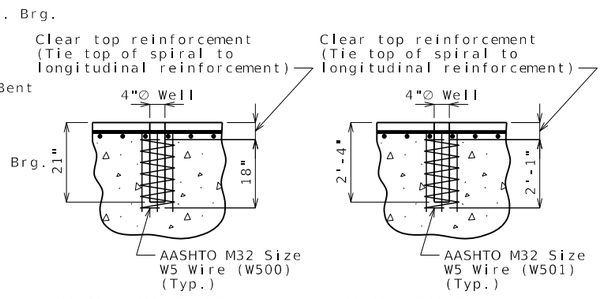

ANCHOR BOLT WELLS (BENT NO. 5 BK. & BENT NO. 8 AHD.)

ANCHOR BOLT WELLS (BENT NO. 5 AHD. & BENT NO. 8 BK.)

Notes:

For details of Laminated Neoprene Bearing Pad Assembly, see Sheets No. 22 & 23.

Reinforcing steel shall be shifted to clear anchor bolt wells by at least 1/2".

DETAILS OF INTERMEDIATE BENTS NO. 5 & 8

Detailed Dec. 2024
Checked Jan. 2025

Note: This drawing is not to scale. Follow dimensions.

STATE OF MISSOURI
DEREK S. BUTLER
NUMBER PE-2016009626
PROFESSIONAL ENGINEER

THIS SHEET HAS BEEN SIGNED, SEALED AND DATED ELECTRONICALLY

DATE PREPARED 5/19/2025

ROUTE	STATE
62	MO
DISTRICT	SHEET NO.
BR	14

COUNTY: DUNKLIN

JOB NO. JSE0155

CONTRACT ID.

PROJECT NO.

BRIDGE NO. A9436

DATE	DESCRIPTION

MISSOURI HIGHWAYS AND TRANSPORTATION COMMISSION
105 WEST CAPITOL
JEFFERSON CITY, MO 65102
1-888-ASK-MODOT (1-888-275-6636)

GARVER, LLC.
7509 NW TIFFANY SPRINGS PARKWAY, SUITE 200
KANSAS CITY, MO 64153
PHONE: (816) 298-6465
CERTIFICATE OF AUTHORITY NO. 2008013090

IF A SEAL IS PRESENT ON THIS SHEET IT HAS BEEN ELECTRONICALLY SEALED AND DATED.

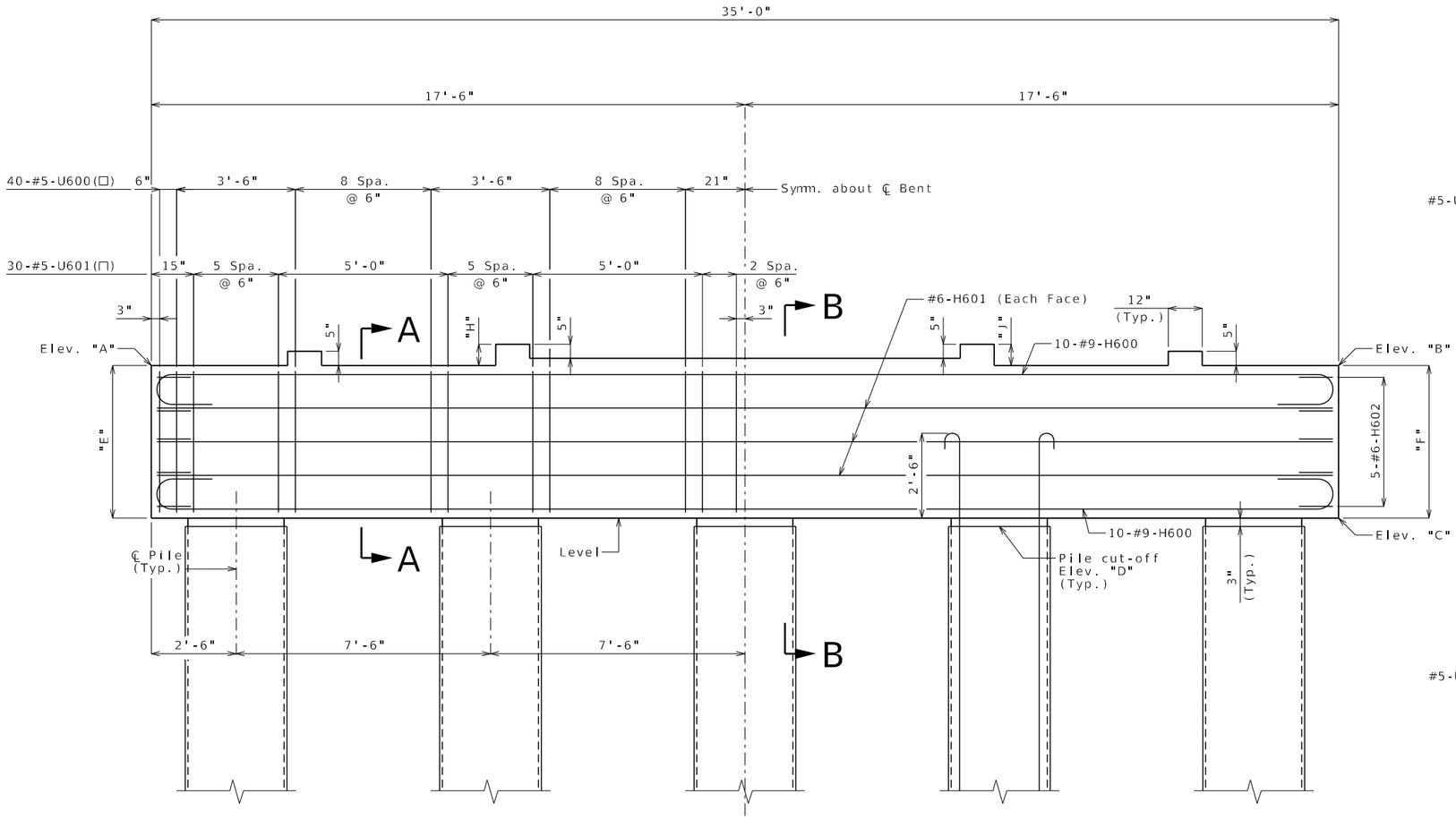

ELEVATION

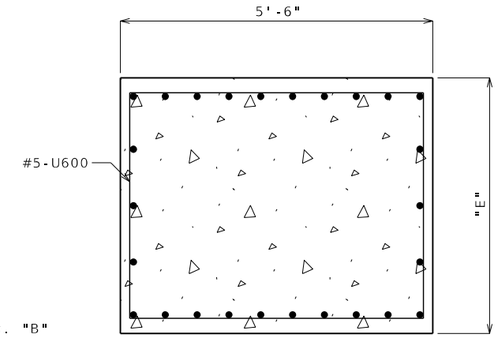

SECTION A-A

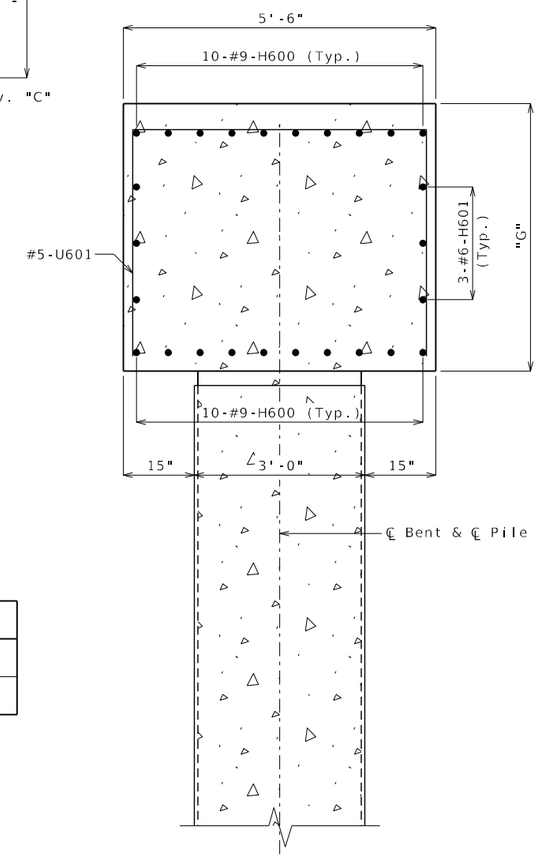

SECTION B-B

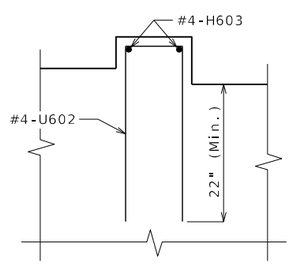

PART ELEVATION OF SHEAR BLOCK

	"A"	"B"	"C"	"D"	"E"	"F"	"G"	"H"	"J"
Bent No. 6	306.25	306.29	301.75	301.50	4'-6"	4'-6½"	4'-8½"	7½"	7"
Bent No. 7	306.42	306.39	301.89	301.64	4'-6⅜"	4'-6"	4'-8⅜"	7"	7⅜"

Notes:

Work this sheet with Sheet No. 16.

For details of cast-in-place concrete pile, see Sheet No. 5.

DETAILS OF INTERMEDIATE BENTS NO. 6 & 7

Note: This drawing is not to scale. Follow dimensions.

Detailed Dec. 2024
Checked Jan. 2025

STATE OF MISSOURI
DEREK S. BUTLER
NUMBER PE-2016009828
PROFESSIONAL ENGINEER

THIS SHEET HAS BEEN SIGNED, SEALED AND DATED ELECTRONICALLY

DATE PREPARED	5/19/2025
ROUTE	62
STATE	MO
DISTRICT	BR
SHEET NO.	15
COUNTY	DUNKLIN
JOB NO.	JSE0155
CONTRACT ID.	
PROJECT NO.	
BRIDGE NO.	A9436

DESCRIPTION

DATE

MISSOURI HIGHWAYS AND TRANSPORTATION COMMISSION

105 WEST CAPITOL
JEFFERSON CITY, MO 65102
1-888-ASK-MODOT (1-888-275-6636)

GARVER, LLC.
7509 NW TIFFANY SPRINGS PARKWAY, SUITE 200
KANSAS CITY, MO 64153
PHONE: (816) 298-6465
CERTIFICATE OF AUTHORITY NO. 2008013090

IF A SEAL IS PRESENT ON THIS SHEET IT HAS BEEN ELECTRONICALLY SEALED AND DATED.

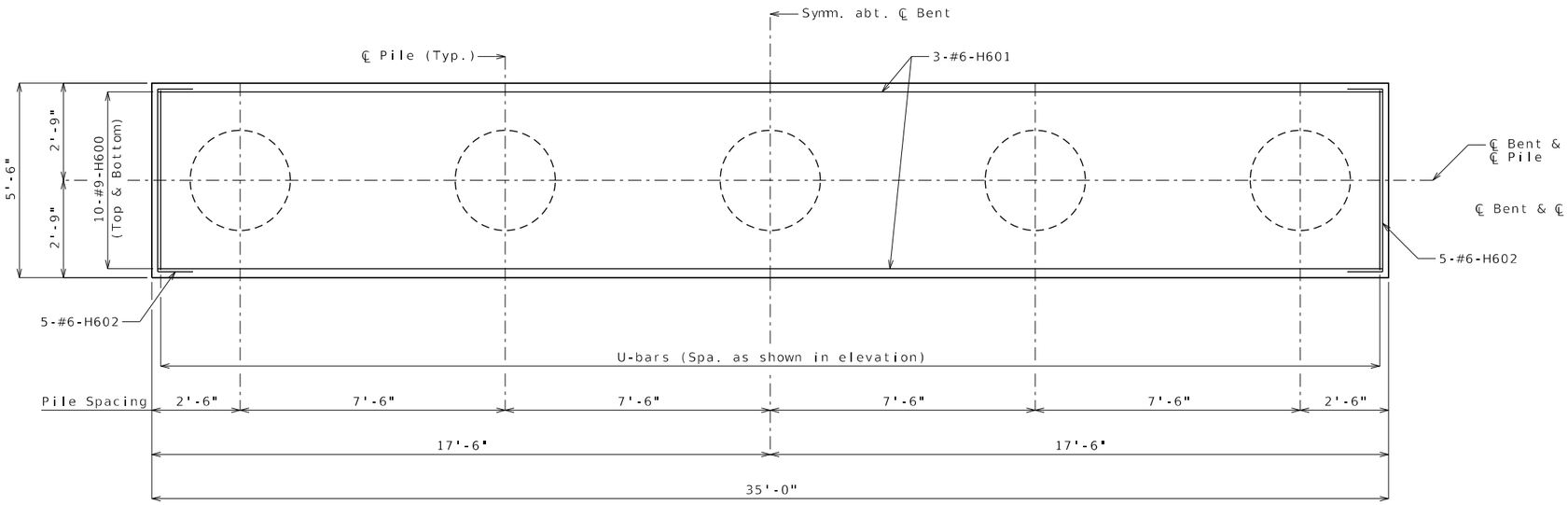

PLAN SHOWING REINFORCEMENT & PILES
(TOP & BOTTOM)

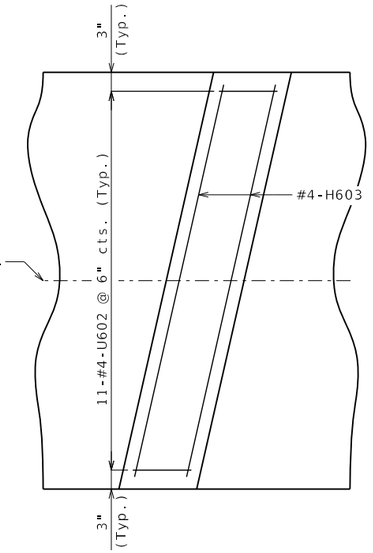

PART PLAN OF SHEAR BLOCK

Substructure Quantity Table for Intermediate Bents No. 6 & 7			
Item		Quantity	
		Bent No. 6	Bent No. 7
Dynamic Pile Testing	each	1	1
Dynamic Pile Restrike Testing	each	1	1
Pile Point Reinforcement	each	5	5
Galvanized Cast-in-Place Concrete Piles (36 in.)	linear foot	635	550
Class B Concrete (Substructure)	cu. yard	33.1	33.1
Reinforcing Steel (Bridges)	pound	8,560	8,560

These quantities are included in the Estimated Quantities table on Sheet No. 3.

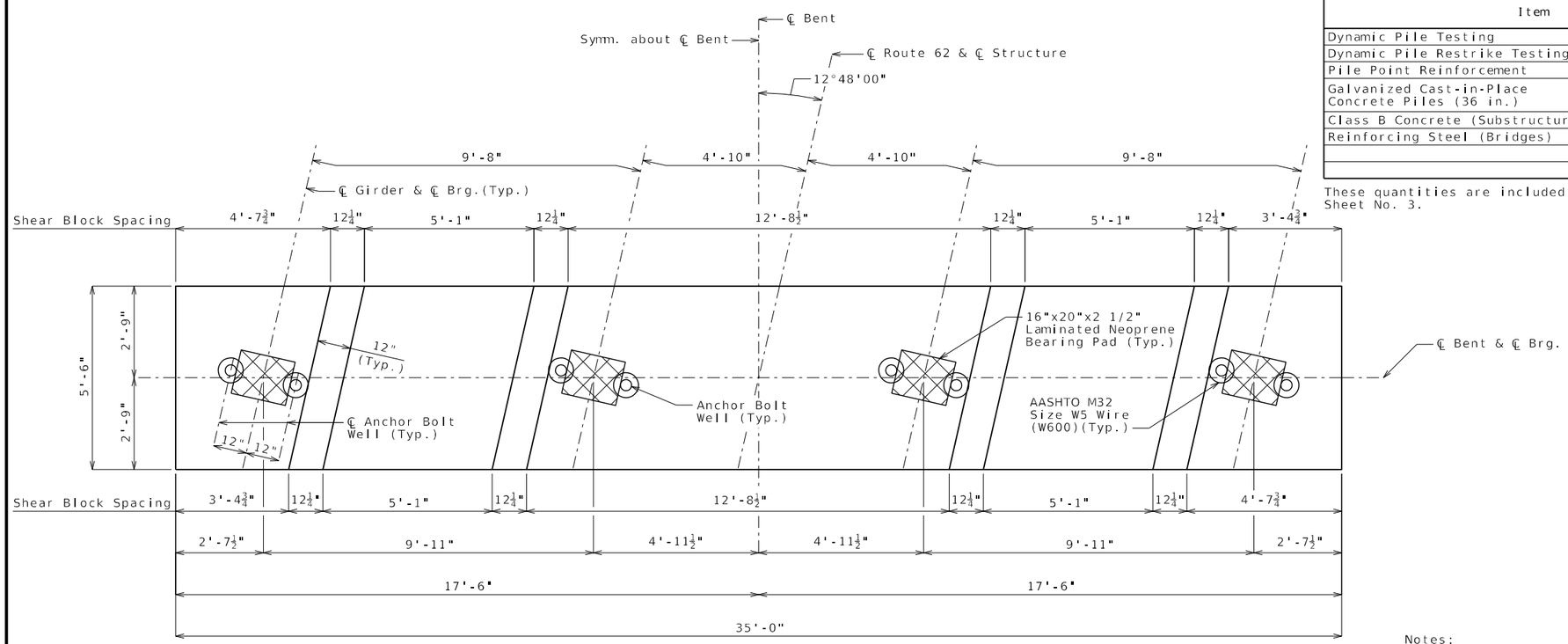

PLAN OF BEAM

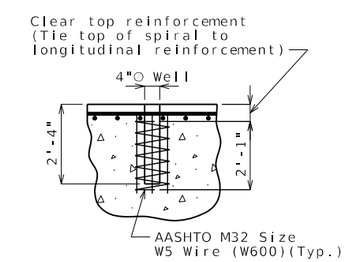

ANCHOR BOLT WELLS

Notes:

For details of Laminated Neoprene Bearing Pad Assembly, see Sheet No. 23.

Reinforcing steel shall be shifted to clear anchor bolt wells by at least 1/2".

DETAILS OF INTERMEDIATE BENTS NO. 6 & 7

Detailed Dec. 2024
Checked Jan. 2025

Note: This drawing is not to scale. Follow dimensions.

STATE OF MISSOURI
DEREK S. BUTLER
NUMBER PE-2016009628
PROFESSIONAL ENGINEER

THIS SHEET HAS BEEN SIGNED, SEALED AND DATED ELECTRONICALLY

DATE PREPARED 5/19/2025
ROUTE 62 | STATE MO
DISTRICT BR | SHEET NO. 16
COUNTY DUNKLIN
JOB NO. JSE0155
CONTRACT ID.
PROJECT NO.
BRIDGE NO. A9436

DESCRIPTION
DATE

IF A SEAL IS PRESENT ON THIS SHEET IT HAS BEEN ELECTRONICALLY SEALED AND DATED.

MISSOURI HIGHWAYS AND TRANSPORTATION COMMISSION
105 WEST CAPITOL
JEFFERSON CITY, MO 65102
1-888-ASK-MODOT (1-888-275-6636)

GARVER, LLC.
7509 NW TIFFANY SPRINGS
PARKWAY, SUITE 200
KANSAS CITY, MO 64153
PHONE: (816) 298-6465
CERTIFICATE OF AUTHORITY
NO. 2008013090

B_A9436_016_SE0155_Int_Bent_6.dgn 9:27:30 AM 5/19/2025

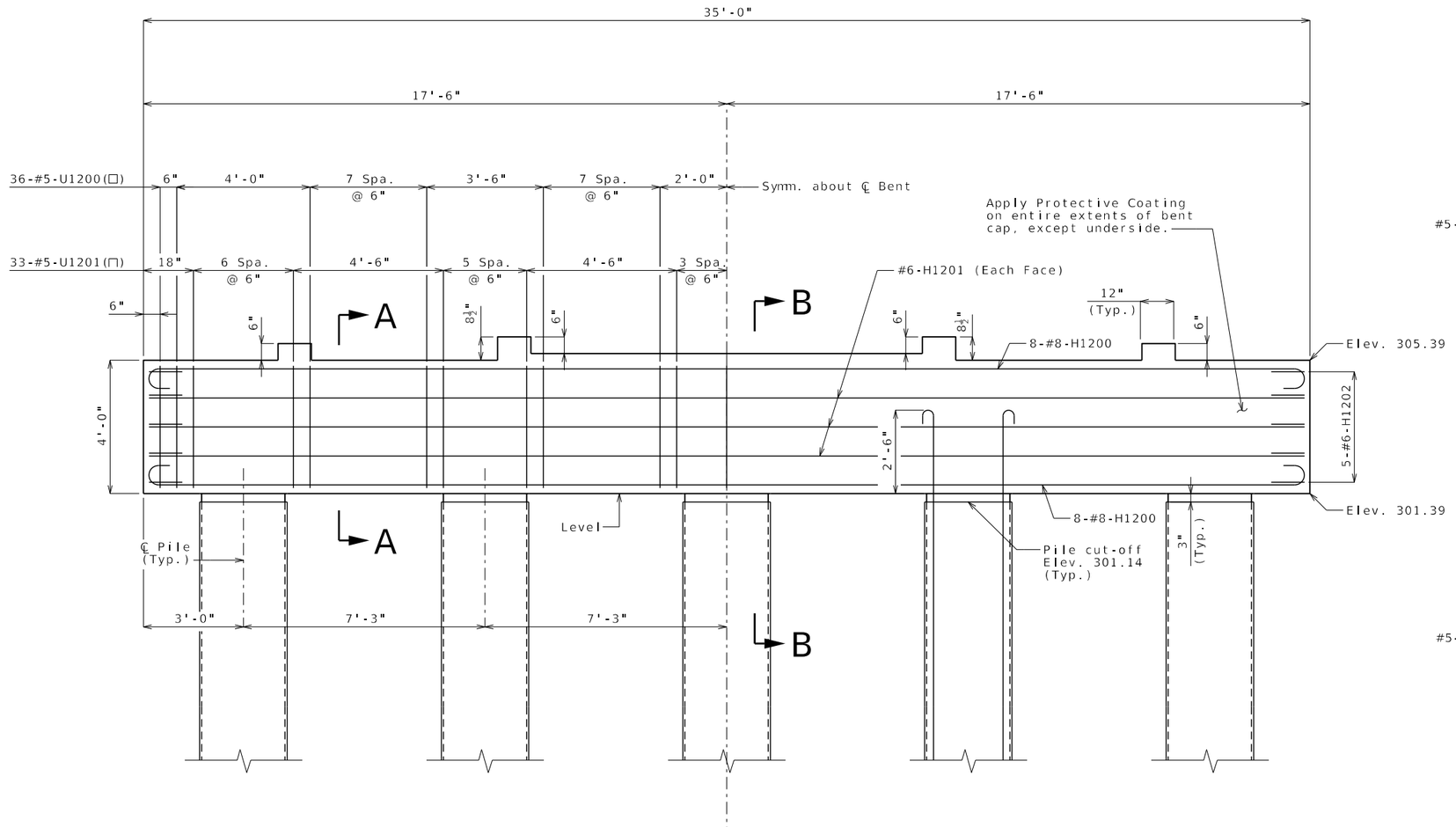

ELEVATION

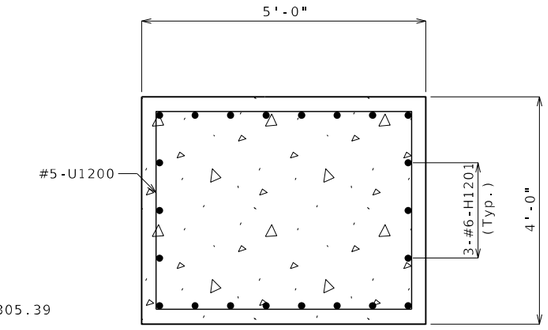

SECTION A-A

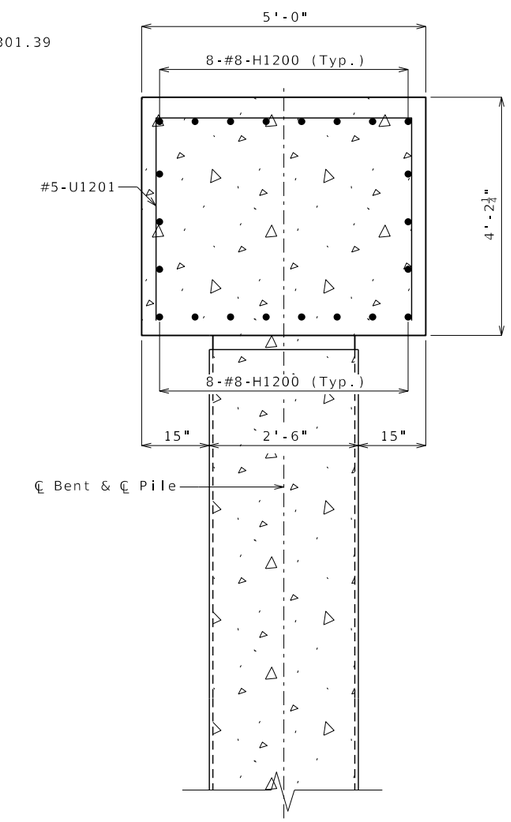

SECTION B-B

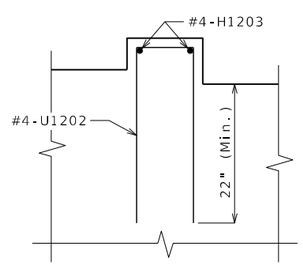

PART ELEVATION OF SHEAR BLOCK

Notes:

Work this sheet with Sheet No. 18.

For details of cast-in-place concrete pile, see Sheet No. 5.

DETAILS OF INTERMEDIATE BENT NO. 12

Detailed Dec. 2024
Checked Jan. 2025

Note: This drawing is not to scale. Follow dimensions.

STATE OF MISSOURI
DEREK S. BUTLER
NUMBER PE-2016009626
PROFESSIONAL ENGINEER

THIS SHEET HAS BEEN SIGNED, SEALED AND DATED ELECTRONICALLY

DATE PREPARED	
5/19/2025	
ROUTE 62	STATE MO
DISTRICT BR	SHEET NO. 17
COUNTY DUNKLIN	
JOB NO. JSE0155	
CONTRACT ID.	
PROJECT NO.	
BRIDGE NO. A9436	

DATE	DESCRIPTION

IF A SEAL IS PRESENT ON THIS SHEET IT HAS BEEN ELECTRONICALLY SEALED AND DATED.

MISSOURI HIGHWAYS AND TRANSPORTATION COMMISSION
105 WEST CAPITOL
JEFFERSON CITY, MO 65102
1-888-ASK-MODOT (1-888-275-6636)

GARVER, LLC.
7509 NW TIFFANY SPRINGS PARKWAY, SUITE 200
KANSAS CITY, MO 64153
PHONE: (816) 298-6465
CERTIFICATE OF AUTHORITY NO. 2008013090

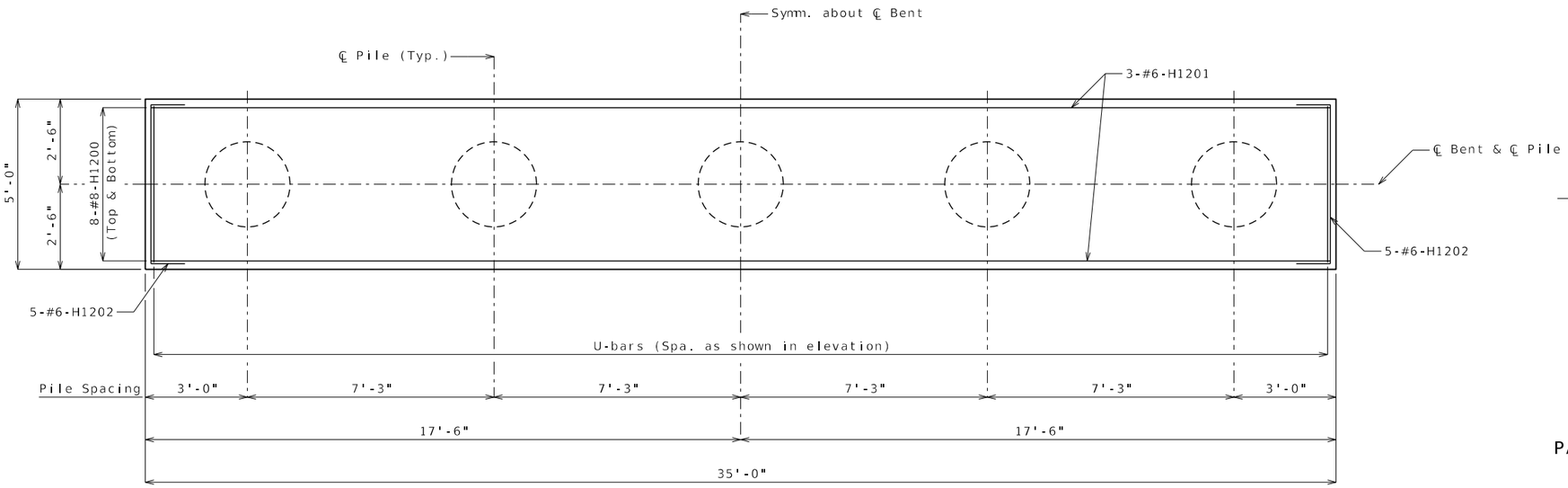

PLAN SHOWING REINFORCEMENT & PILES
(TOP & BOTTOM)

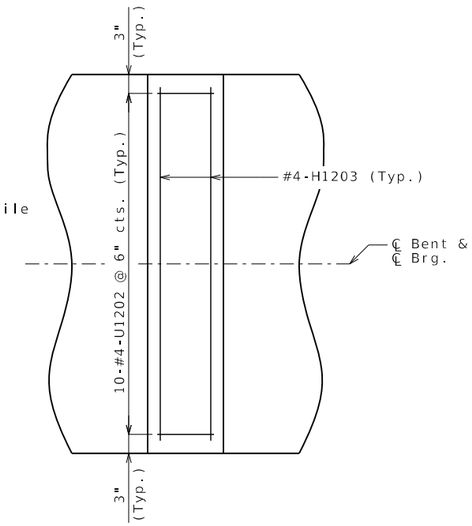

PART PLAN OF SHEAR BLOCK

Substructure Quantity Table for Intermediate Bent No. 12		
Item		Quantity
Dynamic Pile Testing	each	1
Dynamic Pile Restrike Testing	each	1
Pile Point Reinforcement	each	5
Galvanized Cast-in-Place Concrete Piles (30 in.)	linear foot	595
Class B Concrete (Substructure)	cu. yard	26.7
Reinforcing Steel (Epoxy Coated)	pound	6,670

These quantities are included in the Estimated Quantities table on Sheet No. 3.

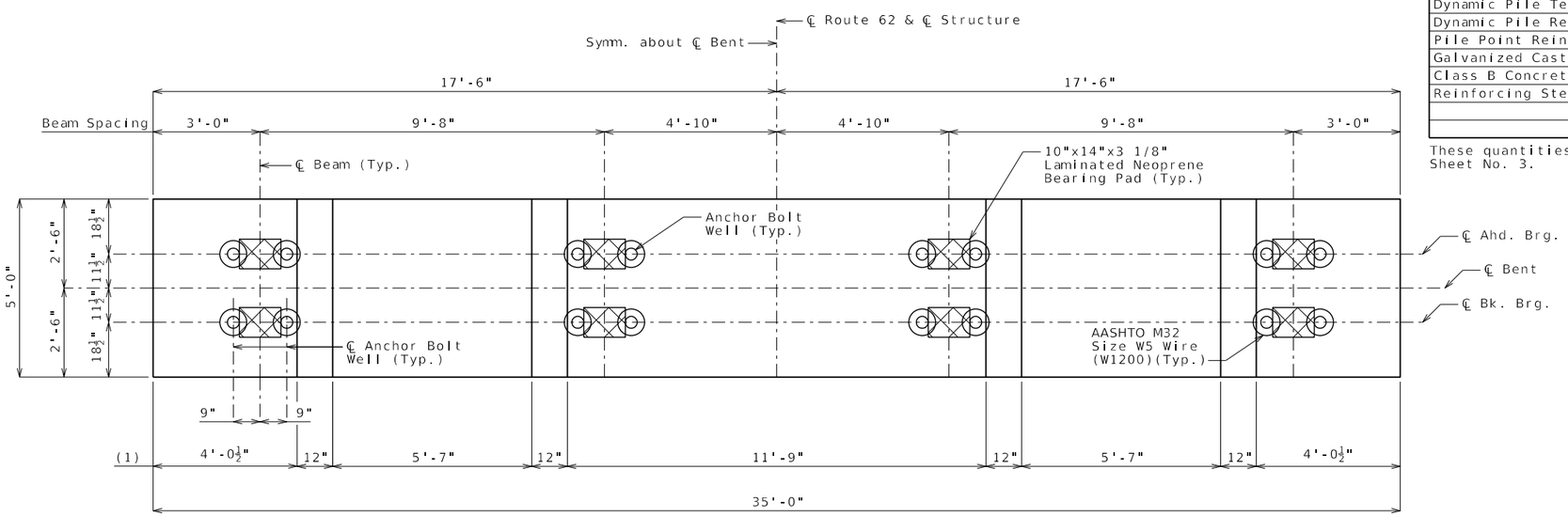

PLAN OF BEAM

(1) Shear Block Spacing

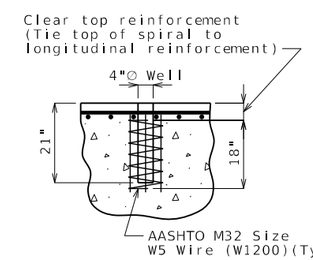

ANCHOR BOLT WELLS

Notes:

For details of Laminated Neoprene Bearing Pad Assembly, see Sheet No. 22.

Reinforcing steel shall be shifted to clear anchor bolt wells by at least 1/2".

DETAILS OF INTERMEDIATE BENT NO. 12

Detailed Dec. 2024
Checked Jan. 2025

Note: This drawing is not to scale. Follow dimensions.

STATE OF MISSOURI
DEREK S. BUTLER
NUMBER PE-2016009628
PROFESSIONAL ENGINEER

THIS SHEET HAS BEEN SIGNED, SEALED AND DATED ELECTRONICALLY

DATE PREPARED	
5/19/2025	
ROUTE 62	STATE MO
DISTRICT BR	SHEET NO. 18
COUNTY DUNKLIN	
JOB NO. JSE0155	
CONTRACT ID.	
PROJECT NO.	
BRIDGE NO. A9436	

DATE	DESCRIPTION

IF A SEAL IS PRESENT ON THIS SHEET IT HAS BEEN ELECTRONICALLY SEALED AND DATED.

MISSOURI HIGHWAYS AND TRANSPORTATION COMMISSION
105 WEST CAPITOL
JEFFERSON CITY, MO 65102
1-888-ASK-MODOT (1-888-275-6636)

GARVER, LLC.
7509 NW TIFFANY SPRINGS
PARKWAY, SUITE 200
KANSAS CITY, MO 64153
PHONE: (816) 298-6465
CERTIFICATE OF AUTHORITY
NO. 2008013090

B_A9436_018_SE0155_Int_Bent_8.dgn 9:28:47 AM 5/19/2025

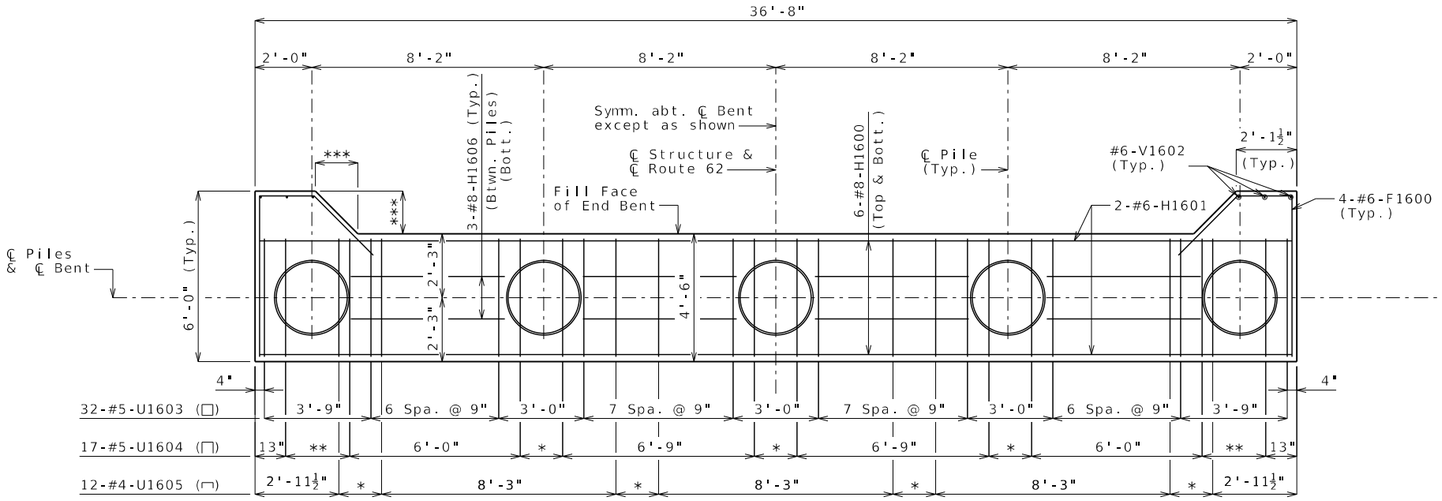

PLAN OF BEAM SHOWING PILE SPACING AND REINFORCEMENT

(Keys & steps not shown for clarity)

* 2 Spa. @ 9"

** 3 Spa. @ 9"

*** 18" (Typ.)

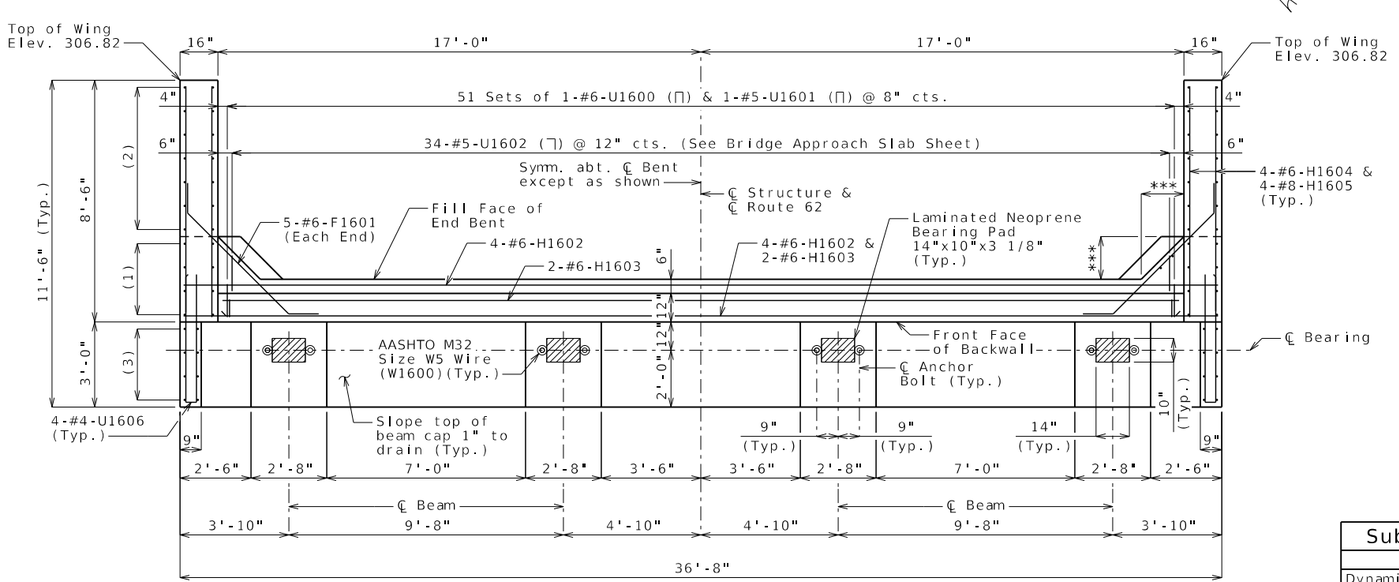

(1) 4-#6-V1600 @ 10" cts. (E.F.)(Typ.)

(2) 7-#6-V1601 @ 10" cts. (E.F.)(Typ.)

(3) 4-#4-V1603 @ 10" cts. (E.F.)(Typ.)

PART PLAN

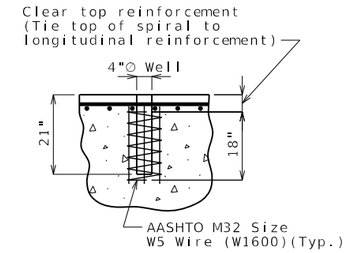

ANCHOR BOLT WELLS

Notes:

Work this sheet with Sheets No. 20 & 21.

For details of vertical drain at end bents, see Sheet No. 10.

For details of bridge approach slab, see Sheet No. 48.

For details of Type D Barrier, see Sheet No. 47.

For details of Laminated Neoprene Bearing Pad Assembly, see Sheet No. 22.

For details of galvanized cast-in-place concrete piles, see Sheet No. 6.

All concrete above the upper construction joint in the backwall shall be Class B-2.

Top of backwall for End Bent No. 16 shall be formed to the crown and grade of the roadway. Backwall above upper construction joint shall not be poured until the superstructure slab has been poured in the adjacent span.

Reinforcing steel shall be shifted to clear piles. U bars shall be shifted to clear piles by at least 1 1/2 inches.

Reinforcing steel in beam cap and cast-in-place piles shall be shifted where necessary to clear anchor bolt wells by at least 1/2".

Seal the following surfaces with Protective Coating - Concrete Bents and Piers (Epoxy): backwall; top and front of beam cap; all sides and top of curtain walls; outside of beam cap above ground line; and outside of wingwalls for 2 ft beyond curtain walls.

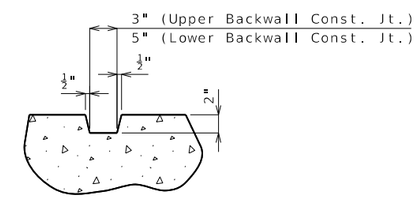

SECTION THRU KEY

Substructure Quantity Table for End Bent No. 16		
Item		Quantity
Dynamic Pile Testing	each	1
Dynamic Pile Restrike Testing	each	1
Pile Point Reinforcement	each	5
Galvanized Cast-In-Place Concrete Pile (30 in.)	linear foot	395
Class B Concrete (Substructure)	cu. yard	29.7
Reinforcing Steel (Epoxy Coated)	pound	8,700

These quantities are included in the Estimated Quantities table on Sheet No. 3.

DETAILS OF END BENT NO. 16

Detailed Nov. 2024
Checked Jan. 2025

Note: This drawing is not to scale. Follow dimensions.

STATE OF MISSOURI
DEREK S. BUTLER
NUMBER PE-2016009626
PROFESSIONAL ENGINEER

THIS SHEET HAS BEEN SIGNED, SEALED AND DATED ELECTRONICALLY

DATE PREPARED	
5/29/2025	
ROUTE 62	STATE MO
DISTRICT BR	SHEET NO. 19
COUNTY DUNKLIN	
JOB NO. JSE0155	
CONTRACT ID.	
PROJECT NO.	
BRIDGE NO. A9436	

DATE	DESCRIPTION

IF A SEAL IS PRESENT ON THIS SHEET IT HAS BEEN ELECTRONICALLY SEALED AND DATED.

MISSOURI HIGHWAYS AND TRANSPORTATION COMMISSION
105 WEST CAPITOL
JEFFERSON CITY, MO 65102
1-888-ASK-MODOT (1-888-275-6636)

GARVER, LLC.
7509 NW TIFFANY SPRINGS PARKWAY, SUITE 200
KANSAS CITY, MO 64153
PHONE: (816) 298-6465
CERTIFICATE OF AUTHORITY NO. 2008013090

B_A9436_019_SE0155_End_Bent16_1.dgn 1:26:21 PM 5/29/2025

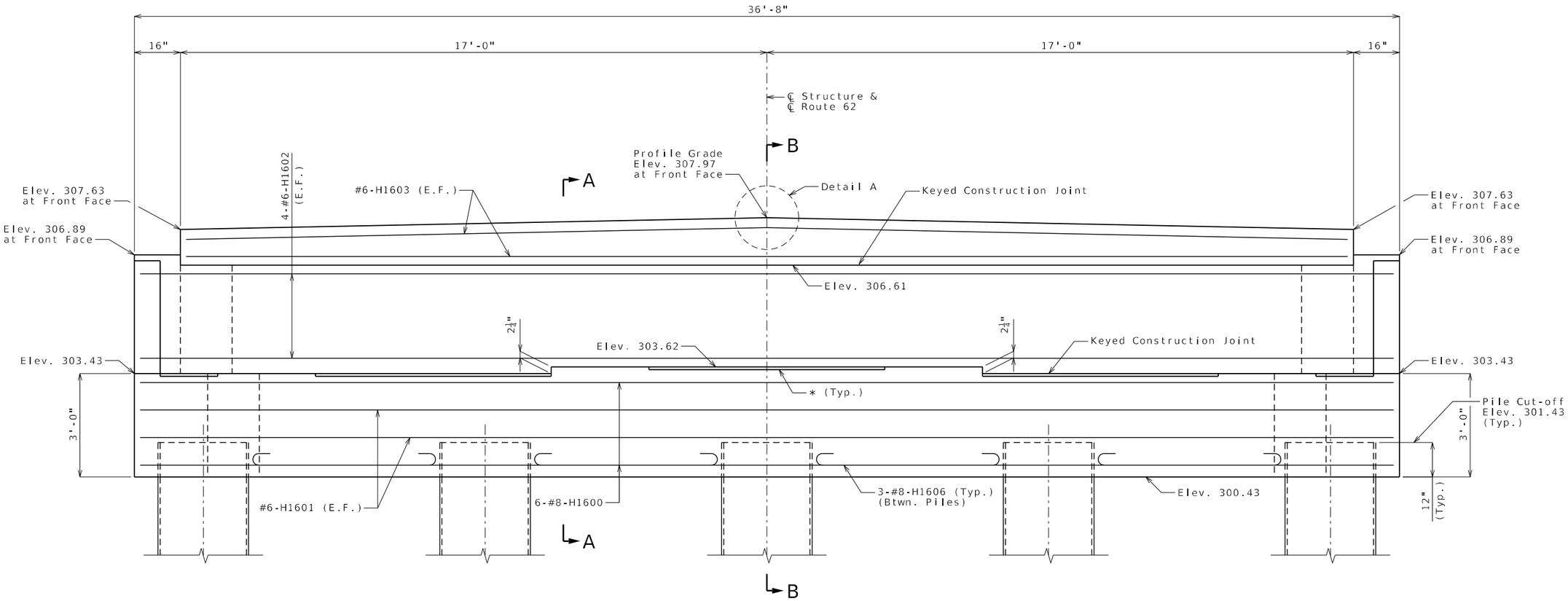

SECTION NEAR END BENT

(Looking Ahead Station)

* Slope top of beam cap 1" to drain, from front face of backwall to front face of beam cap.

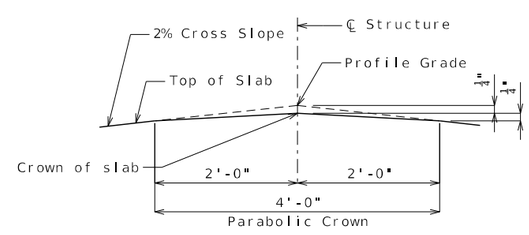

DETAIL A

Notes:

Work this sheet with Sheets No. 19 & 21.

For Wingwall Elevation and Sections A-A & B-B, see Sheet No. 21.

For additional notes, see Sheet No. 19.

DETAILS OF END BENT NO. 16

Detailed Nov. 2024
Checked Jan. 2025

Note: This drawing is not to scale. Follow dimensions.

STATE OF MISSOURI
DEREK S. BUTLER
NUMBER PE-2016009628
PROFESSIONAL ENGINEER

THIS SHEET HAS BEEN SIGNED, SEALED AND DATED ELECTRONICALLY

DATE PREPARED	5/29/2025
ROUTE	62
STATE	MO
DISTRICT	BR
SHEET NO.	20
COUNTY	DUNKLIN
JOB NO.	JSE0155
CONTRACT ID.	
PROJECT NO.	
BRIDGE NO.	A9436

DATE	DESCRIPTION

MISSOURI HIGHWAYS AND TRANSPORTATION COMMISSION

105 WEST CAPITOL
JEFFERSON CITY, MO 65102
1-888-ASK-MODOT (1-888-275-6636)

GARVER, LLC.
7509 NW TIFFANY SPRINGS
PARKWAY, SUITE 200
KANSAS CITY, MO 64153
PHONE: (816) 298-6465
CERTIFICATE OF AUTHORITY
NO. 2008013090

IF A SEAL IS PRESENT ON THIS SHEET IT HAS BEEN ELECTRONICALLY SEALED AND DATED.

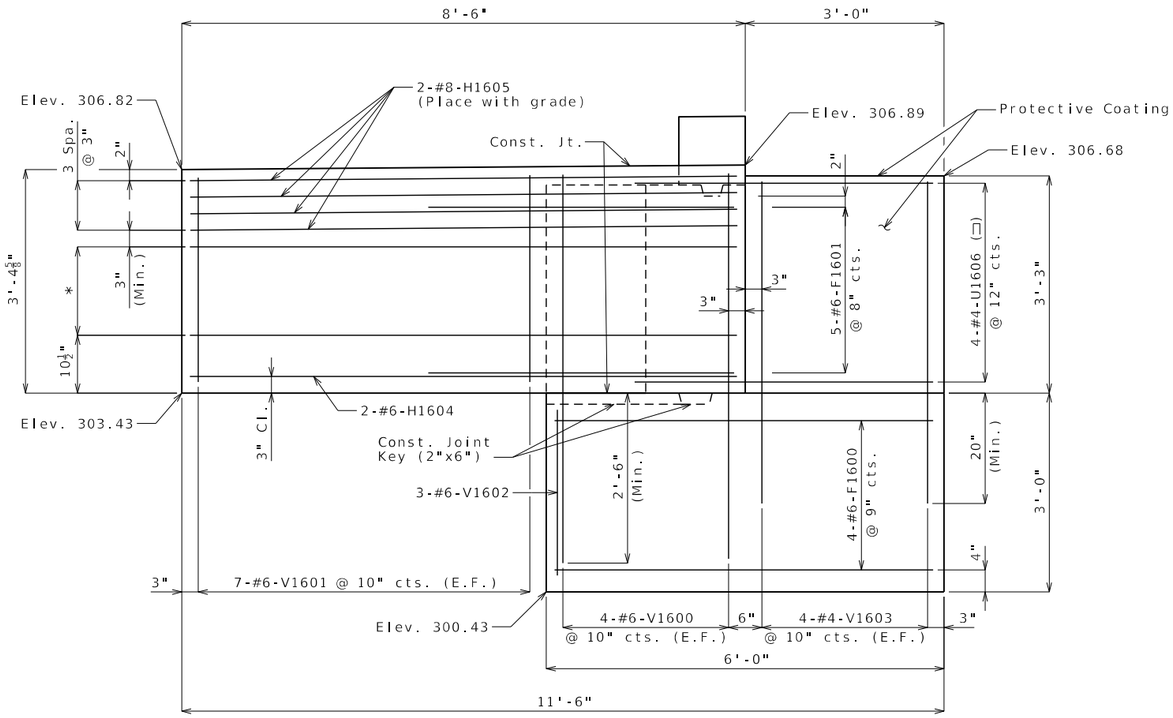

WINGWALL ELEVATION

* 3-#6-H1604 @ 8" cts. (E.F.)
** 4-#6-H1602 @ 10" cts. (E.F.)(Typ.)
*** #8-H Bars @ 3" cts. (E.F.)(Place with grade)

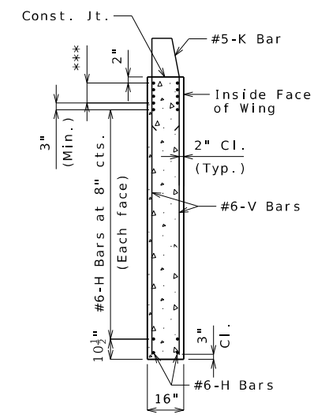

TYPICAL SECTION THRU WING

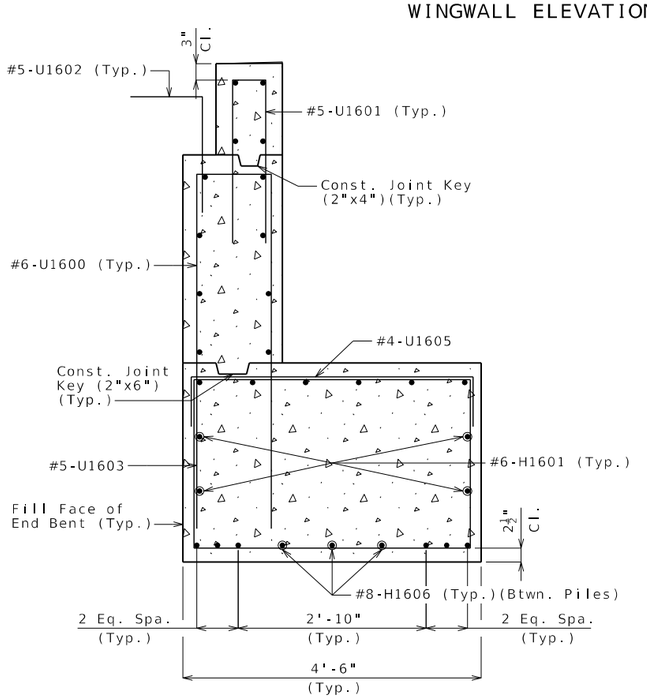

SECTION A-A

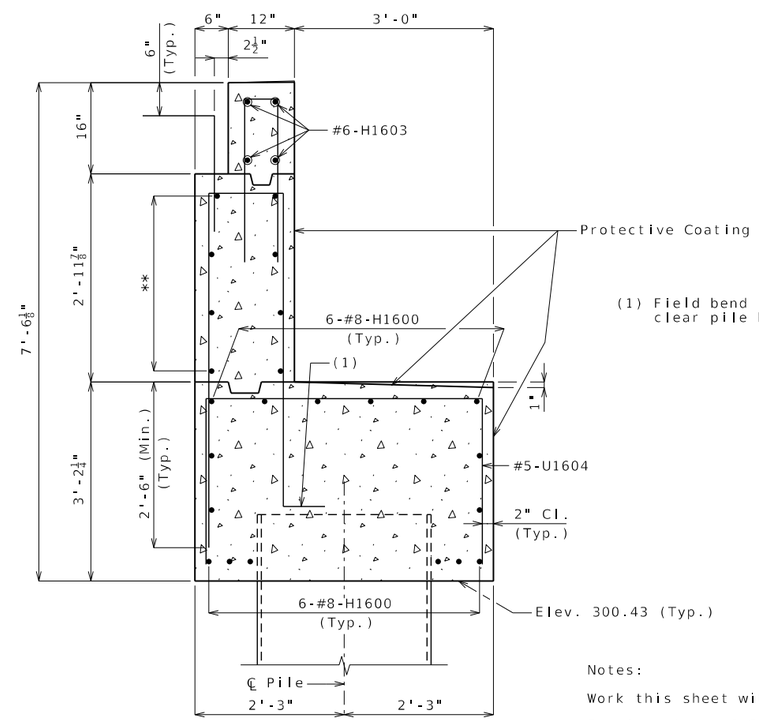

(1) Field bend leg of U1600 to clear pile by 1 1/2 inches.

SECTION B-B

Notes:

Work this sheet with Sheets No. 19 & 20.

For locations of Sections A-A & B-B, see Sheet No. 20.

For additional notes, see Sheet No. 19.

DETAILS OF END BENT NO. 16

Detailed Nov. 2024
Checked Jan. 2025

Note: This drawing is not to scale. Follow dimensions.

STATE OF MISSOURI
DEREK S. BUTLER
NUMBER PE-2016009626
PROFESSIONAL ENGINEER

THIS SHEET HAS BEEN SIGNED, SEALED AND DATED ELECTRONICALLY

DATE PREPARED	
5/29/2025	
ROUTE 62	STATE MO
DISTRICT BR	SHEET NO. 21
COUNTY DUNKLIN	
JOB NO. JSE0155	
CONTRACT ID.	
PROJECT NO.	
BRIDGE NO. A9436	

DATE	DESCRIPTION

IF A SEAL IS PRESENT ON THIS SHEET IT HAS BEEN ELECTRONICALLY SEALED AND DATED.

MISSOURI HIGHWAYS AND TRANSPORTATION COMMISSION
105 WEST CAPITOL
JEFFERSON CITY, MO 65102
1-888-ASK-MODOT (1-888-275-6636)

GARVER, LLC.
7509 NW TIFFANY SPRINGS PARKWAY, SUITE 200
KANSAS CITY, MO 64153
PHONE: (816) 298-6465
CERTIFICATE OF AUTHORITY NO. 2008013090

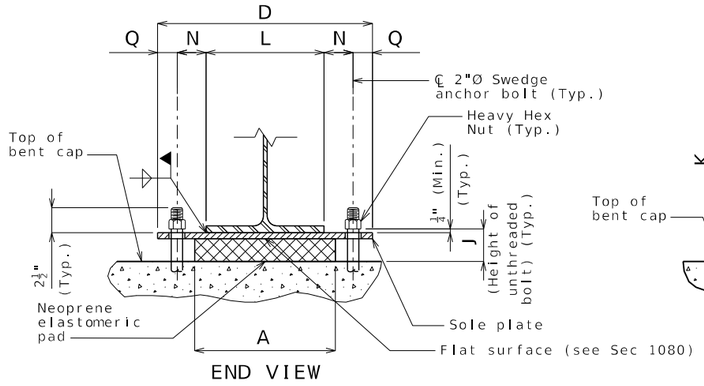

END VIEW

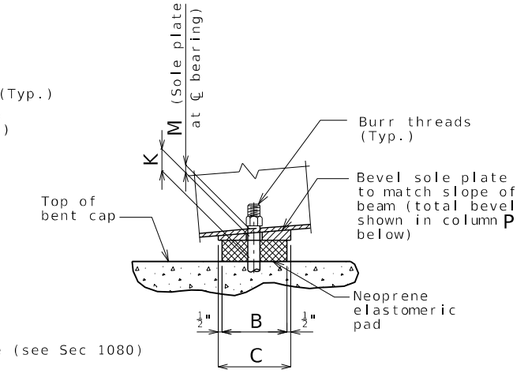

SIDE VIEW

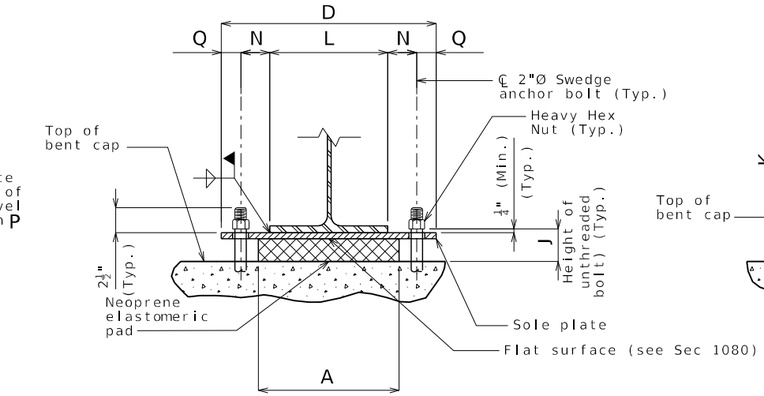

END VIEW

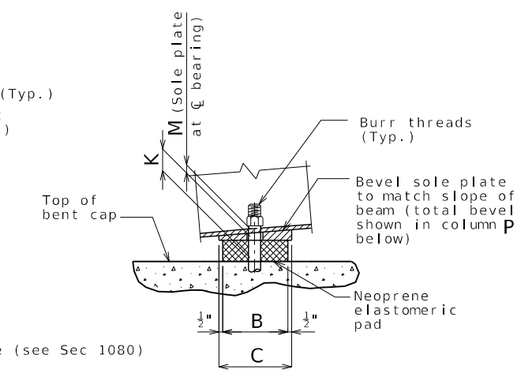

SIDE VIEW

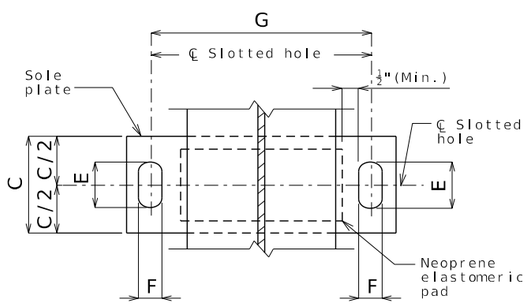

PART PLAN

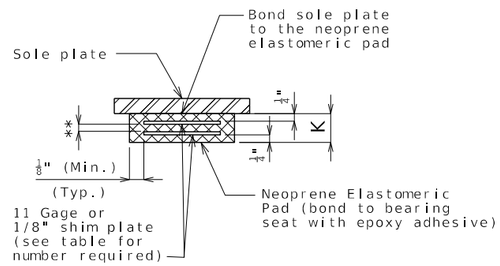

** Layers of 1/2" elastomer alternating with 11 gage or 1/8" shim plate

NEOPRENE ELASTOMERIC PAD

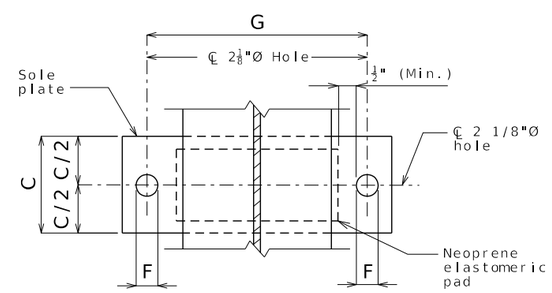

PART PLAN

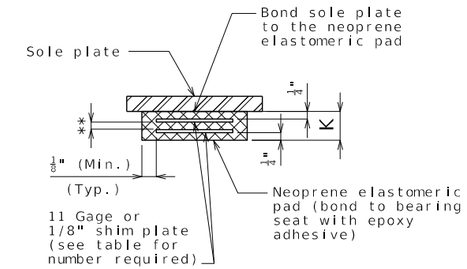

** Layers of 1/2" elastomer alternating with 11 gage or 1/8" shim plate

NEOPRENE ELASTOMERIC PAD

EXPANSION BEARINGS																	
BENT NO.	A	B	C	D	E	F	G	J	K	L	M	N	P	Q	R	NUMBER OF SHIM PLATES *	NUMBER REQUIRED
1	14"	10"	11"	24"	5 1/4"	2 1/8"	18"	4 7/8"	3 1/8"	12"	1 1/2"	3"	1/4"	3"	1/16"	5	4
5 Bk	14"	10"	11"	24"	5 1/4"	2 1/8"	18"	4 7/8"	3 1/8"	12"	1 1/2"	3"	3/16"	3"	1/16"	5	4
8 Ahd 12 Bk 12 Ahd 16	14"	10"	11"	24"	5 1/4"	2 1/8"	18"	4 7/8"	3 1/8"	12"	1 1/2"	3"	0"	3"	1/16"	5	16
																TOTAL BEARINGS	24

* The required shim plate shall be placed between layers of elastomer and molded together to form an integral unit.

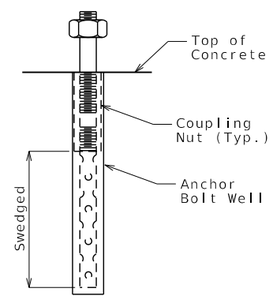

EXPANSION ANCHOR BOLT DETAIL

FIXED BEARINGS																
BENT NO.	A	B	C	D	F	G	J	K	L	M	N	P	Q	NUMBER OF SHIM PLATES *	NUMBER REQUIRED
2-3	16"	12"	13"	26"	2 1/8"	20"	3 5/8"	1 7/8"	12"	1 1/2"	4"	5/16"	3"	3	8
4	16"	12"	13"	26"	2 1/8"	20"	3 5/8"	1 7/8"	12"	1 1/2"	4"	1/4"	3"	3	4
9-11 & 13-15	16"	12"	13"	26"	2 1/8"	20"	3 5/8"	1 7/8"	12"	1 1/2"	4"	1/8"	3"	3	24
														TOTAL BEARINGS	36

* The required shim plate shall be placed between layers of elastomer and molded together to form an integral unit.

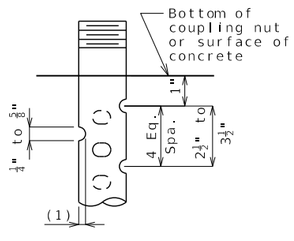

DETAIL OF 3/4"Ø THRU 2 1/2"Ø ANCHOR BOLTS

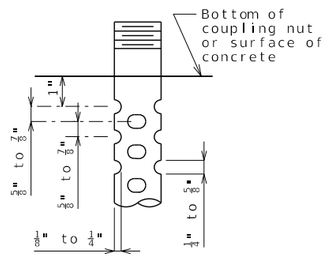

OPTIONAL DETAIL OF 1 3/8"Ø THRU 2 1/2"Ø ANCHOR BOLTS

SWEDGE ANCHOR BOLT DETAILS

(1) 1/8" for 3/4"Ø thru 1 1/4"Ø anchor bolts
1/8" to 1/4" for 1 3/8"Ø thru 2 1/2"Ø anchor bolts

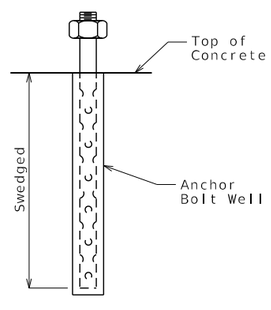

FIXED ANCHOR BOLT DETAIL

GENERAL NOTES:

Anchor bolts shall be 2"Ø ASTM F1554 Grade 55 swedged bolts and shall extend 18" into the concrete with ASTM A563 Grade A Heavy Hex nuts. Actual manufacturer's certified mill test reports (chemical and mechanical) shall be provided. Swedging shall be 1" less than extension into the concrete.

Anchor bolt shall be at the centerline of slotted hole at 60°F for expansion bearings. Bearing position shall be adjusted R for each 10° fall or rise in temperature at installation.

Anchor bolts and heavy hex nuts shall be coated with a minimum of two coats of inorganic zinc primer to provide a total dry film thickness of 4 mils minimum, 6 mils maximum, or galvanized in accordance with Sec 1081.

Neoprene Elastomeric Pads shall be 60 Durometer.

Structural steel for sole plate shall be ASTM A709 Grade 50W and shall be coated with a minimum of two coats of inorganic zinc primer to provide a total dry film thickness of 4 mils minimum, 6 mils maximum. The welds shall have corrosion resistance and weathering characteristics compatible with the base material.

Laminated Neoprene Bearing Pad Assembly shall be in accordance with Sec 716.

LAMINATED NEOPRENE BEARING PAD ASSEMBLY - UNITS 1, 3 & 4

Detailed Nov. 2024
Checked Jan. 2025

Note: This drawing is not to scale. Follow dimensions.

STATE OF MISSOURI
DEREK S. BUTLER
NUMBER PE-2016009828
PROFESSIONAL ENGINEER

THIS SHEET HAS BEEN SIGNED, SEALED AND DATED ELECTRONICALLY

DATE PREPARED	
5/19/2025	
ROUTE 62	STATE MO
DISTRICT BR	SHEET NO. 22
COUNTY DUNKLIN	
JOB NO. JSE0155	
CONTRACT ID.	
PROJECT NO.	
BRIDGE NO. A9436	

DATE	DESCRIPTION

IF A SEAL IS PRESENT ON THIS SHEET IT HAS BEEN ELECTRONICALLY SEALED AND DATED.

MISSOURI HIGHWAYS AND TRANSPORTATION COMMISSION
105 WEST CAPITOL
JEFFERSON CITY, MO 65102
1-888-ASK-MODOT (1-888-275-6636)

GARVER, LLC.
7509 NW TIFFANY SPRINGS PARKWAY, SUITE 200
KANSAS CITY, MO 64153
PHONE: (816) 298-6465
CERTIFICATE OF AUTHORITY NO. 2008013090

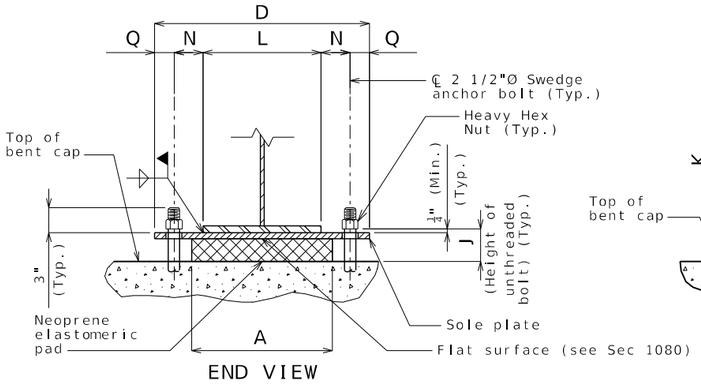

END VIEW

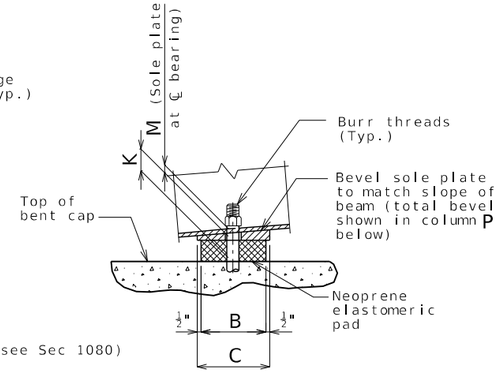

SIDE VIEW

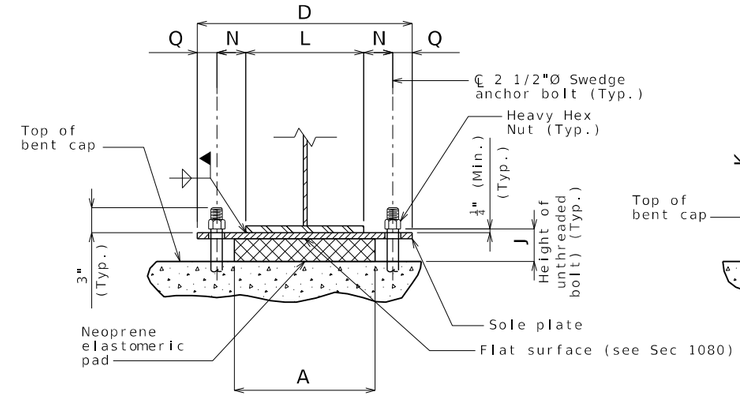

END VIEW

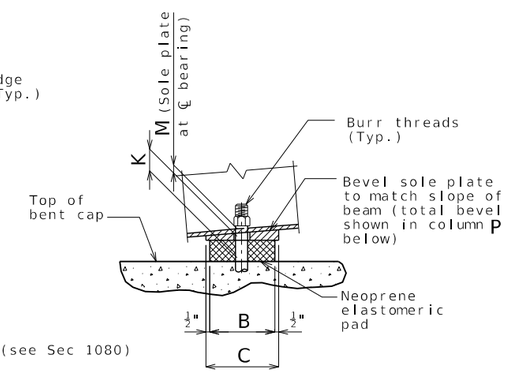

SIDE VIEW

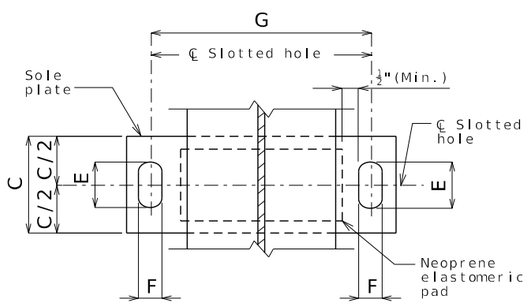

PART PLAN

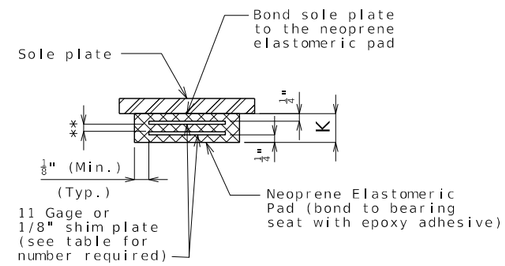

** Layers of 1/2" elastomer alternating with 11 gage or 1/8" shim plate

NEOPRENE ELASTOMERIC PAD

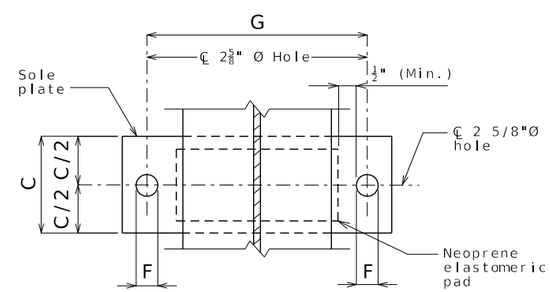

PART PLAN

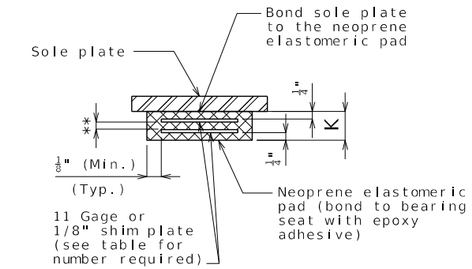

** Layers of 1/2" elastomer alternating with 11 gage or 1/8" shim plate

NEOPRENE ELASTOMERIC PAD

EXPANSION BEARINGS																	
BENT NO.	A	B	C	D	E	F	G	J	K	L	M	N	P	Q	R	NUMBER OF SHIM PLATES *	NUMBER REQUIRED
5 Ahd	16"	12"	13"	29 1/2"	6 3/4"	2 5/8"	22"	6 3/8"	4 3/8"	16"	1 1/2"	3"	3/16"	3 3/4"	1/8"	7	4
8 Bk	16"	12"	13"	29 1/2"	6 3/4"	2 5/8"	22"	6 3/8"	4 3/8"	16"	1 1/2"	3"	1/8"	3 3/4"	1/8"	7	4
																TOTAL BEARINGS	8

* The required shim plate shall be placed between layers of elastomer and molded together to form an integral unit.

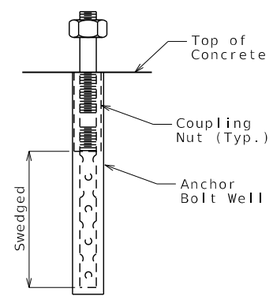

EXPANSION ANCHOR BOLT DETAIL

FIXED BEARINGS																	
BENT NO.	A	B	C	D	F	G	J	K	L	M	N	P	Q	NUMBER OF SHIM PLATES *	NUMBER REQUIRED
6	20"	16"	17"	31 1/2"	2 5/8"	24"	4 1/4"	2 1/2"	16"	1 1/2"	4"	1/8"	3 3/4"	4	4
7	20"	16"	17"	31 1/2"	2 5/8"	24"	4 1/4"	2 1/2"	16"	1 1/2"	4"	0"	3 3/4"	4	4
														TOTAL BEARINGS	8

* The required shim plate shall be placed between layers of elastomer and molded together to form an integral unit.

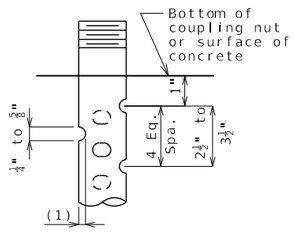

DETAIL OF 3/4"Ø THRU 2 1/2"Ø ANCHOR BOLTS

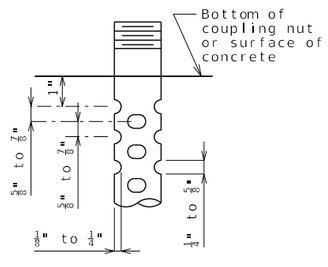

OPTIONAL DETAIL OF 1 3/8"Ø THRU 2 1/2"Ø ANCHOR BOLTS

SWEDGE ANCHOR BOLT DETAILS

(1) 1/8" for 3/4"Ø thru 1 1/4"Ø anchor bolts
1/8" to 1/4" for 1 3/8"Ø thru 2 1/2"Ø anchor bolts

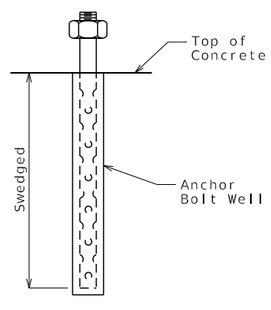

FIXED ANCHOR BOLT DETAIL

GENERAL NOTES:

Anchor bolts shall be 2 1/2"Ø ASTM F1554 Grade 55 swedged bolts and shall extend 25" into the concrete with ASTM A563 Grade A Heavy Hex nuts. Actual manufacturer's certified mill test reports (chemical and mechanical) shall be provided. Swedging shall be 1" less than extension into the concrete.

Anchor bolt shall be at the centerline of slotted hole at 60°F for expansion bearings. Bearing position shall be adjusted R for each 10° fall or rise in temperature at installation.

Anchor bolts and heavy hex nuts shall be coated with a minimum of two coats of inorganic zinc primer to provide a total dry film thickness of 4 mils minimum, 6 mils maximum, or galvanized in accordance with Sec 1081.

Neoprene Elastomeric Pads shall be 60 Durometer.

Structural steel for sole plate shall be ASTM A709 Grade 50W and shall be coated with a minimum of two coats of inorganic zinc primer to provide a total dry film thickness of 4 mils minimum, 6 mils maximum. The welds shall have corrosion resistance and weathering characteristics compatible with the base material.

Laminated Neoprene Bearing Pad Assembly shall be in accordance with Sec 716.

LAMINATED NEOPRENE BEARING PAD ASSEMBLY - UNIT 2

Detailed Nov. 2024
Checked Jan. 2025

Note: This drawing is not to scale. Follow dimensions.

STATE OF MISSOURI DEREK S. BUTLER NUMBER PE-2016009626 PROFESSIONAL ENGINEER
THIS SHEET HAS BEEN SIGNED, SEALED AND DATED ELECTRONICALLY

DATE PREPARED 5/19/2025
ROUTE 62 | STATE MO
DISTRICT BR | SHEET NO. 23
COUNTY DUNKLIN
JOB NO. JSE0155
CONTRACT ID.
PROJECT NO.
BRIDGE NO. A9436

DESCRIPTION | DATE

MISSOURI HIGHWAYS AND TRANSPORTATION COMMISSION
105 WEST CAPITOL
JEFFERSON CITY, MO 65102
1-888-ASK-MODOT (1-888-275-6636)

GARVER, LLC.
7509 NW TIFFANY SPRINGS PARKWAY, SUITE 200
KANSAS CITY, MO 64153
PHONE: (816) 298-6465
CERTIFICATE OF AUTHORITY NO. 2008013090

IF A SEAL IS PRESENT ON THIS SHEET IT HAS BEEN ELECTRONICALLY SEALED AND DATED.

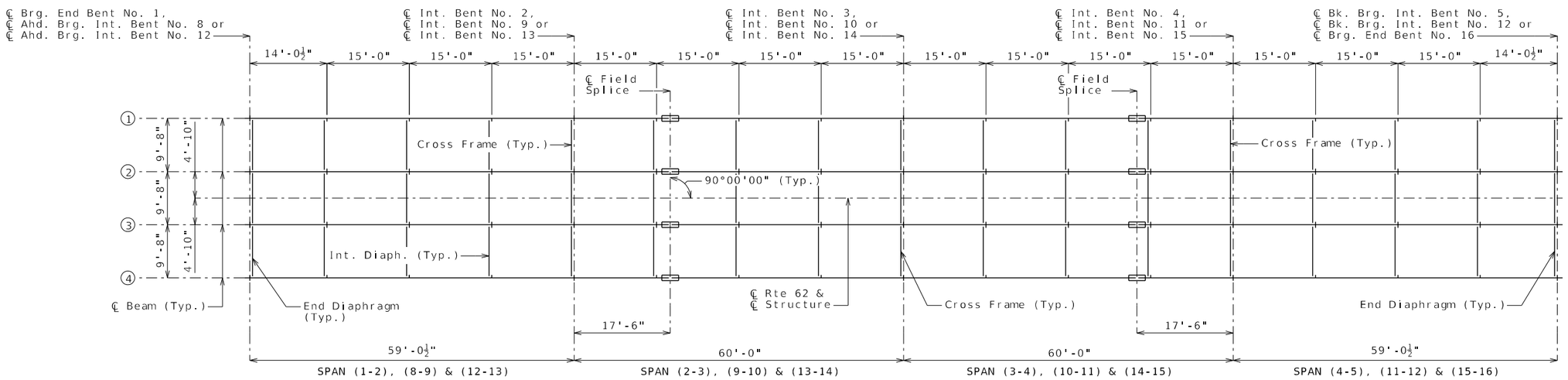

PLAN OF STRUCTURAL STEEL

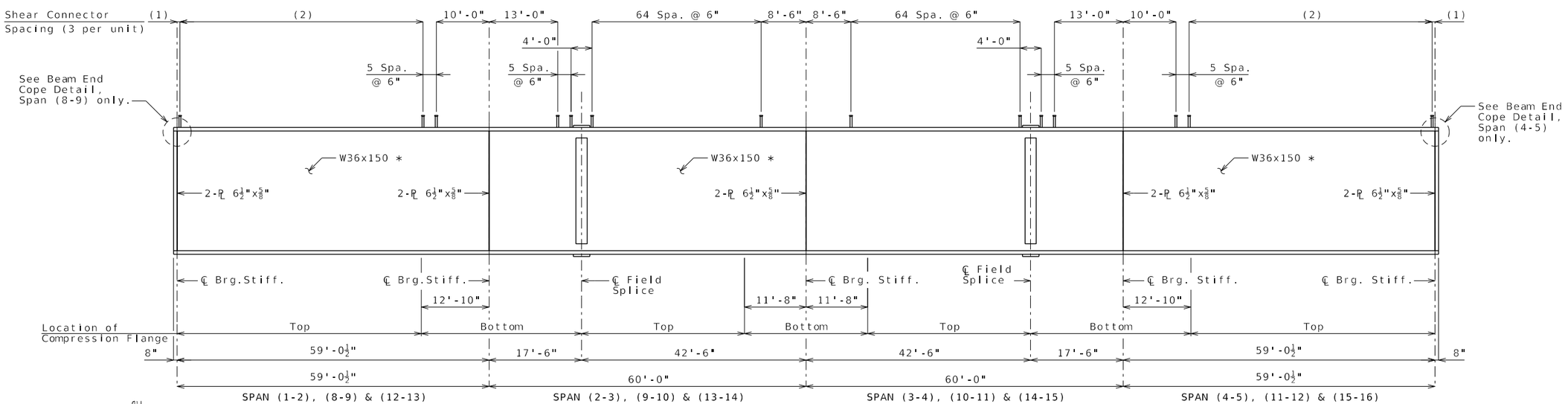

ELEVATION OF BEAM

(1) 6 1/2" [Spans (1-2), (11-12), (12-13) & (15-16)]
18 1/2" [Spans (4-5) & (8-9)]

(2) 46 Spa. @ 12" [Spans (1-2), (11-12), (12-13) & (15-16)]
45 Spa. @ 12" [Spans (4-5) & (8-9)]

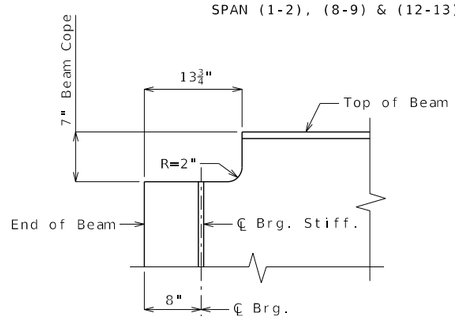

BEAM END COPE DETAIL
(Shown at Int. Bent No. 8.
Similar at Int. Bent No. 5)

Notes:

* Notch toughness is required for all wide flange beams.

For details of bolted field splices, see Sheet No. 26.

Fabricated structural steel shall be ASTM A709, Grade 50W, except as noted.

Longitudinal dimensions are horizontal from ℄ bearing to ℄ bearing. See Part Longitudinal Section on Sheet No. 32.

For location of slab drain attachment holes, see Sheet No. 33.

For details of intermediate diaphragms, cross frames, end diaphragms, bearing stiffeners and intermediate diaphragm connection plates, see Sheet No. 27.

PLAN OF STRUCTURAL STEEL AND ELEVATION OF BEAM - UNITS 1, 3 & 4

Detailed Oct. 2024
Checked Dec. 2024

Note: This drawing is not to scale. Follow dimensions.

STATE OF MISSOURI
DEREK S. BUTLER
NUMBER PE-2016009626
PROFESSIONAL ENGINEER

THIS SHEET HAS BEEN SIGNED, SEALED AND DATED ELECTRONICALLY

DATE PREPARED	5/19/2025
ROUTE	62
STATE	MO
DISTRICT	BR
SHEET NO.	24
COUNTY	DUNKLIN
JOB NO.	JSE0155
CONTRACT ID.	
PROJECT NO.	
BRIDGE NO.	A9436

DATE	DESCRIPTION

IF A SEAL IS PRESENT ON THIS SHEET IT HAS BEEN ELECTRONICALLY SEALED AND DATED.

MISSOURI HIGHWAYS AND TRANSPORTATION COMMISSION
105 WEST CAPITOL
JEFFERSON CITY, MO 65102
1-888-ASK-MODOT (1-888-275-6636)

GARVER, LLC.
7509 NW TIFFANY SPRINGS PARKWAY, SUITE 200
KANSAS CITY, MO 64153
PHONE: (816) 298-6465
CERTIFICATE OF AUTHORITY NO. 2008013090

B_A9436_024_SE0155_Steel_Plan.dgn 9:32:38 AM 5/19/2025

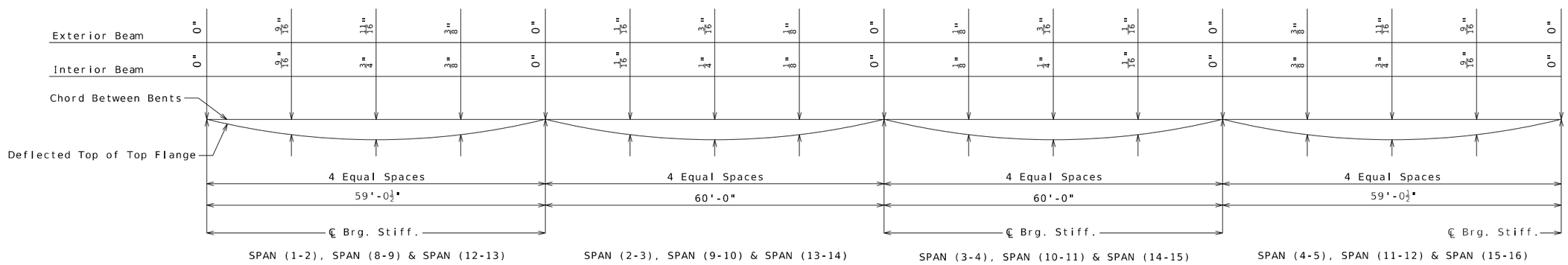

DEAD LOAD DEFLECTION

13% of dead load deflection is due to the weight of structural steel.

Dead load deflection includes weight of structural steel, concrete slab, and barrier.

Note: Do not camber the wide flange beams. Any natural mill camber that the beams have retained shall be placed up. Provide for beam deflections by adding the concrete dead load deflections to plan grade. Increase or decrease the depth of the concrete haunch over the beams to achieve this adjustment. See Theoretical Slab Haunching Diagram on Sheet No. 37.

DEAD LOAD DEFLECTIONS - UNITS 1, 3 & 4

Detailed Oct. 2024
Checked Dec. 2024

Note: This drawing is not to scale. Follow dimensions.

STATE OF MISSOURI
DEREK S. BUTLER
NUMBER PE-2016009628
PROFESSIONAL ENGINEER

THIS SHEET HAS BEEN SIGNED, SEALED AND DATED ELECTRONICALLY

DATE PREPARED	5/19/2025
ROUTE	62
STATE	MO
DISTRICT	BR
SHEET NO.	25
COUNTY	DUNKLIN
JOB NO.	JSE0155
CONTRACT ID.	
PROJECT NO.	
BRIDGE NO.	A9436

DATE	DESCRIPTION

MISSOURI HIGHWAYS AND TRANSPORTATION COMMISSION
105 WEST CAPITOL
JEFFERSON CITY, MO 65102
1-888-ASK-MODOT (1-888-275-6636)

GARVER, LLC.
7509 NW TIFFANY SPRINGS
PARKWAY, SUITE 200
KANSAS CITY, MO 64153
PHONE: (816) 298-6465
CERTIFICATE OF AUTHORITY
NO. 2008013090

IF A SEAL IS PRESENT ON THIS SHEET IT HAS BEEN ELECTRONICALLY SEALED AND DATED.

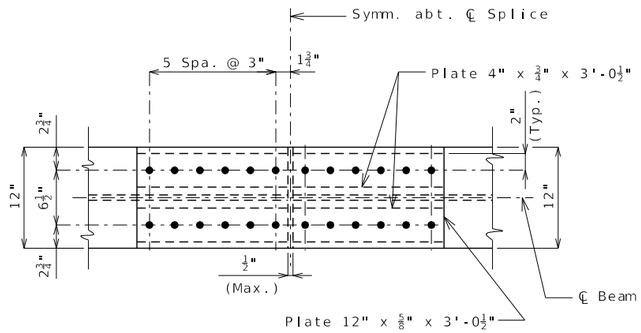

PLAN OF FLANGE SPLICE
(TOP & BOTTOM)

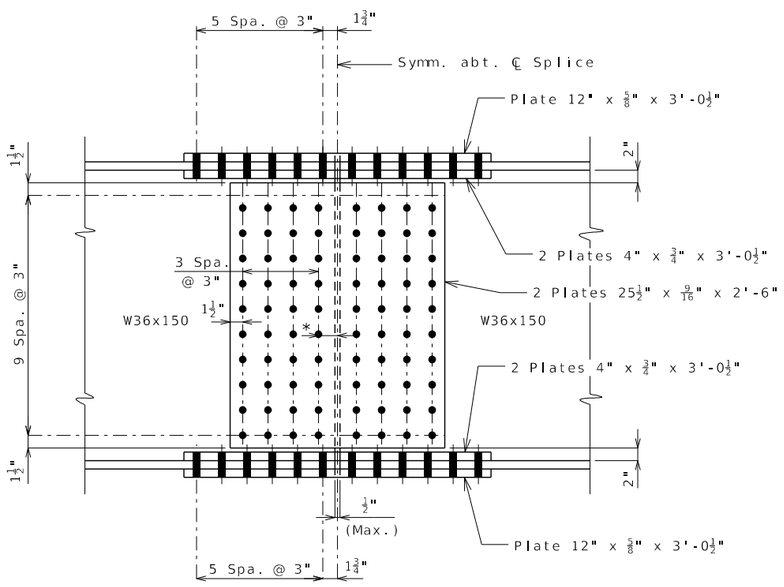

DETAIL OF BOLTED FIELD SPLICE

* 2¼"

Bolts shall be 7/8-inch diameter ASTM F3125 Grade A325 Type 3 in 15/16-inch diameter holes.

Contact surfaces shall be in accordance with Sec 1081 for surface preparation.

Fabricated Structural Steel for splice plates shall be ASTM A709 Grade 50W. All splice plates shall be subject to notch toughness requirements.

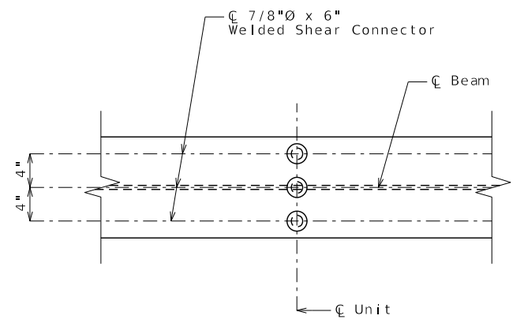

PLAN

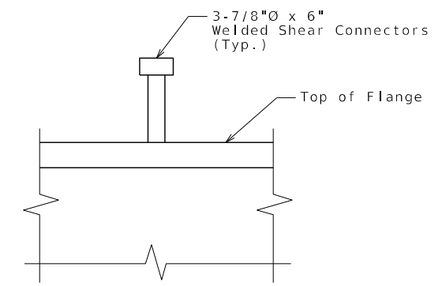

ELEVATION

DETAILS OF SHEAR CONNECTORS
(3 STUDS PER UNIT)

Weight of 10,157 pounds of shear connectors is included in the weight of Fabricated Structural Low Alloy Steel (I-Beam) A709, Grade 50W.

Shear connectors shall be in accordance with Sec 712, 1037 & 1080.

STRUCTURAL STEEL DETAILS - UNITS 1, 3 & 4

Note: This drawing is not to scale. Follow dimensions.

Detailed Nov. 2024
Checked Dec. 2024

STATE OF MISSOURI
DEREK S. BUTLER
NUMBER PE-2016009828
PROFESSIONAL ENGINEER

THIS SHEET HAS BEEN SIGNED, SEALED AND DATED ELECTRONICALLY

DATE PREPARED	
5/19/2025	
ROUTE 62	STATE MO
DISTRICT BR	SHEET NO. 26
COUNTY DUNKLIN	
JOB NO. JSE0155	
CONTRACT ID.	
PROJECT NO.	
BRIDGE NO. A9436	

DESCRIPTION	DATE

MISSOURI HIGHWAYS AND TRANSPORTATION COMMISSION
105 WEST CAPITOL
JEFFERSON CITY, MO 65102
1-888-ASK-MODOT (1-888-275-6636)

GARVER, LLC.
7509 NW TIFFANY SPRINGS
PARKWAY, SUITE 200
KANSAS CITY, MO 64153
PHONE: (816) 298-6465
CERTIFICATE OF AUTHORITY
NO. 2008013090

IF A SEAL IS PRESENT ON THIS SHEET IT HAS BEEN ELECTRONICALLY SEALED AND DATED.

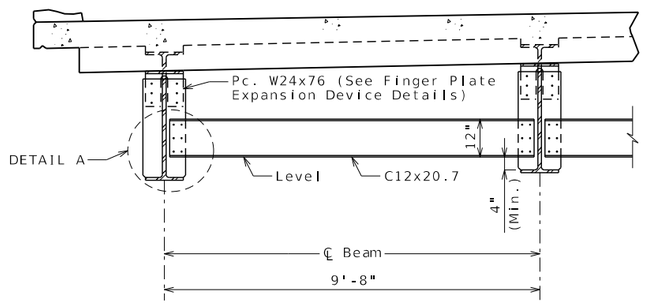

TYPICAL PART SECTION SHOWING END DIAPHRAGMS AT INT. BENTS NO. 5 & 8

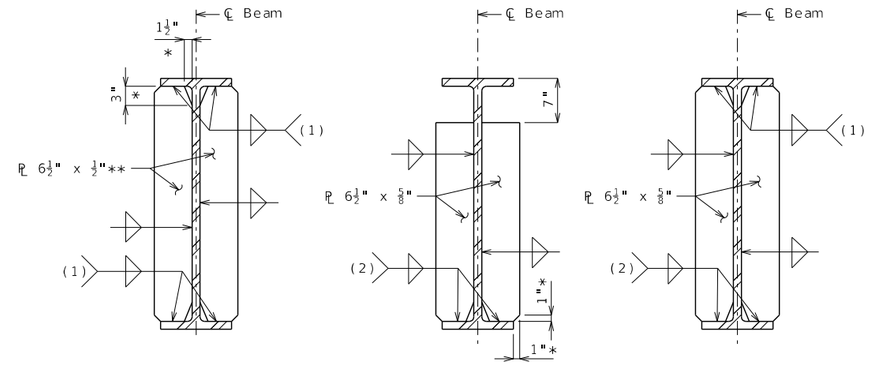

INTERMEDIATE DIAPHRAGM CONNECTION PLATE

BEARING STIFFENER (INT. BENTS NO. 5 & 8)

BEARING STIFFENER (END BENTS NO. 1 & 16) (INT. BENTS NO. 2-4 & 9-15)

WELDING DETAILS

(1) Tight fit

(2) Grind or mill to bear.

* Typical for all intermediate diaphragm connection plates and bearing stiffeners.

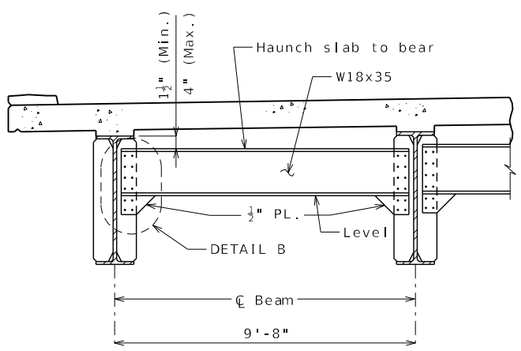

TYPICAL PART SECTION SHOWING END DIAPHRAGMS AT END BENTS NO. 1 & 16 AND INT. BENT NO. 12

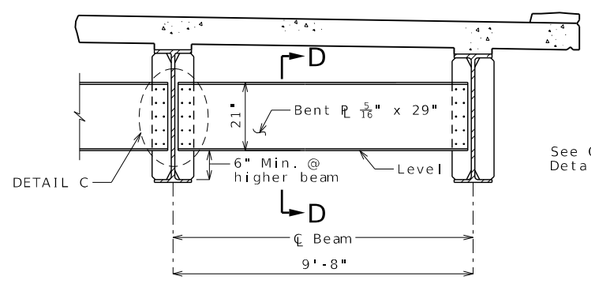

TYPICAL PART SECTION SHOWING CROSS FRAMES AND INTERMEDIATE DIAPHRAGMS

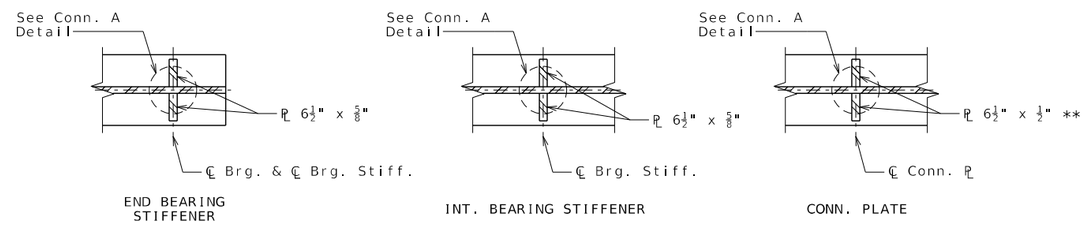

TYPICAL LOCATION DETAILS

** Omit for outside face of exterior beam.

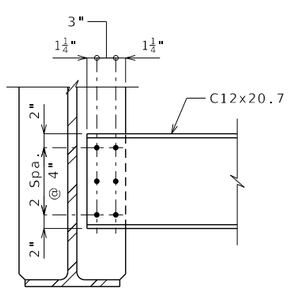

DETAIL A

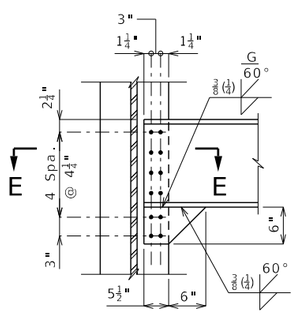

DETAIL B

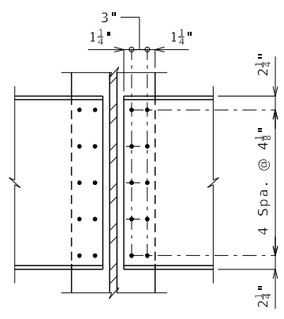

DETAIL C

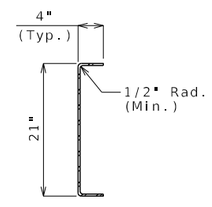

SECTION D-D

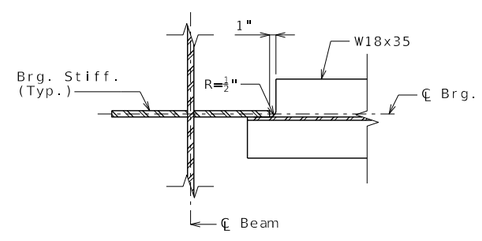

SECTION E-E

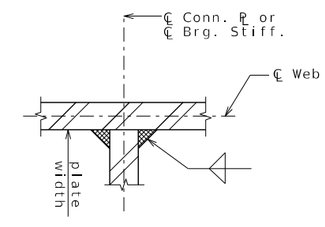

CONN. A

WELDING DETAIL

STEEL DIAPHRAGM DETAILS - UNITS 1, 3 & 4

Detailed Oct. 2024
Checked Dec. 2024

Note: This drawing is not to scale. Follow dimensions.

STATE OF MISSOURI
DEREK S. BUTLER
NUMBER PE-2016009828
PROFESSIONAL ENGINEER

THIS SHEET HAS BEEN SIGNED, SEALED AND DATED ELECTRONICALLY

DATE PREPARED	
5/19/2025	
ROUTE 62	STATE MO
DISTRICT BR	SHEET NO. 27
COUNTY DUNKLIN	
JOB NO. JSE0155	
CONTRACT ID.	
PROJECT NO.	
BRIDGE NO. A9436	

DATE	DESCRIPTION

IF A SEAL IS PRESENT ON THIS SHEET IT HAS BEEN ELECTRONICALLY SEALED AND DATED.

MISSOURI HIGHWAYS AND TRANSPORTATION COMMISSION
105 WEST CAPITOL
JEFFERSON CITY, MO 65102
1-888-ASK-MODOT (1-888-275-6636)

GARVER, LLC.
7509 NW TIFFANY SPRINGS PARKWAY, SUITE 200
KANSAS CITY, MO 64153
PHONE: (816) 298-6465
CERTIFICATE OF AUTHORITY NO. 2008013090

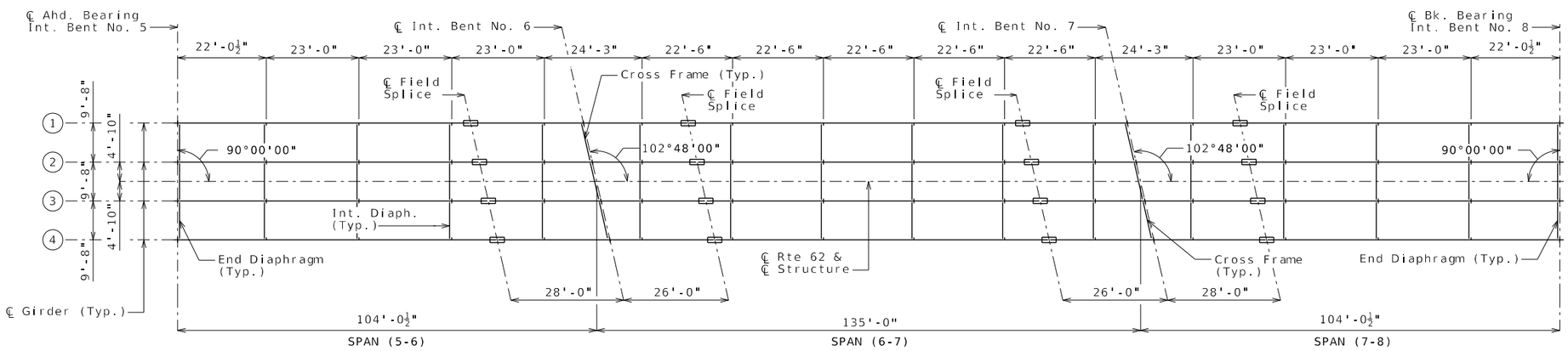

PLAN OF STRUCTURAL STEEL

* Indicates flange plates subject to notch toughness requirements. All web plates shall be subject to notch toughness requirements.

Plate girders shall be fabricated to be in accordance with the camber diagram shown on Sheet No. 29.

For details of bolted field splices, see Sheet No. 30.

Fabricated structural steel shall be ASTM A709, Grade 50W, except as noted.

Longitudinal dimensions are horizontal from ℄ bearing to ℄ bearing. See Part Longitudinal Section on Sheet No. 32.

For details of intermediate diaphragms, cross frames, end diaphragms, bearing stiffeners and intermediate diaphragm connection plates, see Sheet No. 31.

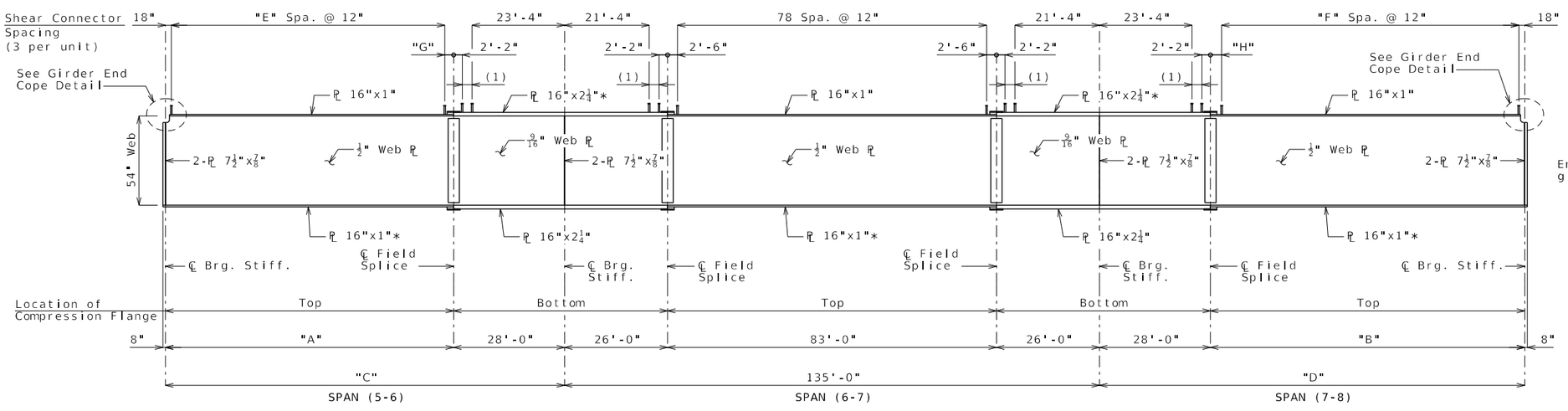

(1) 5 Spa. @ 6"

ELEVATION OF GIRDER

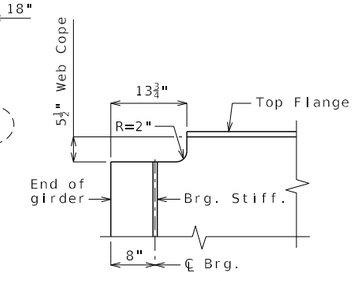

GIRDER END COPE DETAIL

(Shown at Int. Bent No. 5. similar at Int. Bent No. 8)

Girder Number	"A"	"B"	"C"	"D"	"E"	"F"	"G"	"H"
1	72'-9"	79'-4"	100'-9"	107'-4"	69	75	2'-3"	2'-10"
2	74'-11⅜"	77'-1⅝"	102'-11⅜"	105'-1⅝"	71	73	2'-5⅝"	2'-7⅝"
3	77'-1⅝"	74'-11⅜"	105'-1⅝"	102'-11⅜"	73	71	2'-7⅝"	2'-5⅝"
4	79'-4"	72'-9"	107'-4"	100'-9"	75	69	2'-10"	2'-3"

PLAN OF STRUCTURAL STEEL AND ELEVATION OF GIRDER - UNIT 2

Detailed Sep. 2024
Checked Dec. 2024

Note: This drawing is not to scale. Follow dimensions.

STATE OF MISSOURI
DEREK S. BUTLER
NUMBER PE-2016009828
PROFESSIONAL ENGINEER

THIS SHEET HAS BEEN SIGNED, SEALED AND DATED ELECTRONICALLY

DATE PREPARED	
5/19/2025	
ROUTE 62	STATE MO
DISTRICT BR	SHEET NO. 28
COUNTY DUNKLIN	
JOB NO. JSE0155	
CONTRACT ID.	
PROJECT NO.	
BRIDGE NO. A9436	

DATE	DESCRIPTION

IF A SEAL IS PRESENT ON THIS SHEET IT HAS BEEN ELECTRONICALLY SEALED AND DATED.

MISSOURI HIGHWAYS AND TRANSPORTATION COMMISSION
105 WEST CAPITOL
JEFFERSON CITY, MO 65102
1-888-ASK-MODOT (1-888-275-6636)

GARVER, LLC.
7509 NW TIFFANY SPRINGS PARKWAY, SUITE 200
KANSAS CITY, MO 64153
PHONE: (816) 298-6465
CERTIFICATE OF AUTHORITY NO. 2008013090

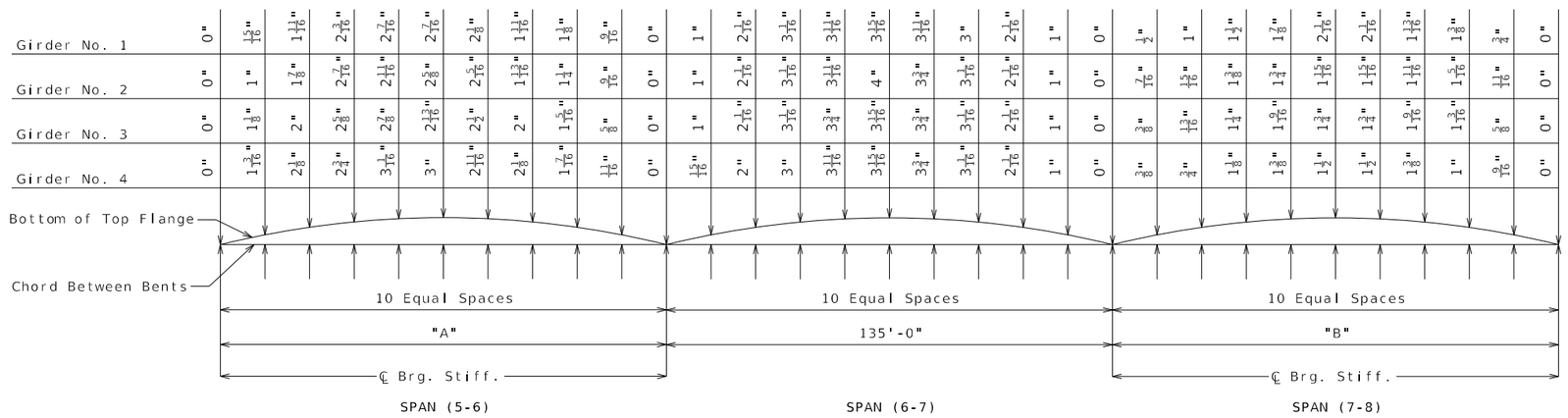

PLATE GIRDER CAMBER DIAGRAM

Camber includes allowance for vertical curve and dead load deflection due to concrete slab, barrier, and structural steel.

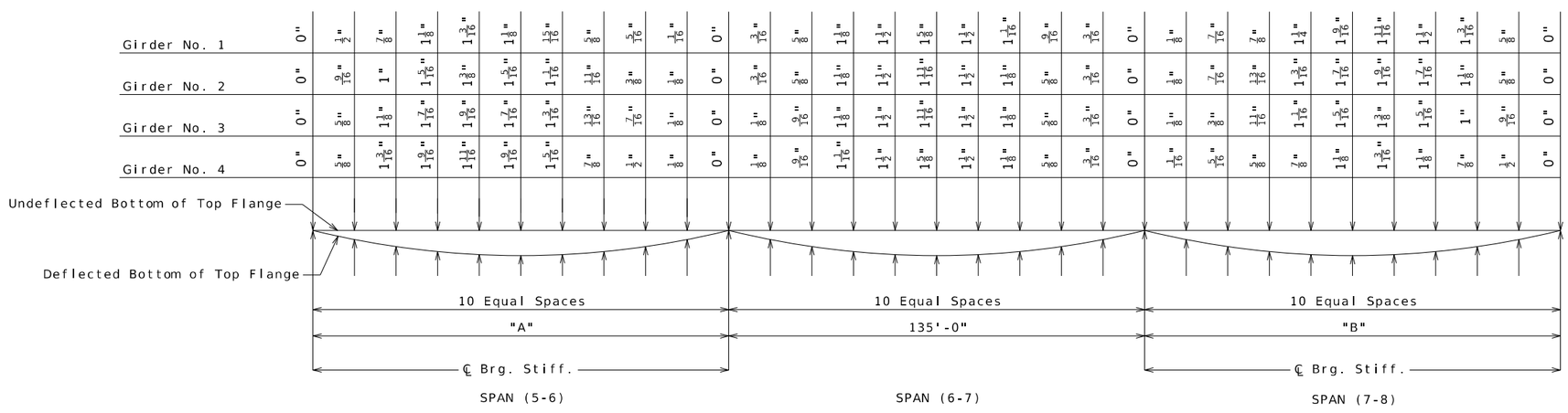

DEAD LOAD DEFLECTION

17% of dead load deflection is due to the weight of structural steel.

Dead load deflection includes weight of structural steel, concrete slab, and barrier.

Girder Number	"A"	"B"
1	100'-9"	107'-4"
2	102'-11 3/16"	105'-1 3/16"
3	105'-1 3/16"	102'-11 3/16"
4	107'-4"	100'-9"

DEAD LOAD DEFLECTIONS AND PLATE GIRDER CAMBER DIAGRAM - UNIT 2

Note: This drawing is not to scale. Follow dimensions.

Detailed Oct. 2024
Checked Dec. 2024

STATE OF MISSOURI
DEREK S. BUTLER
NUMBER PE-2016009628
PROFESSIONAL ENGINEER

THIS SHEET HAS BEEN SIGNED, SEALED AND DATED ELECTRONICALLY

DATE PREPARED 5/19/2025

ROUTE	STATE
62	MO
DISTRICT	SHEET NO.
BR	29

COUNTY: DUNKLIN
JOB NO.: JSE0155
CONTRACT ID.:
PROJECT NO.:
BRIDGE NO.: A9436

DATE	DESCRIPTION

IF A SEAL IS PRESENT ON THIS SHEET IT HAS BEEN ELECTRONICALLY SEALED AND DATED.

MISSOURI HIGHWAYS AND TRANSPORTATION COMMISSION
105 WEST CAPITOL
JEFFERSON CITY, MO 65102
1-888-ASK-MODOT (1-888-275-6636)

GARVER, LLC.
7509 NW TIFFANY SPRINGS PARKWAY, SUITE 200
KANSAS CITY, MO 64153
PHONE: (816) 298-6465
CERTIFICATE OF AUTHORITY NO. 2008013090

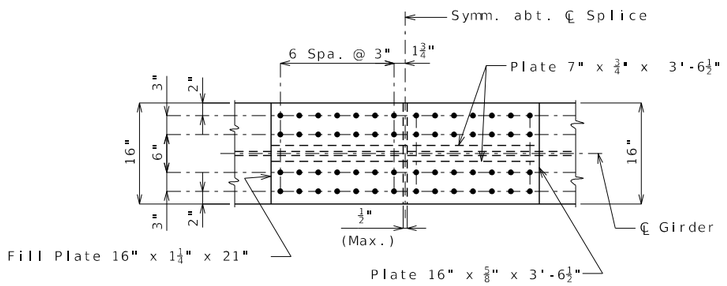

PLAN OF FLANGE SPLICE
(TOP & BOTTOM)

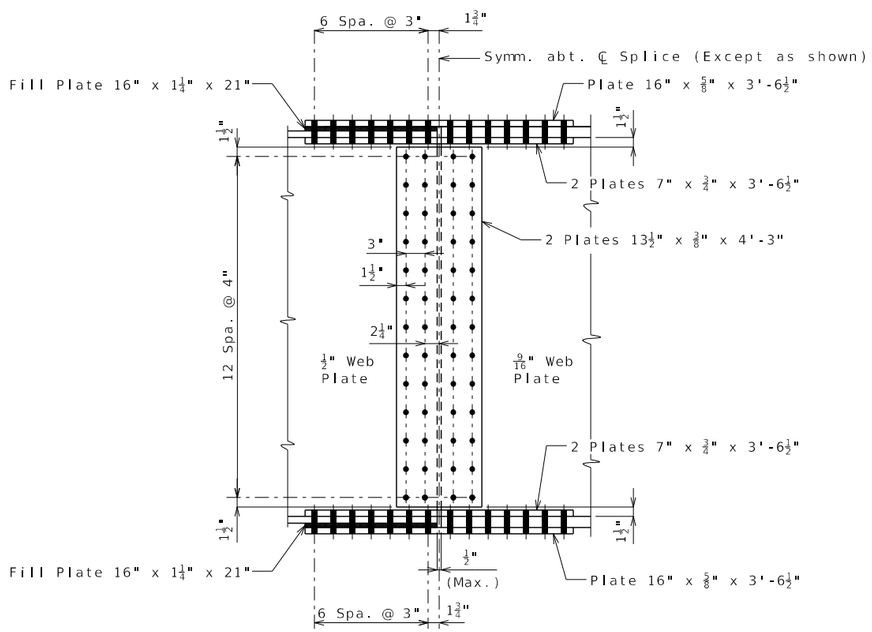

DETAIL OF BOLTED FIELD SPLICE

Bolts shall be 7/8-inch diameter ASTM F3125 Grade A325 Type 3 in 15/16-inch diameter holes.

Contact surfaces shall be in accordance with Sec 1081 for surface preparation.

Fabricated structural steel for splice plates shall be ASTM A709 Grade 50W. All splice plates shall be subject to notch toughness requirements.

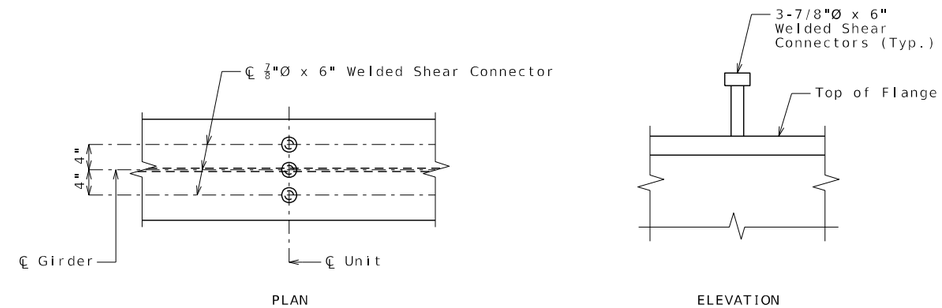

DETAILS OF SHEAR CONNECTORS
(3 STUDS PER UNIT)

Weight of 3,436 pounds of shear connectors is included in the weight of Fabricated Structural Low Alloy Steel (Plate Girder) A709, Grade 50W.

Shear connectors shall be in accordance with Sec 712, 1037 & 1080.

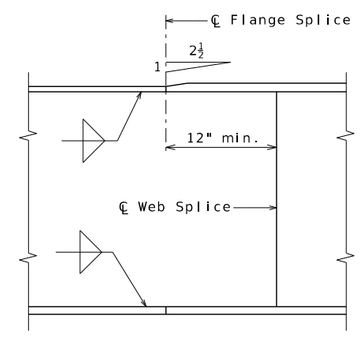

WELDED SHOP WEB AND FLANGE SPLICE

Welded shop web and flange splices may be permitted when detailed on the shop drawings and approved by the engineer. No additional payment will be made for optional welded shop web and flange splices.

STRUCTURAL STEEL DETAILS - UNIT 2

Detailed Oct. 2024
Checked Dec. 2024

Note: This drawing is not to scale. Follow dimensions.

STATE OF MISSOURI
DEREK S. BUTLER
NUMBER PE-2016009828
PROFESSIONAL ENGINEER

THIS SHEET HAS BEEN SIGNED, SEALED AND DATED ELECTRONICALLY

DATE PREPARED	
5/19/2025	
ROUTE 62	STATE MO
DISTRICT BR	SHEET NO. 30
COUNTY DUNKLIN	
JOB NO. JSE0155	
CONTRACT ID.	
PROJECT NO.	
BRIDGE NO. A9436	

DATE	DESCRIPTION

IF A SEAL IS PRESENT ON THIS SHEET IT HAS BEEN ELECTRONICALLY SEALED AND DATED.

MISSOURI HIGHWAYS AND TRANSPORTATION COMMISSION
105 WEST CAPITOL
JEFFERSON CITY, MO 65102
1-888-ASK-MODOT (1-888-275-6636)

GARVER, LLC.
7509 NW TIFFANY SPRINGS PARKWAY, SUITE 200
KANSAS CITY, MO 64153
PHONE: (816) 298-6465
CERTIFICATE OF AUTHORITY NO. 2008013090

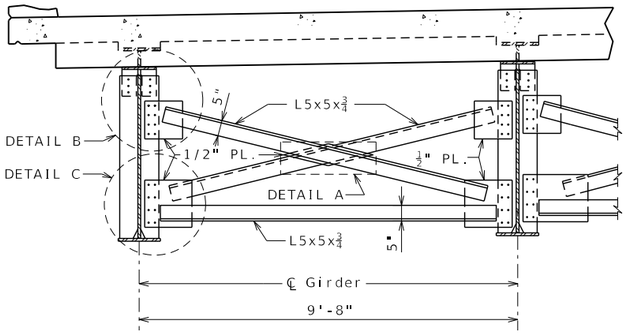

TYPICAL PART SECTION SHOWING END DIAPHRAGMS AT INT. BENTS NO. 5 & 8

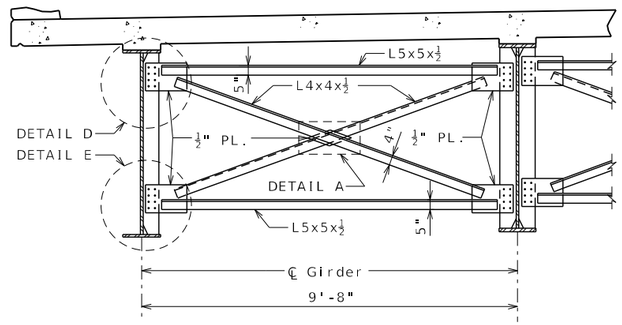

TYPICAL PART SECTION SHOWING INTERMEDIATE DIAPHRAGMS

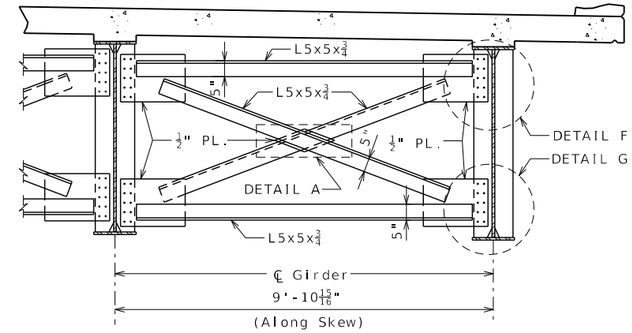

TYPICAL PART SECTION SHOWING CROSS FRAMES AT INT. BENTS NO. 6 & 7

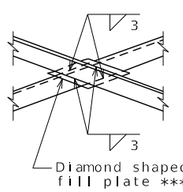

DETAIL A

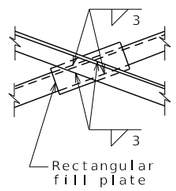

OPTIONAL DETAIL A

(1) Tight fit

(2) Grind or mill to bear.

(3) To intersection of member work lines and ℄ Girder (at low girder).

* Typical for all intermediate diaphragm connection plates and bearing stiffeners.

** Omit for outside face of exterior girder.

*** At the contractor's option, rectangular fill plates may be used in lieu of diamond fill plates as shown in Optional Detail A.

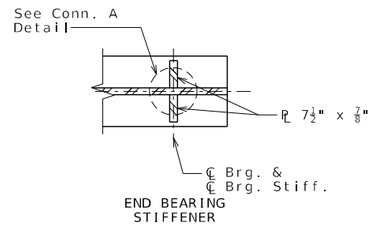

END BEARING STIFFENER

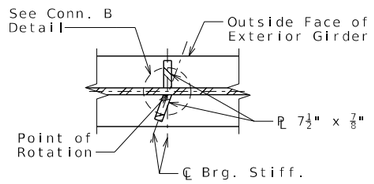

INT. BEARING STIFFENER

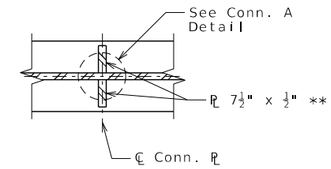

CONN. PLATE

TYPICAL LOCATION DETAILS

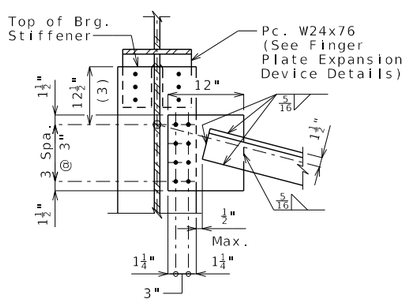

DETAIL B

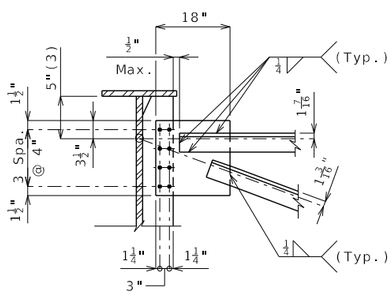

DETAIL D

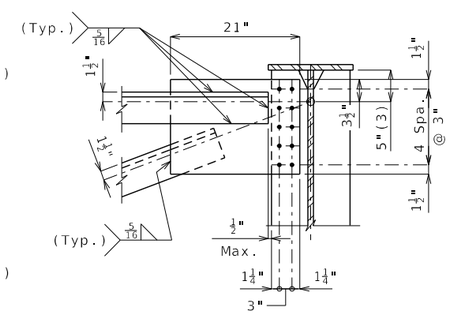

DETAIL F

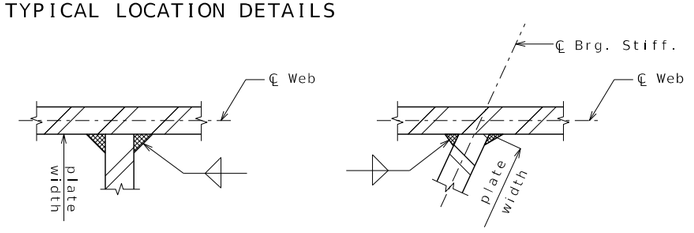

CONN. A CONN. B

WELDING DETAILS

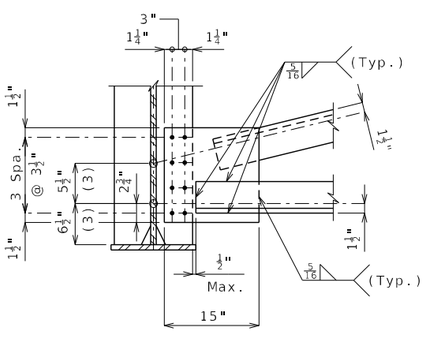

DETAIL C

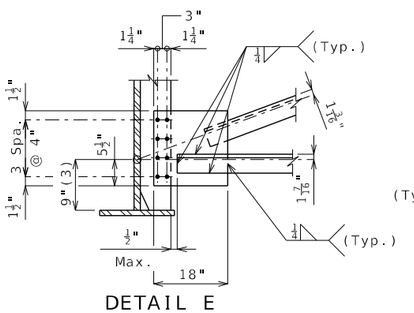

DETAIL E

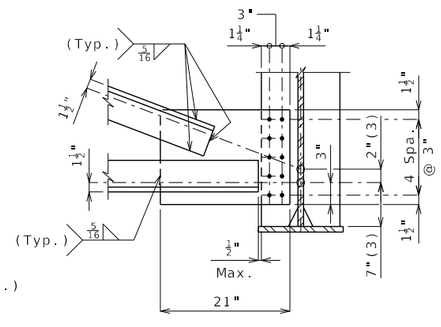

DETAIL G

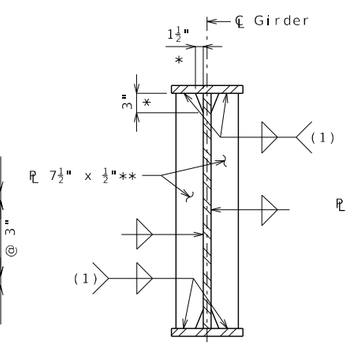

INTERMEDIATE DIAPHRAGM CONNECTION PLATE

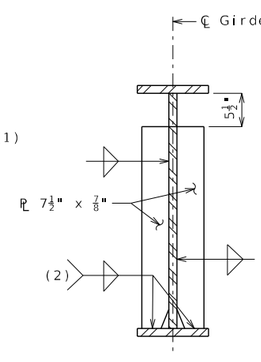

BEARING STIFFENER (INT. BENTS NO. 5 & 8)

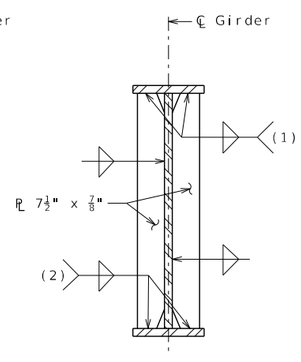

BEARING STIFFENER (INT. BENTS NO. 6 & 7)

WELDING DETAILS

STEEL DIAPHRAGM DETAILS - UNIT 2

Detailed Sep. 2024
Checked Dec. 2024

Note: This drawing is not to scale. Follow dimensions.

STATE OF MISSOURI DEREK S. BUTLER NUMBER PE-2016009628 PROFESSIONAL ENGINEER

THIS SHEET HAS BEEN SIGNED, SEALED AND DATED ELECTRONICALLY

DATE PREPARED	
5/19/2025	
ROUTE 62	STATE MO
DISTRICT BR	SHEET NO. 31
COUNTY DUNKLIN	
JOB NO. JSE0155	
CONTRACT ID.	
PROJECT NO.	
BRIDGE NO. A9436	

DATE	DESCRIPTION

IF A SEAL IS PRESENT ON THIS SHEET IT HAS BEEN ELECTRONICALLY SEALED AND DATED.

MISSOURI HIGHWAYS AND TRANSPORTATION COMMISSION
105 WEST CAPITOL
JEFFERSON CITY, MO 65102
1-888-ASK-MODOT (1-888-275-6636)

GARVER, LLC.
7509 NW TIFFANY SPRINGS PARKWAY, SUITE 200
KANSAS CITY, MO 64153
PHONE: (816) 298-6465
CERTIFICATE OF AUTHORITY NO. 2008013090

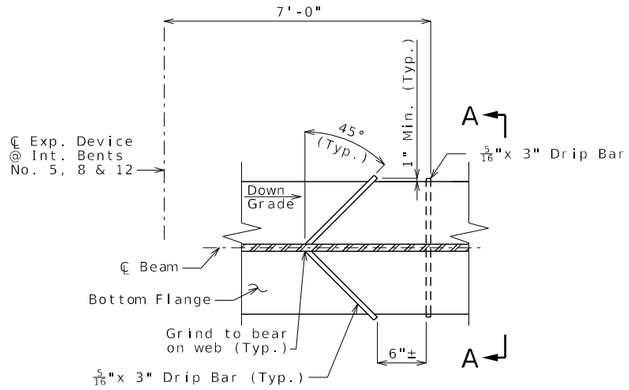

DRIP BAR DETAIL NEAR EXPANSION DEVICE

Required at 3 locations on all beam lines:
Int. Bent No. 5 (Bk.)
Int. Bent No. 8 (Ahd.)
Int. Bent No. 12 (Ahd.)

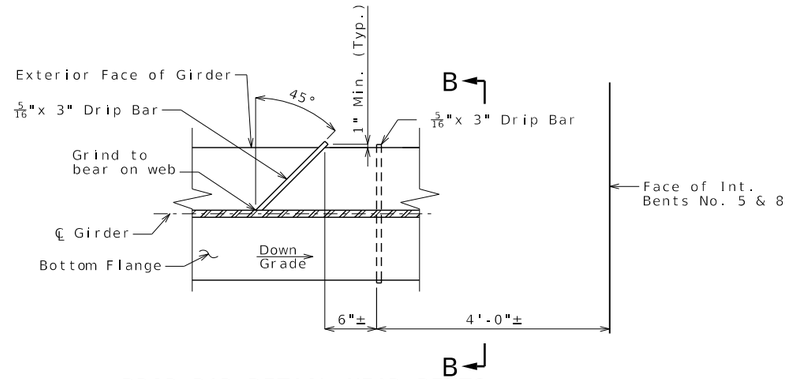

DRIP BAR DETAIL NEAR BENTS

Required at 2 locations on exterior girders only:
Int. Bent No. 5 (Ahd.)
Int. Bent No. 8 (Bk.)

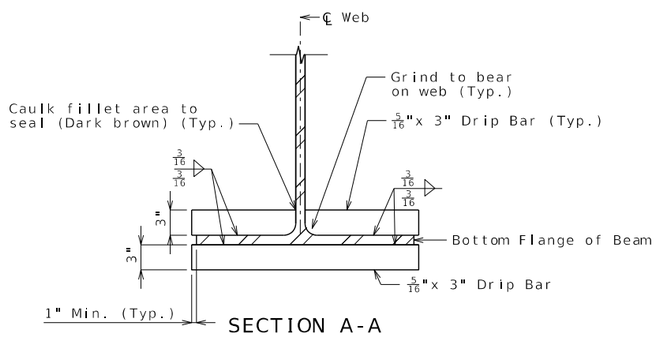

SECTION A-A

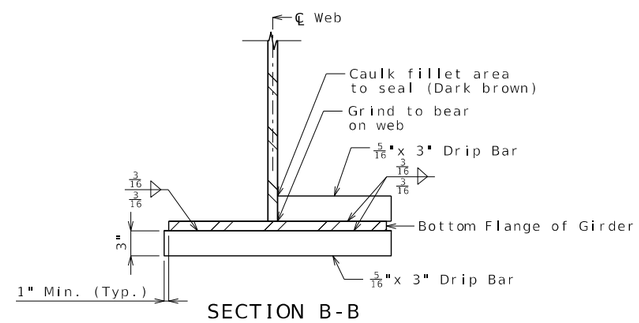

SECTION B-B

Note:
Steel for drip bars shall be same grade as bottom flange.

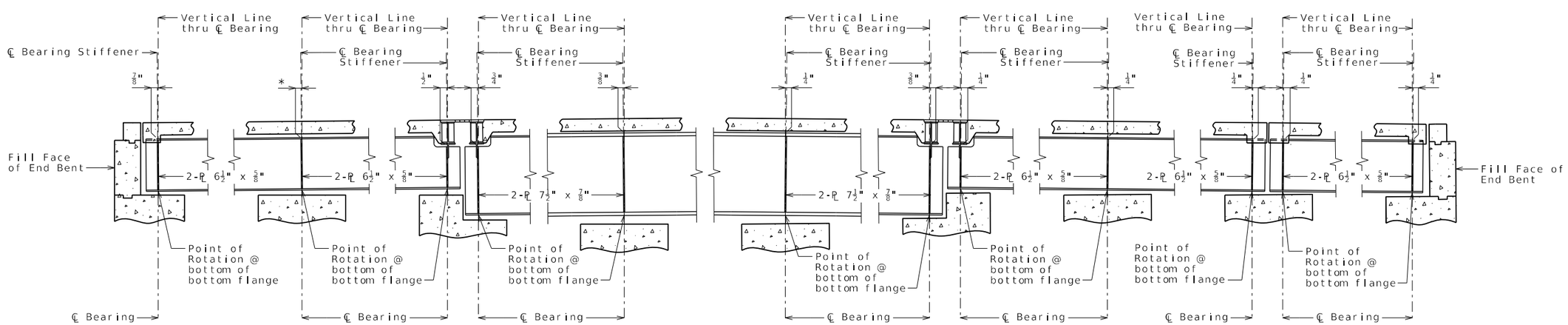

PART LONGITUDINAL SECTION

* 7/8" (Bents No. 2 & 3)
3/4" (Bent No. 4)

PART LONGITUDINAL SECTION & DRIP BAR DETAILS

Detailed Oct. 2024
Checked Dec. 2024

Note: This drawing is not to scale. Follow dimensions.

STATE OF MISSOURI
DEREK S. BUTLER
NUMBER PE-2016009828
PROFESSIONAL ENGINEER

THIS SHEET HAS BEEN SIGNED, SEALED AND DATED ELECTRONICALLY

DATE PREPARED	5/19/2025
ROUTE 62	STATE MO
DISTRICT BR	SHEET NO. 32
COUNTY	DUNKLIN
JOB NO.	JSE0155
CONTRACT ID.	
PROJECT NO.	
BRIDGE NO.	A9436

DATE	DESCRIPTION

MISSOURI HIGHWAYS AND TRANSPORTATION COMMISSION
105 WEST CAPITOL
JEFFERSON CITY, MO 65102
1-888-ASK-MODOT (1-888-275-6636)

GARVER, LLC.
7509 NW TIFFANY SPRINGS PARKWAY, SUITE 200
KANSAS CITY, MO 64153
PHONE: (816) 298-6465
CERTIFICATE OF AUTHORITY NO. 2008013090

IF A SEAL IS PRESENT ON THIS SHEET IT HAS BEEN ELECTRONICALLY SEALED AND DATED.

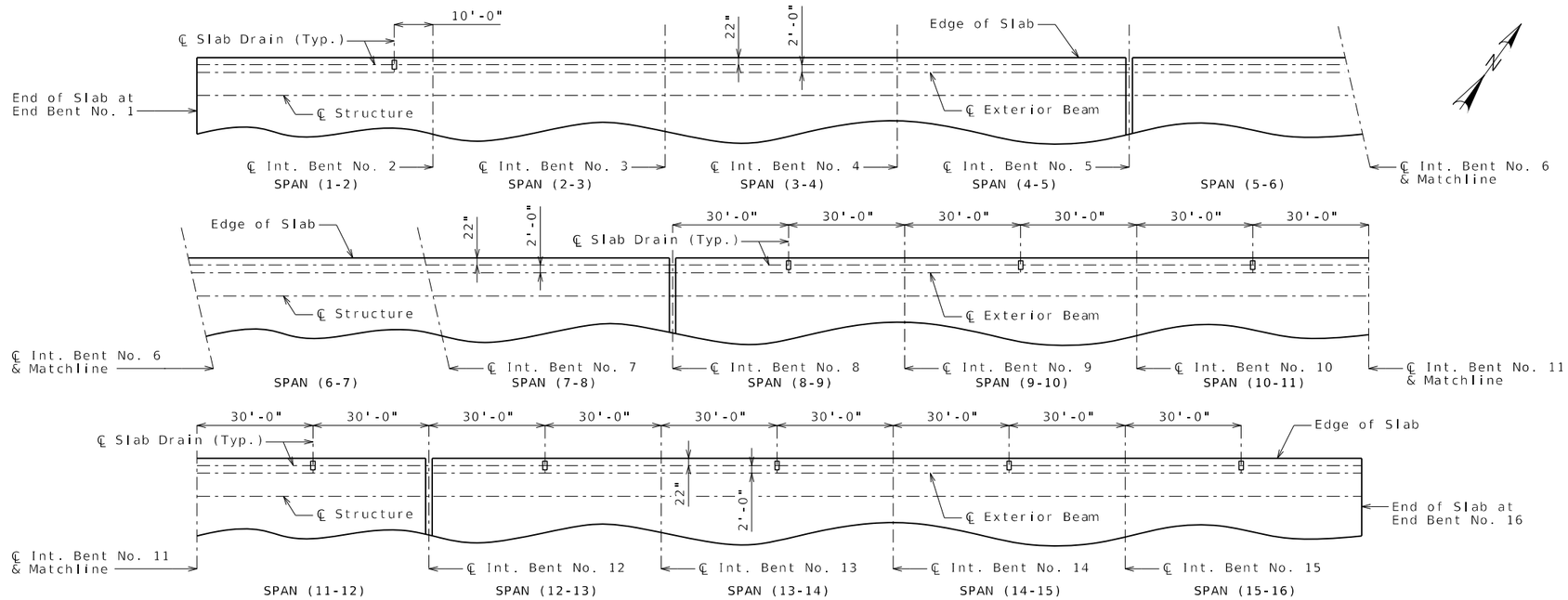

PLAN OF SLAB SHOWING SLAB DRAIN LOCATIONS

(Symm. abt. ℄ Structure)

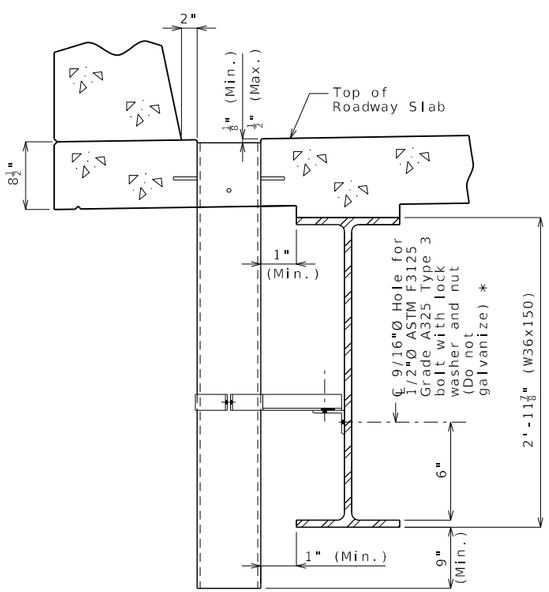

PART SECTION NEAR DRAIN

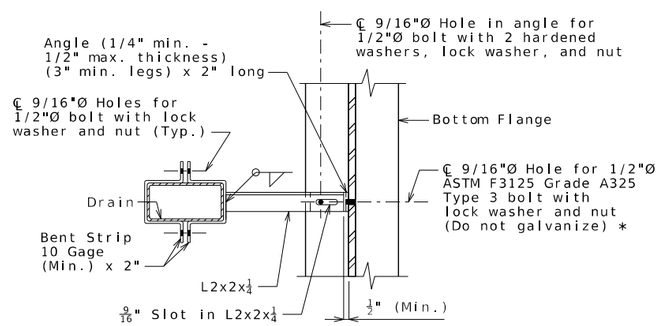

PART SECTION SHOWING BRACKET ASSEMBLY

* See Sec 1080.4

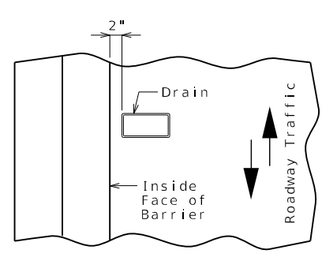

PART PLAN OF SLAB AT DRAIN

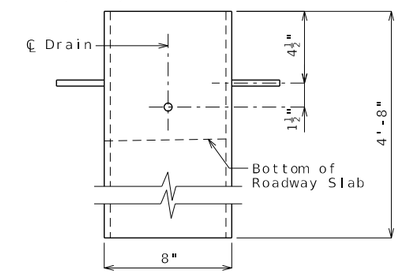

ELEVATION OF DRAIN

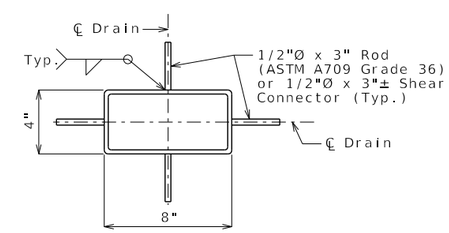

PLAN OF STEEL DRAIN OPTION

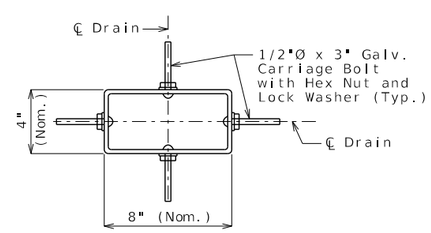

PLAN OF FRP DRAIN OPTION

General Notes:

Contractor shall have the option to construct either steel or FRP slab drains. All drains shall be of same type.

Slab drain bracket assembly shall be ASTM A709 Grade 36 steel.

Locate drains in slab by dimensions shown in Part Section Near Drain.

Reinforcing steel shall be shifted to clear drains.

The bracket assembly shall be galvanized in accordance with ASTM A123.

All bolts, hardened washers, lock washers and nuts shall be galvanized in accordance with AASHTO M 232 (ASTM A153), Class C, except as shown.

All 1/2-inch diameter bolts shall be ASTM A307, except as shown.

Shop drawings will not be required for the slab drains and the bracket assembly.

The bolt hole for the bracket assembly attachment shall be located on the beam shop drawings.

The galvanized surfaces of drain support brackets shall be prepared according to the coating manufacturer's recommendation and field coated with a gray epoxy-mastic primer (non-aluminum) within a distance of 6 inches from the point of connection to the weathering steel structure.

Notes for Steel Drain:

Slab drains may be fabricated of either 1/4-inch welded sheets of ASTM A709 Grade 36 steel or from 1/4-inch structural steel tubing ASTM A500 or A501.

Outside dimensions of drains are 8" x 4".

The drains shall be galvanized in accordance with ASTM A123.

Notes for FRP Drain:

Drains shall be machine filament-wound thermosetting resin tubing meeting the requirements of ASTM D2996 with the following exceptions:

Shape of drains shall be rectangular with outside nominal dimensions of 8" x 4".

Minimum reinforced wall thickness shall be 1/4 inch.

The resin used shall be ultraviolet (UV) resistant and/or have UV inhibitors mixed throughout. Drains may have an exterior coating for additional UV resistance.

The color of the slab drain shall be gray (Federal Standard #26373). The color shall be uniform throughout the resin and any coating used.

The combination of materials used in the manufacture of the drains shall be tested for UV resistance in accordance with ASTM D4329 Cycle A. The representative material shall withstand at least 500 hours of testing with only minor discoloration and without any physical deterioration. The contractor shall furnish the results of the required ultraviolet testing prior to acceptance of the slab drains.

At the contractor's option, drains may be field cut. The method of cutting FRP slab drain shall be as recommended by the manufacturer to ensure a smooth, chip free cut.

STATE OF MISSOURI
DEREK S. BUTLER
NUMBER PE-2016009658
PROFESSIONAL ENGINEER

THIS SHEET HAS BEEN SIGNED, SEALED AND DATED ELECTRONICALLY

DATE PREPARED	5/19/2025
ROUTE	62
STATE	MO
DISTRICT	BR
SHEET NO.	33
COUNTY	DUNKLIN
JOB NO.	JSE0155
CONTRACT ID.	
PROJECT NO.	
BRIDGE NO.	A9436

DESCRIPTION

DATE

MISSOURI HIGHWAYS AND TRANSPORTATION COMMISSION

105 WEST CAPITOL
JEFFERSON CITY, MO 65102
1-888-ASK-MODOT (1-888-275-6636)

GARVER, LLC.
7509 NW TIFFANY SPRINGS
PARKWAY, SUITE 200
KANSAS CITY, MO 64153
PHONE: (816) 298-6465
CERTIFICATE OF AUTHORITY
NO. 2008013090

IF A SEAL IS PRESENT ON THIS SHEET IT HAS BEEN ELECTRONICALLY SEALED AND DATED.

SLAB DRAINS

Detailed Oct. 2024
Checked Dec. 2024

Note: This drawing is not to scale. Follow dimensions.

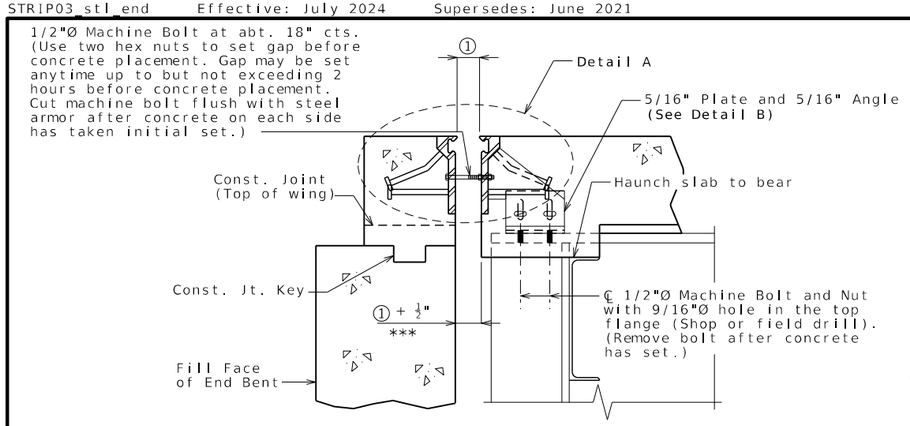

SECTION A-A

Strip seal gland not shown for clarity.

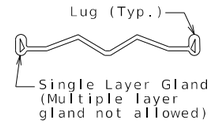

DETAIL OF GLAND

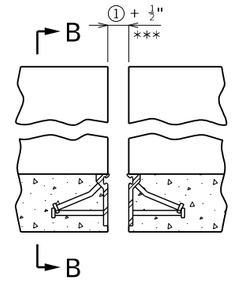

PART ELEVATION OF BARRIER

Strip seal gland not shown for clarity.

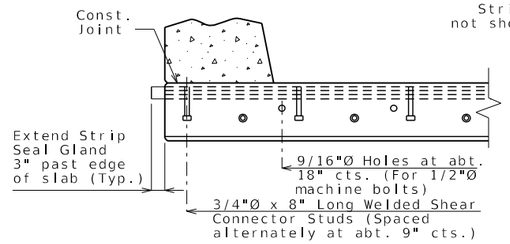

PART SECTION B-B

GENERAL NOTES:

Expansion joint system shall be fabricated in one section, except for staged construction and when the length is over 50 feet. A complete joint penetration groove welded splice shall be required. Welds shall be ground flush to provide a smooth surface. The expansion joint system shall be fabricated and installed to the crown and grade of the roadway.

The strip seal gland shall be installed in joints in one continuous piece without field splices. Factory splicing will be permitted for joints in excess of 53 feet.

Structural steel for the expansion joint system shall be ASTM A709 Grade 36 except the steel armor may be ASTM A709 Grade 50W. Anchors for the expansion joint system shall be in accordance with Sec 1037. Strip seal expansion joint system shall be in accordance with Sec 717.

Structural steel for the expansion joint system shall be coated with a minimum of two coats of inorganic zinc primer to provide a total dry film thickness of 4 mils minimum, 6 mils maximum, or galvanized in accordance with ASTM A123. Anchors need not be protected from overspray.

Longitudinal reinforcing steel shall be placed so that ends shall be 1" from the vertical leg of the steel armor at the expansion joint system.

Concrete shall be forced under and around steel armor and anchors. Proper consolidation of the concrete shall be achieved by localized internal vibration.

② The installation temperature shall be taken as the actual air temperature averaged over the 24-hour period immediately preceding installation.

③ MoDOT Construction personnel will indicate the strip seal expansion joint system installed.

Steel armor may also be referred to as extrusion or rail.

The terms P and R rail are used for identification only, and are not endorsements for any particular manufacturer.

*** Because of variation in armor dimensions, the concrete opening will vary if the optional R rail is used. Dimensions shown are based on the P rail option.

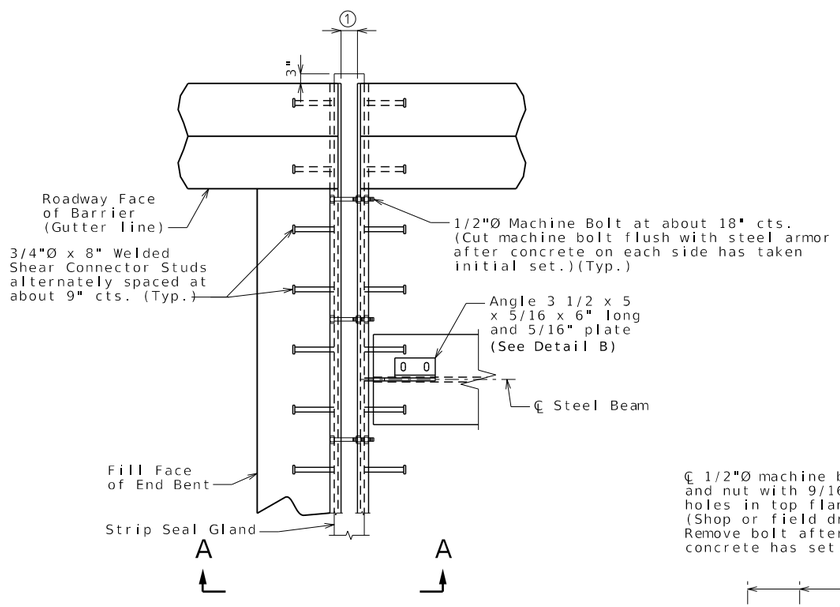

PART PLAN

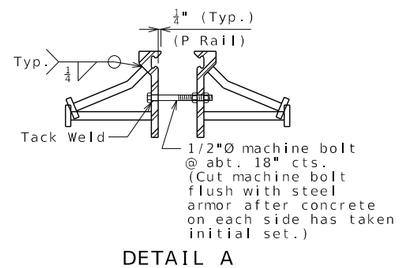

DETAIL A

(P Rail shown, R Rail similar)

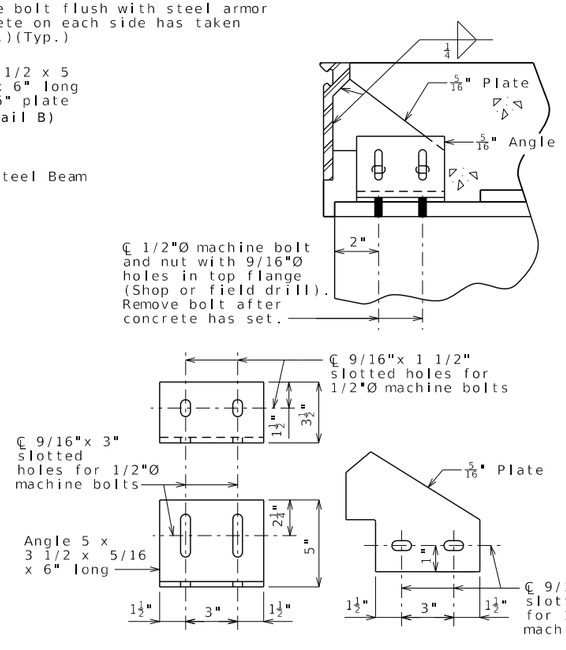

DETAIL B

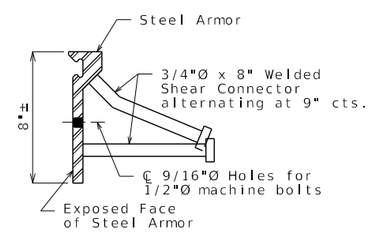

DETAIL OF JOINT ARMOR

(P Rail)

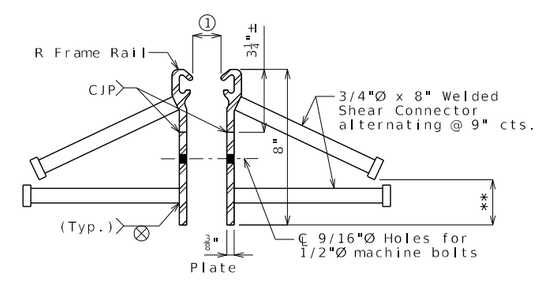

** Bend stud in shop if necessary to maintain 1" min. from bottom of vertical plate.

OPTIONAL R RAIL DETAIL

Table of Allowed Transverse Strip Seal Expansion Joint System

Manufacturer	Strip Seal System (Designated Name)	Movement Parallel to RDWY	① Allowed Installation Gap Normal to Joint at RDWY Surface @ Air/Surface Temperature ②						③
			@ 40°F	@ 50°F	@ 60°F	@ 70°F	@ 80°F	@ 90°F	
D S Brown	Strip seal L2-400	1 11/16"	2¼"	2⅛"	2"	1⅞"	1¾"	1 11/16"	□
Watson Bowman Acme (Wabo)	Strip seal SE-400	1 11/16"	2¼"	2⅛"	2"	1⅞"	1¾"	1 11/16"	□

STRIP SEAL EXPANSION JOINT SYSTEM AT END BENTS NO. 1 & 16

Detailed Oct. 2024
Checked Dec. 2024

Note: This drawing is not to scale. Follow dimensions.

STATE OF MISSOURI
DEREK S. BUTLER
NUMBER PE-2016009828
PROFESSIONAL ENGINEER

THIS SHEET HAS BEEN SIGNED, SEALED AND DATED ELECTRONICALLY

DATE PREPARED	
5/19/2025	
ROUTE 62	STATE MO
DISTRICT BR	SHEET NO. 34
COUNTY DUNKLIN	
JOB NO. JSE0155	
CONTRACT ID.	
PROJECT NO.	
BRIDGE NO. A9436	

DATE	DESCRIPTION

IF A SEAL IS PRESENT ON THIS SHEET IT HAS BEEN ELECTRONICALLY SEALED AND DATED.

MISSOURI HIGHWAYS AND TRANSPORTATION COMMISSION
105 WEST CAPITOL
JEFFERSON CITY, MO 65102
1-888-ASK-MODOT (1-888-275-6636)

GARVER, LLC.
7509 NW TIFFANY SPRINGS PARKWAY, SUITE 200
KANSAS CITY, MO 64153
PHONE: (816) 298-6465
CERTIFICATE OF AUTHORITY NO. 2008013090

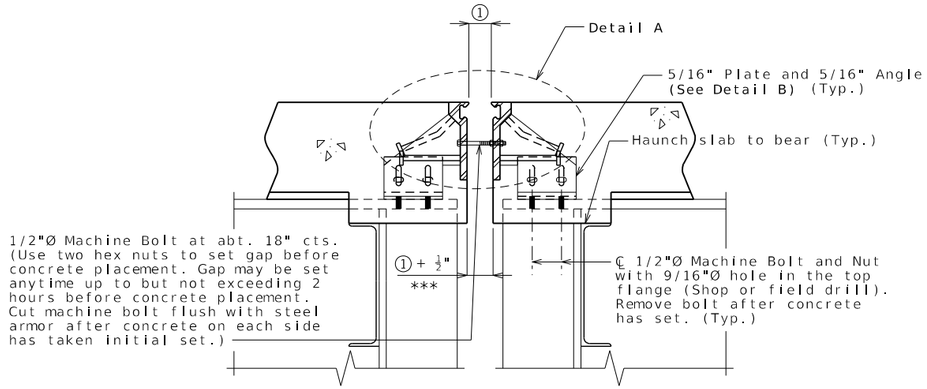

SECTION A-A

Strip seal gland not shown for clarity.

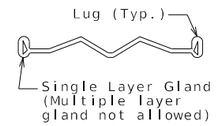

DETAIL OF GLAND

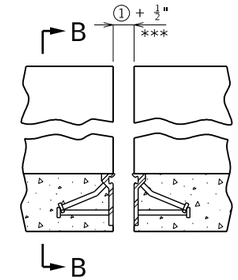

PART ELEVATION OF BARRIER

Strip seal gland not shown for clarity.

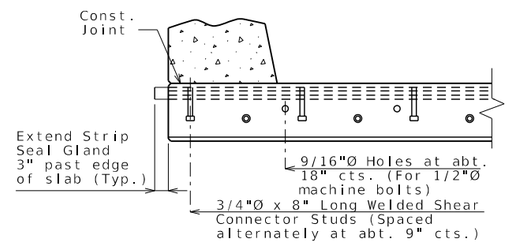

PART SECTION B-B

GENERAL NOTES:

Expansion joint system shall be fabricated in one section, except for staged construction and when the length is over 50 feet. A complete joint penetration groove welded splice shall be required. Welds shall be ground flush to provide a smooth surface. The expansion joint system shall be fabricated and installed to the crown and grade of the roadway.

The strip seal gland shall be installed in joints in one continuous piece without field splices. Factory splicing will be permitted for joints in excess of 53 feet.

Structural steel for the expansion joint system shall be ASTM A709 Grade 36 except the steel armor may be ASTM A709 Grade 50W. Anchors for the expansion joint system shall be in accordance with Sec 1037. Strip seal expansion joint system shall be in accordance with Sec 717.

Structural steel for the expansion joint system shall be coated with a minimum of two coats of inorganic zinc primer to provide a total dry film thickness of 4 mils minimum, 6 mils maximum, or galvanized in accordance with ASTM A123. Anchors need not be protected from overspray.

Longitudinal reinforcing steel shall be placed so that ends shall be 1" from the vertical leg of the steel armor at the expansion joint system.

Concrete shall be forced under and around steel armor and anchors. Proper consolidation of the concrete shall be achieved by localized internal vibration.

② The installation temperature shall be taken as the actual air temperature averaged over the 24-hour period immediately preceding installation.

③ MoDOT Construction personnel will indicate the strip seal expansion joint system installed.

Steel armor may also be referred to as extrusion or rail.

The terms P and R rail are used for identification only, and are not endorsements for any particular manufacturer.

*** Because of variation in armor dimensions, the concrete opening will vary if the optional R rail is used. Dimensions shown are based on the P rail option.

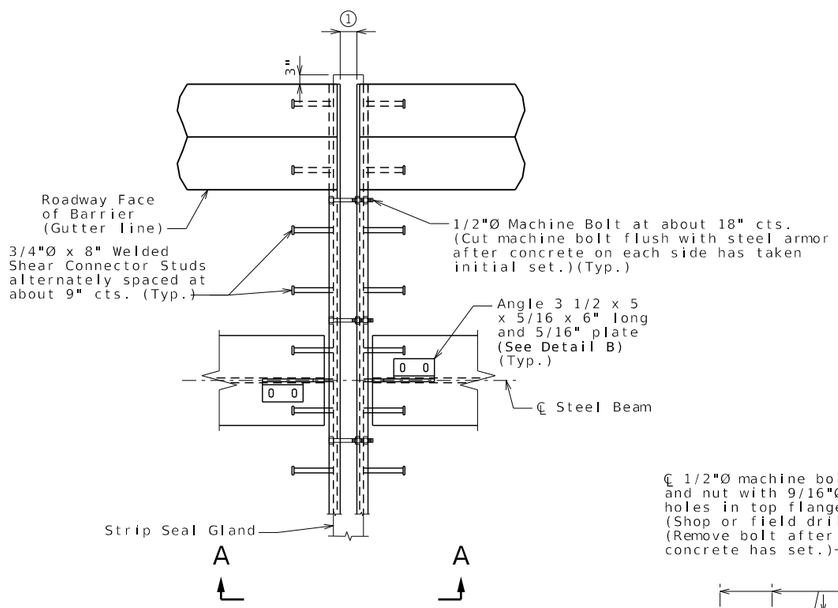

PART PLAN

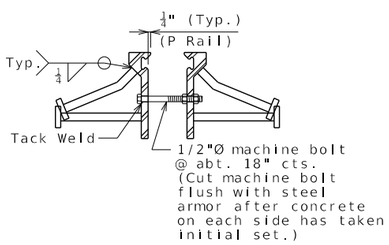

DETAIL A

(P Rail shown, R Rail similar)

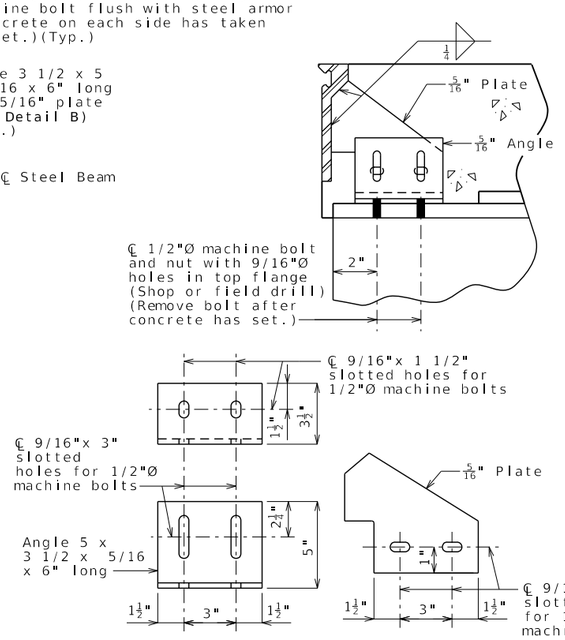

DETAIL B

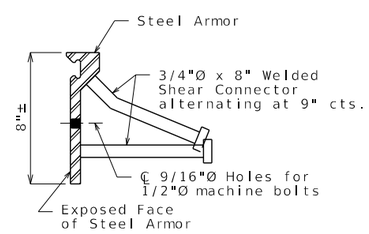

DETAIL OF JOINT ARMOR

(P Rail)

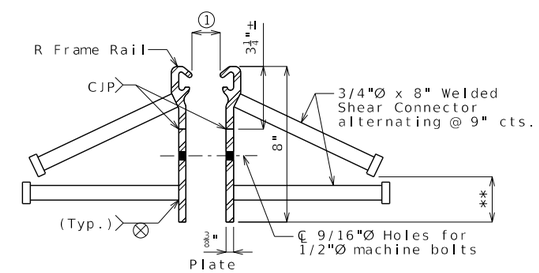

** Bend stud in shop if necessary to maintain 1" min. from bottom of vertical plate.

OPTIONAL R RAIL DETAIL

Table of Allowed Transverse Strip Seal Expansion Joint System

Manufacturer	Strip Seal System (Designated Name)	Movement Parallel to RDWY	① Allowed Installation Gap Normal to Joint at RDWY Surface @ Air/Surface Temperature ②						③
			@ 40°F	@ 50°F	@ 60°F	@ 70°F	@ 80°F	@ 90°F	
D S Brown	Strip seal L2-400	3 3/8"	2 7/16"	2 1/4"	2"	1 3/4"	1 9/16"	N/A	☐
Watson Bowman Acme (Wabo)	Strip seal SE-400	3 3/8"	2 7/16"	2 1/4"	2"	1 3/4"	1 9/16"	N/A	☐

N/A = Installation is not allowed at this temperature.

STRIP SEAL EXPANSION JOINT SYSTEM AT INTERMEDIATE BENT NO. 12

Detailed Dec. 2024
Checked Dec. 2024

Note: This drawing is not to scale. Follow dimensions.

STATE OF MISSOURI
DEREK S. BUTLER
NUMBER PE-2016009828
PROFESSIONAL ENGINEER
THIS SHEET HAS BEEN SIGNED, SEALED AND DATED ELECTRONICALLY

DATE PREPARED	
5/19/2025	
ROUTE 62	STATE MO
DISTRICT BR	SHEET NO. 35
COUNTY DUNKLIN	
JOB NO. JSE0155	
CONTRACT ID.	
PROJECT NO.	
BRIDGE NO. A9436	

DATE	DESCRIPTION

IF A SEAL IS PRESENT ON THIS SHEET IT HAS BEEN ELECTRONICALLY SEALED AND DATED.

MISSOURI HIGHWAYS AND TRANSPORTATION COMMISSION
105 WEST CAPITOL
JEFFERSON CITY, MO 65102
1-888-ASK-MODOT (1-888-275-6636)

GARVER, LLC.
7509 NW TIFFANY SPRINGS PARKWAY, SUITE 200
KANSAS CITY, MO 64153
PHONE: (816) 298-6465
CERTIFICATE OF AUTHORITY NO. 2008013090

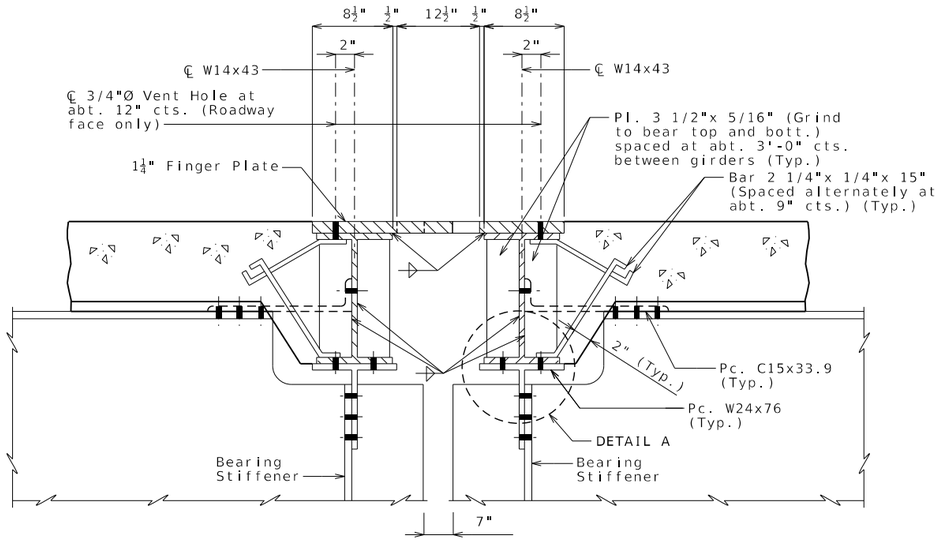

SECTION THRU DEVICE

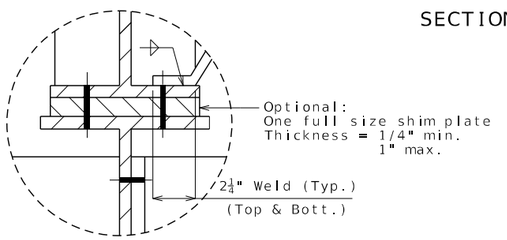

DETAIL A

Note:
Concrete shall be forced under and around finger plate supporting hardware, anchors, angles and bars. Proper consolidation shall be achieved by localized internal vibration.

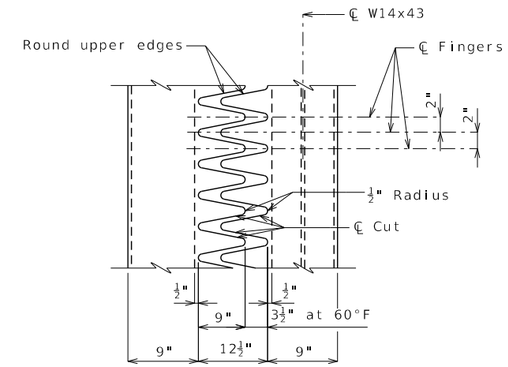

PART PLAN OF FINGER PLATE

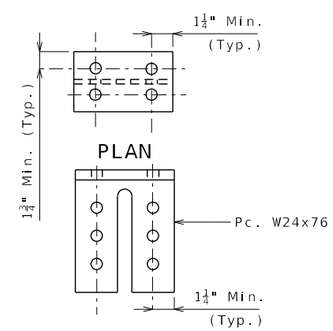

ELEVATION
Pc. W24x76

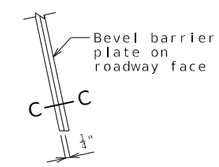

PART ELEVATION
AT END OF
BARRIER PLATE

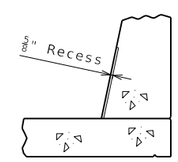

SECTION B-B

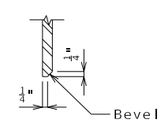

SECTION C-C

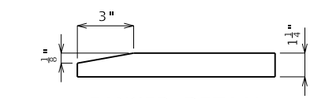

FINGER DETAIL

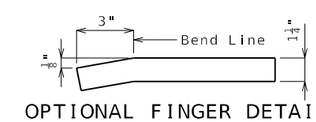

OPTIONAL FINGER DETAIL

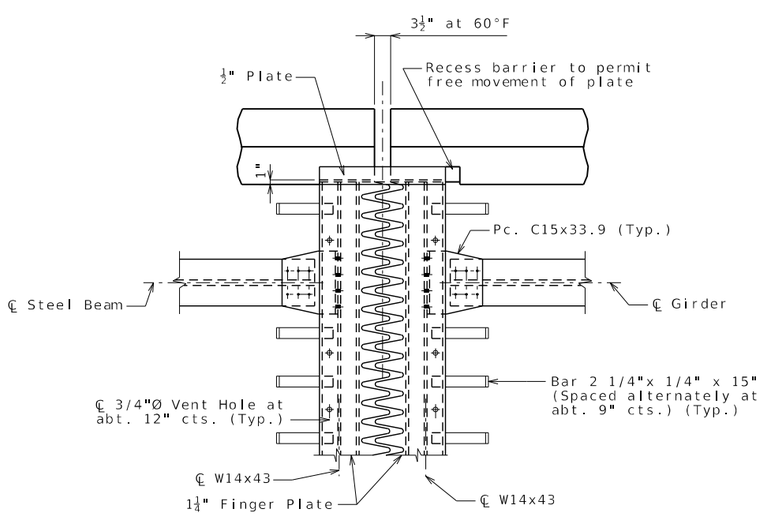

PART PLAN OF DEVICE

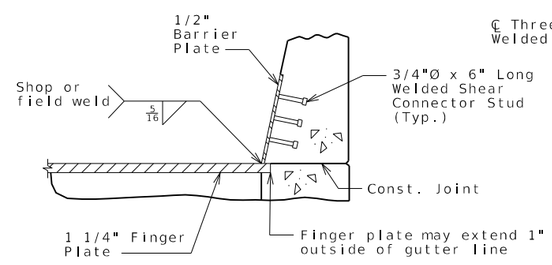

SECTION A-A

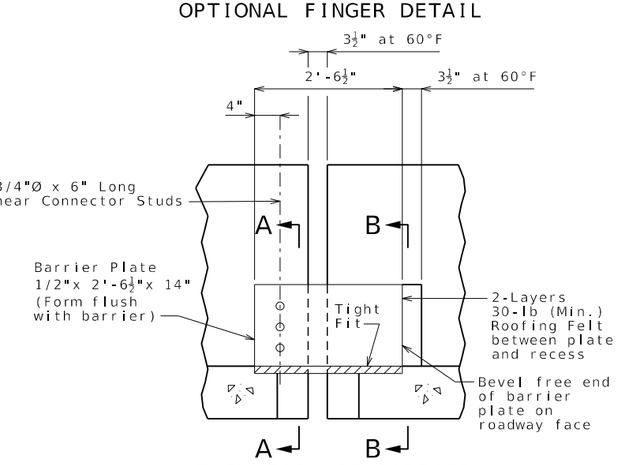

ELEVATION OF BARRIER

GENERAL NOTES:

Finger plate shall be cut with a machine guided gas torch from one plate. The plate from which fingers are cut may be spliced before fingers are cut. The surface of cut shall be perpendicular to the surface of the plate. The cut shall not exceed 1/8" in width. The centerline of cut shall not deviate more than 1/16" from the position of centerline of cut shown. No splicing of finger plate or finger plate assembly will be allowed after fingers are cut. The expansion device shall be fabricated and installed to the crown and grade of the roadway.

Plan dimensions are based on installation at 60°F. The expansion gap and other dimensions shall be increased or decreased 1/4" for each 10° fall or rise in temperature at installation.

Material for the expansion device shall be ASTM A709 Grade 36 structural steel. Anchors for the expansion device shall be in accordance with Sec 1037.

Structural steel for the expansion device and barrier plate shall be coated with a minimum of two coats of inorganic zinc primer to provide a total dry film thickness of 4 mils minimum, 6 mils maximum, or galvanized in accordance with ASTM A123. Anchors need not be protected from overspray.

Payment for furnishing, coating or galvanizing and installing the structural steel for the expansion device will be considered completely covered by the contract unit price for Expansion Device (Finger Plate) per linear foot.

All holes shown for connections shall be subpunched 11/16-inch diameter (shop or field drill) and reamed to 13/16-inch diameter in field, except holes in members that will be used as templates may be drilled to 13/16-inch diameter in the shop. For multi-piece connections, only the holes in the template member may be drilled to 13/16-inch diameter in the shop.

Longitudinal reinforcing steel shall be placed so that ends shall not be more than ±1" from the web of W14 x 43 at the expansion device.

Complete joint penetration welds utilized in the fabrication of the expansion device shall be nondestructively tested by an approved method.

Bolts shall be 3/4-inch diameter ASTM F3125 Grade A325 Type 3.

FINGER PLATE EXPANSION DEVICE AT INT. BENTS NO. 5 & 8

Detailed Oct. 2024
Checked Dec. 2024

Note: This drawing is not to scale. Follow dimensions.

STATE OF MISSOURI
DEREK S. BUTLER
NUMBER PE-2016009828
PROFESSIONAL ENGINEER

THIS SHEET HAS BEEN SIGNED, SEALED AND DATED ELECTRONICALLY

DATE PREPARED	
5/19/2025	
ROUTE 62	STATE MO
DISTRICT BR	SHEET NO. 36
COUNTY DUNKLIN	
JOB NO. JSE0155	
CONTRACT ID.	
PROJECT NO.	
BRIDGE NO. A9436	

DATE	DESCRIPTION

IF A SEAL IS PRESENT ON THIS SHEET IT HAS BEEN ELECTRONICALLY SEALED AND DATED.

MISSOURI HIGHWAYS AND TRANSPORTATION COMMISSION
105 WEST CAPITOL
JEFFERSON CITY, MO 65102
1-888-ASK-MODOT (1-888-275-6636)

GARVER, LLC.
7509 NW TIFFANY SPRINGS PARKWAY, SUITE 200
KANSAS CITY, MO 64153
PHONE: (816) 298-6465
CERTIFICATE OF AUTHORITY NO. 2008013090

Theoretical Bottom of Slab Elevations at Centerline of Beam (Prior to forming for slab)

	Beam Number	Span (1-2) (59-0½" ℄ Brg. - ℄ Brg.)					Span (2-3) (60'-0" ℄ Brg. - ℄ Brg.)				
		℄ Brg.	.25	.50	.75	℄ Brg.	℄ Brg.	.25	.50	.75	℄ Brg.
Unit 1	1/4	304.94	305.36	305.74	306.10	306.44	306.44	306.83	307.22	307.60	307.97
	2/3	305.14	305.55	305.94	306.29	306.64	306.64	307.02	307.41	307.79	308.16
	Beam Number	Span (3-4) (60'-0" ℄ Brg. - ℄ Brg.)					Span (4-5) (59'-0½" ℄ Brg. - ℄ Brg.)				
		℄ Brg.	.25	.50	.75	℄ Brg.	℄ Brg.	.25	.50	.75	℄ Brg.
	1/4	307.97	308.35	308.71	309.04	309.35	309.35	309.67	309.97	310.21	310.41
	2/3	308.16	308.54	308.90	309.23	309.54	309.54	309.86	310.16	310.41	310.60
Unit 3	Beam Number	Span (8-9) (59'-0½" ℄ Brg. - ℄ Brg.)					Span (9-10) (60'-0" ℄ Brg. - ℄ Brg.)				
		℄ Brg.	.25	.50	.75	℄ Brg.	℄ Brg.	.25	.50	.75	℄ Brg.
	1/4	310.92	310.83	310.72	310.58	310.43	310.43	310.31	310.20	310.07	309.93
	2/3	311.11	311.03	310.92	310.77	310.62	310.62	310.50	310.39	310.26	310.13
	Beam Number	Span (10-11) (60'-0" ℄ Brg. - ℄ Brg.)					Span (11-12) (59'-0½" ℄ Brg. - ℄ Brg.)				
		℄ Brg.	.25	.50	.75	℄ Brg.	℄ Brg.	.25	.50	.75	℄ Brg.
	1/4	309.93	309.82	309.70	309.57	309.44	309.44	309.35	309.25	309.12	308.95
	2/3	310.13	310.01	309.90	309.76	309.63	309.63	309.54	309.44	309.31	309.15
Unit 4	Beam Number	Span (12-13) (59'-0½" ℄ Brg. - ℄ Brg.)					Span (13-14) (60'-0" ℄ Brg. - ℄ Brg.)				
		℄ Brg.	.25	.50	.75	℄ Brg.	℄ Brg.	.25	.50	.75	℄ Brg.
	1/4	308.94	308.86	308.75	308.60	308.45	308.45	308.33	308.22	308.09	307.96
	2/3	309.13	309.05	308.94	308.79	308.64	308.64	308.53	308.41	308.28	308.15
	Beam Number	Span (14-15) (60'-0" ℄ Brg. - ℄ Brg.)					Span (15-16) (59'-0½" ℄ Brg. - ℄ Brg.)				
		℄ Brg.	.25	.50	.75	℄ Brg.	℄ Brg.	.25	.50	.75	℄ Brg.
	1/4	307.96	307.84	307.72	307.59	307.46	307.46	307.37	307.27	307.14	306.98
	2/3	308.15	308.04	307.92	307.78	307.66	307.66	307.56	307.46	307.33	307.17

Elevations are based on a constant slab thickness of 8 1/2" and include allowance for theoretical dead load deflections due to weight of slab (including optional corrugated steel forms) and barriers.

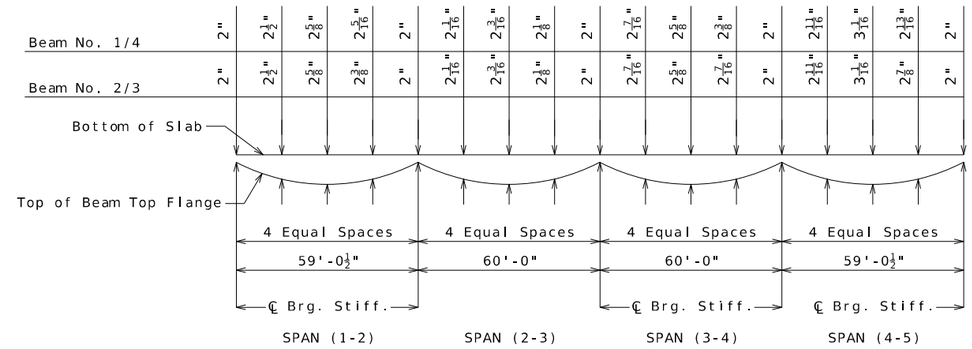

THEORETICAL SLAB HAUNCHING DIAGRAM - UNIT 1

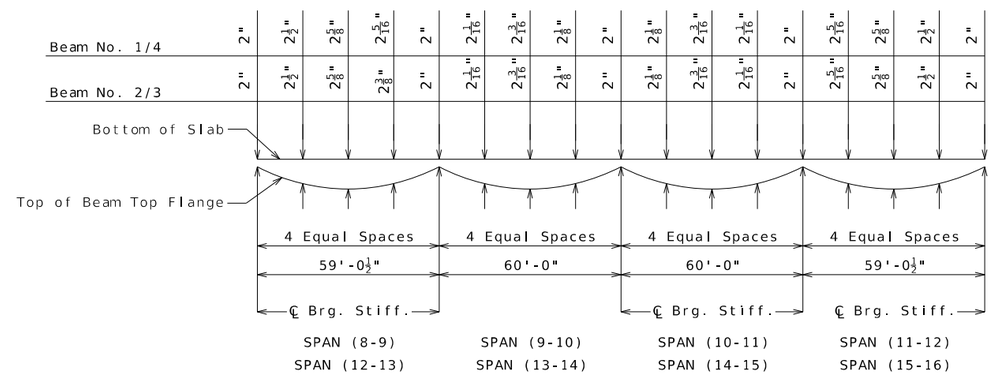

THEORETICAL SLAB HAUNCHING DIAGRAM - UNITS 3 & 4

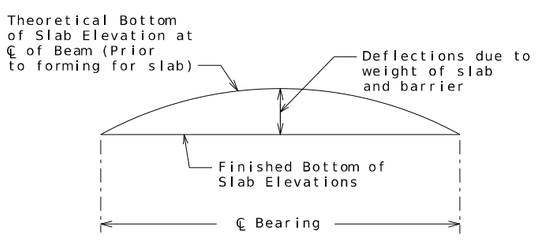

TYPICAL SLAB ELEVATIONS DIAGRAM

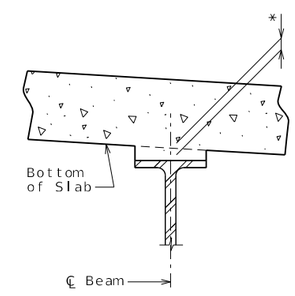

THEORETICAL SLAB HAUNCH

* Dimension (bottom of slab to top of top flange) may vary if beam camber after erection differs from plan camber by more than the % of Dead Load Deflection due to weight of structural steel. No payment will be made for any adjustment in forming or additional concrete required for variation in haunching.

THEORETICAL BOTTOM OF SLAB ELEVATIONS AND THEORETICAL SLAB HAUNCHING DIAGRAM - UNITS 1, 3 & 4

Detailed Oct. 2024
Checked Dec. 2024

Note: This drawing is not to scale. Follow dimensions.

STATE OF MISSOURI
DEREK S. BUTLER
NUMBER PE-2016009828
PROFESSIONAL ENGINEER

THIS SHEET HAS BEEN SIGNED, SEALED AND DATED ELECTRONICALLY

DATE PREPARED	
5/19/2025	
ROUTE 62	STATE MO
DISTRICT BR	SHEET NO. 37
COUNTY DUNKLIN	
JOB NO. JSE0155	
CONTRACT ID.	
PROJECT NO.	
BRIDGE NO. A9436	

DATE	DESCRIPTION

MISSOURI HIGHWAYS AND TRANSPORTATION COMMISSION
105 WEST CAPITOL
JEFFERSON CITY, MO 65102
1-888-ASK-MODOT (1-888-275-6636)

GARVER, LLC.
7509 NW TIFFANY SPRINGS PARKWAY, SUITE 200
KANSAS CITY, MO 64153
PHONE: (816) 298-6465
CERTIFICATE OF AUTHORITY NO. 2008013090

IF A SEAL IS PRESENT ON THIS SHEET IT HAS BEEN ELECTRONICALLY SEALED AND DATED.

Theoretical Bottom of Slab Elevations at Centerline of Girder (Prior to forming for slab)

Girder Number	Span (5-6) (Varies ℄ Brg. - ℄ Brg.)										
	℄ Brg.	.10	.20	.30	.40	.50	.60	.70	.80	.90	℄ Brg.
1	310.44	310.62	310.79	310.94	311.08	311.19	311.28	311.36	311.43	311.50	311.56
2	310.63	310.83	311.00	311.16	311.29	311.40	311.50	311.57	311.64	311.71	311.77
3	310.63	310.83	311.01	311.18	311.31	311.43	311.52	311.59	311.66	311.72	311.79
4	310.44	310.65	310.83	311.00	311.14	311.25	311.34	311.42	311.48	311.54	311.61
Girder Number	Span (6-7) (135'-0" ℄ Brg. - ℄ Brg.)										
	℄ Brg.	.10	.20	.30	.40	.50	.60	.70	.80	.90	℄ Brg.
1	311.56	311.66	311.76	311.85	311.92	311.95	311.95	311.92	311.86	311.80	311.73
2	311.77	311.87	311.97	312.05	312.12	312.15	312.15	312.11	312.05	311.98	311.91
3	311.79	311.88	311.97	312.06	312.12	312.15	312.15	312.11	312.04	311.97	311.90
4	311.61	311.69	311.79	311.87	311.93	311.96	311.95	311.91	311.85	311.77	311.70
Girder Number	Span (7-8) (Varies ℄ Brg. - ℄ Brg.)										
	℄ Brg.	.10	.20	.30	.40	.50	.60	.70	.80	.90	℄ Brg.
1	311.73	311.69	311.65	311.60	311.55	311.48	311.40	311.30	311.19	311.06	310.93
2	311.91	311.87	311.83	311.78	311.73	311.66	311.58	311.48	311.37	311.25	311.12
3	311.90	311.86	311.81	311.76	311.71	311.64	311.56	311.47	311.36	311.25	311.12
4	311.70	311.65	311.60	311.55	311.49	311.42	311.35	311.26	311.16	311.05	310.93

Elevations are based on a constant slab thickness of 8 1/2" and include allowance for theoretical dead load deflections due to weight of slab (including optional corrugated steel forms) and barriers.

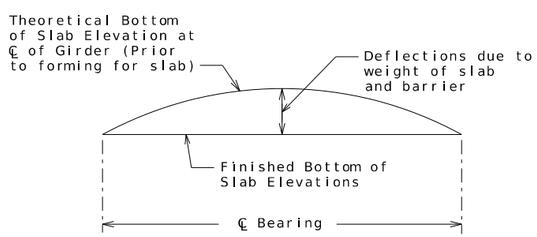

TYPICAL SLAB ELEVATIONS DIAGRAM

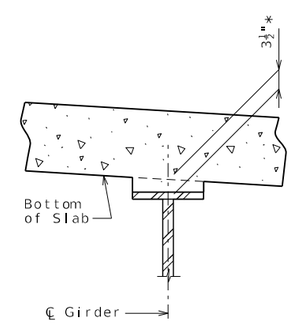

THEORETICAL SLAB HAUNCH

* Dimension (bottom of slab to top of web) may vary if girder camber after erection differs from plan camber by more than the % of Dead Load Deflection due to weight of structural steel. No payment will be made for any adjustment in forming or additional concrete required for variation in haunching.

THEORETICAL BOTTOM OF SLAB ELEVATIONS - UNIT 2

Detailed Oct. 2024
Checked Dec. 2024

Note: This drawing is not to scale. Follow dimensions.

STATE OF MISSOURI
DEREK S. BUTLER
NUMBER PE-2016009628
PROFESSIONAL ENGINEER

THIS SHEET HAS BEEN SIGNED, SEALED AND DATED ELECTRONICALLY

DATE PREPARED 5/19/2025

ROUTE	STATE
62	MO
DISTRICT	SHEET NO.
BR	38

COUNTY DUNKLIN

JOB NO. JSE0155

CONTRACT ID.

PROJECT NO.

BRIDGE NO. A9436

DATE	DESCRIPTION

MISSOURI HIGHWAYS AND TRANSPORTATION COMMISSION
105 WEST CAPITOL
JEFFERSON CITY, MO 65102
1-888-ASK-MODOT (1-888-275-6636)

GARVER, LLC.
7509 NW TIFFANY SPRINGS PARKWAY, SUITE 200
KANSAS CITY, MO 64153
PHONE: (816) 298-6465
CERTIFICATE OF AUTHORITY NO. 2008013090

IF A SEAL IS PRESENT ON THIS SHEET IT HAS BEEN ELECTRONICALLY SEALED AND DATED.

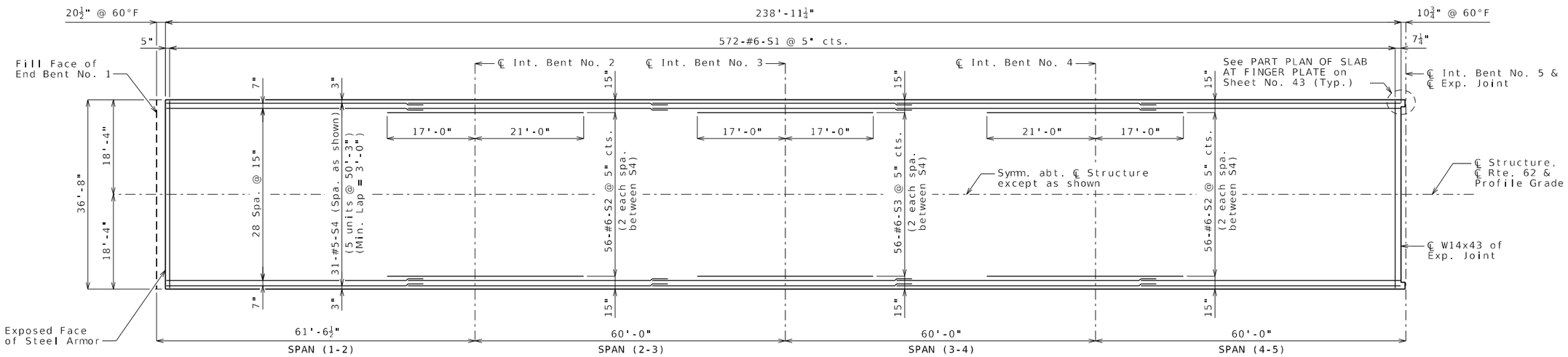

TOP REINFORCEMENT

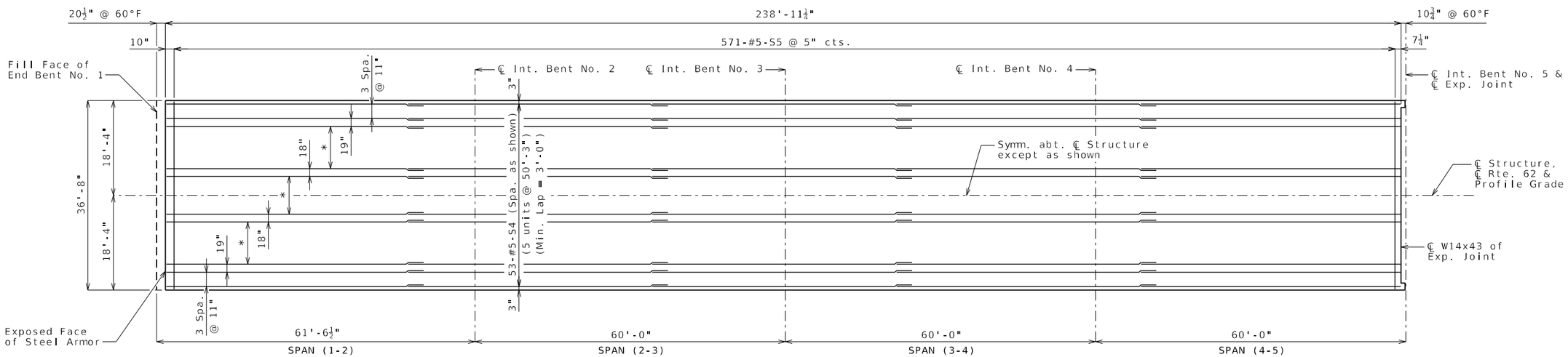

* 14 Spa. @ 7"

BOTTOM REINFORCEMENT

Notes:

Longitudinal dimensions are horizontal.

For Section Thru Slab and Part Plan of Slab at Finger Plate, see Sheet No. 43.

For details and locations of slab drains, see Sheet No. 33.

For details and reinforcement of Type D Barrier not shown, see Sheets No. 45 & 46.

For Slab Pouring Sequence, see Sheet No. 44.

For Theoretical Slab Haunch and Theoretical Bottom of Slab Elevations, see Sheet No. 37.

Longitudinal reinforcing steel shall be placed so that ends shall not be more than 1" from the web of W14x43 or the vertical leg of steel armor of the expansion device.

PLAN OF SLAB SHOWING REINFORCEMENT - UNIT 1

Detailed Oct. 2024
Checked Dec. 2024

Note: This drawing is not to scale. Follow dimensions.

STATE OF MISSOURI
DEREK S. BUTLER
NUMBER PE-2016009626
PROFESSIONAL ENGINEER

THIS SHEET HAS BEEN SIGNED, SEALED AND DATED ELECTRONICALLY

DATE PREPARED	
5/19/2025	
ROUTE 62	STATE MO
DISTRICT BR	SHEET NO. 39
COUNTY DUNKLIN	
JOB NO. JSE0155	
CONTRACT ID.	
PROJECT NO.	
BRIDGE NO. A9436	

DATE	DESCRIPTION

IF A SEAL IS PRESENT ON THIS SHEET IT HAS BEEN ELECTRONICALLY SEALED AND DATED.

MISSOURI HIGHWAYS AND TRANSPORTATION COMMISSION
105 WEST CAPITOL
JEFFERSON CITY, MO 65102
1-888-ASK-MODOT (1-888-275-6636)

GARVER, LLC.
7509 NW TIFFANY SPRINGS PARKWAY, SUITE 200
KANSAS CITY, MO 64153
PHONE: (816) 298-6465
CERTIFICATE OF AUTHORITY NO. 2008013090

B_A9436_039_SE0155_Slab_Plan1.dgn 9:42:39 AM 5/19/2025

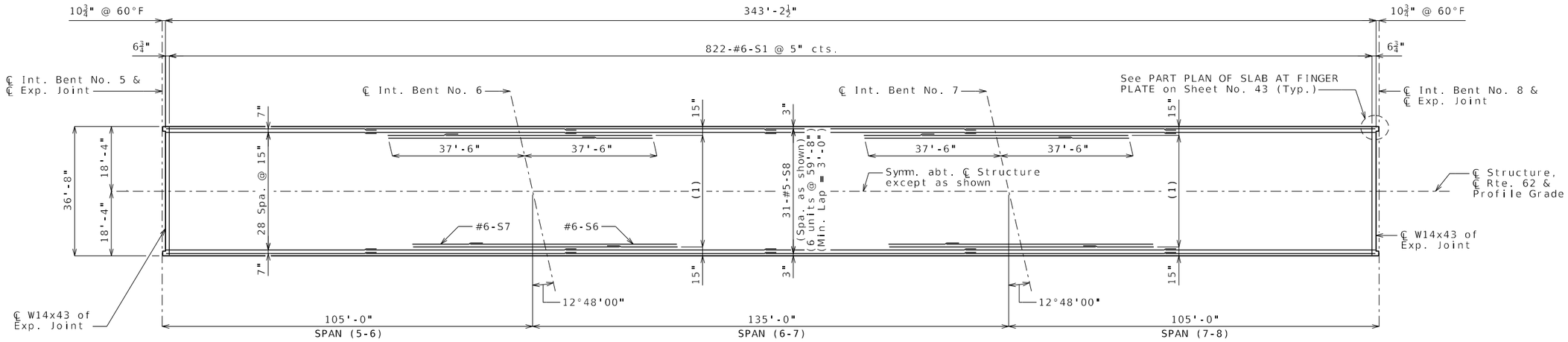

(1) 56-#6-S6 & 56-#6-S7 @ 5" cts. (2 each spa. btwn. S8)(Alternate Splice)

(2) 14 Spa. @ 7"

TOP REINFORCEMENT

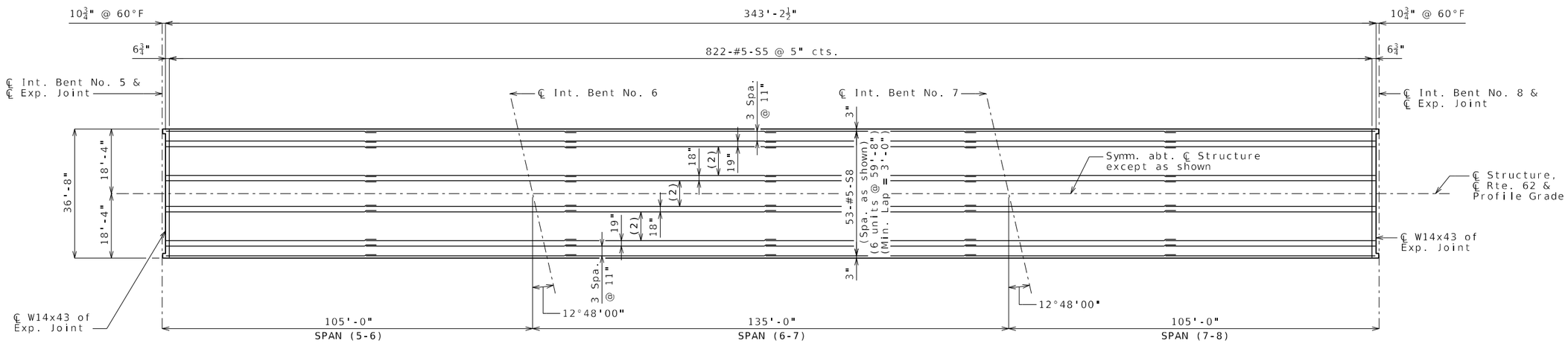

BOTTOM REINFORCEMENT

Notes:

Longitudinal dimensions are horizontal.

For Section Thru Slab and Part Plan of Slab at Finger Plate, see Sheet No. 43.

For details and locations of slab drains, see Sheet No. 33.

For details and reinforcement of Type D Barrier not shown, see Sheets No. 45 & 46.

For Slab Pouring Sequence, see Sheet No. 44.

For Theoretical Slab Haunch and Theoretical Bottom of Slab Elevations, see Sheet No. 38.

Longitudinal reinforcing steel shall be placed so that ends shall not be more than 1" from the web of W14x43 or the vertical leg of steel armor of the expansion device.

PLAN OF SLAB SHOWING REINFORCEMENT - UNIT 2

Detailed Oct. 2024
Checked Dec. 2024

Note: This drawing is not to scale. Follow dimensions.

STATE OF MISSOURI
DEREK S. BUTLER
NUMBER PE-2016009628
PROFESSIONAL ENGINEER

THIS SHEET HAS BEEN SIGNED, SEALED AND DATED ELECTRONICALLY

DATE PREPARED	
5/19/2025	
ROUTE 62	STATE MO
DISTRICT BR	SHEET NO. 40
COUNTY DUNKLIN	
JOB NO. JSE0155	
CONTRACT ID.	
PROJECT NO.	
BRIDGE NO. A9436	

DESCRIPTION	DATE

MISSOURI HIGHWAYS AND TRANSPORTATION COMMISSION

105 WEST CAPITOL
JEFFERSON CITY, MO 65102
1-888-ASK-MODOT (1-888-275-6636)

GARVER, LLC.
7509 NW TIFFANY SPRINGS
PARKWAY, SUITE 200
KANSAS CITY, MO 64153
PHONE: (816) 298-6465
CERTIFICATE OF AUTHORITY
NO. 2008013090

IF A SEAL IS PRESENT ON THIS SHEET IT HAS BEEN ELECTRONICALLY SEALED AND DATED.

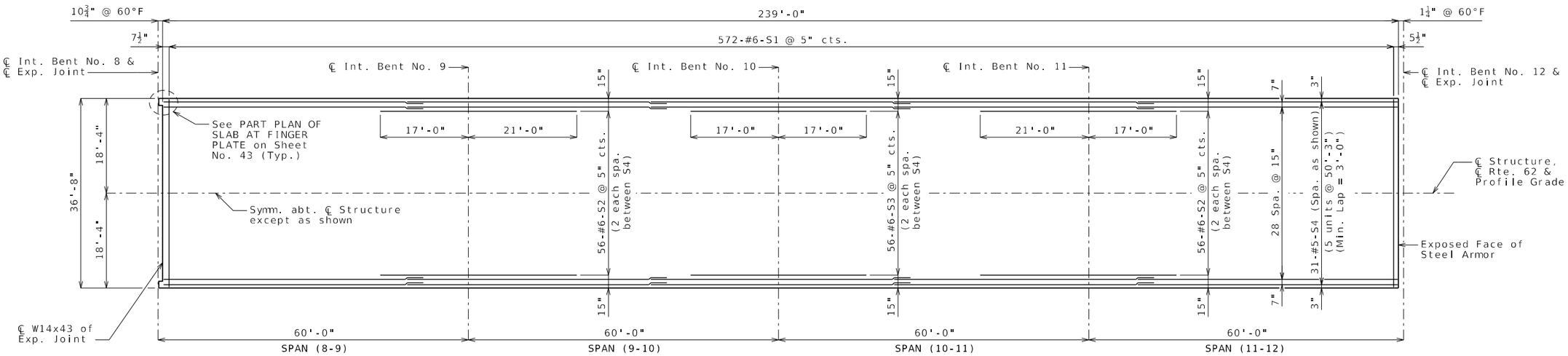

TOP REINFORCEMENT

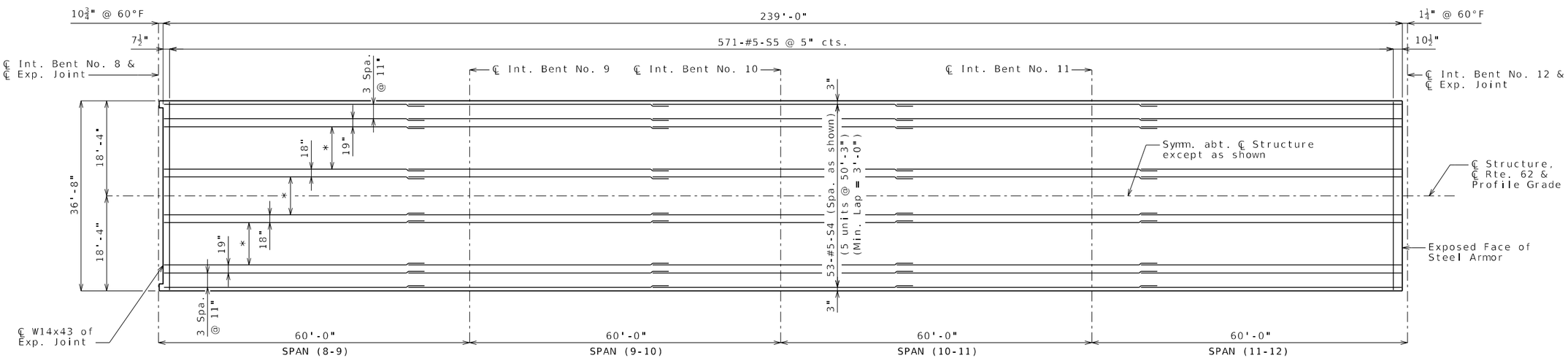

* 14 Spa. @ 7"

BOTTOM REINFORCEMENT

Notes:

Longitudinal dimensions are horizontal.

For Section Thru Slab and Part Plan of Slab at Finger Plate, see Sheet No. 43.

For details and locations of slab drains, see Sheet No. 33.

For details and reinforcement of Type D Barrier not shown, see Sheets No. 45 & 46.

For Slab Pouring Sequence, see Sheet No. 44.

For Theoretical Slab Haunch and Theoretical Bottom of Slab Elevations, see Sheet No. 37.

Longitudinal reinforcing steel shall be placed so that ends shall not be more than 1" from the web of W14x43 or the vertical leg of steel armor of the expansion device.

PLAN OF SLAB SHOWING REINFORCEMENT - UNIT 3

Detailed Oct. 2024
Checked Dec. 2024

Note: This drawing is not to scale. Follow dimensions.

STATE OF MISSOURI
DEREK S. BUTLER
NUMBER PE-2016009628
PROFESSIONAL ENGINEER

THIS SHEET HAS BEEN SIGNED, SEALED AND DATED ELECTRONICALLY

DATE PREPARED	
5/19/2025	
ROUTE 62	STATE MO
DISTRICT BR	SHEET NO. 41
COUNTY DUNKLIN	
JOB NO. JSE0155	
CONTRACT ID.	
PROJECT NO.	
BRIDGE NO. A9436	

DATE	DESCRIPTION

MISSOURI HIGHWAYS AND TRANSPORTATION COMMISSION
105 WEST CAPITOL
JEFFERSON CITY, MO 65102
1-888-ASK-MODOT (1-888-275-6636)

GARVER, LLC.
7509 NW TIFFANY SPRINGS PARKWAY, SUITE 200
KANSAS CITY, MO 64153
PHONE: (816) 298-6465
CERTIFICATE OF AUTHORITY NO. 2008013090

IF A SEAL IS PRESENT ON THIS SHEET IT HAS BEEN ELECTRONICALLY SEALED AND DATED.

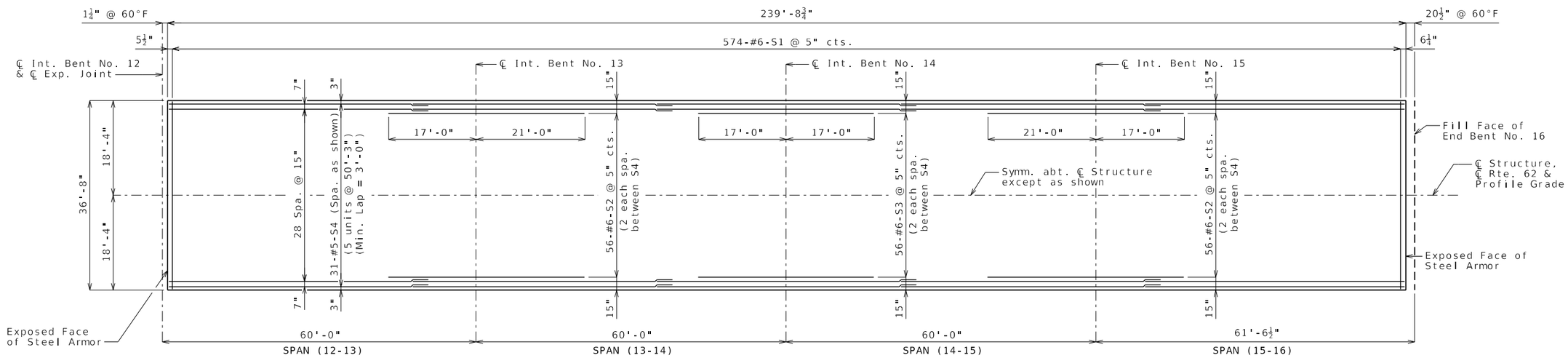

TOP REINFORCEMENT

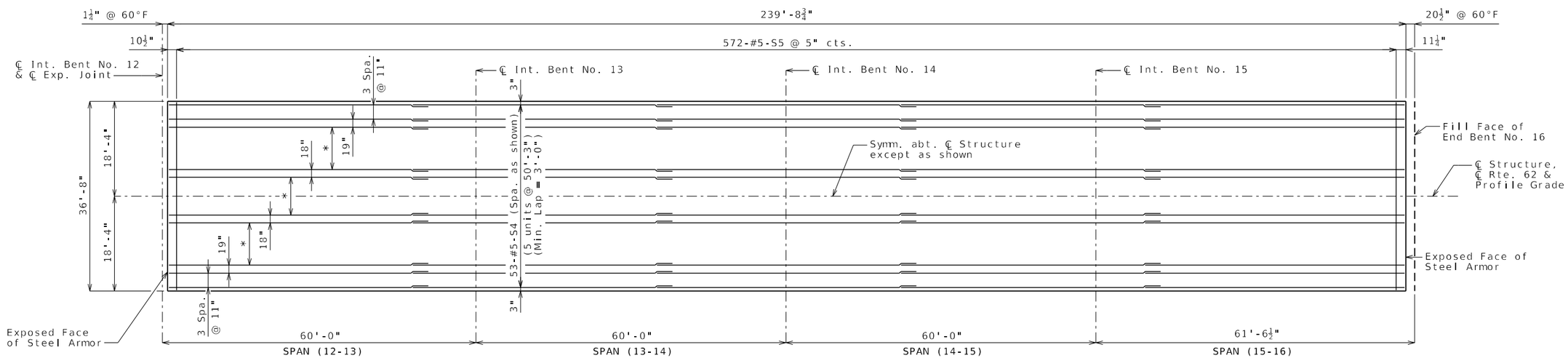

* 14 Spa. @ 7"

BOTTOM REINFORCEMENT

Notes:

Longitudinal dimensions are horizontal.

For Section Thru Slab and Part Plan of Slab at Finger Plate, see Sheet No. 43.

For details and locations of slab drains, see Sheet No. 33.

For details and reinforcement of Type D Barrier not shown, see Sheets No. 45 & 46.

For Slab Pouring Sequence, see Sheet No. 44.

For Theoretical Slab Haunch and Theoretical Bottom of Slab Elevations, see Sheet No. 37.

Longitudinal reinforcing steel shall be placed so that ends shall not be more than 1" from the web of W14x43 or the vertical leg of steel armor of the expansion device.

PLAN OF SLAB SHOWING REINFORCEMENT - UNIT 4

Detailed Oct. 2024
Checked Dec. 2024

Note: This drawing is not to scale. Follow dimensions.

STATE OF MISSOURI
DEREK S. BUTLER
NUMBER PE-2016009628
PROFESSIONAL ENGINEER

THIS SHEET HAS BEEN SIGNED, SEALED AND DATED ELECTRONICALLY

DATE PREPARED	
5/19/2025	
ROUTE 62	STATE MO
DISTRICT BR	SHEET NO. 42
COUNTY DUNKLIN	
JOB NO. JSE0155	
CONTRACT ID.	
PROJECT NO.	
BRIDGE NO. A9436	

DATE	DESCRIPTION

MISSOURI HIGHWAYS AND TRANSPORTATION COMMISSION
105 WEST CAPITOL
JEFFERSON CITY, MO 65102
1-888-ASK-MODOT (1-888-275-6636)

GARVER, LLC.
7509 NW TIFFANY SPRINGS
PARKWAY, SUITE 200
KANSAS CITY, MO 64153
PHONE: (816) 298-6465
CERTIFICATE OF AUTHORITY
NO. 2008013090

IF A SEAL IS PRESENT ON THIS SHEET IT HAS BEEN ELECTRONICALLY SEALED AND DATED.

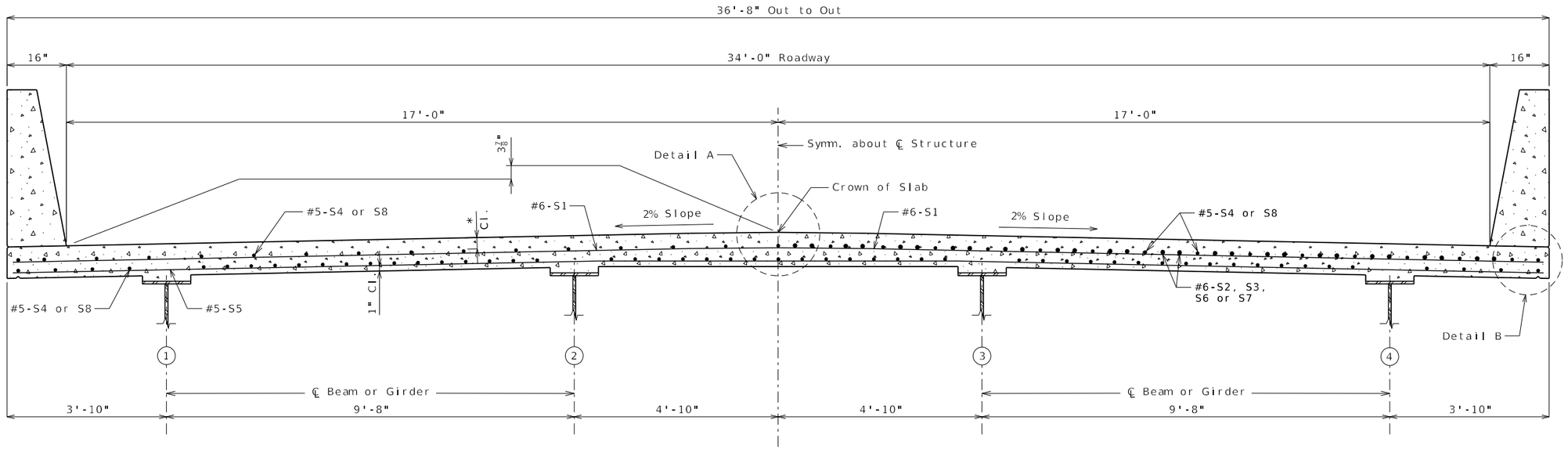

HALF SECTION NEAR MIDSPAN

HALF SECTION NEAR INTERMEDIATE BENT

SECTION THRU SLAB

* $3\frac{1}{8}$" (#5 bars)
3" (#6 bars)

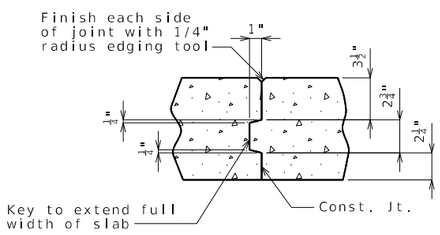

SLAB CONSTRUCTION JOINT

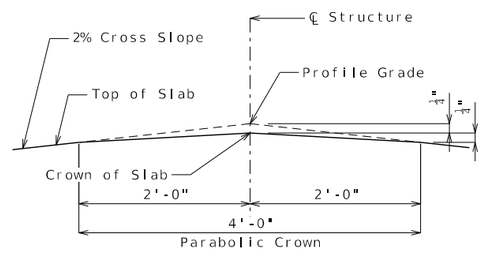

DETAIL A

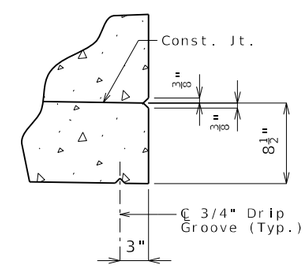

DETAIL B

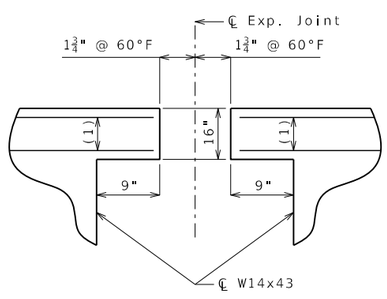

PART PLAN OF SLAB AT FINGER PLATE

(Left side shown, right side similar)
(1) 3-#5-S9 (Equally spaced)(Top and Bottom)

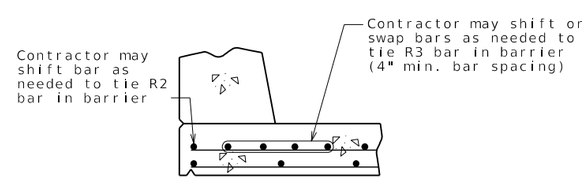

OPTIONAL SHIFTING TOP BARS AT BARRIER

Notes:

For reinforcement of barrier not shown, see Sheets No. 45 & 46.

For Theoretical Bottom of Slab Elevations and Theoretical Slab Haunching Diagram, see Sheets No. 37 & 38.

For Plan of Slab Showing Reinforcement, see Sheets No. 39 thru 42.

For details of optional stay-in-place forms, see Sheet No. 44.

SLAB DETAILS

Detailed Nov. 2024
Checked Dec. 2024

Note: This drawing is not to scale. Follow dimensions.

STATE OF MISSOURI
DEREK S. BUTLER
NUMBER PE-2016009828
PROFESSIONAL ENGINEER

THIS SHEET HAS BEEN SIGNED, SEALED AND DATED ELECTRONICALLY

DATE PREPARED	5/19/2025
ROUTE	62
STATE	MO
DISTRICT	BR
SHEET NO.	43
COUNTY	DUNKLIN
JOB NO.	JSE0155
CONTRACT ID.	
PROJECT NO.	
BRIDGE NO.	A9436

DATE	DESCRIPTION

MISSOURI HIGHWAYS AND TRANSPORTATION COMMISSION

105 WEST CAPITOL
JEFFERSON CITY, MO 65102
1-888-ASK-MODOT (1-888-275-6636)

GARVER, LLC.
7509 NW TIFFANY SPRINGS
PARKWAY, SUITE 200
KANSAS CITY, MO 64153
PHONE: (816) 298-6465
CERTIFICATE OF AUTHORITY
NO. 2008013090

IF A SEAL IS PRESENT ON THIS SHEET IT HAS BEEN ELECTRONICALLY SEALED AND DATED.

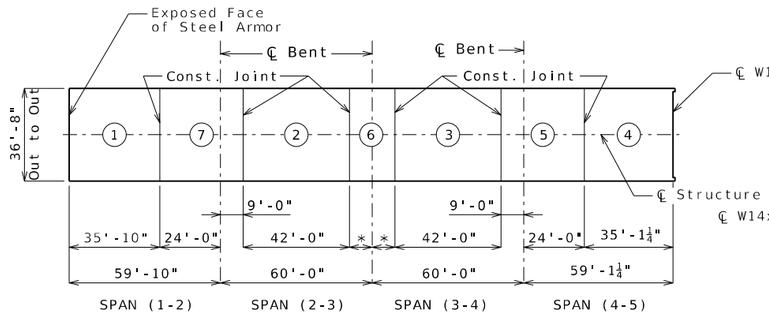

	Sequence of Pours							Min. Rate of Pour Cu. Yds./Hr.	
	Direction							With Retarder	No Retarder
Basic Sequence	1	2	3	4	5	6	7	25	25
	End to 7	7 to 6	6 to 5	5 to End	3 to 4	2 to 3	1 to 2		
Alternate pours to the basic skip sequence are subject to the approval of the engineer in accordance with Sec 703.									
Alternate A Pours	1	7 + 2	6 + 3	5 + 4				25	29
	End to 7	1 to 6	2 to 5	3 to End					
Alternate B Pours	1 + 7 + 2	6 + 3	5 + 4					25	29
	End to 6	2 to 5	3 to End						
Alternate C Pours	1 + 7 + 2	6 + 3 + 5 + 4						25	29
	End to 6	2 to End							
Alternate D Pours	1 + 7 + 2 + 6 + 3 + 5 + 4							25	29
	End to End								

The contractor shall pour and satisfactorily finish the slab pours at the rate given. Retarder, if used, shall be an approved type and retard the set of concrete to 2.5 hours.

SLAB POURING SEQUENCE - UNIT 1

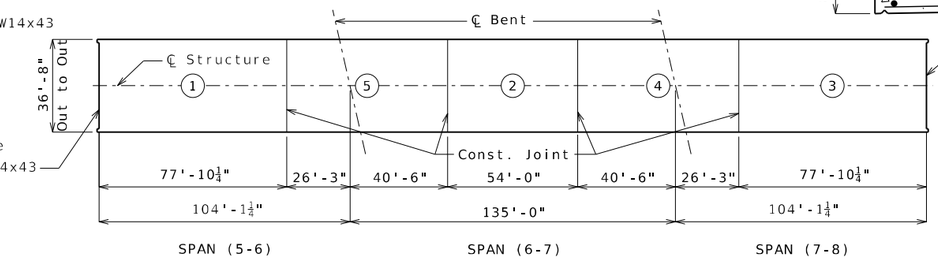

	Sequence of Pours					Min. Rate of Pour Cu. Yds./Hr.	
	Direction					With Retarder	No Retarder
Basic Sequence	1	2	3	4	5	25	25
	Either Direction						
Alternate pours to the basic skip sequence are subject to the approval of the engineer in accordance with Sec 703.							
Alternate A Pours	1	5 + 2	4 + 3			39	65
	End to 5	1 to 4	2 to End				
Alternate B Pours	1 + 5 + 2	4 + 3				39	65
	End to 4	2 to End					
Alternate C Pours	1 + 5 + 2 + 4 + 3					39	65
	End to End						

The contractor shall pour and satisfactorily finish the slab pours at the rate given. Retarder, if used, shall be an approved type and retard the set of concrete to 2.5 hours.

SLAB POURING SEQUENCE - UNIT 2

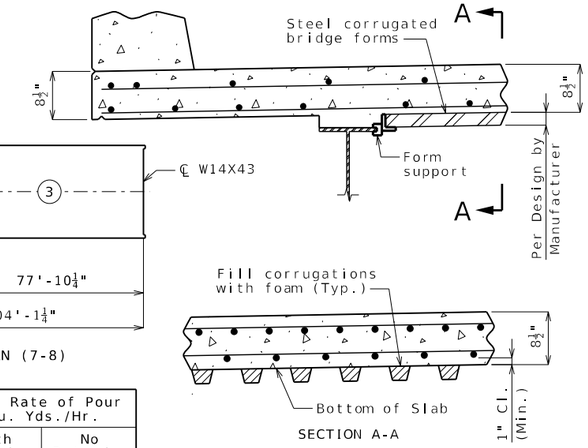

OPTIONAL STAY-IN-PLACE FORM DETAILS

Stay-In-Place Forms:

Corrugated steel forms, supports, closure elements and accessories shall be in accordance with grade requirement and coating designation G165 of ASTM A653. Complete shop drawings of the permanent steel deck forms shall be required in accordance with Sec 1080.

Corrugations of stay-in-place forms shall be filled with an expanded polystyrene material. The polystyrene material shall be placed in the forms with an adhesive in accordance with the manufacturer's recommendations.

Form sheets shall not rest directly on the top of beam or girder flanges. Sheets shall be securely fastened to form supports with a minimum bearing length of one inch on each end. Form supports shall be placed in direct contact with the flange. Drilling holes in the beam or girder flanges will not be permitted. All steel fabrication and construction shall be in accordance with Sec 1080 and 712. Certified field welders will not be required for welding of the form supports.

The design of stay-in-place corrugated steel forms is per manufacturer which shall be in accordance with Sec 703 for false work and forms. Maximum actual weight of corrugated steel forms allowed shall be 4 psf assumed for girder loading.

The contractor shall provide a method of preventing the direct contact of the stay-in-place forms and connection components with uncoated weathering steel members that is approved by the engineer.

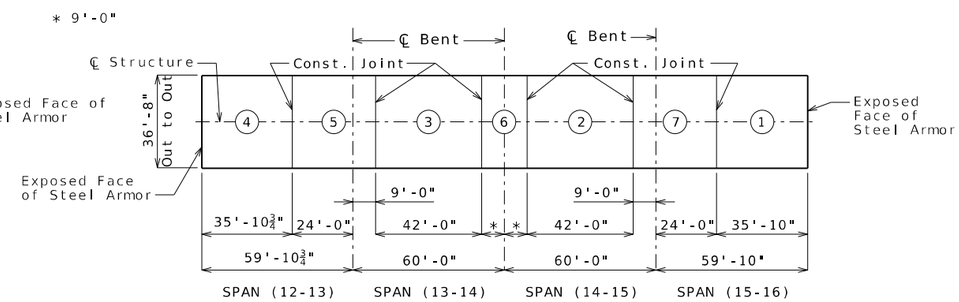

	Sequence of Pours							Min. Rate of Pour Cu. Yds./Hr.	
	Direction							With Retarder	No Retarder
Basic Sequence	1	2	3	4	5	6	7	25	25
	End to 7	7 to 6	6 to 5	5 to End	3 to 4	2 to 3	1 to 2		
Alternate pours to the basic skip sequence are subject to the approval of the engineer in accordance with Sec 703.									
Alternate A Pours	1	7 + 2	6 + 3	5 + 4				25	29
	End to 7	1 to 6	2 to 5	3 to End					
Alternate B Pours	1 + 7 + 2	6 + 3	5 + 4					25	29
	End to 6	2 to 5	3 to End						
Alternate C Pours	1 + 7 + 2	6 + 3 + 5 + 4						25	29
	End to 6	2 to End							
Alternate D Pours	1 + 7 + 2 + 6 + 3 + 5 + 4							25	29
	End to End								

The contractor shall pour and satisfactorily finish the slab pours at the rate given. Retarder, if used, shall be an approved type and retard the set of concrete to 2.5 hours.

SLAB POURING SEQUENCE - UNIT 3

	Sequence of Pours							Min. Rate of Pour Cu. Yds./Hr.	
	Direction							With Retarder	No Retarder
Basic Sequence	1	2	3	4	5	6	7	25	25
	End to 7	7 to 6	6 to 5	5 to End	3 to 4	2 to 3	1 to 2		
Alternate pours to the basic skip sequence are subject to the approval of the engineer in accordance with Sec 703.									
Alternate A Pours	1	7 + 2	6 + 3	5 + 4				25	29
	End to 7	1 to 6	2 to 5	3 to End					
Alternate B Pours	1 + 7 + 2	6 + 3	5 + 4					25	29
	End to 6	2 to 5	3 to End						
Alternate C Pours	1 + 7 + 2	6 + 3 + 5 + 4						25	29
	End to 6	2 to End							
Alternate D Pours	1 + 7 + 2 + 6 + 3 + 5 + 4							25	29
	End to End								

The contractor shall pour and satisfactorily finish the slab pours at the rate given. Retarder, if used, shall be an approved type and retard the set of concrete to 2.5 hours.

SLAB POURING SEQUENCE - UNIT 4

SLAB DETAILS

Detailed Nov. 2024
Checked Dec. 2024

Note: This drawing is not to scale. Follow dimensions.

STATE OF MISSOURI
DEREK S. BUTLER
NUMBER PE-2016009626
PROFESSIONAL ENGINEER
THIS SHEET HAS BEEN SIGNED, SEALED AND DATED ELECTRONICALLY

DATE PREPARED	
5/19/2025	
ROUTE 62	STATE MO
DISTRICT BR	SHEET NO. 44
COUNTY DUNKLIN	
JOB NO. JSE0155	
CONTRACT ID.	
PROJECT NO.	
BRIDGE NO. A9436	

DATE	DESCRIPTION

MISSOURI HIGHWAYS AND TRANSPORTATION COMMISSION
105 WEST CAPITOL
JEFFERSON CITY, MO 65102
1-888-ASK-MODOT (1-888-275-6636)

GARVER, LLC.
7509 NW TIFFANY SPRINGS
PARKWAY, SUITE 200
KANSAS CITY, MO 64153
PHONE: (816) 298-6465
CERTIFICATE OF AUTHORITY
NO. 2008013090

IF A SEAL IS PRESENT ON THIS SHEET IT HAS BEEN ELECTRONICALLY SEALED AND DATED.

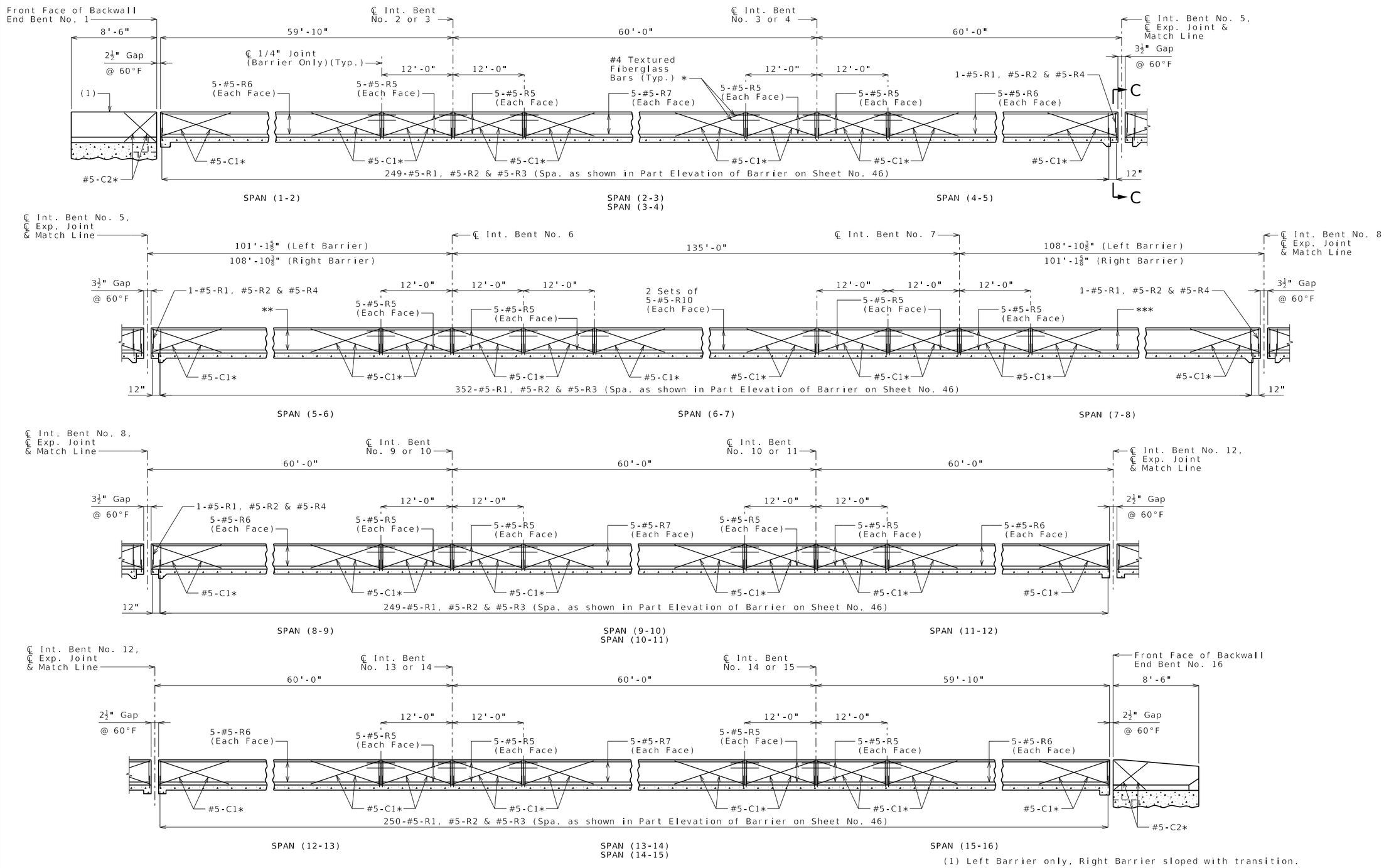

ELEVATION OF BARRIER

(Left Barrier shown, Right Barrier similar)
Longitudinal dimensions are horizontal and measured along gutter line.

(1) Left Barrier only, Right Barrier sloped with transition.

* Slip-formed option only.

** 2 Sets of #5-R8 (Each Face)(Left Barrier)
2 Sets of #5-R9 (Each Face)(Right Barrier)

*** 2 Sets of #5-R9 (Each Face)(Left Barrier)
2 Sets of #5-R8 (Each Face)(Right Barrier)

For General Notes, Section C-C and additional details see Sheet No. 46.

TYPE D BARRIER DETAILS

Detailed Nov. 2024
Checked Dec. 2024

Note: This drawing is not to scale. Follow dimensions.

STATE OF MISSOURI
DEREK S. BUTLER
NUMBER PE-2016009828
PROFESSIONAL ENGINEER

THIS SHEET HAS BEEN SIGNED, SEALED AND DATED ELECTRONICALLY

DATE PREPARED	
7/11/2025	
ROUTE 62	STATE MO
DISTRICT BR	SHEET NO. 45
COUNTY DUNKLIN	
JOB NO. JSE0155	
CONTRACT ID.	
PROJECT NO.	
BRIDGE NO. A9436	

DATE	DESCRIPTION

MISSOURI HIGHWAYS AND TRANSPORTATION COMMISSION
105 WEST CAPITOL
JEFFERSON CITY, MO 65102
1-888-ASK-MODOT (1-888-275-6636)

GARVER, LLC.
7509 NW TIFFANY SPRINGS
PARKWAY, SUITE 200
KANSAS CITY, MO 64153
PHONE: (816) 298-6465
CERTIFICATE OF AUTHORITY
NO. 2008013090

IF A SEAL IS PRESENT ON THIS SHEET IT HAS BEEN ELECTRONICALLY SEALED AND DATED.

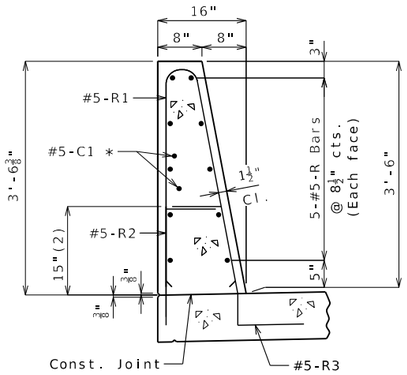

SECTION A-A

Use a minimum lap of 3'-1" for #5 horizontal barrier bars.

The cross-sectional area above the slab is 3.52 square feet.

(2) To top of bar

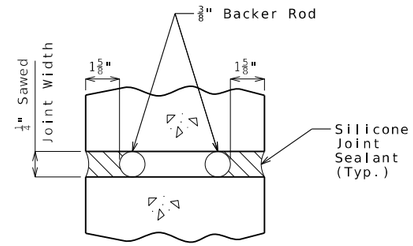

SECTION B-B

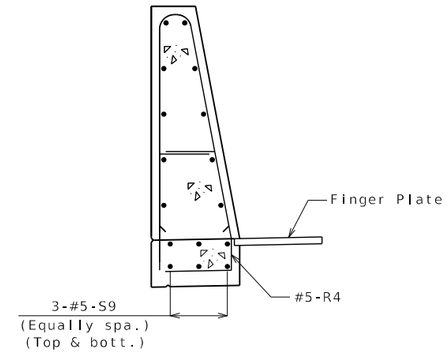

SECTION C-C

(Similar to Section A-A, except as shown)

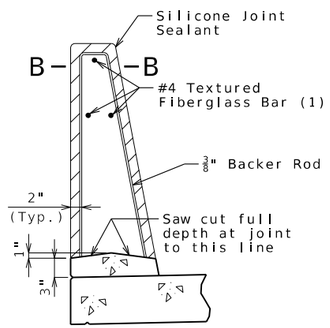

SECTION THRU SAW CUT JOINT

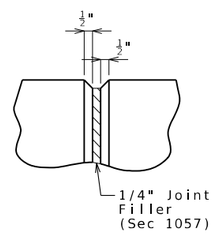

PART ELEVATION AT FORMED JOINT

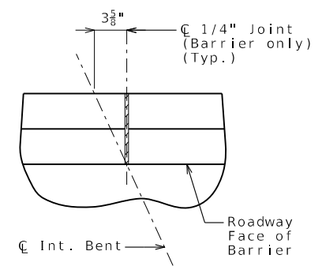

PART PLAN SHOWING JOINT LOCATION

(Int. Bents No. 6 & 7)

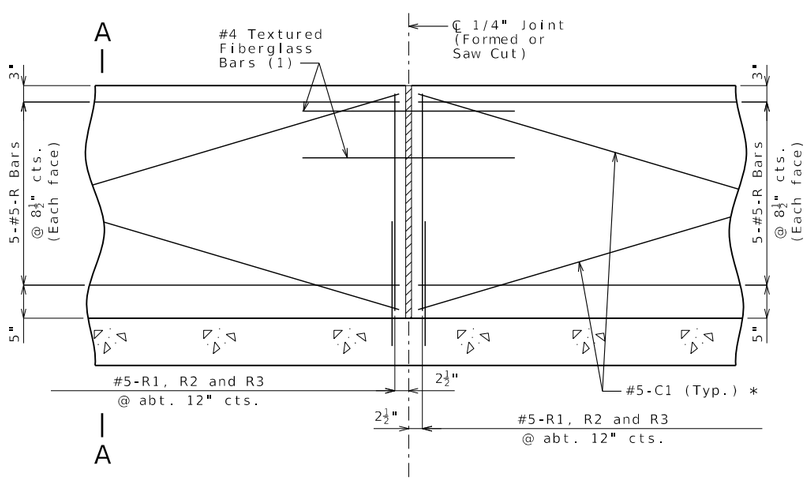

PART ELEVATION OF BARRIER

(1) Four feet long, centered on joint, slip-formed option only

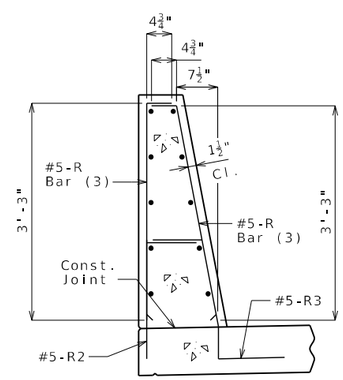

R-BAR PERMISSIBLE ALTERNATE SHAPE

(3) The R1 bar may be separated into two bars as shown, at the contractor's option, only when slip forming is not used. (All dimensions are out to out.)

General Notes:

* Slip-formed option only.

Conventional forming or slip forming may be used. Saw cut joints may be used with conventional forming.

Top of barrier shall be built parallel to grade and barrier joints (except at end bents) normal to grade.

All exposed edges of barrier shall have either a 1/2-inch radius or a 3/8-inch bevel, unless otherwise noted.

Payment for all concrete and reinforcement, complete in place, will be considered completely covered by the contract unit price for Type D Barrier per linear foot.

Concrete in barrier shall be Class B-1.

Measurement of barrier is to the nearest linear foot for each structure, measured along the outside top of slab from end of wing to end of wing.

Concrete traffic barrier delineators shall be placed on top of the barrier as shown on Missouri Standard Plan 617.10 and in accordance with Sec 617. Delineators on bridges with two-lane, two-way traffic shall have retroreflective sheeting on both sides. Concrete traffic barrier delineators will be considered completely covered by the contract unit price for Type D Barrier.

Joint sealant and backer rods shall be in accordance with Sec 717 for silicone joint sealant for saw cut and formed joints.

For slip-formed option, both sides of barrier shall have a vertically broomed finish and the top shall have a transversely broomed finish.

Note:
For location of Section C-C, see Sheet No. 45.

TYPE D BARRIER DETAILS

Note: This drawing is not to scale. Follow dimensions.

Detailed Nov. 2024
Checked Dec. 2024

STATE OF MISSOURI
DEREK S. BUTLER
NUMBER PE-2016009828
PROFESSIONAL ENGINEER

THIS SHEET HAS BEEN SIGNED- SEALED AND DATED ELECTRONICALLY

DATE PREPARED	
5/19/2025	
ROUTE 62	STATE MO
DISTRICT BR	SHEET NO. 46
COUNTY DUNKLIN	
JOB NO. JSE0155	
CONTRACT ID.	
PROJECT NO.	
BRIDGE NO. A9436	

DATE	DESCRIPTION

MISSOURI HIGHWAYS AND TRANSPORTATION COMMISSION
105 WEST CAPITOL
JEFFERSON CITY, MO 65102
1-888-ASK-MODOT (1-888-275-6636)

GARVER, LLC.
7509 NW TIFFANY SPRINGS
PARKWAY, SUITE 200
KANSAS CITY, MO 64153
PHONE: (816) 298-6465
CERTIFICATE OF AUTHORITY
NO. 2008013090

IF A SEAL IS PRESENT ON THIS SHEET IT HAS BEEN ELECTRONICALLY SEALED AND DATED.

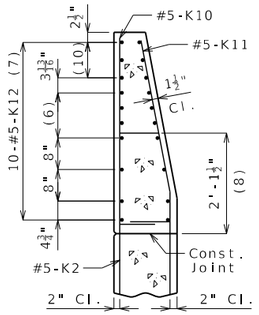

SECTION A-A

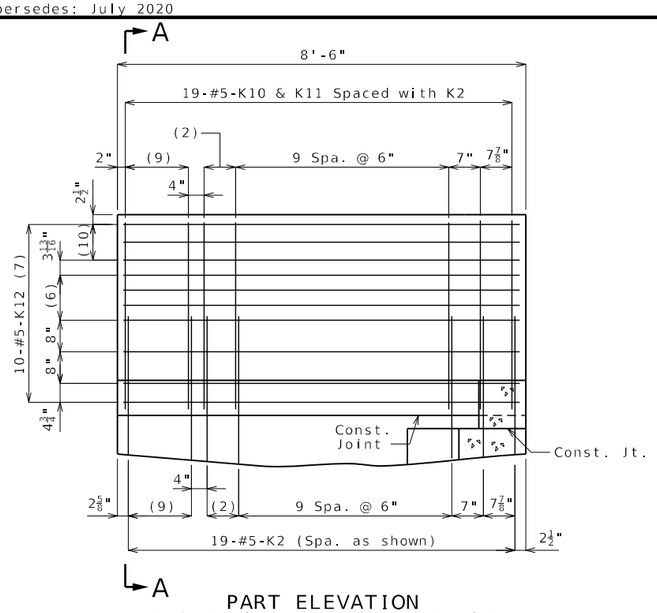

PART ELEVATION
(Left Barrier at End Bent No. 1 only)

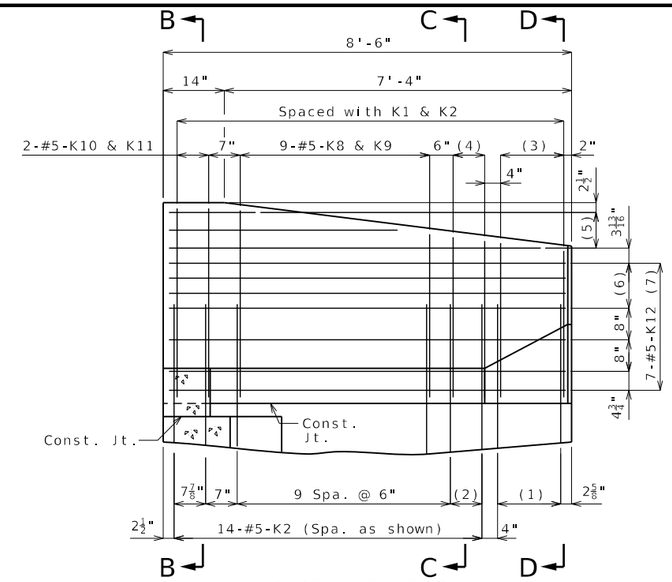

PART ELEVATION
(Right Barrier at End Bent No. 1, Left and Right Barrier at End Bent No. 16)

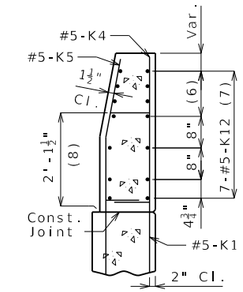

SECTION D-D

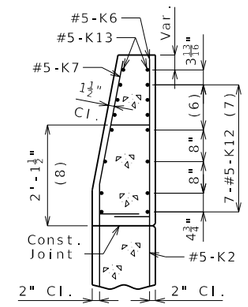

SECTION C-C

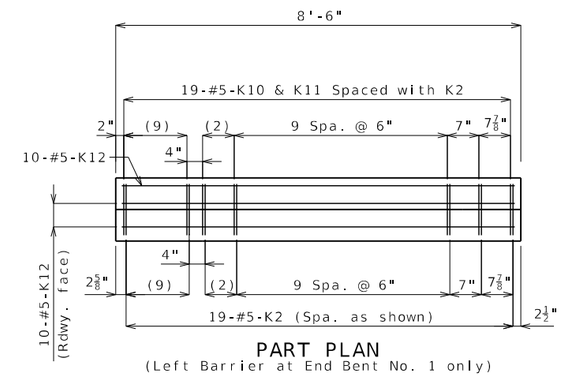

PART PLAN
(Left Barrier at End Bent No. 1 only)

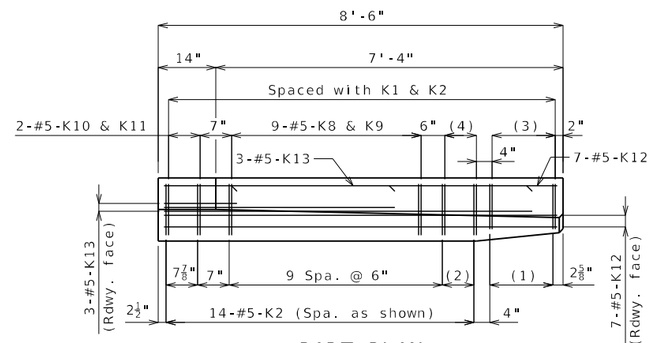

PART PLAN
(Right Barrier at End Bent No. 1, Left and Right Barrier at End Bent No. 16)

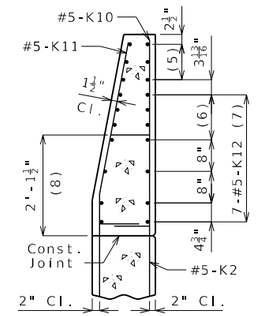

SECTION B-B

(1) 5-#5-K1 @ 4" cts.
(2) 2 spaces @ 4"
(3) 5-#5-K4 & K5
(4) 3-#5-K6 & K7
(5) 3-#5-K13 @ $4\frac{1}{2}$" cts., each face
(6) 3 Spaces @ $3\frac{13}{16}$"
(7) Spaced as shown, each face
(8) To top of bar
(9) 4 spaces @ 4"
(10) 2 spaces @ $4\frac{1}{2}$"

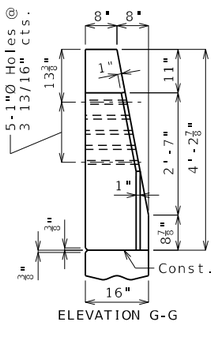

ELEVATION G-G

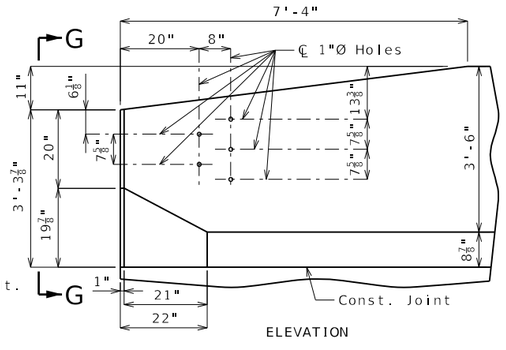

ELEVATION

∗ Transition to zero at Type A curb for gutter lines to match.

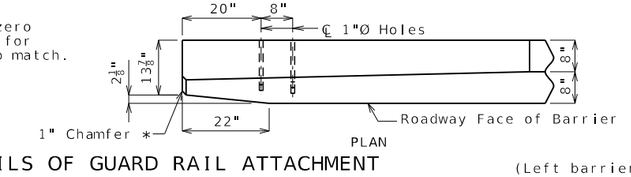

PLAN

DETAILS OF GUARD RAIL ATTACHMENT

General Notes:

Reinforcing Steel:

Concrete traffic barrier delineators shall be placed on top of the barrier as shown on Missouri Standard Plan 617.10 and in accordance with Sec 617. Delineators on bridges with two-lane, two-way traffic shall have retroreflective sheeting on both sides. Concrete traffic barrier delineators will be considered completely covered by the contract unit price for Type D Barrier.

Minimum clearance to reinforcing steel shall be 1 1/2" except as shown for bars embedded into end bent.

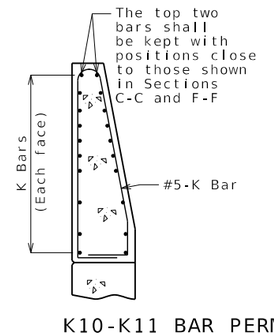

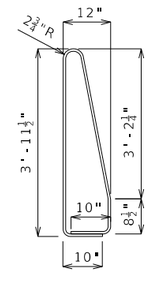

K10-K11 BAR PERMISSIBLE ALTERNATE SHAPE

(Other K bars not shown for clarity)

The K10-K11 bar combination may be furnished as one bar as shown, at the contractor's option.

All dimensions are out to out.

TYPE D BARRIER AT END BENTS

(Left barrier at End Bent No. 1 shown, right barrier and End Bent No. 16 similar except as noted)

Detailed Nov. 2024
Checked Jan. 2025

Note: This drawing is not to scale. Follow dimensions.

STATE OF MISSOURI
DEREK S. BUTLER
NUMBER PE-2016009626
PROFESSIONAL ENGINEER

THIS SHEET HAS BEEN SIGNED, SEALED AND DATED ELECTRONICALLY

DATE PREPARED	7/11/2025
ROUTE 62	STATE MO
DISTRICT BR	SHEET NO. 47
COUNTY	DUNKLIN
JOB NO.	JSE0155
CONTRACT ID.	
PROJECT NO.	
BRIDGE NO.	A9436

DATE	DESCRIPTION

MISSOURI HIGHWAYS AND TRANSPORTATION COMMISSION
105 WEST CAPITOL
JEFFERSON CITY, MO 65102
1-888-ASK-MODOT (1-888-275-6636)

GARVER, LLC.
7509 NW TIFFANY SPRINGS PARKWAY, SUITE 200
KANSAS CITY, MO 64153
PHONE: (816) 298-6465
CERTIFICATE OF AUTHORITY NO. 2008013090

IF A SEAL IS PRESENT ON THIS SHEET IT HAS BEEN ELECTRONICALLY SEALED AND DATED.

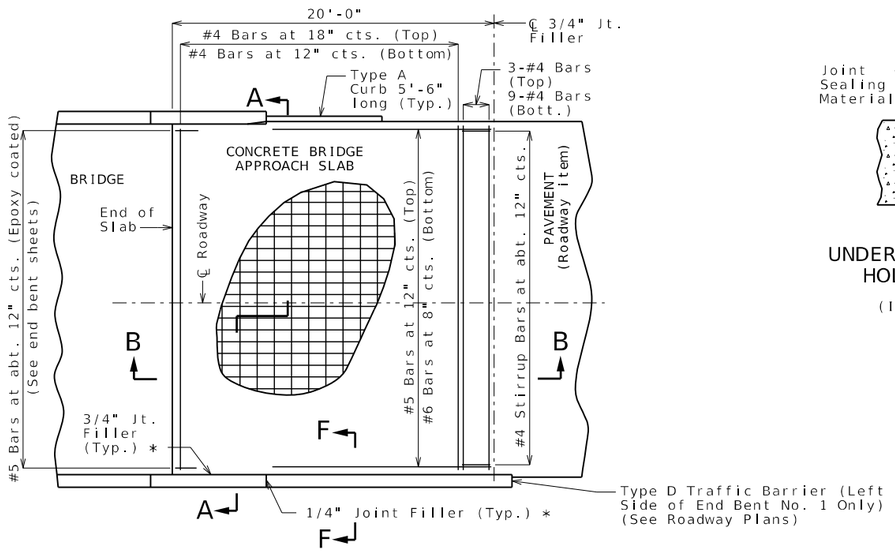

PART PLAN OF SQUARED STRUCTURE
(Skewed structure similar)

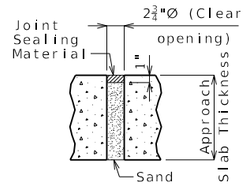

UNDERSEAL ACCESS HOLE DETAIL
(If required)

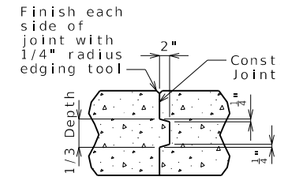

CONSTRUCTION JOINT DETAIL

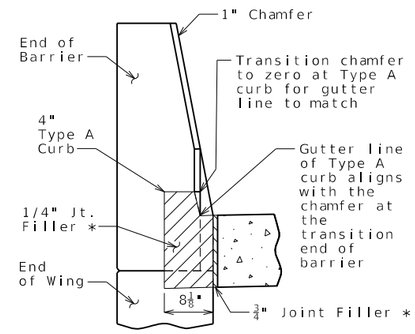

SECTION BETWEEN CURB AND BARRIER

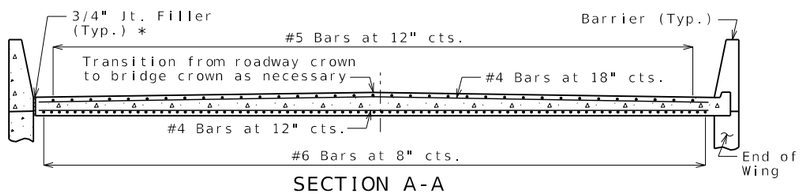

SECTION A-A
With the approval of the engineer, the contractor may crown the bottom of the approach slab to match the crown of the roadway surface.

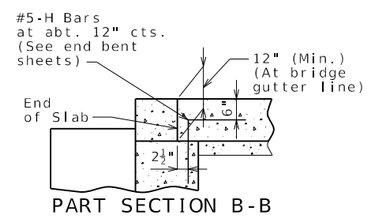

PART SECTION B-B
(Non-integral end bent)

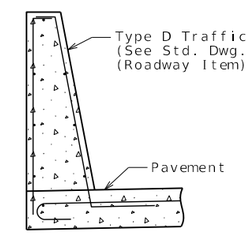

SECTION F-F
(Left side of End Bent No. 1 only)

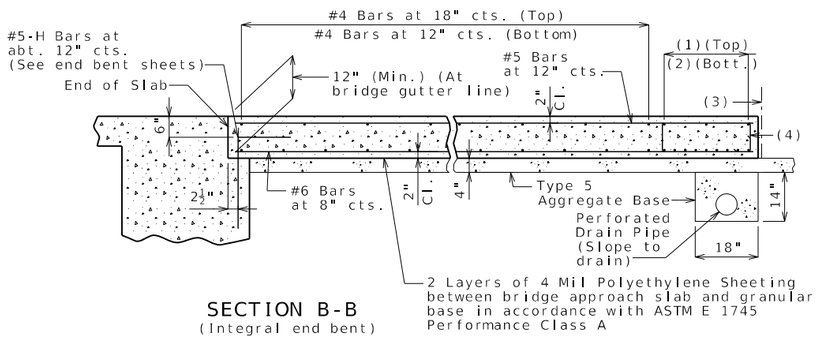

SECTION B-B
(Integral end bent)

(1) 3-#4 Bars

(2) 9-#4 Bars

(3) ℄ 3/4" Jt. Filler

(4) #4 Stirrup Bars at abt. 12" cts.; 2'-0"x 8" (Min.) out to out; Actual length = 5'-10" (Min.); 90° stirrup hook at bottom; Stirrup height (8") and actual length vary due to crown.

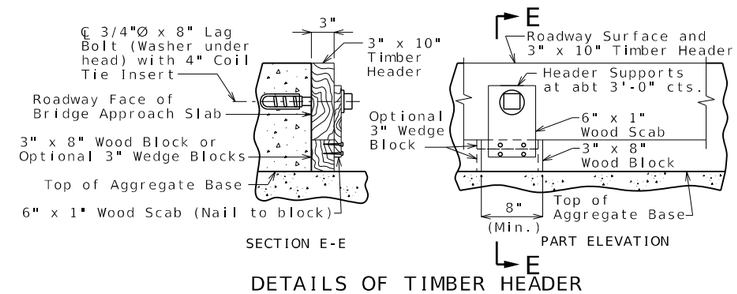

DETAILS OF TIMBER HEADER
Remove timber header when pavement is placed.

General Notes:

The contractor shall pour and satisfactorily finish the bridge slab before placing the bridge approach slab.

All concrete for the bridge approach slab shall be in accordance with Sec 503 (f'c = 4,000 psi).

The reinforcing steel in the bridge approach slab shall be epoxy coated Grade 60 with fy = 60,000 psi.

Longitudinal construction joints in bridge approach slab shall be aligned with longitudinal construction joints in bridge slab.

Minimum clearance to reinforcing steel shall be 1 1/2", unless otherwise shown.

The reinforcing steel in the bridge approach slab shall be continuous. The transverse reinforcing steel may be made continuous by providing a minimum lap splice of 23 inches for #4 bars, or by mechanical bar splice.

All joint filler shall be in accordance with Sec 1057 for preformed fiber expansion joint filler except as noted.

Payment for furnishing all materials, labor and excavation necessary to construct the concrete bridge approach slab, including the timber header, underdrain, Type 5 aggregate base, joint filler, and all other appurtenances and incidental work as shown on this sheet, complete in place, will be considered completely covered by the contract unit price for Bridge Approach Slab (Minor) per square yard.

See Missouri Standard Plan 609.00 for details of Type A curb.

Drain pipe may be either 6" diameter corrugated metallic-coated pipe underdrain, 4" diameter corrugated polyvinyl chloride (PVC) drain pipe, or 4" diameter corrugated polyethylene (PE) drain pipe.

* Seal joint between vertical face of approach slab and wing with sealant in accordance with Sec 717 for silicone joint sealant for saw cut and formed joints.

BRIDGE APPROACH SLAB (MINOR)

Integral end bents shown, non-integral end bent similar.

Detailed Nov. 2024
Checked Jan. 2025

Note: This drawing is not to scale. Follow dimensions.

STATE OF MISSOURI
DEREK S. BUTLER
NUMBER PE-2016009828
PROFESSIONAL ENGINEER
THIS SHEET HAS BEEN SIGNED, SEALED AND DATED ELECTRONICALLY

DATE PREPARED	
7/11/2025	
ROUTE 62	STATE MO
DISTRICT BR	SHEET NO. 48
COUNTY DUNKLIN	
JOB NO. JSE0155	
CONTRACT ID.	
PROJECT NO.	
BRIDGE NO. A9436	

DATE	DESCRIPTION

IF A SEAL IS PRESENT ON THIS SHEET IT HAS BEEN ELECTRONICALLY SEALED AND DATED.

MISSOURI HIGHWAYS AND TRANSPORTATION COMMISSION
105 WEST CAPITOL
JEFFERSON CITY, MO 65102
1-888-ASK-MODOT (1-888-275-6636)

GARVER, LLC.
7509 NW TIFFANY SPRINGS PARKWAY, SUITE 200
KANSAS CITY, MO 64153
PHONE: (816) 298-6465
CERTIFICATE OF AUTHORITY NO. 2008013090

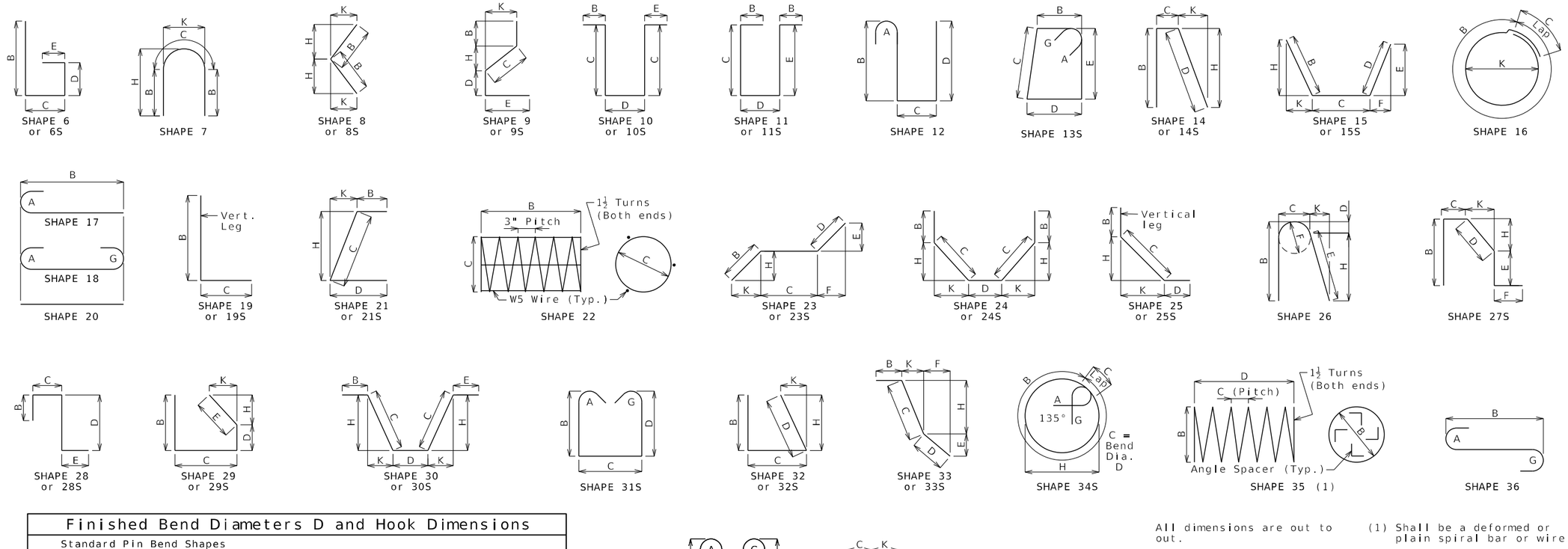

Finished Bend Diameters D and Hook Dimensions

Standard Pin Bend Shapes

Size	Case	D	A or G 90°	A or G 180°	J 180°
#4	1	3"	8"	6"	4"
#5	1	3¾"	10"	7"	5"
#6	1	4½"	12"	8¼"	6"
#7	2	5¼"	14"	9¾"	7"
	3	7"	15"	11½"	8¾"
#8	2	6"	16"	11"	8"
	3	8"	17"	13¼"	10"
#9	1	9½"	19½"	15½"	11¾"
#10	1	10¾"	22"	17½"	13¼"
#11	1	12"	24½"	19½"	14⅞"
#14	1	18¼"	31¼"	27½"	21⅝"
#18	1	24"	41½"	36¼"	28½"

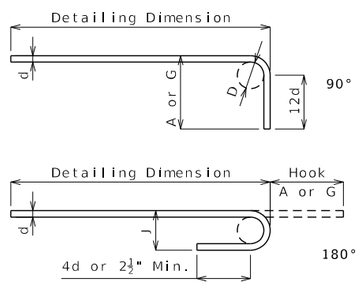

Stirrup Pin Bend Shapes (S)

Size	Case	D	A or G 90°	A or G 135°	A or G 180°	H 135°	J 180°
#4	2	2"	4½"	4½"	5"	2⅝"	3"
	3	3"	5"	5¼"	6"	3"	4"
#5	2	2½"	5¾"	5¾"	5¾"	3⅝"	3¾"
	3	3¾"	6¼"	6½"	7"	3⅞"	5"
#6	1	4½"	12"	7¾"	8¼"	4⅝"	6"

Applicable for all grades of steel.

Case 1 applies to all reinforcement. Case 2 applies to all reinforcement except for galvanized bars. Case 3 applies to galvanized bars only.

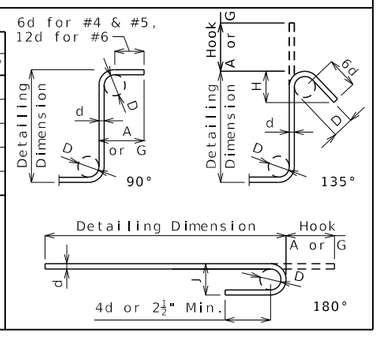

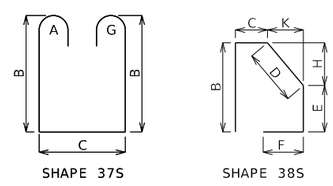

BENDING DIAGRAMS

All dimensions are out to out.

Shapes ending with an S shall be bent in accordance with stirrup pin bend shapes.

Unless otherwise noted, finished bending diameter D is the same for all bends of a shape.

(1) Shall be a deformed or plain spiral bar or wire.

Four angle or channel spacers are required for each column spiral. Spacers are to be placed on inside of spirals. Length and weight of column spirals do not include splices or spacers.

Reinforcing Steel Totals (Pounds)

	Size	Substructure Plain	Substructure Epoxy	Superstructure Slab Plain	Superstructure Slab Epoxy	Superstructure Barrier	Superstructure Slip Form	Entire Bridge Plain	Entire Bridge Epoxy
By Size	W5	397	296	0	0	0	0	397	296
	4	1,829	784	0	0	0	0	1,829	784
	5	22,204	11,609	0	193,870	52,825	2,752	22,204	261,056
	6	4,527	6,707	0	179,912	0	0	4,527	186,619
	7	0	0	0	0	0	0	0	0
	8	14,034	5,054	0	0	0	0	14,034	5,054
	9	31,144	18,447	0	0	0	0	31,144	18,447
	10	0	0	0	0	0	0	0	0
	11	0	0	0	0	0	0	0	0
	14	0	0	0	0	0	0	0	0
	18	0	0	0	0	0	0	0	0
By Type		74,135	42,897	0	373,782	52,825	2,752	74,135	472,256

All superstructure reinforcing steel shall be epoxy coated unless otherwise specified.

BENDING DIAGRAMS AND REINFORCING STEEL TOTALS

Detailed Dec. 2024
Checked Feb. 2025

Note: This drawing is not to scale. Follow dimensions.

STATE OF MISSOURI
DEREK S. BUTLER
NUMBER PE-2016009626
PROFESSIONAL ENGINEER
THIS SHEET HAS BEEN SIGNED, SEALED AND DATED ELECTRONICALLY

DATE PREPARED	
7/11/2025	
ROUTE 62	STATE MO
DISTRICT BR	SHEET NO. 49
COUNTY DUNKLIN	
JOB NO. JSE0155	
CONTRACT ID.	
PROJECT NO.	
BRIDGE NO. A9436	

DATE	DESCRIPTION

IF A SEAL IS PRESENT ON THIS SHEET IT HAS BEEN ELECTRONICALLY SEALED AND DATED.

MISSOURI HIGHWAYS AND TRANSPORTATION COMMISSION
105 WEST CAPITOL
JEFFERSON CITY, MO 65102
1-888-ASK-MODOT (1-888-275-6636)

GARVER, LLC.
7509 NW TIFFANY SPRINGS PARKWAY, SUITE 200
KANSAS CITY, MO 64153
PHONE: (816) 298-6465
CERTIFICATE OF AUTHORITY NO. 2008013090

Bill of Reinforcing Steel

No. Req.	Size/ Mark	Location	Codes C	Codes SH	Codes V	Dimensions B ft in.	C ft in.	D ft in.	E ft in.	F ft in.	H ft in.	K ft in.	Nom. Length ft in.	Actual Length ft in.	Weight lb
		SUBSTRUCTURE													
		END BENT NO. 1													
8	6 F100	BEAM	E	14		5 7.00	21.50	4 3.50			3 0.50	3 0.50	11 8	11 6	139
10	6 F101	WINGWALL	E	15		12.75	5 0.00	12.75	9.00	9.00	9.00	9.00	7 2	7 1	107
12	8 H100	BEAM	E	20		36 4.00							36 4	36 4	1,165
4	6 H101	BEAM	E	20		36 4.00							36 4	36 4	219
8	6 H102	BACKWALL	E	20		36 4.00							36 4	36 4	437
4	6 H103	BACKWALL	E	20		33 8.00							33 8	33 8	203
16	6 H104	WINGWALL	E	20		8 2.00							8 2	8 2	197
16	8 H105	WINGWALL	E	20		8 2.00							8 2	8 2	349
12	8 H106	BEAM	E	18		5 5.00							7 3	7 3	233
100	5 P100	PILE	E	34S		6 8.00	2.50				2 1.50		7 10	7 10	818
51	6 U100	BACKWALL	E	10S			5 6.00	14.00					12 2	11 10	907
51	5 U101	BACKWALL	E	10S			2 6.00	8.00					5 8	5 5	289
34	5 U102	BACKWALL	E	19		2 0.00	15.00						3 3	3 2	113
32	5 U103	BEAM	E	13S		4 2.00	2 6.50	4 2.00	2 6.50				14 5	14 1	471
17	5 U104	BEAM	E	10S			2 6.50	4 2.00					9 3	9 0	160
12	4 U105	BEAM	E	10S			9.00	4 2.00					5 8	5 6	45
8	4 U106	CURTAIN WALL	E	10S			4 6.00	3.75					9 4	9 2	49
16	6 V100	WINGWALL	E	20		5 9.00							5 9	5 9	139
28	6 V101	WINGWALL	E	20		2 10.00							2 10	2 10	120
6	6 V102	BEAM	E	20		2 7.00							2 7	2 7	24
16	4 V103	CURTAIN WALL	E	20		4 9.00							4 9	4 9	51
50	9 V104	PILE	E	17		12 11.00							14 3	14 3	2,423
8	W5 W100	BEAM	E	22		18.00	9.00						25 9	25 2	35
		INT. BENTS NO. 2													
		THRU 4, 9 THRU													
		11 & 13 THRU 15													
144	8 H200	BEAM		18		34 8.00							36 6	36 6	14,034
54	6 H201	BEAM		20		34 8.00							34 8	34 8	2,812
90	6 H202	BEAM		10			12.00	4 8.00					6 8	6 6	879
72	4 H203	BEAM		20		4 8.00							4 8	4 8	225
990	5 P200	PILE		34S		6 8.00	2.50				2 1.50		7 10	7 10	8,089
324	5 U200	BEAM		13S		4 8.00	3 8.00	4 8.00	3 8.00				17 8	17 4	5,858
297	5 U201	BEAM		10S			3 8.00	4 8.00					12 0	11 10	3,666
360	4 U202	BEAM		10S			2 4.00	8.00					5 4	5 2	1,243
450	9 V200	PILE		17		11 8.00							13 0	13 0	19,890
72	W5 W200	BEAM		22		18.00	9.00						25 9	25 2	309
		INT. BENTS													
		NO. 5 & 8													
50	9 H500	BEAM	E	18		34 8.00							37 3	37 3	6,333
20	6 H501	BEAM	E	20		34 8.00							34 8	34 8	1,042
20	6 H502	BEAM	E	10			12.00	5 2.00					7 2	7 0	211
8	6 H503	BEAM	E	10			12.00	2 5.00					4 5	4 3	52
32	4 H504	BEAM	E	20		2 5.00							2 5	2 5	52
240	5 P500	PILE	E	34S		6 8.00	2.50				2 1.50		7 10	7 10	1,961
72	5 U500	BEAM	E	13S		5 2.00	4 2.00	5 2.00	4 2.00				19 8	19 4	1,452
66	5 U501	BEAM	E	10S			4 2.00	5 2.00					13 6	13 4	918
138	5 U502	BEAM	E	10S			4 3.00	2 5.00					10 11	10 8	1,536
40	4 U503	BEAM	E	10S			2 4.00	8.00					5 4	5 2	139
40	4 U504	BEAM	E	10S			2 5.00	8.00					5 6	5 2	139
100	9 V500	PILE	E	17		12 11.00							14 3	14 3	4,845
16	W5 W500	BEAM	E	22		18.00	9.00						25 9	25 2	69
16	W5 W501	BEAM	E	22		2 1.00	9.00						33 1	32 4	88

Bill of Reinforcing Steel

No. Req.	Size/ Mark	Location	Codes C	Codes SH	Codes V	Dimensions B ft in.	C ft in.	D ft in.	E ft in.	F ft in.	H ft in.	K ft in.	Nom. Length ft in.	Actual Length ft in.	Weight lb
		INT. BENTS													
		NO. 6 & 7													
40	9 H600	BEAM		18		34 8.00							37 3	37 3	5,066
12	6 H601	BEAM		20		34 8.00							34 8	34 8	625
20	6 H602	BEAM		10			12.00	5 2.00					7 2	7 0	211
16	4 H603	BEAM		20		5 3.00							5 3	5 3	57
220	5 P600	PILE		34S		8 1.25	2.50				2 7.00		9 4	9 4	2,142
80	5 U600	BEAM		13S		5 2.00	4 2.00	5 2.00	4 2.00				19 8	19 4	1,614
60	5 U601	BEAM		10S			4 2.00	5 2.00					13 6	13 4	835
88	4 U602	BEAM		10S			2 4.00	8.00					5 4	5 2	304
140	9 V600	PILE		17		11 8.00							13 0	13 0	6,188
16	W5 W600	BEAM		22		2 1.00	9.00						33 1	32 4	88
		INT. BENT NO. 12													
16	8 H1200	BEAM	E	18		34 8.00							36 6	36 6	1,560
6	6 H1201	BEAM	E	20		34 8.00							34 8	34 8	313
10	6 H1202	BEAM	E	10			12.00	4 8.00					6 8	6 6	98
8	4 H1203	BEAM	E	20		4 8.00							4 8	4 8	25
120	5 P1200	PILE	E	34S		6 8.00	2.50				2 1.50		7 10	7 10	981
36	5 U1200	BEAM	E	13S		4 8.00	3 8.00	4 8.00	3 8.00				17 8	17 4	651
33	5 U1201	BEAM	E	10S			3 8.00	4 8.00					12 0	11 10	408
40	4 U1202	BEAM	E	10S			2 4.00	8.00					5 4	5 2	139
50	9 V1200	PILE	E	17		12 11.00							14 3	14 3	2,423
16	W5 W1200	BEAM	E	22		18.00	9.00						25 9	25 2	69
		END BENT NO. 16													
8	6 F1600	BEAM	E	14		5 7.00	21.50	4 3.50			3 0.50	3 0.50	11 8	11 6	139
10	6 F1601	WINGWALL	E	15		12.75	5 0.00	12.75	9.00	9.00	9.00	9.00	7 2	7 1	107
12	8 H1600	BEAM	E	20		36 4.00							36 4	36 4	1,165
4	6 H1601	BEAM	E	20		36 4.00							36 4	36 4	219
8	6 H1602	BACKWALL	E	20		36 4.00							36 4	36 4	437
4	6 H1603	BACKWALL	E	20		33 8.00							33 8	33 8	203
16	6 H1604	WINGWALL	E	20		8 2.00							8 2	8 2	197
16	8 H1605	WINGWALL	E	20		8 2.00							8 2	8 2	349
12	8 H1606	BEAM	E	18		5 5.00							7 3	7 3	233
100	5 P1600	PILE	E	34S		6 8.00	2.50				2 1.50		7 10	7 10	818
51	6 U1600	BACKWALL	E	10S			5 6.00	14.00					12 2	11 10	907
51	5 U1601	BACKWALL	E	10S			2 6.00	8.00					5 8	5 5	289
34	5 U1602	BACKWALL	E	19		2 0.00	15.00						3 3	3 2	113
32	5 U1603	BEAM	E	13S		4 2.00	2 6.50	4 2.00	2 6.50				14 5	14 1	471
17	5 U1604	BEAM	E	10S			2 6.50	4 2.00					9 3	9 0	160
12	4 U1605	BEAM	E	10S			9.00	4 2.00					5 8	5 6	45
8	4 U1606	CURTAIN WALL	E	10S			4 6.00	3.75					9 4	9 2	49
16	6 V1600	WINGWALL	E	20		5 9.00							5 9	5 9	139
28	6 V1601	WINGWALL	E	20		3 0.00							3 0	3 0	127
6	6 V1602	BEAM	E	20		2 7.00							2 7	2 7	24
16	4 V1603	CURTAIN WALL	E	20		4 9.00							4 9	4 9	51
50	9 V1604	PILE	E	17		12 11.00							14 3	14 3	2,423
8	W5 W1600	BEAM	E	22		18.00	9.00						25 9	25 2	35
		SUPERSTRUCTURE													
		SLAB													
2540	6 S1	SLAB	E	20		36 5.00							36 5	36 5	138,933
336	6 S2	SLAB	E	20		38 0.00							38 0	38 0	19,178
168	6 S3	SLAB	E	20		34 0.00							34 0	34 0	8,580
1260	5 S4	SLAB	E	20		50 3.00							50 3	50 3	66,038
2536	5 S5	SLAB	E	20		36 5.00							36 5	36 5	96,324
112	6 S6	SLAB	E	20		58 7.00							58 7	58 7	9,856
112	6 S7	SLAB	E	20		20 0.00							20 0	20 0	3,365
504	5 S8	SLAB	E	20		59 8.00							59 8	59 8	31,366
48	5 S9	SLAB	E	20		2 10.00							2 10	2 10	142

Nominal lengths are based on out to out dimensions shown in bending diagrams and are listed to the nearest inch for fabricator's use. Actual lengths are measured along centerline bar to the nearest inch. Weights are based on actual lengths.

For bending diagrams and steel reinforcing totals, see Sheet No. 49.

Detailed Dec. 2024
Checked Feb. 2025

All bars shall be Grade 60.

Note: This drawing is not to scale. Follow dimensions.

Codes: C = Required coatings, where E = Epoxy Coated and G = Galvanized.

SH = Required shape, see bending diagrams.

V = Sets of varied bars and number of bars of each length. Bar dimensions vary in equal increments between dimensions shown on this line and the following line and the actual length dimension shown on this line and the following line vary by the specified increment.

BILL OF REINFORCING STEEL

STATE OF MISSOURI
DEREK S. BUTLER
NUMBER PE-2016009828
PROFESSIONAL ENGINEER

THIS SHEET HAS BEEN SIGNED, SEALED AND DATED ELECTRONICALLY

DATE PREPARED 5/19/2025
ROUTE 62 | STATE MO
DISTRICT BR | SHEET NO. 50
COUNTY DUNKLIN
JOB NO. JSE0155
CONTRACT ID.
PROJECT NO.
BRIDGE NO. A9436

DESCRIPTION | DATE

MISSOURI HIGHWAYS AND TRANSPORTATION COMMISSION
105 WEST CAPITOL
JEFFERSON CITY, MO 65102
1-888-ASK-MODOT (1-888-275-6636)

GARVER, LLC.
7509 NW TIFFANY SPRINGS PARKWAY, SUITE 200
KANSAS CITY, MO 64153
PHONE: (816) 298-6465
CERTIFICATE OF AUTHORITY NO. 2008013090

IF A SEAL IS PRESENT ON THIS SHEET IT HAS BEEN ELECTRONICALLY SEALED AND DATED.

Bill of Reinforcing Steel

No. Req.	Size/ Mark	Location	Codes C	SH	V	Dimensions B ft in.	C ft in.	D ft in.	E ft in.	F ft in.	H ft in.	K ft in.	Nom. Length ft in.	Actual Length ft in.	Weight lb
		TYPE D BARRIER													
15	5 K1	BARRIER	E	27S		4 4.50	9.25	5.38	3 11.25		5.25	1.00	9 6	9 4	147
61	5 K2	BARRIER	E	27S		4 4.50	9.25	14.50	3 2.25		14.25	2.75	9 7	9 4	594
15	5 K4	BARRIER	E	19S	4	3 1.00	10.00						3 11	3 10	62
		INCR = 0.50"				3 3.00	10.00						4 1	4 0	
15	5 K5	BARRIER	E	38S	4			18.50	18.00	8.25	18.00	4.00	3 9	3 7	58
		INCR = 0.50"						20.50	18.00	8.25	20.00	4.50	3 11	3 9	
9	5 K6	BARRIER	E	19S		3 3.25	10.00						4 1	4 0	38
9	5 K7	BARRIER	E	38S				2 6.50	8.75	10.00	2 5.75	6.25	4 1	4 0	38
27	5 K8	BARRIER	E	19S	4	3 5.00	10.00						4 3	4 2	125
		INCR = 0.75"				3 11.00	10.00						4 9	4 8	
27	5 K9	BARRIER	E	38S	4			2 8.00	8.75	10.00	2 7.50	6.75	4 3	4 1	123
		INCR = 0.75"						3 2.00	8.75	10.00	3 1.50	7.75	4 9	4 7	
25	5 K10	BARRIER	E	19S		3 11.50	10.00						4 9	4 8	122
25	5 K11	BARRIER	E	38S				3 3.00	8.75	10.00	3 2.00	7.75	4 10	4 8	122
62	5 K12	BARRIER	E	20		8 3.00							8 3	8 3	534
18	5 K13	BARRIER	E	20	8	1 6.00							1 6	1 6	85
		INCR = 36.00"				7 6.00							7 6	7 6	
2208	5 R1	BARRIER	E	26		3 3.00	5.50	2.25	3 1.00	5.50	3 0.75	6.75	6 10	6 9	15,545
2208	5 R2	BARRIER	E	19S		20.50	9.50						2 6	2 5	5,566
2200	5 R3	BARRIER	E	27S			9.50	15.25	5.00	12.00	15.00	3.00	3 6	3 3	7,458
8	5 R4	BARRIER	E	38S			9.50	15.25	5.00	12.00	15.00	3.00	3 6	3 3	28
480	5 R5	BARRIER	E	20		11 9.00							11 9	11 9	5,883
120	5 R6	BARRIER	E	20		47 7.00							47 7	47 7	5,956
120	5 R7	BARRIER	E	20		35 9.00							35 9	35 9	4,475
40	5 R8	BARRIER	E	20		45 11.00							45 11	45 11	1,916
40	5 R9	BARRIER	E	20		49 9.00							49 9	49 9	2,076
40	5 R10	BARRIER	E	20		44 11.00							44 11	44 11	1,874
		SLIP FORM BARRIER													
216	5 C1	SLIP FORM	E	20		12 0.00							12 0	12 0	2,704
8	5 C2	SLIP FORM	E	20		5 9.00							5 9	5 9	48

Bill of Reinforcing Steel

No. Req.	Size/ Mark	Location	Codes C	SH	V	Dimensions B ft in.	C ft in.	D ft in.	E ft in.	F ft in.	H ft in.	K ft in.	Nom. Length ft in.	Actual Length ft in.	Weight lb

Nominal lengths are based on out to out dimensions shown in bending diagrams and are listed to the nearest inch for fabricator's use. Actual lengths are measured along centerline bar to the nearest inch. Weights are based on actual lengths.

For bending diagrams and steel reinforcing totals, see Sheet No. 49.

All bars shall be Grade 60.

Codes: C = Required coatings, where E = Epoxy Coated and G = Galvanized.

SH = Required shape, see bending diagrams.

V = Sets of varied bars and number of bars of each length. Bar dimensions vary in equal increments between dimensions shown on this line and the following line and the actual length dimension shown on this line and the following line vary by the specified increment.

Detailed Dec. 2024
Checked Feb. 2025

BILL OF REINFORCING STEEL

Note: This drawing is not to scale. Follow dimensions.

STATE OF MISSOURI
DEREK S. BUTLER
NUMBER PE-2016009828
PROFESSIONAL ENGINEER

THIS SHEET HAS BEEN SIGNED, SEALED AND DATED ELECTRONICALLY

DATE PREPARED 7/11/2025
ROUTE 62
STATE MO
DISTRICT BR
SHEET NO. 51
COUNTY DUNKLIN
JOB NO. JSE0155
CONTRACT ID.
PROJECT NO.
BRIDGE NO. A9436

DESCRIPTION
DATE

MISSOURI HIGHWAYS AND TRANSPORTATION COMMISSION
105 WEST CAPITOL
JEFFERSON CITY, MO 65102
1-888-ASK-MODOT (1-888-275-6636)

GARVER, LLC.
7509 NW TIFFANY SPRINGS
PARKWAY, SUITE 200
KANSAS CITY, MO 64153
PHONE: (816) 298-6465
CERTIFICATE OF AUTHORITY
NO. 2008013090

IF A SEAL IS PRESENT ON THIS SHEET IT HAS BEEN ELECTRONICALLY SEALED AND DATED.

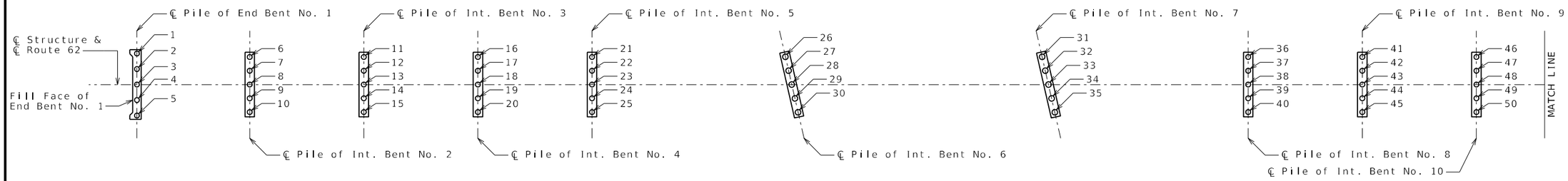

PART PLAN SHOWING PILE NUMBERING FOR RECORDING AS-BUILT PILE DATA

As-Built Pile Data

Pile No.	Length in Place (ft)	PDA Nom. Axial Compressive Resistance (kips)	PDA End of Drive Blow Count (blows/in.)	Actual End of Drive Blow Count (blows/in.)	Remarks
					End Bent No. 1
1					
2					
3					
4					
5					
					Intermediate Bent No. 2
6					
7					
8					
9					
10					
					Intermediate Bent No. 3
11					
12					
13					
14					
15					
					Intermediate Bent No. 4
16					
17					
18					
19					
20					

As-Built Pile Data

Pile No.	Length in Place (ft)	PDA Nom. Axial Compressive Resistance (kips)	PDA End of Drive Blow Count (blows/in.)	Actual End of Drive Blow Count (blows/in.)	Remarks
					Intermediate Bent No. 5
21					
22					
23					
24					
25					
					Intermediate Bent No. 6
26					
27					
28					
29					
30					
					Intermediate Bent No. 7
31					
32					
33					
34					
35					
					Intermediate Bent No. 8
36					
37					
38					
39					
40					

As-Built Pile Data

Pile No.	Length in Place (ft)	PDA Nom. Axial Compressive Resistance (kips)	PDA End of Drive Blow Count (blows/in.)	Actual End of Drive Blow Count (blows/in.)	Remarks
					Intermediate Bent No. 9
41					
42					
43					
44					
45					
					Intermediate Bent No. 10
46					
47					
48					
49					
50					

Note:
Indicate in remarks column:
A. Pile type and grade
B. Batter
C. Driven to practical refusal
D. PDA test pile
E. Minimum tip elevation controlled
(Use when actual blow count is less than PDA blow count due to minimum tip elevation requirement. A plus sign (+) shall be placed after the PDA nominal axial compressive resistance value indicating actual value is higher than PDA value.)

This sheet to be completed by MoDOT construction personnel.

AS-BUILT PILE DATA

Detailed Dec. 2024
Checked Jan. 2025

Note: This drawing is not to scale. Follow dimensions.

STATE OF MISSOURI
DEREK S. BUTLER
NUMBER PE-2016009628
PROFESSIONAL ENGINEER

THIS SHEET HAS BEEN SIGNED, SEALED AND DATED ELECTRONICALLY

DATE PREPARED 5/19/2025
ROUTE 62 | STATE MO
DISTRICT BR | SHEET NO. 52
COUNTY DUNKLIN
JOB NO. JSE0155
CONTRACT ID.
PROJECT NO.
BRIDGE NO. A9436

DESCRIPTION | DATE

MISSOURI HIGHWAYS AND TRANSPORTATION COMMISSION
105 WEST CAPITOL
JEFFERSON CITY, MO 65102
1-888-ASK-MODOT (1-888-275-6636)

GARVER, LLC.
7509 NW TIFFANY SPRINGS
PARKWAY, SUITE 200
KANSAS CITY, MO 64153
PHONE: (816) 298-6465
CERTIFICATE OF AUTHORITY
NO. 2008013090

IF A SEAL IS PRESENT ON THIS SHEET IT HAS BEEN ELECTRONICALLY SEALED AND DATED.

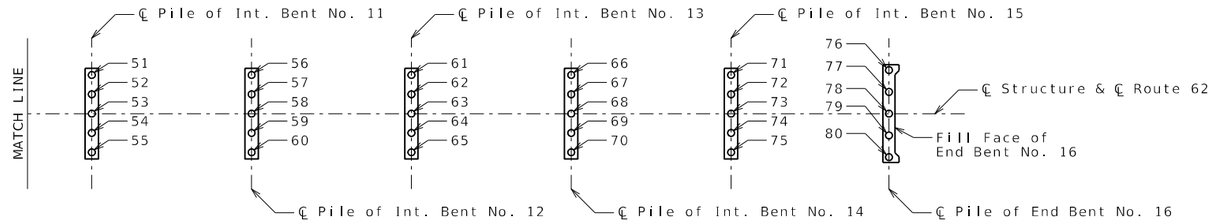

PART PLAN SHOWING PILE NUMBERING FOR RECORDING AS-BUILT PILE DATA

As-Built Pile Data					
Pile No.	Length in Place (ft)	PDA Nom. Axial Compressive Resistance (kips)	PDA End of Drive Blow Count (blows/in.)	Actual End of Drive Blow Count (blows/in.)	Remarks
					Intermediate Bent No. 11
51					
52					
53					
54					
55					
					Intermediate Bent No. 12
56					
57					
58					
59					
60					
					Intermediate Bent No. 13
61					
62					
63					
64					
65					
					Intermediate Bent No. 14
66					
67					
68					
69					
70					

As-Built Pile Data					
Pile No.	Length in Place (ft)	PDA Nom. Axial Compressive Resistance (kips)	PDA End of Drive Blow Count (blows/in.)	Actual End of Drive Blow Count (blows/in.)	Remarks
					Intermediate Bent No. 15
71					
72					
73					
74					
75					
					End Bent No. 16
76					
77					
78					
79					
80					

Note:
Indicate in remarks column:
A. Pile type and grade
B. Batter
C. Driven to practical refusal
D. PDA test pile
E. Minimum tip elevation controlled
(Use when actual blow count is less than PDA blow count due to minimum tip elevation requirement. A plus sign (+) shall be placed after the PDA nominal axial compressive resistance value indicating actual value is higher than PDA value.)

This sheet to be completed by MoDOT construction personnel.

AS-BUILT PILE DATA

Detailed Dec. 2024
Checked Jan. 2025

Note: This drawing is not to scale. Follow dimensions.

STATE OF MISSOURI
DEREK S. BUTLER
NUMBER PE-2016009628
PROFESSIONAL ENGINEER

THIS SHEET HAS BEEN SIGNED, SEALED AND DATED ELECTRONICALLY

DATE PREPARED 5/19/2025
ROUTE 62 | STATE MO
DISTRICT BR | SHEET NO. 53
COUNTY DUNKLIN
JOB NO. JSE0155
CONTRACT ID.
PROJECT NO.
BRIDGE NO. A9436

DESCRIPTION	DATE

MISSOURI HIGHWAYS AND TRANSPORTATION COMMISSION
105 WEST CAPITOL
JEFFERSON CITY, MO 65102
1-888-ASK-MODOT (1-888-275-6636)

GARVER, LLC.
7509 NW TIFFANY SPRINGS PARKWAY, SUITE 200
KANSAS CITY, MO 64153
PHONE: (816) 298-6465
CERTIFICATE OF AUTHORITY NO. 2008013090

IF A SEAL IS PRESENT ON THIS SHEET IT HAS BEEN ELECTRONICALLY SEALED AND DATED.

Surface Elevation: 292.9
Datum: NAVD88
Completion Date: 9/5/23
Northing: 226544.84
Easting: 926455.58

SHEAR STRENGTH, tsf: Δ - UU/2, ○ - QU/2, □ - PP/2 (0.5, 1.0, 1.5, 2.0, 2.5)
STANDARD PENETRATION RESISTANCE ▲ N-VALUE (BLOWS PER FOOT) (ASTM D 1586)
WATER CONTENT, % PL 10 20 30 40 50 LL

DEPTH IN FEET	ELEVATION IN FEET	DESCRIPTION OF MATERIAL	DRY UNIT WEIGHT (pcf) SPT BLOW COUNTS (N60) CORE RECOVERY/RQD	SAMPLES
		Medium stiff, gray, LEAN CLAY - (CL)		
5	287.9		2-2-2 (6)	SS1
			95	ST2
10	282.9		0-0-3 (5)	SS3
		Medium dense, brown, poorly-graded SAND, little clay - SC		
15	277.9		3-6-6 (19)	SS4
		Soft to medium stiff, gray, LEAN CLAY - (CL)		
20	272.9		0-0-2 (3)	SS5
			96	ST6
25	267.9		0-2-2 (6)	SS7
			96	ST8
30	262.9		1-2-5 (11)	SS9
		Stiff, gray SILT, trace clay - (ML)		
35	257.9		2-5-5 (16)	SS10
		Medium stiff, gray SILT, little clay - (MH)		
40	252.9		3-3-4 (11)	SS11
		Soft to medium stiff, gray, LEAN CLAY - (CL)		
45	247.9		2-1-1 (3)	SS12
50	242.9		1-2-3 (8)	SS13

Drawn by: ADP Date: 11/21/23 | Checked by: CKK Date: 11/30/23 | App'vd. by: CKK Date: 8/22/24

GROUNDWATER DATA
ENCOUNTERED AT 15 FEET ▽

DRILLING DATA
__ AUGER 3 3/4" HOLLOW STEM
WASHBORING FROM 86 FEET
FD - Smith & Co. DRILLER HMB LOGGER
CME 750 DRILL RIG
HAMMER TYPE Auto
HAMMER EFFICIENCY 94 %

REMARKS:

GEOTECHNOLOGY
A Universal Engineering Sciences Company

Route 62 over St. Francis River
Dunklin County, MO and Clay County, AR

LOG OF BORING: B-2
Page 1 of 3

Project No. J042646.01

NOTE: STRATIFICATION LINES REPRESENT THE APPROXIMATE BOUNDARIES BETWEEN SOIL TYPES AND THE TRANSITION MAY BE GRADUAL. GRAPHIC LOG FOR ILLUSTRATION PURPOSES ONLY.

N60 BORING LOG (WITH PAGE #) J042646.01 US 62 OVER ST. FRAN.GPJ 00 CLCNE.ME.GDT 5/19/25

Surface Elevation: 292.9
Datum: NAVD88
Completion Date: 9/5/23
Northing: 226544.84
Easting: 926455.58

SHEAR STRENGTH, tsf: Δ - UU/2, ○ - QU/2, □ - PP/2 (0.5, 1.0, 1.5, 2.0, 2.5)
STANDARD PENETRATION RESISTANCE ▲ N-VALUE (BLOWS PER FOOT) (ASTM D 1586)
WATER CONTENT, % PL 10 20 30 40 50 LL

DEPTH IN FEET	ELEVATION IN FEET	DESCRIPTION OF MATERIAL	DRY UNIT WEIGHT (pcf) SPT BLOW COUNTS (N60) CORE RECOVERY/RQD	SAMPLES
		Soft to medium stiff, gray, LEAN CLAY - (CL) *(continued)*		
55	237.9		2-4-4 (13)	SS14
60	232.9	some silt	3-3-3 (9)	SS15
		Medium stiff to stiff, gray SILT - (ML)		
65	227.9		1-2-2 (6)	SS16
70	222.9		2-2-5 (11)	SS17
75	217.9		2-4-6 (16)	SS18
		Dense to medium dense, gray, porly-graded SAND and to little clay - SC		
80	212.9		2-8-13 (33)	SS19
85	207.9	loose	13-1-3 (6)	SS20
90	202.9		6-5-8 (20)	SS21
95	197.9		7-6-6 (19)	SS22
		Medium dense, brown poorly-graded SAND - SP		
100	192.9		7-6-7 (20)	SS23
		Medium stiff, gray, LEAN CLAY and sand - CL		

Drawn by: ADP Date: 11/21/23 | Checked by: CKK Date: 11/30/23 | App'vd. by: CKK Date: 8/22/24

GROUNDWATER DATA
ENCOUNTERED AT 15 FEET ▽

DRILLING DATA
__ AUGER 3 3/4" HOLLOW STEM
WASHBORING FROM 86 FEET
FD - Smith & Co. DRILLER HMB LOGGER
CME 750 DRILL RIG
HAMMER TYPE Auto
HAMMER EFFICIENCY 94 %

REMARKS:

GEOTECHNOLOGY
A Universal Engineering Sciences Company

Route 62 over St. Francis River
Dunklin County, MO and Clay County, AR

LOG OF BORING: B-2
Page 2 of 3

Project No. J042646.01

NOTE: STRATIFICATION LINES REPRESENT THE APPROXIMATE BOUNDARIES BETWEEN SOIL TYPES AND THE TRANSITION MAY BE GRADUAL. GRAPHIC LOG FOR ILLUSTRATION PURPOSES ONLY.

N60 BORING LOG (WITH PAGE #) J042646.01 US 62 OVER ST. FRAN.GPJ 00 CLCNE.ME.GDT 5/19/25

STATE OF MISSOURI
DEREK S. BUTLER
NUMBER PE-2016009626
PROFESSIONAL ENGINEER
THIS SHEET HAS BEEN SIGNED, SEALED AND DATED ELECTRONICALLY

DATE PREPARED 5/19/2025
ROUTE 62 | STATE MO
DISTRICT BR | SHEET NO. 54
COUNTY DUNKLIN
JOB NO. JSE0155
CONTRACT ID.
PROJECT NO.
BRIDGE NO. A9436

DESCRIPTION | DATE

MISSOURI HIGHWAYS AND TRANSPORTATION COMMISSION
105 WEST CAPITOL
JEFFERSON CITY, MO 65102
1-888-ASK-MODOT (1-888-275-6636)

GARVER, LLC.
7509 NW TIFFANY SPRINGS PARKWAY, SUITE 200
KANSAS CITY, MO 64153
PHONE: (816) 298-6465
CERTIFICATE OF AUTHORITY NO. 2008013090

IF A SEAL IS PRESENT ON THIS SHEET IT HAS BEEN ELECTRONICALLY SEALED AND DATED.

Coordinates shown in boring logs are State Plane. See roadway plans for projection factor.

BORING DATA

Note: for locations of borings, see Sheets No. 1 & 2.

Detailed Dec. 2024
Checked Jan. 2025

Note: This drawing is not to scale. Follow dimensions.

B_A9436_054_SE0155_Boring1.dgn 9:52:30 AM 5/19/2025

Surface Elevation: 292.9 | Completion Date: 9/5/23
Datum: NAVD88 | Northing: 226544.84 | Easting: 926455.58

DEPTH IN FEET	ELEVATION IN FEET	DESCRIPTION OF MATERIAL	DRY UNIT WEIGHT (pcf) / SPT BLOW COUNTS (N60) / CORE RECOVERY/RQD	SAMPLES
		Medium stiff, gray, LEAN CLAY and sand - CL *(continued)*	2-1-4 (8)	SS24
105	187.9	Very dense, brown, poorly-graded SAND, little to trace silt - SP	14-22-27 (77)	SS25
110	182.9		10-14-19 (52)	SS26
115	177.9		14-17-19 (56)	SS27
120	172.9	dense	12-14-16 (47)	SS28
125	167.9		10-18-22 (63)	SS29
130	162.9	Brown GRAVEL cuttings		
135	157.9			
140	152.9			
145	147.9			
150	142.9	Boring terminated at 150 feet.		
155	137.9			

SHEAR STRENGTH, tsf: Δ - UU/2 ○ - QU/2 □ - PP/2 (0.5, 1.0, 1.5, 2.0, 2.5)
STANDARD PENETRATION RESISTANCE ▲ N-VALUE (BLOWS PER FOOT) (ASTM D 1586)
WATER CONTENT, % PL (10, 20, 30, 40, 50) LL

NOTE: STRATIFICATION LINES REPRESENT THE APPROXIMATE BOUNDARIES BETWEEN SOIL TYPES AND THE TRANSITION MAY BE GRADUAL. GRAPHIC LOG FOR ILLUSTRATION PURPOSES ONLY.

N60 BORING LOG (WITH PAGE #) J042646.01 US 62 OVER ST. FRAN.GPJ 00 CLCNE ME.GDT 5/19/25

GROUNDWATER DATA
ENCOUNTERED AT 15 FEET ▽

DRILLING DATA
__ AUGER 3 3/4" HOLLOW STEM
WASHBORING FROM 86 FEET
FD - Smith & Co. DRILLER HMB LOGGER
CME 750 DRILL RIG
HAMMER TYPE Auto
HAMMER EFFICIENCY 94 %

REMARKS:

Drawn by: ADP	Checked by: CKK	App'vd. by: CKK
Date: 11/21/23	Date: 11/30/23	Date: 8/22/24

GEOTECHNOLOGY — A Universal Engineering Sciences Company

Route 62 over St. Francis River
Dunklin County, MO and Clay County, AR

LOG OF BORING: B-2
Page 3 of 3

Project No. J042646.01

Surface Elevation: 293.9 | Completion Date: 9/7/23
Datum: NAVD88 | Northing: 226656.85 | Easting: 926521.62

DEPTH IN FEET	ELEVATION IN FEET	DESCRIPTION OF MATERIAL	DRY UNIT WEIGHT (pcf) / SPT BLOW COUNTS (N60) / CORE RECOVERY/RQD	SAMPLES
		Medium stiff to very soft, gray, LEAN CLAY - (CL)	104	ST1
5	288.9		0-1-1 (3)	SS2
			0-1-2 (5)	SS3
10	283.9		*	ST4
15	278.9		1-1-3 (6)	SS5
			0-0-0 (0)	SS6
20	273.9	Medium dense, gray, poorly-graded SAND and clay - SC		
25	268.9		3-6-5 (17)	SS7
		Very soft, gray, LEAN CLAY, trace sand - CL	0-0-0 (0)	SS8
30	263.9	Stiff, gray SILT, trace clay - (ML)		
35	258.9		4-3-5 (13)	SS9
		Stiff, gray SILT, trace to some sand - (MH)		
40	253.9		3-3-5 (13)	SS10
45	248.9		11-13-16 (44)	SS11
		Medium stiff to stiff, gray, LEAN CLAY - (CL)		
50	243.9		2-3-5 (13)	SS12

SHEAR STRENGTH, tsf: Δ - UU/2 ○ - QU/2 □ - PP/2 (0.5, 1.0, 1.5, 2.0, 2.5)
STANDARD PENETRATION RESISTANCE ▲ N-VALUE (BLOWS PER FOOT) (ASTM D 1586)
WATER CONTENT, % PL (10, 20, 30, 40, 50) LL — 67 >>

NOTE: STRATIFICATION LINES REPRESENT THE APPROXIMATE BOUNDARIES BETWEEN SOIL TYPES AND THE TRANSITION MAY BE GRADUAL. GRAPHIC LOG FOR ILLUSTRATION PURPOSES ONLY.

N60 BORING LOG (WITH PAGE #) J042646.01 US 62 OVER ST. FRAN.GPJ 00 CLCNE ME.GDT 5/19/25

GROUNDWATER DATA
ENCOUNTERED AT 14.5 FEET ▽

DRILLING DATA
__ AUGER 3 3/4" HOLLOW STEM
WASHBORING FROM 31 FEET
FD - Smith & Co. DRILLER JWU LOGGER
CME 750 DRILL RIG
HAMMER TYPE Auto
HAMMER EFFICIENCY 94 %

REMARKS:

Drawn by: ADP	Checked by: CKK	App'vd. by: CKK
Date: 11/21/23	Date: 11/30/23	Date: 8/22/24

GEOTECHNOLOGY — A Universal Engineering Sciences Company

Route 62 over St. Francis River
Dunklin County, MO and Clay County, AR

LOG OF BORING: B-3
Page 1 of 3

Project No. J042646.01

Coordinates shown in boring logs are State Plane. See roadway plans for projection factor.

BORING DATA

Note: for locations of borings, see Sheets No. 1 & 2.

Detailed Dec. 2024
Checked Jan. 2025

Note: This drawing is not to scale. Follow dimensions.

STATE OF MISSOURI — DEREK S. BUTLER — NUMBER PE-2016009626 — PROFESSIONAL ENGINEER

THIS SHEET HAS BEEN SIGNED, SEALED AND DATED ELECTRONICALLY

IF A SEAL IS PRESENT ON THIS SHEET IT HAS BEEN ELECTRONICALLY SEALED AND DATED.

DATE PREPARED	
5/19/2025	
ROUTE 62	STATE MO
DISTRICT BR	SHEET NO. 55
COUNTY DUNKLIN	
JOB NO. JSE0155	
CONTRACT ID.	
PROJECT NO.	
BRIDGE NO. A9436	

DATE	DESCRIPTION

MISSOURI HIGHWAYS AND TRANSPORTATION COMMISSION
105 WEST CAPITOL
JEFFERSON CITY, MO 65102
1-888-ASK-MODOT (1-888-275-6636)

GARVER, LLC.
7509 NW TIFFANY SPRINGS PARKWAY, SUITE 200
KANSAS CITY, MO 64153
PHONE: (816) 298-6465
CERTIFICATE OF AUTHORITY NO. 2008013090

Surface Elevation: 293.9 | Completion Date: 9/7/23
Datum: NAVD88 | Northing: 226656.85 | Easting: 926521.62

SHEAR STRENGTH, tsf: Δ - UU/2, ○ - QU/2, □ - PP/2 (0.5, 1.0, 1.5, 2.0, 2.5)
STANDARD PENETRATION RESISTANCE ▲ N-VALUE (BLOWS PER FOOT) (ASTM D 1586)
WATER CONTENT, % PL — LL (10, 20, 30, 40, 50)

DEPTH IN FEET	ELEVATION IN FEET	DESCRIPTION OF MATERIAL	DRY UNIT WEIGHT (pcf) SPT BLOW COUNTS (N60) CORE RECOVERY/RQD	SAMPLES
		Medium stiff to stiff, gray, LEAN CLAY - (CL) *(continued)*		
55	238.9		0-3-4 (11)	SS13
60	233.9	some silt	4-4-5 (14)	SS14
		Very soft to to stiff, gray SILT - (ML)		
65	228.9		2-2-2 (6)	SS15
70	223.9		0-0-0 (0)	SS16
75	218.9		4-4-6 (16)	SS17
		Medium stiff, gray, LEAN CLAY, some sand - CL		
80	213.9		0-0-4 (6)	SS18
		Very dense, gray, well-graded SAND, little clay, little gravel - SW-SC		
85	208.9		17-26-35 (96)	SS19
		Medium stiff, gray, LEAN CLAY and sand - CL		
90	203.9		1-1-2 (5)	SS20
		Medium dense, gray, poorly-graded SAND, little clay - SC		
95	198.9		10-5-4 (14)	SS21
		Loose, brown poorly-graded SAND - SP		
100	193.9		4-2-3 (8)	SS22
		Stiff, gray, LEAN CLAY and sand - CL		

Water content values: 61

NOTE: STRATIFICATION LINES REPRESENT THE APPROXIMATE BOUNDARIES BETWEEN SOIL TYPES AND THE TRANSITION MAY BE GRADUAL. GRAPHIC LOG FOR ILLUSTRATION PURPOSES ONLY.

N60 BORING LOG (WITH PAGE #) J042646.01 US 62 OVER ST. FRAN.GPJ 00 CLONE ME (GND) THE 2

GROUNDWATER DATA

ENCOUNTERED AT 14.5 FEET ▽

DRILLING DATA

__ AUGER 3 3/4" HOLLOW STEM
WASHBORING FROM 31 FEET
FD - Smith & Co. DRILLER JWU LOGGER
CME 750 DRILL RIG
HAMMER TYPE Auto
HAMMER EFFICIENCY 94 %

REMARKS:

Drawn by: ADP	Checked by: CKK	App'vd. by: CKK
Date: 11/21/23	Date: 11/30/23	Date: 8/22/24

GEOTECHNOLOGY — A Universal Engineering Sciences Company

Route 62 over St. Francis River
Dunklin County, MO and Clay County, AR

LOG OF BORING: B-3
Page 2 of 3

Project No. J042646.01

Surface Elevation: 293.9 | Completion Date: 9/7/23
Datum: NAVD88 | Northing: 226656.85 | Easting: 926521.62

SHEAR STRENGTH, tsf: Δ - UU/2, ○ - QU/2, □ - PP/2 (0.5, 1.0, 1.5, 2.0, 2.5)
STANDARD PENETRATION RESISTANCE ▲ N-VALUE (BLOWS PER FOOT) (ASTM D 1586)
WATER CONTENT, % PL — LL (10, 20, 30, 40, 50)

DEPTH IN FEET	ELEVATION IN FEET	DESCRIPTION OF MATERIAL	DRY UNIT WEIGHT (pcf) SPT BLOW COUNTS (N60) CORE RECOVERY/RQD	SAMPLES
		Stiff, gray, LEAN CLAY and sand - CL *(continued)*		
105	188.9		3-4-7 (17)	SS23
		Very dense, brown, poorly-graded SAND, little to trace silt - SP		
110	183.9		17-20-18 (60)	SS24
115	178.9		15-19-19 (60)	SS25
120	173.9		14-18-25 (67)	SS26
125	168.9		19-17-19 (56)	SS27
130	163.9		14-16-21 (58)	SS28
		Dense, brown, well-graded GRAVEL and sand, trace clay - GW		
135	158.9		18-17-13 (47)	SS29
		Boring terminated at 136 feet.		
140	153.9			
145	148.9			
150	143.9			
155	138.9			

NOTE: STRATIFICATION LINES REPRESENT THE APPROXIMATE BOUNDARIES BETWEEN SOIL TYPES AND THE TRANSITION MAY BE GRADUAL. GRAPHIC LOG FOR ILLUSTRATION PURPOSES ONLY.

N60 BORING LOG (WITH PAGE #) J042646.01 US 62 OVER ST. FRAN.GPJ 00 CLONE ME (GND) THE 2

GROUNDWATER DATA

ENCOUNTERED AT 14.5 FEET ▽

DRILLING DATA

__ AUGER 3 3/4" HOLLOW STEM
WASHBORING FROM 31 FEET
FD - Smith & Co. DRILLER JWU LOGGER
CME 750 DRILL RIG
HAMMER TYPE Auto
HAMMER EFFICIENCY 94 %

REMARKS:

Drawn by: ADP	Checked by: CKK	App'vd. by: CKK
Date: 11/21/23	Date: 11/30/23	Date: 8/22/24

GEOTECHNOLOGY — A Universal Engineering Sciences Company

Route 62 over St. Francis River
Dunklin County, MO and Clay County, AR

LOG OF BORING: B-3
Page 3 of 3

Project No. J042646.01

Coordinates shown in boring logs are State Plane. See roadway plans for projection factor.

BORING DATA

Note: for locations of borings, see Sheets No. 1 & 2.

Detailed Dec. 2024
Checked Jan. 2025

Note: This drawing is not to scale. Follow dimensions.

STATE OF MISSOURI — DEREK S. BUTLER — NUMBER PE-2016009626 — PROFESSIONAL ENGINEER

THIS SHEET HAS BEEN SIGNED, SEALED AND DATED ELECTRONICALLY

DATE PREPARED	
5/19/2025	
ROUTE 62	STATE MO
DISTRICT BR	SHEET NO. 56
COUNTY DUNKLIN	
JOB NO. JSE0155	
CONTRACT ID.	
PROJECT NO.	
BRIDGE NO. A9436	

DATE	DESCRIPTION

IF A SEAL IS PRESENT ON THIS SHEET IT HAS BEEN ELECTRONICALLY SEALED AND DATED.

MISSOURI HIGHWAYS AND TRANSPORTATION COMMISSION
105 WEST CAPITOL
JEFFERSON CITY, MO 65102
1-888-ASK-MODOT (1-888-275-6636)

GARVER, LLC.
7509 NW TIFFANY SPRINGS PARKWAY, SUITE 200
KANSAS CITY, MO 64153
PHONE: (816) 298-6465
CERTIFICATE OF AUTHORITY NO. 2008013090

Surface Elevation: 290.5
Datum: NAVD88
Completion Date: 9/13/23
Northing: 226889.16
Easting: 926922.47

SHEAR STRENGTH, tsf: Δ - UU/2, ○ - QU/2, □ - PP/2 (0.5, 1.0, 1.5, 2.0, 2.5)
STANDARD PENETRATION RESISTANCE ▲ N-VALUE (BLOWS PER FOOT) (ASTM D 1586)
WATER CONTENT, % PL 10 20 30 40 50 LL

DEPTH IN FEET	ELEVATION IN FEET	DESCRIPTION OF MATERIAL	DRY UNIT WEIGHT (pcf) SPT BLOW COUNTS (N60) CORE RECOVERY/RQD	SAMPLES
		Medium stiff to soft, brown, LEAN CLAY, trace to little silt - (CL)		
5	285.5		1-1-2 (5)	SS1
			97	ST2
10	280.5		1-1-1 (3)	SS3
		Medium stiff to soft, brown, LEAN CLAY and sand - (CL)		
15	275.5	56% passing #200 sieve	1-1-3 (6)	SS4
			93	ST5
20	270.5		1-1-2 (5)	SS6
		Medium dense to loose, brown, poorly-graded SAND and clay - SC		
25	265.5		2-6-9 (24)	SS7
30	260.5		3-3-3 (9)	SS8
		Medium stiff, gray, FAT CLAY - (CH)		
35	255.5		2-3-5 (13)	SS9
40	250.5		3-3-3 (9)	SS10
45	245.5		1-2-4 (9)	SS11
50	240.5		2-2-2 (6)	SS12

NOTE: STRATIFICATION LINES REPRESENT THE APPROXIMATE BOUNDARIES BETWEEN SOIL TYPES AND THE TRANSITION MAY BE GRADUAL. GRAPHIC LOG FOR ILLUSTRATION PURPOSES ONLY.

N60 BORING LOG (WITH PAGE #) J042646.01 US 62 OVER ST. FRAN GPJ 00 CLCNE ME.GDT 4/26/24

GROUNDWATER DATA

ENCOUNTERED AT 13 FEET ▽

DRILLING DATA

__ AUGER 3 3/4" HOLLOW STEM
WASHBORING FROM 30 FEET
FD - Smith & Co. DRILLER DWJ LOGGER
CME 750 DRILL RIG
HAMMER TYPE Auto
HAMMER EFFICIENCY 94 %

REMARKS:

Drawn by: ADP	Checked by: CKK	App'vd. by: CKK
Date: 11/21/23	Date: 11/30/23	Date: 8/22/24

GEOTECHNOLOGY
A Universal Engineering Sciences Company

Route 62 over St. Francis River
Dunklin County, MO and Clay County, AR

LOG OF BORING: B-8
Page 1 of 3

Project No. J042646.01

Surface Elevation: 290.5
Datum: NAVD88
Completion Date: 9/13/23
Northing: 226889.16
Easting: 926922.47

SHEAR STRENGTH, tsf: Δ - UU/2, ○ - QU/2, □ - PP/2 (0.5, 1.0, 1.5, 2.0, 2.5)
STANDARD PENETRATION RESISTANCE ▲ N-VALUE (BLOWS PER FOOT) (ASTM D 1586)
WATER CONTENT, % PL 10 20 30 40 50 LL

DEPTH IN FEET	ELEVATION IN FEET	DESCRIPTION OF MATERIAL	DRY UNIT WEIGHT (pcf) SPT BLOW COUNTS (N60) CORE RECOVERY/RQD	SAMPLES
		Very stiff to stiff, gray, LEAN CLAY - (CL)		
55	235.5		3-7-9 (25)	SS13
60	230.5	little silt	6-5-5 (16)	SS14
		Stiff to medium stiff, gray SILT - (ML)		
65	225.5		4-3-2 (8)	SS15
70	220.5		2-4-5 (14)	SS16
75	215.5	some clay	3-2-2 (6)	SS17
		Very dense, gray, poorly-graded SAND, trace to some clay - SP		
80	210.5		18-29-33 (97)	SS18
85	205.5		16-29-18 (74)	SS19
		Very stiff, gray, LEAN CLAY and sand - CL		
90	200.5		10-7-10 (27)	SS20
		Medium dense, gray, poorly-graded SAND, some clay - SC		
95	195.5		10-10-9 (30)	SS21
		Medium dense to dense, gray, poorly-graded SAND, some to and silt - SM		
100	190.5		5-9-16 (39)	SS22

NOTE: STRATIFICATION LINES REPRESENT THE APPROXIMATE BOUNDARIES BETWEEN SOIL TYPES AND THE TRANSITION MAY BE GRADUAL. GRAPHIC LOG FOR ILLUSTRATION PURPOSES ONLY.

N60 BORING LOG (WITH PAGE #) J042646.01 US 62 OVER ST. FRAN GPJ 00 CLCNE ME.GDT 4/26/24

GROUNDWATER DATA

ENCOUNTERED AT 13 FEET ▽

DRILLING DATA

__ AUGER 3 3/4" HOLLOW STEM
WASHBORING FROM 30 FEET
FD - Smith & Co. DRILLER DWJ LOGGER
CME 750 DRILL RIG
HAMMER TYPE Auto
HAMMER EFFICIENCY 94 %

REMARKS:

Drawn by: ADP	Checked by: CKK	App'vd. by: CKK
Date: 11/21/23	Date: 11/30/23	Date: 8/22/24

GEOTECHNOLOGY
A Universal Engineering Sciences Company

Route 62 over St. Francis River
Dunklin County, MO and Clay County, AR

LOG OF BORING: B-8
Page 2 of 3

Project No. J042646.01

Coordinates shown in boring logs are State Plane. See roadway plans for projection factor.

BORING DATA

Note: for locations of borings, see Sheets No. 1 & 2.

Detailed Dec. 2024
Checked Jan. 2025

Note: This drawing is not to scale. Follow dimensions.

STATE OF MISSOURI
DEREK S. BUTLER
NUMBER PE-2016009626
PROFESSIONAL ENGINEER

THIS SHEET HAS BEEN SIGNED, SEALED AND DATED ELECTRONICALLY

DATE PREPARED	
5/19/2025	
ROUTE 62	STATE MO
DISTRICT BR	SHEET NO. 57
COUNTY DUNKLIN	
JOB NO. JSE0155	
CONTRACT ID.	
PROJECT NO.	
BRIDGE NO. A9436	

DESCRIPTION

DATE

MISSOURI HIGHWAYS AND TRANSPORTATION COMMISSION
105 WEST CAPITOL
JEFFERSON CITY, MO 65102
1-888-ASK-MODOT (1-888-275-6636)

GARVER, LLC.
7509 NW TIFFANY SPRINGS PARKWAY, SUITE 200
KANSAS CITY, MO 64153
PHONE: (816) 298-6465
CERTIFICATE OF AUTHORITY NO. 2008013090

IF A SEAL IS PRESENT ON THIS SHEET IT HAS BEEN ELECTRONICALLY SEALED AND DATED.

Surface Elevation: 290.5
Datum: NAVD88
Completion Date: 9/13/23
Northing: 226889.16
Easting: 926922.47

DEPTH IN FEET	ELEVATION IN FEET	DESCRIPTION OF MATERIAL	DRY UNIT WEIGHT (pcf) SPT BLOW COUNTS (N60) CORE RECOVERY/RQD	SAMPLES
105	185.5	Medium dense to dense, gray, poorly-graded SAND, some to and silt - SM *(continued)*	7-13-14 (42)	SS23
110	180.5		6-8-12 (31)	SS24
115	175.5		8-13-16 (45)	SS25
120	170.5		14-13-19 (50)	SS26
125	165.5	Very dense, brown, poorly-graded SAND, trace to and gravel, trace clay - SP	12-14-19 (52)	SS27
130	160.5		50/5"	SS28
135	155.5		14-23-16 (61)	SS29
140	150.5	Boring terminated at 136 feet.		
145	145.5			
150	140.5			
155	135.5			

GRAPHIC LOG

SHEAR STRENGTH, tsf
Δ - UU/2 ○ - QU/2 □ - PP/2
0.5 1.0 1.5 2.0 2.5

STANDARD PENETRATION RESISTANCE
▲ N-VALUE (BLOWS PER FOOT)
(ASTM D 1586)

WATER CONTENT, %
PL 10 20 30 40 50 LL

NOTE: STRATIFICATION LINES REPRESENT THE APPROXIMATE BOUNDARIES BETWEEN SOIL TYPES AND THE TRANSITION MAY BE GRADUAL. GRAPHIC LOG FOR ILLUSTRATION PURPOSES ONLY.

N60 BORING LOG (WITH PAGE #) J042646.01 US 62 OVER ST. FRAN.GPJ 00 CLCNE.ME.GDT 11/30/23

GROUNDWATER DATA

ENCOUNTERED AT 13 FEET ▽

DRILLING DATA

__ AUGER 3 3/4" HOLLOW STEM
WASHBORING FROM 30 FEET
FD - Smith & Co. DRILLER DWJ LOGGER
CME 750 DRILL RIG
HAMMER TYPE Auto
HAMMER EFFICIENCY 94 %

REMARKS:

Drawn by: ADP	Checked by: CKK	App'vd. by: CKK
Date: 11/21/23	Date: 11/30/23	Date: 8/22/24

GEOTECHNOLOGY
A Universal Engineering Sciences Company

Route 62 over St. Francis River
Dunklin County, MO and Clay County, AR

LOG OF BORING: B-8
Page 3 of 3

Project No. J042646.01

Surface Elevation: 287.5
Datum: NAVD88
Completion Date: 9/19/23
Northing: 227033.80
Easting: 927122.88

DEPTH IN FEET	ELEVATION IN FEET	DESCRIPTION OF MATERIAL	DRY UNIT WEIGHT (pcf) SPT BLOW COUNTS (N60) CORE RECOVERY/RQD	SAMPLES
		Very soft to soft, brown, LEAN CLAY, trace to some sand - (CL)		
5	282.5		0-0-1 (2)	SS1
			*	ST2
10	277.5		0-1-1 (3)	SS3
			99	ST4
15	272.5	67% passing #200 sieve	1-1-2 (5)	SS5
			98	ST6
20	267.5	Medium dense, gray, poorly-graded SAND, trace clay - SC	2-4-8 (19)	SS7
		Soft, gray, FAT CLAY - (CH)		
25	262.5		1-2-1 (5)	SS8
		Stiff to medium stiff, gray LEAN CLAY, trace to some silt - (CL)	107	ST9
30	257.5		3-3-4 (11)	SS10
			87	ST11
35	252.5		3-2-4 (9)	SS12
40	247.5		2-2-2 (6)	SS13
45	242.5		2-2-2 (6)	SS14
		Stiff, gray, FAT CLAY - (CH)		
50	237.5		3-4-5 (14)	SS15

GRAPHIC LOG

SHEAR STRENGTH, tsf
Δ - UU/2 ○ - QU/2 □ - PP/2
0.5 1.0 1.5 2.0 2.5

STANDARD PENETRATION RESISTANCE
▲ N-VALUE (BLOWS PER FOOT)
(ASTM D 1586)

WATER CONTENT, %
PL 10 20 30 40 50 LL

71 >>

60

NOTE: STRATIFICATION LINES REPRESENT THE APPROXIMATE BOUNDARIES BETWEEN SOIL TYPES AND THE TRANSITION MAY BE GRADUAL. GRAPHIC LOG FOR ILLUSTRATION PURPOSES ONLY.

N60 BORING LOG (WITH PAGE #) J042646.01 US 62 OVER ST. FRAN.GPJ 00 CLCNE.ME.GDT 11/30/23

GROUNDWATER DATA

ENCOUNTERED AT 8 FEET ▽

DRILLING DATA

__ AUGER 3 3/4" HOLLOW STEM
WASHBORING FROM 22 FEET
FD - Smith & Co. DRILLER DWJ LOGGER
CME 750 DRILL RIG
HAMMER TYPE Auto
HAMMER EFFICIENCY 94 %

REMARKS:

Drawn by: ADP	Checked by: CKK	Acp'vd. by: CKK
Date: 11/21/23	Date: 11/30/23	Date: 8/22/24

GEOTECHNOLOGY
A Universal Engineering Sciences Company

Route 62 over St. Francis River
Dunklin County, MO and Clay County, AR

LOG OF BORING: B-10
Page 1 of 3

Project No. J042646.01

Coordinates shown in boring logs are State Plane. See roadway plans for projection factor.

BORING DATA

Note: for locations of borings, see Sheets No. 1 & 2.

Detailed Dec. 2024
Checked Jan. 2025

Note: This drawing is not to scale. Follow dimensions.

STATE OF MISSOURI
DEREK S. BUTLER
NUMBER PE-2016009626
PROFESSIONAL ENGINEER

THIS SHEET HAS BEEN SIGNED, SEALED AND DATED ELECTRONICALLY

DATE PREPARED	
5/19/2025	
ROUTE 62	STATE MO
DISTRICT BR	SHEET NO. 58
COUNTY DUNKLIN	
JOB NO. JSE0155	
CONTRACT ID.	
PROJECT NO.	
BRIDGE NO. A9436	

DATE	DESCRIPTION

MISSOURI HIGHWAYS AND TRANSPORTATION COMMISSION
105 WEST CAPITOL
JEFFERSON CITY, MO 65102
1-888-ASK-MODOT (1-888-275-6636)

GARVER, LLC.
7509 NW TIFFANY SPRINGS PARKWAY, SUITE 200
KANSAS CITY, MO 64153
PHONE: (816) 298-6465
CERTIFICATE OF AUTHORITY NO. 2008013090

IF A SEAL IS PRESENT ON THIS SHEET IT HAS BEEN ELECTRONICALLY SEALED AND DATED.

Surface Elevation: 287.5 | Completion Date: 9/19/23
Datum: NAVD88 | Northing: 227033.80 | Easting: 927122.88

DEPTH IN FEET	ELEVATION IN FEET	DESCRIPTION OF MATERIAL	DRY UNIT WEIGHT (pcf) / SPT BLOW COUNTS (N60) / CORE RECOVERY/RQD	SAMPLES
		Medium stiff to stiff, gray SILT - (ML)	100	ST16
55	232.5		4-5-5 (16)	SS17
		Very stiff to medium stiff, gray, LEAN CLAY and silt - (CL)	97	ST18
60	227.5		1-1-2 (5)	SS19
		Medium stiff to stiff, gray SILT - ML		
65	222.5		1-2-3 (8)	SS20
70	217.5	95% passing #200 sieve	4-5-8 (20)	SS21
		Very loose, gray, poorly-graded SAND and clay - SC		
75	212.5		0-1-3 (6)	SS22
		Very dense to loose, gray, poorly-graded SAND and silt - SM		
80	207.5		0-15 -50/5" ()	SS23
85	202.5		19-18-10 (44)	SS24
90	197.5		8-16-30 (72)	SS25
95	192.5		3-3-4 (11)	SS26
		Very stiff, gray, LEAN CLAY and sand - CL		
100	187.5		9-7-4 (17)	SS27

SHEAR STRENGTH, tsf: Δ - UU/2, ○ - QU/2, □ - PP/2 (0.5, 1.0, 1.5, 2.0, 2.5)
STANDARD PENETRATION RESISTANCE ▲ N-VALUE (BLOWS PER FOOT) (ASTM D 1586)
WATER CONTENT, % PL 10 20 30 40 50 LL

GROUNDWATER DATA
ENCOUNTERED AT 8 FEET ▽

DRILLING DATA
__ AUGER 3 3/4" HOLLOW STEM
WASHBORING FROM 22 FEET
FD - Smith & Co. DRILLER DWJ LOGGER
CME 750 DRILL RIG
HAMMER TYPE Auto
HAMMER EFFICIENCY 94 %

REMARKS:

Drawn by: ADP Date: 11/21/23 | Checked by: CKK Date: 11/30/23 | App'vd. by: CKK Date: 8/22/24

GEOTECHNOLOGY — A Universal Engineering Sciences Company

Route 62 over St. Francis River
Dunklin County, MO and Clay County, AR

LOG OF BORING: B-10
Page 2 of 3
Project No. J042646.01

NOTE: STRATIFICATION LINES REPRESENT THE APPROXIMATE BOUNDARIES BETWEEN SOIL TYPES AND THE TRANSITION MAY BE GRADUAL. GRAPHIC LOG FOR ILLUSTRATION PURPOSES ONLY.

N60 BORING LOG (WITH PAGE #) J042646.01 US 62 OVER ST. FRAN.GPJ 00 CLCNE MEDOT TEMPLATE.GDT

Surface Elevation: 287.5 | Completion Date: 9/19/23
Datum: NAVD88 | Northing: 227033.80 | Easting: 927122.88

DEPTH IN FEET	ELEVATION IN FEET	DESCRIPTION OF MATERIAL	DRY UNIT WEIGHT (pcf) / SPT BLOW COUNTS (N60) / CORE RECOVERY/RQD	SAMPLES
105	182.5	Dense to very dense, gray, poorly-graded SAND, little to some silt - SM *(continued)*	10-11-9 (31)	SS28
110	177.5		10-14-15 (45)	SS29
115	172.5		8-14-16 (47)	SS30
120	167.5		12-15-18 (52)	SS31
125	162.5	Very dense, brown, poorly-graded SAND, little to and gravel, trace silt - SP	13-12-19 (49)	SS32
130	157.5		49-50/5"	SS33
135	152.5		13-17-18 (55)	SS34
140	147.5	Very dense, brown, well-graded SAND, little gravel, trace silt - SW	29-31-19 (78)	SS35
145	142.5		22-26-32 (91)	SS36
150	137.5	Hard, gray and black PEAT - PT Boring terminated at 151 feet.	8-10-38 (75)	SS37
155	132.5			

SHEAR STRENGTH, tsf: Δ - UU/2, ○ - QU/2, □ - PP/2 (0.5, 1.0, 1.5, 2.0, 2.5)
STANDARD PENETRATION RESISTANCE ▲ N-VALUE (BLOWS PER FOOT) (ASTM D 1586)
WATER CONTENT, % PL 10 20 30 40 50 LL

GROUNDWATER DATA
ENCOUNTERED AT 8 FEET ▽

DRILLING DATA
__ AUGER 3 3/4" HOLLOW STEM
WASHBORING FROM 22 FEET
FD - Smith & Co. DRILLER DWJ LOGGER
CME 750 DRILL RIG
HAMMER TYPE Auto
HAMMER EFFICIENCY 94 %

REMARKS:

Drawn by: ADP Date: 11/21/23 | Checked by: CKK Date: 11/30/23 | App'vd. by: CKK Date: 8/22/24

GEOTECHNOLOGY — A Universal Engineering Sciences Company

Route 62 over St. Francis River
Dunklin County, MO and Clay County, AR

LOG OF BORING: B-10
Page 3 of 3
Project No. J042646.01

NOTE: STRATIFICATION LINES REPRESENT THE APPROXIMATE BOUNDARIES BETWEEN SOIL TYPES AND THE TRANSITION MAY BE GRADUAL. GRAPHIC LOG FOR ILLUSTRATION PURPOSES ONLY.

N60 BORING LOG (WITH PAGE #) J042646.01 US 62 OVER ST. FRAN.GPJ 00 CLCNE MEDOT TEMPLATE.GDT

Coordinates shown in boring logs are State Plane. See roadway plans for projection factor.

BORING DATA

Note: for locations of borings, see Sheets No. 1 & 2.

Detailed Dec. 2024
Checked Jan. 2025

Note: This drawing is not to scale. Follow dimensions.

STATE OF MISSOURI — DEREK S. BUTLER — NUMBER PE-2016009626 — PROFESSIONAL ENGINEER

THIS SHEET HAS BEEN SIGNED, SEALED AND DATED ELECTRONICALLY

DATE PREPARED	
5/19/2025	
ROUTE 62	STATE MO
DISTRICT BR	SHEET NO. 59
COUNTY DUNKLIN	
JOB NO. JSE0155	
CONTRACT ID.	
PROJECT NO.	
BRIDGE NO. A9436	

DESCRIPTION	DATE

MISSOURI HIGHWAYS AND TRANSPORTATION COMMISSION
105 WEST CAPITOL
JEFFERSON CITY, MO 65102
1-888-ASK-MODOT (1-888-275-6636)

GARVER, LLC.
7509 NW TIFFANY SPRINGS PARKWAY, SUITE 200
KANSAS CITY, MO 64153
PHONE: (816) 298-6465
CERTIFICATE OF AUTHORITY NO. 2008013090

IF A SEAL IS PRESENT ON THIS SHEET IT HAS BEEN ELECTRONICALLY SEALED AND DATED.

Surface Elevation: 288.3
Datum: NAVD88
Completion Date: 9/22/23
Northing: 227147.68
Easting: 927202.44

SHEAR STRENGTH, tsf: Δ - UU/2 ○ - QU/2 □ - PP/2 (0.5, 1.0, 1.5, 2.0, 2.5)
STANDARD PENETRATION RESISTANCE ▲ N-VALUE (BLOWS PER FOOT) (ASTM D 1586)
WATER CONTENT, % PL 10 20 30 40 50 LL

DEPTH IN FEET	ELEVATION IN FEET	DESCRIPTION OF MATERIAL	DRY UNIT WEIGHT (pcf) SPT BLOW COUNTS (N60) CORE RECOVERY/RQD	SAMPLES
		Medium stiff to soft, brown, LEAN CLAY, trace to some sand - (CL)	92	ST11
5	283.3		1-1-2 (5)	SS1
			98	ST2
10	278.3		1-1-1 (3)	SS3
15	273.3		0-2-1 (5)	SS4
			*	ST5
20	268.3	Very loose, gray, poorly-graded SAND, some clay - SC	4-2-1 (5)	SS6
		Medium stiff, gray, FAT CLAY and sand - CH		
25	263.3		0-1-2 (5)	SS7
		Very loose, gray, poorly-graded SAND, some clay - SC		ST8
30	258.3	Medium stiff to stiff, gray, LEAN CLAY, little to and silt - (CL)	0-2-2 (6)	SS9
35	253.3		2-2-3 (8)	SS10
40	248.3		2-3-2 (8)	SS12
			81	ST13
45	243.3		2-2-3 (8)	SS14
		Medium stiff, gray, FAT CLAY - CH	95	ST15
50	238.3		1-3-3 (9)	SS16

NOTE: STRATIFICATION LINES REPRESENT THE APPROXIMATE BOUNDARIES BETWEEN SOIL TYPES AND THE TRANSITION MAY BE GRADUAL. GRAPHIC LOG FOR ILLUSTRATION PURPOSES ONLY.

N60 BORING LOG (WITH PAGE #) J042646.01 US 62 OVER ST. FRAN.GPJ 00 CLONE MC 6.GDT 12/4/24

GROUNDWATER DATA

ENCOUNTERED AT 21 FEET ▽

DRILLING DATA

__ AUGER 3 3/4" HOLLOW STEM
WASHBORING FROM 21 FEET
FD - Smith & Co. DRILLER DWJ LOGGER
CME 750 DRILL RIG
HAMMER TYPE Auto
HAMMER EFFICIENCY 94 %

REMARKS:

Drawn by: ADP	Checked by: CKK	App'vd. by: CKK
Date: 11/21/23	Date: 11/30/23	Date: 8/22/24

GEOTECHNOLOGY
A Universal Engineering Sciences Company

Route 62 over St. Francis River
Dunklin County, MO and Clay County, AR

LOG OF BORING: B-11
Page 1 of 3

Project No. J042646.01

Surface Elevation: 288.3
Datum: NAVD88
Completion Date: 9/22/23
Northing: 227147.68
Easting: 927202.44

SHEAR STRENGTH, tsf: Δ - UU/2 ○ - QU/2 □ - PP/2 (0.5, 1.0, 1.5, 2.0, 2.5)
STANDARD PENETRATION RESISTANCE ▲ N-VALUE (BLOWS PER FOOT) (ASTM D 1586)
WATER CONTENT, % PL 10 20 30 40 50 LL

DEPTH IN FEET	ELEVATION IN FEET	DESCRIPTION OF MATERIAL	DRY UNIT WEIGHT (pcf) SPT BLOW COUNTS (N60) CORE RECOVERY/RQD	SAMPLES
		Very stiff, gray SILT - (ML)		
55	233.3		7-6-6 (19)	SS17
		Stiff, gray, LEAN CLAY and silt - (CL)		
60	228.3		3-4-5 (14)	SS18
		Medium stiff to stiff, gray SILT - ML		
65	223.3		2-2-3 (8)	SS19
70	218.3		5-5-6 (17)	SS20
		Very loose, gray, poorly-graded SAND and clay - SC		
75	213.3		0-0-1 (2)	SS21
80	208.3	Loose to very dense, gray, poorly-graded SAND, some to and silt, some to trace gravel - SM	5-5-5 (16)	SS22
85	203.3		6-14-20 (53)	SS23
90	198.3	37% passing #200 sieve	0-4-7 (17)	SS24
95	193.3		8-8-9 (27)	SS25
		Stiff, gray, LEAN CLAY, some sand - (CL)		
100	188.3		5-4-2 (9)	SS26

NOTE: STRATIFICATION LINES REPRESENT THE APPROXIMATE BOUNDARIES BETWEEN SOIL TYPES AND THE TRANSITION MAY BE GRADUAL. GRAPHIC LOG FOR ILLUSTRATION PURPOSES ONLY.

N60 BORING LOG (WITH PAGE #) J042646.01 US 62 OVER ST. FRAN.GPJ 00 CLONE MC 6.GDT 12/4/24

GROUNDWATER DATA

ENCOUNTERED AT 21 FEET ▽

DRILLING DATA

__ AUGER 3 3/4" HOLLOW STEM
WASHBORING FROM 21 FEET
FD - Smith & Co. DRILLER DWJ LOGGER
CME 750 DRILL RIG
HAMMER TYPE Auto
HAMMER EFFICIENCY 94 %

REMARKS:

Drawn by: ADP	Checked by: CKK	App'vd. by: CKK
Date: 11/21/23	Date: 11/30/23	Date: 8/22/24

GEOTECHNOLOGY
A Universal Engineering Sciences Company

Route 62 over St. Francis River
Dunklin County, MO and Clay County, AR

LOG OF BORING: B-11
Page 2 of 3

Project No. J042646.01

Coordinates shown in boring logs are State Plane. See roadway plans for projection factor.

BORING DATA

Note: for locations of borings, see Sheets No. 1 & 2.

Detailed Dec. 2024
Checked Jan. 2025

Note: This drawing is not to scale. Follow dimensions.

STATE OF MISSOURI
DEREK S. BUTLER
NUMBER PE-2016009626
PROFESSIONAL ENGINEER

THIS SHEET HAS BEEN SIGNED, SEALED AND DATED ELECTRONICALLY

DATE PREPARED 5/19/2025
ROUTE 62 | STATE MO
DISTRICT BR | SHEET NO. 60
COUNTY DUNKLIN
JOB NO. JSE0155
CONTRACT ID.
PROJECT NO.
BRIDGE NO. A9436

DATE	DESCRIPTION

MISSOURI HIGHWAYS AND TRANSPORTATION COMMISSION
105 WEST CAPITOL
JEFFERSON CITY, MO 65102
1-888-ASK-MODOT (1-888-275-6636)

GARVER, LLC.
7509 NW TIFFANY SPRINGS PARKWAY, SUITE 200
KANSAS CITY, MO 64153
PHONE: (816) 298-6465
CERTIFICATE OF AUTHORITY NO. 2008013090

IF A SEAL IS PRESENT ON THIS SHEET IT HAS BEEN ELECTRONICALLY SEALED AND DATED.

Surface Elevation: 288.3
Datum: NAVD88
Completion Date: 9/22/23
Northing: 227147.68
Easting: 927202.44

DEPTH IN FEET	ELEVATION IN FEET	DESCRIPTION OF MATERIAL	DRY UNIT WEIGHT (pcf) SPT BLOW COUNTS (N60) CORE RECOVERY/RQD	SAMPLES
105	183.3	Medium dense to very dense, gray, poorly-graded SAND, some silt - SM *(continued)*	11-11-10 (33)	SS27
110	178.3		11-14-15 (45)	SS28
115	173.3		8-7-15 (34)	SS29
120	168.3		12-18-22 (63)	SS30
125	163.3	Dense to very dense, brown, poorly-graded SAND, little to and gravel, trace silt - SP	10-15-17 (50)	SS31
130	158.3		17-29-29 (91)	SS32
135	153.3		28-25-31 (88)	SS33
140	148.3	Very dense, brown, well-graded SAND, little gravel, trace silt - SW	27-33-32 (102)	SS34
145	143.3		16-30-34 (100)	SS35
150	138.3	Very stiff, gray and black PEAT - PT	5-8-27 (55)	SS36
		Boring terminated at 151 feet.		
155	133.3			

SHEAR STRENGTH, tsf
Δ - UU/2 ○ - QU/2 □ - PP/2
0.5 1.0 1.5 2.0 2.5

STANDARD PENETRATION RESISTANCE
▲ N-VALUE (BLOWS PER FOOT)
(ASTM D 1586)

WATER CONTENT, %
PL 10 20 30 40 50 LL

65
64

GROUNDWATER DATA

ENCOUNTERED AT 21 FEET ▽

DRILLING DATA

__ AUGER 3 3/4" HOLLOW STEM
WASHBORING FROM 21 FEET
FD - Smith & Co. DRILLER DWJ LOGGER
CME 750 DRILL RIG
HAMMER TYPE Auto
HAMMER EFFICIENCY 94 %

REMARKS:

Drawn by: ADP	Checked by: CKK	App'vd. by: CKK
Date: 11/21/23	Date: 11/30/23	Date: 8/22/24

GEOTECHNOLOGY
A Universal Engineering Sciences Company

Route 62 over St. Francis River
Dunklin County, MO and Clay County, AR

LOG OF BORING: B-11
Page 3 of 3

Project No. J042646.01

NOTE: STRATIFICATION LINES REPRESENT THE APPROXIMATE BOUNDARIES BETWEEN SOIL TYPES AND THE TRANSITION MAY BE GRADUAL. GRAPHIC LOG FOR ILLUSTRATION PURPOSES ONLY.

N60 BORING LOG (WITH PAGE #) J042646.01 US 62 OVER ST. FRAN.GPJ 00 CLONE ME (GINT STD US LAB.GDT 5/19/25

Coordinates shown in boring logs are State Plane. See roadway plans for projection factor.

BORING DATA

Note: for locations of borings, see Sheets No. 1 & 2.

Detailed Dec. 2024
Checked Jan. 2025

Note: This drawing is not to scale. Follow dimensions.

STATE OF MISSOURI
DEREK S. BUTLER
NUMBER PE-2016009628
PROFESSIONAL ENGINEER

THIS SHEET HAS BEEN SIGNED, SEALED AND DATED ELECTRONICALLY

DATE PREPARED 5/19/2025
ROUTE 62 | STATE MO
DISTRICT BR | SHEET NO. 61
COUNTY DUNKLIN
JOB NO. JSE0155
CONTRACT ID.
PROJECT NO.
BRIDGE NO. A9436

DATE	DESCRIPTION

MISSOURI HIGHWAYS AND TRANSPORTATION COMMISSION
105 WEST CAPITOL
JEFFERSON CITY, MO 65102
1-888-ASK-MODOT (1-888-275-6636)

GARVER, LLC.
7509 NW TIFFANY SPRINGS
PARKWAY, SUITE 200
KANSAS CITY, MO 64153
PHONE: (816) 298-6465
CERTIFICATE OF AUTHORITY
NO. 2008013090

IF A SEAL IS PRESENT ON THIS SHEET IT HAS BEEN ELECTRONICALLY SEALED AND DATED.