MISSOURI HIGHWAYS AND TRANSPORTATION COMMISSION
PLANS FOR PROPOSED
STATE HIGHWAY
WAYNE COUNTY

TOWNSHIP 27N
RANGE 6E, SECTIONS 7,18,19

DESIGN DESIGNATION

A.A.D.T. - 2022 = 3,270
A.A.D.T. - 2042 = 5,720
T = 29%
V = 65 M.P.H.
MEDIAN CROSSOVER V = 55 M.P.H.
FUNCTIONAL CLASSIFICATION - OTHER FREEWAY AND EXPRESSWAY (MAJOR)

NO NEW RIGHT OF WAY

CONVENTIONAL SYMBOLS
(USED IN PLANS)

	EXISTING	NEW
BUILDINGS AND STRUCTURES		
GUARD RAIL		
GUARD CABLE		
CONCRETE RIGHT-OF-WAY MARKER		
STEEL RIGHT-OF-WAY MARKER		
LOCATION SURVEY MARKER		
UTILITIES		
FIBER OPTICS	-FO-	~~FO~~
OVERHEAD CABLE TV	-OTV-	~~OTV~~
UNDERGROUND CABLE TV	-UTV-	~~UTV~~
OVERHEAD TELEPHONE	-OT-	~~OT~~
UNDERGROUND TELEPHONE	-UT-	~~UT~~
OVERHEAD POWER	-OE-	~~OE~~
UNDERGROUND POWER	-UE-	~~UE~~
SANITARY SEWER	-S-	~~S~~
STORM SEWER	-SS-	~~SS~~
GAS	-G-	~~G~~
WATER	-W-	~~W~~
MANHOLE	SAN	
FIRE HYDRANT	HYD	
WATER VALVE	WV	
WATER METER	WM	
DROP INLET	DI	
DITCH BLOCK		
GROUND MOUNTED SIGN	SIGN	
LIGHT POLE		
H-FRAME POWER POLE		
TELEPHONE PEDESTAL	PED	
FENCE		
CHAIN LINK	-V-	
WOVEN WIRE	-X-	
GATE POST		
BENCHMARK	BM	
PERMANENT DRAINAGE EASEMENT	P.D.E.	
PERMANENT HIGHWAY EASEMENT	P.H.E.	
TEMPORARY CONSTRUCTION EASEMENT	T.C.E.	
DO NOT DISTURB	(DND)	
REMOVE	(R)	
RELOCATE	(RELOC.)	
REMOVE AND REPLACE	(R & R)	
REMOVE AND RELOCATE	(R & RELOC.)	
ADJUST TO GRADE	(ATG)	
USE IN PLACE	(UIP)	
TO BE ABANDONED	(TBA)	
BY OTHERS	(BO)	
BRIDGE APPROACH TRANSITION	B.A.T.	
CRASHWORTHY END TERMINAL	C.E.T.	

NOTE: DASHED OR OPEN SYMBOLS INDICATE EXISTING FEATURES

KEY MAP
LOCATION OF WAYNE COUNTY

ROUTE 67 PROJECT LIMITS
PAVING, GUARDRAIL, PERMANENT CROSSOVERS
REPLACE BR. L0210 W/ A9610

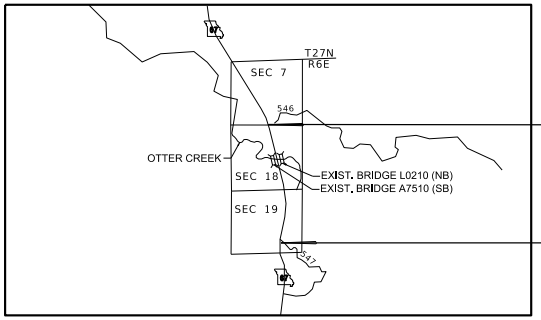

BEGIN PROJECT
STA. 816+73.00
LOG MI. 39.435

END PROJECT
STA. 899+71.87
LOG MI. 37.854

NOT TO SCALE

DISCLAIMER
THE PROFESSIONAL WHOSE SIGNATURE AND PERSONAL SEAL APPEAR HEREON ASSUMES RESPONSIBILITY ONLY FOR WHAT APPEARS ON THIS PAGE, AND DISCLAIMS (PURSUANT TO SECTION 327.411 RSMO) SPECIFICATION, ESTIMATES, REPORTS, OR OTHER DOCUMENTS OR INSTRUMENTS NOT SEALED BY THE UNDERSIGNED PROFESSIONAL RELATING TO OR INTENDED TO BE USED FOR ANY PART OR PARTS OF THE PROJECT TO WHICH THIS PAGE REFERS.

THE EXISTENCE AND APPROXIMATE LOCATION OF UTILITY FACILITIES KNOWN TO EXIST, AS SHOWN ON THE PLANS, ARE BASED ON THE BEST INFORMATION AVAILABLE TO THE COMMISSION AT THIS TIME. THIS INFORMATION IS PROVIDED BY THE COMMISSION "AS-IS" AND THE COMMISSION EXPRESSLY DISCLAIMS ANY REPRESENTATION OR WARRANTY AS TO THE COMPLETENESS, ACCURACY, OR SUITABILITY OF THE INFORMATION FOR ANY USE. RELIANCE UPON THIS INFORMATION IS DONE AT THE RISK AND PERIL OF THE USER, AND THE COMMISSION SHALL NOT BE LIABLE FOR ANY DAMAGES THAT MAY ARISE FROM ANY ERROR IN THE INFORMATION. IT IS, THEREFORE, THE RESPONSIBILITY OF THE CONTRACTOR TO VERIFY THE EXISTENCE, LOCATION AND STATUS OF ANY FACILITY. SUCH VERIFICATION INCLUDES DIRECT CONTACT WITH THE LISTED UTILITIES.

INDEX OF SHEETS

LENGTH OF PROJECT

BEGINNING OF PROJECT	STA.	816+73.00
END OF PROJECT	STA.	899+71.87
APPARENT LENGTH		8,298.87 FEET

EQUATIONS AND EXCEPTIONS:

TOTAL CORRECTIONS	0	FEET
NET LENGTH OF PROJECT	8,298.87	FEET
STATE LENGTH	1.57	MILES
FOR INFORMATION ONLY ESTIMATED DISTURBED AREA	2.9	ACRES

STATE OF MISSOURI
NIKKI D. CONLEY
NUMBER PE-2018040668
PROFESSIONAL ENGINEER

THIS SHEET HAS BEEN SIGNED, SEALED, AND DATED ELECTRONICALLY.

IF A SEAL IS PRESENT ON THIS SHEET IT HAS BEEN ELECTRONICALLY SEALED AND DATED.

DATE PREPARED	2/28/2025
ROUTE	67
STATE	MO
DISTRICT	SE
SHEET NO.	1
COUNTY	WAYNE
JOB NO.	JSE0083
CONTRACT ID.	
PROJECT NO.	
BRIDGE NO.	A9610

DATE	DESCRIPTION

MISSOURI HIGHWAYS AND TRANSPORTATION COMMISSION
105 WEST CAPITOL
JEFFERSON CITY, MO 65102
1-888-ASK-MODOT (1-888-275-6636)

GBA
16305 SWINGLEY RIDGE RD
ST. 300
CHESTERFIELD, MO 63017
314.231.0100
GBAteam.com

GEORGE BUTLER ASSOCIATES, INC.
PRO. ENGINEER 000133
ARCHITECT 000212
PRO. LAND SURVEYOR 000059

NIKKI D. CONLEY
PROFESSIONAL ENGINEER
PE-2018040668

2/28/2025

NOTE:
SEE CROSS SECTIONS AND PLANS SHEETS FOR CROSS SLOPES, TRANSITIONS, AND TAPERS

SEE PLANS FOR EXISTING RIGHT OF WAY.

NO DIRECT PAY FOR SAW CUTS.

EXISTING PAVEMENT SHOWN FOR INFORMATION ONLY. LAYERS MAY VARY.

SEE STANDARD PLAN 626.00 FOR RUMBLE STRIP DETAILS.

SEE BRIDGE PLANS FOR BRIDGE APPROACH SLAB AND BRIDGE SECTION DETAILS.

ESTIMATE FACTORS
(FOR INFORMATION ONLY)

DESCRIPTION	FACTOR
SP125C (PG70-22)	1.960 TONS/ C.Y.
SP190C (P64-22)	1.946 TONS/ C.Y.
TACK COAT (OVER NEW ASPHALT)	0.05 GAL/ S.Y.

DISCLAIMER
THE PROFESSIONAL WHOSE SIGNATURE AND PERSONAL SEAL APPEAR HEREON ASSUMES RESPONSIBILITY ONLY FOR WHAT APPEARS ON THIS PAGE, AND DISCLAIMS (PURSUANT TO SECTION 327.411 RSMO) SPECIFICATION, ESTIMATES, REPORTS, OR OTHER DOCUMENTS OR INSTRUMENTS NOT SEALED BY THE UNDERSIGNED PROFESSIONAL RELATING TO OR INTENDED TO BE USED FOR ANY PART OR PARTS OF THE PROJECT TO WHICH THIS PAGE REFERS.

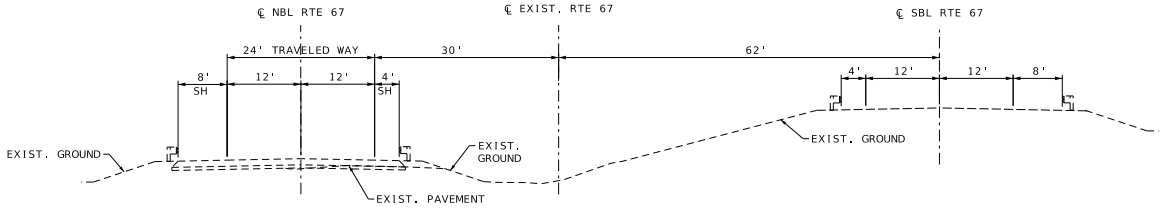

SECTION ON TANGENT
EXISTING TYPICAL SECTION
RTE 67

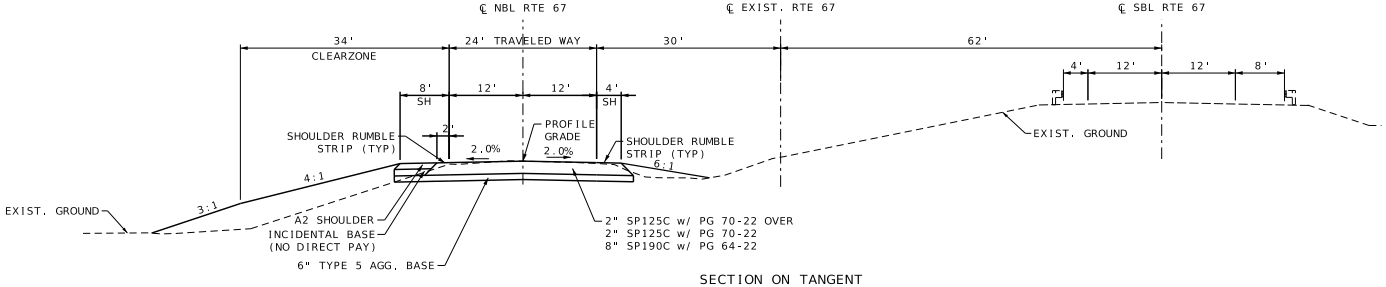

SECTION ON TANGENT
TYPICAL SECTION
RTE 67
STA 839+80.00 TO 841+43.46
(ASPHALT OPTION)

CONCRETE APPROACH PAVEMENT STA 841+23.65 TO 841+43.46
BRIDGE APPROACH SLAB STA 841+43.46 TO 841+63.46
BRIDGE EXCEPTION STA 841+63.46 TO 843+50.05 (A9610)
BRIDGE APPROACH SLAB STA 843+50.05 TO 843+70.05
CONCRETE APPROACH PAVEMENT STA 843+70.05 TO 843+90.92

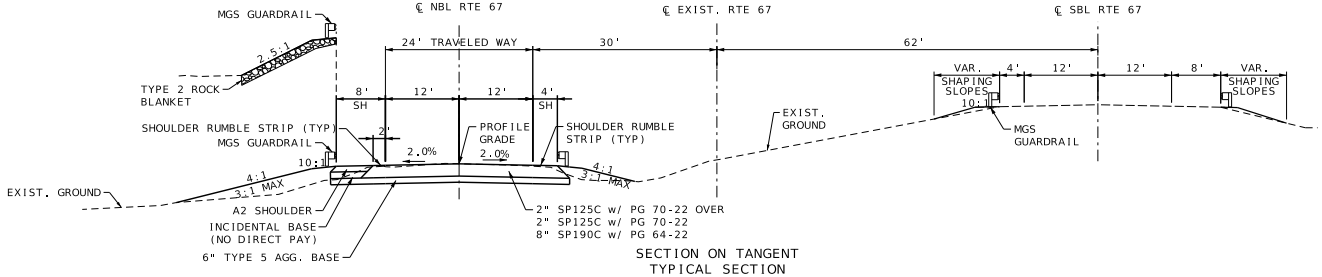

SECTION ON TANGENT
TYPICAL SECTION
RTE 67
STA 843+70.05 TO 845+65.00
(ASPHALT OPTION)

NOT TO SCALE

TYPICAL SECTIONS
SHEET 1 OF 2

STATE OF MISSOURI
NIKKI D. CONLEY
NUMBER PE-2018040668
PROFESSIONAL ENGINEER

THIS SHEET HAS BEEN SIGNED, SEALED, AND DATED ELECTRONICALLY.

DATE PREPARED	
2/28/2025	
ROUTE 67	STATE MO
DISTRICT SE	SHEET NO. 2
COUNTY WAYNE	
JOB NO. JSE0083	
CONTRACT ID.	
PROJECT NO.	
BRIDGE NO. A9610	

DATE	DESCRIPTION

MISSOURI HIGHWAYS AND TRANSPORTATION COMMISSION
105 WEST CAPITOL
JEFFERSON CITY, MO 65102
1-888-ASK-MODOT (1-888-275-6636)

GBA
16305 SWINGLEY RIDGE RD
ST. 300
CHESTERFIELD, MO 63017
314.231.0100
GBAteam.com

GEORGE BUTLER ASSOCIATES, INC.
PRO. ENGINEER 000133
ARCHITECT 000212
PRO. LAND SURVEYOR 000059

NIKKI D. CONLEY
PROFESSIONAL ENGINEER
PE-2018040668

IF A SEAL IS PRESENT ON THIS SHEET IT HAS BEEN ELECTRONICALLY SEALED AND DATED.

2/28/2025

NOTE:
SEE CROSS SECTIONS AND PLANS SHEETS FOR CROSS SLOPES, TRANSITIONS, AND TAPERS

SEE PLANS FOR EXISTING RIGHT OF WAY.

NO DIRECT PAY FOR SAW CUTS.

EXISTING PAVEMENT SHOWN FOR INFORMATION ONLY. LAYERS MAY VARY.

SEE STANDARD PLAN 626.00 FOR RUMBLE STRIP DETAILS.

SEE BRIDGE PLANS FOR BRIDGE APPROACH SLAB AND BRIDGE SECTION DETAILS.

DISCLAIMER
THE PROFESSIONAL WHOSE SIGNATURE AND PERSONAL SEAL APPEAR HEREON ASSUMES RESPONSIBILITY ONLY FOR WHAT APPEARS ON THIS PAGE, AND DISCLAIMS (PURSUANT TO SECTION 327.411 RSMO) SPECIFICATION, ESTIMATES, REPORTS, OR OTHER DOCUMENTS OR INSTRUMENTS NOT SEALED BY THE UNDERSIGNED PROFESSIONAL RELATING TO OR INTENDED TO BE USED FOR ANY PART OR PARTS OF THE PROJECT TO WHICH THIS PAGE REFERS.

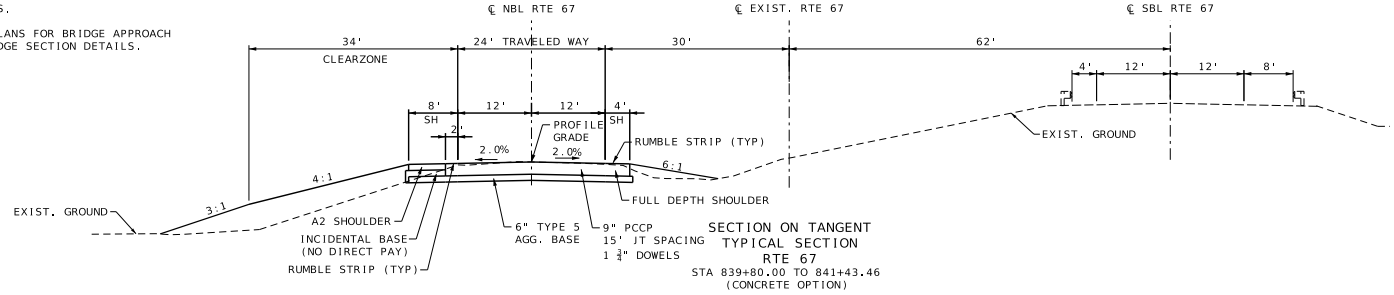

SECTION ON TANGENT
TYPICAL SECTION
RTE 67
STA 839+80.00 TO 841+43.46
(CONCRETE OPTION)

CONCRETE APPROACH PAVEMENT STA 841+23.65 TO 841+43.46
BRIDGE APPROACH SLAB STA 841+43.46 TO 841+63.46
BRIDGE EXCEPTION STA 841+63.46 TO 843+50.05 (A9610)
BRIDGE APPROACH SLAB STA 843+50.05 TO 843+70.05
CONCRETE APPROACH PAVEMENT STA 843+70.05 TO 843+90.92

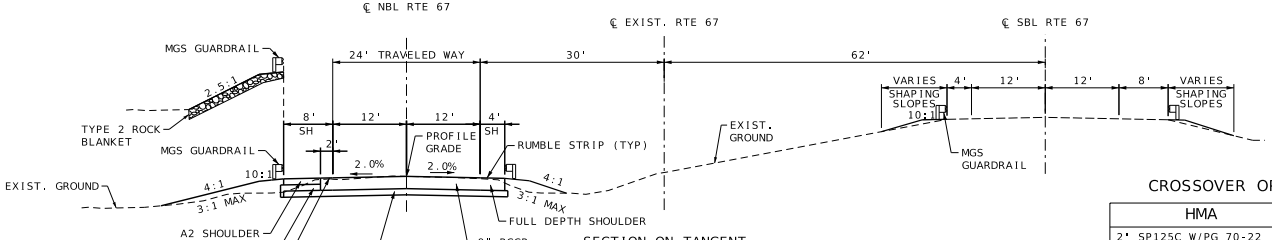

SECTION ON TANGENT
TYPICAL SECTION
RTE 67
STA 843+70.05 TO 845+65.00
(CONCRETE OPTION)

CROSSOVER OPTIONAL PAVEMENT

HMA	PCCP
2" SP125C W/PG 70-22 2" SP125C W/PG 70-22 8" SP190C W/PG 64-22	9" NON-REINFORCED PCCP 15 FT. JOINTS 1 ¼" DOWELS
6" TYPE 5 AGG. BASE	6" TYPE 5 AGG. BASE

HMA = HOT MIX ASPHALT PAVEMENT
PCCP = PORTLAND CEMENT CONCRETE PAVEMENT

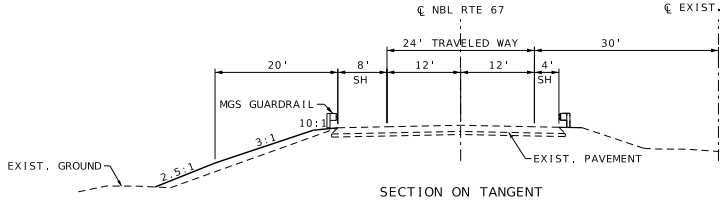

SECTION ON TANGENT
TYPICAL SECTION
RTE 67
STA 845+65.00 TO 848+00.00

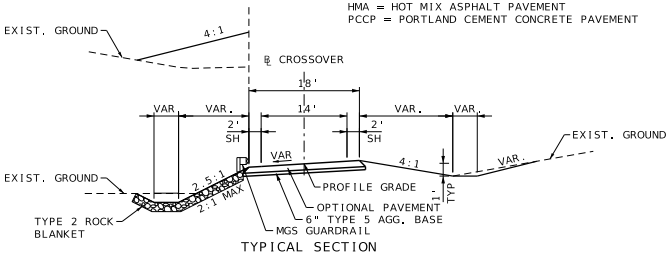

TYPICAL SECTION
PERMANENT CROSSOVERS
STA 816+73.00 TO 828+00.00 NORTH CROSSOVER
STA 889+50.00 TO 899+00.00 SOUTH CROSSOVER

NOT TO SCALE

TYPICAL SECTIONS
SHEET 2 OF 2

STATE OF MISSOURI
NIKKI D. CONLEY
NUMBER PE-2018040668
PROFESSIONAL ENGINEER

THIS SHEET HAS BEEN SIGNED, SEALED, AND DATED ELECTRONICALLY.

DATE PREPARED	
2/28/2025	
ROUTE 67	STATE MO
DISTRICT SE	SHEET NO. 2
COUNTY WAYNE	
JOB NO. JSE0083	
CONTRACT ID.	
PROJECT NO.	
BRIDGE NO. A9610	

DATE	DESCRIPTION

IF A SEAL IS PRESENT ON THIS SHEET IT HAS BEEN ELECTRONICALLY SEALED AND DATED.

MISSOURI HIGHWAYS AND TRANSPORTATION COMMISSION
105 WEST CAPITOL
JEFFERSON CITY, MO 65102
1-888-ASK-MODOT (1-888-275-6636)

GBA
16305 SWINGLEY RIDGE RD
ST. 300
CHESTERFIELD, MO 63017
314.231.0100
GBAteam.com

GEORGE BUTLER ASSOCIATES, INC.
PRO. ENGINEER 000133
ARCHITECT 000212
PRO. LAND SURVEYOR 000059

NIKKI D. CONLEY
PROFESSIONAL ENGINEER
PE-2018040668

2/28/2025

REMOVAL OF IMPROVEMENTS								
ROADWAY	STATION BEGIN	STATION END	OFFSET	SIDE	DESCRIPTION	QUANTITY	UNITS	COMMENTS
ROUTE 67	814+04.00		28.0	RT	SIGN	2	EA	
ROUTE 67	815+91.00		13.7	LT	SIGN	3	EA	
ROUTE 67	816+88.00		6.0	LT	SIGN	2	EA	
ROUTE 67	898+00.00		29.0	RT	SIGN	1	EA	
ROUTE 67	898+52.00		26.0	RT	SIGN	2	EA	
ROUTE 67	901+47.00		6.0	LT	SIGN	2	EA	
ROUTE 67	822+57.00		39.0	RT	SIGN	2	EA	
ROUTE 67	899+33.00		15.5	LT	SIGN	6	EA	
ROUTE 67	900+68.00		10.0	LT	SIGN	3	EA	
ROUTE 67	816+73.00	819+75.00	17.0	LT	INSIDE SHOULDER PAVEMENT REMOVAL	74	SY	
ROUTE 67	816+73.00	819+75.00	14.0	LT	INSIDE SHOULDER SAWCUT	302	LF	
ROUTE 67	824+63.00	828+00.00	46.0	RT	INSIDE SHOULDER PAVEMENT REMOVAL	122	SY	
ROUTE 67	824+63.00	828+00.00	46.0	RT	INSIDE SHOULDER SAWCUT	337	LF	
ROUTE 67	839+80.00	841+43.46	25.0	LT	NORTHBOUND FULL WIDTH PAVEMENT REMOVAL	654	SY	
ROUTE 67	836+93.77	841+38.13	45.0	RT	SOUTHBOUND GUARDRAIL, END TERMINAL	445	LF	EXISTING BRIDGE A7510
ROUTE 67	838+32.41	841+28.08	84.0	RT	SOUTHBOUND GUARDRAIL, END TERMINAL	318	LF	EXISTING BRIDGE A7510
ROUTE 67	844+05.00	846+81.34	55.0	LT	NORTHBOUND GUARDRAIL, END TERMINAL	275	LF	
ROUTE 67	843+97.47	847+43.71	28.0	LT	NORTHBOUND GUARDRAIL, END TERMINAL	350	LF	
ROUTE 67	843+70.05	845+65.00	25.0	LT	NORTHBOUND FULL WIDTH PAVEMENT REMOVAL	549	SY	
ROUTE 67	839+80.00	841+28.00	30.0	LT	NORTHBOUND FULL WIDTH SAWCUT	63	LF	
ROUTE 67	843+97.47	845+65.00	30.0	LT	NORTHBOUND FULL WIDTH SAWCUT	64	LF	
ROUTE 67	889+50.00	892+67.00	48.0	RT	INSIDE SHOULDER PAVEMENT REMOVAL	113	SY	
ROUTE 67	889+50.00	892+67.00	46.0	RT	INSIDE SHOULDER SAWCUT	317	LF	
ROUTE 67	898+78.00	899+71.87	25.0	LT	INSIDE SHOULDER PAVEMENT REMOVAL	76	SY	
ROUTE 67	898+78.00	899+71.87	46.0	LT	INSIDE SHOULDER SAWCUT	94	LF	
ROUTE 67	899+32.82	899+50.89			PIPE, FES	18	LF	
					PAY TOTAL	1	LUMP SUM	

MOBILIZATION
1 LUMP SUM

CONTRACTOR FURNISHED SURVEY & STAKING
1 LUMP SUM

ADDITIONAL MOBILIZATION FOR SEEDING
1 LUMP SUM

EARTHWORK							
ROADWAY	STATION BEGIN	STATION END	CLASS A EXCAVATION (CU.YD.)	EMBANKMENT IN PLACE (CU.YD.)	COMPACTING EMBANKMENT (CU.YD.)	COMPACTING IN CUT (STA.)	REMARKS
ROUTE 67	816+50.00	828+00.00	263	2472.5	223.6	2.3	NORTHERN CROSSOVER
ROUTE 67	839+80.00	841+62.94	229	1302.4	194.7	0.4	NORTH OF BRIDGE
ROUTE 67	843+50.56	848+16.00	314	3104.1	266.9	0.9	SOUTH OF BRIDGE
ROUTE 67	889+50.00	901+00.00	385	1820.8	327.3	2.3	SOUTHERN CROSSOVER
		PAY TOTAL	1191	8700	1013	5.9	

GUARDRAIL											
ROADWAY	STATION BEGIN	STATION END	SIDE	OFFSET	MGS GUARDRAIL 6 FT POSTS (LF)	MGS GUARDRAIL 8 FT POSTS (LF)	MGS BRIDGE APPROACH TRANSITION SECTION (REG/NO CURB) (EA)	TYPE A CRASHWORTHY END TERMINAL (MASH) (EA)	MGS END ANCHOR (EA)	SHAPING SLOPES CLASS III (100 FT) (EA)	REMARKS
ROUTE 67	836+99.50	841+38.13	RT	45.5	350.0	-	1	1	-	-	SOUTHBOUND
ROUTE 67	838+51.95	841+28.08	RT	84.5	187.5	-	1	1	-	-	SOUTHBOUND
ROUTE 67	843+63.32	848+00.82	LT	62.0	350.0	-	1	1	-	-	NORTHBOUND
ROUTE 67	843+53.67	846+42.31	LT	26.0	200.0	-	1	1	-	-	NORTHBOUND
ROUTE 67	843+16.51	844+55.14	RT	83.0	50.0	-	1	1	-	2	SOUTHBOUND
ROUTE 67	843+28.59	846+04.72	RT	46.0	187.5	-	1	1	-	3	SOUTHBOUND
N CROSSOVER	9+25.61	14+04.23	LT	9.0	-	412.5	-	1	1	-	NORTH CROSSOVER
S CROSSOVER	2+35.61	9+38.69	LT	9.0	-	637.5	-	1	1	-	SOUTH CROSSOVER
PAY TOTAL					1325	1050	6	8	2	5	

PIPES												
ROADWAY	STATION BEGIN	STATION END	SIDE	GROUP A PIPE 18" (LF)	GROUP A PIPE 24" (LF)	GROUP A FES 18" OR ALLOWED SUBSTITUTE (EA)	GROUP A FES 24" OR ALLOWED SUBSTITUTE (EA)	PIPE COLLAR, TYPE A (EA)	CLASS 3 EXCAVATION (CU.YD.)	ROCK LINING (CU.YD.)	CULVERT CLEANOUT (EA)	REMARKS
ROUTE 67	819+16.86	824+26.77	RT	1020	-	4	-	-	71	-	1	NORTH CROSSOVER
ROUTE 67	895+37.69	897+98.90	LT/RT	-	261	-	1	-	72	-	-	SOUTH CROSSOVER
ROUTE 67	899+36.52	899+50.89	LT/RT	-	15	-	1	1	12	3	1	EXTENSION,CR 547
PIPE SUBTOTAL				1020	276	4	2	1	155	3	2	
INLET SUBTOTAL				-	-	-	-	-	5	-	-	
PAY TOTAL				1020	276	4	2	1	160	3	2	

INLETS					
ROADWAY	STATION	SIDE	PRECAST CONCRETE DROP INLET 5FT X 2FT (FT)	CLASS 3 EXCAVATION (CU.YD.)	REMARKS
ROUTE 67	897+98.90	RT	5	5	TYPE S-1 DROP INLET
PAY TOTAL			5	*	

*SEE PIPES QUANTITY TABLE FOR PROJECT TOTAL.

PAVEMENT & SHOULDERS						
ROADWAY	STATION BEGIN	STATION END	CONCRETE APPROACH PAVEMENT (SQ.YD.)	OPTIONAL PAVEMENT (SQ.YD.)	TYPE A2 SHOULDER (SQ.YD.)	REMARKS
ROUTE 67	816+73.00	828+00.00	-	1879.7	-	NORTH CROSSOVER
ROUTE 67	839+80.00	841+23.65	-	480.0	95.5	PROJECT BEGIN TO BRIDGE
ROUTE 67	841+23.65	841+43.46	79.3	-	-	APPROACH SLAB PAVEMENT
ROUTE 67	843+70.05	843+90.92	79.3	-	-	APPROACH SLAB PAVEMENT
ROUTE 67	843+90.92	845+65.00	-	580.3	116.1	BRIDGE TO PROJECT END
ROUTE 67	889+50.00	899+71.87	-	1783.5	-	SOUTH CROSSOVER
PAY TOTAL			158.6	4723.5	211.6	

SUMMARY OF QUANTITIES
SHEET 1 OF 4

STATE OF MISSOURI
NIKKI D. CONLEY
NUMBER PE-2018040668
PROFESSIONAL ENGINEER

THIS SHEET HAS BEEN SIGNED, SEALED, AND DATED ELECTRONICALLY.

DATE PREPARED 3/28/2025

ROUTE 67 | STATE MO
DISTRICT SE | SHEET NO. 3
COUNTY WAYNE
JOB NO. JSE0083
CONTRACT ID.
PROJECT NO.
BRIDGE NO. A9610

DATE	DESCRIPTION

MISSOURI HIGHWAYS AND TRANSPORTATION COMMISSION
105 WEST CAPITOL
JEFFERSON CITY, MO 65102
1-888-ASK-MODOT (1-888-275-6636)

GBA
16305 SWINGLEY RIDGE RD
ST. 300
CHESTERFIELD, MO 63017
314.231.0100
GBAteam.com

GEORGE BUTLER ASSOCIATES, INC.
PRO. ENGINEER 000133
ARCHITECT 000212
PRO. LAND SURVEYOR 000059

NIKKI D. CONLEY
PROFESSIONAL ENGINEER
PE-2018040668

IF A SEAL IS PRESENT ON THIS SHEET IT HAS BEEN ELECTRONICALLY SEALED AND DATED.

3/28/2025

AGGREGATE BASE				
ROADWAY	STATION BEGIN	STATION END	TYPE 5 AGGREGATE BASE 6 IN THICK (SQ.YD.)	REMARKS
ROUTE 67	839+80.00	841+43.48	654	PROJECT BEGIN TO BRIDGE
ROUTE 67	843+71.10	845+65.00	776	BRIDGE TO PROJECT END
ROUTE 67	816+73.15	828+00.00	1878	NORTH CROSSOVER
ROUTE 67	889+50.00	899+71.87	1812	SOUTH CROSSOVER
PAY TOTAL			5120	

RUMBLE STRIPS					
ROADWAY	STATION BEGIN	STATION END	SIDE	OPTIONAL RUMBLE STRIP (STA.)	REMARKS
ROUTE 67	839+80	841+23	LT	1.4	PAVEMENT BEGIN TO APPROACH
ROUTE 67	839+80	841+23	RT	1.4	PAVEMENT BEGIN TO APPROACH
ROUTE 67	843+91	845+65	LT	1.7	APPROACH TO PAVEMENT END
ROUTE 67	843+91	845+65	RT	1.7	APPROACH TO PAVEMENT END
PAY TOTAL				6.2	

TEMPORARY EROSION CONTROL									
ROADWAY	STATION BEGIN	STATION END	SIDE	SILT FENCE (LF)	ALTERNATE DITCH CHECK (LF)	INLET CHECK (EA)	SEDIMENT REMOVAL (CU.YD.)	TYPE C BERM (LF)	REMARKS
ROUTE 67	839+80	841+60	LT	180	-	-	2	-	OUTSIDE SLOPE
ROUTE 67	839+80	841+50	CL	173	-	-	2	-	INSIDE SLOPE
ROUTE 67	841+58	842+21	LT	-	-	-	-	140	
ROUTE 67	842+83	843+70	LT	-	-	-	-	150	
ROUTE 67	843+20	844+60	RT	145	-	-	2	-	OUTSIDE SLOPE
ROUTE 67	843+64	848+20	LT	457	-	-	5	-	OUTSIDE SLOPE
ROUTE 67	900+82	-	RT	-	-	1	-	-	PIPE EXTENSION
N CROSSOVER	3+00	3+50	RT	-	59	-	3	-	3 AT 25' SPACING
N CROSSOVER	4+25	-	RT	-	12	-	1	-	
N CROSSOVER	4+50	-	RT	-	12	-	1	-	
N CROSSOVER	4+90	-	RT	-	12	-	1	-	
N CROSSOVER	5+40	9+90	RT	-	135	-	10	-	10 AT 50' SPACING
N CROSSOVER	5+27	9+77	LT	-	105	-	7	-	7 AT 75' SPACING
N CROSSOVER	11+00	12+50	LT	-	65	-	3	-	3 AT 75' SPACING
S CROSSOVER	6+26	7+74	LT	-	75	-	5	-	5 AT 37' SPACING
S CROSSOVER	8+10	8+70	LT	-	47	-	3	-	3 AT 30' SPACING
S CROSSOVER	4+25	5+73	RT	-	83	-	5	-	5 AT 37' SPACING
S CROSSOVER	6+48	-	RT	-	15	-	1	-	
S CROSSOVER	7+98	-	RT	-	18	-	1	-	
S CROSSOVER	9+00	-	RT	-	-	1	-	-	
S CROSSOVER	9+70	-	RT	-	18	-	1	-	
PAY TOTAL				955	656	2	53	290	

SEEDING & MULCHING						
ROADWAY	STATION BEGIN	STATION END	SIDE	SEEDING COOL SEASON GRASSES (ACRES)	MULCHING (ACRES)	REMARKS
ROUTE 67	816+73	828+53	LT	0.5	0.5	NORTH CROSSOVER
ROUTE 67	816+86	824+63	RT	0.2	0.2	NORTH CROSSOVER
ROUTE 67	839+80	841+52	LT	0.1	0.1	NORTH OF BRIDGE, INSIDE
ROUTE 67	839+80	841+72	LT	0.3	0.3	NORTH OF BRIDGE, OUTSIDE
ROUTE 67	843+48	847+65	LT	0.2	0.2	SOUTH OF BRIDGE, INSIDE
ROUTE 67	843+64	848+16	LT	0.4	0.4	SOUTH OF BRIDGE, OUTSIDE
ROUTE 67	843+13	844+62	RT	0.1	0.1	SB BRIDGE, OUTSIDE
ROUTE 67	843+20	846+23	RT	0.1	0.1	SB BRIDGE, INSIDE
ROUTE 67	889+50	898+78	LT/RT	0.6	0.6	SOUTH CROSSOVER, LT
ROUTE 67	892+67	900+74	LT/RT	0.4	0.4	SOUTH CROSSOVER, RT
PAY TOTAL				2.9	2.9	

PERMANENT EROSION CONTROL BLANKETS & GEOTEXTILES							
ROADWAY	STATION BEGIN	STATION END	SIDE	FURNISHING TYPE 2 ROCK BLANKET (CU.YD.)	PLACING TYPE 2 ROCK BLANKET (CU.YD.)	PERMANENT EROSION CONTROL GEOTEXTILE (SQ.YD.)	REMARKS
ROUTE 67	824+29	825+50	LT/RT	471	471	706	2' THICK, NORTH CROSSOVER
ROUTE 67	841+15	842+14	LT/RT	351	351	526	2' THICK
ROUTE 67	842+90	844+15	LT/RT	442	442	663	2' THICK
ROUTE 67	844+99	845+65	LT	149	149	224	2' THICK
ROUTE 67	892+00	895+34	LT/RT	1091	1,091	1,637	2' THICK, SOUTH CROSSOVER
PAY TOTAL				2,504	2,504	3,756	

SUMMARY OF QUANTITIES
SHEET 2 OF 4

STATE OF MISSOURI
NIKKI D. CONLEY
NUMBER PE-2018040668
PROFESSIONAL ENGINEER

THIS SHEET HAS BEEN SIGNED, SEALED, AND DATED ELECTRONICALLY.

DATE PREPARED
3/28/2025

ROUTE	STATE
67	MO
DISTRICT	SHEET NO.
SE	3

COUNTY
WAYNE

JOB NO.
JSE0083

CONTRACT ID.

PROJECT NO.

BRIDGE NO.
A9610

DATE	DESCRIPTION

MISSOURI HIGHWAYS AND TRANSPORTATION COMMISSION
105 WEST CAPITOL
JEFFERSON CITY, MO 65102
1-888-ASK-MODOT (1-888-275-6636)

GBA
16305 SWINGLEY RIDGE RD
ST. 300
CHESTERFIELD, MO 63017
314.231.0100
GBAteam.com

GEORGE BUTLER ASSOCIATES, INC.
PRO. ENGINEER 000133
ARCHITECT 000212
PRO. LAND SURVEYOR 000059

NIKKI D. CONLEY
PROFESSIONAL ENGINEER
PE-2018040668

3/28/2025

IF A SEAL IS PRESENT ON THIS SHEET IT HAS BEEN ELECTRONICALLY SEALED AND DATED.

TEMPORARY PAVEMENT MARKING

ROADWAY	STATION BEGIN	STATION END	SIDE	TEMPORARY REMOVABLE MARKING TAPE 24-INCH WHITE	TEMPORARY PAVEMENT MARKING PAINT 4-INCH	PAVEMENT MARKING REMOVAL	PAVEMENT MARKING REMOVAL SYMBOL	REMARKS
				L.F.	L.F.	L.F.	E.A.	
ROUTE 67	802+11	936+38	LT/RT	72	30664.6	28714.3	46	FOR TRAFFIC CONTROL
ROUTE 67	802+11	936+38	LT/RT			48118.1	18	TO RESTORE EXISTING CONDITIONS
			SUBTOTAL	72	30664.6	75587.4	64	
			PAY TOTAL	72	30665	75587	64	

DISCLAIMER
THE PROFESSIONAL WHOSE SIGNATURE AND PERSONAL SEAL APPEAR HEREON ASSUMES RESPONSIBILITY ONLY FOR WHAT APPEARS ON THIS PAGE, AND DISCLAIMS (PURSUANT TO SECTION 327.411 RSMO) SPECIFICATION, ESTIMATES, REPORTS, OR OTHER DOCUMENTS OR INSTRUMENTS NOT SEALED BY THE UNDERSIGNED PROFESSIONAL RELATING TO OR INTENDED TO BE USED FOR ANY PART OR PARTS OF THE PROJECT TO WHICH THIS PAGE REFERS.

PERMANENT PAVEMENT MARKING

ROADWAY	STATION BEGIN	STATION END	CLASS 2 PAVEMENT MARKING PAINT (25-MIL, TYPE L BEADS) 6-INCH YELLOW	6-INCH WHITE	6-INCH INTERMINTENT WHITE	6-INCH DOTTED WHITE	PREFORMED THERMOPLASTIC PAVEMENT MARKING 24-INCH YELLOW	COMBINATION STR/RT/LT	24INCHx36INCH YIELD LINE TRIANGLE	36-INCH SURFACE-MOUNT DELINEATOR POST	REMARKS
			L.F.	L.F.	L.F.	L.F.	L.F.	EA.	EA.	EA.	
ROUTE 67	802+11	810+69	852.7	849.9	212.8						PROJECT BEGIN TO NORTH INTERSECTION
ROUTE 67	810+69	819+74	1895.4	2013.6	388.6	91.3	391.3	2	30	48	NORTH INTERSECTION
ROUTE 67	819+74	895+26	7725.6	7714.1	1929.9					113	NORTH INTERSECTION TO SOUTH INTERSECTION
ROUTE 67	839+00	849+00	585.0	585.0	146.3						BRIDGE
ROUTE 67	895+26	904+09	1422.0	1535.7	268.9	86.7	380.6	2	30	23	SOUTH INTERSECTION
ROUTE 67	904+09	936+38	3220.7	3215.8	804.4						SOUTH INTERSECTION TO PROJECT END
		SUBTOTAL	15701.4	19843.0			771.9	4	60	184	
		PAY TOTAL	15701	19843			772	4	60	184	

SUMMARY OF QUANTITIES
SHEET 3 OF 4

STATE OF MISSOURI
NICHOLAS MICHAEL CORRENTI
NUMBER PE-2010000809
PROFESSIONAL ENGINEER

06/25/2025 9:11:30 AM
Nicholas Michael Correnti - Civil
MO PE-2010000809

DATE PREPARED
6/25/2025

ROUTE	STATE
67	MO
DISTRICT	SHEET NO.
SE	3

COUNTY
WAYNE

JOB NO.
JSE0083

CONTRACT ID.

PROJECT NO.

BRIDGE NO.

DATE	DESCRIPTION

MISSOURI HIGHWAYS AND TRANSPORTATION COMMISSION
105 WEST CAPITOL
JEFFERSON CITY, MO 65102
1-888-ASK-MoDOT (1-888-275-6636)

EFK•Moen
Civil Engineering Design
13523 Barrett Parkway Dr
Suite 150
St. Louis, MO 63021
Phone 314-394-3199
Fax 314-394-3199
Missouri Certificate of Authority: 001578

EFFECTIVE: 07-01-2024

SIGN	SIZE IN.	AREA SQ.FT.	QTY EACH	TOTAL AREA SQ.FT.	QTY RELOC EACH	TOTAL RELOC SQ.FT.	SIGN NUM.	DESCRIPTION
WARNING SIGNS								
WO1-1L	48X48	16.00						TURN (SYMBOL LEFT)
WO1-1R	48X48	16.00						TURN (SYMBOL RIGHT)
WO1-2L	48X48	16.00						CURVE (SYMBOL LEFT)
WO1-2R	48X48	16.00						CURVE (SYMBOL RIGHT)
WO1-3L	48X48	16.00						REVERSE TURN (SYMBOL LEFT)
WO1-3R	48X48	16.00						REVERSE TURN (SYMBOL RIGHT)
WO1-4L	48X48	16.00	1	16			15L	REVERSE CURVE (SYMBOL LEFT)
WO1-4R	48X48	16.00	1	16			15R	REVERSE CURVE (SYMBOL RIGHT)
WO1-4bL	48X48	16.00						DOUBLE ARROW REVERSE CURVE (SYMBOL LEFT)
WO1-4bR	48X48	16.00						DOUBLE ARROW REVERSE CURVE (SYMBOL RIGHT)
WO1-4cL	48X48	16.00						TRIPLE ARROW REVERSE CURVE (SYMBOL LEFT)
WO1-4cR	48X48	16.00						TRIPLE ARROW REVERSE CURVE (SYMBOL RIGHT)
WO1-6	60X30	12.50	2	25			16R/L	HORIZONTAL ARROW (SYMBOL)
WO1-6a	72X36	18.00						HORIZ. ARROW (SYMBOL ON PERMANENT BARRICADE)
WO1-7	60X30	12.50						DOUBLE HEAD HORIZONTAL ARROW (SYMBOL)
WO1-7a	72X36	18.00						DOUBLE HEAD HORIZ. ARROW (SYMBOL ON PERM. BARR.)
WO1-8	18X24	3.00						CHEVRON (SYMBOL)
WO1-8a	30X36	7.50						CHEVRON (SYMBOL FOR DIVIDED HIGHWAYS)
WO3-1	48X48	16.00						STOP AHEAD (SYMBOL)
WO3-2	48X48	16.00						YIELD AHEAD (SYMBOL)
WO3-3	48X48	16.00						SIGNAL AHEAD (SYMBOL)
WO3-4	48X48	16.00						BE PREPARED TO STOP
WO3-5	48X48	16.00						SPEED LIMIT AHEAD
WO4-1L	48X48	16.00						MERGE (SYMBOL FROM LEFT)
WO4-1R	48X48	16.00						MERGE (SYMBOL FROM RIGHT)
WO4-1aL	48X48	16.00						MERGE (LEFT)
WO4-1aR	48X48	16.00						MERGE (RIGHT)
WO5-1	48X48	16.00						ROAD/BRIDGE/RAMP NARROWS
WO5-3	48X48	16.00						ONE LANE BRIDGE
WO5-5	48X48	16.00						NARROW LANES
WO6-1	48X48	16.00						DIVIDED HIGHWAY (SYMBOL)
WO6-2	48X48	16.00						DIVIDED HIGHWAY END (SYMBOL)
WO6-3	48X48	16.00	3	48			31	TWO WAY TRAFFIC (SYMBOL)
WO7-3a	30X24	5.00						NEXT XX MILES (PLAQUE)
WO8-1	48X48	16.00						BUMP
WO8-2	48X48	16.00						DIP
WO8-3	48X48	16.00						PAVEMENT ENDS
WO8-4	48X48	16.00						SOFT SHOULDER
WO8-5	48X48	16.00						SLIPPERY WHEN WET (SYMBOL)
WO8-6	48X48	16.00						TRUCK CROSSING
WO8-6c	48X48	16.00	7	112			9	TRUCK ENTRANCE
WO8-7	36X36	9.00						LOOSE GRAVEL
WO8-7a	36X36	9.00						FRESH OIL / LOOSE GRAVEL
WO8-9	48X48	16.00						LOW SHOULDER
WO8-11	48X48	16.00						UNEVEN LANES
WO8-12	48X48	16.00						NO CENTER LINE
WO8-15	48X48	16.00						GROOVED PAVEMENT
WO8-15P	30X24	5.00						MOTORCYCLE (PLAQUE)
WO8-17L	48X48	16.00						SHOULDER DROP-OFF (SYMBOL LEFT)
WO8-17R	48X48	16.00						SHOULDER DROP-OFF (SYMBOL RIGHT)
WO8-17P	30X24	5.00						SHOULDER DROP-OFF (PLAQUE)
W10-1	42RND.	9.62						RAILROAD CROSSING
WO12-1	24X24	4.00						DOUBLE DOWN ARROW (SYMBOL)
WO12-2	48X48	16.00						LOW CLEARANCE (SYMBOL)
WO12-2x	24X18	3.00						LOW CLEARANCE (PLAQUE)
WO12-2a	84X24	14.00						OVERHEAD LOW CLEARANCE (FEET AND INCHES)
WO12-4	120X60	50.00						LOW CLEARANCE XX FT XX IN XX MILES AHEAD
WO12-5	120X60	50.00						WIDTH RESTRICTION XX FT XX IN XX MILES AHEAD
WO13-1	30X30	6.25						ADVISORY SPEED (PLAQUE)
WO16-2	30X24	5.00						XXX FEET (PLAQUE)
WO16-3	30X24	5.00						X MILE (PLAQUE)
WO20-1	48X48	16.00	8	128			2	ROAD/BRIDGE/RAMP WORK AHEAD
WO20-2	48X48	16.00						DETOUR AHEAD
WO20-3	48X48	16.00						ROAD CLOSED AHEAD
WO20-4	48X48	16.00						ONE LANE ROAD AHEAD
WO20-5	48X48	16.00	4	64			5	RIGHT/CENTER/LEFT LANE CLOSED AHEAD
WO20-5a	48X48	16.00						2 RIGHT/CENTER/LEFT LANES CLOSED AHEAD
WO20-6a	48X48	16.00						RIGHT/CENTER/LEFT LANE CLOSED
WO20-7a	48X48	16.00	7	112			8	FLAGGER (SYMBOL)
WO21-2	36X36	9.00						FRESH OIL
WO21-5	48X48	16.00						SHOULDER WORK / SHOULDER WORK AHEAD
WO22-1	48X48	16.00						BLASTING ZONE AHEAD
WO22-2	42X36	10.50						TURN OFF 2-WAY RADIO AND PHONE
WO22-3	42X36	10.50						END BLASTING ZONE
GO22-1	21X15	2.19	6	13.14			69	WET PAINT (ARROW PIVOTS)

SIGN	SIZE IN.	AREA SQ.FT.	QTY EACH	TOTAL SQ.FT.	QTY RELOC EACH	TOTAL RELOC SQ.FT.	SIGN NUM.	DESCRIPTION
GUIDE SIGNS								
E05-1	36X48	12.00						GORE EXIT
E05-2	48X36	12.00						EXIT OPEN
E05-2a	48X36	12.00						EXIT CLOSED
GO20-1	60X24	10.00	4	40			1	ROAD WORK NEXT 3 MILES
GO20-2	48X24	8.00	4	32			26	END ROAD WORK
GO20-4	36X18	4.50						PILOT CAR FOLLOW ME
GO20-4a	42X30	8.75						PILOT CAR IN USE WAIT & FOLLOW
GO20-4a	18X12	1.50						PILOT CAR IN USE WAIT & FOLLOW
GO20-5aP	36X24	6.00	4	24			54	WORK ZONE (PLAQUE)
MO4-8a	24X18	3.00						END DETOUR
MO4-9L	48X36	12.00						DETOUR (LEFT)
MO4-9R	48X36	12.00						DETOUR (RIGHT)
MO4-9P	48X12	4.00						STREET NAME (PLAQUE)
MO4-10L	48X18	6.00						DETOUR ARROW (LEFT)
MO4-10R	48X18	6.00						DETOUR ARROW (RIGHT)
REGULATORY SIGNS								
R1-1	48X48	13.25	3	39.75			41	STOP
R1-2	48TRI.	6.93						YIELD
R1-2a	36X36	9.00						TO ONCOMING TRAFFIC (PLAQUE)
R1-3P	30X12	2.50						ALL WAY (PLAQUE)
R2-1	36X48	12.00						SPEED LIMIT (SEE PLANS)
R3-1	48X48	16.00						NO RIGHT TURN (SYMBOL)
R3-2	48X48	16.00	3	48			71	NO LEFT TURN (SYMBOL)
R3-3	36X36	9.00						NO TURNS
R3-4	48X48	16.00						NO U-TURN (SYMBOL)
R3-7L	30X30	6.25	1	6.25			62	LEFT LANE MUST TURN LEFT
R3-7R	30X30	6.25	1	6.25			63	RIGHT LANE MUST TURN RIGHT
R4-1	36X48	12.00	3	36			46	DO NOT PASS
R4-2	36X48	12.00						PASS WITH CARE
R4-7a	36X48	12.00	1	12			60	KEEP RIGHT (HORIZONTAL ARROW)
R4-8a	36X48	12.00						KEEP LEFT (HORIZONTAL ARROW)
R5-1	30X30	6.25	2	12.5			61	DO NOT ENTER
R5-1a	36X24	6.00						WRONG WAY
R6-1L	54X18	6.75						ONE WAY ARROW (LEFT)
R6-1R	54X18	6.75						ONE WAY ARROW (RIGHT)
R6-2L	24X30	5.00						ONE WAY (LEFT)
R6-2R	24X30	5.00						ONE WAY (RIGHT)
R9-9	24X12	2.00						SIDEWALK CLOSED
R9-11L	24X18	3.00						SIDEWALK CLOSED AHEAD, (ARROW LEFT) CROSS HERE
R9-11R	24X18	3.00						SIDEWALK CLOSED AHEAD, (ARROW RIGHT) CROSS HERE
R10-6	24X36	6.00						STOP HERE ON RED (45^ ARROW)
R11-2	48X30	10.00						ROAD CLOSED
R11-3a	60X30	12.50						ROAD CLOSED XX MILES AHEAD LOCAL TRAFFIC ONLY
R11-4	60X30	12.50						ROAD CLOSED TO THRU TRAFFIC
CONST-3A	60X48	20.00						FINE SIGN
CONST-3X	56X12	4.67						SPEEDING/PASSING (PLATE)
MISCELLANEOUS SIGNS								
CONST-5	48X36	12.00						POINT OF PRESENCE
CONST-5	96X48	32.00	2	64			66	POINT OF PRESENCE
CONST-8	48X36	12.00	2	24			65	WORK ZONE NO PHONE ZONE
SPECIAL	66x42	20.00	1	20			68	END WET PAINT/THANK YOU
G022-3			5				67	WET PAINT/KEEP RIGHT
G023-1			2				70	STAY BACK 100FT
SPECIAL	48X48	16.00	4	64			72	RUMBLE STRIP AHEAD
W04-2R	48X48	16.00	2	32			80R	LANE END (SYMBOL RIGHT)
W04-2L	48X48	16.00	2	32			80L	LANE END (SYMBOL LEFT)

616-10.05 CONSTRUCTION SIGNS	TOTAL	1027
616-10.10 RELOCATED SIGNS	TOTAL	*

* NO DIRECT PAYMENT FOR RELOCATING SIGNS

ITEM NUMBER	TOTAL QTY	DESCRIPTION
6122008		IMPACT ATTENUATOR 40 MPH (SAND BARRELS)
6122009		IMPACT ATTENUATOR 45 MPH (SAND BARRELS)
6122010		IMPACT ATTENUATOR 50 MPH (SAND BARRELS)
6122012		IMPACT ATTENUATOR 55 MPH (SAND BARRELS)
6122014		IMPACT ATTENUATOR 60 MPH (SAND BARRELS)
6122017		IMPACT ATTENUATOR 65 MPH (SAND BARRELS)
6122019		IMPACT ATTENUATOR 70 MPH (SAND BARRELS)
6122020		REPLACEMENT SAND BARREL
6122030		IMPACT ATTENUATOR (RELOCATION)
6123001	1	TRUCK MOUNTED ATTENUATOR (TMA)
6161008		ADVANCED WARNING RAIL SYSTEM
6161012		BUOYS (BOATS KEEP OUT)
6161013		BUOYS (NO WAKE)
6161014		SPECIAL SIGN ASSEMBLY (BOATS KEEP OUT)
6161025	150	CHANNELIZER (TRIM LINE)
6161030	13	TYPE III MOVEABLE BARRICADE
6161033	30	DIRECTION INDICATOR BARRICADE
6161040	2	FLASHING ARROW PANEL
6161047		TYPE III OBJECT MARKER
6161055		SEQUENTIAL FLASHING WARNING LIGHT
6161070	130	TUBULAR MARKER
6161095		RADAR SPEED ADVISORY SYSTEM
6161096		CHANGEABLE MESSAGE SIGN, COMMISSION FURNISHED/RETAINED
6161098A	2	CHANGEABLE MESSAGE SIGN W/O COMM. INTERFACE - CONTRACTOR FURNISHED/RETAINED
6161099		CHANGEABLE MESSAGE SIGN WITH COMM. INTERFACE - CONTRACTOR FURNISHED/RETAINED
6162000A		WORK ZONE TRAFFIC SIGNAL SYSTEM
6162002	4	TEMPORARY LONG-TERM RUMBLE STRIPS
6173600D		TEMPORARY TRAFFIC BARRIER CONTRACTOR FURNISHED/RETAINED
6173602B		TEMPORARY TRAFFIC BARRIER CONTRACTOR FURNISHED/COMMISSION RETAINED
6174000A		TEMP. TRAFFIC BARRIER HEIGHT TRANSITION
6175010A		RELOCATING TEMPORARY TRAFFIC BARRIER
6176000B		TEMPORARY TRAFFIC BARRIER COMMISSION FURNISHED/RETAINED
6177000B		TEMP. TRAFFIC BARRIER HEIGHT TRANSITION COMMISSION FURNISHED/RETAINED
6208064A		TEMPORARY RAISED PAVEMENT MARKER
9029400		TEMPORARY TRAFFIC SIGNALS
9029401		TEMPORARY TRAFFIC SIGNALS AND LIGHTING

DISCLAIMER

THE PROFESSIONAL WHOSE SIGNATURE AND PERSONAL SEAL APPEAR HEREON ASSUMES RESPONSIBILITY ONLY FOR WHAT APPEARS ON THIS PAGE, AND DISCLAIMS (PURSUANT TO SECTION 327.411 RSMO) SPECIFICATION, ESTIMATES, REPORTS, OR OTHER DOCUMENTS OR INSTRUMENTS NOT SEALED BY THE UNDERSIGNED PROFESSIONAL RELATING TO OR INTENDED TO BE USED FOR ANY PART OR PARTS OF THE PROJECT TO WHICH THIS PAGE REFERS.

SUMMARY OF QUANTITIES
SHEET 4 OF 4

STATE OF MISSOURI
NICHOLAS MICHAEL CORRENTI
NUMBER PE-2010000809
PROFESSIONAL ENGINEER

08/24/2025 11:32:58 AM
Nicholas Michael Correnti - Civil
MO PE-2010000809

DATE PREPARED: 6/24/2025
ROUTE: 67 | STATE: MO
DISTRICT: SE | SHEET NO.: 3
COUNTY: WAYNE
JOB NO.: JSE0083
CONTRACT ID.
PROJECT NO.
BRIDGE NO.

DATE	DESCRIPTION

MISSOURI HIGHWAYS AND TRANSPORTATION COMMISSION
105 WEST CAPITOL
JEFFERSON CITY, MO 65102
1-888-ASK-MoDOT (1-888-275-6636)

EFK•Moen
Civil Engineering Design
13523 Barrett Parkway Dr
Suite 205
St. Louis, MO 63021
Phone 314-394-3199
Fax 314-394-3199
Missouri Certificate of Authority:001578

DISCLAIMER

THE PROFESSIONAL WHOSE SIGNATURE AND PERSONAL SEAL APPEAR HEREON ASSUMES RESPONSIBILITY ONLY FOR WHAT APPEARS ON THIS PAGE, AND DISCLAIMS (PURSUANT TO SECTION 327.411 RSMO) SPECIFICATION, ESTIMATES, REPORTS, OR OTHER DOCUMENTS OR INSTRUMENTS NOT SEALED BY THE UNDERSIGNED PROFESSIONAL RELATING TO OR INTENDED TO BE USED FOR ANY PART OR PARTS OF THE PROJECT TO WHICH THIS PAGE REFERS.

ANY WORK INDICATED ON THE PLANS THAT EXTENDS BEYOND THE PROJECT LIMITS IS CONSIDERED INCIDENTAL TO AND A PART OF THE CONSTRUCTION OF THIS PROJECT.

RIGHT OF WAY LIMITS FOR THIS PROJECT EXTEND FROM STATION 814+50.00 TO STATION 902+00.00, A DISTANCE OF 1.66 MILES.

ALL BEARINGS BASED ON STATE PLAN BEARINGS EASTERN ZONE.

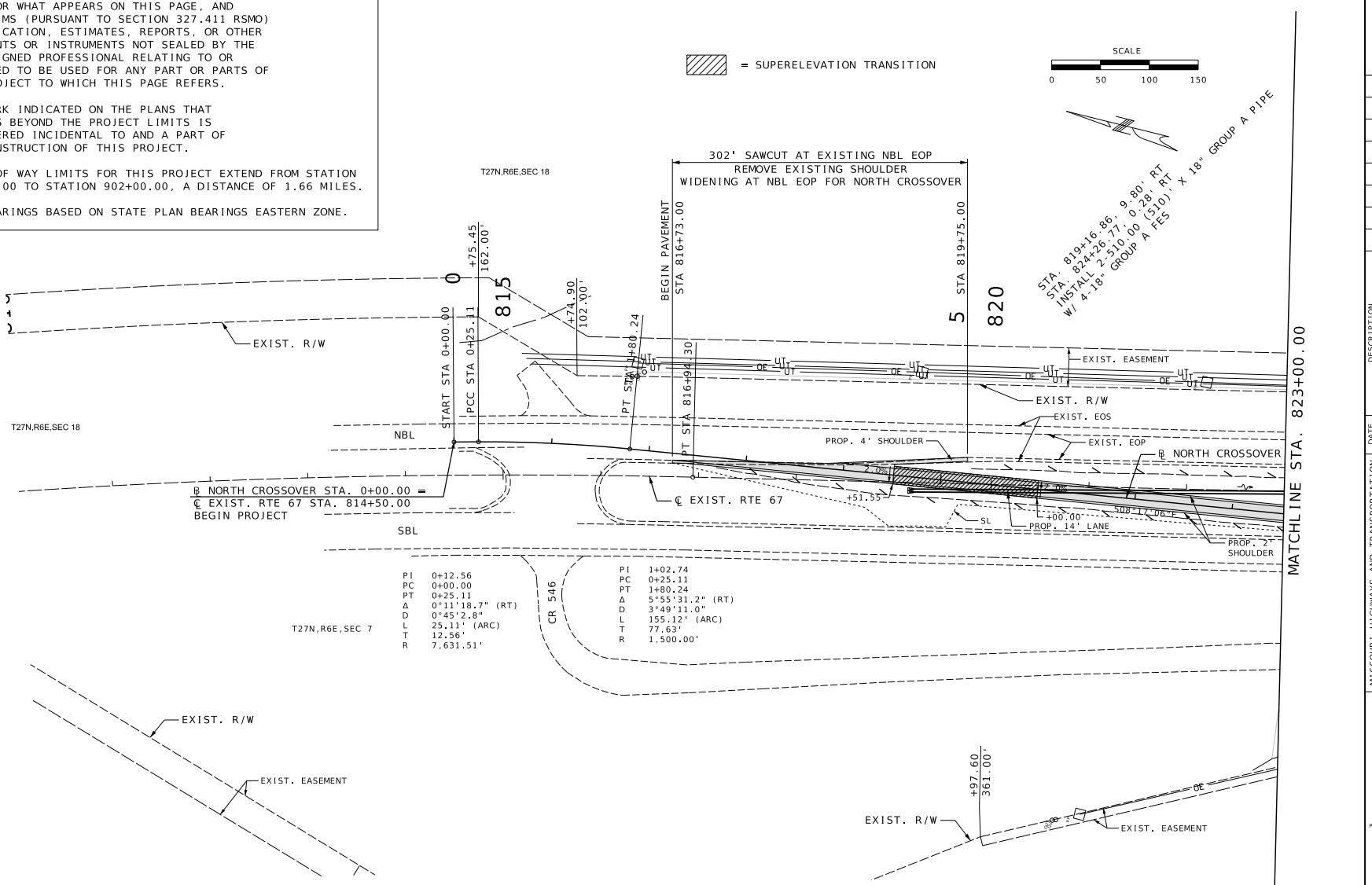

PLAN SHEET
SHEET 1 OF 5

STATE OF MISSOURI
NIKKI D. CONLEY
NUMBER PE-2018040668
PROFESSIONAL ENGINEER

THIS SHEET HAS BEEN SIGNED, SEALED, AND DATED ELECTRONICALLY.

DATE PREPARED	
2/28/2025	
ROUTE	STATE
67	MO
DISTRICT	SHEET NO.
SE	4
COUNTY	
WAYNE	
JOB NO.	
JSE0083	
CONTRACT ID.	
PROJECT NO.	
BRIDGE NO.	
A9610	

DATE	DESCRIPTION

MISSOURI HIGHWAYS AND TRANSPORTATION COMMISSION
105 WEST CAPITOL
JEFFERSON CITY, MO 65102
1-888-ASK-MODOT (1-888-275-6636)

GBA
16305 SWINGLEY RIDGE RD
ST. 300
CHESTERFIELD, MO 63017
314.231.0100
GBAteam.com

GEORGE BUTLER ASSOCIATES, INC.
PRO. ENGINEER 000133
ARCHITECT 000212
PRO. LAND SURVEYOR 000059

NIKKI D. CONLEY
PROFESSIONAL ENGINEER
PE-2018040668

2/28/2025

IF A SEAL IS PRESENT ON THIS SHEET IT HAS BEEN ELECTRONICALLY SEALED AND DATED.

DISCLAIMER
THE PROFESSIONAL WHOSE SIGNATURE AND PERSONAL SEAL APPEAR HEREON ASSUMES RESPONSIBILITY ONLY FOR WHAT APPEARS ON THIS PAGE, AND DISCLAIMS (PURSUANT TO SECTION 327.411 RSMO) SPECIFICATION, ESTIMATES, REPORTS, OR OTHER DOCUMENTS OR INSTRUMENTS NOT SEALED BY THE UNDERSIGNED PROFESSIONAL RELATING TO OR INTENDED TO BE USED FOR ANY PART OR PARTS OF THE PROJECT TO WHICH THIS PAGE REFERS.

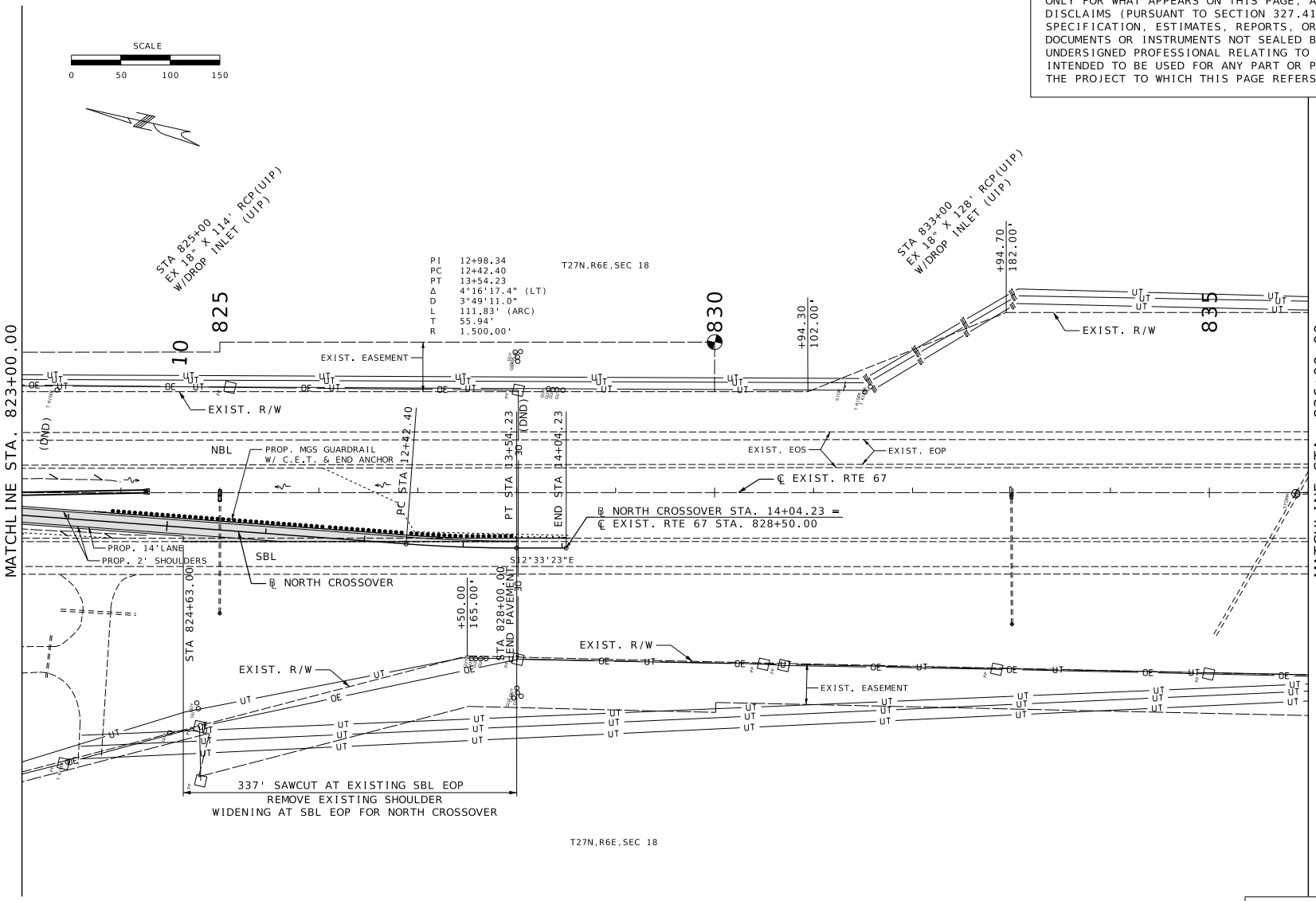

PLAN SHEET
SHEET 2 OF 5

STATE OF MISSOURI
NIKKI D. CONLEY
NUMBER PE-2018040668
PROFESSIONAL ENGINEER

THIS SHEET HAS BEEN SIGNED, SEALED, AND DATED ELECTRONICALLY.

DATE PREPARED	2/28/2025
ROUTE	67
STATE	MO
DISTRICT	SE
SHEET NO.	5
COUNTY	WAYNE
JOB NO.	JSE0083
CONTRACT ID.	
PROJECT NO.	
BRIDGE NO.	A9610

DATE	DESCRIPTION

MISSOURI HIGHWAYS AND TRANSPORTATION COMMISSION
105 WEST CAPITOL
JEFFERSON CITY, MO 65102
1-888-ASK-MODOT (1-888-275-6636)

GBA
16305 SWINGLEY RIDGE RD
ST. 300
CHESTERFIELD, MO 63017
314.231.0100
GBAteam.com

GEORGE BUTLER ASSOCIATES, INC.
PRO. ENGINEER 000133
ARCHITECT 000212
PRO. LAND SURVEYOR 000059

NIKKI D. CONLEY
PROFESSIONAL ENGINEER
PE-2018040668

2/28/2025

IF A SEAL IS PRESENT ON THIS SHEET IT HAS BEEN ELECTRONICALLY SEALED AND DATED.

DISCLAIMER
THE PROFESSIONAL WHOSE SIGNATURE AND PERSONAL SEAL APPEAR HEREON ASSUMES RESPONSIBILITY ONLY FOR WHAT APPEARS ON THIS PAGE, AND DISCLAIMS (PURSUANT TO SECTION 327.411 RSMO) SPECIFICATION, ESTIMATES, REPORTS, OR OTHER DOCUMENTS OR INSTRUMENTS NOT SEALED BY THE UNDERSIGNED PROFESSIONAL RELATING TO OR INTENDED TO BE USED FOR ANY PART OR PARTS OF THE PROJECT TO WHICH THIS PAGE REFERS.

ANY WORK INDICATED ON THE PLANS THAT EXTENDS BEYOND THE PROJECT LIMITS IS CONSIDERED INCIDENTAL TO AND A PART OF THE CONSTRUCTION OF THIS PROJECT.

ALL BEARINGS BASED ON STATE PLAN BEARINGS EASTERN ZONE.

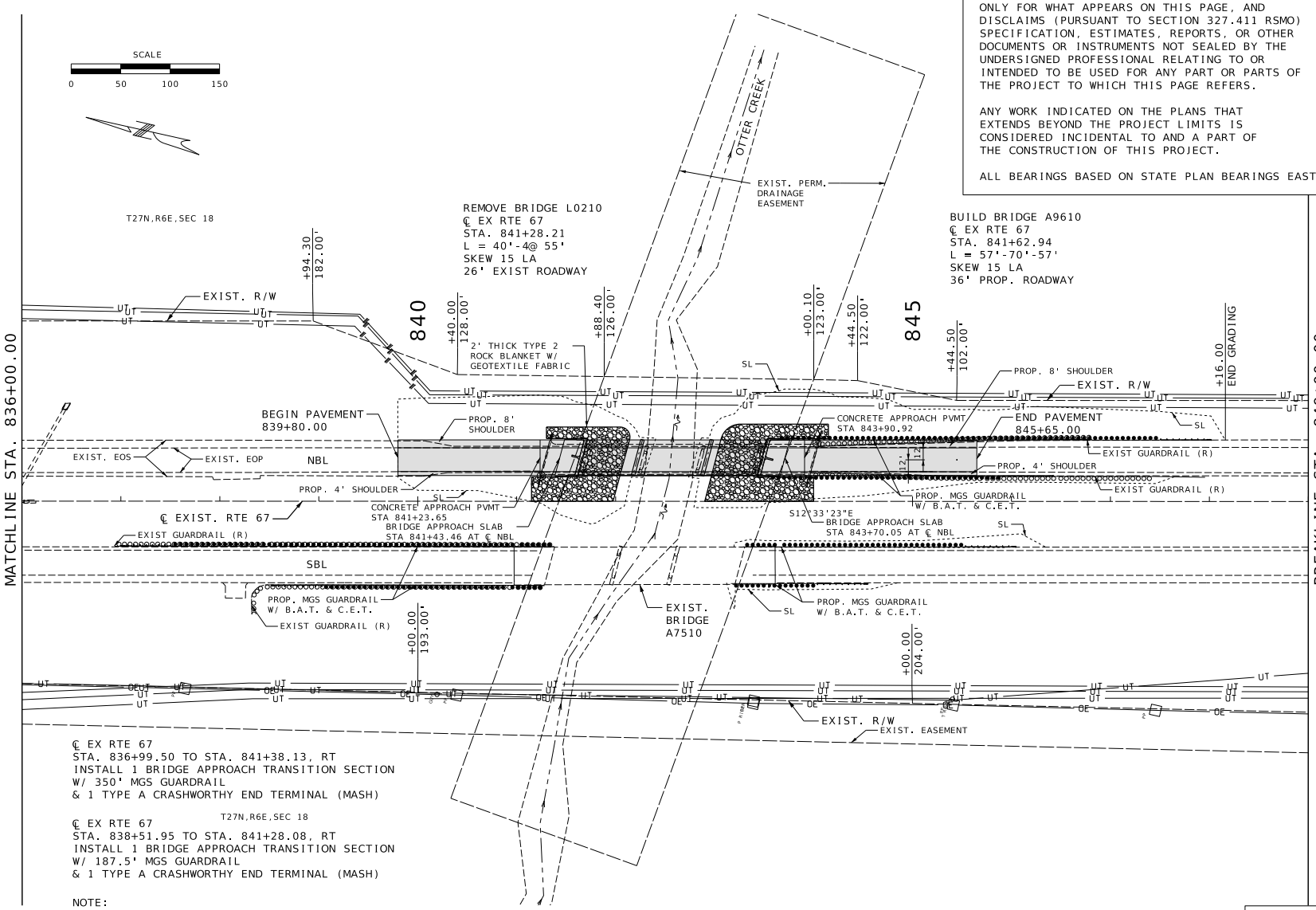

℄ EX RTE 67
STA. 836+99.50 TO STA. 841+38.13, RT
INSTALL 1 BRIDGE APPROACH TRANSITION SECTION
W/ 350' MGS GUARDRAIL
& 1 TYPE A CRASHWORTHY END TERMINAL (MASH)

T27N,R6E,SEC 18

℄ EX RTE 67
STA. 838+51.95 TO STA. 841+28.08, RT
INSTALL 1 BRIDGE APPROACH TRANSITION SECTION
W/ 187.5' MGS GUARDRAIL
& 1 TYPE A CRASHWORTHY END TERMINAL (MASH)

NOTE:
FIELD VERIFY SOUTHBOUND
BRIDGE BARRIERS FOR GUARDRAILS

PLAN SHEET
SHEET 3 OF 5

STATE OF MISSOURI
NIKKI D. CONLEY
NUMBER PE-2018040668
PROFESSIONAL ENGINEER

THIS SHEET HAS BEEN SIGNED, SEALED, AND DATED ELECTRONICALLY.

DATE PREPARED	
2/28/2025	
ROUTE 67	STATE MO
DISTRICT SE	SHEET NO. 6
COUNTY WAYNE	
JOB NO. JSE0083	
CONTRACT ID.	
PROJECT NO.	
BRIDGE NO. A9610	

DATE	DESCRIPTION

IF A SEAL IS PRESENT ON THIS SHEET IT HAS BEEN ELECTRONICALLY SEALED AND DATED.

MISSOURI HIGHWAYS AND TRANSPORTATION COMMISSION
105 WEST CAPITOL
JEFFERSON CITY, MO 65102
1-888-ASK-MODOT (1-888-275-6636)

GBA
16305 SWINGLEY RIDGE RD
ST. 300
CHESTERFIELD, MO 63017
314.231.0100
GBAteam.com

GEORGE BUTLER ASSOCIATES, INC.
PRO. ENGINEER 000133
ARCHITECT 000212
PRO. LAND SURVEYOR 000059

NIKKI D. CONLEY
PROFESSIONAL ENGINEER
PE-2018040668

2/28/2025

DISCLAIMER
THE PROFESSIONAL WHOSE SIGNATURE AND PERSONAL SEAL APPEAR HEREON ASSUMES RESPONSIBILITY ONLY FOR WHAT APPEARS ON THIS PAGE, AND DISCLAIMS (PURSUANT TO SECTION 327.411 RSMO) SPECIFICATION, ESTIMATES, REPORTS, OR OTHER DOCUMENTS OR INSTRUMENTS NOT SEALED BY THE UNDERSIGNED PROFESSIONAL RELATING TO OR INTENDED TO BE USED FOR ANY PART OR PARTS OF THE PROJECT TO WHICH THIS PAGE REFERS.

ANY WORK INDICATED ON THE PLANS THAT EXTENDS BEYOND THE PROJECT LIMITS IS CONSIDERED INCIDENTAL TO AND A PART OF THE CONSTRUCTION OF THIS PROJECT.

ALL BEARINGS BASED ON STATE PLAN BEARINGS EASTERN ZONE.

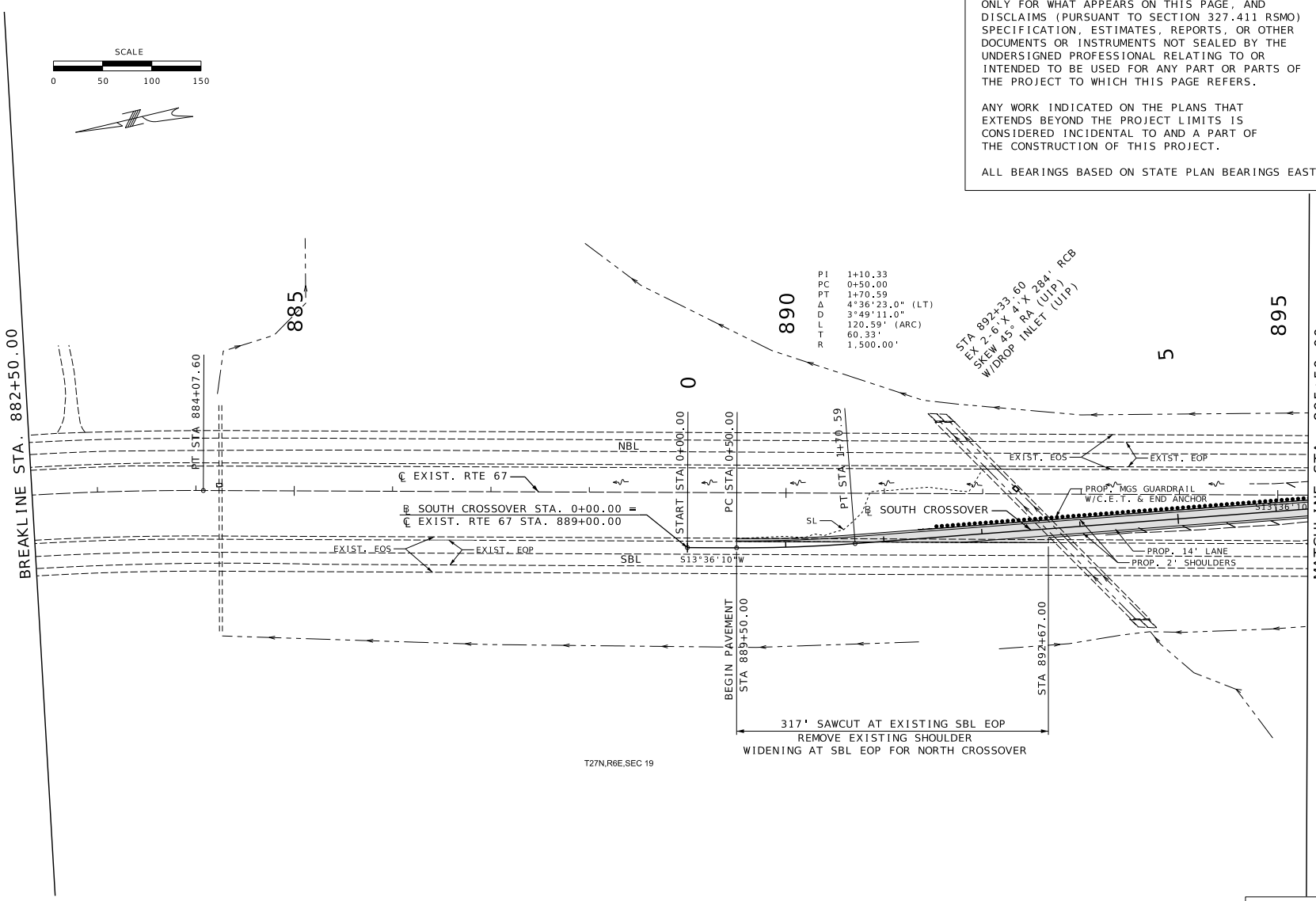

PLAN SHEET
SHEET 4 OF 5

STATE OF MISSOURI
NIKKI D. CONLEY
NUMBER PE-2018040668
PROFESSIONAL ENGINEER

THIS SHEET HAS BEEN SIGNED, SEALED, AND DATED ELECTRONICALLY.

DATE PREPARED	2/28/2025
ROUTE	67
STATE	MO
DISTRICT	SE
SHEET NO.	7
COUNTY	WAYNE
JOB NO.	JSE0083
CONTRACT ID.	
PROJECT NO.	
BRIDGE NO.	A9610

DATE	DESCRIPTION

MISSOURI HIGHWAYS AND TRANSPORTATION COMMISSION
105 WEST CAPITOL
JEFFERSON CITY, MO 65102
1-888-ASK-MODOT (1-888-275-6636)

GBA
16305 SWINGLEY RIDGE RD
ST. 300
CHESTERFIELD, MO 63017
314.231.0100
GBAteam.com

GEORGE BUTLER ASSOCIATES, INC.
PRO. ENGINEER 000133
ARCHITECT 000212
PRO. LAND SURVEYOR 000059

NIKKI D. CONLEY
PROFESSIONAL ENGINEER
PE-2018040668

2/28/2025

IF A SEAL IS PRESENT ON THIS SHEET IT HAS BEEN ELECTRONICALLY SEALED AND DATED.

DISCLAIMER
THE PROFESSIONAL WHOSE SIGNATURE AND PERSONAL SEAL APPEAR HEREON ASSUMES RESPONSIBILITY ONLY FOR WHAT APPEARS ON THIS PAGE, AND DISCLAIMS (PURSUANT TO SECTION 327.411 RSMO) SPECIFICATION, ESTIMATES, REPORTS, OR OTHER DOCUMENTS OR INSTRUMENTS NOT SEALED BY THE UNDERSIGNED PROFESSIONAL RELATING TO OR INTENDED TO BE USED FOR ANY PART OR PARTS OF THE PROJECT TO WHICH THIS PAGE REFERS.

= SUPERELEVATION TRANSITION

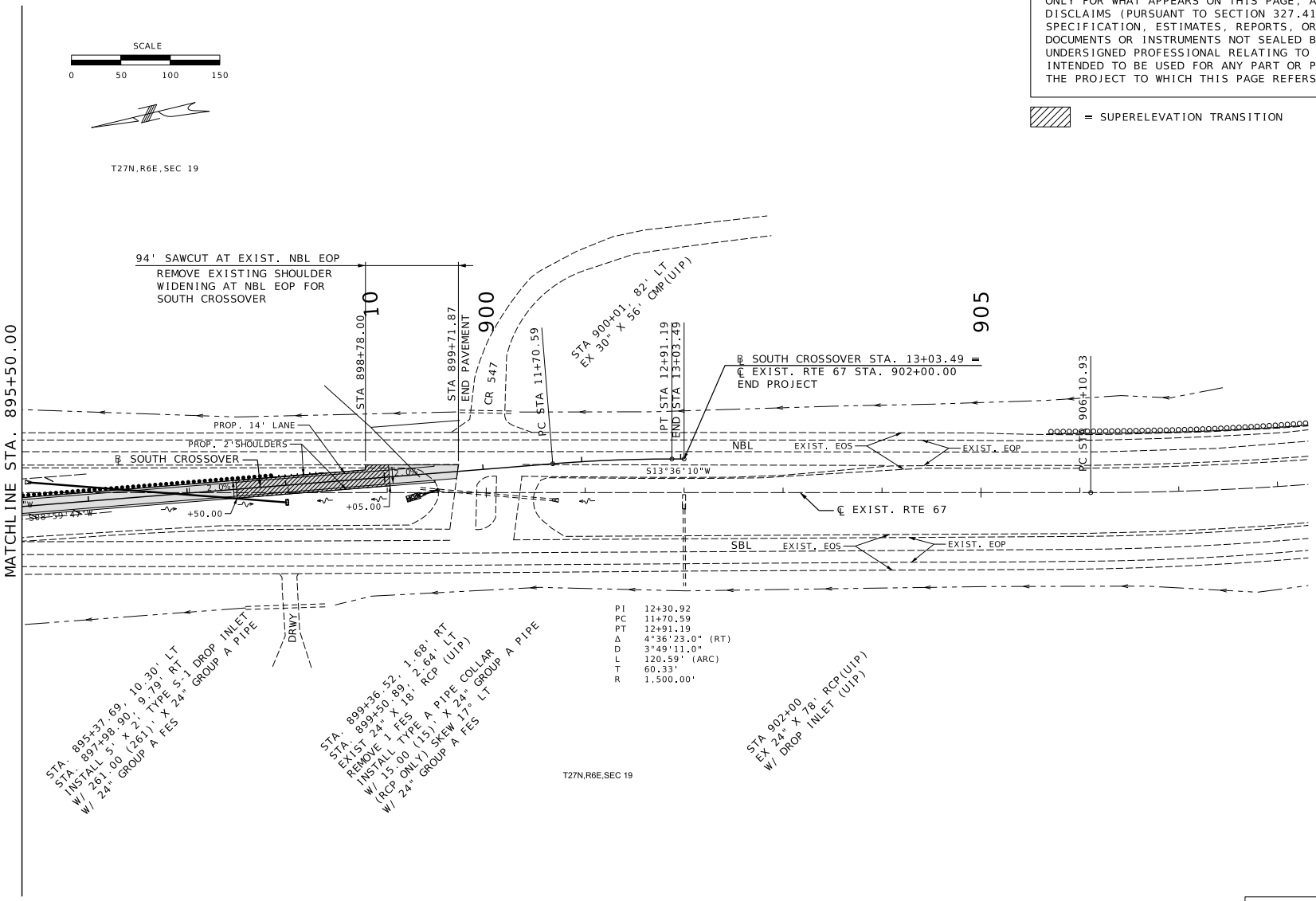

PI	12+30.92
PC	11+70.59
PT	12+91.19
Δ	4°36'23.0" (RT)
D	3°49'11.0"
L	120.59' (ARC)
T	60.33'
R	1,500.00'

PLAN SHEET
SHEET 5 OF 5

STATE OF MISSOURI
NIKKI D. CONLEY
NUMBER PE-2018040668
PROFESSIONAL ENGINEER

THIS SHEET HAS BEEN SIGNED, SEALED, AND DATED ELECTRONICALLY.

DATE PREPARED	2/28/2025
ROUTE 67	STATE MO
DISTRICT SE	SHEET NO. 8
COUNTY	WAYNE
JOB NO.	JSE0083
CONTRACT ID.	
PROJECT NO.	
BRIDGE NO.	A9610

DATE	DESCRIPTION

MISSOURI HIGHWAYS AND TRANSPORTATION COMMISSION
105 WEST CAPITOL
JEFFERSON CITY, MO 65102
1-888-ASK-MODOT (1-888-275-6636)

GBA
16305 SWINGLEY RIDGE RD
ST. 300
CHESTERFIELD, MO 63017
314.231.0100
GBAteam.com

GEORGE BUTLER ASSOCIATES, INC.
PRO. ENGINEER 000133
ARCHITECT 000212
PRO. LAND SURVEYOR 000059

NIKKI D. CONLEY
PROFESSIONAL ENGINEER
PE-2018040668

2/28/2025

IF A SEAL IS PRESENT ON THIS SHEET IT HAS BEEN ELECTRONICALLY SEALED AND DATED.

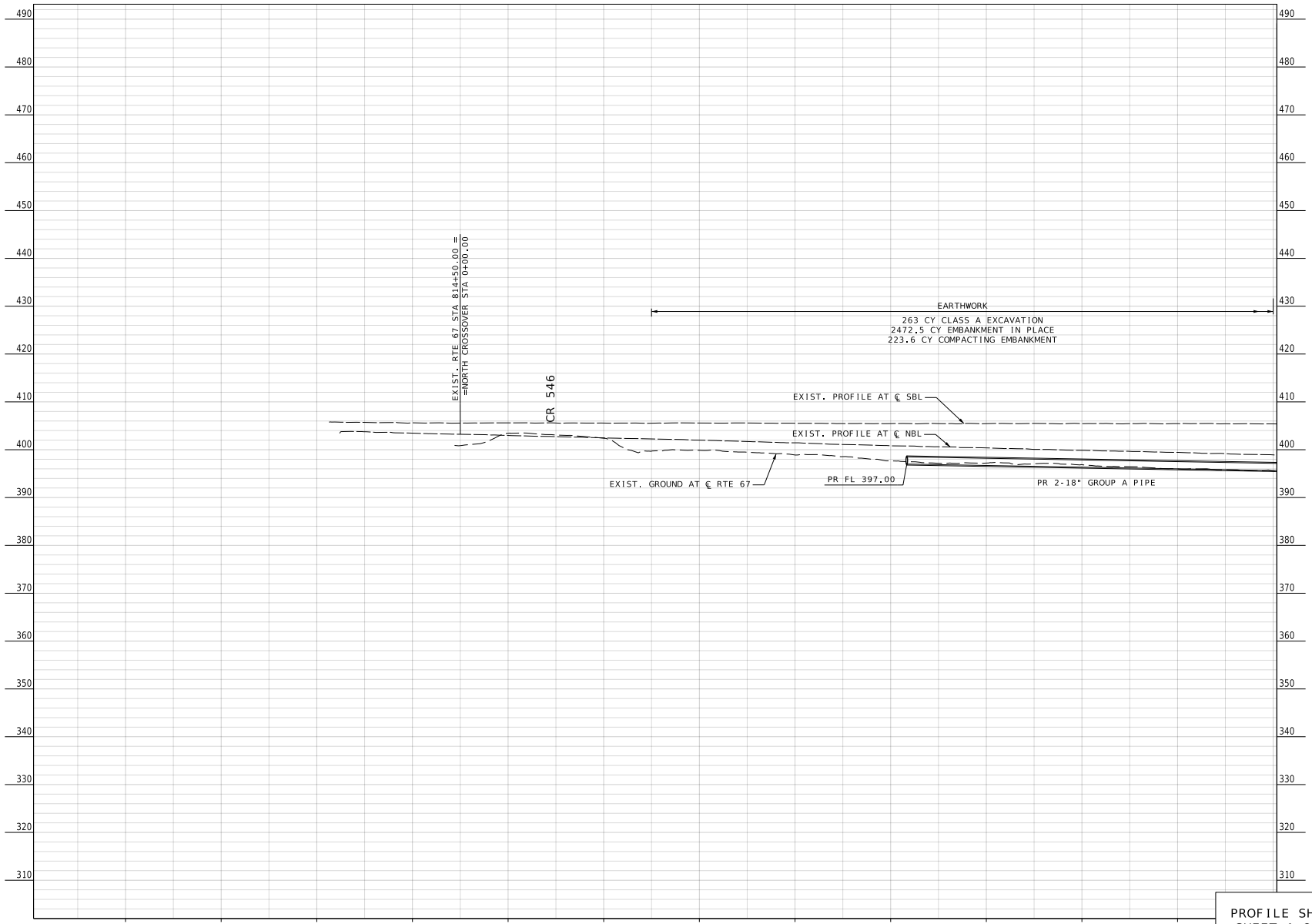

PROFILE SHEET
SHEET 1 OF 5

STATE OF MISSOURI
NIKKI D. CONLEY
NUMBER PE-2018040668
PROFESSIONAL ENGINEER

THIS SHEET HAS BEEN SIGNED, SEALED, AND DATED ELECTRONICALLY.

DATE PREPARED	2/28/2025
ROUTE 67	STATE MO
DISTRICT SE	SHEET NO. 9
COUNTY	WAYNE
JOB NO.	JSE0083
CONTRACT ID.	
PROJECT NO.	
BRIDGE NO.	A9610

DATE	DESCRIPTION

MISSOURI HIGHWAYS AND TRANSPORTATION COMMISSION
105 WEST CAPITOL
JEFFERSON CITY, MO 65102
1-888-ASK-MODOT (1-888-275-6636)

GBA
16305 SWINGLEY RIDGE RD
ST. 300
CHESTERFIELD, MO 63017
314.231.0100
GBAteam.com

GEORGE BUTLER ASSOCIATES, INC.
PRO. ENGINEER 000133
ARCHITECT 000212
PRO. LAND SURVEYOR 000059

NIKKI D. CONLEY
PROFESSIONAL ENGINEER
PE-2018040668

IF A SEAL IS PRESENT ON THIS SHEET IT HAS BEEN ELECTRONICALLY SEALED AND DATED.

2/28/2025

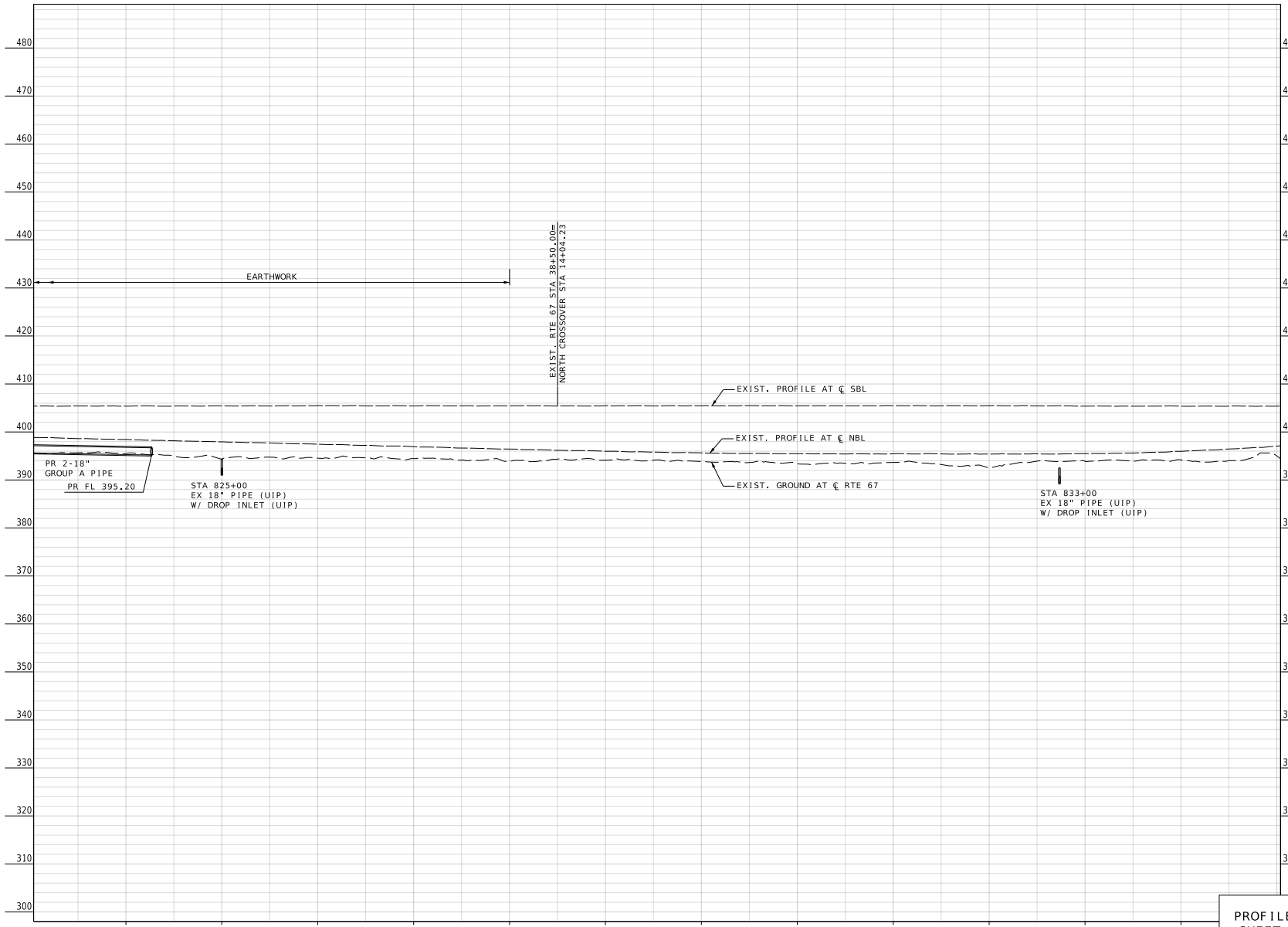

PROFILE SHEET
SHEET 2 OF 5

STATE OF MISSOURI
NIKKI D. CONLEY
NUMBER PE-2018040668
PROFESSIONAL ENGINEER

THIS SHEET HAS BEEN SIGNED, SEALED, AND DATED ELECTRONICALLY.

DATE PREPARED	2/28/2025
ROUTE 67	STATE MO
DISTRICT SE	SHEET NO. 10
COUNTY	WAYNE
JOB NO.	JSE0083
CONTRACT ID.	
PROJECT NO.	
BRIDGE NO.	A9610

DATE	DESCRIPTION

MISSOURI HIGHWAYS AND TRANSPORTATION COMMISSION
105 WEST CAPITOL
JEFFERSON CITY, MO 65102
1-888-ASK-MODOT (1-888-275-6636)

GBA
16305 SWINGLEY RIDGE RD
ST. 300
CHESTERFIELD, MO 63017
314.231.0100
GBAteam.com

GEORGE BUTLER ASSOCIATES, INC.
PRO. ENGINEER 000133
ARCHITECT 000212
PRO. LAND SURVEYOR 000059

NIKKI D. CONLEY
PROFESSIONAL ENGINEER
PE-2018040668

2/28/2025

IF A SEAL IS PRESENT ON THIS SHEET IT HAS BEEN ELECTRONICALLY SEALED AND DATED.

BENCHMARKS

BM 1:
CHISELED SQUARE ON HEADWALL
EXIST ℄ RTE 67
STA 841+24.81, 25.46 LT
ELEV 402.42'

BM 2:
CHISELED SQUARE ON HEADWALL
EXIST ℄ RTE 67
STA 844+03.53, 58.51 LT
ELEV 402.42'

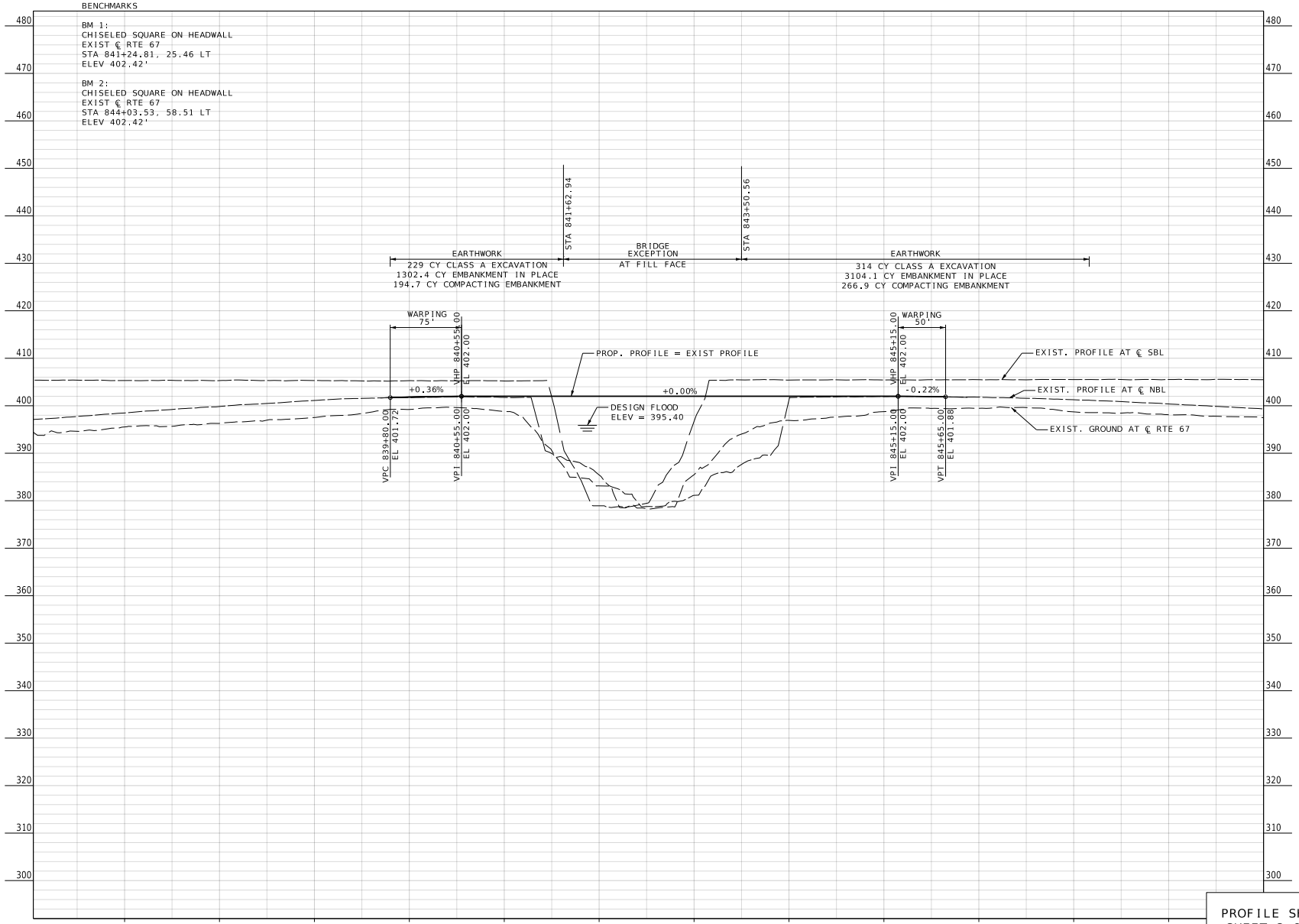

PROFILE SHEET
SHEET 3 OF 5

STATE OF MISSOURI
NIKKI D. CONLEY
NUMBER PE-2018040668
PROFESSIONAL ENGINEER

THIS SHEET HAS BEEN SIGNED, SEALED, AND DATED ELECTRONICALLY.

DATE PREPARED	
2/28/2025	
ROUTE	STATE
67	MO
DISTRICT	SHEET NO.
SE	11
COUNTY	
WAYNE	
JOB NO.	
JSE0083	
CONTRACT ID.	
PROJECT NO.	
BRIDGE NO.	
A9610	

DATE	DESCRIPTION

IF A SEAL IS PRESENT ON THIS SHEET IT HAS BEEN ELECTRONICALLY SEALED AND DATED.

MISSOURI HIGHWAYS AND TRANSPORTATION COMMISSION
105 WEST CAPITOL
JEFFERSON CITY, MO 65102
1-888-ASK-MODOT (1-888-275-6636)

GBA
16305 SWINGLEY RIDGE RD
ST. 300
CHESTERFIELD, MO 63017
314.231.0100
GBAteam.com

GEORGE BUTLER
ASSOCIATES, INC.
PRO. ENGINEER 000133
ARCHITECT 000212
PRO. LAND SURVEYOR 000059

NIKKI D. CONLEY
PROFESSIONAL
ENGINEER
PE-2018040668

2/28/2025

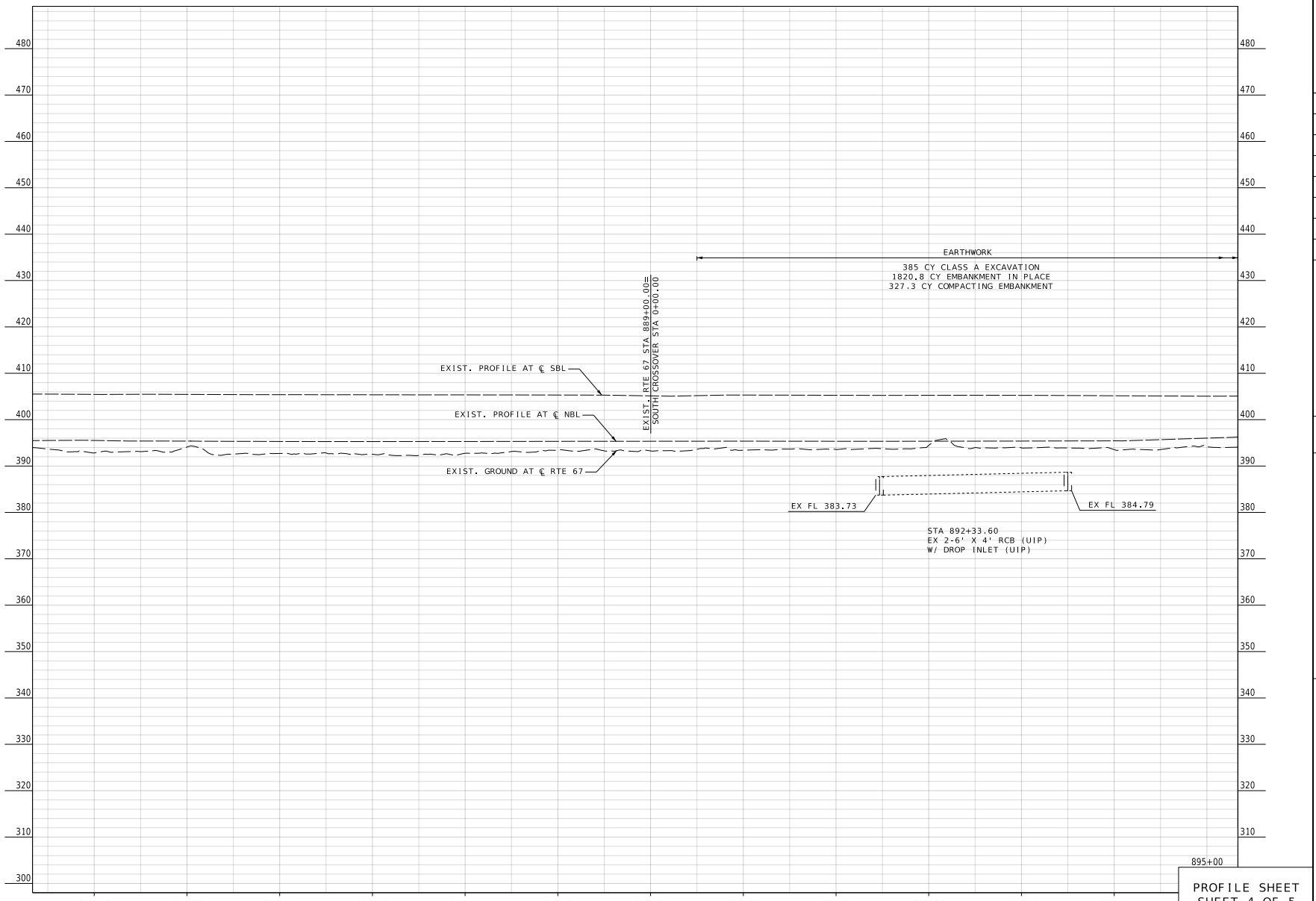

PROFILE SHEET
SHEET 4 OF 5

STATE OF MISSOURI
NIKKI D. CONLEY
NUMBER PE-2018040668
PROFESSIONAL ENGINEER

THIS SHEET HAS BEEN SIGNED, SEALED, AND DATED ELECTRONICALLY.

DATE PREPARED	2/28/2025
ROUTE	67
STATE	MO
DISTRICT	SE
SHEET NO.	12
COUNTY	WAYNE
JOB NO.	JSE0083
CONTRACT ID.	
PROJECT NO.	
BRIDGE NO.	A9610

DATE	DESCRIPTION

IF A SEAL IS PRESENT ON THIS SHEET IT HAS BEEN ELECTRONICALLY SEALED AND DATED.

MISSOURI HIGHWAYS AND TRANSPORTATION COMMISSION
105 WEST CAPITOL
JEFFERSON CITY, MO 65102
1-888-ASK-MODOT (1-888-275-6636)

GBA
16305 SWINGLEY RIDGE RD
ST. 300
CHESTERFIELD, MO 63017
314.231.0100
GBAteam.com

GEORGE BUTLER
ASSOCIATES, INC.
PRO. ENGINEER 000133
ARCHITECT 000212
PRO. LAND SURVEYOR 000059

NIKKI D. CONLEY
PROFESSIONAL
ENGINEER
PE-2018040668

2/28/2025

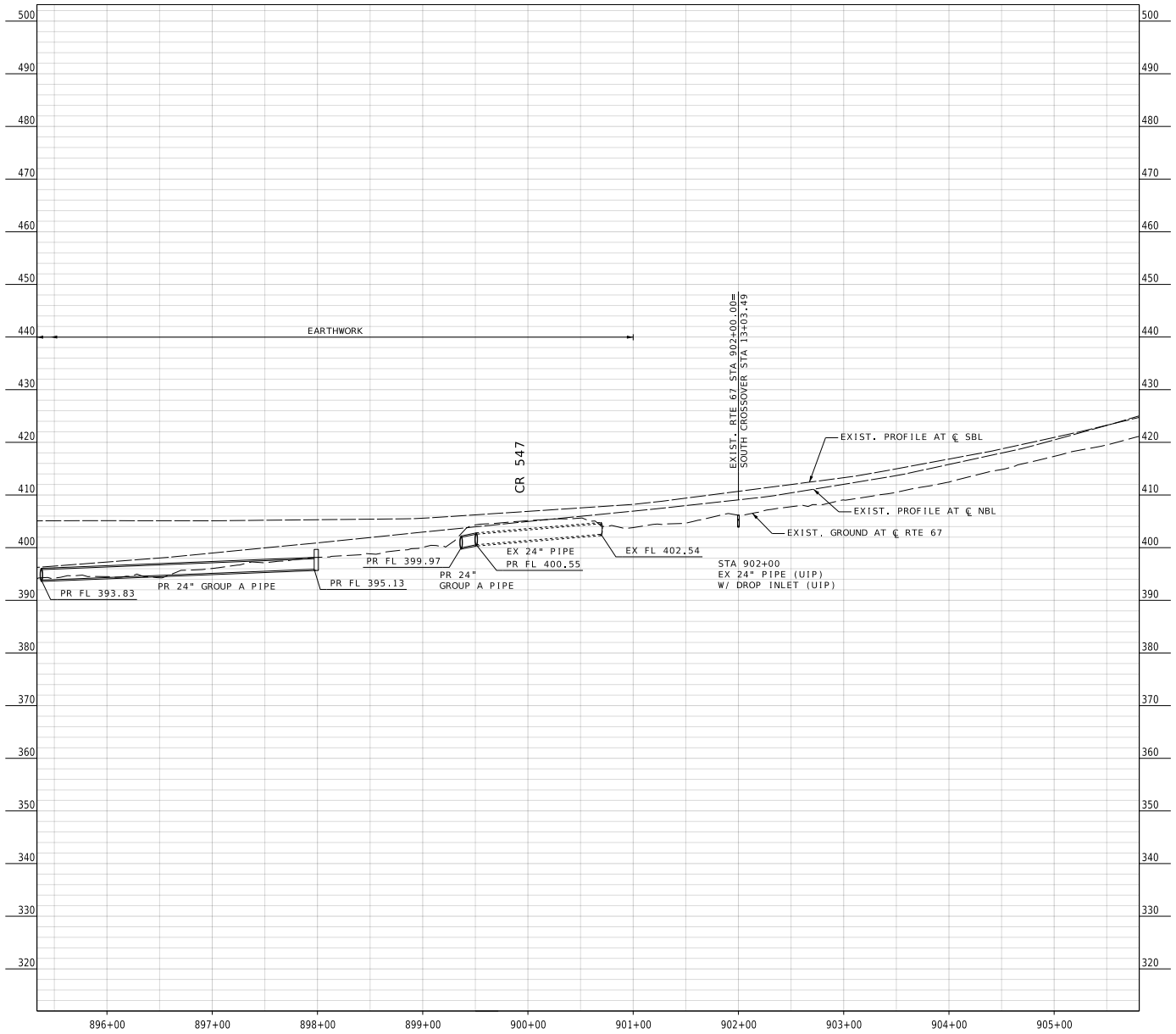

PROFILE SHEET
SHEET 5 OF 5

STATE OF MISSOURI
NIKKI D CONLEY
NUMBER PE-2018040668
PROFESSIONAL ENGINEER

THIS SHEET HAS BEEN SIGNED, SEALED, AND DATED ELECTRONICALLY.

DATE PREPARED	3/28/2025
ROUTE 67	STATE MO
DISTRICT SE	SHEET NO. 13
COUNTY	WAYNE
JOB NO.	JSE0083
CONTRACT ID.	
PROJECT NO.	
BRIDGE NO.	A9610

DATE	DESCRIPTION

MISSOURI HIGHWAYS AND TRANSPORTATION COMMISSION
105 WEST CAPITOL
JEFFERSON CITY, MO 65102
1-888-ASK-MODOT (1-888-275-6636)

GBA
16305 SWINGLEY RIDGE RD
ST. 300
CHESTERFIELD, MO 63017
314.231.0100
GBAteam.com

GEORGE BUTLER ASSOCIATES, INC.
PRO. ENGINEER 000133
ARCHITECT 000212
PRO. LAND SURVEYOR 000059

NIKKI D. CONLEY
PROFESSIONAL ENGINEER
PE-2018040668

3/28/2025

IF A SEAL IS PRESENT ON THIS SHEET IT HAS BEEN ELECTRONICALLY SEALED AND DATED.

NOTE:
WARP TRANSITIONS TO MAINLINE
ROAD CROSS SLOPES AND
EXISTING ROAD GRADES.

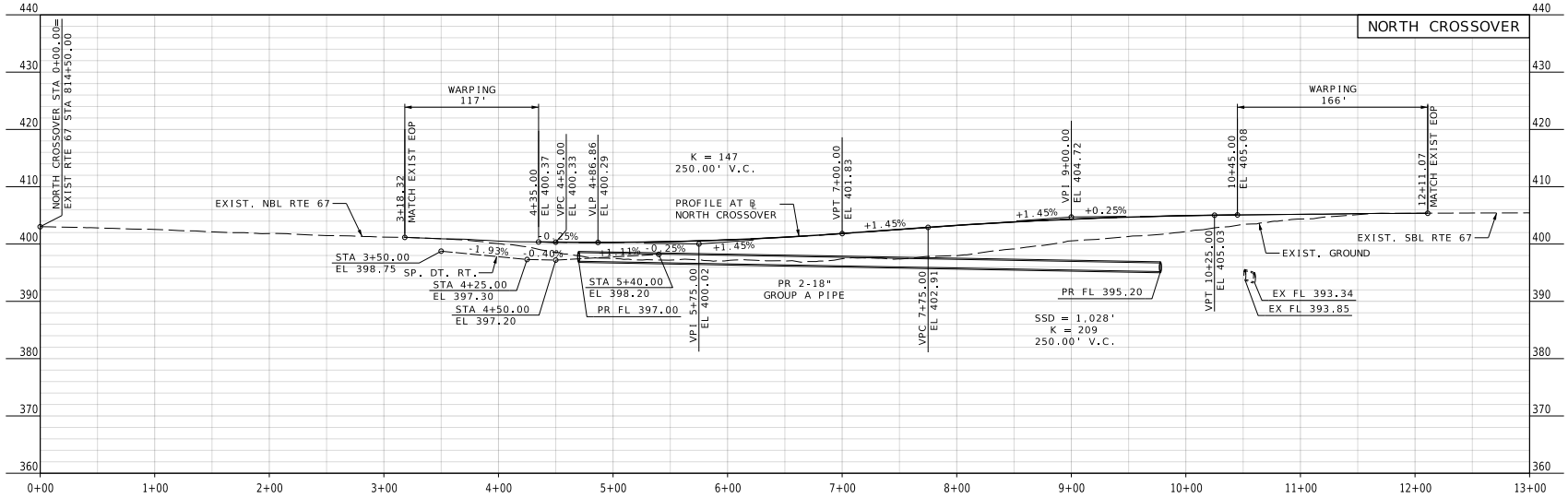

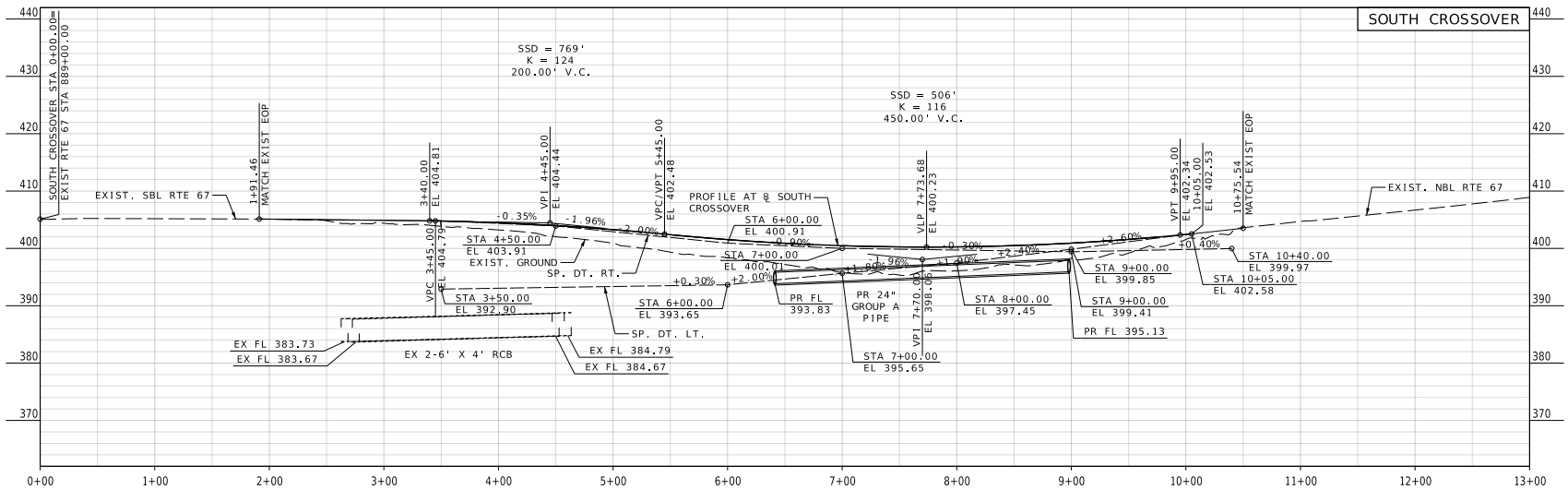

CROSSOVER
PROFILE SHEET
SHEET 1 OF 1

STATE OF MISSOURI
NIKKI D CONLEY
NUMBER PE-2018040668
PROFESSIONAL ENGINEER

THIS SHEET HAS BEEN SIGNED, SEALED, AND DATED ELECTRONICALLY.

DATE PREPARED	3/28/2025
ROUTE	67
STATE	MO
DISTRICT	SE
SHEET NO.	14
COUNTY	WAYNE
JOB NO.	JSE0083
CONTRACT ID.	
PROJECT NO.	
BRIDGE NO.	A9610

DATE	DESCRIPTION

MISSOURI HIGHWAYS AND TRANSPORTATION COMMISSION
105 WEST CAPITOL
JEFFERSON CITY, MO 65102
1-888-ASK-MODOT (1-888-275-6636)

GBA
16305 SWINGLEY RIDGE RD
ST. 300
CHESTERFIELD, MO 63017
314.231.0100
GBAteam.com

GEORGE BUTLER ASSOCIATES, INC.
PRO. ENGINEER 000133
ARCHITECT 000212
PRO. LAND SURVEYOR 000059

NIKKI D. CONLEY
PROFESSIONAL ENGINEER
PE-2018040668

3/28/2025

IF A SEAL IS PRESENT ON THIS SHEET IT HAS BEEN ELECTRONICALLY SEALED AND DATED.

US 67
STA 823+23.47
CP#1 OFFSET 94.47' RT

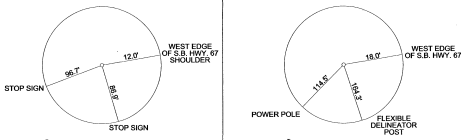

5/8" REBAR W/ ALUM. CAP
N: 423362.951
E: 834835.707
ELEV: 402.29'

US 67
STA 859+46.40
CP#2 OFFSET 100.62' RT

5/8" REBAR W/ ALUM. CAP
N: 419825.337
E: 835617.333
ELEV: 403.33'

US 67
STA 849+15.90
CP#3 OFFSET 75.03' LT

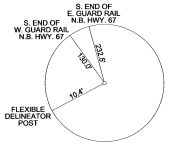

5/8" REBAR W/ ALUM. CAP
N: 420869.377
E: 835564.751
ELEV: 393.29'

US 67
STA 841+09.24
CP#4 OFFSET 1.23' LT

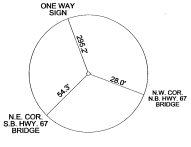

5/8" REBAR W/ ALUM. CAP
N: 421640.697
E: 835317.348
ELEV: 398.12'

US 67
STA 833+38.74
CP#5 OFFSET 95.60' RT

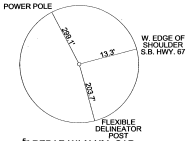

5/8" REBAR W/ ALUM. CAP
N: 422371.716
E: 835055.326
ELEV: 402.02'

US 67
STA 845+52.01
CP#6 OFFSET 92.69' RT

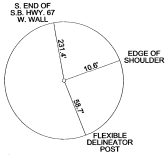

5/8" REBAR W/ ALUM. CAP
N: 421188.096
E: 835321.927
ELEV: 403.65'

US 67
STA 870+26.11
CP#7 OFFSET 63.19' LT

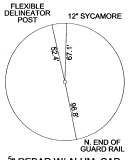

5/8" REBAR W/ ALUM. CAP
N: 418807.062
E: 836011.949
ELEV: 393.37'

US 67
STA 876+10.25
CP#8 OFFSET 91.68' RT

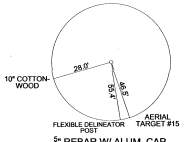

5/8" REBAR W/ ALUM. CAP
N: 418212.163
E: 835943.483
ELEV: 401.80'

US 67
STA 898+83.39
CP#9 OFFSET 65.90' LT

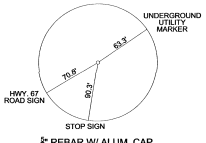

5/8" REBAR W/ ALUM. CAP
N: 415975.376
E: 835675.704
ELEV: 400.89'

US 67
STA 910+56.35
CP#10 OFFSET 90.07' RT

5/8" REBAR W/ ALUM. CAP
N: 414852.071
E: 835279.551
ELEV: 455.29'

REFERENCE POINT SHEET
SHEET 1 OF 1

STATE OF MISSOURI
RAYMOND S. McCRAE
NUMBER
PLS-2013020065
LAND SURVEYOR

RAYMOND S. McCRAE
MO. P.L.S. NO. 2013020065

DATE PREPARED	
2/27/2025	
ROUTE	STATE
67	MO
DISTRICT	SHEET NO.
SE	15
COUNTY	
WAYNE	
JOB NO.	
JSE0083	
CONTRACT ID.	
PROJECT NO.	
BRIDGE NO.	
A9610	

DATE	DESCRIPTION

MISSOURI HIGHWAYS AND TRANSPORTATION COMMISSION

MoDOT

105 WEST CAPITOL
JEFFERSON CITY, MO 65102
1-888-ASK-MODOT (1-888-275-6636)

IF A SEAL IS PRESENT ON THIS SHEET IT HAS BEEN ELECTRONICALLY SEALED AND DATED.

2:09:44 PM 2/27/2025

ALL PROJECT COORDINATES HAVE BEEN PROJECTED FROM THE MISSOURI STATE PLANE COORDINATE (SPC) SYSTEM OF 1983 USING AN AVERAGE PROJECT PROJECTION (GRID TO GROUND) FACTOR. TO GET BACK TO STATE PLANE COORDINATES MULTIPY THE PROJECT COORDINATES BY THE AVERAGE GRID FACTOR AS SHOWN IN THE "REFERENCE CONTROL INFORMATION" PORTION OF THIS TABLE.

PROJECT COORDINATE INFORMATION

COORDINATE SYSTEM	MOD STATE PLANE (GROUND)
HORIZONTAL DATUM	NAD83 (2011)
VERTICAL DATUM	NAVD 88
GEOID MODEL	2018
ELEVATIONS DETERMINED BY	TIES TO MODOT REALTIME NETWORK & LEVELS
PROJECT PROJECTION FACTOR	1.000080816

REFERENCE CONTROL INFORMATION

COORDINATE SYSTEM	MISSOURI COORDINATE SYSTEM 1983
CONTROL STATION	MODOT VRS
DESIGNATION	MODOT SILVA CORP ARP
CORS_ID	MO SL
PID	DN 5838
LATITUDE	371038.14513
LONGITUDE	902752.44434
NORTHING (M)	149124.332
EASTING (M)	253146.327
ZONE	EAST
PROJECT AVERAGE GRID FACTOR	1.000080816

EXAMPLE OF PROJECT COORDINATE TO S.P.C.

PROJECT NORTHING X AVERAGE GRID FACTOR
= STATE PLANE NORTHING
PROJECT EASTING X AVERAGE GRID FACTOR
= STATE PLANE EASTING

EXAMPLE: CONTROL POINT #1
N 423362.951 X 0.999919191= N 423328.740
E 834835.707 X 0.999919191= E 834768.245

LINEAR UNIT CONVERSION

1 METER = 3.280833333 US SURVEY FEET (USFT)

COORDINATE POINT LISTING

SHEET NO	STATION	LOCATION	OFFSET (USFT)	MODIFIED STATE PLANE (GROUND) NORTHING (US SURVEY FT)	EASTING (US SURVEY FT)	ELEVATION (US SURVEY FT)	DESCRIPTION	POINT ID
PROJECT CONTROL POINTS								
			94.74' RT	423362.951	834835.707	402.29	5/8" Rebar with Aluminum Cap	CP1
			100.62' RT	419825.337	835617.333	403.33	5/8" Rebar with Aluminum Cap	CP2
			75.03' LT	420869.377	835564.751	393.29	5/8" Rebar with Aluminum Cap	CP3
			1.23' LT	421640.697	835317.348	398.12	5/8" Rebar with Aluminum Cap	CP4
			95.60' RT	422371.716	835055.326	402.02	5/8" Rebar with Aluminum Cap	CP5
			92.69' RT	421188.096	835321.927	403.65	5/8" Rebar with Aluminum Cap	CP 6
			63.19' LT	418807.062	836011.949	393.37	5/8" Rebar with Aluminum Cap	CP 7
			91.68' RT	418212.163	835943.483	401.80	5/8" Rebar with Aluminum Cap	CP 8
			65.90' LT	415975.376	835675.704	400.89	5/8" Rebar with Aluminum Cap	CP 9
			90.07' RT	414852.071	835279.551	455.29	5/8" Rebar with Aluminum Cap	CP 10
			58.95' LT	423375.560	834990.079	398.18	Mag Nail in Asphalt	T1
			80.28' RT	422668.217	835004.986	405.11	Mag Nail In Asphalt	T2
			59.07' LT	421894.052	835320.179	400.27	Mag Nail in Asphalt	T3
			80.14' RT	421116.388	835350.758	405.15	Mag Nail In Asphalt	T4
			59.00' LT	420668.350	835593.107	396.68	Mag Nail in Asphalt	T5
			79.88' RT	419752.566	835654.783	405.15	Mag Nail in Asphalt	T6
				421630	835344	402.42	Chiseled Sq. on Headwall	BM1
				421365	835437	402.42	Chiseled Sq. on Headwall	BM2
ALIGNMENTS								
EXISTING ROUTE 67								
	790+00.00	EX. RTE 67		426473.111	833761.400		START	
	793+05.63	EX. RTE 67		426209.962	833916.842		PC	
	805+09.90	EX. RTE 67	94.85 LT	425173.077	834529.329		HPI	
	816+94.30	EX. RTE 67		423997.608	834791.138		PT	
	871+20.30	EX. RTE 67		418701.385	835970.751		PC	
	877+75.34	EX. RTE 67	75.00 LT	418061.934	836112.804		HPI	
	884+07.60	EX. RTE 67		417425.27	835958.746		PT	
	906+10.93	EX. RTE 67		415283.744	835440.546		PC	
	913+35.99	EX. RTE 67		414579.024	835270.020		HPI	
	920+32.04	EX. RTE 67		413876.774	835450.451		PT, END	
NORTH CROSSOVER								
	0+00.00	N CROSS		424243.625	834767.134		PC	
	0+12.56	N CROSS	0.01 LT	424231.464	834770.257		HPI	
	0+25.11	N CROSS		424219.292	834773.339		PCC	
	1+02.74	N CROSS	2.00 LT	424144.036	834792.396		HPI	
	1+80.24	N CROSS		424067.214	834803.582		PT	
	12+42.40	N CROSS		423016.137	834956.634		PC	
	12+98.34	N CROSS	1.04 RT	422960.781	834964.695		HPI	
	13+54.23	N CROSS		422906.180	834976.856		PT	
	14+04.23	N CROSS		422857.375	834987.726		END	
SOUTH CROSSOVER								
	0+00.00	S CROSS		416959.849	835788.508		START	
	0+50.00	S CROSS		416911.251	835776.749		PC	
	1+10.33	S CROSS	1.21 RT	416852.613	835762.560		HPI	
	1+70.60	S CROSS		416793.026	835753.126		PT	
	11+70.60	S CROSS		415805.328	835596.754		PC	
	12+30.92	S CROSS	1.21 LT	415745.740	835587.320		HPI	
	12+91.19	S CROSS		415687.102	835573.131		PT	
	13+03.49	S CROSS		415675.147	835570.238		END	

COORDINATE POINT SHEET
SHEET 1 OF 1

STATE OF MISSOURI
NIKKI D. CONLEY
NUMBER PE-2018040668
PROFESSIONAL ENGINEER

THIS SHEET HAS BEEN SIGNED, SEALED, AND DATED ELECTRONICALLY.

DATE PREPARED 2/28/2025

ROUTE	STATE
67	MO
DISTRICT	SHEET NO.
SE	16

COUNTY: WAYNE
JOB NO.: JSE0083
CONTRACT ID.:
PROJECT NO.:
BRIDGE NO.: A9610

DATE	DESCRIPTION

IF A SEAL IS PRESENT ON THIS SHEET IT HAS BEEN ELECTRONICALLY SEALED AND DATED.

MISSOURI HIGHWAYS AND TRANSPORTATION COMMISSION
105 WEST CAPITOL
JEFFERSON CITY, MO 65102
1-888-ASK-MODOT (1-888-275-6636)

GBA
16305 SWINGLEY RIDGE RD
ST. 300
CHESTERFIELD, MO 63017
314.231.0100
GBAteam.com

GEORGE BUTLER ASSOCIATES, INC.
PRO. ENGINEER 000133
ARCHITECT 000212
PRO. LAND SURVEYOR 000059

NIKKI D. CONLEY
PROFESSIONAL ENGINEER
PE-2018040668

2/28/2025

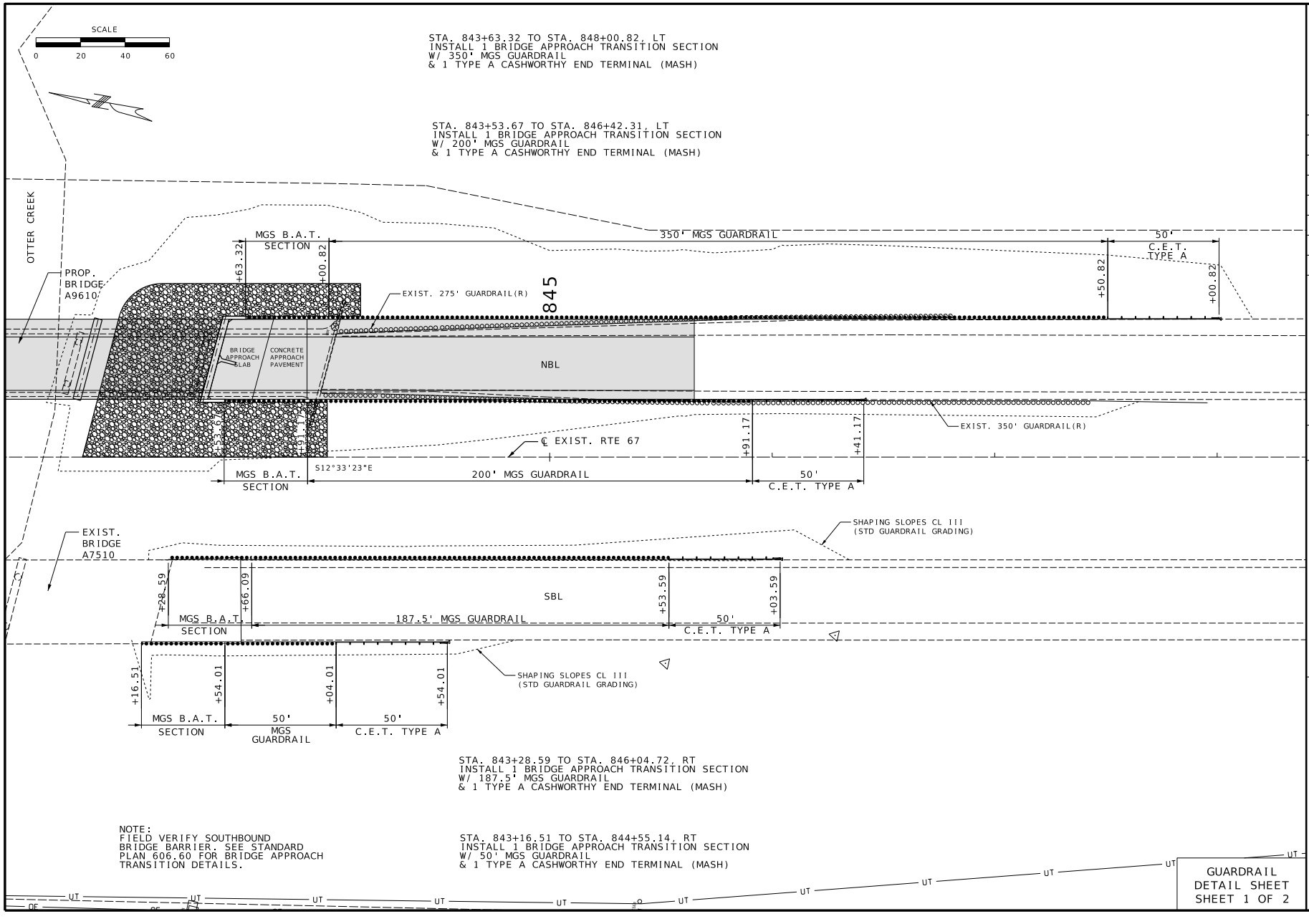

NOTE:
FIELD VERIFY SOUTHBOUND BRIDGE BARRIER. SEE STANDARD PLAN 606.60 FOR BRIDGE APPROACH TRANSITION DETAILS.

GUARDRAIL DETAIL SHEET
SHEET 1 OF 2

STATE OF MISSOURI
NIKKI D. CONLEY
NUMBER PE-2018040668
PROFESSIONAL ENGINEER

THIS SHEET HAS BEEN SIGNED, SEALED, AND DATED ELECTRONICALLY.

DATE PREPARED	
2/28/2025	
ROUTE	STATE
67	MO
DISTRICT	SHEET NO.
SE	17
COUNTY	
WAYNE	
JOB NO.	
JSE0083	
CONTRACT ID.	
PROJECT NO.	
BRIDGE NO.	
A9610	

DATE	DESCRIPTION

MISSOURI HIGHWAYS AND TRANSPORTATION COMMISSION
105 WEST CAPITOL
JEFFERSON CITY, MO 65102
1-888-ASK-MODOT (1-888-275-6636)

GBA
16305 SWINGLEY RIDGE RD
ST. 300
CHESTERFIELD, MO 63017
314.231.0100
GBAteam.com

GEORGE BUTLER ASSOCIATES, INC.
PRO. ENGINEER 000133
ARCHITECT 000212
PRO. LAND SURVEYOR 000059

NIKKI D. CONLEY
PROFESSIONAL ENGINEER
PE-2018040668

2/28/2025

IF A SEAL IS PRESENT ON THIS SHEET IT HAS BEEN ELECTRONICALLY SEALED AND DATED.

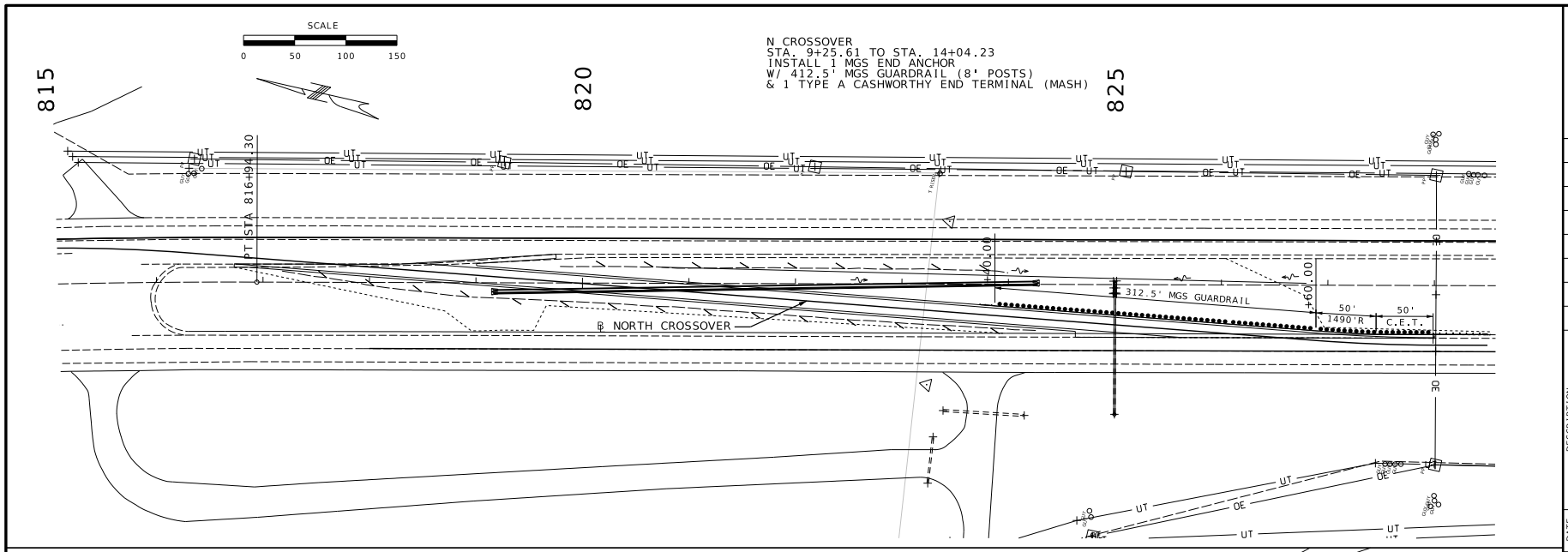

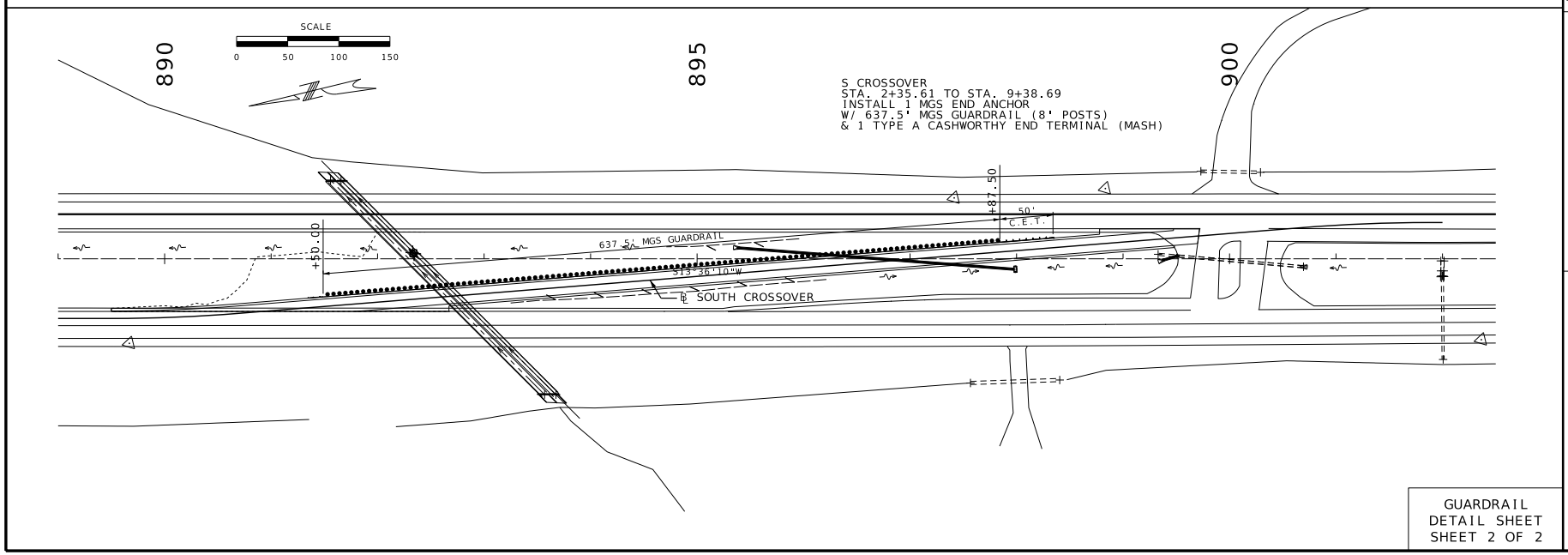

GUARDRAIL
DETAIL SHEET
SHEET 2 OF 2

STATE OF MISSOURI
NIKKI D. CONLEY
NUMBER PE-2018040668
PROFESSIONAL ENGINEER

THIS SHEET HAS BEEN SIGNED, SEALED, AND DATED ELECTRONICALLY.

DATE PREPARED	2/28/2025
ROUTE	67
STATE	MO
DISTRICT	SE
SHEET NO.	18
COUNTY	WAYNE
JOB NO.	JSE0083
CONTRACT ID.	
PROJECT NO.	
BRIDGE NO.	A9610

DATE	DESCRIPTION

IF A SEAL IS PRESENT ON THIS SHEET IT HAS BEEN ELECTRONICALLY SEALED AND DATED.

MISSOURI HIGHWAYS AND TRANSPORTATION COMMISSION
105 WEST CAPITOL
JEFFERSON CITY, MO 65102
1-888-ASK-MODOT (1-888-275-6636)

GBA
16305 SWINGLEY RIDGE RD
ST. 300
CHESTERFIELD, MO 63017
314.231.0100
GBAteam.com

GEORGE BUTLER ASSOCIATES, INC.
PRO. ENGINEER 000133
ARCHITECT 000212
PRO. LAND SURVEYOR 000059

NIKKI D. CONLEY
PROFESSIONAL ENGINEER
PE-2018040668

2/28/2025

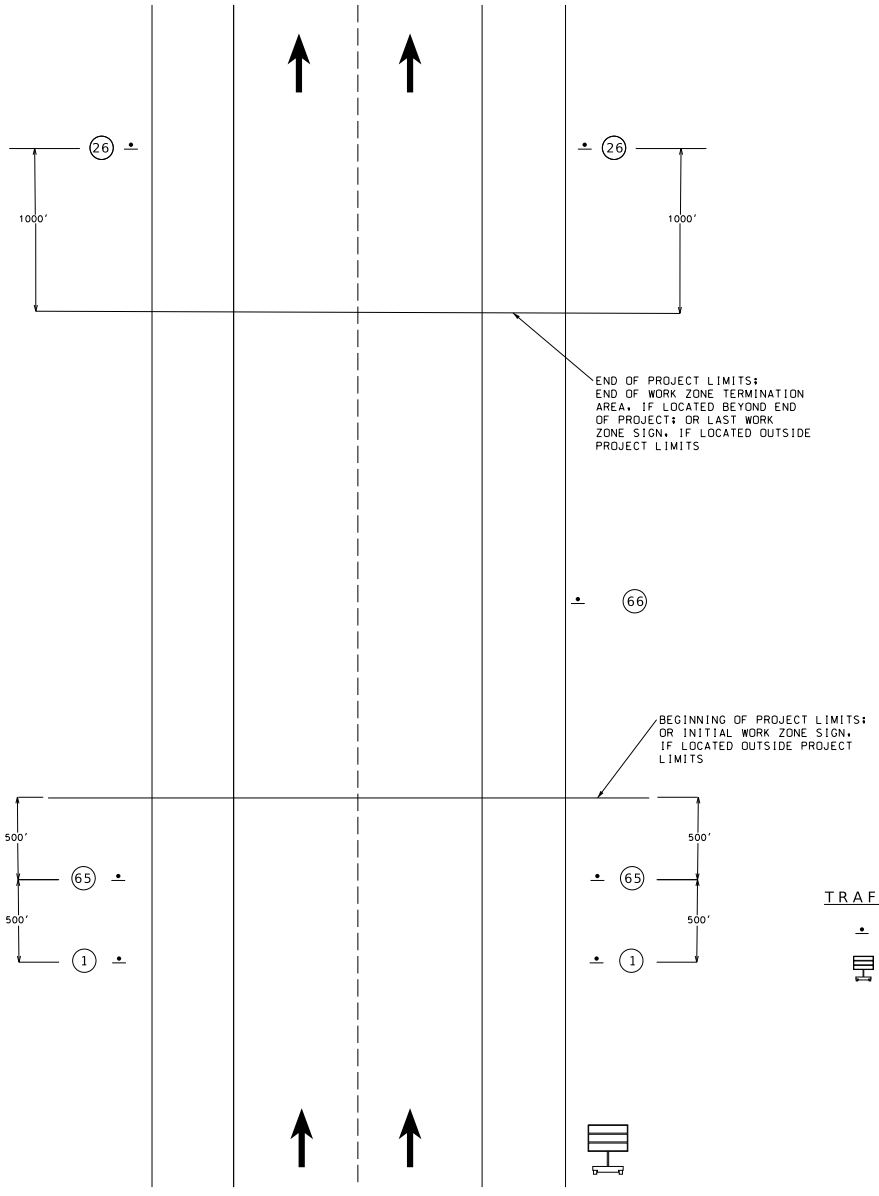

NOT TO SCALE

DISCLAIMER

THE PROFESSIONAL WHOSE SIGNATURE AND PERSONAL SEAL APPEAR HEREON ASSUMES RESPONSIBILITY ONLY FOR WHAT APPEARS ON THIS PAGE, AND DISCLAIMS (PURSUANT TO SECTION 327.411 RSMO) SPECIFICATION, ESTIMATES, REPORTS, OR OTHER DOCUMENTS OR INSTRUMENTS NOT SEALED BY THE UNDERSIGNED PROFESSIONAL RELATING TO OR INTENDED TO BE USED FOR ANY PART OR PARTS OF THE PROJECT TO WHICH THIS PAGE REFERS.

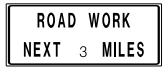

GO20-1

1

CONST-8

65

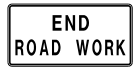

GO20-2

26

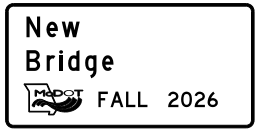

CONST-5

66

NOTES:

(1) THE CONTRACTOR IS RESPONSIBLE FOR COMPLETELY COVERING OR REMOVING ALL EXISTING SIGNING, PAVEMENT MARKING, OR SIGNALS THAT CONFLICTS WITH THE TEMPORARY TRAFFIC CONTROL.

(2) THE CONTRACTOR SHALL BE RESPONSIBLE FOR MAKING ADJUSTMENTS ACCORDING TO FIELD CONDITIONS. WHERE TRAFFIC BACKUPS OCCUR OR ARE EXPECTED BEYOND THE ADVANCE WARNING AREA, THE CONTRACTOR WILL BE RESPONSIBLE FOR INSTALLING ADDITIONAL SIGNING.

(3) THE CONTRACTOR SHALL INSTALL SIGN 66 IN A VISIBLE AREA WITHIN THE PROJECT LIMITS THAT DOES NOT DISRUPT THE SEQUENCE OF OTHER WORK ZONE SIGNS. IF THIS LOCATION CANNOT BE FOUND WITHIN THE PROJECT, THE CONTRACTOR MAY INSTALL THE SIGN 500 FEET PRIOR TO SIGN 1.

(4) CMS TO BE PLACED AS DIRECTED BY THE ENGINEER.

TRAFFIC CONTROL LEGEND

SIGN (SINGLE SIDED)

CHANGEABLE MESSAGE BOARD

TRAFFIC CONTROL
SHEET 1 OF 14

STATE OF MISSOURI
NICHOLAS MICHAEL CORRENTI
NUMBER PE-2010000809
PROFESSIONAL ENGINEER

02/28/2025 1:51:20 PM
Nicholas Michael Correnti - Civil
MO PE-2010000809

DATE PREPARED	2/28/2025
ROUTE	67
STATE	MO
DISTRICT	SE
SHEET NO.	19
COUNTY	WAYNE
JOB NO.	JSE0083
CONTRACT ID.	
PROJECT NO.	
BRIDGE NO.	

DATE	DESCRIPTION

MISSOURI HIGHWAYS AND TRANSPORTATION COMMISSION

105 WEST CAPITOL
JEFFERSON CITY, MO 65102
1-888-ASK-MODOT (1-888-275-6636)

EFK•Moen
Civil Engineering Design
13523 Barrett Parkway Dr
Suite 120
St. Louis, MO 63021
Phone 314-394-3199
Fax 314-394-3199
Missouri Certificate of Authority: 001578

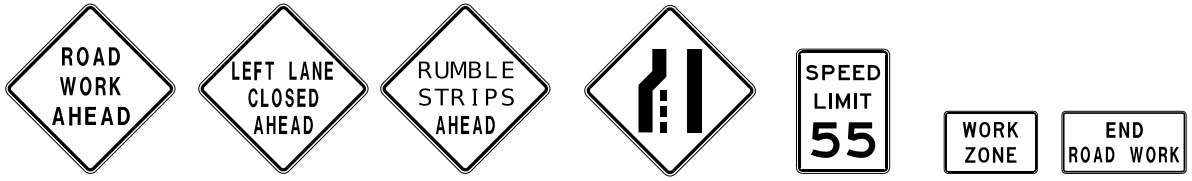

W020-1 (2) | W020-5 (5) | SPECIAL (72) | W04-2L (80L) | R2-1 (4) | G020-5aP (54) | G020-2 (26)

NOTES:
1) USE 11-FOOT WIDTH (TYP.) FOR TEMPORARY LANE WIDTHS; 10-FOOT MINIMUM.

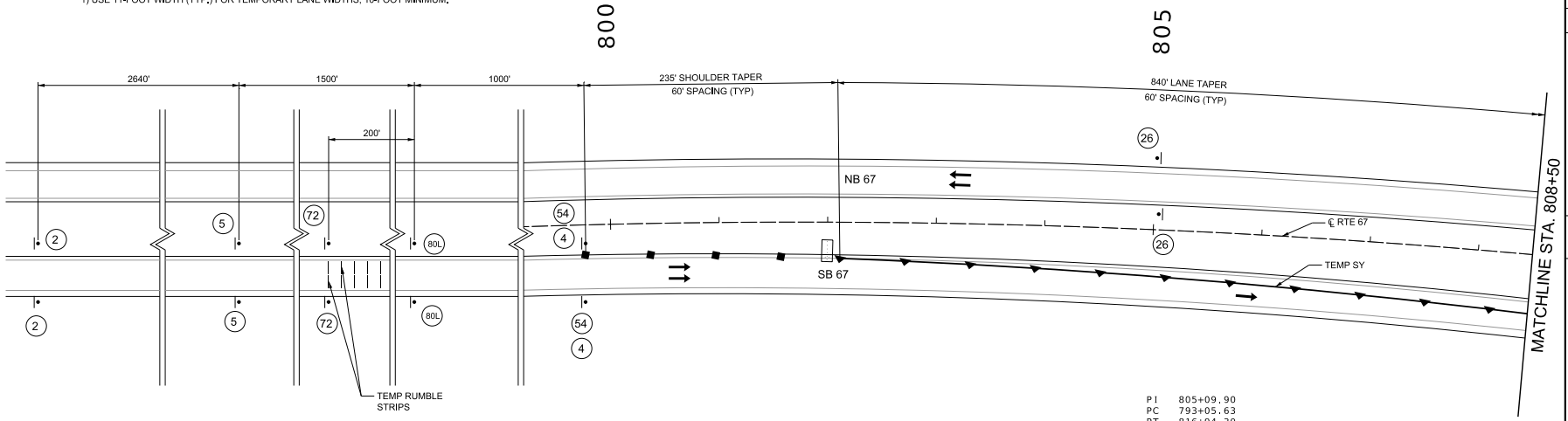

PI	805+09.90
PC	793+05.63
PT	816+94.30
Δ	18°0'50.0" (RT)
D	0°45'14.9"
L	2,388.67' (ARC)
T	1,204.27'
R	7,597.51'

TRAFFIC CONTROL LEGEND

- SIGN (SINGLE SIDED)
- DIRECTIONAL INDICATION BARRICADE
- CHANNELIZER
- BARRICADE
- CHANGEABLE MESSAGE BOARD
- FLASHING ARROW PANNEL
- TUBULAR MARKERS

SCALE
0 50 100 150

ANY WORK INDICATED ON THE PLANS THAT EXTENDS BEYOND THE PROJECT LIMITS IS CONSIDERED INCIDENTAL TO AND A PART OF THE CONSTRUCTION OF THIS PROJECT.

DISCLAIMER
THE PROFESSIONAL WHOSE SIGNATURE AND PERSONAL SEAL APPEAR HEREON ASSUMES RESPONSIBILITY ONLY FOR WHAT APPEARS ON THIS PAGE, AND DISCLAIMS (PURSUANT TO SECTION 327.411 RSMO) SPECIFICATION, ESTIMATES, REPORTS, OR OTHER DOCUMENTS OR INSTRUMENTS NOT SEALED BY THE UNDERSIGNED PROFESSIONAL RELATING TO OR INTENDED TO BE USED FOR ANY PART OR PARTS OF THE PROJECT TO WHICH THIS PAGE REFERS.

STATE OF MISSOURI
NICHOLAS MICHAEL CORRENTI
NUMBER PE-2010000809
PROFESSIONAL ENGINEER

02/28/2025 2:39:06 PM
Nicholas Michael Correnti - Civil
MO PE-2010000809

DATE PREPARED: 2/28/2025

ROUTE	STATE
67	MO
DISTRICT	SHEET NO.
SE	20

COUNTY: WAYNE
JOB NO.: JSE0083
CONTRACT ID.
PROJECT NO.
BRIDGE NO.

DATE	DESCRIPTION

MISSOURI HIGHWAYS AND TRANSPORTATION COMMISSION
105 WEST CAPITOL
JEFFERSON CITY, MO 65102
1-888-ASK-MoDOT (1-888-275-6636)

EFK•Moen
Civil Engineering Design
13523 Barrett Parkway Dr
Suite 205
St. Louis, MO 63021
Phone 314-394-3199
Fax 314-394-3199
Missouri Certificate of Authority: 001578

TRAFFIC CONTROL
SHEET 2 OF 14

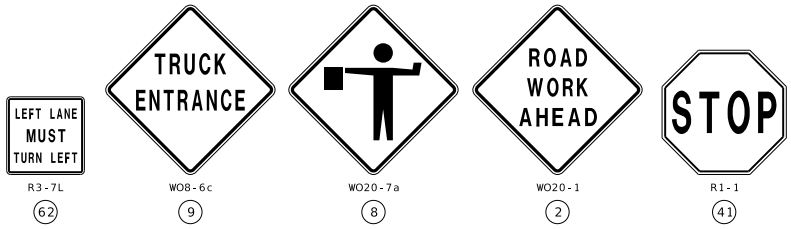

DISCLAIMER
THE PROFESSIONAL WHOSE SIGNATURE AND PERSONAL SEAL APPEAR HEREON ASSUMES RESPONSIBILITY ONLY FOR WHAT APPEARS ON THIS PAGE, AND DISCLAIMS (PURSUANT TO SECTION 327.411 RSMO) SPECIFICATION, ESTIMATES, REPORTS, OR OTHER DOCUMENTS OR INSTRUMENTS NOT SEALED BY THE UNDERSIGNED PROFESSIONAL RELATING TO OR INTENDED TO BE USED FOR ANY PART OR PARTS OF THE PROJECT TO WHICH THIS PAGE REFERS.

NOTES:
1) USE 11-FOOT WIDTH (TYP.) FOR TEMPORARY LANE WIDTHS: 10-FOOT MINIMUM.
2) FLAGGER SIGN TO BE USED AS DIRECTED BY THE ENGINEER.
3) FLAGGER SIGN TO BE 250-FOOT MINIMUM FROM INTERSECTION WHEN PLACED WITH THE TRUCK ENTRANCE SIGN.
4) FLAGGER SIGN SHALL ONLY BE DISPLAYED WHEN FLAGGER IS PRESENT.

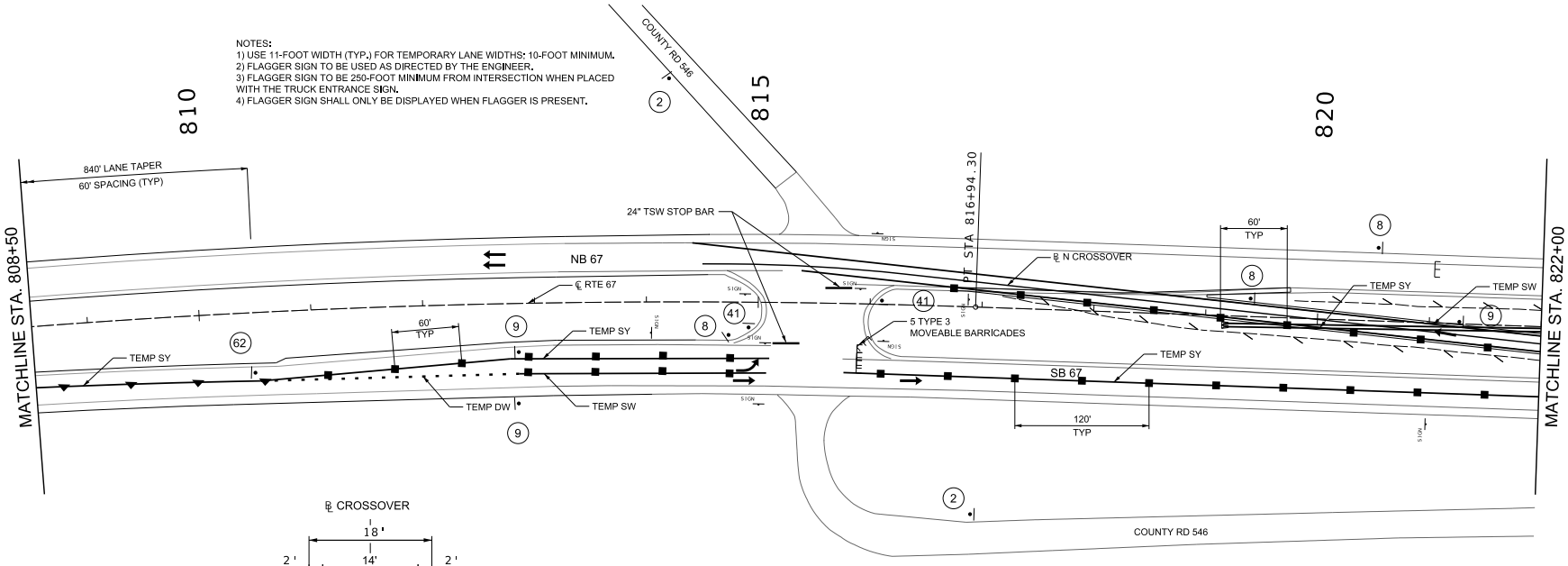

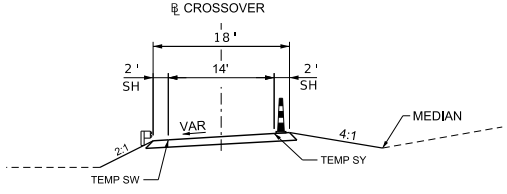

TYPICAL SECTION
CROSSOVERS

SCALE
0 50 100 150

TRAFFIC CONTROL LEGEND

- SIGN (SINGLE SIDED)
- DIRECTIONAL INDICATION BARRICADE
- CHANNELIZER
- BARRICADE
- CHANGEABLE MESSAGE BOARD
- FLASHING ARROW PANNEL
- TUBULAR MARKERS

TRAFFIC CONTROL
SHEET 3 OF 14

STATE OF MISSOURI
NICHOLAS MICHAEL CORRENTI
NUMBER PE-2010000809
PROFESSIONAL ENGINEER
02/28/2025 2:39:31 PM
Nicholas Michael Correnti - Civil
MO PE-2010000809

DATE PREPARED	2/28/2025
ROUTE 67	STATE MO
DISTRICT SE	SHEET NO. 21
COUNTY WAYNE	
JOB NO. JSE0083	
CONTRACT ID.	
PROJECT NO.	
BRIDGE NO.	

DATE	DESCRIPTION

MISSOURI HIGHWAYS AND TRANSPORTATION COMMISSION
105 WEST CAPITOL
JEFFERSON CITY, MO 65102
1-888-ASK-MoDOT (1-888-275-6636)

EFK•Moen
Civil Engineering Design
13523 Barrett Parkway Dr
Suite 150
St. Louis, MO 63021
Phone 314-394-3199
Fax 314-394-3199
Missouri Certificate of Authority: 001578

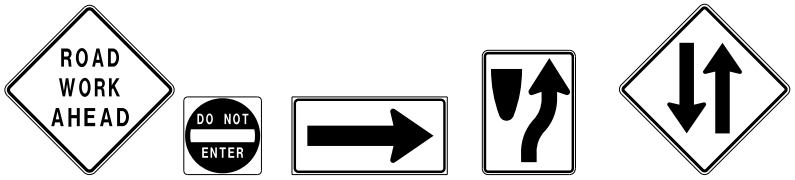

WO20-1 (2) | R5-1 (61) | WO1-6 (16R) | R4-7 (60) | WO6-3 (31)

DISCLAIMER
THE PROFESSIONAL WHOSE SIGNATURE AND PERSONAL SEAL APPEAR HEREON ASSUMES RESPONSIBILITY ONLY FOR WHAT APPEARS ON THIS PAGE, AND DISCLAIMS (PURSUANT TO SECTION 327.411 RSMO) SPECIFICATION, ESTIMATES, REPORTS, OR OTHER DOCUMENTS OR INSTRUMENTS NOT SEALED BY THE UNDERSIGNED PROFESSIONAL RELATING TO OR INTENDED TO BE USED FOR ANY PART OR PARTS OF THE PROJECT TO WHICH THIS PAGE REFERS.

NOTES:
1) USE 11-FOOT WIDTH (TYP.) FOR TEMPORARY LANE WIDTHS; 10-FOOT MINIMUM.

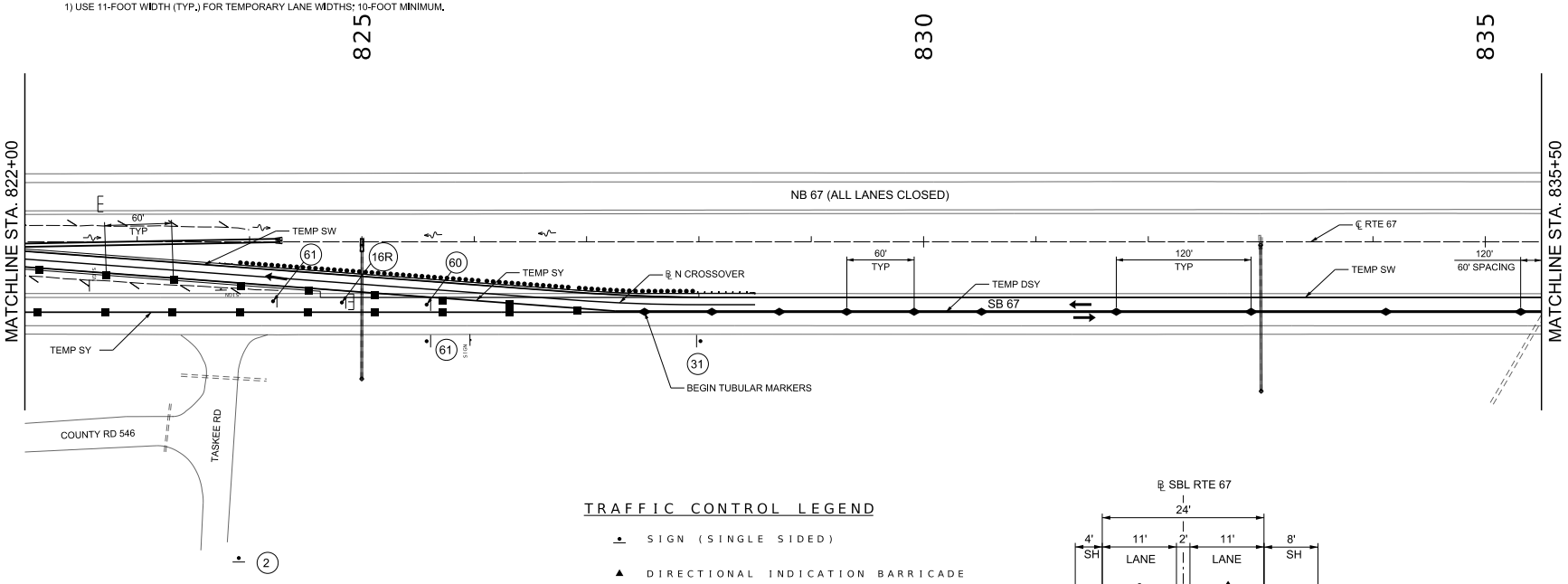

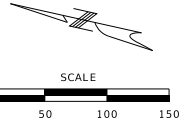

TRAFFIC CONTROL LEGEND

- SIGN (SINGLE SIDED)
- DIRECTIONAL INDICATION BARRICADE
- CHANNELIZER
- BARRICADE
- CHANGEABLE MESSAGE BOARD
- FLASHING ARROW PANNEL
- TUBULAR MARKERS

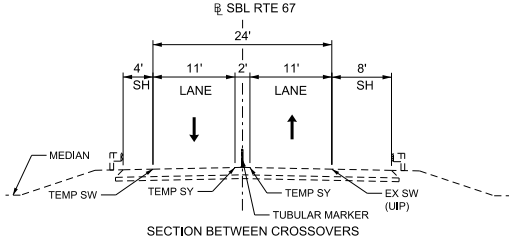

SECTION BETWEEN CROSSOVERS

TRAFFIC CONTROL
SHEET 4 OF 14

STATE OF MISSOURI
NICHOLAS MICHAEL CORRENTI
NUMBER PE-2010000809
PROFESSIONAL ENGINEER

02/28/2025 2:40:12 PM
Nicholas Michael Correnti - Civil
MO PE-2010000809

DATE PREPARED	
2/28/2025	
ROUTE 67	STATE MO
DISTRICT SE	SHEET NO. 22
COUNTY WAYNE	
JOB NO. JSE0083	
CONTRACT ID.	
PROJECT NO.	
BRIDGE NO.	

DATE	DESCRIPTION

MISSOURI HIGHWAYS AND TRANSPORTATION COMMISSION
105 WEST CAPITOL
JEFFERSON CITY, MO 65102
1-888-ASK-MoDOT (1-888-275-6636)

EFK•Moen
Civil Engineering Design
13523 Barrett Parkway Dr
Suite 125
St. Louis, MO 63021
Phone 314-394-3100
Fax 314-394-3199
Missouri Certificate of Authority: 001578

O:\2022R3\MoDOT_ORD_v10.12.02.04\24060 GBA-MoDOT SE0083 Route 67\Received\20250228 PSE\022_JSE0083_TC_04.dgn 2:31:58 PM 2/28/2025

DISCLAIMER
THE PROFESSIONAL WHOSE SIGNATURE AND PERSONAL SEAL APPEAR HEREON ASSUMES RESPONSIBILITY ONLY FOR WHAT APPEARS ON THIS PAGE, AND DISCLAIMS (PURSUANT TO SECTION 327.411 RSMO) SPECIFICATION, ESTIMATES, REPORTS, OR OTHER DOCUMENTS OR INSTRUMENTS NOT SEALED BY THE UNDERSIGNED PROFESSIONAL RELATING TO OR INTENDED TO BE USED FOR ANY PART OR PARTS OF THE PROJECT TO WHICH THIS PAGE REFERS.

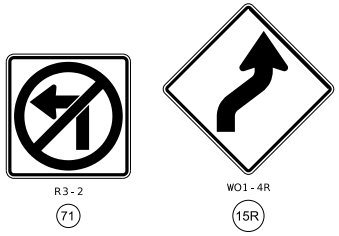

NOTES:
1) USE 11-FOOT WIDTH (TYP.) FOR TEMPORARY LANE WIDTHS; 10-FOOT MINIMUM.

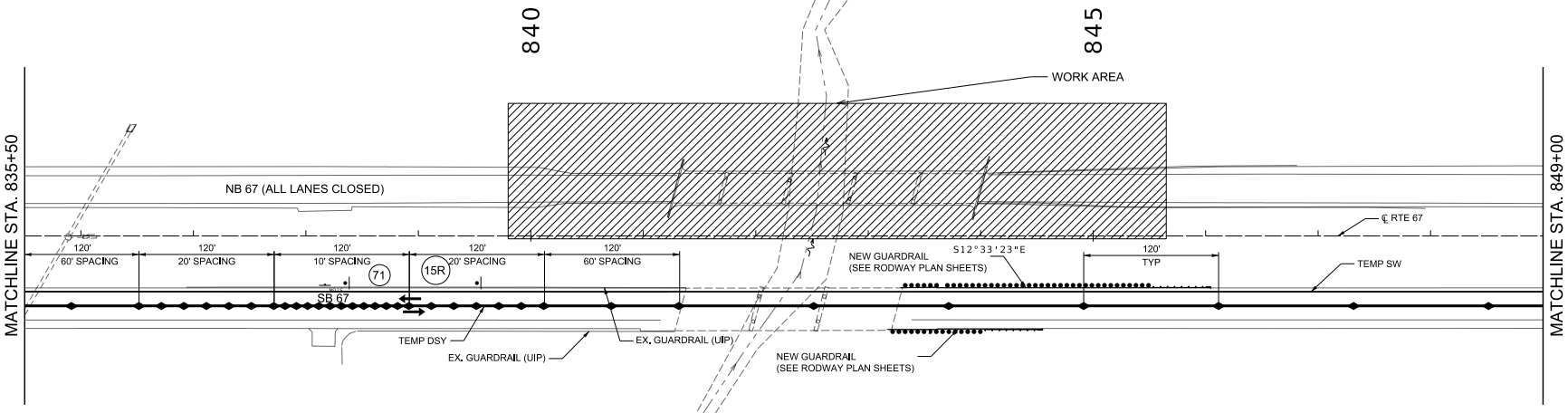

TRAFFIC CONTROL LEGEND

- SIGN (SINGLE SIDED)
- DIRECTIONAL INDICATION BARRICADE
- CHANNELIZER
- BARRICADE
- CHANGEABLE MESSAGE BOARD
- FLASHING ARROW PANNEL
- TUBULAR MARKERS

SCALE
0 50 100 150

TRAFFIC CONTROL
SHEET 5 OF 14

STATE OF MISSOURI
NICHOLAS MICHAEL CORRENTI
NUMBER PE-2010000805
PROFESSIONAL ENGINEER

02/28/2025 1:53:49 PM
Nicholas Michael Correnti - Civil
MO PE-2010000805

DATE PREPARED	
2/28/2025	
ROUTE 67	STATE MO
DISTRICT SE	SHEET NO. 23
COUNTY WAYNE	
JOB NO. JSE0083	
CONTRACT ID.	
PROJECT NO.	
BRIDGE NO.	

DATE	DESCRIPTION

MISSOURI HIGHWAYS AND TRANSPORTATION COMMISSION
105 WEST CAPITOL
JEFFERSON CITY, MO 65102
1-888-ASK-MODOT (1-888-275-6636)

EFK•Moen
Civil Engineering Design
13523 Barrett Parkway Dr
Suite 105
St. Louis, MO 63021
Phone 314-394-3199
Fax 314-394-3199
Missouri Certificate of Authority:001578

O:\2022R3\MoDOT_ORD_v10.12.02.04\24060 GBA-MoDOT SE0083 Route 67\Received\20250228 PSE\023_JSE0083_TC_05.dgn 1:14:02 PM 2/28/2025

DISCLAIMER
THE PROFESSIONAL WHOSE SIGNATURE AND PERSONAL SEAL APPEAR HEREON ASSUMES RESPONSIBILITY ONLY FOR WHAT APPEARS ON THIS PAGE, AND DISCLAIMS (PURSUANT TO SECTION 327.411 RSMO) SPECIFICATION, ESTIMATES, REPORTS, OR OTHER DOCUMENTS OR INSTRUMENTS NOT SEALED BY THE UNDERSIGNED PROFESSIONAL RELATING TO OR INTENDED TO BE USED FOR ANY PART OR PARTS OF THE PROJECT TO WHICH THIS PAGE REFERS.

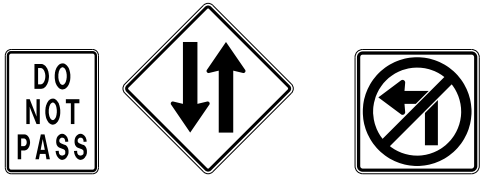

R4-1 (46) WO6-3 (31) R3-2 (71)

NOTES:
1) USE 11-FOOT WIDTH (TYP.) FOR TEMPORARY LANE WIDTHS; 10-FOOT MINIMUM.

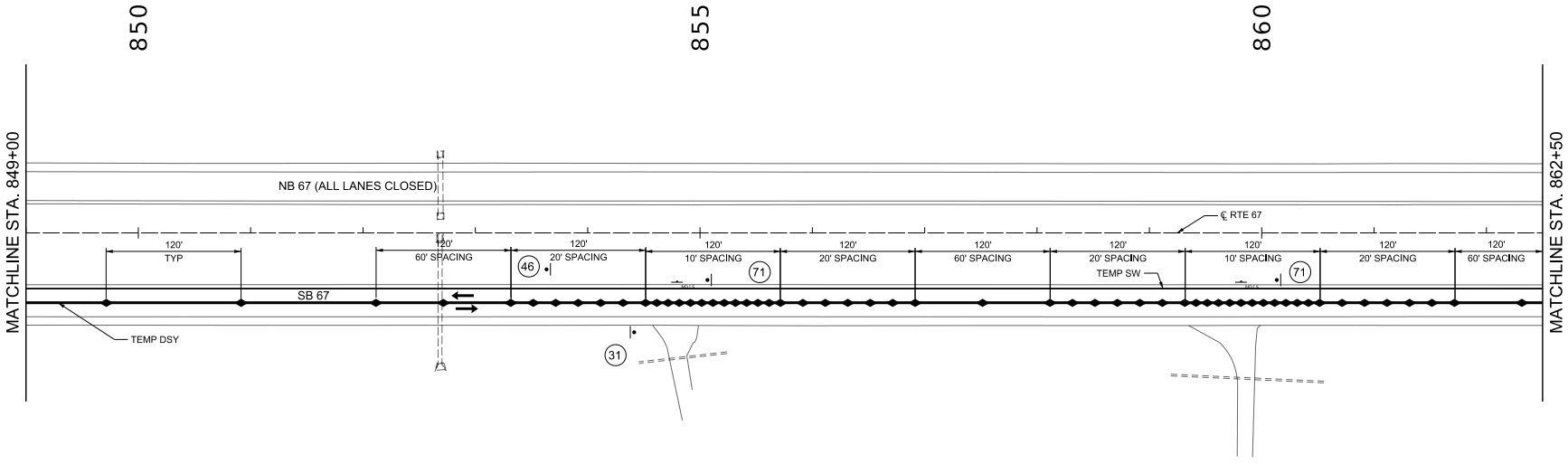

TRAFFIC CONTROL LEGEND

- SIGN (SINGLE SIDED)
- DIRECTIONAL INDICATION BARRICADE
- CHANNELIZER
- BARRICADE
- CHANGEABLE MESSAGE BOARD
- FLASHING ARROW PANNEL
- TUBULAR MARKERS

SCALE
0 50 100 150

TRAFFIC CONTROL
SHEET 6 OF 14

STATE OF MISSOURI
NICHOLAS MICHAEL CORRENTI
NUMBER PE-2010000809
PROFESSIONAL ENGINEER

02/28/2025 1:54:19 PM
Nicholas Michael Correnti - Civil
MO PE-2010000809

DATE PREPARED	
2/28/2025	
ROUTE 67	STATE MO
DISTRICT SE	SHEET NO. 24
COUNTY WAYNE	
JOB NO. JSE0083	
CONTRACT ID.	
PROJECT NO.	
BRIDGE NO.	

DATE	DESCRIPTION

MISSOURI HIGHWAYS AND TRANSPORTATION COMMISSION
105 WEST CAPITOL
JEFFERSON CITY, MO 65102
1-888-ASK-MODOT (1-888-275-6636)

EFK•Moen
Civil Engineering Design
13523 Barrett Parkway Dr
Suite 150
St. Louis, MO 63021
Phone 314-394-3199
Fax 314-394-3199
Missouri Certificate of Authority: 001578

WO6-3

31

R4-1

46

DISCLAIMER

THE PROFESSIONAL WHOSE SIGNATURE AND PERSONAL SEAL APPEAR HEREON ASSUMES RESPONSIBILITY ONLY FOR WHAT APPEARS ON THIS PAGE, AND DISCLAIMS (PURSUANT TO SECTION 327.411 RSMO) SPECIFICATION, ESTIMATES, REPORTS, OR OTHER DOCUMENTS OR INSTRUMENTS NOT SEALED BY THE UNDERSIGNED PROFESSIONAL RELATING TO OR INTENDED TO BE USED FOR ANY PART OR PARTS OF THE PROJECT TO WHICH THIS PAGE REFERS.

NOTES:
1) USE 11-FOOT WIDTH (TYP.) FOR TEMPORARY LANE WIDTHS; 10-FOOT MINIMUM.

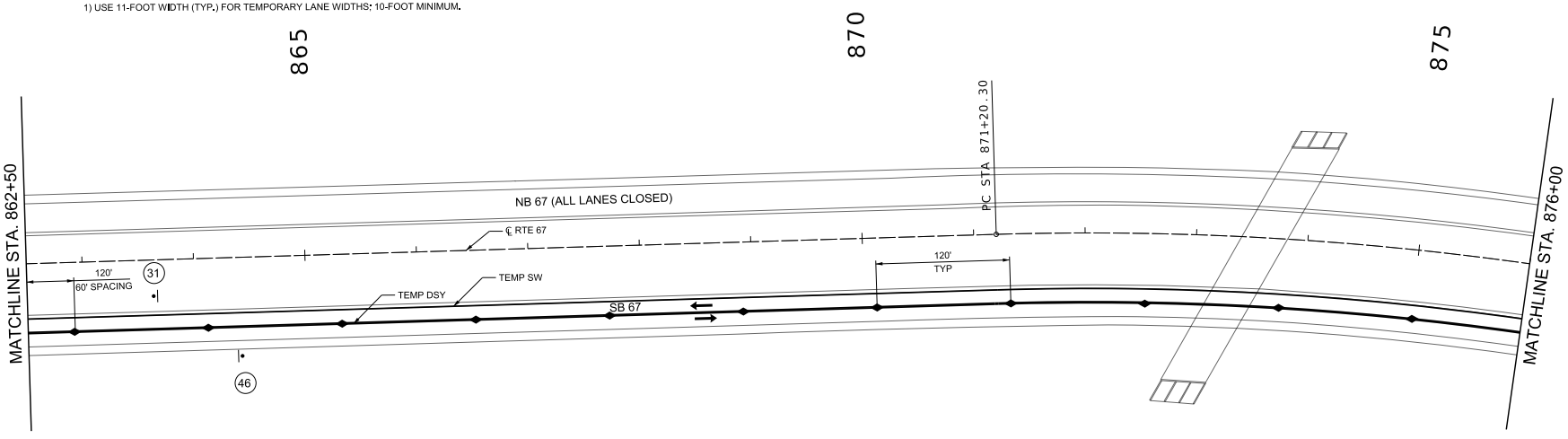

TRAFFIC CONTROL LEGEND

- SIGN (SINGLE SIDED)
- DIRECTIONAL INDICATION BARRICADE
- CHANNELIZER
- BARRICADE
- CHANGEABLE MESSAGE BOARD
- FLASHING ARROW PANNEL
- TUBULAR MARKERS

SCALE

0 50 100 150

TRAFFIC CONTROL
SHEET 7 OF 14

STATE OF MISSOURI
NICHOLAS MICHAEL CORRENTI
NUMBER PE-2010000809
PROFESSIONAL ENGINEER

02/28/2025 1:54:56 PM
Nicholas Michael Correnti - Civil
MO PE-2010000809

DATE PREPARED	
2/28/2025	
ROUTE 67	STATE MO
DISTRICT SE	SHEET NO. 25
COUNTY WAYNE	
JOB NO. JSE0083	
CONTRACT ID.	
PROJECT NO.	
BRIDGE NO.	

DATE	DESCRIPTION

MISSOURI HIGHWAYS AND TRANSPORTATION COMMISSION

MoDOT

105 WEST CAPITOL
JEFFERSON CITY, MO 65102
1-888-ASK-MODOT (1-888-275-6636)

EFK•Moen
Civil Engineering Design
13523 Barrett Parkway Dr
Suite 150
St. Louis, MO 63021
Phone 314-394-3199
Fax 314-394-3199
Missouri Certificate of Authority: 001578

NOTES:
1) USE 11-FOOT WIDTH (TYP.) FOR TEMPORARY LANE WIDTHS; 10-FOOT MINIMUM.

DISCLAIMER
THE PROFESSIONAL WHOSE SIGNATURE AND PERSONAL SEAL APPEAR HEREON ASSUMES RESPONSIBILITY ONLY FOR WHAT APPEARS ON THIS PAGE, AND DISCLAIMS (PURSUANT TO SECTION 327.411 RSMO) SPECIFICATION, ESTIMATES, REPORTS, OR OTHER DOCUMENTS OR INSTRUMENTS NOT SEALED BY THE UNDERSIGNED PROFESSIONAL RELATING TO OR INTENDED TO BE USED FOR ANY PART OR PARTS OF THE PROJECT TO WHICH THIS PAGE REFERS.

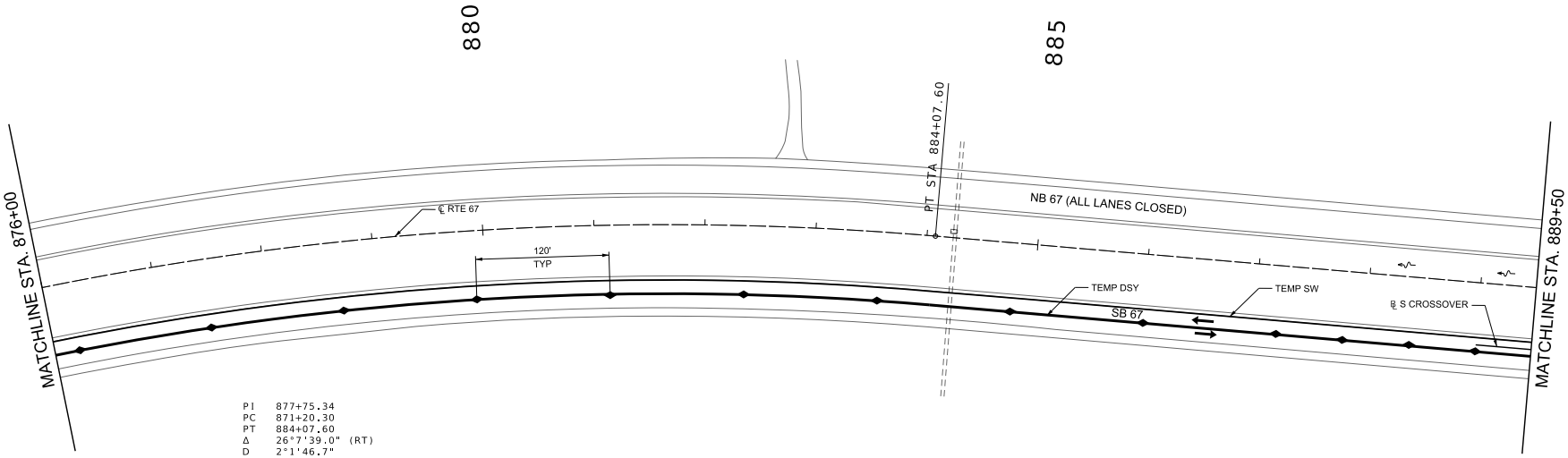

PI	877+75.34
PC	871+20.30
PT	884+07.60
Δ	26°7'39.0" (RT)
D	2°1'46.7"
L	1,287.30' (ARC)
T	655.04'
R	2,822.95'

TRAFFIC CONTROL LEGEND

- SIGN (SINGLE SIDED)
- DIRECTIONAL INDICATION BARRICADE
- CHANNELIZER
- BARRICADE
- CHANGEABLE MESSAGE BOARD
- FLASHING ARROW PANNEL
- TUBULAR MARKERS

SCALE
0 50 100 150

TRAFFIC CONTROL
SHEET 8 OF 14

STATE OF MISSOURI
NICHOLAS MICHAEL CORRENTI
NUMBER PE-2010000805
PROFESSIONAL ENGINEER

02/28/2025 1:55:26 PM
Nicholas Michael Corrente - Civil
MO PE-2010000805

DATE PREPARED	2/28/2025
ROUTE	67
STATE	MO
DISTRICT	SE
SHEET NO.	26
COUNTY	WAYNE
JOB NO.	JSE0083
CONTRACT ID.	
PROJECT NO.	
BRIDGE NO.	

DATE	DESCRIPTION

MISSOURI HIGHWAYS AND TRANSPORTATION COMMISSION
105 WEST CAPITOL
JEFFERSON CITY, MO 65102
1-888-ASK-MODOT (1-888-275-6636)

EFK•Moen
Civil Engineering Design
13523 Barrett Parkway Dr
Suite 150
St. Louis, MO 63021
Phone 314-394-3199
Fax 314-394-3199
Missouri Certificate of Authority: 001578

O:\2022R3\MoDOT_ORD_v10.12.02.04\24060 GBA-MoDOT SE0083 Route 67\Received\20250228 PSE\026_JSE0083_TC_08.dgn 1:14:05 PM 2/28/2025

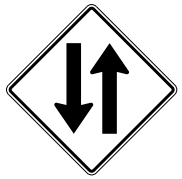

W06-3

31

W08-6c

9

W20-7a

8

R11-2

29

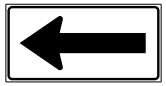

W01-6

16L

R1-1

41

W20-1

2

DISCLAIMER

THE PROFESSIONAL WHOSE SIGNATURE AND PERSONAL SEAL APPEAR HEREON ASSUMES RESPONSIBILITY ONLY FOR WHAT APPEARS ON THIS PAGE, AND DISCLAIMS (PURSUANT TO SECTION 327.411 RSMO) SPECIFICATION, ESTIMATES, REPORTS, OR OTHER DOCUMENTS OR INSTRUMENTS NOT SEALED BY THE UNDERSIGNED PROFESSIONAL RELATING TO OR INTENDED TO BE USED FOR ANY PART OR PARTS OF THE PROJECT TO WHICH THIS PAGE REFERS.

NOTES:
1) USE 11-FOOT WIDTH (TYP.) FOR TEMPORARY LANE WIDTHS; 10-FOOT MINIMUM.
2) FLAGGER SIGN TO BE USED AS DIRECTED BY THE ENGINEER.
3) FLAGGER SIGN TO BE 250-FOOT MINIMUM FROM INTERSECTION WHEN PLACED WITH THE TRUCK ENTRANCE SIGN.
4) FLAGGER SIGN SHALL ONLY BE DISPLAYED WHEN FLAGGER IS PRESENT.

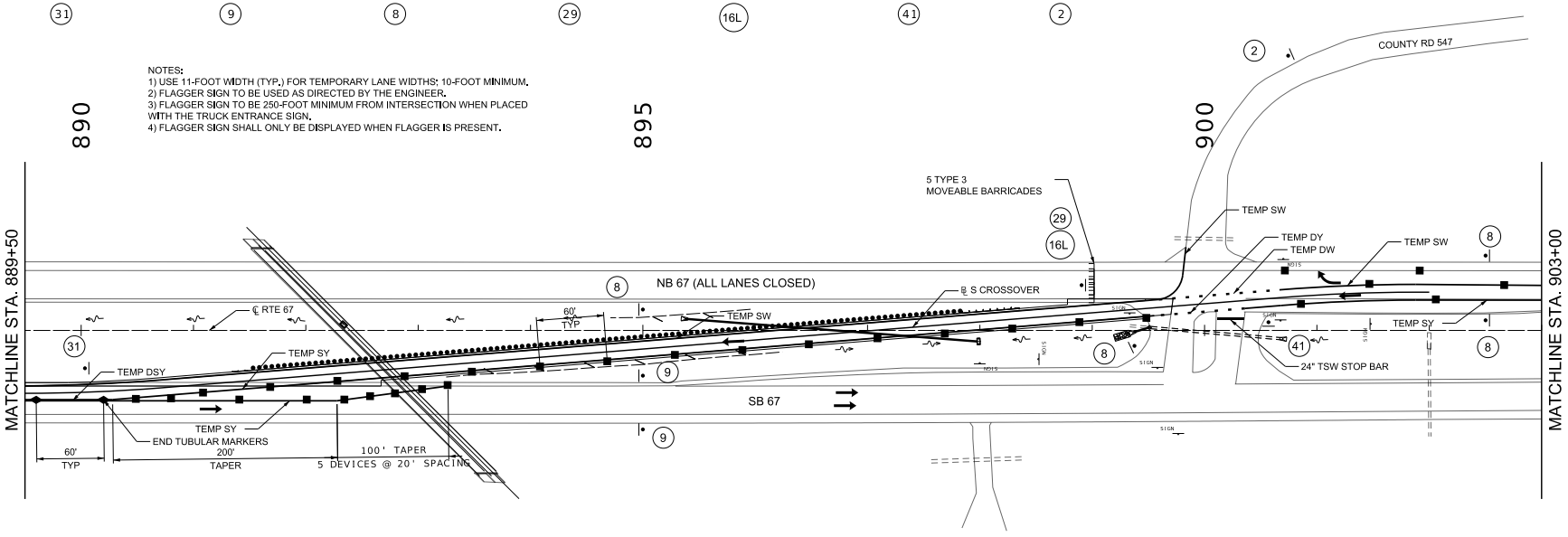

TRAFFIC CONTROL LEGEND

- SIGN (SINGLE SIDED)
- DIRECTIONAL INDICATION BARRICADE
- CHANNELIZER
- BARRICADE
- CHANGEABLE MESSAGE BOARD
- FLASHING ARROW PANNEL
- TUBULAR MARKERS

SCALE

0 50 100 150

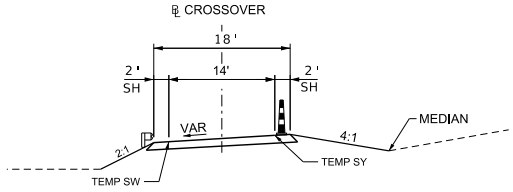

TYPICAL SECTION
CROSSOVERS

TRAFFIC CONTROL
SHEET 9 OF 14

STATE OF MISSOURI
NICHOLAS MICHAEL CORRENTI
NUMBER PE-2010000805
PROFESSIONAL ENGINEER

02/28/2025 2:40:46 PM
Nicholas Michael Correnti - Civil
MO PE-2010000805

DATE PREPARED	2/28/2025
ROUTE	67
STATE	MO
DISTRICT	SE
SHEET NO.	27
COUNTY	WAYNE
JOB NO.	JSE0083
CONTRACT ID.	
PROJECT NO.	
BRIDGE NO.	

DATE	DESCRIPTION

MISSOURI HIGHWAYS AND TRANSPORTATION COMMISSION
105 WEST CAPITOL
JEFFERSON CITY, MO 65102
1-888-ASK-MoDOT (1-888-275-6636)

EFK•Moen
Civil Engineering Design
13523 Barrett Parkway Dr
Suite 150
St. Louis, MO 63021
Phone 314-394-3199
Fax 314-394-3199
Missouri Certificate of Authority: 001578

WO8-6c

9

R3-7R

63

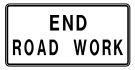

GO20-2

26

WO1-4L

15L

NOTES:
1) USE 11-FOOT WIDTH (TYP.) FOR TEMPORARY LANE WIDTHS: 10-FOOT MINIMUM.

DISCLAIMER
THE PROFESSIONAL WHOSE SIGNATURE AND PERSONAL SEAL APPEAR HEREON ASSUMES RESPONSIBILITY ONLY FOR WHAT APPEARS ON THIS PAGE, AND DISCLAIMS (PURSUANT TO SECTION 327.411 RSMO) SPECIFICATION, ESTIMATES, REPORTS, OR OTHER DOCUMENTS OR INSTRUMENTS NOT SEALED BY THE UNDERSIGNED PROFESSIONAL RELATING TO OR INTENDED TO BE USED FOR ANY PART OR PARTS OF THE PROJECT TO WHICH THIS PAGE REFERS.

PI	913+35.98
PC	906+10.93
PT	920+32.04
Δ	28°0'44.0" (LT)
D	1°58'16.1"
L	1,421.12' (ARC)
T	725.06'
R	2,906.73'

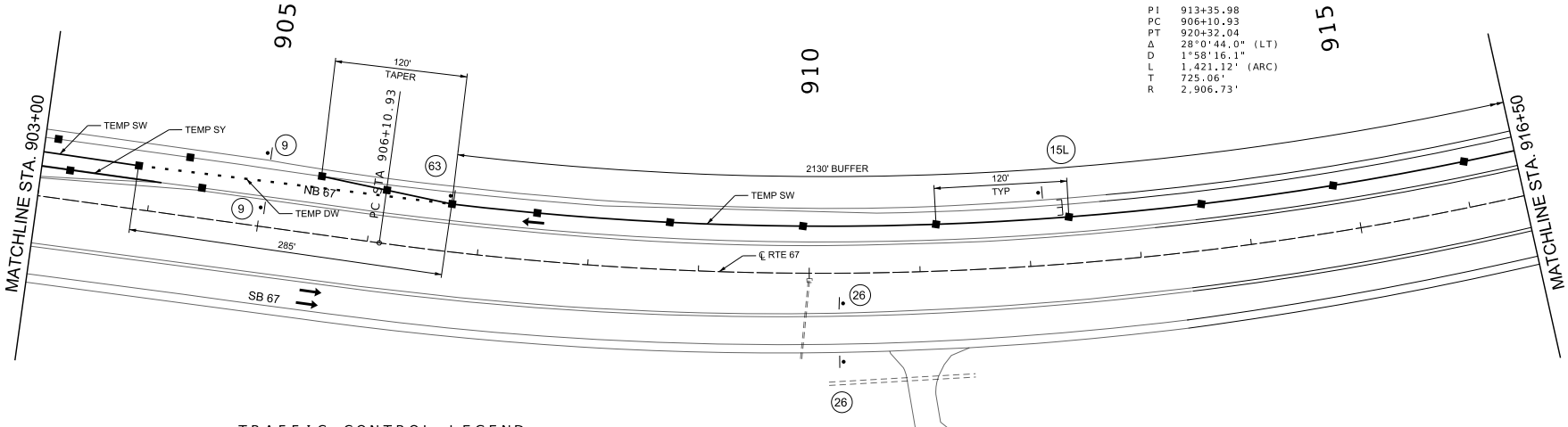

TRAFFIC CONTROL LEGEND

- SIGN (SINGLE SIDED)
- DIRECTIONAL INDICATION BARRICADE
- CHANNELIZER
- BARRICADE
- CHANGEABLE MESSAGE BOARD
- FLASHING ARROW PANNEL
- TUBULAR MARKERS

SCALE
0 50 100 150

TRAFFIC CONTROL
SHEET 10 OF 14

STATE OF MISSOURI
NICHOLAS MICHAEL CORRENTI
NUMBER PE-2010000805
PROFESSIONAL ENGINEER

02/28/2025 1:57:12 PM
Nicholas Michael Correnti - Civil
MO PE-2010000805

DATE PREPARED	
2/28/2025	
ROUTE 67	STATE MO
DISTRICT SE	SHEET NO. 28
COUNTY WAYNE	
JOB NO. JSE0083	
CONTRACT ID.	
PROJECT NO.	
BRIDGE NO.	

DATE	DESCRIPTION

MISSOURI HIGHWAYS AND TRANSPORTATION COMMISSION
105 WEST CAPITOL
JEFFERSON CITY, MO 65102
1-888-ASK-MODOT (1-888-275-6636)

EFK•Moen
Civil Engineering Design
13523 Barrett Parkway Dr
Suite 150
St. Louis, MO 63021
Phone 314-394-3199
Fax 314-394-3199
Missouri Certificate of Authority: 001578

O:\2022R3\MoDOT_ORD_v10.12.02.04\24060 GBA-MoDOT SE0083 Route 67\Received\20250228 PSE\02B_JSE0083_TC_10.dgn 1:14:07 PM 2/28/2025

DISCLAIMER
THE PROFESSIONAL WHOSE SIGNATURE AND PERSONAL SEAL APPEAR HEREON ASSUMES RESPONSIBILITY ONLY FOR WHAT APPEARS ON THIS PAGE, AND DISCLAIMS (PURSUANT TO SECTION 327.411 RSMO) SPECIFICATION, ESTIMATES, REPORTS, OR OTHER DOCUMENTS OR INSTRUMENTS NOT SEALED BY THE UNDERSIGNED PROFESSIONAL RELATING TO OR INTENDED TO BE USED FOR ANY PART OR PARTS OF THE PROJECT TO WHICH THIS PAGE REFERS.

NOTES:
1) USE 11-FOOT WIDTH (TYP.) FOR TEMPORARY LANE WIDTHS; 10-FOOT MINIMUM.

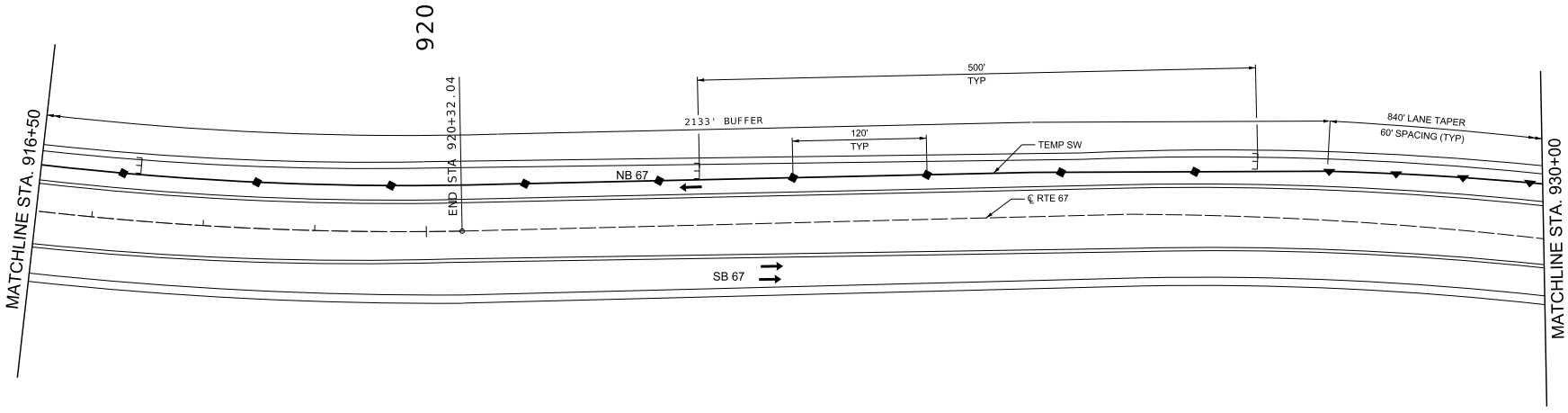

TRAFFIC CONTROL LEGEND

- SIGN (SINGLE SIDED)
- DIRECTIONAL INDICATION BARRICADE
- CHANNELIZER
- BARRICADE
- CHANGEABLE MESSAGE BOARD
- FLASHING ARROW PANNEL
- TUBULAR MARKERS

SCALE
0 50 100 150

TRAFFIC CONTROL
SHEET 11 OF 14

STATE OF MISSOURI
NICHOLAS MICHAEL CORRENTI
NUMBER PE-2010000805
PROFESSIONAL ENGINEER

02/28/2025 1:57:49 PM
Nicholas Michael Correnti – Civil
MO PE-2010000805

DATE PREPARED	
2/28/2025	
ROUTE 67	STATE MO
DISTRICT SE	SHEET NO. 29
COUNTY WAYNE	
JOB NO. JSE0083	
CONTRACT ID.	
PROJECT NO.	
BRIDGE NO.	

DATE	DESCRIPTION

MISSOURI HIGHWAYS AND TRANSPORTATION COMMISSION
105 WEST CAPITOL
JEFFERSON CITY, MO 65102
1-888-ASK-MoDOT (1-888-275-6636)

EFK•Moen
Civil Engineering Design
13523 Barrett Parkway Dr
Suite 250
St. Louis, MO 63021
Phone 314-394-3199
Fax 314-394-3199
Missouri Certificate of Authority: 001578

R2-1

4

G020-5aP

54

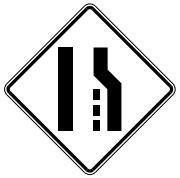

W04-2R

80R

SPECIAL

72

W020-5

5

W020-1

2

DISCLAIMER

THE PROFESSIONAL WHOSE SIGNATURE AND PERSONAL SEAL APPEAR HEREON ASSUMES RESPONSIBILITY ONLY FOR WHAT APPEARS ON THIS PAGE, AND DISCLAIMS (PURSUANT TO SECTION 327.411 RSMO) SPECIFICATION, ESTIMATES, REPORTS, OR OTHER DOCUMENTS OR INSTRUMENTS NOT SEALED BY THE UNDERSIGNED PROFESSIONAL RELATING TO OR INTENDED TO BE USED FOR ANY PART OR PARTS OF THE PROJECT TO WHICH THIS PAGE REFERS.

NOTES:
1) USE 11-FOOT WIDTH (TYP.) FOR TEMPORARY LANE WIDTHS; 10-FOOT MINIMUM.

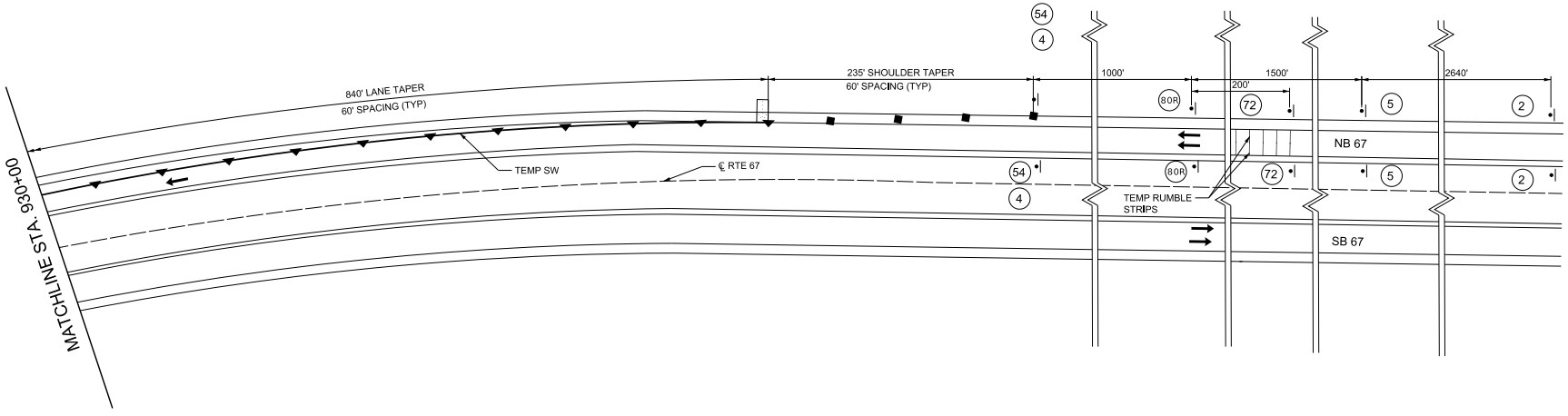

TRAFFIC CONTROL LEGEND

- SIGN (SINGLE SIDED)
- DIRECTIONAL INDICATION BARRICADE
- CHANNELIZER
- BARRICADE
- CHANGEABLE MESSAGE BOARD
- FLASHING ARROW PANNEL
- TUBULAR MARKERS

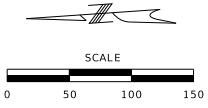

TRAFFIC CONTROL
SHEET 12 OF 14

STATE OF MISSOURI
NICHOLAS MICHAEL CORRENTI
NUMBER PE-2010000805
PROFESSIONAL ENGINEER

02/28/2025 1:58:29 PM
Nicholas Michael Correnti - Civil
MO PE-2010000805

DATE PREPARED	2/28/2025
ROUTE	67
STATE	MO
DISTRICT	SE
SHEET NO.	30
COUNTY	WAYNE
JOB NO.	JSE0083
CONTRACT ID.	
PROJECT NO.	
BRIDGE NO.	

DATE	DESCRIPTION

MISSOURI HIGHWAYS AND TRANSPORTATION COMMISSION

MoDOT

105 WEST CAPITOL
JEFFERSON CITY, MO 65102
1-888-ASK-MODOT (1-888-275-6636)

EFK•Moen
Civil Engineering Design
13523 Barrett Parkway Dr
Suite 200
St. Louis, MO 63021
Phone 314-394-3199
Fax 314-394-3199
Missouri Certificate of Authority: 001578

O:\2022R3\MoDOT_ORD_v10.12.02.04\24060 GBA-MoDOT SE0083 Route 67\Received\20250228 PSE\030_JSE0083_TC_12.dgn 1:14:10 PM 2/28/2025

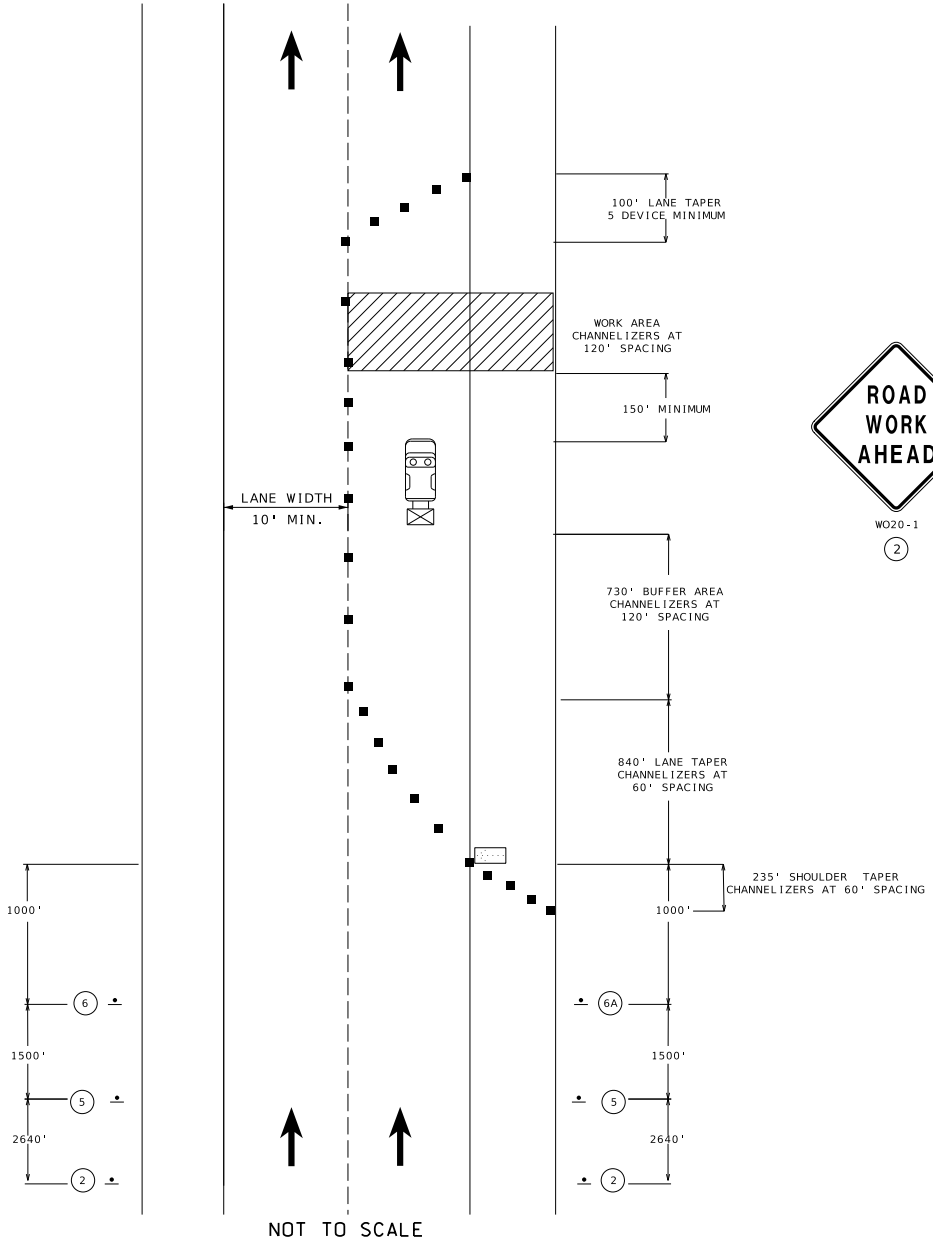

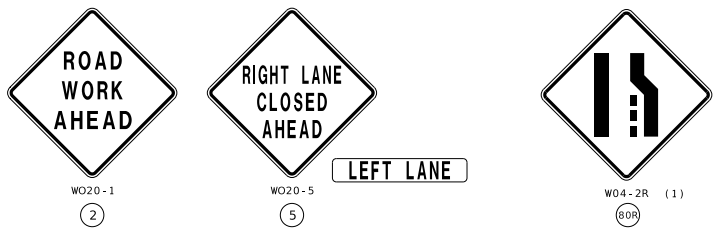

DISCLAIMER

THE PROFESSIONAL WHOSE SIGNATURE AND PERSONAL SEAL APPEAR HEREON ASSUMES RESPONSIBILITY ONLY FOR WHAT APPEARS ON THIS PAGE, AND DISCLAIMS (PURSUANT TO SECTION 327.411 RSMO) SPECIFICATION, ESTIMATES, REPORTS, OR OTHER DOCUMENTS OR INSTRUMENTS NOT SEALED BY THE UNDERSIGNED PROFESSIONAL RELATING TO OR INTENDED TO BE USED FOR ANY PART OR PARTS OF THE PROJECT TO WHICH THIS PAGE REFERS.

TRAFFIC CONTROL LEGEND

- SIGN (SINGLE SIDED)
- CHANNELIZER
- WORK AREA
- FLASHING ARROW PANNEL
- PROTECTIVE VEHICLE WITH TMA AND FLASHING ARROW PANNEL

NOTES:

THE CONTRACTOR SHALL MAKE ADJUSTMENTS TO WORK ZONE TO FIT ACTUAL FIELD CONDITIONS.

(1) CONTRACTOR SHALL USE SIGN W04-2L FOR LEFT LANE CLOSURE.

TRAFFIC CONTROL
SHEET 13 OF 14

STATE OF MISSOURI
NICHOLAS MICHAEL CORRENTI
NUMBER PE-2010000809
PROFESSIONAL ENGINEER

02/28/2025 1:59:07 PM
Nicholas Michael Correnti - Civil
MO PE-2010000809

DATE PREPARED	2/28/2025
ROUTE	67
STATE	MO
DISTRICT	SE
SHEET NO.	31
COUNTY	WAYNE
JOB NO.	JSE0083
CONTRACT ID.	
PROJECT NO.	
BRIDGE NO.	

DATE	DESCRIPTION

MISSOURI HIGHWAYS AND TRANSPORTATION COMMISSION
105 WEST CAPITOL
JEFFERSON CITY, MO 65102
1-888-ASK-MODOT (1-888-275-6636)

EFK•Moen
Civil Engineering Design
13523 Barrett Parkway Dr
Suite 205
St. Louis, MO 63021
Phone 314-394-3199
Fax 314-394-3199
Missouri Certificate of Authority:001578

TRAFFIC CONTROL FOR PAVEMENT MARKING OPERATIONS

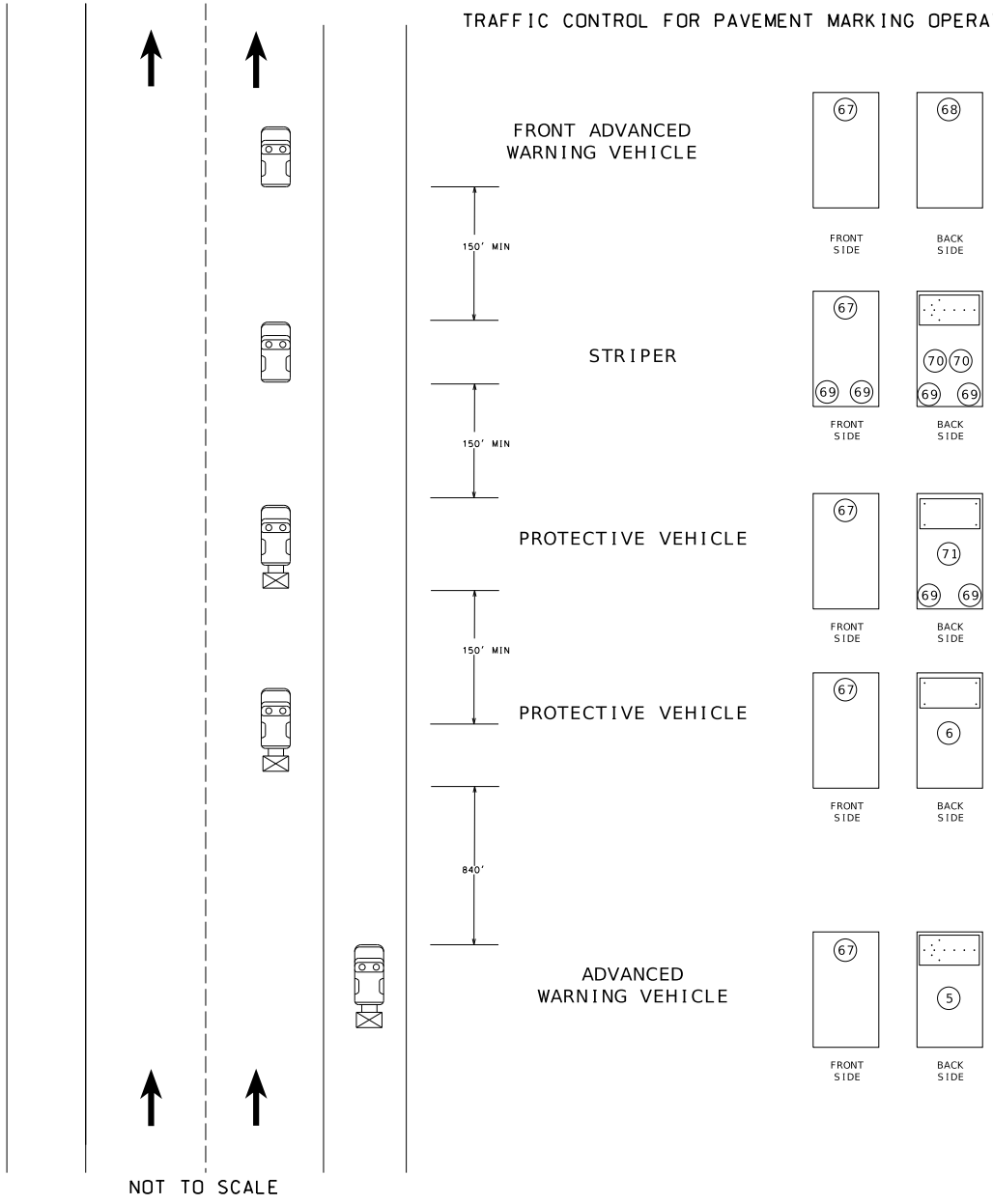

DISCLAIMER

THE PROFESSIONAL WHOSE SIGNATURE AND PERSONAL SEAL APPEAR HEREON ASSUMES RESPONSIBILITY ONLY FOR WHAT APPEARS ON THIS PAGE, AND DISCLAIMS (PURSUANT TO SECTION 327.411 RSMO) SPECIFICATION, ESTIMATES, REPORTS, OR OTHER DOCUMENTS OR INSTRUMENTS NOT SEALED BY THE UNDERSIGNED PROFESSIONAL RELATING TO OR INTENDED TO BE USED FOR ANY PART OR PARTS OF THE PROJECT TO WHICH THIS PAGE REFERS.

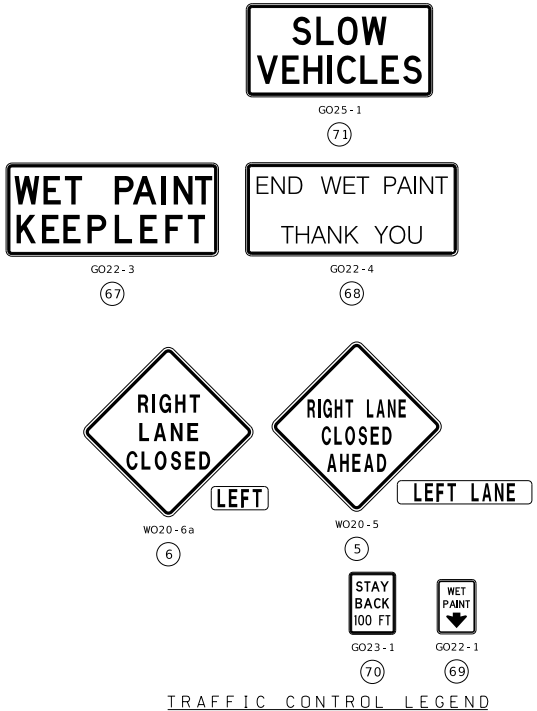

TRAFFIC CONTROL LEGEND

FLASHING ARROW PANEL

PROTECTIVE VEHICLE WITH TMA AND FLASHING ARROW PANEL

NOTES:

ALL VEHICLES SHALL HAVE HIGH INTENSITY ROTATING, FLASHING, OSCILLATING OR STROBE LIGHTS ACTIVATED FOR THE DURATION OF THE WORK ZONE. (NO DIRECT PAY)

THE CONTRACTOR SHALL INSTALL ANY VEHICLE MOUNTED SIGNING AT THE RECOMMENDED HEIGHT OF 48 INCHES ABOVE THE ROAD.

TRAFFIC CONTROL
SHEET 14 OF 14

STATE OF MISSOURI
NICHOLAS MICHAEL CORRENTI
NUMBER PE-2010000809
PROFESSIONAL ENGINEER

02/28/2025 1:59:30 PM
Nicholas Michael Correnti - Civil
MO PE-2010000809

DATE PREPARED	2/28/2025
ROUTE	67
STATE	MO
DISTRICT	SE
SHEET NO.	32
COUNTY	WAYNE
JOB NO.	JSE0083
CONTRACT ID.	
PROJECT NO.	
BRIDGE NO.	

DATE	DESCRIPTION

MISSOURI HIGHWAYS AND TRANSPORTATION COMMISSION
105 WEST CAPITOL
JEFFERSON CITY, MO 65102
1-888-ASK-MODOT (1-888-275-6636)

EFK•Moen
Civil Engineering Design
13523 Barrett Parkway Dr
Suite 250
St. Louis, MO 63021
Phone 314-394-3199
Fax 314-394-3199
Missouri Certificate of Authority: 001578

O:\2022R3\MoDOT_ORD_v10.12.02.04\24060 GBA-MoDOT SE0083 Route 67\Received\20250228 PSE\032_JSE0083_TC_14.dgn 1:14:11 PM 2/28/2025

N CROSSOVER
STA. 3+00 TO STA. 3+50, RT
INSTALL 3 ALTERNATE DITCH CHECKS
AT 25' SPACING

N CROSSOVER
STA. 4+25, RT
INSTALL 1 ALTERNATE DITCH CHECK

N CROSSOVER
STA. 4+50, RT
INSTALL 1 ALTERNATE DITCH CHECK

N CROSSOVER
STA. 4+90, RT
INSTALL 1 ALTERNATE DITCH CHECK

N CROSSOVER
STA. 5+40 TO STA. 9+90, RT
INSTALL 10 ALTERNATE DITCH CHECKS
AT 50' SPACING

N CROSSOVER
STA. 5+27 TO STA. 9+77, LT
INSTALL 7 ALTERNATE DITCH CHECKS
AT 75' SPACING

N CROSSOVER
STA. 11+00 TO STA. 12+50, LT
INSTALL 3 ALTERNATE DITCH CHECKS
AT 75' SPACING

SCALE
0 50 100 150

EROSION CONTROL LEGEND

- ALTERNATE DITCH CHECK
- TEMPORARY BERM TYPE C
- SILT FENCE
- TYPE 2 ROCK BLANKET

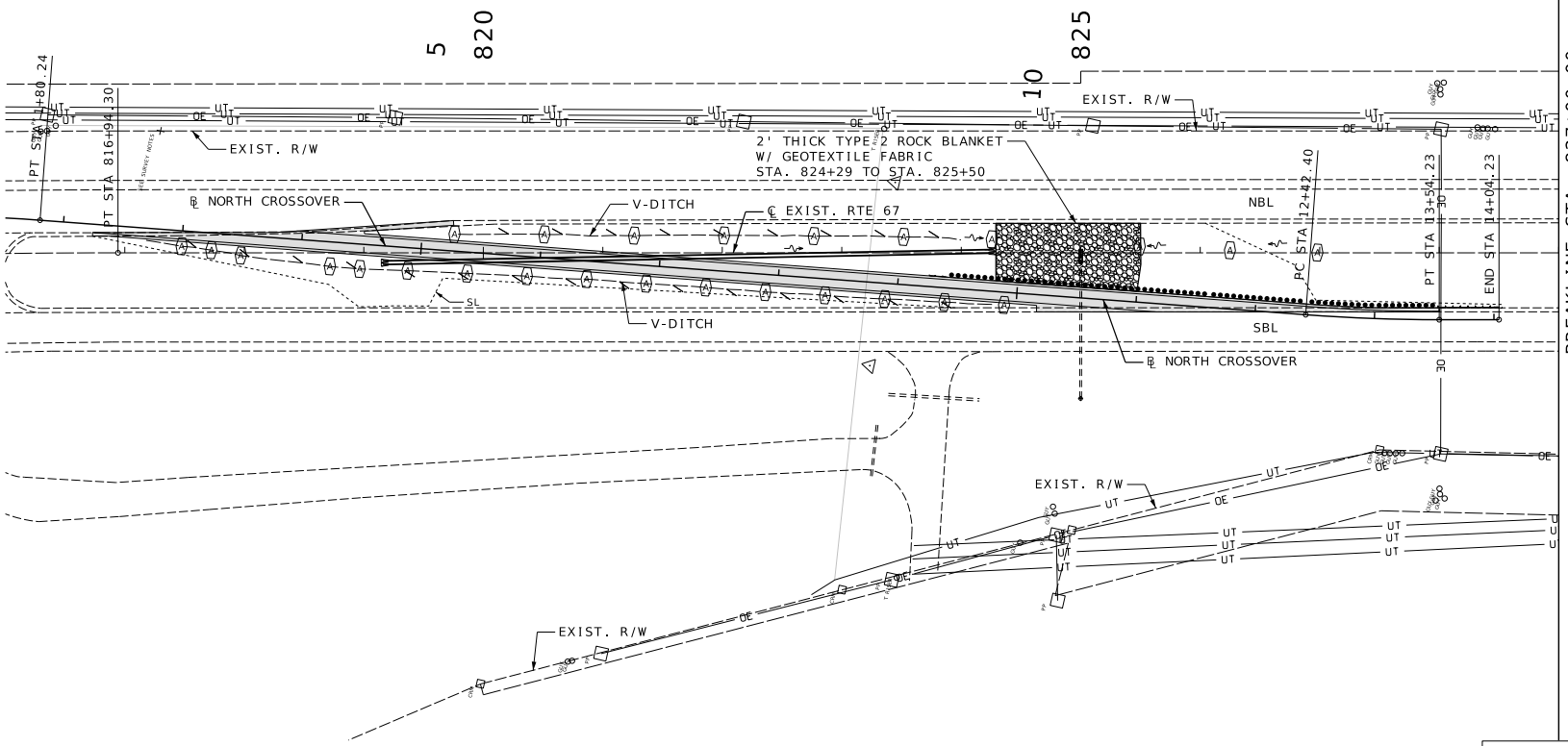

EROSION CONTROL
SHEET 1 OF 3

STATE OF MISSOURI
NIKKI D. CONLEY
NUMBER PE-2018040668
PROFESSIONAL ENGINEER

THIS SHEET HAS BEEN SIGNED, SEALED, AND DATED ELECTRONICALLY.

DATE PREPARED	2/28/2025
ROUTE	67
STATE	MO
DISTRICT	SE
SHEET NO.	33
COUNTY	WAYNE
JOB NO.	JSE0083
CONTRACT ID.	
PROJECT NO.	
BRIDGE NO.	A9610

DATE	DESCRIPTION

MISSOURI HIGHWAYS AND TRANSPORTATION COMMISSION
105 WEST CAPITOL
JEFFERSON CITY, MO 65102
1-888-ASK-MODOT (1-888-275-6636)

GBA
16305 SWINGLEY RIDGE RD
ST. 300
CHESTERFIELD, MO 63017
314.231.0100
GBAteam.com

GEORGE BUTLER ASSOCIATES, INC.
PRO. ENGINEER 000133
ARCHITECT 000212
PRO. LAND SURVEYOR 000059

NIKKI D. CONLEY
PROFESSIONAL ENGINEER
PE-2018040668

2/28/2025

IF A SEAL IS PRESENT ON THIS SHEET IT HAS BEEN ELECTRONICALLY SEALED AND DATED.

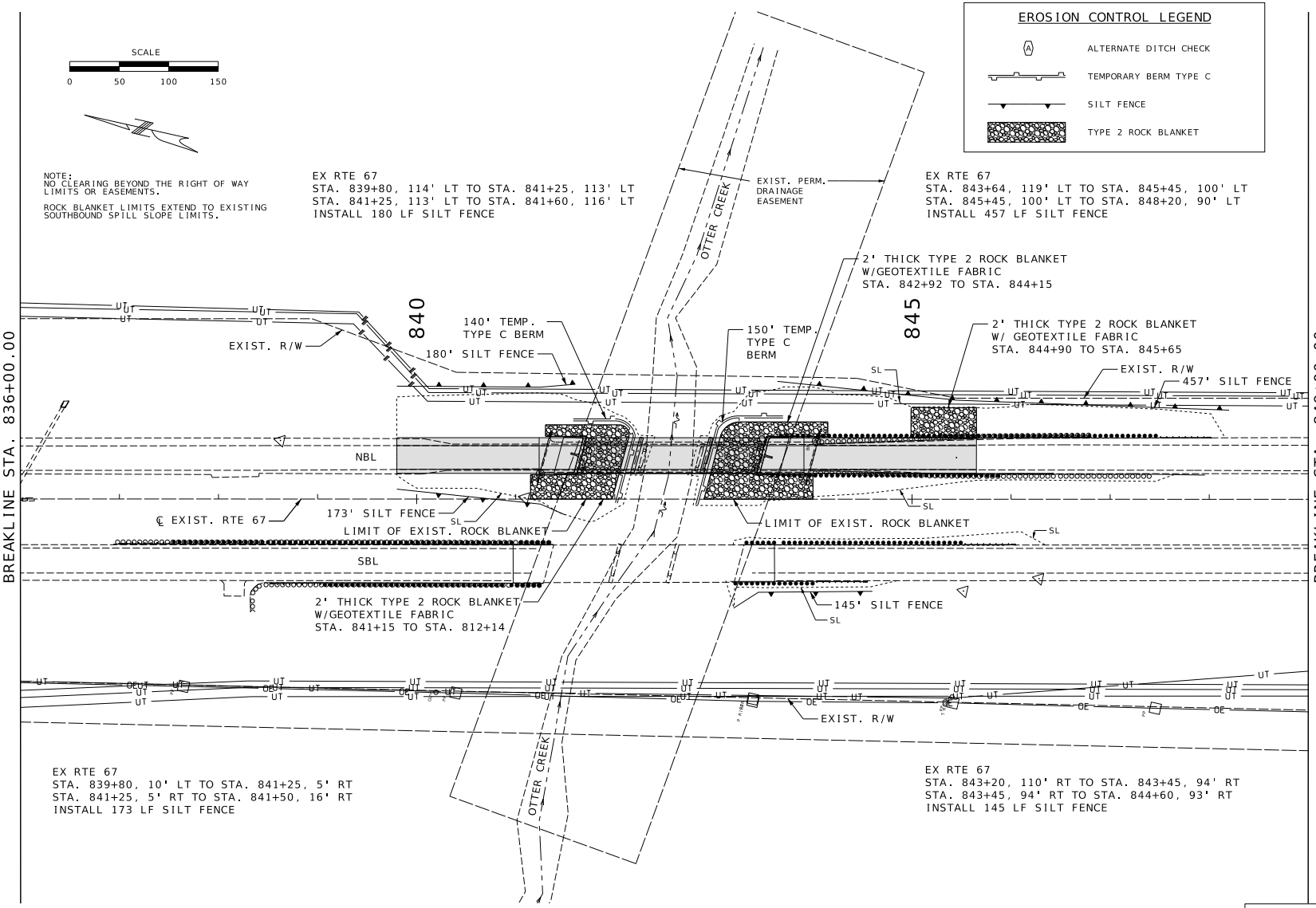

EROSION CONTROL LEGEND

- ALTERNATE DITCH CHECK
- TEMPORARY BERM TYPE C
- SILT FENCE
- TYPE 2 ROCK BLANKET

EROSION CONTROL
SHEET 2 OF 3

STATE OF MISSOURI
NIKKI D. CONLEY
NUMBER PE-2018040668
PROFESSIONAL ENGINEER

THIS SHEET HAS BEEN SIGNED, SEALED, AND DATED ELECTRONICALLY.

DATE PREPARED	
2/28/2025	
ROUTE 67	STATE MO
DISTRICT SE	SHEET NO. 34
COUNTY WAYNE	
JOB NO. JSE0083	
CONTRACT ID.	
PROJECT NO.	
BRIDGE NO. A9610	

DATE	DESCRIPTION

MISSOURI HIGHWAYS AND TRANSPORTATION COMMISSION
105 WEST CAPITOL
JEFFERSON CITY, MO 65102
1-888-ASK-MODOT (1-888-275-6636)

GBA
16305 SWINGLEY RIDGE RD
ST. 300
CHESTERFIELD, MO 63017
314.231.0100
GBAteam.com

GEORGE BUTLER ASSOCIATES, INC.
PRO. ENGINEER 000133
ARCHITECT 000212
PRO. LAND SURVEYOR 000059

NIKKI D. CONLEY
PROFESSIONAL ENGINEER
PE-2018040668

2/28/2025

IF A SEAL IS PRESENT ON THIS SHEET IT HAS BEEN ELECTRONICALLY SEALED AND DATED.

S CROSSOVER
STA. 4+25 TO STA. 5+73, RT
INSTALL 5 ALTERNATE DITCH CHECKS
AT 37' SPACING

S CROSSOVER
STA. 6+48, RT
INSTALL 1 ALTERNATE DITCH CHECK

S CROSSOVER
STA. 7+98, RT
INSTALL 1 ALTERNATE DITCH CHECK

S CROSSOVER
STA. 9+00, RT
INSTALL 1 ALTERNATE INLET CHECK

S CROSSOVER
STA. 9+70, RT
INSTALL 1 ALTERNATE DITCH CHECK

S CROSSOVER
STA. 6+26 TO STA. 7+74, LT
INSTALL 5 ALTERNATE DITCH CHECKS
AT 37' SPACING

S CROSSOVER
STA. 8+10 TO STA. 8+70, LT
INSTALL 3 ALTERNATE DITCH CHECKS
AT 30' SPACING

EX RTE 67
STA. 900+82, RT
INSTALL 1 ALTERNATE INLET CHECK
AT EXISTING PIPE

EROSION CONTROL LEGEND

- (A) ALTERNATE DITCH CHECK
- TEMPORARY BERM TYPE C
- SILT FENCE
- TYPE 2 ROCK BLANKET

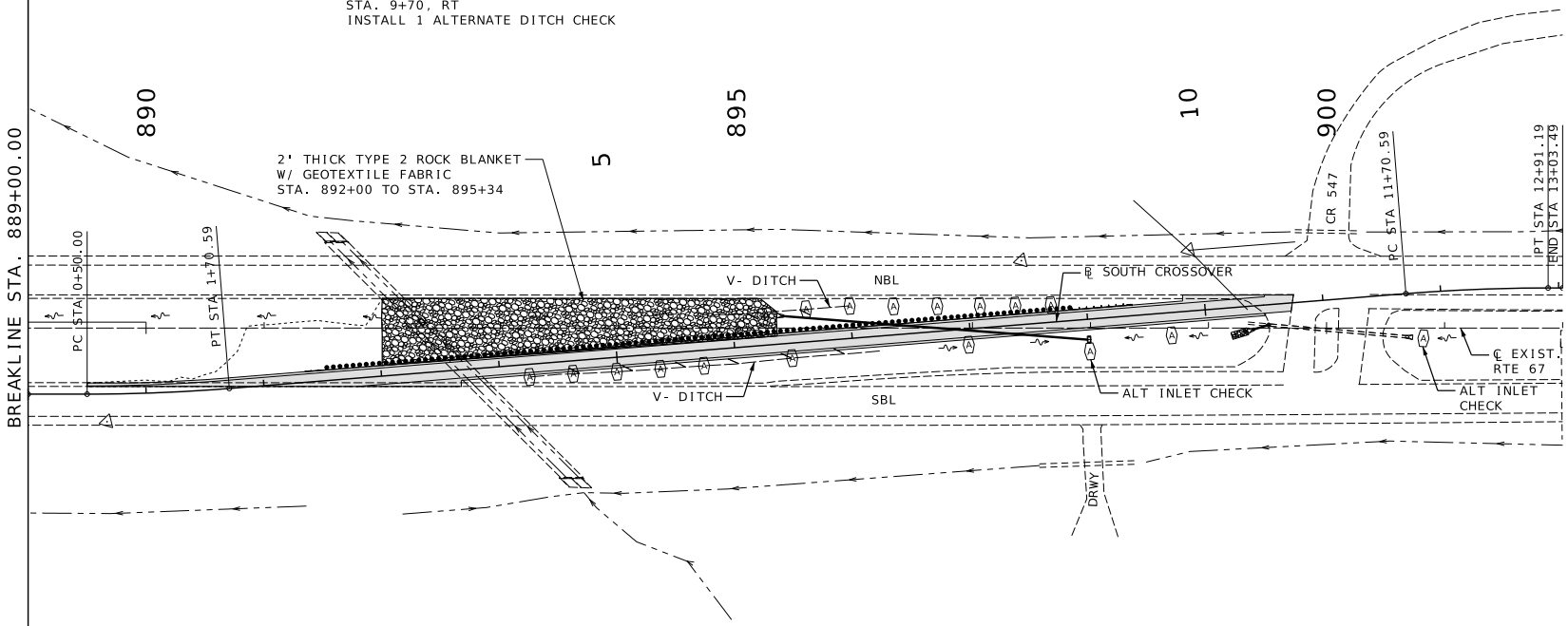

EROSION CONTROL
SHEET 3 OF 3

STATE OF MISSOURI
NIKKI D. CONLEY
NUMBER PE-2018040668
PROFESSIONAL ENGINEER

THIS SHEET HAS BEEN SIGNED, SEALED, AND DATED ELECTRONICALLY.

DATE PREPARED	2/28/2025
ROUTE	67
STATE	MO
DISTRICT	SE
SHEET NO.	35
COUNTY	WAYNE
JOB NO.	JSE0083
CONTRACT ID.	
PROJECT NO.	
BRIDGE NO.	A9610

DATE	DESCRIPTION

MISSOURI HIGHWAYS AND TRANSPORTATION COMMISSION
105 WEST CAPITOL
JEFFERSON CITY, MO 65102
1-888-ASK-MODOT (1-888-275-6636)

GBA
16305 SWINGLEY RIDGE RD
ST. 300
CHESTERFIELD, MO 63017
314.231.0100
GBAteam.com

GEORGE BUTLER
ASSOCIATES, INC.
PRO. ENGINEER 000133
ARCHITECT 000212
PRO. LAND SURVEYOR 000059

NIKKI D. CONLEY
PROFESSIONAL
ENGINEER
PE-2018040668

2/28/2025

IF A SEAL IS PRESENT ON THIS SHEET IT HAS BEEN ELECTRONICALLY SEALED AND DATED.

DISCLAIMER

THE PROFESSIONAL WHOSE SIGNATURE AND PERSONAL SEAL APPEAR HEREON ASSUMES RESPONSIBILITY ONLY FOR WHAT APPEARS ON THIS PAGE, AND DISCLAIMS (PURSUANT TO SECTION 327.411 RSMO) SPECIFICATION, ESTIMATES, REPORTS, OR OTHER DOCUMENTS OR INSTRUMENTS NOT SEALED BY THE UNDERSIGNED PROFESSIONAL RELATING TO OR INTENDED TO BE USED FOR ANY PART OR PARTS OF THE PROJECT TO WHICH THIS PAGE REFERS.

NOTES

1. REMOVE TEMPORARY PAVEMENT MARKING IN CONFLICT WITH MAINLINE PAVEMENT MARKING AND ON SHOULDERS.
2. PAVEMENT MARKING FOR CROSSOVER MAY BE LEFT IN PLACE BEYOND OUTSIDE EDGE OF SHOULDER LINE.

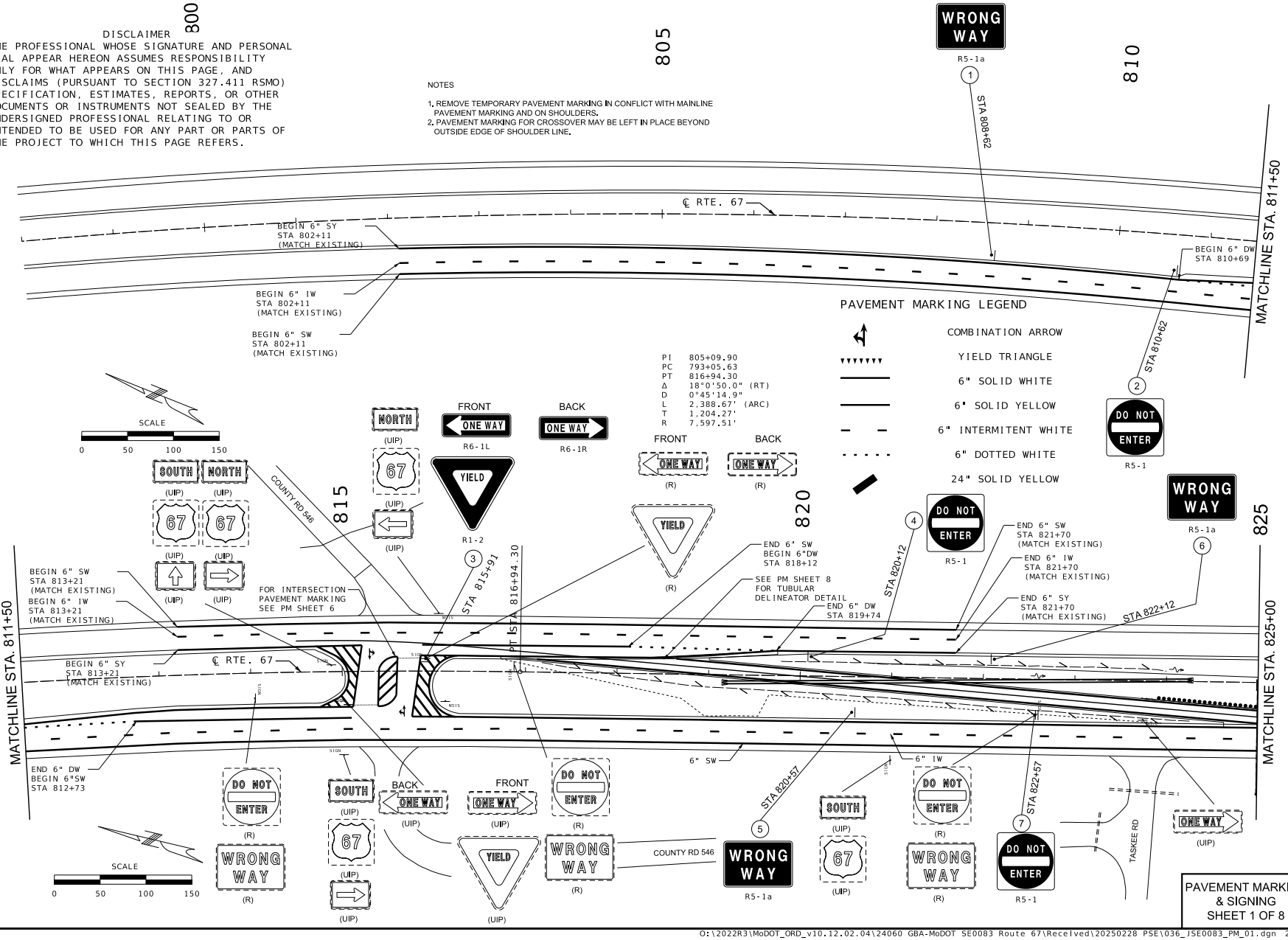

PAVEMENT MARKING & SIGNING SHEET 1 OF 8

STATE OF MISSOURI
NICHOLAS MICHAEL CORRENTI
NUMBER PE-2010000809
PROFESSIONAL ENGINEER

02/28/2025 2:42:33 PM
Nicholas Michael Correnti - Civil
MO PE-2010000809

DATE PREPARED	2/28/2025
ROUTE	67
STATE	MO
DISTRICT	SE
SHEET NO.	36
COUNTY	WAYNE
JOB NO.	JSE0083
CONTRACT ID.	
PROJECT NO.	
BRIDGE NO.	

DATE	DESCRIPTION

MISSOURI HIGHWAYS AND TRANSPORTATION COMMISSION
105 WEST CAPITOL
JEFFERSON CITY, MO 65102
1-888-ASK-MoDOT (1-888-275-6636)

EFK•Moen
Civil Engineering Design
13523 Barrett Parkway Dr
Suite 205
St. Louis, MO 63021
Missouri Certificate of Authority:001578
Phone 314-394-3100
Fax 314-394-3199

O:\2022R3\MoDOT_ORD_v10.12.02.04\24060 GBA-MoDOT SE0083 Route 67\Received\20250228 PSE\036_JSE0083_PM_01.dgn 2:40:40 PM 2/28/2025

NOTES

1. REMOVE TEMPORARY PAVEMENT MARKING IN CONFLICT WITH MAINLINE PAVEMENT MARKING AND ON SHOULDERS.
2. PAVEMENT MARKING FOR CROSSOVER MAY BE LEFT IN PLACE BEYOND OUTSIDE EDGE OF SHOULDER LINE.

DISCLAIMER

THE PROFESSIONAL WHOSE SIGNATURE AND PERSONAL SEAL APPEAR HEREON ASSUMES RESPONSIBILITY ONLY FOR WHAT APPEARS ON THIS PAGE, AND DISCLAIMS (PURSUANT TO SECTION 327.411 RSMO) SPECIFICATION, ESTIMATES, REPORTS, OR OTHER DOCUMENTS OR INSTRUMENTS NOT SEALED BY THE UNDERSIGNED PROFESSIONAL RELATING TO OR INTENDED TO BE USED FOR ANY PART OR PARTS OF THE PROJECT TO WHICH THIS PAGE REFERS.

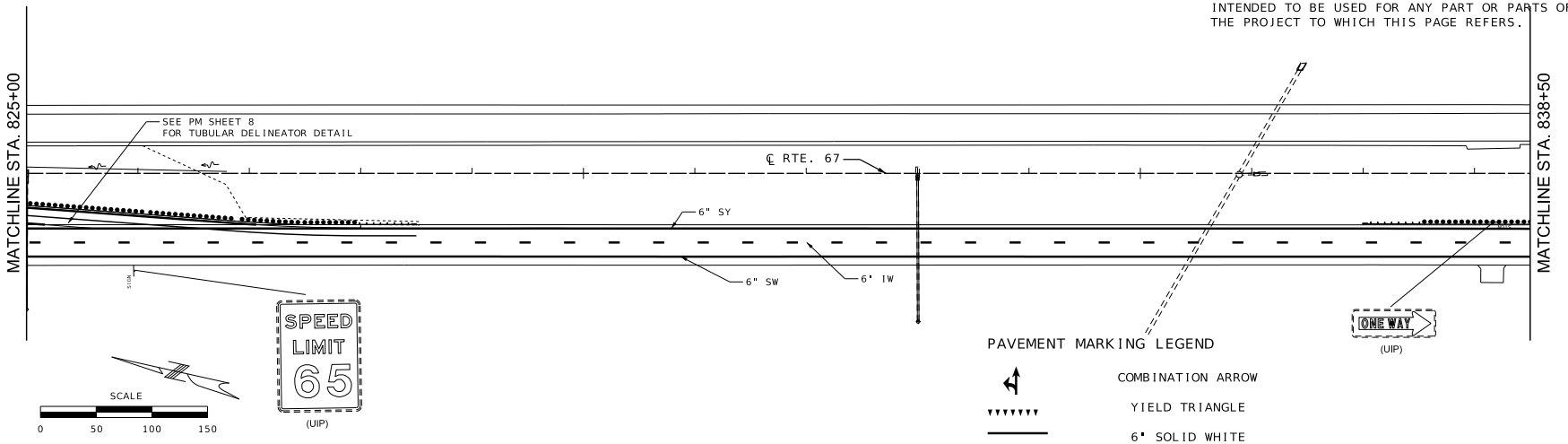

PAVEMENT MARKING LEGEND

- COMBINATION ARROW
- YIELD TRIANGLE
- 6' SOLID WHITE
- 6" SOLID YELLOW
- 6" INTERMITENT WHITE
- 6" DOTTED WHITE
- 24" SOLID YELLOW

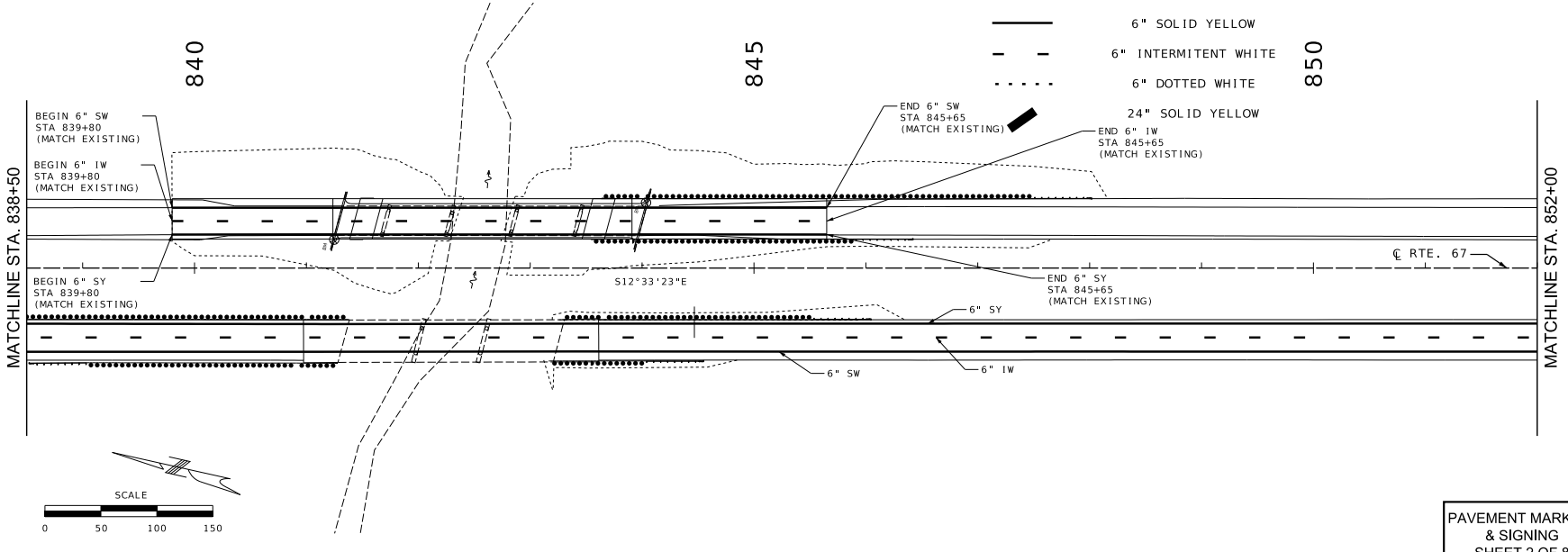

PAVEMENT MARKING & SIGNING SHEET 2 OF 8

STATE OF MISSOURI
NICHOLAS MICHAEL CORRENTI
NUMBER PE-2010000809
PROFESSIONAL ENGINEER

02/28/2025 2:43:00 PM
Nicholas Michael Correnti - Civil
MO PE-2010000809

DATE PREPARED	2/28/2025
ROUTE	67
STATE	MO
DISTRICT	SE
SHEET NO.	37
COUNTY	WAYNE
JOB NO.	JSE0083
CONTRACT ID.	
PROJECT NO.	
BRIDGE NO.	

DATE	DESCRIPTION

MISSOURI HIGHWAYS AND TRANSPORTATION COMMISSION
105 WEST CAPITOL
JEFFERSON CITY, MO 65102
1-888-ASK-MODOT (1-888-275-6636)

EFK•Moen
Civil Engineering Design
13523 Barrett Parkway Dr
Suite 250
St. Louis, MO 63021
Phone 314-394-3100
Fax 314-394-3199
Missouri Certificate of Authority: 001578

O:\2022R3\MoDOT_ORD_v10.12.02.04\24060 GBA-MoDOT SE0083 Route 67\Received\20250228 PSE\037_JSE0083_PM_02.dgn 2:32:12 PM 2/28/2025

DISCLAIMER
THE PROFESSIONAL WHOSE SIGNATURE AND PERSONAL SEAL APPEAR HEREON ASSUMES RESPONSIBILITY ONLY FOR WHAT APPEARS ON THIS PAGE, AND DISCLAIMS (PURSUANT TO SECTION 327.411 RSMO) SPECIFICATION, ESTIMATES, REPORTS, OR OTHER DOCUMENTS OR INSTRUMENTS NOT SEALED BY THE UNDERSIGNED PROFESSIONAL RELATING TO OR INTENDED TO BE USED FOR ANY PART OR PARTS OF THE PROJECT TO WHICH THIS PAGE REFERS.

NOTES

1. REMOVE TEMPORARY PAVEMENT MARKING IN CONFLICT WITH MAINLINE PAVEMENT MARKING AND ON SHOULDERS.
2. PAVEMENT MARKING FOR CROSSOVER MAY BE LEFT IN PLACE BEYOND OUTSIDE EDGE OF SHOULDER LINE.

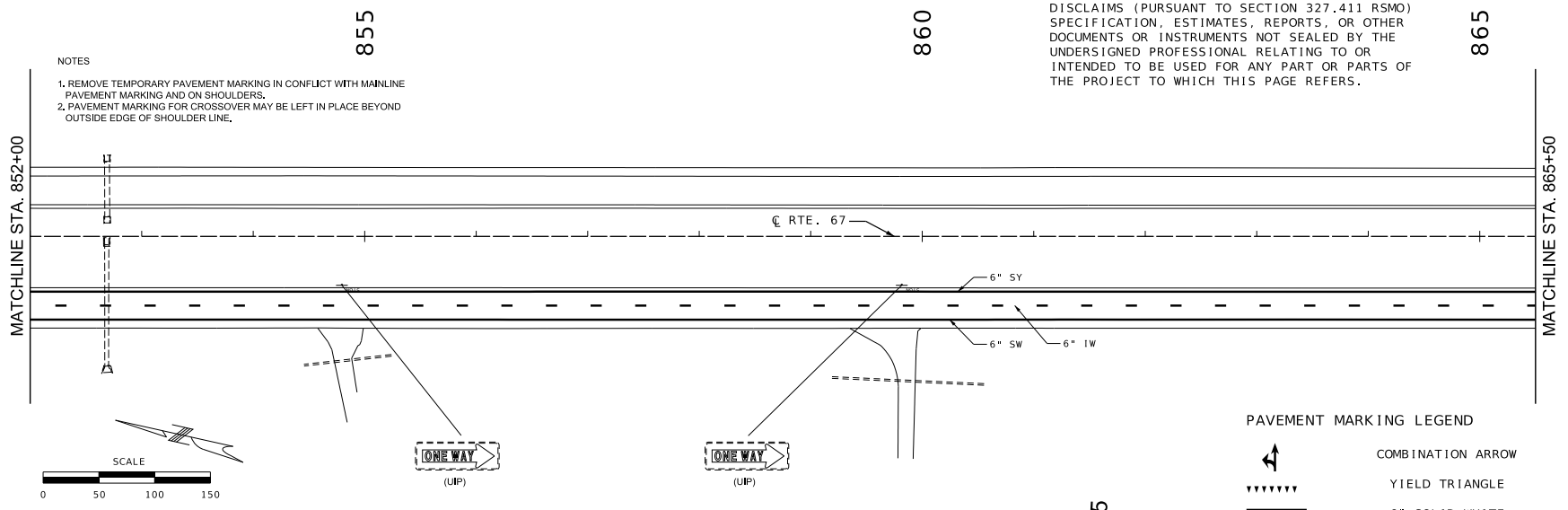

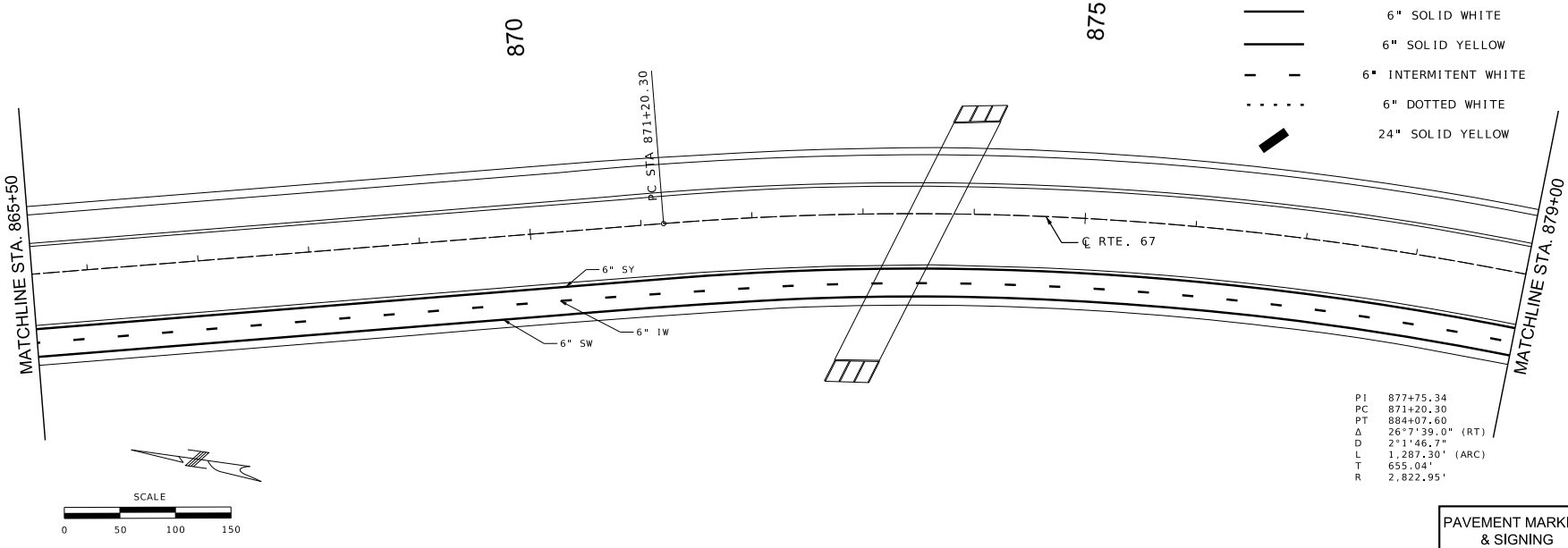

PAVEMENT MARKING LEGEND

- COMBINATION ARROW
- YIELD TRIANGLE
- 6" SOLID WHITE
- 6" SOLID YELLOW
- 6" INTERMITENT WHITE
- 6" DOTTED WHITE
- 24" SOLID YELLOW

PI	877+75.34
PC	871+20.30
PT	884+07.60
Δ	26°7'39.0" (RT)
D	2°1'46.7"
L	1,287.30' (ARC)
T	655.04'
R	2,822.95'

PAVEMENT MARKING & SIGNING
SHEET 3 OF 8

STATE OF MISSOURI
NICHOLAS MICHAEL CORRENTI
NUMBER PE-2010000809
PROFESSIONAL ENGINEER

02/28/2025 1:46:52 PM
Nicholas Michael Correnti - Civil
MO PE-2010000809

DATE PREPARED
2/28/2025

ROUTE	STATE
67	MO
DISTRICT	SHEET NO.
SE	38

COUNTY
WAYNE

JOB NO.
JSE0083

CONTRACT ID.

PROJECT NO.

BRIDGE NO.

DATE	DESCRIPTION

MISSOURI HIGHWAYS AND TRANSPORTATION COMMISSION
105 WEST CAPITOL
JEFFERSON CITY, MO 65102
1-888-ASK-MODOT (1-888-275-6636)

EFK•Moen
Civil Engineering Design
13523 Barrett Parkway Dr
Suite 205
St. Louis, MO 63021
Phone 314-394-3100
Fax 314-394-3199
Missouri Certificate of Authority: 001578

NOTES

1. REMOVE TEMPORARY PAVEMENT MARKING IN CONFLICT WITH MAINLINE PAVEMENT MARKING AND ON SHOULDERS.
2. PAVEMENT MARKING FOR CROSSOVER MAY BE LEFT IN PLACE BEYOND OUTSIDE EDGE OF SHOULDER LINE.

DISCLAIMER

THE PROFESSIONAL WHOSE SIGNATURE AND PERSONAL SEAL APPEAR HEREON ASSUMES RESPONSIBILITY ONLY FOR WHAT APPEARS ON THIS PAGE, AND DISCLAIMS (PURSUANT TOSECTION 327.411 RSMO) SPECIFICATION, ESTIMATES, REPORTS, OR OTHER DOCUMENTS OR INSTRUMENTS NOT SEALED BY THE UNDERSIGNED PROFESSIONAL RELATING TO OR INTENDED TO BE USED FOR ANY PART OR PARTS OF THE PROJECT TO WHICH THIS PAGE REFERS.

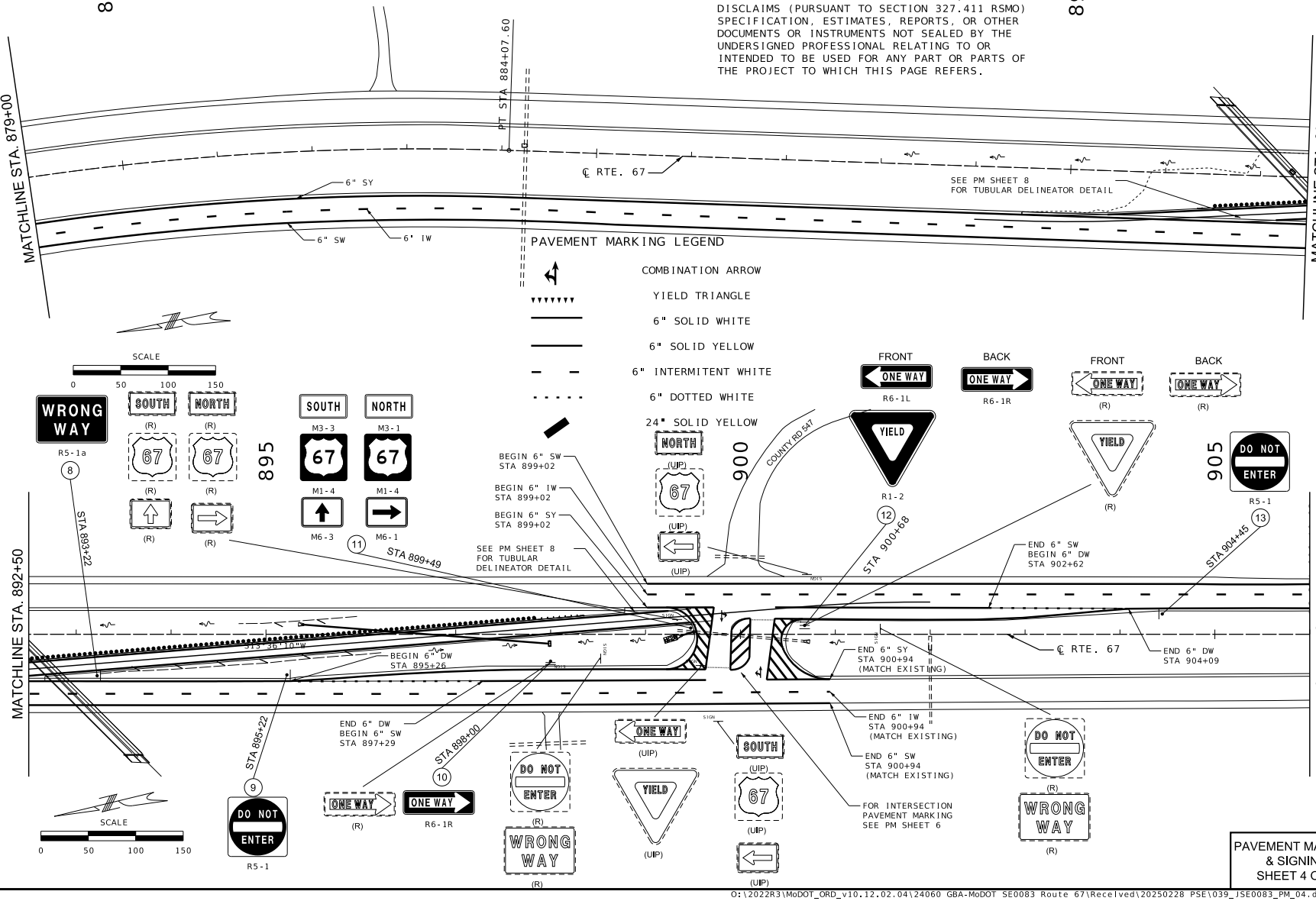

PAVEMENT MARKING & SIGNING SHEET 4 OF 8

STATE OF MISSOURI
NICHOLAS MICHAEL CORRENTI
NUMBER PE-2010000809
PROFESSIONAL ENGINEER

02/28/2025 2:43:32 PM
Nicholas Michael Correnti - Civil
MO PE-2010000809

DATE PREPARED	2/28/2025
ROUTE	67
STATE	MO
DISTRICT	SE
SHEET NO.	39
COUNTY	WAYNE
JOB NO.	JSE0083
CONTRACT ID.	
PROJECT NO.	
BRIDGE NO.	

DESCRIPTION

DATE

MISSOURI HIGHWAYS AND TRANSPORTATION COMMISSION

MoDOT

105 WEST CAPITOL
JEFFERSON CITY, MO 65102
1-888-ASK-MODOT (1-888-275-6636)

EFK•Moen
Civil Engineering Design
13523 Barrett Parkway Dr
Suite 205
St. Louis, MO 63021
Phone 314-394-3100
Fax 314-394-3199
Missouri Certificate of Authority:001578

O:\2022R3\MoDOT_ORD_v10.12.02.04\24060 GBA-MoDOT SE0083 Route 67\Received\20250228 PSE\039_JSE0083_PM_04.dgn 2:32:15 PM 2/28/2025

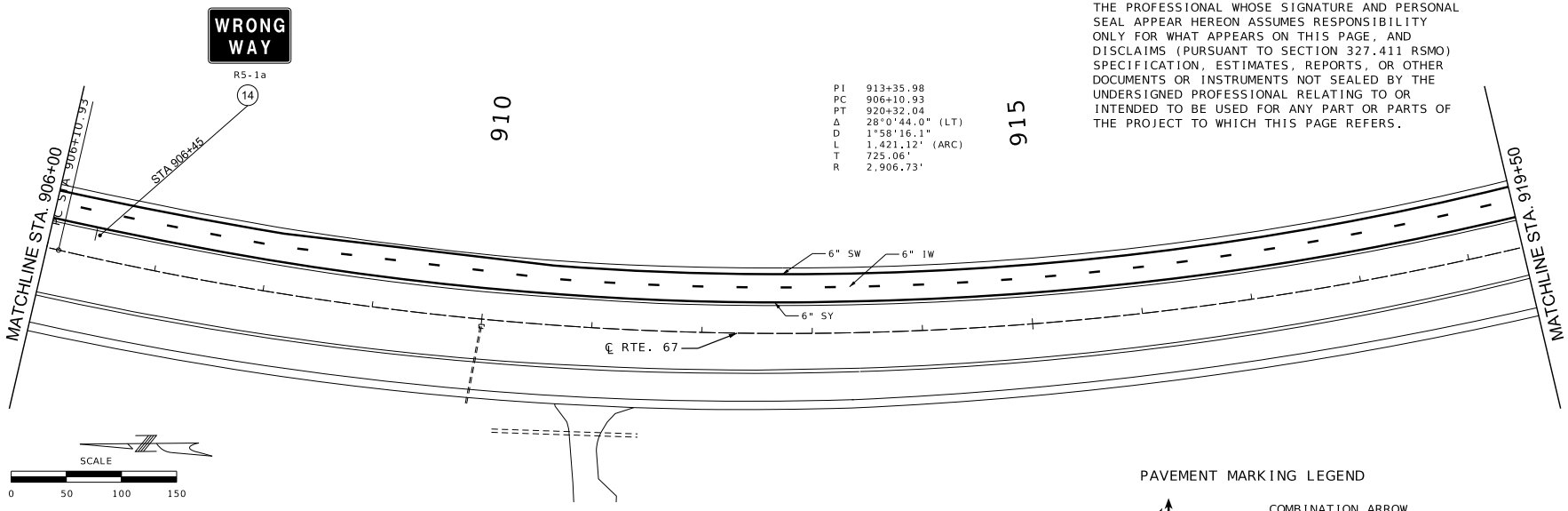

PI	913+35.98
PC	906+10.93
PT	920+32.04
Δ	28°0'44.0" (LT)
D	1°58'16.1"
L	1,421.12' (ARC)
T	725.06'
R	2,906.73'

DISCLAIMER

THE PROFESSIONAL WHOSE SIGNATURE AND PERSONAL SEAL APPEAR HEREON ASSUMES RESPONSIBILITY ONLY FOR WHAT APPEARS ON THIS PAGE, AND DISCLAIMS (PURSUANT TO SECTION 327.411 RSMO) SPECIFICATION, ESTIMATES, REPORTS, OR OTHER DOCUMENTS OR INSTRUMENTS NOT SEALED BY THE UNDERSIGNED PROFESSIONAL RELATING TO OR INTENDED TO BE USED FOR ANY PART OR PARTS OF THE PROJECT TO WHICH THIS PAGE REFERS.

PAVEMENT MARKING LEGEND

- COMBINATION ARROW
- YIELD TRIANGLE
- 6" SOLID WHITE
- 6" SOLID YELLOW
- 6" INTERMITENT WHITE
- 6" DOTTED WHITE
- 24" SOLID YELLOW

NOTES

1. REMOVE TEMPORARY PAVEMENT MARKING IN CONFLICT WITH MAINLINE PAVEMENT MARKING AND ON SHOULDERS.
2. PAVEMENT MARKING FOR CROSSOVER MAY BE LEFT IN PLACE BEYOND OUTSIDE EDGE OF SHOULDER LINE.

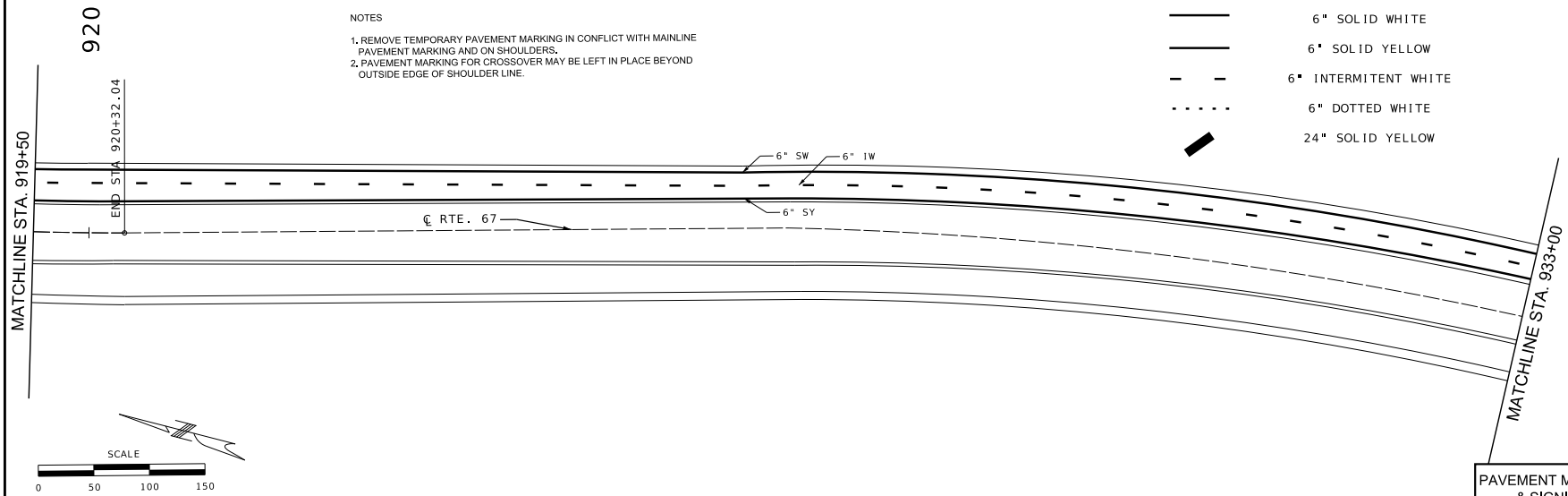

PAVEMENT MARKING & SIGNING SHEET 5 OF 8

STATE OF MISSOURI
NICHOLAS MICHAEL CORRENTI
NUMBER PE-2010000809
PROFESSIONAL ENGINEER

02/28/2025 1:47:31 PM
Nicholas Michael Correnti - Civil
MO PE-2010000809

DATE PREPARED
2/28/2025

ROUTE	STATE
67	MO
DISTRICT	SHEET NO.
SE	40

COUNTY
WAYNE

JOB NO.
JSE0083

CONTRACT ID.

PROJECT NO.

BRIDGE NO.

DATE	DESCRIPTION

MISSOURI HIGHWAYS AND TRANSPORTATION COMMISSION
105 WEST CAPITOL
JEFFERSON CITY, MO 65102
1-888-ASK-MODOT (1-888-275-6636)

EFK•Moen
Civil Engineering Design
13523 Barrett Parkway Dr
Suite 100
St. Louis, MO 63021
Phone 314-394-3100
Fax 314-394-3199
Missouri Certificate of Authority:001578

O:\2022R3\MoDOT_ORD_v10.12.02.04\24060 GBA-MoDOT SE0083 Route 67\Received\20250228 PSE\040_JSE0083_PM_05.dgn 1:14:19 PM 2/28/2025

PAVEMENT MARKING LEGEND

- COMBINATION ARROW
- YIELD TRIANGLE
- 6" SOLID WHITE
- 6" SOLID YELLOW
- 6" INTERMITENT WHITE
- 6" DOTTED WHITE
- 24" SOLID YELLOW

SCALE

0 50 100 150

NOTES

1. REMOVE TEMPORARY PAVEMENT MARKING IN CONFLICT WITH MAINLINE PAVEMENT MARKING AND ON SHOULDERS.
2. PAVEMENT MARKING FOR CROSSOVER MAY BE LEFT IN PLACE BEYOND OUTSIDE EDGE OF SHOULDER LINE.

DISCLAIMER

THE PROFESSIONAL WHOSE SIGNATURE AND PERSONAL SEAL APPEAR HEREON ASSUMES RESPONSIBILITY ONLY FOR WHAT APPEARS ON THIS PAGE, AND DISCLAIMS (PURSUANT TO SECTION 327.411 RSMO) SPECIFICATION, ESTIMATES, REPORTS, OR OTHER DOCUMENTS OR INSTRUMENTS NOT SEALED BY THE UNDERSIGNED PROFESSIONAL RELATING TO OR INTENDED TO BE USED FOR ANY PART OR PARTS OF THE PROJECT TO WHICH THIS PAGE REFERS.

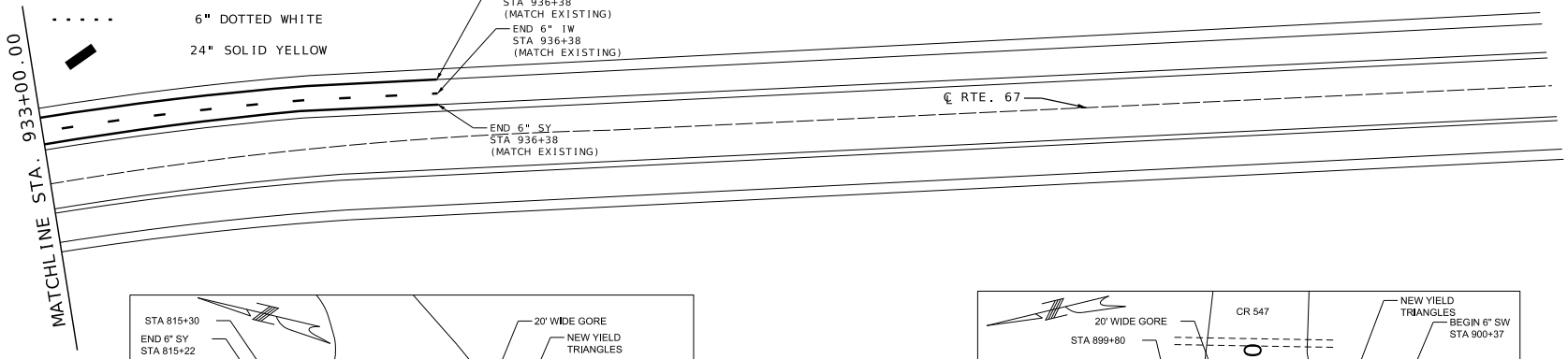

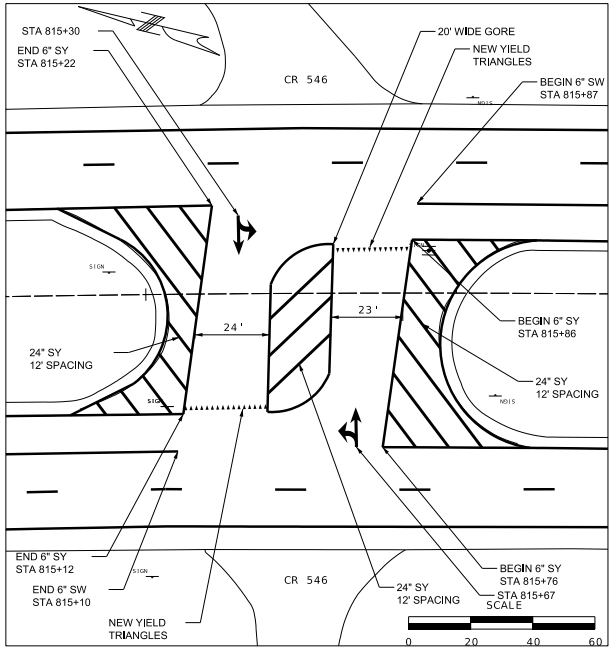

NORTH INTERSECTION DETAIL

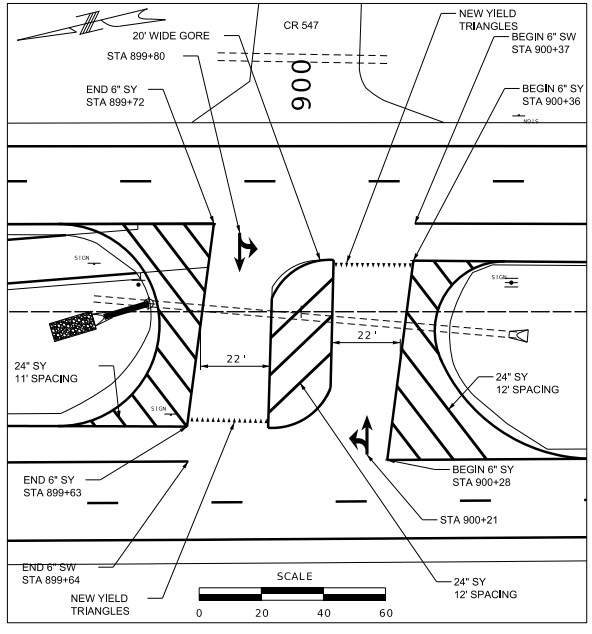

SOUTH INTERSECTION DETAIL

PAVEMENT MARKING
& SIGNING
SHEET 6 OF 8

STATE OF MISSOURI
NICHOLAS MICHAEL CORRENTI
NUMBER PE-2010000809
PROFESSIONAL ENGINEER

02/28/2025 1:48:29 PM
Nicholas Michael Correnti - Civil
MO PE-2010000809

DATE PREPARED	
2/28/2025	
ROUTE 67	STATE MO
DISTRICT SE	SHEET NO. 41
COUNTY WAYNE	
JOB NO. JSE0083	
CONTRACT ID.	
PROJECT NO.	
BRIDGE NO.	

DATE	DESCRIPTION

MISSOURI HIGHWAYS AND TRANSPORTATION COMMISSION
105 WEST CAPITOL
JEFFERSON CITY, MO 65102
1-888-ASK-MODOT (1-888-275-6636)

EFK•Moen
Civil Engineering Design
13523 Barrett Parkway Dr
Suite 205
St. Louis, MO 63021
Phone 314-394-3199
Fax 314-394-3199
Missouri Certificate of Authority:001578

O:\2022R3\MoDOT_ORD_v10.12.02.04\24060 GBA-MoDOT SE0083 Route 67\Received\20250228 PSE\041_JSE0083_PM_06.dgn 1:14:20 PM 2/28/2025

DISCLAIMER
THE PROFESSIONAL WHOSE SIGNATURE AND PERSONAL SEAL APPEAR HEREON ASSUMES RESPONSIBILITY ONLY FOR WHAT APPEARS ON THIS PAGE, AND DISCLAIMS (PURSUANT TO SECTION 327.411 RSMO) SPECIFICATION, ESTIMATES, REPORTS, OR OTHER DOCUMENTS OR INSTRUMENTS NOT SEALED BY THE UNDERSIGNED PROFESSIONAL RELATING TO OR INTENDED TO BE USED FOR ANY PART OR PARTS OF THE PROJECT TO WHICH THIS PAGE REFERS.

STATE OF MISSOURI
NICHOLAS MICHAEL CORRENTI
NUMBER PE-2010000809
PROFESSIONAL ENGINEER

02/28/2025 1:49:13 PM
Nicholas Michael Correnti - Civil
MO PE-2010000809

DATE PREPARED	2/28/2025
ROUTE	67
STATE	MO
DISTRICT	SE
SHEET NO.	42
COUNTY	WAYNE
JOB NO.	JSE0083
CONTRACT ID.	
PROJECT NO.	
BRIDGE NO.	

EFFECTIVE: 07-01-2024

SIGNS (902 SIGNAL SIGNS TABULATED ON D-37A SHEET)						CONCRETE FOOTINGS EMBEDDED	STRUCTURAL STEEL POSTS*						PIPE POSTS*					BACKING BARS**					U-CHANNEL POST	PERFORATED SQUARE STEEL TUBE															REMARKS AND OTHER REQUIRED ITEMS
																								2-INCH POST						2.5-INCH POST										
																										TOTAL	ANCHORS					TOTAL	2.25" INSERT (6 FT)	ANCHORS			BREAK-AWAY ASSEMBLY	
SIGN NO.	SIGN SIZE	STATION OR LOG MILE	HORIZ CLEAR IF NOT STD	LOCATION	SIGN DTL SHT NO.	ITEM NO. 9031010 CY	POST DES NO.	POST NO.1 LF	POST NO.2 LF	POST NO.3 LF	LBS PER FT	TOTAL ITEM NO. 9031210 LBS	PIPE SIZE IN	POST NO.1 LF	POST NO.2 LF	LBS PER FT	TOTAL ITEM NO. 9031220 LBS	2" X 3/8" BARS AT 2.55 LBS/FT NO. EACH	LGTH IN.	TOTAL LF	TOTAL LF	ITEM NO. 9031250A LF	POST NO.1 LF	POST NO.2 LF	TOTAL ITEM NO. 9031270A LF	DRIVEN 12 GA. ITEM NO. 9031271A EACH	DRIVEN 7 GA. ITEM NO. 9031273A EACH	CONCRETE 7 GA. ITEM NO. 9031274 EACH	POST NO.1 LF	POST NO.2 LF	TOTAL ITEM NO. 9031280 LF	ITEM NO. 9031272A EACH	DRIVEN 7 GA. ITEM NO. 9031281A EACH	CONCRETE 7 GA. ITEM NO. 9031285 EACH	ITEM NO. 9031241 EACH	
1	42 x 30	808+62		RTE 67																			16		16	1												
2	36 x 36	810+62		RTE 67																			16		16	1												
3	ASSBLY	815+91		RTE 67																			16		16			1										
4	36 x 36	520+12		RTE 67																			16		16	1												
5	42 x 30	820+57		RTE 67																			16		16	1												
6	42 x 30	822+12		RTE 67																			16		16	1												
7	36 x 36	822+57		RTE 67																			16		16	1												
8	42 x 30	893+22		RTE 67																			16		16	1												
9	36 x 36	895+22		RTE 67																			16		16	1												
10	54 x 18	898+00		RTE 67																			16		16	1												
11	ASSBLY	899+49		RTE 67														6	50	25	63.75									16		16	1	1		1		
12	ASSBLY	900+68		RTE 67																			16		16	1												
13	36 x 36	904+45		RTE 67																			16		16	1												
14	42 x 30	906+45		RTE 67																			16		16	1												
				SUBTOTAL																	63.8				208	12		1			16	1	1		1		
				TOTAL													70				**				208	12		1			16	1	1		1		

*BREAKAWAY ASSEMBLY IS INCIDENTAL FOR STRUCTURAL STEEL AND PIPE POSTS.
**BACKING BARS ARE TOTALED WITH STRUCTURAL STEEL OR PIPE POSTS.

DATE	DESCRIPTION

STANDARD SIGN ASSEMBLIES

SIGN, TYPE, DESIGNATION, SIZE & NUMBER OF EACH

SIGN NO.	STATION OR LOG MILE	LOCATION	SH M1-4 24 x 24	SH M3-1 24 x 12	SH M3-3 24 x 12	SH M6-1R 21 x 15	SH M6-3 21 x 15	SH R1-2 48TRI	SH R5-1 36 x 36	SH R5-1a 42 x 30	SH R6-1L 54 x 18	SH R6-1R 54 x 18
1	808+62	RTE 67								1		
2	810+62	RTE 67							1			
3	815+91	RTE 67						1			1	1
4	520+12	RTE 67								1		
5	820+57	RTE 67							1			
6	822+12	RTE 67								1		
7	822+57	RTE 67							1			
8	893+22	RTE 67								1		
9	895+22	RTE 67							1			
10	898+00	RTE 67										1
11	899+49	RTE 67	2	1	1	1	1					
12	900+68	RTE 67						1			1	1
13	904+45	RTE 67							1			
14	906+45	RTE 67								1		
		TOTALS	2	1	1	1	1	2	5	5	2	3

SIGN SUMMARY

EFFECTIVE: 10-01-2016

STANDARD OR SPECIAL SIGN DESIGNATION	SIGN DTL. SHT. NO.	NO. EACH	SIGN SIZE	TYPE & SQUARE FEET: FLAT SHEET SH ITEM NO. 9035004A	FLAT SHEET FLUORESCENT SHF* ITEM NO. 9035069A	STRUCTURAL ST ITEM NO. 9035011A	STRUCTURAL FLUORESCENT STF* ITEM NO. 9035071A
M1-4		2	24 x 24	8.00			
M3-1		1	24 x 12	2.00			
M3-3		1	24 x 12	2.00			
M6-1R		1	21 x 15	2.19			
M6-3		1	21 x 15	2.19			
R1-2		2	48TRI	16.00			
R5-1		5	36 x 36	45.00			
R5-1a		5	42 x 30	43.75			
R6-1		2	54 x 18	13.50			
R6-1		3	54 x 18	20.25			
			TOTALS	155			

*ORANGE, YELLOW AND YELLOW-GREEN

ROUND PIPE POST AND FOOTING DATA TABLE

NOM.SIZE (IN.)	WEIGHT LBS/FT	WEIGHT LBS/IN	STUB LENGTH	FOOTING DIA.	FOOTING DEPTH	CONCRETE C.Y.
2½	3.79	0.48	4'- 3½"	12"	4-6"	0.13
3	7.58	0.63	4'- 3½"	12"	4-6"	0.13
4	10.79	0.90	5'- 3½"	18"	5-6"	0.36

STRUCTURAL STEEL POST AND FOOTING DATA TABLE

POST DES. NO.	POST NOM. SIZE	POST WEIGHT LBS/FT	POST WEIGHT LBS/IN	STUB LENGTH	DIA.	FOOTING LEVEL GROUND DEPTH	LEVEL GROUND C.Y.	6:1 GRADE DEPTH	6:1 GRADE C.Y.	4:1 GRADE DEPTH	4:1 GRADE C.Y.	3:1 OR 2:1 GRADE DEPTH	3:1 OR 2:1 GRADE C.Y.
1	W6	9.0	0.75	3'-0"	15"	3'-0"	0.14	3'-2"	0.15	3'-3"	0.16	3'-8"	0.17
2	W6	15.0	1.25	4'-0"	24"	4'-0"	0.47	4'-3"	0.50	4'-3"	0.51	4'-8"	0.54
3	W8	18.0	1.50	4'-6"	28"	4'-6"	0.71	4'-8"	0.73	4'-9"	0.74	5'-0"	0.78
4	W10	22.0	1.83	5'-0"	36"	5'-0"	1.31	5'-2"	1.36	5'-3"	1.39	5'-8"	1.45
5	W10	26.0	2.17	5'-0"	36"	5'-0"	1.31	5'-3"	1.37	5'-5"	1.43	5'-8"	1.52
6	W12	35.0	2.92	5'-6"	36"	5'-6"	1.44	5'-8"	1.52	5'-11"	1.56	6'-3"	1.65

D-29 & D-30

PAVEMENT MARKING & SIGNING SHEET 7 OF 8

MISSOURI HIGHWAYS AND TRANSPORTATION COMMISSION
MoDOT
105 WEST CAPITOL
JEFFERSON CITY, MO 65102
1-888-ASK-MoDOT (1-888-275-6636)

EFK•Moen
Civil Engineering Design
13523 Barrett Parkway Dr
Suite 205
St. Louis, MO 63021
Phone 314-394-3100
Fax 314-394-3199
Missouri Certificate of Authority:001578

TUBULAR DELINEATOR PLACEMENT DETAIL

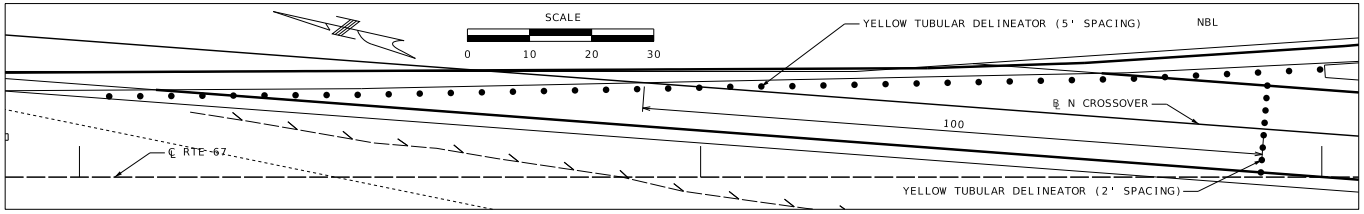

NORTH CROSSOVER EXIT DETAIL

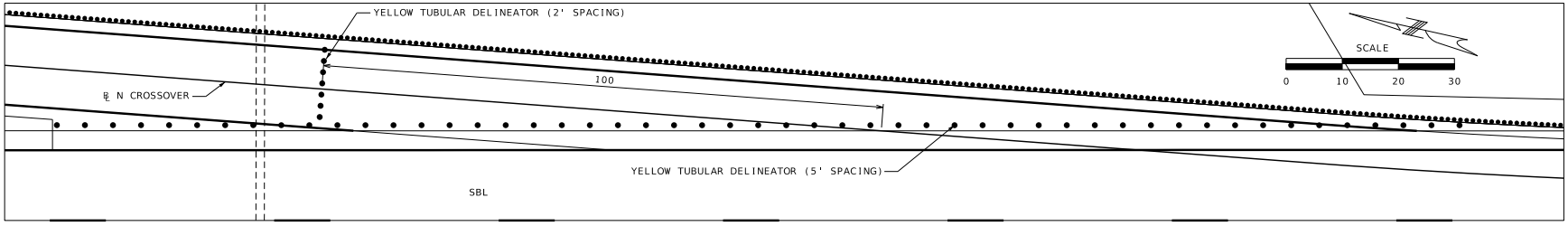

NORTH CROSSOVER ENTRANCE DETAIL

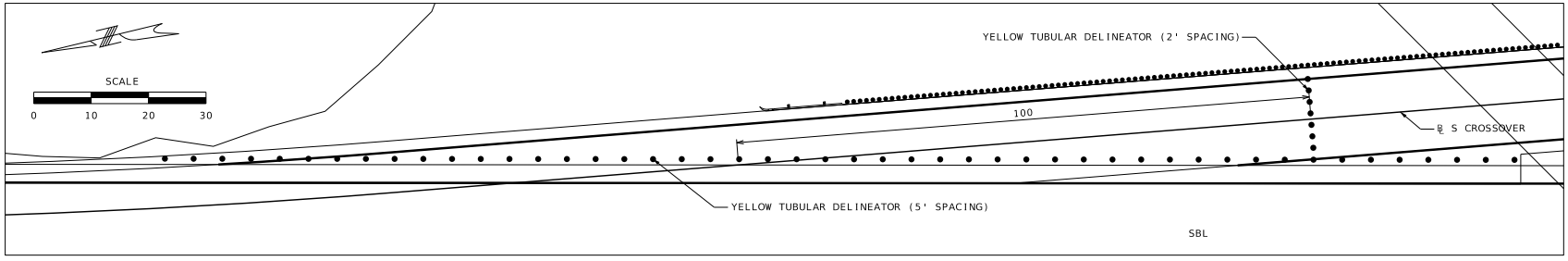

SOUTH CROSSOVER EXIT DETAIL

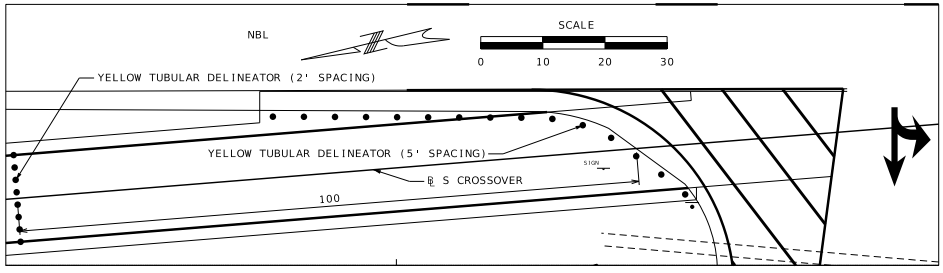

SOUTH CROSSOVER ENTRANCE DETAIL

DISCLAIMER

THE PROFESSIONAL WHOSE SIGNATURE AND PERSONAL SEAL APPEAR HEREON ASSUMES RESPONSIBILITY ONLY FOR WHAT APPEARS ON THIS PAGE, AND DISCLAIMS (PURSUANT TO SECTION 327.411 RSMO) SPECIFICATION, ESTIMATES, REPORTS, OR OTHER DOCUMENTS OR INSTRUMENTS NOT SEALED BY THE UNDERSIGNED PROFESSIONAL RELATING TO OR INTENDED TO BE USED FOR ANY PART OR PARTS OF THE PROJECT TO WHICH THIS PAGE REFERS.

PAVEMENT MARKING & SIGNING SHEET 8 OF 8

STATE OF MISSOURI
NICHOLAS MICHAEL CORRENTI
NUMBER PE-2010000809
PROFESSIONAL ENGINEER

02/28/2025 1:49:45 PM
Nicholas Michael Correnti - Civil
MO PE-2010000809

DATE PREPARED	2/28/2025
ROUTE	67
STATE	MO
DISTRICT	SE
SHEET NO.	43
COUNTY	WAYNE
JOB NO.	JSE0083
CONTRACT ID.	
PROJECT NO.	
BRIDGE NO.	

DATE	DESCRIPTION

MISSOURI HIGHWAYS AND TRANSPORTATION COMMISSION
105 WEST CAPITOL
JEFFERSON CITY, MO 65102
1-888-ASK-MoDOT (1-888-275-6636)

EFK•Moen
Civil Engineering Design
13523 Barrett Parkway Dr
Suite 205
St. Louis, MO 63021
Phone 314-394-3199
Fax 314-394-3199
Missouri Certificate of Authority: 001578

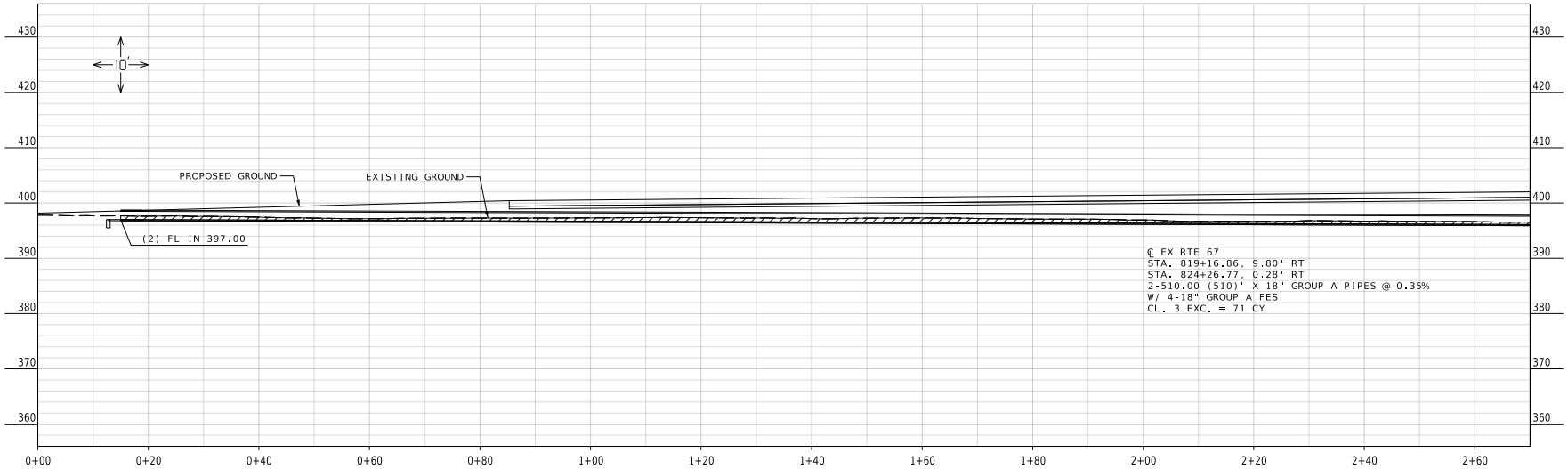

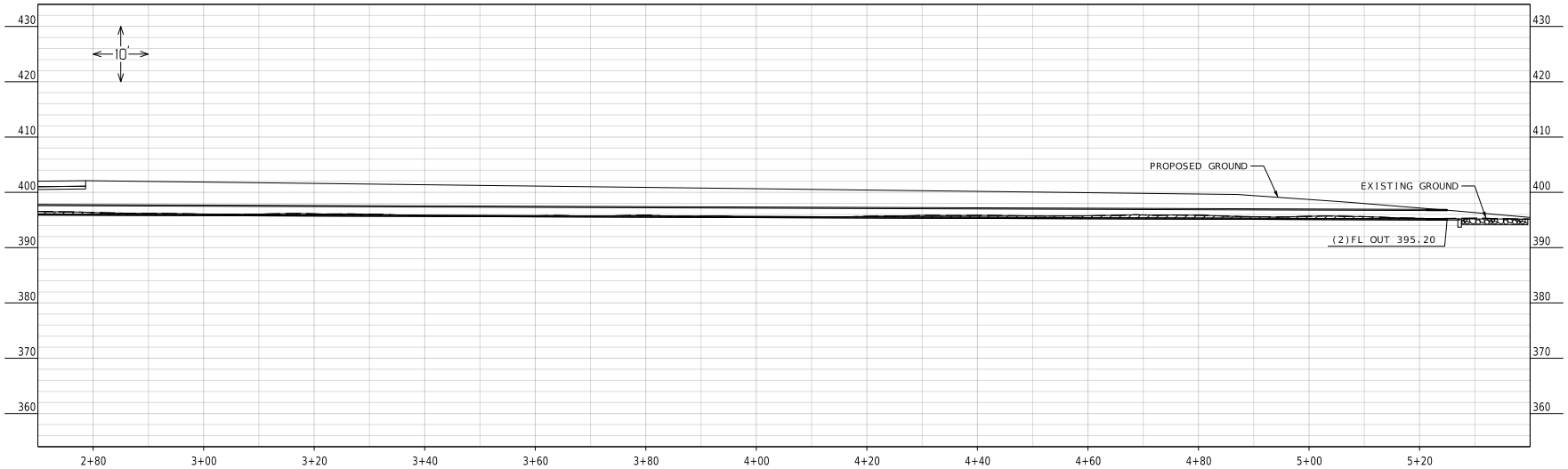

= CLASS 3 EXCAVATION

NOTES:
(#) = PAY LENGTH/DEPTH
INLET AND OUTLET TRANSITIONS INCIDENTAL TO GRADING
SEE EROSION CONTROL FOR ROCK LINING LIMITS

CULVERT SECTIONS
SHEET 1 OF 3

STATE OF MISSOURI
NIKKI D. CONLEY
NUMBER PE-2018040668
PROFESSIONAL ENGINEER

THIS SHEET HAS BEEN SIGNED, SEALED, AND DATED ELECTRONICALLY.

DATE PREPARED	
2/28/2025	
ROUTE	STATE
67	MO
DISTRICT	SHEET NO.
SE	44
COUNTY	
WAYNE	
JOB NO.	
JSE0083	
CONTRACT ID.	
PROJECT NO.	
BRIDGE NO.	
A9610	

DATE	DESCRIPTION

IF A SEAL IS PRESENT ON THIS SHEET IT HAS BEEN ELECTRONICALLY SEALED AND DATED.

MISSOURI HIGHWAYS AND TRANSPORTATION COMMISSION
105 WEST CAPITOL
JEFFERSON CITY, MO 65102
1-888-ASK-MODOT (1-888-275-6636)

GBA
16305 SWINGLEY RIDGE RD
ST. 300
CHESTERFIELD, MO 63017
314.231.0100
GBAteam.com

GEORGE BUTLER ASSOCIATES, INC.
PRO. ENGINEER 000133
ARCHITECT 000212
PRO. LAND SURVEYOR 000059

NIKKI D. CONLEY
PROFESSIONAL ENGINEER
PE-2018040668

2/28/2025

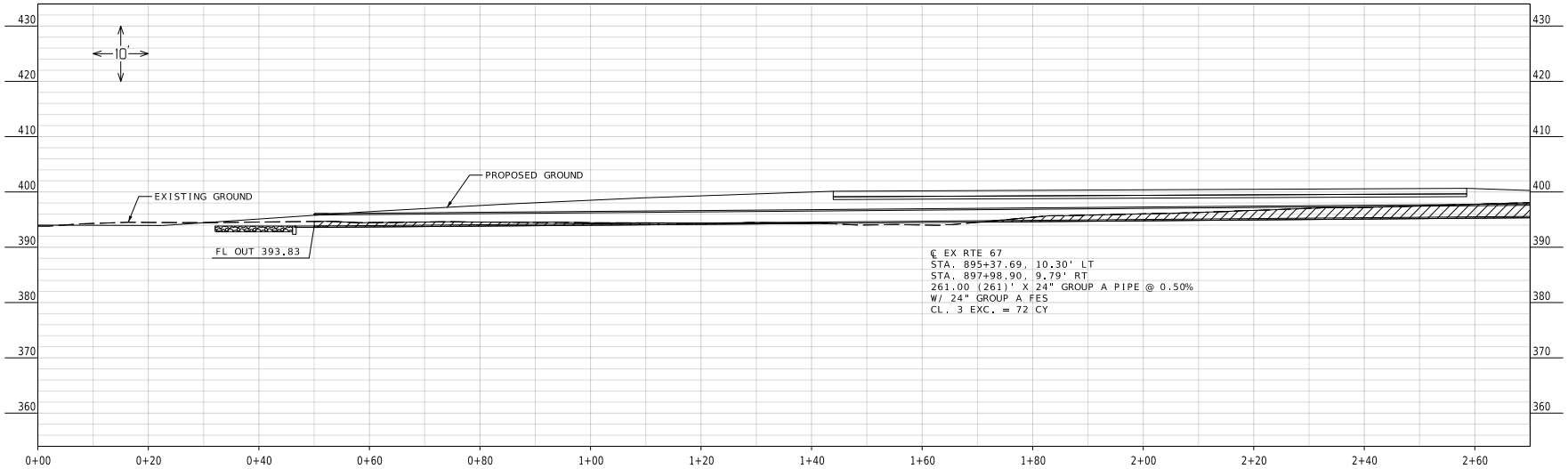

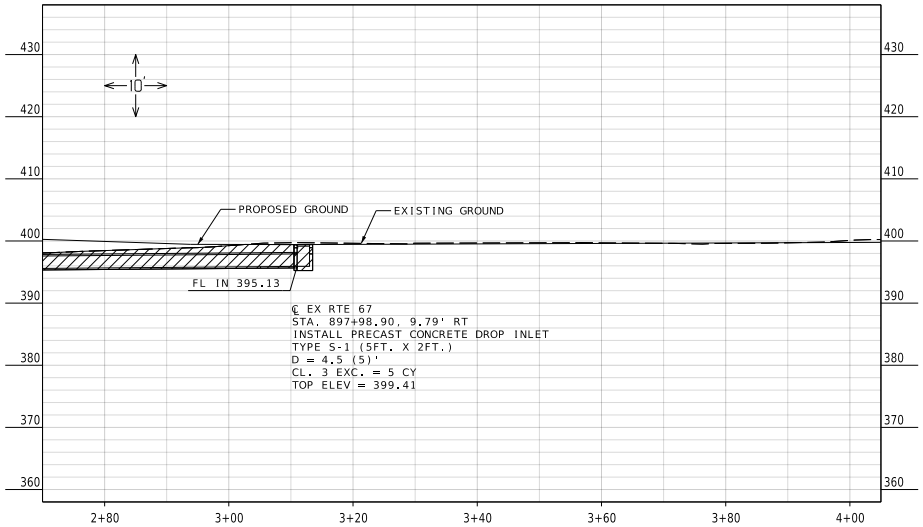

= CLASS 3 EXCAVATION NOTE: (#) = PAY LENGTH/DEPTH

CULVERT SECTIONS
SHEET 2 OF 3

STATE OF MISSOURI
NIKKI D. CONLEY
NUMBER PE-2018040668
PROFESSIONAL ENGINEER

THIS SHEET HAS BEEN SIGNED, SEALED, AND DATED ELECTRONICALLY.

DATE PREPARED	
3/31/2025	
ROUTE 67	STATE MO
DISTRICT SE	SHEET NO. 45
COUNTY WAYNE	
JOB NO. JSE0083	
CONTRACT ID.	
PROJECT NO.	
BRIDGE NO. A9610	

DATE	DESCRIPTION

MISSOURI HIGHWAYS AND TRANSPORTATION COMMISSION
105 WEST CAPITOL
JEFFERSON CITY, MO 65102
1-888-ASK-MODOT (1-888-275-6636)

GBA
16305 SWINGLEY RIDGE RD
ST. 300
CHESTERFIELD, MO 63017
314.231.0100
GBAteam.com

GEORGE BUTLER ASSOCIATES, INC.
PRO. ENGINEER 000133
ARCHITECT 000212
PRO. LAND SURVEYOR 000059

NIKKI D. CONLEY
PROFESSIONAL ENGINEER
PE-2018040668

3/31/2025

IF A SEAL IS PRESENT ON THIS SHEET IT HAS BEEN ELECTRONICALLY SEALED AND DATED.

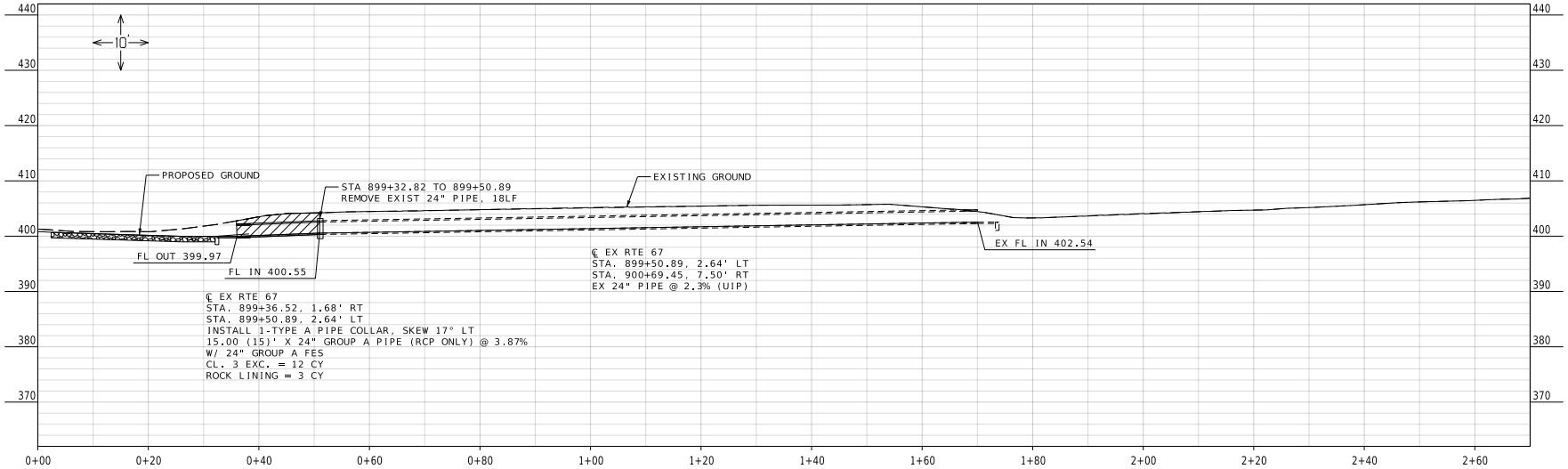

NOTES:
(#) = PAY LENGTH/DEPTH
SKEW EXTENSION BY USING A BEVELED END OR ELBOW ON PIPE.

= CLASS 3 EXCAVATION

CULVERT SECTIONS
SHEET 3 OF 3

STATE OF MISSOURI
NIKKI D. CONLEY
NUMBER PE-2018040668
PROFESSIONAL ENGINEER

THIS SHEET HAS BEEN SIGNED, SEALED, AND DATED ELECTRONICALLY.

DATE PREPARED	2/28/2025
ROUTE 67	STATE MO
DISTRICT SE	SHEET NO. 46
COUNTY	WAYNE
JOB NO.	JSE0083
CONTRACT ID.	
PROJECT NO.	
BRIDGE NO.	A9610

DATE	DESCRIPTION

IF A SEAL IS PRESENT ON THIS SHEET IT HAS BEEN ELECTRONICALLY SEALED AND DATED.

MISSOURI HIGHWAYS AND TRANSPORTATION COMMISSION
105 WEST CAPITOL
JEFFERSON CITY, MO 65102
1-888-ASK-MODOT (1-888-275-6636)

GBA
16305 SWINGLEY RIDGE RD
ST. 300
CHESTERFIELD, MO 63017
314.231.0100
GBAteam.com

GEORGE BUTLER ASSOCIATES, INC.
PRO. ENGINEER 000133
ARCHITECT 000212
PRO. LAND SURVEYOR 000059

NIKKI D. CONLEY
PROFESSIONAL ENGINEER
PE-2018040668

2/28/2025

SEC/SUR 18 TWP 27N RGE 6E

(57'-70'-57') PRESTRESSED CONCRETE I-GIRDER SPANS

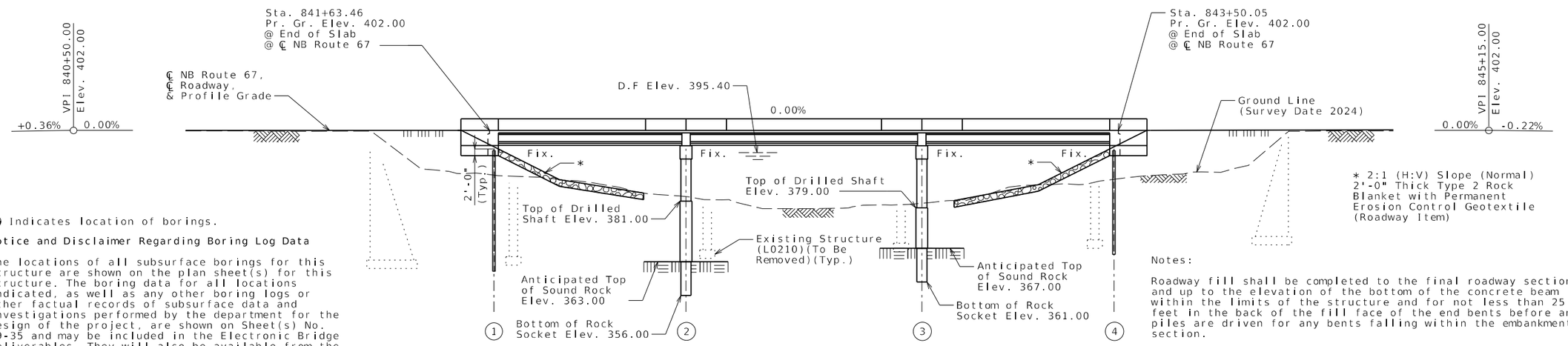

* 2:1 (H:V) Slope (Normal)
2'-0" Thick Type 2 Rock
Blanket with Permanent
Erosion Control Geotextile
(Roadway Item)

GENERAL ELEVATION

Indicates location of borings.

Notice and Disclaimer Regarding Boring Log Data

The locations of all subsurface borings for this structure are shown on the plan sheet(s) for this structure. The boring data for all locations indicated, as well as any other boring logs or other factual records of subsurface data and investigations performed by the department for the design of the project, are shown on Sheet(s) No. 29-35 and may be included in the Electronic Bridge Deliverables. They will also be available from the Project Contact upon written request. No greater significance or weight should be given to the boring data depicted on the plan sheets than is given to the subsurface data available from the district or elsewhere.

The Commission does not represent or warrant that any such boring data accurately depicts the conditions to be encountered in constructing this project. A contractor assumes all risks it may encounter in basing its bid prices, time or schedule of performance on the boring data depicted here or those available from the district, or on any other documentation not expressly warranted, which the contractor may obtain from the Commission.

Notes:

Roadway fill shall be completed to the final roadway section and up to the elevation of the bottom of the concrete beam within the limits of the structure and for not less than 25 feet in the back of the fill face of the end bents before any piles are driven for any bents falling within the embankment section.

Existing roadway fill under the ends of the bridge shall be removed as shown. Removal of existing roadway fill will be considered completely covered by the contract unit price for roadway excavation.

For General Notes, Estimated Quantities, Hydraulic Data, Foundation Data and Location Sketch, see Sheet No. 2.

All longitudinal dimensions shown are horizontal.

Outline of existing work is indicated by light dashed lines. Heavy lines indicate new work.

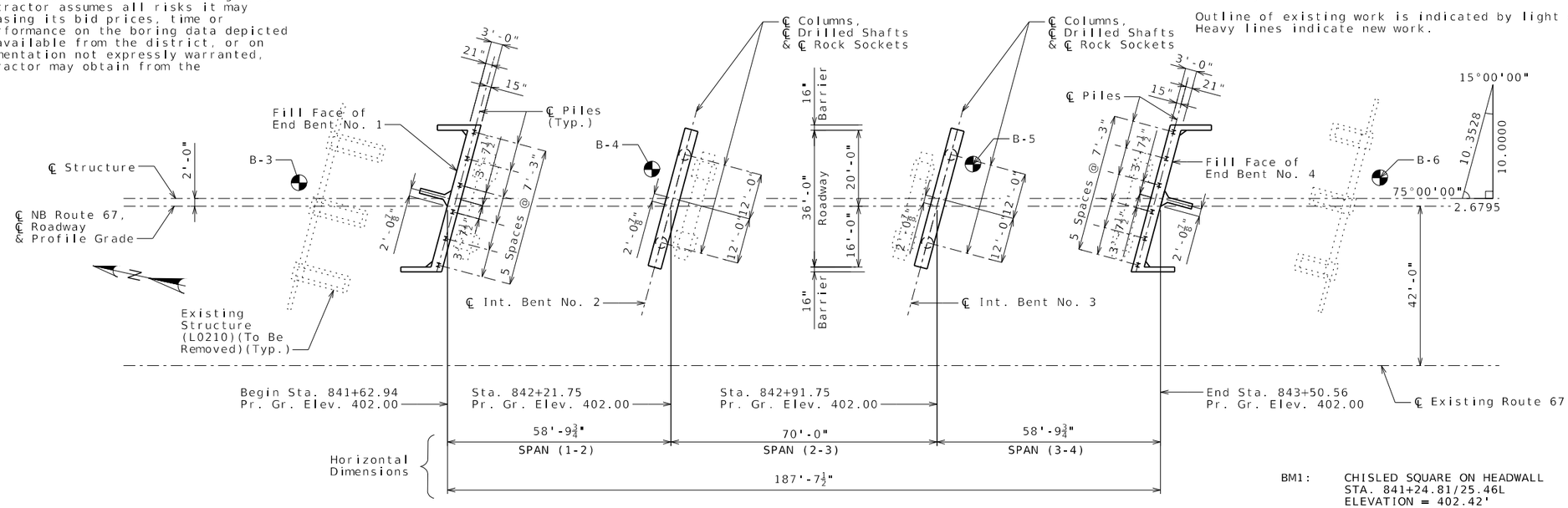

PLAN

BM1: CHISLED SQUARE ON HEADWALL
STA. 841+24.81/25.46L
ELEVATION = 402.42'

BM2: CHISLED SQUARE ON HEADWALL
STA. 844+03.53/58.51L
ELEVATION = 402.42'

BRIDGE: ROUTE 67 NB OVER OTTER CREEK

ROUTE 67 NB FROM ROUTE F TO ROUTE 172

ABOUT 3.5 MILES NORTH OF ROUTE 172

BEGINNING STATION 841+62.94

Designed Dec 2024
Detailed Jan 2025
Checked Jan 2025

Note: This drawing is not to scale. Follow dimensions.

STATE OF MISSOURI
RYAN G. HAGERTY
NUMBER
PE-2016034015
PROFESSIONAL ENGINEER

THIS SHEET HAS BEEN SIGNED, SEALED, AND DATED ELECTRONICALLY

DATE PREPARED
7/25/2025

ROUTE	STATE
67	MO
DISTRICT	SHEET NO.
BR	1

COUNTY
WAYNE

JOB NO.
JSE0083

CONTRACT ID.

PROJECT NO.

BRIDGE NO.
A9610

DESCRIPTION	DATE

IF A SEAL IS PRESENT ON THIS SHEET IT HAS BEEN ELECTRONICALLY SEALED AND DATED.

MISSOURI HIGHWAYS AND TRANSPORTATION COMMISSION
105 WEST CAPITOL
JEFFERSON CITY, MO 65102
1-888-ASK-MODOT (1-888-275-6636)

GBA
16305 SWINGLEY RIDGE RD
ST. 300
CHESTERFIELD, MO 63017
314.231.0100
GBAteam.com

GEORGE BUTLER
ASSOCIATES, INC.
PRO. ENGINEER 000133
ARCHITECT 000212
PRO. LAND SURVEYOR 000059

NICHOLE WITUSHYNSKY
PROFESIONAL
ENGINEER
PE-2018037127

Estimated Quantities

Item		Substr.	Superstr.	Total
Class 1 Excavation	cu. yard	100	--	100
Removal of Bridges (L0210)	lump sum	--	--	1
Bridge Approach Slab (Major)	sq. yard	--	--	163
Drilled Shafts (4 ft. 0 in. Dia.)	linear foot	60.0	--	60.0
Rock Socket (3 ft. 6 in. Dia.)	linear foot	26.0	--	26.0
Video Camera Inspection	each	4	--	4
Foundation Inspection Holes	linear foot	66.0	--	66.0
Sonic Logging Testing	each	4	--	4
Galvanized Structural Steel Piles (12 in.)	linear foot	396	--	396
Pre-Bore for Piling	linear foot	78	--	78
Pile Point Reinforcement	each	12	--	12
Class B Concrete (Substructure)	cu. yard	95.1	--	95.1
Slab on Concrete I-Girder	sq. yard	--	802	802
Type D Barrier	linear foot	--	407	407
Type 3 (39 in.) Prestressed Concrete I-Girder	linear foot	--	919	919
Reinforcing Steel (Bridges)	pound	35,810	--	35,810
Steel Intermediate Diaphragm for P/S Concrete Girders	each	--	12	12
Slab Drain	each	--	32	32
Vertical Drain at End Bents	each	--	--	2
Plain Neoprene Bearing Pad	each	--	10	10
Laminated Neoprene Bearing Pad	each	--	20	20

Cost of L4x4 ASTM A709 Grade 36 HP pile anchors and 3/4-inch diameter ASTM F3125 Grade A325 Type 1 bolts, complete in place, will be considered completely covered by the contract unit price for Glavanized Structural Steel Piles (12 in.).

All concrete above the construction joint in the end bents is included in the Estimated Quantities for Slab on Concrete I-Girder.

The reinforcement in the end bents is included in the Estimated Quantities for Slab on Concrete I-Girder.

All reinforcement in the intermediate bent concrete diaphragms except reinfocement embedded in the beam cap is included in the Estimated Quantities for Slab on Concrete I-Girder.

All concrete above the intermediate bent beam cap is included in the Estimated Quantities for Slab on Concrete I-Girder.

Estimated Quantities for Slab on Concrete I-Girder

Item		Total
Class B-2 Concrete	cu. yard	254.1
Reinforcing Steel (Epoxy Coated)	pound	51,100

The table of Estimated Quantities for Slab on Concrete I-Girder represents the quantities used by the State in preparing the cost estimate for concrete slabs. The area of the concrete slab will be measured to the nearest square yard longitudinally from end of slab to end of slab and transversely from out to out of bridge slab (or with the horizontal dimensions as shown on the plan of slab). Payment for prestressed panels, conventional forms, all concrete and epoxy coated reinforcing steel will be considered completely covered by the contract unit price for the slab. Variations may be encountered in the estimated quantities but the variations cannot be used for an adjustment in the contract unit price.

Method of forming the slab shall be as shown on the plans and in accordance with Sec 703. All hardware for forming the slab to be left in place as a permanent part of the structure shall be coated in accordance with ASTM A123 or ASTM B633 with a thickness class SC 4 and a finish type I, II or III.

The Estimated Quantities for Slab on Concrete I-Girder are based on skewed precast prestressed end panels.

Class B-2 Concrete quantity is based on minimum top flange thickness and minimum joint material thickness.

The prestressed panel quantities are not included in the table of Estimated Quantities for Slab on Concrete I-Girder.

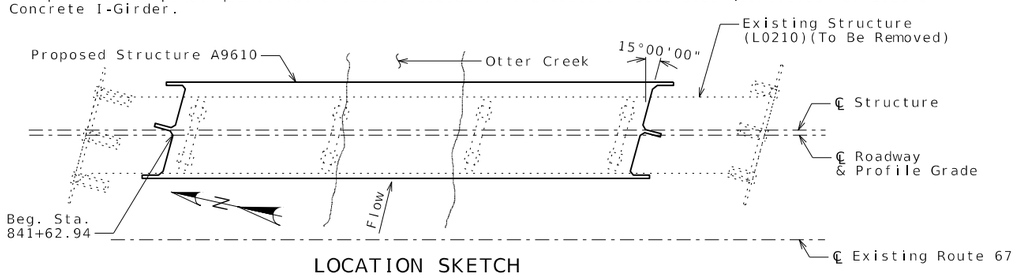

LOCATION SKETCH

Hydrologic Data

Drainage Area = 48.3 mi²
Design Flood Frequency = 50-yr
Design Flood Discharge = 11,100 cfs
Design Flood (D.F.) Elevation = 395.4 ft
Base Flood (100-year) - Headwater
Base Flood Elevation = 396.4 ft
Base Flood Discharge = 13,000 cfs
Estimated Backwater = 3.0 ft
Average Velocity thru Opening = 12.8 ft/s
Lake Wappapello 100-yr Backwater Elev. = 403.0 ft
Freeboard (50-year) - Headwater
Freeboard = 3.8 ft
Roadway Overtopping - Headwater
Overtopping Flood Discharge > 17,500 cfs
Overtopping Flood Frequency > 500-yr
500-yr Flood Elevation = 398.7 ft

General Notes:

Design Specifications:

2020 AASHTO LRFD Bridge Design Specifications (9th Ed.)
Seismic Design Category = B (Seismic Details plus Abutment Seismic Design)
Design earthquake response spectral acceleration coefficient at 1.0 second period, SD1 = 0.26
Acceleration Coefficient (effective peak ground acceleration coefficient), As = 0.413

Design Loading:

Vehicular = HL-93
Future Wearing Surface = 35 lb/sf
Earth = 120 lb/cf
Equivalent Fluid Pressure = 45 lb/cf
Superstructure: Simply Supported, Non-Composite for dead load.
Continuous Composite for live load.

Design Unit Stresses:

Class B Concrete (Substructure, except Drilled Shafts & Rock Sockets)	f'c = 3,000 psi
Class B-1 Concrete (Type D Barrier)	f'c = 4,000 psi
Class B-2 Concrete (Drilled Shafts & Rock Sockets)	f'c = 4,000 psi
Class B-2 Concrete (Superstructure, except P/S Girders and Type D Barrier)	f'c = 4,000 psi
Reinforcing Steel (ASTM A706 Grade 60)	fy = 60,000 psi
Structural Steel HP Piles (ASTM A709 Grade 50)	fy = 50,000 psi

For Precast Prestressed Panel Stresses, see Sheet No.17.
For Prestressed Girder Stresses, see Sheets No.13 & 14.

Neoprene Pads:

Neoprene Bearing Pads shall be 60 durometer and shall be in accordance with Sec 716.

Joint Filler:

All joint filler shall be in accordance with Sec 1057 for preformed sponge rubber expansion and partition joint filler, except as noted.

Reinforcing Steel:

Minimum clearance to reinforcing steel shall be 1 1/2", unless otherwise shown.

Traffic Handling:

Traffic to be maintained on other routes during construction. See roadway plans for traffic control.

MoDOT Construction personnel will indicate the type of joint filler option used under the precast panels for this structure:

☐ Constant Joint Filler
☐ Variable Joint Filler

Foundation Data

Type	Design Data		Bent Number 1	2	3	4
Load Bearing Pile	Pile Type and Size		HP 12x53	--	--	HP 12x53
	Number	ea	6	--	--	6
	Approximate Length Per Each	ft	35	--	--	31
	Pile Point Reinforcement	ea	6	--	--	6
	Min. Galvanized Penetration (Elev.)	ft	Full Length	--	--	Full Length
	Pile Driving Verification Method		DF	--	--	DF
	Resistance Factor		0.35	--	--	0.35
	Minimum Nominal Axial Compressive Resistance	kip	441	--	--	441
Rock Socket	Number	ea	--	2	2	--
	Layer 1: Foundation Material		--	Dolomite	Dolomite	--
	Layer 1: Elevation Range	ft	--	359.0-338.0	363.0-342.0	--
	Layer 1: Minimum Nominal Axial Compressive Resistance (Side Resistance)	ksf	--	17	17	--
	Minimum Nominal Axial Compressive Resistance (Tip Resistance)	ksf	--	165	174	--

DF = FHWA-modified Gates Dynamic Pile Formula

Load Bearing Pile:
Minimum Nominal Axial Compressive Resistance = $\frac{\text{Maximum Factored Loads}}{\text{Resistance Factor}}$

Rock Socket (Drilled Shafts):
Minimum Nominal Axial Compressive Resistance (Side Resistance + Tip Resistance) = $\frac{\text{Maximum Factored Loads}}{\text{Resistance Factors}}$

Manufactured pile point reinforcement shall be used on all piles in this structure.

Sonic logging testing shall be performed on all drilled shafts and rock sockets.

Prebore for piles at Bents No. 1 and 4 to elevations 388.50 and 387.50, respectively.

GENERAL NOTES AND QUANTITIES

Detailed Jan 2025
Checked Jan 2025

Note: This drawing is not to scale. Follow dimensions.

STATE OF MISSOURI
RYAN G. HAGERTY
NUMBER PE-2016034015
PROFESSIONAL ENGINEER

THIS SHEET HAS BEEN SIGNED, SEALED, AND DATED ELECTRONICALLY

DATE PREPARED 7/25/2025
ROUTE 67 | STATE MO
DISTRICT BR | SHEET NO. 2
COUNTY WAYNE
JOB NO. JSE0083
CONTRACT ID.
PROJECT NO.
BRIDGE NO. A9610

DATE	DESCRIPTION

IF A SEAL IS PRESENT ON THIS SHEET IT HAS BEEN ELECTRONICALLY SEALED AND DATED.

MISSOURI HIGHWAYS AND TRANSPORTATION COMMISSION
105 WEST CAPITOL
JEFFERSON CITY, MO 65102
1-888-ASK-MODOT (1-888-275-6636)

GBA
16305 SWINGLEY RIDGE RD
ST. 300
CHESTERFIELD, MO 63017
314.231.0100
GBAteam.com

GEORGE BUTLER ASSOCIATES, INC.
PRO. ENGINEER 000133
ARCHITECT 000212
PRO. LAND SURVEYOR 000059

NICHOLE WITUSHYNSKY
PROFESIONAL ENGINEER
PE-2018037127

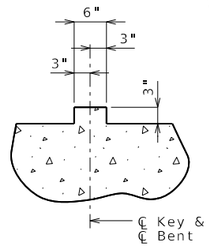

SECTION THRU KEY

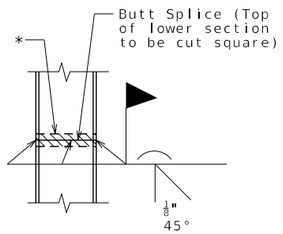

STEEL PILE SPLICE

(If required)

* Galvanizing material shall be omitted or removed one inch clear of weld locations in accordance with Sec 702.

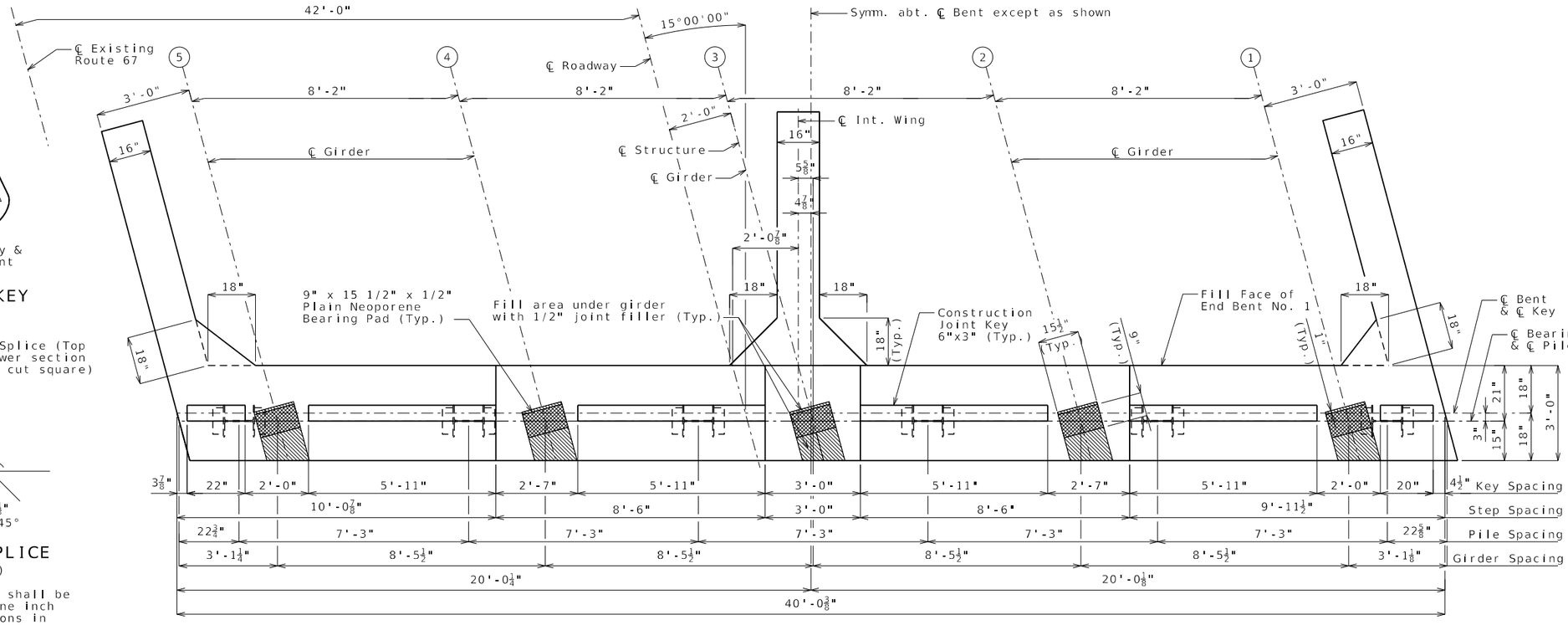

PLAN OF BEAM

Note: Steps and keys are dimensioned along ℄ Bent.

Piles and Girders are dimensioned along ℄ Bearing & ℄ Pile.

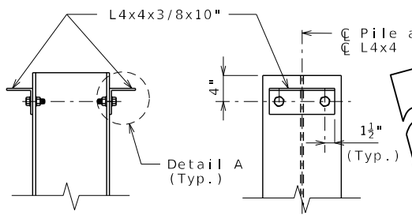

DETAILS OF HP PILE ANCHORS

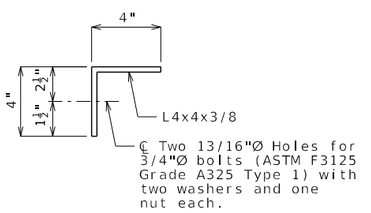

DETAIL A

Angles shall be coated with a minimum of two coats of non-aluminum epoxy mastic primer to provide a dry film thickness of 4 mils minimum, 8 mils maximum, or galvanized in accordance with Sec 1081. Bolts, washers and nuts shall be galvanized in accordance with AASHTO M 232 (ASTM A153), Class C.

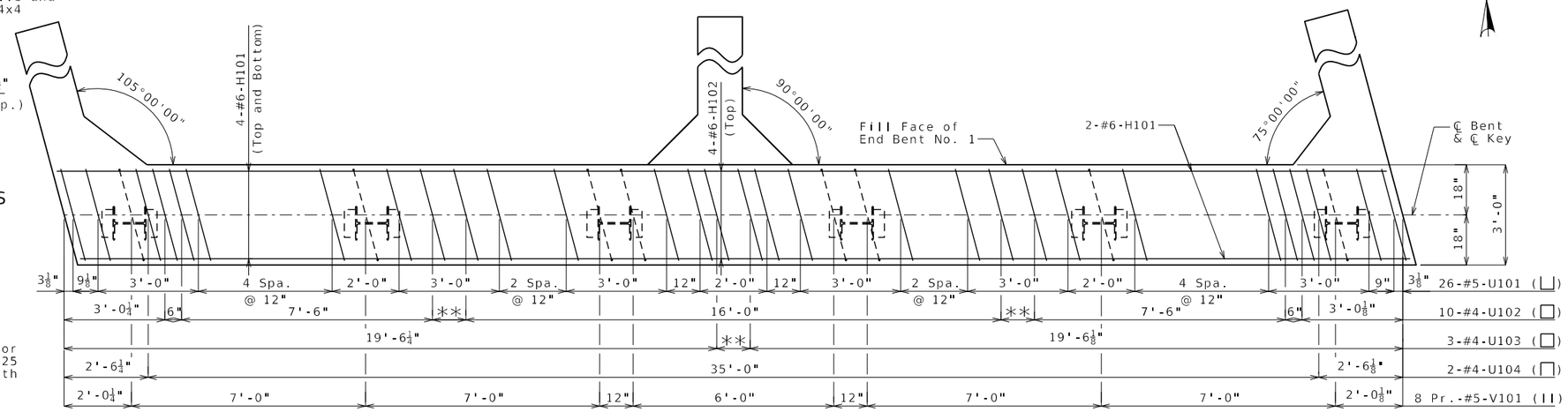

PLAN OF BEAM SHOWING REINFORCEMENT

Note: Steps and keys not shown for clarity.

** 2 Spa. @ 6"

Notes:

For Details of End Bent No. 1 not shown, see Sheets No. 4 & 5.

Reinforcing steel shall be shifted to clear piles. U-bars shall clear piles by at least 1 1/2 inches.

All concrete in the end bent above top of beam and below top of slab shall be Class B-2.

All U-bars and pairs of V-bars shall be placed parallel to centerline of roadway.

DETAILS OF END BENT NO. 1

Detailed Jan 2025
Checked Jan 2025

Note: This drawing is not to scale. Follow dimensions.

STATE OF MISSOURI
RYAN G. HAGERTY
NUMBER PE-2016034015
PROFESSIONAL ENGINEER

THIS SHEET HAS BEEN SIGNED, SEALED, AND DATED ELECTRONICALLY

DATE PREPARED	
7/25/2025	
ROUTE 67	STATE MO
DISTRICT BR	SHEET NO. 3
COUNTY WAYNE	
JOB NO. JSE0083	
CONTRACT ID.	
PROJECT NO.	
BRIDGE NO. A9610	

DESCRIPTION	DATE

MISSOURI HIGHWAYS AND TRANSPORTATION COMMISSION
105 WEST CAPITOL
JEFFERSON CITY, MO 65102
1-888-ASK-MODOT (1-888-275-6636)

GBA
16305 SWINGLEY RIDGE RD
ST. 300
CHESTERFIELD, MO 63017
314.231.0100
GBAteam.com

GEORGE BUTLER ASSOCIATES, INC.
PRO. ENGINEER 000133
ARCHITECT 000212
PRO. LAND SURVEYOR 000059

NICHOLE WITUSHYNSKY
PROFESIONAL ENGINEER
PE-2018037127

IF A SEAL IS PRESENT ON THIS SHEET IT HAS BEEN ELECTRONICALLY SEALED AND DATED.

Notes:

For details of End Bent No. 1 not shown, see Sheets No. 3 & 5.

For Elevation A-A, B-B, & C-C and Sections D-D, E-E, F-F, & G-G see Sheet No. 5.

For locations of strand tie bars and coil tie rods, see Sheets No. 13, 14 & 16.

The #6-F102 & #6-F104 bars shall be bent in the field to clear girders.

The U-bars shall be placed parallel to centerline of roadway.

All concrete in the end bent above top of beam and below top of slab shall be Class B-2.

Strands at end of girders shall be field bent or, if necessary, cut in field to maintain 1 1/2 inch minimum clearance to fill face of end bent.

For details of vertical drain at end bents, see Sheet No. 6.

For details of bridge approach slab, see Sheet No. 24.

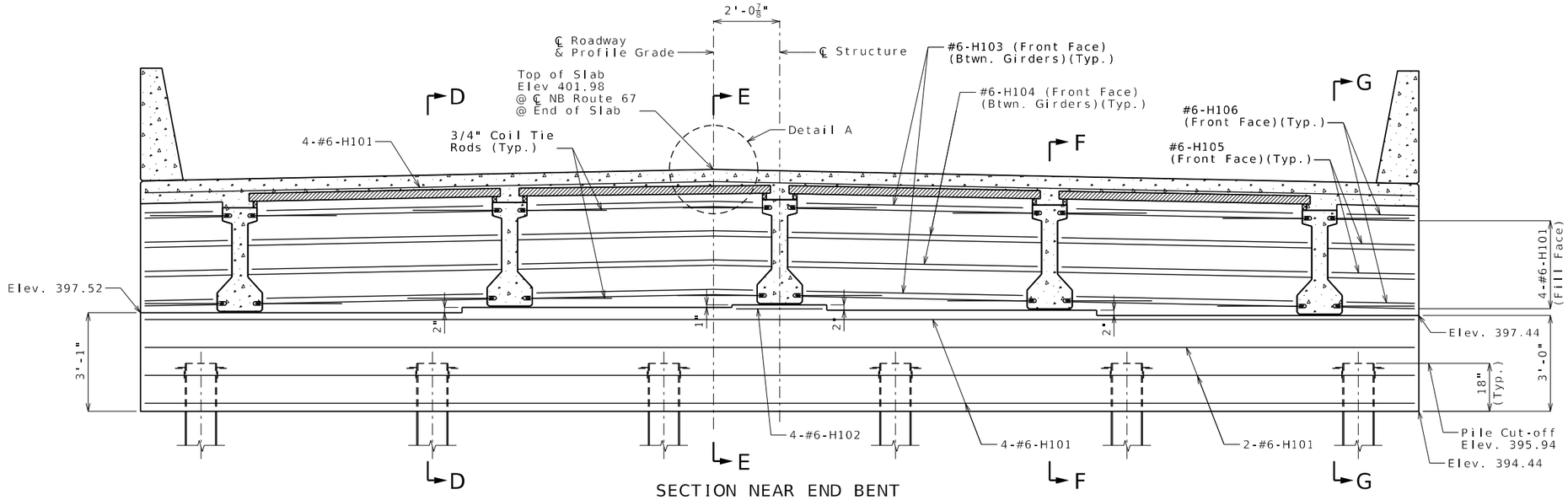

SECTION NEAR END BENT

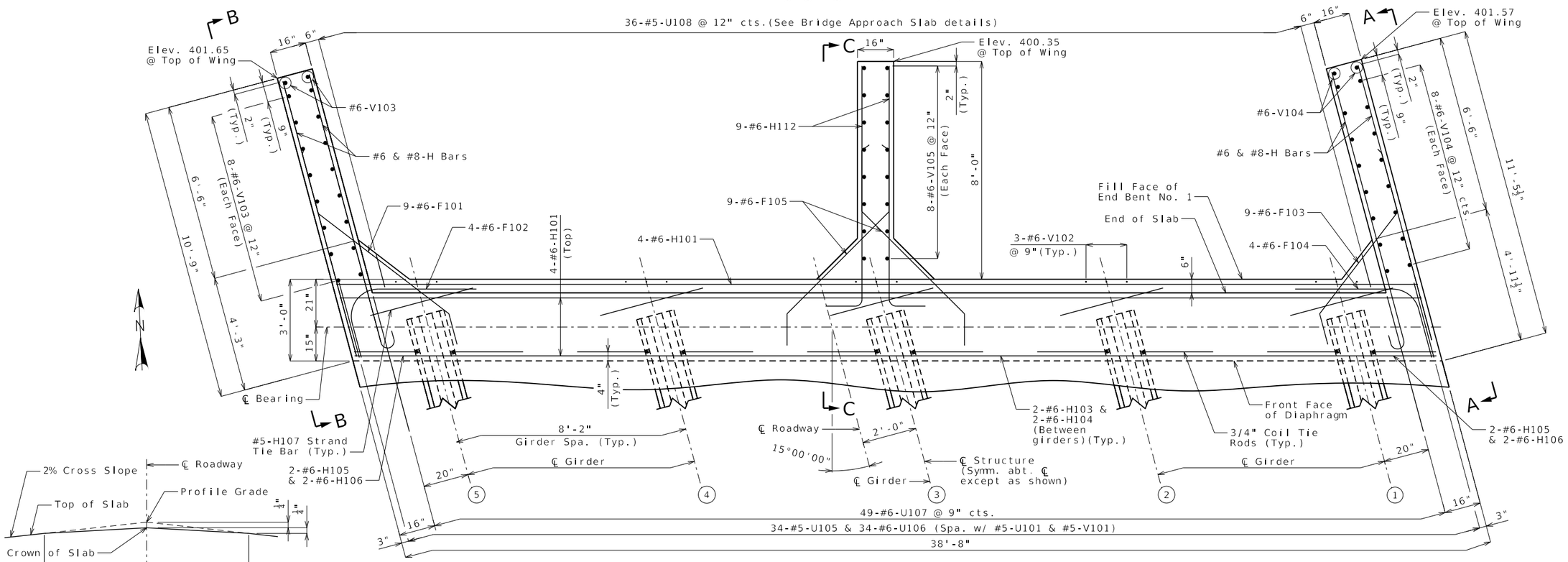

PART PLAN

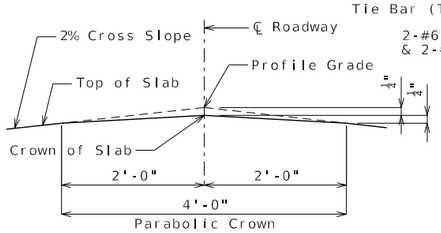

DETAIL A

DETAILS OF END BENT NO. 1

Detailed Jan 2025
Checked Jan 2025

Note: This drawing is not to scale. Follow dimensions.

Sheet No. 4 of 35

STATE OF MISSOURI
RYAN G. HAGERTY
NUMBER PE-2016034015
PROFESSIONAL ENGINEER

THIS SHEET HAS BEEN SIGNED, SEALED, AND DATED ELECTRONICALLY

DATE PREPARED	
7/25/2025	
ROUTE	STATE
67	MO
DISTRICT	SHEET NO.
BR	4
COUNTY	
WAYNE	
JOB NO.	
JSE0083	
CONTRACT ID.	
PROJECT NO.	
BRIDGE NO.	
A9610	

DESCRIPTION	DATE

MISSOURI HIGHWAYS AND TRANSPORTATION COMMISSION
105 WEST CAPITOL
JEFFERSON CITY, MO 65102
1-888-ASK-MODOT (1-888-275-6636)

GBA
16305 SWINGLEY RIDGE RD
ST. 300
CHESTERFIELD, MO 63017
314.231.0100
GBAteam.com

GEORGE BUTLER ASSOCIATES, INC.
PRO. ENGINEER 000133
ARCHITECT 000212
PRO. LAND SURVEYOR 000059

NICHOLE WITUSHYNSKY
PROFESIONAL ENGINEER
PE-2018037127

IF A SEAL IS PRESENT ON THIS SHEET IT HAS BEEN ELECTRONICALLY SEALED AND DATED.

c:\bms\gba-pw-01\mackenzy vedder\dms22880\B_A9610_04_JSE0083_EB1_Sht_No_2.dgn 11:58:10 AM 7/25/2025

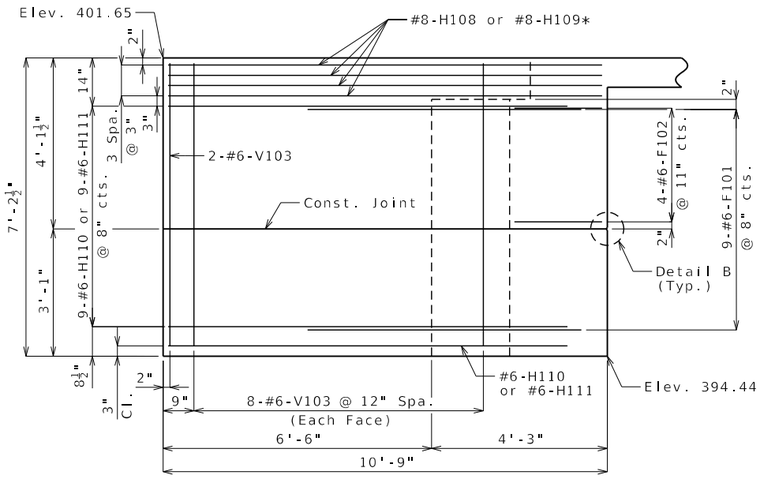

ELEVATION B-B

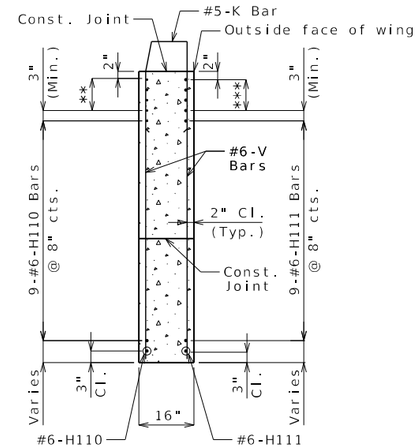

TYPICAL SECTION
THRU EXT. WINGS

* Placed with grade
** #8-H108 Bars @ 3" cts.
*** #8-H109 Bars @ 3" cts.

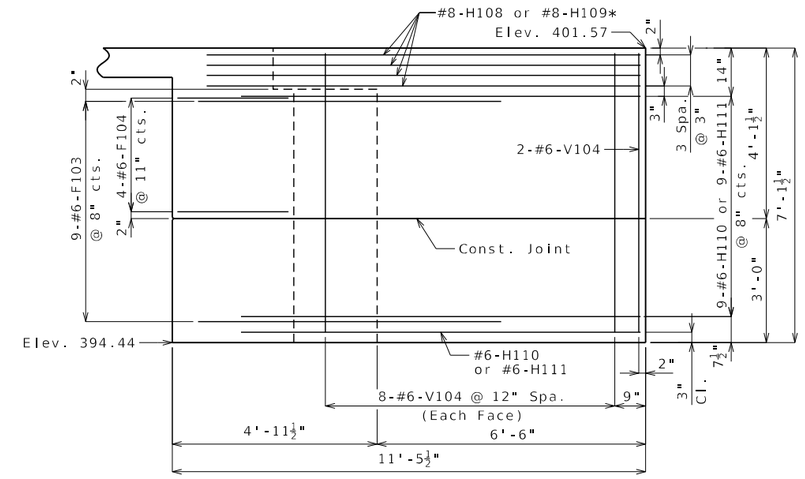

ELEVATION A-A

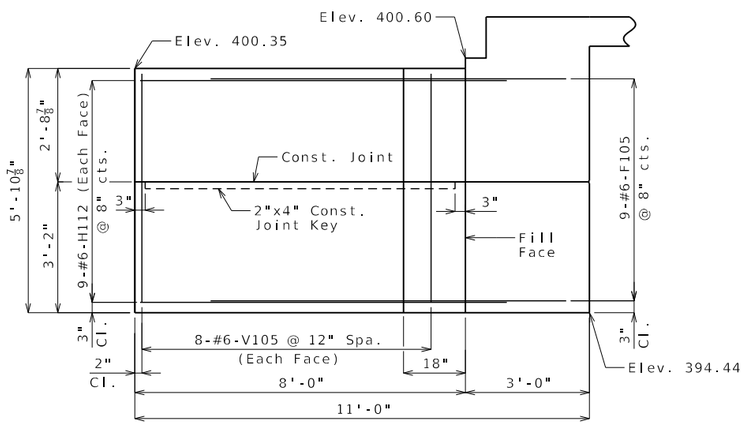

ELEVATION C-C

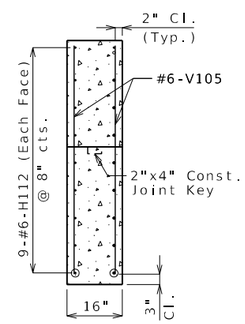

TYPICAL SECTION
THRU INT. WING

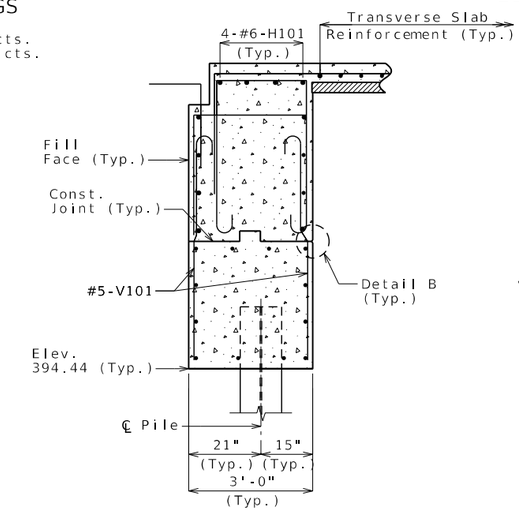

SECTION D-D

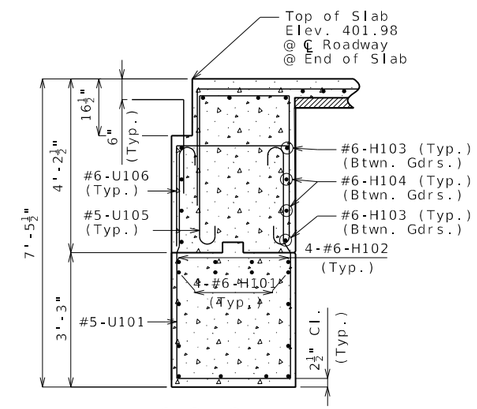

SECTION E-E

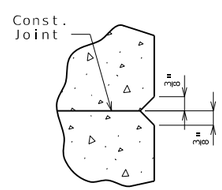

DETAIL B

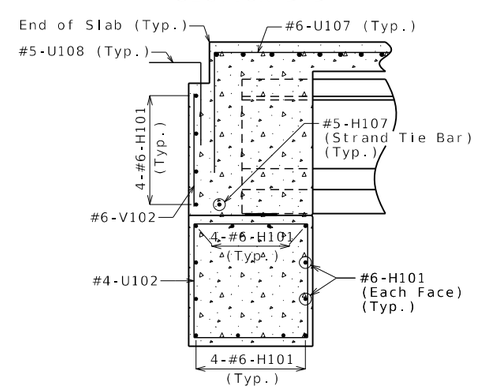

SECTION F-F

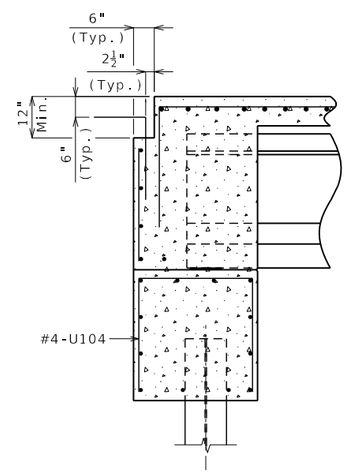

SECTION G-G

Notes:

For details of End Bent No. 1 not shown, see Sheets No. 3 & 4.

For location of Elevations A-A, B-B, & C-C, and Sections D-D, E-E, F-F, & G-G, see Sheet No. 4.

For reinforcement of Type D Barrier, see Sheets No. 22 & 23.

Substructure Quantity Table for Bent No. 1		
Item		Quantity
Class 1 Excavation	cu. yard	50
Galvanized Structural Steel Pile (12 in.)	linear foot	210
Pre-Bore for Piling	linear foot	36
Pile Point Reinforcement	Each	6
Class B Concrete (Substructure)	cu. yard	18.2

These quantities are included in the Estimated Quantities table on Sheet No. 2.

DETAILS OF END BENT NO. 1

Detailed Jan 2025
Checked Jan 2025

Note: This drawing is not to scale. Follow dimensions.

STATE OF MISSOURI
RYAN G. HAGERTY
NUMBER PE-2016034015
PROFESSIONAL ENGINEER

THIS SHEET HAS BEEN SIGNED, SEALED, AND DATED ELECTRONICALLY

DATE PREPARED	
7/25/2025	
ROUTE 67	STATE MO
DISTRICT BR	SHEET NO. 5
COUNTY WAYNE	
JOB NO. JSE0083	
CONTRACT ID.	
PROJECT NO.	
BRIDGE NO. A9610	

DESCRIPTION	DATE

MISSOURI HIGHWAYS AND TRANSPORTATION COMMISSION
105 WEST CAPITOL
JEFFERSON CITY, MO 65102
1-888-ASK-MODOT (1-888-275-6636)

GBA
16305 SWINGLEY RIDGE RD
ST. 300
CHESTERFIELD, MO 63017
314.231.0100
GBAteam.com

GEORGE BUTLER ASSOCIATES, INC.
PRO. ENGINEER 000133
ARCHITECT 000212
PRO. LAND SURVEYOR 000059

NICHOLE WITUSHYNSKY
PROFESIONAL ENGINEER
PE-2018037127

IF A SEAL IS PRESENT ON THIS SHEET IT HAS BEEN ELECTRONICALLY SEALED AND DATED.

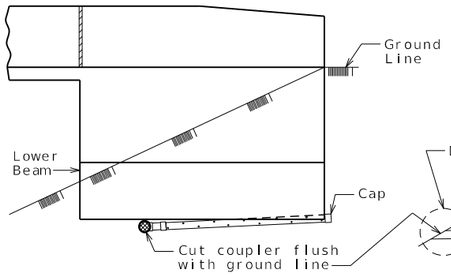

ELEVATION OF WING

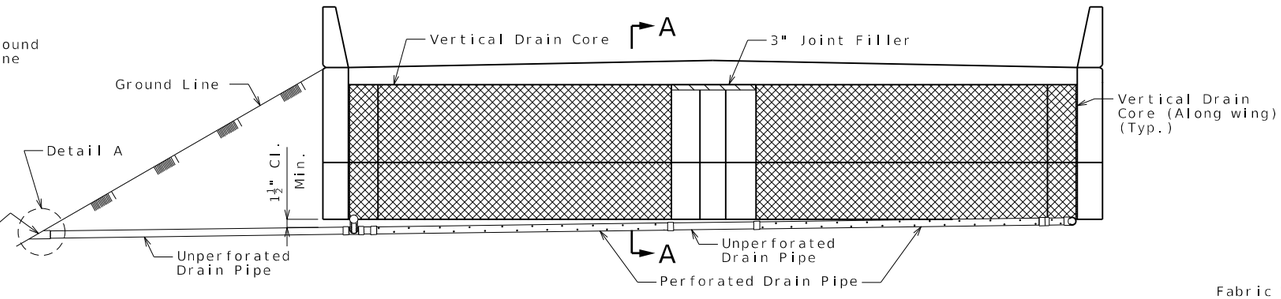

ELEVATION OF END BENT

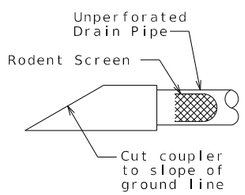

DETAIL A

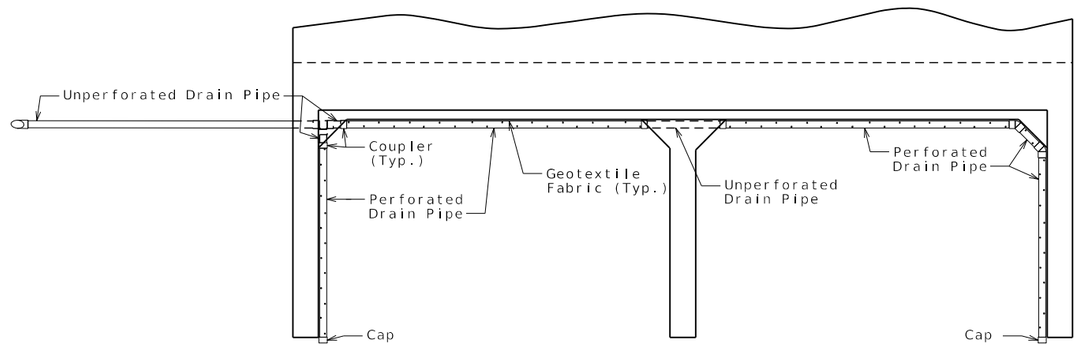

PLAN OF END BENT

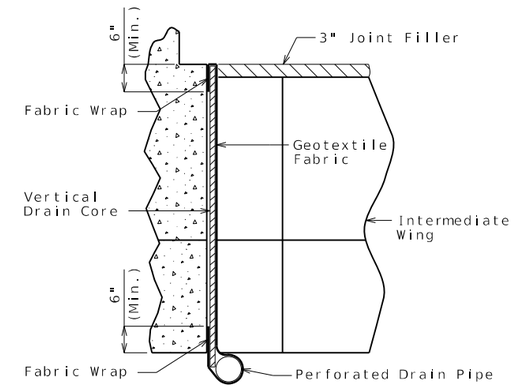

PART SECTION A-A
(Section thru wing similar)

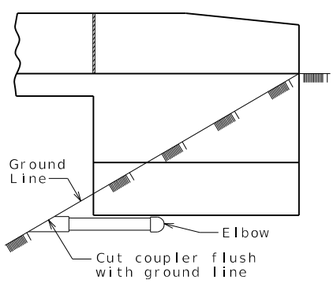

ELEVATION OF WING

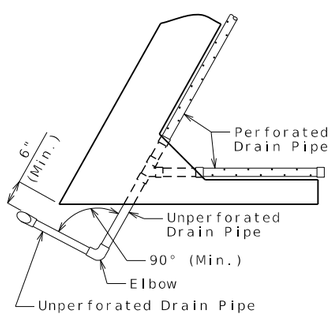

PART PLAN

OPTIONAL TURNED DRAIN
(Use only when straight drain is not practical.)

General Notes:

All drain pipe shall be sloped 1 to 2 percent.

Drain pipe may be either 6-inch diameter corrugated metallic-coated steel pipe underdrain, 4-inch diameter corrugated polyvinyl chloride (PVC) drain pipe, or 4-inch diameter corrugated polyethylene (PE) drain pipe.

Drain pipe shall be placed at fill face of end bent and inside face of wings. The pipe shall slope to lowest grade of ground line, also missing the lower beam of end bent by a minimum of 1 1/2 inches.

Perforated pipe shall be placed at fill face side and inside face of wings at the bottom of end bent and plain pipe shall be used where the vertical drain ends to the exit at ground line.

VERTICAL DRAIN AT END BENTS

(Squared end bent shown, skewed end bent similar)

Detailed Jan 2025
Checked Jan 2025

Note: This drawing is not to scale. Follow dimensions.

STATE OF MISSOURI
RYAN G. HAGERTY
NUMBER
PE-2016034015
PROFESSIONAL ENGINEER

THIS SHEET HAS BEEN SIGNED, SEALED, AND DATED ELECTRONICALLY

DATE PREPARED	
7/25/2025	
ROUTE 67	STATE MO
DISTRICT BR	SHEET NO. 6
COUNTY WAYNE	
JOB NO. JSE0083	
CONTRACT ID.	
PROJECT NO.	
BRIDGE NO. A9610	

DESCRIPTION	DATE

MISSOURI HIGHWAYS AND TRANSPORTATION COMMISSION
105 WEST CAPITOL
JEFFERSON CITY, MO 65102
1-888-ASK-MODOT (1-888-275-6636)

GBA
16305 SWINGLEY RIDGE RD
ST. 300
CHESTERFIELD, MO 63017
314.231.0100
GBAteam.com

GEORGE BUTLER ASSOCIATES, INC.
PRO. ENGINEER 000133
ARCHITECT 000212
PRO. LAND SURVEYOR 000059

NICHOLE WITUSHYNSKY
PROFESIONAL ENGINEER
PE-2018037127

IF A SEAL IS PRESENT ON THIS SHEET IT HAS BEEN ELECTRONICALLY SEALED AND DATED.

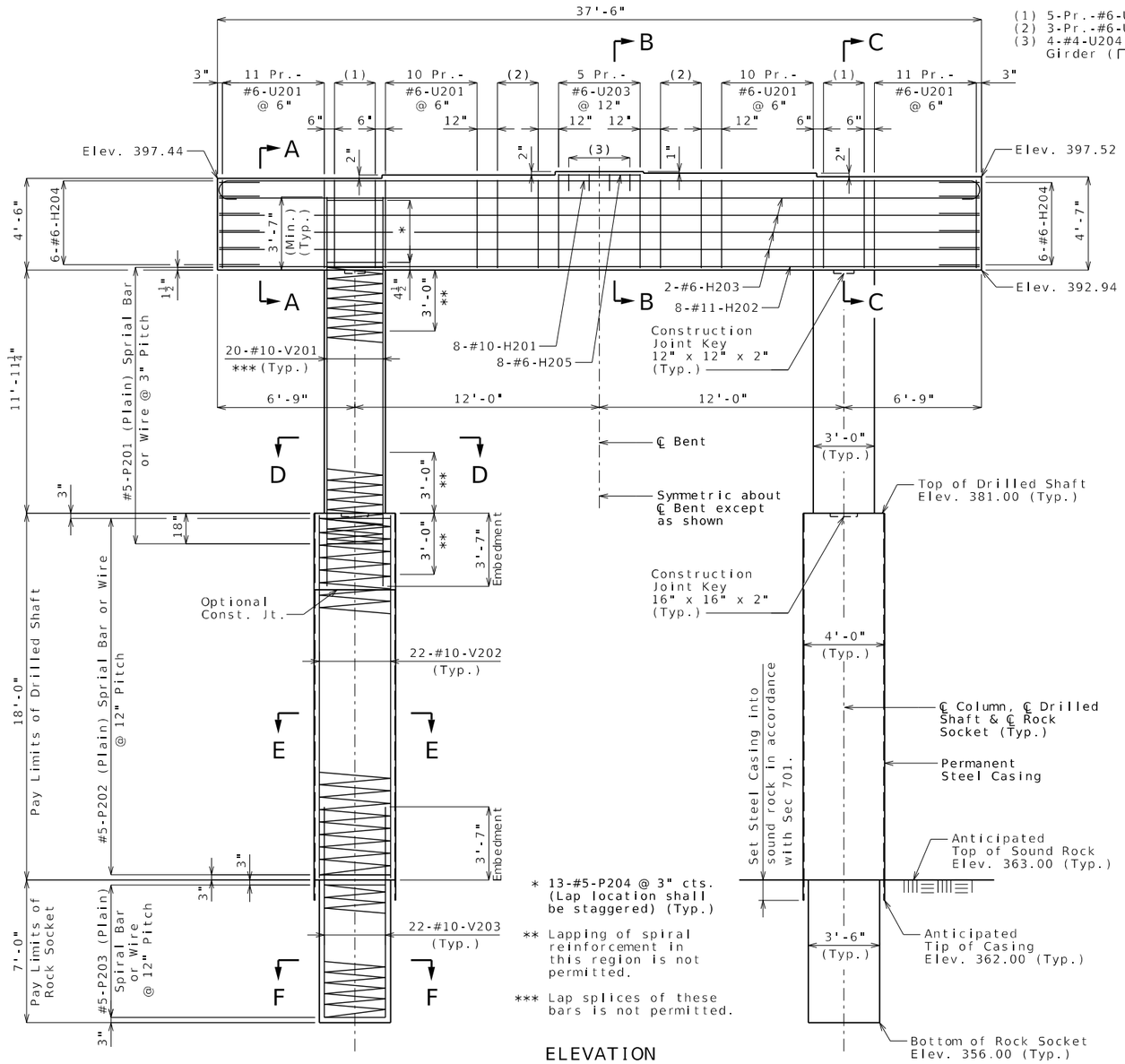

ELEVATION

Note: Dowels and keys not shown on the pier beam for clarity.

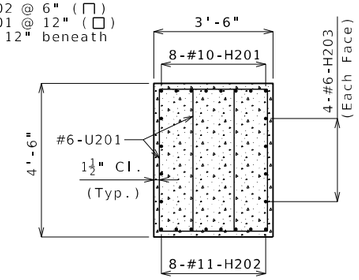

SECTION A-A

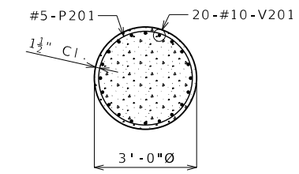

SECTION D-D

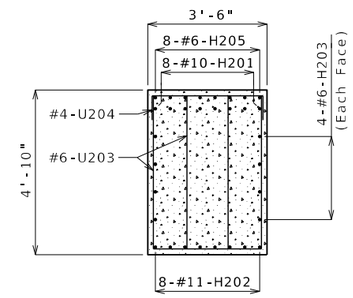

SECTION B-B

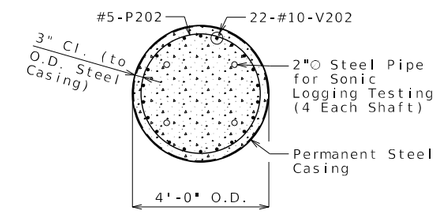

SECTION E-E

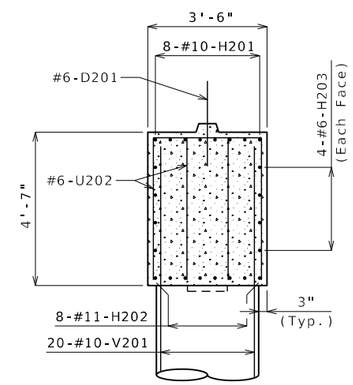

SECTION C-C

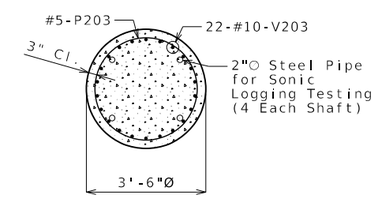

SECTION F-F

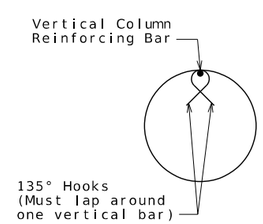

SEISMIC STIRRUP BAR

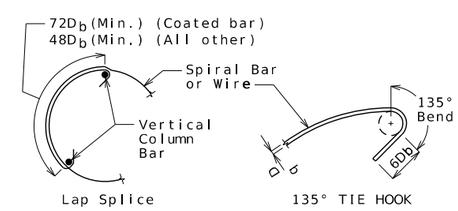

INTERMEDIATE SPLICE OF SPIRALS

Standard 135-degree tie hooks that engage vertical column reinforcing bars shall be provided at each end of splice.

Notes:

An additional 4 feet has been added to V202 & V203 bar lengths and an additional 4 foot in height for #4-P202 & #4-P203 bars have been added in the quantities, if required, for possible change in drilled shaft or rock socket length. The additional bar length shall be cut off if not required.

Sonic logging testing shall be performed on all drilled shafts and rock sockets.

Thickness of steel casing shall be in accordance with Sec. 701.

All reinforcement in drilled shafts and rock sockets is included in the Substructure Quantities.

For additional details and substructure quantity table, see Sheet No. 9.

Column or dowel reinforcement shall be placed prior to pouring drilled shaft concrete in the area of the lap. Dowel bar or column reinforcement shall not be inserted after drilled shaft pour is complete.

Remove sediment laitance and weak concrete to sound concrete prior to setting column/dowel reinforcement if optional construction joint is used.

DETAILS OF INTERMEDIATE BENT NO. 2

Detailed Jan 2025
Checked Jan 2025

Note: This drawing is not to scale. Follow dimensions.

STATE OF MISSOURI
RYAN G. HAGERTY
NUMBER PE-2016034015
PROFESSIONAL ENGINEER

THIS SHEET HAS BEEN SIGNED, SEALED, AND DATED ELECTRONICALLY

DATE PREPARED	
7/25/2025	
ROUTE	STATE
67	MO
DISTRICT	SHEET NO.
BR	7
COUNTY	
WAYNE	
JOB NO.	
JSE0083	
CONTRACT ID.	
PROJECT NO.	
BRIDGE NO.	
A9610	

DATE	DESCRIPTION

MISSOURI HIGHWAYS AND TRANSPORTATION COMMISSION
105 WEST CAPITOL
JEFFERSON CITY, MO 65102
1-888-ASK-MODOT (1-888-275-6636)

GBA
16305 SWINGLEY RIDGE RD
ST. 300
CHESTERFIELD, MO 63017
314.231.0100
GBAteam.com

GEORGE BUTLER ASSOCIATES, INC.
PRO. ENGINEER 000133
ARCHITECT 000212
PRO. LAND SURVEYOR 000059

NICHOLE WITUSHYNSKY
PROFESIONAL ENGINEER
PE-2018037127

IF A SEAL IS PRESENT ON THIS SHEET IT HAS BEEN ELECTRONICALLY SEALED AND DATED.

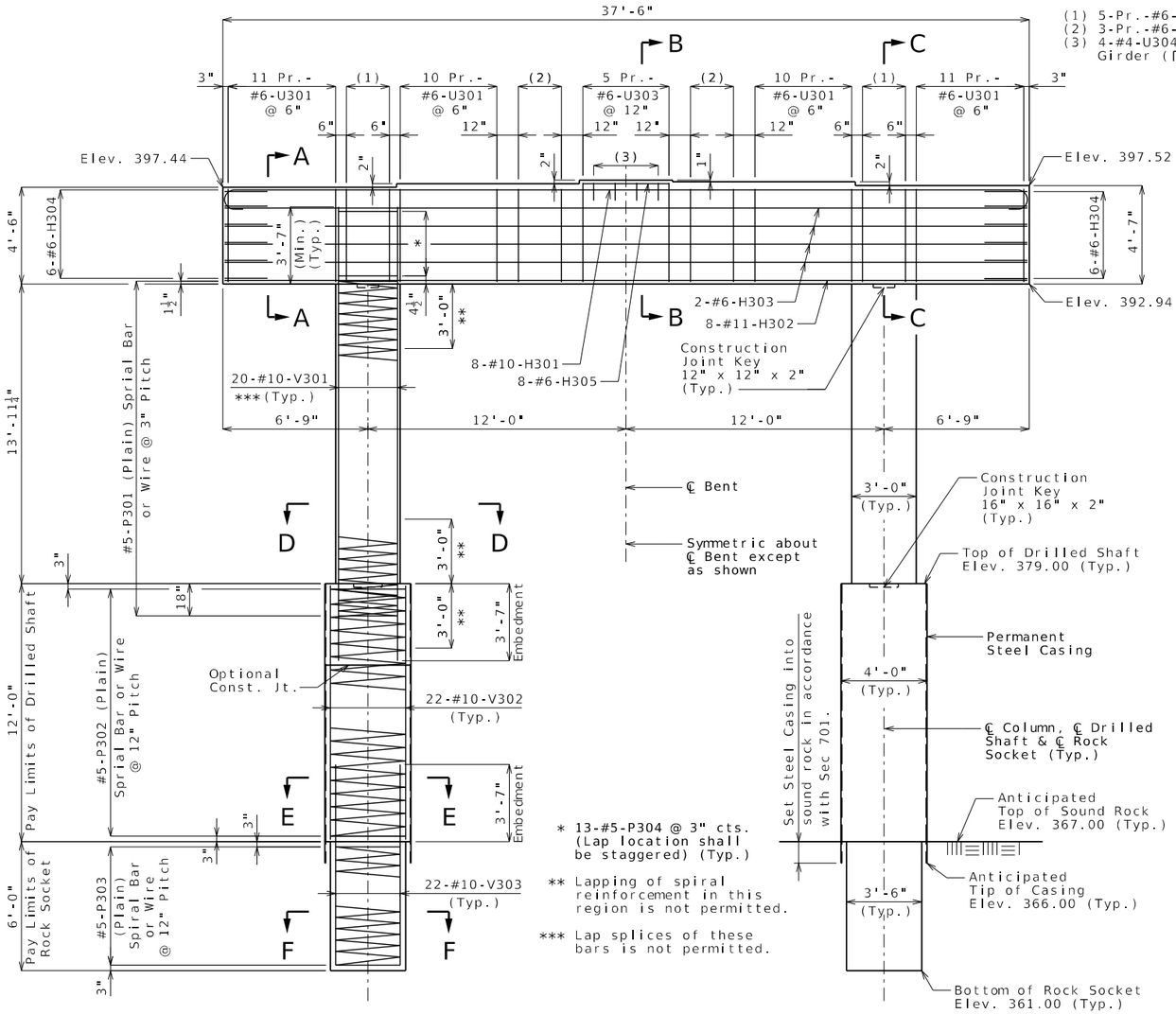

* 13-#5-P304 @ 3" cts. (Lap location shall be staggered) (Typ.)

** Lapping of spiral reinforcement in this region is not permitted.

*** Lap splices of these bars is not permitted.

ELEVATION

Note: Dowels and keys not shown on the pier beam for clarity.

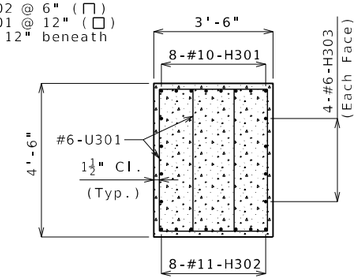

SECTION A-A

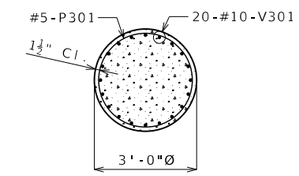

SECTION D-D

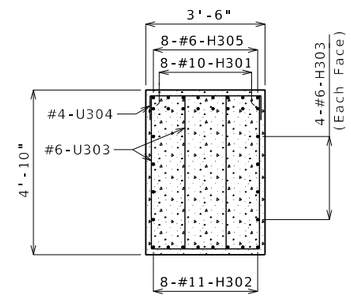

SECTION B-B

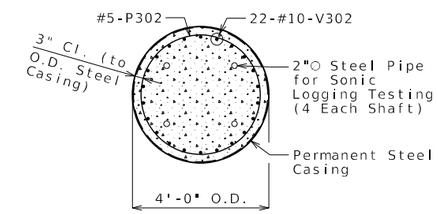

SECTION E-E

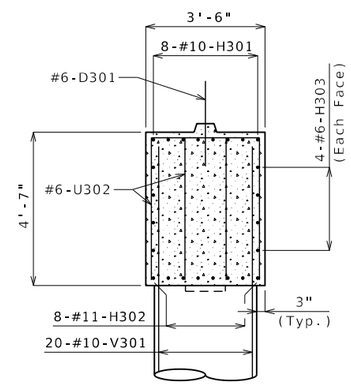

SECTION C-C

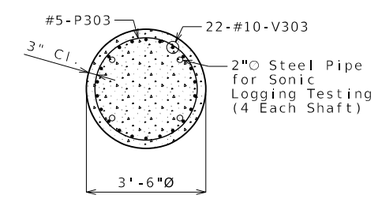

SECTION F-F

Notes:

An additional 4 feet has been added to V302 & V303 bar lengths and an additional 4 foot in height for #4-P302 & #4-P303 bars have been added in the quantities, if required, for possible change in drilled shaft or rock socket length. The additional bar length shall be cut off if not required.

Sonic logging testing shall be performed on all drilled shafts and rock sockets.

Thickness of permanent steel casing shall be in accordance with Sec. 701.

All reinforcement in drilled shafts and rock sockets is included in the Substructure Quantities.

For additional details and substructure quantity table, see Sheet No. 9.

Column or dowel reinforcement shall be placed prior to pouring drilled shaft concrete in the area of the lap. Dowel bar or column reinforcement shall not be inserted after drilled shaft pour is complete.

Remove sediment laitance and weak concrete to sound concrete prior to setting column/dowel reinforcement if optional construction joint is used.

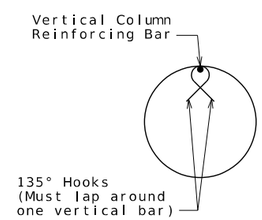

SEISMIC STIRRUP BAR

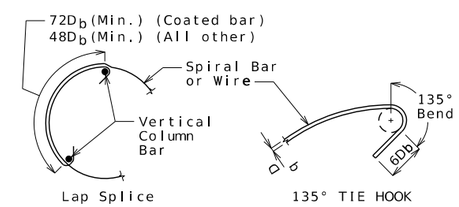

INTERMEDIATE SPLICE OF SPIRALS

Standard 135-degree tie hooks that engage vertical column reinforcing bars shall be provided at each end of splice.

DETAILS OF INTERMEDIATE BENT NO. 3

Detailed Jan 2025
Checked Jan 2025

Note: This drawing is not to scale. Follow dimensions.

STATE OF MISSOURI
RYAN G. HAGERTY
NUMBER PE-2016034015
PROFESSIONAL ENGINEER

THIS SHEET HAS BEEN SIGNED, SEALED, AND DATED ELECTRONICALLY

DATE PREPARED	
7/25/2025	
ROUTE	STATE
67	MO
DISTRICT	SHEET NO.
BR	8
COUNTY	
WAYNE	
JOB NO.	
JSE0083	
CONTRACT ID.	
PROJECT NO.	
BRIDGE NO.	
A9610	

DATE	DESCRIPTION

MISSOURI HIGHWAYS AND TRANSPORTATION COMMISSION
105 WEST CAPITOL
JEFFERSON CITY, MO 65102
1-888-ASK-MODOT (1-888-275-6636)

GBA
16305 SWINGLEY RIDGE RD
ST. 300
CHESTERFIELD, MO 63017
314.231.0100
GBAteam.com

GEORGE BUTLER ASSOCIATES, INC.
PRO. ENGINEER 000133
ARCHITECT 000212
PRO. LAND SURVEYOR 000059

NICHOLE WITUSHYNSKY
PROFESSIONAL ENGINEER
PE-2018037127

IF A SEAL IS PRESENT ON THIS SHEET IT HAS BEEN ELECTRONICALLY SEALED AND DATED.

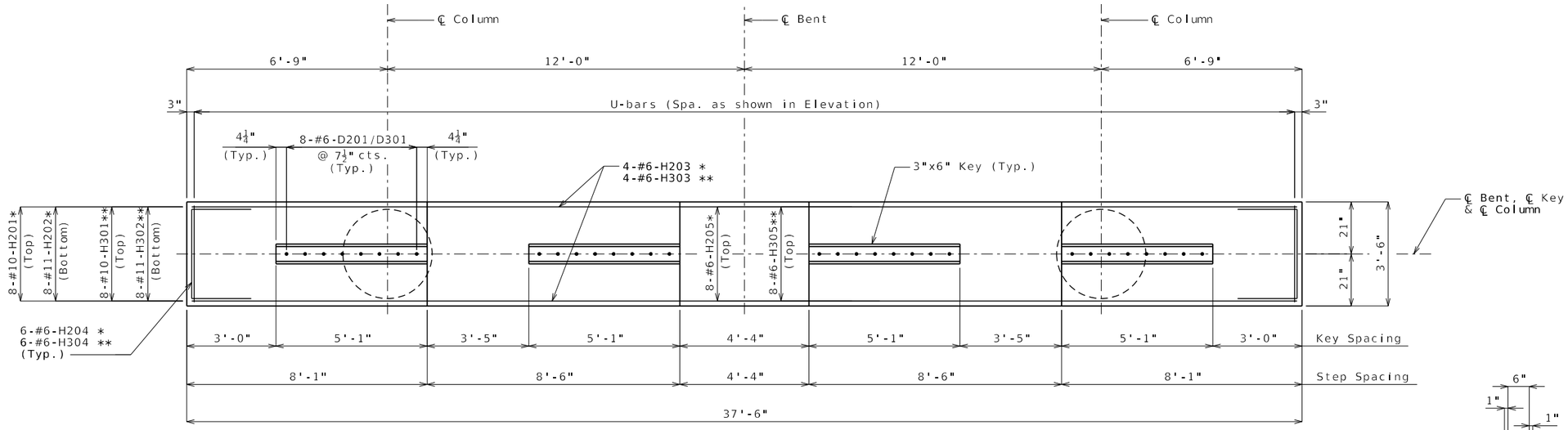

PLAN OF BEAM SHOWING REINFORCING

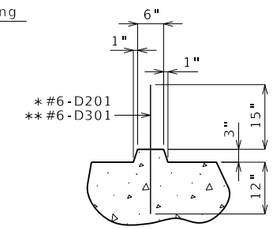

SECTION THRU KEY

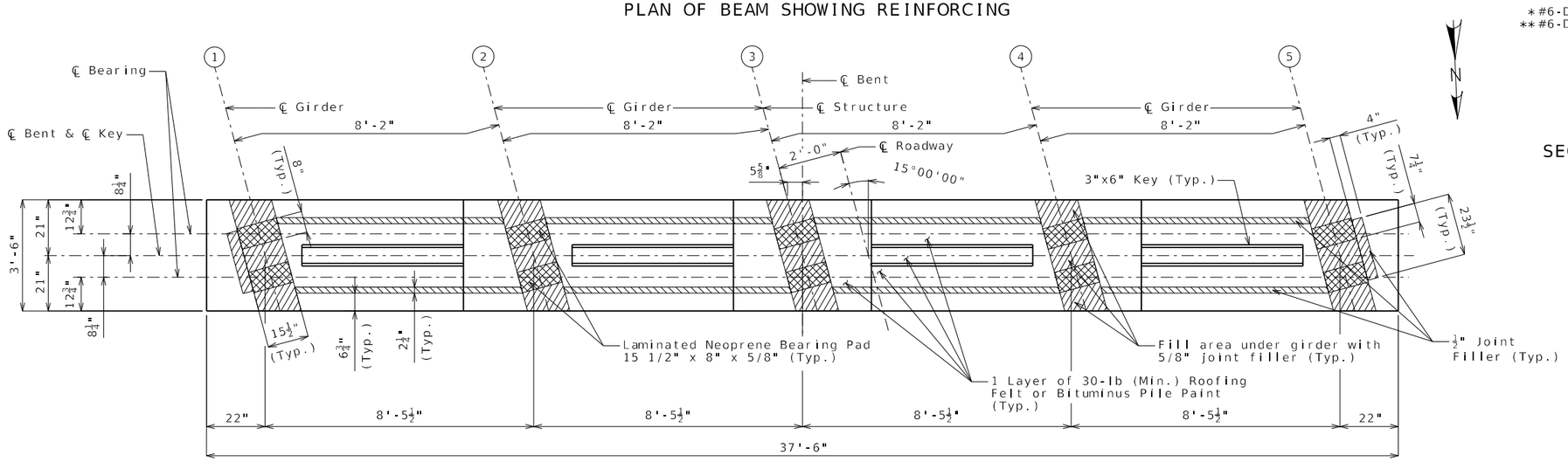

PLAN OF BEAM

Dowel bars not shown for clarity.

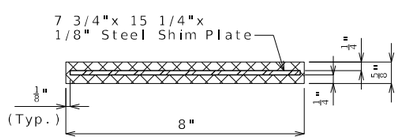

TYPICAL SECTION THRU LAMINATED NEOPRENE BEARING PAD

Notes:
For details of Int. Bent No. 2 not shown, see Sheet No. 7.
For details of Int. Bent No. 3 not shown, see Sheet No. 8.

* Intermediate Bent No. 2
** Intermediate Bent No. 3

Substructure Quantity Table for Bents No. 2 & 3

Item		Quantity	
		Bent No. 2	Bent No. 3
Drilled Shafts (4ft. 0in. Dia.)	linear foot	36.0	24.0
Rock Sockets (3ft. 6in. Dia.)	linear foot	12.0	14.0
Video Camera Inspection	each	2	2
Foundation Inspection Holes	linear foot	34.0	32.0
Sonic Logging Testing	each	2	2
Class B Concrete (Substructure)	cu. yard	28.9	29.9
Reinforcing Steel (Bridges)	pound	18,400	17,410

These quantities are included in the Estimated Quantities shown on Sheet No. 2.

DETAILS OF INTERMEDIATE BENTS NO. 2 & 3

Detailed Jan 2025
Checked Jan 2025

Note: This drawing is not to scale. Follow dimensions.

STATE OF MISSOURI
RYAN G. HAGERTY
NUMBER PE-2016034015
PROFESSIONAL ENGINEER

THIS SHEET HAS BEEN SIGNED, SEALED, AND DATED ELECTRONICALLY

DATE PREPARED	
7/25/2025	
ROUTE 67	STATE MO
DISTRICT BR	SHEET NO. 9
COUNTY WAYNE	
JOB NO. JSE0083	
CONTRACT ID.	
PROJECT NO.	
BRIDGE NO. A9610	

DESCRIPTION	DATE

MISSOURI HIGHWAYS AND TRANSPORTATION COMMISSION
105 WEST CAPITOL
JEFFERSON CITY, MO 65102
1-888-ASK-MODOT (1-888-275-6636)

GBA
16305 SWINGLEY RIDGE RD
ST. 300
CHESTERFIELD, MO 63017
314.231.0100
GBAteam.com

GEORGE BUTLER ASSOCIATES, INC.
PRO. ENGINEER 000133
ARCHITECT 000212
PRO. LAND SURVEYOR 000059

NICHOLE WITUSHYNSKY
PROFESIONAL ENGINEER
PE-2018037127

IF A SEAL IS PRESENT ON THIS SHEET IT HAS BEEN ELECTRONICALLY SEALED AND DATED.

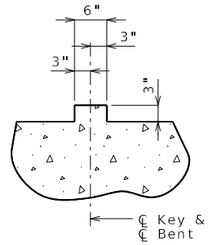

SECTION THRU KEY

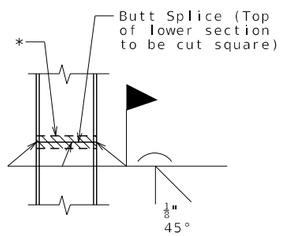

STEEL PILE SPLICE

(If required)

* Galvanizing material shall be omitted or removed one inch clear of weld locations in accordance with Sec 702.

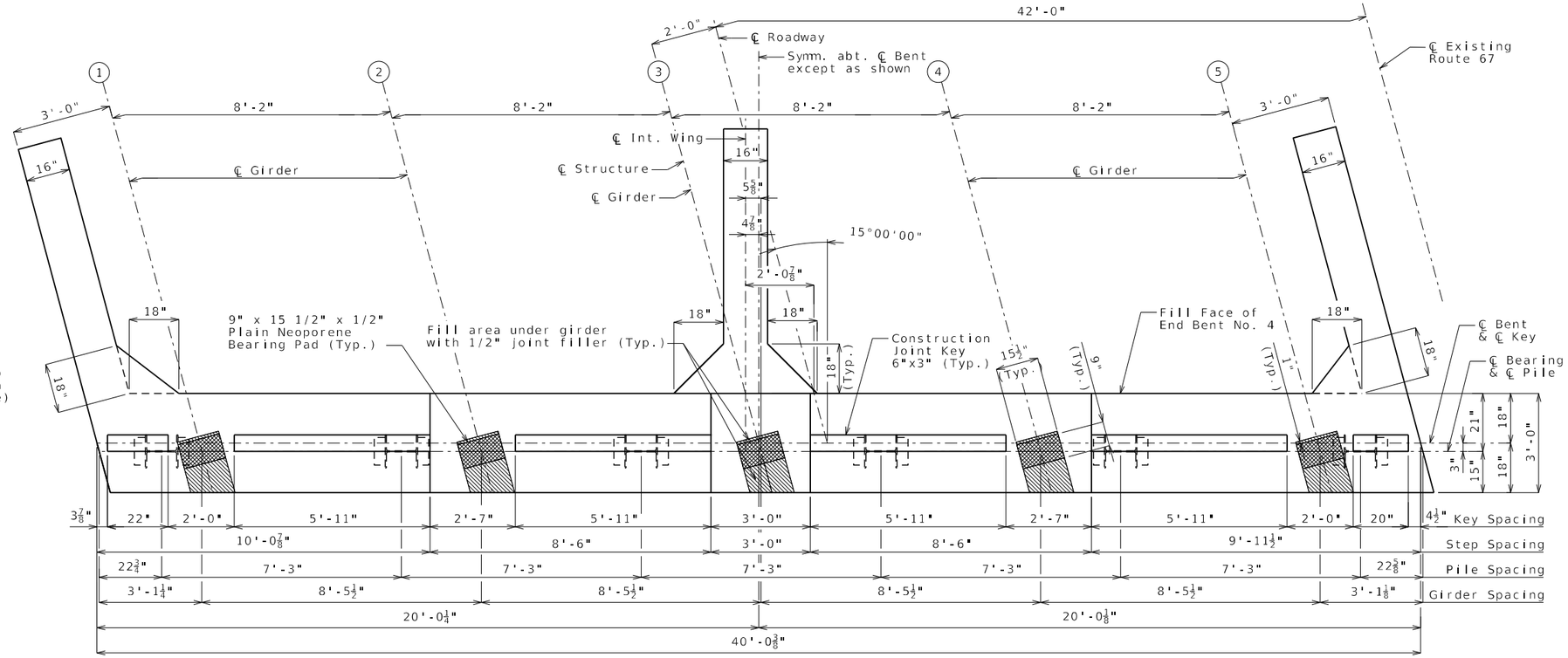

PLAN OF BEAM

Note: Steps and keys are dimensioned along ℄ Bent.

Piles and Girders are dimensioned along ℄ Bearing & ℄ Pile.

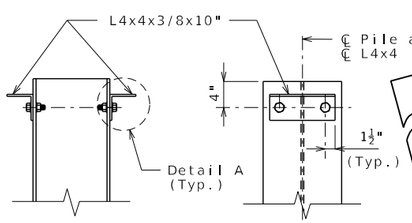

DETAILS OF HP PILE ANCHORS

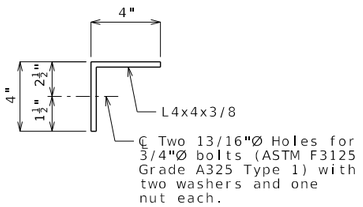

DETAIL A

Angles shall be coated with a minimum of two coats of non-aluminum epoxy mastic primer to provide a dry film thickness of 4 mils minimum, 8 mils maximum, or galvanized in accordance with Sec 1081. Bolts, washers and nuts shall be galvanized in accordance with AASHTO M 232 (ASTM A153), Class C.

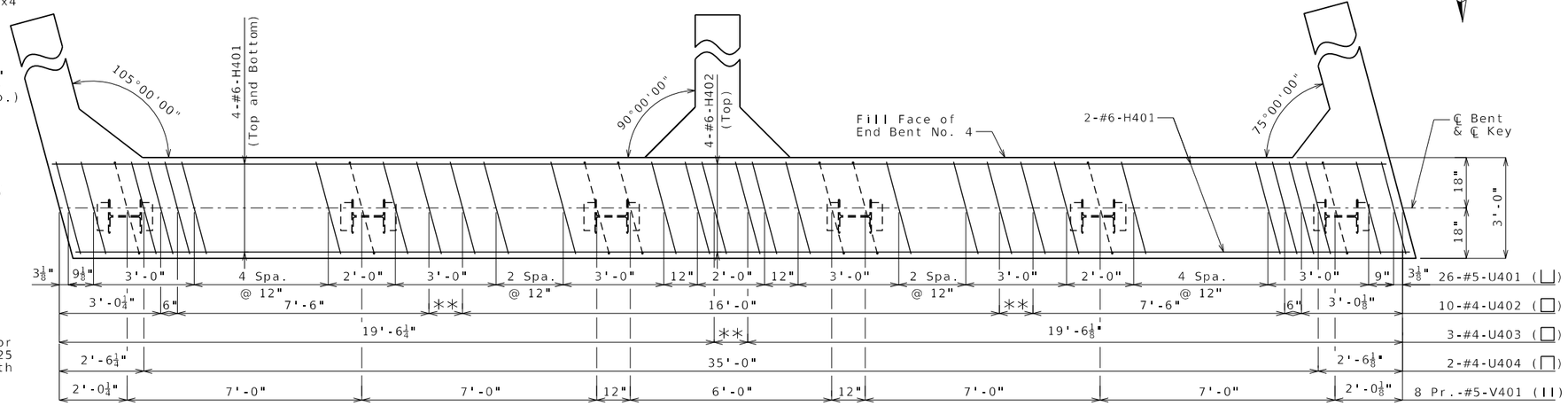

PLAN OF BEAM SHOWING REINFORCEMENT

Note: Steps and keys not shown for clarity.

** 2 Spa. @ 6"

Notes:

For Details of End Bent No. 4 not shown, see Sheets No.11 & 12.

Reinforcing steel shall be shifted to clear piles. U-bars shall clear piles by at least 1 1/2 inches.

All concrete in the end bent above top of beam and below top of slab shall be Class B-2.

All U-bars and pairs of V-bars shall be placed parallel to centerline of roadway.

DETAILS OF END BENT NO. 4

Detailed Jan 2025
Checked Jan 2025

Note: This drawing is not to scale. Follow dimensions.

Sheet No. 10 of 35

STATE OF MISSOURI
RYAN G. HAGERTY
NUMBER PE-2016034015
PROFESSIONAL ENGINEER

THIS SHEET HAS BEEN SIGNED, SEALED, AND DATED ELECTRONICALLY

DATE PREPARED	
7/25/2025	
ROUTE 67	STATE MO
DISTRICT BR	SHEET NO. 10
COUNTY WAYNE	
JOB NO. JSE0083	
CONTRACT ID.	
PROJECT NO.	
BRIDGE NO. A9610	

DATE	DESCRIPTION

MISSOURI HIGHWAYS AND TRANSPORTATION COMMISSION
105 WEST CAPITOL
JEFFERSON CITY, MO 65102
1-888-ASK-MODOT (1-888-275-6636)

GBA
16305 SWINGLEY RIDGE RD
ST. 300
CHESTERFIELD, MO 63017
314.231.0100
GBAteam.com

GEORGE BUTLER ASSOCIATES, INC.
PRO. ENGINEER 000133
ARCHITECT 000212
PRO. LAND SURVEYOR 000059

NICHOLE WITUSHYNSKY
PROFESIONAL ENGINEER
PE-2018037127

IF A SEAL IS PRESENT ON THIS SHEET IT HAS BEEN ELECTRONICALLY SEALED AND DATED.

c:\bms\gba-pw-01\mackenzy vedder\dms22880\B_A9610_10_JSE0083_EB4_Sht_No_1.dgn 12:00:10 PM 7/25/2025

Notes:

For details of End Bent No. 4 not shown, see Sheets No. 10 & 12.

For Elevation A-A, B-B, & C-C and Sections D-D, E-E, F-F, & G-G see Sheet No. 12.

For locations of strand tie bars and coil tie rods, see Sheets No. 13, 14 & 16

The #6-F402 & #6-F404 bars shall be bent in the field to clear girders.

The U-bars shall be placed parallel to centerline of roadway.

All concrete in the end bent above top of beam and below top of slab shall be Class B-2.

Strands at end of girders shall be field bent or, if necessary, cut in field to maintain 1 1/2 inch minimum clearance to fill face of end bent.

For details of vertical drain at end bents, see Sheet No. 6.

For details of bridge approach slab, see Sheet No. 24.

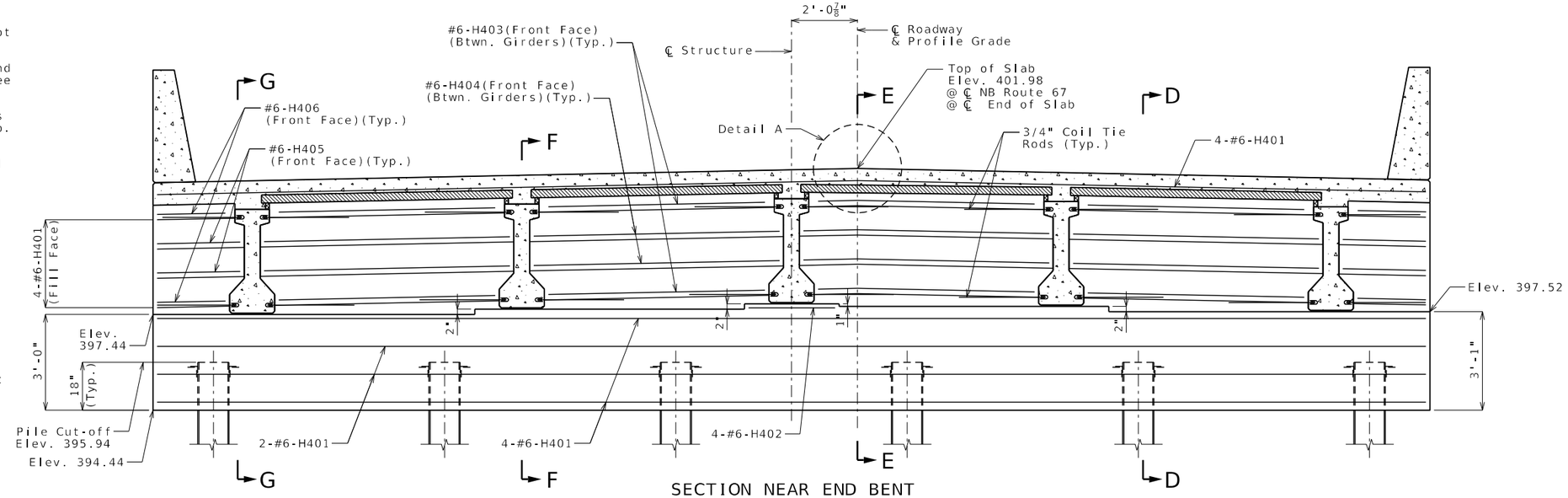

SECTION NEAR END BENT

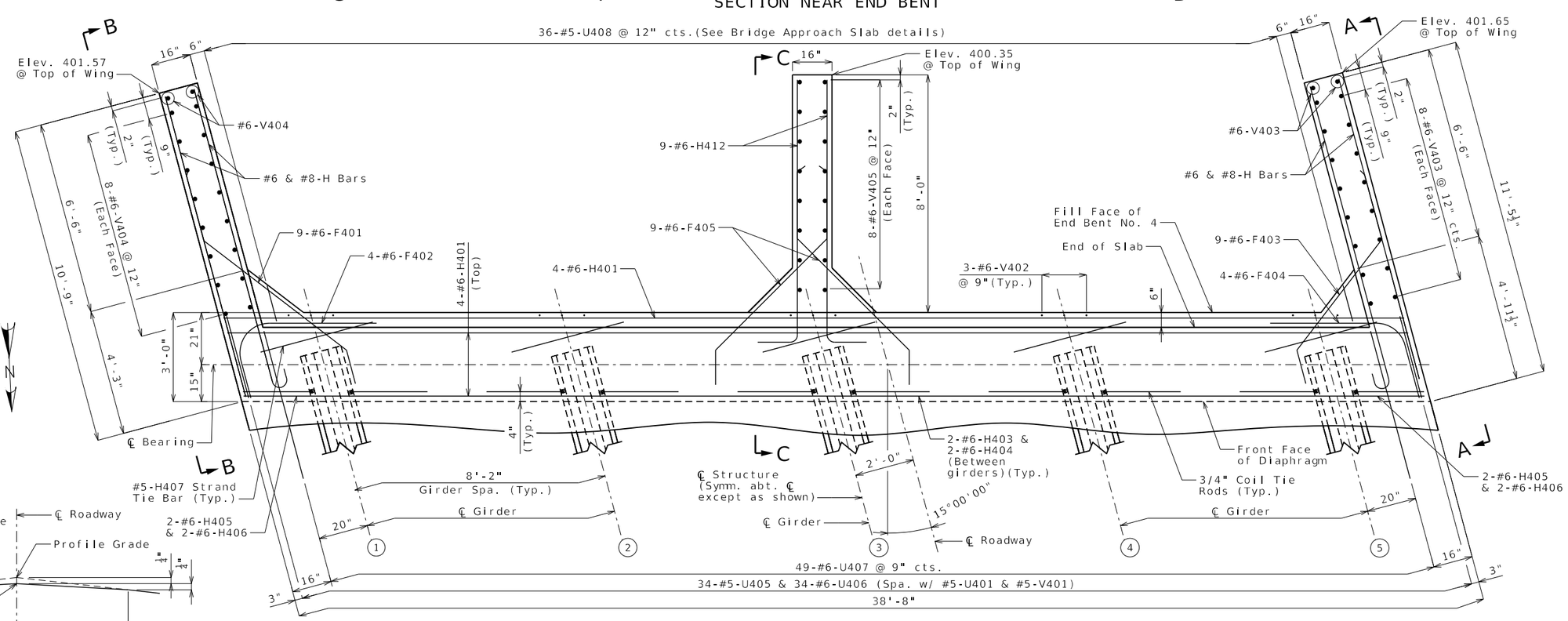

PART PLAN

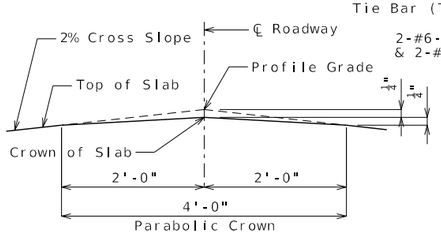

DETAIL A

DETAILS OF END BENT NO. 4

Detailed Jan 2025
Checked Jan 2025

Note: This drawing is not to scale. Follow dimensions.

Sheet No. 11 of 35

STATE OF MISSOURI
RYAN G. HAGERTY
NUMBER PE-2016034015
PROFESSIONAL ENGINEER

THIS SHEET HAS BEEN SIGNED, SEALED, AND DATED ELECTRONICALLY

DATE PREPARED	
7/25/2025	
ROUTE	STATE
67	MO
DISTRICT	SHEET NO.
BR	11
COUNTY	
WAYNE	
JOB NO.	
JSE0083	
CONTRACT ID.	
PROJECT NO.	
BRIDGE NO.	
A9610	

DESCRIPTION	DATE

MISSOURI HIGHWAYS AND TRANSPORTATION COMMISSION
105 WEST CAPITOL
JEFFERSON CITY, MO 65102
1-888-ASK-MODOT (1-888-275-6636)

GBA
16305 SWINGLEY RIDGE RD
ST. 300
CHESTERFIELD, MO 63017
314.231.0100
GBAteam.com

GEORGE BUTLER ASSOCIATES, INC.
PRO. ENGINEER 000133
ARCHITECT 000212
PRO. LAND SURVEYOR 000059

NICHOLE WITUSHYNSKY
PROFESIONAL ENGINEER
PE-2018037127

IF A SEAL IS PRESENT ON THIS SHEET IT HAS BEEN ELECTRONICALLY SEALED AND DATED.

c:\bms\gba-pw-01\mackenzy vedder\dms22880\B_A9610_11_JSE0083_EB4_Sht_No_2.dgn 12:00:31 PM 7/25/2025

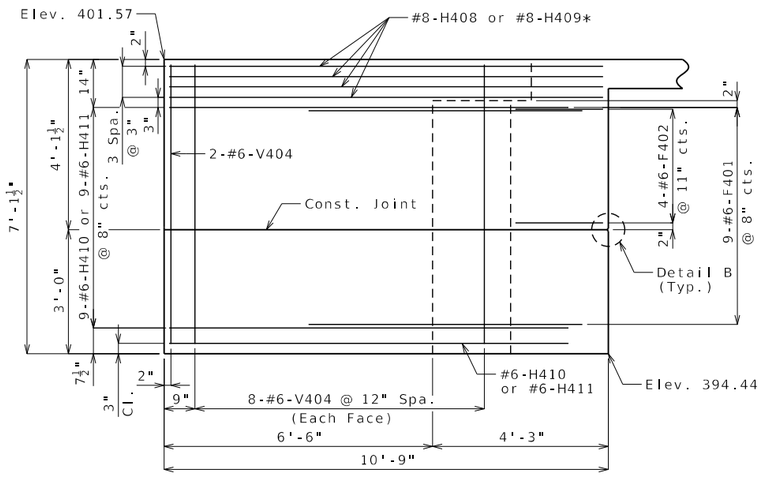

ELEVATION B-B

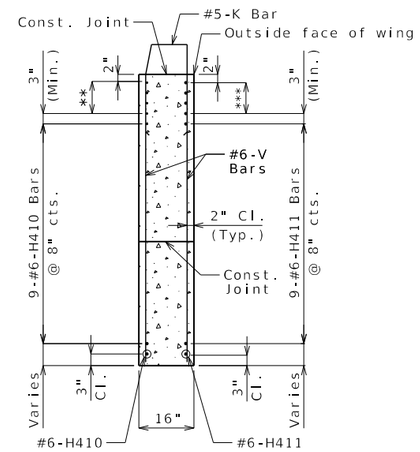

TYPICAL SECTION
THRU EXT. WINGS

* Placed with grade
** #8-H408 Bars @ 3" cts.
*** #8-H409 Bars @ 3" cts.

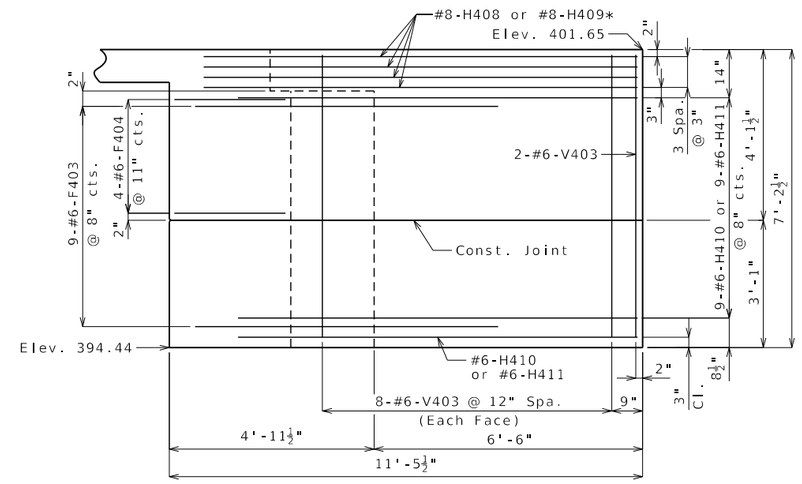

ELEVATION A-A

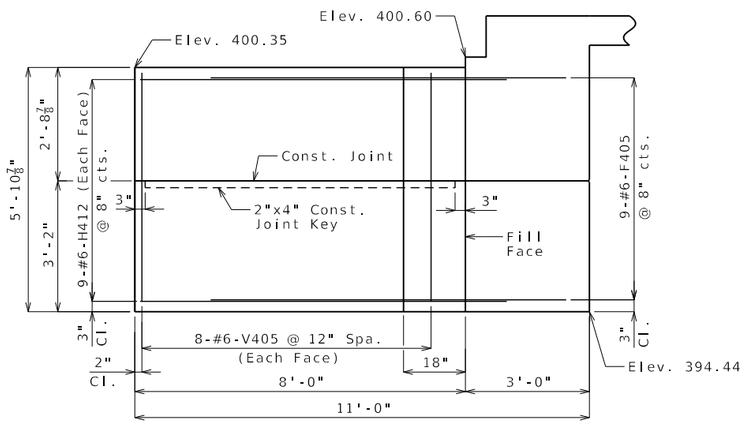

ELEVATION C-C

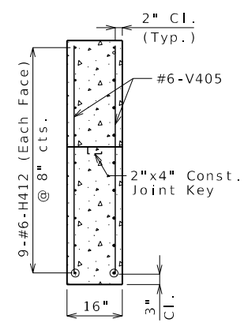

TYPICAL SECTION
THRU INT. WING

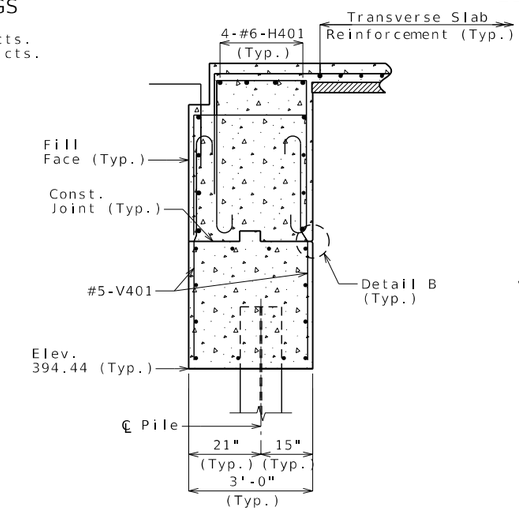

SECTION D-D

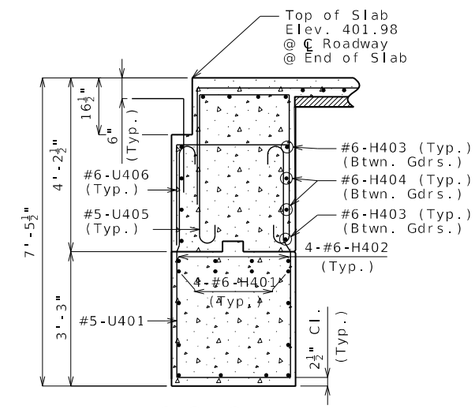

SECTION E-E

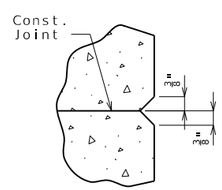

DETAIL B

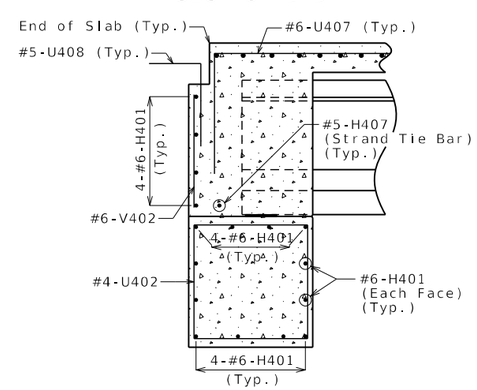

SECTION F-F

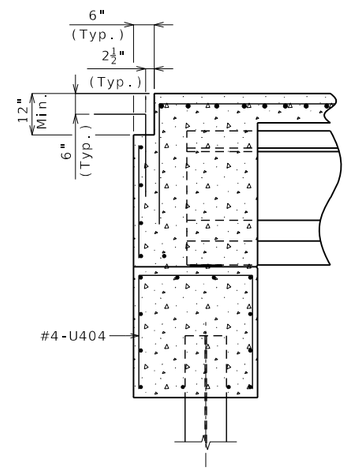

SECTION G-G

Notes:

For details of End Bent No. 4 not shown, see Sheets No. 10 & 11.

For location of Elevations A-A, B-B, & C-C, and Sections D-D, E-E, F-F, & G-G, see Sheet No. 11.

For reinforcement of Type D Barrier, see Sheets No. 22 & 23.

Substructure Quantity Table for Bent No. 4		
Item		Quantity
Class 1 Excavation	cu. yard	50
Galvanized Structural Steel Pile (12 in.)	linear foot	186
Pre-Bore for Piling	linear foot	42
Pile Point Reinforcement	Each	6
Class B Concrete (Substructure)	cu. yard	18.2

These quantities are included in the Estimated Quantities table on Sheet No. 2.

DETAILS OF END BENT NO. 4

Detailed Jan 2025
Checked Jan 2025

Note: This drawing is not to scale. Follow dimensions.

STATE OF MISSOURI
RYAN G. HAGERTY
NUMBER PE-2016034015
PROFESSIONAL ENGINEER

THIS SHEET HAS BEEN SIGNED, SEALED, AND DATED ELECTRONICALLY

DATE PREPARED	
7/25/2025	
ROUTE 67	STATE MO
DISTRICT BR	SHEET NO. 12
COUNTY WAYNE	
JOB NO. JSE0083	
CONTRACT ID.	
PROJECT NO.	
BRIDGE NO. A9610	

DESCRIPTION	DATE

MISSOURI HIGHWAYS AND TRANSPORTATION COMMISSION
105 WEST CAPITOL
JEFFERSON CITY, MO 65102
1-888-ASK-MODOT (1-888-275-6636)

GBA
16305 SWINGLEY RIDGE RD
ST. 300
CHESTERFIELD, MO 63017
314.231.0100
GBAteam.com

GEORGE BUTLER
ASSOCIATES, INC.
PRO. ENGINEER 000133
ARCHITECT 000212
PRO. LAND SURVEYOR 000059

NICHOLE WITUSHYNSKY
PROFESIONAL
ENGINEER
PE-2018037127

IF A SEAL IS PRESENT ON THIS SHEET IT HAS BEEN ELECTRONICALLY SEALED AND DATED.

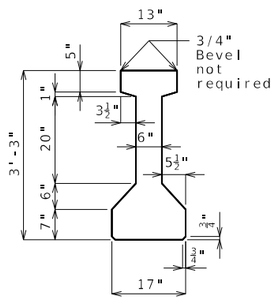

DIMENSIONS

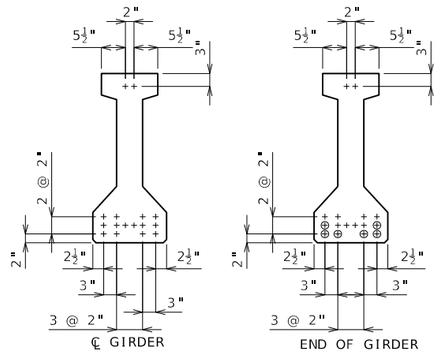

STRAND ARRANGEMENT

+ Indicates prestressing strand.

○ Indicates cut & shop bend with 2'-6" projection.

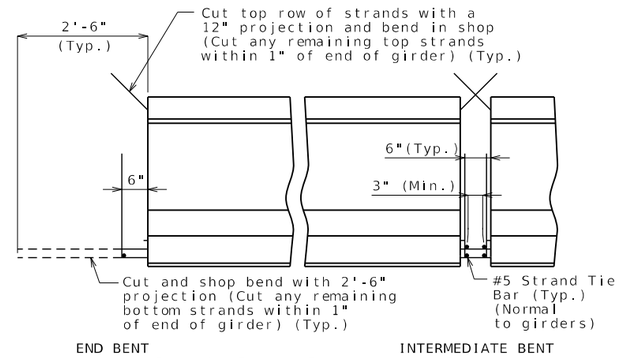

STRANDS AT GIRDER ENDS

BILL OF REINFORCING STEEL - EACH GIRDER				
NO.	SIZE & MARK	ACTUAL LENGTH	SHAPE	BENDING DIAGRAM
2	5 A1	56'-11"	20	
158	5 B1	4'-8"	11S	
16	6 B2	4'-0"	11S	
87	4 C1	13"	10S	
174	4 D1	2'-5"	9S	

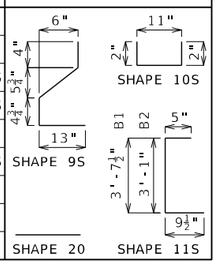

All dimensions are out to out.

Hooks and bends shall be in accordance with the CRSI Manual of Standard Practice for Detailing Reinforced Concrete Structures, Stirrup and Tie Dimensions.

Actual lengths are measured along centerline of bar to the nearest inch.

Minimum clearance to reinforcing shall be one inch.

All reinforcement shall be Grade 60.

The two D1 bars may be furnished as one bar at the fabricator's option.

All B1 bars shall be epoxy coated.

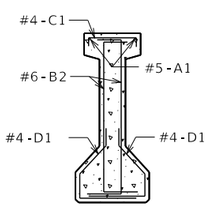

SECTION A-A

Strands not shown for clarity.

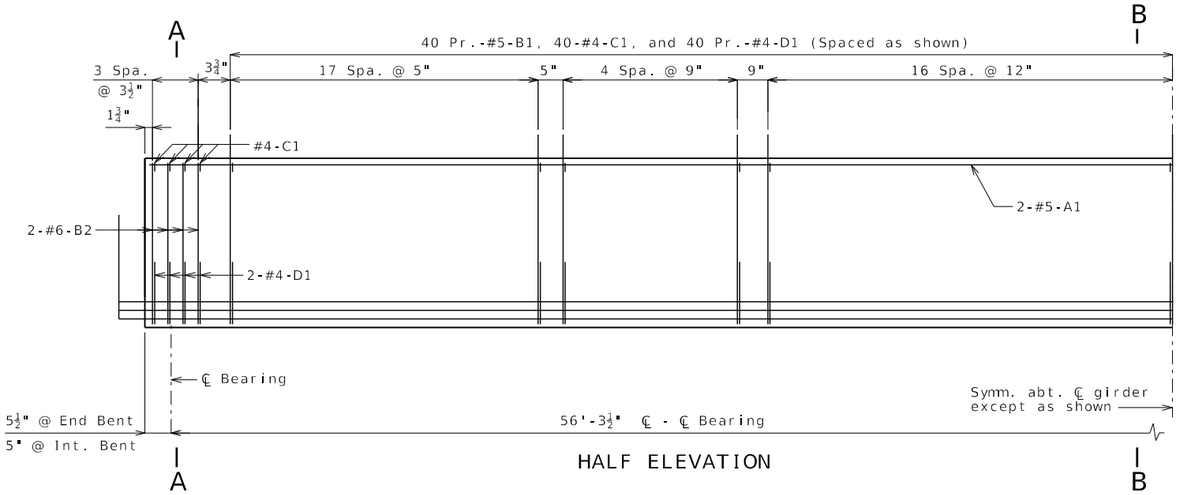

HALF ELEVATION

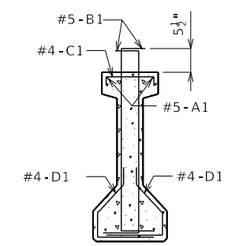

SECTION B-B

Strands not shown for clarity.

General Notes:

Concrete for prestressed girders shall be Class A-1 with f'c = 8.0 psi and f'ci = 6.5 psi.

Use 16 strands, 6/10"Ø Grade 270, with an initial prestress force of 703 kips.

Pretensioned members shall be in accordance with Sec 1029.

Fabricator shall be responsible for location and design of lifting devices.

Exterior and interior girders are the same except: coil ties, coil inserts for slab drains, holes for steel intermediate diaphragms.

For Girder Camber Diagram, see Sheet No. 19.

The 1 1/2"Ø holes shall be cast in the web for steel intermediate diaphragms. Drilling is not allowed. For location of holes and details of steel intermediate diaphragms, see Sheet No. 15.

For location of coil inserts at slab drains, see Sheet No. 18.

For location of coil ties at concrete bent diaphragms, see Sheets No. 4, 11 and 16.

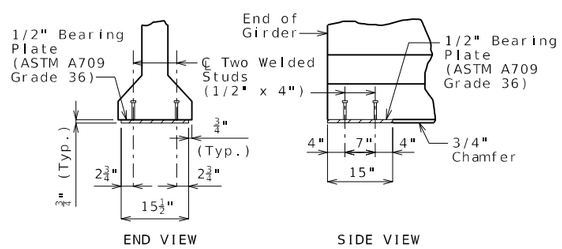

BEARING PLATE

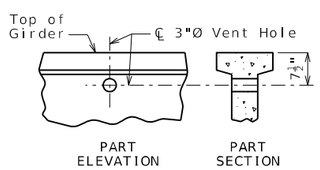

VENT HOLE

Place vent holes at or near upgrade 1/3 point of girders and clear reinforcing steel or strands by 1 1/2" minimum and steel intermediate diaphragm bolt connections by 6" minimum.

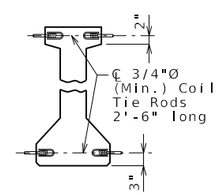

CLOSED DIAPHRAGMS AND INTEGRAL BENTS

COIL TIES

Exclude coil tie at exterior face of exterior girders except at integral end bents.

* 2'-4" at exterior face of exterior girders at end bents

I-GIRDERS - SPANS (1-2) AND (3-4)

Detailed Jan 2025
Checked Jan 2025

Note: This drawing is not to scale. Follow dimensions.

STATE OF MISSOURI
RYAN G. HAGERTY
NUMBER PE-2016034015
PROFESSIONAL ENGINEER

THIS SHEET HAS BEEN SIGNED, SEALED, AND DATED ELECTRONICALLY

DATE PREPARED	
7/25/2025	
ROUTE 67	STATE MO
DISTRICT BR	SHEET NO. 13
COUNTY WAYNE	
JOB NO. JSE0083	
CONTRACT ID.	
PROJECT NO.	
BRIDGE NO. A9610	

DESCRIPTION	DATE

MISSOURI HIGHWAYS AND TRANSPORTATION COMMISSION
105 WEST CAPITOL
JEFFERSON CITY, MO 65102
1-888-ASK-MODOT (1-888-275-6636)

GBA
16305 SWINGLEY RIDGE RD
ST. 300
CHESTERFIELD, MO 63017
314.231.0100
GBAteam.com

GEORGE BUTLER ASSOCIATES, INC.
PRO. ENGINEER 000133
ARCHITECT 000212
PRO. LAND SURVEYOR 000059

NICHOLE WITUSHYNSKY
PROFESIONAL ENGINEER
PE-2018037127

IF A SEAL IS PRESENT ON THIS SHEET IT HAS BEEN ELECTRONICALLY SEALED AND DATED.

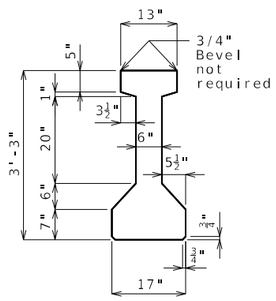

DIMENSIONS

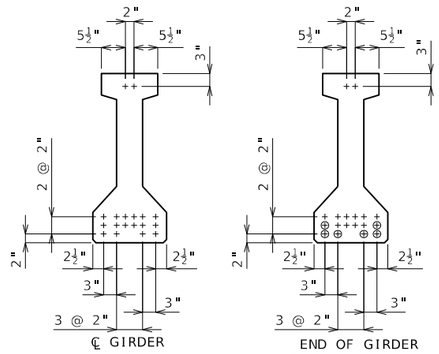

STRAND ARRANGEMENT

+ Indicates prestressing strand.

○ Indicates cut & shop bend with 2'-6" projection.

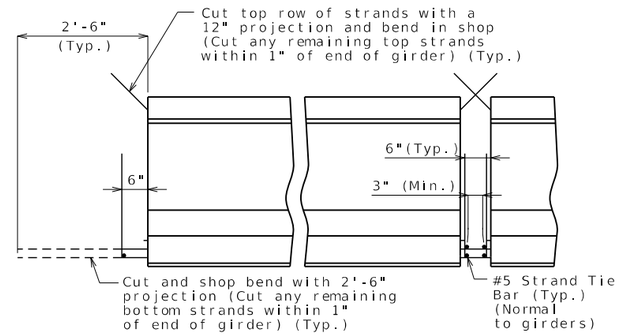

STRANDS AT GIRDER ENDS

BILL OF REINFORCING STEEL - EACH GIRDER				
NO.	SIZE & MARK	ACTUAL LENGTH	SHAPE	BENDING DIAGRAM
4	5 A1	36'-1½"	20	
154	5 B1	4'-8"	11S	
16	6 B2	4'-0"	11S	
85	4 C1	13"	10S	
170	4 D1	2'-5"	9S	

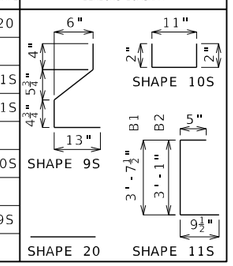

All dimensions are out to out.

Hooks and bends shall be in accordance with the CRSI Manual of Standard Practice for Detailing Reinforced Concrete Structures, Stirrup and Tie Dimensions.

Actual lengths are measured along centerline of bar to the nearest inch.

Minimum clearance to reinforcing shall be one inch.

All reinforcement shall be Grade 60.

The two D1 bars may be furnished as one bar at the fabricator's option.

All B1 bars shall be epoxy coated.

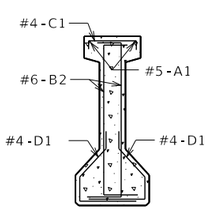

SECTION A-A

Strands not shown for clarity.

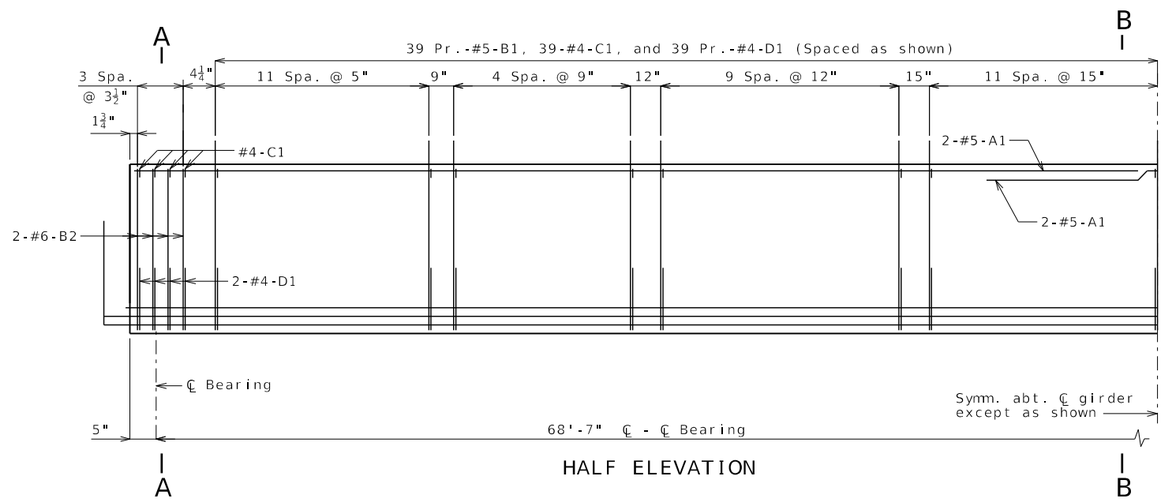

HALF ELEVATION

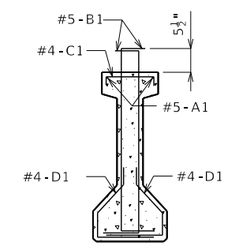

SECTION B-B

Strands not shown for clarity.

General Notes:

Concrete for prestressed girders shall be Class A-1 with f'c = 8.0 psi and f'ci = 6.5 psi.

Use 18 strands, 0.6"Ø Grade 270, with an initial prestress force of 791 kips.

Pretensioned members shall be in accordance with Sec 1029.

Fabricator shall be responsible for location and design of lifting devices.

Exterior and interior girders are the same except: coil ties, coil inserts for slab drains, holes for steel intermediate diaphragms.

For Girder Camber Diagram, see Sheet No. 19.

The 1 1/2"Ø holes shall be cast in the web for steel intermediate diaphragms. Drilling is not allowed. For location of holes and details of steel intermediate diaphragms, see Sheet No. 15.

For location of coil inserts at slab drains, see Sheet No. 18.

For location of coil ties at concrete bent diaphragms, see Sheets No. 4, 11 and 16.

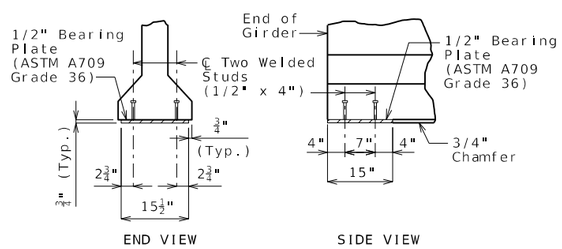

END VIEW SIDE VIEW

BEARING PLATE

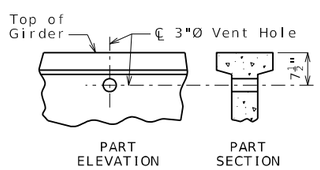

PART ELEVATION PART SECTION

VENT HOLE

Place vent holes at or near upgrade 1/3 point of girders and clear reinforcing steel or strands by 1 1/2" minimum and steel intermediate diaphragm bolt connections by 6" minimum.

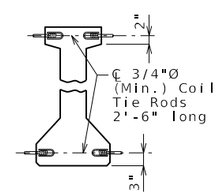

CLOSED DIAPHRAGMS

COIL TIES

Exclude coil tie at exterior face of exterior girders.

I-GIRDERS - SPAN (2-3)

Detailed Jan 2025
Checked Jan 2025

Note: This drawing is not to scale. Follow dimensions.

STATE OF MISSOURI
RYAN G. HAGERTY
NUMBER PE-2016034015
PROFESSIONAL ENGINEER

THIS SHEET HAS BEEN SIGNED, SEALED, AND DATED ELECTRONICALLY

DATE PREPARED	
7/25/2025	
ROUTE 67	STATE MO
DISTRICT BR	SHEET NO. 14
COUNTY WAYNE	
JOB NO. JSE0083	
CONTRACT ID.	
PROJECT NO.	
BRIDGE NO. A9610	

DESCRIPTION	DATE

MISSOURI HIGHWAYS AND TRANSPORTATION COMMISSION
105 WEST CAPITOL
JEFFERSON CITY, MO 65102
1-888-ASK-MODOT (1-888-275-6636)

GBA
16305 SWINGLEY RIDGE RD
ST. 300
CHESTERFIELD, MO 63017
314.231.0100
GBAteam.com

GEORGE BUTLER ASSOCIATES, INC.
PRO. ENGINEER 000133
ARCHITECT 000212
PRO. LAND SURVEYOR 000059

NICHOLE WITUSHYNSKY
PROFESIONAL ENGINEER
PE-2018037127

IF A SEAL IS PRESENT ON THIS SHEET IT HAS BEEN ELECTRONICALLY SEALED AND DATED.

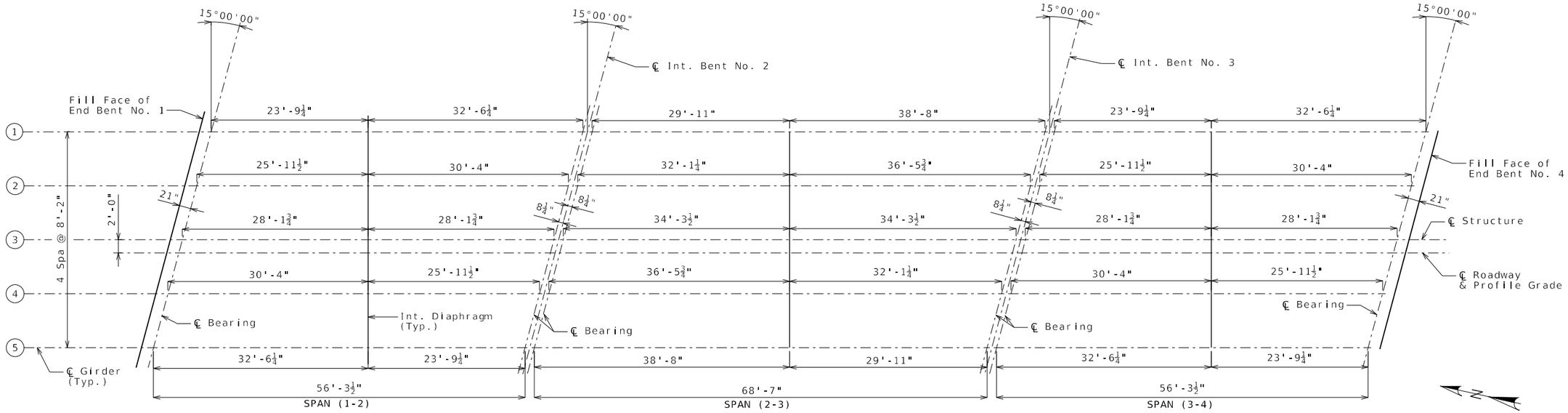

PLAN SHOWING LOCATION OF STEEL INTERMEDIATE DIAPHRAGMS

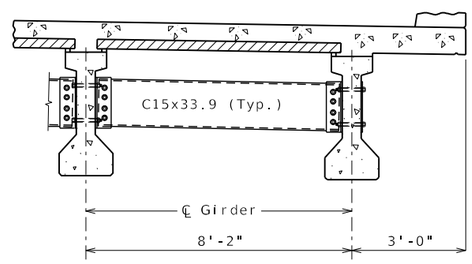

PART SECTION SHOWING INTERMEDIATE DIAPHRAGMS

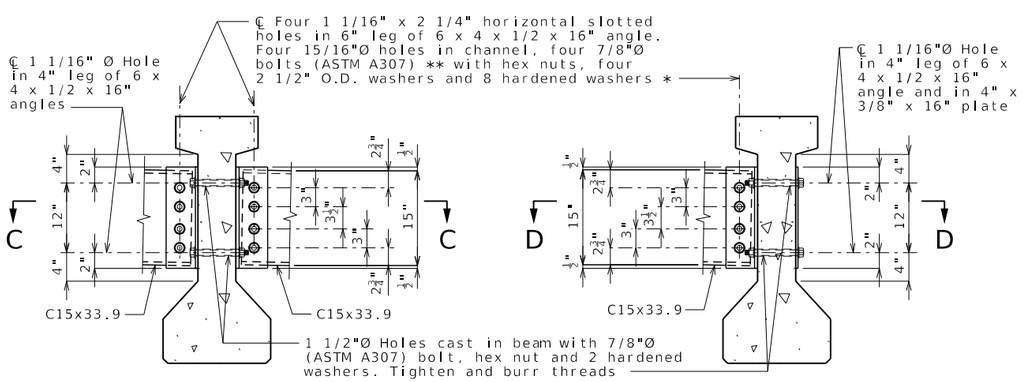

SECTION THRU INT. GIRDER AT DIAPHRAGM

SECTION THRU EXT. GIRDER AT DIAPHRAGM

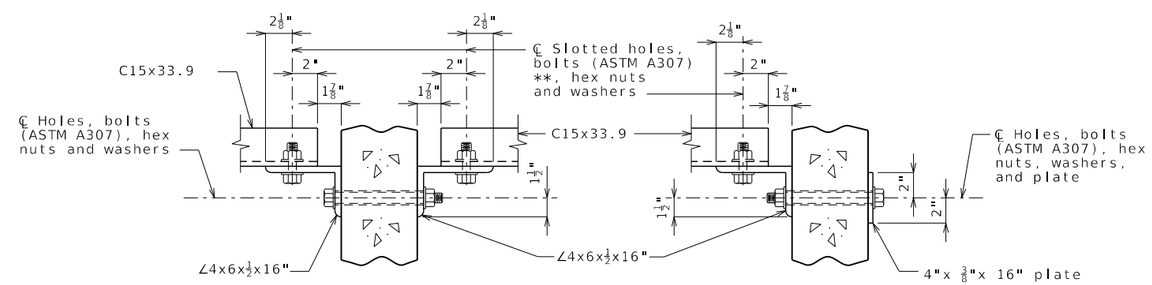

SECTION C-C

SECTION D-D

STEEL DIAPHRAGM NOTES:

* In lieu of 2 1/2" outside diameter washers, contractor may substitute a 3/16" (Min. thickness) plate with four 15/16" Ø holes and one hardened washer per bolt.

** Bolts shall be tightened to provide a tension of one-half that specified in Sec 712 for high strength bolt installation. ASTM F3125 Grade A325 Type 1 bolts may be substituted for and installed in accordance with the requirements for the specified ASTM A307 bolts.

All diaphragm materials including bolts, nuts, and washers shall be galvanized.

Fabricated structural steel shall be ASTM A709 Grade 36 except as noted.

Payment for furnishing and installing steel intermediate diaphragms will be considered completely covered by the contract unit price for Steel Intermediate Diaphragm for P/S Concrete Girders.

Shop drawings will not be required for steel intermediate diaphragms and angle connections.

STEEL INTERMEDIATE DIAPHRAGMS

Detailed Jan 2025
Checked Jan 2025

Note: This drawing is not to scale. Follow dimensions.

STATE OF MISSOURI
RYAN G. HAGERTY
NUMBER PE-2016034015
PROFESSIONAL ENGINEER

THIS SHEET HAS BEEN SIGNED, SEALED, AND DATED ELECTRONICALLY

DATE PREPARED	
7/25/2025	
ROUTE 67	STATE MO
DISTRICT BR	SHEET NO. 15
COUNTY WAYNE	
JOB NO. JSE0083	
CONTRACT ID.	
PROJECT NO.	
BRIDGE NO. A9610	

DESCRIPTION	DATE

MISSOURI HIGHWAYS AND TRANSPORTATION COMMISSION
105 WEST CAPITOL
JEFFERSON CITY, MO 65102
1-888-ASK-MODOT (1-888-275-6636)

GBA
16305 SWINGLEY RIDGE RD
ST. 300
CHESTERFIELD, MO 63017
314.231.0100
GBAteam.com

GEORGE BUTLER ASSOCIATES, INC.
PRO. ENGINEER 000133
ARCHITECT 000212
PRO. LAND SURVEYOR 000059

NICHOLE WITUSHYNSKY
PROFESIONAL ENGINEER
PE-2018037127

IF A SEAL IS PRESENT ON THIS SHEET IT HAS BEEN ELECTRONICALLY SEALED AND DATED.

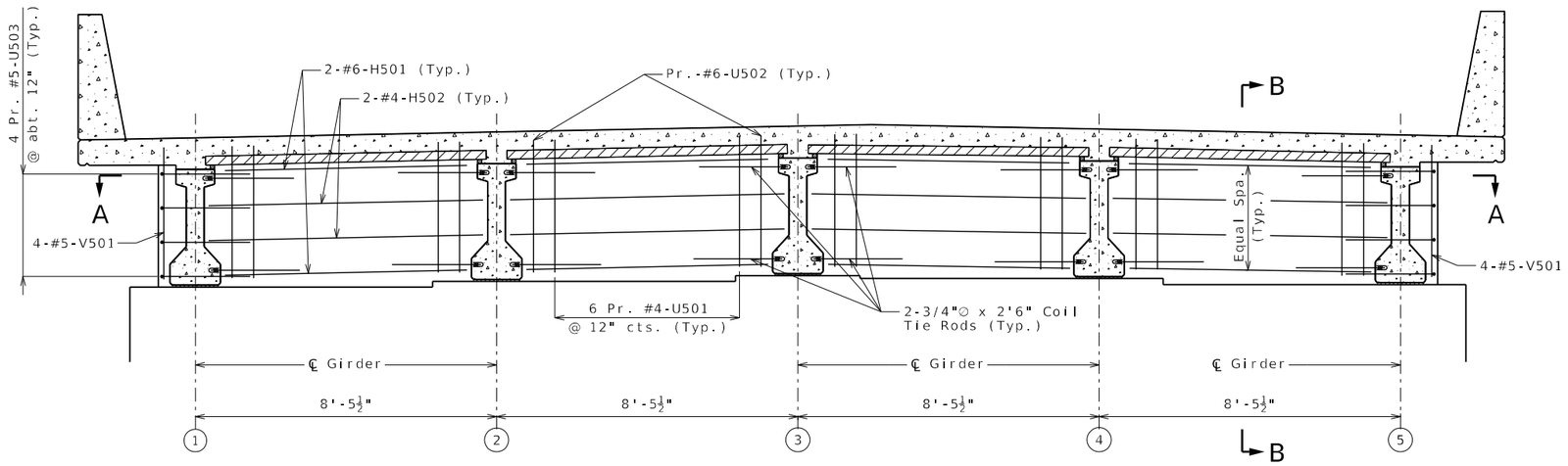

SECTION NEAR INTERMEDIATE BENT
(Key not shown for clarity.)

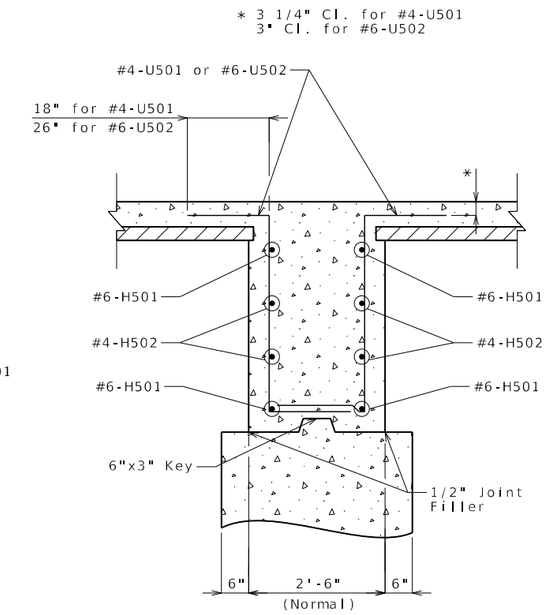

SECTION B-B

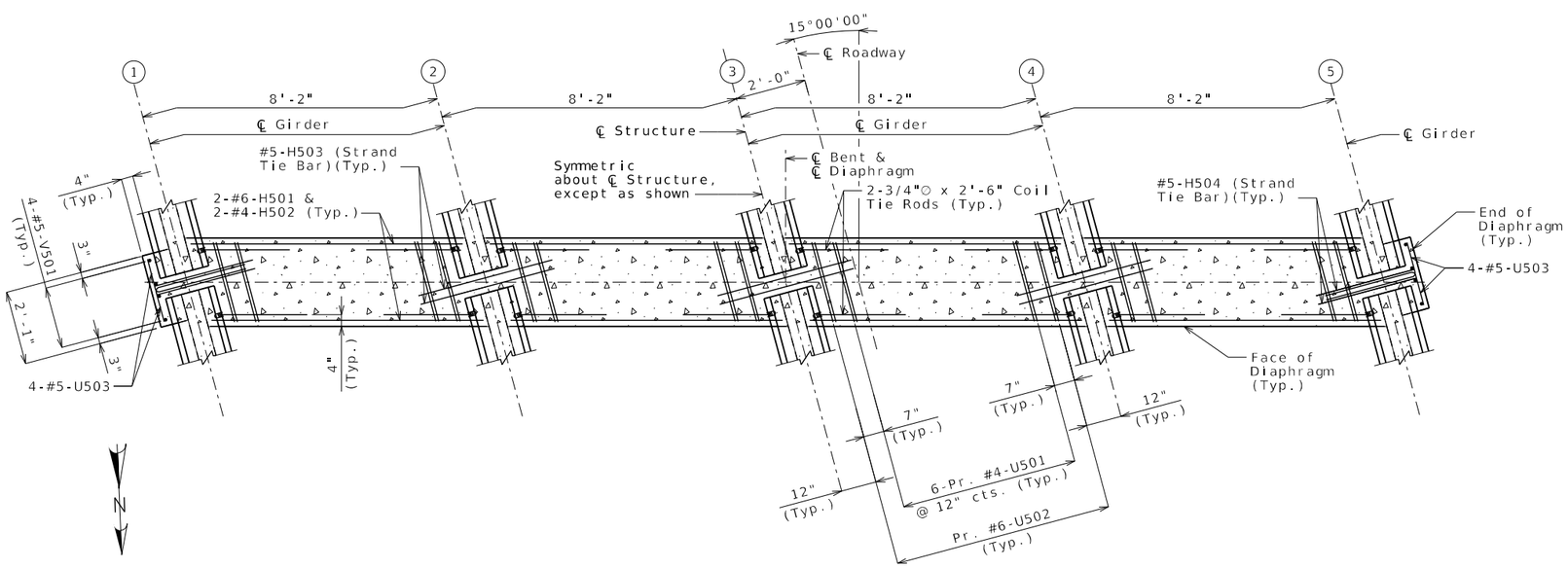

SECTION A-A

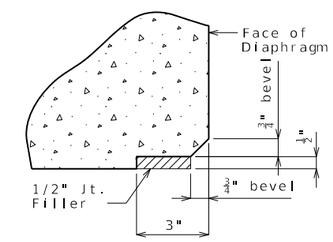

EDGE DETAIL

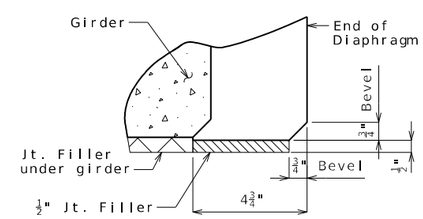

END DETAIL

Notes:

Diaphragms at Intermediate Bents shall be built vertical.

All U-bars in the diaphragm are to be placed parallel to ℄ Structure.

For locations of Strand Tie Bars, see Sheets No. 13 & 14.

For locations and details of Coil Tie Rods, see Sheets No. 13 & 14.

DETAILS OF CONCRETE DIAPHRAGM AT INTERMEDIATE BENTS NO. 2 & 3

Detailed Jan 2025
Checked Jan 2025

Note: This drawing is not to scale. Follow dimensions.

STATE OF MISSOURI
RYAN G. HAGERTY
NUMBER PE-2016034015
PROFESSIONAL ENGINEER

THIS SHEET HAS BEEN SIGNED, SEALED, AND DATED ELECTRONICALLY

DATE PREPARED	7/25/2025
ROUTE 67	STATE MO
DISTRICT BR	SHEET NO. 16
COUNTY	WAYNE
JOB NO.	JSE0083
CONTRACT ID.	
PROJECT NO.	
BRIDGE NO.	A9610

DATE	DESCRIPTION

MISSOURI HIGHWAYS AND TRANSPORTATION COMMISSION
105 WEST CAPITOL
JEFFERSON CITY, MO 65102
1-888-ASK-MODOT (1-888-275-6636)

GBA
16305 SWINGLEY RIDGE RD
ST. 300
CHESTERFIELD, MO 63017
314.231.0100
GBAteam.com

GEORGE BUTLER
ASSOCIATES, INC.
PRO. ENGINEER 000133
ARCHITECT 000212
PRO. LAND SURVEYOR 000059

NICHOLE WITUSHYNSKY
PROFESIONAL
ENGINEER
PE-2018037127

IF A SEAL IS PRESENT ON THIS SHEET IT HAS BEEN ELECTRONICALLY SEALED AND DATED.

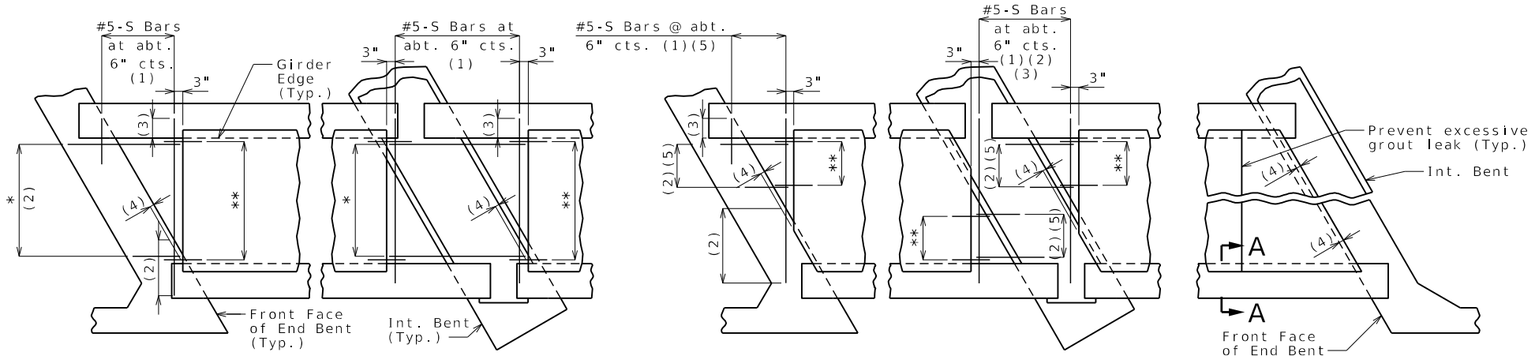

PLAN SHOWING PANEL PLACEMENT

* #5-S Bars at abt. 9" cts. (1)
** #3-P1 at 12" cts. (End panels only)

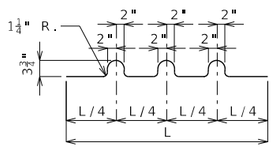

U1 Bars may be oriented at right angles to location and spacing shown. U1 Bars shall be placed between P1 bars.

BENDING DIAGRAM FOR U1 BAR

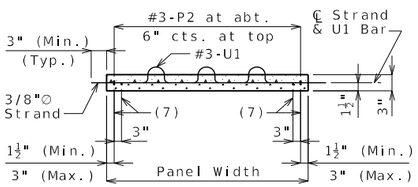

SECTION B-B

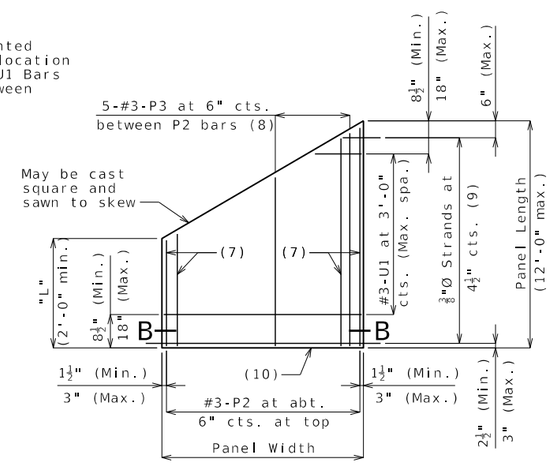

PLAN OF OPTIONAL SKEWED END PANEL

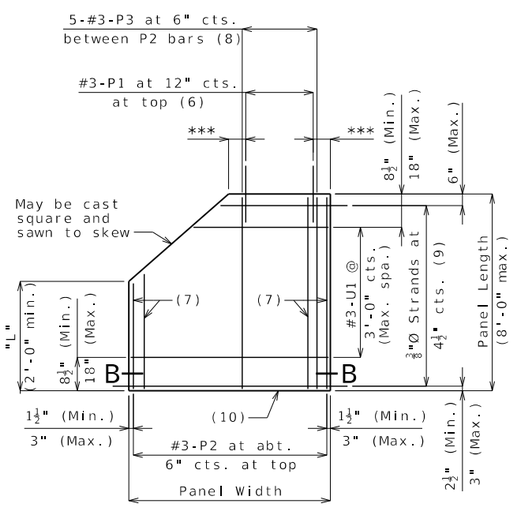

PLAN OF OPTIONAL TRUNCATED END PANEL

*** 3" (Min.), 6" (Max.)

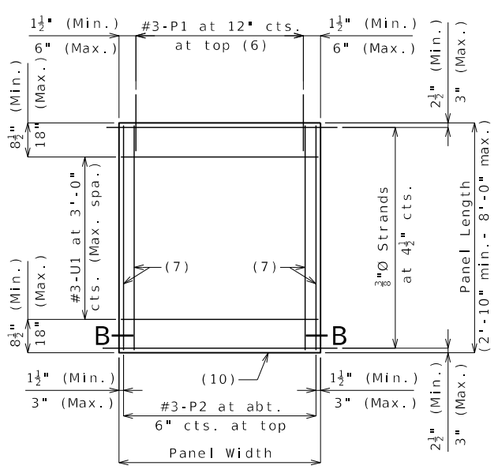

PLAN OF SQUARED PANEL

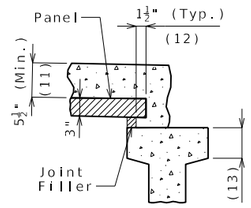

SECTION A-A

Joint Filler Dimensions		
Width	Height	
	Min.	Max.
1½"	1"	2"

Reference Notes:

Plan of Panel Placement:
(1) S-bars shown are bottom steel in slab between panels and used with squared and truncated end panels only.

(2) Extend S-bars 18 inches beyond the front face of end bents and int. bents for squared and truncated end panels only.

(3) Extend S-bars 9 inches beyond edge of girder (Typ.).

(4) End panels shall be dimensioned 1/2" min. to 1 1/2" max. from the inside face of diaphragm.

(5) For truncated end panels, use a min. of #5-S bars at 6" crossings in openings, or min. 4x4-W7xW7.

Plans of Panels:
(6) For end panels only, P1 bars shall be 2'-0" in length and embedded 12". P1 bars will not be required for panels at squared integral end bents.

(7) #3-P2 bars near edge of panel at bottom (under strands).

(8) Use #3-P3 bars if panel is skewed 45° or greater.

(9) Any strand 2'-0" or shorter shall have a #4 reinforcing bar on each side of it, centered between strands. Strands 2'-0" or shorter may then be debonded at the fabricator's option.

(10) Optional 1/2" x 45° Chamfer one or both sides at bottom.

Section A-A:
(11) Slab thickness over prestressed panels varies due to girder camber. In order to maintain minimum slab thickness, it may be necessary to raise the grade uniformly throughout the structure. No payment will be made for additional labor or materials required for necessary grade adjustment.

(12) Contractor shall ensure proper consolidation under and between panels.

(13) At the contractor's option, the variation in slab thickness over prestressed panels may be eliminated or reduced by increasing and varying the girder top flange thickness. Dimensions shall be shown on the shop drawings.

General Notes:

Prestressed Panels:
Concrete for prestressed panels shall be Class A-1 with f'c = 6,000 psi, f'ci = 4,000 psi.

The top surface of all panels shall receive a scored finish with a depth of scoring of 1/8" perpendicular to the prestressing strands in the panels.

Prestressing tendons shall be high-tensile strength, uncoated, seven-wire, low-relaxation strands for prestressed concrete in accordance with AASHTO M 203 Grade 270, with nominal diameter of strand = 3/8" and nominal area = 0.085 sq.in. and minimum ultimate strength = 22.95 kips (270 ksi). Larger strands may be used with the same spacing and initial tension.

Initial prestressing force = 17.2 kips/strand.

The method and sequence of releasing the strands shall be shown on the shop drawings.

Suitable anchorage devices for lifting panels may be cast in panels, provided the devices are shown on the shop drawings and approved by the engineer. Panel lengths shall be determined by the contractor and shown on the shop drawings.

When squared end panels are used at skewed bents, the skewed portion shall be cast full depth. No separate payment will be made for additional concrete and reinforcing required.

Support from diaphragm forms is required under the optional skewed end until cast-in-place concrete has reached 3,000 psi compressive strength.

Prestressed panels shall be brought to saturated surface-dry (SSD) condition just prior to the deck pour. There shall be no free standing water on the panels or in the area to be cast.

The prestressed panel quantities are not included in the table of estimated quantities for the slab.

Reinforcing Steel:
All dimensions are out to out.

Hooks and bends shall be in accordance with the CRSI Manual of Standard Practice for Detailing Reinforced Concrete Structures, Stirrup and Tie Dimensions.

Minimum clearance to reinforcing steel shall be 1 1/2", unless otherwise shown.

If U1 bars interfere with placement of slab steel, U1 loops may be bent over, as necessary, to clear slab steel.

Deformed welded wire reinforcement (WWR) providing a minimum area of reinforcing perpendicular to strands of 0.22 sq in./ft, with spacing parallel to strands sufficient to ensure proper handling, may be used in lieu of the #3-P2 bars shown. Wire diameter shall not be larger than 0.375 inch. The above alternative reinforcement criteria may be used in lieu of the #3-P3 bars, when required, and placed over a width not less than 2 feet.

The following reinforcing steel shall be tied securely to the strands with the following maximum spacing in each direction:
#3-P2 bars at 16 inches.
WWR at 24 inches.

The #3-U1 bars shall be tied securely to #3-P2 bars, to WWR or to strands (when placed between P1 bars) at about 3-foot centers.

Minimum reinforcement steel length shall be 2'-0".

All reinforcement other than prestressing strands shall be epoxy coated.

Precast panels may be in contact with stirrup reinforcing in diaphragms.

S-bars are not listed in the bill of reinforcing.

Cost of S-bars will be considered completely covered by the contract unit price for the slab.

Joint Filler:
Joint filler shall be preformed fiber expansion joint material in accordance with Sec 1057 or expanded or extruded polystyrene bedding material in accordance with Sec 1073.

Use Slab Haunching Diagram on Sheet No. 19 for determining thickness of joint filler within the limits noted in the table of Joint Filler Dimensions.

Thicker material may be used on one or both sides of the girder to reduce cast-in-place concrete thickness to within tolerances.

The same thickness of preformed fiber expansion joint material shall be used under any one edge of any panel except at locations where top flange thickness may be stepped. The maximum change in thickness between adjacent panels shall be 1/2 inch. The polystyrene bedding material may be cut with a transition to match haunch height above top of flange.

Joint filler shall be glued to the girder. When thickness exceeds 1 1/2 inches, the joint filler shall be glued top and bottom. The glue used shall be the type recommended by the joint filler manufacturer.

Edges of panels shall be uniformly seated on the joint filler before slab reinforcement is placed.

PRESTRESSED PANELS

Detailed Jan 2025
Checked Jan 2025

Note: This drawing is not to scale. Follow dimensions.

STATE OF MISSOURI RYAN G. HAGERTY NUMBER PE-2016034015 PROFESSIONAL ENGINEER

THIS SHEET HAS BEEN SIGNED, SEALED, AND DATED ELECTRONICALLY

DATE PREPARED	
7/25/2025	
ROUTE 67	STATE MO
DISTRICT BR	SHEET NO. 17
COUNTY WAYNE	
JOB NO. JSE0083	
CONTRACT ID.	
PROJECT NO.	
BRIDGE NO. A9610	

DESCRIPTION	DATE

IF A SEAL IS PRESENT ON THIS SHEET IT HAS BEEN ELECTRONICALLY SEALED AND DATED.

MISSOURI HIGHWAYS AND TRANSPORTATION COMMISSION
105 WEST CAPITOL
JEFFERSON CITY, MO 65102
1-888-ASK-MODOT (1-888-275-6636)

GBA
16305 SWINGLEY RIDGE RD
ST. 300
CHESTERFIELD, MO 63017
314.231.0100
GBAteam.com

GEORGE BUTLER ASSOCIATES, INC.
PRO. ENGINEER 000133
ARCHITECT 000212
PRO. LAND SURVEYOR 000059

NICHOLE WITUSHYNSKY
PROFESIONAL ENGINEER
PE-2018037127

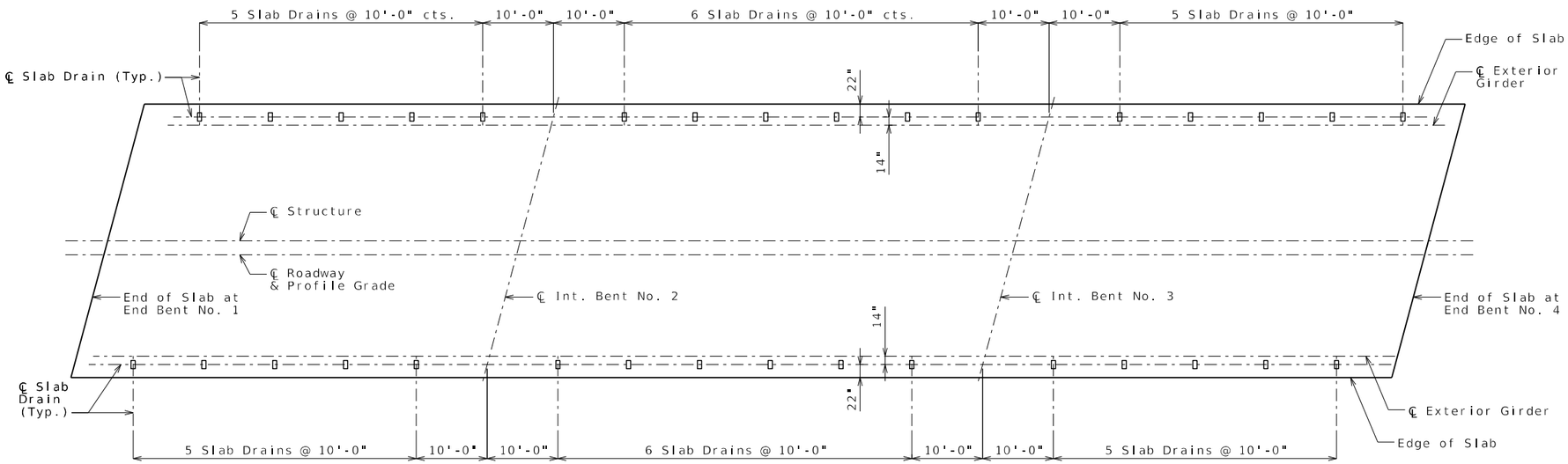

PLAN OF SLAB SHOWING SLAB DRAIN LOCATIONS

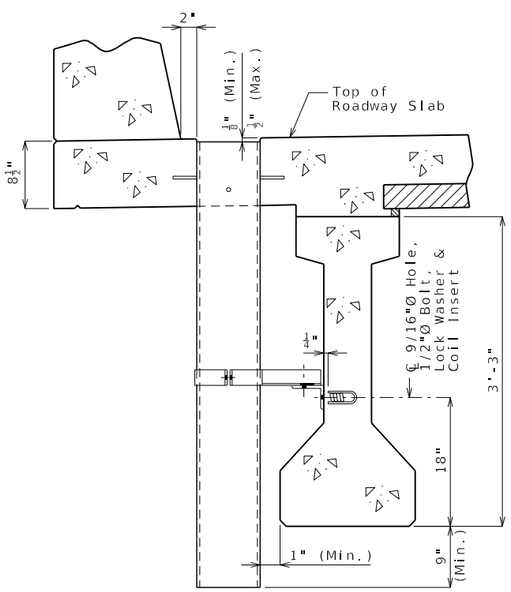

PART SECTION NEAR DRAIN

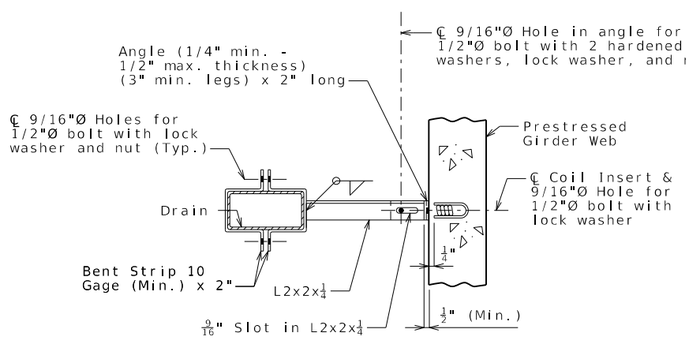

PART SECTION SHOWING BRACKET ASSEMBLY

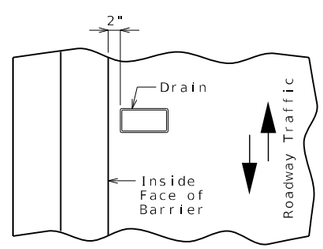

PART PLAN OF SLAB AT DRAIN

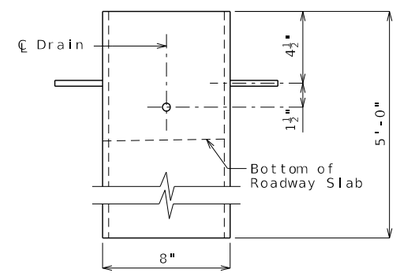

ELEVATION OF DRAIN

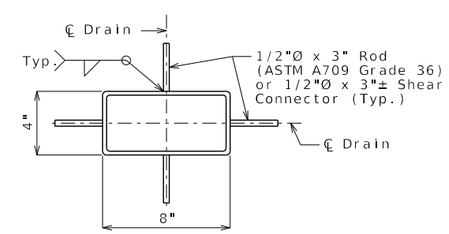

PLAN OF STEEL DRAIN OPTION

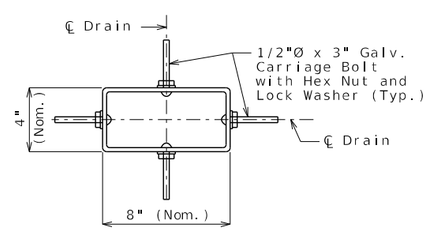

PLAN OF FRP DRAIN OPTION

General Notes:

Contractor shall have the option to construct either steel or FRP slab drains. All drains shall be of same type.

Slab drain bracket assembly shall be ASTM A709 Grade 36 steel.

Locate drains in slab by dimensions shown in Part Section Near Drain.

Reinforcing steel shall be shifted to clear drains.

The coil inserts and bracket assembly shall be galvanized in accordance with ASTM A123.

All bolts, hardened washers, lock washers and nuts shall be galvanized in accordance with AASHTO M 232 (ASTM A153), Class C.

All 1/2"Ø bolts shall be ASTM A307.

Shop drawings will not be required for the slab drains and the bracket assembly.

The coil insert required for the bracket assembly attachment shall be located on the prestressed girder shop drawings.

Coil inserts shall have a concrete pull-out strength (ultimate load) of at least 2,500 pounds in 5,000 psi concrete.

The bolt required to attach the slab drain bracket assembly to the prestressed girder web shall be supplied by the prestressed girder fabricator.

Notes for Steel Drain:

Slab drains may be fabricated of either 1/4" welded sheets of ASTM A709 Grade 36 steel or from 1/4" structural steel tubing ASTM A500 or A501.

Outside dimensions of drains are 8" x 4".

The drains shall be galvanized in accordance with ASTM A123.

Notes for FRP Drain:

Drains shall be machine filament-wound thermosetting resin tubing meeting the requirements of ASTM D2996 with the following exceptions:

Shape of drains shall be rectangular with outside nominal dimensions of 8" x 4".

Minimum reinforced wall thickness shall be 1/4 inch.

The resin used shall be ultraviolet (UV) resistant and/or have UV inhibitors mixed throughout. Drains may have an exterior coating for additional UV resistance.

The color of the slab drain shall be gray (Federal Standard 26373). The color shall be uniform throughout the resin and any coating used.

The combination of materials used in the manufacture of the drains shall be tested for UV resistance in accordance with ASTM D4329 Cycle A. The representative material shall withstand at least 500 hours of testing with only minor discoloration and without any physical deterioration. The contractor shall furnish the results of the required ultraviolet testing prior to acceptance of the slab drains.

At the contractor's option, drains may be field cut. The method of cutting FRP slab drain shall be as recommended by the manufacturer to ensure a smooth, chip free cut.

SLAB DRAINS

Detailed Jan 2025
Checked Jan 2025

Note: This drawing is not to scale. Follow dimensions.

STATE OF MISSOURI
RYAN G. HAGERTY
NUMBER PE-2016034015
PROFESSIONAL ENGINEER

THIS SHEET HAS BEEN SIGNED, SEALED, AND DATED ELECTRONICALLY

DATE PREPARED	
7/25/2025	
ROUTE 67	STATE MO
DISTRICT BR	SHEET NO. 18
COUNTY WAYNE	
JOB NO. JSE0083	
CONTRACT ID.	
PROJECT NO.	
BRIDGE NO. A9610	

DATE	DESCRIPTION

IF A SEAL IS PRESENT ON THIS SHEET IT HAS BEEN ELECTRONICALLY SEALED AND DATED.

MISSOURI HIGHWAYS AND TRANSPORTATION COMMISSION
105 WEST CAPITOL
JEFFERSON CITY, MO 65102
1-888-ASK-MODOT (1-888-275-6636)

GBA
16305 SWINGLEY RIDGE RD
ST. 300
CHESTERFIELD, MO 63017
314.231.0100
GBAteam.com

GEORGE BUTLER ASSOCIATES, INC.
PRO. ENGINEER 000133
ARCHITECT 000212
PRO. LAND SURVEYOR 000059

NICHOLE WITUSHYNSKY
PROFESIONAL ENGINEER
PE-2018037127

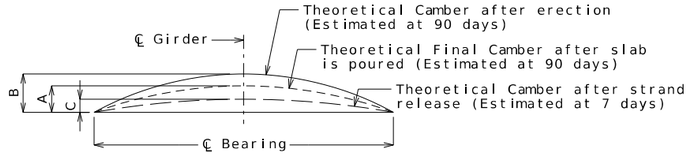

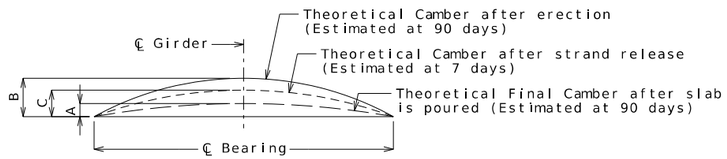

Girder	Span (1-2)			Span (2-3)			Span (3-4)		
	A	B	C	A	B	C	A	B	C
Exterior	1"	$1\frac{5}{8}$"	$\frac{7}{8}$"	$1\frac{1}{8}$"	$2\frac{3}{8}$"	$1\frac{3}{8}$"	1"	$1\frac{5}{8}$"	$\frac{7}{8}$"
Interior	$\frac{7}{8}$"			$\frac{7}{8}$"			$\frac{7}{8}$"		

GIRDER CAMBER DIAGRAM

Conversion Factors for Girder Camber (Estimated at 90 days):

0.25 pt. = 0.7125 x 0.5 pt.

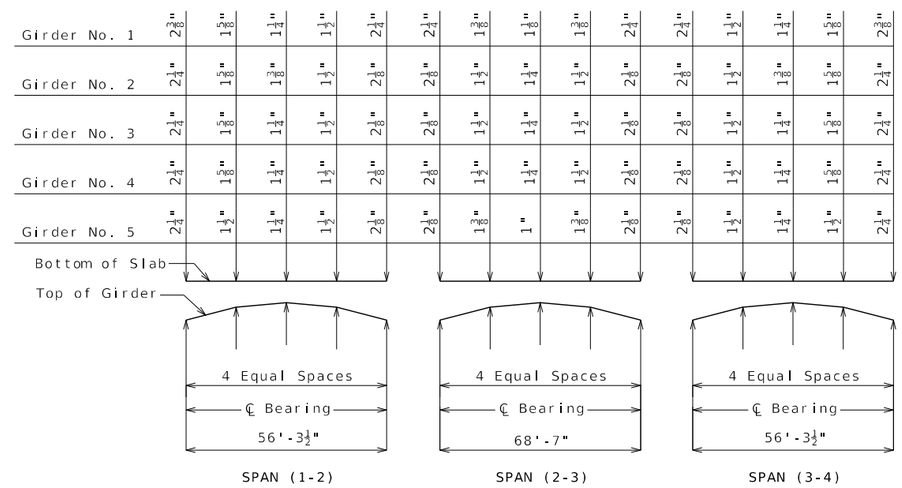

THEORETICAL SLAB HAUNCHING DIAGRAM (ESTIMATED AT 90 DAYS)

If girder camber is different from that shown in the camber diagram, in order to maintain minimum slab thickness, an adjustment of the slab haunches, an increase in slab thickness or a raise in grade uniformly throughout the structure shall be necessary. The haunch shall be limited to ensure the projecting girder reinforcementt is embedded into slab at least 2 inches. No payment will be made for additional labor or materials required for variation in haunching, slab thickness or grade adjustment.

Concrete in the slab haunches is included in the Estimated Quantities for Slab on Concrete I-Girder.

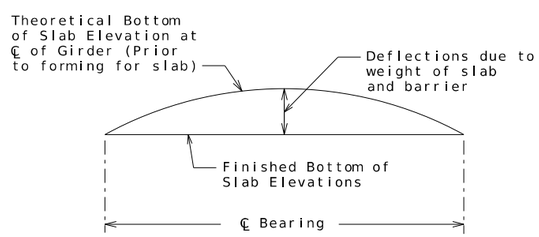

TYPICAL SLAB ELEVATIONS DIAGRAM

Theoretical Bottom of Slab Elevations at Centerline of Girder (Prior to forming for slab) (Estimated at 90 days)

Girder Number	Span (1-2) (56'-3½" ℄ Brg. - ℄ Brg.)					Span (2-3) (68'-7" ℄ Brg. - ℄ Brg.)					Span (3-4) (56'-3½" ℄ Brg. - ℄ Brg.)				
	℄ Brg.	.25	.50	.75	℄ Brg.	℄ Brg.	.25	.50	.75	℄ Brg.	℄ Brg.	.25	.50	.75	℄ Brg.
1	400.93	400.96	400.97	400.96	400.93	400.93	401.00	401.03	401.00	400.93	400.93	400.96	400.97	400.96	400.93
2	401.09	401.13	401.14	401.13	401.09	401.09	401.17	401.21	401.17	401.09	401.09	401.13	401.14	401.13	401.09
3	401.25	401.29	401.31	401.29	401.25	401.25	401.34	401.37	401.34	401.25	401.25	401.29	401.31	401.29	401.25
4	401.17	401.21	401.22	401.21	401.17	401.17	401.25	401.29	401.25	401.17	401.17	401.21	401.22	401.21	401.17
5	401.00	401.04	401.05	401.04	401.00	401.00	401.08	401.11	401.08	401.00	401.00	401.04	401.05	401.04	401.00

Elevations are based on a constant slab thickness of 8 1/2" and include allowance for theoretical dead load deflections due to weight of slab (including precast panel) and barrier.

SLAB DETAILS

Detailed Jan 2025
Checked Jan 2025

Note: This drawing is not to scale. Follow dimensions.

STATE OF MISSOURI
RYAN G. HAGERTY
NUMBER PE-2016034015
PROFESSIONAL ENGINEER

THIS SHEET HAS BEEN SIGNED, SEALED, AND DATED ELECTRONICALLY

DATE PREPARED 7/25/2025

ROUTE	STATE
67	MO
DISTRICT	SHEET NO.
BR	19

COUNTY WAYNE

JOB NO. JSE0083

CONTRACT ID.

PROJECT NO.

BRIDGE NO. A9610

DATE	DESCRIPTION

IF A SEAL IS PRESENT ON THIS SHEET IT HAS BEEN ELECTRONICALLY SEALED AND DATED.

MISSOURI HIGHWAYS AND TRANSPORTATION COMMISSION
105 WEST CAPITOL
JEFFERSON CITY, MO 65102
1-888-ASK-MODOT (1-888-275-6636)

GBA
16305 SWINGLEY RIDGE RD
ST. 300
CHESTERFIELD, MO 63017
314.231.0100
GBAteam.com

GEORGE BUTLER ASSOCIATES, INC.
PRO. ENGINEER 000133
ARCHITECT 000212
PRO. LAND SURVEYOR 000059

NICHOLE WITUSHYNSKY
PROFESIONAL ENGINEER
PE-2018037127

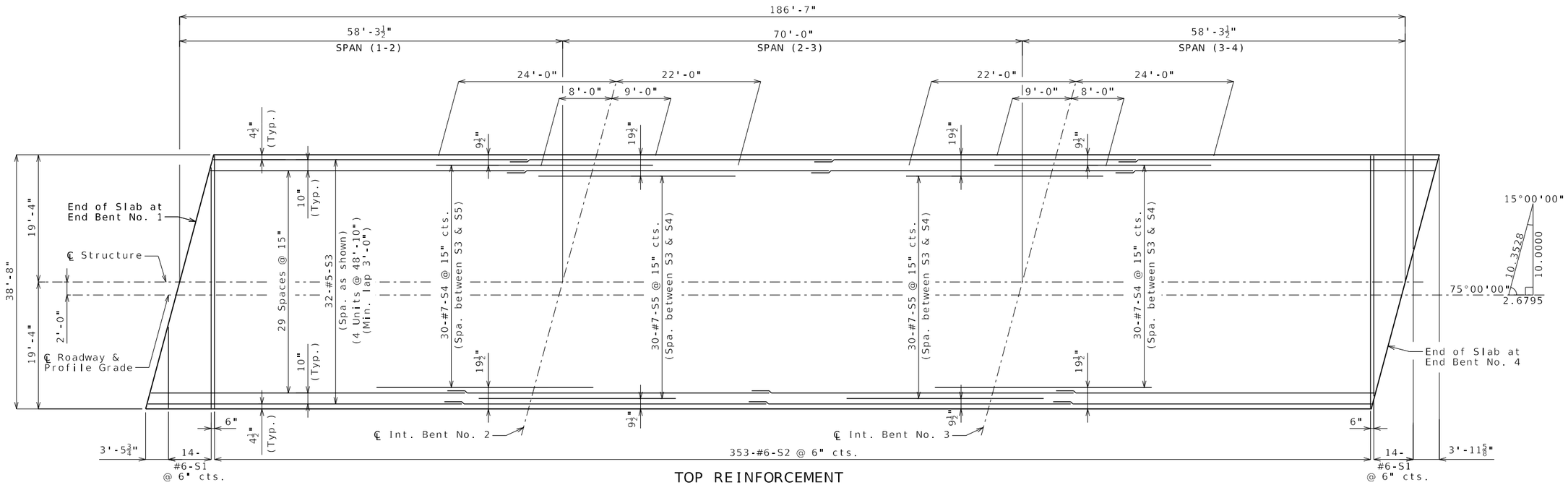

TOP REINFORCEMENT

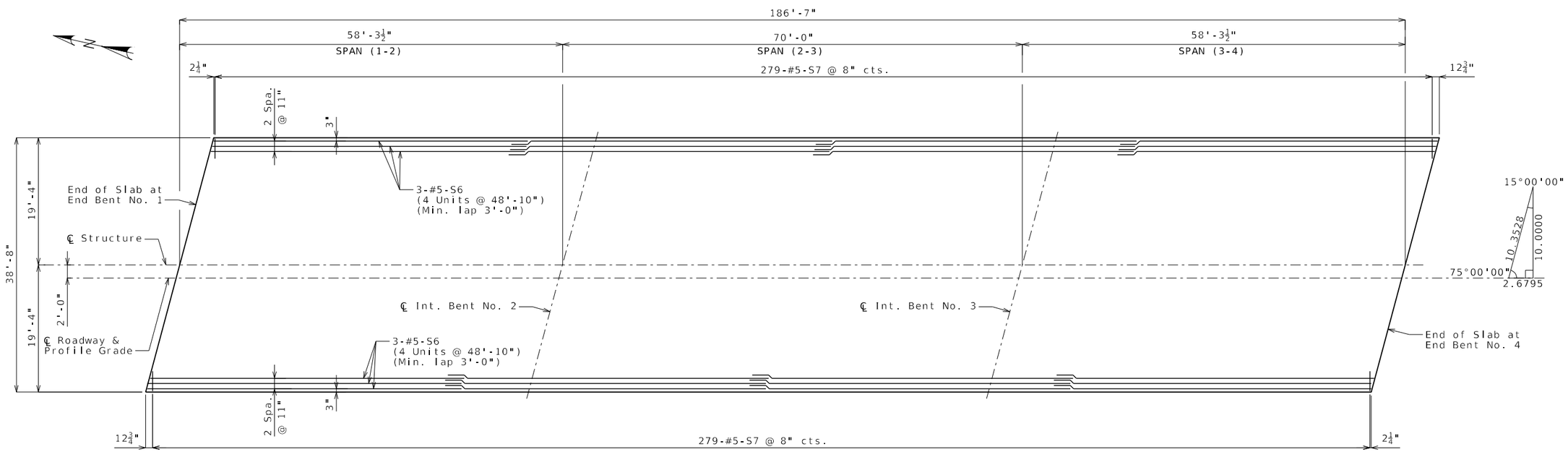

BOTTOM REINFORCEMENT

Notes:

For Details of Precast Prestressed Panels, see Sheet No. 17.

For details and locations of Slab Drains, see Sheet No. 18.

For reinforcement of Type D Barrier not shown, see Sheets No. 22 & 23.

For Theoretical Bottom of Slab Elevations, Girder Camber and Theoretical Slab Haunching Diagram, see Sheet No. 19.

For Section Thru Slab, Construction Joint Detail, and Slab Pouring Sequence, see Sheet No. 21.

PLAN OF SLAB SHOWING REINFORCEMENT

Detailed Jan 2025
Checked Jan 2025

Note: This drawing is not to scale. Follow dimensions.

STATE OF MISSOURI
RYAN G. HAGERTY
NUMBER
PE-2016034015
PROFESSIONAL ENGINEER

THIS SHEET HAS BEEN SIGNED, SEALED, AND DATED ELECTRONICALLY

DATE PREPARED	
7/25/2025	
ROUTE	STATE
67	MO
DISTRICT	SHEET NO.
BR	20
COUNTY	
WAYNE	
JOB NO.	
JSE0083	
CONTRACT ID.	
PROJECT NO.	
BRIDGE NO.	
A9610	

DESCRIPTION	DATE

IF A SEAL IS PRESENT ON THIS SHEET IT HAS BEEN ELECTRONICALLY SEALED AND DATED.

MISSOURI HIGHWAYS AND TRANSPORTATION COMMISSION
105 WEST CAPITOL
JEFFERSON CITY, MO 65102
1-888-ASK-MODOT (1-888-275-6636)

GBA
16305 SWINGLEY RIDGE RD
ST. 300
CHESTERFIELD, MO 63017
314.231.0100
GBAteam.com

GEORGE BUTLER
ASSOCIATES, INC.
PRO. ENGINEER 000133
ARCHITECT 000212
PRO. LAND SURVEYOR 000059

NICHOLE WITUSHYNSKY
PROFESIONAL
ENGINEER
PE-2018037127

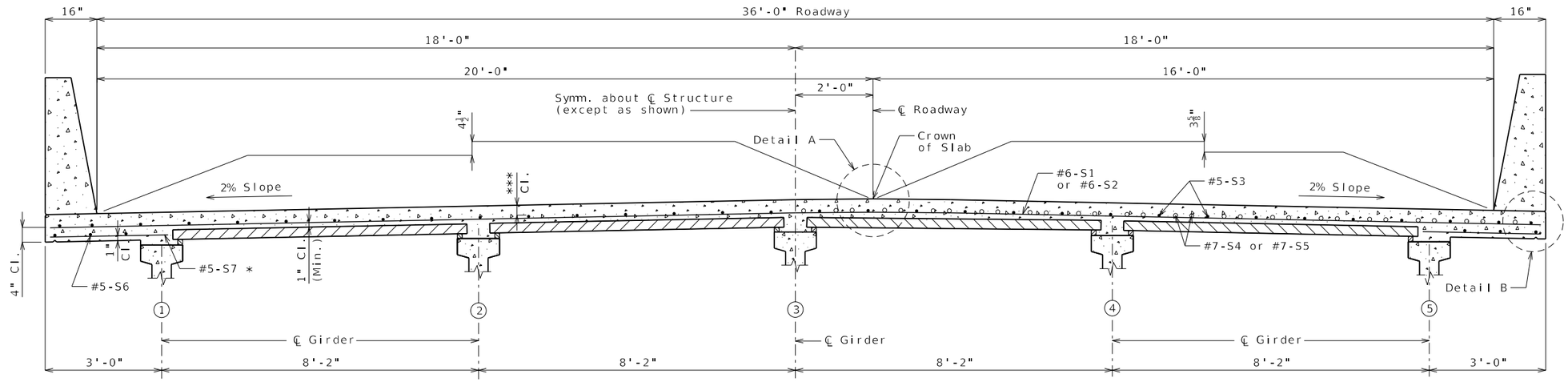

HALF SECTION NEAR MIDSPAN

HALF SECTION NEAR INTERMEDIATE BENT

*** $3\frac{1}{8}$" (#5)
$2\frac{7}{8}$" (#7)

SECTION THRU SLAB

* Alternate bar shape available, see barrier sheet.

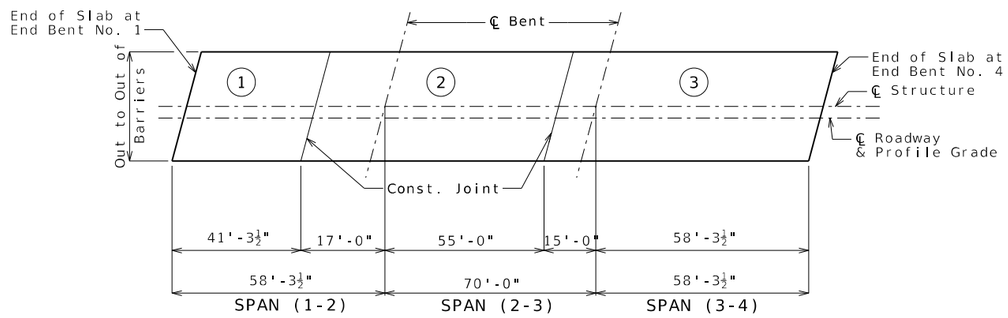

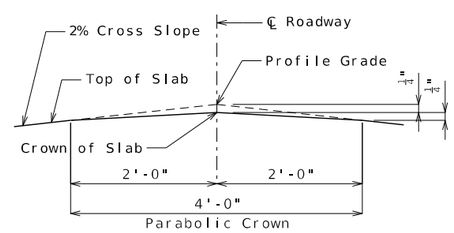

DETAIL A

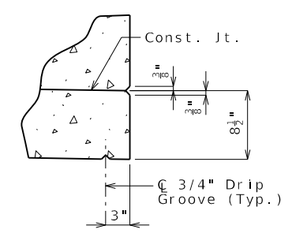

DETAIL B

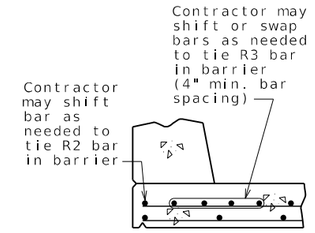

OPTIONAL SHIFTING
TOP BARS AT BARRIER

	Sequence of Pours			Min. Rate of Pour Cu. Yds./Hr.
	Direction			With Retarder
Basic Sequence	1	2	3	25
	End to 2	1 to 3	2 to End	
Alternate pours to the basic sequence are subject to the approval of the engineer in accordance with Sec 703.				
Alternate A Pours	1 + 2		3	25
	End to 3		2 to End	
Alternate B Pours	1 + 2 + 3			25
	End to End			

The contractor shall furnish an approved retarder to retard the set of the concrete to 2.5 hours, and shall pour and satisfactorily finish the slab pours at the rate given.

The concrete diaphragm at the intermediate bents and integral end bents shall be poured a minimum of 30 minutes and a maximum of 2 hours before the slab is poured.

SLAB POURING SEQUENCE

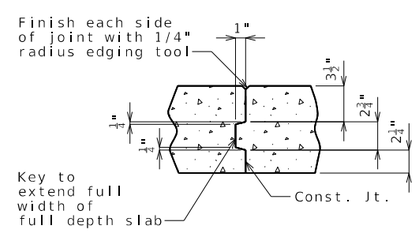

FULL DEPTH SLAB

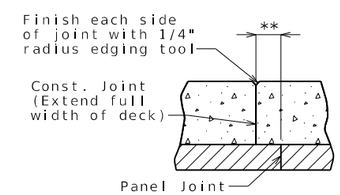

** Adjust the construction joint to a clearance of 6 inches minimum from the panel joint.

SLAB ON PANELS

SLAB CONSTRUCTION JOINT

Notes:

For details of precast prestressed panels, see Sheet No. 17.

For reinforcement of barrier not shown, see Sheets No. 22 & 23.

For Theoretical Bottom of Slab Elevations, Girder Camber Diagram and Theoretical Slab Haunching Diagram, see Sheet No. 19.

For Plan of Slab Showing Reinforcement, see Sheet No. 20.

SLAB DETAILS

Detailed Jan 2025
Checked Jan 2025

Note: This drawing is not to scale. Follow dimensions.

DATE PREPARED 7/25/2025

ROUTE	STATE
67	MO
DISTRICT	SHEET NO.
BR	21

COUNTY WAYNE
JOB NO. JSE0083
CONTRACT ID.
PROJECT NO.
BRIDGE NO. A9610

DATE	DESCRIPTION

MISSOURI HIGHWAYS AND TRANSPORTATION COMMISSION
105 WEST CAPITOL
JEFFERSON CITY, MO 65102
1-888-ASK-MODOT (1-888-275-6636)

GBA
16305 SWINGLEY RIDGE RD
ST. 300
CHESTERFIELD, MO 63017
314.231.0100
GBAteam.com

GEORGE BUTLER
ASSOCIATES, INC.
PRO. ENGINEER 000133
ARCHITECT 000212
PRO. LAND SURVEYOR 000059

NICHOLE WITUSHYNSKY
PROFESIONAL
ENGINEER
PE-2018037127

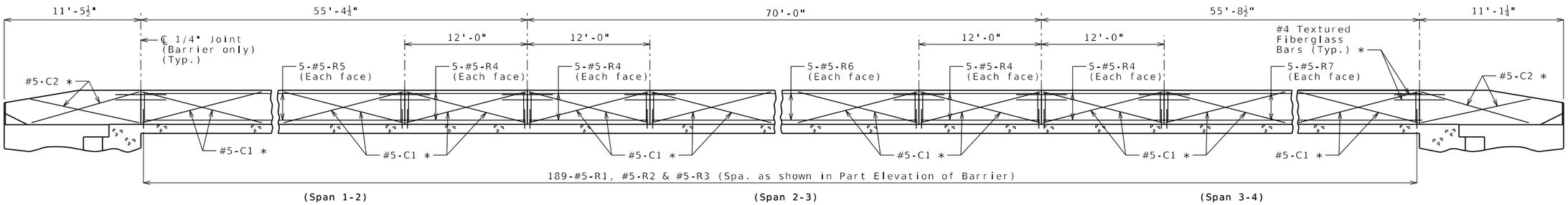

ELEVATION OF BARRIER

(Left barrier shown, right barrier similar)

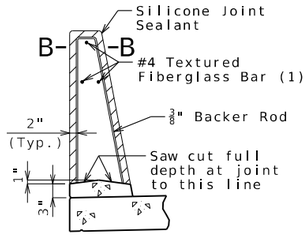

SECTION THRU SAW CUT JOINT

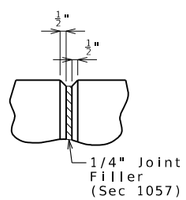

PART ELEVATION AT FORMED JOINT

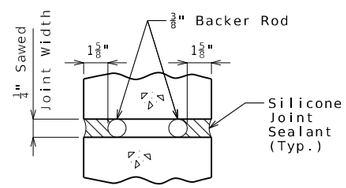

SECTION B-B

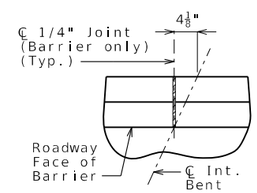

PART PLAN SHOWING JOINT LOCATION

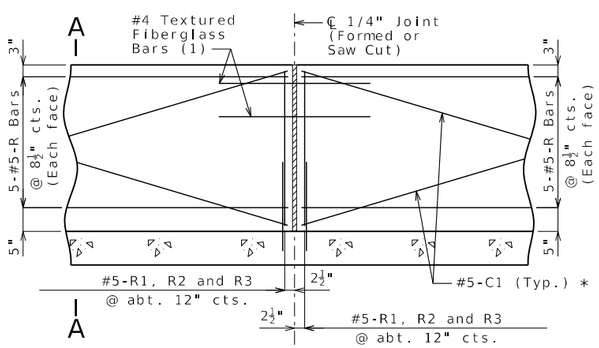

PART ELEVATION OF BARRIER

(1) Four feet long, centered on joint, slip-formed option only

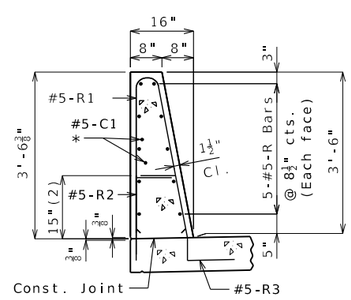

SECTION A-A

Use a minimum lap of 3'-1" for #5 horizontal barrier bars.

The cross-sectional area above the slab is 3.52 square feet.

(2) To top of bar

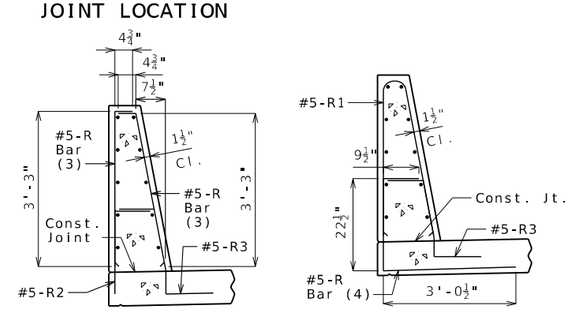

R-BAR PERMISSIBLE ALTERNATE SHAPE

(3) The R1 bar may be separated into two bars as shown, at the contractor's option, only when slip forming is not used. (All dimensions are out to out.)

(4) The R2 bar and #5 bottom transverse slab bar in cantilever (prestressed panels only) combination may be furnished as one bar as shown, at the contractor's option.

General Notes:

* Slip-formed option only.

Conventional forming or slip forming may be used. Saw cut joints may be used with conventional forming.

Top of barrier shall be built parallel to grade and barrier joints (except at end bents) normal to grade.

All exposed edges of barrier shall have either a 1/2-inch radius or a 3/8-inch bevel, unless otherwise noted.

Payment for all concrete and reinforcement, complete in place, will be considered completely covered by the contract unit price for Type D Barrier per linear foot.

Concrete in barrier shall be Class B-1.

Measurement of barrier is to the nearest linear foot for each structure, measured along the outside top of slab from end of wing to end of wing.

Concrete traffic barrier delineators shall be placed on top of the barrier as shown on Missouri Standard Plan 617.10 and in accordance with Sec 617. Delineators on bridges with two-lane, one-way traffic shall have retroreflective sheeting on one side. Concrete traffic barrier delineators will be considered completely covered by the contract unit price for Type D Barrier.

Joint sealant and backer rods shall be in accordance with Sec 717 for silicone joint sealant for saw cut and formed joints.

For slip-formed option, both sides of barrier shall have a vertically broomed finish and the top shall have a transversely broomed finish.

TYPE D BARRIER

Detailed Jan 2025
Checked Jan 2025

Note: This drawing is not to scale. Follow dimensions.

STATE OF MISSOURI
RYAN G. HAGERTY
NUMBER PE-2016034015
PROFESSIONAL ENGINEER

THIS SHEET HAS BEEN SIGNED, SEALED, AND DATED ELECTRONICALLY

DATE PREPARED	
7/25/2025	
ROUTE 67	STATE MO
DISTRICT BR	SHEET NO. 22
COUNTY WAYNE	
JOB NO. JSE0083	
CONTRACT ID.	
PROJECT NO.	
BRIDGE NO. A9610	

DATE	DESCRIPTION

IF A SEAL IS PRESENT ON THIS SHEET IT HAS BEEN ELECTRONICALLY SEALED AND DATED.

MISSOURI HIGHWAYS AND TRANSPORTATION COMMISSION
105 WEST CAPITOL
JEFFERSON CITY, MO 65102
1-888-ASK-MODOT (1-888-275-6636)

GBA
16305 SWINGLEY RIDGE RD
ST. 300
CHESTERFIELD, MO 63017
314.231.0100
GBAteam.com

GEORGE BUTLER ASSOCIATES, INC.
PRO. ENGINEER 000133
ARCHITECT 000212
PRO. LAND SURVEYOR 000059

NICHOLE WITUSHYNSKY
PROFESIONAL ENGINEER
PE-2018037127

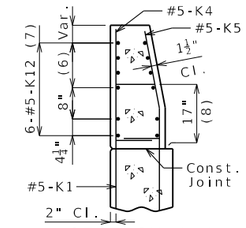

SECTION A-A

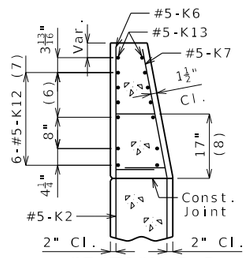

SECTION B-B

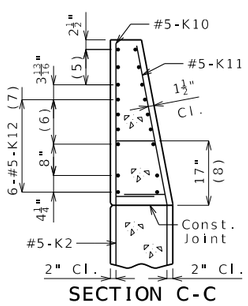

SECTION C-C

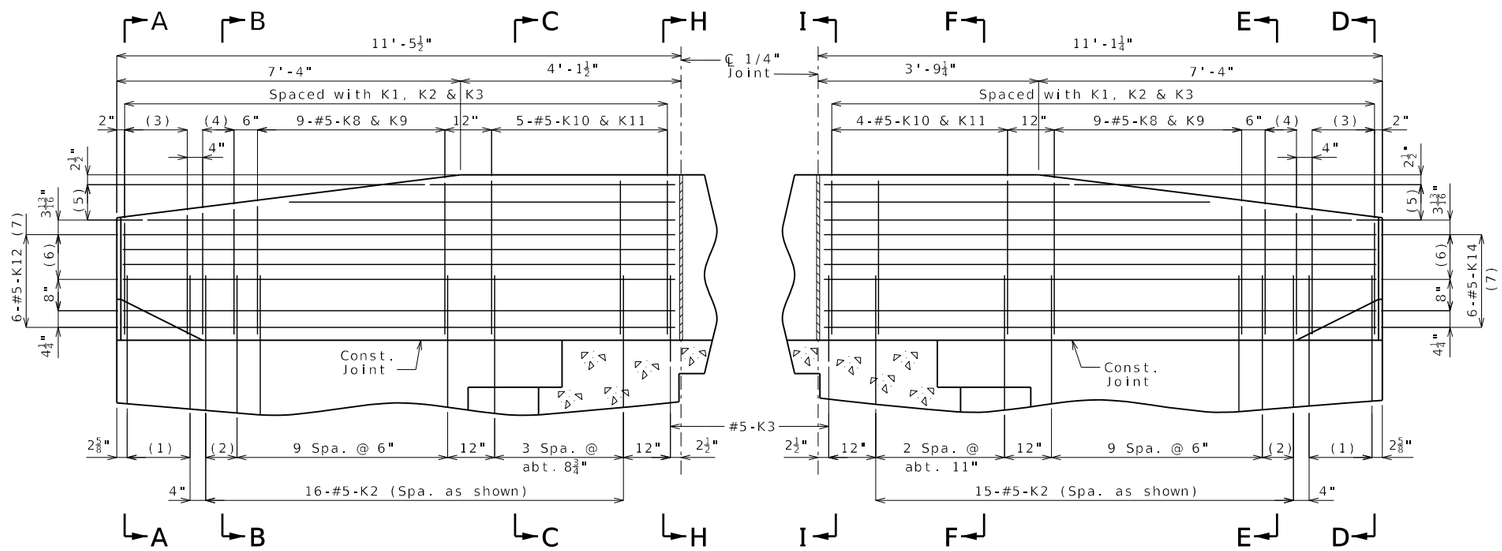

PART ELEVATION

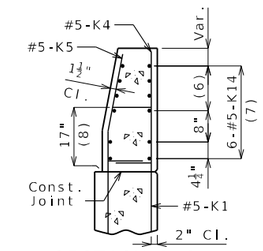

SECTION D-D

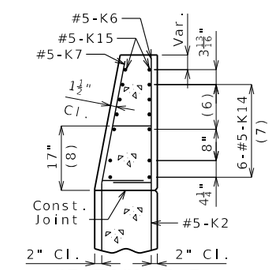

SECTION E-E

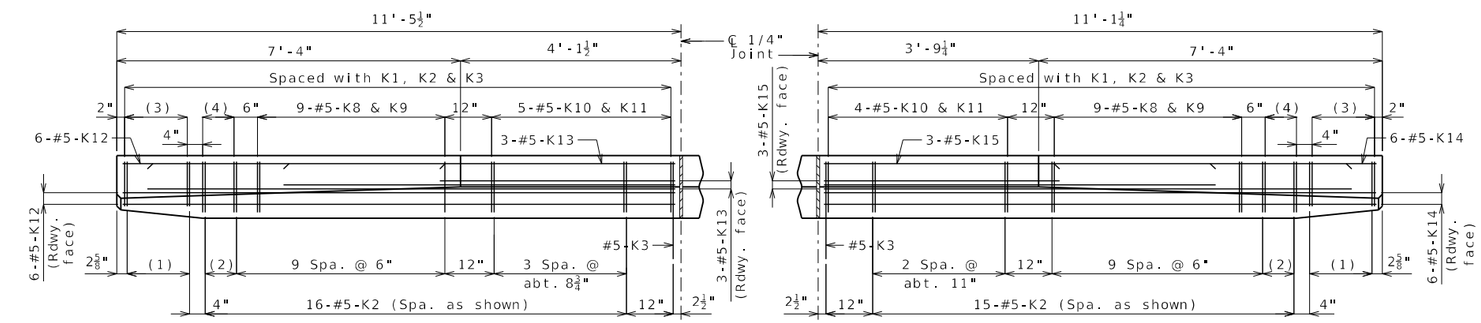

PART PLAN

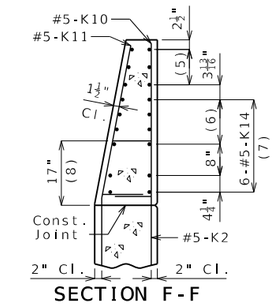

SECTION F-F

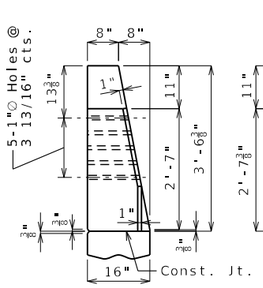

ELEVATION G-G

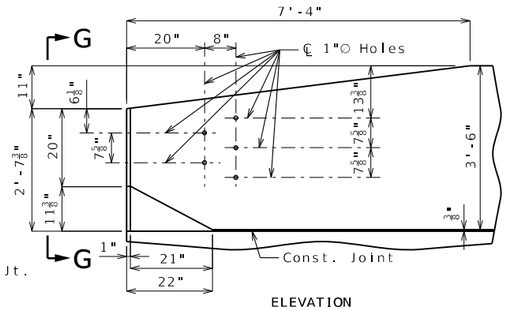

ELEVATION

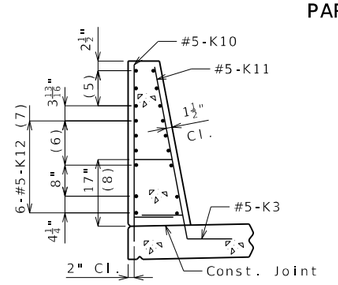

SECTION H-H

(1) 5-#5-K1 @ 4" cts.

(2) 2 spaces @ 4"

(3) 5-#5-K4 & K5

(4) 3-#5-K6 & K7

(5) 3-#5-K13 or K15 @ 4½" cts., each face

(6) 3 spaces @ 3 13/16"

(7) Spaced as shown, each face

(8) To top of bar

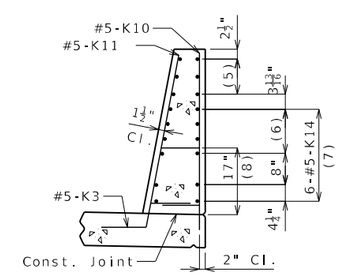

SECTION I-I

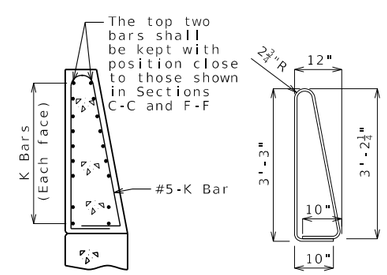

K10-K11 BAR PERMISSIBLE ALTERNATE SHAPE

(Other K bars not shown for clarity)

The K10-K11 bar combination may be furnished as one bar as shown, at the contractor's option.

All dimensions are out to out.

* Transition to zero at Type A curb for gutter lines to match.

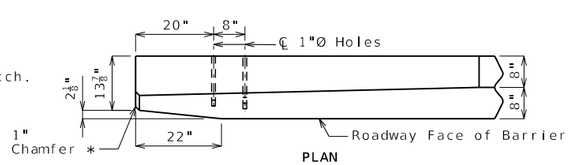

PLAN

DETAILS OF GUARD RAIL ATTACHMENT

General Notes:

Concrete traffic barrier delineators shall be placed on top of the barrier as shown on Missouri Standard Plan 617.10 and in accordance with Sec 617. Delineators on bridges with two-lane, one-way traffic shall have retroreflective sheeting on one side. Concrete traffic barrier delineators will be considered completely covered by the contract unit price for Type D Barrier.

Reinforcing Steel:
Minimum clearance to reinforcing steel shall be 1 1/2" except as shown for bars embedded into end bent.

TYPE D BARRIER AT END BENTS

(Left barrier shown, right barrier similar)

Detailed Jan 2025
Checked Jan 2025

Note: This drawing is not to scale. Follow dimensions.

STATE OF MISSOURI
RYAN G. HAGERTY
NUMBER PE-2016034015
PROFESSIONAL ENGINEER

THIS SHEET HAS BEEN SIGNED, SEALED, AND DATED ELECTRONICALLY

DATE PREPARED	
7/25/2025	
ROUTE	STATE
67	MO
DISTRICT	SHEET NO.
BR	23
COUNTY	
WAYNE	
JOB NO.	
JSE0083	
CONTRACT ID.	
PROJECT NO.	
BRIDGE NO.	
A9610	

DESCRIPTION	DATE

IF A SEAL IS PRESENT ON THIS SHEET IT HAS BEEN ELECTRONICALLY SEALED AND DATED.

MISSOURI HIGHWAYS AND TRANSPORTATION COMMISSION
105 WEST CAPITOL
JEFFERSON CITY, MO 65102
1-888-ASK-MODOT (1-888-275-6636)

GBA
16305 SWINGLEY RIDGE RD
ST. 300
CHESTERFIELD, MO 63017
314.231.0100
GBAteam.com

GEORGE BUTLER ASSOCIATES, INC.
PRO. ENGINEER 000133
ARCHITECT 000212
PRO. LAND SURVEYOR 000059

NICHOLE WITUSHYNSKY
PROFESIONAL ENGINEER
PE-2018037127

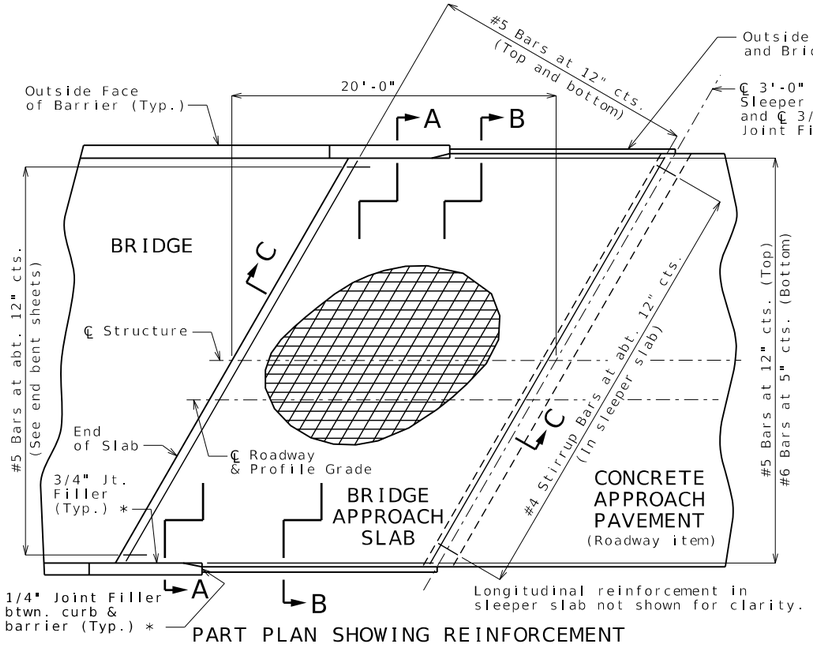

PART PLAN SHOWING REINFORCEMENT

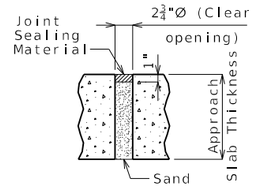

UNDERSEAL ACCESS HOLE DETAIL

(If required)

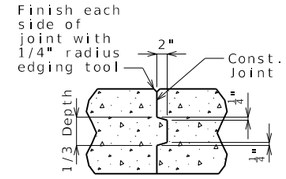

CONSTRUCTION JOINT DETAIL

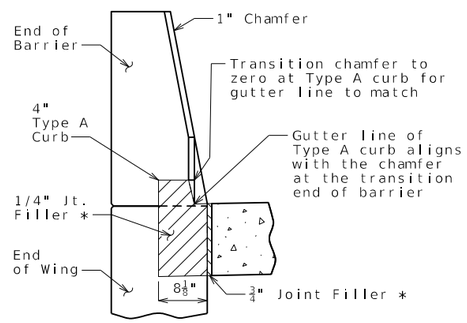

SECTION BETWEEN CURB AND BARRIER

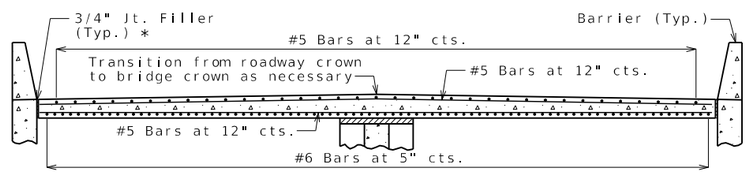

SECTION A-A

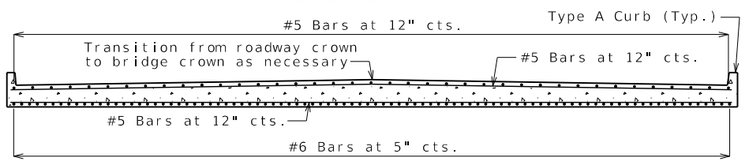

SECTION B-B

With the approval of the engineer, the contractor may crown the bottom of the approach slab to match the crown of the roadway surface.

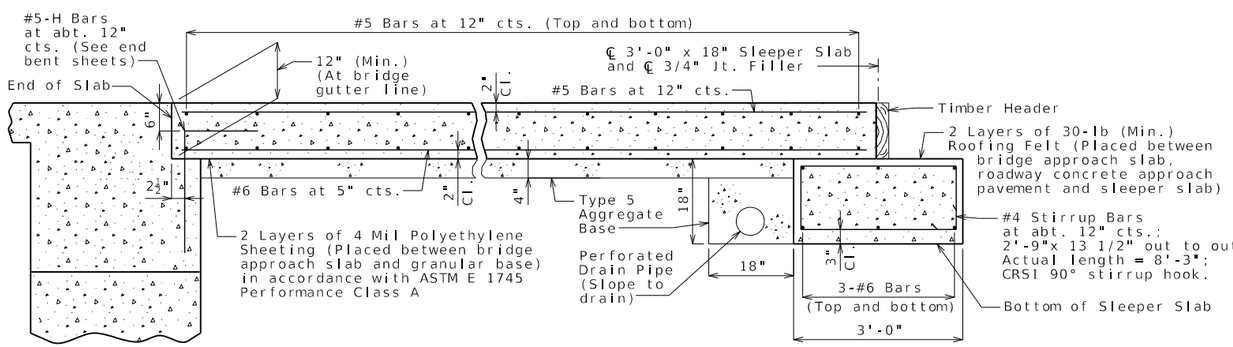

SECTION C-C

(Intermediate wing not shown for clarity)

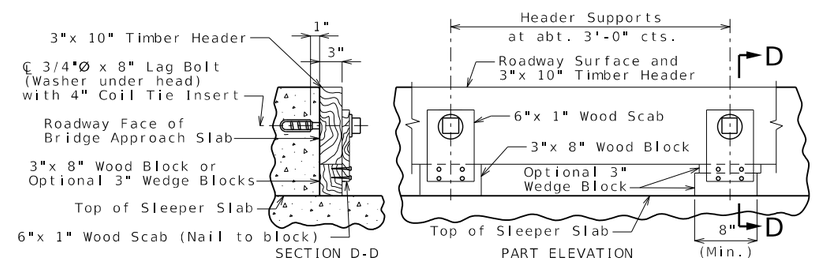

DETAILS OF TIMBER HEADER

Remove timber header when concrete pavement is placed.

General Notes:

All concrete for the bridge approach slab and sleeper slab shall be in accordance with Sec 503 (f'c = 4,000 psi).

The reinforcing steel in the bridge approach slab and the sleeper slab shall be epoxy coated Grade 60 with fy = 60,000 psi.

Drain pipe may be either 6" diameter corrugated metallic-coated pipe underdrain, 4" diameter corrugated polyvinyl chloride (PVC) drain pipe, or 4" diameter corrugated polyethylene (PE) drain pipe.

Minimum clearance to reinforcing steel shall be 1 1/2", unless otherwise shown.

The reinforcing steel in the bridge approach slab and the sleeper slab shall be continuous. The transverse reinforcing steel may be made continuous by providing a minimum lap splice of 29 inches for #5 bars and 44 inches for #6 bars, or by mechanical bar splice.

Mechanical bar splices shall be in accordance with Sec 710.

All joint filler shall be in accordance with Sec 1057 for preformed fiber expansion joint filler except as noted.

The contractor shall pour and satisfactorily finish the bridge slab before placing the bridge approach slab.

Longitudinal construction joints in approach slab and sleeper slab shall be aligned with longitudinal construction joints in bridge slab.

For concrete approach pavement details, see roadway plans.

See Missouri Standard Plan 609.00 for details of Type A curb.

Payment for furnishing all materials, labor and excavation necessary to construct the approach slab, including the timber header, sleeper slab, underdrain, Type 5 aggregate base, joint filler and all other appurtenances and incidental work as shown on this sheet, complete in place, will be considered completely covered by the contract unit price for Bridge Approach Slab (Major) per square yard.

* Seal joint between vertical face of approach slab and wing with sealant in accordance with Sec 717 for silicone joint sealant for saw cut and formed joints.

STATE OF MISSOURI
RYAN G. HAGERTY
NUMBER PE-2016034015
PROFESSIONAL ENGINEER

THIS SHEET HAS BEEN SIGNED, SEALED, AND DATED ELECTRONICALLY

DATE PREPARED	
7/25/2025	
ROUTE	STATE
67	MO
DISTRICT	SHEET NO.
BR	24
COUNTY	
WAYNE	
JOB NO.	
JSE0083	
CONTRACT ID.	
PROJECT NO.	
BRIDGE NO.	
A9610	

DESCRIPTION	DATE

IF A SEAL IS PRESENT ON THIS SHEET IT HAS BEEN ELECTRONICALLY SEALED AND DATED.

MISSOURI HIGHWAYS AND TRANSPORTATION COMMISSION
105 WEST CAPITOL
JEFFERSON CITY, MO 65102
1-888-ASK-MODOT (1-888-275-6636)

GBA
16305 SWINGLEY RIDGE RD
ST. 300
CHESTERFIELD, MO 63017
314.231.0100
GBAteam.com

GEORGE BUTLER ASSOCIATES, INC.
PRO. ENGINEER 000133
ARCHITECT 000212
PRO. LAND SURVEYOR 000059

NICHOLE WITUSHYNSKY
PROFESIONAL ENGINEER
PE-2018037127

Detailed Jan 2025
Checked Jan 2025

BRIDGE APPRAOCH SLAB (MAJOR)

Note: This drawing is not to scale. Follow dimensions.

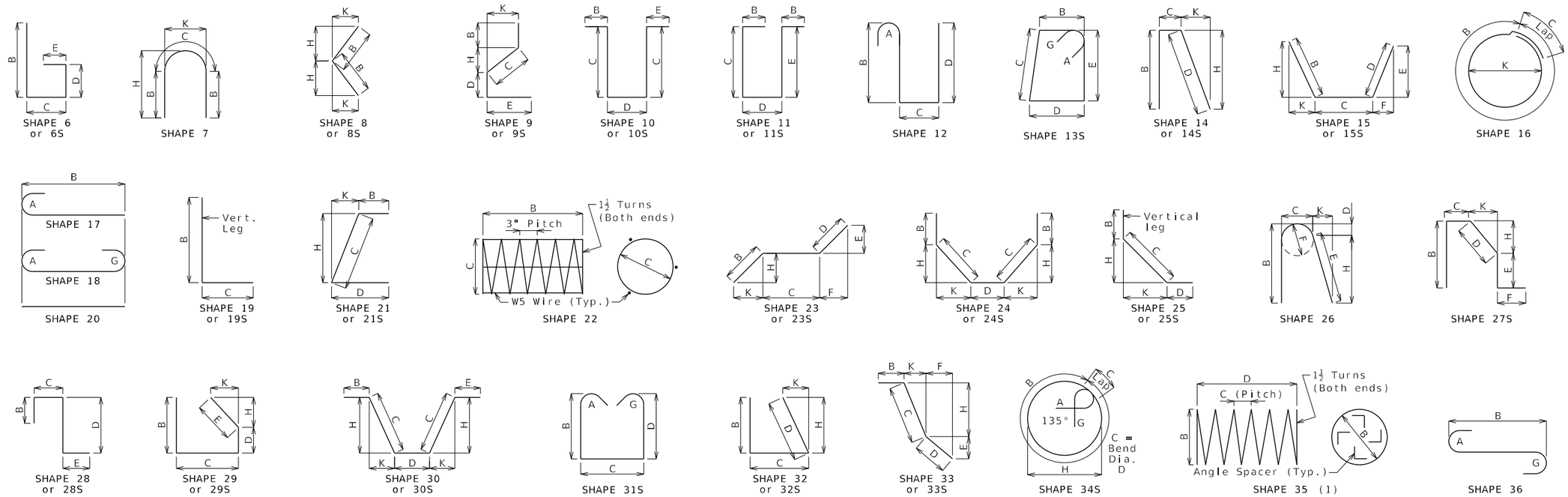

Finished Bend Diameters D and Hook Dimensions

Standard Pin Bend Shapes

Size	Case	D	A or G 90°	A or G 180°	J 180°
#4	1	3"	8"	6"	4"
#5	1	3¾"	10"	7"	5"
#6	1	4½"	12"	8¼"	6"
#7	2	5¼"	14"	9¾"	7"
	3	7"	15"	11½"	8¾"
#8	2	6"	16"	11"	8"
	3	8"	17"	13¼"	10"
#9	1	9½"	19½"	15½"	11¾"
#10	1	10¾"	22"	17½"	13¼"
#11	1	12"	24½"	19½"	14⅞"
#14	1	18¼"	31¼"	27½"	21⅝"
#18	1	24"	41½"	36¼"	28½"

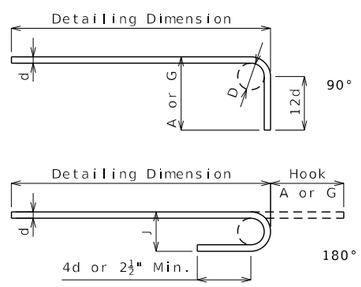

Stirrup Pin Bend Shapes (S)

Size	Case	D	A or G 90°	A or G 135°	A or G 180°	H 135°	J 180°
#4	2	2"	4½"	4¼"	5"	2⅞"	3"
	3	3"	5"	5¼"	6"	3"	4"
#5	2	2½"	5¾"	5¾"	5¾"	3⅝"	3¾"
	3	3¾"	6¼"	6½"	7"	3⅞"	5"
#6	1	4½"	12"	7¾"	8¼"	4⅝"	6"

Applicable for all grades of steel.

Case 1 applies to all reinforcement. Case 2 applies to all reinforcement except for galvanized bars. Case 3 applies to galvanized bars only.

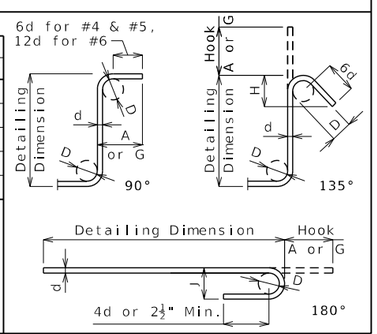

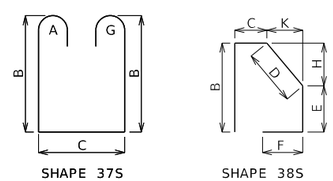

BENDING DIAGRAMS

All dimensions are out to out.

Shapes ending with an S shall be bent in accordance with stirrup pin bend shapes.

Unless otherwise noted, finished bending diameter D is the same for all bends of a shape.

(1) Shall be a deformed or plain spiral bar or wire.

Four angle or channel spacers are required for each column spiral. Spacers are to be placed on inside of spirals. Length and weight of column spirals do not include splices or spacers.

Reinforcing Steel Totals (Pounds)

	Size	Substructure Plain	Substructure Epoxy	Superstructure Slab Plain	Superstructure Slab Epoxy	Superstructure Barrier	Superstructure Slip Form	Entire Bridge Plain	Entire Bridge Epoxy
By Size	W5	0	0	0	0	0	0	0	0
	4	22	0	0	750	0	0	22	750
	5	4180	0	0	11559	10726	574	4180	22859
	6	6400	0	0	30128	0	0	6400	30128
	7	0	0	0	7726	0	0	0	7726
	8	0	0	0	936	0	0	0	936
	9	0	0	0	0	0	0	0	0
	10	22040	0	0	0	0	0	22040	0
	11	3166	0	0	0	0	0	3166	0
	14	0	0	0	0	0	0	0	0
	18	0	0	0	0	0	0	0	0
By Type		35808	0	0	51099	10726	574	35808	62399

All superstructure reinforcing steel shall be epoxy coated unless otherwise specified.

BENDING DIAGRAMS AND REINFORCING STEEL TOTALS

Detailed Jan 2025
Checked Jan 2025

Note: This drawing is not to scale. Follow dimensions.

STATE OF MISSOURI
RYAN G. HAGERTY
NUMBER PE-2016034015
PROFESSIONAL ENGINEER

THIS SHEET HAS BEEN SIGNED, SEALED, AND DATED ELECTRONICALLY

DATE PREPARED 7/25/2025

ROUTE	STATE
67	MO
DISTRICT	SHEET NO.
BR	25

COUNTY WAYNE

JOB NO. JSE0083

CONTRACT ID.

PROJECT NO.

BRIDGE NO. A9610

DATE	DESCRIPTION

IF A SEAL IS PRESENT ON THIS SHEET IT HAS BEEN ELECTRONICALLY SEALED AND DATED.

MISSOURI HIGHWAYS AND TRANSPORTATION COMMISSION
105 WEST CAPITOL
JEFFERSON CITY, MO 65102
1-888-ASK-MODOT (1-888-275-6636)

GBA
16305 SWINGLEY RIDGE RD
ST. 300
CHESTERFIELD, MO 63017
314.231.0100
GBAteam.com

GEORGE BUTLER ASSOCIATES, INC.
PRO. ENGINEER 000133
ARCHITECT 000212
PRO. LAND SURVEYOR 000059

NICHOLE WITUSHYNSKY
PROFESIONAL ENGINEER
PE-2018037127

Bill of Reinforcing Steel

No. Req.	Size/ Mark	Location	Codes C	SH	V	Dimensions B ft in.	C ft in.	D ft in.	E ft in.	F ft in.	H ft in.	K ft in.	Nom. Length ft in.	Actual Length ft in.	Weight lb
		Substructure													
		Int Bent 2													
32	6 D201	BEAM		20		2 6.00							2 6	2 6	120
8	10 H201	BEAM		18		37 3.00							40 1	40 1	1380
8	11 H202	BEAM		20		37 3.00							37 3	37 3	1583
8	6 H203	BEAM		20		37 3.00							37 3	37 3	448
12	6 H204	BEAM		10S			12.00	3 1.50					5 2	4 10	87
8	6 H205	BEAM		20		4 1.00							4 1	4 1	49
2	5 P201	COLUMN		35		2 9.00	3.00	13 6.75					494 4	485 5	1013
2	5 P202	DRILLED SHAFT		35		3 6.00	12.00	21 6.00					269 11	266 4	556
2	5 P203	ROCK SOCKET		35		3 0.00	12.00	10 6.00					127 4	125 7	262
26	5 P204	COLUMN		34S		8 7.50	3.00				2 9.00		9 10	9 10	267
96	6 U201	BEAM		13S		2 2.00	4 3.00	2 2.00	4 3.00				14 1	13 8	1971
20	6 U202	BEAM		10S			4 3.00	2 2.00					10 8	10 4	310
10	6 U203	BEAM		13S		2 2.00	4 7.00	2 2.00	4 7.00				14 9	14 4	215
4	4 U204	BEAM		10S			6.00	3 3.00					4 3	4 1	11
40	10 V201	COLUMN		20		19 2.00							19 2	19 2	3299
44	10 V202	DRILLED SHAFT		20		21 9.00							21 9	21 9	4118
44	10 V203	ROCK SOCKET		20		14 4.00							14 4	14 4	2714
		Int Bent 3													
32	6 D301	BEAM		20		2 6.00							2 6	2 6	120
8	10 H301	BEAM		18		37 3.00							40 1	40 1	1380
8	11 H302	BEAM		20		37 3.00							37 3	37 3	1583
8	6 H303	BEAM		20		37 3.00							37 3	37 3	448
12	6 H304	BEAM		10S			12.00	3 1.50					5 2	4 10	87
8	6 H305	BEAM		20		4 1.00							4 1	4 1	49
2	5 P301	COLUMN		35		2 9.00	3.00	15 6.75					563 5	553 3	1154
2	5 P302	DRILLED SHAFT		35		3 6.00	12.00	15 6.00					203 8	201 1	419
2	5 P303	ROCK SOCKET		35		3 0.00	12.00	9 6.00					117 10	116 3	242
26	5 P304	COLUMN		34S		8 7.50	3.00				2 9.00		9 10	9 10	267
96	6 U301	BEAM		13S		2 2.00	4 3.00	2 2.00	4 3.00				14 1	13 8	1971
20	6 U302	BEAM		10S			4 3.00	2 2.00					10 8	10 4	310
10	6 U303	BEAM		13S		2 2.00	4 7.00	2 2.00	4 7.00				14 9	14 4	215
4	4 U304	BEAM		10S			6.00	3 3.00					4 3	4 1	11
40	10 V301	COLUMN		20		21 2.00							21 2	21 2	3643
44	10 V302	DRILLED SHAFT		20		15 9.00							15 9	15 9	2982
44	10 V303	ROCK SOCKET		20		13 4.00							13 4	13 4	2524
		Superstructure													
		End Bent 1													
9	6 F101	WING BRACE	E	23		2 3.00	5 11.50	14.00	8.50	11.00	16.50	21.50	9 4	9 4	126
4	6 F102	DIAPHRAGM	E	21			4 11.00	2 7.25			4 9.00	15.25	7 6	7 4	44
9	6 F103	WING BRACE	E	23		2 3.00	4 7.50	14.00	11.00	8.50	21.50	16.50	8 0	7 11	107
4	6 F104	DIAPHRAGM	E	21		2 7.25	4 4.50				4 2.75	13.50	7 0	6 10	41
18	6 F105	WING BRACE	E	23		2 3.00	5 2.75	14.00	10.00	10.00	19.00	19.00	8 8	8 7	232
20	6 H101	BEAM	E	20		39 9.00							39 9	39 9	1194
4	6 H102	BEAM	E	20		2 9.00							2 9	2 9	17
8	6 H103	DIAPHRAGM	E	20		6 8.00							6 8	6 8	80
8	6 H104	DIAPHRAGM	E	20		7 8.00							7 8	7 8	92
4	6 H105	DIAPHRAGM	E	20		2 7.00							2 7	2 7	16
4	6 H106	DIAPHRAGM	E	20		2 1.00							2 1	2 1	13
5	5 H107	STRAND TIE	E	20		3 11.00							3 11	3 11	20
8	8 H108	WING	E	17		10 6.00							11 5	11 5	244
8	8 H109	WING	E	20		10 6.00							10 6	10 6	224
20	6 H110	WING	E	17		9 8.00							10 4	10 4	310
20	6 H111	WING	E	20		9 8.00							9 8	9 8	290
18	6 H112	WING	E	6		8 10.50	12.00						9 11	9 9	264
26	5 U101	BEAM	E	37S		4 7.00	2 10.00						13 2	13 0	353
10	4 U102	BEAM	E	13S		2 10.00	2 8.00	2 10.00	2 8.00				11 9	11 6	77

Bill of Reinforcing Steel

No. Req.	Size/ Mark	Location	Codes C	SH	V	Dimensions B ft in.	C ft in.	D ft in.	E ft in.	F ft in.	H ft in.	K ft in.	Nom. Length ft in.	Actual Length ft in.	Weight lb
3	4 U103	BEAM	E	13S		2 10.00	3 0.00	2 10.00	3 0.00				12 5	12 2	24
2	4 U104	BEAM	E	10S			2 8.00	2 10.00					8 2	8 0	11
34	5 U105	DIAPHRAGM	E	37S		3 8.25	2 3.75						10 10	10 8	378
34	6 U106	DIAPHRAGM	E	19S		2 7.00	2 10.00						5 5	5 3	268
49	6 U107	DIAPHRAGM	E	19S		2 11.00	4 7.50						7 7	7 5	546
36	5 U108	DIAPHRAGM	E	19S		2 0.00	15.00						3 3	3 2	119
16	5 V101	BEAM	E	17		4 7.00							5 2	5 2	86
15	6 V102	DIAPHRAGM	E	20		2 7.00							2 7	2 7	58
18	6 V103	WING	E	20		6 10.00							6 10	6 10	185
18	6 V104	WING	E	20		6 9.00							6 9	6 9	182
16	6 V105	WING	E	20		5 6.00							5 6	5 6	132
		End Bent 4													
9	6 F401	WING BRACE	E	23		2 3.00	5 11.50	14.00	8.50	11.00	16.50	21.50	9 4	9 4	126
4	6 F402	DIAPHRAGM	E	21			4 11.00	2 7.25			4 9.00	15.25	7 6	7 4	44
9	6 F403	WING BRACE	E	23		2 3.00	4 7.50	14.00	11.00	8.50	21.50	16.50	8 0	7 11	107
4	6 F404	DIAPHRAGM	E	21		2 7.25	4 4.50				4 2.75	13.50	7 0	6 10	41
18	6 F405	WING BRACE	E	23		2 3.00	5 2.75	14.00	10.00	10.00	19.00	19.00	8 8	8 7	232
20	6 H401	BEAM	E	20		39 9.00							39 9	39 9	1194
4	6 H402	BEAM	E	20		2 9.00							2 9	2 9	17
8	6 H403	DIAPHRAGM	E	20		6 8.00							6 8	6 8	80
8	6 H404	DIAPHRAGM	E	20		7 8.00							7 8	7 8	92
4	6 H405	DIAPHRAGM	E	20		2 7.00							2 7	2 7	16
4	6 H406	DIAPHRAGM	E	20		2 1.00							2 1	2 1	13
5	5 H407	STRAND TIE	E	20		3 11.00							3 11	3 11	20
8	8 H408	WING	E	17		10 6.00							11 5	11 5	244
8	8 H409	WING	E	20		10 6.00							10 6	10 6	224
20	6 H410	WING	E	17		9 8.00							10 4	10 4	310
20	6 H411	WING	E	20		9 8.00							9 8	9 8	290
18	6 H412	WING	E	6		8 10.50	12.00						9 11	9 9	264
26	5 U401	BEAM	E	37S		4 7.00	2 10.00						13 2	13 0	353
10	4 U402	BEAM	E	13S		2 10.00	2 8.00	2 10.00	2 8.00				11 9	11 6	77
3	4 U403	BEAM	E	13S		2 10.00	3 0.00	2 10.00	3 0.00				12 5	12 2	24
2	4 U404	BEAM	E	10S			2 8.00	2 10.00					8 2	8 0	11
34	5 U405	DIAPHRAGM	E	37S		3 8.25	2 3.75						10 10	10 8	378
34	6 U406	DIAPHRAGM	E	19S		2 7.00	2 10.00						5 5	5 3	268
49	6 U407	DIAPHRAGM	E	19S		2 11.00	4 7.50						7 7	7 5	546
36	5 U408	DIAPHRAGM	E	19S		2 0.00	15.00						3 3	3 2	119
16	5 V401	BEAM	E	17		4 7.00							5 2	5 2	86
15	6 V402	DIAPHRAGM	E	20		2 7.00							2 7	2 7	58
18	6 V403	WING	E	20		6 9.00							6 9	6 9	182
18	6 V404	WING	E	20		6 10.00							6 10	6 10	185
16	6 V405	WING	E	20		5 6.00							5 6	5 6	132
		Int Bents 2 & 3													
16	6 H501	DIAPHRAGM	E	20		6 8.00							6 8	6 8	160
16	4 H502	DIAPHRAGM	E	20		7 8.00							7 8	7 8	82
12	5 H503	DIAPHRAGM	E	20		3 11.00							3 11	3 11	49
8	5 H504	DIAPHRAGM	E	20		2 11.00							2 11	2 11	24
96	4 U501	DIAPHRAGM	E	28S			18.00	3 6.00	2 1.25				7 1	6 11	444
16	6 U502	DIAPHRAGM	E	28S			2 2.00	3 6.25	2 1.25				7 10	7 6	180
8	5 U503	DIAPHRAGM	E	6S		2 7.50	12.25						3 8	3 6	29
16	5 V501	DIAPHRAGM	E	20		3 6.00							3 6	3 6	58
		Slab													
28	6 S1	TOP SLAB	E	20	2	12 4.25							12 4	12 4	1025
		INCR = 22.25 IN				36 5.50							36 5	36 5	
353	6 S2	TOP SLAB	E	20		38 5.00							38 5	38 5	20369
128	5 S3	TOP SLAB	E	20		48 10.00							48 10	48 10	6519
60	7 S4	TOP SLAB	E	20		33 0.00							33 0	33 0	4047
60	7 S5	TOP SLAB	E	20		30 0.00							30 0	30 0	3679
24	5 S6	BOTTOM SLAB	E	20		48 10.00							48 10	48 10	1222
558	5 S7	BOTTOM SLAB	E	20		3 0.00							3 0	3 0	1746

Nominal lengths are based on out to out dimensions shown in bending diagrams and are listed to the nearest inch for fabricator's use. Actual lengths are measured along centerline bar to the nearest inch. Weights are based on actual lengths.

For bending diagrams and steel reinforcing totals, see Sheet No. 25.

Detailed Jan 2025
Checked Jan 2025

All bars shall be Grade 60.

BILL OF REINFORCING STEEL

Note: This drawing is not to scale. Follow dimensions.

Codes: C = Required coatings, where E = Epoxy Coated and G = Galvanized.

SH = Required shape, see bending diagrams.

V = Sets of varied bars and number of bars of each length. Bar dimensions vary in equal increments between dimensions shown on this line and the following line and the actual length dimension shown on this line and the following line vary by the specified increment.

STATE OF MISSOURI
RYAN G. HAGERTY
NUMBER PE-2016034015
PROFESSIONAL ENGINEER

THIS SHEET HAS BEEN SIGNED, SEALED, AND DATED ELECTRONICALLY

DATE PREPARED 7/25/2025

ROUTE	STATE
67	MO

DISTRICT	SHEET NO.
BR	26

COUNTY: WAYNE

JOB NO.: JSE0083

CONTRACT ID.

PROJECT NO.

BRIDGE NO.: A9610

DESCRIPTION	DATE

MISSOURI HIGHWAYS AND TRANSPORTATION COMMISSION
105 WEST CAPITOL
JEFFERSON CITY, MO 65102
1-888-ASK-MODOT (1-888-275-6636)

GBA
16305 SWINGLEY RIDGE RD
ST. 300
CHESTERFIELD, MO 63017
314.231.0100
GBAteam.com

GEORGE BUTLER ASSOCIATES, INC.
PRO. ENGINEER 000133
ARCHITECT 000212
PRO. LAND SURVEYOR 000059

NICHOLE WITUSHYNSKY
PROFESIONAL ENGINEER
PE-2018037127

IF A SEAL IS PRESENT ON THIS SHEET IT HAS BEEN ELECTRONICALLY SEALED AND DATED.

Bill of Reinforcing Steel

No. Req.	Size/ Mark	Location	Codes C	Codes SH	Codes V	Dimensions B ft in.	C ft in.	D ft in.	E ft in.	F ft in.	H ft in.	K ft in.	Nom. Length ft in.	Actual Length ft in.	Weight lb
		Barrier													
		Type D													
20	5 K1	BARRIER	E	27S		3 8.00	9.25	5.25	3 2.75		5.25	1.00	8 1	7 11	165
62	5 K2	BARRIER	E	27S		3 8.000	9.250	14.500	2 5.750		14.250	2.750	8 1	7 11	512
4	5 K3	BARRIER	E	27S		22.500	9.250	14.500	7.750	12.000	14.250	2.750	5 6	5 2	22
20	5 K4	BARRIER	E	19S	4	2 4.250	10.000						3 2	3 1	66
		INCR = 0.5 IN				2 6.250	10.000						3 4	3 3	
20	5 K5	BARRIER	E	38S	4			18.500	9.500	8.250	18.000	4.000	3 0	2 10	61
		INCR = 0.5 IN						20.500	9.500	8.250	20.000	4.500	3 2	3 0	
12	5 K6	BARRIER	E	19S		2 6.750	10.000						3 5	3 3	41
12	5 K7	BARRIER	E	21S			2 6.500	10.000			2 6.000	6.250	3 5	3 2	40
36	5 K8	BARRIER	E	19S	4	2 8.500	10.000						3 7	3 5	138
		INCR = 0.75 IN				3 2.500	10.000						4 1	3 11	
36	5 K9	BARRIER	E	21S	4		2 8.500	10.000			2 7.750	6.750	3 7	3 4	135
		INCR = 0.75 IN					3 2.500	10.000			3 1.750	7.750	4 1	3 10	
18	5 K10	BARRIER	E	19S		3 3.000	10.000						4 1	4 0	75
18	5 K11	BARRIER	E	21S			3 3.000	10.000			3 2.250	7.750	4 1	3 11	74
24	5 K12	BARRIER	E	20		11 2.000							11 2	11 2	280
12	5 K13	BARRIER	E	20	2	4 5.000							4 5	4 5	93
		INCR = 36 IN				10 5.000							10 5	10 5	
24	5 K14	BARRIER	E	20		10 9.000							10 9	10 9	269
12	5 K15	BARRIER	E	20	2	4 0.000							4 0	4 0	88
		INCR = 36 IN				10 0.000							10 0	10 0	
378	5 R1	BARRIER	E	26		3 3.000	5.500	2.250	3 1.250	5.500	3 0.750	6.750	6 10	6 10	2694
378	5 R2	BARRIER	E	19S		20.500	9.500						2 6	2 5	953
378	5 R3	BARRIER	E	27S			9.500	15.250	5.000	12.000	15.000	3.000	3 6	3 3	1281
80	5 R4	BARRIER	E	20		11 9.000							11 9	11 9	980
20	5 R5	BARRIER	E	20		43 1.000							43 1	43 1	899
20	5 R6	BARRIER	E	20		45 9.000							45 9	45 9	954
20	5 R7	BARRIER	E	20		43 5.000							43 5	43 5	906
		Slip Form													
40	5 C1	SLIP FORM	E	20		12 0.000							12 0	12 0	501
8	5 C2	SLIP FORM	E	20		8 9.000							8 9	8 9	73

Bill of Reinforcing Steel

No. Req.	Size/ Mark	Location	Codes C	Codes SH	Codes V	Dimensions B ft in.	C ft in.	D ft in.	E ft in.	F ft in.	H ft in.	K ft in.	Nom. Length ft in.	Actual Length ft in.	Weight lb

Nominal lengths are based on out to out dimensions shown in bending diagrams and are listed to the nearest inch for fabricator's use. Actual lengths are measured along centerline bar to the nearest inch. Weights are based on actual lengths.

For bending diagrams and steel reinforcing totals, see Sheet No. 25.

All bars shall be Grade 60.

Codes: C = Required coatings, where E = Epoxy Coated and G = Galvanized.

SH = Required shape, see bending diagrams.

V = Sets of varied bars and number of bars of each length. Bar dimensions vary in equal increments between dimensions shown on this line and the following line and the actual length dimension shown on this line and the following line vary by the specified increment.

Detailed Jan 2025
Checked Jan 2025

BILL OF REINFORCING STEEL

Note: This drawing is not to scale. Follow dimensions.

STATE OF MISSOURI
RYAN G. HAGERTY
NUMBER
PE-2016034015
PROFESSIONAL ENGINEER

THIS SHEET HAS BEEN SIGNED, SEALED, AND DATED ELECTRONICALLY

DATE PREPARED 7/25/2025
ROUTE 67
STATE MO
DISTRICT BR
SHEET NO. 27
COUNTY WAYNE
JOB NO. JSE0083
CONTRACT ID.
PROJECT NO.
BRIDGE NO. A9610

DESCRIPTION
DATE

MISSOURI HIGHWAYS AND TRANSPORTATION COMMISSION
105 WEST CAPITOL
JEFFERSON CITY, MO 65102
1-888-ASK-MODOT (1-888-275-6636)

GBA
16305 SWINGLEY RIDGE RD
ST. 300
CHESTERFIELD, MO 63017
314.231.0100
GBAteam.com

GEORGE BUTLER ASSOCIATES, INC.
PRO. ENGINEER 000133
ARCHITECT 000212
PRO. LAND SURVEYOR 000059

NICHOLE WITUSHYNSKY
PROFESIONAL ENGINEER
PE-2018037127

IF A SEAL IS PRESENT ON THIS SHEET IT HAS BEEN ELECTRONICALLY SEALED AND DATED.

PART PLAN SHOWING PILE & DRILLED SHAFT NUMBERING FOR
RECORDING AS-BUILT PILE DATA & AS-BUILT DRILLED SHAFT DATA

As-Built Pile Data

Pile No.	Length in Place (ft)	Computed Nominal Axial Compressive Resistance (kips)	Remarks
			End Bent No. 1
1			
2			
3			
4			
5			
6			

As-Built Pile Data

Pile No.	Length in Place (ft)	Computed Nominal Axial Compressive Resistance (kips)	Remarks
			End Bent No. 4
7			
8			
9			
10			
11			
12			

As-Built Drilled Shaft Data

Shaft No.	Top of Sound Rock (Elev.)	Tip of Casing (Elev.)	Bottom of Rock Socket (Elev.)	Remarks
				Int. Bent No. 2
1				
2				
				Int. Bent No. 3
3				
4				

Note:
Indicate in remarks column:
A. Pile type and grade
B. Batter
C. Driven to practical refusal

This sheet to be completed by MoDOT construction personnel.

AS-BUILT PILE AND DRILLED SHAFT DATA

Detailed Jan 2025
Checked Jan 2025

Note: This drawing is not to scale. Follow dimensions.

STATE OF MISSOURI
RYAN G. HAGERTY
NUMBER PE-2016034015
PROFESSIONAL ENGINEER

THIS SHEET HAS BEEN SIGNED, SEALED, AND DATED ELECTRONICALLY

DATE PREPARED 7/25/2025

ROUTE	STATE
67	MO

DISTRICT	SHEET NO.
BR	28

COUNTY WAYNE
JOB NO. JSE0083
CONTRACT ID.
PROJECT NO.
BRIDGE NO. A9610

DESCRIPTION	DATE

MISSOURI HIGHWAYS AND TRANSPORTATION COMMISSION
105 WEST CAPITOL
JEFFERSON CITY, MO 65102
1-888-ASK-MODOT (1-888-275-6636)

GBA
16305 SWINGLEY RIDGE RD
ST. 300
CHESTERFIELD, MO 63017
314.231.0100
GBAteam.com

GEORGE BUTLER
ASSOCIATES, INC.
PRO. ENGINEER 000133
ARCHITECT 000212
PRO. LAND SURVEYOR 000059

NICHOLE WITUSHYNSKY
PROFESIONAL
ENGINEER
PE-2018037127

IF A SEAL IS PRESENT ON THIS SHEET IT HAS BEEN ELECTRONICALLY SEALED AND DATED.

Missouri Department of Transportation
Construction and Materials

BORING NO. B-3
Page 1 of 3

Job No.: JSE0083 (SCI No. 2023-1428.11)
County: Wayne
Route: Route 67 Over Otter Creek
Design: L0210
Skew:
Location: Wayne County, Missouri
Bent:
Logged By: Prakash Paudel
Operator: Midwest Drilling, Inc.
Station:
Northing: 421599.82
Date of Work: 07/19/24
Offset:
Easting: 835300.373
Depth to Water: 22.0
Elevation: 401.8
Requested Northing:
Depth Hole Open: 51.0
Requested Station:
Requested Easting:
Time Change:
Requested Offset:
Equipment: CME 750 ,Split-Spoon Sampler, Shelby Tube, NQ
Requested Elevation:
Location Note:
Drill No.: MIDWEST
Hammer Efficiency: 93.7%
Drilling Method: Continuous Flight Auger

Depth (ft)	Description	Elevation (ft)	Sample Type	REC % (RQD %)	Blow Counts (N_{60})	Shear Data	Field Tests	Index Tests
0	0.0-0.2' 2" ASPHALTIC CONCRETE 0.2-1.3' 13" CONCRETE							
	1.3-7.0' (FILL) Brown, GRAVELLY FAT CLAY, gravel is fine to coarse	400						
5				100				LL = 92 PL = 27
	7.0-13.0' (FILL) Brown and gray, FAT CLAY, few fine- to coarse-grained sand, few fine to coarse gravel, trace organics	395						
10				78	8-3-5 (12)		PP = 0.50 tsf	MC = 18.7%
		390						
	13.0-16.0' (CH) Brown, FAT CLAY, with fine to coarse gravel			100				LL = 76 PL = 27
15								
	16.0-23.0' (CL) Brown, SANDY LEAN CLAY, sand is fine- to coarse-grained	385		100	2-2-2 (6)		PP = 0.50 tsf	LL = 27 PL = 18 MC = 20.8%
				100		Qu Test Results UCS = 1.20 ksf MC = 17.96802% γ_{moist} = 125.4 pcf		LL = 24 PL = 18
20								

N_{60} = (Em/60)Nm N_{60} - Corrected N value for standard 60% SPT efficiency; Em - Measured hammer efficiency in percent; Nm - Observed N-value
(1) = Assumed, (2) = Actual

Coordinate System: U.S. State Plane 1983
Coordinate Zone: Missouri East
Coordinate Proj. Factor: 1.000
Coordinate Datum: NAD 83 (CONUS)
Coordinate Units: U.S. Survey Feet

* Persons using this information are cautioned that the materials shown are determined by the equipment noted and accuracy of the "log of materials" is limited thereby and by judgement of the operator. THIS INFORMATION IS FOR DESIGN PURPOSES ONLY.

LETTER BOREHOLE - MODOT 20150728.GDT - 2/19/25 14:45 - N:\LABORATORY\ACTIVE GINT PROJECTS\2023-1428.11 US 67 OVER OTTER CREEK.GPJ

Missouri Department of Transportation
Construction and Materials

BORING NO. B-3
Page 2 of 3

Job No.: JSE0083 (SCI No. 2023-1428.11)
County: Wayne
Route: Route 67 Over Otter Creek
Design: L0210
Skew:
Location: Wayne County, Missouri
Bent:
Logged By: Prakash Paudel
Operator: Midwest Drilling, Inc.
Station:
Northing: 421599.82
Date of Work: 07/19/24
Offset:
Easting: 835300.373
Depth to Water: 22.0
Elevation: 401.8
Requested Northing:
Depth Hole Open: 51.0
Requested Station:
Requested Easting:
Time Change:
Requested Offset:
Equipment: CME 750 ,Split-Spoon Sampler, Shelby Tube, NQ
Requested Elevation:
Location Note:
Drill No.: MIDWEST
Hammer Efficiency: 93.7%
Drilling Method: Continuous Flight Auger

Depth (ft)	Description	Elevation (ft)	Sample Type	REC % (RQD %)	Blow Counts (N_{60})	Shear Data	Field Tests	Index Tests
20	16.0-23.0' (CL) Brown, SANDY LEAN CLAY, sand is fine- to coarse-grained *(continued)*							
		380						
	23.0-36.0' (GP) Brown, SANDY GRAVEL, fine to cobble sized, sand is fine- to coarse-grained							
25				56	4-7-5 (19)			
		375						
30				50	4-5-3 (12)			
		370						
35				56	4-4-3 (11)			
	36.0-39.0' BOULDERS AND COBBLES 36.0' *DRILLER'S OBSERVATION*	365						
40	39.0-41.0' WEAK ROCK, likely dolomite							

N_{60} = (Em/60)Nm N_{60} - Corrected N value for standard 60% SPT efficiency; Em - Measured hammer efficiency in percent; Nm - Observed N-value
(1) = Assumed, (2) = Actual

Coordinate System: U.S. State Plane 1983
Coordinate Zone: Missouri East
Coordinate Proj. Factor: 1.000
Coordinate Datum: NAD 83 (CONUS)
Coordinate Units: U.S. Survey Feet

* Persons using this information are cautioned that the materials shown are determined by the equipment noted and accuracy of the "log of materials" is limited thereby and by judgement of the operator. THIS INFORMATION IS FOR DESIGN PURPOSES ONLY.

LETTER BOREHOLE - MODOT 20150728.GDT - 2/19/25 14:45 - N:\LABORATORY\ACTIVE GINT PROJECTS\2023-1428.11 US 67 OVER OTTER CREEK.GPJ

STATE OF MISSOURI
RYAN G. HAGERTY
NUMBER PE-2016034015
PROFESSIONAL ENGINEER

THIS SHEET HAS BEEN SIGNED, SEALED, AND DATED ELECTRONICALLY

DATE PREPARED 7/25/2025
ROUTE 67 | STATE MO
DISTRICT BR | SHEET NO. 29
COUNTY WAYNE
JOB NO. JSE0083
CONTRACT ID.
PROJECT NO.
BRIDGE NO. A9610

DESCRIPTION | DATE

MISSOURI HIGHWAYS AND TRANSPORTATION COMMISSION
105 WEST CAPITOL
JEFFERSON CITY, MO 65102
1-888-ASK-MODOT (1-888-275-6636)

GBA
16305 SWINGLEY RIDGE RD
ST. 300
CHESTERFIELD, MO 63017
314.231.0100
GBAteam.com

GEORGE BUTLER ASSOCIATES, INC.
PRO. ENGINEER 000133
ARCHITECT 000212
PRO. LAND SURVEYOR 000059

NICHOLE WITUSHYNSKY
PROFESIONAL ENGINEER
PE-2018037127

IF A SEAL IS PRESENT ON THIS SHEET IT HAS BEEN ELECTRONICALLY SEALED AND DATED.

BORING DATA

Note: For locations of borings, see Sheet No. 1.

Detailed Jan 2025
Checked Jan 2025

Note: This drawing is not to scale. Follow dimensions.

Missouri Department of Transportation
Construction and Materials

BORING NO. B-3
Page 3 of 3

Job No.: JSE0083 (SCI No. 2023-1428.11) **County:** Wayne **Route:** Route 67 Over Otter Creek
Design: L0210 **Skew:** **Location:** Wayne County, Missouri
Bent: **Logged By:** Prakash Paudel **Operator:** Midwest Drilling, Inc.
Station: **Northing:** 421599.82 **Date of Work:** 07/19/24
Offset: **Easting:** 835300.373 **Depth to Water:** 22.0
Elevation: 401.8 **Requested Northing:** **Depth Hole Open:** 51.0
Requested Station: **Requested Easting:** **Time Change:**
Requested Offset: **Equipment:** CME 750 ,Split-Spoon Sampler, Shelby Tube, NQ
Requested Elevation: **Location Note:**
Drill No.: MIDWEST **Hammer Efficiency:** 93.7% **Drilling Method:** Continuous Flight Auger

Depth (ft)	Graphic	Description	Elevation (ft)	Sample Type	REC % (RQD %)	Blow Counts (N_{60})	Shear Data	Feld Tests	Index Tests
40		39.0-41.0' WEAK ROCK, likely dolomite *(continued)*							
		41.0-51.0' CHERTY DOLOMITE: Gray, moderately hard, finely crystalline, thin to medium bedding, slightly weathered, pitted, with clay seams	360		100 (47)		Qu Test Results UCS = 1180 ksf MC = 0% γ_{moist} = 172.6 pcf		
45			355		100 (52)				
		47.0' With vertical fracturing							
50		Bottom of borehole at 51.0 feet.							

N_{60} = (Em/60)Nm N_{60} - Corrected N value for standard 60% SPT efficiency; Em - Measured hammer efficiency in percent; Nm - Observed N-value
(1) = Assumed, (2) = Actual

Coordinate System: U.S. State Plane 1983 **Coordinate Zone:** Missouri East **Coordinate Proj. Factor:** 1.000
Coordinate Datum: NAD 83 (CONUS) **Coordinate Units:** U.S. Survey Feet

* Persons using this information are cautioned that the materials shown are determined by the equipment noted and accuracy of the "log of materials" is limited thereby and by judgement of the operator. THIS INFORMATION IS FOR DESIGN PURPOSES ONLY.

LETTER BOREHOLE - MODOT 20150728.GDT - 2/19/25 14:45 - N:\LABORATORY\ACTIVE GINT PROJECTS\2023-1428.11 US 67 OVER OTTER CREEK.GPJ

Missouri Department of Transportation
Construction and Materials

BORING NO. B-4
Page 1 of 4

Job No.: JSE0083 (SCI No. 2023-1428.11) **County:** Wayne **Route:** Route 67 Over Otter Creek
Design: L0210 **Skew:** **Location:** Wayne County, Missouri
Bent: **Logged By:** Prakash Paudel **Operator:** Midwest Drilling, Inc.
Station: **Northing:** 421509.9 **Date of Work:** 07/18/24
Offset: **Easting:** 835323.967 **Depth to Water:** 22.0
Elevation: 402.0 **Requested Northing:** **Depth Hole Open:** 63.0
Requested Station: **Requested Easting:** **Time Change:**
Requested Offset: **Equipment:** CME 750 ,Split-Spoon Sampler, NQ
Requested Elevation: **Location Note:**
Drill No.: MIDWEST **Hammer Efficiency:** 93.7% **Drilling Method:** Continuous Flight Auger

Depth (ft)	Graphic	Description	Elevation (ft)	Sample Type	REC % (RQD %)	Blow Counts (N_{60})	Shear Data	Feld Tests	Index Tests
0		0.0-0.2' 2" ASPHALTIC CONCRETE							
		0.2-0.7' 6" CONCRETE							
		0.7-20.0' AIR	400						
5			395						
10			390						
15			385						
20									

N_{60} = (Em/60)Nm N_{60} - Corrected N value for standard 60% SPT efficiency; Em - Measured hammer efficiency in percent; Nm - Observed N-value
(1) = Assumed, (2) = Actual

Coordinate System: U.S. State Plane 1983 **Coordinate Zone:** Missouri East **Coordinate Proj. Factor:** 1.000
Coordinate Datum: NAD 83 (CONUS) **Coordinate Units:** U.S. Survey Feet

* Persons using this information are cautioned that the materials shown are determined by the equipment noted and accuracy of the "log of materials" is limited thereby and by judgement of the operator. THIS INFORMATION IS FOR DESIGN PURPOSES ONLY.

LETTER BOREHOLE - MODOT 20150728.GDT - 2/19/25 14:45 - N:\LABORATORY\ACTIVE GINT PROJECTS\2023-1428.11 US 67 OVER OTTER CREEK.GPJ

STATE OF MISSOURI
RYAN G. HAGERTY
NUMBER
PE-2016034015
PROFESSIONAL ENGINEER

THIS SHEET HAS BEEN SIGNED, SEALED, AND DATED ELECTRONICALLY

DATE PREPARED 7/25/2025
ROUTE 67 STATE MO
DISTRICT BR SHEET NO. 30
COUNTY WAYNE
JOB NO. JSE0083
CONTRACT ID.
PROJECT NO.
BRIDGE NO. A9610

DESCRIPTION | DATE

MISSOURI HIGHWAYS AND TRANSPORTATION COMMISSION
105 WEST CAPITOL
JEFFERSON CITY, MO 65102
1-888-ASK-MODOT (1-888-275-6636)

GBA
16305 SWINGLEY RIDGE RD
ST. 300
CHESTERFIELD, MO 63017
314.231.0100
GBAteam.com

GEORGE BUTLER ASSOCIATES, INC.
PRO. ENGINEER 000133
ARCHITECT 000212
PRO. LAND SURVEYOR 000059

NICHOLE WITUSHYNSKY
PROFESIONAL ENGINEER
PE-2018037127

IF A SEAL IS PRESENT ON THIS SHEET IT HAS BEEN ELECTRONICALLY SEALED AND DATED.

BORING DATA

Note: For locations of borings, see Sheet No. 1.

Detailed Jan 2025
Checked Jan 2025

Note: This drawing is not to scale. Follow dimensions.

Missouri Department of Transportation
Construction and Materials

BORING NO. B-4
Page 2 of 4

Job No.: JSE0083 (SCI No. 2023-1428.11) **County:** Wayne **Route:** Route 67 Over Otter Creek
Design: L0210 **Skew:** **Location:** Wayne County, Missouri
Bent: **Logged By:** Prakash Paudel **Operator:** Midwest Drilling, Inc.
Station: **Northing:** 421509.9 **Date of Work:** 07/18/24
Offset: **Easting:** 835323.967 **Depth to Water:** 22.0
Elevation: 402.0 **Requested Northing:** **Depth Hole Open:** 63.0
Requested Station: **Requested Easting:** **Time Change:**
Requested Offset: **Equipment:** CME 750 ,Split-Spoon Sampler, NQ
Requested Elevation: **Location Note:**
Drill No.: MIDWEST **Hammer Efficiency:** 93.7% **Drilling Method:** Continuous Flight Auger

Depth (ft)	Graphic	Description	Elevation (ft)	Sample Type	REC % (RQD %)	Blow Counts (N_{60})	Shear Data	Field Tests	Index Tests
20		20.0-32.0' (SC) Brown, CLAYEY SAND WITH GRAVEL, fine- to coarse-grained, gravel is fine to coarse, clay is lean	380						
25					100	3-4-3 (11)			
			375						
30									
		32.0-36.0' BOULDERS AND COBBLES	370						
35									
		36.0-38.0' WEAK ROCK, likely dolomite	365						
40		38.0-63.0' CHERTY DOLOMITE: Gray, moderately hard, micritic, thin bedding, moderately weathered, fractured			95 (0)				

N_{60} = (Em/60)Nm N_{60} - Corrected N value for standard 60% SPT efficiency; Em - Measured hammer efficiency in percent; Nm - Observed N-value
(1) = Assumed, (2) = Actual

Coordinate System: U.S. State Plane 1983 **Coordinate Zone:** Missouri East **Coordinate Proj. Factor:** 1.000
Coordinate Datum: NAD 83 (CONUS) **Coordinate Units:** U.S. Survey Feet

* Persons using this information are cautioned that the materials shown are determined by the equipment noted and accuracy of the "log of materials" is limited thereby and by judgement of the operator. THIS INFORMATION IS FOR DESIGN PURPOSES ONLY.

LETTER BOREHOLE - MODOT 20150728.GDT - 2/19/25 14:45 - N:\LABORATORY\ACTIVE GINT PROJECTS\2023-1428.11 US 67 OVER OTTER CREEK.GPJ

Missouri Department of Transportation
Construction and Materials

BORING NO. B-4
Page 3 of 4

Job No.: JSE0083 (SCI No. 2023-1428.11) **County:** Wayne **Route:** Route 67 Over Otter Creek
Design: L0210 **Skew:** **Location:** Wayne County, Missouri
Bent: **Logged By:** Prakash Paudel **Operator:** Midwest Drilling, Inc.
Station: **Northing:** 421509.9 **Date of Work:** 07/18/24
Offset: **Easting:** 835323.967 **Depth to Water:** 22.0
Elevation: 402.0 **Requested Northing:** **Depth Hole Open:** 63.0
Requested Station: **Requested Easting:** **Time Change:**
Requested Offset: **Equipment:** CME 750 ,Split-Spoon Sampler, NQ
Requested Elevation: **Location Note:**
Drill No.: MIDWEST **Hammer Efficiency:** 93.7% **Drilling Method:** Continuous Flight Auger

Depth (ft)	Graphic	Description	Elevation (ft)	Sample Type	REC % (RQD %)	Blow Counts (N_{60})	Shear Data	Field Tests	Index Tests
40		38.0-63.0' CHERTY DOLOMITE: Gray, moderately hard, micritic, thin bedding, moderately weathered, fractured *(continued)*	360		100 (54)				
45			355		100 (47)		Qu Test Results UCS = 1970 ksf MC = 0% γ_{moist} = 172.8 pcf Qu Test Results UCS = 1220 ksf MC = 0% γ_{moist} = 170.2 pcf Qu Test Results UCS = 439 ksf MC = 0% γ_{moist} = 167.2 pcf		
50		51.0' Becomes pitted, with clay seams	350		100 (52)		Qu Test Results UCS = 477 ksf MC = 0% γ_{moist} = 159.8 pcf		
55		53.0' Becomes finely crytsalline, thin to medium bedding	345		100 (47)		Qu Test Results UCS = 970 ksf MC = 0% γ_{moist} = 168.2 pcf		
60							Qu Test Results UCS = 928 ksf MC = 0% γ_{moist} = 172.7 pcf		

N_{60} = (Em/60)Nm N_{60} - Corrected N value for standard 60% SPT efficiency; Em - Measured hammer efficiency in percent; Nm - Observed N-value
(1) = Assumed, (2) = Actual

Coordinate System: U.S. State Plane 1983 **Coordinate Zone:** Missouri East **Coordinate Proj. Factor:** 1.000
Coordinate Datum: NAD 83 (CONUS) **Coordinate Units:** U.S. Survey Feet

* Persons using this information are cautioned that the materials shown are determined by the equipment noted and accuracy of the "log of materials" is limited thereby and by judgement of the operator. THIS INFORMATION IS FOR DESIGN PURPOSES ONLY.

LETTER BOREHOLE - MODOT 20150728.GDT - 2/19/25 14:45 - N:\LABORATORY\ACTIVE GINT PROJECTS\2023-1428.11 US 67 OVER OTTER CREEK.GPJ

STATE OF MISSOURI
RYAN G. HAGERTY
NUMBER PE-2016034015
PROFESSIONAL ENGINEER

THIS SHEET HAS BEEN SIGNED, SEALED, AND DATED ELECTRONICALLY

DATE PREPARED 7/25/2025
ROUTE 67 STATE MO
DISTRICT BR SHEET NO. 31
COUNTY WAYNE
JOB NO. JSE0083
CONTRACT ID.
PROJECT NO.
BRIDGE NO. A9610

DESCRIPTION | DATE

MISSOURI HIGHWAYS AND TRANSPORTATION COMMISSION
105 WEST CAPITOL
JEFFERSON CITY, MO 65102
1-888-ASK-MODOT (1-888-275-6636)

IF A SEAL IS PRESENT ON THIS SHEET IT HAS BEEN ELECTRONICALLY SEALED AND DATED.

GBA
16305 SWINGLEY RIDGE RD
ST. 300
CHESTERFIELD, MO 63017
314.231.0100
GBAteam.com

GEORGE BUTLER ASSOCIATES, INC.
PRO. ENGINEER 000133
ARCHITECT 000212
PRO. LAND SURVEYOR 000059

NICHOLE WITUSHYNSKY
PROFESIONAL ENGINEER
PE-2018037127

BORING DATA

Note: For locations of borings, see Sheet No. 1.

Detailed Jan 2025
Checked Jan 2025

Note: This drawing is not to scale. Follow dimensions.

Missouri Department of Transportation
Construction and Materials

BORING NO. B-4
Page 4 of 4

Job No.: JSE0083 (SCI No. 2023-1428.11) **County:** Wayne **Route:** Route 67 Over Otter Creek
Design: L0210 **Skew:** **Location:** Wayne County, Missouri
Bent: **Logged By:** Prakash Paudel **Operator:** Midwest Drilling, Inc.
Station: **Northing:** 421509.9 **Date of Work:** 07/18/24
Offset: **Easting:** 835323.967 **Depth to Water:** 22.0
Elevation: 402.0 **Requested Northing:** **Depth Hole Open:** 63.0
Requested Station: **Requested Easting:** **Time Change:**
Requested Offset: **Equipment:** CME 750 ,Split-Spoon Sampler, NQ
Requested Elevation: **Location Note:**
Drill No.: MIDWEST **Hammer Efficiency:** 93.7% **Drilling Method:** Continuous Flight Auger

Depth (ft)	Graphic	Description	Elevation (ft)	Sample Type	REC % (RQD %)	Blow Counts (N_{60})	Shear Data	Field Tests	Index Tests
60		38.0-63.0' CHERTY DOLOMITE: Gray, moderately hard, micritic, thin bedding, moderately weathered, fractured *(continued)* 60.0' Becomes slightly weathered	340		100 (80)				
		Bottom of borehole at 63.0 feet.							

N_{60} = (Em/60)Nm N_{60} - Corrected N value for standard 60% SPT efficiency; Em - Measured hammer efficiency in percent; Nm - Observed N-value
(1) = Assumed, (2) = Actual

Coordinate System: U.S. State Plane 1983 **Coordinate Zone:** Missouri East **Coordinate Proj. Factor:** 1.000
Coordinate Datum: NAD 83 (CONUS) **Coordinate Units:** U.S. Survey Feet

* Persons using this information are cautioned that the materials shown are determined by the equipment noted and accuracy of the "log of materials" is limited thereby and by judgement of the operator. THIS INFORMATION IS FOR DESIGN PURPOSES ONLY.

LETTER BOREHOLE - MODOT 20150728.GDT - 2/19/25 14:45 - N:\LABORATORY\ACTIVE GINT PROJECTS\2023-1428.11 US 67 OVER OTTER CREEK.GPJ

Missouri Department of Transportation
Construction and Materials

BORING NO. B-5
Page 1 of 3

Job No.: JSE0083 (SCI No. 2023-1428.11) **County:** Wayne **Route:** Route 67 Over Otter Creek
Design: L0210 **Skew:** **Location:** Wayne County, Missouri
Bent: **Logged By:** Prakash Paudel **Operator:** Midwest Drilling, Inc.
Station: **Northing:** 421427.347 **Date of Work:** 07/16/24
Offset: **Easting:** 835343.369 **Depth to Water:** 29.0
Elevation: 402.0 **Requested Northing:** **Depth Hole Open:** 59.0
Requested Station: **Requested Easting:** **Time Change:**
Requested Offset: **Equipment:** CME 750 ,Split-Spoon Sampler, NQ
Requested Elevation: **Location Note:**
Drill No.: MIDWEST **Hammer Efficiency:** 93.7% **Drilling Method:** Continuous Flight Auger

Depth (ft)	Graphic	Description	Elevation (ft)	Sample Type	REC % (RQD %)	Blow Counts (N_{60})	Shear Data	Field Tests	Index Tests
0		0.0-0.1' 1.5" ASPHALTIC CONCRETE 0.1-0.6' 6" CONCRETE 0.6-22.0' AIR	400						
5			395						
10			390						
15			385						
20									

N_{60} = (Em/60)Nm N_{60} - Corrected N value for standard 60% SPT efficiency; Em - Measured hammer efficiency in percent; Nm - Observed N-value
(1) = Assumed, (2) = Actual

Coordinate System: U.S. State Plane 1983 **Coordinate Zone:** Missouri East **Coordinate Proj. Factor:** 1.000
Coordinate Datum: NAD 83 (CONUS) **Coordinate Units:** U.S. Survey Feet

* Persons using this information are cautioned that the materials shown are determined by the equipment noted and accuracy of the "log of materials" is limited thereby and by judgement of the operator. THIS INFORMATION IS FOR DESIGN PURPOSES ONLY.

LETTER BOREHOLE - MODOT 20150728.GDT - 2/19/25 14:45 - N:\LABORATORY\ACTIVE GINT PROJECTS\2023-1428.11 US 67 OVER OTTER CREEK.GPJ

STATE OF MISSOURI
RYAN G. HAGERTY
NUMBER PE-2016034015
PROFESSIONAL ENGINEER

THIS SHEET HAS BEEN SIGNED, SEALED, AND DATED ELECTRONICALLY

DATE PREPARED 7/25/2025
ROUTE 67 STATE MO
DISTRICT BR SHEET NO. 32
COUNTY WAYNE
JOB NO. JSE0083
CONTRACT ID.
PROJECT NO.
BRIDGE NO. A9610

DESCRIPTION	DATE

MISSOURI HIGHWAYS AND TRANSPORTATION COMMISSION
105 WEST CAPITOL
JEFFERSON CITY, MO 65102
1-888-ASK-MODOT (1-888-275-6636)

IF A SEAL IS PRESENT ON THIS SHEET IT HAS BEEN ELECTRONICALLY SEALED AND DATED.

GBA
16305 SWINGLEY RIDGE RD
ST. 300
CHESTERFIELD, MO 63017
314.231.0100
GBAteam.com

GEORGE BUTLER ASSOCIATES, INC.
PRO. ENGINEER 000133
ARCHITECT 000212
PRO. LAND SURVEYOR 000059

NICHOLE WITUSHYNSKY
PROFESIONAL ENGINEER
PE-2018037127

BORING DATA

Note: For locations of borings, see Sheet No. 1.

Detailed Jan 2025
Checked Jan 2025

Note: This drawing is not to scale. Follow dimensions.

Missouri Department of Transportation
Construction and Materials

BORING NO. B-5
Page 2 of 3

Job No.: JSE0083 (SCI No. 2023-1428.11) **County:** Wayne **Route:** Route 67 Over Otter Creek
Design: L0210 **Skew:** **Location:** Wayne County, Missouri
Bent: **Logged By:** Prakash Paudel **Operator:** Midwest Drilling, Inc.
Station: **Northing:** 421427.347 **Date of Work:** 07/16/24
Offset: **Easting:** 835343.369 **Depth to Water:** 29.0
Elevation: 402.0 **Requested Northing:** **Depth Hole Open:** 59.0
Requested Station: **Requested Easting:** **Time Change:**
Requested Offset: **Equipment:** CME 750 ,Split-Spoon Sampler, NQ
Requested Elevation: **Location Note:**
Drill No.: MIDWEST **Hammer Efficiency:** 93.7% **Drilling Method:** Continuous Flight Auger

Depth (ft)	Graphic	Description	Elevation (ft)	Sample Type	REC % (RQD %)	Blow Counts (N_{60})	Shear Data	Field Tests	Index Tests
20		0.6-22.0' AIR *(continued)*							
			380						
		22.0-32.0' (SC) Gray and brown, CLAYEY SAND WITH GRAVEL, fine- to coarse-grained, gravel is fine to coarse, clay is lean							
25									
			375						
					67	3-3-4 (11)			
30									
			370						
		32.0-34.0' BOULDERS AND COBBLES							
35		34.0-59.0' DOLOMITE: Gray, moderately hard, micritic, thin bedding, slightly to moderately weathered, pitted, interbedded with thin beds of cherty dolomite 35.5' Becomes vuggy							
			365		95 (29)		Qu Test Results UCS = 1200 ksf MC = 0% γ_{moist} = 171.3 pcf		
40									

N_{60} = (Em/60)Nm N_{60} - Corrected N value for standard 60% SPT efficiency; Em - Measured hammer efficiency in percent; Nm - Observed N-value
(1) = Assumed, (2) = Actual

Coordinate System: U.S. State Plane 1983 **Coordinate Zone:** Missouri East **Coordinate Proj. Factor:** 1.000
Coordinate Datum: NAD 83 (CONUS) **Coordinate Units:** U.S. Survey Feet

* Persons using this information are cautioned that the materials shown are determined by the equipment noted and accuracy of the "log of materials" is limited thereby and by judgement of the operator. THIS INFORMATION IS FOR DESIGN PURPOSES ONLY.

LETTER BOREHOLE - MODOT 20150728.GDT - 2/19/25 14:45 - N:\LABORATORY\ACTIVE GINT PROJECTS\2023-1428.11 US 67 OVER OTTER CREEK.GPJ

Missouri Department of Transportation
Construction and Materials

BORING NO. B-5
Page 3 of 3

Job No.: JSE0083 (SCI No. 2023-1428.11) **County:** Wayne **Route:** Route 67 Over Otter Creek
Design: L0210 **Skew:** **Location:** Wayne County, Missouri
Bent: **Logged By:** Prakash Paudel **Operator:** Midwest Drilling, Inc.
Station: **Northing:** 421427.347 **Date of Work:** 07/16/24
Offset: **Easting:** 835343.369 **Depth to Water:** 29.0
Elevation: 402.0 **Requested Northing:** **Depth Hole Open:** 59.0
Requested Station: **Requested Easting:** **Time Change:**
Requested Offset: **Equipment:** CME 750 ,Split-Spoon Sampler, NQ
Requested Elevation: **Location Note:**
Drill No.: MIDWEST **Hammer Efficiency:** 93.7% **Drilling Method:** Continuous Flight Auger

Depth (ft)	Graphic	Description	Elevation (ft)	Sample Type	REC % (RQD %)	Blow Counts (N_{60})	Shear Data	Field Tests	Index Tests
40		34.0-59.0' DOLOMITE: Gray, moderately hard, micritic, thin bedding, slightly to moderately weathered, pitted, interbedded with thin beds of cherty dolomite *(continued)*							
			360		100 (93)		Qu Test Results UCS = 519 ksf MC = 0% γ_{moist} = 172.3 pcf		
		42.0' With chert							
		43.0' No chert							
45									
		46.0' Becomes dense			97 (54)				
			355						
		47.0' With chert							
		48.0' No chert			100 (63)				
		49.0' Becomes vuggy							
50									
			350		100 (47)		Qu Test Results UCS = 994 ksf MC = 0% γ_{moist} = 171.2 pcf		
		53.5' Becomes dense							
55									
			345		100 (73)		Qu Test Results UCS = 301 ksf MC = 0% γ_{moist} = 171.2 pcf		
		Bottom of borehole at 59.0 feet.							

N_{60} = (Em/60)Nm N_{60} - Corrected N value for standard 60% SPT efficiency; Em - Measured hammer efficiency in percent; Nm - Observed N-value
(1) = Assumed, (2) = Actual

Coordinate System: U.S. State Plane 1983 **Coordinate Zone:** Missouri East **Coordinate Proj. Factor:** 1.000
Coordinate Datum: NAD 83 (CONUS) **Coordinate Units:** U.S. Survey Feet

* Persons using this information are cautioned that the materials shown are determined by the equipment noted and accuracy of the "log of materials" is limited thereby and by judgement of the operator. THIS INFORMATION IS FOR DESIGN PURPOSES ONLY.

LETTER BOREHOLE - MODOT 20150728.GDT - 2/19/25 14:45 - N:\LABORATORY\ACTIVE GINT PROJECTS\2023-1428.11 US 67 OVER OTTER CREEK.GPJ

STATE OF MISSOURI
RYAN G. HAGERTY
NUMBER PE-2016034015
PROFESSIONAL ENGINEER

THIS SHEET HAS BEEN SIGNED, SEALED, AND DATED ELECTRONICALLY

DATE PREPARED 7/25/2025
ROUTE 67 STATE MO
DISTRICT BR SHEET NO. 33
COUNTY WAYNE
JOB NO. JSE0083
CONTRACT ID.
PROJECT NO.
BRIDGE NO. A9610

DESCRIPTION | DATE

IF A SEAL IS PRESENT ON THIS SHEET IT HAS BEEN ELECTRONICALLY SEALED AND DATED.

MISSOURI HIGHWAYS AND TRANSPORTATION COMMISSION
105 WEST CAPITOL
JEFFERSON CITY, MO 65102
1-888-ASK-MODOT (1-888-275-6636)

GBA
16305 SWINGLEY RIDGE RD
ST. 300
CHESTERFIELD, MO 63017
314.231.0100
GBAteam.com

GEORGE BUTLER ASSOCIATES, INC.
PRO. ENGINEER 000133
ARCHITECT 000212
PRO. LAND SURVEYOR 000059

NICHOLE WITUSHYNSKY
PROFESIONAL ENGINEER
PE-2018037127

BORING DATA

Note: For locations of borings, see Sheet No. 1.

Detailed Jan 2025
Checked Jan 2025

Note: This drawing is not to scale. Follow dimensions.

Missouri Department of Transportation
Construction and Materials

BORING NO. B-6
Page 1 of 3

Job No.: JSE0083 (SCI No. 2023-1428.11) **County:** Wayne **Route:** Route 67 Over Otter Creek
Design: L0210 **Skew:** **Location:** Wayne County, Missouri
Bent: **Logged By:** Prakash Paudel **Operator:** Midwest Drilling, Inc.
Station: **Northing:** 421322.407 **Date of Work:** 07/15/24
Offset: **Easting:** 835363.342 **Depth to Water:** 22.0
Elevation: 401.7 **Requested Northing:** **Depth Hole Open:** 46.0
Requested Station: **Requested Easting:** **Time Change:**
Requested Offset: **Equipment:** CME 750 ,Split-Spoon Sampler, Shelby Tube, NQ
Requested Elevation: **Location Note:**
Drill No.: MIDWEST **Hammer Efficiency:** 93.7% **Drilling Method:** Continuous Flight Auger

Depth (ft)	Description	Elevation (ft)	Sample Type	REC % (RQD %)	Blow Counts (N_{60})	Shear Data	Field Tests	Index Tests
0	0.0-0.3' 3" ASPHALTIC CONCRETE 0.3-1.3' 13" CONCRETE							
	1.3-6.0' (FILL) Gray, SANDY FAT CLAY, sand is fine- to coarse-grained, some fine to coarse gravel	400						
5				22	3-3-3 (9)			MC = 16.0%
	6.0-11.0' (FILL) Brown, LEAN CLAY, with fine to coarse gravel	395						
10				67	3-3-4 (11)		PP = 1.75 tsf	LL = 45 PL = 16 MC = 18.0%
	11.0-13.5' (FILL) Brown, SANDY LEAN CLAY, with fine to coarse gravel, sand is fine- to coarse-grained	390		71		Qu Test Results UCS = 1.40 ksf MC = 18.16497% γ_{moist} = 127.5 pcf		LL = 24 PL = 17
	13.5-15.0' (FILL) Brown, CLAYEY SAND, fine- to coarse-grained, clay is fat			100	3-3-4 (11)			MC = 13.7%
15	15.0-27.0' (SM) Brown, SILTY SAND, fine- to coarse-grained, with fine gravel, clay is fat	385						
20	18.5' *ATTERBERG LIMIT TESTING PERFORMED: NON-PLASTIC*			100	2-3-3 (9)			

N_{60} = (Em/60)Nm N_{60} - Corrected N value for standard 60% SPT efficiency; Em - Measured hammer efficiency in percent; Nm - Observed N-value
(1) = Assumed, (2) = Actual

Coordinate System: U.S. State Plane 1983 **Coordinate Zone:** Missouri East **Coordinate Proj. Factor:** 1.000
Coordinate Datum: NAD 83 (CONUS) **Coordinate Units:** U.S. Survey Feet

* Persons using this information are cautioned that the materials shown are determined by the equipment noted and accuracy of the "log of materials" is limited thereby and by judgement of the operator. THIS INFORMATION IS FOR DESIGN PURPOSES ONLY.

LETTER BOREHOLE - MODOT 20150728.GDT - 2/19/25 14:45 - N:\LABORATORY\ACTIVE GINT PROJECTS\2023-1428.11 US 67 OVER OTTER CREEK.GPJ

Missouri Department of Transportation
Construction and Materials

BORING NO. B-6
Page 2 of 3

Job No.: JSE0083 (SCI No. 2023-1428.11) **County:** Wayne **Route:** Route 67 Over Otter Creek
Design: L0210 **Skew:** **Location:** Wayne County, Missouri
Bent: **Logged By:** Prakash Paudel **Operator:** Midwest Drilling, Inc.
Station: **Northing:** 421322.407 **Date of Work:** 07/15/24
Offset: **Easting:** 835363.342 **Depth to Water:** 22.0
Elevation: 401.7 **Requested Northing:** **Depth Hole Open:** 46.0
Requested Station: **Requested Easting:** **Time Change:**
Requested Offset: **Equipment:** CME 750 ,Split-Spoon Sampler, Shelby Tube, NQ
Requested Elevation: **Location Note:**
Drill No.: MIDWEST **Hammer Efficiency:** 93.7% **Drilling Method:** Continuous Flight Auger

Depth (ft)	Description	Elevation (ft)	Sample Type	REC % (RQD %)	Blow Counts (N_{60})	Shear Data	Field Tests	Index Tests
20	15.0-27.0' (SM) Brown, SILTY SAND, fine- to coarse-grained, with fine gravel, clay is fat *(continued)*							
		380						
25				100	1-3-4 (11)		PP = 0.25 tsf	MC = 15.4%
	27.0-33.5' (CH) Brown, GRAVELLY FAT CLAY, gravel is fine to coarse	375						
30				100	8-13-16 (45)		PP = 1.00 tsf	MC = 10.8%
		370						
	33.5-36.0' WEAK ROCK, likely dolomite			100	50/0.0'			
35	36.0-46.0' DOLOMITE: Gray, hard, finely crystalline, medium bedding, moderately weathered, pitted	365		100 (42)				
40				100		Qu Test Results UCS = 1050 ksf		

N_{60} = (Em/60)Nm N_{60} - Corrected N value for standard 60% SPT efficiency; Em - Measured hammer efficiency in percent; Nm - Observed N-value
(1) = Assumed, (2) = Actual

Coordinate System: U.S. State Plane 1983 **Coordinate Zone:** Missouri East **Coordinate Proj. Factor:** 1.000
Coordinate Datum: NAD 83 (CONUS) **Coordinate Units:** U.S. Survey Feet

* Persons using this information are cautioned that the materials shown are determined by the equipment noted and accuracy of the "log of materials" is limited thereby and by judgement of the operator. THIS INFORMATION IS FOR DESIGN PURPOSES ONLY.

LETTER BOREHOLE - MODOT 20150728.GDT - 2/19/25 14:45 - N:\LABORATORY\ACTIVE GINT PROJECTS\2023-1428.11 US 67 OVER OTTER CREEK.GPJ

STATE OF MISSOURI
RYAN G. HAGERTY
NUMBER PE-2016034015
PROFESSIONAL ENGINEER

THIS SHEET HAS BEEN SIGNED, SEALED, AND DATED ELECTRONICALLY

DATE PREPARED 7/25/2025
ROUTE 67 STATE MO
DISTRICT BR SHEET NO. 34
COUNTY WAYNE
JOB NO. JSE0083
CONTRACT ID.
PROJECT NO.
BRIDGE NO. A9610

DESCRIPTION | DATE

MISSOURI HIGHWAYS AND TRANSPORTATION COMMISSION
105 WEST CAPITOL
JEFFERSON CITY, MO 65102
1-888-ASK-MODOT (1-888-275-6636)

IF A SEAL IS PRESENT ON THIS SHEET IT HAS BEEN ELECTRONICALLY SEALED AND DATED.

GBA
16305 SWINGLEY RIDGE RD
ST. 300
CHESTERFIELD, MO 63017
314.231.0100
GBAteam.com

GEORGE BUTLER ASSOCIATES, INC.
PRO. ENGINEER 000133
ARCHITECT 000212
PRO. LAND SURVEYOR 000059

NICHOLE WITUSHYNSKY
PROFESIONAL ENGINEER
PE-2018037127

BORING DATA

Note: For locations of borings, see Sheet No. 1.

Detailed Jan 2025
Checked Jan 2025

Note: This drawing is not to scale. Follow dimensions.

Missouri Department of Transportation
Construction and Materials

BORING NO. B-6
Page 3 of 3

Job No.: JSE0083 (SCI No. 2023-1428.11)
County: Wayne
Route: Route 67 Over Otter Creek
Design: L0210
Skew:
Location: Wayne County, Missouri
Bent:
Logged By: Prakash Paudel
Operator: Midwest Drilling, Inc.
Station:
Northing: 421322.407
Date of Work: 07/15/24
Offset:
Easting: 835363.342
Depth to Water: 22.0
Elevation: 401.7
Requested Northing:
Depth Hole Open: 46.0
Requested Station:
Requested Easting:
Time Change:
Requested Offset:
Equipment: CME 750 ,Split-Spoon Sampler, Shelby Tube, NQ
Requested Elevation:
Location Note:
Drill No.: MIDWEST
Hammer Efficiency: 93.7%
Drilling Method: Continuous Flight Auger

Depth (ft)	Graphic	Description	Elevation (ft)	Sample Type	REC % (RQD %)	Blow Counts (N_{60})	Shear Data	Feld Tests	Index Tests
40		36.0-46.0' DOLOMITE: Gray, hard, finely crystalline, medium bedding, moderately weathered, pitted *(continued)*			(58)		MC = 0% γ_{moist} = 168.9 pcf		
		40.0' Becomes slightly weathered	360						
		42.0' Becomes thin to medium bedding, fractured			100 (85)				
45		Bottom of borehole at 46.0 feet.							

N_{60} = (Em/60)Nm N_{60} - Corrected N value for standard 60% SPT efficiency; Em - Measured hammer efficiency in percent; Nm - Observed N-value
(1) = Assumed, (2) = Actual

Coordinate System: U.S. State Plane 1983
Coordinate Zone: Missouri East
Coordinate Proj. Factor: 1.000
Coordinate Datum: NAD 83 (CONUS)
Coordinate Units: U.S. Survey Feet

* Persons using this information are cautioned that the materials shown are determined by the equipment noted and accuracy of the "log of materials" is limited thereby and by judgement of the operator. THIS INFORMATION IS FOR DESIGN PURPOSES ONLY.

LETTER BOREHOLE - MODOT 20150728.GDT - 2/19/25 14:45 - N:\LABORATORY\ACTIVE GINT PROJECTS\2023-1428.11 US 67 OVER OTTER CREEK.GPJ

BORING DATA

Note: For locations of borings, see Sheet No. 1.

Detailed Jan 2025
Checked Jan 2025

Note: This drawing is not to scale. Follow dimensions.

STATE OF MISSOURI
RYAN G. HAGERTY
NUMBER PE-2016034015
PROFESSIONAL ENGINEER

THIS SHEET HAS BEEN SIGNED, SEALED, AND DATED ELECTRONICALLY

DATE PREPARED	
7/25/2025	
ROUTE 67	STATE MO
DISTRICT BR	SHEET NO. 35
COUNTY WAYNE	
JOB NO. JSE0083	
CONTRACT ID.	
PROJECT NO.	
BRIDGE NO. A9610	

DESCRIPTION	DATE

MISSOURI HIGHWAYS AND TRANSPORTATION COMMISSION
105 WEST CAPITOL
JEFFERSON CITY, MO 65102
1-888-ASK-MODOT (1-888-275-6636)

GBA
16305 SWINGLEY RIDGE RD
ST. 300
CHESTERFIELD, MO 63017
314.231.0100
GBAteam.com

GEORGE BUTLER ASSOCIATES, INC.
PRO. ENGINEER 000133
ARCHITECT 000212
PRO. LAND SURVEYOR 000059

NICHOLE WITUSHYNSKY
PROFESIONAL ENGINEER
PE-2018037127

IF A SEAL IS PRESENT ON THIS SHEET IT HAS BEEN ELECTRONICALLY SEALED AND DATED.