MISSOURI HIGHWAYS AND TRANSPORTATION COMMISSION

PLANS FOR PROPOSED STATE HIGHWAY

CLINTON COUNTY

DESIGN DESIGNATION

A.A.D.T. - 2026 = 5,313
A.A.D.T. - 2036 = 5,454
D.H.V. = 7.70%
T = 5.95%
V = 60 M.P.H.
D = 49.9% / 50.1%
FUNCTIONAL CLASSIFICATION - MAJOR COLLECTOR

NO RIGHT OF WAY ACQUISITION

KEY MAP
LOCATION OF CLINTON COUNTY

CONVENTIONAL SYMBOLS
(USED IN PLANS)

	EXISTING	NEW
BUILDINGS AND STRUCTURES		
GUARD RAIL		
GUARD CABLE		
CONCRETE RIGHT-OF-WAY MARKER		
STEEL RIGHT-OF-WAY MARKER		
LOCATION SURVEY MARKER		
UTILITIES		
FIBER OPTICS	—FO—	—FO—
OVERHEAD CABLE TV	—OTV—	—OTV—
UNDERGROUND CABLE TV	—UTV—	—UTV—
OVERHEAD TELEPHONE	—OT—	—OT—
UNDERGROUND TELEPHONE	—UT—	—UT—
OVERHEAD POWER	—OE—	—OE—
UNDERGROUND POWER	—UE—	—UE—
SANITARY SEWER	—S—	—S—
STORM SEWER	—SS—	—SS—
GAS	—G—	—G—
WATER	—W—	—W—
MANHOLE	SAN	
FIRE HYDRANT	HYD	
WATER VALVE	WV	
WATER METER	WM	
DROP INLET	D	
DITCH BLOCK		
GROUND MOUNTED SIGN	SIGN	
LIGHT POLE		
H-FRAME POWER POLE		
TELEPHONE PEDESTAL	PED	
FENCE		
CHAIN LINK	—V—	
WOVEN WIRE	—X—	
GATE POST		
BENCHMARK	BM	

NOTE: DASHED OR OPEN SYMBOLS INDICATE EXISTING FEATURES

JOB NO. JNW0042
2" RESURFACING
LENGTH = 6.783 MILES

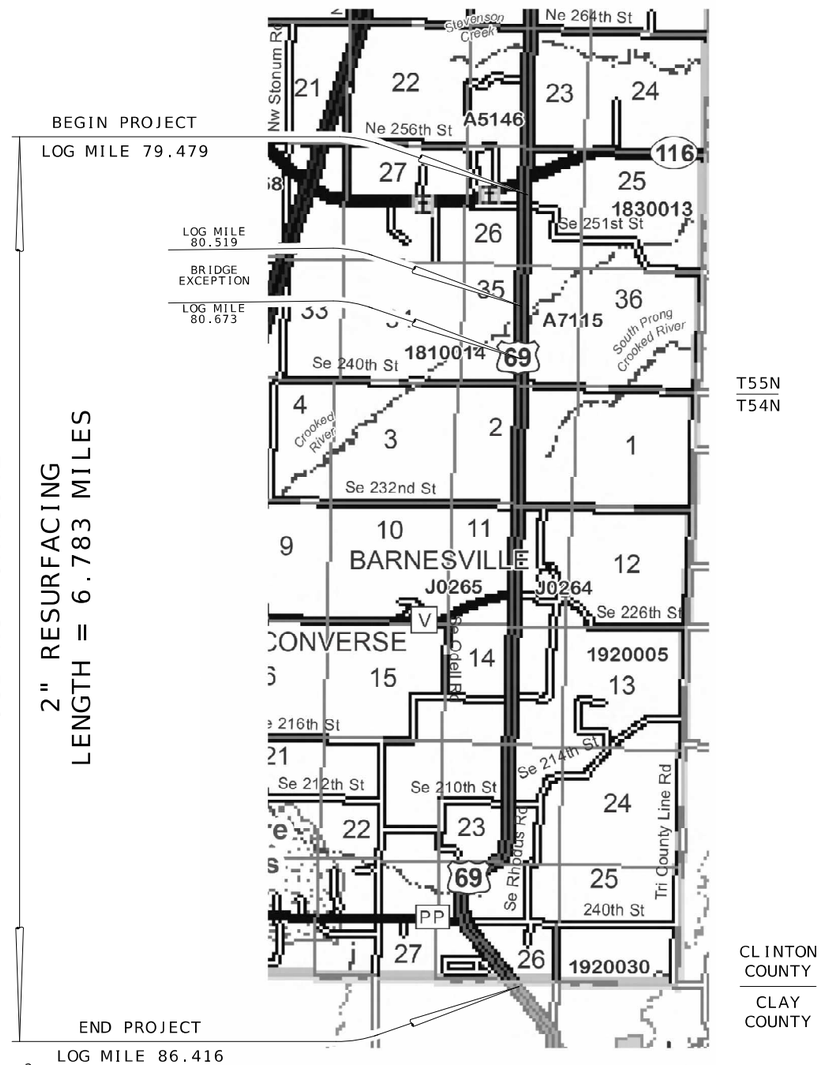

THE EXISTENCE AND APPROXIMATE LOCATION OF UTILITY FACILITIES KNOWN TO EXIST, AS SHOWN ON THE PLANS, ARE BASED ON THE BEST INFORMATION AVAILABLE TO THE COMMISSION AT THIS TIME. THIS INFORMATION IS PROVIDED BY THE COMMISSION "AS-IS" AND THE COMMISSION EXPRESSLY DISCLAIMS ANY REPRESENTATION OR WARRANTY AS TO THE COMPLETENESS, ACCURACY, OR SUITABILITY OF THE INFORMATION FOR ANY USE. RELIANCE UPON THIS INFORMATION IS DONE AT THE RISK AND PERIL OF THE USER, AND THE COMMISSION SHALL NOT BE LIABLE FOR ANY DAMAGES THAT MAY ARISE FROM ANY ERROR IN THE INFORMATION. IT IS, THEREFORE, THE RESPONSIBILITY OF THE CONTRACTOR TO VERIFY THE EXISTENCE, LOCATION AND STATUS OF ANY FACILITY. SUCH VERIFICATION INCLUDES DIRECT CONTACT WITH THE LISTED UTILITIES.

INDEX OF SHEETS

DESCRIPTION	SHEET NUMBER
TITLE SHEET	1
TYPICAL SECTIONS (TS) (1 SHEET)	2
QUANTITIES (QU) (3 SHEETS)	3
SPECIAL SHEET (SS)	4
PAVEMENT MARKING (PM)	5

LENGTH OF PROJECT

BEGINNING OF PROJECT — LOG MILE 79.479
END OF PROJECT — LOG MILE 86.416

APPARENT LENGTH — 6.937 MILES

EQUATIONS AND EXCEPTIONS:
BRIDGE A7115 OVER CROOKED RIVER
LOG MILE 80.519 TO LOG MILE 80.673 -0.154 MILES

TOTAL CORRECTIONS	-0.154	MILES
NET LENGTH OF PROJECT	6.783	MILES
STATE LENGTH	6.783	MILES

FOR INFORMATION ONLY
ESTIMATED DISTURBED ACRES — 0 ACRES

STATE OF MISSOURI
TIMOTHY K. MINER
NUMBER PE-2021010008
PROFESSIONAL ENGINEER
07/28/2025 3:11:40 PM
TIMOTHY K. MINER - CIVIL
MO-PE-20211010008

DATE PREPARED: 7/28/2025

ROUTE	STATE
69	MO
DISTRICT	SHEET NO.
NW	1

COUNTY: CLINTON
JOB NO.: JNW0042
CONTRACT ID.
PROJECT NO.
BRIDGE NO.

DESCRIPTION	DATE

MISSOURI HIGHWAYS AND TRANSPORTATION COMMISSION
105 WEST CAPITOL
JEFFERSON CITY, MO 65102
1-888-ASK-MODOT (1-888-275-6636)

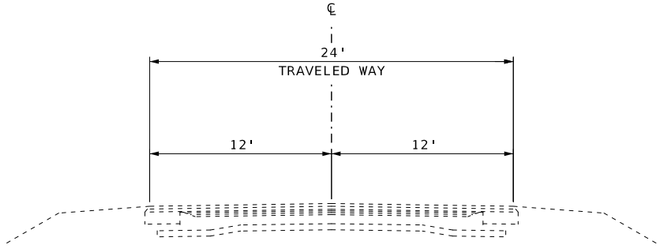

EXISTING TYPICAL SECTION

LOG MILE 79.479 TO LOG MILE 80.496
LOG MILE 80.673 TO LOG MILE 81.811
LOG MILE 82.009 TO LOG MILE 83.689
LOG MILE 83.765 TO LOG MILE 85.766

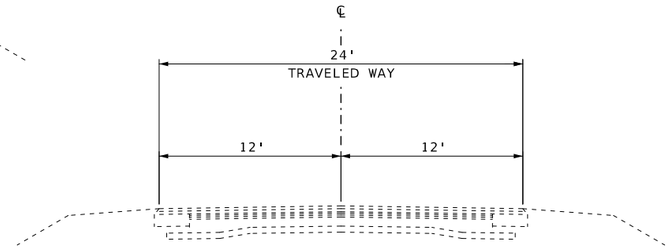

EXISTING TYPICAL SECTION

LOG MILE 80.496 TO LOG MILE 80.519
LOG MILE 81.811 TO LOG MILE 82.009
LOG MILE 83.689 TO LOG MILE 83.765

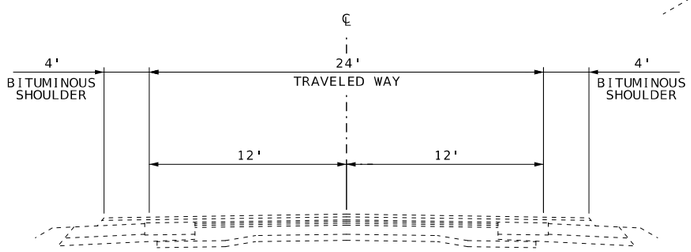

EXISTING TYPICAL SECTION

LOG MILE 85.766 TO LOG MILE 86.416

PAVEMENT HISTORY

YEAR	DESCRIPTION	
	TRAVELED WAY	SHOULDERS
1931	6"-9" X 20' PCCP	-
1931	4" BASE	-
1931	-	7" BASE
1931	-	5" SUBBASE
1950	1" X 20' ASPH. CONC. RESURF.	-
1964	1-1/4" x 20' TYPE C ASPHALTIC CONCRETE	-
1964	-	2" BASE
1990	1" X 20' SURFACE LEVELING	-
2008	1-3/4" BP-1 (PG64-22)	-
2008	2" BP-1 (PG64-22)	-
2008	-	8" PMBB WIDENING (PG64-22)
2008	-	5" TYPE 1 AGGR.

ESTIMATE FACTORS *	
BP-1 (PG58-28H)	1.97 TON / C.Y.
TACK COAT	0.08 GAL. / S.Y.
TACK COAT (FOR MODIFIED COLDMILLING)	0.10 GAL. / S.Y.
PERMANENT AGG. EDGE TREATMENT	1.60 TONS / C.Y.

* FOR INFORMATION PURPOSES ONLY

EXISTING TYPICAL SECTIONS

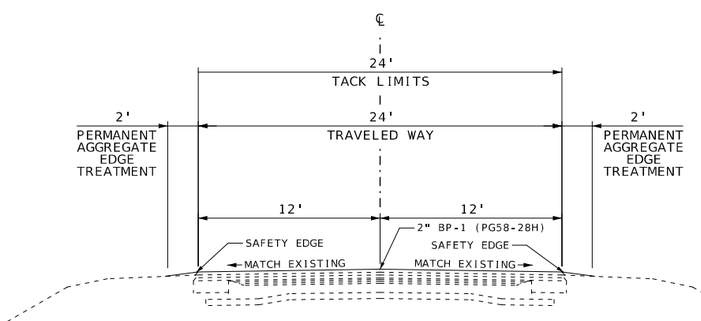

PROPOSED TYPICAL SECTION

LOG MILE 79.479 TO LOG MILE 80.496
LOG MILE 80.673 TO LOG MILE 81.811
LOG MILE 82.009 TO LOG MILE 83.689
LOG MILE 83.765 TO LOG MILE 85.766

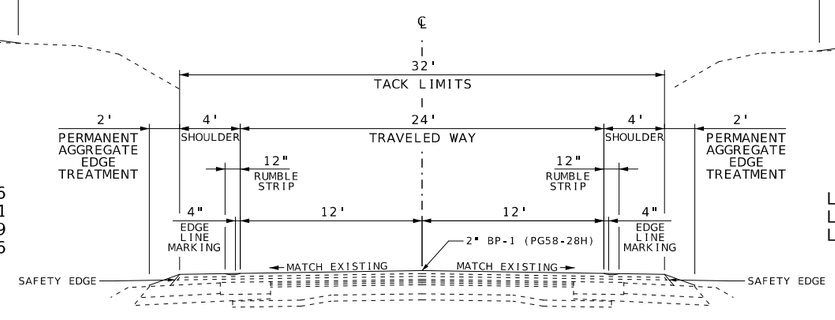

PROPOSED TYPICAL SECTION

LOG MILE 85.766 TO LOG MILE 86.416

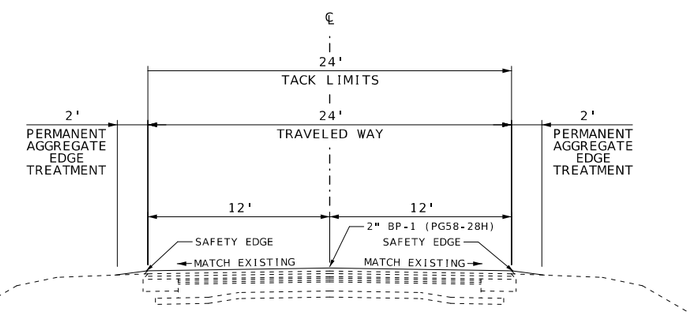

PROPOSED TYPICAL SECTION

LOG MILE 80.496 TO LOG MILE 80.519
LOG MILE 81.811 TO LOG MILE 82.009
LOG MILE 83.689 TO LOG MILE 83.765

NOT TO SCALE

PROPOSED TYPICAL SECTIONS

TYPICAL SECTIONS
SHEET 1 OF 1

STATE OF MISSOURI
TIMOTHY K. MINER
NUMBER PE-2021010008
PROFESSIONAL ENGINEER
07/28/2025 3:12:12 PM
TIMOTHY K. MINER - CIVIL
MO-PE-2021101008

DATE PREPARED	
7/28/2025	
ROUTE 69	STATE MO
DISTRICT NW	SHEET NO. 2
COUNTY CLINTON	
JOB NO. JNW0042	
CONTRACT ID.	
PROJECT NO.	
BRIDGE NO.	

DATE	DESCRIPTION

MISSOURI HIGHWAYS AND TRANSPORTATION COMMISSION
105 WEST CAPITOL
JEFFERSON CITY, MO 65102
1-888-ASK-MODOT (1-888-275-6636)

RESURFACING

LOCATION	BEGIN LOG MILE	END LOG MILE	LENGTH FT.	WIDTH FT.	AREA S.Y.	2" BP-1 (PG 58-28H) TONS	TACK COAT GAL.	REMARKS
MAINLINE								
US 69	79.479	80.519	5491.20	24	14643.20	1602.62	1171.5	FROM ROUNDABOUT APPROACH PAVEMENT TO BRIDGE EXCEPTION
US 69	80.673	85.639	26220.48	24	69921.28	7652.50	5593.7	FROM BRIDGE EXCEPTION TO COMMERCIAL ENTRANCE
US 69	85.639	85.718	417.12	26	1205.01	131.88	96.4	COMMERCIAL ENTRANCE
US 69	85.718	85.766	253.44	24	675.84	73.97	54.1	FROM COMMERCIAL ENTRANCE TO WIDTH TRANSITION
US 69	85.766	86.416	3432.00	32	12202.67	1335.51	976.2	FROM WIDTH TRANSITION TO COUNTY LINE
US 69	-	-	35814.24	-	-	678.30	-	SURFACE IRREGULARITIES (50 TONS/LANE MILE)
US 69	-	-	35814.24	-	-	431.86	-	SAFETY EDGE
INTERSECTIONS								
W SE 251 ST.	79.599	-	-	-	82.79	9.06	8.3	
E SE 251 ST.	79.599	-	-	-	124.39	13.61	12.4	
W SE 240 ST	81.099	-	-	-	134.5	14.72	13.5	
S SE 240 ST	81.099	-	-	-	122.5	13.41	12.3	
W SE 232 ST.	82.119	-	-	-	122.5	13.41	12.3	
E SE 232 ST.	82.119	-	-	-	196.53	21.51	19.7	
V HWY	82.859	-	-	-	320.35	35.06	32.0	
SE 226 ST.	82.867	-	-	-	148.38	16.24	14.8	
SE 216 ST.	83.719	-	-	-	26.99	2.95	2.7	
SE BARNSVILLE RD.	83.719	-	-	-	124.64	13.64	12.5	
W SE 212 ST.	84.618	-	-	-	133.09	14.57	13.3	
E SE 212 ST.	84.618	-	-	-	65.5	7.17	6.6	
RTE PP	85.778	-	-	-	676.53	74.04	67.7	
SE 204 ST.	85.778	-	-	-	158.14	17.31	15.8	
ELISSA LN.	86.097	-	-	-	169.56	18.56	17.0	
PRIVATE ENTRANCES								
VARIOUS	-	-	-	-	2500	273.61	250.0	QUANTITIES FOR 70 PRIVATE ENTRANCE LOCATIONS
					SUBTOTALS	12468.61	8404.3	
					PAY TOTALS	12468.6	8404	

AGGREGATE EDGE TREATMENT

LOCATION	BEGIN LOG MILE	END LOG MILE	LENGTH FT.	DEPTH IN.	WIDTH FT.	PERMANENT AGGREGATE EDGE TREATMENT TONS	REMARKS
US 69	79.479	79.598	628.32	3	2	24.95	TO 251 ST
US 69	79.618	80.518	4752.00	3	2	188.67	TO BRIDGE EXCEPTION
US 69	80.679	82.858	11505.12	3	2	456.80	TO ROUTE V
US 69	82.871	85.767	15290.88	3	2	607.10	TO ROUTE PP
US 69	85.796	86.416	3273.60	3	2	129.97	TO END OF JOB
					SUBTOTAL	1407.49	
					PAY TOTAL	1407	

MOBILIZATION

1 LUMP SUM

MODIFIED COLDMILLING (DEPTH TRANSITIONS)

LOCATION	LOG MILE	LENGTH FT.	WIDTH FT.	MODIFIED COLDMILLING S.Y.	REMARKS
MAINLINE					
US 69	79.479	100.00	24	266.67	CONSTRUCTION JOINT TRANSITION
US 69	80.519	100.00	24	266.67	BEGIN BRIDGE EXCEPTION
US 69	80.673	100.00	24	266.67	END BRIDGE EXCEPTION
US 69	86.416	100.00	32	355.56	COUNTY LINE TRANSITION
INTERSECTIONS					
W SE 251 ST.	79.599	-	-	22.22	
E SE 251 ST.	79.599	-	-	22.22	
W SE 240 ST	81.099	-	-	19.44	
S SE 240 ST	81.099	-	-	19.44	
W SE 232 ST.	82.119	-	-	19.44	
E SE 232 ST.	82.119	-	-	19.44	
V HWY	82.859	-	-	22.22	
SE 226 ST.	82.867	-	-	19.44	
SE 216 ST.	83.719	-	-	19.44	
SE BARNSVILLE RD.	83.719	-	-	19.44	
W SE 212 ST.	84.618	-	-	19.44	
E SE 212 ST.	84.618	-	-	19.44	
RTE PP	85.778	-	-	22.22	
SE 204 ST.	85.778	-	-	19.44	
ELISSA LN.	86.097	-	-	19.44	
			SUBTOTAL	1458.29	
			PAY TOTAL	1458	

RUMBLE STRIPS

LOCATION	BEGIN LOG MILE	END LOG MILE	LENGTH FT.	BITUMINOUS SHOULDER RUMBLE STRIP 100FT	REMARKS
NORTHBOUND					
US 69	85.796	85.975	945.12	9.45	TO PRIVATE ENTRANCE
US 69	85.996	86.116	633.60	6.34	TO PRIVATE ENTRANCE
US 69	86.236	86.416	950.40	9.50	TO END OF JOB
SOUTHBOUND					
US 69	85.796	86.096	1584.00	15.84	TO PRIVATE ENTRANCE
US 69	86.156	86.176	105.60	1.06	TO PRIVATE ENTRANCE
US 69	86.236	86.316	422.40	4.22	TO PRIVATE ENTRANCE
US 69	86.336	86.416	422.40	4.22	TO END OF JOB
			SUBTOTAL	50.63	
			PAY TOTAL	51	

SUMMARY OF QUANTITIES

SHEET 1 OF 3

STATE OF MISSOURI
TIMOTHY K. MINER
NUMBER
PE-2021010008
PROFESSIONAL ENGINEER

07/28/2025 3:16:33 PM
TIMOTHY K. MINER - CIVIL
MO-PE-2021010008

DATE PREPARED
7/28/2025

ROUTE	STATE
69	MO
DISTRICT	SHEET NO.
NW	3

COUNTY
CLINTON

JOB NO.
JNW0042

CONTRACT ID.

PROJECT NO.

BRIDGE NO.

DESCRIPTION	DATE

MISSOURI HIGHWAYS AND TRANSPORTATION COMMISSION
105 WEST CAPITOL
JEFFERSON CITY, MO 65102
1-888-ASK-MODOT (1-888-275-6636)

PAVEMENT MARKING PAINT

BEGIN LOG MILE	END LOG MILE	LENGTH	4" YELLOW CLASS 1 (18-MIL, TYPE P BEADS)	4" WHITE CLASS 1 (18-MIL, TYPE P BEADS)	REMARK
		FT.	L.F.	L.F.	
79.479	79.658	945.12	1890.24	1890.24	NO PASSING NORTHBOUND, NO PASSING SOUTHBOUND
79.658	79.760	538.56	673.20	1077.12	NO PASSING NORTHBOUND, SKIP SOUTHBOUND
79.760	79.958	1045.44	2090.88	2090.88	NO PASSING NORTHBOUND, NO PASSING SOUTHBOUND
79.958	80.138	950.40	1188.00	1900.80	NO PASSING NORTHBOUND, SKIP SOUTHBOUND
80.138	80.559	2222.88	555.72	4445.76	CENTERLINE SKIP
80.559	80.738	945.12	1181.40	1890.24	SKIP NORTHBOUND, NO PASSING SOUTHBOUND
80.738	81.018	1478.40	2956.80	2956.80	NO PASSING NORTHBOUND, NO PASSING SOUTHBOUND
81.018	81.098	422.40	528.00	844.80	NO PASSING NORTHBOUND, SKIP SOUTHBOUND
81.098	81.158	316.80	633.60	633.60	NO PASSING NORTHBOUND, NO PASSING SOUTHBOUND
81.158	81.218	316.80	396.00	633.60	SKIP NORTHBOUND, NO PASSING SOUTHBOUND
81.218	81.317	522.72	1045.44	1045.44	NO PASSING NORTHBOUND, NO PASSING SOUTHBOUND
81.317	81.398	427.68	534.60	855.36	NO PASSING NORTHBOUND, SKIP SOUTHBOUND
81.398	81.459	322.08	644.16	644.16	NO PASSING NORTHBOUND, NO PASSING SOUTHBOUND
81.459	81.577	623.04	778.80	1246.08	SKIP NORTHBOUND, NO PASSING SOUTHBOUND
81.577	81.617	211.20	422.40	422.40	NO PASSING NORTHBOUND, NO PASSING SOUTHBOUND
81.617	81.817	1056.00	1320.00	2112.00	NO PASSING NORTHBOUND, SKIP SOUTHBOUND
81.817	81.878	322.08	80.52	644.16	CENTERLINE SKIP
81.878	82.038	844.80	1056.00	1689.60	SKIP NORTHBOUND, NO PASSING SOUTHBOUND
82.038	82.058	105.60	211.20	211.20	NO PASSING NORTHBOUND, NO PASSING SOUTHBOUND
82.058	82.158	528.00	660.00	1056.00	NO PASSING NORTHBOUND, SKIP SOUTHBOUND
82.158	82.221	332.64	665.28	665.28	NO PASSING NORTHBOUND, NO PASSING SOUTHBOUND
82.221	82.378	828.96	1036.20	1657.92	SKIP NORTHBOUND, NO PASSING SOUTHBOUND
82.378	82.418	211.20	422.40	422.40	NO PASSING NORTHBOUND, NO PASSING SOUTHBOUND
82.418	82.578	844.80	1056.00	1689.60	NO PASSING NORTHBOUND, SKIP SOUTHBOUND
82.578	82.718	739.20	924.00	1478.40	SKIP NORTHBOUND, NO PASSING SOUTHBOUND
82.718	82.738	105.60	26.40	211.20	CENTERLINE SKIP
82.738	82.838	528.00	660.00	1056.00	NO PASSING NORTHBOUND, SKIP SOUTHBOUND
82.838	82.899	322.08	644.16	644.16	NO PASSING NORTHBOUND, NO PASSING SOUTHBOUND
82.899	83.019	633.60	792.00	1267.20	SKIP NORTHBOUND, NO PASSING SOUTHBOUND
83.019	83.059	211.20	422.40	422.40	NO PASSING NORTHBOUND, NO PASSING SOUTHBOUND
83.059	83.158	522.72	653.40	1045.44	NO PASSING NORTHBOUND, SKIP SOUTHBOUND
83.158	83.223	343.20	686.40	686.40	NO PASSING NORTHBOUND, NO PASSING SOUTHBOUND
83.223	83.318	501.60	627.00	1003.20	SKIP NORTHBOUND, NO PASSING SOUTHBOUND
83.318	83.498	950.40	1900.80	1900.80	NO PASSING NORTHBOUND, NO PASSING SOUTHBOUND
83.498	83.638	739.20	924.00	1478.40	NO PASSING NORTHBOUND, SKIP SOUTHBOUND
83.638	83.718	422.40	844.80	844.80	NO PASSING NORTHBOUND, NO PASSING SOUTHBOUND
83.718	83.798	422.40	528.00	844.80	SKIP NORTHBOUND, NO PASSING SOUTHBOUND
83.798	83.918	633.60	792.00	1267.20	NO PASSING NORTHBOUND, SKIP SOUTHBOUND
83.918	83.959	216.48	432.96	432.96	NO PASSING NORTHBOUND, NO PASSING SOUTHBOUND
83.959	84.097	728.64	910.80	1457.28	SKIP NORTHBOUND, NO PASSING SOUTHBOUND
84.097	84.137	211.20	422.40	422.40	NO PASSING NORTHBOUND, NO PASSING SOUTHBOUND
84.137	84.237	528.00	660.00	1056.00	NO PASSING NORTHBOUND, SKIP SOUTHBOUND
84.237	84.417	950.40	1900.80	1900.80	NO PASSING NORTHBOUND, NO PASSING SOUTHBOUND
84.417	84.519	538.56	673.20	1077.12	NO PASSING NORTHBOUND, SKIP SOUTHBOUND
84.519	84.597	411.84	823.68	823.68	NO PASSING NORTHBOUND, NO PASSING SOUTHBOUND
84.597	84.697	528.00	660.00	1056.00	SKIP NORTHBOUND, NO PASSING SOUTHBOUND
84.697	84.837	739.20	1478.40	1478.40	NO PASSING NORTHBOUND, NO PASSING SOUTHBOUND
84.837	84.958	638.88	798.60	1277.76	SKIP NORTHBOUND, NO PASSING SOUTHBOUND
84.958	85.891	4926.24	9852.48	9852.48	NO PASSING NORTHBOUND, NO PASSING SOUTHBOUND
85.891	86.056	871.20	1089.00	1742.40	NO PASSING NORTHBOUND, SKIP SOUTHBOUND
86.056	86.076	105.60	211.20	211.20	NO PASSING NORTHBOUND, NO PASSING SOUTHBOUND
86.076	86.216	739.20	924.00	1478.40	SKIP NORTHBOUND, NO PASSING SOUTHBOUND
86.216	86.226	52.80	105.60	105.60	NO PASSING NORTHBOUND, NO PASSING SOUTHBOUND
86.226	86.316	475.20	594.00	950.40	NO PASSING NORTHBOUND, SKIP SOUTHBOUND
86.316	86.416	528.00	1056.00	1056.00	NO PASSING NORTHBOUND, NO PASSING SOUTHBOUND
		SUBTOTALS	55045.32	73254.72	
		PAY TOTALS	55045	73255	

CLASS C PARTIAL DEPTH PAVEMENT REPAIRS

LOCATION	LOG MILE	LENGTH	DEPTH	WIDTH	FURNISHING AND PLACING BITUMINOUS MATERIAL	REMOVAL
		FT.	IN.	FT.	TONS	S.Y.
SB TRANSVERSE REPAIRS						
US 69	79.484	2.00	4	12	0.58	2.67
US 69	79.600	2.00	4	12	0.58	2.67
US 69	79.620	2.00	4	12	0.58	2.67
US 69	79.678	2.00	4	12	0.58	2.67
US 69	79.908	2.00	4	12	0.58	2.67
US 69	81.517	2.00	4	12	0.58	2.67
US 69	81.864	4.00	4	12	1.17	5.33
US 69	82.151	2.00	4	12	0.58	2.67
US 69	82.298	2.00	4	12	0.58	2.67
US 69	83.449	10.00	4	12	2.92	13.33
US 69	83.767	4.00	4	12	1.17	5.33
US 69	84.003	4.00	4	12	1.17	5.33
US 69	84.219	4.00	4	12	1.17	5.33
US 69	84.332	4.00	4	12	1.17	5.33
US 69	84.441	4.00	4	12	1.17	5.33
US 69	84.908	10.00	4	12	2.92	13.33
US 69	85.028	4.00	4	12	1.17	5.33
US 69	85.242	4.00	4	12	1.17	5.33
US 69	85.518	4.00	4	12	1.17	5.33
US 69	85.917	2.00	4	16	0.78	3.56
US 69	86.267	6.00	4	16	2.33	10.67
US 69	86.305	4.00	4	16	1.56	7.11
NB TRANSVERSE REPAIRS						
US 69	79.484	4.00	4	12	1.17	5.33
US 69	80.827	4.00	4	12	1.17	5.33
US 69	81.073	4.00	4	12	1.17	5.33
US 69	81.864	4.00	4	12	1.17	5.33
US 69	82.298	2.00	4	12	0.58	2.67
US 69	83.212	4.00	4	12	1.17	5.33
US 69	83.296	4.00	4	12	1.17	5.33
US 69	83.449	10.00	4	12	2.92	13.33
US 69	83.651	4.00	4	12	1.17	5.33
US 69	84.003	4.00	4	12	1.17	5.33
US 69	84.219	4.00	4	12	1.17	5.33
US 69	84.347	4.00	4	12	1.17	5.33
US 69	84.908	10.00	4	12	2.92	13.33
US 69	85.028	4.00	4	12	1.17	5.33
US 69	85.257	4.00	4	12	1.17	5.33
US 69	85.339	4.00	4	12	1.17	5.33
US 69	86.069	4.00	4	16	1.56	7.11
US 69	86.267	4.00	4	16	1.56	7.11
US 69	86.305	4.00	4	16	1.56	7.11
CL LONGITUDINAL REPAIRS						
US 69	84.587	15.00	4	2	0.73	3.33
US 69	84.728	25.00	4	2	1.22	5.56
US 69	84.946	40.00	4	2	1.95	8.89
US 69	84.979	207.00	4	2	10.07	46.00
US 69	85.048	90.00	4	2	4.38	20.00
US 69	85.327	30.00	4	2	1.46	6.67
US 69	85.450	40.00	4	2	1.95	8.89
US 69	85.471	20.00	4	2	0.97	4.44
US 69	85.483	25.00	4	2	1.22	5.56
US 69	85.505	105.00	4	2	5.11	23.33
US 69	85.562	175.00	4	2	8.51	38.89
US 69	85.729	15.00	4	2	0.73	3.33
				SUBTOTAL	90.29	412.17
				PAY TOTAL	90.3	412.2

PREFORMED THERMOPLASTIC PAVEMENT MARKING

LOCATION	24" WHITE	REMARKS
	L.F.	
US 69	30.00	SEE PAVEMENT MARKING SHEET
PAY TOTAL	30	

SUMMARY OF QUANTITIES
SHEET 2 OF 3

STATE OF MISSOURI
TIMOTHY K. MINER
NUMBER PE-2021010008
PROFESSIONAL ENGINEER
07/28/2025 3:14:18 PM
TIMOTHY K. MINER - CIVIL
MO-PE-20211010008

DATE PREPARED 7/28/2025
ROUTE 69 | STATE MO
DISTRICT NW | SHEET NO. 3
COUNTY CLINTON
JOB NO. JNW0042
CONTRACT ID.
PROJECT NO.
BRIDGE NO.

DESCRIPTION | DATE

MISSOURI HIGHWAYS AND TRANSPORTATION COMMISSION
105 WEST CAPITOL
JEFFERSON CITY, MO 65102
1-888-ASK-MODOT (1-888-275-6636)

SIGN	SIZE IN.	AREA SQ.FT.	QTY EACH	TOTAL AREA SQ.FT.	QTY RELOC EACH	TOTAL RELOC SQ.FT.	SIGN NO.	DESCRIPTION
WARNING SIGNS								
WO1-1L	48X48	16.00						TURN (SYMBOL LEFT)
WO1-1R	48X48	16.00						TURN (SYMBOL RIGHT)
WO1-2L	48X48	16.00						CURVE (SYMBOL LEFT)
WO1-2R	48X48	16.00						CURVE (SYMBOL RIGHT)
WO1-3L	48X48	16.00						REVERSE TURN (SYMBOL LEFT)
WO1-3R	48X48	16.00						REVERSE TURN (SYMBOL RIGHT)
WO1-4L	48X48	16.00						REVERSE CURVE (SYMBOL LEFT)
WO1-4R	48X48	16.00						REVERSE CURVE (SYMBOL RIGHT)
WO1-4bL	48X48	16.00						DOUBLE ARROW REVERSE CURVE (SYMBOL LEFT)
WO1-4bR	48X48	16.00						DOUBLE ARROW REVERSE CURVE (SYMBOL RIGHT)
WO1-4cL	48X48	16.00						TRIPLE ARROW REVERSE CURVE (SYMBOL LEFT)
WO1-4cR	48X48	16.00						TRIPLE ARROW REVERSE CURVE (SYMBOL RIGHT)
WO1-6	60X30	12.50						HORIZONTAL ARROW (SYMBOL)
WO1-6a	72X36	18.00						HORIZ. ARROW (SYMBOL ON PERMANENT BARRICADE)
WO1-7	60X30	12.50						DOUBLE HEAD HORIZONTAL ARROW (SYMBOL)
WO1-7a	72X36	18.00						DOUBLE HEAD HORIZ. ARROW (SYMBOL ON PERM. BARR.)
WO1-8	18X24	3.00						CHEVRON (SYMBOL)
WO1-8a	30X36	7.50						CHEVRON (SYMBOL FOR DIVIDED HIGHWAYS)
WO3-1	48X48	16.00						STOP AHEAD (SYMBOL)
WO3-2	48X48	16.00						YIELD AHEAD (SYMBOL)
WO3-3	48X48	16.00						SIGNAL AHEAD (SYMBOL)
WO3-4	48X48	16.00	8	128.00			11	BE PREPARED TO STOP
WO3-5	48X48	16.00						SPEED LIMIT AHEAD
WO4-1L	48X48	16.00						MERGE (SYMBOL FROM LEFT)
WO4-1R	48X48	16.00						MERGE (SYMBOL FROM RIGHT)
WO4-1aL	48X48	16.00						MERGE (LEFT)
WO4-1aR	48X48	16.00						MERGE (RIGHT)
WO5-1	48X48	16.00						ROAD/BRIDGE/RAMP NARROWS
WO5-3	48X48	16.00						ONE LANE BRIDGE
WO5-5	48X48	16.00						NARROW LANES
WO6-1	48X48	16.00						DIVIDED HIGHWAY (SYMBOL)
WO6-2	48X48	16.00						DIVIDED HIGHWAY END (SYMBOL)
WO6-3	48X48	16.00						TWO WAY TRAFFIC (SYMBOL)
WO7-3a	30X24	5.00						NEXT XX MILES (PLAQUE)
WO8-1	48X48	16.00						BUMP
WO8-2	48X48	16.00						DIP
WO8-3	48X48	16.00						PAVEMENT ENDS
WO8-4	48X48	16.00						SOFT SHOULDER
WO8-5	48X48	16.00						SLIPPERY WHEN WET (SYMBOL)
WO8-6	48X48	16.00						TRUCK CROSSING
WO8-6c	48X48	16.00						TRUCK ENTRANCE
WO8-7	36X36	9.00						LOOSE GRAVEL
WO8-7a	36X36	9.00						FRESH OIL / LOOSE GRAVEL
WO8-9	48X48	16.00						LOW SHOULDER
WO8-11	48X48	16.00	12	192.00			36	UNEVEN LANES
WO8-12	48X48	16.00	12	192.00			35	NO CENTER LINE
WO8-15	48X48	16.00						GROOVED PAVEMENT
WO8-15P	30X24	5.00						MOTORCYCLE (PLAQUE)
WO8-17L	48X48	16.00						SHOULDER DROP-OFF (SYMBOL LEFT)
WO8-17R	48X48	16.00						SHOULDER DROP-OFF (SYMBOL RIGHT)
WO8-17P	30X24	5.00						SHOULDER DROP-OFF (PLAQUE)
W10-1	42RND.	9.62						RAILROAD CROSSING
WO12-1	24X24	4.00						DOUBLE DOWN ARROW (SYMBOL)
WO12-2	48X48	16.00						LOW CLEARANCE (SYMBOL)
WO12-2x	24X18	3.00						LOW CLEARANCE (PLAQUE)
WO12-2a	84X24	14.00						OVERHEAD LOW CLEARANCE (FEET AND INCHES)
WO12-4	120X60	50.00						LOW CLEARANCE XX FT XX IN XX MILES AHEAD
WO12-5	120X60	50.00						WIDTH RESTRICTION XX FT XX IN XX MILES AHEAD
WO13-1	30X30	6.25						ADVISORY SPEED (PLAQUE)
WO16-2	30X24	5.00						XXX FEET (PLAQUE)
WO16-3	30X24	5.00						X MILE (PLAQUE)
WO20-1	48X48	16.00	12	192.00			2	ROAD/BRIDGE/RAMP WORK AHEAD
WO20-2	48X48	16.00						DETOUR AHEAD
WO20-3	48X48	16.00						ROAD CLOSED AHEAD
WO20-4	48X48	16.00	6	96.00			7	ONE LANE ROAD AHEAD
WO20-5	48X48	16.00						RIGHT/CENTER/LEFT LANE CLOSED AHEAD
WO20-5a	48X48	16.00						2 RIGHT/CENTER/LEFT LANES CLOSED AHEAD
WO20-6a	48X48	16.00						RIGHT/CENTER/LEFT LANE CLOSED
WO20-7a	48X48	16.00	12	192.00			8	FLAGGER (SYMBOL)
WO21-2	36X36	9.00						FRESH OIL
WO21-5	48X48	16.00						SHOULDER WORK / SHOULDER WORK AHEAD
WO22-1	48X48	16.00						BLASTING ZONE AHEAD
WO22-2	42X36	10.50						TURN OFF 2-WAY RADIO AND PHONE
WO22-3	42X36	10.50						END BLASTING ZONE
GO22-1	21X15	2.19	2	4.38				WET PAINT (ARROW PIVOTS)

SIGN	SIZE IN.	AREA SQ.FT.	QTY EACH	TOTAL SQ.FT.	QTY RELOC EACH	TOTAL RELOC SQ.FT.	SIGN NO.	DESCRIPTION
GUIDE SIGNS								
E05-1	36X48	12.00						GORE EXIT
E05-2	48X36	12.00						EXIT OPEN
E05-2a	48X36	12.00						EXIT CLOSED
GO20-1	60X24	10.00	2	20.00			1	ROAD WORK NEXT 14 MILES
GO20-2	48X24	8.00	2	16.00			26	END ROAD WORK
GO20-4	36X18	4.50	1	4.50			53	PILOT CAR FOLLOW ME
GO20-4a	42X30	8.75	8	70.00			58	PILOT CAR IN USE WAIT & FOLLOW
GO20-4a	18X12	1.50	20	30.00			58	PILOT CAR IN USE WAIT & FOLLOW
GO20-5aP	36X24	6.00						WORK ZONE (PLAQUE)
MO4-8a	24X18	3.00						END DETOUR
MO4-9L	48X36	12.00						DETOUR (LEFT)
MO4-9R	48X36	12.00						DETOUR (RIGHT)
MO4-9P	48X12	4.00						STREET NAME (PLAQUE)
MO4-10L	48X18	6.00						DETOUR ARROW (LEFT)
MO4-10R	48X18	6.00						DETOUR ARROW (RIGHT)
REGULATORY SIGNS								
R1-1	48X48	13.25						STOP
R1-2	48TRI.	6.93						YIELD
R1-2a	36X36	9.00						TO ONCOMING TRAFFIC (PLAQUE)
R1-3P	30X12	2.50						ALL WAY (PLAQUE)
R2-1	36X48	12.00						SPEED LIMIT XX
R3-1	48X48	16.00						NO RIGHT TURN (SYMBOL)
R3-2	48X48	16.00						NO LEFT TURN (SYMBOL)
R3-3	36X36	9.00						NO TURNS
R3-4	48X48	16.00						NO U-TURN (SYMBOL)
R3-7L	30X30	6.25						LEFT LANE MUST TURN LEFT
R3-7R	30X30	6.25						RIGHT LANE MUST TURN RIGHT
R4-1	36X48	12.00						DO NOT PASS
R4-2	36X48	12.00						PASS WITH CARE
R4-7a	36X48	12.00						KEEP RIGHT (HORIZONTAL ARROW)
R4-8a	36X48	12.00						KEEP LEFT (HORIZONTAL ARROW)
R5-1	30X30	6.25						DO NOT ENTER
R5-1a	36X24	6.00						WRONG WAY
R6-1L	54X18	6.75						ONE WAY ARROW (LEFT)
R6-1R	54X18	6.75						ONE WAY ARROW (RIGHT)
R6-2L	24X30	5.00						ONE WAY (LEFT)
R6-2R	24X30	5.00						ONE WAY (RIGHT)
R9-9	24X12	2.00						SIDEWALK CLOSED
R9-11L	24X18	3.00						SIDEWALK CLOSED AHEAD, (ARROW LEFT) CROSS HERE
R9-11R	24X18	3.00						SIDEWALK CLOSED AHEAD, (ARROW RIGHT) CROSS HERE
R10-6	24X36	6.00						STOP HERE ON RED (45^ ARROW)
R11-2	48X30	10.00						ROAD CLOSED
R11-3a	60X30	12.50						ROAD CLOSED XX MILES AHEAD LOCAL TRAFFIC ONLY
R11-4	60X30	12.50						ROAD CLOSED TO THRU TRAFFIC
CONST-3A	60X48	20.00						FINE SIGN
CONST-3X	56X12	4.67						SPEEDING/PASSING (PLATE)
MISCELLANEOUS SIGNS								
CONST-5	48X36	12.00						POINT OF PRESENCE
CONST-5	96X48	32.00						POINT OF PRESENCE
CONST-8	48X36	12.00	2	24.00			59	WORK ZONE NO PHONE ZONE

616-10.05 CONSTRUCTION SIGNS	TOTAL 1161
616-10.10 RELOCATED SIGNS	TOTAL

ITEM NUMBER	TOTAL QTY	EFFECTIVE: 07-01-2025 DESCRIPTION
6122008		IMPACT ATTENUATOR 40 MPH (SAND BARRELS)
6122009		IMPACT ATTENUATOR 45 MPH (SAND BARRELS)
6122010		IMPACT ATTENUATOR 50 MPH (SAND BARRELS)
6122012		IMPACT ATTENUATOR 55 MPH (SAND BARRELS)
6122014		IMPACT ATTENUATOR 60 MPH (SAND BARRELS)
6122017		IMPACT ATTENUATOR 65 MPH (SAND BARRELS)
6122019		IMPACT ATTENUATOR 70 MPH (SAND BARRELS)
6122020		REPLACEMENT SAND BARREL
6122030		IMPACT ATTENUATOR (RELOCATION)
6122040		WORK ZONE CRASH CUSHION (NARROW)
6122041		WORK ZONE CRASH CUSHION (RELOCATION)
6123001		TRUCK MOUNTED ATTENUATOR (TMA)
6161012		BUOYS (BOATS KEEP OUT)
6161013		BUOYS (NO WAKE)
6161014		SPECIAL SIGN ASSEMBLY (BOATS KEEP OUT)
6161020		CHANNELIZER (DRUM-LIKE)
6161022		CHANNELIZER (CONE)
6161025	100	CHANNELIZER (TRIM-LINE)
6161026		CHANNELIZER (VERTICAL PANEL)
6161030		TYPE 3 MOVEABLE BARRICADE
6161033		DIRECTION INDICATOR BARRICADE
6161040	2	FLASHING ARROW PANEL
6161047		TYPE 3 OBJECT MARKER
6161055		SEQUENTIAL FLASHING WARNING LIGHT
6161070		TUBULAR MARKER
6161095		RADAR SPEED ADVISORY SYSTEM
6161096		CHANGEABLE MESSAGE SIGN, COMMISSION FURNISHED/RETAINED
6161098A	4*	CHANGEABLE MESSAGE SIGN WITHOUT COMM. INTERFACE, CONTRACTOR FURNISHED/RETAINED
6161099		CHANGEABLE MESSAGE SIGN WITH COMM. INTERFACE, CONTRACTOR FURNISHED/RETAINED
6162000A		WORK ZONE TRAFFIC SIGNAL SYSTEM
6162002		TEMPORARY LONG-TERM RUMBLE STRIPS
6173600D		TEMPORARY TRAFFIC BARRIER, CONTRACTOR FURNISHED/RETAINED
6173700B		TEMP. TRAFFIC BARRIER ANCHORED, CONTRACTOR FURNISHED/RETAINED
6173706		TEMP. TRAFFIC BARRIER STIFFNESS TRANSITION CONTRACTOR FURNISHED/RETAINED
6174000A		TEMP. TRAFFIC BARRIER HEIGHT TRANSITION, CONTRACTOR FURNISHED/RETAINED
6175010A		RELOCATING TEMPORARY TRAFFIC BARRIER
6175011B		RELOCATING TEMP. TRAFFIC BARRIER ANCHORED
6175013		RELOCATING TEMP. TRAFFIC BARRIER STIFFNESS
6175020A		RELOCATING TEMP. TRAFFIC BARRIER HEIGHT
6208064A		TEMPORARY RAISED PAVEMENT MARKER
9029400		TEMPORARY TRAFFIC SIGNALS
9029401		TEMPORARY TRAFFIC SIGNALS AND LIGHTING

616-99.01 - MISC. LUMP SUM TEMPORARY TRAFFIC CONTROL
1 LUMP SUM

* NOT INCLUDED IN LUMP SUM TEMPORARY TRAFFIC CONTROL, LOCATION AS DIRECTED BY THE ENGINEER

SEE STANDARD PLAN 616.20D FOR TEMPORARY TRAFFIC CONTROL PLANS

SUMMARY OF QUANTITIES
SHEET 3 OF 3

STATE OF MISSOURI
TIMOTHY K. MINER
NUMBER PE-2021010008
PROFESSIONAL ENGINEER
07/18/2025 8:29:56 AM
TIMOTHY K. MINER - CIVIL
MO-PE-20210101008

DATE PREPARED 7/14/2025

ROUTE	STATE
69	MO
DISTRICT	SHEET NO.
NW	3

COUNTY CLINTON

JOB NO. JNW0042

CONTRACT ID.

PROJECT NO.

BRIDGE NO.

DATE	DESCRIPTION

MISSOURI HIGHWAYS AND TRANSPORTATION COMMISSION

105 WEST CAPITOL
JEFFERSON CITY, MO 65102
1-888-ASK-MODOT (1-888-275-6636)

TYPICAL GRAVEL
INTERSECTION / ENTRANCE
TAPER AT 1":1'

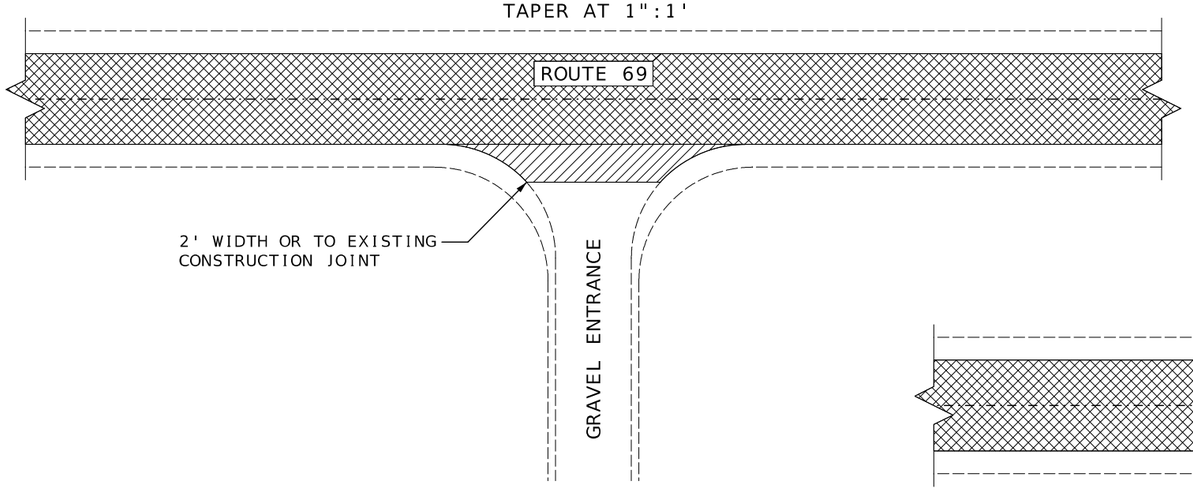

TYPICAL ASPHALT JUNCTION
TAPER AT 1":5'

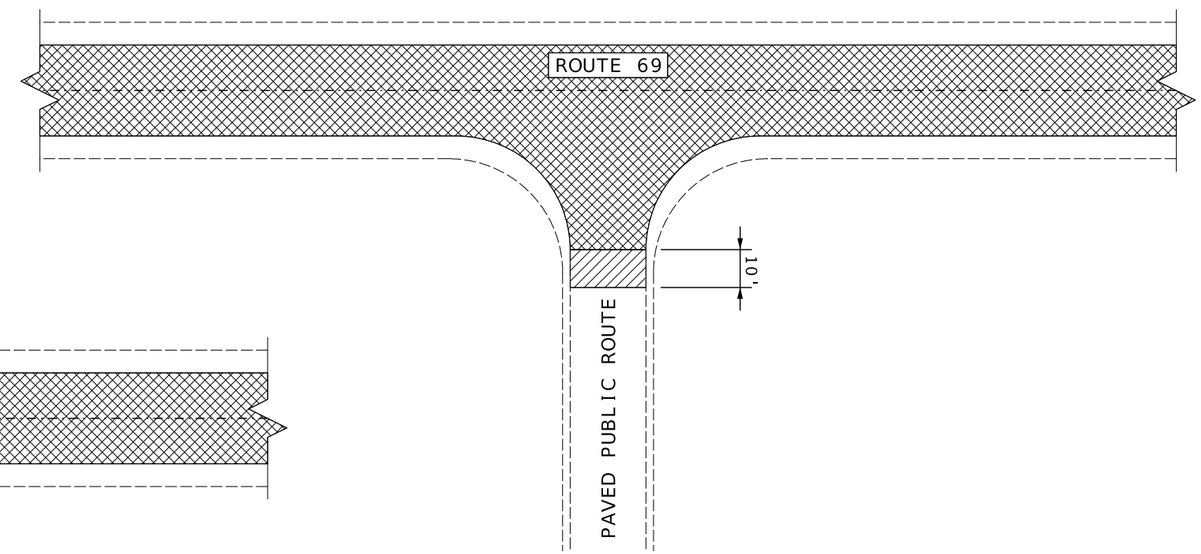

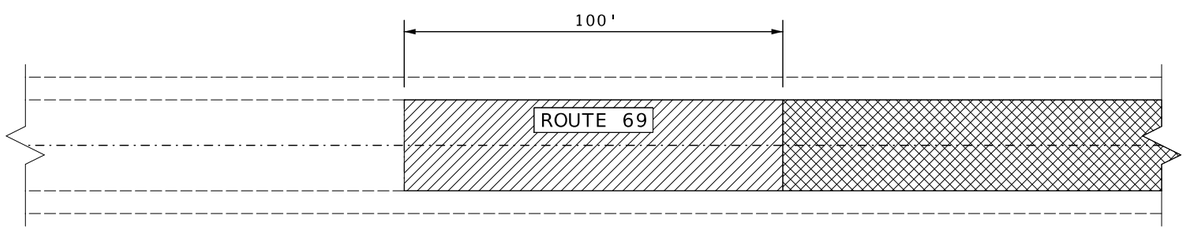

BEGINNING AND END OF
PROJECT / BRIDGE EXCEPTION
TAPER AT 1":50'

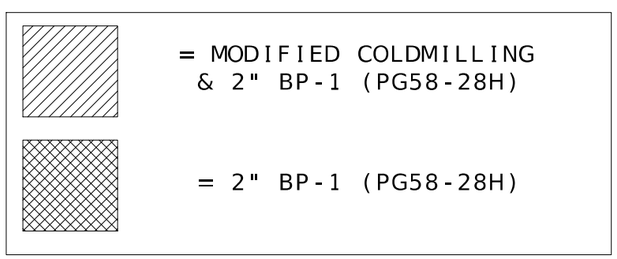

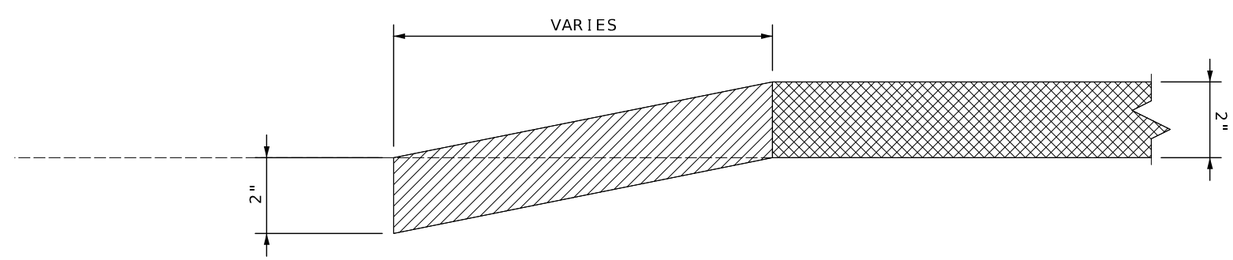

DEPTH TRANSITION

DEPTH TRANSITIONS
SPECIAL SHEET 1 OF 1

STATE OF MISSOURI
TIMOTHY K. MINER
NUMBER
PE-2021010008
PROFESSIONAL ENGINEER

07/18/2025 8:30:04 AM
TIMOTHY K. MINER - CIVIL
MO-PE-2021010008

DATE PREPARED	7/14/2025
ROUTE	69
STATE	MO
DISTRICT	NW
SHEET NO.	4
COUNTY	CLINTON
JOB NO.	JNW0042
CONTRACT ID.	
PROJECT NO.	
BRIDGE NO.	

DESCRIPTION	DATE

MISSOURI HIGHWAYS AND TRANSPORTATION COMMISSION
105 WEST CAPITOL
JEFFERSON CITY, MO 65102
1-888-ASK-MODOT (1-888-275-6636)

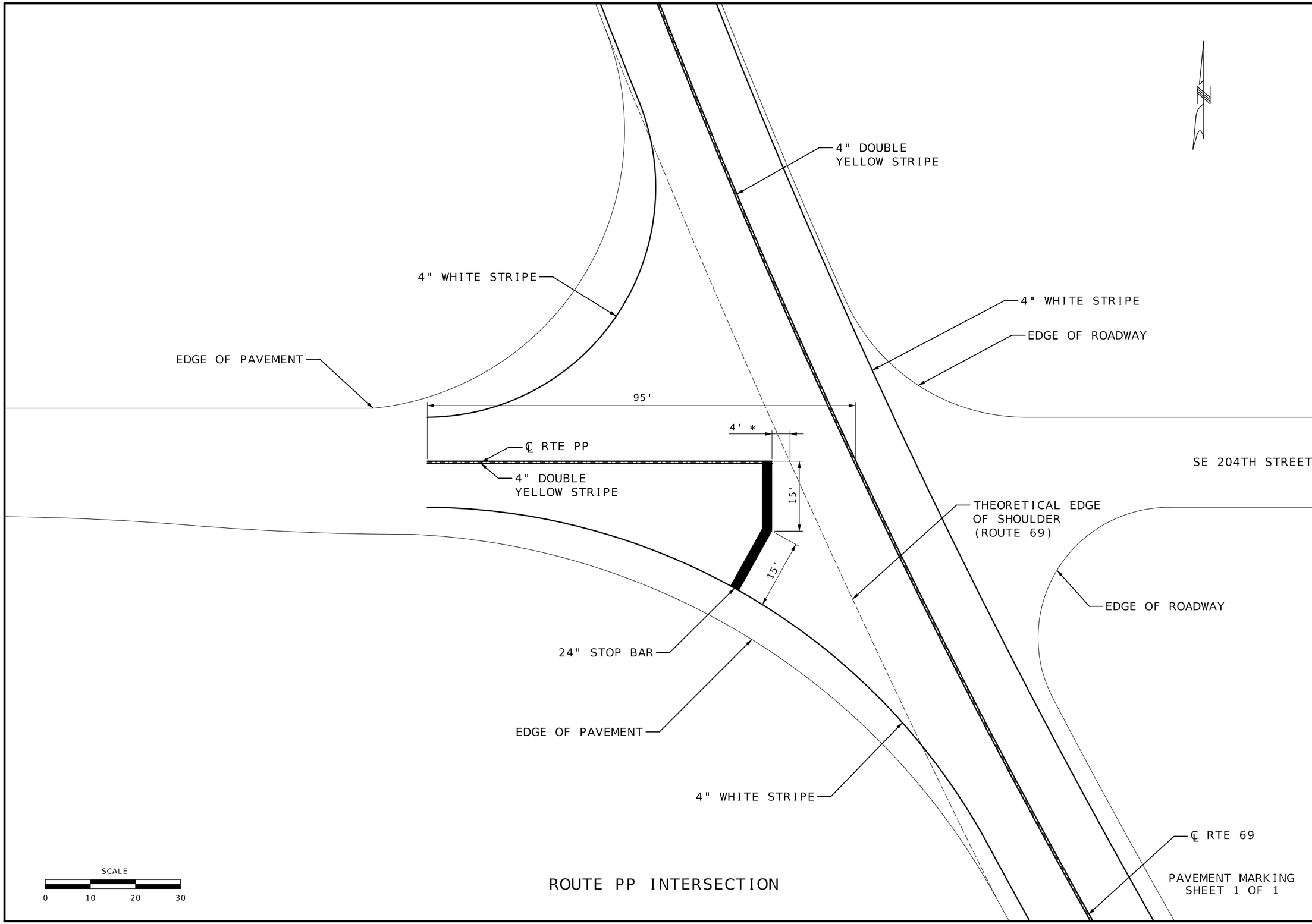

ROUTE PP INTERSECTION

PAVEMENT MARKING
SHEET 1 OF 1

STATE OF MISSOURI
TIMOTHY K. MINER
NUMBER
PE-2021010008
PROFESSIONAL ENGINEER

07/28/2025 3:12:40 PM
TIMOTHY K. MINER - CIVIL
MO-PE-20211010008

DATE PREPARED	7/28/2025
ROUTE	69
STATE	MO
DISTRICT	NW
SHEET NO.	5
COUNTY	CLINTON
JOB NO.	JNW0042
CONTRACT ID.	
PROJECT NO.	
BRIDGE NO.	

DESCRIPTION	DATE

MISSOURI HIGHWAYS AND TRANSPORTATION COMMISSION

105 WEST CAPITOL
JEFFERSON CITY, MO 65102
1-888-ASK-MODOT (1-888-275-6636)

MISSOURI HIGHWAYS AND TRANSPORTATION COMMISSION

PLANS FOR PROPOSED STATE HIGHWAY

CALDWELL / DAVIESS COUNTIES

DESIGN DESIGNATION

A.A.D.T. - 2026 = 1,787
A.A.D.T. - 2036 = 2,062
D.H.V. = 184
T = 11%-19.6%
V = 25-60 M.P.H.
D = 50.3% N / 49.7% S

FUNCTIONAL CLASSIFICATION-

ROUTE 13
MAJOR COLLECTOR
MINOR ARTERIAL (SOUTH OF HAMILTON)

BUSINESS 36
MAJOR COLLECTOR

NOTE: NO RIGHT OF WAY ACQUISITION

CONVENTIONAL SYMBOLS

(USED IN PLANS)

	EXISTING	NEW
BUILDINGS AND STRUCTURES		
GUARD RAIL		
GUARD CABLE		
CONCRETE RIGHT-OF-WAY MARKER		
STEEL RIGHT-OF-WAY MARKER		
LOCATION SURVEY MARKER		
UTILITIES		
FIBER OPTICS	—FO—	—FO—
OVERHEAD CABLE TV	-OTV-	-OTV-
UNDERGROUND CABLE TV	-UTV-	-UTV-
OVERHEAD TELEPHONE	—OT—	—OT—
UNDERGROUND TELEPHONE	—UT—	—UT—
OVERHEAD POWER	—OE—	—OE—
UNDERGROUND POWER	—UE—	—UE—
SANITARY SEWER	—S—	—S—
STORM SEWER	—SS—	—SS—
GAS	—G—	—G—
WATER	—W—	—W—
MANHOLE	SAN	
FIRE HYDRANT	HYD	
WATER VALVE	WV	
WATER METER	WM	
DROP INLET	DI	
DITCH BLOCK		
GROUND MOUNTED SIGN	SIGN	
LIGHT POLE		
H-FRAME POWER POLE		
TELEPHONE PEDESTAL	PED	
FENCE		
CHAIN LINK	—V—	
WOVEN WIRE	—X—	
GATE POST		
BENCHMARK	BM	

NOTE: DASHED OR OPEN SYMBOLS INDICATE EXISTING FEATURES

KEY MAP

LOCATION OF CALDWELL & DAVIESS COUNTIES

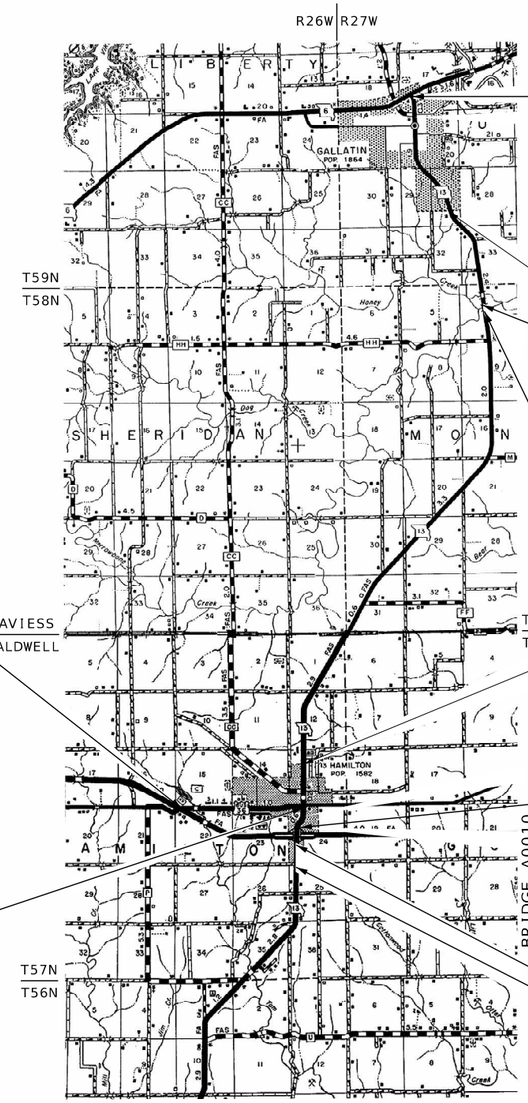

THE EXISTENCE AND APPROXIMATE LOCATION OF UTILITY FACILITIES KNOWN TO EXIST, AS SHOWN ON THE PLANS, ARE BASED ON THE BEST INFORMATION AVAILABLE TO THE COMMISSION AT THIS TIME. THIS INFORMATION IS PROVIDED BY THE COMMISSION "AS-IS" AND THE COMMISSION EXPRESSLY DISCLAIMS ANY REPRESENTATION OR WARRANTY AS TO THE COMPLETENESS, ACCURACY, OR SUITABILITY OF THE INFORMATION FOR ANY USE. RELIANCE UPON THIS INFORMATION IS DONE AT THE RISK AND PERIL OF THE USER, AND THE COMMISSION SHALL NOT BE LIABLE FOR ANY DAMAGES THAT MAY ARISE FROM ANY ERROR IN THE INFORMATION. IT IS, THEREFORE, THE RESPONSIBILITY OF THE CONTRACTOR TO VERIFY THE EXISTENCE, LOCATION AND STATUS OF ANY FACILITY. SUCH VERIFICATION INCLUDES DIRECT CONTACT WITH THE LISTED UTILITIES.

INDEX OF SHEETS

DESCRIPTION	SHEET NUMBER
TITLE SHEET	1
TYPICAL SECTIONS (TS) (5 SHEETS)	2
QUANTITIES (QU) (5 SHEETS)	3
SPECIAL SHEETS (SS)	4-16
TRAFFIC CONTROL SHEETS (TC)	17-24
PAVEMENT MARKING (PM)	25-28
EROSION CONTROL (EC)	29

LENGTH OF BUS. 36

BEGINNING	LOG MILE 0.020
END	LOG MILE 2.128
APPARENT LENGTH	2.108 MILES

LENGTH OF MO 13

BEGINNING	LOG MILE 25.707
END	LOG MILE 40.483
APPARENT LENGTH	14.776 MILES
EQUATIONS AND EXCEPTIONS:	
BRIDGE A8450	-0.045 MILES
BRIDGE A0010	-0.039 MILES
TOTAL CORRECTIONS	-0.084 MILES
STATE LENGTH	16.800 MILES
FOR INFORMATION ONLY ESTIMATED DISTURBED ACRES	0.1 ACRES

STATE OF MISSOURI
TIMOTHY K. MINER
NUMBER PE-2021010008
PROFESSIONAL ENGINEER

08/12/2025 12:25:16 PM
TIMOTHY K. MINER - CIVIL
MO-PE-2021010008

DATE PREPARED	8/12/2025
ROUTE	13,BUS36
STATE	MO
DISTRICT	NW
SHEET NO.	1
COUNTY	CALDWELL,DAVIESS
JOB NO.	JNW0089
CONTRACT ID.	-
PROJECT NO.	-
BRIDGE NO.	-

DATE	DESCRIPTION

MISSOURI HIGHWAYS AND TRANSPORTATION COMMISSION
105 WEST CAPITOL
JEFFERSON CITY, MO 65102
1-888-ASK-MODOT (1-888-275-6636)

ESTIMATE FACTORS *

BITUMINOUS PAVEMENT MIXTURE BP-2 (PG58-28H) .....1.98 TON/YD ^{3}
PERMANENT AGGREGATE EDGE TREATMENT .....1.60 TON/YD ^{3}
TACK COAT (EXISTING SURFACE).....0.08 GAL/YD ^{2}
TACK COAT (COLDMILL & MILLED SURFACE).....0.10 GAL/YD ^{2}
GRAVEL (A) OR CRUSHED STONE (B).....1.60 TON/YD ^{3}

* FOR INFORMATION ONLY

PAVEMENT HISTORY - MO 13

YEAR	JOB	DESCRIPTION	COUNTY
2020	J1S3300	SCRUB SEAL	CALDWELL/DAVIESS
2012	J1L1201	1" BP-1 RESURFACING	CALDWELL/DAVIESS
2001	J1L0111C	1" SURFACE LEVELING	CALDWELL
2000	J1L9920A	1" SURFACE LEVELING	DAVIESS
1984	RS-59(6)	RESURFACING	CALDWELL/DAVIESS
1976	1-S-13-62	MIN. 1.5" BP RESURFACING	CALDWELL/DAVIESS
1965	SEC 13(1)	6" CEMENT-TREATED BASE, 3" BP	CALDWELL/DAVIESS

SYMBOLOGY LEGEND

COLDMILLING

PROPOSED CONSTRUCTION

EXISTING CONSTRUCTION

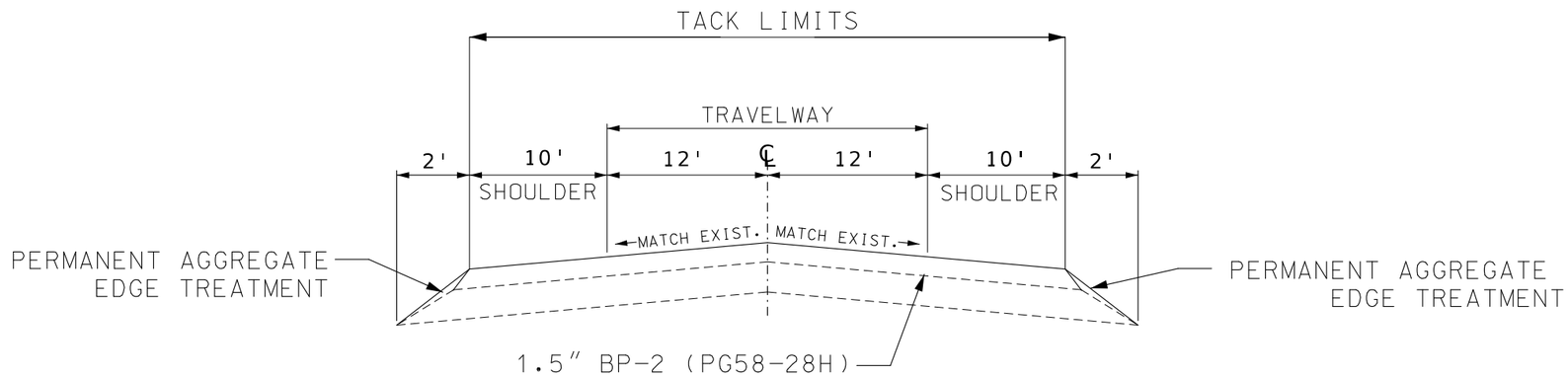

PROPOSED TYPICAL SECTION
(ROUTE 13)
LOG MILE 25.707 - LOG MILE 25.964

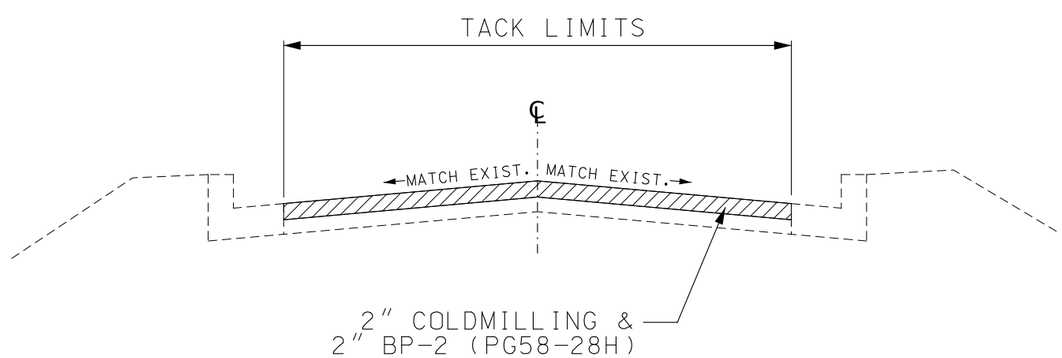

PROPOSED TYPICAL SECTION
(ROUTE 13)
LOG MILE 25.964 - LOG MILE 26.008

NOT TO SCALE

TYPICAL SECTIONS
SHEET 1 OF 5

STATE OF MISSOURI
TIMOTHY K. MINER
NUMBER
PE-2021010008
PROFESSIONAL ENGINEER
08/12/2025 1:26:21 PM
TIMOTHY K. MINER - CIVIL
MO-PE-2021101008

DATE PREPARED	8/12/2025
ROUTE	13,BUS36
STATE	MO
DISTRICT	NW
SHEET NO.	2
COUNTY	CALDWELL,DAVIESS
JOB NO.	JNW0089
CONTRACT ID.	-
PROJECT NO.	-
BRIDGE NO.	-

DESCRIPTION

DATE

MISSOURI HIGHWAYS AND TRANSPORTATION COMMISSION
105 WEST CAPITOL
JEFFERSON CITY, MO 65102
1-888-ASK-MODOT (1-888-275-6636)

PAVEMENT HISTORY - MO 13			
YEAR	JOB	DESCRIPTION	COUNTY
2020	J1S3300	SCRUB SEAL	CALDWELL/DAVIESS
2012	J1L1201	1" BP-1 RESURFACING	CALDWELL/DAVIESS
2001	J1L0111C	1" SURFACE LEVELING	CALDWELL
2000	J1L9920A	1" SURFACE LEVELING	DAVIESS
1984	RS-59(6)	RESURFACING	CALDWELL/DAVIESS
1976	1-S-13-62	MIN. 1.5" BP RESURFACING	CALDWELL/DAVIESS

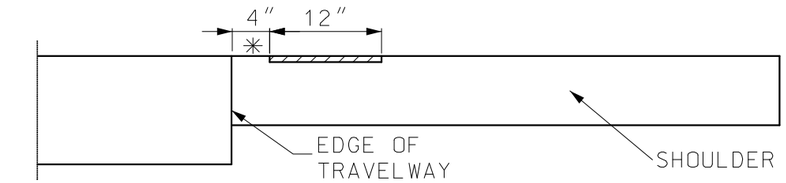

✳ = LATERAL DEVIATION SHALL NOT EXCEED ONE INCH IN 100 FEET.

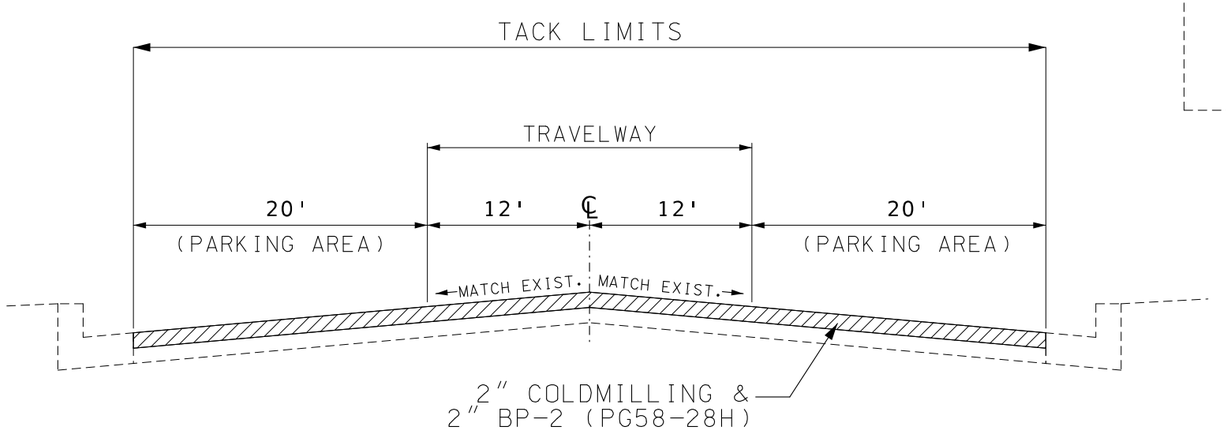

PROPOSED TYPICAL SECTION
(ROUTE 13)
LOG MILE 26.036 - LOG MILE 26.235

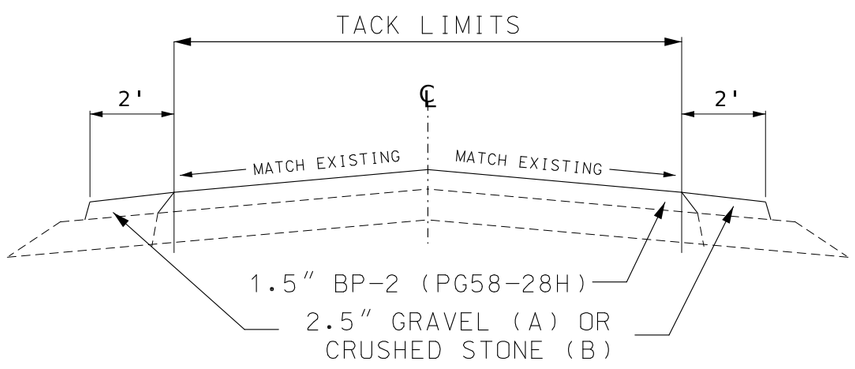

PROPOSED TYPICAL SECTION
(ROUTE 13)
LOG MILE 26.235 - LOG MILE 27.362

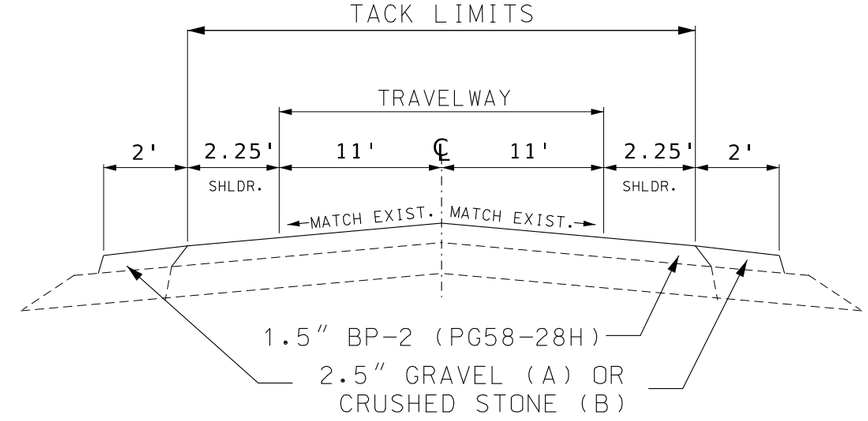

PROPOSED TYPICAL SECTION
(ROUTE 13)
LOG MILE 27.362 - LOG MILE 29.729
LOG MILE 29.830 - LOG MILE 39.157

NOT TO SCALE

TYPICAL SECTIONS
SHEET 2 OF 5

STATE OF MISSOURI
TIMOTHY K. MINER
NUMBER
PE-2021010008
PROFESSIONAL ENGINEER
08/12/2025 1:26:11 PM
TIMOTHY K. MINER - CIVIL
MO-PE-20211010008

DATE PREPARED	8/12/2025
ROUTE	13, BUS36
STATE	MO
DISTRICT	NW
SHEET NO.	2
COUNTY	CALDWELL, DAVIESS
JOB NO.	JNW0089
CONTRACT ID.	-
PROJECT NO.	-
BRIDGE NO.	-

DATE	DESCRIPTION

MISSOURI HIGHWAYS AND TRANSPORTATION COMMISSION
105 WEST CAPITOL
JEFFERSON CITY, MO 65102
1-888-ASK-MODOT (1-888-275-6636)

PAVEMENT HISTORY - MO 13			
YEAR	JOB	DESCRIPTION	COUNTY
2020	J1S3300	SCRUB SEAL	CALDWELL/DAVIESS
2012	J1L1201	1" BP-1 RESURFACING	CALDWELL/DAVIESS
2001	J1L0111C	1" SURFACE LEVELING	CALDWELL
2000	J1L9920A	1" SURFACE LEVELING	DAVIESS
1984	RS-59(6)	RESURFACING	CALDWELL/DAVIESS
1976	1-S-13-62	MIN. 1.5" BP RESURFACING	CALDWELL/DAVIESS

SYMBOLOGY LEGEND

COLDMILLING

PROPOSED CONSTRUCTION

EXISTING CONSTRUCTION

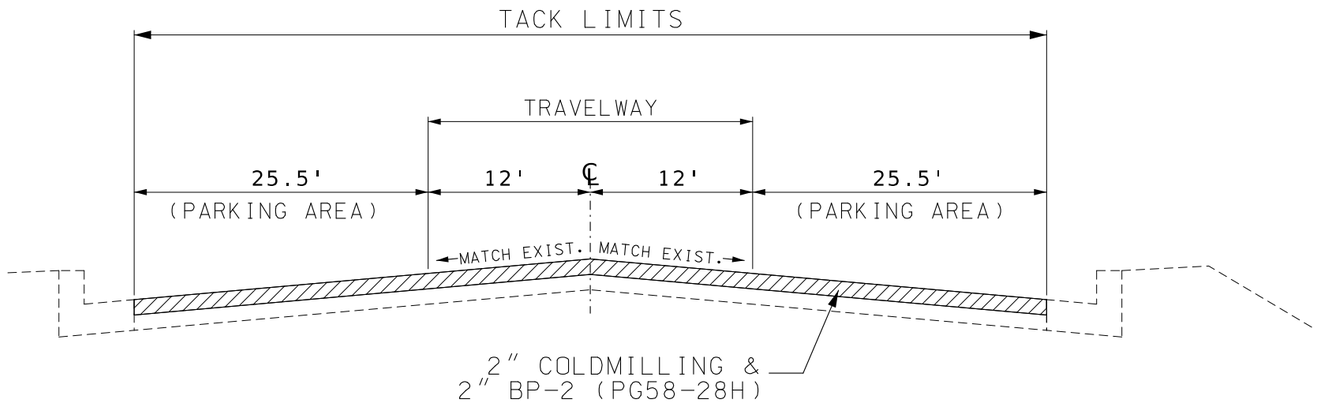

PROPOSED TYPICAL SECTION
(ROUTE 13)
LOG MILE 39.185 - LOG MILE 39.511

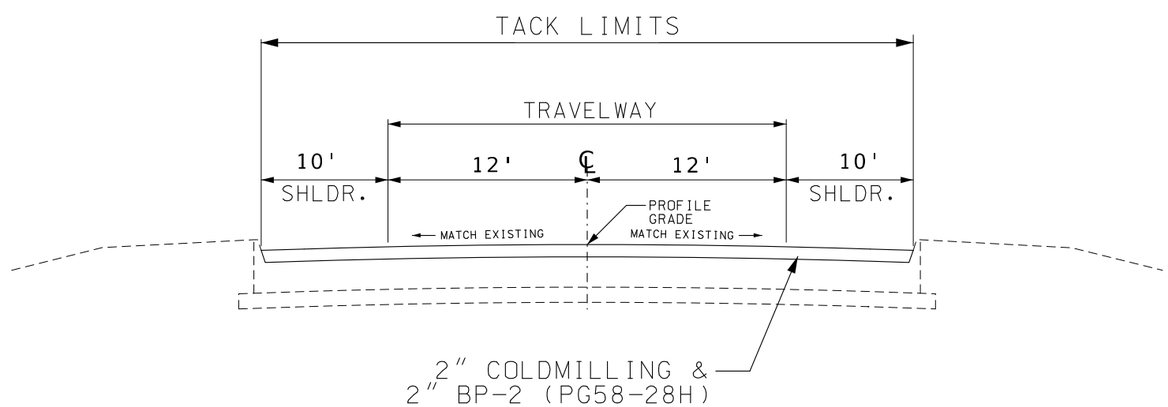

PROPOSED TYPICAL SECTION
(ROUTE 13)
LOG MILE 39.511 - LOG MILE 40.061

NOT TO SCALE

TYPICAL SECTIONS
SHEET 3 OF 5

STATE OF MISSOURI
TIMOTHY K. MINER
NUMBER
PE-2021010008
PROFESSIONAL ENGINEER
08/12/2025 1:25:59 PM
TIMOTHY K. MINER - CIVIL
MO-PE-2021010008

DATE PREPARED	
8/12/2025	
ROUTE	STATE
13,BUS36	MO
DISTRICT	SHEET NO.
NW	2
COUNTY	
CALDWELL,DAVIESS	
JOB NO.	
JNW0089	
CONTRACT ID.	
-	
PROJECT NO.	
-	
BRIDGE NO.	
-	

DATE	DESCRIPTION

MISSOURI HIGHWAYS AND TRANSPORTATION COMMISSION
105 WEST CAPITOL
JEFFERSON CITY, MO 65102
1-888-ASK-MODOT (1-888-275-6636)

PAVEMENT HISTORY - MO 13			
YEAR	JOB	DESCRIPTION	COUNTY
2020	J1S3300	SCRUB SEAL	CALDWELL/DAVIESS
2012	J1L1201	1" BP-1 RESURFACING	CALDWELL/DAVIESS
2001	J1L0111C	1" SURFACE LEVELING	CALDWELL
2000	J1L9920A	1" SURFACE LEVELING	DAVIESS
1984	RS-59(6)	RESURFACING	CALDWELL/DAVIESS
1976	1-S-13-62	MIN. 1.5" BP RESURFACING	CALDWELL/DAVIESS

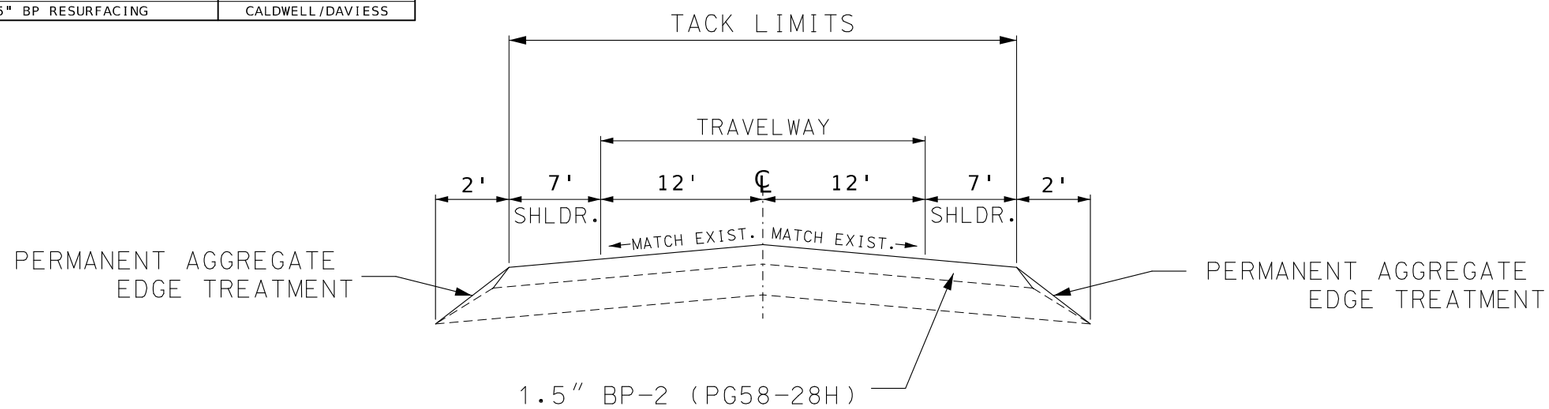

PROPOSED TYPICAL SECTION
(ROUTE 13)
LOG MILE 40.1 - LOG MILE 40.483

PAVEMENT HISTORY - BUS. 36			
YEAR	JOB	DESCRIPTION	COUNTY
2012	J1I1201	1" SURFACE LEVELING	CALDWELL
2002	J1S0527	1.75" BP-1	CALDWELL
1977	RS-59(4)	RESURFACING	CALDWELL
1936	SEC 13A-14A	6" CONCRETE PAVEMENT	CALDWELL

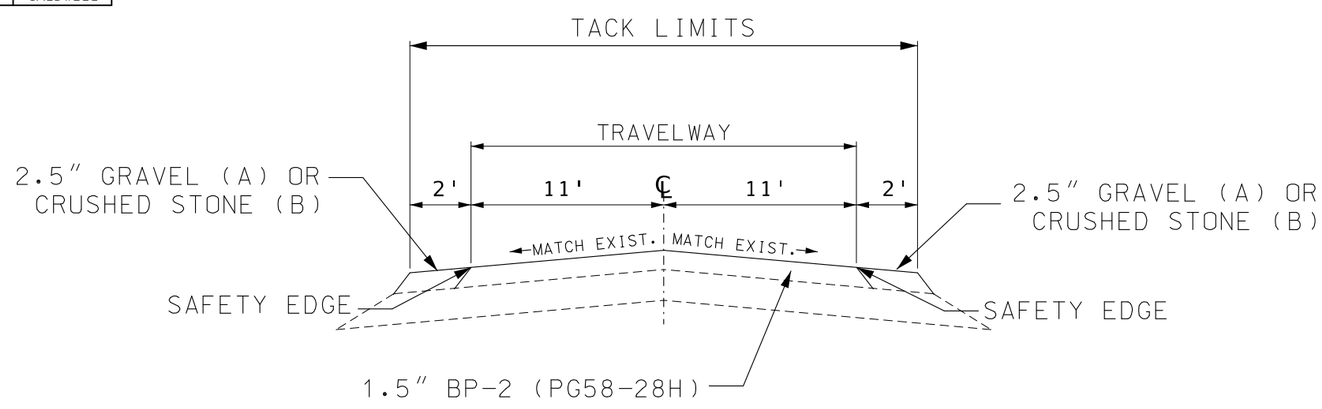

PROPOSED TYPICAL SECTION
(BUS. 36)
LOG MILE 0.02 - LOG MILE 1.937

NOT TO SCALE

SYMBOLOGY LEGEND

COLDMILLING

PROPOSED CONSTRUCTION

EXISTING CONSTRUCTION

STATE OF MISSOURI
TIMOTHY K. MINER
NUMBER
PE-2021010008
PROFESSIONAL ENGINEER
08/12/2025 1:25:50 PM
TIMOTHY K. MINER - CIVIL
MO-PE-2021101008

DATE PREPARED	
8/12/2025	
ROUTE	STATE
13,BUS36	MO
DISTRICT	SHEET NO.
NW	2
COUNTY	
CALDWELL,DAVIESS	
JOB NO.	
JNW0089	
CONTRACT ID.	
-	
PROJECT NO.	
-	
BRIDGE NO.	
-	

DATE	DESCRIPTION

MISSOURI HIGHWAYS AND TRANSPORTATION COMMISSION
105 WEST CAPITOL
JEFFERSON CITY, MO 65102
1-888-ASK-MODOT (1-888-275-6636)

TYPICAL SECTIONS
SHEET 4 OF 5

PAVEMENT HISTORY - BUS. 36			
YEAR	JOB	DESCRIPTION	COUNTY
2012	J1I1201	1" SURFACE LEVELING	CALDWELL
2002	J1S0527	1.75" BP-1	CALDWELL
1977	RS-59(4)	RESURFACING	CALDWELL
1936	SEC 13A-14A	6" CONCRETE PAVEMENT	CALDWELL

SYMBOLOGY LEGEND

COLDMILLING

PROPOSED CONSTRUCTION

EXISTING CONSTRUCTION

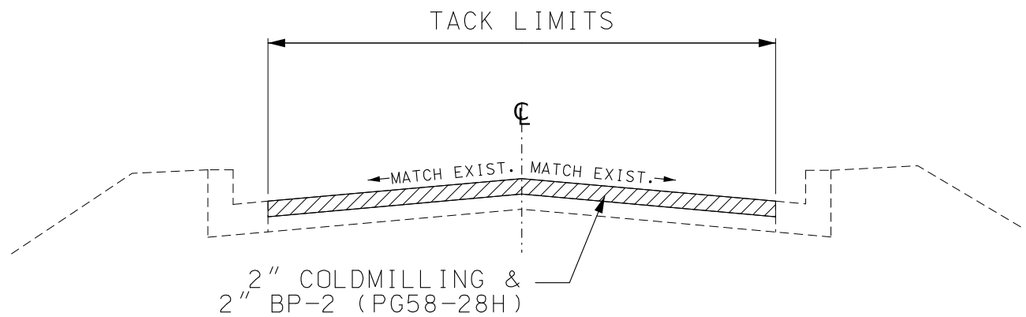

PROPOSED TYPICAL SECTION
(BUS. 36)
LOG MILE 1.937 - LOG MILE 2.128

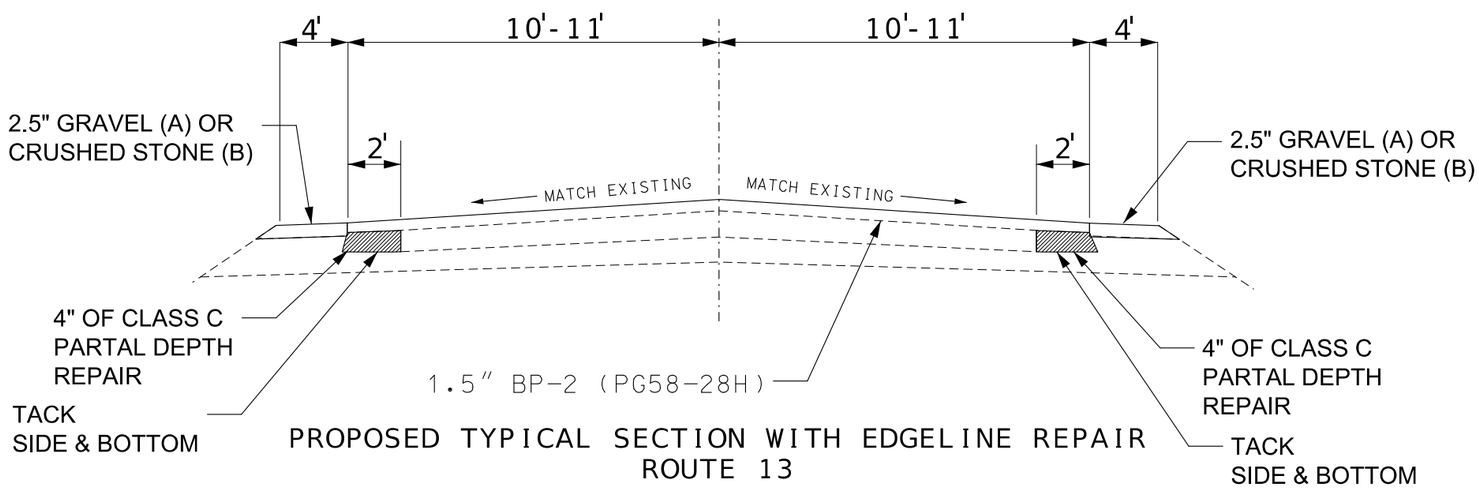

PROPOSED TYPICAL SECTION WITH EDGELINE REPAIR
ROUTE 13

SEE NBL & SBL EDGE LINE REPAIR TABLES FOR LOCATIONS

NOT TO SCALE

TYPICAL SECTIONS
SHEET 5 OF 5

STATE OF MISSOURI
TIMOTHY K. MINER
NUMBER
PE-2021010008
PROFESSIONAL ENGINEER

08/12/2025 1:25:39 PM
TIMOTHY K. MINER - CIVIL
MO-PE-2021010008

DATE PREPARED	
8/12/2025	
ROUTE	STATE
13,BUS36	MO
DISTRICT	SHEET NO.
NW	2
COUNTY	
CALDWELL,DAVIESS	
JOB NO.	
JNW0089	
CONTRACT ID.	
-	
PROJECT NO.	
-	
BRIDGE NO.	
-	

DATE	DESCRIPTION

MISSOURI HIGHWAYS AND TRANSPORTATION COMMISSION

105 WEST CAPITOL
JEFFERSON CITY, MO 65102
1-888-ASK-MODOT (1-888-275-6636)

RESURFACING

LOG MILE	LOG MILE	LENGTH	AVERAGE WIDTH	RESURFACING DEPTH	AGGREGATE DEPTH	MODIFIED COLDMILLING (DEPTH TRANSITIONS)	COLDMILLING (LESS THAN 3 INCHES)	TACK COAT	BITUMINOUS PAVEMENT BP-2 (PG58-28H)	GRAVEL (A) OR CRUSHED STONE (B)	PERMANENT AGGREGATE EDGE TREATMENT	REMARKS
		L.F.	FT.	IN.		S.Y.	S.Y.	GAL	TON	TON	TON	
MO 13												
25.707	25.735	150.000	44.0	1.5	2.5	733.33	--	73.30	60.50	--	2.59	BEGIN TO END TRANSITION
25.735	25.964	1209.120	44.0	1.5	2.5	--	--	472.90	487.70	--	29.85	END TRANSITION TO CORRINE STREET
25.964	26.008	232.320	24.5	1.5	--	--	--	50.60	52.20	--	--	CORRINE STREET TO START TRANSITION
26.008	26.036	150.000	24.5	1.5	2.5	408.33	--	40.80	33.70	--	2.59	START TRANSITION TO GALLATIN DOWNTOWN AREA
26.036	26.235	1050.720	24.0	2.0	--	--	2801.92	280.20	308.20	--	--	GALLATIN DOWNTOWN AREA TO START TRANSITION
26.235	26.263	150.000	24.5	1.5	2.5	408.33	--	40.80	33.70	--	2.59	START TRANSITION TO END TRANSITION
26.263	27.918	8738.400	26.5	1.5	2.5	--	--	2058.40	2122.70	215.76	--	END TRANSITION TO GALLATIN CITY LIMITS
27.918	29.729	9562.080	26.5	1.5	2.5	--	--	2252.40	2322.80	236.10	--	GALLATIN CITY LIMITS TO START TRANSITION TO BRIDGE A8450
29.729	29.757	150.000	26.5	1.5	2.5	441.67	--	44.20	36.40	3.70	--	TRANSITION TO BRIDGE A8450
29.757	29.802	237.600	--	--	--	--	--	--	--	--	--	BRIDGE A8450 LIMITS
29.802	29.830	150.000	26.5	1.5	--	441.67	--	44.20	36.40	3.70	--	TRANSITION FROM A8450
29.830	38.576	46178.880	26.5	1.5	2.5	--	--	10877.70	11217.60	1140.22	--	A8450 END TRANSITION TO HAMILTON CITY LIMITS
38.576	39.157	3067.680	26.5	1.5	2.5	--	--	722.60	745.20	75.75	--	HAMILTON CITY LIMITS TO START TRANSITION TO DOWNTOWN
39.157	39.185	150.000	26.5	1.5	2.5	441.67	--	44.20	36.40	--	2.59	START TRANSITION TO END TRANSITION (HAMILTON DOWNTOWN)
39.185	39.511	1721.280	24.0	2.0	--	--	4590.08	459.00	504.90	--	--	HAMILTON DOWNTOWN TO SCHOOL STREET
39.511	40.061	2904.000	42.5	2.0	--	--	13713.33	1371.30	1508.50	--	--	SCHOOL STREET TO BRIDGE A0100
40.061	40.100	205.920	--	--	--	--	--	--	--	--	--	BRIDGE A0100 LIMITS
40.100	40.138	200.000	38.0	2.0	2.5	844.44	--	84.40	92.90	5.93	--	BRIDGE A0100 TO END TRANSITION
40.138	40.445	1620.960	38.0	2.0	2.5	--	--	547.50	752.80	48.03	--	END TRANSITION TO START TRANSITION
40.445	40.483	200.000	38.0	1.5	2.5	844.44	--	84.40	69.70	4.94	--	START TRANSITION TO END
25.707	40.483	78017.280	--	--	--	--	--	--	2179.47	--	--	SURFACE IRREGULARITIES
25.707	40.483	78017.280	--	--	--	--	--	--	380.55	--	--	SAFETY EDGE
--	--	24.600	48.0	1.5	--	213.40	--	262.00	216.00	--	--	20 INTERSECTIONS WITH CITY ROADS
--	--	27.500	38.6	1.5	--	111.54	--	153.40	126.10	--	--	13 INTERSECTIONS WITH COUNTY ROADS
--	--	45.000	33.5	1.5	--	1005.00	--	100.80	82.80	--	--	6 INTERSECTIONS WITH STATE ROADS
BUS 36												
0.020	0.048	150.000	22.0	1.5	2.5	366.67	--	36.70	30.30	3.70	--	BEGIN TO END TRANSITION
0.048	1.937	9973.920	22.0	1.5	2.5	--	--	2438.10	2011.40	246.27	--	END TRANSITION TO FRAME STREET
1.937	2.100	860.640	25.0	1.5	--	--	2390.67	239.10	197.20	--	--	FRAME STREET TO START TRANSITION
2.100	2.128	150.000	37.0	1.5	--	416.67	--	61.70	50.90	--	--	START TRANSITION TO END OF
0.020	2.128	11130.240	--	1.5	--	--	--	--	316.20	--	--	SURFACE IRREGULARITIES
0.020	2.128	11130.240	--	1.5	--	--	--	--	40.83	--	--	SAFETY EDGE
--	--	24.600	48.0	1.5	--	131.20	--	13.10	129.90	--	--	9 INTERSECTIONS WITH CITY ROADS
--	--	45.000	33.5	1.5	--	167.50	--	16.80	165.80	--	--	1 INTERSECTION WITH STATE ROADS
				TOTAL		6975.86	23496.00	22870.60	26349.75	1984.10	40.21	
				PAY TOTAL		6976	23496	22871	26349.8	1984	40	

RUMBLE STRIPS

LOG MILE	LOG MILE	LENGTH	BITUMINOUS SHOULDER RUMBLE STRIP	REMARKS
		MILE	STA.	
27.541	27.732	0.191	20.16	--
29.811	38.397	8.586	906.68	--
26.036	26.235	0.199	-21.02	GALLATIN DOWNTOAN AREA
39.185	40.061	0.876	-92.50	HAMILTON DOWNTOWN AREA TO BRIDGE A0010
VARIOUS		--	-25.30	INTERSECTIONS WITH 11 COUNTY ROADS
		--	-9.90	INTERSECTIONS WITH 3 STATE ROADS
		TOTAL	778.12	
		PAY TOTAL	778.1	

SUMMARY OF QUANTITIES
SHEET 1 OF 5

STATE OF MISSOURI
TIMOTHY K. MINER
NUMBER
PE-2021010008
PROFESSIONAL ENGINEER
08/12/2025 3:11:35 PM
TIMOTHY K. MINER - CIVIL
MO-PE-20211010008

DATE PREPARED
8/12/2025

ROUTE	STATE
13,BUS36	MO

DISTRICT	SHEET NO.
NW	3

COUNTY
CALDWELL,DAVIESS

JOB NO.
JNW0089

CONTRACT ID.
-

PROJECT NO.
-

BRIDGE NO.
-

DATE	DESCRIPTION

MISSOURI HIGHWAYS AND TRANSPORTATION COMMISSION
105 WEST CAPITOL
JEFFERSON CITY, MO 65102
1-888-ASK-MODOT (1-888-275-6636)

PAVEMENT MARKING - ROUTE 13

LOG MILE	LOG MILE	LENGTH	4 IN. YELLOW CLASS 1 PAVEMENT MARKING PAINT (18-MIL, TYPE P BEADS)			4 IN. WHITE CLASS 1 PAVEMENT MARKING PAINT 18-MIL, TYPE P BEADS	6 IN. WHITE CLASS 1 PAVEMENT MARKING PAINT 18-MIL, TYPE P BEADS	REMARKS
			INTERMITTENT	SOLID (SINGLE)	SOLID (DOUBLE)			
		L.F.	L.F.	L.F.	L.F.	L.F.	L.F.	
26.000	26.235	1240.800	310.2	--	--	--	--	INTERMITTENT
26.235	26.743	2682.240	670.6	--	--	5364.5	284.1	INTERMITTENT
26.743	26.785	221.760	55.4	221.8	--	443.5	--	SOUTHBOUND INTERMITTENT, NORTHBOUND SOLID
26.785	26.985	1056.000	--	--	2112.0	2112.0	--	DOUBLE SOLID
26.985	27.155	897.600	224.4	897.6	--	1795.2	--	SOUTHBOUND INTERMITTENT, NORTHBOUND SOLID
27.155	27.255	528.000	132.0	--	--	1056.0	--	INTERMITTENT
27.255	27.425	897.600	224.4	897.6	--	1795.2	--	SOUTHBOUND SOLID NORTHBOUND INTERMITTENT,
27.425	27.695	1425.600	--	--	2851.2	2851.2	--	DOUBLE SOLID
27.695	27.825	686.400	171.6	686.4	--	1372.8	--	SOUTHBOUND SOLID NORTHBOUND INTERMITTENT,
27.825	28.035	1108.800	--	--	2217.6	2217.6	--	DOUBLE SOLID
28.035	28.235	1056.000	264.0	1056.0	--	2112.0	--	SOUTHBOUND INTERMITTENT, NORTHBOUND SOLID
28.235	28.405	897.600	224.4	897.6	--	1795.2	--	SOUTHBOUND SOLID NORTHBOUND INTERMITTENT,
28.405	28.655	1320.000	--	--	2640.0	2640.0	--	DOUBLE SOLID
28.655	28.845	1003.200	250.8	1003.2	--	2006.4	--	SOUTHBOUND INTERMITTENT, NORTHBOUND SOLID
28.845	28.925	422.400	105.6	--	--	844.8	--	INTERMITTENT
28.925	29.090	871.200	217.8	871.2	--	1742.4	--	SOUTHBOUND SOLID NORTHBOUND INTERMITTENT,
29.090	29.255	871.200	217.8	871.2	--	1742.4	--	SOUTHBOUND INTERMITTENT, NORTHBOUND SOLID
29.255	30.395	6019.200	1504.8	--	--	12038.4	--	INTERMITTENT
30.395	30.485	475.200	118.8	475.2	--	950.4	--	SOUTHBOUND SOLID NORTHBOUND INTERMITTENT,
30.485	30.650	871.200	217.8	871.2	--	1742.4	--	SOUTHBOUND INTERMITTENT, NORTHBOUND SOLID
30.650	30.865	1135.200	283.8	1135.2	--	2270.4	--	SOUTHBOUND SOLID NORTHBOUND INTERMITTENT,
30.865	31.055	1003.200	250.8	1003.2	--	2006.4	--	SOUTHBOUND INTERMITTENT, NORTHBOUND SOLID
31.055	31.220	871.200	217.8	--	--	1742.4	--	INTERMITTENT
31.220	31.410	1003.200	250.8	1003.2	--	2006.4	--	SOUTHBOUND SOLID NORTHBOUND INTERMITTENT,
31.410	31.935	2772.000	--	--	5544.0	5544.0	--	DOUBLE SOLID
31.935	32.125	1003.200	250.8	1003.2	--	2006.4	--	SOUTHBOUND INTERMITTENT, NORTHBOUND SOLID
32.125	32.300	924.000	231.0	924.0	--	1848.0	--	SOUTHBOUND SOLID NORTHBOUND INTERMITTENT,
32.300	33.045	3933.600	--	--	7867.2	7867.2	--	DOUBLE SOLID
33.045	33.225	950.400	237.6	950.4	--	1900.8	--	SOUTHBOUND INTERMITTENT, NORTHBOUND SOLID
33.225	33.305	422.400	105.6	--	--	844.8	--	INTERMITTENT
33.305	33.495	1003.200	250.8	1003.2	--	2006.4	--	SOUTHBOUND SOLID NORTHBOUND INTERMITTENT,
33.495	33.735	1267.200	--	--	2534.4	2534.4	--	DOUBLE SOLID
33.735	33.935	1056.000	264.0	1056.0	--	2112.0	--	SOUTHBOUND INTERMITTENT, NORTHBOUND SOLID
33.935	34.125	1003.200	250.8	--	--	2006.4	--	INTERMITTENT
34.125	34.290	871.200	217.8	871.2	--	1742.4	--	SOUTHBOUND SOLID NORTHBOUND INTERMITTENT,
34.290	34.645	1874.400	--	--	3748.8	3748.8	--	DOUBLE SOLID
34.645	34.840	1029.600	257.4	1029.6	--	2059.2	--	SOUTHBOUND INTERMITTENT, NORTHBOUND SOLID
34.840	35.040	1056.000	264.0	1056.0	--	2112.0	--	SOUTHBOUND SOLID NORTHBOUND INTERMITTENT,
35.040	35.240	1056.000	264.0	1056.0	--	2112.0	--	SOUTHBOUND INTERMITTENT, NORTHBOUND SOLID
35.240	35.345	554.400	138.6	--	--	1108.8	--	INTERMITTENT
35.345	35.515	897.600	224.4	897.6	--	1795.2	--	SOUTHBOUND SOLID NORTHBOUND INTERMITTENT,
35.515	35.695	950.400	237.6	950.4	--	1900.8	--	SOUTHBOUND INTERMITTENT, NORTHBOUND SOLID
35.695	35.825	686.400	171.6	--	--	1372.8	--	INTERMITTENT
35.825	36.015	1003.200	250.8	1003.2	--	2006.4	--	SOUTHBOUND SOLID NORTHBOUND INTERMITTENT,
36.015	36.260	1293.600	--	--	2587.2	2587.2	--	DOUBLE SOLID
36.260	36.415	818.400	204.6	818.4	--	1636.8	--	SOUTHBOUND INTERMITTENT, NORTHBOUND SOLID
36.415	36.475	316.800	79.2	--	--	633.6	--	INTERMITTENT
36.475	36.665	1003.200	250.8	1003.2	--	2006.4	--	SOUTHBOUND SOLID NORTHBOUND INTERMITTENT,
36.665	36.845	950.400	--	--	1900.8	1900.8	--	DOUBLE SOLID
36.845	36.975	686.400	171.6	686.4	--	1372.8	--	SOUTHBOUND SOLID NORTHBOUND INTERMITTENT,
36.975	37.135	844.800	211.2	844.8	--	1689.6	--	SOUTHBOUND INTERMITTENT, NORTHBOUND SOLID
37.135	37.275	739.200	184.8	739.2	--	1478.4	--	SOUTHBOUND SOLID NORTHBOUND INTERMITTENT,
37.275	37.425	792.000	198.0	792.0	--	1584.0	--	SOUTHBOUND INTERMITTENT, NORTHBOUND SOLID
37.425	37.495	369.600	92.4	--	--	739.2	--	INTERMITTENT
37.495	37.685	1003.200	250.8	1003.2	--	2006.4	--	SOUTHBOUND SOLID NORTHBOUND INTERMITTENT,
37.685	37.900	1135.200	--	--	2270.4	2270.4	--	DOUBLE SOLID
37.900	38.055	818.400	204.6	818.4	--	1636.8	--	SOUTHBOUND INTERMITTENT, NORTHBOUND SOLID
38.055	38.200	765.600	191.4	765.6	--	1531.2	--	SOUTHBOUND SOLID NORTHBOUND INTERMITTENT,
38.200	38.305	554.400	138.6	554.4	--	1108.8	--	SOUTHBOUND INTERMITTENT, NORTHBOUND SOLID
38.305	38.370	343.200	--	--	686.4	686.4	--	DOUBLE SOLID
38.370	38.490	633.600	158.4	633.6	--	1267.2	--	SOUTHBOUND SOLID NORTHBOUND INTERMITTENT,
38.490	38.700	1108.800	--	--	2217.6	2217.6	--	DOUBLE SOLID
38.700	38.880	950.400	237.6	950.4	--	1900.8	--	SOUTHBOUND INTERMITTENT, NORTHBOUND SOLID
38.880	39.175	1557.600	389.4	--	--	3115.2	--	INTERMITTENT
39.175	39.405	1214.400	303.6	--	--	--	--	INTERMITTENT
39.405	39.450	237.600	--	--	475.2	--	--	DOUBLE SOLID
39.457	39.477	105.600	--	--	211.2	--	--	DOUBLE SOLID
39.477	40.061	3083.520	770.9	--	--	6167.0	--	INTERMITTENT
40.100	40.483	2022.240	505.6	--	--	4044.5	--	INTERMITTENT
		SUBTOTAL	14073.9	33301.0	39864.0	146857.9	284.1	

SUMMARY OF QUANTITIES
SHEET 2 OF 5

STATE OF MISSOURI
TIMOTHY K. MINER
NUMBER
PE-2021010008
PROFESSIONAL ENGINEER

08/12/2025 2:05:12 PM
TIMOTHY K. MINER - CIVIL
MO-PE-2021010008

DATE PREPARED
8/12/2025

ROUTE	STATE
13,BUS36	MO
DISTRICT	SHEET NO.
NW	3

COUNTY
CALDWELL,DAVIESS

JOB NO.
JNW0089

CONTRACT ID.
-

PROJECT NO.
-

BRIDGE NO.
-

DATE	DESCRIPTION

MISSOURI HIGHWAYS AND TRANSPORTATION COMMISSION
105 WEST CAPITOL
JEFFERSON CITY, MO 65102
1-888-ASK-MODOT (1-888-275-6636)

PAVEMENT MARKING - BUS. 36

LOG MILE	LOG MILE	LENGTH	4 IN. YELLOW CLASS 1 PAVEMENT MARKING PAINT (18-MIL, TYPE P BEADS)			4 IN. WHITE CLASS 1 PAVEMENT MARKING PAINT 18-MIL, TYPE P BEADS	REMARKS
			INTERMITTENT	SOLID (SINGLE)	SOLID (DOUBLE)		
		L.F.	L.F.	L.F.	L.F.	L.F.	
0.020	0.118	517.440	--	--	1034.9	1034.9	DOUBLE SOLID
0.118	0.249	691.680	172.9	--	--	1383.4	WESTBOUND INTERMITTENT EASTBOUND INTERMITTENT,
0.249	0.258	47.520	--	--	95.0	95.0	DOUBLE SOLID
0.258	0.437	945.120	236.3	945.1	--	1890.2	WESTBOUND SOLID EASTBOUND INTERMITTENT,
0.437	0.837	2112.000	--	--	4224.0	4224.0	DOUBLE SOLID
0.837	0.977	739.200	184.8	739.2	--	1478.4	WESTBOUND SOLID EASTBOUND INTERMITTENT,
0.977	1.017	211.200	--	--	422.4	422.4	DOUBLE SOLID
1.017	1.157	739.200	184.8	--	--	1478.4	WESTBOUND INTERMITTENT EASTBOUND INTERMITTENT,
1.157	1.875	3791.040	--	--	7582.1	7582.1	DOUBLE SOLID
1.875	2.118	1283.040	--	--	2566.1	--	DOUBLE SOLID
		SUBTOTAL	778.8	1684.3	15924.5	19588.8	

PAVEMENT MARKING - SUMMARY

LOCATION	4 IN. WHITE CLASS 1 PAVEMENT MARKING PAINT 18-MIL, TYPE P BEADS	6 IN. WHITE CLASS 1 PAVEMENT MARKING PAINT 18-MIL, TYPE P BEADS	24 IN. THERMOPLASTIC	4 IN. YELLOW CLASS 1 PAVEMENT MARKING PAINT (18-MIL, TYPE P BEADS)		
				INTERMITTENT	SOLID (SINGLE)	SOLID (DOUBLE)
	L.F.	L.F.	L.F.	L.F.	L.F.	L.F.
ROUTE 13 SUBTOTAL	146857.9	284.1	2009.1	14073.9	33301.0	39864.0
BUS 36 SUBTOTAL	19588.8	--	--	778.8	1684.3	15924.5
TOTALS	166446.7	284.1	2009.1	14852.7	34985.3	55788.5
PAY TOTALS	166447	284	2009	105627		

ADA ITEMS - BUS. 36

LOCATION	CURB RAMP	TRUNCATED DOMES	INTEGRAL CURB	REMOVAL OF IMPROVEMENTS
	S.Y.	S.F.	L.F.	L.S.
BUS. 36 & FRAME ST.	11.11	20.00	40.00	11.11 S.Y. OF CONCRETE
BUS. 36 & HUGHES ST.	11.11	20.00	40.00	11.11 S.Y. OF CONCRETE
BUS. 36 & ARDINGER ST.	5.56	10.00	20.00	5.56 S.Y. OF CONCRETE
BUS. 36 & RTE. 13	7.45	10.00	26.10	7.45 S.Y. OF CONCRETE
TOTALS	35.23	60.00	126.10	--
PAY TOTALS	35.2	60	126	L.S. = 1

CLASS C REPAIR

LOG MILE	LOG MILE	LENGTH	REMOVAL FOR CLASS C PARTIAL DEPTH PAVEMENT REPAIR	FURNISHING AND PLACING BITUMINOUS MATERIAL FOR CLASS C PARTIAL DEPTH PAVEMENT REPAIR
			S.Y.	TON
26.263	29.729	3.466	8133.55	1789.38
29.830	39.157	9.327	21887.36	4815.22
		TOTALS	30020.91	6604.60
		PAY TOTALS	30020.9	6604.6

EROSION CONTROL

LOG MILE	LOCATION	ALTERNATE DITCH CHECK	REMARKS
		L.F.	
ROUTE 13			
25.970	GALLATIN	4	SOUTH OF CORRINE ST., WEST OF RTE. 13
25.970	GALLATIN	4	SOUTH OF CORRINE ST., EAST OF RTE. 13
26.043	GALLATIN	4	SOUTH OF BERRY ST., EAST OF RTE. 13
26.234	GALLATIN	4	NORTHWEST CORNER OF VAN BUREN ST. & RTE. 13
39.391	HAMILTON	6	SOUTH OF MCGAUGHY ST., WEST OF RTE. 13
39.395	HAMILTON	4	SOUTH OF MCGAUGHY ST., WEST OF RTE. 13
39.413	HAMILTON	4	SOUTH OF MCGAUGHY ST. (MID-BLOCK), WEST OF RTE. 13
39.417	HAMILTON	4	SOUTH OF MCGAUGHY ST. (MID-BLOCK), WEST OF RTE. 13
5.349	HAMILTON	4	NORTHEAST CORNER OF BERRY ST. & RTE. 13
39.441	HAMILTON	4	NORTHWEST CORNER OF BERRY ST. & RTE. 13
39.511	HAMILTON	4	NORTHWEST CORNER OF W SCHOOL ST. & RTE. 13
39.512	HAMILTON	4	SOUTHEAST CORNER OF E SCHOOL ST. & RTE. 13
BUS. 36			
1.996	HAMILTON	4	NORTHWEST CORNER OF HUGHES ST. & BUS. 36
1.996	HAMILTON	4	NORTHEAST CORNER OF HUGHES ST. & BUS. 36
2.005	HAMILTON	4	SOUTHWEST CORNER OF HUGHES ST. & BUS. 36
	TOTALS	62	
	PAY TOTALS	62	

CONTRACTOR FURNISHED SURVEYING AND STAKING

LUMP SUM = 1

MOBILIZATION

LUMP SUM = 1

SUMMARY OF QUANTITIES
SHEET 3 OF 5

STATE OF MISSOURI
TIMOTHY K. MINER
NUMBER
PE-2021010008
PROFESSIONAL ENGINEER
08/12/2025 2:05:35 PM
TIMOTHY K. MINER - CIVIL
MO-PE-2021010008

DATE PREPARED
8/12/2025

ROUTE	STATE
13,BUS36	MO
DISTRICT	SHEET NO.
NW	3

COUNTY
CALDWELL,DAVIESS

JOB NO.
JNW0089

CONTRACT ID.
-

PROJECT NO.
-

BRIDGE NO.
-

DATE	DESCRIPTION

MISSOURI HIGHWAYS AND TRANSPORTATION COMMISSION
105 WEST CAPITOL
JEFFERSON CITY, MO 65102
1-888-ASK-MODOT (1-888-275-6636)

GALLATIN RESURFACING & ADA IMPROVEMENTS

RESURFACING - (GALLATIN ROUTE 13)							
LOG MILE	LOG MILE	LENGTH	AVERAGE WIDTH	DEPTH	COLDMILLING (LESS THAN 3 INCHES)	TACK COAT	BITUMINOUS PAVEMENT BP-2 (PG58-28H)
		L.F.	FT.	IN.	S.Y.	GAL	TON
26.036	26.235	1050.720	39.53	1.5	4615.00	461.50	380.70
				TOTAL	4615.00	461.50	380.70
				PAY TOTAL	4615	462	380.7

PAVEMENT MARKING - (GALLATIN ADA)			
LOCATION	4 IN. WHITE CLASS 1 PAVEMENT MARKING PAINT 18-MIL, TYPE P BEADS	ADA HANDICAP SYMBOL	6 IN. WHITE CLASS 1 PAVEMENT MARKING PAINT 18-MIL, TYPE P BEADS
	L.F.	EACH	L.F.
GALLATIN	2114.6	5.0	1273.8
TOTALS	2114.6	5.0	1273.8
PAY TOTALS	2115	5	1274

ADA ITEMS - GALLATIN						
LOG MILE	CURB RAMP	TRUNCATED DOMES	INTEGRAL CURB	CONCRETE SIDEWALK	REMOVAL OF IMPROVEMENTS	REMARKS
	S.Y.	S.F.	L.F.	S.Y.	L.S.	
26.034	22.80	20.00	58.00	--	22.8 S.Y. OF CONCRETE	EAST OF 13
26.034	9.30	10.00	27.00	--	9.3 S.Y. OF CONCRETE	WEST OF 13
26.100	4.20	35.00	29.00	--	4.2 S.Y. OF CONCRETE	--
26.101	18.70	32.00	21.00	5.20	18.7 S.Y. OF CONCRETE	--
26.109	7.30	20.00	22.00	11.20	7.3 S.Y. OF CONCRETE	--
26.165	19.10	33.00	22.00	5.40	19.1 S.Y. OF CONCRETE	--
26.177	16.10	28.00	19.00	3.90	16.1 S.Y. OF CONCRETE	EAST OF 13
26.177	19.30	25.00	28.00	--	19.3 S.Y. OF CONCRETE	WEST OF 13
26.203	14.00	26.00	15.00	--	14 S.Y. OF CONCRETE	--
26.233	7.80	17.00	19.00	--	7.8 S.Y. OF CONCRETE	--
TOTALS	138.60	246.00	260.00	25.70	--	
PAY TOTALS	138.6	246	260	25.7	L.S. = 1	

HAMILTON RESURFACING & ADA IMPROVEMENTS

RESURFACING - (HAMILTON ROUTE 13)							
LOG MILE	LOG MILE	LENGTH	AVERAGE WIDTH	DEPTH	COLDMILLING (LESS THAN 3 INCHES)	TACK COAT	BITUMINOUS PAVEMENT BP-2 (PG58-28H)
		L.F.	FT.	IN.	S.Y.	GAL	TON
39.185	39.511	1721.280	51	2	9648.36	964.80	1061.30
				TOTAL	9648.36	964.80	1061.30
				PAY TOTAL	9648	965	1061.3

PAVEMENT MARKING - (HAMILTON ADA)			
LOCATION	4 IN. WHITE CLASS 1 PAVEMENT MARKING PAINT 18-MIL, TYPE P BEADS	ADA HANDICAP SYMBOL	6 IN. WHITE CLASS 1 PAVEMENT MARKING PAINT 18-MIL, TYPE P BEADS
	L.F.	EACH	L.F.
HAMILTON	4185.0	12.0	2306.5
TOTALS	4185.0	12.0	2306.5
PAY TOTALS	4185	12	2307

ADA ITEMS - HAMILTON											
LOG MILE	CURB RAMP	TRUNCATED DOMES	INTEGRAL CURB	CONCRETE SIDEWALK	CONCRETE MEDIAN STRIP	CURB AND GUTTER TYPE B	GUTTER TYPE B	TYPE 5 AGGREGATE FOR BASE	CURB CUT DRAIN	REMOVAL OF IMPROVEMENTS	REMARKS
	S.Y.	S.F.	L.F.	S.Y.	S.Y.	L.F.	L.F.	S.Y.	EACH	L.S.	
39.177	3.90	10.00	11.00	--	--	--	--	--	--	3.9 S.Y. OF CONCRETE	--
39.310	13.60	35.00	--	--	--	--	--	--	--	13.6 S.Y. OF CONCRETE	EAST OF 13
39.310	20.70	34.00	25.00	--	--	--	--	--	--	20.7 S.Y. OF CONCRETE	WEST OF 13
39.379	10.00	10.00	25.00	--	--	--	--	--	--	10 S.Y. OF CONCRETE	--
39.437	12.40	15.00	23.35	5.85	18.64	59.17	--	18.64	1.00	12.4 S.Y. OF CONCRETE	--
39.449	7.12	10.00	18.85	--	5.43	23.17	10.53	5.43	--	7.12 S.Y. OF CONCRETE	--
39.453	3.70	10.00	11.00	--	--	--	--	--	--	3.7 S.Y. OF CONCRETE	--
39.510	3.70	10.00	11.00	--	--	--	--	--	--	3.7 S.Y. OF CONCRETE	--
39.511	3.70	10.00	11.00	--	--	--	--	--	--	3.7 S.Y. OF CONCRETE	--
TOTALS	78.82	144.00	136.20	5.85	24.07	82.34	10.53	24.07	1.00	--	
PAY TOTALS	78.8	144	136	5.9	24.1	82	11	24.1	1	L.S. = 1	

DAVIESS COUNTY RESURFACING & ADA IMPROVEMENTS

ADA ITEMS - DAVIESS COUNTY					
LOCATION	CURB RAMP	TRUNCATED DOMES	INTEGRAL CURB	REMOVAL OF IMPROVEMENTS	REMARKS
	S.Y.	S.F.	L.F.	L.S.	
26.112	18.80	35.00	29.00	18.8 S.Y. OF CONCRETE	--
26.162	18.80	35.00	29.00	18.8 S.Y. OF CONCRETE	--
TOTALS	37.60	70.00	58.00	--	
PAY TOTALS	37.6	70	58	L.S. = 1	

SUMMARY OF QUANTITIES

STATE OF MISSOURI
TIMOTHY K. MINER
NUMBER
PE-2021010008
PROFESSIONAL ENGINEER
08/12/2025 2:05:58 PM
TIMOTHY K. MINER - CIVIL
MO-PE-2021010008

DATE PREPARED 8/12/2025
ROUTE 13,BUS36
STATE MO
DISTRICT NW
SHEET NO. 3
COUNTY CALDWELL,DAVIESS
JOB NO. JNW0089
CONTRACT ID. -
PROJECT NO. -
BRIDGE NO. -

DESCRIPTION
DATE

MISSOURI HIGHWAYS AND TRANSPORTATION COMMISSION
105 WEST CAPITOL
JEFFERSON CITY, MO 65102
1-888-ASK-MODOT (1-888-275-6636)

SIGN	SIZE IN.	AREA SQ.FT.	QTY EACH	TOTAL AREA SQ.FT.	QTY RELOC EACH	TOTAL RELOC SQ.FT.	SIGN NO.	DESCRIPTION
WARNING SIGNS								
WO1-1L	48X48	16.00						TURN (SYMBOL LEFT)
WO1-1R	48X48	16.00						TURN (SYMBOL RIGHT)
WO1-2L	48X48	16.00						CURVE (SYMBOL LEFT)
WO1-2R	48X48	16.00						CURVE (SYMBOL RIGHT)
WO1-3L	48X48	16.00						REVERSE TURN (SYMBOL LEFT)
WO1-3R	48X48	16.00						REVERSE TURN (SYMBOL RIGHT)
WO1-4L	48X48	16.00						REVERSE CURVE (SYMBOL LEFT)
WO1-4R	48X48	16.00						REVERSE CURVE (SYMBOL RIGHT)
WO1-4bL	48X48	16.00						DOUBLE ARROW REVERSE CURVE (SYMBOL LEFT)
WO1-4bR	48X48	16.00						DOUBLE ARROW REVERSE CURVE (SYMBOL RIGHT)
WO1-4cL	48X48	16.00						TRIPLE ARROW REVERSE CURVE (SYMBOL LEFT)
WO1-4cR	48X48	16.00						TRIPLE ARROW REVERSE CURVE (SYMBOL RIGHT)
WO1-6	60X30	12.50						HORIZONTAL ARROW (SYMBOL)
WO1-6a	72X36	18.00						HORIZ. ARROW (SYMBOL ON PERMANENT BARRICADE)
WO1-7	60X30	12.50						DOUBLE HEAD HORIZONTAL ARROW (SYMBOL)
WO1-7a	72X36	18.00						DOUBLE HEAD HORIZ. ARROW (SYMBOL ON PERM. BARR.)
WO1-8	18X24	3.00						CHEVRON (SYMBOL)
WO1-8a	30X36	7.50						CHEVRON (SYMBOL FOR DIVIDED HIGHWAYS)
WO3-1	48X48	16.00						STOP AHEAD (SYMBOL)
WO3-2	48X48	16.00						YIELD AHEAD (SYMBOL)
WO3-3	48X48	16.00						SIGNAL AHEAD (SYMBOL)
WO3-4	48X48	16.00						BE PREPARED TO STOP
WO3-5	48X48	16.00	2	32.00			3	SPEED LIMIT AHEAD
WO4-1L	48X48	16.00						MERGE (SYMBOL FROM LEFT)
WO4-1R	48X48	16.00						MERGE (SYMBOL FROM RIGHT)
WO4-1aL	48X48	16.00						MERGE (LEFT)
WO4-1aR	48X48	16.00						MERGE (RIGHT)
WO5-1	48X48	16.00						ROAD/BRIDGE/RAMP NARROWS
WO5-3	48X48	16.00						ONE LANE BRIDGE
WO5-5	48X48	16.00						NARROW LANES
WO6-1	48X48	16.00						DIVIDED HIGHWAY (SYMBOL)
WO6-2	48X48	16.00						DIVIDED HIGHWAY END (SYMBOL)
WO6-3	48X48	16.00						TWO WAY TRAFFIC (SYMBOL)
WO7-3a	30X24	5.00						NEXT XX MILES (PLAQUE)
WO8-1	48X48	16.00						BUMP
WO8-2	48X48	16.00						DIP
WO8-3	48X48	16.00						PAVEMENT ENDS
WO8-4	48X48	16.00						SOFT SHOULDER
WO8-5	48X48	16.00						SLIPPERY WHEN WET (SYMBOL)
WO8-6	48X48	16.00						TRUCK CROSSING
WO8-6c	48X48	16.00						TRUCK ENTRANCE
WO8-7	36X36	9.00						LOOSE GRAVEL
WO8-7a	36X36	9.00						FRESH OIL / LOOSE GRAVEL
WO8-9	48X48	16.00						LOW SHOULDER
WO8-11	48X48	16.00	35	560.00			36	UNEVEN LANES
WO8-12	48X48	16.00	34	544.00			35	NO CENTER LINE
WO8-15	48X48	16.00						GROOVED PAVEMENT
WO8-15P	30X24	5.00						MOTORCYCLE (PLAQUE)
WO8-17L	48X48	16.00						SHOULDER DROP-OFF (SYMBOL LEFT)
WO8-17R	48X48	16.00						SHOULDER DROP-OFF (SYMBOL RIGHT)
WO8-17P	30X24	5.00						SHOULDER DROP-OFF (PLAQUE)
W10-1	42RND.	9.62						RAILROAD CROSSING
WO12-1	24X24	4.00						DOUBLE DOWN ARROW (SYMBOL)
WO12-2	48X48	16.00						LOW CLEARANCE (SYMBOL)
WO12-2x	24X18	3.00						LOW CLEARANCE (PLAQUE)
WO12-2a	84X24	14.00						OVERHEAD LOW CLEARANCE (FEET AND INCHES)
WO12-4	120X60	50.00						LOW CLEARANCE XX FT XX IN XX MILES AHEAD
WO12-5	120X60	50.00						WIDTH RESTRICTION XX FT XX IN XX MILES AHEAD
WO13-1	30X30	6.25						ADVISORY SPEED (PLAQUE)
WO16-2	30X24	5.00						XXX FEET (PLAQUE)
WO16-3	30X24	5.00						X MILE (PLAQUE)
WO20-1	48X48	16.00	99	1584.00			2	ROAD/BRIDGE/RAMP WORK AHEAD
WO20-2	48X48	16.00						DETOUR AHEAD
WO20-3	48X48	16.00						ROAD CLOSED AHEAD
WO20-4	48X48	16.00	15	240.00			7	ONE LANE ROAD AHEAD
WO20-5	48X48	16.00						RIGHT/CENTER/LEFT LANE CLOSED AHEAD
WO20-5a	48X48	16.00						2 RIGHT/CENTER/LEFT LANES CLOSED AHEAD
WO20-6a	48X48	16.00						RIGHT/CENTER/LEFT LANE CLOSED
WO20-7a	48X48	16.00	18	288.00			8	FLAGGER (SYMBOL)
WO21-2	36X36	9.00						FRESH OIL
WO21-5	48X48	16.00						SHOULDER WORK / SHOULDER WORK AHEAD
WO22-1	48X48	16.00						BLASTING ZONE AHEAD
WO22-2	42X36	10.50						TURN OFF 2-WAY RADIO AND PHONE
WO22-3	42X36	10.50						END BLASTING ZONE
GO22-1	21X15	2.19	2	4.38			(2)	WET PAINT (ARROW PIVOTS)

SIGN	SIZE IN.	AREA SQ.FT.	QTY EACH	TOTAL SQ.FT.	QTY RELOC EACH	TOTAL RELOC SQ.FT.	SIGN NO.	DESCRIPTION
GUIDE SIGNS								
E05-1	36X48	12.00						GORE EXIT
E05-2	48X36	12.00						EXIT OPEN
E05-2a	48X36	12.00						EXIT CLOSED
GO20-1	60X24	10.00	9	90.00			1	ROAD WORK NEXT XX MILES
GO20-2	48X24	8.00	9	72.00			26	END ROAD WORK
GO20-4	36X18	4.50	1	4.50			53	PILOT CAR FOLLOW ME
GO20-4a	42X30	8.75	2	17.50			58	PILOT CAR IN USE WAIT & FOLLOW
GO20-4a	18X12	1.50	6	9.00			60	PILOT CAR IN USE WAIT & FOLLOW
GO20-5aP	36X24	6.00	2	12.00			54	WORK ZONE (PLAQUE)
MO4-8a	24X18	3.00						END DETOUR
MO4-9L	48X36	12.00						DETOUR (LEFT)
MO4-9R	48X36	12.00						DETOUR (RIGHT)
MO4-9P	48X12	4.00						STREET NAME (PLAQUE)
MO4-10L	48X18	6.00						DETOUR ARROW (LEFT)
MO4-10R	48X18	6.00						DETOUR ARROW (RIGHT)
REGULATORY SIGNS								
R1-1	48X48	13.25						STOP
R1-2	48TRI.	6.93						YIELD
R1-2a	36X36	9.00						TO ONCOMING TRAFFIC (PLAQUE)
R1-3P	30X12	2.50						ALL WAY (PLAQUE)
R2-1	36X48	12.00	4	48.00			25	SPEED LIMIT XX
R3-1	48X48	16.00						NO RIGHT TURN (SYMBOL)
R3-2	48X48	16.00						NO LEFT TURN (SYMBOL)
R3-3	36X36	9.00						NO TURNS
R3-4	48X48	16.00						NO U-TURN (SYMBOL)
R3-7L	30X30	6.25						LEFT LANE MUST TURN LEFT
R3-7R	30X30	6.25						RIGHT LANE MUST TURN RIGHT
R4-1	36X48	12.00						DO NOT PASS
R4-2	36X48	12.00						PASS WITH CARE
R4-7a	36X48	12.00						KEEP RIGHT (HORIZONTAL ARROW)
R4-8a	36X48	12.00						KEEP LEFT (HORIZONTAL ARROW)
R5-1	30X30	6.25						DO NOT ENTER
R5-1a	36X24	6.00						WRONG WAY
R6-1L	54X18	6.75						ONE WAY ARROW (LEFT)
R6-1R	54X18	6.75						ONE WAY ARROW (RIGHT)
R6-2L	24X30	5.00						ONE WAY (LEFT)
R6-2R	24X30	5.00						ONE WAY (RIGHT)
R9-9	24X12	2.00	3	6.00			55	SIDEWALK CLOSED
R9-11L	24X18	3.00	1	3.00			57	SIDEWALK CLOSED AHEAD, (ARROW LEFT) CROSS HERE
R9-11R	24X18	3.00	1	3.00			58	SIDEWALK CLOSED AHEAD, (ARROW RIGHT) CROSS HERE
R10-6	24X36	6.00						STOP HERE ON RED (45^ ARROW)
R11-2	48X30	10.00						ROAD CLOSED
R11-3a	60X30	12.50						ROAD CLOSED XX MILES AHEAD LOCAL TRAFFIC ONLY
R11-4	60X30	12.50						ROAD CLOSED TO THRU TRAFFIC
CONST-3A	60X48	20.00						FINE SIGN
CONST-3X	56X12	4.67						SPEEDING/PASSING (PLATE)
MISCELLANEOUS SIGNS								
CONST-5	48X36	12.00						POINT OF PRESENCE
CONST-5	96X48	32.00						POINT OF PRESENCE
CONST-8	48X36	12.00	9	108.00			59	WORK ZONE NO PHONE ZONE
R9-10	24X12	2.00	2	4.00			56	SIDEWALK CLOSED, USE OTHER SIDE
R9-11A	24X12	2.00	3	6.00			60	SIDEWALK CLOSED AHEAD, CROSS HERE
W11-2	48X48	16.00	4	64.00			61	PEDESTRIAN CROSSING
W16-7PL	30X18	3.75	2	7.50			61	DOWN ARROW (ARROW LEFT)
W16-9P	30X18	3.75	2	7.50			62	AHEAD

616-10.05 CONSTRUCTION SIGNS	TOTAL 3715*	
616-10.10 RELOCATED SIGNS		TOTAL

EFFECTIVE: 07-01-2025

ITEM NUMBER	TOTAL QTY	DESCRIPTION
6122008		IMPACT ATTENUATOR 40 MPH (SAND BARRELS)
6122009		IMPACT ATTENUATOR 45 MPH (SAND BARRELS)
6122010		IMPACT ATTENUATOR 50 MPH (SAND BARRELS)
6122012		IMPACT ATTENUATOR 55 MPH (SAND BARRELS)
6122014		IMPACT ATTENUATOR 60 MPH (SAND BARRELS)
6122017		IMPACT ATTENUATOR 65 MPH (SAND BARRELS)
6122019		IMPACT ATTENUATOR 70 MPH (SAND BARRELS)
6122020		REPLACEMENT SAND BARREL
6122030		IMPACT ATTENUATOR (RELOCATION)
6122040		WORK ZONE CRASH CUSHION (NARROW)
6122041		WORK ZONE CRASH CUSHION (RELOCATION)
6123001	2	TRUCK MOUNTED ATTENUATOR (TMA)
6161012		BUOYS (BOATS KEEP OUT)
6161013		BUOYS (NO WAKE)
6161014		SPECIAL SIGN ASSEMBLY (BOATS KEEP OUT)
6161020		CHANNELIZER (DRUM-LIKE)
6161022		CHANNELIZER (CONE)
6161025	53*	CHANNELIZER (TRIM-LINE)
6161026		CHANNELIZER (VERTICAL PANEL)
6161030	40*	TYPE 3 MOVEABLE BARRICADE
6161033		DIRECTION INDICATOR BARRICADE
6161040	2*	FLASHING ARROW PANEL
6161047		TYPE 3 OBJECT MARKER
6161055		SEQUENTIAL FLASHING WARNING LIGHT
6161070		TUBULAR MARKER
6161095		RADAR SPEED ADVISORY SYSTEM
6161096		CHANGEABLE MESSAGE SIGN, COMMISSION FURNISHED/RETAINED
6161098A	2	CHANGEABLE MESSAGE SIGN WITHOUT COMM. INTERFACE, CONTRACTOR FURNISHED/RETAINED
6161099		CHANGEABLE MESSAGE SIGN WITH COMM. INTERFACE, CONTRACTOR FURNISHED/RETAINED
6162000A		WORK ZONE TRAFFIC SIGNAL SYSTEM
6162002		TEMPORARY LONG-TERM RUMBLE STRIPS
6173600D		TEMPORARY TRAFFIC BARRIER, CONTRACTOR FURNISHED/RETAINED
6173700B		TEMP. TRAFFIC BARRIER ANCHORED, CONTRACTOR FURNISHED/RETAINED
6173706		TEMP. TRAFFIC BARRIER STIFFNESS TRANSITION CONTRACTOR FURNISHED/RETAINED
6174000A		TEMP. TRAFFIC BARRIER HEIGHT TRANSITION, CONTRACTOR FURNISHED/RETAINED
6175010A		RELOCATING TEMPORARY TRAFFIC BARRIER
6175011B		RELOCATING TEMP. TRAFFIC BARRIER ANCHORED
6175013		RELOCATING TEMP. TRAFFIC BARRIER STIFFNESS
6175020A		RELOCATING TEMP. TRAFFIC BARRIER HEIGHT
6208064A		TEMPORARY RAISED PAVEMENT MARKER
9029400		TEMPORARY TRAFFIC SIGNALS
9029401		TEMPORARY TRAFFIC SIGNALS AND LIGHTING

BID ITEM: 6169901
TEMPORARY TRAFFIC CONTROL

LUMP SUM = 1
(*ITEMS INCLUDED)

SUMMARY OF QUANTITIES
SHEET 5 OF 5

STATE OF MISSOURI
TIMOTHY K. MINER
NUMBER
PE-2021010008
PROFESSIONAL ENGINEER
08/12/2025 2:05:47 PM
TIMOTHY K. MINER - CIVIL
MO-PE-2021010008

DATE PREPARED: 8/12/2025
ROUTE: 13,BUS36
STATE: MO
DISTRICT: NW
SHEET NO.: 3
COUNTY: CALDWELL,DAVIESS
JOB NO.: JNW0089
CONTRACT ID.: -
PROJECT NO.: -
BRIDGE NO.: -

DESCRIPTION
DATE

MISSOURI HIGHWAYS AND TRANSPORTATION COMMISSION
105 WEST CAPITOL
JEFFERSON CITY, MO 65102
1-888-ASK-MODOT (1-888-275-6636)

ROUTE 13 RESURFACING DETAILS

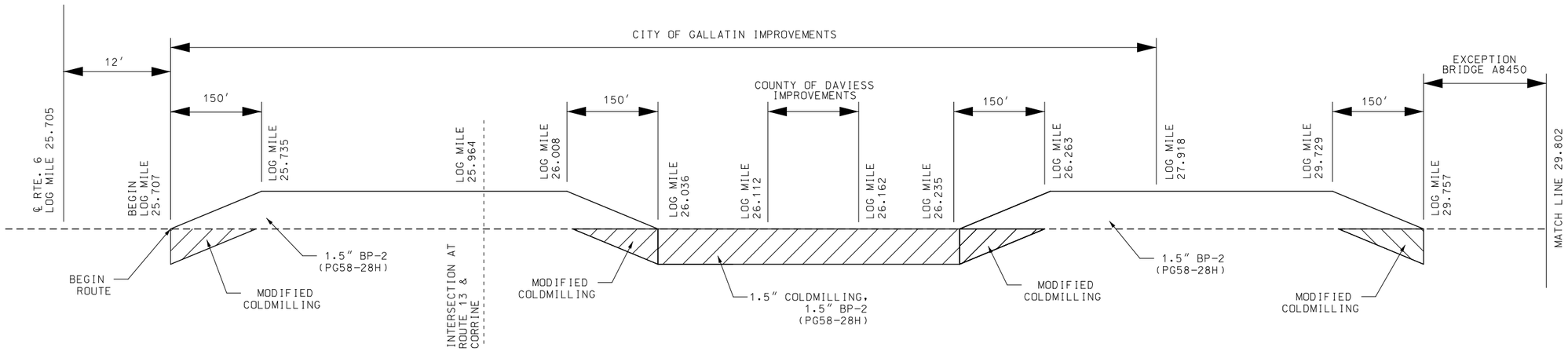

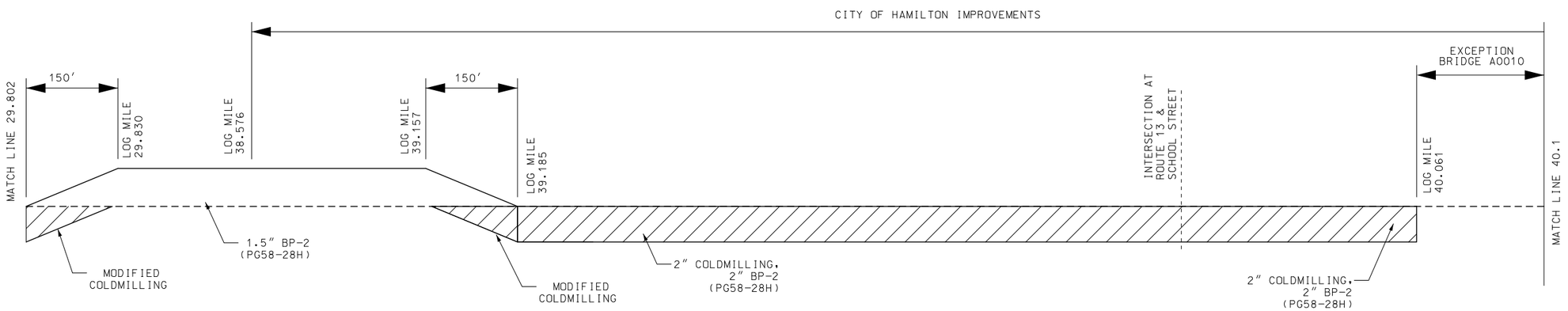

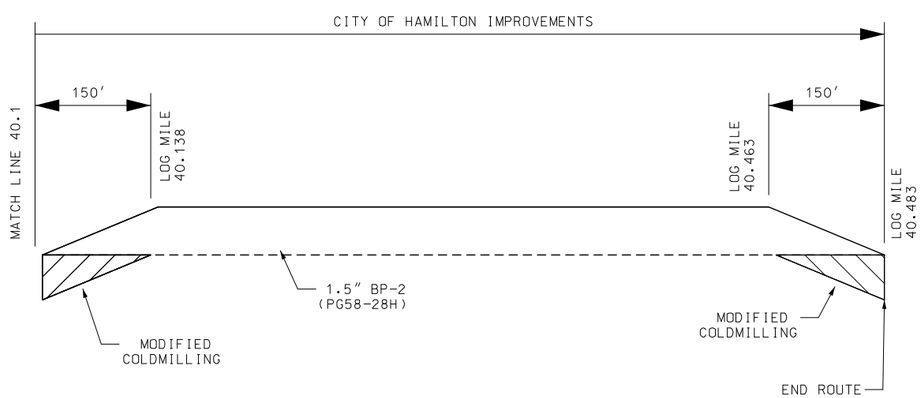

BUS. 36 RESURFACING DETAILS

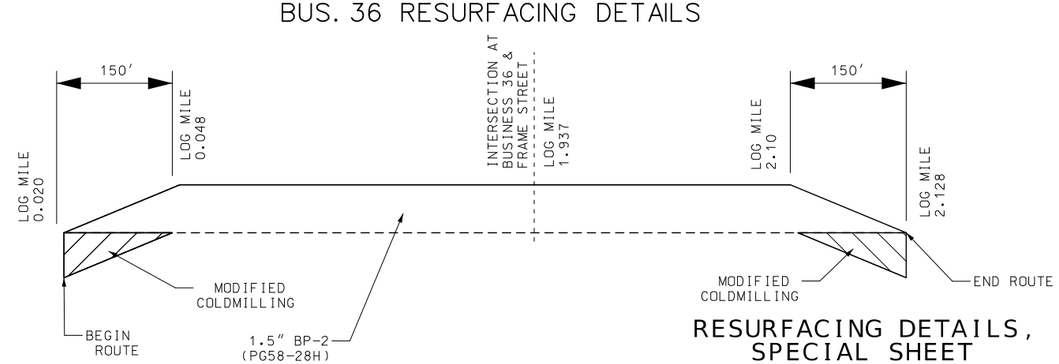

RESURFACING DETAILS, SPECIAL SHEET
1 OF 13

STATE OF MISSOURI
TIMOTHY K. MINER
NUMBER PE-2021010008
PROFESSIONAL ENGINEER
08/15/2025 3:40:18 PM
TIMOTHY K. MINER - CIVIL
MO-PE-2021010008

DATE PREPARED	8/12/2025
ROUTE	13,BUS36
STATE	MO
DISTRICT	NW
SHEET NO.	4
COUNTY	CALDWELL,DAVIESS
JOB NO.	JNW0089
CONTRACT ID.	-
PROJECT NO.	-
BRIDGE NO.	-

DATE	DESCRIPTION

MISSOURI HIGHWAYS AND TRANSPORTATION COMMISSION
105 WEST CAPITOL
JEFFERSON CITY, MO 65102
1-888-ASK-MODOT (1-888-275-6636)

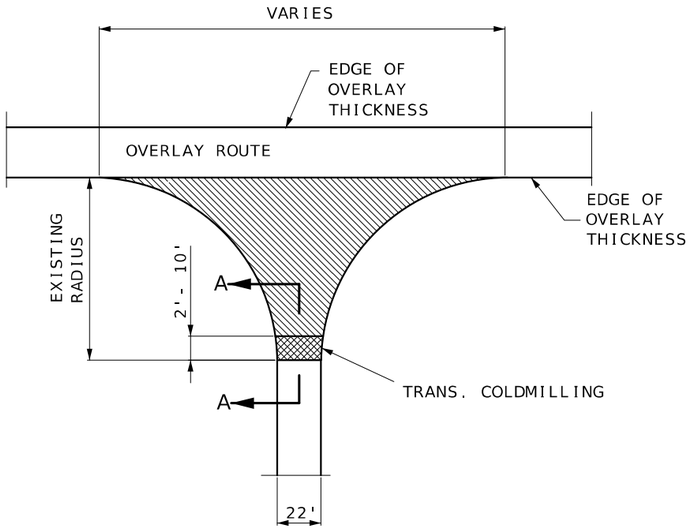

TYPICAL STATE ROUTE JUNCTION

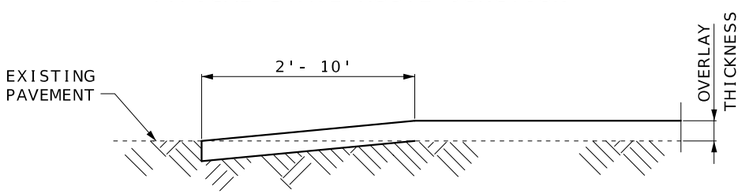

SECTION A-A

TYPICAL STATE ROUTE JUNCTION
(COLDMILLED TRANSITION)

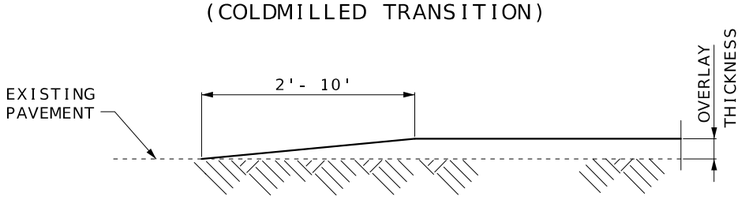

ALTERNATE SECTION A-A

TYPICAL STATE ROUTE JUNCTION
(TAPERED TRANSITION)

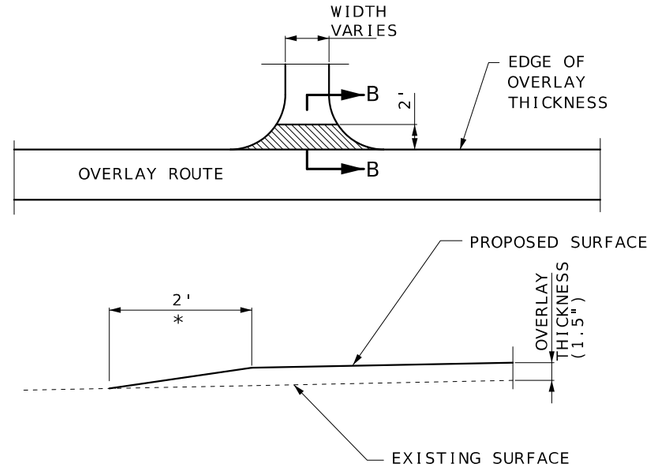

SECTION B-B

TYPICAL ENTRANCE
(FIELD, PRIVATE OR COUNTY ROAD)
* TAPER AT 1:1 FOR FIELD ENTRANCE

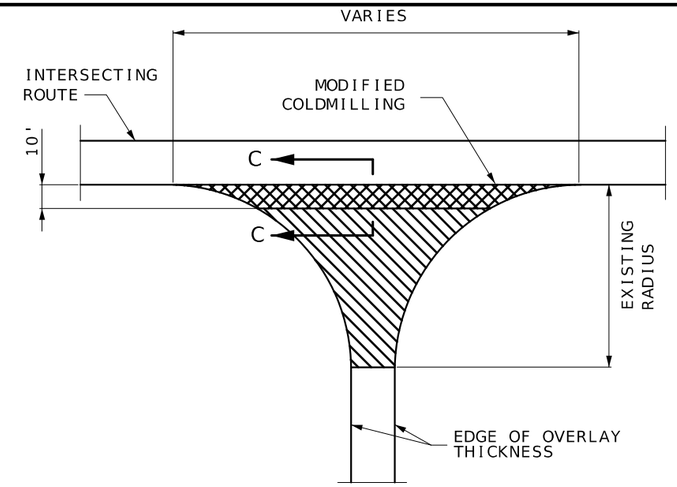

BEGINNING AND END
AT INTERSECTING ROUTE

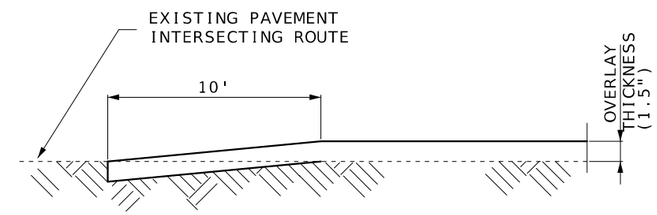

SECTION C-C

DEPTH TRANSITIONS
BEGINNING OF PROJECT
AT INTERSECTING ROUTE

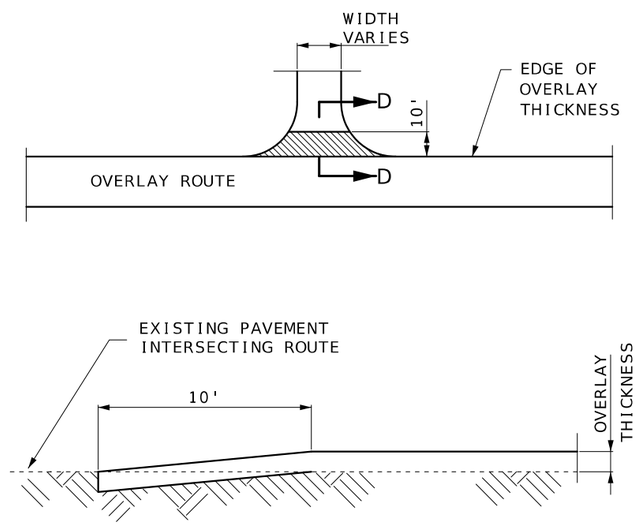

SECTION D-D

DEPTH TRANSITIONS
AT INTERSECTIONS
WITH CITY STREETS

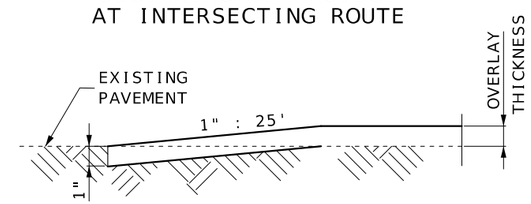

TRAVELWAY DEPTH TRANSITIONS
BEGINNING AND END OF PROJECT
NOT AT INTERSECTING ROUTE
AND AT EXCEPTIONS

DEPTH TRANSITIONS,
SPECIAL SHEET
2 OF 13

STATE OF MISSOURI
TIMOTHY K. MINER
NUMBER
PE-2021010008
PROFESSIONAL ENGINEER

08/12/2025 1:12:40 PM
TIMOTHY K. MINER - CIVIL
MO-PE-2021010008

DATE PREPARED	8/12/2025
ROUTE	13, BUS36
STATE	MO
DISTRICT	NW
SHEET NO.	5
COUNTY	CALDWELL, DAVIESS
JOB NO.	JNW0089
CONTRACT ID.	-
PROJECT NO.	-
BRIDGE NO.	-

DATE	DESCRIPTION

MISSOURI HIGHWAYS AND TRANSPORTATION COMMISSION
105 WEST CAPITOL
JEFFERSON CITY, MO 65102
1-888-ASK-MODOT (1-888-275-6636)

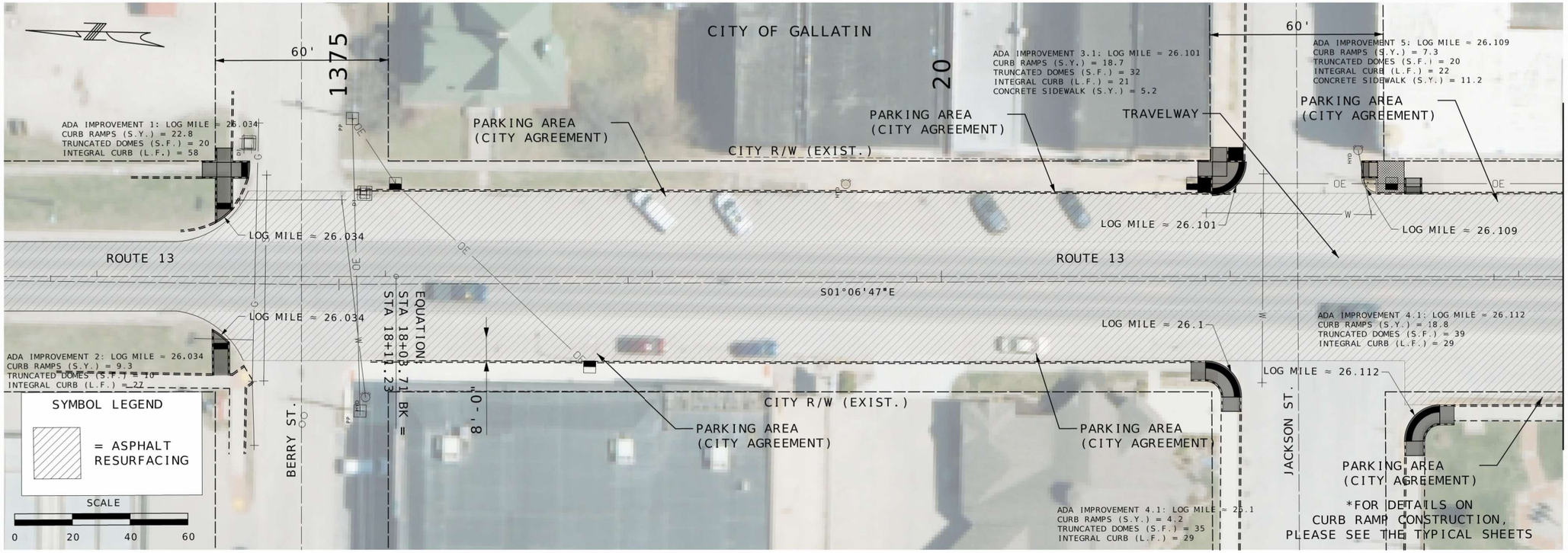

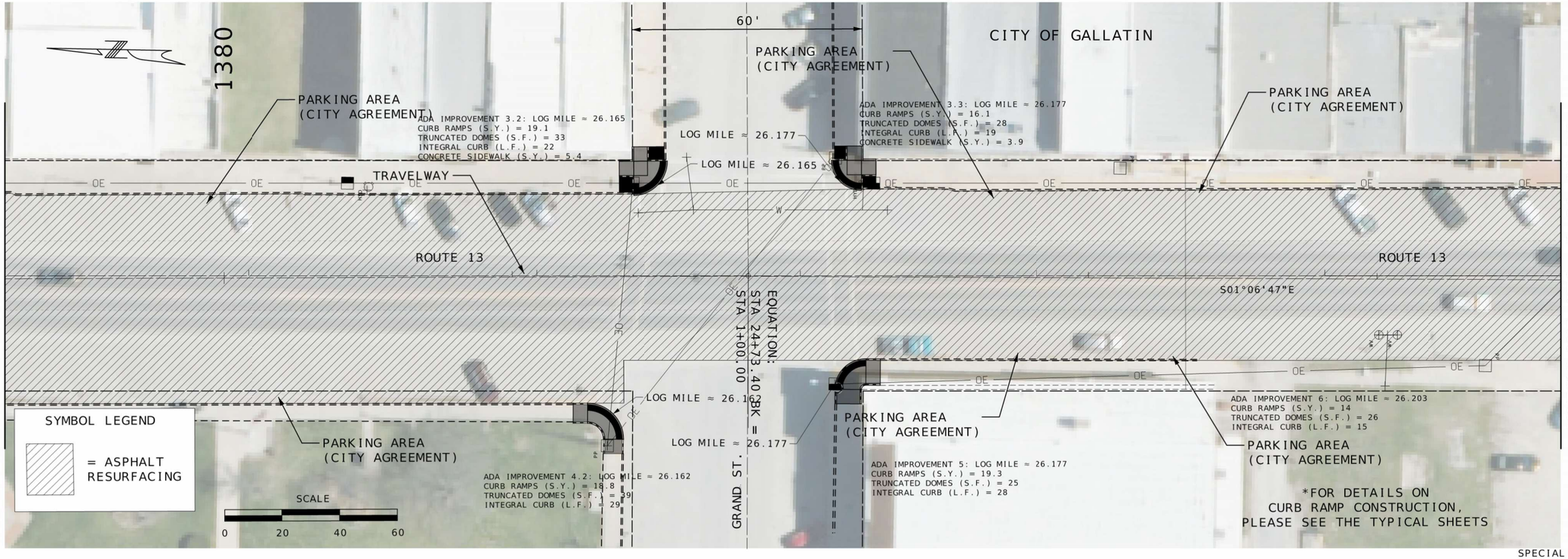

SPECIAL SHEETS
SHEET 3 OF 13

STATE OF MISSOURI
TIMOTHY K. MINER
NUMBER
PE-2021010008
PROFESSIONAL ENGINEER
08/15/2025 3:41:15 PM
TIMOTHY K. MINER - CIVIL
MO-PE-20211010008

DATE PREPARED	8/15/2025
ROUTE	13,BUS36
STATE	MO
DISTRICT	NW
SHEET NO.	6
COUNTY	CALDWELL,DAVIESS
JOB NO.	NW0089
CONTRACT ID.	-
PROJECT NO.	-
BRIDGE NO.	-

DATE	DESCRIPTION

MISSOURI HIGHWAYS AND TRANSPORTATION COMMISSION
105 WEST CAPITOL
JEFFERSON CITY, MO 65102
1-888-ASK-MODOT (1-888-275-6636)

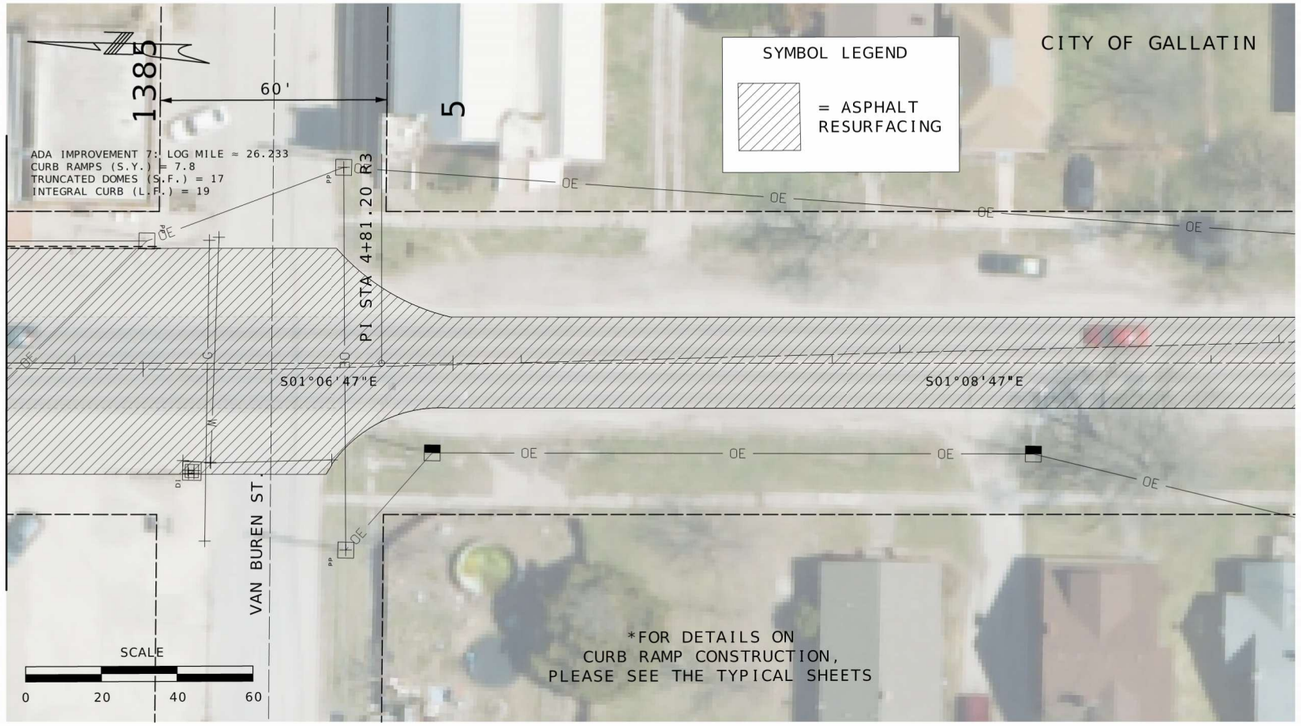

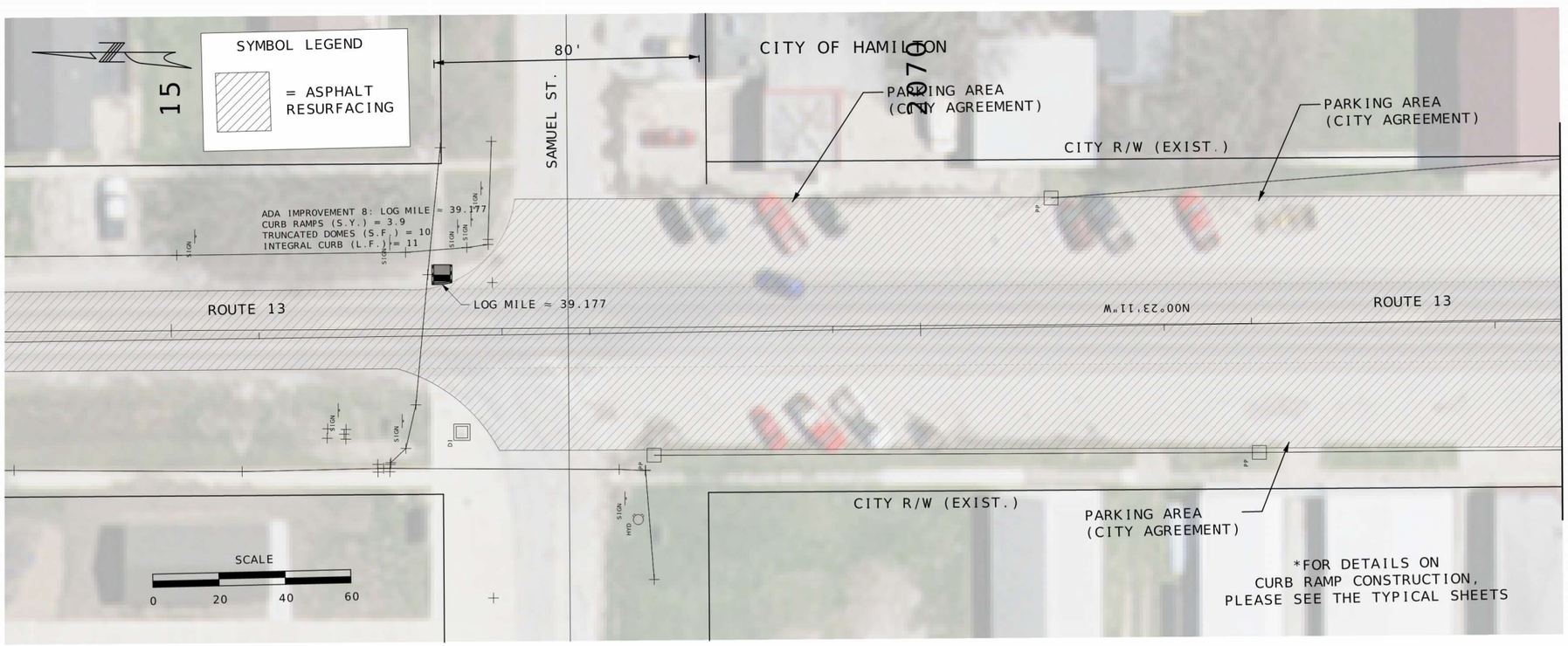

STATE OF MISSOURI
TIMOTHY K. MINER
NUMBER
PE-2021010008
PROFESSIONAL ENGINEER
08/15/2025 3:41:28 PM
TIMOTHY K. MINER - CIVIL
MO-PE-20210100008

DATE PREPARED	8/15/2025
ROUTE	13,BUS36
STATE	MO
DISTRICT	NW
SHEET NO.	7
COUNTY	CALDWELL,DAVIESS
JOB NO.	NW0089
CONTRACT ID.	-
PROJECT NO.	-
BRIDGE NO.	-

DATE	DESCRIPTION

MISSOURI HIGHWAYS AND TRANSPORTATION COMMISSION
105 WEST CAPITOL
JEFFERSON CITY, MO 65102
1-888-ASK-MODOT (1-888-275-6636)

SPECIAL SHEETS
SHEET 4 OF 13

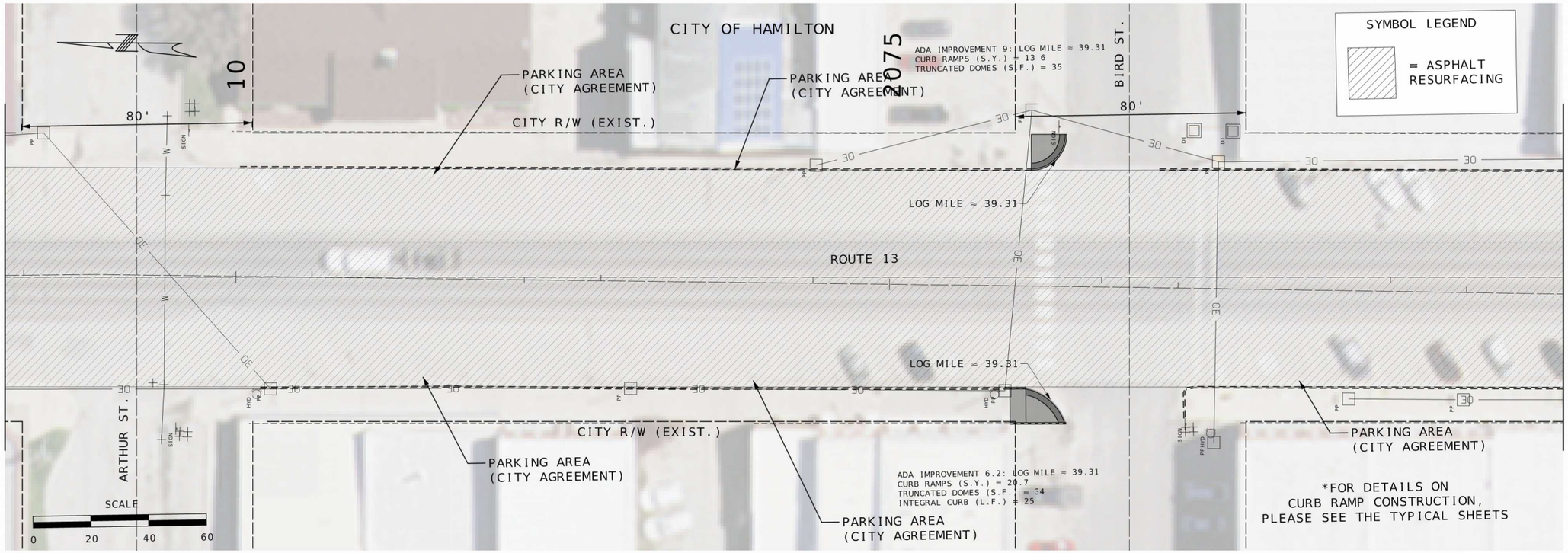

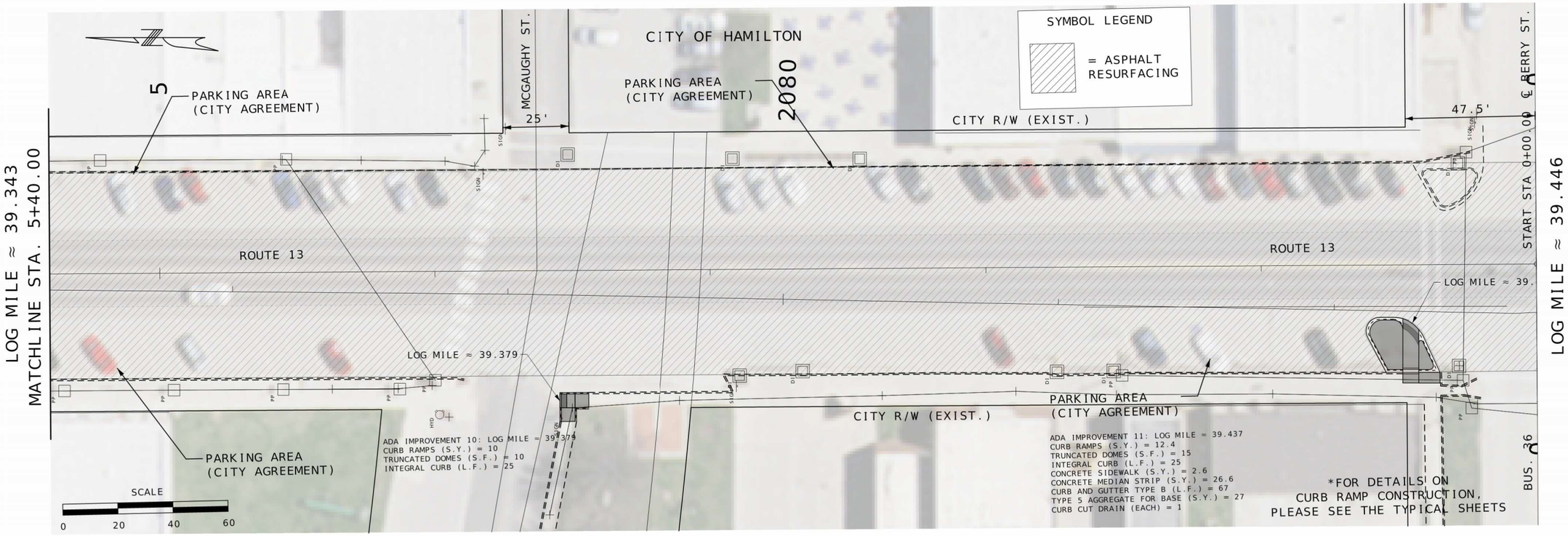

STATE OF MISSOURI
TIMOTHY K. MINER
NUMBER PE-2021010008
PROFESSIONAL ENGINEER

08/15/2025 3:41:07 PM
TIMOTHY K. MINER - CIVIL
MO-PE-2021010008

DATE PREPARED	8/15/2025
ROUTE	13,BUS36
STATE	MO
DISTRICT	NW
SHEET NO.	8
COUNTY	CALDWELL,DAVIESS
JOB NO.	NW0089
CONTRACT ID.	-
PROJECT NO.	-
BRIDGE NO.	-

DESCRIPTION

DATE

MISSOURI HIGHWAYS AND TRANSPORTATION COMMISSION
105 WEST CAPITOL
JEFFERSON CITY, MO 65102
1-888-ASK-MODOT (1-888-275-6636)

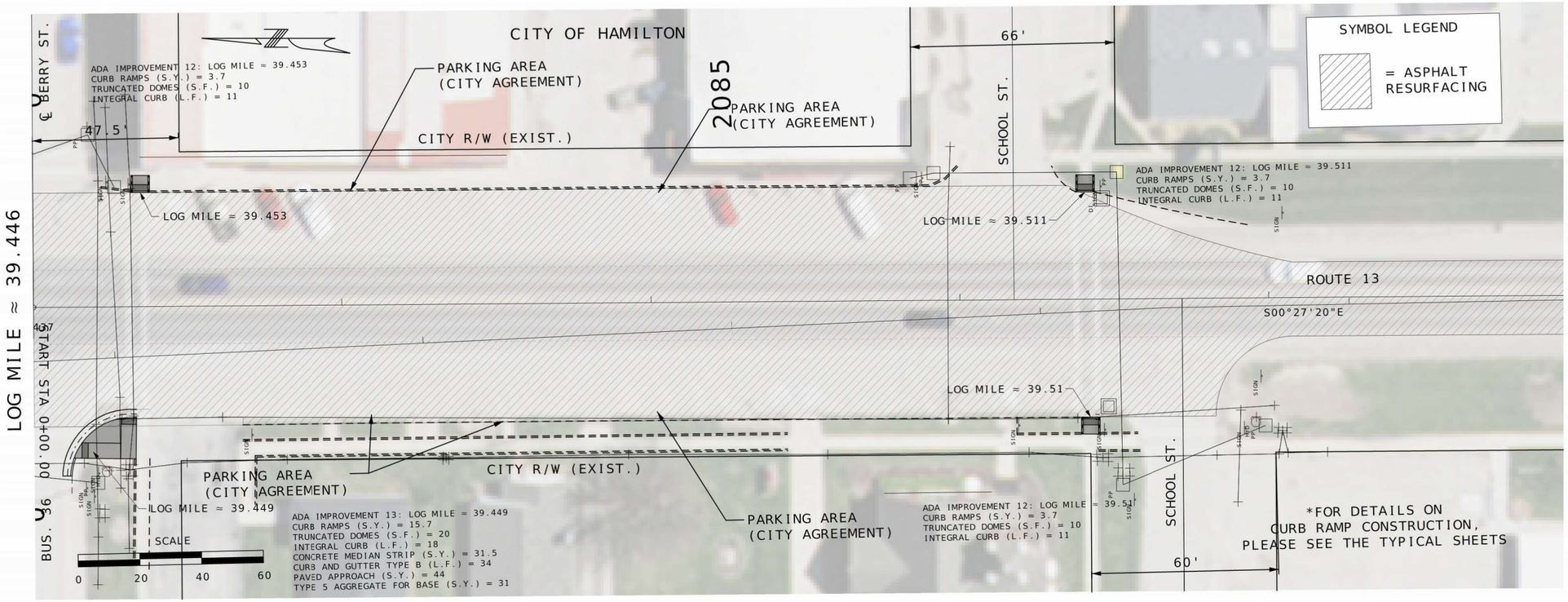

SPECIAL SHEETS
SHEET 6 OF 13

STATE OF MISSOURI
TIMOTHY K. MINER
NUMBER PE-2021010008
PROFESSIONAL ENGINEER
08/15/2025 3:40:58 PM
TIMOTHY K. MINER - CIVIL
MO-PE-2021010008

DATE PREPARED	8/15/2025
ROUTE	13,BUS36
STATE	MO
DISTRICT	NW
SHEET NO.	9
COUNTY	CALDWELL,DAVIESS
JOB NO.	NW0089
CONTRACT ID.	-
PROJECT NO.	-
BRIDGE NO.	-

DESCRIPTION

DATE

MISSOURI HIGHWAYS AND TRANSPORTATION COMMISSION
105 WEST CAPITOL
JEFFERSON CITY, MO 65102
1-888-ASK-MODOT (1-888-275-6636)

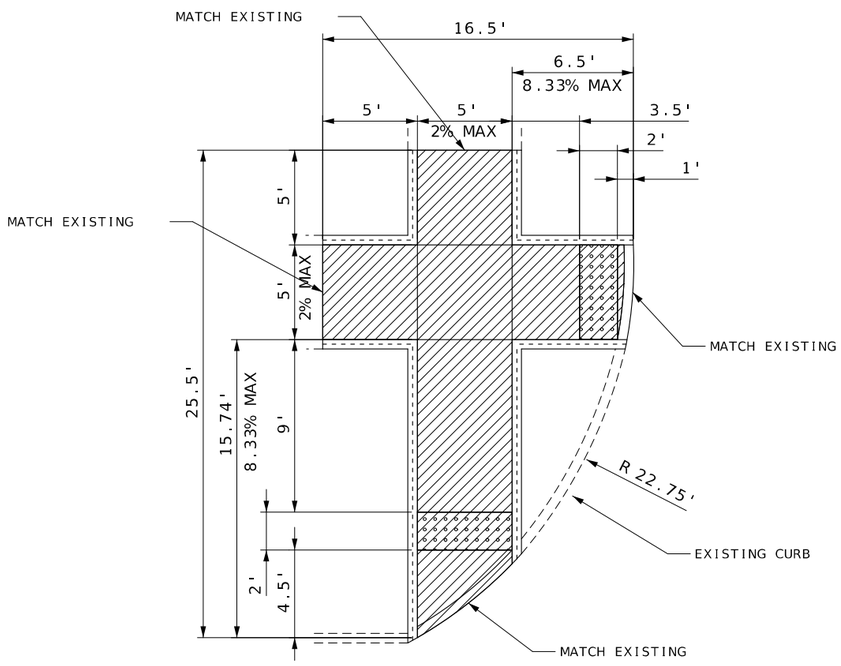

ADA DETAIL 1

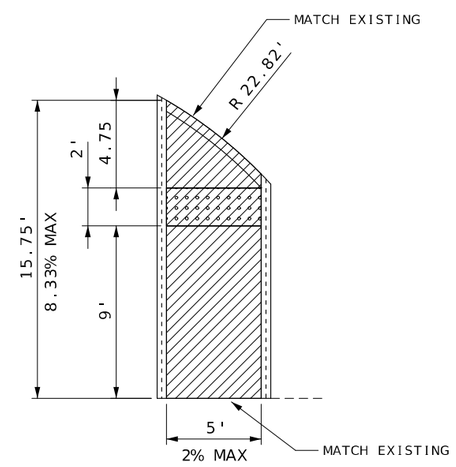

ADA DETAIL 2

NOT TO SCALE

DIMENSIONS MAY BE ADJUSTED BY APPROVAL OF THE ENGINEER

SYMBOL LEGEND

EXISTING SIDEWALK

SPLITTER CONCRETE ISLAND (STAMPED, RED)

CONCRETE SIDEWALK

STEEL PLATE

CONCRETE CURB RAMP

CURB & GUTTER TYPE B

TRUNCATED DOME

INTEGRAL CURB

GUTTER TYPE B

POWER POLE OR POWER POLE (LIGHT POLE)

SPECIAL SHEET
7 OF 13

STATE OF MISSOURI
TIMOTHY K. MINER
NUMBER PE-2021010008
PROFESSIONAL ENGINEER
08/12/2025 1:29:11 PM
TIMOTHY K. MINER - CIVIL
MO-PE-2021010008

DATE PREPARED	8/12/2025
ROUTE	13,BUS36
STATE	MO
DISTRICT	NW
SHEET NO.	10
COUNTY	CALDWELL,DAVIESS
JOB NO.	JNW0089
CONTRACT ID.	-
PROJECT NO.	-
BRIDGE NO.	-

DATE	DESCRIPTION

MISSOURI HIGHWAYS AND TRANSPORTATION COMMISSION
105 WEST CAPITOL
JEFFERSON CITY, MO 65102
1-888-ASK-MODOT (1-888-275-6636)

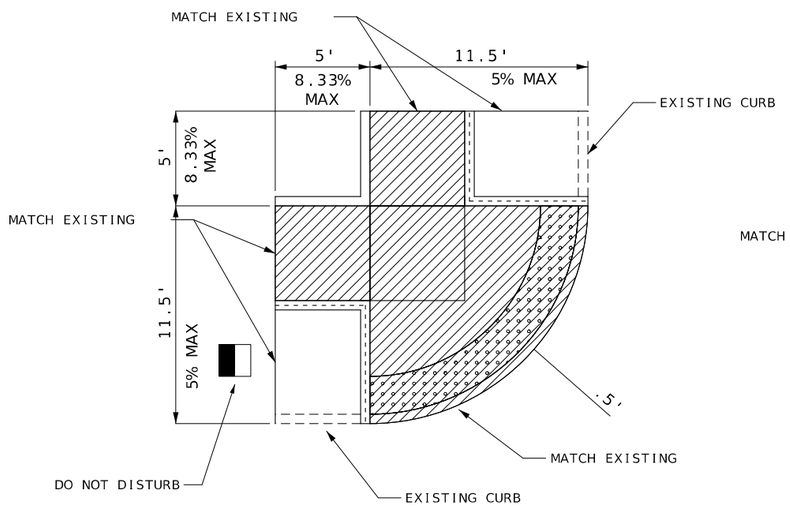

ADA DETAIL 3.1

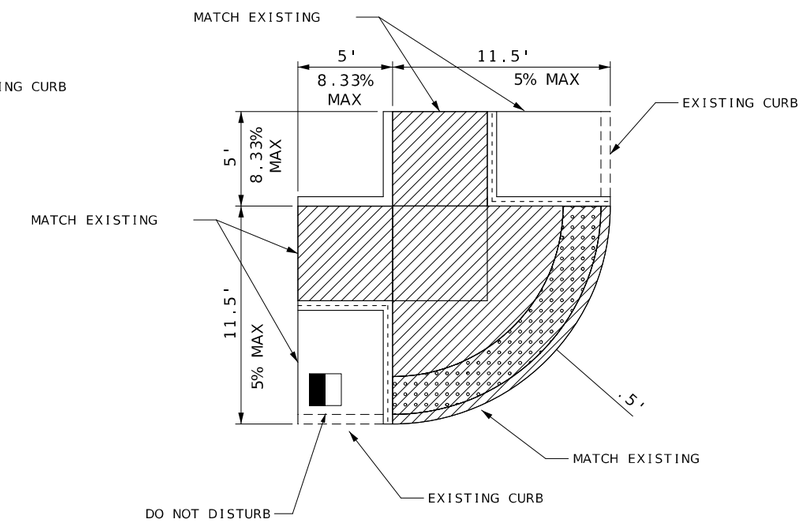

ADA DETAIL 3.2

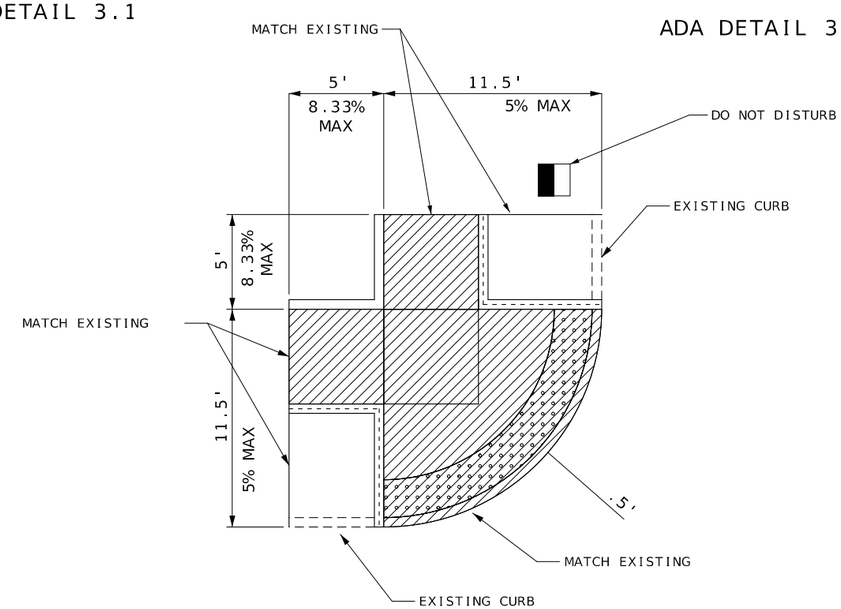

ADA DETAIL 3.3

NOT TO SCALE

DIMENSIONS MAY BE ADJUSTED BY APPROVAL OF THE ENGINEER

SYMBOL LEGEND

EXISTING SIDEWALK

SPLITTER CONCRETE ISLAND (STAMPED, RED)

CONCRETE SIDEWALK

STEEL PLATE

CONCRETE CURB RAMP

CURB & GUTTER TYPE B

TRUNCATED DOME

INTEGRAL CURB

GUTTER TYPE B

POWER POLE OR POWER POLE (LIGHT POLE)

SPECIAL SHEET
8 OF 13

STATE OF MISSOURI
TIMOTHY K. MINER
NUMBER PE-2021010008
PROFESSIONAL ENGINEER
08/12/2025 1:20:17 PM
TIMOTHY K. MINER - CIVIL
MO-PE-2021010008

DATE PREPARED	8/12/2025
ROUTE	13,BUS36
STATE	MO
DISTRICT	NW
SHEET NO.	11
COUNTY	CALDWELL,DAVIESS
JOB NO.	JNW0089
CONTRACT ID.	-
PROJECT NO.	-
BRIDGE NO.	-

DATE	DESCRIPTION

MISSOURI HIGHWAYS AND TRANSPORTATION COMMISSION
105 WEST CAPITOL
JEFFERSON CITY, MO 65102
1-888-ASK-MODOT (1-888-275-6636)

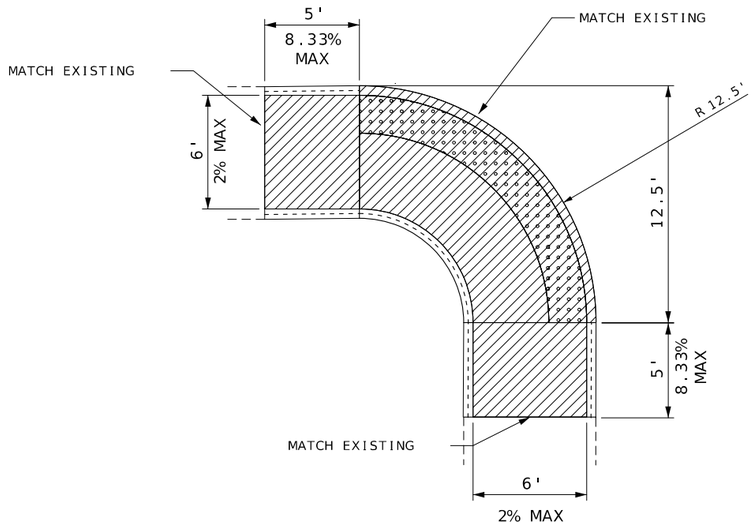

ADA DETAIL 4.1

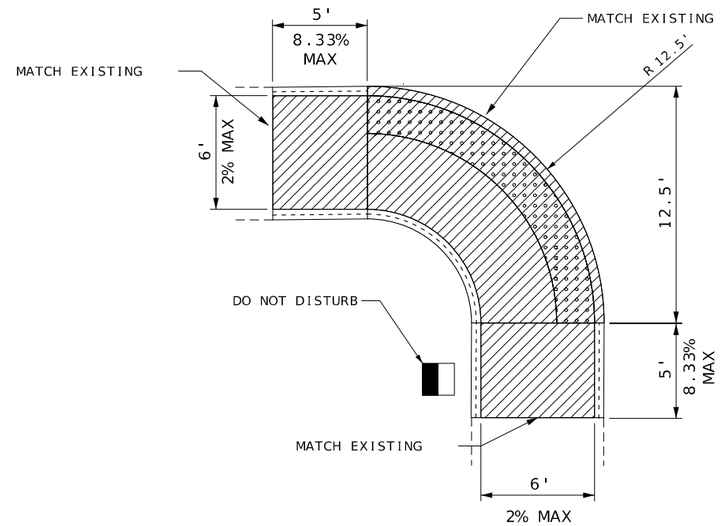

ADA DETAIL 4.2

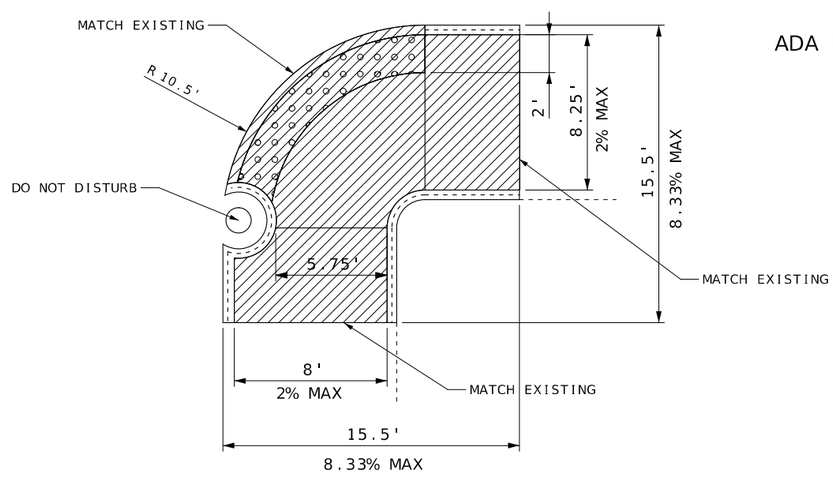

ADA DETAIL 4.3

NOT TO SCALE

DIMENSIONS MAY BE ADJUSTED BY APPROVAL OF THE ENGINEER

SYMBOL LEGEND

EXISTING SIDEWALK

SPLITTER CONCRETE ISLAND (STAMPED, RED)

CONCRETE SIDEWALK

STEEL PLATE

CONCRETE CURB RAMP

CURB & GUTTER TYPE B

TRUNCATED DOME

INTEGRAL CURB

GUTTER TYPE B

POWER POLE OR POWER POLE (LIGHT POLE)

STATE OF MISSOURI
TIMOTHY K. MINER
NUMBER PE-2021010008
PROFESSIONAL ENGINEER
08/12/2025 1:29:26 PM
TIMOTHY K. MINER - CIVIL
MO-PE-2021010008

DATE PREPARED	8/12/2025
ROUTE	13,BUS36
STATE	MO
DISTRICT	NW
SHEET NO.	12
COUNTY	CALDWELL,DAVIESS
JOB NO.	JNW0089
CONTRACT ID.	-
PROJECT NO.	-
BRIDGE NO.	-

DATE	DESCRIPTION

MISSOURI HIGHWAYS AND TRANSPORTATION COMMISSION
105 WEST CAPITOL
JEFFERSON CITY, MO 65102
1-888-ASK-MODOT (1-888-275-6636)

SPECIAL SHEET
9 OF 13

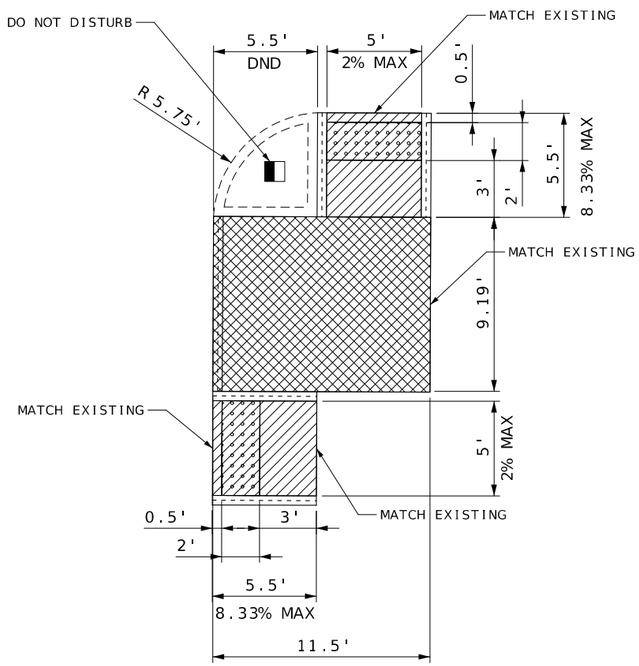

ADA DETAIL 5

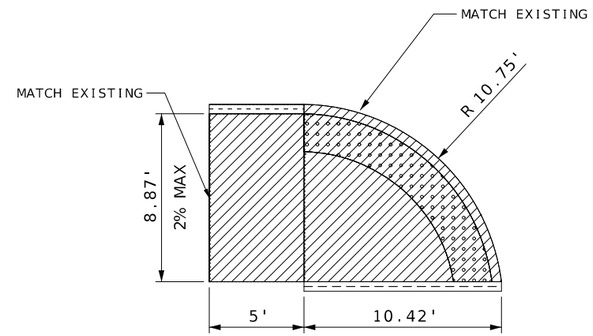

ADA DETAIL 6.1

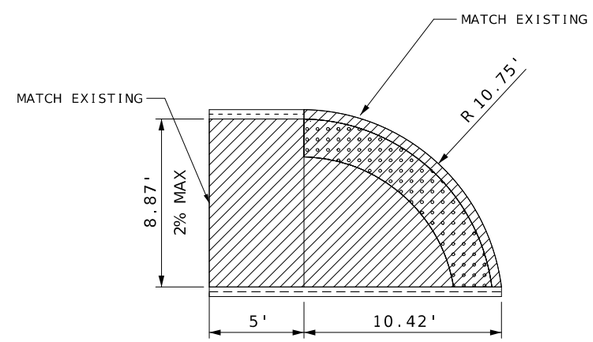

ADA DETAIL 6.2

SYMBOL LEGEND

EXISTING SIDEWALK

SPLITTER CONCRETE ISLAND (STAMPED, RED)

CONCRETE SIDEWALK

STEEL PLATE

CONCRETE CURB RAMP

CURB & GUTTER TYPE B

TRUNCATED DOME

INTEGRAL CURB

GUTTER TYPE B

POWER POLE OR POWER POLE (LIGHT POLE)

NOT TO SCALE

DIMENSIONS MAY BE ADJUSTED BY APPROVAL OF THE ENGINEER

SPECIAL SHEET
10 OF 13

STATE OF MISSOURI
TIMOTHY K. MINER
NUMBER PE-2021010008
PROFESSIONAL ENGINEER
08/12/2025 1:29:32 PM
TIMOTHY K. MINER - CIVIL
MO-PE-2021010008

DATE PREPARED	8/12/2025
ROUTE	13,BUS36
STATE	MO
DISTRICT	NW
SHEET NO.	13
COUNTY	CALDWELL,DAVIESS
JOB NO.	JNW0089
CONTRACT ID.	-
PROJECT NO.	-
BRIDGE NO.	-

DESCRIPTION

DATE

MISSOURI HIGHWAYS AND TRANSPORTATION COMMISSION
105 WEST CAPITOL
JEFFERSON CITY, MO 65102
1-888-ASK-MODOT (1-888-275-6636)

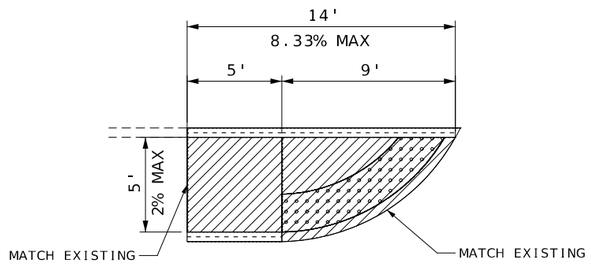

ADA DETAIL 7

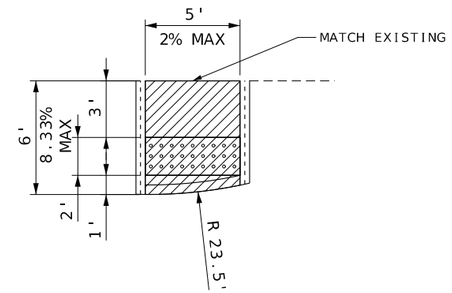

ADA DETAIL 8

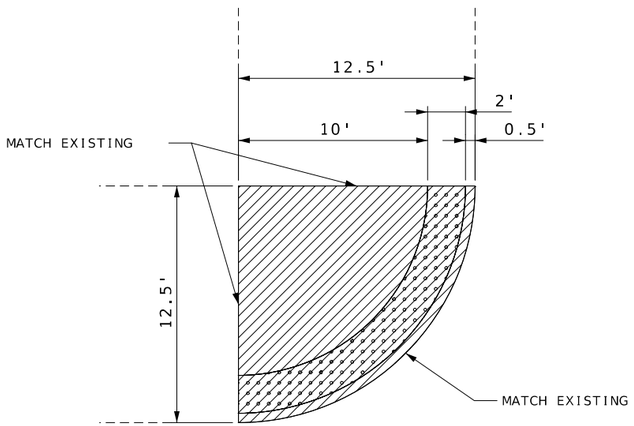

ADA DETAIL 9

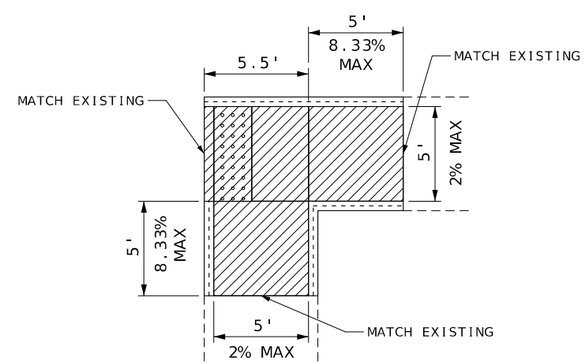

ADA DETAIL 10

NOT TO SCALE

DIMENSIONS MAY BE ADJUSTED BY APPROVAL OF THE ENGINEER

SYMBOL LEGEND

EXISTING SIDEWALK

SPLITTER CONCRETE ISLAND (STAMPED, RED)

CONCRETE SIDEWALK

STEEL PLATE

CONCRETE CURB RAMP

CURB & GUTTER TYPE B

TRUNCATED DOME

INTEGRAL CURB

GUTTER TYPE B

POWER POLE OR POWER POLE (LIGHT POLE)

SPECIAL SHEET
11 OF 13

STATE OF MISSOURI
TIMOTHY K. MINER
NUMBER PE-2021010008
PROFESSIONAL ENGINEER
08/12/2025 1:09:19 PM
TIMOTHY K. MINER - CIVIL
MO-PE-2021101008

DATE PREPARED	8/12/2025
ROUTE	13,BUS36
STATE	MO
DISTRICT	NW
SHEET NO.	14
COUNTY	CALDWELL,DAVIESS
JOB NO.	JNW0089
CONTRACT ID.	-
PROJECT NO.	-
BRIDGE NO.	-

DATE	DESCRIPTION

MISSOURI HIGHWAYS AND TRANSPORTATION COMMISSION
105 WEST CAPITOL
JEFFERSON CITY, MO 65102
1-888-ASK-MODOT (1-888-275-6636)

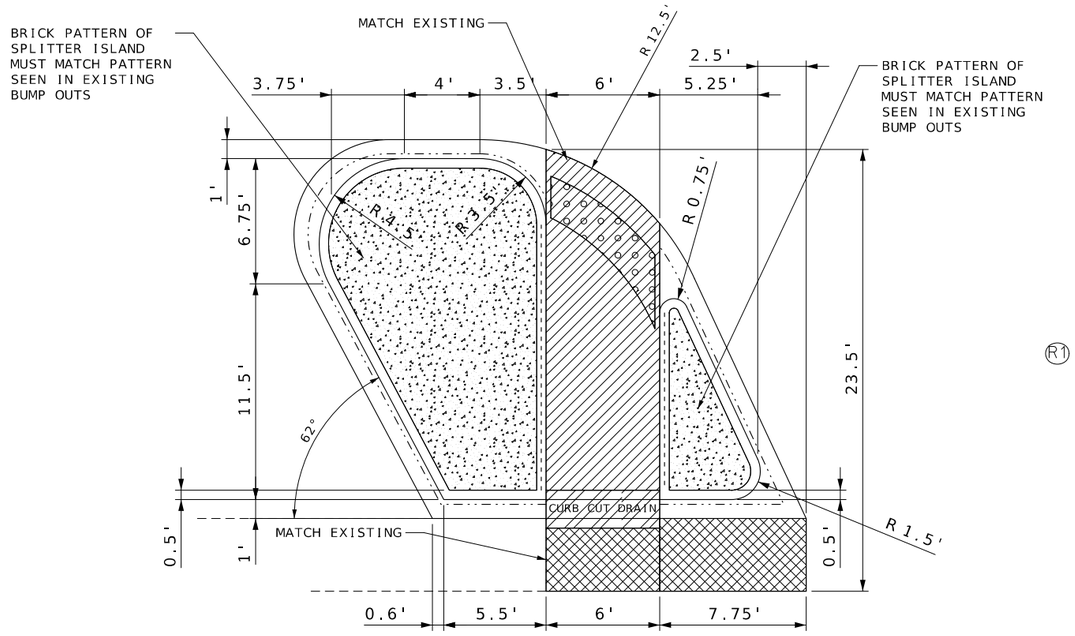

ADA DETAIL 11

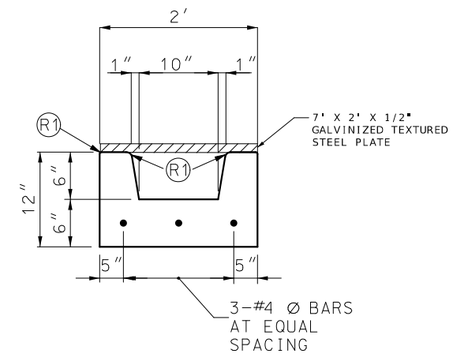

CURB CUT DRAIN
SECTION A-A

(R1) ROUND TO $\frac{1}{4}$" RADIUS (EXCEPT FOR SAWED JOINTS).

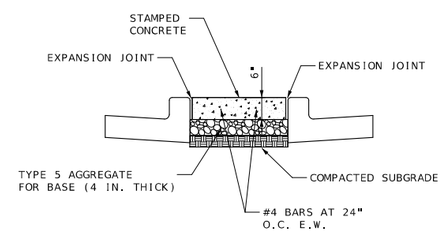

SPLITTER CONCRETE ISLAND
(STAMPED, RED)

NOT TO SCALE

DIMENSIONS MAY BE ADJUSTED BY APPROVAL OF THE ENGINEER

SYMBOL LEGEND

EXISTING SIDEWALK

SPLITTER CONCRETE ISLAND (STAMPED, RED)

CONCRETE SIDEWALK

STEEL PLATE

CONCRETE CURB RAMP

CURB & GUTTER TYPE B

TRUNCATED DOME

INTEGRAL CURB

GUTTER TYPE B

POWER POLE OR POWER POLE (LIGHT POLE)

STATE OF MISSOURI
TIMOTHY K. MINER
NUMBER PE-2021010008
PROFESSIONAL ENGINEER
08/12/2025 3:11:55 PM
TIMOTHY K. MINER - CIVIL
MO-PE-2021010008

DATE PREPARED	8/12/2025
ROUTE	13,BUS36
STATE	MO
DISTRICT	NW
SHEET NO.	15
COUNTY	CALDWELL,DAVIESS
JOB NO.	JNW0089
CONTRACT ID.	-
PROJECT NO.	-
BRIDGE NO.	-

DATE	DESCRIPTION

MISSOURI HIGHWAYS AND TRANSPORTATION COMMISSION
105 WEST CAPITOL
JEFFERSON CITY, MO 65102
1-888-ASK-MODOT (1-888-275-6636)

SPECIAL SHEET
12 OF 13

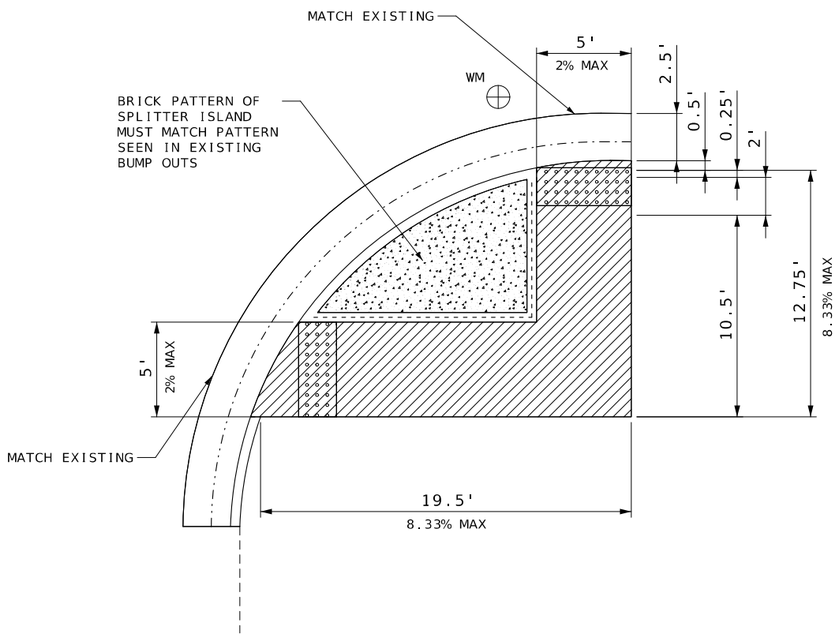

ADA DETAIL 12

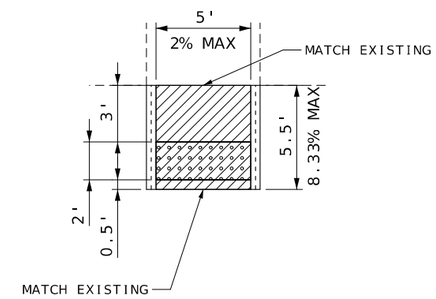

ADA DETAIL 13

NOT TO SCALE

DIMENSIONS MAY BE
ADJUSTED BY APPROVAL
OF THE ENGINEER

SYMBOL LEGEND

EXISTING SIDEWALK

SPLITTER CONCRETE ISLAND
(STAMPED, RED)

CONCRETE SIDEWALK

STEEL PLATE

CONCRETE CURB RAMP

CURB & GUTTER
TYPE B

TRUNCATED DOME

INTEGRAL CURB

GUTTER TYPE B

POWER POLE OR
POWER POLE (LIGHT POLE)

SPECIAL SHEET
13 OF 13

STATE OF MISSOURI
TIMOTHY K. MINER
NUMBER
PE-2021010008
PROFESSIONAL ENGINEER
08/12/2025 1:07:18 PM
TIMOTHY K. MINER - CIVIL
MO-PE-20211010008

DATE PREPARED	8/12/2025
ROUTE	13,BUS36
STATE	MO
DISTRICT	NW
SHEET NO.	16
COUNTY	CALDWELL,DAVIESS
JOB NO.	JNW0089
CONTRACT ID.	-
PROJECT NO.	-
BRIDGE NO.	-

DATE	DESCRIPTION

MISSOURI HIGHWAYS AND TRANSPORTATION COMMISSION
105 WEST CAPITOL
JEFFERSON CITY, MO 65102
1-888-ASK-MODOT (1-888-275-6636)

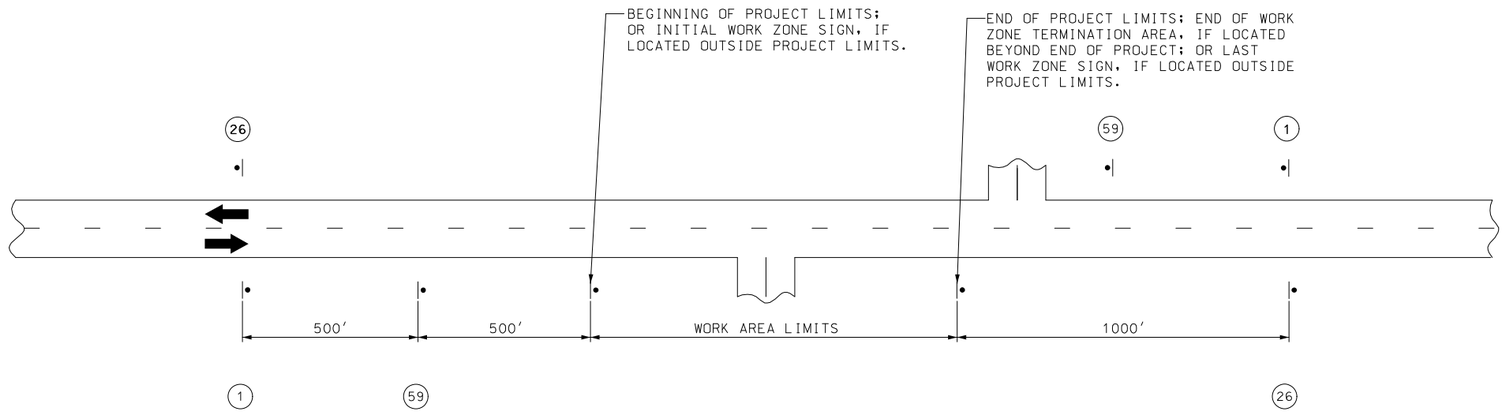

NOTES:

SIGN (1) AND (26) ARE ONLY USED ON PROJECT LENGTHS 2 MILES OR GREATER.

PROVIDE SIGNS IN EACH DIRECTION ON TWO-WAY HIGHWAY.

DISTANCE MAY BE ADJUSTED ACCORDING TO FIELD CONDITIONS.

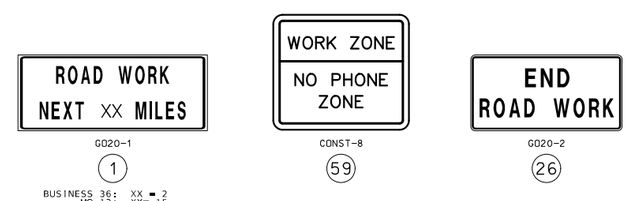

TRAFFIC CONTROL
SHEET 1 OF 8

NOT TO SCALE

STATE OF MISSOURI
TIMOTHY K. MINER
NUMBER
PE-2021010008
PROFESSIONAL ENGINEER

08/12/2025 1:09:07 PM
TIMOTHY K. MINER - CIVIL
MO-PE-2021010008

DATE PREPARED	
8/12/2025	
ROUTE	STATE
13,BUS36	MO
DISTRICT	SHEET NO.
NW	17
COUNTY	
CALDWELL,DAVIESS	
JOB NO.	
JNW0089	
CONTRACT ID.	
-	
PROJECT NO.	
-	
BRIDGE NO.	
-	

DESCRIPTION	DATE

MISSOURI HIGHWAYS AND TRANSPORTATION COMMISSION

105 WEST CAPITOL
JEFFERSON CITY, MO 65102
1-888-ASK-MODOT (1-888-275-6636)

W020-1

2

W020-4

7

W020-7a

8

G020-4

53

SIGN 53, "PILOT CAR FOLLOW ME" SHALL BE THE CONTRACTOR'S RESPONSIBILITY WHEN IN USE DURING OPERATION.

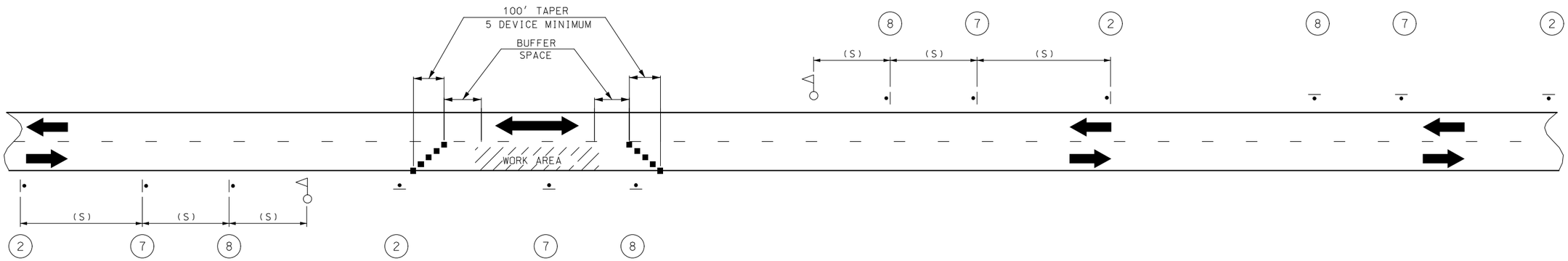

SET 1	SET 2	SET 3	SET 4
ACTIVE	INACTIVE	ACTIVE	INACTIVE

NOTES:

THIS PLAN IS FOR DAYLIGHT FLAGGING OPERATIONS ONLY. WHEN NIGHT WORK IS REQUIRED, OR OTHERWISE ALLOWED BY THE ENGINEER, WORK ZONE LIGHTING SHALL BE PROVIDED IN ACCORDANCE WITH SEC 616.5.2.

CHANNELIZING DEVICES LOCATED DOWNSTREAM OF THE ONE-LANE, TWO-WAY TAPER ARE OPTIONAL. THESE DEVICES SHOULD BE ELIMINATED WHEN THEIR USE WILL REDUCE THE USABLE LANE WIDTH, INCLUDING ANY ACCEPTABLE SHOULDERS, TO LESS THAN 10' OR WILL SIGNIFICANTLY AFFECT THE RESURFACING OPERATION.

SIGN SETS 1 AND 3 ARE ACTIVE AND (I.E., SIGNS FACE ONCOMING TRAFFIC) SIGN SETS 2 AND 4 ARE INACTIVE (I.E., SIGNS DO NOT FACE EITHER DIRECTION OF TRAFFIC) WHEN THE RESURFACING OPERATION IS LOCATED BETWEEN SIGN SETS 1 AND 3.

WHEN SIGN SETS 2 AND 4 ARE ACTIVE, SIGN SETS 1 AND 3 BECOME INACTIVE AND ARE ADVANCED TO BECOME SETS 2 AND 4 WITH SIGN LEGENDS TURNED AWAY FROM BOTH DIRECTIONS OF TRAFFIC. WHEN THE RESURFACING OPERATION ADVANCES TO BETWEEN SIGN SETS 2 AND 4, SIGN SETS 2 AND 4 BECOME ACTIVE (I.E., NEW SIGN SETS 1 AND 3) AND SIGN SETS 1 AND 3 ADVANCED IN THE DIRECTION OF THE OPERATION (I.E., NEW SIGN SETS 2 AND 4).

■ - CHANNELIZERS

- FLAGGER

NOT TO SCALE

SPEED	SIGN SPACING (FT) (1)	BUFFER SPACE
PERMANENT POSTED (MPH)	NON-DIVIDED HIGHWAYS (S)	LENGTH (FT)
0-35	200	250
40-45	350	360
50-55	500	495
60-70	1000	730

(1) SPACING BETWEEN SIGNS, BETWEEN LAST SIGN AND FLAGGER, BEGINNING OF TAPER OR SIGNED CONDITION.

SPACING MAY BE ADJUSTED AS NECESSARY TO MEET FIELD CONDITIONS.

TRAFFIC CONTROL
SHEET 2 OF 8

STATE OF MISSOURI
TIMOTHY K. MINER
NUMBER
PE-2021010008
PROFESSIONAL ENGINEER

08/12/2025 1:08:54 PM
TIMOTHY K. MINER - CIVIL
MO-PE-2021010008

DATE PREPARED
8/12/2025

ROUTE	STATE
13,BUS36	MO
DISTRICT	SHEET NO.
NW	18

COUNTY
CALDWELL,DAVIESS

JOB NO.
JNW0089

CONTRACT ID.
-

PROJECT NO.
-

BRIDGE NO.
-

DESCRIPTION	DATE

MISSOURI HIGHWAYS AND TRANSPORTATION COMMISSION

105 WEST CAPITOL
JEFFERSON CITY, MO 65102
1-888-ASK-MODOT (1-888-275-6636)

SPEED	SIGN SPACING (FT) (1)	CHANNELIZER SPACING (FT)
PERMANENT POSTED (MPH)	NON-DIVIDED HIGHWAYS (S)	BUFFER/ WORK AREA (TYP.)
0-35	200	40
40-45	350	80
50-55	500	80
60-70	1000	120

(1) SPACING BETWEEN SIGNS, BETWEEN LAST SIGN AND FLAGGER, BEGINNING OF TAPER OR SIGNED CONDITION.

SPACING MAY BE ADJUSTED AS NECESSARY TO MEET FIELD CONDITIONS.

NOTES:
WARNING SIGNS SHALL BE ERECTED AT EACH INTERSECTION WITH ANOTHER STATE HIGHWAY WITHIN THE WORK ZONE.

ADDITIONAL WARNING SIGNS SHALL BE ERECTED AT OTHER INTERSECTIONS WITHIN THE WORK ZONE, AS DIRECTED BY THE ENGINEER.

■ - CHANNELIZERS (AS SPECIFIED)

- FLAGGER

NOT TO SCALE

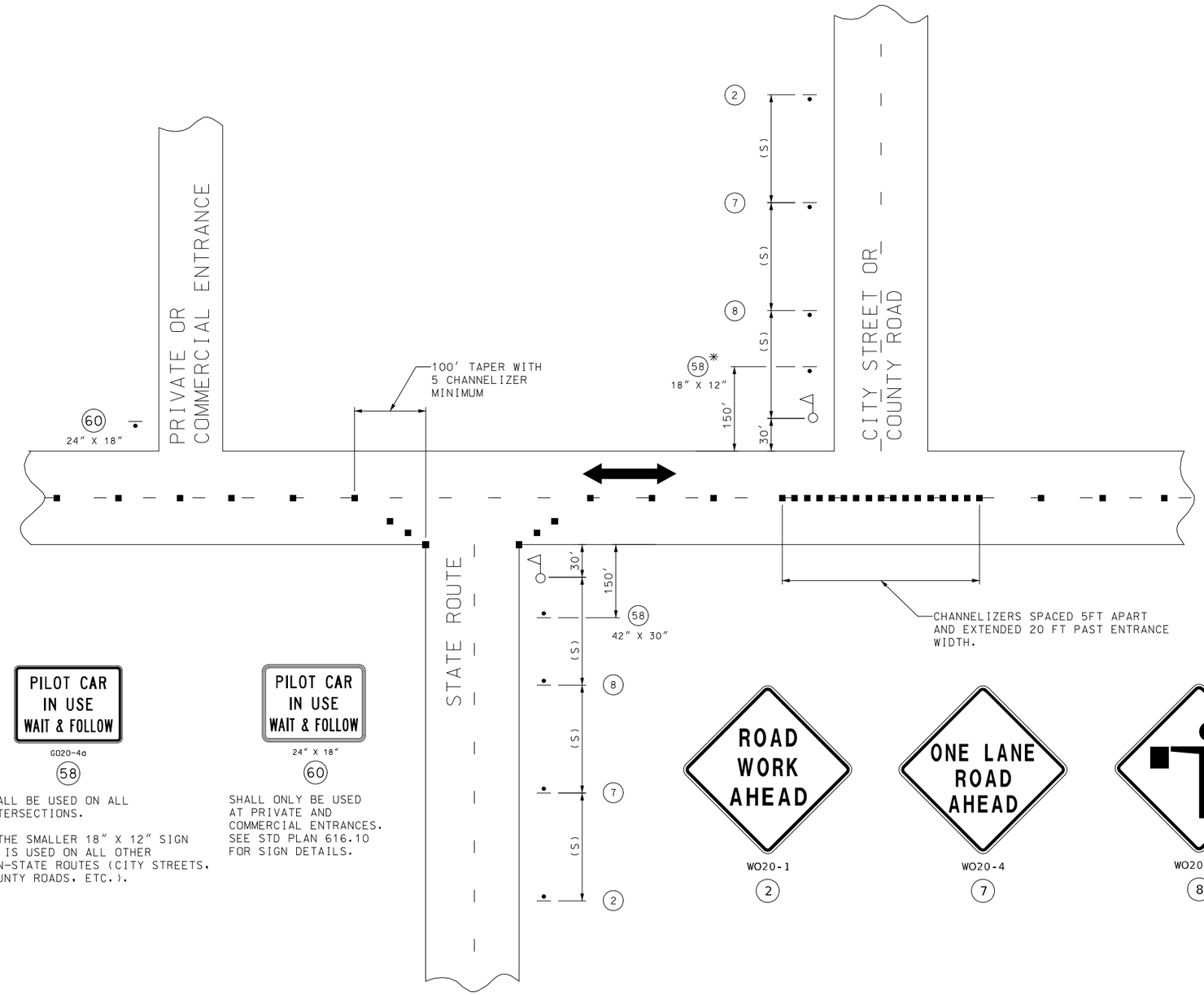

G020-4a

58

SHALL BE USED ON ALL INTERSECTIONS.

* THE SMALLER 18" X 12" SIGN 58 IS USED ON ALL OTHER NON-STATE ROUTES (CITY STREETS, COUNTY ROADS, ETC.).

24" X 18"

60

SHALL ONLY BE USED AT PRIVATE AND COMMERCIAL ENTRANCES. SEE STD PLAN 616.10 FOR SIGN DETAILS.

W020-1

2

W020-4

7

W020-7a

8

SIDE ROADS ENTERING WORK ZONES

NOT TO SCALE

TRAFFIC CONTROL
SHEET 3 OF 8

STATE OF MISSOURI
TIMOTHY K. MINER
NUMBER
PE-2021010008
PROFESSIONAL ENGINEER

08/12/2025 1:08:42 PM
TIMOTHY K. MINER - CIVIL
MO-PE-20211010008

DATE PREPARED
8/12/2025

ROUTE	STATE
13,BUS36	MO
DISTRICT	SHEET NO.
NW	19

COUNTY
CALDWELL,DAVIESS

JOB NO.
JNW0089

CONTRACT ID.
-

PROJECT NO.
-

BRIDGE NO.
-

DATE	DESCRIPTION

MISSOURI HIGHWAYS AND TRANSPORTATION COMMISSION

105 WEST CAPITOL
JEFFERSON CITY, MO 65102
1-888-ASK-MODOT (1-888-275-6636)

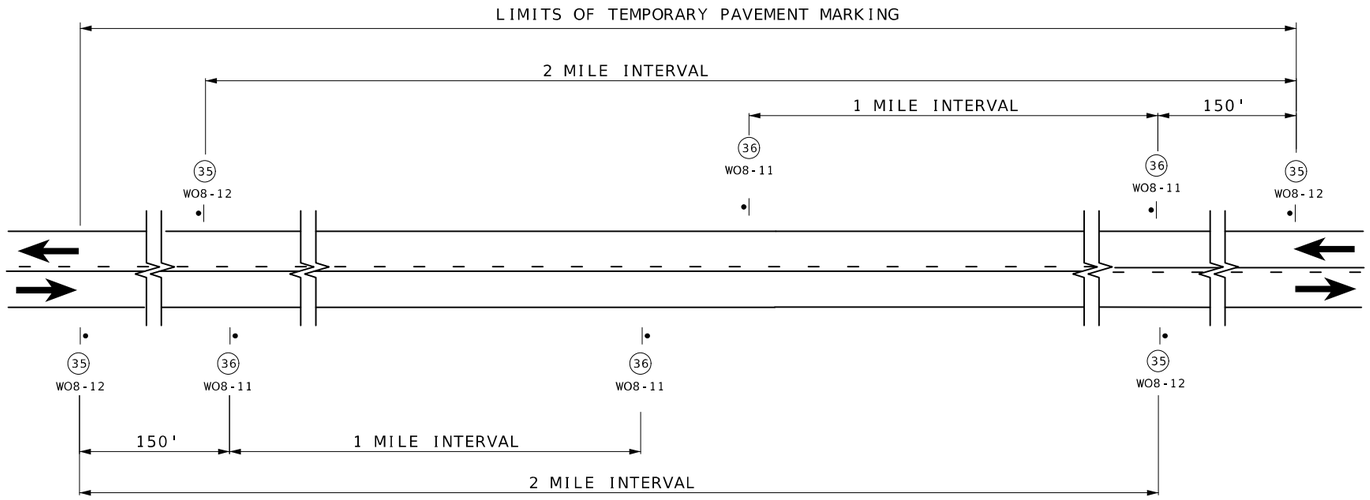

SIGN SPACING AND TEMPORARY STRIPING FOR MAINLINE

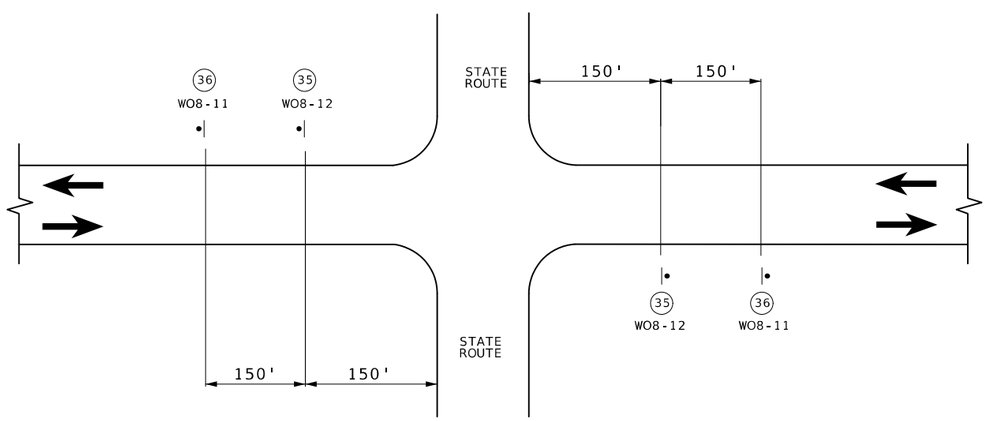

SIGN SPACING AT STATE ROUTE INTERSECTIONS
SHOWING TEMPORARY STRIPING FOR MAINLINE

NOT TO SCALE

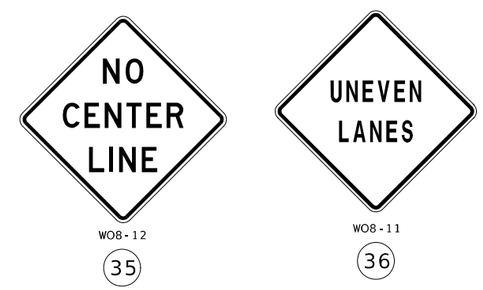

NOTES:

SIGN (35) AND TEMPORARY RAISED PAVEMENT MARKING (SEE STANDARD PLAN 620.10) INSTALLED WHERE CENTERLINE STRIPING HAS BEEN COVERED OR REMOVED. SIGNS ARE TO REMAIN IN PLACE UNTIL THE PERMANENT CENTERLINE PAVEMENT MARKINGS ARE IN PLACE. SIGNS SHALL BE COVERED OR REMOVED WHEN PAVEMENT CENTERLINE MARKING HAS BEEN INSTALLED.

SIGN (35) IS PLACED AT APPROXIMATELY TWO-MILE INTERVALS AND AT STATE ROUTE JUNCTIONS. WHEN THE INSTALLATION AT A JUNCTION IS WITHIN ONE-EIGHTH MILE OF THE NORMAL MAINLINE SIGN (35), THE LATTER MAY BE ELIMINATED.

ALL SIGNS SHALL BE POST MOUNTED AND IN ACCORDANCE WITH STANDARD PLAN 616.10 AND 903.03.

NOT TO SCALE

TRAFFIC CONTROL
SHEET 4 OF 8

STATE OF MISSOURI
TIMOTHY K. MINER
NUMBER
PE-2021010008
PROFESSIONAL ENGINEER

08/12/2025 1:08:28 PM
TIMOTHY K. MINER - CIVIL
MO-PE-2021010008

DATE PREPARED	8/12/2025
ROUTE	13,BUS36
STATE	MO
DISTRICT	NW
SHEET NO.	20
COUNTY	CALDWELL,DAVIESS
JOB NO.	JNW0089
CONTRACT ID.	-
PROJECT NO.	-
BRIDGE NO.	-

DESCRIPTION	DATE

MISSOURI HIGHWAYS AND TRANSPORTATION COMMISSION
105 WEST CAPITOL
JEFFERSON CITY, MO 65102
1-888-ASK-MODOT (1-888-275-6636)

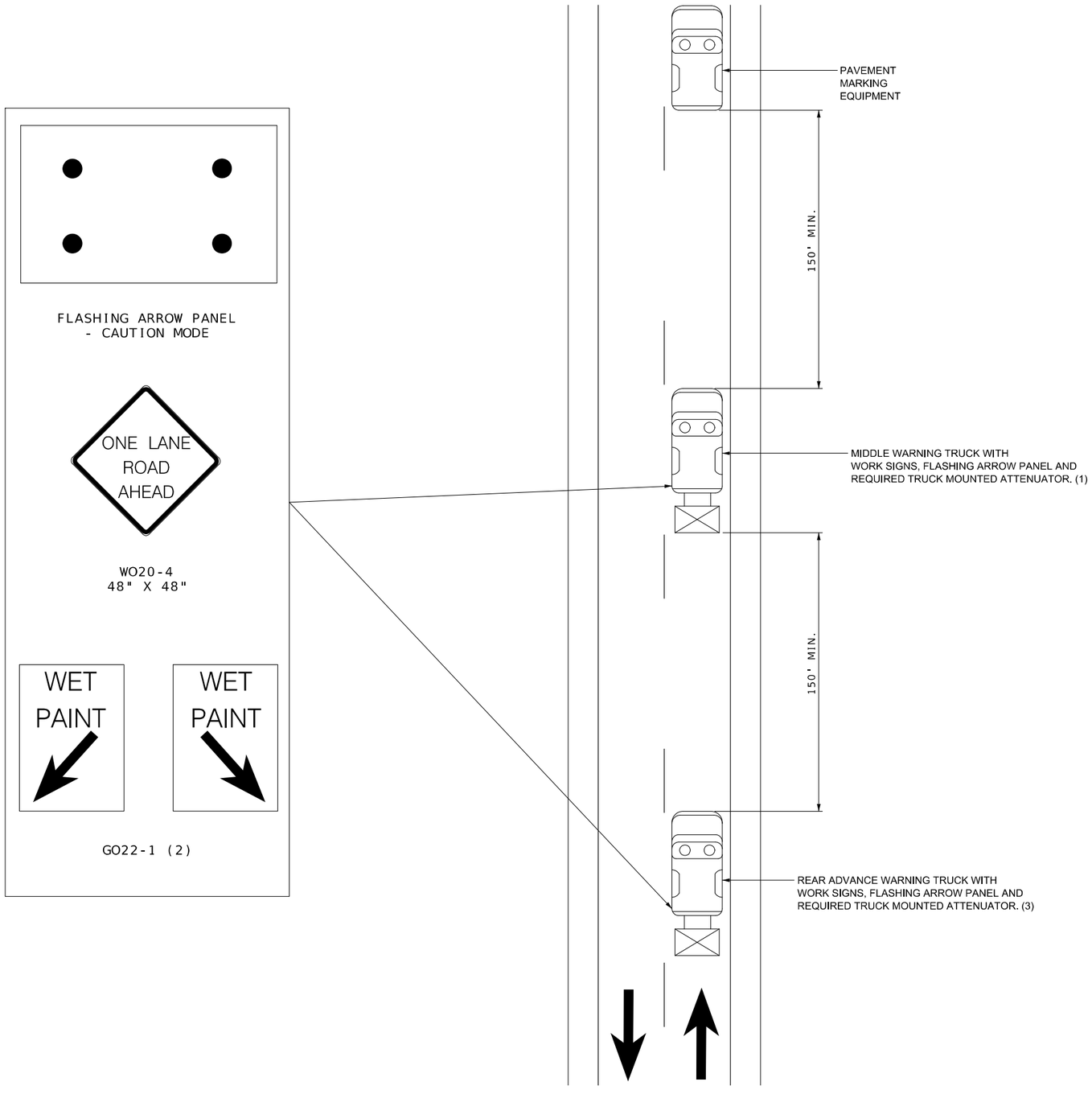

CENTERLINE/EDGELINE STRIPING ON TWO-LANE HIGHWAYS

NOT TO SCALE

NOTES:
UPON APPROVAL OF THE ENGINEER, THE CONTRACTOR MAY PROVIDE ADDITIONAL PROTECTIVE TRUCK EQUIPPED WITH PROPER WARNING DEVICES.

PROTECTIVE TRUCK AND WORK VEHICLES SHALL DISPLAY HIGH-INTENSITY ROTATING, FLASHING, OSCILLATING, OR STROBE LIGHTS.

VEHICLE HAZARD WARNING SIGNALS SHALL NOT BE USED INSTEAD OF THE VEHICLE'S HIGH-INTENSITY ROTATING, FLASHING, OSCILLATING, OR STROPE LIGHTS.

FLASHING ARROW PANELS SHALL BE INCIDENTAL TO TRUCK MOUNTED ATTENUATORS, WHEREVER USED. NO ADDITIONAL PAYMENT WILL BE MADE.

(1) TRUCK IS OPTIONAL ON TWO-LANE UNDIVIDED HIGHWAYS IF SIGNING AND ARROW BOARD IS MOUNTED ON THE PAVEMENT MARKING EQUIPMENT.

(2) WET PAINT SIGNS ARE INSTALLED TO INDICATE THE SIDE IN WHICH THE PAVEMENT MARKING MATERIAL IS BEING APPLIED. AT THE CONTRACTOR'S OPTION, A FRONT FACING WET PAINT SIGN MAY BE INSTALLED ON THE LEFT SIDE OF THE PAVEMENT MARKING EQUIPMENT.

(3) REAR ADVANCE WARNING TRUCK IS POSITIONED AT THE NO TRACK POINT OF THE PAVEMENT MARKING MATERIAL, OR VERTICAL OR HORIZONTAL CURVES THAT RESTRICT SIGHT DISTANCE, OR SPACING SHOWN.

TRAFFIC CONTROL
SHEET 5 OF 8

STATE OF MISSOURI
TIMOTHY K. MINER
NUMBER
PE-2021010008
PROFESSIONAL ENGINEER

08/12/2025 1:08:16 PM
TIMOTHY K. MINER - CIVIL
MO-PE-2021010008

DATE PREPARED	8/12/2025
ROUTE	13,BUS36
STATE	MO
DISTRICT	NW
SHEET NO.	21
COUNTY	CALDWELL,DAVIESS
JOB NO.	JNW0089
CONTRACT ID.	-
PROJECT NO.	-
BRIDGE NO.	-

DESCRIPTION	DATE

MISSOURI HIGHWAYS AND TRANSPORTATION COMMISSION
105 WEST CAPITOL
JEFFERSON CITY, MO 65102
1-888-ASK-MODOT (1-888-275-6636)

SPEED	SIGN SPACING (FT)	TAPER LENGTH (FT)		RECOMMENDED	CHANNELIZER SPACING (FT)	
PERMANENT POSTED (MPH)	NON-DIVIDED HIGHWAYS (S)	SHOULDER	LANE	BUFFER LENGTH (FT)	TAPER	BUFFER/ WORK AREA
0-35	200	35	100	250	25	40
40-45	350	35	100	360	25	80
50-55	500	35	100	495	25	80
60-70	1000	35	100	730	25	120

WO20-1

2

WO3-5

3

R2-1

4

WO20-4

7

WO20-7a

8

R2-1

25

GO20-5aP

54

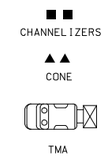

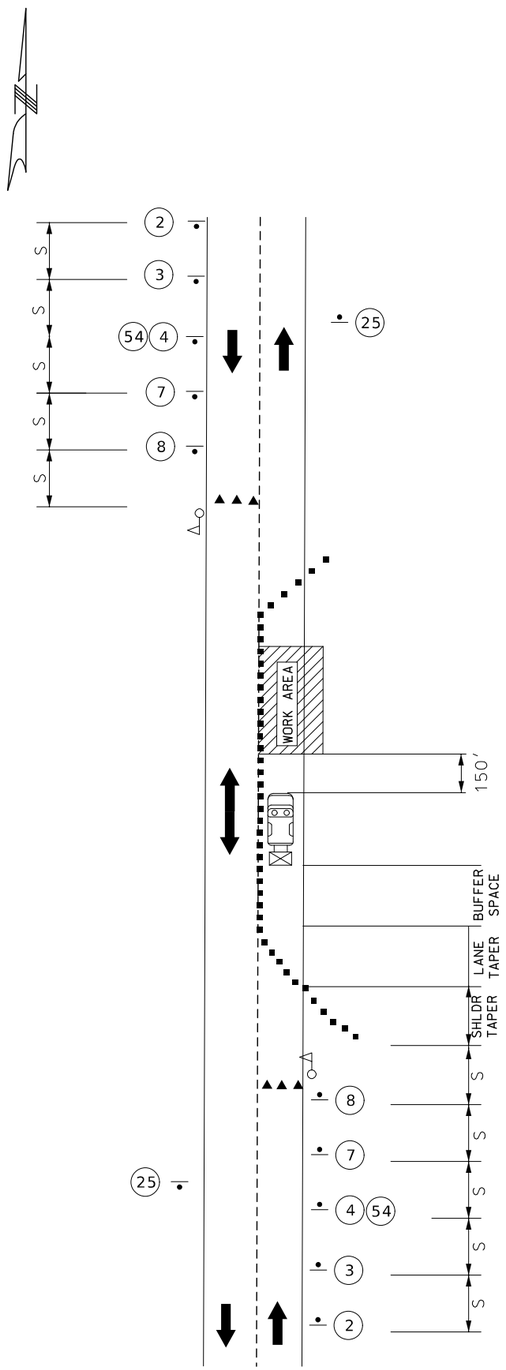

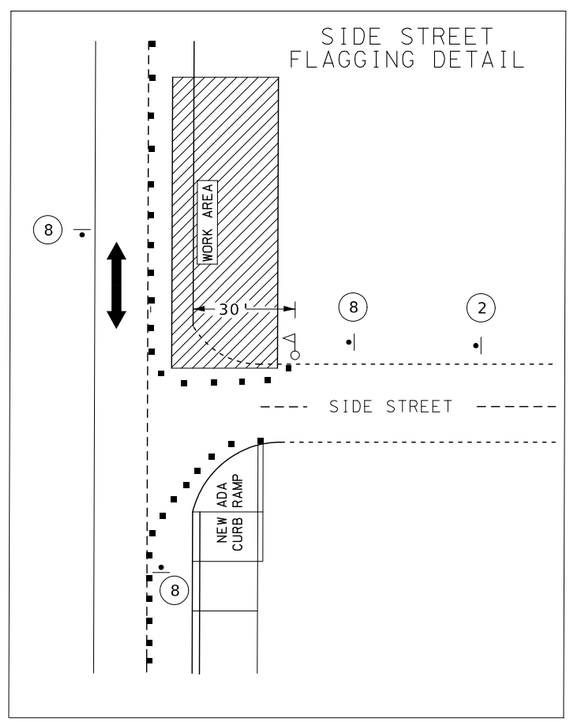

NOTE:

TEMPORARY PAVEMENT MARKING REQUIRED WITH LONG TERM LANE CLOSURES (NO DIRECT PAY).

NO DIRECT PAYMENT WILL BE MADE FOR THE RELOCATION OF CHANNELIZERS, CONSTRUCTION SIGNS, OR FLASHING ARROWS PANEL.

NO DIRECT PAYMENT WILL BE MADE FOR TEMPORARY STOP OR YIELD SIGNS AS NEEDED TO MAINTAIN EXISTING STOP/YIELD CONDITIONS AS APPROVE BY THE ENGINEER.

FOR SHORT TERM OPERATIONS WHERE IT IS NOT FEASIBLE TO MODIFY PAVEMENT MARKING, DIVICE SPACING ARE ONE-HALF OF THE SPACING SHOWN IN TABLE.

ALL SIGNS, EXCEPT "RATE OUR WORK ZONE", SHALL BE PORTABLE MOUNT AND ARE TO BE MOVED AS WORK PROGRESSES, UNLESS OTHERWISE NOTED. ALL TRAFFIC CONTROL ITEMS SHALL BE REMOVED FROM THE ROADWAY DURING NON-WORKING HOURS.

WORK WILL REQUIRE LANE CLOSURES UNLESS APRROVED BY THE ENGINEER.

LAYOUT IS TYPICAL FOR EITHER DIRECTION, ALTERNATE TRAFFIC CONTROL MAY BE USED AS NEEDED AT THE APPROVAL OF THE ENGINEER.

THE MAX. CHANNELIZER SPACING WITHIN THE WORK ZONE AREA MAY BE REDUCED BASED ON CONSTRUCTION CONDITIONA AS APPROVED BY ENDINEER.

NOT TO SCALE

TRAFFIC CONTROL
SHEET 6 OF 8

STATE OF MISSOURI
TIMOTHY K. MINER
NUMBER
PE-2021010008
PROFESSIONAL ENGINEER
08/12/2025 1:08:04 PM
TIMOTHY K. MINER - CIVIL
MO-PE-20210100008

DATE PREPARED
8/12/2025

ROUTE	STATE
13,BUS36	MO
DISTRICT	SHEET NO.
NW	22

COUNTY
CALDWELL,DAVIESS

JOB NO.
JNW0089

CONTRACT ID.
-

PROJECT NO.
-

BRIDGE NO.
-

DATE	DESCRIPTION

MISSOURI HIGHWAYS AND TRANSPORTATION COMMISSION
105 WEST CAPITOL
JEFFERSON CITY, MO 65102
1-888-ASK-MODOT (1-888-275-6636)

$FILE$

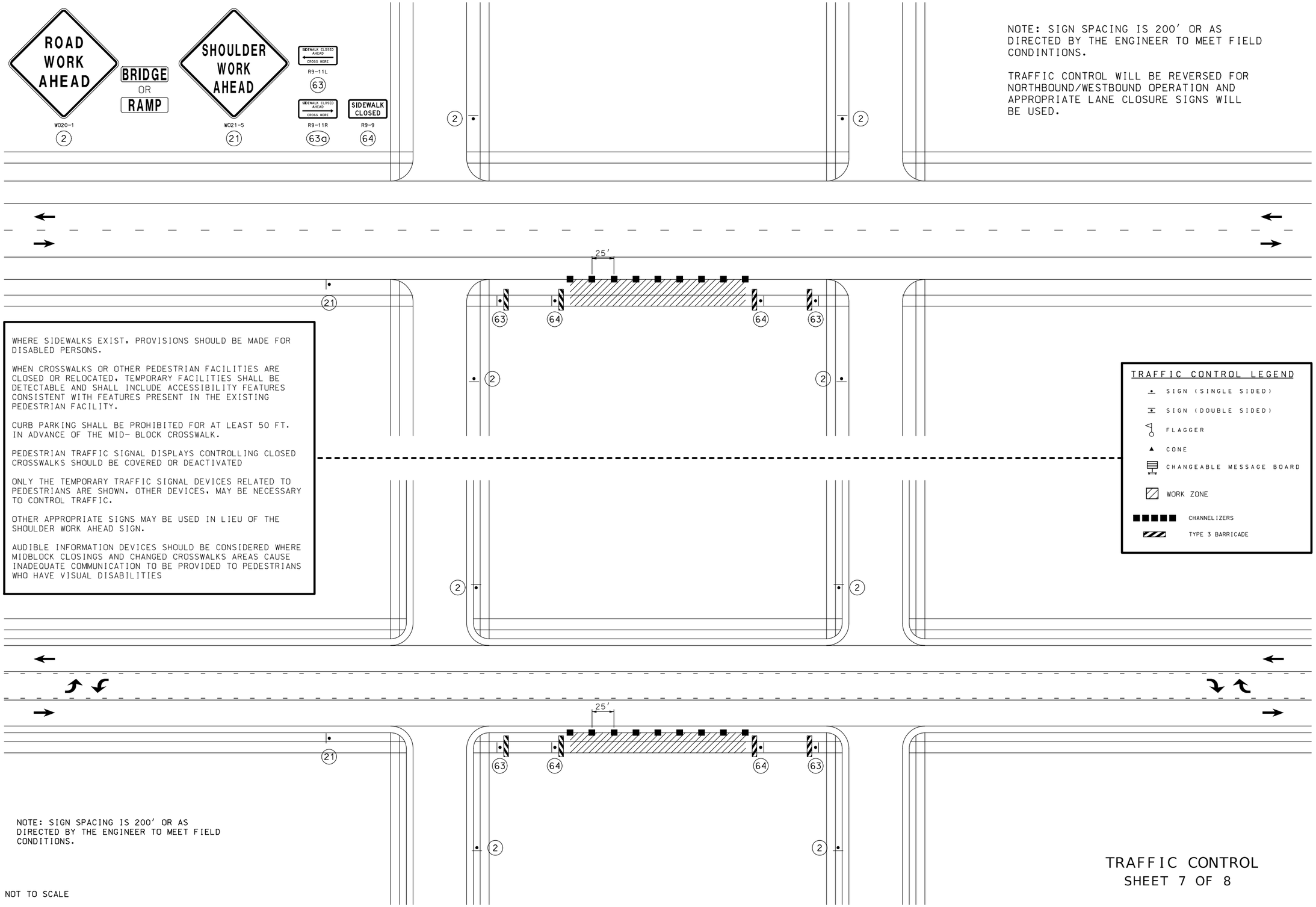

NOTE: SIGN SPACING IS 200' OR AS DIRECTED BY THE ENGINEER TO MEET FIELD CONDINTIONS.

TRAFFIC CONTROL WILL BE REVERSED FOR NORTHBOUND/WESTBOUND OPERATION AND APPROPRIATE LANE CLOSURE SIGNS WILL BE USED.

WHERE SIDEWALKS EXIST, PROVISIONS SHOULD BE MADE FOR DISABLED PERSONS.

WHEN CROSSWALKS OR OTHER PEDESTRIAN FACILITIES ARE CLOSED OR RELOCATED, TEMPORARY FACILITIES SHALL BE DETECTABLE AND SHALL INCLUDE ACCESSIBILITY FEATURES CONSISTENT WITH FEATURES PRESENT IN THE EXISTING PEDESTRIAN FACILITY.

CURB PARKING SHALL BE PROHIBITED FOR AT LEAST 50 FT. IN ADVANCE OF THE MID- BLOCK CROSSWALK.

PEDESTRIAN TRAFFIC SIGNAL DISPLAYS CONTROLLING CLOSED CROSSWALKS SHOULD BE COVERED OR DEACTIVATED

ONLY THE TEMPORARY TRAFFIC SIGNAL DEVICES RELATED TO PEDESTRIANS ARE SHOWN. OTHER DEVICES, MAY BE NECESSARY TO CONTROL TRAFFIC.

OTHER APPROPRIATE SIGNS MAY BE USED IN LIEU OF THE SHOULDER WORK AHEAD SIGN.

AUDIBLE INFORMATION DEVICES SHOULD BE CONSIDERED WHERE MIDBLOCK CLOSINGS AND CHANGED CROSSWALKS AREAS CAUSE INADEQUATE COMMUNICATION TO BE PROVIDED TO PEDESTRIANS WHO HAVE VISUAL DISABILITIES

TRAFFIC CONTROL LEGEND

- SIGN (SINGLE SIDED)
- SIGN (DOUBLE SIDED)
- FLAGGER
- CONE
- CHANGEABLE MESSAGE BOARD
- WORK ZONE
- CHANNELIZERS
- TYPE 3 BARRICADE

NOTE: SIGN SPACING IS 200' OR AS DIRECTED BY THE ENGINEER TO MEET FIELD CONDITIONS.

NOT TO SCALE

TRAFFIC CONTROL
SHEET 7 OF 8

STATE OF MISSOURI
TIMOTHY K. MINER
NUMBER PE-2021010008
PROFESSIONAL ENGINEER
08/12/2025 1:07:53 PM
TIMOTHY K. MINER - CIVIL
MO-PE-2021010008

DATE PREPARED	8/12/2025
ROUTE	13,BUS36
STATE	MO
DISTRICT	NW
SHEET NO.	23
COUNTY	CALDWELL,DAVIESS
JOB NO.	JNW0089
CONTRACT ID.	-
PROJECT NO.	-
BRIDGE NO.	-

DESCRIPTION

DATE

MISSOURI HIGHWAYS AND TRANSPORTATION COMMISSION

105 WEST CAPITOL
JEFFERSON CITY, MO 65102
1-888-ASK-MODOT (1-888-275-6636)

NOTE: SIGN SPACING IS 200' OR AS DIRECTED BY THE ENGINEER TO MEET FIELD CONDINTIONS.

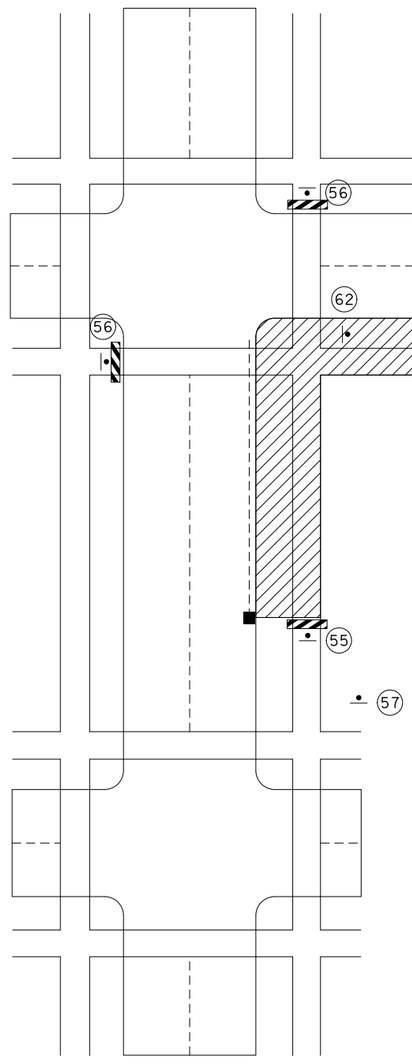

TRAFFIC CONTROL LEGEND

- SIGN (SINGLE SIDED)
- SIGN (DOUBLE SIDED)
- FLAGGER
- CONE
- CHANGEABLE MESSAGE BOARD
- WORK ZONE
- CHANNELIZERS
- TYPE 3 BARRICADE

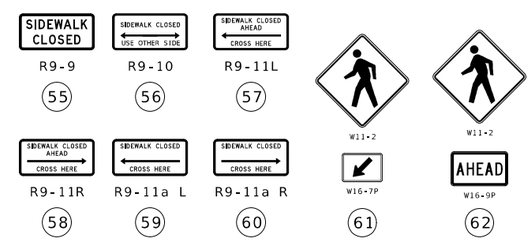

NOTE:

FOR LONG-TERM STATIONARY WORK, THE DOUBLE YELLOW CENTER LINE AND/OR LAND LINES SHOULD BE REMOVED BETWEEN THE CROSSWALK LINES.

NOT TO SCALE

TRAFFIC CONTROL
SHEET 8 OF 8

STATE OF MISSOURI
TIMOTHY K. MINER
NUMBER
PE-2021010008
PROFESSIONAL ENGINEER

08/12/2025 1:07:41 PM
TIMOTHY K. MINER - CIVIL
MO-PE-2021101008

DATE PREPARED	
8/12/2025	
ROUTE	STATE
13,BUS36	MO
DISTRICT	SHEET NO.
NW	24
COUNTY	
CALDWELL,DAVIESS	
JOB NO.	
JNW0089	
CONTRACT ID.	
-	
PROJECT NO.	
-	
BRIDGE NO.	
-	

DATE	DESCRIPTION

MISSOURI HIGHWAYS AND TRANSPORTATION COMMISSION
105 WEST CAPITOL
JEFFERSON CITY, MO 65102
1-888-ASK-MODOT (1-888-275-6636)

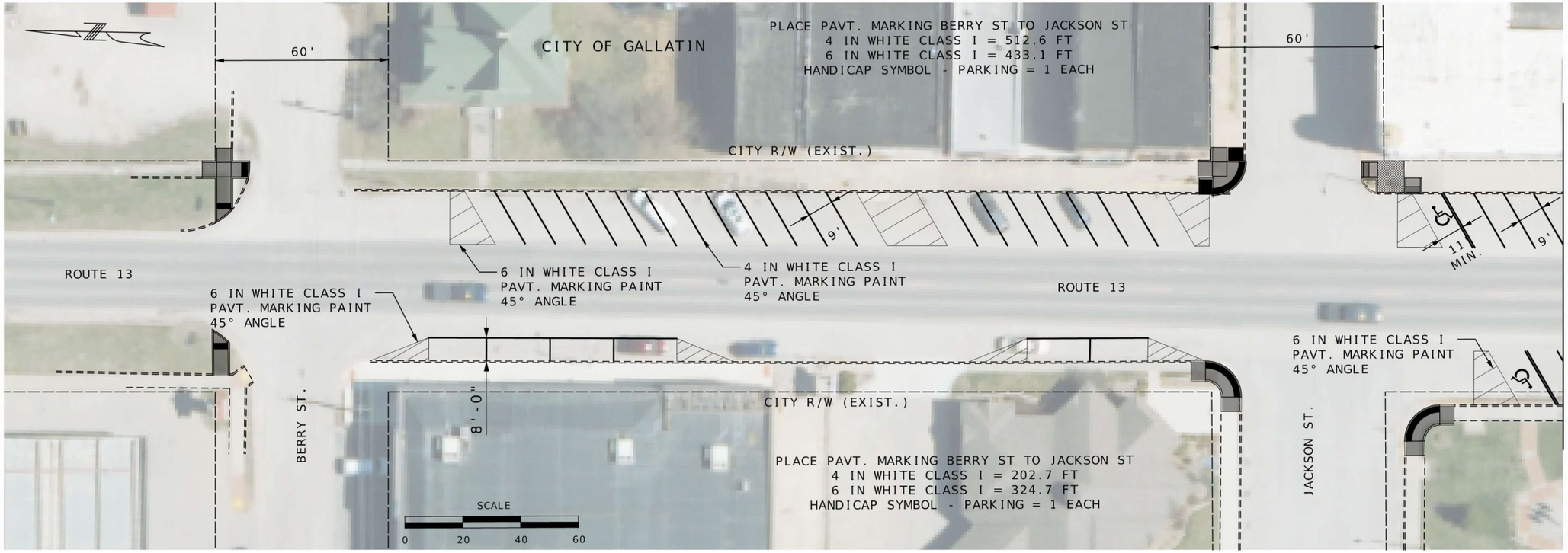

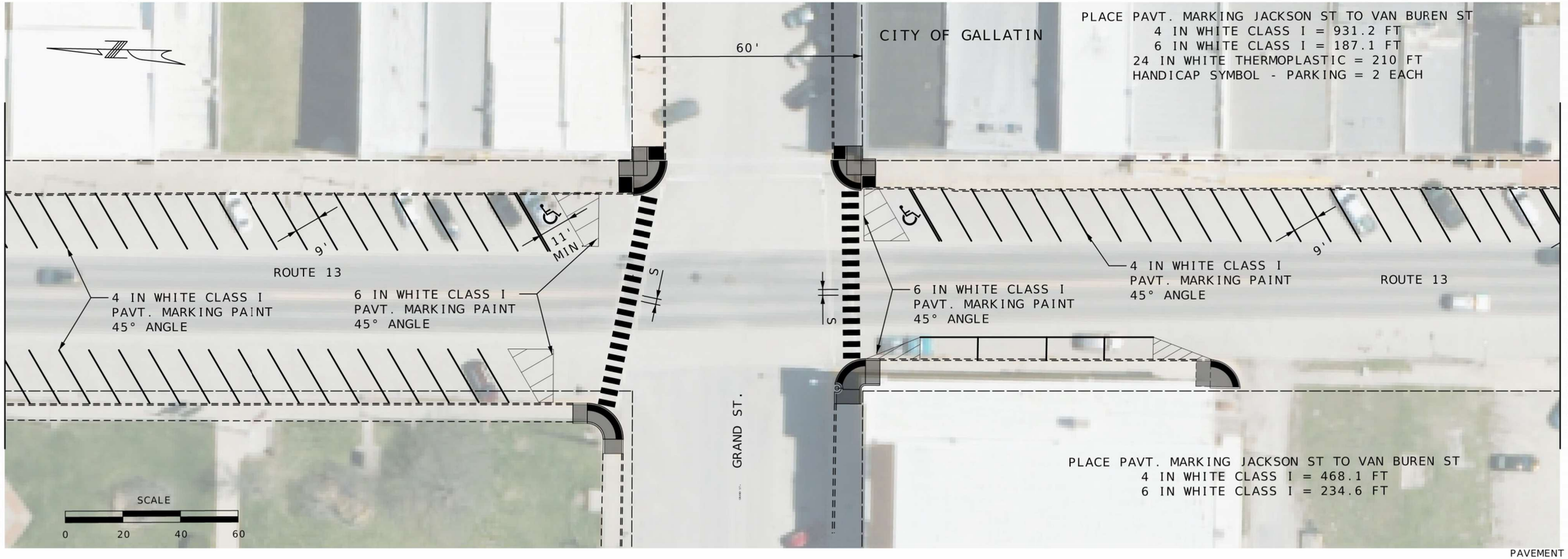

PAVEMENT MARKING
SHEET 1 OF 4

STATE OF MISSOURI
TIMOTHY K. MINER
NUMBER PE-2021010008
PROFESSIONAL ENGINEER
08/12/2025 2:09:01 PM
TIMOTHY K. MINER - CIVIL
MO-PE-2021010008

DATE PREPARED	8/12/2025
ROUTE	13,BUS36
STATE	MO
DISTRICT	NW
SHEET NO.	25
COUNTY	CALDWELL,DAVIESS
JOB NO.	JNW0089
CONTRACT ID.	-
PROJECT NO.	-
BRIDGE NO.	-

DATE	DESCRIPTION

MISSOURI HIGHWAYS AND TRANSPORTATION COMMISSION
105 WEST CAPITOL
JEFFERSON CITY, MO 65102
1-888-ASK-MODOT (1-888-275-6636)

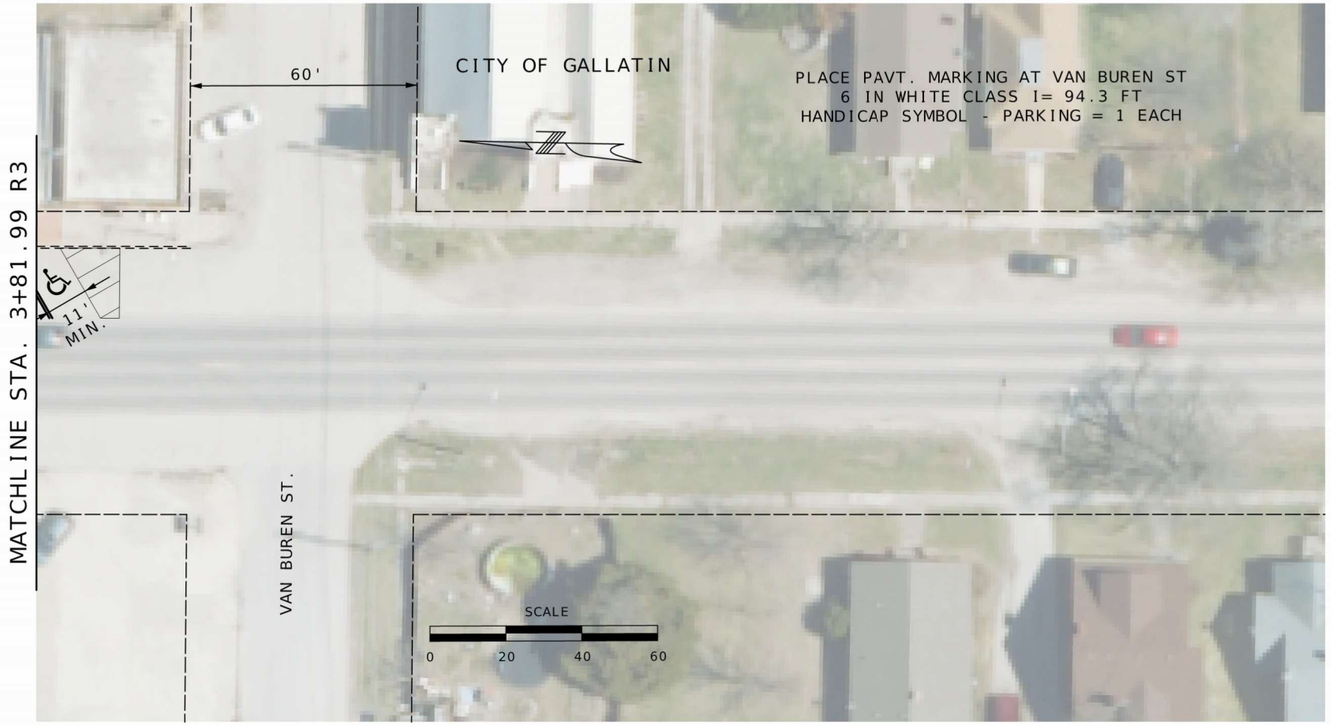

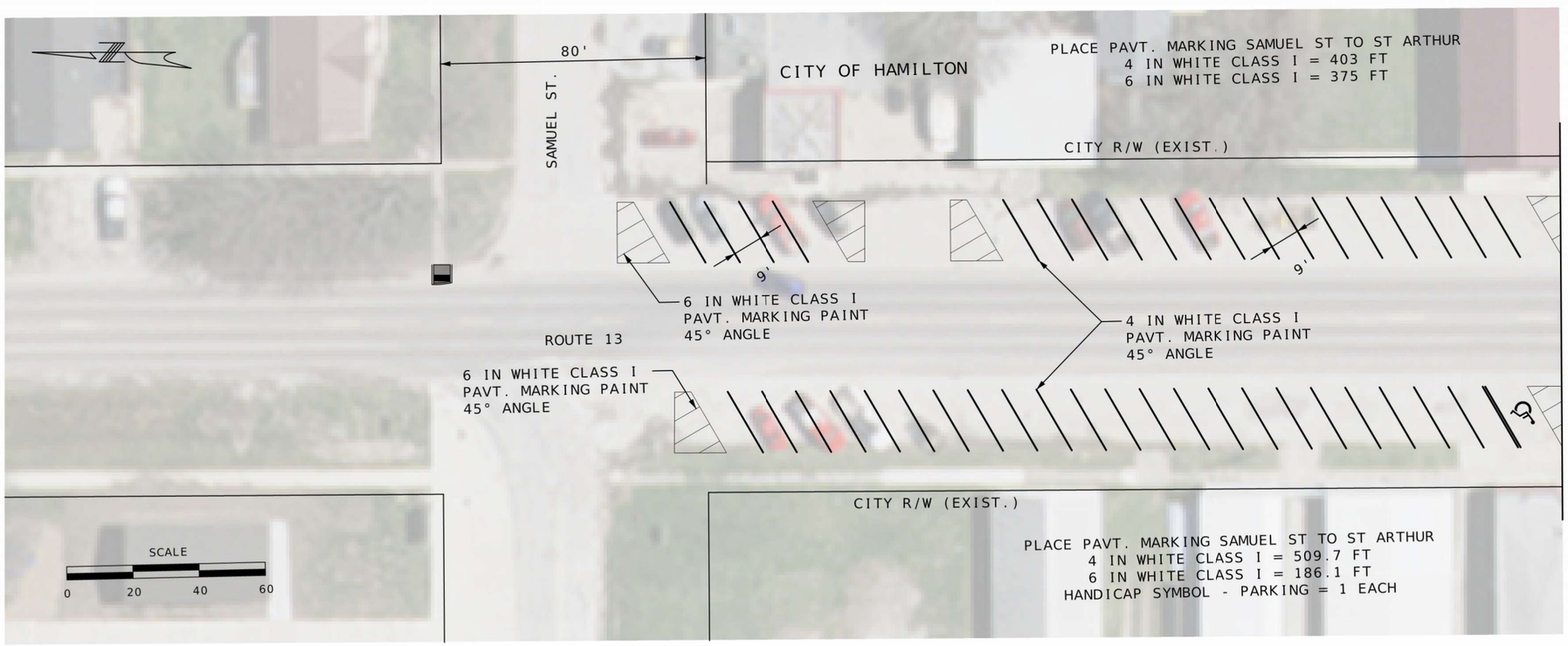

PAVEMENT MARKING
SHEET 2 OF 4

STATE OF MISSOURI
TIMOTHY K. MINER
NUMBER
PE-2021010008
PROFESSIONAL ENGINEER

08/12/2025 2:08:05 PM
TIMOTHY K. MINER - CIVIL
MO-PE-2021101008

DATE PREPARED	8/12/2025
ROUTE	13,BUS36
STATE	MO
DISTRICT	NW
SHEET NO.	26
COUNTY	CALDWELL,DAVIESS
JOB NO.	JNW0089
CONTRACT ID.	-
PROJECT NO.	-
BRIDGE NO.	-

DATE	DESCRIPTION

MISSOURI HIGHWAYS AND TRANSPORTATION COMMISSION

105 WEST CAPITOL
JEFFERSON CITY, MO 65102
1-888-ASK-MODOT (1-888-275-6636)

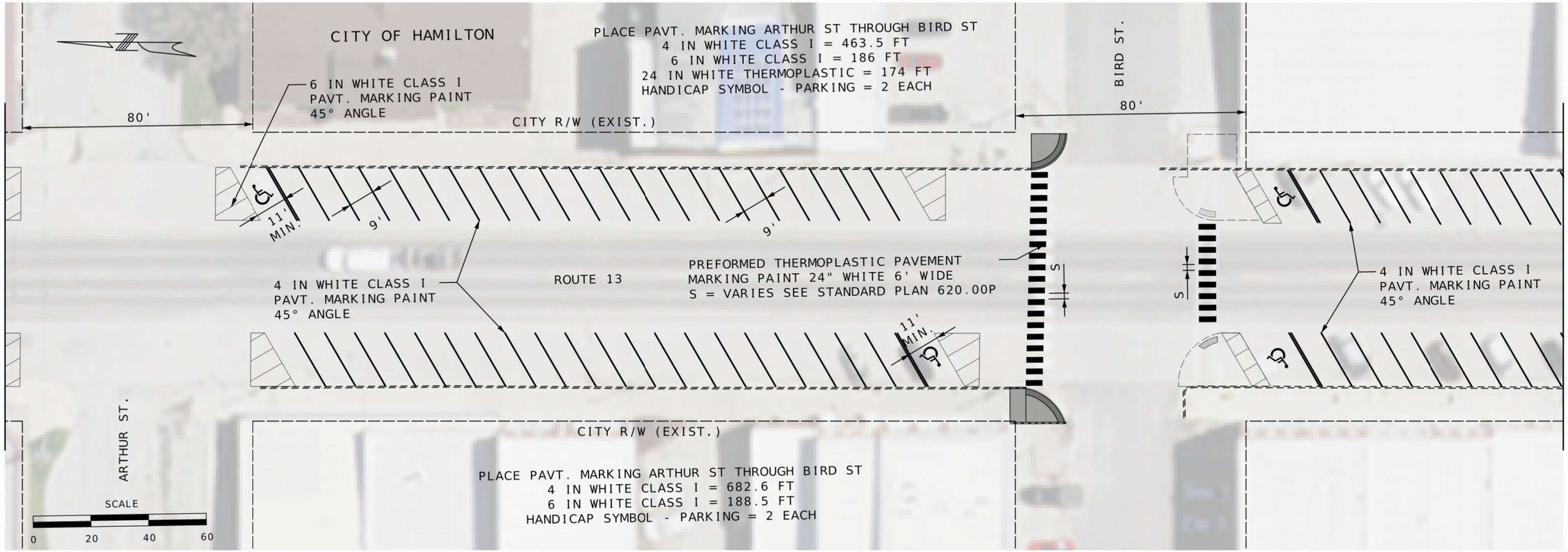

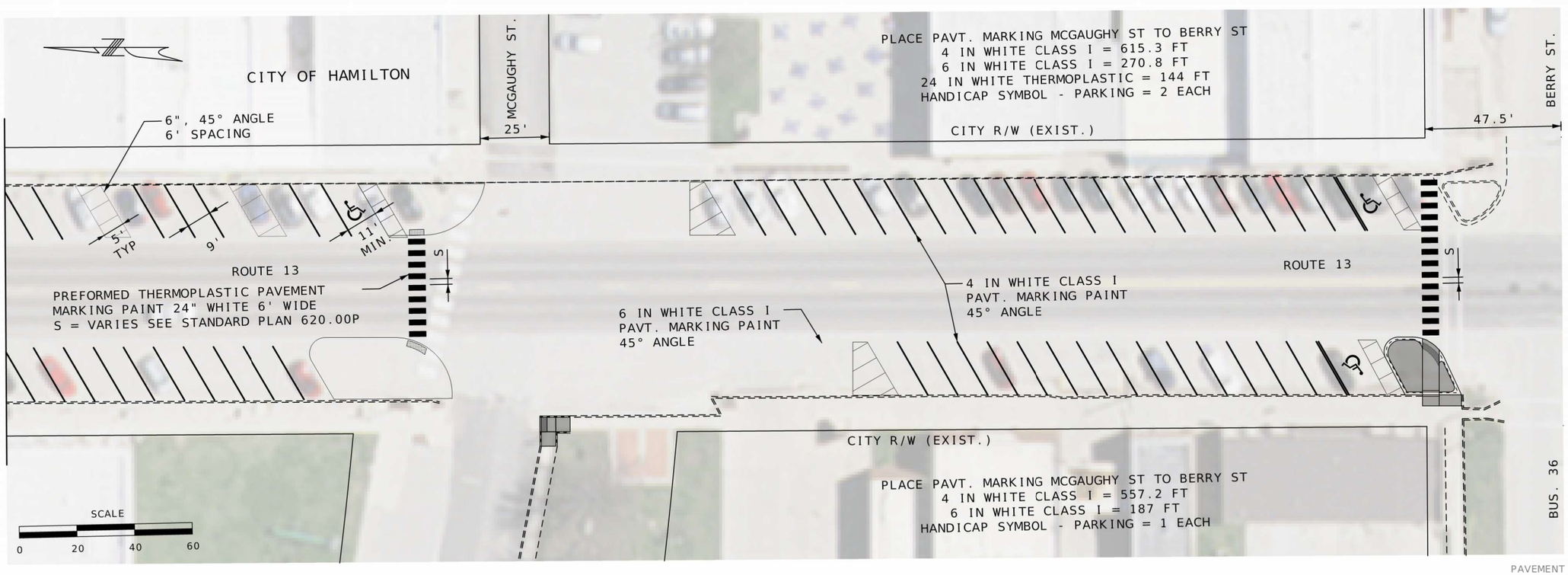

PAVEMENT MARKING
SHEET 3 OF 4

STATE OF MISSOURI
TIMOTHY K. MINER
NUMBER
PE-2021010008
PROFESSIONAL ENGINEER
08/12/2025 2:07:54 PM
TIMOTHY K. MINER - CIVIL
MO-PE-20211010008

DATE PREPARED	8/12/2025
ROUTE	13, BUS36
STATE	MO
DISTRICT	NW
SHEET NO.	27
COUNTY	CALDWELL, DAVIESS
JOB NO.	JNW0089
CONTRACT ID.	-
PROJECT NO.	-
BRIDGE NO.	-

DATE	DESCRIPTION

MISSOURI HIGHWAYS AND TRANSPORTATION COMMISSION
105 WEST CAPITOL
JEFFERSON CITY, MO 65102
1-888-ASK-MODOT (1-888-275-6636)

LOG MILE ≈ 39.446

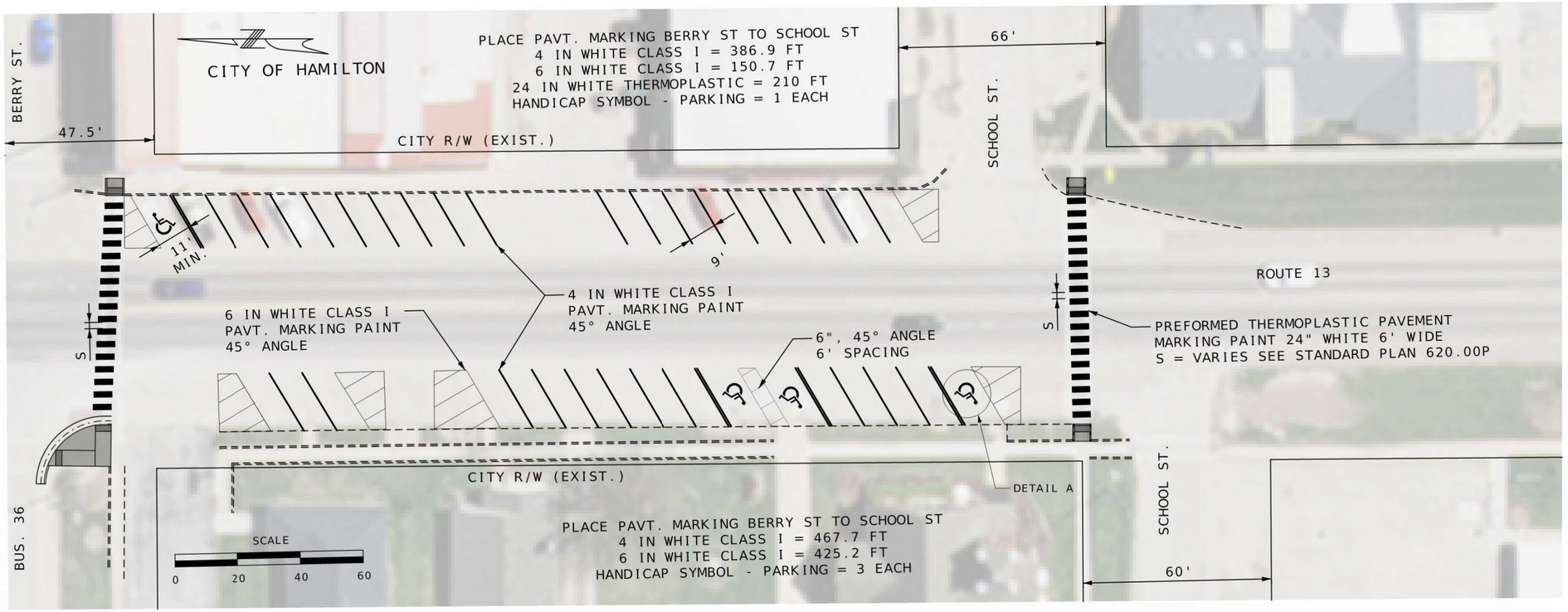

DETAIL A

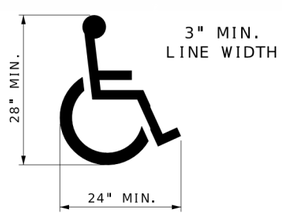

ADA HANDICAP SYMBOL - PARKING

WHITE CLASS 1
PAVEMENT MARKING PAINT
(18-MIL, TYPE P BEADS)

STATE OF MISSOURI
TIMOTHY K. MINER
NUMBER
PE-2021010008
PROFESSIONAL ENGINEER

08/12/2025 2:07:39 PM
TIMOTHY K. MINER - CIVIL
MO-PE-2021010008

DATE PREPARED	8/12/2025
ROUTE	13,BUS36
STATE	MO
DISTRICT	NW
SHEET NO.	28
COUNTY	CALDWELL,DAVIESS
JOB NO.	JNW0089
CONTRACT ID.	-
PROJECT NO.	-
BRIDGE NO.	-

DATE	DESCRIPTION

MISSOURI HIGHWAYS AND TRANSPORTATION COMMISSION

105 WEST CAPITOL
JEFFERSON CITY, MO 65102
1-888-ASK-MODOT (1-888-275-6636)

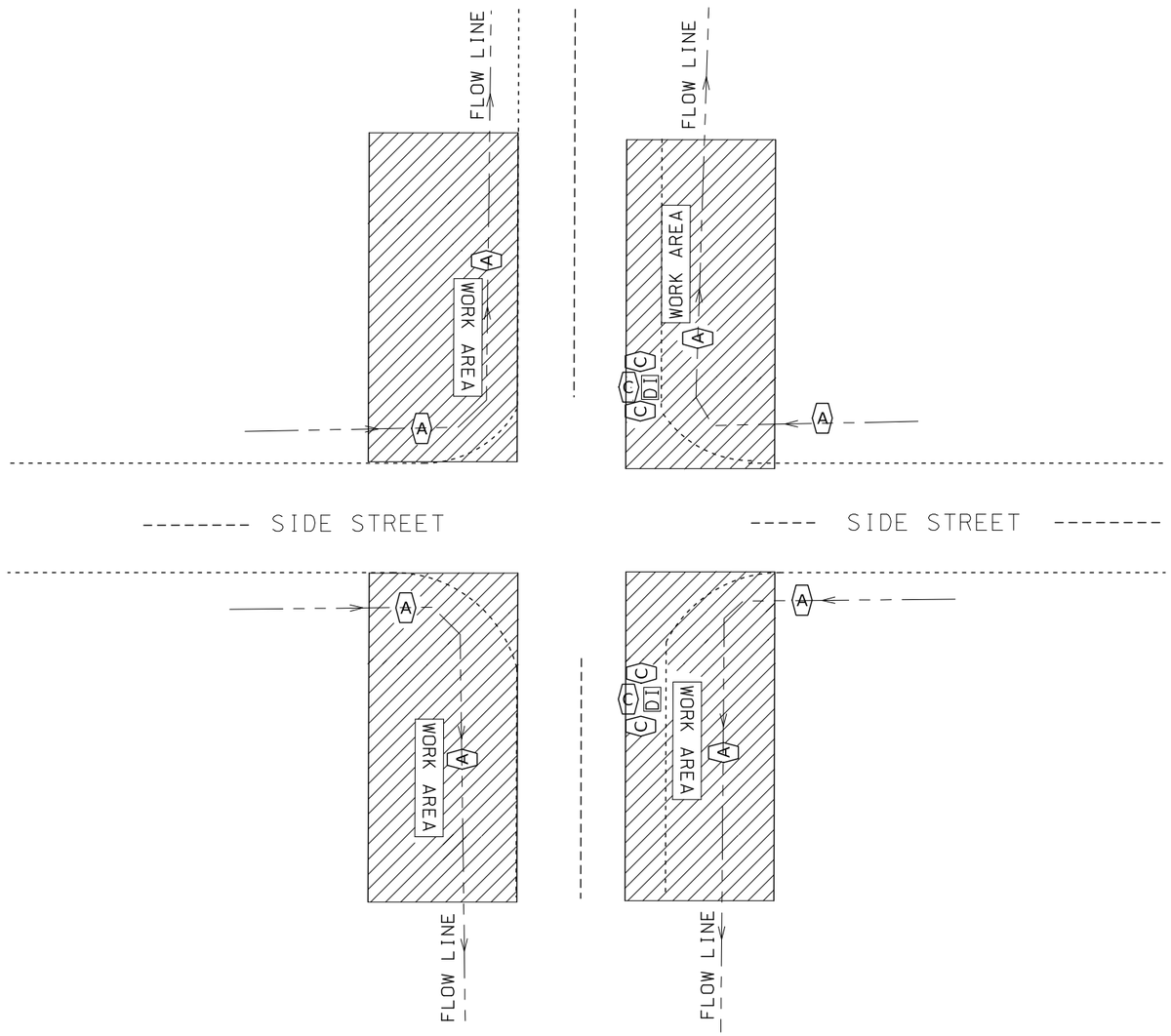

TYPICAL EROSION CONTROL
AT CITY STREETS INTERSECTION

A ALTERNATE DITCH CHECK

C CURB INLET CHECK

NOT TO SCALE

TYPICAL EROSION CONTROL
SHEET 1 OF 1

STATE OF MISSOURI
TIMOTHY K. MINER
NUMBER
PE-2021010008
PROFESSIONAL ENGINEER

08/12/2025 2:09:42 PM
TIMOTHY K. MINER - CIVIL
MO-PE-2021010008

DATE PREPARED	8/12/2025
ROUTE	13,BUS36
STATE	MO
DISTRICT	NW
SHEET NO.	29
COUNTY	CALDWELL,DAVIESS
JOB NO.	JNW0089
CONTRACT ID.	
PROJECT NO.	
BRIDGE NO.	

DATE	DESCRIPTION

MISSOURI HIGHWAYS AND TRANSPORTATION COMMISSION

105 WEST CAPITOL
JEFFERSON CITY, MO 65102
1-888-ASK-MODOT (1-888-275-6636)