MISSOURI HIGHWAYS AND TRANSPORTATION COMMISSION

PLANS FOR PROPOSED

STATE HIGHWAY

ST. LOUIS, ST. LOUIS CITY, ST. CHARLES, JEFFERSON & FRANKLIN COUNTIES

ITS HARDWARE MAINTENANCE AND REPAIR

KEY MAP

LOCATION OF VARIOUS COUNTIES IN ST. LOUIS DISTRICT

NOT TO SCALE

THE EXISTENCE AND APPROXIMATE LOCATION OF UTILITY FACILITIES KNOWN TO EXIST, AS SHOWN ON THE PLANS, ARE BASED ON THE BEST INFORMATION AVAILABLE TO THE COMMISSION AT THIS TIME. THIS INFORMATION IS PROVIDED BY THE COMMISSION "AS-IS" AND THE COMMISSION EXPRESSLY DISCLAIMS ANY REPRESENTATION OR WARRANTY AS TO THE COMPLETENESS, ACCURACY, OR SUITABILITY OF THE INFORMATION FOR ANY USE. RELIANCE UPON THIS INFORMATION IS DONE AT THE RISK AND PERIL OF THE USER, AND THE COMMISSION SHALL NOT BE LIABLE FOR ANY DAMAGES THAT MAY ARISE FROM ANY ERROR IN THE INFORMATION. IT IS, THEREFORE, THE RESPONSIBILITY OF THE CONTRACTOR TO VERIFY THE EXISTENCE, LOCATION AND STATUS OF ANY FACILITY. SUCH VERIFICATION INCLUDES DIRECT CONTACT WITH THE LISTED UTILITIES.

DESIGN DESIGNATION

A.A.D.T. - 2025 = VARIES
A.A.D.T. - 2045 = VARIES
D.H.V. = VARIES
T = VARIES
V = VARIES
D = VARIES
FUNCTIONAL CLASSIFICATION - VARIES

NO ADDITIONAL R/W WILL BE ACQUIRED FOR THIS PROJECT

CONVENTIONAL SYMBOLS

(USED IN PLANS)

	EXISTING	NEW
BUILDINGS AND STRUCTURES		
GUARD RAIL		
GUARD CABLE		
CONCRETE RIGHT-OF-WAY MARKER		
STEEL RIGHT-OF-WAY MARKER		
LOCATION SURVEY MARKER		
UTILITIES		
FIBER OPTICS	FO	FO
OVERHEAD CABLE TV	OTV	OTV
UNDERGROUND CABLE TV	UTV	UTV
OVERHEAD TELEPHONE	OT	OT
UNDERGROUND TELEPHONE	UT	UT
OVERHEAD POWER	OE	OE
UNDERGROUND POWER	UE	UE
SANITARY SEWER	S	S
STORM SEWER	SS	SS
GAS	G	G
WATER	W	W
MANHOLE	SAN	
FIRE HYDRANT	HYD	
WATER VALVE	WV	
WATER METER	WM	
DROP INLET	D	
DITCH BLOCK		
GROUND MOUNTED SIGN	SIGN	
LIGHT POLE		
H-FRAME POWER POLE		
TELEPHONE PEDESTAL	PED	
FENCE		
CHAIN LINK	V	
WOVEN WIRE	X	
GATE POST		
BENCHMARK	BM	

NOTE: DASHED OR OPEN SYMBOLS INDICATE EXISTING FEATURES

INDEX OF SHEETS

DESCRIPTION	SHEET NUMBER
TITLE SHEET	1
QUANTITIES (QU) (32 SHEETS)	2
TRAFFIC CONTROL SHEETS (TC)	3-9
SPECIAL SHEETS (SS)	10-15

LENGTH OF PROJECT
VARIES

STATE OF MISSOURI
JAMIE F. RANA
NUMBER PE-2005001034
PROFESSIONAL ENGINEER

Jamie F. Rana
07/17/2025 12:56:01 PM
JAMIE F. RANA - CIVIL
MO-PE-2005001034

DATE PREPARED: 7/17/2025

ROUTE	STATE
VAR.	MO
DISTRICT	SHEET NO.
SL	1

COUNTY: VARIOUS
JOB NO.: J6Q2026E
CONTRACT ID.:
PROJECT NO.:
BRIDGE NO.:

DATE	DESCRIPTION

MISSOURI HIGHWAYS AND TRANSPORTATION COMMISSION
105 WEST CAPITOL
JEFFERSON CITY, MO 65102
1-888-ASK-MODOT (1-888-275-6636)

TITLE SHEET

SOLAR CABINETS

ROUTE	LOG MILE	LOCATION	COUNTY	P.M. SOLAR POWER SYSTEM (EA)	COMMENTS
MO 21	MO021S027.7	21 S of A	Jefferson	1	Ubiquiti - Solar
MO 21	MO021S027.7	21 S of A	Jefferson	1	Ubiquiti - Solar
MO 47	MO047N071.5	47 W of N Commercial	Franklin	1	Ubiquiti - Solar
MO 47	MO047N071.5	47 W of N Commercial	Franklin	1	Ubiquiti - Solar
MO 47	MO047S062.5	47 S of Independence	Franklin	1	Encom - Solar
MO 47	MO047S062.5	47 S of Independence	Franklin	1	Ubiquiti - Solar
MO 47	MO047S071.1	47 @ N Commercial	Franklin	1	Ubiquiti - Solar
MO 364	MO364W001.4	364 W of Bryan	St. Charles	1	Ubiquiti - Solar
MO 364	MO364W002.4	364 E of Bryan	St. Charles	1	Ubiquiti - Solar
MO 364	MO364W003.4	364 W of K	St. Charles	1	RTMS - Solar
MO 364	MO364W005.5	364 E of K	St. Charles	1	RTMS - Solar
MO 364	MO364W007.6	364 W of Motherhead	St. Charles	1	RTMS - Solar
RT B	RT00BW010.7	B @ 21 SB Ramps	Jefferson	1	Ubiquiti - Solar
RT M	RT00ME007.3	M @ 1323 Route M	Jefferson	1	Ubiquiti - Solar
RT M	RT00ME007.3	M @ 1323 Route M	Jefferson	1	Ubiquiti - Solar
RT M	RT00ME007.4	M near 1205 Route M	Jefferson	1	Ubiquiti - Solar
RT M	RT00ME007.4	M near 1205 Route M	Jefferson	1	Ubiquiti - Solar
RT M	RT00MW007.0	M EO 55 (1399 RTE M)	Jefferson	1	Ubiquiti - Solar
RT M	RT00MW007.0	M EO 55 (1399 RTE M)	Jefferson	1	Ubiquiti - Solar
RT M	RT00MW007.2	M W of 61 (1345 RTE M)	Jefferson	1	Ubiquiti - Solar
RT M	RT00MW007.2	M W of 61 (1345 RTE M)	Jefferson	1	Ubiquiti - Solar
RT N	RT00NE010.4	N @ R. Reagan-Sommers	St. Charles	1	Ubiquiti - Solar
RT N	RT00NW007.2	N @ Perry Cate	St. Charles	1	Ubiquiti - Solar
RT N	RT00NW009.3	N S of Glen Brook Ct	St. Charles	1	Ubiquiti - Solar
US 50	US050W218.0	50 @ 47 South	Franklin	1	Ubiquiti - Solar
US 50	US050W218.8	50 S of 47 South	Franklin	1	Ubiquiti - Solar
US 50	US050W218.8	50 S of 47 South	Franklin	1	Ubiquiti - Solar
US 67	US067N040.9	61 @ Meramec Bottom-Baumgartner	St. Louis	1	Ubiquiti - Solar
US 67	US067N041.3	61 N of Starling Airport	Jefferson	1	Ubiquiti - Solar
US 67	US067N041.3	61 N of Starling Airport	Jefferson	1	Ubiquiti - Solar
US 67	US067N041.8	61 @ Starling Airport	Jefferson	1	Ubiquiti - Solar
US 67	US067N050.5	61 @ M	Jefferson	1	Ubiquiti - Solar
US 67	US067S064.6	67 N of Meyer	Jefferson	1	Ubiquiti - Solar
US 67	US067S065.1	67 @ Meyer	Jefferson	1	Ubiquiti - Solar
			PAYTOTAL	34	

MOBILIZATION	
PAY TOTAL	1 LUMP SUM

LUMP SUM TEMPORARY TRAFFIC CONTROL	
PAY TOTAL	1 LUMP SUM

CLEARING, GRUBBING, MOWING & TREE CLEARING	
PAY TOTAL	6 EACH

* LOCATIONS TO BE DETERMINED BY THE ENGINEER.

STATE OF MISSOURI
JAMIE F. RANA
NUMBER PE-2005001034
PROFESSIONAL ENGINEER

Jamie F. Rana
(07/18/2025 11:17:47 AM
JAMIE F. RANA - CIVIL
MO-PE-2005001034

DATE PREPARED
7/17/2025

ROUTE	STATE
VAR.	MO
DISTRICT	SHEET NO.
SL	2

COUNTY
VARIOUS

JOB NO.
J6Q2026E

CONTRACT ID.

PROJECT NO.

BRIDGE NO.

DESCRIPTION	DATE

MISSOURI HIGHWAYS AND TRANSPORTATION COMMISSION

105 WEST CAPITOL
JEFFERSON CITY, MO 65102
1-888-ASK-MODOT (1-888-275-6636)

QUANTITIY SHEETS
1 OF 32

CCTV INVENTORY (TABLE 1 OF 12)

ROUTE	ID	LOCATION	COUNTY	P.M. CCTV CAMERA, ASSEMBLY, POLE & FIELD CABINET EACH	CAMERA BRAND	DESCRIPTION	REMARKS
I-44	IS044E225.0	I-44 @ Sullivan MM225.0	Franklin	1	Axis	Q6155-E	
I-44	IS044E225.9	I-44 @ 185/AF EB Ramps	Franklin	1	Axis	Q6075-E	
I-44	IS044E246.6	I-44 W of US 50	Franklin	1	Axis	Q6155-E	
I-44	IS044E250.8	I-44 W of Rte 100-AT	Franklin	1	Axis	Q6155-E	
I-44	IS044E253.6	I-44 @ MO 100 Gray Summit	Franklin	1	Axis	Q6155-E	
I-44	IS044E256.8	I-44 @ Pacific-Viaduct	Franklin	1	Axis	Q6155-E	
I-44	IS044E263.3	I-44 E of Six Flags	St. Louis	1	Axis	Q6075-E	
I-44	IS044E264.7	I-44 @ 109	St. Louis	1	Axis	Q6155-E	
I-44	IS044E266.0	I-44 W of Lewis	St. Louis	1	Axis	Q6155-E	
I-44	IS044E266.9	I-44 @ Lewis	St. Louis	1	Axis	Q6155-E	
I-44	IS044E268.0	I-44 E of Lewis	St. Louis	1	Axis	Q6155-E	
I-44	IS044E269.0	I-44 @ Antire	St. Louis	1	Axis	Q6155-E	
I-44	IS044E270.5	I-44 W of 141	St. Louis	1	Axis	Q6155-E	
I-44	IS044E272.6	I-44 @ 141 SEQ	St. Louis	1	Axis	Q6315-LE	
I-44	IS044E274.0	I-44 @ Bowles	St. Louis	1	Cohu	4220HD	
I-44	IS044E275.8	I-44 W of Meramec River East	St. Louis	1	Cohu	4220-02HD	
I-44	IS044E276.3	I-44 W of I-270 HM	St. Louis	1	Axis	Q6075-E	
I-44	IS044E278.2	I-44 E of 61	St. Louis	1	Axis	Q6155-E	
I-44	IS044E280.1	I-44 E of S Berry	St. Louis	1	Axis	Q6155-E	
I-44	IS044E280.9	Elm @ I-44 EB Ramps	St. Louis City	1	Axis	Q6155-E	
I-44	IS044E280.9	I-44 @ Elm	St. Louis City	1	Axis	Q6155-E	
I-44	IS044E281.5	I-44 E of Elm	St. Louis	1	Axis	Q6155-E	
I-44	IS044E282.9	I-44 @ Shrewsbury	St. Louis City	1	Axis	Q6155-E	
I-44	IS044E283.2	I-44 E of Shrewsbury	St. Louis City	1	Axis	Q6155-E	
I-44	IS044E284.0	I-44 W of Jamieson	St. Louis	1	Axis	Q6155-E	
I-44	IS044E284.4	I-44 @ Jamieson	St. Louis City	1	Axis	Q6155-E	
I-44	IS044E284.7	I-44 @ Arsenal	St. Louis City	1	Axis	Q6155-E	
I-44	IS044E289.6	I-44 @ Jefferson	St. Louis City	1	Axis	Q6155-E	
I-44	IS044E290.1	I-44 @ I-55 NWQ	St. Louis City	1	Axis	Q6075-E	
I-44	IS044E290.4	I-44/55 @ 30-12th	St. Louis City	1	Axis	Q6155-E	
I-44	IS044E291.5	I-44 @ I-64-I-55 NEQ	St. Louis City	1	Axis	Q6155-E	
I-44	IS044E291.8	Memorial @ Walnut	St. Louis City	1	Axis	Q6315-LE	
I-44	IS044E292.7	I-44 @ Broadway-Cass	St. Louis City	1	Cohu	4220-02HD	
I-44	IS044W247.0	I-44 @ US 50 Union Exit	Franklin	1	Axis	Q6155-E	
I-44	IS044W248.9	I-44 E of US 50	Franklin	1	Axis	Q6155-E	
I-44	IS044W251.7	I-44 @ Rte 100-AT	Franklin	1	Axis	Q6155-E	
I-44	IS044W252.2	I-44 E of Rte 100-AT	Franklin	1	Axis	Q6155-E	
I-44	IS044W255.1	I-44 E of MO 100 Gray Summit	Franklin	1	Axis	Q6155-E	
I-44	IS044W256.0	I-44 W of Lamar Pkwy	Franklin	1	Axis	Q6155-E	
I-44	IS044W257.9	I-44 E of Pacific-Viaduct	Franklin	1	Axis	Q6155-E	
I-44	IS044W259.2	I-44 W of Six Flags	St. Louis	1	Bosch	inteox 7000i	
I-44	IS044W261.3	I-44 @ Allenton/Six Flags_Lower CCTV	St. Louis	1	Axis	Q6155-E	
I-44	IS044W261.3	I-44 @ Allenton/Six Flags_Upper CCTV	St. Louis	1	Axis	Q6155-E	
I-44	IS044W264.1	I-44 W of 109	St. Louis	1	Bosch	inteox 7000i	
I-44	IS044W264.7	109 @ 5th	St. Louis	1	Axis	Q6155-E	
I-44	IS044W270.0	I-44 E of Antire	St. Louis	1	Cohu	4221HD	
I-44	IS044W271.3	I-44 W of 141	St. Louis	1	Cohu	4220-02HD	
I-44	IS044W273.3	I-44 @ Maritz North	St. Louis	1	Axis	Q6075-E	
I-44	IS044W276.6	I-44 @ I-270 HM	St. Louis	1	Axis	Q6315-LE	
I-44	IS044W277.0	I-44 @ 366 NEQ	St. Louis	1	Axis	Q6155-E	
I-44	IS044W277.5	I-44 @ 61	St. Louis	1	Axis	Q6155-E	
I-44	IS044W278.8	I-44 @ Big Bend	St. Louis	1	Axis	Q6155-E	
I-44	IS044W279.8	I-44 @ Berry	St. Louis	1	Axis	Q6155-E	
I-44	IS044W282.6	I-44 W of Laclede Station	St. Louis	1	Axis	Q6155-E	
I-44	IS044W285.9	I-44 @ Hampton	St. Louis City	1	Axis	Q6155-E	
I-44	IS044W285.9	I-44 @ Hampton (Test Camera)	St. Louis City	1	Bosch	starlight 7100i	
I-44	IS044W287.1	I-44 @ Kingshighway	St. Louis City	1	Bosch	inteox 7000i	
I-44	IS044W287.5	I-44 @ Vandeventer WB Ramp	St. Louis City	1	Axis	Q6155-E	
I-44	IS044W288.6	I-44 @ Grand	St. Louis City	1	Bosch	inteox 7000i	
I-44	IS044W290.1	I-44 @ I-55 HM	St. Louis City	1	Axis	Q6075-E	
			SUBTOTAL 1	60			

STATE OF MISSOURI
JAMIE F. RANA
NUMBER PE-2005001034
PROFESSIONAL ENGINEER
Jamie F. Rana
07/18/2025 11:19:25 AM
JAMIE F. RANA - CIVIL
MO-PE-2005001034

DATE PREPARED
7/17/2025

ROUTE	STATE
VAR.	MO
DISTRICT	SHEET NO.
SL	2

COUNTY
VARIOUS

JOB NO.
J6Q2026E

CONTRACT ID.

PROJECT NO.

BRIDGE NO.

DESCRIPTION	DATE

MISSOURI HIGHWAYS AND TRANSPORTATION COMMISSION
105 WEST CAPITOL
JEFFERSON CITY, MO 65102
1-888-ASK-MODOT (1-888-275-6636)

QUANTITIY SHEETS
2 OF 32

CCTV INVENTORY (TABLE 2 OF 12)

ROUTE	ID	LOCATION	COUNTY	P.M. CCTV CAMERA, ASSEMBLY, POLE & FIELD CABINET EACH	CAMERA BRAND	DESCRIPTION	REMARKS
I-44	IS044W290.7	I-44 @ Lafayette	St. Louis City	1	Axis	Q6155-E	
I-44	IS044W290.7	I-44 @ Lafayette_Test Camera	St. Louis City	1	Bosch	inteox 7000i	
I-44	IS044W291.9	I-44 @ Chestnut (EB)	St. Louis City	1	Axis	Q6155-E	
I-44	IS044W291.9	I-44 @ Chestnut (WB)	St. Louis City	1	Axis	Q6155-E	
I-44	IS044W292.0	Memorial @ Pine	St. Louis City	1	Axis	Q6075-E	
I-44	IS044W292.2	I-44 @ Washington	St. Louis City	1	Axis	Q6315-LE	
I-44	IS044W292.7	I-44 @ Broadway Express Lane Ramp	St. Louis City	1	Axis	Q6315-LE	
I-44	IS044W292.9	Cass @ Tucker	St. Louis City	1	Cohu	4220-02HD	
I-55	IS055N169.5	I-55 N of AA	Jefferson	1	Axis	Q6155-E	
I-55	IS055N171.2	I-55 NB Ramp @ 61	Jefferson	1	Cohu	4220-02HD	
I-55	IS055N172.1	I-55 N of 61	Jefferson	1	Axis	Q6155-E	
I-55	IS055N176.5	I-55 N of A	Jefferson	1	Axis	Q6155-E	
I-55	IS055N177.2	I-55 S of McNutt	Jefferson	1	Axis	Q6155-E	
I-55	IS055N178.5	I-55 NB Ramp @ McNutt	Jefferson	1	Axis	Q6155-E	
I-55	IS055N181.3	I-55 @ Z	Jefferson	1	Axis	Q6155-E	
I-55	IS055N182.7	I-55 @ Eagle Crest	Jefferson	1	Axis	Q6155-E	
I-55	IS055N183.7	I-55 @ Haefner-S of M	Jefferson	1	Axis	Q6155-E	
I-55	IS055N186.7	I-55 S of Imperial Main	Jefferson	1	Axis	Q6155-E	
I-55	IS055N187.3	I-55 @ Imperial Main	Jefferson	1	Axis	Q6155-E	
I-55	IS055N188.4	I-55 N of Imperial Main	Jefferson	1	Axis	Q6155-E	
I-55	IS055N189.4	I-55 S of Richardson	Jefferson	1	Axis	Q6155-E	
I-55	IS055N199.1	I-55 N of 61 (I-55 S of Reavis Barracks)	St. Louis	1	Cohu	4220-02HD	
I-55	IS055N200.1	I-55 @ Reavis Barracks	St. Louis	1	Axis	Q6155-E	
I-55	IS055N202.7	I-55 @ Carondelet	St. Louis City	1	Axis	Q6315-LE	
I-55	IS055N202.7	Reavis Barracks East @ I-55	St. Louis	1	Axis	Q6155-E	
I-55	IS055N204.4	I-55 @ Bates	St. Louis City	1	Axis	Q6155-E	
I-55	IS055N206.7	I-55 @ Potomac NB Ramp	St. Louis City	1	Axis	Q6155-E	
I-55	IS055N209.3	44-55-64 Ramps to PSB HM	St. Louis City	1	Axis	Q6315-LE	
I-55	IS055S174.6	I-55 @ 61	Jefferson	1	Axis	Q6155-E	
I-55	IS055S175.7	I-55 @ A SB Ramps	Jefferson	1	Axis	Q6155-E	
I-55	IS055S180.1	I-55 S of Z	Jefferson	1	Axis	Q6155-E	
I-55	IS055S181.9	I-55 N of Z	Jefferson	1	Axis	Q6155-E	
I-55	IS055S184.4	I-55 S of M	Jefferson	1	Axis	Q6155-E	
I-55	IS055S185.6	I-55 @ M NWQ	Jefferson	1	Axis	Q6155-E	
I-55	IS055S190.7	I-55 @ Richardson	Jefferson	1	Axis	Q6075	
I-55	IS055S191.6	I-55 @ Church	Jefferson	1	Axis	Q6315-LE	
I-55	IS055S192.6	I-55 @ 141	Jefferson	1	Axis	Q6155-E	
I-55	IS055S194.3	I-55 N of Meramec Bottom	St. Louis	1	Axis	Q6155-E	
I-55	IS055S195.2	I-55 @ Butler Hill	St. Louis	1	Axis	Q6155-E	
I-55	IS055S195.2	I-55 @ Butler Hill SB Ramps	St. Louis	1	Axis	Q6155-E	
I-55	IS055S198.0	I-55 @ 61	St. Louis	1	Axis	Q6155-E	
I-55	IS055S198.0	I-55 N of 61	St. Louis	1	Axis	Q6155-E	
I-55	IS055S200.8	I-55 @ Union	St. Louis	1	Axis	Q6155-E	
I-55	IS055S201.5	I-55 @ Bayless	St. Louis	1	Axis	Q6155-E	
I-55	IS055S201.8	I-55 @ Weber	St. Louis	1	Axis	Q6075-E	
I-55	IS055S202.7	I-55 @ Carondelet	St. Louis City	1	Axis	Q6075-E	
I-55	IS055S203.5	I-55 @ Loughborough	St. Louis City	1	Axis	Q6155-E	
I-55	IS055S204.6	I-55 S of Broadway	St. Louis City	1	Axis	Q6155-E	
I-55	IS055S205.8	I-55 S of Gasconade	St. Louis City	1	Axis	Q6155-E	
I-55	IS055S207.4	I-55 @ Arsenal	St. Louis City	1	Axis	Q6155-E	
I-55	IS055S208.2	I-55 @ 30-Russell	St. Louis City	1	Axis	Q6155-E	
I-55	IS055S208.3	I-55 @ Lafayette	St. Louis City	1	Axis	Q6155-E	
I-55	IS055S208.5	I-55 @ 7th (44-55 @ Park)	St. Louis City	1	Axis	Q6155-E	
I-55	IS055S209.0	I-55 N of 7th	St. Louis City	1	Axis	Q6315-LE	
I-64	IS064E001.6	I-64 E of Prospect	St. Charles	1	Axis	Q6155-E	
I-64	IS064E002.9	I-64 @ Lake St Louis	St. Charles	1	Axis	Q6155-E	
I-64	IS064E004.1	I-64 @ MO 364	St. Charles	1	Bosch	inteox 7000i	
I-64	IS064E007.7	I-64 E of Winghaven	St. Charles	1	Axis	Q6155-E	
I-64	IS064E008.9	I-64 W of K	St. Charles	1	Axis	Q6155-E	
I-64	IS064E010.2	I-64 @ K SWQ	St. Charles	1	Axis	Q6155-E	
			SUBTOTAL 2	60			

STATE OF MISSOURI
JAMIE F. RANA
NUMBER PE-2005001034
PROFESSIONAL ENGINEER

Jamie F. Rana
(07/18/2025 11:19:43 AM
JAMIE F. RANA - CIVIL
MO-PE-2005001034

DATE PREPARED
7/17/2025

ROUTE	STATE
VAR.	MO
DISTRICT	SHEET NO.
SL	2

COUNTY
VARIOUS

JOB NO.
J6Q2026E

CONTRACT ID.

PROJECT NO.

BRIDGE NO.

DESCRIPTION

DATE

MISSOURI HIGHWAYS AND TRANSPORTATION COMMISSION

105 WEST CAPITOL
JEFFERSON CITY, MO 65102
1-888-ASK-MODOT (1-888-275-6636)

QUANTITIY SHEETS
3 OF 32

CCTV INVENTORY (TABLE 3 OF 12)

ROUTE	ID	LOCATION	COUNTY	P.M. CCTV CAMERA, ASSEMBLY, POLE & FIELD CABINET EACH	CAMERA BRAND	DESCRIPTION	REMARKS
I-64	IS064E013.6	I-64 @ Spirit of St Louis Blvd	St. Louis	1	Axis	Q6155-E	
I-64	IS064E013.8	I-64 E of Missouri River	St. Louis	1	Panasonic	WV-X6531	
I-64	IS064E018.8	I-64 @ 340	St. Louis	1	Axis	Q6155-E	
I-64	IS064E018.9	I-64 @ 340 EB Ramps	St. Louis	1	Axis	Q6155-E	
I-64	IS064E019.2	I-64 @ Chesterfield Pkwy West	St. Louis	1	Axis	Q6155-E	
I-64	IS064E020.0	I-64 W of Timberlake Manor	St. Louis	1	Axis	Q6155-E	
I-64	IS064E022.8	141 @ I-64 SEQ	St. Louis	1	Axis	Q6155-E	
I-64	IS064E024.2	I-64 @ Mason	St. Louis	1	Axis	Q6155-E	
I-64	IS064E025.2	I-64 W of I-270	St. Louis	1	Axis	Q6155-E	
I-64	IS064E027.0	I-64 E of Ballas	St. Louis	1	Axis	Q6155-E	
I-64	IS064E027.6	I-64 @ Spoede	St. Louis	1	Axis	Q6315-L4	
I-64	IS064E028.2	I-64 @ 67	St. Louis	1	Cohu	4220HD	
I-64	IS064E029.8	I-64 E of Clayton	St. Louis	1	Axis	Q6155-E	
I-64	IS064E030.5	I-64 @ McKnight	St. Louis	1	Axis	Q6155-E	
I-64	IS064E031.6	I-64 E of Brentwood	St. Louis	1	Axis	Q6155-E	
I-64	IS064E032.2	I-64 E of Hanley	St. Louis	1	Axis	Q6155-E	
I-64	IS064E033.4	I-64 @ Bellevue Ramp	St. Louis	1	Axis	Q6155-E	
I-64	IS064E033.5	I-64 E of Bellevue	St. Louis	1	Axis	Q6155-E	
I-64	IS064E034.9	I-64 @ Hampton	St. Louis City	1	Axis	Q6155-E	
I-64	IS064E035.8	I-64 W of Kingshighway	St. Louis City	1	Cohu	4220-02HD	
I-64	IS064E036.7	I-64 @ Tower Grove	St. Louis City	1	Axis	Q6155-E	
I-64	IS064E036.9	I-64 @ Grand (Lower CCTV)	St. Louis City	1	Axis	Q6155-E	
I-64	IS064E037.2	I-64 @ Compton	St. Louis City	1	Axis	Q6155-E	
I-64	IS064E038.5	I-64 W of 14th	St. Louis City	1	Axis	Q6155-E	
I-64	IS064E038.7	I-64 @ 15th	St. Louis City	1	Axis	Q6155-E	
I-64	IS064E039.1	I-64 @ 20th	St. Louis City	1	Axis	Q6155-E	
I-64	IS064E039.2	I-64 W of 7th	St. Louis City	1	Cohu	4220HD	
I-64	IS064W000.8	I-64 E of I-70	St. Charles	1	Axis	Q6155-E	
I-64	IS064W006.1	I-64 @ DD	St. Charles	1	Axis	Q6155-E	
I-64	IS064W011.0	I-64 @ 94	St. Charles	1	Axis	Q6075-E	
I-64	IS064W014.7	I-64 NOR @ Verizon Wireless/Technology Drive (I-64 E of 94)	St. Charles	1	Bosch	inteox 7000i	
I-64	IS064W012.7	I-64 W of Missouri River	St. Charles	1	Axis	Q6155-E	
I-64	IS064W016.1	I-64 @ Boones Crossing	St. Louis	1	Axis	Q6315-LE	
I-64	IS064W016.2	I-64 @ Long	St. Louis	1	Axis	Q6155-E	
I-64	IS064W017.1	I-64 E of Boones Crossing	St. Louis	1	Axis	Q6155-E	
I-64	IS064W021.9	I-64 @ 141 NWQ	St. Louis	1	Bosch	inteox 7000i	
I-64	IS064W023.2	I-64 @ Maryville Centre	St. Louis	1	Axis	Q6315-LE	
I-64	IS064W026.2	I-64 @ Ballas	St. Louis	1	Axis	Q6155-E	
I-64	IS064W028.9	I-64 @ Clayton	St. Louis	1	Axis	Q6155-E	
I-64	IS064W031.7	I-64 @ I-170 HM	St. Louis	1	Axis	Q6315-LE	
I-64	IS064W031.7	I-64 @ I-170 NWQ	St. Louis	1	Bosch	inteox 7000i	
I-64	IS064W031.8	I-64 E of I-170	St. Louis	1	Axis	Q6155-E	
I-64	IS064W033.0	I-64 @ Big Bend	St. Louis	1	Axis	Q6155-E	
I-64	IS064W033.7	I-64 @ McCausland WB Ramps	St. Louis City	1	Axis	Q6155-E	
I-64	IS064W034.1	I-64 @ Oakland	St. Louis City	1	Axis	Q6155-E	
I-64	IS064W036.1	I-64 @ Kingshighway	St. Louis City	1	Cohu	4220-03HD	
I-64	IS064W036.5	I-64 @ Vandeventer	St. Louis City	1	Cohu	4220-02HD	
I-64	IS064W036.9	I-64 @ Grand (Upper CCTV)	St. Louis City	1	Bosch	inteox 7000i	
I-64	IS064W038.0	I-64 @ Jefferson	St. Louis City	1	Axis	Q6315-LE	
I-64	IS064W038.2	I-64 NOR @ 22nd	St. Louis City	1	Axis	Q6075-E	
I-64	IS064W040.3	I-64 E of 6th (I-64 @ I-55 NEQ)	St. Louis City	1	Bosch	inteox 7000i	
I-70	IS070E205.2	I-70 E of W-T (Foristell)	St. Charles	1	Cohu	4220HD	
I-70	IS070E206.8	I-70 E of W-T (W of Wentzville Pkwy)	St. Charles	1	Cohu	4220HD	
I-70	IS070E207.5	I-70 W of Wentzville Pkwy	St. Charles	1	Axis	Q6315-LE	
I-70	IS070E209.6	I-70 @ Z	St. Charles	1	Bosch	inteox 7000i	
I-70	IS070E212.0	I-70 @ A	St. Charles	1	Cohu	4220-02HD	
I-70	IS070E214.1	I-70 @ Lake St Louis Blvd	St. Charles	1	Cohu	4220-02HD	
I-70	IS070E214.8	I-70 E of Lake St Louis Blvd	St. Charles	1	Axis	Q6315-LE	
I-70	IS070E216.1	I-70 @ Bryan	St. Charles	1	Axis	Q6315-LE	
I-70	IS070E217.8	K @ I-70 SOR	St. Charles	1	Axis	Q6075-E	
			SUBTOTAL 3	60			

STATE OF MISSOURI
JAMIE F. RANA
NUMBER PE-2005001034
PROFESSIONAL ENGINEER

Jamie F. Rana
07/18/2025 11:20:06 AM
JAMIE F. RANA - CIVIL
MO-PE-2005001034

DATE PREPARED
7/17/2025

ROUTE	STATE
VAR.	MO
DISTRICT	SHEET NO.
SL	2

COUNTY
VARIOUS

JOB NO.
J6Q2026E

CONTRACT ID.

PROJECT NO.

BRIDGE NO.

DATE	DESCRIPTION

MISSOURI HIGHWAYS AND TRANSPORTATION COMMISSION

105 WEST CAPITOL
JEFFERSON CITY, MO 65102
1-888-ASK-MODOT (1-888-275-6636)

QUANTITIY SHEETS
4 OF 32

CCTV INVENTORY (TABLE 4 OF 12)

ROUTE	ID	LOCATION	COUNTY	P.M. CCTV CAMERA, ASSEMBLY, POLE & FIELD CABINET EACH	CAMERA BRAND	DESCRIPTION	REMARKS
I-70	IS070E217.9	I-70 @ K-M	St. Charles	1	Cohu	4220-02HD	
I-70	IS070E226.1	I-70 E of Cave Springs	St. Charles	1	Axis	Q6315-LE	
I-70	IS070E228.3	I-70 @ 94	St. Charles	1	Axis	Q6155-E	
I-70	IS070E228.3	I-70 @ 94	St. Charles	1	Cohu	4220-02HD	
I-70	IS070E230.7	I-70 E of Missouri River	St. Louis	1	Bosch	inteox 7000i	
I-70	IS070E233.8	I-70 W of 180	St. Louis	1	Axis	Q6315-LE	
I-70	IS070E235.7	I-70 @ Cypress EB Ramps	St. Louis	1	Axis	Q6155-E	
I-70	IS070E236.7	I-70 @ Airflight	St. Louis	1	Axis	Q6075-E	
I-70	IS070E236.8	Airflight @ Natural Bridge-Pear Tree	St. Louis	1	Axis	Q6155-E	
I-70	IS070E237.2	I-70 E of Airflight	St. Louis	1	Axis	Q6075-E	
I-70	IS070E238.8	I-70 @ I-170 NWQ	St. Louis	1	Cohu	4220-02HD	
I-70	IS070E239.7	I-70 W of N Hanley	St. Louis	1	Cohu	4220-02HD	
I-70	IS070E241.9	I-70 @ Lucas and Hunt	St. Louis	1	Cohu	4220HD	
I-70	IS070E243.0	I-70 @ Jennings Sta	St. Louis	1	Cohu	4220HD	
I-70	IS070E243.0	I-70 @ Jennings Sta EB Ramp	St. Louis	1	Axis	Q6155-E	
I-70	IS070E245.2	I-70 @ Shreve	St. Louis City	1	Cohu	4220HD	
I-70	IS070E245.7	I-70 @ W Florissant-E Taylor	St. Louis City	1	Cohu	4220-02HD	
I-70	IS070E000.5	I-70 @ MVM-Mainspan (Illinois Tower Mississippi River Bridge)	St. Louis City	1	Cohu	4221HD	
I-70	IS070W203.9	I-70 @ W-T	St. Charles	1	Cohu	4220HD	
I-70	IS070W208.3	I-70 @ Wentzville Pkwy HM	St. Charles	1	Cohu	4220-02HD	
I-70	IS070W208.8	I-70 E of Wentzville Pkwy	St. Charles	1	Axis	Q6075-E	
I-70	IS070W210.5	I-70 @ I-64	St. Charles	1	Cohu	4220HD	
I-70	IS070W211.2	I-70 E of I-64	St. Charles	1	Axis	Q6315-LE	
I-70	IS070W211.8	I-70 @ I-64 HM	St. Charles	1	Axis	Q6075-E	
I-70	IS070W219.0	I-70 @ TR Hughes	St. Charles	1	Axis	Q6315-LE	
I-70	IS070W220.5	I-70 @ 79	St. Charles	1	Cohu	4220HD	
I-70	IS070W222.2	I-70 @ Mid Rivers Mall Dr	St. Charles	1	Axis	Q6075-E	
I-70	IS070W223.7	I-70 @ 370 NWQ	St. Charles	1	Cohu	4220HD	
I-70	IS070W224.8	I-70 W of Cave Springs	St. Charles	1	Cohu	4220-02HD	
I-70	IS070W225.1	I-70 @ Cave Springs Ramp SPUI	St. Charles	1	Axis	Q6315-LE	
I-70	IS070W226.9	I-70 @ Zumbehl Ramps SPUI	St. Charles	1	Axis	Q6315-LE	
I-70	IS070W227.7	I-70 @ Hawks Nest	St. Charles	1	Axis	Q6075-E	
I-70	IS070W229.5	I-70 W of Missouri River	St. Charles	1	Axis	Q6315-LE	
I-70	IS070W231.6	141 @ I-70 NEQ (Lower CCTV)	St. Louis	1	Axis	Q6155-E	
I-70	IS070W231.6	I-70 @ 141 NEQ (Upper CCTV)	St. Louis	1	Axis	Q6315-LE	
I-70	IS070W232.7	I-70 @ I-270	St. Louis	1	Axis	Q6075-E	
I-70	IS070W235.0	I-70 @ Fee Fee	St. Louis	1	Axis	Q6075-E	
I-70	IS070W236.1	I-70 E of Cypress	St. Louis	1	Axis	Q6115-E	
I-70	IS070W238.2	I-70 @ McDonnell	St. Louis	1	Axis	Q6075-E	
I-70	IS070W239.8	I-70 @ N Hanley	St. Louis	1	Axis	Q6155-E	
I-70	IS070W240.4	I-70 @ N	St. Louis	1	Axis	Q6155-E	
I-70	IS070W240.6	I-70 @ Florissant	St. Louis	1	Cohu	4220HD	
I-70	IS070W241.4	I-70 E of Bermuda	St. Louis	1	Axis	Q6315-LE	
I-70	IS070W243.1	I-70 @ Goodfellow WB Ramp	St. Louis City	1	Axis	Q6155-E	
I-70	IS070W243.6	I-70 @ Riverview	St. Louis City	1	Cohu	4220-02HD	
I-70	IS070W244.4	I-70 @ Union WB Ramp	St. Louis City	1	Axis	Q6115-E	
I-70	IS070W246.1	I-70 @ Carrie-O'Fallon Park	St. Louis City	1	Bosch	inteox 7000i	
I-70	IS070W246.3	I-70 @ Carrie	St. Louis City	1	Cohu	4220HD	
I-70	IS070W247.1	I-70 @ Grand	St. Louis City	1	Axis	Q6315-LE	
I-70	IS070W247.3	I-70 @ E Grand WB Ramp	St. Louis City	1	Axis	Q6155-E	
I-70	IS070W248.2	I-70 @ McKinley Bridge	St. Louis City	1	Cohu	4220-02HD	
I-70	IS070W249.2	I-70 W of Madison	St. Louis City	1	Axis	Q6075-E	
I-70	IS070W249.6	I-70 @ MVM-Mainspan (Mississippi River Bridge)	St. Louis City	1	Axis	Q6315-LE	
I-70	IS070W249.6	I-70 @ MVM-Mainspan HM (Mississippi River Bridge)	St. Louis City	1	Axis	Q6315-LE	
I-170	IS170N000.6	I-170 @ Galleria	St. Louis	1	Axis	Q6075-E	
I-170	IS170N001.3	I-170 @ Forest Park	St. Louis	1	Axis	Q6155-E	
I-170	IS170N002.4	I-170 @ Delmar	St. Louis	1	Axis	Q6155-E	
I-170	IS170N004.4	I-170 @ D	St. Louis	1	Bosch	inteox 7000i	
I-170	IS170N005.1	I-170 S of Midland	St. Louis	1	Axis	Q6155-E	
I-170	IS170N006.0	I-170 @ 180	St. Louis	1	Axis	Q6155-E	
			SUBTOTAL 4	60			

STATE OF MISSOURI
JAMIE F. RANA
NUMBER PE-2005001034
PROFESSIONAL ENGINEER

Jamie F. Rana
07/18/2025 11:20:29 AM
JAMIE F. RANA - CIVIL
MO-PE-2005001034

DATE PREPARED
7/17/2025

ROUTE	STATE
VAR.	MO
DISTRICT	SHEET NO.
SL	2

COUNTY
VARIOUS

JOB NO.
J6Q2026E

CONTRACT ID.

PROJECT NO.

BRIDGE NO.

DESCRIPTION

DATE

MISSOURI HIGHWAYS AND TRANSPORTATION COMMISSION

105 WEST CAPITOL
JEFFERSON CITY, MO 65102
1-888-ASK-MODOT (1-888-275-6636)

QUANTITIY SHEETS
5 OF 32

CCTV INVENTORY (TABLE 5 OF 12)

ROUTE	ID	LOCATION	COUNTY	P.M. CCTV CAMERA, ASSEMBLY, POLE & FIELD CABINET EACH	CAMERA BRAND	DESCRIPTION	REMARKS
I-170	IS170N007.9	I-170 @ I-70 HM	St. Louis	1	Axis	Q6315-LE	
I-170	IS170N009.1	I-170 @ Airport	St. Louis	1	Axis	Q6155-E	
I-170	IS170N009.4	I-170 @ Ladue	St. Louis	1	Axis	Q6075-E	
I-170	IS170N010.1	I-170 @ Frost	St. Louis	1	Bosch	inteox 7000i	
I-170	IS170N010.6	I-170 @ Nyflot	St. Louis	1	Axis	Q6155-E	
I-170	IS170S001.0	I-170 @ Brentwood	St. Louis	1	Axis	Q6315-LE	
I-170	IS170S002.9	I-170 S of 340	St. Louis	1	Axis	Q6155-E	
I-170	IS170S003.3	I-170 @ 340	St. Louis	1	Axis	Q6155-E	
I-170	IS170S007.1	I-170 @ 115	St. Louis	1	Axis	Q6075-E	
I-170	IS170S008.7	I-170 N of Scudder	St. Louis	1	Axis	Q6155-E	
I-255	IS255E000.0	I-255 @ I-55 SEQ	St. Louis	1	Axis	Q6155-E	
I-255	IS255E000.0	I-255 @ I-55 SEQ HM	St. Louis	1	Axis	Q6315-LE	
I-255	IS255E000.7	I-255 @ 61 EB Ramps	St. Louis	1	Axis	Q6075-E	
I-255	IS255E002.1	I-255 @ 231 SEQ	St. Louis	1	Axis	Q6155-E	
I-255	IS255E003.1	I-255 @ Koch	St. Louis	1	Axis	Q6155-E	
I-255	IS255W001.1	I-255 @ 61 NEQ	St. Louis	1	Axis	Q6155-E	
I-270	IS270E001.2	I-270 @ Theiss	St. Louis	1	Axis	Q6155-E	
I-270	IS270E001.8	I-270 @ 21 SEQ	St. Louis	1	Axis	Q6315-LE	
I-270	IS270E002.9	I-270 S of 30	St. Louis	1	Axis	Q6155-E	
I-270	IS270E023.8	I-270 @ McDonnell EB Ramps	St. Louis	1	Axis	Q6155-E	
I-270	IS270E026.3	I-270 @ I-170 SWQ HM	St. Louis	1	Axis	Q6315-LE	
I-270	IS270E033.1	I-270 @ Bellefontaine EB Ramp	St. Louis	1	Axis	Q6155-E	
I-270	IS270E034.1	I-270 @ Lilac EB Ramp	St. Louis	1	Cohu	4220-02HD	
I-270	IS270N005.7	I-270 @ I-44 SEQ	St. Louis	1	Axis	Q6155-E	
I-270	IS270N007.6	I-270 N of Big Bend NEQ	St. Louis	1	Axis	Q6155-E	
I-270	IS270N010.0	I-270 @ 100 NEQ	St. Louis	1	Axis	Q6315-LE	
I-270	IS270N013.6	I-270 @ AB-Ladue	St. Louis	1	Axis	Q6155-E	
I-270	IS270N013.6	I-270 @ AB-Ladue - Test Location	St. Louis	1	Axis	Q1656-DLE	
I-270	IS270N014.8	I-270 @ 340 SEQ	St. Louis	1	Cohu	4220HD	
I-270	IS270N017.9	I-270 @ Dorsett East	St. Louis	1	Axis	Q6155-E	
I-270	IS270N018.8	I-270 S of McKelvey	St. Louis	1	Axis	Q6155-E	
I-270	IS270S003.6	I-270 @ 30	St. Louis	1	Cohu	4220HD	
I-270	IS270S004.7	I-270 N of 30	St. Louis	1	Axis	Q6155-E	
I-270	IS270S007.0	I-270 @ Marshall	St. Louis	1	Axis	Q6315-LE	
I-270	IS270S007.6	I-270 @ Big Bend	St. Louis	1	Axis	Q6155-E	
I-270	IS270S008.5	I-270 @ Dougherty Ferry	St. Louis	1	Cohu	4220HD	
I-270	IS270S011.0	I-270 S of Clayton	St. Louis	1	Axis	Q6155-E	
I-270	IS270S012.4	I-270 @ I-64 SWQ	St. Louis	1	Axis	Q6315-LE	
I-270	IS270S012.4	I-270 @ I-64 SWQ HM	St. Louis	1	Axis	Q6315-LE	
I-270	IS270S015.8	I-270 S of D	St. Louis	1	Bosch	inteox 7000i	
I-270	IS270S016.6	I-270 @ 364 NWQ	St. Louis	1	Cohu	4221HD	
I-270	IS270S017.9	Dorsett @ 270	St. Louis	1	Axis	Q6155-E	
I-270	IS270S018.1	I-270 N of Dorsett	St. Louis	1	Axis	Q6155-E	
I-270	IS270S019.9	I-270 @ I-70 HM	St. Louis	1	Axis	Q6155-E	
I-270	IS270S019.9	I-270 @ I-70 SEQ	St. Louis	1	Axis	Q6155-E	
I-270	IS270S020.8	I-270 @ St Charles Rock Rd	St. Louis	1	Axis	Q6075-E	
I-270	IS270S021.6	I-270 E of Woodford Way	St. Louis	1	Axis	Q6155-E	
I-270	IS270S022.3	I-270 @ 370	St. Louis	1	Bosch	inteox 7000i	
I-270	IS270S022.9	I-270 @ Missouri Bottom	St. Louis	1	Bosch	inteox 7000i	
I-270	IS270W024.0	I-270 E of McDonnell	St. Louis	1	Bosch	inteox 7000i	
I-270	IS270W029.3	I-270 W of W Florissant	St. Louis	1	Axis	Q6155-E	
I-270	IS270W031.6	I-270 @ 367	St. Louis	1	Axis	Q6075-E	
I-270	IS270W034.5	I-270 W of Riverview	St. Louis	1	Bosch	inteox 7000i	
I-270	IS270W035.5	I-270 @ Riverview	St. Louis City	1	Axis	Q6315-LE	
MO 21	MO021N000.5	21 @ Reavis	St. Louis	1	Axis	Q6315-LE	
MO 21	MO021N003.2	21 @ Concord School	St. Louis	1	Axis	Q6315-LE	
MO 21	MO021N004.0	21 @ Kennerly	St. Louis	1	Axis	Q6315-LE	
MO 21	MO021N004.4	21 @ Town South-Shuessler	St. Louis	1	Axis	Q6315-LE	
MO 21	MO021N005.6	21 @ Cedar Plaza	St. Louis	1	Axis	Q6315-LE	
MO 21	MO021N005.7	21 @ Butler Hill	St. Louis	1	Axis	Q6315-LE	
			SUBTOTAL 5	60			

STATE OF MISSOURI
JAMIE F. RANA
NUMBER PE-2005001034
PROFESSIONAL ENGINEER
Jamie F. Rana
07/18/2025 11:20:51 AM
JAMIE F. RANA - CIVIL
MO-PE-2005001034

DATE PREPARED
7/17/2025

ROUTE	STATE
VAR.	MO
DISTRICT	SHEET NO.
SL	2

COUNTY
VARIOUS

JOB NO.
J6Q2026E

CONTRACT ID.

PROJECT NO.

BRIDGE NO.

DATE	DESCRIPTION

MISSOURI HIGHWAYS AND TRANSPORTATION COMMISSION
105 WEST CAPITOL
JEFFERSON CITY, MO 65102
1-888-ASK-MODOT (1-888-275-6636)

QUANTITIY SHEETS
6 OF 32

CCTV INVENTORY (TABLE 6 OF 12)

ROUTE	ID	LOCATION	COUNTY	P.M. CCTV CAMERA, ASSEMBLY, POLE & FIELD CABINET EACH	CAMERA BRAND	DESCRIPTION	REMARKS
MO 21	MO021N006.9	21 @ Duchesne Parque-Hagemann	St. Louis	1	Axis	Q6315-LE	
MO 21	MO021N007.6	21 @ N of Meramac River	St. Louis	1	Axis	Q6155-E	
MO 21	MO021N034.5	21 @ Y	Jefferson	1	Axis	Q6315-LE	
MO 21	MO021N034.8	21 @ Walmart	Jefferson	1	Axis	Q6315-LE	
MO 21	MO021S001.7	21 @ Musick - Green Park	St. Louis	1	Axis	Q6315-LE	
MO 21	MO021S002.9	21 @ Baptist Church	St. Louis	1	Axis	Q6315-LE	
MO 21	MO021S005.9	21 @ Duessel	St. Louis	1	Axis	Q6315-LE	
MO 21	MO021S006.4	21 @ Suson Hills	St. Louis	1	Axis	Q6315-LE	
MO 21	MO021S035.3	21 @ Rte H / Rte N	Jefferson	1	Axis	Q6155-E	
MO 30	MO030E020.7	30 @ B-NN	Jefferson	1	Axis	Q6075-E	
MO 30	MO030E023.3	30 @ Local Hillsboro	Jefferson	1	Axis	Q6315-LE	
MO 30	MO030E031.3	30 @ PP-Rock Creek	Jefferson	1	Axis	Q6315-LE	
MO 30	MO030E032.1	30 @ High Ridge	Jefferson	1	Axis	Q6315-LE	
MO 30	MO030E035.2	30 @ New Sugar Creek	Jefferson	1	Axis	Q6155-E	
MO 30	MO030E036.4	30 @ Delores	Jefferson	1	Axis	Q6315-LE	
MO 30	MO030E037.1	30 @ Summit	St. Louis	1	Axis	Q6315-LE	
MO 30	MO030E040.0	30 E of Rahning	St. Louis	1	Axis	Q6315-LE	
MO 30	MO030E041.3	30 @ Geyer-Sappington Barracks	St. Louis	1	Axis	Q6315-LE	
MO 30	MO030E046.5	30 @ Heege	St. Louis	1	Axis	Q6315-LE	
MO 30	MO030E050.0	30 @ MO 366/Chippewa	St. Louis City	1	Bosch	inteox 7000i	
MO 30	MO030W021.7	30 @ BB-Industrial	Jefferson	1	Axis	Q6075-E	
MO 30	MO030W027.4	30 @ MM	Jefferson	1	Axis	Q6315-LE	
MO 30	MO030W029.9	30 @ Gravois-Clearview	Jefferson	1	Axis	Q6315-LE	
MO 30	MO030W032.9	30 @ Caroline	Jefferson	1	Axis	Q6315-LE	
MO 30	MO030W034.2	30 @ Little Brennan	Jefferson	1	Axis	Q6315-LE	
MO 30	MO030W035.7	30 @ N. Valley Dell	Jefferson	1	Axis	Q6315-LE	
MO 30	MO030W042.0	30 @ Sappington	St. Louis	1	Axis	Q6075-E	
MO 30	MO030W043.2	30 @ Baptist Church	St. Louis	1	Axis	Q6315-LE	
MO 30	MO030W043.8	30 @ Musick	St. Louis	1	Axis	Q6315-LE	
MO 30	MO030W044.0	30 @ Grant	St. Louis	1	Axis	Q6315-LE	
MO 30	MO030W044.8	30 @ 21	St. Louis	1	Axis	Q6315-LE	
MO 30	MO030W045.3	30 @ P	St. Louis	1	Axis	Q6315-LE	
MO 30	MO030W045.6	30 @ Weber-Elgin	St. Louis	1	Cohu	4220-02HD	
MO 30	MO030W047.0	30 @ River Des Peres	St. Louis City	1	Bosch	inteox 7000i	
MO 30	MO030W047.1	30 @ Hampton	St. Louis City	1	Cohu	4220HD	
MO 30	MO030W047.8	30 @ Kingshighway	St. Louis City	1	Axis	Q6075-E	
MO 30	MO030W048.2	30 @ Holly Hills	St. Louis City	1	Axis	Q6315-LE	
MO 30	MO030W048.5	30 @ Christy	St. Louis City	1	Axis	Q6315-LE	
MO 30	MO030W048.7	30 @ Bates	St. Louis City	1	Axis	Q6315-LE	
MO 30	MO030W049.1	30 @ Morganford/Delor	St. Louis City	1	Bosch	inteox 7000i	
MO 30	MO030W050.2	30 @ Gustine	St. Louis City	1	Axis	Q6315-LE	
MO 30	MO030W050.6	30 @ Grand	St. Louis City	1	Axis	Q6315-LE	
MO 30	MO030W051.5	30 @ Arsenal/Pennsylvania	St. Louis City	1	Bosch	inteox 7000i	
MO 30	MO030W052.0	30 @ Jefferson-Sidney	St. Louis City	1	Axis	Q6315-LE	
MO 79	MO030W052.4	30 @ Shenandoah	St. Louis City	1	Axis	Q6315-LE	
MO 79	MO079N083.8	79 @ M	St. Charles	1	Axis	Q6155-E	
MO 79	MO079N085.8	79 @ TR Hughes	St. Charles	1	Cohu	4220-03HD	
MO 79	MO079N086.8	79 @ Salt River NB ramps	St. Charles	1	Axis	Q6155-E	
MO 94	MO094E097.8	94 @ Francis Howell High School	St. Charles	1	Cohu	4220-02HD	
MO 94	MO094E098.3	94 @ D	St. Charles	1	Axis	Q6075-E	
MO 94	MO094E102.2	94 W of Wolfrum	St. Charles	1	Axis	Q6155-E	
MO 94	MO094E108.1	94 @ 364 NEQ	St. Charles	1	Axis	Q6155-E	
MO 94	MO094E109.1	94 @ Pralle	St. Charles	1	Axis	Q6155-E	
MO 94	MO094E109.8	94 @ Zumbehl-Friedens	St. Charles	1	Axis	Q6155-E	
MO 94	MO094W100.2	94 @ Cedar Glen	St. Charles	1	Cohu	4220-02HD	
MO 94	MO094W101.0	94 W of S Breeze	St. Charles	1	Axis	Q6155-E	
MO 94	MO094W108.2	Muegge @ 94 WB Ramps	St. Charles	1	Axis	Q6155-E	
MO 94	MO094W110.4	94 @ I-70 HM	St. Charles	1	Axis	Q6075-E	
MO 94	MO094W111.2	94 @ W Clay	St. Charles	1	Axis	Q6155-E	
MO 100	MO100E070.2	100 @ Washington Crossing	Franklin	1	Cohu	4220-04 HD	
			SUBTOTAL 6	60			

STATE OF MISSOURI
JAMIE F. RANA
NUMBER PE-2005001034
PROFESSIONAL ENGINEER
Jamie F. Rana
07/18/2025 11:21:10 AM
JAMIE F. RANA - CIVIL
MO-PE-2005001034

DATE PREPARED
7/17/2025

ROUTE	STATE
VAR.	MO
DISTRICT	SHEET NO.
SL	2

COUNTY
VARIOUS

JOB NO.
J6Q2026E

CONTRACT ID.

PROJECT NO.

BRIDGE NO.

DESCRIPTION	DATE

MISSOURI HIGHWAYS AND TRANSPORTATION COMMISSION
105 WEST CAPITOL
JEFFERSON CITY, MO 65102
1-888-ASK-MODOT (1-888-275-6636)

QUANTITIY SHEETS
7 OF 32

CCTV INVENTORY (TABLE 7 OF 12)

ROUTE	ID	LOCATION	COUNTY	P.M. CCTV CAMERA, ASSEMBLY, POLE & FIELD CABINET EACH	CAMERA BRAND	DESCRIPTION	REMARKS
MO 100	MO100E070.4	100 @ 47	Franklin	1	Cohu	4220-04 HD	
MO 100	MO100E070.7	100 @ Washington Heights	Franklin	1	Cohu	4220-04 HD	
MO 100	MO100E099.1	100 @ 340	St. Louis	1	Axis	Q6315-LE	
MO 100	MO100E099.5	100 @ Beaukman Ford	St. Louis	1	Axis	Q6315-LE	
MO 100	MO100E100.6	100 @ New Ballwin	St. Louis	1	Axis	Q6315-LE	
MO 100	MO100E101.2	100 @ Holloway	St. Louis	1	Axis	Q6315-LE	
MO 100	MO100E101.7	100 @ Ries-Seven Trails	St. Louis	1	Axis	Q6315-LE	
MO 100	MO100E105.2	100 @ Barrett Station	St. Louis	1	Axis	Q6315-LE	
MO 100	MO100E106.5	100 @ Ballas	St. Louis	1	Axis	Q6315-LE	
MO 100	MO100E108.1	100 @ Woodgate	St. Louis	1	Axis	Q6315-LE	
MO 100	MO100E108.5	100 @ Geyer	St. Louis	1	Axis	Q6315-LE	
MO 100	MO100E109.1	100 @ 67	St. Louis	1	Axis	Q6125-LE	
MO 100	MO100E109.4	100 @ Sylvan Place	St. Louis	1	Axis	Q6315-LE	
MO 100	MO100E109.6	100 @ Woodlawn	St. Louis	1	Axis	Q6315-LE	
MO 100	MO100E110.2	100 @ Sappington	St. Louis	1	Axis	Q6315-LE	
MO 100	MO100E110.4	100 @ Warson	St. Louis	1	Axis	Q6315-LE	
MO 100	MO100E110.9	100 @ Kortwright	St. Louis	1	Axis	Q6315-LE	
MO 100	MO100E111.5	100 @ McKnight- Rock Hill	St. Louis	1	Axis	Q6315-LE	
MO 100	MO100E113.7	100 @ Oakland Signal	St. Louis	1	Bosch	inteox 7000i	
MO 100	MO100E114.7	100 @ McCausland	St. Louis City	1	Axis	Q6155-E	
MO 100	MO100E115.2	100 W of St Louis Marketplace	St. Louis City	1	Axis	Q6155-E	
MO 100	MO100E116.7	100 @ Barron	St. Louis City	1	Axis	Q6155-E	
MO 100	MO100E117.7	100 @ S. Boyle	St. Louis City	1	Bosch	inteox 7000i	
MO 100	MO100E120.3	100 @ Truman	St. Louis City	1	Axis	Q6155-E	
MO 100	MO100E121.1	100 @ S. Broadway-4th	St. Louis City	1	Axis	Q6155-E	
MO 100	MO100W071.4	100 @ International/Rabbit's Trl	Franklin	1	Cohu	4220-04 HD	
MO 100	MO100W071.9	100 @ South Point	Franklin	1	Cohu	4220-04 HD	
MO 100	MO100W095.9	100 @ 109	St. Louis	1	Axis	Q6315-LE	
MO 100	MO100W096.7	100 @ Taylor	St. Louis	1	Axis	Q6315-LE	
MO 100	MO100W097.4	100 @ West Glen Farms	St. Louis	1	Axis	Q6315-LE	
MO 100	MO100W098.6	100 @ Old State-Huchinson	St. Louis	1	Axis	Q6315-LE	
MO 100	MO100W102.6	100 @ Baxter-Sulphur Springs	St. Louis	1	Axis	Q6315-LE	
MO 100	MO100W103.6	100 @ Enchanted Parkway	St. Louis	1	Axis	Q6315-LE	
MO 100	MO100W104.2	100 @ Weidman	St. Louis	1	Axis	Q6315-LE	
MO 100	MO100W106.4	100 WB Ramps @ Des Peres	St. Louis	1	Axis	Q6315-LE	
MO 100	MO100W107.2	100 @ Blase	St. Louis	1	Axis	Q6155-E	
MO 100	MO100W107.6	100 @ Lindeman	St. Louis	1	Axis	Q6155-E	
MO 100	MO100W115.9	100 @ Hampton	St. Louis City	1	Cohu	4220-02HD	
MO 100	MO100W117.1	100 @ S. Kingshighway	St. Louis City	1	Axis	Q6075-E	
MO 100	MO100W118.1	100 @ S.Vandeventer	St. Louis City	1	Axis	Q6155-E	
MO 100	MO100W118.5	100 @ S. Spring	St. Louis City	1	Axis	Q6075-E	
MO 100	MO100W118.7	100 @ S. Grand	St. Louis City	1	Axis	Q6155-E	
MO 100	MO100W119.7	100 @ S. Jefferson	St. Louis City	1	Axis	Q6155-E	
MO 100	MO100W120.6	100 @ S. Tucker-11th	St. Louis City	1	Bosch	inteox 7000i	
MO 100	MO100W121.0	100 @ S. 7th	St. Louis City	1	Axis	Q6155-E	
MO 109	MO109N007.9	109 @ Old State	St. Louis	1	Axis	Q6315-LE	
MO 109	MO109N011.8	109 @ Legends	St. Louis	1	Axis	Q6155-E	
MO 109	MO109N013.1	109 @ FF-W	Jefferson	1	Axis	Q6075-E	
MO 115	MO115E000.5	115 @ Brown	St. Louis	1	Axis	Q6315-LE	
MO 115	MO115E002.4	115 @ Hanley	St. Louis	1	Axis	Q6315-LE	
MO 115	MO115E003.1	115 @ Normandy Middle School	St. Louis	1	Axis	Q6315-LE	
MO 115	MO115E005.1	115 @ Jennings Sta.	St. Louis	1	Axis	Q6315-LE	
MO 115	MO115E005.6	115 @ Goodfellow	St. Louis City	1	Axis	Q6315-LE	
MO 115	MO115E006.4	115 @ Union	St. Louis City	1	Axis	Q6315-LE	
MO 115	MO115E006.8	115 @ Kingshighway	St. Louis City	1	Axis	Q6315-LE	
MO 115	MO115E007.8	115 @ Newstead	St. Louis City	1	Axis	Q6315-LE	
MO 115	MO115W002.7	115 @ West-Clearview	St. Louis	1	Axis	Q6315-LE	
MO 115	MO115W003.5	115 @ St Anns Ln	St. Louis	1	Axis	Q6315-LE	
MO 115	MO115W004.0	115 @ U	St. Louis	1	Axis	Q6315-LE	
MO 115	MO115W007.2	115 @ Shreve	St. Louis City	1	Axis	Q6315-LE	
			SUBTOTAL 7	60			

STATE OF MISSOURI
JAMIE F. RANA
NUMBER PE-2005001034
PROFESSIONAL ENGINEER

Jamie F. Rana
07/18/2025 11:21:32 AM
JAMIE F. RANA - CIVIL
MO-PE-2005001034

DATE PREPARED
7/17/2025

ROUTE	STATE
VAR.	MO
DISTRICT	SHEET NO.
SL	2

COUNTY
VARIOUS

JOB NO.
J6Q2026E

CONTRACT ID.

PROJECT NO.

BRIDGE NO.

DESCRIPTION	DATE

MISSOURI HIGHWAYS AND TRANSPORTATION COMMISSION

105 WEST CAPITOL
JEFFERSON CITY, MO 65102
1-888-ASK-MODOT (1-888-275-6636)

QUANTITIY SHEETS
8 OF 32

CCTV INVENTORY (TABLE 8 OF 12)

ROUTE	ID	LOCATION	COUNTY	P.M. CCTV CAMERA, ASSEMBLY, POLE & FIELD CABINET EACH	CAMERA BRAND	DESCRIPTION	REMARKS
MO 115	MO115W008.3	115 @ Fair	St. Louis City	1	Cohu	4220-02HD	
MO 115	MO115W009.0	115 @ Grand	St. Louis City	1	Axis	Q6315-LE	
MO 115	MO115W009.3	115 @ Farrar	St. Louis City	1	Axis	Q6315-LE	
MO 141	MO141N001.7	141 @ Shoreline	St. Louis	1	Cohu	4220HD	
MO 141	MO141N002.4	141 @ Rider Trail (South) NB	St. Louis	1	Cohu	4220-02HD	
MO 141	MO141N009.3	141 @ 340	St. Louis	1	Axis	Q6155-E	
MO 141	MO141N010.1	141 N of AB-Ladue	St. Louis	1	Axis	Q6155-E	
MO 141	MO141N010.9	141 @ AB-Ladue	St. Louis	1	Axis	Q6155-E	
MO 141	MO141N014.6	141 @ Clayworth-Parkway Jr	St. Louis	1	Axis	Q6155-E	
MO 141	MO141N016.7	141 @ Carman	St. Louis	1	Axis	Q6155-E	
MO 141	MO141N019.7	141 @ I-44 EB Ramps	St. Louis	1	Axis	Q6315-LE	
MO 141	MO141N021.6	141 @ Bowles	St. Louis	1	Axis	Q6155-E	
MO 141	MO141N023.2	141 @ 30 WB Ramps	St. Louis	1	Axis	Q6315-LE	
MO 141	MO141N027.9	141 N of Harper	Jefferson	1	Axis	Q6155-E	
MO 141	MO141S000.5	141 @ Corporate Woods North	St. Louis	1	Axis	Q6315-LE	
MO 141	MO141S001.2	141 @ St Charles Rock Rd	St. Louis	1	Axis	Q6315-LE	
MO 141	MO141S001.4	141 @ Rider Trail North	St. Louis	1	Axis	Q6315-LE	
MO 141	MO141S001.7	141 @ Shoreline	St. Louis	1	Cohu	4220HD	
MO 141	MO141S002.1	141 @ Lakefront	St. Louis	1	Bosch	inteox 7000i	
MO 141	MO141S003.8	141 S of Riverport South	St. Louis	1	Axis	Q6155-E	
MO 141	MO141S004.9	141 @ Creve Coeur Mill North	St. Louis	1	Axis	Q6155-E	
MO 141	MO141S005.9	141 N of Creve Coeur Airport	St. Louis	1	Axis	Q6155-E	
MO 141	MO141S006.7	141 @ River Valley	St. Louis	1	Axis	Q6315-LE	
MO 141	MO141S008.1	141 S of 364 EB Ramp	St. Louis	1	Axis	Q6155-E	
MO 141	MO141S011.4	141 @ St. Lukes Hospital	St. Louis	1	Axis	Q6155-E	
MO 141	MO141S011.7	141 @ Conway	St. Louis	1	Axis	Q6155-E	
MO 141	MO141S013.2	141 N of Clayton	St. Louis	1	Axis	Q6155-E	
MO 141	MO141S013.4	141 @ Clayton SB Ramp	St. Louis	1	Axis	Q6155-E	
MO 141	MO141S014.0	141 N of Milldale-Manors Way	St. Louis	1	Axis	Q6155-E	
MO 141	MO141S015.7	141 @ 100 SWQ	St. Louis	1	Axis	Q6155-E	
MO 141	MO141S017.5	141 @ Big Bend SWQ	St. Louis	1	Axis	Q6155-E	
MO 141	MO141S019.1	141 @ Marshall NWQ	St. Louis	1	Axis	Q6155-E	
MO 141	MO141S020.2	141 N of Centurion	St. Louis	1	Axis	Q6155-E	
MO 141	MO141S020.8	141 @ Hawkins-Gladiator	St. Louis	1	Axis	Q6155-E	
MO 141	MO141S024.8	141 S of Highview	Jefferson	1	Axis	Q6155-E	
MO 141	MO141S025.9	141 @ Fiedler	Jefferson	1	Axis	Q6155-E	
MO 141	MO141S027.1	141 @ 21	Jefferson	1	Axis	Q6155-E	
MO 141	MO141S028.9	141 @ Astra Way	Jefferson	1	Axis	Q6075-E	
MO 141	MO141S030.0	141 @ Church-Old Lemay Ferry	Jefferson	1	Cohu	4220-02HD	
MO 180	MO180E000.3	180 @ Natural Bridge-Mareschal	St. Louis	1	Axis	Q6155-E	
MO 180	MO180E000.7	180 @ McKelvey	St. Louis	1	Axis	Q6315-LE	
MO 180	MO180E001.7	180 @ I-70 EB Ramps	St. Louis	1	Axis	Q6155-E	
MO 180	MO180E002.8	180 @ Adie	St. Louis	1	Axis	Q6155-E	
MO 180	MO180E003.4	180 @ Ashby	St. Louis	1	Axis	Q6315-LE	
MO 180	MO180E003.8	180 @ St. Gregory	St. Louis	1	Axis	Q6315-LE	
MO 180	MO180E004.8	180 @ Edmundson	St. Louis	1	Axis	Q6315-LE	
MO 180	MO180E007.2	180 @ Hanley	St. Louis	1	Axis	Q6315-LE	
MO 180	MO180E007.9	180 @ Normandy	St. Louis	1	Axis	Q6315-LE	
MO 180	MO180E008.3	180 @ Pennsylvania	St. Louis	1	Axis	Q6315-LE	
MO 180	MO180E008.9	180 @ Kingsland	St. Louis	1	Axis	Q6315-LE	
MO 180	MO180E009.6	180 @ Ogden	St. Louis	1	Axis	Q6315-LE	
MO 180	MO180W001.2	180 @ Harmony	St. Louis	1	Axis	Q6315-LE	
MO 180	MO180W002.2	180 @ Fee Fee	St. Louis	1	Axis	Q6315-LE	
MO 180	MO180W002.5	67 @ 180	St. Louis	1	Cohu	4220-02HD	
MO 180	MO180W005.1	180 @ Woodson	St. Louis	1	Axis	Q6315-LE	
MO 180	MO180W005.7	180 @ Brown	St. Louis	1	Axis	Q6315-LE	
MO 180	MO180W006.0	180 @ McKibbon	St. Louis	1	Axis	Q6315-LE	
MO 180	MO180W009.4	180 @ Lucas-Hunt	St. Louis	1	Axis	Q6075-E	
MO 185	MO185S031.2	185 @ Elmont	Franklin	1	Bosch	inteox 7000i	
MO 185	MO185S031.2	185 @ Springfield	Franklin	1	Bosch	inteox 7000i	
			SUBTOTAL 8	60			

STATE OF MISSOURI
JAMIE F. RANA
NUMBER PE-2005001034
PROFESSIONAL ENGINEER

Jamie F. Rana
07/18/2025 11:21:54 AM
JAMIE F. RANA - CIVIL
MO-PE-2005001034

DATE PREPARED
7/17/2025

ROUTE	STATE
VAR.	MO
DISTRICT	SHEET NO.
SL	2

COUNTY
VARIOUS

JOB NO.
J6Q2026E

CONTRACT ID.

PROJECT NO.

BRIDGE NO.

DESCRIPTION	DATE

MISSOURI HIGHWAYS AND TRANSPORTATION COMMISSION
105 WEST CAPITOL
JEFFERSON CITY, MO 65102
1-888-ASK-MODOT (1-888-275-6636)

QUANTITIY SHEETS
9 OF 32

CCTV INVENTORY (TABLE 9 OF 12)

ROUTE	ID	LOCATION	COUNTY	P.M. CCTV CAMERA, ASSEMBLY, POLE & FIELD CABINET EACH	CAMERA BRAND	DESCRIPTION	REMARKS
MO 231	MO231N000.5	231 @ Hoffmeister	St. Louis	1	Axis	Q6315-LE	
MO 231	MO231N001.1	231 @ Ripa	St. Louis	1	Axis	Q6315-LE	
MO 231	MO231N003.1	231 @ Sappington Barracks	St. Louis	1	Axis	Q6315-LE	
MO 231	MO231S002.3	231 @ Telegraph-Kingston	St. Louis	1	Cohu	4220HD	
MO 231	MO231S004.3	231 @ Forder	St. Louis	1	Axis	Q6315-LE	
MO 231	MO231S004.8	231 @ Yaeger	St. Louis	1	Axis	Q6315-LE	
MO 231	MO231S005.3	231 @ Cliff Cave-Baumgartner	St. Louis	1	Axis	Q6315-LE	
MO 231	MO231S005.9	231 @ Black Forest	St. Louis	1	Axis	Q6315-LE	
MO 231	MO231S006.7	231 @ Christopher	St. Louis	1	Axis	Q6315-LE	
MO 231	MO231S008.1	231 @ Becker-Tollgate	St. Louis	1	Axis	Q6315-LE	
MO 267	MO267N001.7	267 @ Telegraph	St. Louis	1	Axis	Q6315-LE	
MO 267	MO267N003.1	267 @ Buckley	St. Louis	1	Axis	Q6315-LE	
MO 267	MO267N003.6	267 @ Will	St. Louis	1	Axis	Q6315-LE	
MO 267	MO267N004.1	267 @ Victory	St. Louis	1	Axis	Q6315-LE	
MO 267	MO267N004.6	267 @ 61	St. Louis	1	Axis	Q6315-LE	
MO 267	MO267S001.1	267 @ Bayless	St. Louis	1	Axis	Q6315-LE	
MO 340	MO340E002.6	340 @ Wilson-Clarkson Woods	St. Louis	1	Axis	Q6315-LE	
MO 340	MO340E003.8	340 @ Lea Oak	St. Louis	1	Bosch	inteox 7000i	
MO 340	MO340E006.4	340 @ Ladue	St. Louis	1	Bosch	inteox 7000i	
MO 340	MO340E008.6	340 @ Woods Mill	St. Louis	1	Axis	Q6075-E	
MO 340	MO340E009.9	340 @ Fee Fee / Rue La Ville	St. Louis	1	Axis	Q6315-LE	
MO 340	MO340E011.8	340 @ New Ballas	St. Louis	1	Axis	Q6075-E	
MO 340	MO340E015.9	340 @ Dielman	St. Louis	1	Axis	Q6315-LE	
MO 340	MO340W000.2	340 @ Froesel	St. Louis	1	Axis	Q6155-E	
MO 340	MO340W000.8	340 @ Clayton	St. Louis	1	Axis	Q6315-LE	
MO 340	MO340W002.0	340 @ Kehrs Mill	St. Louis	1	Axis	Q6155-E	
MO 340	MO340W008.3	340 @ River Valley	St. Louis	1	Axis	Q6075-E	
MO 340	MO340W009.2	340 @ Creve Coeur Mill	St. Louis	1	Axis	Q6315-LE	
MO 340	MO340W009.7	340 @ Fernview	St. Louis	1	Axis	Q6315-LE	
MO 340	MO340W010.2	340 @ Timber Run	St. Louis	1	Axis	Q6155-E	
MO 340	MO340W010.8	340 @ Ross-Questover	St. Louis	1	Axis	Q6075-E	
MO 340	MO340W011.0	340 @ Tempo Dr	St. Louis	1	Axis	Q6315-LE	
MO 340	MO340W012.3	340 @ Craig	St. Louis	1	Axis	Q6315-LE	
MO 340	MO340W012.9	340 @ Schulte - Mary Meadows	St. Louis	1	Cohu	4220-02HD	
MO 340	MO340W014.0	340 @ 67	St. Louis	1	Cohu	4220HD	
MO 340	MO340W016.6	340 @ McKnight-Woodson	St. Louis	1	Axis	Q6155-E	
MO 364	MO364E006.7	364 W of Gutermuth	St. Charles	1	Axis	Q6155-E	
MO 364	MO364E008.0	364 W of Mid Rivers Mall	St. Charles	1	Axis	Q6155-E	
MO 364	MO364E009.5	364 SOR-S St Peters @ Kisker	St. Charles	1	Axis	Q6315-LE	
MO 364	MO364E010.0	364 SOR-S St Peters @ Central School	St. Charles	1	Axis	Q6155-E	
MO 364	MO364E011.7	364 SOR-S St Peters @ Harvester	St. Charles	1	Axis	Q6075-E	
MO 364	MO364E015.9	364 E of Missouri River	St. Louis	1	Cohu	4220-02HD	
MO 364	MO364E017.6	364 @ 141 SWQ	St. Louis	1	Axis	Q6155-E	
MO 364	MO364E019.9	364 @ Bennington SWQ	St. Louis	1	Axis	Q6155-E	
MO 364	MO364W000.4	364 @ Henke	St. Charles	1	Axis	Q6155-E	
MO 364	MO364W001.9	364 @ Bryan	St. Charles	1	Axis	Q6155-E	
MO 364	MO364W004.4	364 @ K	St. Charles	1	Axis	Q6155-E	
MO 364	MO364W008.6	364 @ Mid Rivers Mall	St. Charles	1	Axis	Q6155-E	
MO 364	MO364W010.0	364 @ Central School	St. Charles	1	Axis	Q6155-E	
MO 364	MO364W011.0	364 NOR-St Peters @ Jungermann	St. Charles	1	Axis	Q6155-E	
MO 364	MO364W012.6	364 @ Jungs Sta_Upper CCTV	St. Charles	1	Axis	Q6155-E	
MO 364	MO364W012.6	Jungs Sta @ 364_Lower CCTV	St. Charles	1	Axis	Q6155-E	
MO 364	MO364W014.7	364 @ Upper Bottom WB Ramp	St. Charles	1	Axis	Q6315-LE	
MO 364	MO364W015.1	364 @ Upper Bottom NEQ	St. Charles	1	Axis	Q6155-E	
MO 364	MO364W019.0	364 @ Amiot NEQ	St. Louis	1	Cohu	4220HD	
MO 366	MO366E002.0	366 @ Sturdy	St. Louis	1	Axis	Q6315-LE	
MO 366	MO366E003.4	366 @ Pardee	St. Louis	1	Axis	Q6315-LE	
MO 366	MO366E004.1	366 @ Rock Hill-Elm	St. Louis	1	Axis	Q6315-LE	
MO 366	MO366E006.1	366 @ Trianon	St. Louis	1	Axis	Q6315-LE	
MO 366	MO366E006.8	366 @ P	St. Louis	1	Axis	Q6315-LE	
			SUBTOTAL 9	60			

STATE OF MISSOURI
JAMIE F. RANA
NUMBER PE-2005001034
PROFESSIONAL ENGINEER

Jamie F. Rana
07/18/2025 11:18:08 AM
JAMIE F. RANA - CIVIL
MO-PE-2005001034

DATE PREPARED
7/17/2025

ROUTE	STATE
VAR.	MO
DISTRICT	SHEET NO.
SL	2

COUNTY
VARIOUS

JOB NO.
J6Q2026E

CONTRACT ID.

PROJECT NO.

BRIDGE NO.

DESCRIPTION	DATE

MISSOURI HIGHWAYS AND TRANSPORTATION COMMISSION

105 WEST CAPITOL
JEFFERSON CITY, MO 65102
1-888-ASK-MODOT (1-888-275-6636)

QUANTITIY SHEETS
10 OF 32

CCTV INVENTORY (TABLE 10 OF 12)

ROUTE	ID	LOCATION	COUNTY	P.M. CCTV CAMERA, ASSEMBLY, POLE & FIELD CABINET EACH	CAMERA BRAND	DESCRIPTION	REMARKS
MO 366	MO366W002.6	366 @ New Sappington	St. Louis	1	Axis	Q6315-LE	
MO 366	MO366W003.0	366 @ Crestwood Plaza Ent. West	St. Louis	1	Axis	Q6315-LE	
MO 366	MO366W003.2	366 @ Crestwood Plaza Ent. East	St. Louis	1	Axis	Q6315-LE	
MO 366	MO366W005.1	366 @ Laclede Sta.	St. Louis	1	Axis	Q6315-LE	
MO 367	MO367N000.0	367 @ 67	St. Louis	1	Axis	Q6155-E	
MO 367	MO367N001.0	367 S of New Jamestown	St. Louis	1	Axis	Q6315-LE	
MO 367	MO367N001.6	367 @ Parker	St. Louis	1	Axis	Q6315-LE	
MO 367	MO367S002.8	367 @ Dunn	St. Louis	1	Axis	Q6155-E	
MO 367	MO367S003.6	MO 367 @ EB I-270	St. Louis	1	Axis	Q6155-E	
MO 370	MO370E008.8	370 E of MO River	St. Louis	1	Axis	Q6155-E	
MO 370	MO370E009.4	370 @ 141-Missouri Bottom	St. Louis	1	Axis	Q6155-E	
MO 370	MO370E011.6	370 @ St. Louis Mills	St. Louis	1	Axis	Q6075-E	
MO 370	MO370W001.2	370 @ Salt River Road	St. Charles	1	Axis	Q6315-LE	
MO 370	MO370W002.6	370 @ Harry S Truman	St. Charles	1	Axis	Q6075-E	
MO 370	MO370W002.6	370 @ Lakeside Park WB Ramp	St. Charles	1	WTI	VS720-H.264-HD30	
MO 370	MO370W004.2	370 W of Elm	St. Charles	1	Axis	Q6155-E	
MO 370	MO370W005.1	370 @ Elm-New Town WB Ramp	St. Charles	1	Axis	Q6155-E	
MO 370	MO370W006.2	370 @ Boschertown	St. Charles	1	Axis	Q6315-LE	
MO 370	MO370W007.0	370 W of 94	St. Charles	1	Axis	Q6155-E	
MO 370	MO370W007.9	370 @ 94	St. Charles	1	Axis	Q6315-LE	
MO 370	MO370W010.7	370 W of St. Louis Mills	St. Louis	1	Axis	Q6155-E	
MO 370	MO370W011.4	370 @ St. Louis Mills	St. Louis	1	Bosch	inteox⊕7000i	
OR 21	OR021N000.4	Old MO 21 @ Konert Road	Jefferson	1	Axis	Q6315-LE	
NOR 64	OR064N001.6	I-64 NOR-Mastercard @ Winghaven	St. Charles	1	Bosch	inteox 7000i	
NOR 70	OR070W000.4	I-70 NOR @ Convention Center	St. Charles	1	Axis	Q6315-LE	
NOR 70	OR070W001.2	I-70 NOR-W Terra @ Woodlawn	St. Charles	1	Axis	Q6315-LE	
SOR 270	OR270E027.9	I-270 SOR-Pershall @ Rt N-Jean	St. Louis	1	Axis	Q6155-E	
SOR 270	OR270E033.4	I-270 SOR-Pershall W of Lilac	St. Louis	1	Axis	Q6155-E	
NOR 270	OR270W026.9	I-270 NOR-Dunn @ Graham	St. Louis	1	Axis	Q6155-E	
NOR 270	OR270W026.9	I-270 NOR-Dunn @ Graham	St. Louis	1	Axis	Q6155-E	
NOR 270	OR270W027.2	I-270 NOR-Dunn @ Pedestrian Bridge	St. Louis	1	Axis	Q6155-E	
NOR 270	OR270W027.9	I-270 NOR-Dunn @ Rt N	St. Louis	1	Axis	Q6155-E	
NOR 270	OR270W028.4	I-270 NOR-Dunn @ Washington	St. Louis	1	Cohu	4220HD	
NOR 270	OR270W029.9	I-270 NOR-Dunn @ W. Florissant	St. Louis	1	Axis	Q6315-LE	
NOR 270	OR270W031.0	Old Halls Ferry @ I-270 NOR-Dunn	St. Louis	1	Axis	Q6155-E	
NOR 270	OR270W033.1	I-270 NOR-Dunn @ Bellefontaine	St. Louis	1	Axis	Q6315-LE	
RT A	RT00AE001.7	A @ GM West	St. Charles	1	Axis	Q6155-E	
RT A	RT00AW001.0	A @ Mexico-Enterprise	St. Charles	1	Axis	Q6315-LE	
RT A	RT00AW008.8	A @ Pounds	Jefferson	1	Axis	Q6075-E	
RT D	RT00DE003.1	D @ LinPage	St. Louis	1	Axis	Q6315-LE	
RT D	RT00DE005.2	D @ Woodson	St. Louis	1	Axis	Q6315-LE	
RT D	RT00DE007.1	D @ Hanley	St. Louis	1	Axis	Q6315-LE	
RT D	RT00DE008.0	D @ Pennsylvania	St. Louis	1	Axis	Q6315-LE	
RT D	RT00DE009.4	D @ Skinker-Kienlen	St. Louis City	1	Axis	Q6315-LE	
RT D	RT00DE009.6	D @ Hamilton	St. Louis City	1	Axis	Q6315-LE	
RT D	RT00DE010.6	D @ Union	St. Louis City	1	Cohu	4220HD	
RT D	RT00DE011.3	D @ Kingshighway	St. Louis City	1	Cohu	4200 HD	
RT D	RT00DE013.2	D @ Grand	St. Louis City	1	Cohu	4220HD	
RT D	RT00DW001.2	D W of Schuetz	St. Louis	1	Axis	Q6075-E	
RT D	RT00DW001.9	D @ Ball-Westport Center	St. Louis	1	Axis	Q6315-LE	
RT D	RT00DW002.6	D @ 67 NWQ	St. Louis	1	Axis	Q6155-E	
RT D	RT00DW003.6	D @ Ashby	St. Louis	1	Axis	Q6315-LE	
RT D	RT00DW004.5	D @ Dielman	St. Louis	1	Axis	Q6315-LE	
RT D	RT00DW006.0	D @ Walton	St. Louis	1	Axis	TBD	
RT D	RT00DW006.2	D @ Crystal Industrial Ct Midblock Crossing	St. Louis	1	Axis	TBD	
RT D	RT00DW006.7	D @ North and South	St. Louis	1	Axis	Q6315-LE	
RT D	RT00DW011.9	D @ Taylor	St. Louis City	1	Cohu	4220HD	
RT D	RT00DW012.8	D @ Vandeventer	St. Louis City	1	Axis	Q6075-E	
RT H	RT00HN003.6	H @ Riverview	St. Louis City	1	Axis	Q6315-LE	
RT H	RT00HN004.4	H @ Gimblin	St. Louis City	1	Cohu	4220-02HD	
			SUBTOTAL 10	60			

STATE OF MISSOURI
JAMIE F. RANA
NUMBER PE-2005001034
PROFESSIONAL ENGINEER
Jamie F. Rana
07/18/2025 11:18:27 AM
JAMIE F. RANA - CIVIL
MO-PE-2005001034

DATE PREPARED
7/17/2025

ROUTE	STATE
VAR.	MO
DISTRICT	SHEET NO.
SL	2

COUNTY
VARIOUS

JOB NO.
J6Q2026E

CONTRACT ID.

PROJECT NO.

BRIDGE NO.

DATE	DESCRIPTION

MISSOURI HIGHWAYS AND TRANSPORTATION COMMISSION
105 WEST CAPITOL
JEFFERSON CITY, MO 65102
1-888-ASK-MODOT (1-888-275-6636)

QUANTITIY SHEETS
11 OF 32

CCTV INVENTORY (TABLE 11 OF 12)

ROUTE	ID	LOCATION	COUNTY	P.M. CCTV CAMERA, ASSEMBLY, POLE & FIELD CABINET EACH	CAMERA BRAND	DESCRIPTION	REMARKS
RT H	RT00HN007.1	H @ Adelaide	St. Louis City	1	Cohu	4220-02HD	
RT K	RT00KN000.2	K @ Veterans Memorial Parkway	St. Charles	1	Axis	Q6315-LE	
RT K	RT00KN000.8	K @ Mexico	St. Charles	1	Axis	Q6155-E	
RT K	RT00KN001.1	K @ Clear Creek-Megan	St. Charles	1	Bosch	inteox 7000i	
RT K	RT00KN001.6	K @ Feise-Laura Hill	St. Charles	1	Axis	Q6155-E	
RT K	RT00KN004.0	K @ Waterford-Pheasant Mead	St. Charles	1	Axis	Q6315-LE	
RT K	RT00KN005.7	K @ Waterbury Falls	St. Charles	1	Axis	Q6155-E	
RT K	RT00KS002.1	K @ Hutchings Farm	St. Charles	1	Bosch	inteox 7000i	
RT K	RT00KS002.8	K @ Royallsprings-Fallon	St. Charles	1	Cohu	4220-02HD	
RT K	RT00KS003.2	K @ N	St. Charles	1	Axis	Q6155-E	
RT K	RT00KS004.9	K @ O'Fallon	St. Charles	1	Axis	Q6315-LE	
RT M	RT00MN000.0	M @ P	St. Charles	1	Axis	Q6315-LE	
RT N	RT00NE009.6	N @ Lake St. Louis	St. Charles	1	Pelco	Esprit - ES6230	
RT N	RT00NE010.4	N @ R. Reagan-Sommers	St. Charles	1	Axis	Q6155-E	
RT N	RT00NE010.7	N @ Hawk Ridge	St. Charles	1	Bosch	inteox 7000i	
RT N	RT00NE012.9	364 SOR @ Bryan-Winghaven	St. Charles	1	Axis	Q6315-LE	
RT N	RT00NW007.2	N @ Perry Cate	St. Charles	1	Bosch	inteox 7000i	
RT U	RT00US000.7	U @ Lutheran North High	St. Louis	1	Cohu	4220-02HD	
RT U	RT00US001.0	U @ Burrwood	St. Louis	1	Axis	Q6315-LE	
RT Z	RT00ZS000.3	Z @ Interstate Dr	St. Charles	1	Bosch	inteox 7000i	
RT Z	RT00ZS002.6	Z @ N	St. Charles	1	Axis	Q6315-LE	
RT AB	RT0ABE003.0	AB @ Couer De Ville	St. Louis	1	Axis	Q6155-E	
RT AB	RT0ACN005.8	AC @ I-270 NOR-Dunn	St. Louis	1	Axis	Q6155-E	
RT AB	RT0ACN006.1	AC @ Old Pershall/Home Depot	St. Louis	1	Axis	Q6155-E	
RT DD	RT0DDN009.4	DD @ Caledonia	St. Charles	1	Cohu	4220-02HD	
RT EE	RT0EEN000.0	EE @ Natural Bridge	St. Louis	1	Axis	Q6315-LE	
RT EE	RT0EEN000.6	EE @ Guthrie	St. Louis	1	Axis	Q6315-LE	
RT EE	RT0EEN001.1	EE @ North	St. Louis	1	Axis	Q6315-LE	
RT JJ	RT0JJN000.0	Ballas @ I-64 WB Ramps	St. Louis	1	Axis	Q6155-E	
US 50	US050E216.1	50 @ Independence	Franklin	1	Axis	Q6315-LE	
US 50	US050E216.7	50 @ Hoover	Franklin	1	Axis	Q6315-LE	
US 50	US050E217.1	50 @ Oak	Franklin	1	Axis	Q6315-LE	
US 50	US050W217.6	50 @ 47 North	Franklin	1	Axis	Q6315-LE	
US 61	US061N005.8	61 @ Mueller SEQ	St. Louis	1	Axis	Q6155-E	
US 61	US061N006.5	61 @ 21 SEQ	St. Louis	1	Cohu	4220-03HD	
US 61	US061N008.1	61 @ 30 SEQ	St. Louis	1	Axis	Q6155-E	
US 61	US061N008.5	61 @ S Geyer NEQ	St. Louis	1	Axis	Q6155-E	
US 61	US061N009.6	61 @ W Watson-Eddie & Park	St. Louis	1	Axis	Q6155-E	
US 61	US061N135.3	61 @ A NB Ramp	St. Charles	1	Axis	Q6155-E	
US 61	US061S005.5	61 @ E Concord NEQ	St. Louis	1	Axis	Q6155-E	
US 61	US061S006.9	61 @ Hackberry NEQ	St. Louis	1	Axis	Q6155-E	
US 61	US061S007.7	61 @ Sappington SEQ	St. Louis	1	Axis	Q6155-E	
US 61	US061S010.2	61 @ Watson NWQ	St. Louis	1	Axis	Q6155-E	
US 61	US061S010.9	61 @ Big Bend SEQ	St. Louis	1	Axis	Q6155-E	
US 61	US061S135.3	61 @ A SB Ramp	St. Charles	1	Axis	Q6315-LE	
US 61	US061S136.1	61 @ E Pitman SB ramps	St. Charles	1	Axis	Q6075-E	
US 61	US061S177.4	61 @ Forder	St. Louis	1	Axis	Q6155-E	
US 67	US067N009.4	67 @ Sunswept Park	St. Louis	1	Axis	Q6155-E	
US 67	US067N013.0	67 @ Manresa	St. Louis	1	Axis	Q6155-E	
US 67	US067N014.1	67 @ I-270	St. Louis	1	Axis	Q6155-E	
US 67	US067N015.2	67 @ McDonnell	St. Louis	1	Axis	Q6315-LE	
US 67	US067N015.8	67 @ Missouri Bottom-Banshee	St. Louis	1	Axis	Q6155-E	
US 67	US067N016.7	67 @ Tunnel-ELEC ROOM CCTV-16	St. Louis	1	Cohu	3430HD Fixed	
US 67	US067N016.7	67 @ Tunnel-FUEL ROOM CCTV-18	St. Louis	1	Cohu	3430HD Fixed	
US 67	US067N016.7	67 @ Tunnel-N CONTROL ROOM CCTV-12	St. Louis	1	Cohu	3430HD Fixed	
US 67	US067N016.7	67 @ Tunnel-NB ENTR CCTV-13	St. Louis	1	Axis	Q6315-LE	
US 67	US067N016.7	67 @ Tunnel-NB EXIT CCTV-02	St. Louis	1	Axis	Q6315-LE	
US 67	US067N016.7	67 @ Tunnel-S CONTROL ROOM CCTV-11	St. Louis	1	Cohu	3430HD Fixed	
US 67	US067N016.7	67 @ Tunnel-S CONTROL ROOM CCTV-15	St. Louis	1	Cohu	3430HD Fixed	
US 67	US067N016.7	67 @ Tunnel-S MAIN ENTR CCTV-17	St. Louis	1	Cohu	3430HD Fixed	
			SUBTOTAL 11	60			

STATE OF MISSOURI
JAMIE F. RANA
NUMBER PE-2005001034
PROFESSIONAL ENGINEER

Jamie F. Rana
07/18/2025 11:18:56 AM
JAMIE F. RANA - CIVIL
MO-PE-2005001034

DATE PREPARED
7/17/2025

ROUTE	STATE
VAR.	MO
DISTRICT	SHEET NO.
SL	2

COUNTY
VARIOUS

JOB NO.
J6Q2026E

CONTRACT ID.

PROJECT NO.

BRIDGE NO.

DATE	DESCRIPTION

MISSOURI HIGHWAYS AND TRANSPORTATION COMMISSION
105 WEST CAPITOL
JEFFERSON CITY, MO 65102
1-888-ASK-MODOT (1-888-275-6636)

QUANTITIY SHEETS
12 OF 32

CCTV INVENTORY (TABLE 12 OF 12)

ROUTE	ID	LOCATION	COUNTY	P.M. CCTV CAMERA, ASSEMBLY, POLE & FIELD CABINET EACH	CAMERA BRAND	DESCRIPTION	REMARKS
US 67	US067N016.7	67 @ Tunnel-ZONE 1 CCTV-03	St. Louis	1	Cohu	4260HD RISE Positioner	
US 67	US067N016.7	67 @ Tunnel-ZONE 2 CCTV-04	St. Louis	1	Cohu	4260HD RISE Positioner	
US 67	US067N016.7	67 @ Tunnel-ZONE 3 CCTV-05	St. Louis	1	Cohu	4260HD RISE Positioner	
US 67	US067N016.7	67 @ Tunnel-ZONE 4&5 CCTV-06	St. Louis	1	Cohu	4260HD RISE Positioner	
US 67	US067N018.0	I-70 @ 67	St. Louis	1	Cohu	4220HD	
US 67	US067N018.9	67 @ Old St Charles Rd	St. Louis	1	Axis	Q6315-LE	
US 67	US067N020.6	67 @ Dorsett-Midland	St. Louis	1	Axis	Q6315-LE	
US 67	US067N022.3	67 @ Schuetz-Baur	St. Louis	1	Axis	Q6155-E	
US 67	US067N037.5	61 @ I-255 EB Ramps	St. Louis	1	Axis	Q6155-E	
US 67	US067N040.9	61 @ Meramec Bottom-Baumgartner	St. Louis	1	Axis	Q6155-E	
US 67	US067N042.3	61 @ Tenbrook	Jefferson	1	Axis	Q6075-E	
US 67	US067N048.4	61 @ Imperial Main	Jefferson	1	Axis	Q6315-LE	
US 67	US067N050.5	61 @ M	Jefferson	1	Axis	Q6155-E	
US 67	US067N057.4	61 @ McNutt	Jefferson	1	Axis	Q6155-E	
US 67	US067N060.0	61 @ Bailey	Jefferson	1	Axis	Q6155-E	
US 67	US067S002.7	67 @ 94	St. Charles	1	Axis	Q6155-E	
US 67	US067S004.5	67 S of Missouri River	St. Louis	1	Axis	Q6155-E	
US 67	US067S006.7	67 W of Robbins Mill	St. Louis	1	Axis	Q6155-E	
US 67	US067S008.8	67 @ Old Halls Ferry	St. Louis	1	Axis	Q6155-E	
US 67	US067S009.9	67 @ New Halls Ferry	St. Louis	1	Axis	Q6315-LE	
US 67	US067S011.0	67 @ New Florissant	St. Louis	1	Axis	Q6155-E	
US 67	US067S012.0	67 @ Patterson	St. Louis	1	Axis	Q6315-LE	
US 67	US067S013.8	67 @ Lynn Haven	St. Louis	1	Axis	Q6315-LE	
US 67	US067S014.0	67 @ I-270	St. Louis	1	Axis	Q6155-E	
US 67	US067S016.7	67 @ Tunnel-SB ENTR CCTV-01	St. Louis	1	Axis	Q6315-LE	
US 67	US067S016.7	67 @ Tunnel-SB EXIT CCTV-14	St. Louis	1	Axis	Q6315-LE	
US 67	US067S016.7	67 @ Tunnel-ZONE 10 CCTV-10	St. Louis	1	Cohu	4260HD RISE Positioner	
US 67	US067S016.7	67 @ Tunnel-ZONE 6&7 CCTV-07	St. Louis	1	Cohu	4260HD RISE Positioner	
US 67	US067S016.7	67 @ Tunnel-ZONE 8 CCTV-08	St. Louis	1	Cohu	4260HD RISE Positioner	
US 67	US067S016.7	67 @ Tunnel-ZONE 9 CCTV-09	St. Louis	1	Cohu	4260HD RISE Positioner	
US 67	US067S023.7	67 @ Ladue	St. Louis	1	Axis	Q6155-E	
US 67	US067S025.1	67 S of Chaminade	St. Louis	1	Axis	Q6155-E	
US 67	US067S025.2	67 @ Clayton	St. Louis	1	Axis	Q6075-E	
US 67	US067S025.5	67 @ Plaza Frontenac-Driftwood	St. Louis	1	Axis	Q6315-LE	
US 67	US067S039.2	61 @ Butler Hill	St. Louis	1	Axis	Q6155-E	
US 67	US067S042.7	61 @ 141	Jefferson	1	Axis	Q6315-LE	
US 67	US067S045.4	61 @ Richardson	Jefferson	1	Axis	Q6155-E	
US 67	US067S045.8	61 @ 231	Jefferson	1	Axis	Q6155-E	
US 67	US067S054.4	61 @ Z	Jefferson	1	Axis	Q6155-E	
US 67	US067S059.5	61 @ 6th-8th	Jefferson	1	Axis	Q6155-E	
US 67	US067S060.7	61 @ A	Jefferson	1	Axis	Q6155-E	
US 67	US067S061.5	61 @ American Legion	Jefferson	1	Axis	Q6155-E	
US 67	US067S062.7	67 @ CC	Jefferson	1	Axis	Q6155-E	
US 67	US067S065.1	67 @ Meyer	Jefferson	1	Axis	Q6155-E	

SUBTOTAL 12	44
SUBTOTAL 11	60
SUBTOTAL 10	60
SUBTOTAL 9	60
SUBTOTAL 8	60
SUBTOTAL 7	60
SUBTOTAL 6	60
SUBTOTAL 5	60
SUBTOTAL 4	60
SUBTOTAL 3	60
SUBTOTAL 2	60
SUBTOTAL 1	60
PAY TOTAL	704

NOTE: CAMERA MODEL AND TYPE ARE SUBJST TO CHANGE DUE TO CCTV REPLACEMENT PROJECTS

STATE OF MISSOURI
JAMIE F. RANA
NUMBER PE-2005001034
PROFESSIONAL ENGINEER
Jamie F. Rana
07/17/2025 12:56:38 PM
JAMIE F. RANA - CIVIL
MO-PE-2005001034

DATE PREPARED: 7/17/2025

ROUTE	STATE
VAR.	MO
DISTRICT	SHEET NO.
SL	2

COUNTY: VARIOUS

JOB NO.: J6Q2026E

CONTRACT ID.

PROJECT NO.

BRIDGE NO.

DATE	DESCRIPTION

MISSOURI HIGHWAYS AND TRANSPORTATION COMMISSION

105 WEST CAPITOL
JEFFERSON CITY, MO 65102
1-888-ASK-MODOT (1-888-275-6636)

QUANTITIY SHEETS
13 OF 32

DYNAMIC MESSAGE SIGN INVENTORY (TABLE 1 OF 3)

ROUTE	ID	LOCATION	COUNTY	P.M. DMS, ASSEMBLY POLE, FOUNDATION & FIELD CABINET (EA)	MANUFACTURER	DESCRIPTION	COMMENTS
I-44	IS044E246.4	I-44 W of Shawneetown Ford	Franklin	1	Ledstar	Fiber Rural DMS 27 x 90	
I-44	IS044E249.9	I-44 @ American Inn	Franklin	1	Ledstar	Wireless Rural DMS 27 x 90	
I-44	IS044E255.0	I-44 W of Allenton	Franklin	1	Ledstar	Large Walk In 36 x 105	
I-44	IS044E260.0	I-44 E of Pacific-Viaduct - W of Lewis	St. Louis	1	Ledstar	Large Walk In 36 x 105	
I-44	IS044E263.4	I-44 W of 109	St. Louis	1	Ledstar	Large Walk In 36 x 105	
I-44	IS044E271.8	I-44 W of 141	St. Louis	1	Ledstar	Large Walk In 36 x 105	
I-44	IS044E274.9	I-44 @ Mraz	St. Louis	1	Daktronics	COLOR DAKTRONICS 120 x 336	
I-44	IS044E279.7	I-44 E of Big Bend	St. Louis	1	Ledstar	Large Walk In 36 x 105	
I-44	IS044E287.9	I-44 E of Vandeventer	St. Louis City	1	Ledstar	Large Walk In 36 x 105	
I-44	IS044E292.9	I-44 W of Cass	St. Louis City	1	SES America	SESA COLOR 112 x 336	
I-44	IS044W249.9	I-44 @ American Inn	Franklin	1	Ledstar	Wireless Rural DMS 27 x 90	
I-44	IS044W255.1	I-44 E of MO 100 Gray Summit	Franklin	1	Ledstar	Wireless Rural DMS 27 x 90	
I-44	IS044W260.2	I-44 W of Six Flags	St. Louis	1	Ledstar	Fiber Rural DMS 27 x 90	
I-44	IS044W264.0	I-44 W of 109	St. Louis	1	Ledstar	Large Walk In 36 x 105	
I-44	IS044W265.5	I-44 W of Lewis	St. Louis	1	Ledstar	Large Walk In 36 x 105	
I-44	IS044W275.1	I-44 E of Mraz	St. Louis	1	Ledstar	Large Walk In 36 x 105	
I-44	IS044W279.7	I-44 W of Berry	St. Louis	1	Ledstar	Large Walk In 36 x 105	
I-44	IS044W282.5	I-44 W of Murdoch	St. Louis	1	Daktronics	COLOR DAKTRONICS 120 x 336	
I-44	IS044W288.1	I-44 W of Grand	St. Louis City	1	Ledstar	Large Walk In 36 x 105	
I-55	IS055N171.9	I-55 N of 61	Jefferson	1	Ledstar	Large Walk In 36 x 105	
I-55	IS055N183.5	I-55 @ Haefner (S of Rte M)	Jefferson	1	Ledstar	Large Walk In 36 x 105	
I-55	IS055N190.9	I-55 S of 141	Jefferson	1	Ledstar	Large Walk In 36 x 105	
I-55	IS055N195.4	I-55 S of Butler Hill	St. Louis	1	Daktronics	COLOR DAKTRONICS 120 x 336	
I-55	IS055N199.0	I-55 N of 61	St. Louis	1	Ledstar	Large Walk In 36 x 105	
I-55	IS055N206.2	I-55 @ Gasconade NB Ramp	St. Louis City	1	SES America	SESA COLOR 112 x 336	
I-55	IS055N208.2	I-55 @ Lafayette (S of 7th)	St. Louis City	1	SES America	SESA COLOR 112 x 336	
I-55	IS055S177.8	I-55 N of A	Jefferson	1	Ledstar	Large Walk In 36 x 105	
I-55	IS055S184.6	I-55 S of M	Jefferson	1	Ledstar	Large Walk In 36 x 105	
I-55	IS055S186.8	I-55 S of Imperial Main	Jefferson	1	Ledstar	Large Walk In 36 x 105	
I-55	IS055S193.6	I-55 S of Meramec Bottom	St. Louis	1	Ledstar	Large Walk In 36 x 105	
I-55	IS055S200.8	I-55 @ Union	St. Louis	1	Ledstar	Large Walk In 36 x 105	
I-55	IS055S206.4	I-55 S of Potomac	St. Louis City	1	Daktronics	COLOR DAKTRONICS 120 x 336	
I-55	IS055S208.5	I-55 @ 7th (44-55 @ Park)	St. Louis City	1	DCB	Large Walk In 36 x 105	
I-64	IS064E003.0	I-64 @ Lake St Louis	St. Charles	1	Ledstar	Large Walk In 36 x 105	
I-64	IS064E008.1	I-64 W of K	St. Charles	1	Daktronics	COLOR DAKTRONICS 120 x 336	
I-64	IS064E016.8	I-64 E of Boones Crossing	St. Louis	1	Daktronics	COLOR DAKTRONICS 120 x 336	
I-64	IS064E020.5	I-64 E of Chesterfield PKWY E	St. Louis	1	Ledstar	Large Walk In 36 x 105	
I-64	IS064E024.2	I-64 @ Mason	St. Louis	1	Daktronics	COLOR DAKTRONICS 120 x 336	
I-64	IS064E027.0	I-64 E of Ballas	St. Louis	1	Ledstar	Large Walk In 36 x 105	
I-64	IS064E030.1	I-64 W of McKnight	St. Louis	1	Ledstar	Large Walk In 36 x 105	
I-64	IS064E034.0	I-64 E of McCausland	St. Louis City	1	Ledstar	Large Walk In 36 x 105	
I-64	IS064E037.4	I-64 W of Compton	St. Louis City	1	SES America	SESA COLOR 112 x 336	
I-64	IS064W001.8	I-64 E of Prospect	St. Charles	1	Ledstar	Large Walk In 36 x 105	
I-64	IS064W005.5	I-64 W of DD	St. Charles	1	Ledstar	Large Walk In 36 x 105	
I-64	IS064W012.6	I-64 W of Missouri River	St. Charles	1	Ledstar	Large Walk In 36 x 105	
I-64	IS064W016.2	I-64 @ Long	St. Louis	1	Ledstar	Large Walk In 36 x 105	
I-64	IS064W021.5	I-64 E of Timberlake Manor	St. Louis	1	Ledstar	Large Walk In 36 x 105	
I-64	IS064W024.2	I-64 @ Mason	St. Louis	1	Ledstar	Large Walk In 36 x 105	
I-64	IS064W027.3	I-64 W of Spoede	St. Louis	1	Daktronics	COLOR DAKTRONICS 120 x 336	
I-64	IS064W029.5	I-64 E of Clayton	St. Louis	1	DCB	Large Walk In 36 x 105	
I-64	IS064W032.6	I-64 E of Boland	St. Louis	1	Ledstar	Large Walk In 36 x 105	
I-64	IS064W037.0	I-64 @ Sarah	St. Louis City	1	DCB	Large Walk In 36 x 105	
I-64	IS064W039.0	I-64 E of 22nd St.	St. Louis City	1	Daktronics	COLOR DAKTRONICS 120 x 336	
I-70	IS070E206.8	I-70 E of W-T (W of Wentzville Pkwy)	St. Charles	1	Daktronics	COLOR DAKTRONICS 120 x 336	
I-70	IS070E214.8	I-70 E of Lake St Louis Blvd	St. Charles	1	DCB	Large Walk In 36 x 105	
I-70	IS070E222.6	I-70 E of Mid Rivers Mall Dr	St. Charles	1	Daktronics	COLOR DAKTRONICS 120 x 336	
I-70	IS070E226.1	I-70 E of Cave Springs	St. Charles	1	Daktronics	COLOR DAKTRONICS 120 x 336	
I-70	IS070E230.7	I-70 E of Missouri River	St. Louis	1	Daktronics	COLOR DAKTRONICS 120 x 336	
I-70	IS070E233.6	I-70 W of 180	St. Louis	1	Daktronics	COLOR DAKTRONICS 120 x 336	
I-70	IS070E237.5	I-70 W of 115	St. Louis	1	Daktronics	COLOR DAKTRONICS 120 x 336	
			SUBTOTAL 1	60			

STATE OF MISSOURI
JAMIE F. RANA
NUMBER PE-2005001034
PROFESSIONAL ENGINEER

Jamie F. Rana
07/17/2025 1:32:54 PM
JAMIE F. RANA - CIVIL
MO-PE-2005001034

DATE PREPARED: 7/17/2025
ROUTE: VAR. STATE: MO
DISTRICT: SL SHEET NO.: 2
COUNTY: VARIOUS
JOB NO.: J6Q2026E
CONTRACT ID.
PROJECT NO.
BRIDGE NO.

DESCRIPTION | DATE

MISSOURI HIGHWAYS AND TRANSPORTATION COMMISSION
105 WEST CAPITOL
JEFFERSON CITY, MO 65102
1-888-ASK-MODOT (1-888-275-6636)

QUANTITIY SHEETS
14 OF 32

DYNAMIC MESSAGE SIGN INVENTORY (TABLE 2 OF 3)

ROUTE	ID	LOCATION	COUNTY	P.M. DMS, ASSEMBLY POLE, FOUNDATION & FIELD CABINET (EA)	MANUFACTURER	DESCRIPTION	COMMENTS
I-70	IS070E243.9	I-70 W of Union - Bircher	St. Louis City	1	Daktronics	COLOR DAKTRONICS 120 x 336	
I-70	IS070E246.8	I-70 W of Adelaide	St. Louis City	1	SES America	SESA COLOR 112 x 336	
I-70	IS070E248.2	I-70 @ Salisbury-McKinley-11th	St. Louis City	1	SES America	SESA COLOR 112 x 336	
I-70	IS070W207.8	I-70 W of Wentzville Pkwy	St. Charles	1	Daktronics	COLOR DAKTRONICS 120 x 336	
I-70	IS070W214.1	I-70 @ Lake St Louis Blvd	St. Charles	1	Ledstar	Large Walk In 36 x 105	
I-70	IS070W221.9	I-70 W of Mid Rivers Mall Dr	St. Charles	1	Ledstar	Large Walk In 36 x 105	
I-70	IS070W226.1	I-70 E of Cave Springs	St. Charles	1	Daktronics	COLOR DAKTRONICS 120 x 336	
I-70	IS070W230.9	I-70 E of Missouri River	St. Louis	1	Ledstar	Large Walk In 36 x 105	
I-70	IS070W235.0	I-70 @ Fee Fee	St. Louis	1	Daktronics	COLOR DAKTRONICS 120 x 336	
I-70	IS070W237.3	I-70 W of EE	St. Louis	1	Daktronics	COLOR DAKTRONICS 120 x 336	
I-70	IS070W241.5	I-70 E of Bermuda	St. Louis	1	Daktronics	COLOR DAKTRONICS 120 x 336	
I-70	IS070W248.3	I-70 @ Salisbury-9th-WB Ramp	St. Louis City	1	DCB	Large Walk In 36 x 105	
I-70	IS070W249.6	I-70 @ MVM-Mainspan	St. Louis City	1	Ledstar	Large Walk In 36 x 105	
I-170	IS170N002.7	I-170 N of Delmar	St. Louis	1	Ledstar	Large Walk In 36 x 105	
I-170	IS170N005.0	I-170 S of Midland	St. Louis	1	Ledstar	Large Walk In 36 x 105	
I-170	IS170N006.4	I-170 N of 180	St. Louis	1	DCB	Large Walk In 36 x 105	
I-170	IS170N009.1	I-170 @ Airport	St. Louis	1	Ledstar	Large Walk In 36 x 105	
I-170	IS170S002.7	I-170 N of Delmar	St. Louis	1	Ledstar	Large Walk In 36 x 105	
I-170	IS170S006.7	I-170 S of 115	St. Louis	1	Daktronics	COLOR DAKTRONICS 120 x 336	
I-170	IS170S008.6	I-170 N of Scudder	St. Louis	1	Daktronics	COLOR DAKTRONICS 120 x 336	
I-255	IS255W002.6	I-255 W of Koch	St. Louis	1	Daktronics	COLOR DAKTRONICS 120 x 336	
I-270	IS270E002.3	I-270 N of 21	St. Louis	1	Daktronics	COLOR DAKTRONICS 120 x 336	
I-270	IS270E002.9	I-270 S of 30	St. Louis	1	Daktronics	COLOR DAKTRONICS 120 x 336	
I-270	IS270E023.8	I-270 E of McDonnell	St. Louis	1	Daktronics	COLOR DAKTRONICS 120 x 336	
I-270	IS270E031.1	I-270 @ Pershall Bridge	St. Louis	1	Daktronics	COLOR DAKTRONICS 120 x 336	
I-270	IS270N008.9	I-270 N of Dougherty Ferry	St. Louis	1	DCB	Large Walk In 36 x 105	
I-270	IS270N010.6	I-270 N of 100	St. Louis	1	Daktronics	COLOR DAKTRONICS 120 x 336	
I-270	IS270N014.0	I-270 N of AB-Ladue	St. Louis	1	DCB	Large Walk In 36 x 105	
I-270	IS270N017.0	I-270 N of Marine	St. Louis	1	Daktronics	COLOR DAKTRONICS 120 x 336	
I-270	IS270N021.1	I-270 E of St Charles Rock Rd	St. Louis	1	Daktronics	COLOR DAKTRONICS 120 x 336	
I-270	IS270S009.3	I-270 S of 100	St. Louis	1	Daktronics	COLOR DAKTRONICS 120 x 336	
I-270	IS270S011.6	I-270 N of Clayton	St. Louis	1	SES America	SESA COLOR 112 x 336	
I-270	IS270S014.2	I-270 S of 340	St. Louis	1	DCB	Large Walk In 36 x 105	
I-270	IS270S015.8	I-270 S of D	St. Louis	1	Daktronics	COLOR DAKTRONICS 120 x 336	
I-270	IS270S018.8	I-270 S of McKelvey	St. Louis	1	Daktronics	COLOR DAKTRONICS 120 x 336	
I-270	IS270S021.6	I-270 E of Woodford Way	St. Louis	1	Daktronics	COLOR DAKTRONICS 120 x 336	
I-270	IS270W024.6	I-270 W of 67	St. Louis	1	Daktronics	COLOR DAKTRONICS 120 x 336	
I-270	IS270W029.3	I-270 W of W Florissant	St. Louis	1	Daktronics	COLOR DAKTRONICS 120 x 336	
I-270	IS270W032.5	I-270 W of Bellefontaine	St. Louis	1	Daktronics	COLOR DAKTRONICS 120 x 336	
MO 30	MO030E041.2	30 W of Sappington Barracks	St. Louis	1	Ledstar	Small Arterial 27 x 110	
MO 30	MO030W041.2	30 W of Sappington Barracks	St. Louis	1	Ledstar	Small Arterial 27 x 110	
MO 79	MO079S086.2	79 S of TR Hughes	St. Charles	1	Ledstar	Small Arterial 27 x 110	
MO 94	MO094E101.6	94 E of S Breeze	St. Charles	1	DCB	Small Arterial 27 x 110	
MO 94	MO094E110.0	94 W of Sherman	St. Charles	1	Ledstar	Small Arterial 27 x 110	
MO 94	MO094W100.3	94 E of Huber Park	St. Charles	1	DCB	Small Arterial 27 x 110	
MO 94	MO094W109.6	94 W of Zumbehl-Friedens	St. Charles	1	DCB	Small Arterial 27 x 110	
MO 94	MO094W110.8	94 @ Bel Rae	St. Charles	1	DCB	Small Arterial 27 x 110	
MO 141	MO141N002.0	141 N of Lakefront	St. Louis	1	Ledstar	Small Arterial 27 x 110	
MO 141	MO141N004.6	141 N of Creve Coeur Mill	St. Louis	1	Ledstar	Small Arterial 27 x 110	
MO 141	MO141N007.6	141 S of 364 EB Ramps	St. Louis	1	Ledstar	Small Arterial 27 x 110	
MO 141	MO141N012.6	141 S of Woods Mill	St. Louis	1	Ledstar	Small Arterial 27 x 110	
MO 141	MO141N016.5	141 N of Carman	St. Louis	1	Ledstar	Small Arterial 27 x 110	
MO 141	MO141N021.9	141 S of Bowles	St. Louis	1	Ledstar	Small Arterial 27 x 110	
MO 141	MO141N023.8	141 @ Gravois Bluffs	St. Louis	1	Ledstar	Real Small Arterial 27 x 85	
MO 141	MO141N027.7	141 S of 21	St. Louis	1	Ledstar	Small Arterial 27 x 110	
MO 141	MO141S001.9	141 S of Shoreline	St. Louis	1	Ledstar	Small Arterial 27 x 110	
MO 141	MO141S003.3	141 N of Riverport North	St. Louis	1	Ledstar	Small Arterial 27 x 110	
MO 141	MO141S005.5	141 S of Marine	St. Louis	1	Ledstar	Small Arterial 27 x 110	
MO 141	MO141S007.6	141 S of 364 EB Ramp	St. Louis	1	Ledstar	Small Arterial 27 x 110	
MO 141	MO141S010.1	141 N of AB-Ladue	St. Louis	1	Ledstar	Small Arterial 27 x 110	
			SUBTOTAL 2	60			

STATE OF MISSOURI
JAMIE F. RANA
NUMBER PE-2005001034
PROFESSIONAL ENGINEER

Jamie F. Rana
07/18/2025 11:13:22 AM
JAMIE F. RANA - CIVIL
MO-PE-2005001034

DATE PREPARED
7/17/2025

ROUTE: VAR. | STATE: MO
DISTRICT: SL | SHEET NO.: 2
COUNTY: VARIOUS
JOB NO.: J6Q2026E
CONTRACT ID.
PROJECT NO.
BRIDGE NO.

DESCRIPTION | DATE

MISSOURI HIGHWAYS AND TRANSPORTATION COMMISSION
105 WEST CAPITOL
JEFFERSON CITY, MO 65102
1-888-ASK-MODOT (1-888-275-6636)

QUANTITIY SHEETS
15 OF 32

DYNAMIC MESSAGE SIGN INVENTORY (TABLE 3 OF 3)

ROUTE	ID	LOCATION	COUNTY	P.M. DMS, ASSEMBLY POLE, FOUNDATION & FIELD CABINET (EA)	MANUFACTURER	DESCRIPTION	COMMENTS
MO 141	MO141S011.9	141 N of 64	St. Louis	1	Ledstar	Small Arterial 27 x 110	
MO 141	MO141S015.0	141 N of Burgundy	St. Louis	1	Ledstar	Small Arterial 27 x 110	
MO 141	MO141S016.5	141 N of Carman	St. Louis	1	Ledstar	Small Arterial 27 x 110	
MO 141	MO141S021.6	141 N of Bowles	St. Louis	1	Ledstar	Small Arterial 27 x 110	
MO 141	MO141S026.2	141 S of Fiedler	Jefferson	1	Ledstar	Small Arterial 27 x 110	
MO 141	MO141S029.4	141 S of Astra Way	Jefferson	1	Ledstar	Small Arterial 27 x 110	
MO 364	MO364E003.3	364 E of Bryan	St. Charles	1	Ledstar	Large Walk In 36 x 105	
MO 364	MO364E006.7	364 W of Gutermuth	St. Charles	1	Ledstar	Large Walk In 36 x 105	
MO 364	MO364E012.1	364 W of Jungs Sta.	St. Charles	1	Ledstar	Large Walk In 36 x 105	
MO 364	MO364E017.0	364 W of 141	St. Louis	1	DCB	Large Walk In 36 x 105	
MO 364	MO364W006.5	364 W of Gutermuth	St. Charles	1	Ledstar	Large Walk In 36 x 105	
MO 364	MO364W010.0	364 @ Central School	St. Charles	1	Daktronics	COLOR DAKTRONICS 120 x 336	
MO 364	MO364W016.5	364 E of Missouri River	St. Louis	1	DCB	Large Walk In 36 x 105	
MO 367	MO367N001.1	367 N of Parker	St. Louis	1	Ledstar	Large Walk In 36 x 105	
MO 367	MO367S002.3	367 N of Redman	St. Louis	1	Ledstar	Large Walk In 36 x 105	
MO 370	MO370E001.8	370 EO Salt River Road	St. Charles	1	Ledstar	Large Walk In 36 x 105	
MO 370	MO370E005.6	370 E of Elm	St. Charles	1	DCB	Large Walk In 36 x 105	
MO 370	MO370E011.6	370 @ St. Louis Mills	St. Louis	1	Daktronics	COLOR DAKTRONICS 120 x 336	
MO 370	MO370W004.3	370 W of Elm	St. Charles	1	Ledstar	Large Walk In 36 x 105	
MO 370	MO370W010.5	370 W of St. Louis Mills	St. Louis	1	Ledstar	Large Walk In 36 x 105	
RT B	RT00BE002.1	Natural Bridge EB WO Lindbergh DMS#2	St. Louis	1	Daktronics	COLOR DAKTRONICS 96 x 240	
RT B	RT00BW002.1	Natural Bridge WB EO Lindbergh DMS#2A	St. Louis	1	Daktronics	COLOR DAKTRONICS 96 x 240	
RT K	RT00KN003.9	K @ 364 SOR	St. Charles	1	Ledstar	Small Arterial 27 x 110	
RT K	RT00KS003.1	K @ Christina Marie	St. Charles	1	Ledstar	Small Arterial 27 x 110	
RT N	RT00NE010.6	N W of Hawk Ridge	St. Charles	1	Ledstar	Small Arterial 27 x 110	
US 67	US067N006.2	67 W of 367	St. Louis	1	Ledstar	Small Arterial 27 x 110	
US 67	US067N016.7	Lindbergh Tunnel NB Center DMS #4	St. Louis	1	Daktronics	COLOR DAKTRONICS 24 x 320	
US 67	US067N016.7	Lindbergh Tunnel NB Ent DMS #3	St. Louis	1	Daktronics	COLOR DAKTRONICS 48 x 288	
US 67	US067N016.7	Lindbergh Tunnel NB Exit DMS #4A	St. Louis	1	Daktronics	COLOR DAKTRONICS 24 x 320	
US 67	US067N016.7	Lindbergh Tunnel SB Center DMS #5	St. Louis	1	Daktronics	COLOR DAKTRONICS 24 x 320	
US 67	US067N016.7	Lindbergh Tunnel SB Ent DMS #6	St. Louis	1	Daktronics	COLOR DAKTRONICS 48 x 288	
US 67	US067N016.7	Lindbergh Tunnel SB Exit DMS #5A	St. Louis	1	Daktronics	COLOR DAKTRONICS 24 x 320	
US 67	US067N017.7	Lindbergh NB NO I-70 DMS#1	St. Louis	1	Daktronics	COLOR DAKTRONICS 96 x 240	
US 67	US067N018.8	67 N of Old St Charles Rd	St. Louis	1	Ledstar	Small Arterial 27 x 110	
US 67	US067N024.6	67 S of Ladue	St. Louis	1	Ledstar	Small Arterial 27 x 110	
US 67	US067N026.7	67 S of Litzsinger	St. Louis	1	DCB	Small Arterial 27 x 110	
US 67	US067N031.9	67 N of Eddie & Park	St. Louis	1	Ledstar	Small Arterial 27 x 110	
US 67	US067N035.4	67 S of 21	St. Louis	1	Ledstar	Small Arterial 27 x 110	
US 67	US067N037.0	61 S of Green Lin Acres	St. Louis	1	Ledstar	Small Arterial 27 x 110	
US 67	US067N063.4	67 N of CC-110	Jefferson	1	Ledstar	Large Walk In 36 x 105	
US 67	US067S000.7	67 NO Lindbergh	St. Louis	1	Ledstar	Large Walk In 36 x 105	
US 67	US067S013.3	67 E of Coachway	St. Louis	1	Ledstar	Small Arterial 27 x 110	
US 67	US067S015.7	Lindbergh SB NO MO Bottom DMS#7	St. Louis	1	Daktronics	COLOR DAKTRONICS 96 x 240	
US 67	US067S015.8	Missouri Bottom EB WO Lindbergh DMS#7A	St. Louis	1	Daktronics	COLOR DAKTRONICS 96 x 240	
US 67	US067S020.4	67 N of Dorsett- Midland	St. Louis	1	Ledstar	Small Arterial 27 x 110	
US 67	US067S025.1	67 S of Chaminade	St. Louis	1	Ledstar	Small Arterial 27 x 110	
US 67	US067S030.6	61 S of Big Bend	St. Louis	1	Ledstar	Small Arterial 27 x 110	
US 67	US067S032.1	61 S of W Watson-Eddie & Park	St. Louis	1	Ledstar	Small Arterial 27 x 110	
			SUBTOTAL 3	48			
			SUBTOTAL 2	60			
			SUBTOTAL 1	60			
			PAY TOTAL	168			

STATE OF MISSOURI
JAMIE F. RANA
NUMBER PE-2005001034
PROFESSIONAL ENGINEER

Jamie F. Rana
07/18/2025 11:13:42 AM
JAMIE F. RANA - CIVIL
MO-PE-2005001034

DATE PREPARED
7/17/2025

ROUTE	STATE
VAR.	MO
DISTRICT	SHEET NO.
SL	2

COUNTY
VARIOUS

JOB NO.
J6Q2026E

CONTRACT ID.

PROJECT NO.

BRIDGE NO.

DESCRIPTION	DATE

MISSOURI HIGHWAYS AND TRANSPORTATION COMMISSION

105 WEST CAPITOL
JEFFERSON CITY, MO 65102
1-888-ASK-MODOT (1-888-275-6636)

QUANTITIY SHEETS
16 OF 32

NON-INTRUSIVE VEHICLE DETECTOR STATIONS (INVENTORY 1 OF 5)

ROUTE	ID	LOCATION	COUNTY	P.M. NON-INTRUSIVE VEHICLE DET. STATIONS (MICROWAVE) (EA)	VENDOR/ DEVICE	COMMENTS
I-44	IS044E246.6	I-44 W of US 50	Franklin	1	EIS	
I-44	IS044E250.8	I-44 W of Rte 100-AT (Do Not Replace)	Franklin	1	EIS	
I-44	IS044E253.6	I-44 @ MO 100 Gray Summit (Do Not Replace)	Franklin	1	EIS	
I-44	IS044E256.8	I-44 @ Pacific-Viaduct (Do Not Replace)	Franklin	1	EIS	
I-44	IS044E274.0	I-44 @ Bowles	St. Louis	1	EIS	
I-44	IS044E289.6	I-44 @ Jefferson	St. Louis City	1	EIS	
I-44	IS044E290.1	I-44 @ I-55 NWQ	St. Louis City	1	EIS	
I-44	IS044E292.7	I-44 @ Cass	St. Louis City	1	ISS	
I-44	IS044W248.9	I-44 E of US 50	Franklin	1	EIS	
I-44	IS044W249.9	I-44 @ American Inn	Franklin	1	EIS	
I-44	IS044W252.2	I-44 E of Rte 100-AT	Franklin	1	ISS	
I-44	IS044W255.1	I-44 E of MO 100 Gray Summit	Franklin	1	EIS	
I-44	IS044W256.0	I-44 W of Lamar Pkwy	Franklin	1	EIS	
I-44	IS044W259.2	I-44 W of Six Flags	St. Louis	1	EIS	
I-44	IS044W260.2	I-44 W of Six Flags	St. Louis	1	EIS	
I-44	IS044W261.3	I-44 @ Allenton/Six Flags	St. Louis	1	EIS	
I-44	IS044W271.3	I-44 W of 141	St. Louis	1	EIS	
I-44	IS044W277.5	I-44 @ 61	St. Louis	1	EIS	
I-44	IS044W285.9	I-44 @ Hampton	St. Louis City	1	EIS	
I-44	IS044W292.7	I-44 @ Broadway Express Lane Ramp	St. Louis City	1	ISS	
I-44	IS044W292.7	I-44 @ Broadway Express Lane Ramp	St. Louis City	1	ISS	
I-55	IS055N169.5	I-55 N of AA	Jefferson	1	EIS	
I-55	IS055N171.2	I-55 NB Ramp @ 61	Jefferson	1	EIS	
I-55	IS055N172.1	I-55 N of 61	Jefferson	1	EIS	
I-55	IS055N176.5	I-55 N of A	Jefferson	1	EIS	
I-55	IS055N177.2	I-55 S of McNutt	Jefferson	1	EIS	
I-55	IS055N178.5	I-55 NB Ramp @ McNutt	Jefferson	1	EIS	
I-55	IS055N181.3	I-55 @ Z	Jefferson	1	EIS	
I-55	IS055N182.7	I-55 @ Eagle Crest	Jefferson	1	EIS	
I-55	IS055N183.7	I-55 @ Haefner-S of M	Jefferson	1	EIS	
I-55	IS055N189.4	I-55 S of Richardson	Jefferson	1	EIS	
I-55	IS055N199.1	I-55 N of 61 (I-55 S of Reavis Barracks)	St. Louis	1	EIS	
I-55	IS055N206.7	I-55 @ Potomac NB Ramp	St. Louis City	1	EIS	
I-55	IS055S175.7	I-55 @ A SB Ramps	Jefferson	1	EIS	
I-55	IS055S180.1	I-55 S of Z	Jefferson	1	EIS	
I-55	IS055S181.9	I-55 N of Z	Jefferson	1	EIS	
I-55	IS055S195.2	I-55 @ Butler Hill	St. Louis	1	EIS	
I-55	IS055S209.0	I-55 N of 7th	St. Louis City	1	EIS	
I-64	IS064E004.1	I-64 @ MO 364	St. Charles	1	EIS	
I-64	IS064E010.2	I-64 @ K	St. Charles	1	EIS	
I-64	IS064E010.6	I-64 @ 94	St. Charles	1	EIS	
I-64	IS064E010.8	I-64 @ 94	St. Charles	1	EIS	
I-64	IS064E010.8	I-64 @ 94	St. Charles	1	EIS	
I-64	IS064E012.0	I-64 E of Research Park	St. Charles	1	EIS	
I-64	IS064E019.2	I-64 @ Chesterfield Pkwy West	St. Louis	1	EIS	
I-64	IS064E020.0	I-64 W of Timberlake Manor	St. Louis	1	EIS	
I-64	IS064E020.9	I-64 E of Timberlake Manor	St. Louis	1	EIS	
I-64	IS064E020.9	I-64 E of Timberlake Manor	St. Louis	1	EIS	
I-64	IS064E021.9	I-64 @ 141	St. Louis	1	EIS	
I-64	IS064E024.2	I-64 @ Mason	St. Louis	1	EIS	
I-64	IS064E025.2	I-64 W of I-270	St. Louis	1	EIS	
I-64	IS064E027.6	I-64 @ Spoede	St. Louis	1	EIS	
I-64	IS064E030.5	I-64 @ McKnight	St. Louis	1	EIS	
I-64	IS064E033.5	I-64 E of Bellevue	St. Louis	1	EIS	
I-64	IS064E035.8	I-64 W of Kingshighway	St. Louis City	1	EIS	
I-64	IS064E036.9	I-64 @ Grand	St. Louis City	1	EIS	
I-64	IS064E040.3	I-64 E of 6th	St. Louis City	1	EIS	
I-64	IS064W000.8	I-64 E of I-70	St. Louis	1	EIS	
I-64	IS064W006.1	I-64 @ DD	St. Charles	1	EIS	
I-64	IS064W010.1	I-64 W of K	St. Charles	1	EIS	
			SUBTOTAL 1	60		

STATE OF MISSOURI
JAMIE F. RANA
NUMBER PE-2005001034
PROFESSIONAL ENGINEER

Jamie F. Rana
07/18/2025 11:14:04 AM
JAMIE F. RANA - CIVIL
MO-PE-2005001034

DATE PREPARED: 7/17/2025

ROUTE: VAR. | STATE: MO
DISTRICT: SL | SHEET NO.: 2
COUNTY: VARIOUS
JOB NO.: J6Q2026E
CONTRACT ID.
PROJECT NO.
BRIDGE NO.

DESCRIPTION | DATE

MISSOURI HIGHWAYS AND TRANSPORTATION COMMISSION
105 WEST CAPITOL
JEFFERSON CITY, MO 65102
1-888-ASK-MODOT (1-888-275-6636)

QUANTITIY SHEETS
17 OF 32

NON-INTRUSIVE VEHICLE DETECTOR STATIONS (INVENTORY 2 OF 5)

ROUTE	ID	LOCATION	COUNTY	P.M. NON-INTRUSIVE VEHICLE DET. STATIONS (MICROWAVE) (EA)	VENDOR/ DEVICE	COMMENTS
I-64	IS064W010.3	I-64 @ K	St. Charles	1	EIS	
I-64	IS064W010.8	I-64 @ 94	St. Charles	1	EIS	
I-64	IS064W011.1	I-64 @ Research Park	St. Charles	1	EIS	
I-64	IS064W021.2	I-64 W of Timberlake Manor	St. Louis	1	EIS	
I-64	IS064W021.2	I-64 W of Timberlake Manor	St. Louis	1	EIS	
I-64	IS064W021.9	I-64 @ 141 NWQ	St. Louis	1	EIS	
I-64	IS064W023.2	I-64 @ Maryville Centre	St. Louis	1	EIS	
I-64	IS064W036.9	I-64 @ Grand	St. Louis City	1	EIS	
I-64	IS064W040.3	I-64 E of 6th (I-64 @ I-55 NEQ)	St. Louis City	1	EIS	
I-70	IS070E204.0	I-70 @ W-T	St. Charles	1	EIS	
I-70	IS070E204.9	I-70 E of W-T	St. Charles	1	EIS	
I-70	IS070E208.5	I-70 E of Wentzville Pkwy	St. Charles	1	EIS	
I-70	IS070E209.5	I-70 @ Z	St. Charles	1	EIS	
I-70	IS070E209.6	I-70 @ Z	St. Charles	1	EIS	
I-70	IS070E209.6	I-70 @ Z	St. Charles	1	EIS	
I-70	IS070E210.0	I-70 W of I-64	St. Charles	1	EIS	
I-70	IS070E212.2	I-70 E of A	St. Charles	1	EIS	
I-70	IS070E212.9	I-70 E of A	St. Charles	1	EIS	
I-70	IS070E214.2	I-70 E of Lake St Louis Blvd	St. Charles	1	EIS	
I-70	IS070E215.2	I-70 E of Lake St Louis Blvd	St. Charles	1	EIS	
I-70	IS070E216.3	I-70 E of Bryan	St. Charles	1	EIS	
I-70	IS070E217.1	I-70 W of Woodlawn	St. Charles	1	EIS	
I-70	IS070E218.3	I-70 E of Sonderen Overpass	St. Charles	1	EIS	
I-70	IS070E219.1	I-70 E of TR Hughes	St. Charles	1	EIS	
I-70	IS070E219.1	I-70 E of TR Hughes	St. Charles	1	EIS	
I-70	IS070E220.5	I-70 @ 79	St. Charles	1	EIS	
I-70	IS070E220.7	I-70 E of 79/Salt Lick	St. Charles	1	EIS	
I-70	IS070E222.2	I-70 @ Mid Rivers Mall Dr	St. Charles	1	EIS	
I-70	IS070E222.6	I-70 E of Mid Rivers Mall Dr	St. Charles	1	EIS	
I-70	IS070E223.9	I-70 E of 370	St. Charles	1	EIS	
I-70	IS070E223.9	I-70 E of 370	St. Charles	1	EIS	
I-70	IS070E226.1	I-70 E of Cave Springs	St. Charles	1	EIS	
I-70	IS070E226.1	I-70 E of Cave Springs (South Outer Road)	St. Charles	1	ISS	
I-70	IS070E229.6	I-70 E of 5th	St. Charles	1	EIS	
I-70	IS070E229.6	I-70 E of 5th	St. Charles	1	EIS	
I-70	IS070E230.7	I-70 E of Missouri River	St. Louis	1	EIS	
I-70	IS070E231.9	I-70 E of 141	St. Louis	1	EIS	
I-70	IS070E232.7	I-70 @ I-270	St. Louis	1	EIS	
I-70	IS070E233.8	I-70 W of 180	St. Louis	1	ISS	
I-70	IS070E235.0	I-70 E of Fee Fee	St. Louis	1	EIS	
I-70	IS070E235.4	I-70 E of 67	St. Louis	1	EIS	
I-70	IS070E236.0	I-70 E of Cypress	St. Louis	1	EIS	
I-70	IS070E236.7	I-70 @ Airflight	St. Louis	1	EIS	
I-70	IS070E237.5	I-70 W of 115	St. Louis	1	EIS	
I-70	IS070E237.9	I-70 @ 115	St. Louis	1	EIS	
I-70	IS070E237.9	I-70 @ 115	St. Louis	1	EIS	
I-70	IS070E238.2	I-70 @ McDonnell	St. Louis	1	EIS	
I-70	IS070E239.0	I-70 @ I-170	St. Louis	1	EIS	
I-70	IS070E239.1	I-70 @ I-170	St. Louis	1	EIS	
I-70	IS070E239.1	I-70 @ I-170	St. Louis	1	EIS	
I-70	IS070E239.7	I-70 W of N Hanley	St. Louis	1	ISS	
I-70	IS070E240.2	I-70 W of Florissant	St. Louis	1	EIS	
I-70	IS070E240.6	I-70 @ Florissant	St. Louis	1	EIS	
I-70	IS070E241.2	I-70 E of Bermuda	St. Louis	1	EIS	
I-70	IS070E243.0	I-70 @ Jennings Sta	St. Louis	1	EIS	
I-70	IS070E243.4	I-70 E of Goodfellow	St. Louis City	1	EIS	
I-70	IS070E243.9	I-70 W of Union - Bircher	St. Louis City	1	EIS	
I-70	IS070E244.6	I-70 E of Union	St. Louis City	1	EIS	
I-70	IS070E245.4	I-70 E of Shreve	St. Louis City	1	ISS	
I-70	IS070E245.6	I-70 W of W Florissant	St. Louis City	1	EIS	
			SUBTOTAL 2	60		

STATE OF MISSOURI
JAMIE F. RANA
NUMBER PE-2005001034
PROFESSIONAL ENGINEER

Jamie F. Rana
07/18/2025 11:14:39 AM
JAMIE F. RANA - CIVIL
MO-PE-2005001034

DATE PREPARED
7/17/2025

ROUTE: VAR.
STATE: MO
DISTRICT: SL
SHEET NO.: 2
COUNTY: VARIOUS
JOB NO.: J6Q2026E
CONTRACT ID.
PROJECT NO.
BRIDGE NO.

DESCRIPTION
DATE

MISSOURI HIGHWAYS AND TRANSPORTATION COMMISSION
105 WEST CAPITOL
JEFFERSON CITY, MO 65102
1-888-ASK-MODOT (1-888-275-6636)

QUANTITIY SHEETS
18 OF 32

NON-INTRUSIVE VEHICLE DETECTOR STATIONS (INVENTORY 3 OF 5)

ROUTE	ID	LOCATION	COUNTY	P.M. NON-INTRUSIVE VEHICLE DET. STATIONS (MICROWAVE) (EA)	VENDOR/ DEVICE	COMMENTS
I-70	IS070E247.0	I-70 E of Adelaide	St. Louis City	1	ISS	
I-70	IS070E247.5	I-70 E of Grand	St. Louis City	1	EIS	
I-70	IS070E000.5	I-70 @ MVM-Mainspan (Illinois Tower Mississippi River Bridge)	St. Louis City	1	EIS	
I-70	IS070W203.7	I-70 W of W-T	St. Charles	1	ISS	
I-70	IS070W204.7	I-70 E of W-T	St. Charles	1	EIS	
I-70	IS070W206.2	I-70 @ David Hoekel Pkwy	St. Charles	1	EIS	
I-70	IS070W207.2	I-70 W of Wentzville Pkwy	St. Charles	1	EIS	
I-70	IS070W208.2	I-70 W of Wentzville Pkwy	St. Charles	1	EIS	
I-70	IS070W209.5	I-70 @ Z	St. Charles	1	EIS	
I-70	IS070W210.0	I-70 W of I-64	St. Charles	1	ISS	
I-70	IS070W211.0	I-70 E of I-64	St. Charles	1	EIS	
I-70	IS070W211.9	I-70 @ A	St. Charles	1	EIS	
I-70	IS070W211.9	I-70 @ A	St. Charles	1	EIS	
I-70	IS070W212.9	I-70 E of A	St. Charles	1	EIS	
I-70	IS070W213.9	I-70 W of Lake St. Louis	St. Charles	1	EIS	
I-70	IS070W215.2	I-70 E of Lake St Louis Blvd	St. Charles	1	EIS	
I-70	IS070W215.9	I-70 W of Bryan	St. Charles	1	EIS	
I-70	IS070W217.1	I-70 W of Woodlawn	St. Charles	1	EIS	
I-70	IS070W220.4	I-70 W of 79/Salt Lick	St. Charles	1	EIS	
I-70	IS070W221.4	I-70 W of Mid Rivers Mall Dr	St. Charles	1	EIS	
I-70	IS070W221.4	I-70 W of Mid Rivers Mall Dr	St. Charles	1	EIS	
I-70	IS070W222.2	I-70 @ Mid Rivers Mall Dr	St. Charles	1	EIS	
I-70	IS070W222.2	I-70 @ Mid Rivers Mall Dr	St. Charles	1	EIS	
I-70	IS070W223.6	I-70 W of 370	St. Charles	1	ISS	
I-70	IS070W223.6	I-70 W of 370 (370 to 70 WB Ramp)	St. Charles	1	ISS	
I-70	IS070W227.7	I-70 W of Hawks Nest	St. Charles	1	EIS	
I-70	IS070W229.0	I-70 West of Convention Center Dr	St. Charles	1	ISS	
I-70	IS070W229.5	I-70 W of Missouri River	St. Charles	1	EIS	
I-70	IS070W230.7	I-70 E of Missouri River	St. Louis	1	EIS	
I-70	IS070W231.4	I-70 W of 141	St. Louis	1	EIS	
I-70	IS070W231.7	I-70 @ 141	St. Louis	1	EIS	
I-70	IS070W232.7	I-70 @ I-270	St. Louis	1	EIS	
I-70	IS070W233.8	I-70 W of 180	St. Louis	1	EIS	
I-70	IS070W235.0	I-70 E of Fee Fee	St. Louis	1	EIS	
I-70	IS070W236.1	I-70 E of Cypress	St. Louis	1	EIS	
I-70	IS070W236.6	I-70 W of Airflight	St. Louis	1	EIS	
I-70	IS070W238.2	I-70 @ McDonnell	St. Louis	1	EIS	
I-70	IS070W238.6	I-70 @ I-170	St. Louis	1	EIS	
I-70	IS070W238.6	I-70 @ I-170	St. Louis	1	EIS	
I-70	IS070W238.8	I-70 @ I-170 Ramp	St. Louis	1	ISS	
I-70	IS070W240.0	I-70 @ N Hanley	St. Louis	1	EIS	
I-70	IS070W240.6	I-70 @ Florissant	St. Louis	1	EIS	
I-70	IS070W241.4	I-70 E of Bermuda	St. Louis	1	EIS	
I-70	IS070W241.7	I-70 W of Lucas and Hunt	St. Louis	1	EIS	
I-70	IS070W242.7	I-70 W of Jennings Sta	St. Louis	1	EIS	
I-70	IS070W243.9	I-70 W of Union - Bircher	St. Louis City	1	EIS	
I-70	IS070W245.1	I-70 W of Shreve	St. Louis City	1	EIS	
I-70	IS070W245.6	I-70 W of W Florissant	St. Louis City	1	EIS	
I-70	IS070W246.2	I-70 W of Carrie	St. Louis City	1	EIS	
I-70	IS070W246.7	I-70 W of Adelaide	St. Louis City	1	EIS	
I-70	IS070W246.7	I-70 W of Adelaide	St. Louis City	1	EIS	
I-70	IS070W247.3	I-70 W of Grand	St. Louis City	1	EIS	
I-70	IS070W248.2	I-70 @ McKinley Bridge	St. Louis City	1	EIS	
I-70	IS070W249.6	I-70 @ MVM-Mainspan	St. Louis City	1	EIS	
I-170	IS170N000.6	I-170 @ Galleria	St. Louis	1	ISS	
I-170	IS170N004.4	I-170 @ D	St. Louis	1	ISS	
I-170	IS170N010.1	I-170 @ Frost	St. Louis	1	EIS	
I-170	IS170S007.1	I-170 @ 115	St. Louis	1	EIS	
I-255	IS255E000.0	I-255-I-270 @ I-55	St. Louis	1	EIS	
I-255	IS255E000.8	I-255 @ 50	St. Louis	1	EIS	
			SUBTOTAL 3	60		

STATE OF MISSOURI
JAMIE F. RANA
NUMBER PE-2005001034
PROFESSIONAL ENGINEER

Jamie F. Rana
07/18/2025 11:16:39 AM
JAMIE F. RANA - CIVIL
MO-PE-2005001034

DATE PREPARED
7/17/2025

ROUTE: VAR.
STATE: MO
DISTRICT: SL
SHEET NO.: 2
COUNTY: VARIOUS
JOB NO.: J6Q2026E
CONTRACT ID.
PROJECT NO.
BRIDGE NO.

DESCRIPTION
DATE

MISSOURI HIGHWAYS AND TRANSPORTATION COMMISSION
105 WEST CAPITOL
JEFFERSON CITY, MO 65102
1-888-ASK-MODOT (1-888-275-6636)

QUANTITIY SHEETS
19 OF 32

NON-INTRUSIVE VEHICLE DETECTOR STATIONS (INVENTORY 4 OF 5)

ROUTE	ID	LOCATION	COUNTY	P.M. NON-INTRUSIVE VEHICLE DET. STATIONS (MICROWAVE) (EA)	VENDOR/ DEVICE	COMMENTS
I-255	IS255E002.1	I-255 @ 231 SEQ	St. Louis	1	EIS	
I-255	IS255E003.1	I-255 @ Koch	St. Louis	1	EIS	
I-255	IS255W000.8	I-255 @ 50	St. Louis	1	EIS	
I-255	IS255W003.1	I-255 @ Koch	St. Louis	1	EIS	
I-270	IS270E001.2	I-270 @ Theiss	St. Louis	1	EIS	
I-270	IS270E001.8	I-270 @ 21	St. Louis	1	EIS	
I-270	IS270E023.2	I-270 E of Missouri Bottom	St. Louis	1	ISS	
I-270	IS270E031.1	I-270 @ Pershall Bridge	St. Louis	1	ISS	
I-270	IS270E031.1	I-270 @ Pershall Bridge	St. Louis	1	ISS	
I-270	IS270E031.1	I-270 @ Pershall Bridge	St. Louis	1	ISS	
I-270	IS270E033.1	I-270 @ Bellefontaine	St. Louis	1	EIS	
I-270	IS270E034.5	I-270 W of Riverview	St. Louis City	1	ISS	
I-270	IS270E034.5	I-270 W of Riverview	St. Louis	1	EIS	
I-270	IS270N002.4	I-270 @ Sappington	St. Louis	1	EIS	
I-270	IS270N004.7	I-270 S of I-44	St. Louis	1	EIS	
I-270	IS270N005.7	I-270 @ I-44 SEQ	St. Louis	1	ISS	
I-270	IS270N007.6	I-270 N of Big Bend NEQ	St. Louis	1	EIS	
I-270	IS270N010.0	I-270 @ 100	St. Louis	1	EIS	
I-270	IS270N012.4	I-270 @ I-64	St. Louis	1	EIS	
I-270	IS270N013.6	I-270 @ AB-Ladue	St. Louis	1	ISS	
I-270	IS270N014.8	I-270 @ 340 SEQ	St. Louis	1	EIS	
I-270	IS270N015.4	I-270 N of 340	St. Louis	1	EIS	
I-270	IS270N018.1	I-270 N of Dorsett	St. Louis	1	EIS	
I-270	IS270N018.8	I-270 S of McKelvey	St. Louis	1	EIS	
I-270	IS270S002.4	I-270 @ Sappington	St. Louis	1	EIS	
I-270	IS270S003.6	I-270 @ 30	St. Louis	1	EIS	
I-270	IS270S004.7	I-270 S of I-44	St. Louis	1	EIS	
I-270	IS270S007.0	I-270 @ Marshall	St. Louis	1	EIS	
I-270	IS270S007.6	I-270 N of Big Bend NEQ	St. Louis	1	EIS	
I-270	IS270S008.5	I-270 @ Dougherty Ferry	St. Louis	1	EIS	
I-270	IS270S010.0	I-270 @ 100	St. Louis	1	EIS	
I-270	IS270S011.0	I-270 S of Clayton	St. Louis	1	ISS	
I-270	IS270S012.4	I-270 @ I-64 SWQ	St. Louis	1	EIS	
I-270	IS270S014.8	I-270 @ 340	St. Louis	1	EIS	
I-270	IS270S015.4	I-270 N of 340	St. Louis	1	ISS	
I-270	IS270S016.6	I-270 @ D-on fiber N. of Bennington Ovrpass	St. Louis	1	EIS	
I-270	IS270S018.1	I-270 N of Dorsett	St. Louis	1	EIS	
I-270	IS270S020.0	I-270 @ I-70	St. Louis	1	ISS	
I-270	IS270S021.4	I-270 @ Woodford Way	St. Louis	1	ISS	
I-270	IS270S022.3	I-270 @ 370	St. Louis	1	ISS	
I-270	IS270W024.0	I-270 E of McDonnell	St. Louis	1	ISS	
I-270	IS270W029.3	I-270 W of W Florissant	St. Louis	1	ISS	
I-270	IS270W029.3	I-270 W of W Florissant	St. Louis	1	ISS	
I-270	IS270W029.3	I-270 W of W Florissant	St. Louis	1	ISS	
I-270	IS270W031.6	I-270 @ 367	St. Louis	1	EIS	
I-270	IS270W034.5	I-270 W of Riverview	St. Louis	1	EIS	
I-270	IS270W035.5	I-270 @ Riverview	St. Louis City	1	ISS	
I-270	IS270W035.5	I-270 @ Riverview	St. Louis City	1	ISS	
MO 30	MO030E040.0	30 E of Rahning	St. Louis	1	EIS	
MO 30	MO030W022.3	30 @ Weston Oaks	Jefferson	1	EIS	
MO 30	MO030W037.6	30 W of 141	St. Louis	1	EIS	
MO 141	MO141N010.1	141 N of AB-Ladue	St. Louis	1	ISS	
MO 141	MO141S008.1	141 S of 364 EB Ramp	St. Louis	1	ISS	
MO 364	MO364E013.0	364 W of Jungs Sta.	St. Charles	1	ISS	
MO 364	MO364E014.8	364 W of Missouri River	St. Charles	1	EIS	
MO 364	MO364E015.9	364 E of Missouri River	St. Louis	1	EIS	
MO 364	MO364E017.0	364 W of 141	St. Louis	1	EIS	
MO 364	MO364E018.0	364 @ Creve Couer Mill	St. Louis	1	EIS	
MO 364	MO364W000.4	364 @ Henke	St. Charles	1	EIS	
MO 364	MO364W004.4	364 @ K	St. Charles	1	EIS	
			SUBTOTAL 4	60		

STATE OF MISSOURI
JAMIE F. RANA
NUMBER PE-2005001034
PROFESSIONAL ENGINEER

Jamie F. Rana
07/18/2025 11:17:00 AM
JAMIE F. RANA - CIVIL
MO-PE-2005001034

DATE PREPARED 7/17/2025

ROUTE VAR. | STATE MO
DISTRICT SL | SHEET NO. 2
COUNTY VARIOUS
JOB NO. J6Q2026E
CONTRACT ID.
PROJECT NO.
BRIDGE NO.

DESCRIPTION | DATE

MISSOURI HIGHWAYS AND TRANSPORTATION COMMISSION
105 WEST CAPITOL
JEFFERSON CITY, MO 65102
1-888-ASK-MODOT (1-888-275-6636)

QUANTITIY SHEETS
20 OF 32

NON-INTRUSIVE VEHICLE DETECTOR STATIONS (INVENTORY 5 OF 5)

ROUTE	ID	LOCATION	COUNTY	P.M. NON-INTRUSIVE VEHICLE DET. STATIONS (MICROWAVE) (EA)	VENDOR/ DEVICE	COMMENTS
MO 364	MO364W008.3	364 W of Kisker	St. Charles	1	EIS	
MO 364	MO364W008.6	364 @ Mid Rivers Mall	St. Charles	1	EIS	
MO 364	MO364W010.0	364 @ Central School	St. Charles	1	EIS	
MO 364	MO364W011.0	364 NOR-St Peters @ Jungermann	St. Charles	1	EIS	
MO 364	MO364W014.8	364 W of Missouri River	St. Charles	1	EIS	
MO 364	MO364W015.9	364 E of Missouri River	St. Louis	1	EIS	
MO 364	MO364W017.0	364 W of 141	St. Louis	1	EIS	
MO 364	MO364W019.2	364 E of Amiot	St. Louis	1	EIS	
MO 364	MO364W020.0	364 E of Bennington	St. Louis	1	ISS	
MO 367	MO367N000.0	367 @ 67	St. Louis	1	ISS	
MO 367	MO367N000.4	367 N of New Jamestown	St. Louis	1	EIS	
MO 367	MO367N000.9	367 S of New Jamestown	St. Louis	1	EIS	
MO 367	MO367N000.9	367 S of New Jamestown	St. Louis	1	EIS	
MO 367	MO367N001.4	367 N of Parker	St. Louis	1	EIS	
MO 367	MO367N001.4	367 N of Parker	St. Louis	1	EIS	
MO 367	MO367N002.6	367 S of Redman	St. Louis	1	ISS	
MO 367	MO367N003.2	367 N of I-270	St. Louis	1	EIS	
MO 367	MO367S000.5	367 N of New Jamestown	St. Louis	1	EIS	
MO 367	MO367S001.0	367 S of New Jamestown	St. Louis	1	EIS	
MO 367	MO367S001.4	367 N of Parker	St. Louis	1	EIS	
MO 367	MO367S001.7	367 @ 67	St. Louis	1	EIS	
MO 367	MO367S002.6	367 S of Redman	St. Louis	1	ISS	
MO 367	MO367S003.2	367 N of I-270	St. Louis	1	EIS	
MO 370	MO370E002.6	370 @ Harry S Truman	St. Charles	1	EIS	
MO 370	MO370W000.6	370 W of Premier Pkwy	St. Charles	1	ISS	
MO 370	MO370W001.2	370 @ Salt River Road	St. Charles	1	EIS	
MO 370	MO370W001.2	370 @ Salt River Road	St. Charles	1	EIS	
MO 370	MO370W002.6	370 @ Harry S Truman	St. Charles	1	EIS	
MO 370	MO370W007.9	370 @ 94	St. Charles	1	EIS	
SOR 70	OR070E002.4	I-70 SOR-Veterans Memorial @ Jungermann	St. Charles	1	ISS	
SOR 270	OR270E025.7	I-270 SOR - Pershall @ Coldwater Creek	St. Louis	1	ISS	
SOR 270	OR270E025.7	I-270 SOR - Pershall @ Coldwater Creek	St. Louis	1	ISS	
SOR 270	OR270E027.1	I-270 SOR - Pershall @ Pedestrian Bridge	St. Louis	1	ISS	
SOR 270	OR270E030.1	I-270 SOR-Pershall E of W.Florissant	St. Louis	1	ISS	
SOR 270	OR270E030.5	I-270 SOR-Pershall E of New Halls Ferry	St. Louis	1	ISS	
SOR 270	OR270E033.4	I-270 SOR-Pershall W of Lilac	St. Louis	1	ISS	
NOR 270	OR270W027.2	I-270 NOR-Dunn @ Pedestrian Bridge	St. Louis	1	ISS	
NOR 270	OR270W027.2	I-270 NOR-Dunn @ Pedestrian Bridge	St. Louis	1	ISS	
NOR 270	OR270W028.3	I-270 NOR-Dunn W of Washington	St. Louis	1	ISS	
NOR 270	OR270W028.3	I-270 NOR-Dunn W of Washington	St. Louis	1	ISS	
NOR 270	OR270W030.1	I-270 NOR-Dunn W of RT AC	St. Louis	1	ISS	
NOR 270	OR270W030.5	I-270 NOR-Dunn W of Old Halls Ferry	St. Louis	1	ISS	
NOR 270	OR270W032.5	I-270 NOR-Dunn W of Bellefontaine	St. Louis	1	ISS	
RT D	RT00DE000.6	D @ Westport Plaza	St. Louis	1	EIS	
RT D	RT00DW000.6	D @ Westport Plaza	St. Louis	1	EIS	
US 67	US067N022.3	67 @ Schuetz-Baur	St. Louis	1	ISS	
US 67	US067N063.4	67 N of CC-110	Jefferson	1	EIS	
US 67	US067S025.1	67 S of Chaminade	St. Louis	1	ISS	
US 67	US067S064.6	67 N of Meyer (Do Not Replace)	Jefferson	1	EIS	
			**SUBTOTAL 5	49		
			**SUBTOTAL 4	60		
			**SUBTOTAL 3	60		
			**SUBTOTAL 2	60		
			**SUBTOTAL 1	60		
			* PAY TOTAL	60		

* LOCATIONS OF STATIONS TO BE PROVIDED BY SLITS. INTEND TO ONLY P.M. ECHO MODEL LOCATIONS.

** FOR INFORMATION ONLY. ONLY P.M. ECHO MODELS WILL BE REPLACED.

STATE OF MISSOURI
JAMIE F. RANA
NUMBER PE-2005001034
PROFESSIONAL ENGINEER

Jamie F. Rana
08/27/2025 10:33:56 AM
JAMIE F. RANA - CIVIL
MO-PE-2005001034

DATE PREPARED: 8/27/2025

ROUTE: VAR. | STATE: MO

DISTRICT: SL | SHEET NO.: 2

COUNTY: VARIOUS

JOB NO.: J6Q2026E

CONTRACT ID.

PROJECT NO.

BRIDGE NO.

DATE	DESCRIPTION

MISSOURI HIGHWAYS AND TRANSPORTATION COMMISSION

105 WEST CAPITOL
JEFFERSON CITY, MO 65102
1-888-ASK-MODOT (1-888-275-6636)

QUANTITIY SHEETS
21 OF 32

NODE CABINET AC AND UPS

ROUTE	LOG MILE	NODE CABINET LOCATION	COUNTY	P.M. NODE CABINET (EA)	P.M. AC UNIT (EA)	P.M. UPS (EA)	REMOVE & REPLACE AC UNIT (EA)	REMOVE & REPLACE UPS BATTERY (EA)	DESCRIPTION
WOR 141		TMC - 141 WOR @ S Outer Forty	St. Louis	1	0	0	0	0	Node Cabinet - N000
I-270	IS270S019.9G	I-270 @ I-70 SWQ	St. Louis	1	2	1	0	0	Node Cabinet - N001
I-270	IS270S012.4G	I-270 @ I-64 SWQ	St. Louis	1	2	1	0	0	Node Cabinet - N002
I-270	IS270N005.5G	I-270 @ I-44 SEQ	St. Louis	1	2	1	0	0	Node Cabinet - N003
I-255	IS255E000.0G	I-255 @ I-55 SEQ	St. Louis	1	2	1	0	0	Node Cabinet - N004
I-64	IS064E039.1G	I-64 @ 20th	St. Louis City	1	2	1	0	0	Node Cabinet - N005
I-170	IS170N000.6G	I-170 @ Galleria NEQ	St. Louis	1	2	1	0	0	Node Cabinet - N006
I-70	IS070E238.8G	I-70 @ I-170	St. Louis	1	2	1	0	0	Node Cabinet - N007
I-44	IS044E290.1G	I-44 @ I-55 NWQ	St. Louis City	1	2	1	0	0	Node Cabinet - N008
I-270	IS270W026.3G	I-270 @ I-170 SEQ	St. Louis	1	2	1	0	0	Node Cabinet - N009
I-70	IS070W225.2G	I-70 @ Cave Springs	St. Charles	1	2	1	0	0	Node Cabinet - N010
I-270	IS270N022.9G	I-270 @ MO Bottom	St. Louis	1	2	1	0	0	Node Cabinet - N011
I-70	IS070W251.3G	70 at 44/55/64	St. Louis City	1	2	1	0	0	Node Cabinet - N012
I-70	IS070W230.0G	I-70 E of Missouri River	St. Louis	1	2	1	0	0	Node Cabinet - N013
I-64	IS064E013.8G	I-64 E of Missouri River	St. Louis	1	2	1	0	0	Node Cabinet - N014
I-70	IS070W223.7G	I-70 @ 370 NWQ	St. Charles	1	2	1	0	0	Node Cabinet - N015
I-270	IS270E001.8G	I-270 @ 21 SEQ	St. Louis	1	2	1	0	0	Node Cabinet - N016
I-270	IS270N010.0	I-270 @ 100	St. Louis	1	2	1	0	0	Node Cabinet - N017
I-70	IS070W244.4G	I-70 @ Union	St. Louis City	1	2	1	0	0	Node Cabinet - N018
I-70	IS070W223.7G	I-70 & 64 (Wentzville)	St. Charles	1	2	1	0	0	Node Cabinet - N019
I-70	IS070E235.2G	I-70 @ 67	St. Louis	1	2	1	0	0	Node Cabinet - N020
I-44	IS044E292.7G	I-44 @ Cass	St. Louis City	1	2	1	0	0	Node Cabinet - N021
I-270	IS270N016.6G	I-270 @ 364 SEQ	St. Louis	1	2	1	0	0	Node Cabinet - N022
I-44	IS044W272.6G	141 S of I-44	St. Louis	1	2	1	0	0	Node Cabinet - N023
I-44	IS044E261.3G	I-44 @ Allenton/Six Flags	St. Louis	1	2	1	0	0	Node Cabinet - N024
I-270	IS270E031.6G	I-270 @ 367	St. Louis	1	2	1	0	0	Node Cabinet - N025
I-55	IS055N185.6G	I-55 @ M	Jefferson	1	2	1	0	0	Node Cabinet - N026
I-64	IS064E027.6G	I-64 @ Spoede	St. Louis	1	2	1	0	0	Node Cabinet - N027
I-64	IS064W036.1G	I-64 @ Kingshighway	St. Louis City	1	2	1	0	0	Node Cabinet - N028
I-55	IS055N174.6G	I-55 @ 61	Jefferson	1	2	1	0	0	Node Cabinet - N029
I-44	IS044E247.0G	I-44 @ US 50	Franklin	1	2	1	0	0	Node Cabinet - N030
			TBD - SEE NOTE				1	1	
			PAY TOAL	31	60	30	1	1	

NOTE: BEFORE PURCHASING & REMOVING/REPLACING AN AIR CONDITIONER SYSTEM, THE CONTRACTOR SHALL VERIFY WITH THE SLITS GROUP WHICH IF ANY SYSTEM NEEDS TO BE REPLACED.

AUXILIARY NODE CABINETS

ROUTE	LOG MILE	AUXILIARY NODE CABINET LOCATION	COUNTY	P.M. NODE CABINET (EA)	P.M. AC UNIT (EA)	P.M. UPS (EA)	DESCRIPTION
MO 100	MO100E070.4	100 @ 47	Franklin	1	2	0	SW QUADRANT
US 50	US050W217.6	50 @ 47	Franklin	1	2	0	NW QUADRANT
			PAY TOAL	2	4	0	

STATE OF MISSOURI
JAMIE F. RANA
NUMBER PE-2005001034
PROFESSIONAL ENGINEER

Jamie F. Rana
07/17/2025 12:57:51 PM
JAMIE F. RANA - CIVIL
MO-PE-2005001034

DATE PREPARED
7/17/2025

ROUTE	STATE
VAR.	MO

DISTRICT	SHEET NO.
SL	2

COUNTY
VARIOUS

JOB NO.
J6Q2026E

CONTRACT ID.

PROJECT NO.

BRIDGE NO.

DATE	DESCRIPTION

MISSOURI HIGHWAYS AND TRANSPORTATION COMMISSION

105 WEST CAPITOL
JEFFERSON CITY, MO 65102
1-888-ASK-MODOT (1-888-275-6636)

QUANTITIY SHEETS
22 OF 32

P.M. VIDEO DETECTION (1 OF 3)

ROUTE	LOCATION	COUNTY	P.M. VIDEO DETECTION (EA)	COMMENTS
70/5th St	Lombard St	St. Charles	4	
IS 70	5th St DDI	St. Charles	8	
IS 70	Convention Center/Fairgrounds	St. Charles	5	
DD	Sommers	St. Charles	3	
DD	Caledonia	St. Charles	4	
IS 270 Hanley	NOR/Dunn	St. Louis	4	
IS 270 Hanley	EB Ramp	St. Louis	3	
IS 270 Hanley	SOR/Pershall	St. Louis	3	
IS 270 NOR	Dunn @ Old Dunn	St. Louis	3	
IS 270 Old Halls Ferry	Dunn	St. Louis	3	
IS 270 Old Halls Ferry	EB Ramp	St. Louis	3	
IS 270 W Florissant	Dunn WB	St. Louis	3	
IS 270 W Florissant	Pershall	St. Louis	3	
IS 270 Wash	Eliz - Dunn	St. Louis	3	
IS 44	Vandeventer EB Ramp	St. Louis City	3	
IS 44	Vandeventer WB Ramp	St. Louis City	4	
IS 44	Jefferson WB Ramp	St. Louis City	3	
IS 44	Jefferson EB Ramp	St. Louis City	3	
IS 44	Rt AF WB ramps and NOR	Franklin	7	
IS 44	RT AF EB ramps	Franklin	3	
IS 44	Big Bend EB Ramps	St. Louis	3	
IS 44	Big Bend WB Ramps	St. Louis	3	
IS 55	4500 Broadway NB Ramp	St. Louis City	3	
IS 64 NOR	BiState	St. Louis	3	
IS 64	Jefferson EB Ramps	St. Louis City	3	
IS 64	Jefferson WB Ramps	St. Louis City	3	
IS 64	NOR 22nd ST	St. Louis City	3	
IS 64	SOR 22nd ST	St. Louis City	3	
IS 64	Timberlake SOR	St. Louis	3	
IS 64	Spoede EB Ramp/SOR	St. Louis	4	
IS 64	Timberlake NOR	St. Louis	3	
IS 64 NOR	Mastercard Entrance	St. Charles	1	
IS 64 SOR	Old Rt N	St. Charles	4	
IS 70	9th-Salisbury WB Ramp	St. Louis City	3	
IS 70	11th-Salisbury EB Ramp	St. Louis City	6	
IS 70	David Hoekel Pkwy	St. Charles	6	
IS 70 NOR	Mid Rivers Mall Shops entr.	St. Charles	3	
IS 70 NOR	Shady Springs	St. Charles	3	
IS 70 NOR	Executive Center Loop	St. Charles	3	
IS 70 NOR	Lake St. Louis Blvd	St. Charles	4	
IS 70 NOR	Lowes Entrance	St. Charles	3	
IS 70 NOR	Campus Dr	St. Charles	3	
IS 70 SOR	Jungermann Rd	St. Charles	3	
IS 70 SOR	Suemandy	St. Charles	2	
IS 70 SOR	Woodlawn	St. Charles	4	
IS 70 SOR	Dierbergs	St. Charles	3	
IS 70 SOR	Country Club	St. Charles	3	
IS 70 WB	Lake St. Louis Blvd	St. Charles	3	
IS 70-Airflight	70 WB Ramp	St. Louis	1	
IS 70-Airflight	Pear Tree-Air	St. Louis	1	
IS 70-Airflight	70 EB-Pear Tree	St. Louis	1	
IS 70	Mid Rivers Mall Dr (DDI)	St. Charles	6	
MO 100	Geyer	St. Louis	4	
MO 100	Tucker Blvd - 11TH	St. Louis City	2	
MO 100	Tower Grove	St. Louis City	1	
MO 100	Ballpark	St. Louis	4	
MO 100	Manchester Highland	St. Louis	4	
MO 100	Old State-Hutchin	St. Louis	1	
MO 100	Taylor	St. Louis City	1	
MO 100	Macklind	St. Louis City	1	
MO 109	I-44 NOR - East 5th	St. Louis	4	
		SUBTOTAL 1	197	

P.M. VIDEO DETECTION (2 OF 3)

ROUTE	LOCATION	COUNTY	P.M. VIDEO DETECTION (EA)	COMMENTS
MO 109	W/FF	Jefferson	4	
MO 109	I-44 WB Ramp	St. Louis	3	
MO 109	I-44 EB Ramp	St. Louis	3	
MO 115	N Florissant	St. Louis City	4	
MO 115	Farrar	St. Louis City	4	
MO 115	Glasgow	St. Louis City	4	
MO 115	Grand	St. Louis City	4	
MO 115	Prairie	St. Louis City	3	
MO 115	Fair	St. Louis City	4	
MO 115	Newstead	St. Louis City	4	
MO 115	Taylor	St. Louis City	3	
MO 115	Marcus	St. Louis City	4	
MO 115	Shreve	St. Louis City	4	
MO 115	I-170 SB Ramp	St. Louis	3	
MO 115	Brown-McDonnell	St. Louis	4	
MO 115	I-70 SOR	St. Louis	3	
MO 115	Garrison	St. Louis City	3	
MO 141	364 WB Ramp	St. Louis	4	
MO 141	364 EB Ramp	St. Louis	2	
MO 141	Corporate Woods	St. Louis	4	
MO 141	St Charles Rock Rd	St. Louis	4	
MO 141	Rider Trail North	St. Louis	4	
MO 141	Shoreline Dr NB	St. Louis	3	
MO 141	Shoreline Dr SB Mast	St. Louis	3	
MO 141	Lakefront S NB	St. Louis	3	
MO 141	Lakefront S SB	St. Louis	3	
MO 141	Rider Trail S NB	St. Louis	3	
MO 141	Rider Trail S SB	St. Louis	3	
MO 141	Creve Coeur South	St. Louis	4	
MO 21	MO 110	Jefferson	3	
MO 30	Valley Dell	Jefferson	6	
MO 30	Hydraulic	St. Louis City	3	
MO 30	Gustine	St. Louis City	4	
MO 30	Taft	St. Louis City	4	
MO 30	Duke	St. Louis City	4	
MO 30	Bates	St. Louis City	4	
MO 30	Christy	St. Louis City	4	
MO 30	Holly Hills	St. Louis City	4	
MO 30	Hampton-Germania	St. Louis City	6	
MO 30	River Des Peres	St. Louis City	4	
MO 30	Siebert	St. Louis	3	
MO 30	Weber-Elgin	St. Louis	4	
MO 30	RT P - Mackenzie	St. Louis	4	
MO 30	Musick	St. Louis	3	
MO 30	Sappington-Denny	St. Louis	8	
MO 30	McNair-Shenandoah	St. Louis City	11	
MO 30	Ohio-Lynch	St. Louis City	5	
MO 340	64 WB ramps	St. Louis	5	
MO 340	64 EB ramps	St. Louis	5	
MO 340	Chesterfield Pkwy	St. Louis	6	
MO 340	US 67 NB RAMPS	St. Louis	3	
MO 340	US 67 SB RAMPS	St. Louis	3	
MO 340	Mosley	St. Louis	3	
MO 340	Craig	St. Louis	4	
MO 340	Froesel	St. Louis	4	
MO 340	McKnight-Woodson	St. Louis	1	
MO 340	Old Olive West	St. Louis	4	
MO 340	Spoede	St. Louis	4	
MO 364 NOR	Heritage Crossing	St. Charles	3	
MO 370 EB	Harry S Truman	St. Charles	3	
MO 370 WB	Lakeside Park	St. Charles	3	
		SUBTOTAL 2	236	

STATE OF MISSOURI
JAMIE F. RANA
NUMBER PE-2005001034
PROFESSIONAL ENGINEER

Jamie F. Rana
(07/17/2025 12:58:21 PM
JAMIE F. RANA - CIVIL
MO-PE-2005001034

DATE PREPARED
7/17/2025

ROUTE	STATE
VAR.	MO
DISTRICT	SHEET NO.
SL	2

COUNTY
VARIOUS

JOB NO.
J6Q2026E

CONTRACT ID.

PROJECT NO.

BRIDGE NO.

DESCRIPTION

DATE

MISSOURI HIGHWAYS AND TRANSPORTATION COMMISSION

105 WEST CAPITOL
JEFFERSON CITY, MO 65102
1-888-ASK-MODOT (1-888-275-6636)

QUANTITIY SHEETS
23 OF 32

P.M. VIDEO DETECTION (3 OF 3)

ROUTE	LOCATION	COUNTY	P.M. VIDEO DETECTION (EA)	COMMENTS
MO 94	MO 364 EB Ramp	St. Charles	3	
MO 94	Francis Howell H.S.	St. Charles	3	
MO 94	Westwood Dr/Florence Dr	St. Charles	4	
MO 94	I-64 WB Ramp	St. Charles	3	
MO 94	I-64 SOR	St. Charles	3	
MO 94	Siedentop Rd	St. Charles	4	
MO 94	O'fallon Rd	St. Charles	4	
MO 94	Wolfrum Rd	St. Charles	4	
MO 94	Cedar Glen Dr	St. Charles	4	
RT AC	Chambers	St. Louis	1	
RT AC	Old Halls Ferry	St. Louis	3	
RT AC	Lucas and Hunt	St. Louis	3	
RT D	Grand	St. Louis City	4	
RT D	Kingshighway	St. Louis City	4	
RT D	Academy	St. Louis City	6	
RT D	Belt	St. Louis City	4	
RT D	Linpage	St. Louis	4	
RT D	Ogden	St. Louis	2	
RT D	Clara	St. Louis City	4	
RT D	Spring	St. Louis City	4	
RT D	Rev GH Pruitt	St. Louis City	3	
RT D	Walton	St. Louis	1	
RT D	Sutter	St. Louis	1	
RT H	Riverview	St. Louis City	5	
RT K	IS 70 WB Ramp	St. Charles	3	
RT K	IS 70 EB Ramp	St. Charles	3	
RT K	I-70 SOR Veterans Memorial	St. Charles	4	
Rt N	Perry Cate	St. Charles	3	
RT N	Sommers/Ronald Reagan	St. Charles	4	
RT N	I-64 EB/SOR(Hawks Ridge)	St. Charles	4	
RT N	University	St. Louis	1	
RT Z	Perry Cate	St. Charles	3	
RT Z	Interstate Dr	St. Charles	4	
US 50	Denmark Progress Pkwy	Franklin	4	
US 61	Tenbrook/Fox	Jefferson	4	
US 61	Imperial Main	Jefferson	4	
US 61	Big Bend	St. Louis	4	
US 61 NB	Pitman St	St. Charles	3	
US 61 SB	Pitman St	St. Charles	3	
US 67	Old St. Charles	St. Louis	4	
RT M	Catlin	Jefferson	0	
US 67	Whitehall Manor	St. Louis	4	
US 67	Hazelwood Logistics	St. Louis	4	
US 67	Rte 94	St. Louis	2	
US 67	Missouri Bottom - Banshee	St. Louis	4	
US 67	Cougar-Crosskey	St. Louis	3	
US 67	St. Jean	St. Louis	4	
US 67	Sunswept	St. Louis	4	
US 67	Rte AC	St. Louis	4	
US 67	Trotterway	St. Louis	4	
US 67	Target	St. Louis	4	
US 67	Waterford / Thunderbird	St. Louis	4	
US 67	New Florissant	St. Louis	4	
US 67	St Ferdinand	St. Louis	4	
US 67	Lindsay / St Denis	St. Louis	4	
US 67	Patterson	St. Louis	4	
US 67	Washington / Charbonier	St. Louis	4	
US 67	Manresa Ln	St. Louis	4	
US 67	Chez Paree Dr	St. Louis	4	
US 67	Elm Grove	St. Louis	7	
		SUBTOTAL 3	212	
		SUBTOTAL 2	236	
		SUBTOTAL 1	197	
		PAY TOTAL	645	

STATE OF MISSOURI
JAMIE F. RANA
NUMBER PE-2005001034
PROFESSIONAL ENGINEER

Jamie F. Rana
07/17/2025 1:32:23 PM
JAMIE F. RANA - CIVIL
MO-PE-2005001034

DATE PREPARED
7/17/2025

ROUTE	STATE
VAR.	MO

DISTRICT	SHEET NO.
SL	2

COUNTY
VARIOUS

JOB NO.
J6Q2026E

CONTRACT ID.

PROJECT NO.

BRIDGE NO.

DATE	DESCRIPTION

MISSOURI HIGHWAYS AND TRANSPORTATION COMMISSION

105 WEST CAPITOL
JEFFERSON CITY, MO 65102
1-888-ASK-MODOT (1-888-275-6636)

QUANTITIY SHEETS
24 OF 32

WIRELESS RADIO (1 OF 5)

ROUTE	LOG MILE	LOCATION	COUNTY	P.M. VIDEO COMMUNICATION LINK AND ASSEMBLY (EA)	TYPE	COMMENTS
I-44	IS044E247.0	I-44 @ 47 EB Ramp	Franklin	1	Ubiquiti	
I-44	IS044E289.6	I-44 @ Jefferson	St. Louis City	1	Ubiquiti	
I-44	IS044E292.7	I-44 E of Cass	St. Louis City	1	Encom	
I-44	IS044E292.7	I-44 E of Cass	St. Louis City	1	Encom	
I-44	IS044W261.3	I-44 @ Allenton/Six Flags	St. Louis	1	Ubiquiti	
I-44	IS044W261.9	I-44 E of Allenton/Six Flags	St. Louis	1	Ubiquiti	
I-44	IS044W261.9	I-44 E of Allenton/Six Flags	St. Louis	1	Ubiquiti	
I-44	IS044W262.1	I-44 E of Allenton/Six Flags	St. Louis	1	Ubiquiti	
I-44	IS044W285.9	I-44 @ Hampton- Leave-In-Place Ex. Encom for Redundent Path with 10.6.128.52 Encom	St. Louis City	1	Ubiquiti	
I-44	IS044W287.1	I-44 @ Kingshighway	St. Louis City	1	Ubiquiti	
I-55	IS055N185.6	I-55 @ M NB Ramp	Jefferson	1	Ubiquiti	
I-55	IS055N187.3	I-55 @ Imperial Main NB Ramps	Jefferson	1	Ubiquiti	
I-55	IS055N190.6	I-55 @ Richardson East	Jefferson	1	Ubiquiti	
I-55	IS055S174.6	I-55 @ 61	Jefferson	1	Ubiquiti	
I-55	IS055S185.6	I-55 @ M SB Ramp	Jefferson	1	Encom	
I-55	IS055S209.0	I-55 N of 7th	St. Louis City	1	Ubiquiti	
I-64	IS064E030.5	I-64 @ McKnight	St. Louis	1	Encom	
I-64	IS064E038.5	I-64 W of 14th	St. Louis City	1	Ubiquiti	
I-64	IS064E038.8	I-64 @ 14th	St. Louis City	1	Ubiquiti	
I-64	IS064E040.1	I-64 @ 6th	St. Louis City	1	Ubiquiti	
I-64	IS064W030.8	I-64 @ McKnight	St. Louis	1	Encom	
I-64	IS064W031.8	I-64 @ I-170	St. Louis	1	Encom	
I-64	IS064W031.8	I-64 @ I-170	St. Louis	1	Encom	
I-64	IS064W036.5	I-64 @ Vandeventer - Do NOT remove- Redundant Path	St. Louis City	1	Encom	
I-70	IS070E212.0	I-70 @ A	St. Charles	1	Ubiquiti	
I-70	IS070E217.9	I-70 @ K-M	St. Charles	1	Ubiquiti	
I-70	IS070E246.8	I-70 @ Adelaide	St. Louis City	1	Ubiquiti	
I-70	IS070W209.5	I-70 @ Z	St. Charles	1	Ubiquiti	
I-70	IS070W223.7	I-70 @ 370 NWQ	St. Charles	1	Ubiquiti	
I-170	IS170N000.6	I-170 @ Galleria	St. Louis	1	Ubiquiti	
I-170	IS170N001.3	I-170 @ Forest Park	St. Louis	1	Ubiquiti	
I-270	IS270E020.2	270 WOR @ Woodcrest Exec	St. Louis	1	Ubiquiti	
I-270	IS270E030.4	I-270 E of New Halls Ferry	St. Louis	1	Ubiquiti	
I-270	IS270N014.8	I-270 @ 340 SEQ	St. Louis	1	Ubiquiti	
I-270	IS270S016.6	I-270 @ D	St. Louis	1	Ubiquiti	
I-270	IS270W034.1	I-270 @ Lilac WB Ramp	St. Louis	1	Ubiquiti	
I-270	IS270W034.1	Lilac @ Dunn	St. Louis	1	Ubiquiti	
I-270	IS270W035.4	I-270 @ Riverview	St. Louis City	1	Ubiquiti	
I-270	IS270W035.5	I-270 @ Riverview	St. Louis City	1	Ubiquiti	
MO 21	MO021N000.5	21 @ Reavis	St. Louis	1	Ubiquiti	
MO 21	MO021N002.1	21 N of 61	St. Louis	1	Ubiquiti	
MO 21	MO021N002.1	21 N of 61	St. Louis	1	Encom	
MO 21	MO021S000.1	21 @ Lutheran South High School	St. Louis	1	Ubiquiti	
MO 21	MO021S000.1	21 @ Lutheran South High School	St. Louis	1	Ubiquiti	
MO 21	MO021S001.2	21 S of 141	St. Louis	1	Ubiquiti	
MO 21	MO021S001.2	21 S of 141	St. Louis	1	Ubiquiti	
MO 21	MO021S001.7	21 @ Musick - Green Park	St. Louis	1	Ubiquiti	
MO 30	MO030W027.4	30 @ MM	Jefferson	1	Ubiquiti	
MO 30	MO030W044.8	30 @ 21	St. Louis	1	Ubiquiti	
MO 30	MO030W047.7	30 @ Loughborough	St. Louis City	1	Ubiquiti	
MO 30	MO030W047.8	30 @ Kingshighway	St. Louis City	1	Ubiquiti	
MO 47	MO047N063.3	47 @ Independence	Franklin	1	Encom	
MO 47	MO047N063.3	47 @ Independence	Franklin	1	Encom	
MO 47	MO047N063.7	47 @ V	Franklin	1	Encom	
MO 47	MO047S061.8	47 @ Clearview	Franklin	1	Ubiquiti	
MO 47	MO047S071.1	47 @ N Commercial	Franklin	1	Ubiquiti	
MO 47	MO047S071.1	47 @ N Commercial	Franklin	1	Ubiquiti	
MO 47	MO047S071.1	47 @ N Commercial	Franklin	1	Ubiquiti	
MO 47	MO047S072.3	47 @ 30	Franklin	1	Ubiquiti	
MO 79	MO079N083.8	79 @ M	St. Charles	1	Ubiquiti	
MO 100	MO100E111.5	100 @ McKnight- Rock Hill	St. Louis	1	Encom	
MO 100	MO100E113.7	100 @ Oakland Signal	St. Louis	1	Ubiquiti	
			SUBTOTAL 1	62		

STATE OF MISSOURI
JAMIE F. RANA
NUMBER PE-2005001034
PROFESSIONAL ENGINEER

Jamie F. Rana
07/18/2025 11:22:18 AM
JAMIE F. RANA - CIVIL
MO-PE-2005001034

DATE PREPARED
7/17/2025

ROUTE	STATE
VAR.	MO
DISTRICT	SHEET NO.
SL	2

COUNTY
VARIOUS

JOB NO.
J6Q2026E

CONTRACT ID.

PROJECT NO.

BRIDGE NO.

DATE	DESCRIPTION

MISSOURI HIGHWAYS AND TRANSPORTATION COMMISSION

105 WEST CAPITOL
JEFFERSON CITY, MO 65102
1-888-ASK-MODOT (1-888-275-6636)

QUANTITIY SHEETS
25 OF 32

WIRELESS RADIO (2 OF 5)

ROUTE	LOG MILE	LOCATION	COUNTY	P.M. VIDEO COMMUNICATION LINK AND ASSEMBLY (EA)	TYPE	COMMENTS
MO 100	MO100E114.7	100 @ McCausland	St. Louis City	1	Ubiquiti	
MO 100	MO100E114.9	100 @ Prather	St. Louis City	1	Ubiquiti	
MO 100	MO100E114.9	100 @ Prather	St. Louis City	1	Ubiquiti	
MO 100	MO100E115.0	100 @ Waldemar	St. Louis City	1	Ubiquiti	
MO 100	MO100E115.0	100 @ Waldemar	St. Louis City	1	Ubiquiti	
MO 100	MO100E115.3	100 @ St Louis Marketplace	St. Louis City	1	Ubiquiti	
MO 100	MO100E115.3	100 @ St Louis Marketplace	St. Louis City	1	Ubiquiti	
MO 100	MO100E116.0	100 @ Sulphur	St. Louis City	1	Ubiquiti	
MO 100	MO100E116.0	100 @ Sulphur	St. Louis City	1	Ubiquiti	
MO 100	MO100E116.0	100 @ Sulphur - Leave-In-Place Ex. Ubiquiti for Redundent Path with 10.6.128.44 Ubiquiti	St. Louis City	1	Ubiquiti	
MO 100	MO100E116.3	100 @ Sublette	St. Louis City	1	Ubiquiti	
MO 100	MO100E116.7	100 @ Barron	St. Louis City	1	Ubiquiti	
MO 100	MO100E116.7	100 @ Barron	St. Louis City	1	Ubiquiti	
MO 100	MO100E117.0	100 @ W of Kingshighway- Mid-Block Detector- points to Kingshighway	St. Louis City	1	Ubiquiti	
MO 100	MO100E117.0	100 W of Kingshighway	St. Louis City	1	Ubiquiti	
MO 100	MO100E117.3	100 @ S. Taylor (Stl City)	St. Louis City	1	Ubiquiti	
MO 100	MO100E117.3	100 @ S. Taylor (Stl City)	St. Louis City	1	Ubiquiti	
MO 100	MO100E117.7	100 @ S. Boyle	St. Louis City	1	Ubiquiti	
MO 100	MO100E118.4	100 @ S. 39th	St. Louis City	1	Ubiquiti	
MO 100	MO100E119.1	100 @ S. Compton	St. Louis City	1	Ubiquiti	
MO 100	MO100E119.1	100 @ S. Compton	St. Louis City	1	Ubiquiti	
MO 100	MO100E120.3	100 @ Truman	St. Louis City	1	Ubiquiti	
MO 100	MO100E121.1	100 @ S. Broadway-4th	St. Louis City	1	Ubiquiti	
MO 100	MO100E121.1	100 @ S. Broadway-4th	St. Louis City	1	Ubiquiti	
MO 100	MO100W067.3	100 @ Bluff	Franklin	1	Encom	
MO 100	MO100W068.0	100 @ Washington Elem School	Franklin	1	Ubiquiti	
MO 100	MO100W068.0	100 @ Washington Elem School	Franklin	1	Encom	
MO 100	MO100W068.7	100 @ Pottery	Franklin	1	Ubiquiti	
MO 100	MO100W069.7	100 @ A-Jefferson	Franklin	1	Ubiquiti	
MO 100	MO100W095.5	100 @ 109	St. Louis	1	Ubiquiti	
MO 100	MO100W113.5	100 @ Laclede Station Signal	St. Louis	1	Ubiquiti	
MO 100	MO100W113.5	100 @ Laclede Station Signal	St. Louis	1	Encom	
MO 100	MO100W115.8	100 @ Knox	St. Louis City	1	Ubiquiti	
MO 100	MO100W115.8	100 @ Knox	St. Louis City	1	Ubiquiti	
MO 100	MO100W115.9	100 @ Hampton	St. Louis City	1	Ubiquiti	
MO 100	MO100W115.9	100 @ Hampton	St. Louis City	1	Ubiquiti	
MO 100	MO100W116.6	100 @ Macklind	St. Louis City	1	Ubiquiti	
MO 100	MO100W117.1	100 @ S. Kingshighway	St. Louis City	1	Ubiquiti	
MO 100	MO100W117.1	100 @ S. Kingshighway	St. Louis City	1	Ubiquiti	
MO 100	MO100W117.1	100 @ S. Kingshighway- points to East	St. Louis City	1	Ubiquiti	
MO 100	MO100W117.4	100 @ S. Newstead	St. Louis City	1	Ubiquiti	
MO 100	MO100W117.4	100 @ S. Newstead	St. Louis City	1	Ubiquiti	
MO 100	MO100W117.6	100 @ Tower Grove	St. Louis City	1	Ubiquiti	
MO 100	MO100W118.0	100 @ Sarah	St. Louis City	1	Ubiquiti	
MO 100	MO100W118.0	100 @ Sarah	St. Louis City	1	Ubiquiti	
MO 100	MO100W118.1	100 @ S.Vandeventer	St. Louis City	1	Ubiquiti	
MO 100	MO100W118.1	100 @ S.Vandeventer - Do NOT remove- Redundant Path	St. Louis City	1	Encom	
MO 100	MO100W118.5	100 @ Cardinal Glennon to Grand - Temporary	St. Louis City	0	Ubiquiti	
MO 100	MO100W118.5	100 @ Cardinal Glennon to Spring - Temporary	St. Louis City	0	Ubiquiti	
MO 100	MO100W118.5	100 @ S. Spring	St. Louis City	1	Ubiquiti	
MO 100	MO100W118.5	100 @ S. Spring - Temporary	St. Louis City	0	Ubiquiti	
MO 100	MO100W118.7	100 @ S. Grand	St. Louis City	1	Ubiquiti	
MO 100	MO100W118.7	100 @ S. Grand	St. Louis City	1	Ubiquiti	
MO 100	MO100W119.4	100 @ S. Ewing	St. Louis City	1	Ubiquiti	
MO 100	MO100W119.4	100 @ S. Ewing - Mid-Block Detector- points to Grand	St. Louis City	1	Ubiquiti	
MO 100	MO100W119.6	100 @ S. Jefferson	St. Louis City	1	Ubiquiti	
MO 100	MO100W119.7	100 @ S. Jefferson	St. Louis City	1	Ubiquiti	
MO 100	MO100W120.5	100 @ S. 14th	St. Louis City	1	Ubiquiti	
MO 100	MO100W120.5	100 @ S. 14th	St. Louis City	1	Ubiquiti	
MO 100	MO100W120.6	100 @ S. Tucker-11th - RE-Claim after J6Q3077 fiber connections	St. Louis City	1	Ubiquiti	
MO 100	MO100W121.0	100 @ S. 7th	St. Louis City	1	Ubiquiti	
MO 100	MO100W121.0	100 @ S. 7th	St. Louis City	1	Ubiquiti	
			SUBTOTAL 2	59		

STATE OF MISSOURI
JAMIE F. RANA
NUMBER PE-2005001034
PROFESSIONAL ENGINEER

Jamie F. Rana
07/18/2025 11:22:37 AM
JAMIE F. RANA - CIVIL
MO-PE-2005001034

DATE PREPARED
7/17/2025

ROUTE	STATE
VAR.	MO
DISTRICT	SHEET NO.
SL	2

COUNTY
VARIOUS

JOB NO.
J6Q2026E

CONTRACT ID.

PROJECT NO.

BRIDGE NO.

DESCRIPTION

DATE

MISSOURI HIGHWAYS AND TRANSPORTATION COMMISSION

105 WEST CAPITOL
JEFFERSON CITY, MO 65102
1-888-ASK-MODOT (1-888-275-6636)

QUANTITIY SHEETS
26 OF 32

WIRELESS RADIO (3 OF 5)

ROUTE	LOG MILE	LOCATION	COUNTY	P.M. VIDEO COMMUNICATION LINK AND ASSEMBLY (EA)	TYPE	COMMENTS
MO 109	MO109S005.2	109 @ Old Rte 100	St. Louis	1	Ubiquiti	
MO 109	MO109S005.2	109 @ Old Rte 100	St. Louis	1	Ubiquiti	
MO 109	MO109S005.4	109 @ New College	St. Louis	1	Ubiquiti	
MO 115	MO115E006.4	115 @ Union	St. Louis City	1	Ubiquiti	
MO 115	MO115E006.8	115 @ Kingshighway	St. Louis City	1	Ubiquiti	
MO 141	MO141S027.1	141 @ 21	Jefferson	1	Ubiquiti	
MO 231	MO231N000.5	231 @ Hoffmeister	St. Louis	0	Ubiquiti	
MO 231	MO231N000.6	231 N of Ripa	St. Louis	0	Ubiquiti	
MO 231	MO231N000.6	231 N of Ripa	St. Louis	0	Ubiquiti	
MO 231	MO231N001.1	231 @ Ripa	St. Louis	0	Ubiquiti	
MO 231	MO231N001.1	231 @ Ripa	St. Louis	0	Ubiquiti	
MO 231	MO231N001.2	231 S of Ripa	St. Louis	0	Ubiquiti	
MO 231	MO231N001.2	231 S of Ripa	St. Louis	0	Ubiquiti	
MO 231	MO231N001.6	231 S of Ripa	St. Louis	0	Ubiquiti	
MO 231	MO231N001.6	231 S of Ripa	St. Louis	0	Ubiquiti	
MO 231	MO231N001.9	231 N of Telegraph-Kingston	St. Louis	0	Ubiquiti	
MO 231	MO231N001.9	231 N of Telegraph-Kingston	St. Louis	0	Ubiquiti	
MO 231	MO231N003.1	231 @ Sappington Barracks	St. Louis	0	Ubiquiti	
MO 231	MO231S002.2	231 N of Telegraph-Kingston	St. Louis	0	Ubiquiti	
MO 231	MO231S002.2	231 N of Telegraph-Kingston	St. Louis	0	Ubiquiti	
MO 231	MO231S002.3	231 @ Telegraph-Kingston	St. Louis	0	Ubiquiti	
MO 231	MO231S002.3	231 @ Telegraph-Kingston	St. Louis	0	Ubiquiti	
MO 231	MO231S002.4	231 @ Jeffersonian	St. Louis	0	Ubiquiti	
MO 231	MO231S002.4	231 @ Jeffersonian	St. Louis	0	Ubiquiti	
MO 267	MO267N001.3	267 @ Hoffmeister	St. Louis	0	Ubiquiti	
MO 267	MO267N001.3	267 @ Hoffmeister	St. Louis	0	Ubiquiti	
MO 267	MO267N001.7	267 @ Telegraph	St. Louis	0	Ubiquiti	
MO 267	MO267N001.7	267 @ Telegraph	St. Louis	0	Ubiquiti	
MO 267	MO267N002.2	267 N of Reavis Barracks	St. Louis	0	Ubiquiti	
MO 267	MO267N002.2	267 N of Reavis Barracks	St. Louis	0	Ubiquiti	
MO 267	MO267S000.6	267 @ Military	St. Louis	0	Ubiquiti	
MO 267	MO267S001.1	267 @ Bayless	St. Louis	0	Ubiquiti	
MO 267	MO267S001.1	267 @ Bayless	St. Louis	0	Ubiquiti	
MO 267	MO267S002.6	267 @ Reavis Barracks	St. Louis	0	Ubiquiti	
MO 364	MO364E008.0	364 W of Mid Rivers Mall	St. Charles	1	Ubiquiti	
MO 364	MO364W001.9	364 @ Bryan	St. Charles	1	Ubiquiti	
MO 364	MO364W001.9	364 @ Bryan	St. Charles	1	Ubiquiti	
MO 364	MO364W003.4	364 W of K	St. Charles	1	Ubiquiti	
MO 364	MO364W004.4	364 @ K	St. Charles	1	Ubiquiti	
MO 364	MO364W004.4	364 @ K	St. Charles	1	Ubiquiti	
MO 364	MO364W005.5	364 E of K	St. Charles	1	Ubiquiti	
MO 364	MO364W007.6	364 W of Motherhead	St. Charles	1	Ubiquiti	
MO 367	MO367N005.1	367 @ Berwyn-Northumberland	St. Louis	1	Encom	
MO 367	MO367N005.1	367 @ Berwyn-Northumberland	St. Louis	1	Ubiquiti	
MO 367	MO367S004.0	367 @ Missouri Veterans Home	St. Louis	1	Ubiquiti	
MO 367	MO367S004.6	367 @ Comet	St. Louis	1	Ubiquiti	
MO 367	MO367S004.6	367 @ Comet	St. Louis	1	Encom	
MO 367	MO367S006.0	367 @ St Cyr	St. Louis	1	Ubiquiti	
MO 367	MO367S006.0	367 @ St Cyr	St. Louis	1	Ubiquiti	
MO 367	MO367S006.4	367 @ Jennings Sta	St. Louis	1	Ubiquiti	
OR 21	OR021N000.4	Old MO 21 @ Konert Road	Jefferson	1	Ubiquiti	
SOR 44	OR044E261.3	I-44 SOR-BL @ Six Flags	St. Louis	1	Ubiquiti	
SOR 44	OR044E261.3	SOR 44 at 316 Main Street Signal (One Lane Traffic)	St. Louis	1	Ubiquiti	
OR 55	OR055S000.0	I-55 @ Vogel SB Ramp	Jefferson	1	Ubiquiti	
WOR 55	OR055S000.6	I-55 WOR @ Elm	Jefferson	1	Ubiquiti	
SOR 64	OR064S000.0	I-64 SOR @ Route N	St. Charles	1	Ubiquiti	
SOR 70	OR070E001.0	I-70 SOR @ Spencer Loop South	St. Charles	1	Ubiquiti	
SOR 70	OR070E001.2	I-70 SOR-Veterans Memorial @ Woodlawn	St. Charles	1	Ubiquiti	
NOR 70	OR070W001.0	I-70 NOR @ Spencer Loop North	St. Charles	1	Ubiquiti	
NOR 70	OR070W001.0	I-70 NOR @ Spencer Loop North	St. Charles	1	Ubiquiti	
NOR 70	OR070W001.2	I-70 NOR-W Terra @ Woodlawn	St. Charles	1	Ubiquiti	
NOR 70	OR070W001.2	I-70 NOR-W Terra @ Woodlawn	St. Charles	1	Ubiquiti	
			SUBTOTAL 3	34		

STATE OF MISSOURI
JAMIE F. RANA
NUMBER PE-2005001034
PROFESSIONAL ENGINEER

Jamie F. Rana
(07/18/2025 11:23:03 AM
JAMIE F. RANA - CIVIL
MO-PE-2005001034

DATE PREPARED
7/17/2025

ROUTE: VAR. | STATE: MO
DISTRICT: SL | SHEET NO.: 2
COUNTY: VARIOUS
JOB NO.: J6Q2026E
CONTRACT ID.
PROJECT NO.
BRIDGE NO.

DESCRIPTION
DATE

MISSOURI HIGHWAYS AND TRANSPORTATION COMMISSION
MoDOT
105 WEST CAPITOL
JEFFERSON CITY, MO 65102
1-888-ASK-MODOT (1-888-275-6636)

QUANTITIY SHEETS
27 OF 32

WIRELESS RADIO (4 OF 5)

ROUTE	LOG MILE	LOCATION	COUNTY	P.M. VIDEO COMMUNICATION LINK AND ASSEMBLY (EA)	TYPE	COMMENTS
RT A	RT00AE003.3	A @ I-70 EB Off Ramp	St. Charles	1	Ubiquiti	
RT A	RT00AW000.2	A @ 21 NB Ramps	Jefferson	1	Ubiquiti	
RT A	RT00AW000.4	A @ Steutermann	Jefferson	1	Ubiquiti	
RT D	RT00DE009.5	D @ Hodiamont	St. Louis City	1	Ubiquiti	
RT D	RT00DE009.6	D @ Hamilton	St. Louis City	1	Ubiquiti	
RT D	RT00DE009.6	D @ Hamilton	St. Louis City	1	Ubiquiti	
RT D	RT00DE010.1	D @ Clara	St. Louis City	1	Ubiquiti	
RT D	RT00DE010.1	D @ Clara	St. Louis City	1	Ubiquiti	
RT D	RT00DE010.6	D @ Union	St. Louis City	1	Ubiquiti	
RT D	RT00DE010.6	D @ Union	St. Louis City	1	Ubiquiti	
RT D	RT00DE010.9	D @ Academy	St. Louis City	1	Ubiquiti	
RT D	RT00DE010.9	D @ Academy	St. Louis City	1	Ubiquiti	
RT D	RT00DE011.3	D @ Euclid	St. Louis City	1	Ubiquiti	
RT D	RT00DE011.3	D @ Euclid	St. Louis City	1	Ubiquiti	
RT D	RT00DE011.3	D @ Kingshighway	St. Louis City	1	Ubiquiti	
RT D	RT00DE011.3	D @ Kingshighway	St. Louis City	1	Ubiquiti	
RT D	RT00DE012.2	D @ Pendleton	St. Louis City	1	Ubiquiti	
RT D	RT00DE012.2	D @ Pendleton	St. Louis City	1	Ubiquiti	
RT D	RT00DE012.5	D @ North Sarah	St. Louis City	1	Ubiquiti	
RT D	RT00DE012.5	D @ North Sarah	St. Louis City	1	Ubiquiti	
RT D	RT00DE013.1	D @ Spring	St. Louis City	1	Ubiquiti	
RT D	RT00DE013.1	D @ Spring	St. Louis City	1	Ubiquiti	
RT D	RT00DE013.2	D @ Grand	St. Louis City	1	Ubiquiti	
RT D	RT00DE013.2	D @ Grand	St. Louis City	1	Ubiquiti	
RT D	RT00DW001.4	D @ Schuetz	St. Louis	1	Ubiquiti	
RT D	RT00DW001.4	D @ Schuetz	St. Louis	1	Ubiquiti	
RT D	RT00DW001.9	D @ Ball-Westport Center	St. Louis	1	Ubiquiti	
RT D	RT00DW010.3	D @ Belt	St. Louis City	1	Ubiquiti	
RT D	RT00DW010.3	D @ Belt	St. Louis City	1	Ubiquiti	
RT D	RT00DW011.4	D @ Walton	St. Louis City	1	Ubiquiti	
RT D	RT00DW011.4	D @ Walton	St. Louis City	1	Ubiquiti	
RT D	RT00DW011.7	D @ Rev GH Pruitt	St. Louis City	1	Ubiquiti	
RT D	RT00DW011.7	D @ Rev GH Pruitt	St. Louis City	1	Ubiquiti	
RT D	RT00DW011.9	D @ Taylor	St. Louis City	1	Ubiquiti	
RT D	RT00DW011.9	D @ Taylor	St. Louis City	1	Ubiquiti	
RT D	RT00DW012.0	D @ Newstead	St. Louis City	1	Ubiquiti	
RT D	RT00DW012.0	D @ Newstead	St. Louis City	1	Ubiquiti	
RT D	RT00DW012.4	D @ Whittier	St. Louis City	1	Ubiquiti	
RT D	RT00DW012.4	D @ Whittier	St. Louis City	1	Ubiquiti	
RT D	RT00DW012.8	D @ Vandeventer	St. Louis City	1	Ubiquiti	
RT D	RT00DW012.8	D @ Vandeventer	St. Louis City	1	Ubiquiti	
RT D	RT00DW013.4	D @ Francis / Leonard	St. Louis City	1	Ubiquiti	
RT D	RT00DW019.8	D @ Goodfellow	St. Louis City	1	Ubiquiti	
RT D	RT00DW019.8	D @ Goodfellow	St. Louis City	1	Ubiquiti	
RT H	RT00HN003.6	H @ Riverview	St. Louis City	1	Ubiquiti	
RT H	RT00HN003.7	H N of Jackson	St. Louis City	1	Ubiquiti	
RT H	RT00HN003.7	H N of Jackson	St. Louis City	1	Ubiquiti	
RT H	RT00HN004.4	H @ Gimblin	St. Louis City	1	Ubiquiti	
RT H	RT00HN004.4	H @ Gimblin	St. Louis City	1	Ubiquiti	
RT H	RT00HN005.0	H @ Blase	St. Louis City	1	Ubiquiti	
RT H	RT00HN005.0	H @ Blase	St. Louis City	1	Ubiquiti	
RT H	RT00HN005.6	H N of Humboldt	St. Louis City	1	Ubiquiti	
RT H	RT00HN005.6	H N of Humboldt	St. Louis City	1	Ubiquiti	
RT H	RT00HN007.1	H @ Adelaide	St. Louis City	1	Ubiquiti	
RT H	RT00HN007.1	H @ Adelaide	St. Louis City	1	Ubiquiti	
RT M	RT00ME006.4	M @ Catlin	Jefferson	1	Encom	
RT M	RT00MN000.0	M @ P	St. Charles	1	Ubiquiti	
RT M	RT00MS000.2	M S of 79	St. Charles	1	Ubiquiti	
RT M	RT00MS000.2	M S of 79	St. Charles	1	Ubiquiti	
RT N	RT00NE009.6	N @ Lake St. Louis	St. Charles	1	Ubiquiti	
RT N	RT00NE009.6	N @ Lake St. Louis	St. Charles	1	Ubiquiti	
RT N	RT00NE010.0	N S of Red Baron Dr	St. Charles	1	Ubiquiti	
			SUBTOTAL 4	62		

STATE OF MISSOURI
JAMIE F. RANA
NUMBER PE-2005001034
PROFESSIONAL ENGINEER

Jamie F. Rana
07/18/2025 11:23:27 AM
JAMIE F. RANA - CIVIL
MO-PE-2005001034

DATE PREPARED
7/17/2025

ROUTE	STATE
VAR.	MO
DISTRICT	SHEET NO.
SL	2

COUNTY
VARIOUS

JOB NO.
J6Q2026E

CONTRACT ID.

PROJECT NO.

BRIDGE NO.

DATE	DESCRIPTION

MISSOURI HIGHWAYS AND TRANSPORTATION COMMISSION

105 WEST CAPITOL
JEFFERSON CITY, MO 65102
1-888-ASK-MODOT (1-888-275-6636)

QUANTITIY SHEETS
28 OF 32

WIRELESS RADIO (5 OF 5)

ROUTE	LOG MILE	LOCATION	COUNTY	P.M. VIDEO COMMUNICATION LINK AND ASSEMBLY (EA)	TYPE	COMMENTS
RT N	RT00NE010.0	N S of Red Baron Dr	St. Charles	1	Ubiquiti	
RT N	RT00NE010.7	N @ Hawk Ridge	St. Charles	1	Ubiquiti	
RT N	RT00NW007.8	N S of Duello Rd	St. Charles	1	Ubiquiti	
RT N	RT00NW007.8	N S of Duello Rd	St. Charles	1	Ubiquiti	
RT N	RT00NW008.0	N N of Hopewell Rd	St. Charles	1	Ubiquiti	
RT N	RT00NW008.0	N N of Hopewell Rd	St. Charles	1	Ubiquiti	
RT N	RT00NW008.9	N N of Wyndgate Ridge Dr	St. Charles	1	Ubiquiti	
RT N	RT00NW008.9	N N of Wyndgate Ridge Dr	St. Charles	1	Ubiquiti	
RT N	RT00NW009.3	N S of Glen Brook Ct	St. Charles	1	Ubiquiti	
RT P	RT00PN000.0	P @ 366	St. Louis	1	Ubiquiti	
RT P	RT00PN000.7	P @ St Dominic Savio School	St. Louis	1	Ubiquiti	
RT P	RT00PN000.7	P @ St Dominic Savio School	St. Louis	1	Ubiquiti	
RT P	RT00PN001.7	P @ Affton High School	St. Louis	1	Encom	
RT P	RT00PN001.7	P @ Affton High School	St. Louis	1	Ubiquiti	
RT P	RT00PS000.6	P @ Rogers Middle School	St. Louis	1	Ubiquiti	
RT P	RT00PS000.6	P @ Rogers Middle School	St. Louis	1	Ubiquiti	
RT P	RT00PS001.2	P @ Heege	St. Louis	1	Ubiquiti	
RT P	RT00PS001.2	P @ Heege	St. Louis	1	Encom	
RT P	RT00PS002.0	P @ Weber	St. Louis	1	Ubiquiti	
RT Z	RT00ZS000.3	Z @ Interstate Dr	St. Charles	1	Ubiquiti	
RT AC	RT0ACN003.3	AC @ Hambletonian	St. Louis	1	Encom	
RT AC	RT0ACN003.3	AC @ Hambletonian	St. Louis	1	Ubiquiti	
RT AC	RT0ACN005.6	AC @ Netherton	St. Louis	1	Ubiquiti	
RT AC	RT0ACN006.1	AC @ Old Pershall/Home Depot	St. Louis	1	Ubiquiti	
RT AC	RT0ACN006.5	AC @ Old Halls Ferry	St. Louis	1	Ubiquiti	
RT AC	RT0ACN006.5	AC @ Old Halls Ferry	St. Louis	1	Ubiquiti	
RT AC	RT0ACN006.9	AC @ Hudson	St. Louis	1	Ubiquiti	
RT AC	RT0ACN006.9	AC @ Hudson	St. Louis	1	Ubiquiti	
RT AC	RT0ACN007.6	AC @ Chambers	St. Louis	1	Ubiquiti	
RT AC	RT0ACN007.6	AC @ Chambers	St. Louis	1	Ubiquiti	
RT AC	RT0ACS002.9	AC @ Leisurewood	St. Louis	1	Encom	
RT AC	RT0ACS003.9	AC @ Parker	St. Louis	1	Ubiquiti	
RT AC	RT0ACS004.8	AC @ Pohlman	St. Louis	1	Encom	
RT AC	RT0ACS004.9	AC @ West Florissant	St. Louis	1	Ubiquiti	
RT AC	RT0ACS004.9	AC @ West Florissant	St. Louis	1	Encom	
RT AC	RT0ACS008.1	AC @ Lucas and Hunt	St. Louis	1	Ubiquiti	
RT DD	RT0DDN007.9	DD @ Sommers	St. Charles	1	Ubiquiti	
RT DD	RT0DDS001.9	DD @ Frontier Middle School	St. Charles	1	Ubiquiti	
RT MM	RT0MMN000.7	MM @ House Springs	Jefferson	1	Ubiquiti	
US 50	US050W219.2	50 @ Prairie Dell	Franklin	1	Ubiquiti	
US 50	US050W219.2	50 @ Prairie Dell	Franklin	1	Ubiquiti	
US 50	US050W219.6	50 @ Progress Parkway	Franklin	1	Ubiquiti	
US 61	US061S006.5	61 @ 21	St. Louis	1	Encom	
US 67	US067N048.4	61 @ Imperial Main	Jefferson	1	Ubiquiti	
US 67	US067N048.4	61 @ Imperial Main	Jefferson	1	Ubiquiti	
US 67	US067N048.8	61 @ Windsor Harbor	Jefferson	1	Ubiquiti	
US 67	US067N062.0	67 @ Cloverleaf Drive	Jefferson	1	Ubiquiti	
US 67	US067N062.0	67 @ Cloverleaf Drive	Jefferson	1	Ubiquiti	
US 67	US067S002.7	67 @ 94	St. Charles	1	Ubiquiti	
US 67	US067S004.5	67 S of Missouri River	St. Louis	1	Ubiquiti	
US 67	US067S045.4	61 @ Richardson	Jefferson	1	Ubiquiti	
US 67	US067S062.7	67 @ CC	Jefferson	1	Ubiquiti	
			SUBTOTAL 5	52		
			SUBTOTAL 4	62		
			SUBTOTAL 3	34		
			SUBTOTAL 2	59		
			SUBTOTAL 1	62		
			PAY TOTAL	269		

STATE OF MISSOURI
JAMIE F. RANA
NUMBER PE-2005001034
PROFESSIONAL ENGINEER

Jamie F. Rana
07/18/2025 11:23:49 AM
JAMIE F. RANA - CIVIL
MO-PE-2005001034

DATE PREPARED
7/17/2025

ROUTE	STATE
VAR.	MO

DISTRICT	SHEET NO.
SL	2

COUNTY
VARIOUS

JOB NO.
J6Q2026E

CONTRACT ID.

PROJECT NO.

BRIDGE NO.

DATE	DESCRIPTION

MISSOURI HIGHWAYS AND TRANSPORTATION COMMISSION

105 WEST CAPITOL
JEFFERSON CITY, MO 65102
1-888-ASK-MODOT (1-888-275-6636)

QUANTITIY SHEETS
29 OF 32

WRONG WAY ALERT SYSTEM

ROUTE	LOCATION	COUNTY	P.M., SOFTWARE AND RECERTIFICATION OF EXISTING SYSTEM (EA)	COMMENTS
I-44	WB 44 Off-Ramp to MO 100 Gray Summit	Franklin	1	
I-44	EB 44 Off-Ramp to Hampton Ave, Exit 286	St. Louis City	1	
I-44	EB 44 Off-Ramp to Lafayette Ave, Exit 290B	St. Louis City	1	
I-44	EB 44 Off-Ramp to S Jefferson Ave., Exit 289	St. Louis City	1	
I-44	St. Clair Rest Area ◆ EB 44 Ramp	Franklin	1	
I-44	St. Clair Rest Area ◆ WB 44 Ramp	Franklin	1	
I-44	WB 44 Off-Ramp to Arsenal St., Exist 284B	St. Louis City	1	
I-44	WB 44 Off-Ramp to Grand/Louisiana, Exit 288	St. Louis City	1	
I-44	WB 44 Off-Ramp to Hampton Ave, Exit 286	St. Louis City	1	
I-44	WB 44 Off-Ramp to S. Jefferson Ave., Exit 289	St. Louis City	1	
I-44	WB 44 Off-Ramp to Vandeventer Ave., Exit 287B	St. Louis	1	
I-70	I-70 EB at N. Florissant	St. Louis	1	
MO 370	WB 370 to Off-Ramp to Earth City Expy, Exit 9	St. Louis	1	
		PAYTOTAL	13	

VARIOUS ITS ITEMS (NO LOCATION NOTED) TABLE 1 OF 2

LINE ITEM #	DESCRIPTION	PAY TOTAL
	CCTV CAMERA ASSEMBLY, INSTALLED	30
	CONDUIT, 2", RIGID, IN TRENCH	250
	CONDUIT, 3", RIGID, IN TRENCH	100
	CONDUIT, 4", RIGID, IN TRENCH	100
	CONDUIT, 3", RIGID, PUSHED	50
	CONDUIT, 4", RIGID, PUSHED	50
	FIBER OPTIC CABLE, 24 STRAND, 18 SM, 6 MM	500
	REMOVE CAMERA POLE	1
	INSTALL SALVAGED CAMERA POLE	1
	REMOVE COMM. NODE FIELD CABINET (SINGLE CABINET)	1
	REMOVE COMM. NODE FIELD CABINET (DOUBLE CABINET)	1
	F&I TYPE 1 ITS CABINET	1
	F&I TYPE 2 ITS CABINET	1
	REMOVE WIRELESS COMM. EQUIPMENT	2
	INSTALL SPREAD SPECTRUM WIRELESS COMM. EQUIP.	2
	INSTALL COMMISSION-FURNISHED WIRELESS ETHERNET BRIDGE COMM. EQUIP.	5
	F&I FIBER OPTIC FUSION SPLICE, SM	1250
	F&I FIBER OPTIC FUSION SPLICE, MM	50
	F&I ITS PULL BOX WITH CONCRETE PAD, CLASS 2	2
	F&I ITS PULL BOX WITH CONCRETE PAD, CLASS 5	2
	ITS PULL BOX LID REPLACEMENT (32" DIA.)	5
	ITS PULL BOX LID REPLACEMENT (40.5" DIA.)	5
	FIBER OPTIC SPLICE ENCLOSURE	6
	FIBER OPTIC TERMINATION	150
	RACK MOUNTED INTERCONNECT CENTER	5
	WALL MOUNTED INTERCONNECT CENTER	5
	REMOVE NON-INTRUSIVE VEHICLE DET. POLE	10
	INSTALL SALVAGED NON-INTRUSIVE VEHICLE DET. POLE	10
	REMOVE NON-INTRUSIVE VEHICLE DETECTOR ASSEMBLY	15
	INSTALL NON-INTRUSIVE VEHICLE DETECTOR ASSEMBLY	15
	F&I NON-INTRUSIVE VEHICLE DET. POLE	5
	ADVANCED DIAGNOSTICS	500
	F&I TYPE 5 ITS CABINET	1
	F&I TYPE 7 ITS CABINET	1
	INSTALL SALVAGED FIELD CABINET (SINGLE)	10
	INSTALL SALVAGED FIELD CABINET (DUAL)	1
	F&I CAMERA POLE (60 FT) & LOWERING SYSTEM	1
	INSTALL SOLAR POWER SYSTEM	1
	TB1-17 ALUMINUM BASE FOR RTMS POLE	1
	TB3-17 ALUMINUM BASE FOR RTMS POLE	1
	PAD MOUNTED POWER SUPPLY, 120V ITS	2
	INSTALL COMMISSION FURNISHED ETHERNET BRIDGE COMMUNICATION EQUIPMENT	5
	INSTALL COMMISSION FURNISHED ETHERNET SWITCH ASSEMBLY	5
	INSTALL COMMISSION FURNISHED IP ADDRESSABLE POWER STRIP	5

STATE OF MISSOURI
JAMIE F. RANA
NUMBER PE-2005001034
PROFESSIONAL ENGINEER

Jamie F. Rana
(07/18/2025 11:24:12 AM
JAMIE F. RANA - CIVIL
MO-PE-2005001034

DATE PREPARED
7/17/2025

ROUTE	STATE
VAR.	MO
DISTRICT	SHEET NO.
SL	2

COUNTY
VARIOUS

JOB NO.
J6Q2026E

CONTRACT ID.

PROJECT NO.

BRIDGE NO.

DATE	DESCRIPTION

MISSOURI HIGHWAYS AND TRANSPORTATION COMMISSION

105 WEST CAPITOL
JEFFERSON CITY, MO 65102
1-888-ASK-MODOT (1-888-275-6636)

QUANTITIY SHEETS
30 OF 32

VARIOUS ITS ITEMS (NO LOCATION NOTED) TABLE 2 OF 2			
LINE ITEM #	DESCRIPTION	PAY TOTAL	REMARKS
	REMOVE UPS SYSTEM ASSEMBLY	10	
	F&I ITS PULLBOX CLASS 1	2	
	TROUBLESHOOTING	100	
	INSTALL UPS SYSTEM ASSEMBLY	10	
	REMOVE UPS POWER INVERTER	1	
	INSTALL UPS POWER INVERTER	10	
	REMOVE UPS BATTERY MONITOR	1	
	INSTALL UPS BATTERY MONITOR	10	
	REMOVE UPS BATTERY	10	
	INSTALL UPS BATTERY	10	
	REMOVE UPS AUTOMATIC TRANSFER SWITCH	10	
	INSTALL UPS AUTOMATIC TRANSFER SWITCH	10	
	REMOVE UPS AUTOMATIC GENERATOR SWITCH	10	
	INSTALL UPS AUTOMATIC GENERATOR SWITCH	10	
	REMOVE SOLAR POWER SYSTEM	1	
	REMOVE CCTV CAMERA & ASSEMBLY	30	
	F&I FIBER OPTIC CABLE, 24 STRAND SM	17000	
	F&I FIBER OPTIC CABLE, 72 STRAND SM	5000	
	F&I CABLE IN CONDUIT, #1/0 WIRE, VARIABLE CONDUCTORS	500	
	F&I CABLE IN CONDUIT, #2/0 WIRE, VARIABLE CONDUCTORS	100	
	F&I CABLE IN CONDUIT, #14 WIRE, VARIABLE CONDUCTORS	250	
	F&I CABLE IN CONDUIT, VIDEO COAXIAL CABLE	250	
	CONDUIT, HIGH DENSITY POLYETHYLENE, 2 IN., PUSHED	300	
	CONDUIT, HIGH DENSITY POLYETHYLENE, 2 IN., IN TRENCH	50	
	CONDUIT, 2", RIGID, PUSHED	250	
	F&I TRACE WIRE	7000	
	F&I CABLE IN CONDUIT, CAT-5E OUTDOOR RATED CABLE	5000	
	F&I CABLE IN CONDUIT, #8 WIRE, VARIABLE CONDUCTORS	1000	
	F&I CABLE IN CONDUIT, #6 WIRE, VARIABLE CONDUCTORS	500	
	F&I CABLE IN CONDUIT, #4 WIRE, VARIABLE CONDUCTORS	100	
	F&I CABLE IN CONDUIT, #2 WIRE, VARIABLE CONDUCTORS	100	
	REMOVAL OF VIDEO DETECTION CAMERA	40	REMOVAL IS FOR 1 CAMERA PER APPROACH @ GIVEN INTERSECTION
	INSTALL AND CONFIGURE VIDEO DETECTION CAMERA	40	INSTALLATION IS FOR 1 CAMERA PER APPROACH @ GIVEN INTERSECTION SEE JSP FOR ADDITIONAL DETAILS
	REMOVAL OF AUDIBLE PEDESTRIAN SYSTEM	70	
	INSTALL AND CONFIGURE AUDIBLE PEDESTRIAN SYSTEM	70	
	CABLE, 16 AWG 5 CONDUCTOR	500	
	CABLE, 16 AWG 2 CONDUCTOR	500	
	CABLE, 16 AWG 3 CONDUCTOR	500	
	CABLE, 18 AWG 4 CONDUCTOR	500	
	REMOVAL OF RADAR DETECTION SENSOR	2	
	INSTALL & CONFIGURE RADAR DETECTION SENSOR	2	
	WRONG WAY ALERT SYSTEMS EQUIPMENT PURCHASE	2	
	WRONG WAY ALERT SYSTEMS INSTALLATION	2	
	WRONG WAY ALERT SYSTEMS SOFTWARE AND CERTIFICATION BY TAPCO OF NEW INSTALLATION	2	

NOTE: LOCATIONS OF (R) & INSTALLATION FOR APS (AUDIBLE PEDESTRIAN SYSTEM) & VIDEO DETECTION CAMERAS TO BE DETERMINED BY THE ENGINEER.

PREVENTATIVE MAINTENANCE ITEMS (NO LOCATION NOTED)			
LINE ITEM #	DESCRIPTION	PAY TOTALS	REMARKS
	PM WITH REPAIRS - CCTV CAMERA ASSEMBLY	1	
	PM WITH REPAIRS - IP ADDRESSABLE POWER STRIP	1	
	PM WITH REPAIRS - DMS PIXEL BOARD	1	
	PM WITH REPAIRS - DMS DRIVERBOARD	1	
	PM WITH REPAIRS - DMS POWER SUPPLY	1	
	PM WITH REPAIRS - DMS FAN	1	
	PM WITH REPAIRS - DMS CONTROLLER	1	
	PM WITH REPAIRS - DMS LCA	1	
	PM WITH REPAIRS - SOLAR POWER SYSTEM	1	
	PM WITH REPAIRS - UPS DEVICE AND COMPONENTS	1	
	PM WITH REPAIRS - VIDEO DETECTION CAMERA SYSTEM	1	

STATE OF MISSOURI
JAMIE F. RANA
NUMBER PE-2005001034
PROFESSIONAL ENGINEER

Jamie F. Rana
07/18/2025 11:24:40 AM
JAMIE F. RANA - CIVIL
MO-PE-2005001034

DATE PREPARED
7/17/2025

ROUTE	STATE
VAR.	MO
DISTRICT	SHEET NO.
SL	2

COUNTY
VARIOUS

JOB NO.
J6Q2026E

CONTRACT ID.

PROJECT NO.

BRIDGE NO.

DESCRIPTION	DATE

MISSOURI HIGHWAYS AND TRANSPORTATION COMMISSION
105 WEST CAPITOL
JEFFERSON CITY, MO 65102
1-888-ASK-MODOT (1-888-275-6636)

QUANTITIY SHEETS
31 OF 32

SIGN	SIZE IN.	AREA SQ.FT.	QTY EACH	TOTAL AREA SQ.FT.	QTY RELOC EACH	TOTAL RELOC SQ.FT.	SIGN NO.	DESCRIPTION
WARNING SIGNS								
WO1-1L	48X48	16.00						TURN (SYMBOL LEFT)
WO1-1R	48X48	16.00						TURN (SYMBOL RIGHT)
WO1-2L	48X48	16.00						CURVE (SYMBOL LEFT)
WO1-2R	48X48	16.00						CURVE (SYMBOL RIGHT)
WO1-3L	48X48	16.00						REVERSE TURN (SYMBOL LEFT)
WO1-3R	48X48	16.00						REVERSE TURN (SYMBOL RIGHT)
WO1-4L	48X48	16.00						REVERSE CURVE (SYMBOL LEFT)
WO1-4R	48X48	16.00						REVERSE CURVE (SYMBOL RIGHT)
WO1-4bL	48X48	16.00						DOUBLE ARROW REVERSE CURVE (SYMBOL LEFT)
WO1-4bR	48X48	16.00						DOUBLE ARROW REVERSE CURVE (SYMBOL RIGHT)
WO1-4cL	48X48	16.00						TRIPLE ARROW REVERSE CURVE (SYMBOL LEFT)
WO1-4cR	48X48	16.00						TRIPLE ARROW REVERSE CURVE (SYMBOL RIGHT)
WO1-6	60X30	12.50						HORIZONTAL ARROW (SYMBOL)
WO1-6a	72X36	18.00						HORIZ. ARROW (SYMBOL ON PERMANENT BARRICADE)
WO1-7	60X30	12.50						DOUBLE HEAD HORIZONTAL ARROW (SYMBOL)
WO1-7a	72X36	18.00						DOUBLE HEAD HORIZ. ARROW (SYMBOL ON PERM. BARR.)
WO1-8	18X24	3.00						CHEVRON (SYMBOL)
WO1-8a	30X36	7.50						CHEVRON (SYMBOL FOR DIVIDED HIGHWAYS)
WO3-1	48X48	16.00						STOP AHEAD (SYMBOL)
WO3-2	48X48	16.00						YIELD AHEAD (SYMBOL)
WO3-3	48X48	16.00						SIGNAL AHEAD (SYMBOL)
WO3-4	48X48	16.00						BE PREPARED TO STOP
WO3-5	48X48	16.00						SPEED LIMIT AHEAD
WO4-1L	48X48	16.00						MERGE (SYMBOL FROM LEFT)
WO4-1R	48X48	16.00						MERGE (SYMBOL FROM RIGHT)
WO4-1aL	48X48	16.00	3	48.00			6A	MERGE (LEFT)
WO4-1aR	48X48	16.00	3	48.00			6A	MERGE (RIGHT)
WO5-1	48X48	16.00	3	48.00			43	ROAD/BRIDGE/RAMP NARROWS
WO5-3	48X48	16.00						ONE LANE BRIDGE
WO5-5	48X48	16.00						NARROW LANES
WO6-1	48X48	16.00						DIVIDED HIGHWAY (SYMBOL)
WO6-2	48X48	16.00						DIVIDED HIGHWAY END (SYMBOL)
WO6-3	48X48	16.00						TWO WAY TRAFFIC (SYMBOL)
WO7-3a	30X24	5.00						NEXT XX MILES (PLAQUE)
WO8-1	48X48	16.00						BUMP
WO8-2	48X48	16.00						DIP
WO8-3	48X48	16.00						PAVEMENT ENDS
WO8-4	48X48	16.00						SOFT SHOULDER
WO8-5	48X48	16.00						SLIPPERY WHEN WET (SYMBOL)
WO8-6	48X48	16.00						TRUCK CROSSING
WO8-6c	48X48	16.00						TRUCK ENTRANCE
WO8-7	36X36	9.00						LOOSE GRAVEL
WO8-7a	36X36	9.00						FRESH OIL / LOOSE GRAVEL
WO8-9	48X48	16.00						LOW SHOULDER
WO8-11	48X48	16.00						UNEVEN LANES
WO8-12	48X48	16.00						NO CENTER LINE
WO8-15	48X48	16.00						GROOVED PAVEMENT
WO8-15P	30X24	5.00						MOTORCYCLE (PLAQUE)
WO8-17L	48X48	16.00						SHOULDER DROP-OFF (SYMBOL LEFT)
WO8-17R	48X48	16.00						SHOULDER DROP-OFF (SYMBOL RIGHT)
WO8-17P	30X24	5.00						SHOULDER DROP-OFF (PLAQUE)
W10-1	42RND.	9.62						RAILROAD CROSSING
WO12-1	24X24	4.00						DOUBLE DOWN ARROW (SYMBOL)
WO12-2	48X48	16.00						LOW CLEARANCE (SYMBOL)
WO12-2x	24X18	3.00						LOW CLEARANCE (PLAQUE)
WO12-2a	84X24	14.00						OVERHEAD LOW CLEARANCE (FEET AND INCHES)
WO12-4	120X60	50.00						LOW CLEARANCE XX FT XX IN XX MILES AHEAD
WO12-5	120X60	50.00						WIDTH RESTRICTION XX FT XX IN XX MILES AHEAD
WO13-1	30X30	6.25	3	18.75			44	ADVISORY SPEED (PLAQUE)
WO16-2	30X24	5.00						XXX FEET (PLAQUE)
WO16-3	30X24	5.00						X MILE (PLAQUE)
WO20-1	48X48	16.00	12	192.00			2	ROAD/BRIDGE/RAMP WORK AHEAD
WO20-2	48X48	16.00						DETOUR AHEAD
WO20-3	48X48	16.00	3	48.00			20	ROAD CLOSED AHEAD
WO20-4	48X48	16.00						ONE LANE ROAD AHEAD
WO20-5	48X48	16.00	6	96.00			5	RIGHT/CENTER/LEFT LANE CLOSED AHEAD
WO20-5a	48X48	16.00						2 RIGHT/CENTER/LEFT LANES CLOSED AHEAD
WO20-6a	48X48	16.00	3	48.00			6	RIGHT/CENTER/LEFT LANE CLOSED
WO20-7a	48X48	16.00						FLAGGER (SYMBOL)
WO21-2	36X36	9.00						FRESH OIL
WO21-5	48X48	16.00	9	144.00			21	SHOULDER WORK / SHOULDER WORK AHEAD
WO22-1	48X48	16.00						BLASTING ZONE AHEAD
WO22-2	42X36	10.50						TURN OFF 2-WAY RADIO AND PHONE
WO22-3	42X36	10.50						END BLASTING ZONE
GO22-1	21X15	2.19						WET PAINT (ARROW PIVOTS)

SIGN	SIZE IN.	AREA SQ.FT.	QTY EACH	TOTAL SQ.FT.	QTY RELOC EACH	TOTAL RELOC SQ.FT.	SIGN NO.	DESCRIPTION
GUIDE SIGNS								
E05-1	36X48	12.00						GORE EXIT
E05-2	48X36	12.00						EXIT OPEN
E05-2a	48X36	12.00	3	36.00			90	EXIT CLOSED
GO20-1	60X24	10.00						ROAD WORK NEXT XX MILES
GO20-2	48X24	8.00						END ROAD WORK
GO20-4	36X18	4.50						PILOT CAR FOLLOW ME
GO20-4a	42X30	8.75						PILOT CAR IN USE WAIT & FOLLOW
GO20-4a	18X12	1.50						PILOT CAR IN USE WAIT & FOLLOW
GO20-5aP	36X24	6.00	6	36.00			54	WORK ZONE (PLAQUE)
MO4-8a	24X18	3.00						END DETOUR
MO4-9L	48X36	12.00						DETOUR (LEFT)
MO4-9R	48X36	12.00						DETOUR (RIGHT)
MO4-9P	48X12	4.00						STREET NAME (PLAQUE)
MO4-10L	48X18	6.00						DETOUR ARROW (LEFT)
MO4-10R	48X18	6.00						DETOUR ARROW (RIGHT)
REGULATORY SIGNS								
R1-1	48X48	13.25						STOP
R1-2	48TRI.	6.93						YIELD
R1-2a	36X36	9.00						TO ONCOMING TRAFFIC (PLAQUE)
R1-3P	30X12	2.50						ALL WAY (PLAQUE)
R2-1	36X48	12.00	12	144.00			4 / 25	SPEED LIMIT XX
R3-1	48X48	16.00						NO RIGHT TURN (SYMBOL)
R3-2	48X48	16.00						NO LEFT TURN (SYMBOL)
R3-3	36X36	9.00						NO TURNS
R3-4	48X48	16.00						NO U-TURN (SYMBOL)
R3-7L	30X30	6.25						LEFT LANE MUST TURN LEFT
R3-7R	30X30	6.25						RIGHT LANE MUST TURN RIGHT
R4-1	36X48	12.00						DO NOT PASS
R4-2	36X48	12.00						PASS WITH CARE
R4-7a	36X48	12.00						KEEP RIGHT (HORIZONTAL ARROW)
R4-8a	36X48	12.00						KEEP LEFT (HORIZONTAL ARROW)
R5-1	30X30	6.25						DO NOT ENTER
R5-1a	36X24	6.00						WRONG WAY
R6-1L	54X18	6.75						ONE WAY ARROW (LEFT)
R6-1R	54X18	6.75						ONE WAY ARROW (RIGHT)
R6-2L	24X30	5.00						ONE WAY (LEFT)
R6-2R	24X30	5.00						ONE WAY (RIGHT)
R9-9	24X12	2.00						SIDEWALK CLOSED
R9-11L	24X18	3.00						SIDEWALK CLOSED AHEAD, (ARROW LEFT) CROSS HERE
R9-11R	24X18	3.00						SIDEWALK CLOSED AHEAD, (ARROW RIGHT) CROSS HERE
R10-6	24X36	6.00						STOP HERE ON RED (45^ ARROW)
R11-2	48X30	10.00						ROAD CLOSED
R11-3a	60X30	12.50						ROAD CLOSED XX MILES AHEAD LOCAL TRAFFIC ONLY
R11-4	60X30	12.50						ROAD CLOSED TO THRU TRAFFIC
CONST-3A	60X48	20.00						FINE SIGN
CONST-3X	56X12	4.67						SPEEDING/PASSING (PLATE)
MISCELLANEOUS SIGNS								
CONST-5	48X36	12.00						POINT OF PRESENCE
CONST-5	96X48	32.00						POINT OF PRESENCE
CONST-8	48X36	12.00						WORK ZONE NO PHONE ZONE

616-10.05 CONSTRUCTION SIGNS	TOTAL 907
616-10.10 RELOCATED SIGNS	TOTAL 0

EFFECTIVE: 07-01-2025

ITEM NUMBER	TOTAL QTY	DESCRIPTION
6122008		IMPACT ATTENUATOR 40 MPH (SAND BARRELS)
6122009		IMPACT ATTENUATOR 45 MPH (SAND BARRELS)
6122010		IMPACT ATTENUATOR 50 MPH (SAND BARRELS)
6122012		IMPACT ATTENUATOR 55 MPH (SAND BARRELS)
6122014		IMPACT ATTENUATOR 60 MPH (SAND BARRELS)
6122017		IMPACT ATTENUATOR 65 MPH (SAND BARRELS)
6122019		IMPACT ATTENUATOR 70 MPH (SAND BARRELS)
6122020		REPLACEMENT SAND BARREL
6122030		IMPACT ATTENUATOR (RELOCATION)
6122040		WORK ZONE CRASH CUSHION (NARROW)
6122041		WORK ZONE CRASH CUSHION (RELOCATION)
6123001	+++	TRUCK MOUNTED ATTENUATOR (TMA)
6161012		BUOYS (BOATS KEEP OUT)
6161013		BUOYS (NO WAKE)
6161014		SPECIAL SIGN ASSEMBLY (BOATS KEEP OUT)
6161020		CHANNELIZER (DRUM-LIKE)
6161022		CHANNELIZER (CONE)
6161025	150	CHANNELIZER (TRIM-LINE)
6161026		CHANNELIZER (VERTICAL PANEL)
6161030	21	TYPE 3 MOVEABLE BARRICADE
6161033	84	DIRECTION INDICATOR BARRICADE
6161040	6	FLASHING ARROW PANEL
6161047		TYPE 3 OBJECT MARKER
6161055		SEQUENTIAL FLASHING WARNING LIGHT
6161070		TUBULAR MARKER
6161095		RADAR SPEED ADVISORY SYSTEM
6161096		CHANGEABLE MESSAGE SIGN, COMMISSION FURNISHED/RETAINED
6161098A	**3	CHANGEABLE MESSAGE SIGN WITHOUT COMM. INTERFACE, CONTRACTOR FURNISHED/RETAINED
6161099		CHANGEABLE MESSAGE SIGN WITH COMM. INTERFACE, CONTRACTOR FURNISHED/RETAINED
6162000A		WORK ZONE TRAFFIC SIGNAL SYSTEM
6162002		TEMPORARY LONG-TERM RUMBLE STRIPS
6173600D		TEMPORARY TRAFFIC BARRIER, CONTRACTOR FURNISHED/RETAINED
6173700B		TEMP. TRAFFIC BARRIER ANCHORED, CONTRACTOR FURNISHED/RETAINED
6173706		TEMP. TRAFFIC BARRIER STIFFNESS TRANSITION CONTRACTOR FURNISHED/RETAINED
6174000A		TEMP. TRAFFIC BARRIER HEIGHT TRANSITION, CONTRACTOR FURNISHED/RETAINED
6175010A		RELOCATING TEMPORARY TRAFFIC BARRIER
6175011B		RELOCATING TEMP. TRAFFIC BARRIER ANCHORED
6175013		RELOCATING TEMP. TRAFFIC BARRIER STIFFNESS
6175020A		RELOCATING TEMP. TRAFFIC BARRIER HEIGHT
6208064A		TEMPORARY RAISED PAVEMENT MARKER
9029400		TEMPORARY TRAFFIC SIGNALS
9029401		TEMPORARY TRAFFIC SIGNALS AND LIGHTING

** INDICATES ITEM IS NOT INCLUDED IN LUMP SUM TEMPORARY TRAFFIC CONTROL BID ITEM

+++ INDICATES TMAs WILL BE REQUIRED FOR MOBILE OPERATIONS ON THIS JOB BUT AT NO DIRECT PAY. THE CONTRACTOR MAY ELECT TO USE TMAs AT STATIONARY LOCATIONS OF THIER OWN CHOOSING BUT NO PAYMENT SHALL BE MADE FOR THESE TMAs.

NOTE: CMS LOCATIONS TO BE APPROVED BY THE ENGINEER.

NOTE: QUANTITIES PROVIDED ARE SETUP USING GENERIC TRAFFIC CONTROL. IF THE CONTRACTOR CHOOSES TO SETUP TRAFFIC CONTROL DIFFERENTLY, THEN THOSE ADDITIONAL QUANTITIES SHALL BE PAID AT THE EXPENSE OF THE CONTRACTOR. (QUANTITIES BASED ON 3 WORK ZONES.)

NOTE: ALL TRAFFIC CONTROL ITEMS ARE INCLUDED IN PAY ITEM 616-99.01, LUMP SUM TEMPORARY TRAFFIC CONTROL, UNLESS NOTED OTHERWISE IN THE PLANS. THESE QUANTITIES ARE ONLY AN ESTIMATE AND ARE SUBJECT TO CHANGE BASED UPON FIELD CONDITIONS.

NOTE: NO DIRECT PAYMENT SHALL BE MADE TO RELOCATE OR COVER/UNCOVER EXISTING/TCP SIGNS OR TO RELOCATE OTHER TCP DEVICES.

STATE OF MISSOURI
JAMIE F. RANA
NUMBER PE-2005001034
PROFESSIONAL ENGINEER
Jamie F. Rana
07/18/2025 11:25:04 AM
JAMIE F. RANA - CIVIL
MO-PE-2005001034

DATE PREPARED 7/17/2025

ROUTE	STATE
VAR.	MO
DISTRICT	SHEET NO.
SL	2

COUNTY: VARIOUS

JOB NO. J6Q2026E

CONTRACT ID.

PROJECT NO.

BRIDGE NO.

DESCRIPTION	DATE

MISSOURI HIGHWAYS AND TRANSPORTATION COMMISSION
105 WEST CAPITOL
JEFFERSON CITY, MO 65102
1-888-ASK-MODOT (1-888-275-6636)

QUANTITIY SHEETS
32 OF 32

Sign Spacing, Device Spacing and Channelizing Taper Lengths

NOT TO SCALE

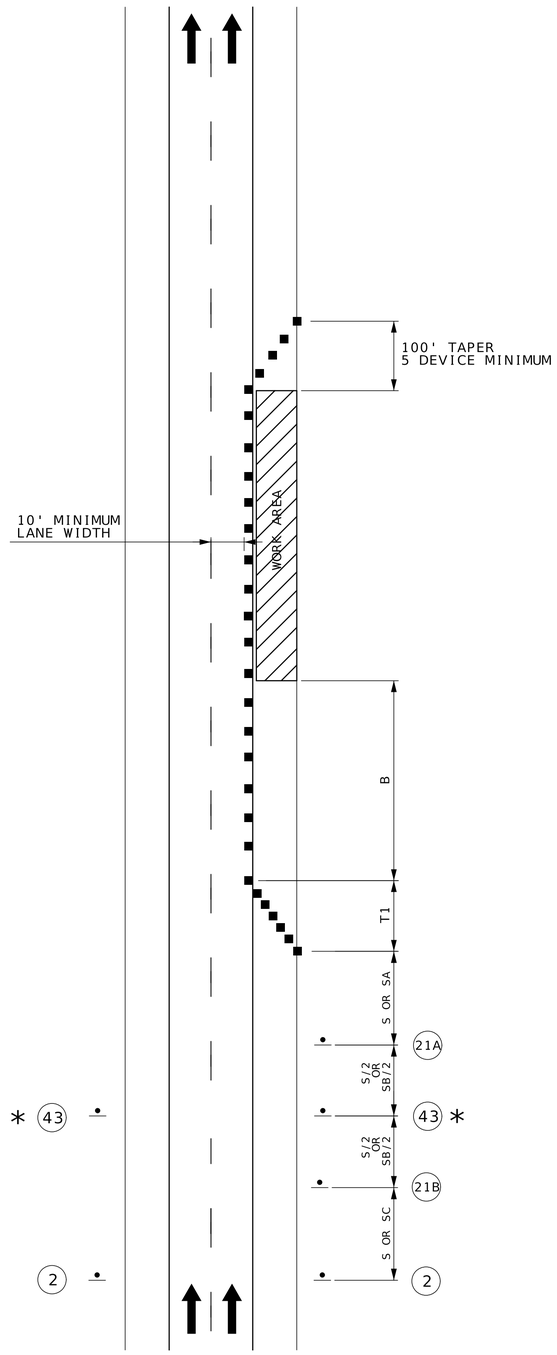

SHOULDER WORK

(DIVIDED HIGHWAY)

SIGN SPACING (S) FOR ADVANCE SIGN SERIES (1) (2)		
SPEED MPH	UNDIVIDED HIGHWAYS	DIVIDED HIGHWAYS
0-35	200	200
40-45	350	500
50-55	500	1000
60-70	1000	SA-1000 SB-1500 SC-2640

LONGITUDINAL BUFFER SPACE (B)	
SPEED MPH	BUFFER SPACE
0-35	250
40-45	360
50-55	495
60-70	730

TAPER LENGTHS AND SPACING OF CHANNELIZING DEVICES					
SPEED MPH	MINIMUM TAPER LENGTHS (L) FOR LANE WIDTHS (W)			MAXIMUM CHANNELIZER SPACING	
	10 FT	11 FT	12 FT	THROUGH TAPER	THROUGH WORK AREA
0-35	205	225	245	35	40
40-45	450	495	540	40	80
50-55	550	605	660	50	80
60-70	700	770	840	60	120

TAPER LENGTH (L):

L = WS FOR 40 MPH OR MORE

$L = \frac{WS^2}{60}$ FOR 35 MPH OR LESS

FOR SHOULDER TAPER USE L/3

WHERE:

L = TAPER LENGTH IN FEET

W = LATERAL SHIFT IN FEET

S = POSTED SPEED IN MPH

NOTES:

DIMENSIONS IN FEET UNLESS OTHERWISE NOTED.

(1) SPACING BETWEEN SIGNS AND SPACING BETWEEN LAST SIGN AND FLAGGER, BEGINNING OF TAPER, OR SIGNED CONDITION

(2) SPACINGS MAY BE ADJUSTED AS NECESSARY TO MEET FIELD CONDITIONS

TRAFFIC CONTROL DEVICES

GENERAL NOTES:

1. SEE STANDARD PLAN 616.10 FOR DETAILS AND ITEMS NOT SHOWN
2. EXISTING SIGNS SHALL BE COVERED DURING WORKING HOURS ONLY IF IN CONFLICT WITH TRAFFIC CONTROL PLANS.
3. NO DIRECT PAYMENT WILL BE MADE FOR RELOCATING, COVERING, UNCOVERING OR REMOVING SIGNS.
4. CONES ALLOWABLE FOR DAYTIME OPERATIONS ONLY.
6. LOCATE FLASHING ARROW PANEL AT BEGINNING OF TAPER WHEN FEASIBLE, ARROW PANELS ARE ALWAYS LOCATED BEHIND CHANNELIZERS OR CONES.

TRAFFIC CONTROL LEGEND

- SIGN (SINGLE SIDED)
- SIGN (DOUBLE SIDED)
- FLAGGER
- DIRECTIONAL INDICATOR BARRICADE
- CHANNELIZER
- BARRICADE
- CHANGEABLE MESSAGE BOARD
- TMA TRUCK MOUNTED ATTENUATOR W/ FLASHING ARROW

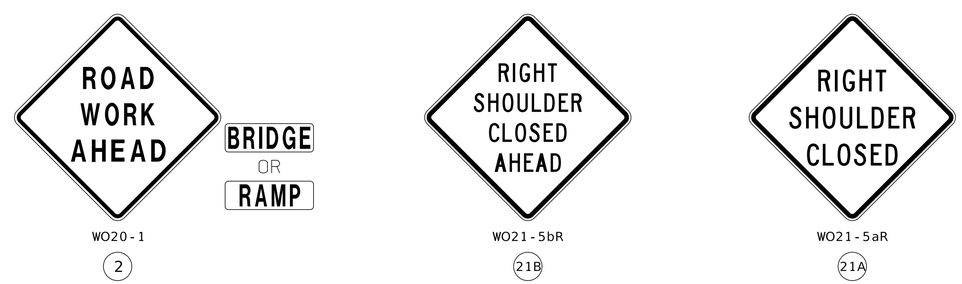

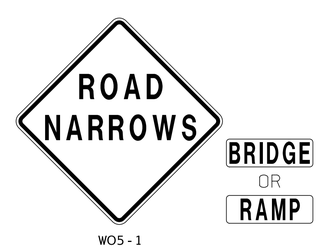

(PLAQUE NOT USED IF LESS THAN ONE MILE.)

43 * OMIT SIGN 43 FOR NO TRAVELWAY ENCROACHMENT.

STATE OF MISSOURI
JAMIE F. RANA
NUMBER PE-2005001034
PROFESSIONAL ENGINEER

Jamie F. Rana
07/15/2025 2:00:21 PM
JAMIE F. RANA - CIVIL
MO-PE-2005001034

DATE PREPARED	
7/11/2025	
ROUTE VAR.	STATE MO
DISTRICT SL	SHEET NO. 3
COUNTY VARIOUS	
JOB NO. J6Q2026E	
CONTRACT ID.	
PROJECT NO.	
BRIDGE NO.	

DATE	DESCRIPTION

MISSOURI HIGHWAYS AND TRANSPORTATION COMMISSION

105 WEST CAPITOL
JEFFERSON CITY, MO 65102
1-888-ASK-MODOT (1-888-275-6636)

TEMPORARY TRAFFIC CONTROL
SHOULDER CLOSURE

SPEED	SIGN SPACING (ft.)		TAPER LENGTH (ft.)		OPTIONAL BUFFER LENGTH (ft.) (B)	CHANNELIZER SPACING (ft.)	
	Undivided (S)	Divided (S)	Shoulder 1 (T1)	Lane 2 (T2)		Tapers	Buffer/ Work Areas
0-35	200	200	70	-	250	35	50
40-45	350	500	150	-	360	40	100
50-55	500	1000	185	-	495	50	100

1 Shoulder taper length based on 10 ft. (standard shoulder width) offset
2 Lane taper length based on 12 ft. (standard lane width) offset

LEGEND

- DIRECTIONAL INDICATOR BARRIER
- TRIMLINE CHANNELIZERS (TL)
- FLASHING ARROW PANEL
- CONSTRUCTION SIGN
- FLAG ASSEMBLY
- ADVANCED WARNING RAIL SYSTEM

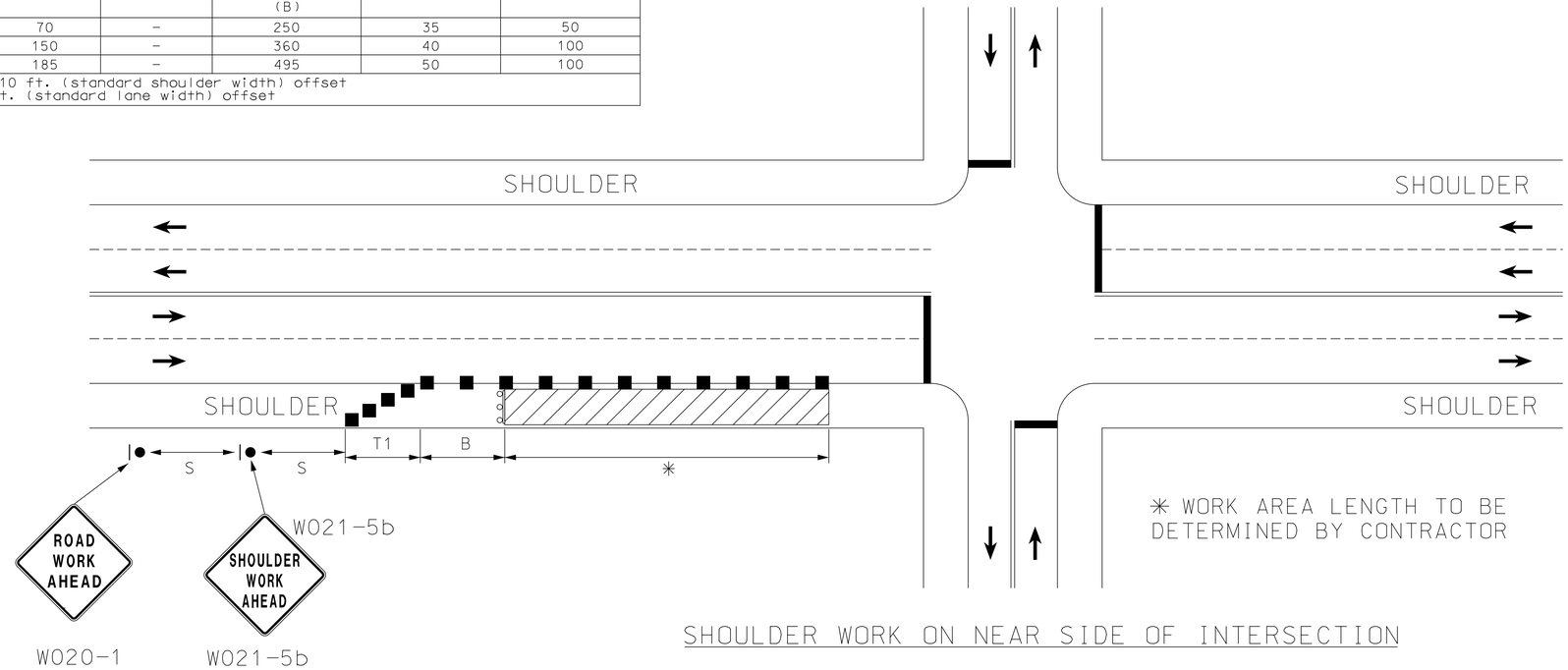

SHOULDER WORK ON NEAR SIDE OF INTERSECTION

SPEED	SIGN SPACING (ft.)		TAPER LENGTH (ft.)		OPTIONAL BUFFER LENGTH (ft.) (B)	LONGI-TUDINAL TRANSITION (X)	CHANNELIZER SPACING (ft.)	
	Undivided (S)	Divided (S)	Shoulder 1 (T1)	Lane 2 (T2)			Tapers	Buffer/ Work Areas
0-35	200	200	-	245	250	120	15	25
40-45	350	500	-	540	360	270	20	50
50-55	500	1000	-	660	495	330	50	100

1 Shoulder taper length based on 10 ft. (standard shoulder width) offset
2 Lane taper length based on 12 ft. (standard lane width) offset

DRAWING NOT TO SCALE

LEGEND

- DIRECTIONAL INDICATOR BARRIER
- TRIMLINE CHANNELIZERS (TL)
- FLASHING ARROW PANEL
- CONSTRUCTION SIGN
- FLAG ASSEMBLY
- ADVANCED WARNING RAIL SYSTEM

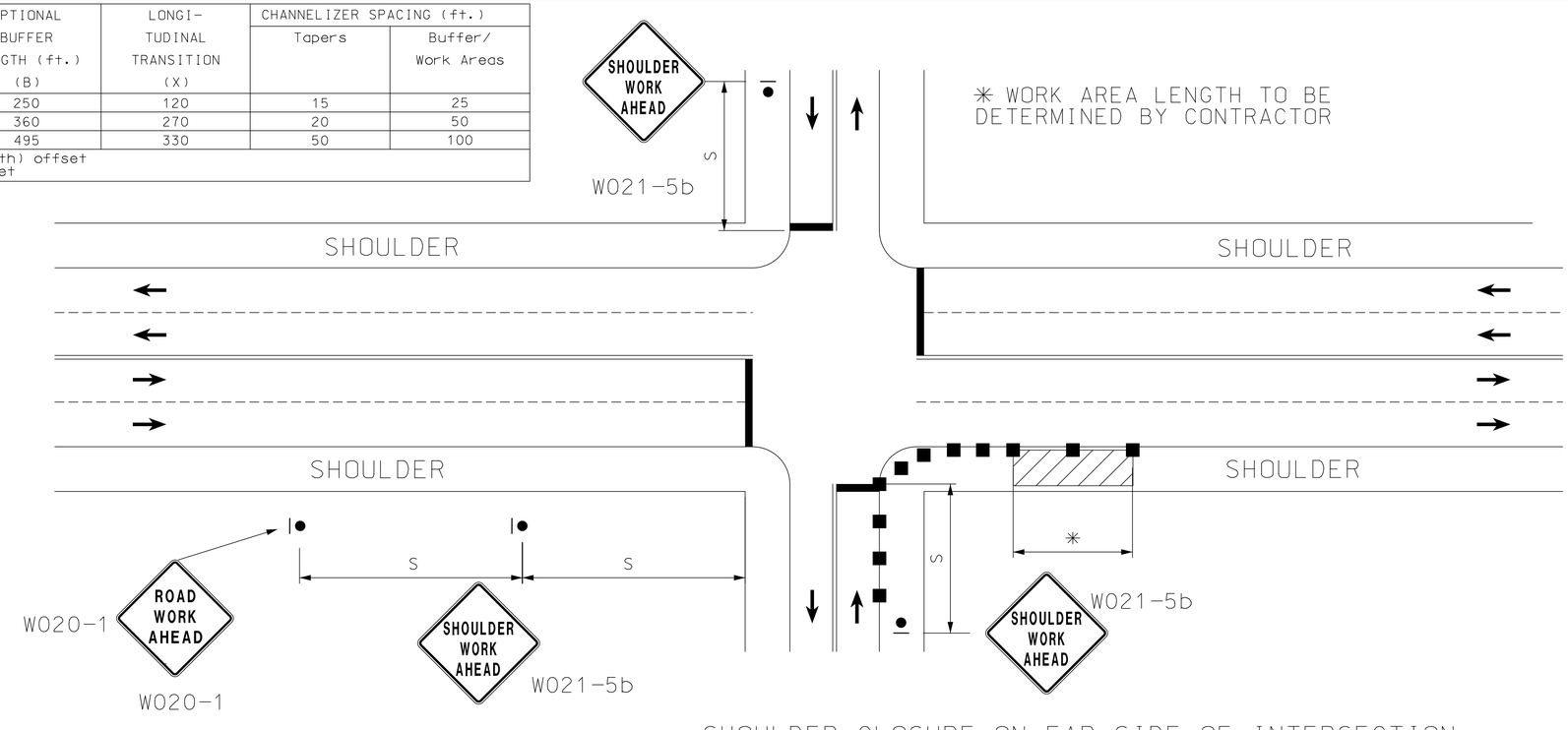

NOTE: SEE EPG 616.12 WORK ZONE SPEED LIMITS FOR SPEED LIMIT GUIDELINES.

SHOULDER CLOSURE ON FAR SIDE OF INTERSECTION

STATE OF MISSOURI
JAMIE F. RANA
NUMBER PE-2005001034
PROFESSIONAL ENGINEER
Jamie F. Rana
07/15/2025 2:00:59 PM
JAMIE F. RANA - CIVIL
MO-PE-2005001034

DATE PREPARED
7/11/2025

ROUTE	STATE
VAR.	MO
DISTRICT	SHEET NO.
SL	4

COUNTY
VARIOUS

JOB NO.
J6Q2026E

CONTRACT ID.

PROJECT NO.

BRIDGE NO.

DATE	DESCRIPTION

MISSOURI HIGHWAYS AND TRANSPORTATION COMMISSION
105 WEST CAPITOL
JEFFERSON CITY, MO 65102
1-888-ASK-MODOT (1-888-275-6636)

TRAFFIC CONTROL PLANS

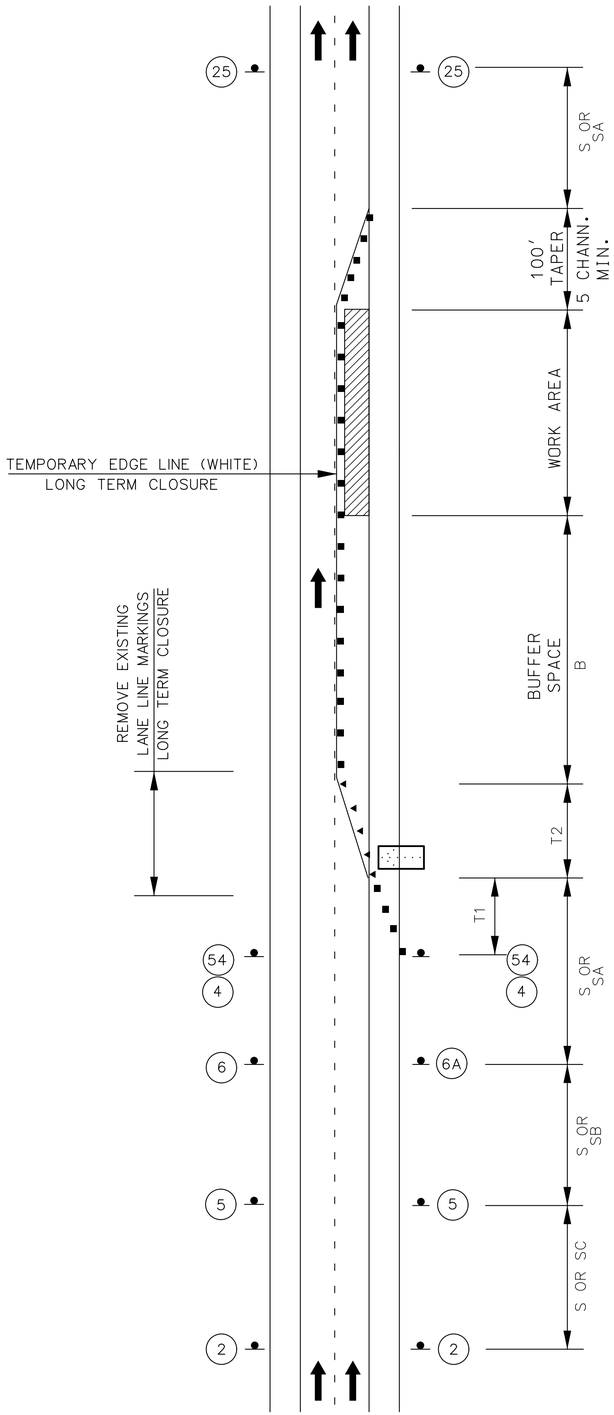

STATIONARY LANE CLOSURE
ON A DIVIDED HIGHWAY

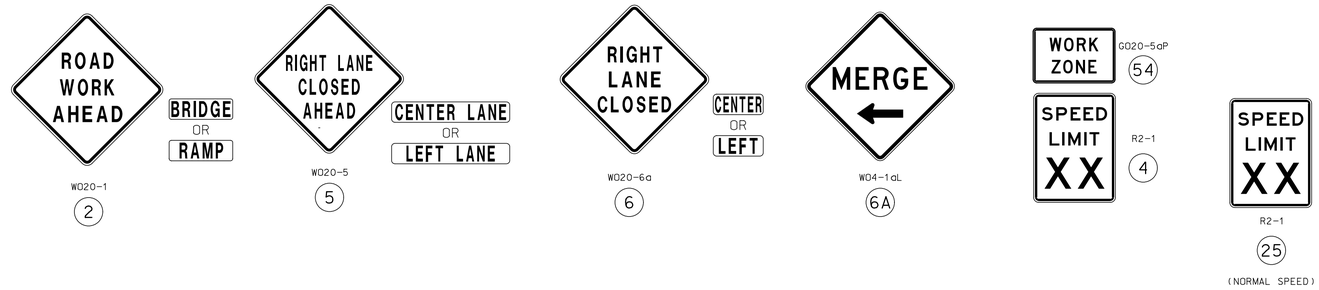

NOTES:

SEE EPG 616.12 WORK ZONE SPEED LIMITS FOR SPEED LIMIT GUIDELINES.

TEMPORARY PAVEMENT MARKING REQUIRED WITH LONG TERM CLOSURES.

REMOVE AND/OR MODIFY ANY EXISTING PAVEMENT MARKING AS NEEDED.

THIS INFORMATION ALSO SHALL BE USED WHEN WORK IS BEING PERFORMED IN THE LANE ADJACENT TO THE MEDIAN ON A DIVIDED HIGHWAY. IN THIS CASE, THE LEFT LANE CLOSED SIGNS AND THE CORRESPONDING MERGE OR LANE ENDS SIGNS SHALL BE SUBSTITUTED.

WHEN A SIDE ROAD INTERSECTS THE HIGHWAY WITHIN THE TTC ZONE, ADDITIONAL TTC DEVICES SHALL BE PLACED AS NEEDED.

TEMPORARY TRAFFIC BARRIERS, IF USED, SHALL COMPLY WITH THE PROVISIONS IN EPG 616.6.85 TEMPORARY TRAFFIC BARRIER AND REVIEW EPG 616.8.34 LANE CLOSURE WITH A TEMPORARY TRAFFIC BARRIER

REVIEW EPG 616.8.34A LANE CLOSURE WITH WIDTH AND LANE RESTRICTIONS - DE/CM FOR A LANE CLOSURE WITH WIDTH RESTRICTION

REVIEW EPG 616.6.63 CHANNELIZING DEVICES FOR DIFFERENT TYPES AND GUIDELINES FOR THE DEVICES.

NOT TO SCALE

TRAFFIC CONTROL LEGEND

- SIGN (SINGLE SIDED)
- DIRECTIONAL INDICATOR BARRICADE
- CHANNELIZER (TRIM-LINE)
- WORK AREA
- FLASHING ARROW PANEL
- ADVANCE WARNING RAILS

SPEED	SIGN SPACING (ft.)		TAPER LENGTH (ft.)		OPTIONAL	CHANNELIZER SPACING (ft.)	
PERM. POSTED (MPH)	UN -DIVIDED (S)	DIVIDED (S)	SHOULDER (1) (T1)	LANE (2) (T2)	BUFFER LENGTH (ft) (B)	TAPERS	BUFFER/ WORK AREAS
0-35	-	200	70	245	280	35	40
40-45	-	500	150	540	400	40	80
50-55	-	1000	185	660	560	50	80
60-70	-	SA-1000 SB-1500 SC-2640	235	840	840	60	120

1 Shoulder taper length based on 10 ft. (standard shoulder width) offset.
2. Lane taper length based on 12 ft. (standard lane width) offset.

STATE OF MISSOURI
JAMIE F. RANA
NUMBER PE-2005001034
PROFESSIONAL ENGINEER
Jamie F. Rana
07/15/2025 2:01:25 PM
JAMIE F. RANA - CIVIL
MO-PE-2005001034

DATE PREPARED	7/11/2025
ROUTE	VAR.
STATE	MO
DISTRICT	SL
SHEET NO.	5
COUNTY	VARIOUS
JOB NO.	J6Q2026E
CONTRACT ID.	
PROJECT NO.	
BRIDGE NO.	

DATE	DESCRIPTION

MISSOURI HIGHWAYS AND TRANSPORTATION COMMISSION
105 WEST CAPITOL
JEFFERSON CITY, MO 65102
1-888-ASK-MODOT (1-888-275-6636)

TRAFFIC CONTROL PLANS

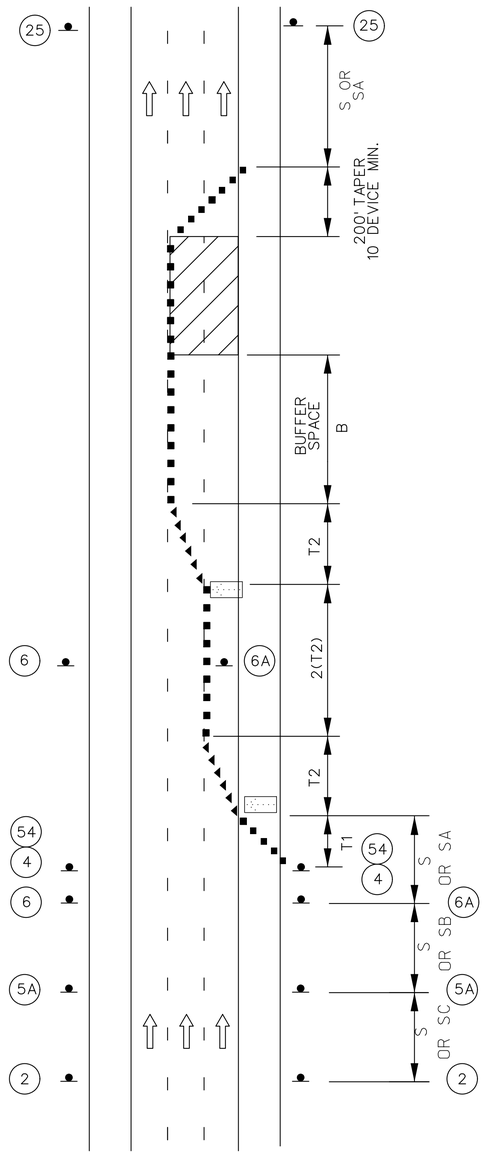

DOUBLE LANE CLOSURE
ON A FREEWAY

NOT TO SCALE

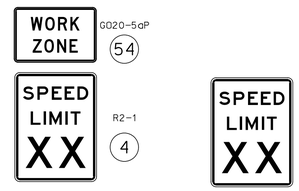

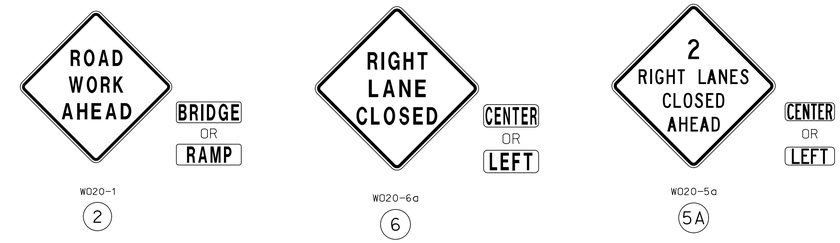

NOTES:

SEE EPG 616.12 WORK ZONE SPEED LIMITS FOR SPEED LIMIT GUIDELINES.

REMOVE AND/OR MODIFY ANY EXISTING PAVEMENT MARKING AS NEEDED.

TEMPORARY PAVEMENT MARKING OPTIONAL WITH SHORT TERM LANE CLOSURES.

ALTERNATIVE TEMPORARY TRAFFIC CONTROL SET-UPS SHOULD BE CONSIDERED WHEN REDUCTION IN CAPACITY CANNOT BE TOLERATED.

A FLASHING ARROW BOARD SHALL BE USED WHEN A FREEWAY LANE IS CLOSED. WHEN MORE THAN ONE FREEWAY LANE IS CLOSED, A SEPARATE FLASHING ARROW BOARD SHALL BE USED FOR EACH CLOSED LANE.

TRAFFIC CONTROL LEGEND

- SIGN (SINGLE SIDED)
- DIRECTIONAL INDICATOR BARRICADE
- CHANNELIZER (TRIM-LINE)
- WORK AREA
- FLASHING ARROW PANEL

SPEED	SIGN SPACING (ft.)		TAPER LENGTH (ft.)		OPTIONAL	CHANNELIZER SPACING (ft.)	
PERM. POSTED (MPH)	UN -DIVIDED (S)	DIVIDED (S)	SHOULDER (1) (T1)	LANE (2) (T2)	BUFFER LENGTH (ft) (B)	TAPERS	BUFFER/ WORK AREAS
0-35	–	200	70	245	280	35	40
40-45	–	500	150	540	400	40	80
50-55	–	1000	185	660	560	50	80
60-70	–	SA-1000 SB-1500 SC-2640	235	840	840	60	120

1 Shoulder taper length based on 10 ft. (standard shoulder width) offset.
2. Lane taper length based on 12 ft. (standard lane width) offset.

STATE OF MISSOURI
JAMIE F. RANA
NUMBER PE-2005001034
PROFESSIONAL ENGINEER
Jamie F. Rana
07/15/2025 2:01:55 PM
JAMIE F. RANA - CIVIL
MO-PE-2005001034

DATE PREPARED
7/11/2025

ROUTE	STATE
VAR.	MO
DISTRICT	SHEET NO.
SL	6

COUNTY
VARIOUS

JOB NO.
J6Q2026E

CONTRACT ID.

PROJECT NO.

BRIDGE NO.

DATE	DESCRIPTION

MISSOURI HIGHWAYS AND TRANSPORTATION COMMISSION
105 WEST CAPITOL
JEFFERSON CITY, MO 65102
1-888-ASK-MODOT (1-888-275-6636)

TRAFFIC CONTROL PLANS

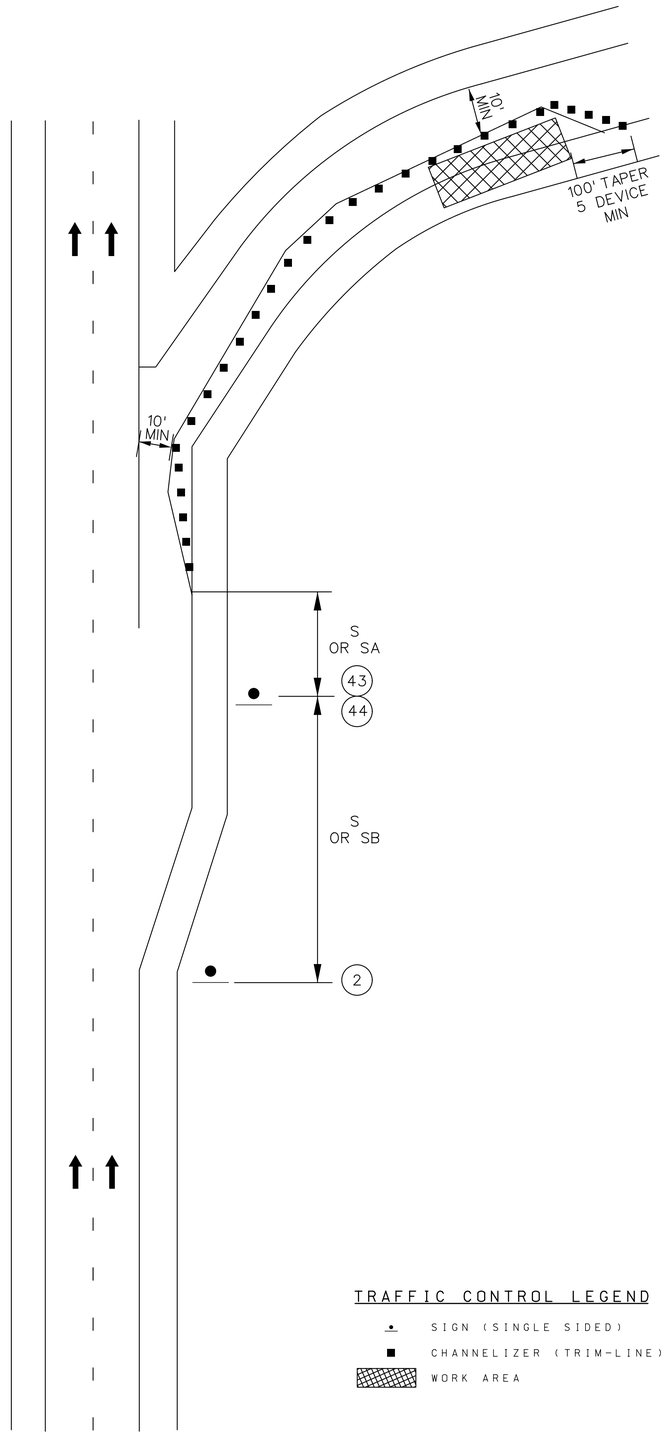

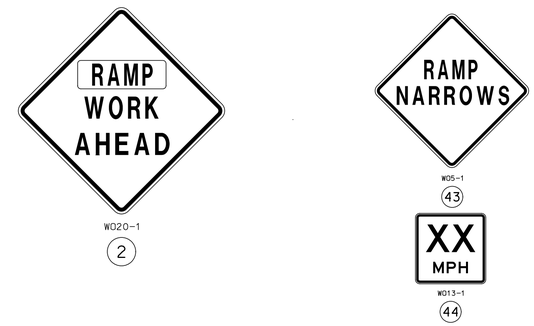

NOTES:

REMOVE AND/OR MODIFY ANY EXISTING PAVEMENT MARKING AS NEEDED.

TEMPORARY PAVEMENT MARKING OPTIONAL FOR SHORT TERM OPERATIONS.

RAMP NARROWS SIGN IS REQUIRED WHEN RAMP WIDTH IS REDUCED

SEE EPG 616.12 WORK ZONE SPEED LIMITS FOR SPEED LIMIT GUIDELINES.

TRAFFIC CONTROL LEGEND

- SIGN (SINGLE SIDED)
- CHANNELIZER (TRIM-LINE)
- WORK AREA

NOT TO SCALE

SPEED	SIGN SPACING (ft.)		TAPER LENGTH (ft.)		OPTIONAL	CHANNELIZER SPACING (ft.)	
PERM. POSTED (MPH)	UN -DIVIDED (S)	DIVIDED (S)	SHOULDER (1) (T1)	LANE (2) (T2)	BUFFER LENGTH (ft) (B)	TAPERS	BUFFER/ WORK AREAS
0-35	-	200	70	245	250	35	40
40-45	-	500	150	540	360	40	80
50-55	-	1000	185	660	495	50	80
60-70	-	SA-1000 SB-1500 SC-2640	235	840	730	60	120

1 Shoulder taper length based on 10 ft. (standard shoulder width) offset.
2. Lane taper length based on 12 ft. (standard lane width) offset.

STATE OF MISSOURI
JAMIE F. RANA
NUMBER PE-2005001034
PROFESSIONAL ENGINEER

Jamie F. Rana
07/15/2025 2:02:29 PM
JAMIE F. RANA - CIVIL
MO-PE-2005001034

DATE PREPARED
7/11/2025

ROUTE	STATE
VAR.	MO
DISTRICT	SHEET NO.
SL	7

COUNTY
VARIOUS

JOB NO.
J6Q2026E

CONTRACT ID.

PROJECT NO.

BRIDGE NO.

DATE	DESCRIPTION

MISSOURI HIGHWAYS AND TRANSPORTATION COMMISSION
105 WEST CAPITOL
JEFFERSON CITY, MO 65102
1-888-ASK-MODOT (1-888-275-6636)

TRAFFIC CONTROL PLANS
PARTIAL EXIT RAMP CLOSURE

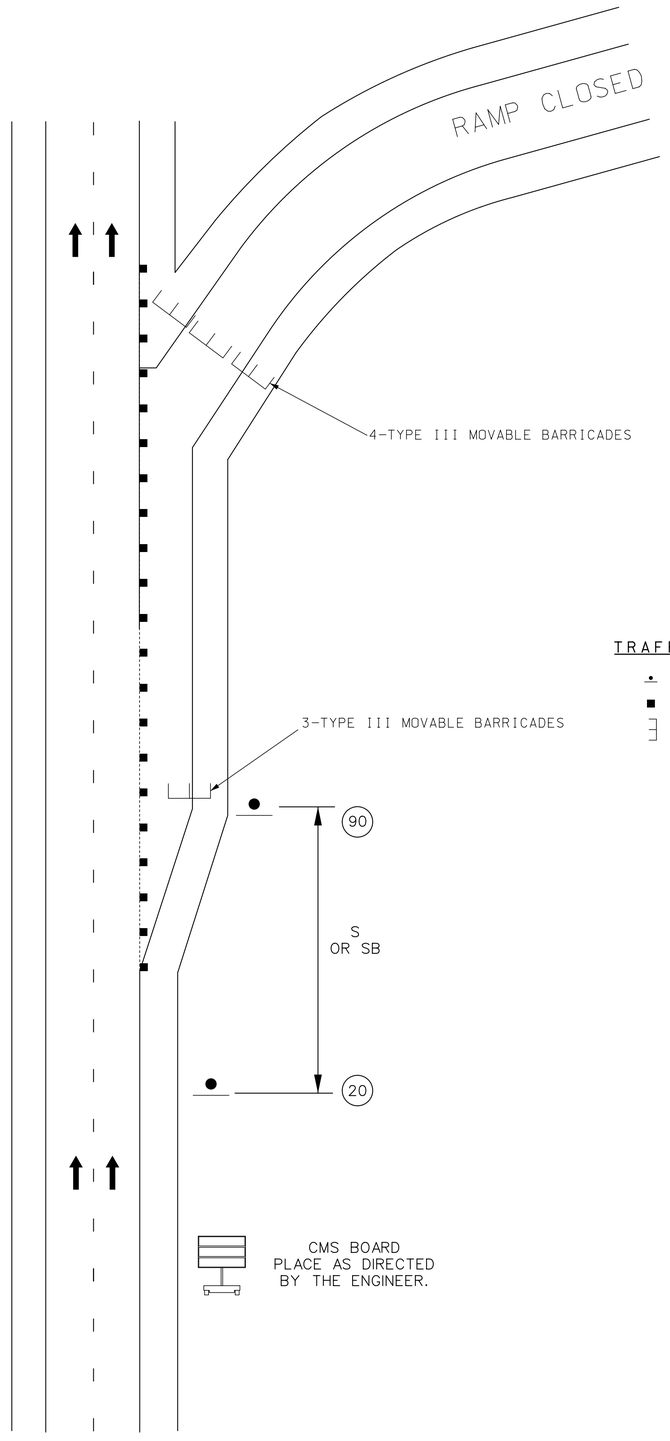

W020-3

20

E05-2a

90

TRAFFIC CONTROL LEGEND

- SIGN (SINGLE SIDED)
- CHANNELIZER (TRIM-LINE)
- TYPE III MOVABLE BARRICADES

NOTES:

REMOVE AND/OR MODIFY ANY EXISTING PAVEMENT MARKING AS NEEDED.

TEMPORARY PAVEMENT MARKING OPTIONAL FOR SHORT TERM OPERATIONS.

RAMP NARROWS SIGN IS REQUIRED WHEN RAMP WIDTH IS REDUCED

SEE EPG 616.12 WORK ZONE SPEED LIMITS FOR SPEED LIMIT GUIDELINES.

SPEED	SIGN SPACING (ft.)		TAPER LENGTH (ft.)		OPTIONAL	CHANNELIZER SPACING (ft.)	
PERM. POSTED (MPH)	UN -DIVIDED (S)	DIVIDED (S)	SHOULDER (1) (T1)	LANE (2) (T2)	BUFFER LENGTH (ft) (B)	TAPERS	BUFFER/ WORK AREAS
0-35	–	200	70	245	250	35	40
40-45	–	500	150	540	360	40	80
50-55	–	1000	185	660	495	50	80
60-70	–	SA-1000 SB-1500 SC-2640	235	840	730	60	120

1 Shoulder taper length based on 10 ft. (standard shoulder width) offset.
2. Lane taper length based on 12 ft. (standard lane width) offset.

NOT TO SCALE

STATE OF MISSOURI
JAMIE F. RANA
NUMBER PE-2005001034
PROFESSIONAL ENGINEER

Jamie F. Rana
07/15/2025 2:02:53 PM
JAMIE F. RANA - CIVIL
MO-PE-2005001034

DATE PREPARED
7/11/2025

ROUTE	STATE
VAR.	MO
DISTRICT	SHEET NO.
SL	8

COUNTY
VARIOUS

JOB NO.
J6Q2026E

CONTRACT ID.

PROJECT NO.

BRIDGE NO.

DATE	DESCRIPTION

MISSOURI HIGHWAYS AND TRANSPORTATION COMMISSION

105 WEST CAPITOL
JEFFERSON CITY, MO 65102
1-888-ASK-MODOT (1-888-275-6636)

TRAFFIC CONTROL PLANS
FULL EXIT RAMP CLOSURE

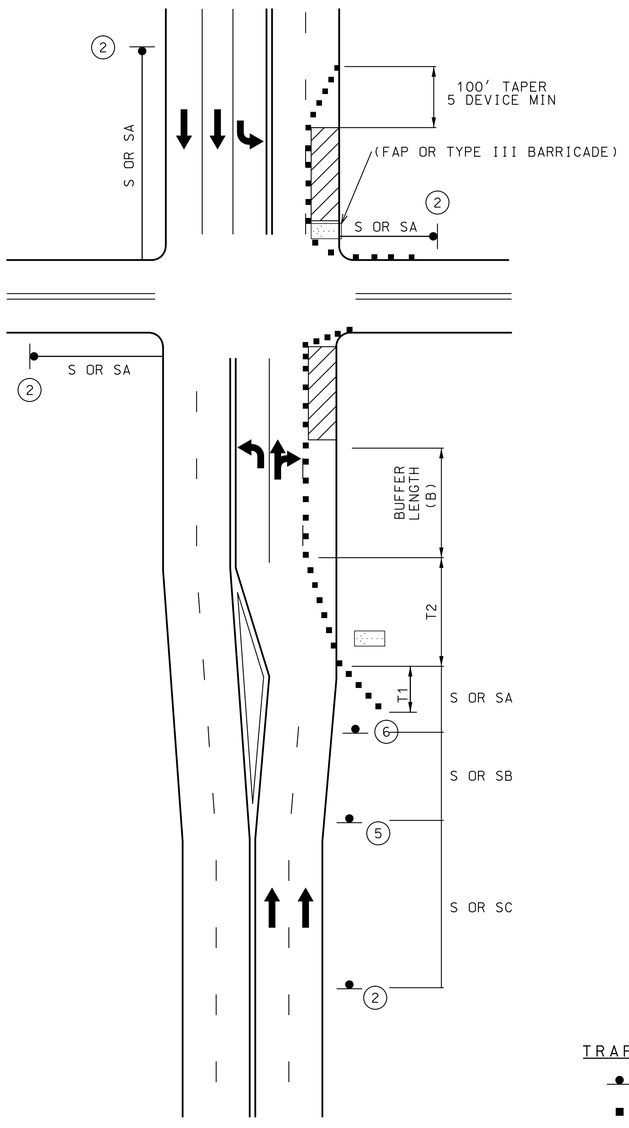

RIGHT LANE CLOSURE AT INTERSECTION
WORK ON NEAR OR FAR SIDE

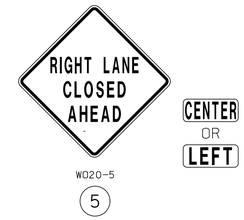

NOTES:

SEE EPG 616.12 WORK ZONE SPEED LIMITS FOR SPEED LIMIT GUIDELINES.

REMOVE AND/OR MODIFY EXISTING PAVEMENT MARKING AS NEEDED.

FOR SIGNALIZED INTERSECTIONS, ADJUSTMENTS MAY NEED TO BE MADE TO SIGNAL PHASING, TIMING, INDICATIONS OR DETECTOR SETTINGS.

FOR SHORT TERM OPERATION, WHERE IT IS NOT FEASIBLE TO MODIFY PAVEMENT MARKING, A 10-FEET DEVICE SPACING IS USED WHERE TRAFFIC IS GUIDED ACROSS DOUBLE YELLOW LINES OR OTHER CONFLICTING PAVEMENT MARKING. ALL OTHER SPACING ARE ONE-HALF OF THE SPACING.

TEMPORARY PAVEMENT MARKING REQUIRED WITH LONG TERM LANE CLOSURES.

PAVEMENT MARKING AND BARRICADES OPTIONAL FOR SHORT TERM OPERATIONS.

RIGHT LANE CLOSED AHEAD SIGN MAY BE OMITTED IN LOW SPEED URBAN AREAS WHERE THERE IS NOT SUFFICIENT SPACE FOR HTE FULL SIGN SERIES.

TRAFFIC CONTROL LEGEND

- SIGN (SINGLE SIDED)
- CHANNELIZER (TRIM-LINE)
- WORK AREA
- FLASHING ARROW PANEL

SPEED	SIGN SPACING (ft.)		TAPER LENGTH (ft.)		OPTIONAL	CHANNELIZER SPACING (ft.)	
PERM. POSTED (MPH)	UN -DIVIDED (S)	DIVIDED (S)	SHOULDER (1) (T1)	LANE (2) (T2)	BUFFER LENGTH (ft) (B)	TAPERS	BUFFER/ WORK AREAS
0-35	200	200	70	245	250	35	40
40-45	350	500	150	540	360	40	80
50-55	500	1000	185	660	495	50	80
60-70	1000	SA-1000 SB-1500 SC-2640	235	840	730	60	120

1 Shoulder taper length based on 10 ft. (standard shoulder width) offset.
2. Lane taper length based on 12 ft. (standard lane width) offset.

NOT TO SCALE

STATE OF MISSOURI
JAMIE F. RANA
NUMBER PE-2005001034
PROFESSIONAL ENGINEER

Jamie F. Rana
07/15/2025 2:03:20 PM
JAMIE F. RANA - CIVIL
MO-PE-2005001034

DATE PREPARED
7/11/2025

ROUTE	STATE
VAR.	MO
DISTRICT	SHEET NO.
SL	9

COUNTY
VARIOUS

JOB NO.
J6Q2026E

CONTRACT ID.

PROJECT NO.

BRIDGE NO.

DATE	DESCRIPTION

MISSOURI HIGHWAYS AND TRANSPORTATION COMMISSION
105 WEST CAPITOL
JEFFERSON CITY, MO 65102
1-888-ASK-MODOT (1-888-275-6636)

TRAFFIC CONTROL PLANS
INTERSECTION - RT. LANE CLOSURE

ITS PULL BOXES WITH CONCRETE PADS

CLASS 2 ITS PULLBOX WITH CONCRETE PAD

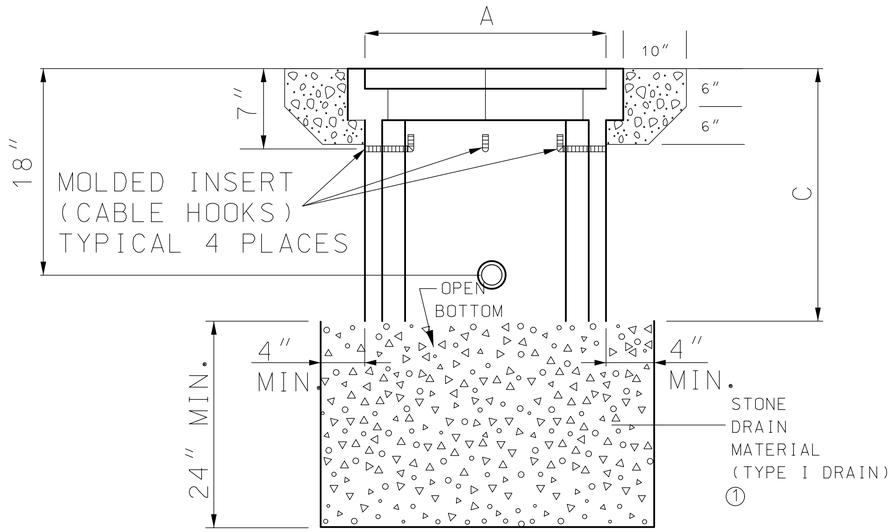

ELEVATION

CLASS 5 ITS PULLBOX WITH CONCRETE PAD

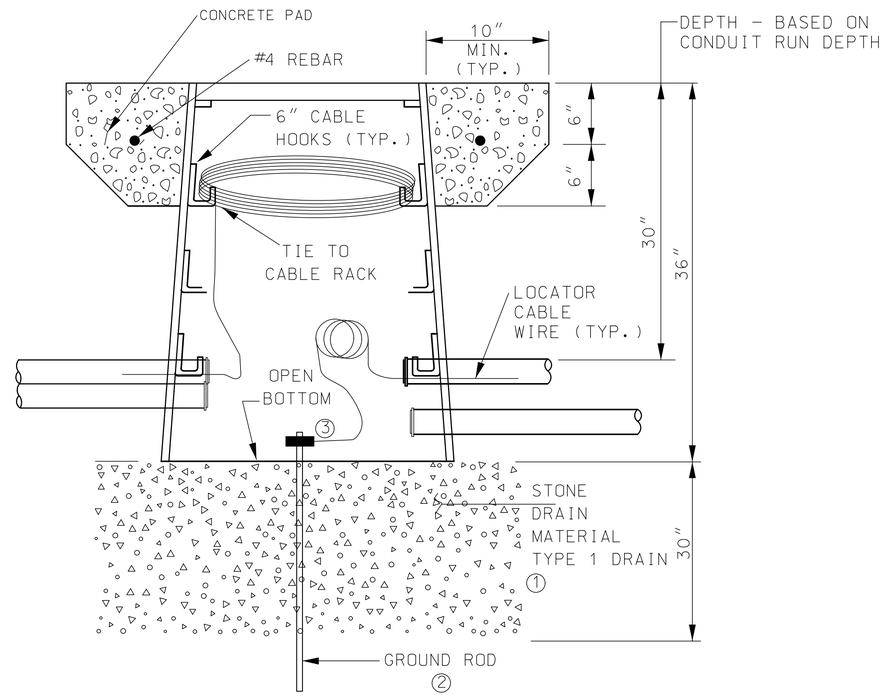

ELEVATION

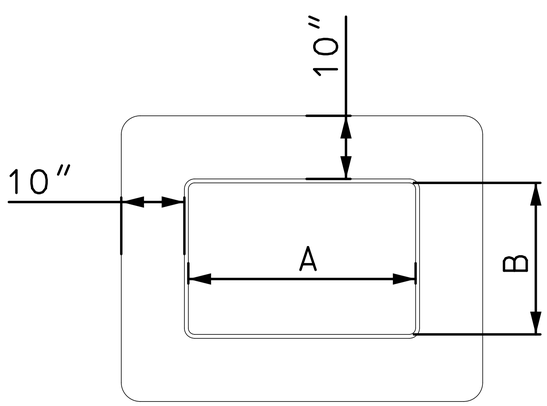

PLAN

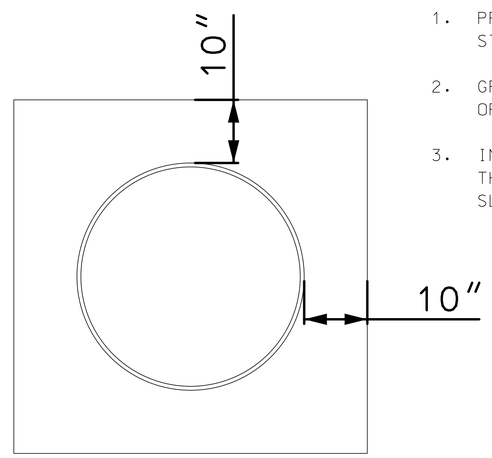

PLAN

1. PROVIDE TYPE II DRAIN AS DIRECTED BY ENGINEER. SEE STANDARD PLAN 902.20 FOR TYPE II DRAIN DETAILS.
2. GROUND ROD ONLY REQUIRED IN PULL BOX NEAREST TO AN ITS OR SIGNAL CABINET.
3. IN THE PULL BOX NEAREST THE ITS OR SIGNAL CABINET, CONNECT THE TRACER WIRE TO A GROUND ROD CLAMP AND PROVIDE 5 FEET OF SLACK.

FOR PULL BOX DIMENSIONS SEE STANDARD PLAN 902.20

DISCLAIMER
THE PROFESSIONAL WHOSE SIGNATURE AND PERSONAL SEAL APPEAR HEREON ASSUMES RESPONSIBILITY ONLY FOR WHAT APPEARS ON THIS PAGE, AND DISCLAIMS (PURSUANT TO SECTION 327.411 RSMO) SPECIFICATION, ESTIMATES, REPORTS, OR OTHER DOCUMENTS OR INSTRUMENTS NOT SEALED BY THE UNDERSIGNED PROFESSIONAL RELATING TO OR INTENDED TO BE USED FOR ANY PART OR PARTS OF THE PROJECT TO WHICH THIS PAGE REFERS.

STATE OF MISSOURI
JAMIE F. RANA
NUMBER
PE-2005001034
PROFESSIONAL ENGINEER

Jamie F. Rana
07/15/2025 2:03:38 PM
JAMIE F. RANA - CIVIL
MO-PE-2005001034

DATE PREPARED	7/11/2025
ROUTE	VAR.
STATE	MO
DISTRICT	SL
SHEET NO.	10
COUNTY	VARIOUS
JOB NO.	J6Q2026E
CONTRACT ID.	
PROJECT NO.	
BRIDGE NO.	

DATE	DESCRIPTION

MISSOURI HIGHWAYS AND TRANSPORTATION COMMISSION
105 WEST CAPITOL
JEFFERSON CITY, MO 65102
1-888-ASK-MODOT (1-888-275-6636)

SPECIAL SHEET
PULL BOX CONC. PAD

TYPICAL DETECTOR CONNECTIONS

NOT TO SCALE

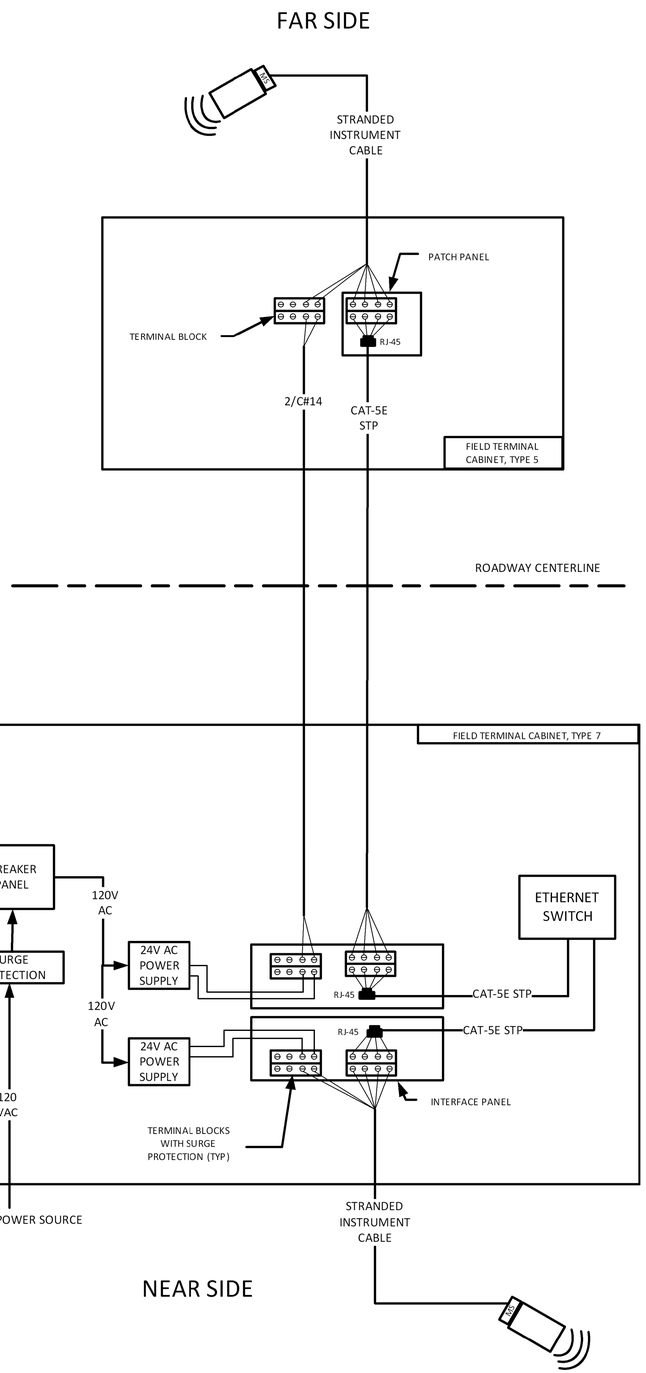

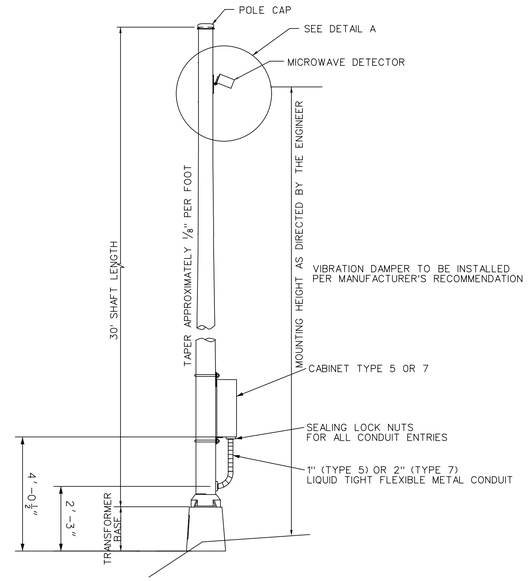

MICROWAVE DETECTOR MOUNTING ON TYPICAL DETECTOR POLE

NOTE:
FOR DETECTOR POLE & FOUNDATION SEE STANDARD PLAN 901.01

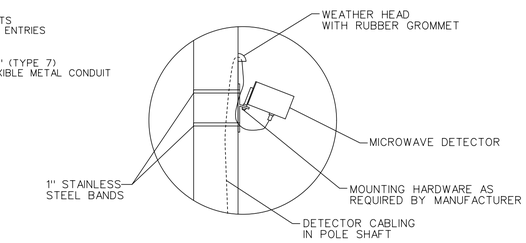

DETAIL A

NOT TO SCALE

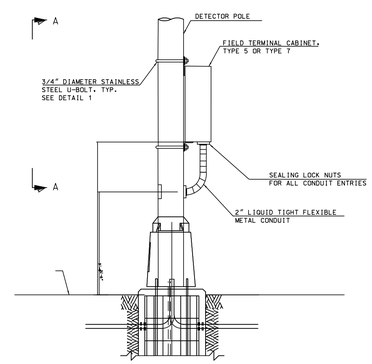

CABINET DETAIL ON DETECTOR POLE

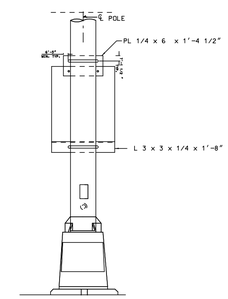

VIEW A-A

TABLE OF DIMENSIONS

POLE TYPE	R	L	L1
9	4 1/2"	1'-8"	1'-4 1/2"
12	5"	1'-8"	1'-4 1/2"
15	6 3/4"	1'-8"	1'-4 1/2"
18	8 3/4"	2'-0 1/2"	2'-0 1/2"
21	10 3/4"	2'-0 1/2"	2'-0 1/2"

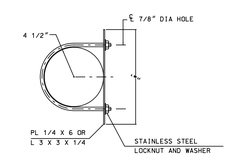

DETAIL 1

TOP CONNECTION SHOWN.
BOTTOM SIMILAR

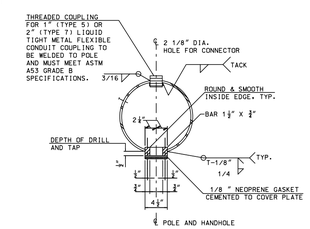

SECTION D-D

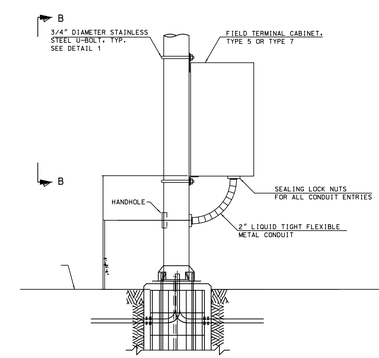

CABINET DETAIL ON CAMERA POLE

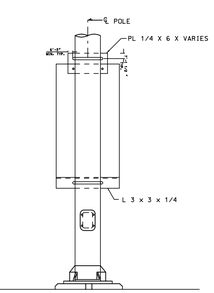

VIEW B-B

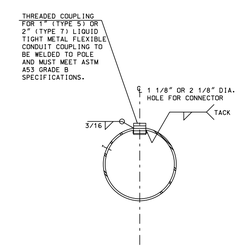

SECTION C-C

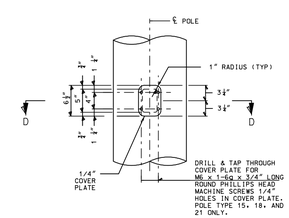

HANDHOLE & COVER DETAIL

NOT TO SCALE

STATE OF MISSOURI
JAMIE F. RANA
NUMBER PE-2005001034
PROFESSIONAL ENGINEER

Jamie F. Rana
07/15/2025 2:04:02 PM
JAMIE F. RANA - CIVIL
MO-PE-2005001034

DATE PREPARED	
7/11/2025	
ROUTE: VAR.	STATE: MO
DISTRICT: SL	SHEET NO.: 11
COUNTY: VARIOUS	
JOB NO.: J6Q2026E	
CONTRACT ID.	
PROJECT NO.	
BRIDGE NO.	

DATE	DESCRIPTION

MISSOURI HIGHWAYS AND TRANSPORTATION COMMISSION
105 WEST CAPITOL
JEFFERSON CITY, MO 65102
1-888-ASK-MODOT (1-888-275-6636)

SPECIAL SHEET
MICROWAVE DETECTOR MOUNTING

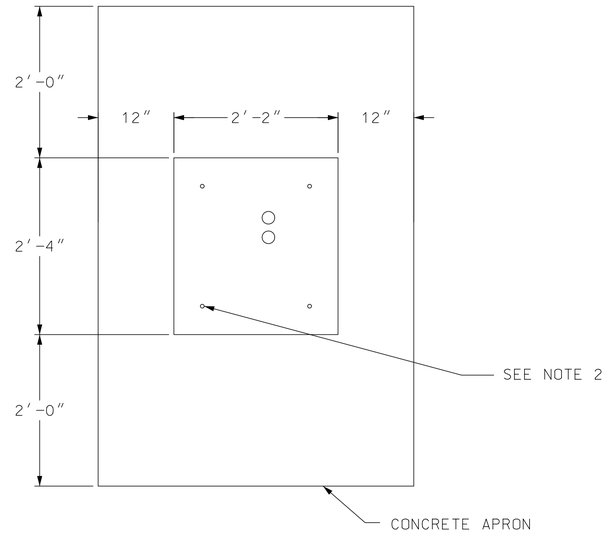

PLAN VIEW

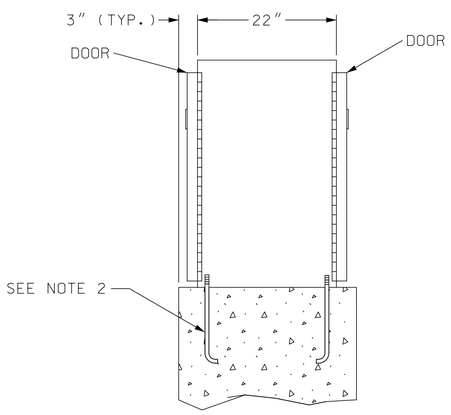

SIDE VIEW

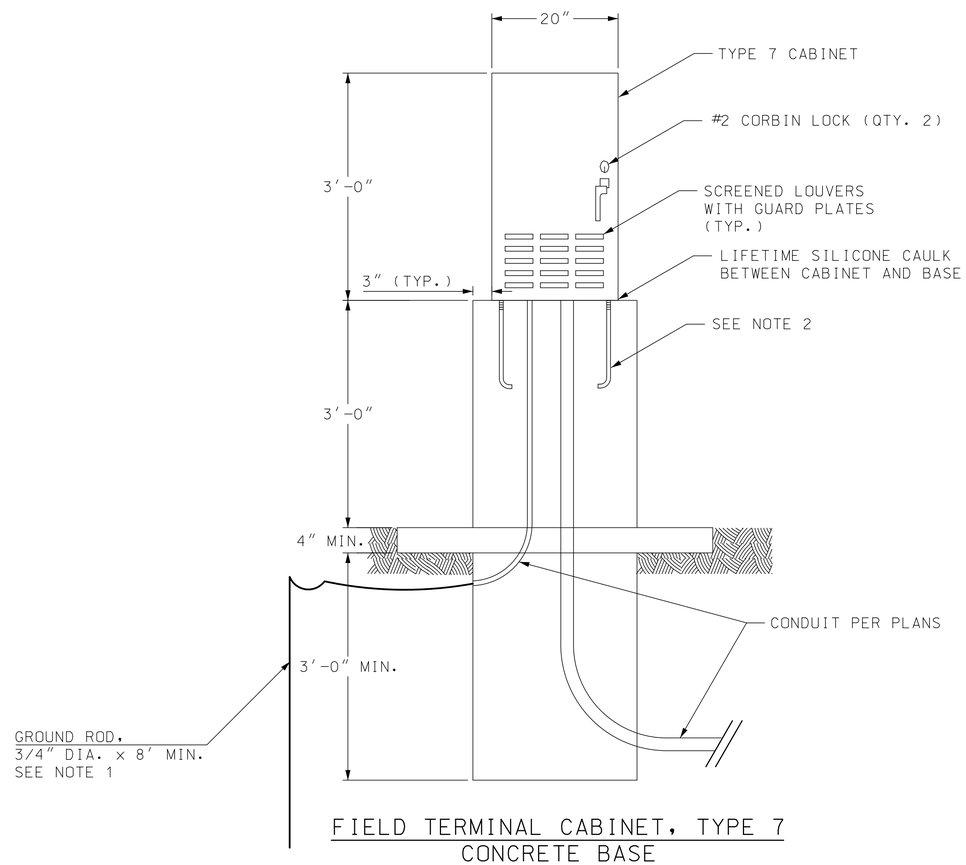

FIELD TERMINAL CABINET, TYPE 7
CONCRETE BASE

NOTES:

1. IF SUBSURFACE CONDITIONS EXIST WHICH PROHIBIT THE PLACEMENT OF THE GROUND ROD IN A VERTICAL POSITION, THE ROD MAY BE DRIVEN AT AN OBLIQUE ANGLE NOT TO EXCEED 45 DEGREES FROM VERTICAL OR BURIED IN A TRENCH AT LEAST 30" DEEP. CONNECTION TO GROUND ROD SHALL BE CADWELDED.

2. ANCHOR BOLTS AS SPECIFIED BY THE CABINET MANUFACTURER.

STATE OF MISSOURI
JAMIE F. RANA
NUMBER
PE-2005001034
PROFESSIONAL ENGINEER

Jamie F. Rana
07/15/2025 2:04:28 PM
JAMIE F. RANA - CIVIL
MO-PE-2005001034

DATE PREPARED	7/11/2025
ROUTE	VAR.
STATE	MO
DISTRICT	SL
SHEET NO.	12
COUNTY	VARIOUS
JOB NO.	J6Q2026E
CONTRACT ID.	
PROJECT NO.	
BRIDGE NO.	

DATE	DESCRIPTION

MISSOURI HIGHWAYS AND TRANSPORTATION COMMISSION

105 WEST CAPITOL
JEFFERSON CITY, MO 65102
1-888-ASK-MODOT (1-888-275-6636)

SPECIAL SHEET
TYPE 7 CABINET

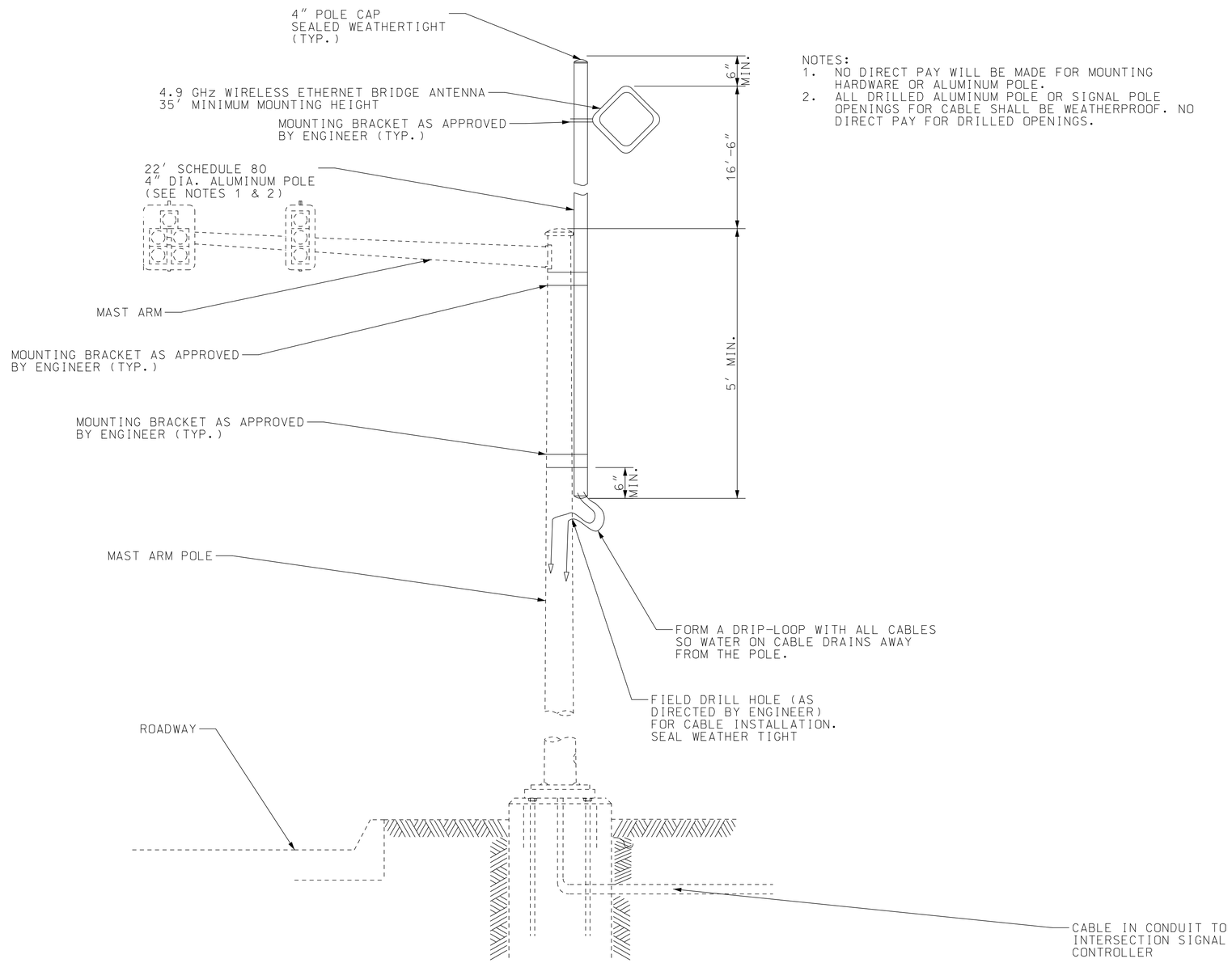

NOTES:
1. NO DIRECT PAY WILL BE MADE FOR MOUNTING HARDWARE OR ALUMINUM POLE.
2. ALL DRILLED ALUMINUM POLE OR SIGNAL POLE OPENINGS FOR CABLE SHALL BE WEATHERPROOF. NO DIRECT PAY FOR DRILLED OPENINGS.

ETHERNET BRIDGE RADIO
NEW POLE MOUNT

RTE. 367 @ JENNINGS STA. RD SIGNAL POLE 2
RTE. AC @ NETHERTON SIGNAL POLE 1
RTE. AC @ PARKER SIGNAL POLE 6
RTE. AC @ POHLMAN POLE 1
RTE. AC @ LUCAS & HUNT SIGNAL POLE 3

NOTE: DRAWING NOT TO SCALE

STATE OF MISSOURI
JAMIE F. RANA
NUMBER PE-2005001034
PROFESSIONAL ENGINEER

Jamie F. Rana
07/15/2025 2:04:47 PM
JAMIE F. RANA - CIVIL
MO-PE-2005001034

DATE PREPARED	7/11/2025
ROUTE	VAR.
STATE	MO
DISTRICT	SL
SHEET NO.	13
COUNTY	VARIOUS
JOB NO.	J6Q2026E
CONTRACT ID.	
PROJECT NO.	
BRIDGE NO.	

DATE	DESCRIPTION

MISSOURI HIGHWAYS AND TRANSPORTATION COMMISSION
105 WEST CAPITOL
JEFFERSON CITY, MO 65102
1-888-ASK-MODOT (1-888-275-6636)

SPECIAL SHEET
ATENNA MOUNT

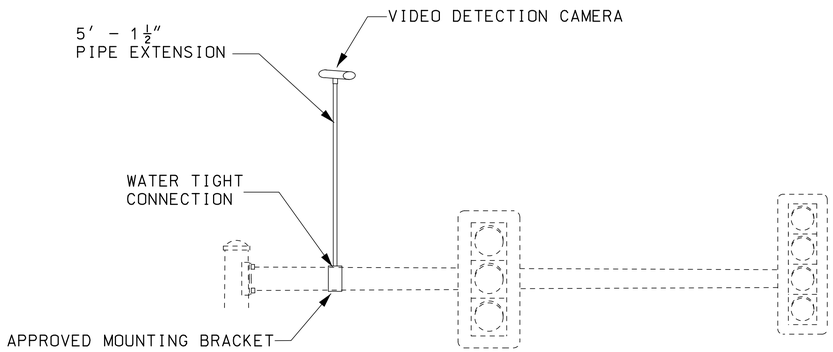

CAMERAS SHALL BE AS CLOSE AS POSSIBLE TO CENTER OF SIGNALIZED APPROACH

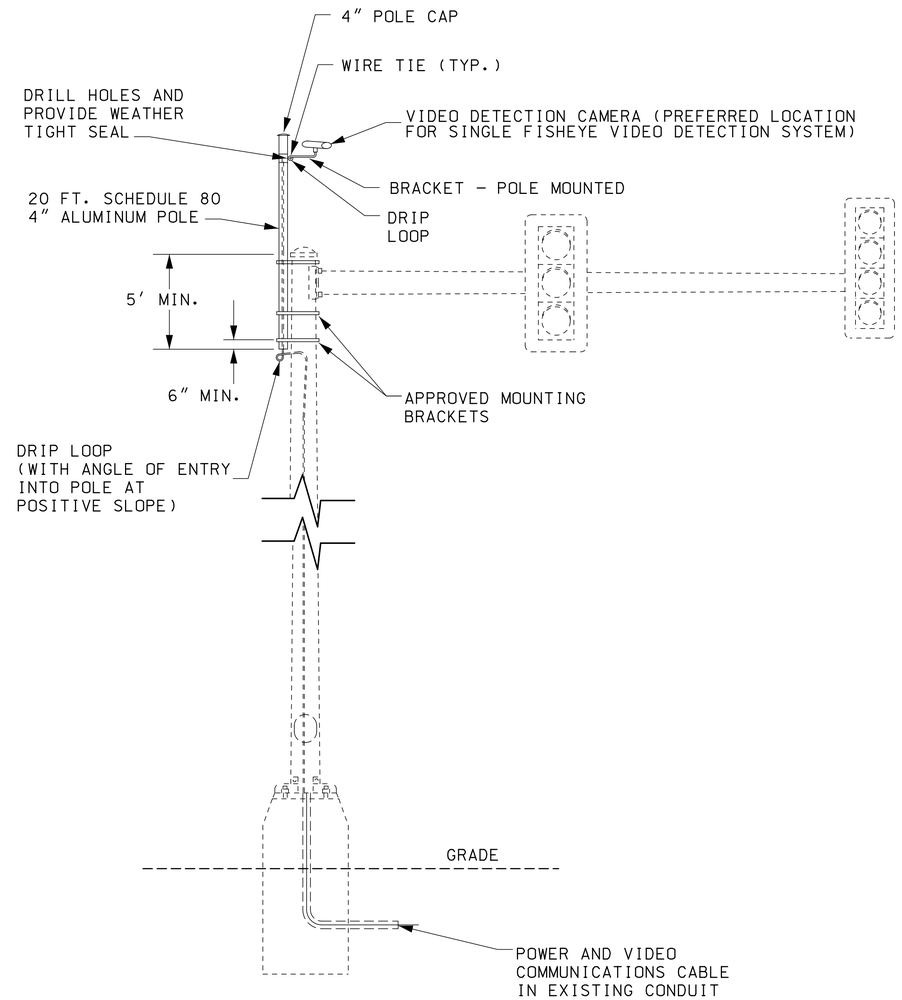

GENERAL NOTES:

1) PROVIDE WATERTIGHT SEAL WHERE CABLES ENTER AND EXIT.
2) CAMERAS SHALL BE INSTALLED PER MANUFACTURER'S SPECIFICATIONS.
3) NO CAMERA SHALL BE INSTALLED ON PEDESTALS UNLESS DIRECTED BY THE ENGINEER.
4) NO CAMERA SHALL BE INSTALLED ON 15' LUMINAIRE ARM UNLESS OTHERWISE DIRECTED BY THE ENGINEER.

NOT TO SCALE

VERSION 07/27/2023

STATE OF MISSOURI
JAMIE F. RANA
NUMBER
PE-2005001034
PROFESSIONAL ENGINEER

Jamie F. Rana
(07/18/2025 11:26:11 AM
JAMIE F. RANA - CIVIL
MO-PE-2005001034

DATE PREPARED	7/17/2025
ROUTE	VAR.
STATE	MO
DISTRICT	SL
SHEET NO.	14
COUNTY	VARIOUS
JOB NO.	J6Q2026E
CONTRACT ID.	
PROJECT NO.	
BRIDGE NO.	

DATE	DESCRIPTION

MISSOURI HIGHWAYS AND TRANSPORTATION COMMISSION

105 WEST CAPITOL
JEFFERSON CITY, MO 65102
1-888-ASK-MODOT (1-888-275-6636)

SPECIAL SHEET
VIDEO DETECTION DETAIL

REVISED 6-XX-2024

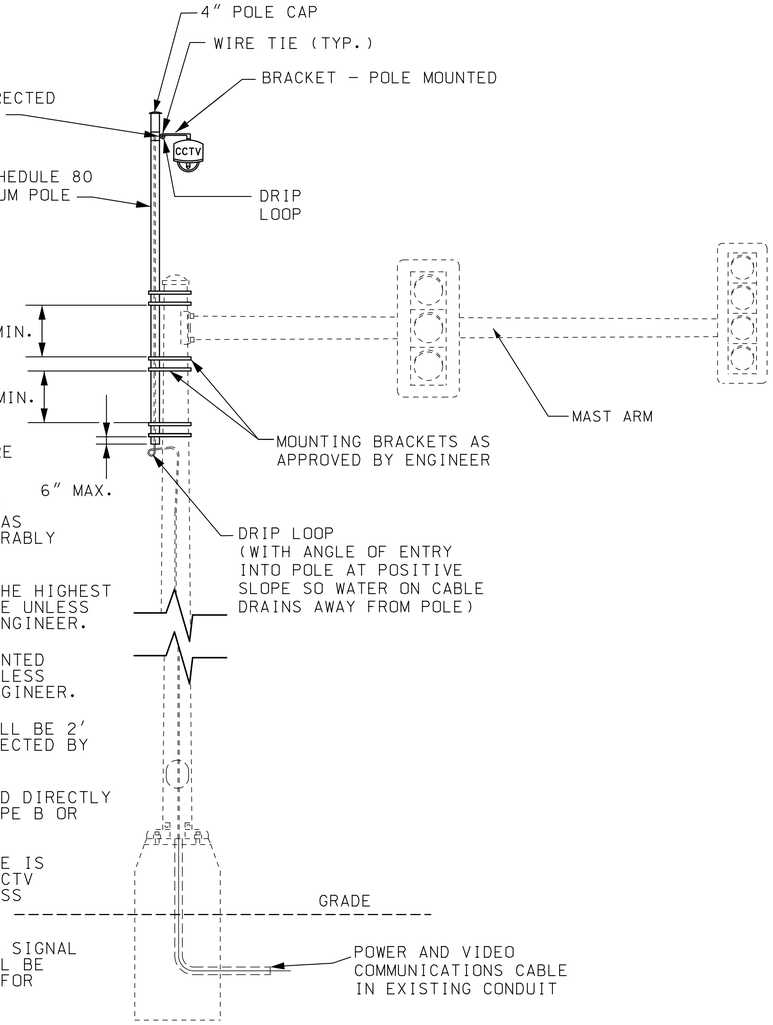

GENERAL NOTES:

PROVIDE WATERTIGHT SEAL WHERE CABLES ENTER AND EXIT.

CCTV CAMERA SHALL BE MOUNTED TO THE SPECIFIC SIGNAL POST AS SHOWN ON THE PLANS AND PREFERABLY ON THE BL OR CL SIGNAL POST.

CAMERA SHALL BE MOUNTED TO THE HIGHEST SEGMENT OF THE EXTENSION POLE UNLESS OTHERWISE REQUESTED BY THE ENGINEER.

CCTV CAMERA SHALL NOT BE MOUNTED BELOW THE SIGNAL MAST ARM UNLESS OTHERWISE DIRECTED BY THE ENGINEER.

SPACING BETWEEN BRACKETS SHALL BE 2' MIN. EVENLY SPACED OR AS DIRECTED BY ENGINEER.

ONE BRACKET SHALL BE ATTACHED DIRECTLY ABOVE THE MAST ARM TO THE TYPE B OR TYPE C SIGNAL POLE.

WHERE EXISTING EXTENSION POLE IS TO BE USED-IN-PLACE. MOUNT CCTV CAMERA BELOW EXISTING WIRELESS RADIO ANTENNA.

ALL DRILLED ALUMINUM POLE OR SIGNAL POLE OPENINGS FOR CABLE SHALL BE WEATHERPROOF. NO DIRECT PAY FOR DRILLED OPENINGS.

NO DIRECT PAY WILL BE MADE FOR MOUNTING HARDWARE.

ALL LABOR AND MATERIALS NEEDED TO COMPLETE THIS WORK WILL BE CONSIDERED INCIDENTAL TO THE PAY ITEMS "CCTV CAMERA ASSEMBLY INSTALLED".

NOT TO SCALE

CCTV MOUNTING ON NEW OR EXISTING C OR B SIGNAL POST WITH EXTENSION POLE

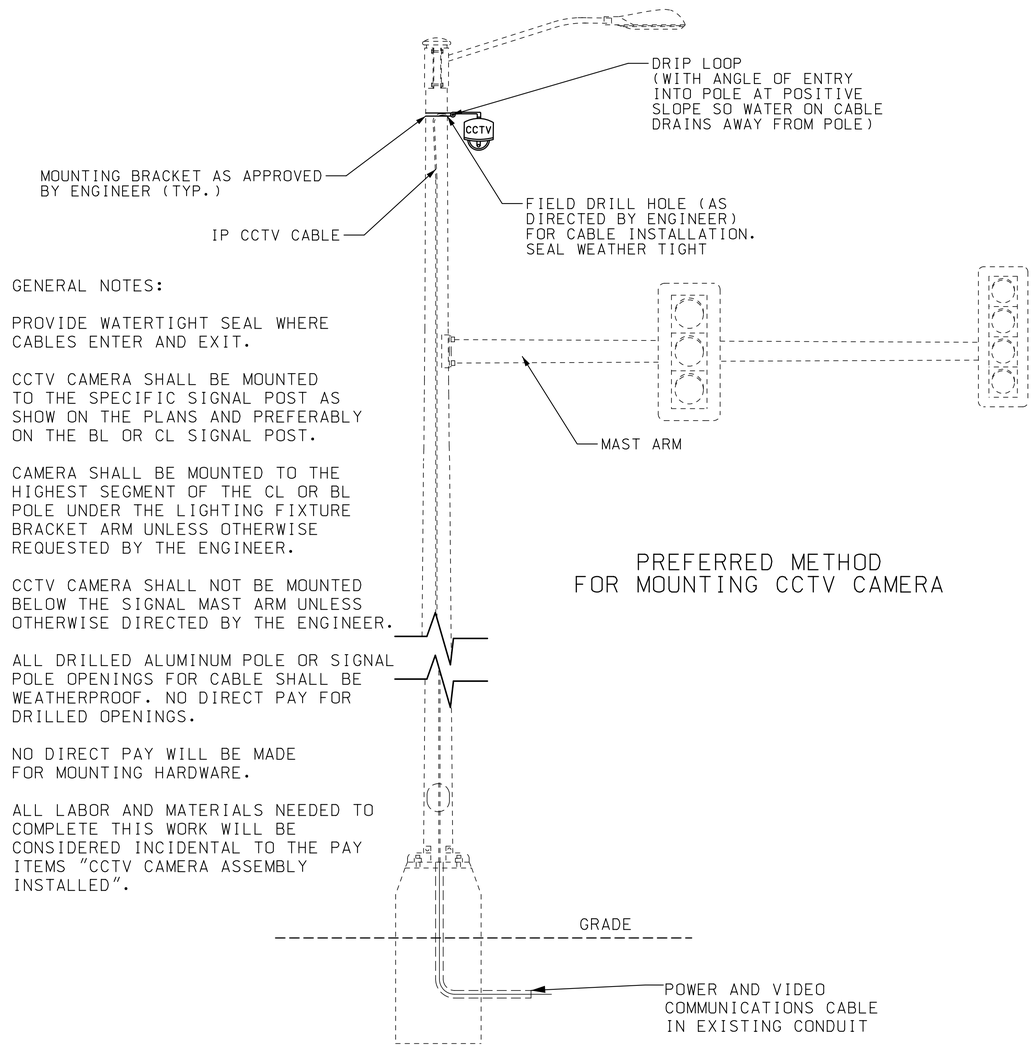

GENERAL NOTES:

PROVIDE WATERTIGHT SEAL WHERE CABLES ENTER AND EXIT.

CCTV CAMERA SHALL BE MOUNTED TO THE SPECIFIC SIGNAL POST AS SHOW ON THE PLANS AND PREFERABLY ON THE BL OR CL SIGNAL POST.

CAMERA SHALL BE MOUNTED TO THE HIGHEST SEGMENT OF THE CL OR BL POLE UNDER THE LIGHTING FIXTURE BRACKET ARM UNLESS OTHERWISE REQUESTED BY THE ENGINEER.

CCTV CAMERA SHALL NOT BE MOUNTED BELOW THE SIGNAL MAST ARM UNLESS OTHERWISE DIRECTED BY THE ENGINEER.

ALL DRILLED ALUMINUM POLE OR SIGNAL POLE OPENINGS FOR CABLE SHALL BE WEATHERPROOF. NO DIRECT PAY FOR DRILLED OPENINGS.

NO DIRECT PAY WILL BE MADE FOR MOUNTING HARDWARE.

ALL LABOR AND MATERIALS NEEDED TO COMPLETE THIS WORK WILL BE CONSIDERED INCIDENTAL TO THE PAY ITEMS "CCTV CAMERA ASSEMBLY INSTALLED".

PREFERRED METHOD FOR MOUNTING CCTV CAMERA

NOT TO SCALE

CCTV MOUNTING ON NEW OR EXISTING CL OR BL SIGNAL POST WITH LUMINAIRE

STATE OF MISSOURI
JAMIE F. RANA
NUMBER PE-2005001034
PROFESSIONAL ENGINEER
Jamie F. Rana
07/18/2025 11:26:31 AM
JAMIE F. RANA - CIVIL
MO-PE-2005001034

DATE PREPARED	7/17/2025
ROUTE	VAR.
STATE	MO
DISTRICT	SL
SHEET NO.	15
COUNTY	VARIOUS
JOB NO.	J6Q2026E
CONTRACT ID.	
PROJECT NO.	
BRIDGE NO.	

DATE	DESCRIPTION

MISSOURI HIGHWAYS AND TRANSPORTATION COMMISSION
105 WEST CAPITOL
JEFFERSON CITY, MO 65102
1-888-ASK-MODOT (1-888-275-6636)

SPECIAL SHEET
CCTV CAMERA MOUNTING TO SIGNAL POST DETAILS