SEC/SUR	22	TWP	29N	RGE	21W

(53'-89'-53') PRESTESSED CONCRETE NU-GIRDER SPANS

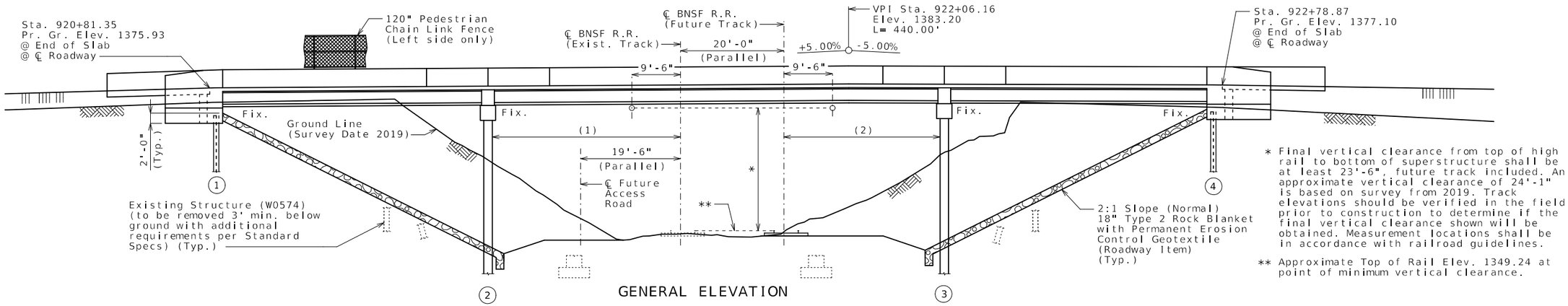

* Final vertical clearance from top of high rail to bottom of superstructure shall be at least 23'-6", future track included. An approximate vertical clearance of 24'-1" is based on survey from 2019. Track elevations should be verified in the field prior to construction to determine if the final vertical clearance shown will be obtained. Measurement locations shall be in accordance with railroad guidelines.

** Approximate Top of Rail Elev. 1349.24 at point of minimum vertical clearance.

GENERAL ELEVATION

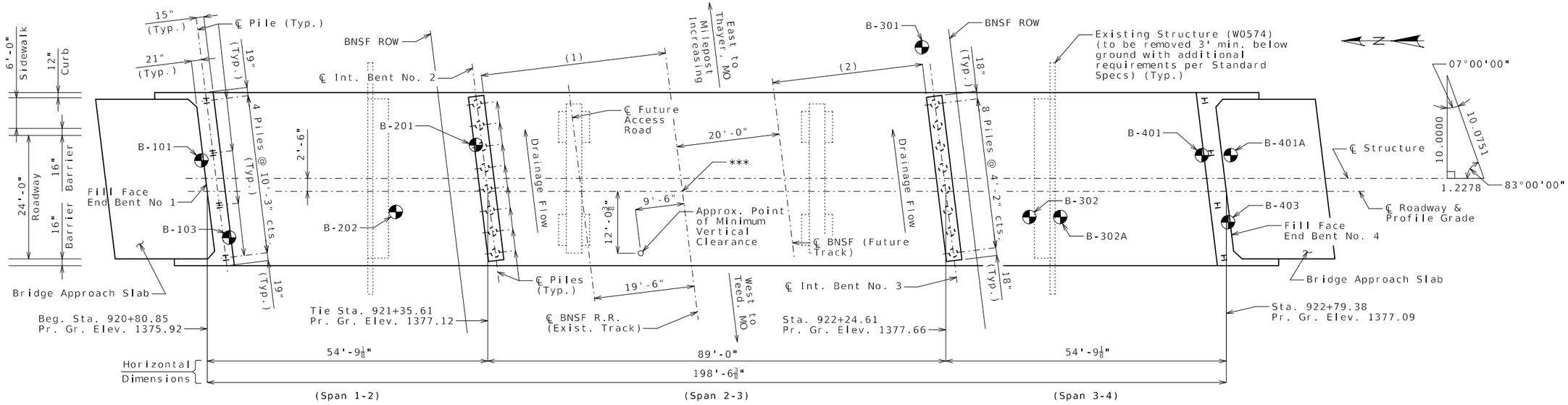

PLAN

◔ Indicates location of borings.

Notice and Disclaimer Regarding Boring Log Data

The locations of all subsurface borings for this structure are shown on the plan sheet(s) for this structure. The boring data for all locations indicated, as well as any other boring logs or other factual records of subsurface data and investigations performed by the department for the design of the project, are shown on Sheet No. 33 and may be included in the Electronic Bridge Deliverables. They will also be available from the Project Contact upon written request. No greater significance or weight should be given to the boring data depicted on the plan sheets than is given to the subsurface data available from the district or elsewhere.

The Commission does not represent or warrant that any such boring data accurately depicts the conditions to be encountered in constructing this project. A contractor assumes all risks it may encounter in basing its bid prices, time or schedule of performance on the boring data depicted here or those available from the district, or on any other documentation not expressly warranted, which the contractor may obtain from the Commission.

*** Sta. 921+73.61 ℄ Rte. 65 OR =
Sta. 11+20.08 ℄ BNSF R.R. (Mile Post 206.25)

(1) Estimated horizontal clearance from ℄ Exist. BNSF Track to Int. Bent No. 2:

Beam Cap Face = 36'-2⅝"
CIP Pile Face = 36'-10⅝"

(2) Estimated horizontal clearance from ℄ Future BNSF Track to Int. Bent No. 3:

Beam Cap Face = 29'-1½"
CIP Pile Face = 29'-9½"

BNSF CROSSING LOCATION	
MILEPOST	206.25
DIVISION	HEARTLAND
SUBDIVISION	THAYER NORTH
NEAREST STATION	SPRINGFIELD
CITY, COUNTY, STATE	SPRINGFIELD, GREENE, MISSOURI
LATITUDE, LONGITUDE	37.1976020, -93.225489

Notes:

For General Notes, Foundation Data, Estimated Quantities, Estimated Quantities for Slab on Concrete NU-Girder (with Transparent Forms) and Location Sketch, see Sheet No. 3.

Roadway fill shall be completed to the final roadway section and up to the elevation of the bottom of the concrete beam within the limits of the structure and for not less than 25 feet in back of the fill face of the end bents before any piles are driven for any bents falling within the embankment section.

B.M. 1 - NW CORNER WEST WINGWALL BT1, 17.05 RT OF CL EX_65OR
NORTHING 497562.61 EASTING 1429222.28, ELEV 1374.99

B.M. 2 - NW CORNER WEST WINGWALL BT4, 17.41 RT OF CL EX_65OR
NORTHING 497441.79 EASTING 1429219.89, ELEV 1374.38

BRIDGE: ROUTE 65 OUTER ROAD OVER BNSF RAILROAD

ROUTE 65 OUTER ROAD FROM BUSINESS ROUTE 65 TO ROUTE D
ABOUT 1.0 MILE SOUTH OF BUSINESS ROUTE 65
TIE STATION 921+35.61

Designed Mar. 2023
Detailed May 2025
Checked June 2025

Note: This drawing is not to scale. Follow dimensions.

STATE OF MISSOURI
TYLER R. LINDSAY
NUMBER PE-2019000128
PROFESSIONAL ENGINEER
07/28/2025 8:31:16 AM
TYLER R. LINDSAY - CIVIL
MO-PE-2019000128

DATE PREPARED	
7/28/2025	
ROUTE 65 OR	STATE MO
DISTRICT BR	SHEET NO. 1
COUNTY GREENE	
JOB NO. J8S3158	
CONTRACT ID.	
PROJECT NO.	
BRIDGE NO. A8938	

DESCRIPTION

DATE

MISSOURI HIGHWAYS AND TRANSPORTATION COMMISSION
105 WEST CAPITOL
JEFFERSON CITY, MO 65102
1-888-ASK-MODOT (1-888-275-6636)

RR General Notes:

BNSF Website: www.bnsf.com

For BNSF Signal/Telecommunications Engineering, "Call Before You Dig", call 1-800-533-2891.

For BNSF Grade Crossings, call 1-800-832-5452.

Please refer to BNSF website for utility review and approval process and application.

A flagman is required when any work is performed within 25 feet of track centerline. No work is allowed within 50 feet of track centerline when a train passes the work site, and all personnel must clear the area within 25 feet of track centerline and secure all equipment when trains are present.

Construction Notes:

1. Any shoring system that impacts the Railroad operations and/or supports Railroad embankment shall be designed and constructed per the Railroad temporary shoring requirements.

2. All demolition within the Railroad right-of-way and/or demolition that may impact the Railroad tracks or operations shall comply with the Railroad demolition requirements.

3. Erection over the Railroad right-of-way shall be designed to cause no interuption to all Railroad operations.

4. The elevation of the existing top-of-rail profile shall be verified before beginning construction. All discrepencies shall be brought to the attention of the Railroad prior to construction.

5. The proposed grade serperation project shall not change the quantity and/or characteristics of the flow in the Railroad ditches and/or drainage structures.

6. The contractor must submit a proposed method of erosion and sediment control and have the method approved by the Railroad prior to beginning any grading on the project site.

7. For Railroad coordination please refer to the Railroad's Coordination Requirements as part of the Specifications or Special Provisions of the project.

8. Temporary Construction Clearances, including falsework clearances, shall comply with Minimum Construction Clearance Envelope. See figure for Temporary Construction Clearances.

9. All permanent clearances shall be verified before project closeout.

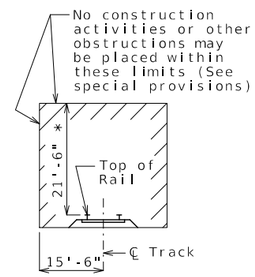

MINIMUM CONSTRUCTION CLEARANCES

(Normal to railroad)
(Not to scale)

* Measured from high rail.

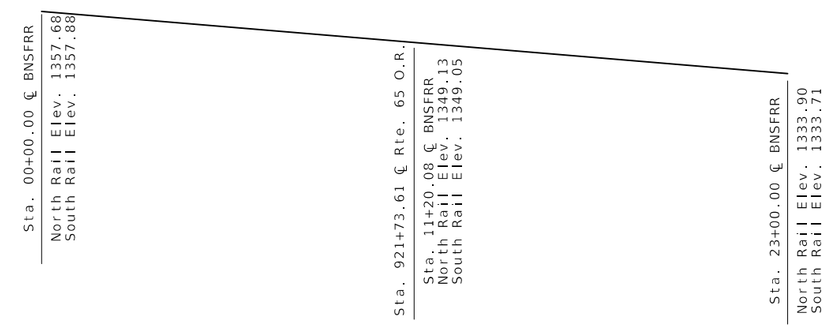

TRACK PROFILE

(Along BNSF top of rail)

BNSF SURVEY POINTS "TOP OF RAIL"

STATION	NORTH RAIL ELEVATION	SOUTH RAIL ELEVATION	STATION	NORTH RAIL ELEVATION	SOUTH RAIL ELEVATION
00+00.00	1357.68	1357.88	11+50.00	1348.81	1348.72
00+50.00	1357.52	1357.74	12+00.00	1348.27	1348.21
01+00.00	1357.32	1357.52	12+50.00	1347.83	1347.81
01+50.00	1357.05	1357.25	13+00.00	1347.60	1347.62
02+00.00	1356.80	1357.01	13+50.00	1347.18	1347.12
02+50.00	1356.51	1356.72	14+00.00	1346.59	1346.58
03+00.00	1356.18	1356.37	14+50.00	1346.02	1345.88
03+50.00	1355.86	1356.08	15+00.00	1345.42	1345.28
04+00.00	1355.51	1355.67	15+50.00	1344.90	1344.68
04+50.00	1355.15	1355.30	16+00.00	1344.25	1344.06
05+00.00	1354.78	1355.00	16+50.00	1343.61	1343.40
05+50.00	1354.45	1354.67	17+00.00	1342.91	1342.73
06+00.00	1354.00	1354.23	17+50.00	1342.16	1341.96
06+50.00	1353.68	1353.92	18+00.00	1341.37	1341.18
07+00.00	1353.34	1353.57	18+50.00	1340.56	1340.38
07+50.00	1352.94	1353.21	19+00.00	1339.76	1339.58
08+00.00	1352.54	1352.75	19+50.00	1338.89	1338.59
08+50.00	1352.14	1352.21	20+00.00	1338.14	1337.84
09+00.00	1351.58	1351.57	20+50.00	1337.38	1337.05
09+50.00	1350.96	1350.99	21+00.00	1336.61	1336.39
10+00.00	1350.37	1350.38	21+50.00	1335.93	1335.62
10+50.00	1349.84	1349.70	22+00.00	1335.23	1335.03
11+00.00	1349.33	1349.27	22+50.00	1334.58	1334.37
11+20.08	1349.13	1349.05	23+00.00	1333.90	1333.71

STATE OF MISSOURI
TYLER R. LINDSAY
NUMBER PE-2019000128
PROFESSIONAL ENGINEER
07/28/2025 8:31:31 AM
TYLER R LINDSAY - CIVIL
MO-PE-2019000128

DATE PREPARED: 7/28/2025

ROUTE	STATE
65 OR	MO
DISTRICT	SHEET NO.
BR	2

COUNTY: GREENE

JOB NO.: J8S3158

CONTRACT ID.:

PROJECT NO.:

BRIDGE NO.: A8938

DATE	DESCRIPTION

MISSOURI HIGHWAYS AND TRANSPORTATION COMMISSION
105 WEST CAPITOL
JEFFERSON CITY, MO 65102
1-888-ASK-MODOT (1-888-275-6636)

RAILROAD REQUIREMENTS

Detailed May 2025
Checked June 2025

Note: This drawing is not to scale. Follow dimensions.

Estimated Quantities

Item		Substr.	Superstr.	Total
Class 1 Excavation	cu. yard	40		40
Removal of Bridges (W0574)	lump sum			1
Bridge Approach Slab (Minor)	sq. yard		140	140
(120 in.) Pedestrian Fence (Structures)	linear foot		214	214
Galvanized Structural Steel Piles (12 in.)	linear foot	304		304
Galvanized Cast-In-Place Concrete Piles (20 in.)	linear foot	800		800
Pre-Bore for Piling	linear foot	120		120
Pile Point Reinforcement	each	24		24
Class B Concrete (Substructure)	cu. yard	50.2		50.2
Type D Barrier	linear foot		452	452
Slab on Concrete NU-Girder (with Transparent Forms)	sq. yard		739	739
Pedestrian Curb	linear foot		215	215
NU 35, Prestressed Concrete NU-Girder	linear foot		778	778
Reinforcing Steel (Bridges)	pound	6610		6610
Conduit System on Structure	lump sum			1
Vertical Drains at End Bents	each	2		2
Plain Neoprene Bearing Pad	each		4	4
Laminated Neoprene Bearing Pad	each		16	16
Laminated Neoprene Bearing Pad (Tapered)	each		4	4

All concrete above the construction joint in the end bents is included in the Estimated Quantities for Slab on Concrete NU-Girder (with Transparent Forms).

All reinforcement in the end bents is included in the Estimated Quantities for Slab on Concrete NU-Girder (with Transparent Forms).

All reinforcement in the intermediate bent concrete diaphragms except reinforcement embedded in the beam cap is included in the Estimated Quantities for Slab on Concrete NU-Girder (with Transparent Forms).

All concrete above the intermediate beam cap is included in the Estimated Quantities for Slab on Concrete NU-Girder (with Transparent Forms).

GENERAL NOTES:

Design Specifications:

2020 AASHTO LRFD Bridge Design Specifications (9th Ed.)
2023 AASHTO Guide Specifications for LRFD Seismic Bridge Design (3rd Ed.)
Seismic Design Category = A (Seismic Details)

Design Loading:

Vehicular = HL-93
Future Wearing Surface = 35 lb/sf
Earth = 120 lb/sf
Equivalent Fluid Pressure = 45 lb/cf (Min.)
Superstructure: Simply supported, Non-Composite for dead load.
Continuous Composite for live load.

Design Unit Stresses:

Class B Concrete (Substructure)	f'c = 3,000 psi
Class B-1 Concrete (Barrier)	f'c = 4,000 psi
Class B-2 Concrete (Superstructure except Prestressed Girders and Barrier)	f'c = 4,000 psi
Reinforcing Steel (ASTM A615 Grade 60)	fy = 60,000 psi
Galvanized Steel HP Pile (ASTM A709 Grade 50)	fy = 50,000 psi
Welded or Seamless steel shell (pipe) for CIP pile (ASTM A252 Modified Grade 3)	fy = 50,000 psi

For prestressed girder stresses, see Sheets No. 14 thru 17.

Neoprene Pads:

Neoprene bearing pads shall be 60 durometer and shall be in accordance with Sec 716.

Joint Filler:

All joint filler shall be in accordance with Sec 1057 for preformed sponge rubber expansion and partition joint filler, except as noted.

Reinforcing Steel:

Minimum clearance to reinforcing steel shall be 1 1/2", unless otherwise shown.

Minimum clearance between galvanized piles and uncoated (plain) reinforcing steel including bar supports shall be 1 1/2". Nylon, PVC, or polyethylene spacers shall be used to maintain clearance. Nylon cable ties shall be used to bind the spacers to the reinforcement.

Traffic Handling:

Structure to be closed during construction. Traffic to be maintained on other routes during construction. See Roadway plans for traffic control.

Estimated Quantities for Slab on Concrete NU-Girder (with Transparent Forms)

Item		Total
Class B-2 Concrete	cu. yard	237
Reinforcing Steel (Epoxy Coated)	pound	63,870

The table of Estimated Quantities for NU-Girder (with Transparent Forms) represents the quantities used by the State in preparing the cost estimate for concrete slabs. The area of the concrete slab will be measured to the nearest square yard longitudinally from end of slab to end of slab and transversely from out to out of bridge slab (or with the horizontal dimensions as shown on the plan of slab). Payment for stay-in-place Transparent forms, all concrete and epoxy coated reinforcing steel will be considered completely covered by the contract unit price for the slab. Variations may be encountered in the estimated quantities but the variations cannot be used for an adjustment in the contract unit price.

Method of forming the slab shall be as shown on the plans and in accordance with Sec 703. All hardware for forming the slab to be left in place as a permanent part of the structure shall be coated in accordance with ASTM A123 or ASTM B633 with a thickness class SC 4 and a finish type I, II or III.

Slab shall be cast-in-place with transparent forms. Precast prestressed panels will not be permitted.

See special provisions for transparent form requirements.

Maximum actual weight of transparent forms allowed shall be 5 psf assumed for girder beam loading.

For transparent form details, see Sheet No. 21.

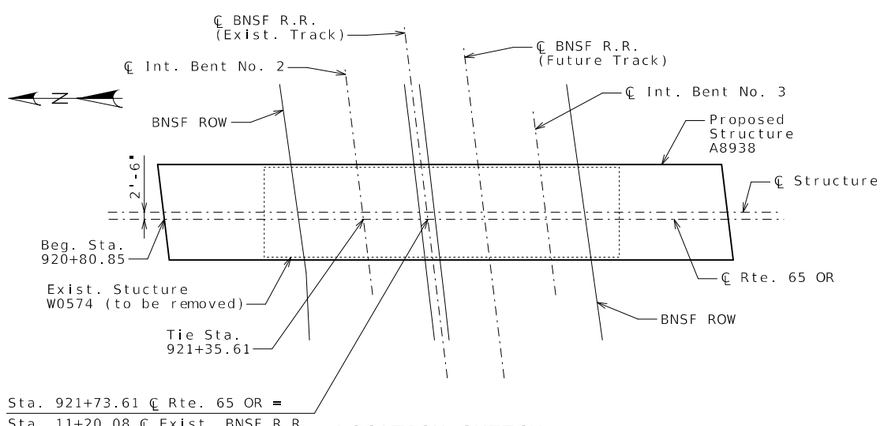

LOCATION SKETCH

Foundation Data

Type	Design Data		Bent Number 1	2	3	4
Load Bearing Pile	Pile Type and Size		HP 12x53	OECIP 20"	OECIP 20"	HP 12x53
	Number	ea	4	8	8	4
	Approximate Length Per Each	ft	42	60	40	34
	Pile Point Reinforcement	ea	All	All	All	All
	Min. Galvanized Penetration (Elev.)	ft	Full Length	Full Length	Full Length	Full Length
	Pile Driving Verification Method		DF	DF	DF	DF
	Resistance Factor		0.4	0.4	0.4	0.4
	Minimum Nominal Axial Compressive Resistance	kip	487	537	526	483

DF = FHWA-modified Gates Dynamic Pile Formula

Minimum Nominal Axial Compressive Resistance = $\frac{\text{Maximum Factored Loads}}{\text{Resistance Factor}}$

Prebore for piles at Bent No. 3 to elevation 1333.00.

All piles shall be galvanized down to the minimum galvanized penetration (elevation).

Pile point reinforcement need not be galvanized. Shop drawings will not be required for pile point reinforcement.

The contractor shall make every effort to achieve the minimum galvanized penetration (elevation) shown on the plans for all piles. Deviations in penetration less than 5 feet of the minimum will be considered acceptable provided the contractor makes the necessary corrections to ensure the minimum penetration is achieved on subsequent piles.

HP piles are anticipated to be driven to refusal on rock. Review all borings for depth of rock and restrict driving as appropriate to comply with hard rock driving criteria in accordance with Sec 702. When pile refusal on rock occurs, as approved by the engineer, the minimum nominal axial compressive resistance is verified and no additional pile driving verification method is required.

STATE OF MISSOURI
TYLER R. LINDSAY
NUMBER PE-2019000128
PROFESSIONAL ENGINEER
07/28/2025 8:31:46 AM
TYLER R.LINDSAY-CIVIL
MO-PE-2019000128

DATE PREPARED 7/28/2025

ROUTE	STATE
65 OR	MO
DISTRICT	SHEET NO.
BR	3

COUNTY GREENE

JOB NO. J8S3158

CONTRACT ID.

PROJECT NO.

BRIDGE NO. A8938

DESCRIPTION	DATE

MISSOURI HIGHWAYS AND TRANSPORTATION COMMISSION
105 WEST CAPITOL
JEFFERSON CITY, MO 65102
1-888-ASK-MODOT (1-888-275-6636)

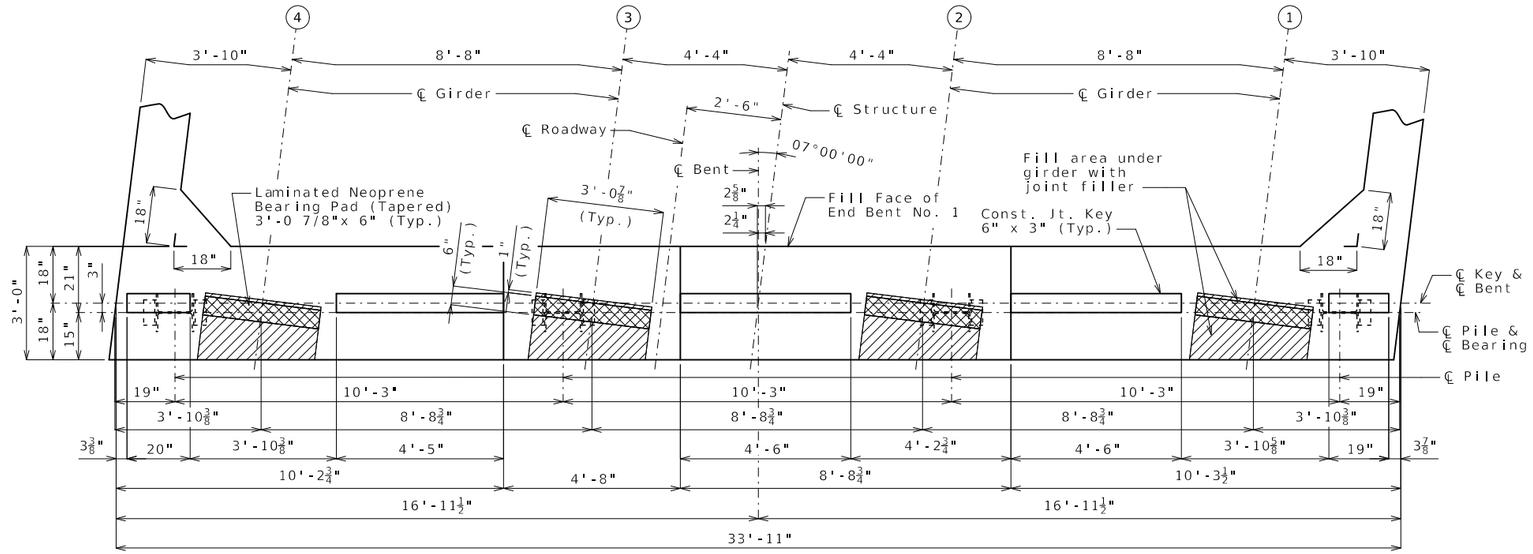

PLAN OF BEAM SHOWING DIMENSIONS

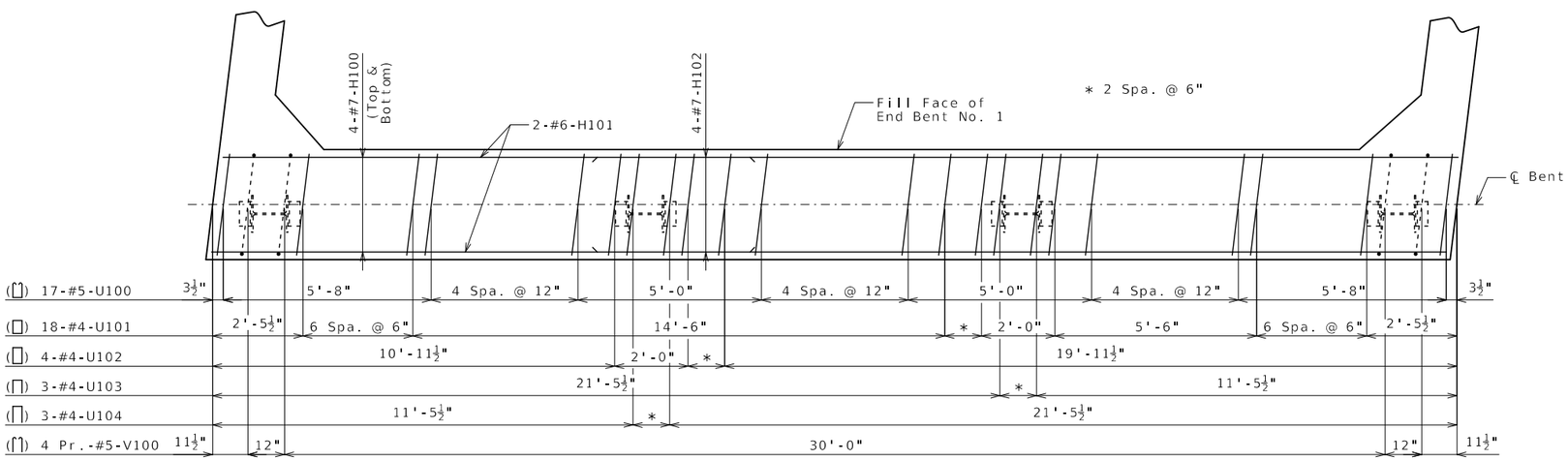

PLAN OF BEAM SHOWING REINFORCEMENT

(Keys and steps not shown for clarity.)

Substructure Quantity Table for Bent No. 1		
Item		Quantity
Class 1 Excavation	cu. yard	40
Galvanized Structural Steel Piles (12 in.)	linear foot	168
Pile Point Reinforcement	each	4
Class B Concrete (Substructure)	cu. yard	14.8

These quantities are included in the Estimated Quantities table on Sheet No. 2.

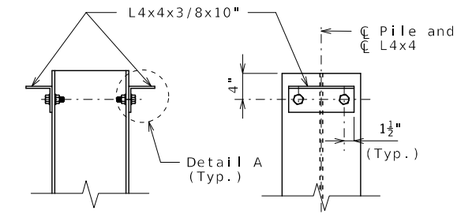

DETAILS OF HP PILE ANCHORS

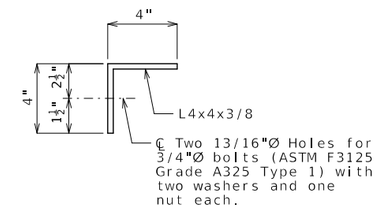

DETAIL A

Angles shall be coated with a minimum of two coats of non-aluminum epoxy mastic primer to provide a dry film thickness of 4 mils minimum, 8 mils maximum, or galvanized in accordance with Sec 1081. Bolts, washers and nuts shall be galvanized in accordance with AASHTO M 232 (ASTM A153), Class C.

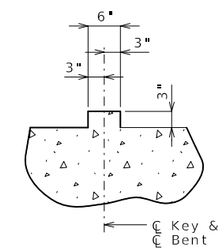

SECTION THRU KEY

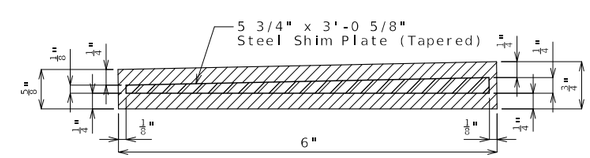

TYPICAL SECTION THRU 6" X 3'-0 7/8" LAMINATED NEOPRENE BEARING PAD (TAPERED)

Notes:

For details of End Bent No. 1 not shown, see Sheets No. 5 & 6.

Reinforcing steel shall be shifted to clear piles. U bars shall clear piles by at least 1 1/2".

The U bars and Pr. V bars shall be placed parallel to ℄ Roadway.

For details of Vertical Drain at End Bents, see Sheet No. 7.

DETAILS OF END BENT NO. 1

Detailed May 2025
Checked June 2025

Note: This drawing is not to scale. Follow dimensions.

STATE OF MISSOURI
TYLER R. LINDSAY
NUMBER PE-2019000128
PROFESSIONAL ENGINEER
07/24/2025 5:50:26 AM
TYLER R. LINDSAY - CIVIL
MO-PE-2019000128

DATE PREPARED	7/22/2025
ROUTE	65 OR
STATE	MO
DISTRICT	BR
SHEET NO.	4
COUNTY	GREENE
JOB NO.	J8S3158
CONTRACT ID.	
PROJECT NO.	
BRIDGE NO.	A8938

DESCRIPTION

DATE

MISSOURI HIGHWAYS AND TRANSPORTATION COMMISSION
105 WEST CAPITOL
JEFFERSON CITY, MO 65102
1-888-ASK-MODOT (1-888-275-6636)

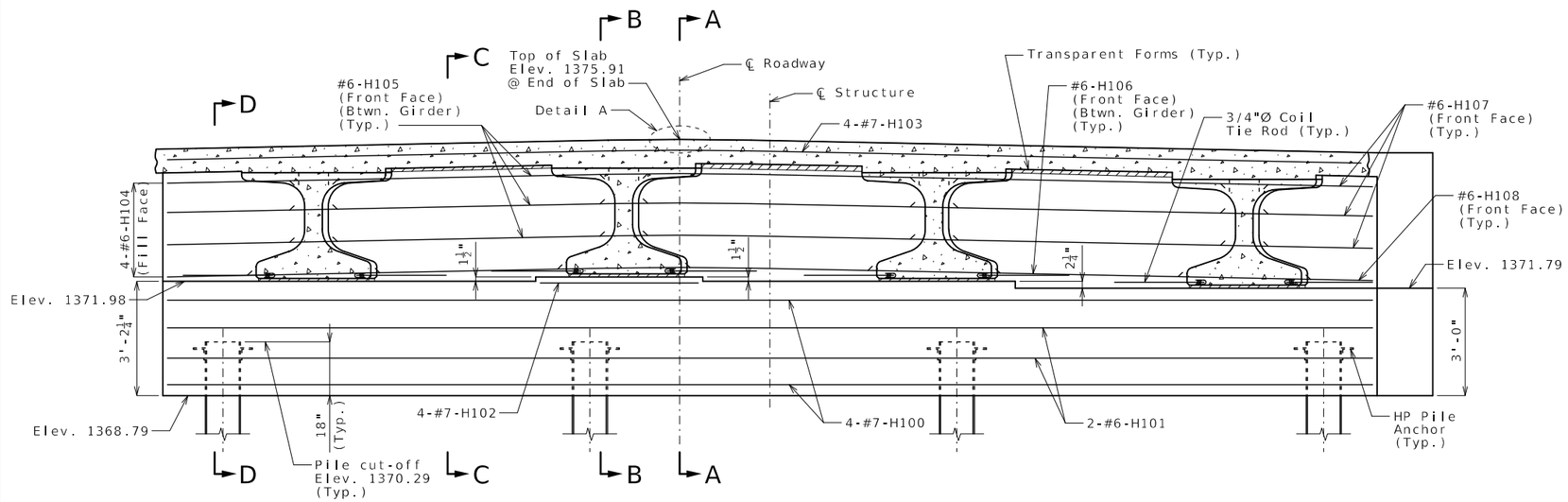

SECTION NEAR END BENT

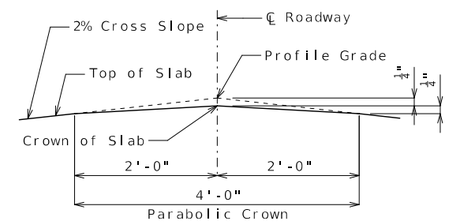

DETAIL A

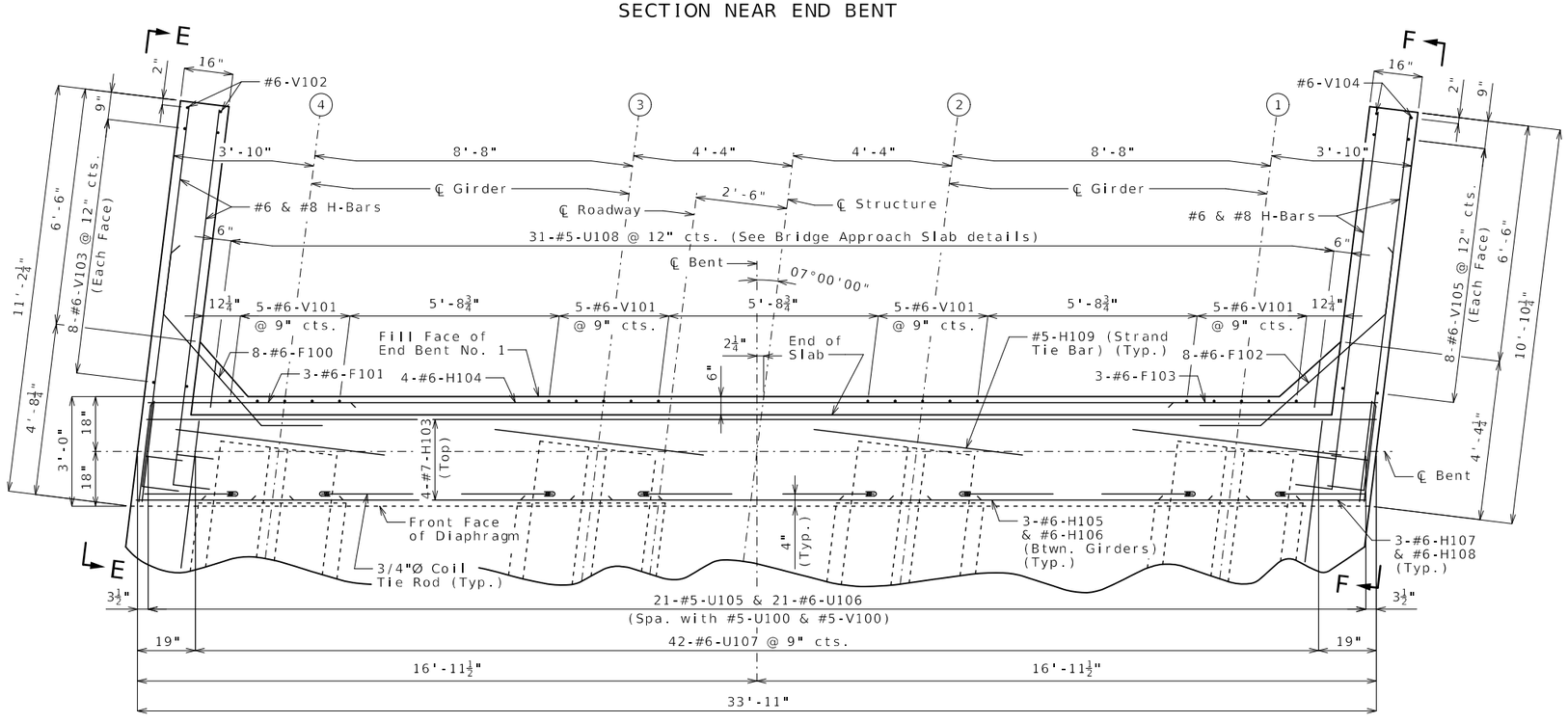

PART PLAN

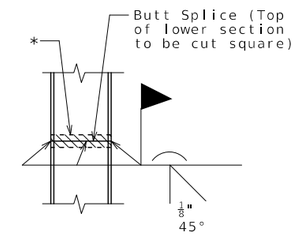

STEEL PILE SPLICE

(If required)

* Galvanizing material shall be omitted or removed one inch clear of weld locations in accordance with Sec 702.

Notes:

For Sections A-A, B-B, C-C & D-D and Elevations E-E & F-F, see Sheet No. 6.

For details of End Bent No. 1 not shown, see Sheets No. 4 & 6.

All concrete in the end bent above top of beam and below top of slab shall be Class B-2.

Strands at end of girders shall be field bent or, if necessary, cut in field to maintain 1 1/2" minimum clearance to fill face of end bent.

For location of Coil Ties & #5-H109 Strand Tie Bars, see Sheets No. 14 & 15.

The U bars shall be placed parallel to ℄ Roadway.

The #6-F100 & #6-F102 bars shall be bent in field to clear girders.

DETAILS OF END BENT NO. 1

Detailed May 2025
Checked June 2025

Note: This drawing is not to scale. Follow dimensions.

STATE OF MISSOURI
TYLER R. LINDSAY
NUMBER PE-2019000128
PROFESSIONAL ENGINEER
07/24/2025 5:50:46 AM
TYLER R. LINDSAY - CIVIL
MO-PE-2019000128

DATE PREPARED	
7/22/2025	
ROUTE	STATE
65 OR	MO
DISTRICT	SHEET NO.
BR	5
COUNTY	
GREENE	
JOB NO.	
J8S3158	
CONTRACT ID.	
PROJECT NO.	
BRIDGE NO.	
A8938	

DESCRIPTION

DATE

MISSOURI HIGHWAYS AND TRANSPORTATION COMMISSION

105 WEST CAPITOL
JEFFERSON CITY, MO 65102
1-888-ASK-MODOT (1-888-275-6636)

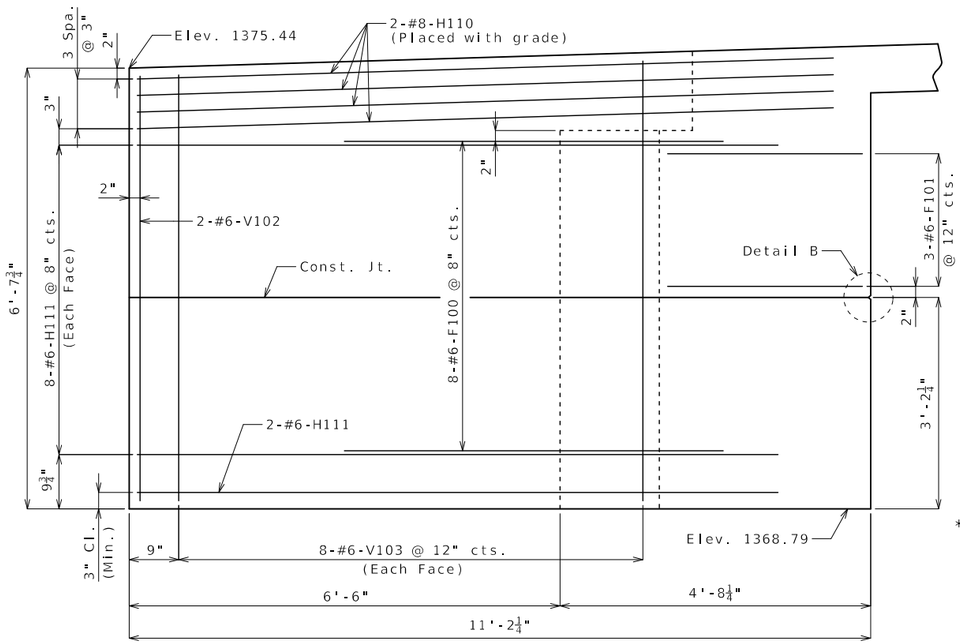

ELEVATION E-E

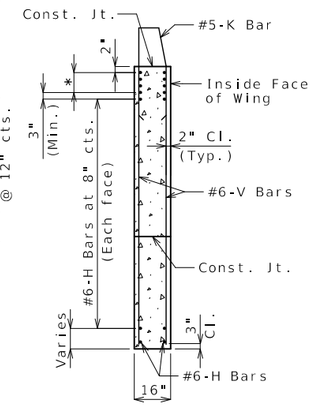

TYPICAL SECTION THRU WING

* #8-H Bars at 3" cts. (Each face)(Place with grade)

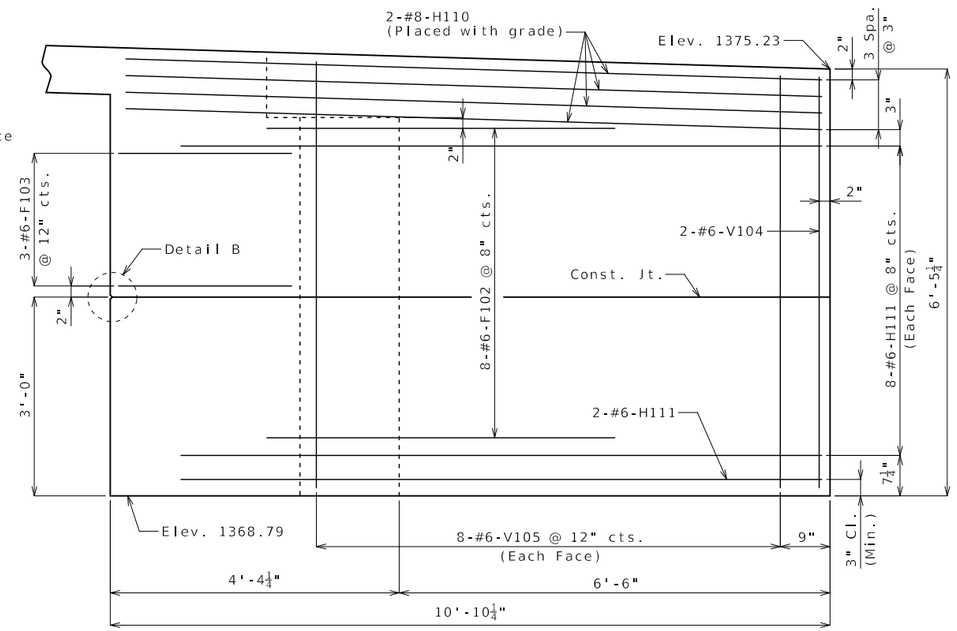

ELEVATION F-F

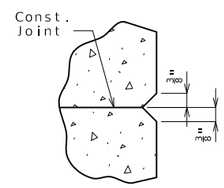

DETAIL B

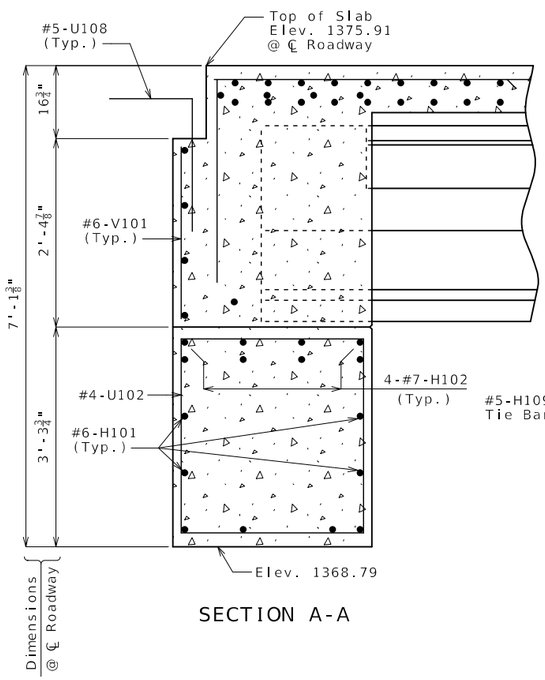

SECTION A-A

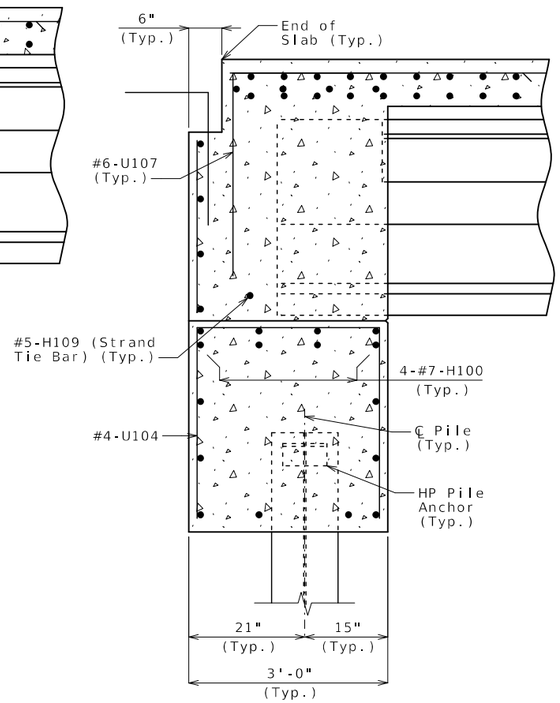

SECTION B-B

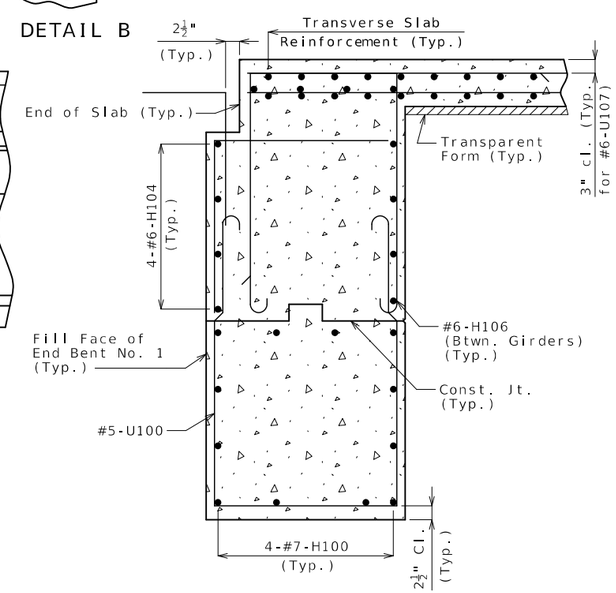

SECTION C-C

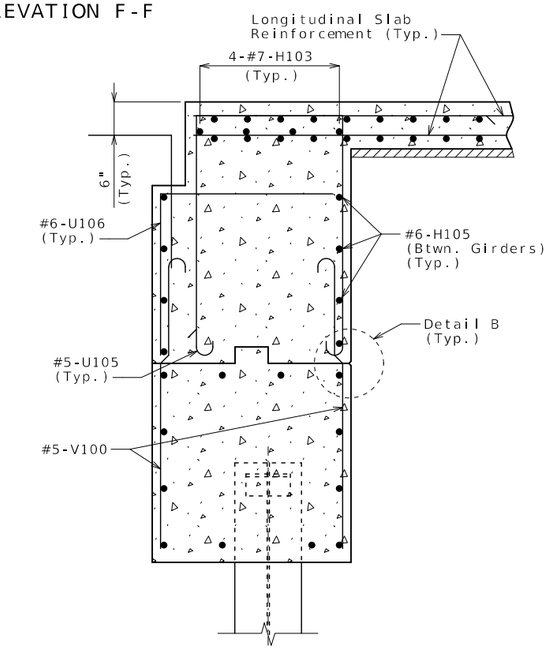

SECTION D-D

Notes:

For details of End Bent No. 1 not shown, see Sheets No. 4 & 5.

For locations of Section A-A, B-B, C-C & D-D and Elevations E-E & F-F, see Sheet No. 5.

For reinforcment of barrier, see Sheets No. 23 & 24.

DETAILS OF END BENT NO. 1

Detailed May 2025
Checked June 2025

Note: This drawing is not to scale. Follow dimensions.

STATE OF MISSOURI
TYLER R. LINDSAY
NUMBER PE-2019000128
PROFESSIONAL ENGINEER
07/24/2025 5:50:56 AM
TYLER R. LINDSAY - CIVIL
MO-PE-2019000128

DATE PREPARED	7/22/2025
ROUTE	65 OR
STATE	MO
DISTRICT	BR
SHEET NO.	6
COUNTY	GREENE
JOB NO.	J8S3158
CONTRACT ID.	
PROJECT NO.	
BRIDGE NO.	A8938

DESCRIPTION

DATE

MISSOURI HIGHWAYS AND TRANSPORTATION COMMISSION

105 WEST CAPITOL
JEFFERSON CITY, MO 65102
1-888-ASK-MODOT (1-888-275-6636)

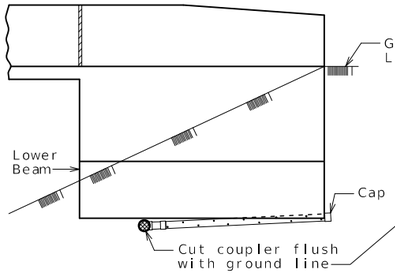

ELEVATION OF WING
(Barrier shown, curb similar)

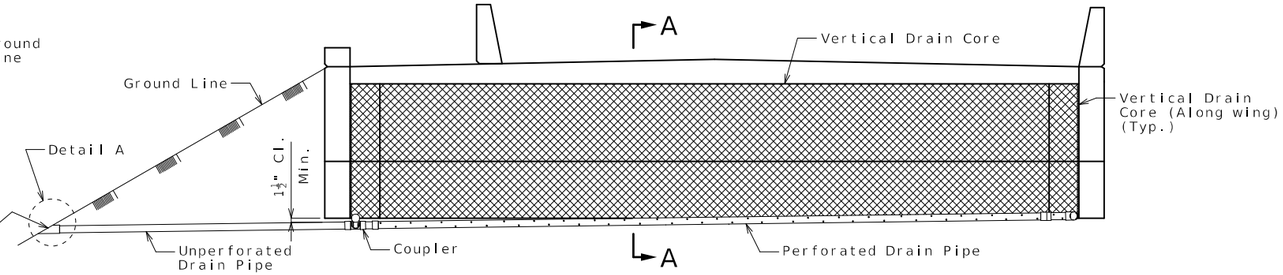

ELEVATION OF END BENT
Conduit not shown for clarity.

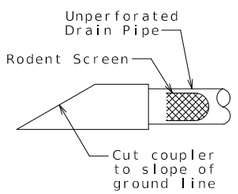

DETAIL A

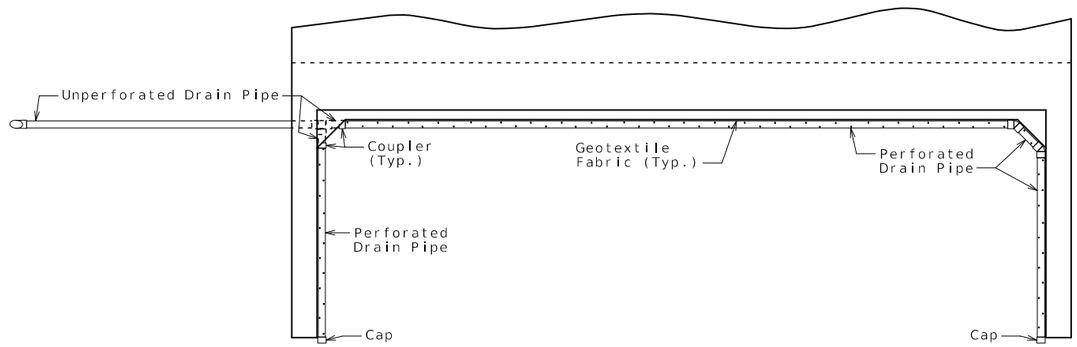

PLAN OF END BENT

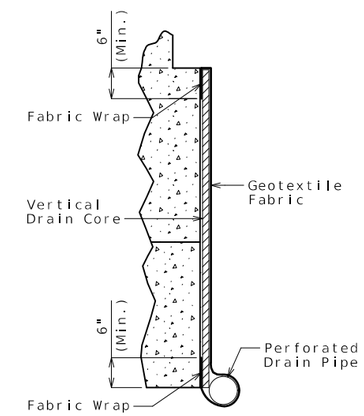

PART SECTION A-A
(Section thru wing similar)

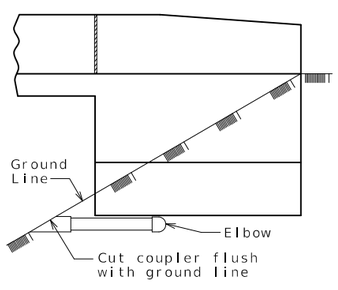

ELEVATION OF WING

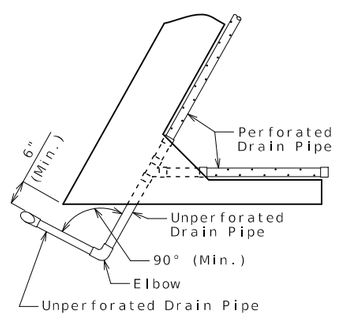

PART PLAN

OPTIONAL TURNED DRAIN
(Use only when straight drain is not practical.)
(Barrier shown, curb similar)

General Notes:

All drain pipe shall be sloped 1 to 2 percent.

Drain pipe may be either 6-inch diameter corrugated metallic-coated steel pipe underdrain, 4-inch diameter corrugated polyvinyl chloride (PVC) drain pipe, or 4-inch diameter corrugated polyethylene (PE) drain pipe.

Drain pipe shall be placed at fill face of end bent and inside face of wings. The pipe shall slope to lowest grade of ground line, also missing the lower beam of end bent by a minimum of 1 1/2 inches.

Perforated pipe shall be placed at fill face side and inside face of wings at the bottom of end bent and plain pipe shall be used where the vertical drain ends to the exit at ground line.

VERTICAL DRAIN AT END BENTS
(Squared end bent shown, skewed end bent similar)

Detailed May 2025
Checked June 2025

Note: This drawing is not to scale. Follow dimensions.

STATE OF MISSOURI
TYLER R. LINDSAY
NUMBER PE-2019000128
PROFESSIONAL ENGINEER
07/24/2025 5:51:06 AM
TYLER R. LINDSAY - CIVIL
MO-PE-2019000128

DATE PREPARED	
7/22/2025	
ROUTE 65 OR	STATE MO
DISTRICT BR	SHEET NO. 7
COUNTY GREENE	
JOB NO. J8S3158	
CONTRACT ID.	
PROJECT NO.	
BRIDGE NO. A8938	

DESCRIPTION	DATE

MISSOURI HIGHWAYS AND TRANSPORTATION COMMISSION
105 WEST CAPITOL
JEFFERSON CITY, MO 65102
1-888-ASK-MODOT (1-888-275-6636)

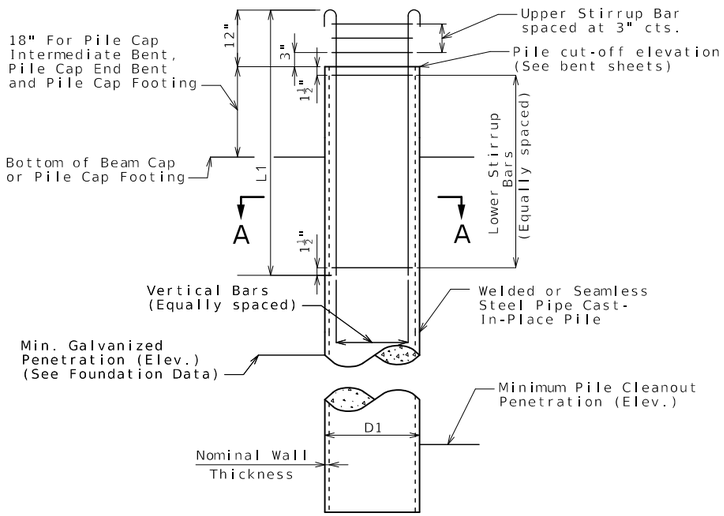

GALVANIZED OPEN ENDED CAST-IN-PLACE (OECIP) CONCRETE PILE WITHOUT PILE POINT REINFORCEMENT

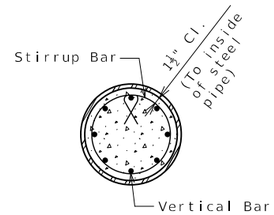

SECTION A-A

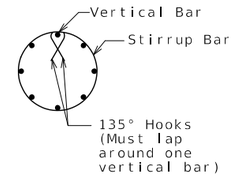

DETAIL OF SEISMIC STIRRUP BAR

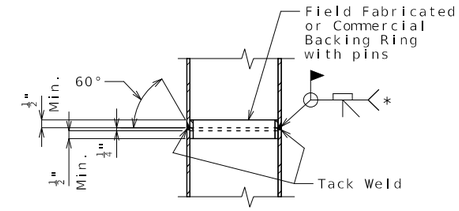

STEEL PIPE PILE SPLICE

* Galvanizing material shall be omitted or removed one inch clear of weld locations in accordance with Sec 702.

GALVANIZED OPEN ENDED CAST-IN-PLACE (OECIP) CONCRETE PILE DATA		
Bent Number	2	3
D1, OECIP Pile (O.D.)	20"	20"
Min. Nominal Wall Thickness	½"	½"
Pile Point Reinforcement	**	**
Min. Pile Cleanout Penetration (Elev.)	1335.00	1337.00
Vertical Bars	8-#6-V200	8-#6-V300
L1, Length of Vertical Bars	7'-3"	7'-3"
Upper Stirrup Bars	3-#4-P200	3-#4-P300
Lower Stirrup Bars	7-#4-P200	7-#4-P300

** Open Ended Cutting Shoe

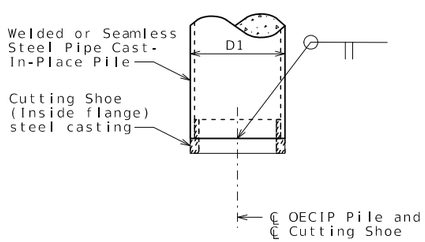

MANUFACTURED OPEN ENDED CUTTING SHOE (INSIDE FLANGE)

Notes:

Welded or seamless steel shell (pipe) shall be ASTM A252 Modified Grade 3 (fy = 50,000 psi) with physical and chemical requirements that meet ASTM A572 Grade 50. Pipe certification and source material certification shall be required.

Open ended pile shall be augered out to the minimum pile cleanout penetration elevation and filled with Class B-1 concrete.

Concrete for cast-in-place pile shall be Class B-1.

Steel casting for open ended cutting shoe pile point reinforcement shall be ASTM A148 Grade 90-60.

The minimum wall thickness of any spot or local area of any type shall not be more than 12.5% under the specified nominal wall thickness.

The contractor shall determine the pile wall thickness required to avoid damage from all driving activities, but wall thickness shall not be less than the minimum specified. No additional payment will be made for furnishing a thicker pile wall then specified on the plans.

Splices of pipe for cast-in-place pipe pile shall be made watertight and to the full strength of the pipe above and below the splice to permit hard driving without damage. Pipe damaged during driving shall be replaced without cost to the state. Pipe sections used for splicing shall be at least 5 feet in length.

At the contractor's option, the hooks of vertical bars embedded in the beam cap may be oriented inward or outward.

Reinforcing steel for cast-in-place pile is included in the Bill of Reinforcing Steel.

All reinforcement for cast-in-place pile is included in the estimated quantities for bents.

For Foundation Data table, see Sheet No. 3.

STATE OF MISSOURI
TYLER R. LINDSAY
NUMBER PE-2019000128
PROFESSIONAL ENGINEER
07/24/2025 5:51:26 AM
TYLER R. LINDSAY - CIVIL
MO-PE-2019000128

DATE PREPARED 7/22/2025

ROUTE	STATE
65 OR	MO
DISTRICT	SHEET NO.
BR	8

COUNTY GREENE

JOB NO. J8S3158

CONTRACT ID.

PROJECT NO.

BRIDGE NO. A8938

DESCRIPTION	DATE

MISSOURI HIGHWAYS AND TRANSPORTATION COMMISSION
105 WEST CAPITOL
JEFFERSON CITY, MO 65102
1-888-ASK-MODOT (1-888-275-6636)

GALVANIZED OPEN ENDED CAST-IN-PLACE (OECIP) CONCRETE PILE

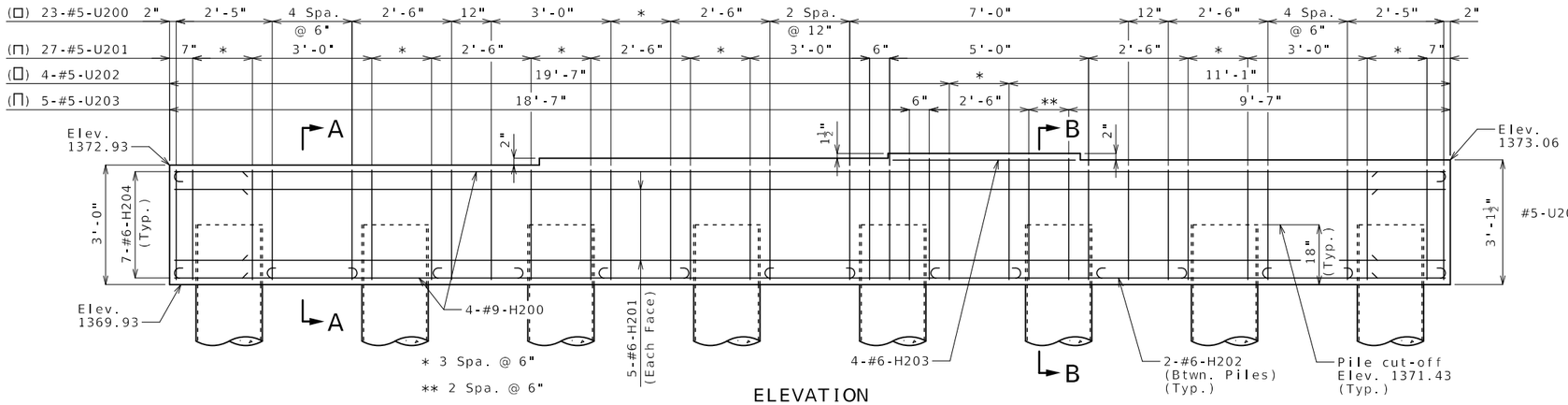

ELEVATION

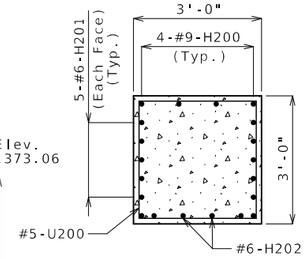

SECTION A-A

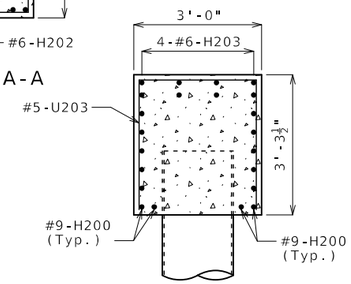

SECTION B-B

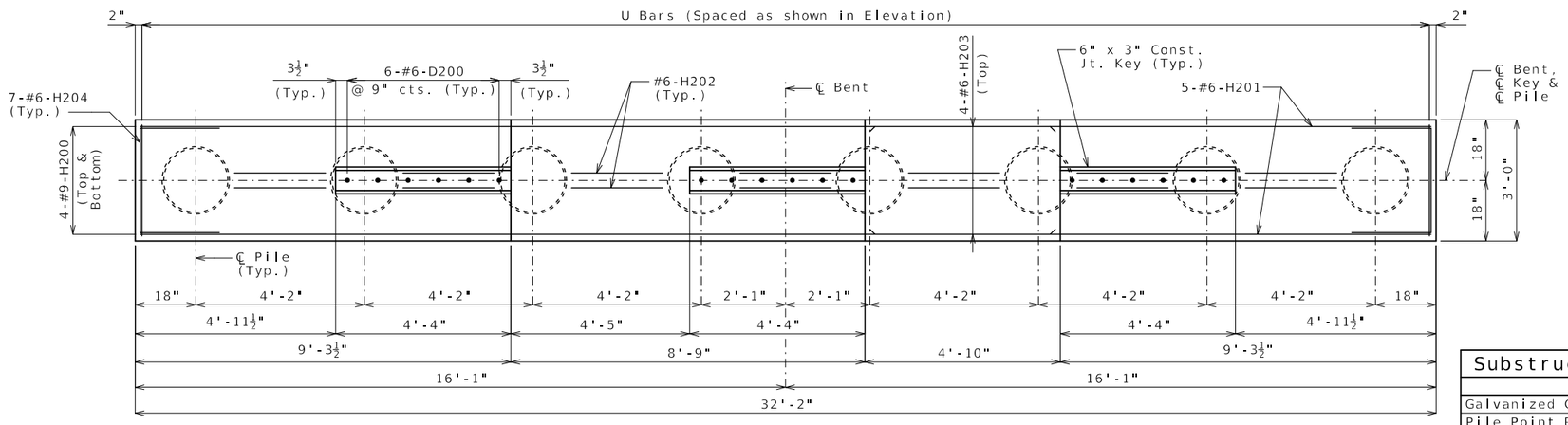

PLAN OF BEAM SHOWING REINFORCEMENT

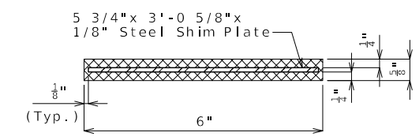

TYPICAL SECTION
THRU LAMINATED
NEOPRENE BEARING PAD

Substructure Quantity Table for Bent No. 2		
Item		Quantity
Galvanized Cast-In-Place Piles (20 in.)	linear foot	480
Pile Point Reinforcement	each	8
Class B Concrete (Substructure)	cu. yard	10.3
Reinforcing Steel (Bridges)	pound	3310

These quantities are included in the Estimated Quantities table on Sheet No. 3.

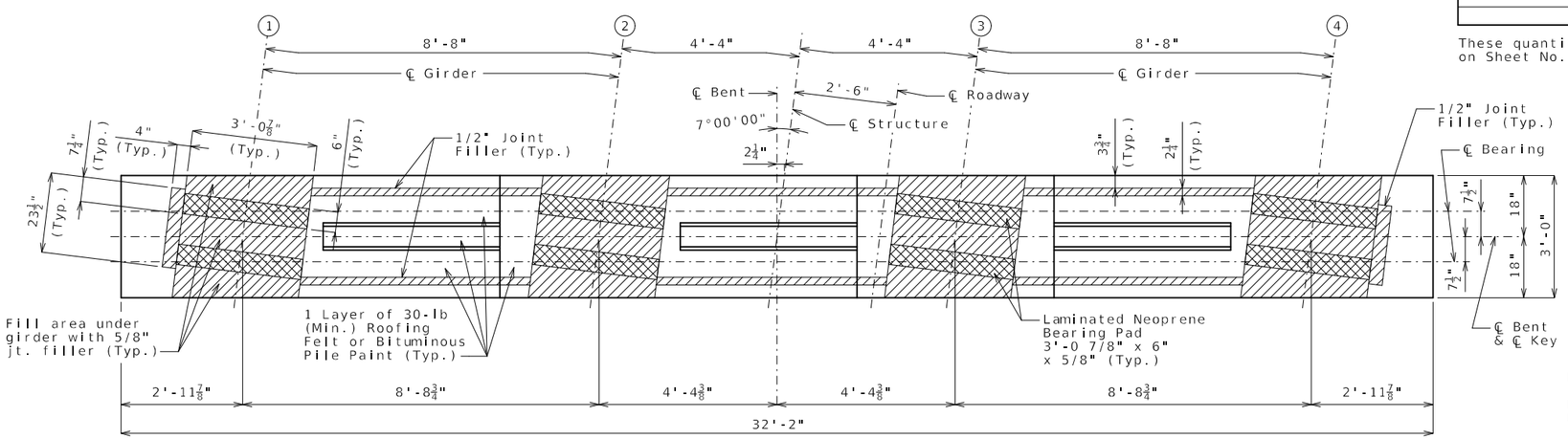

PLAN OF BEAM

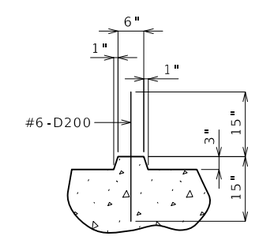

SECTION THRU KEY

Notes:

Reinforcing steel shall be shifted to clear piles.
U bars shall clear piles by at least 1 1/2 inches.

For steps 2 inches or more, use 2 1/4 x 1/2 inch joint filler up vertical face.

DETAILS OF INTERMEDIATE BENT NO. 2

Detailed May 2025
Checked June 2025

Note: This drawing is not to scale. Follow dimensions.

STATE OF MISSOURI
TYLER R. LINDSAY
NUMBER PE-2019000128
PROFESSIONAL ENGINEER
07/24/2025 5:51:36 AM
TYLER R. LINDSAY - CIVIL
MO-PE-2019000128

DATE PREPARED	
7/22/2025	
ROUTE	STATE
65 OR	MO
DISTRICT	SHEET NO.
BR	9
COUNTY	
GREENE	
JOB NO.	
J8S3158	
CONTRACT ID.	
PROJECT NO.	
BRIDGE NO.	
A8938	

DESCRIPTION

DATE

MISSOURI HIGHWAYS AND TRANSPORTATION COMMISSION
105 WEST CAPITOL
JEFFERSON CITY, MO 65102
1-888-ASK-MODOT (1-888-275-6636)

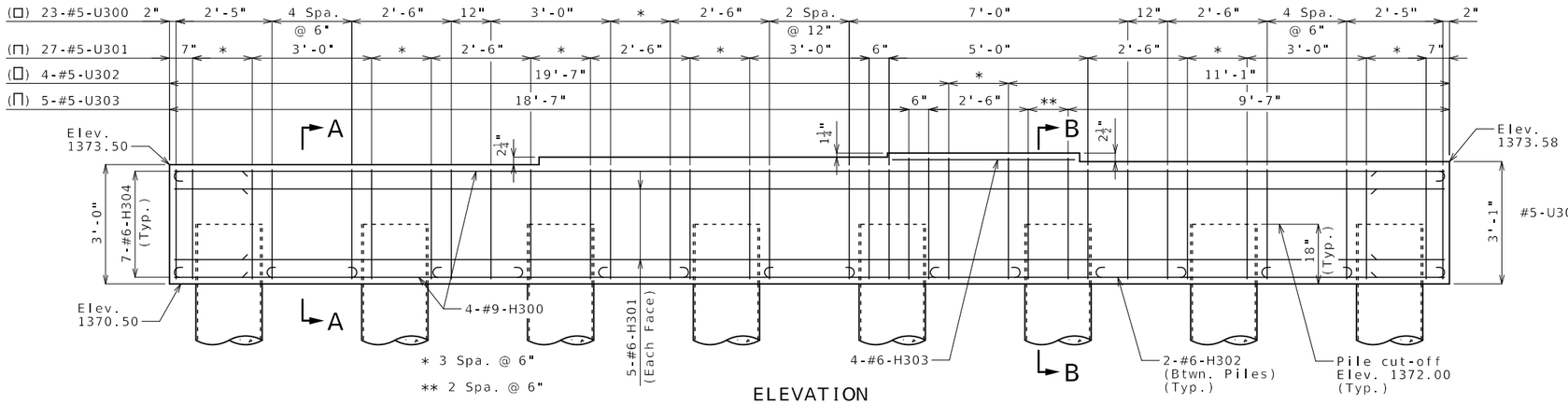

ELEVATION

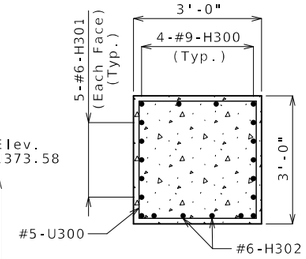

SECTION A-A

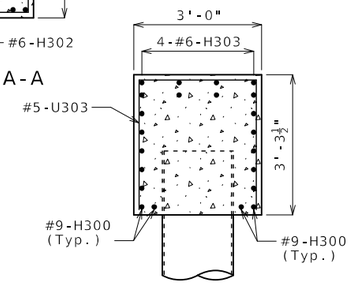

SECTION B-B

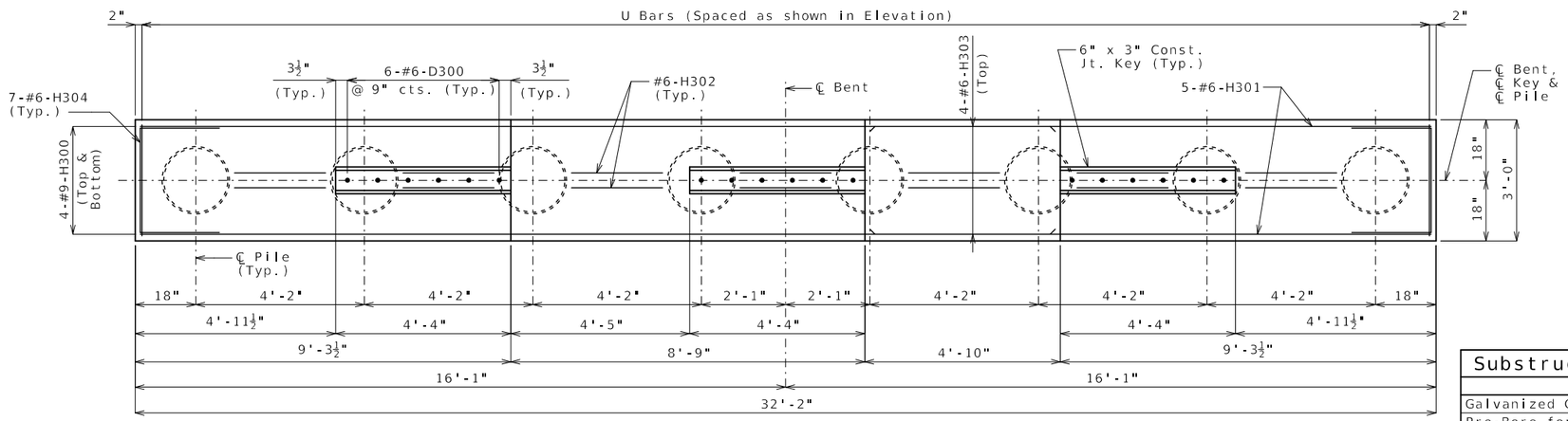

PLAN OF BEAM SHOWING REINFORCEMENT

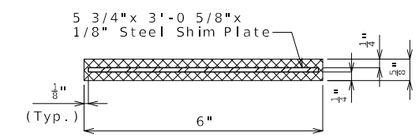

TYPICAL SECTION
THRU LAMINATED
NEOPRENE BEARING PAD

Substructure Quantity Table for Bent No. 3		
Item		Quantity
Galvanized Cast-In-Place Piles (20 in.)	linear foot	320
Pre-Bore for Piling	linear foot	120
Pile Point Reinforcement	each	8
Class B Concrete (Substructure)	cu. yard	10.3
Reinforcing Steel (Bridges)	pound	3300

These quantities are included in the Estimated Quantities table on Sheet No. 3.

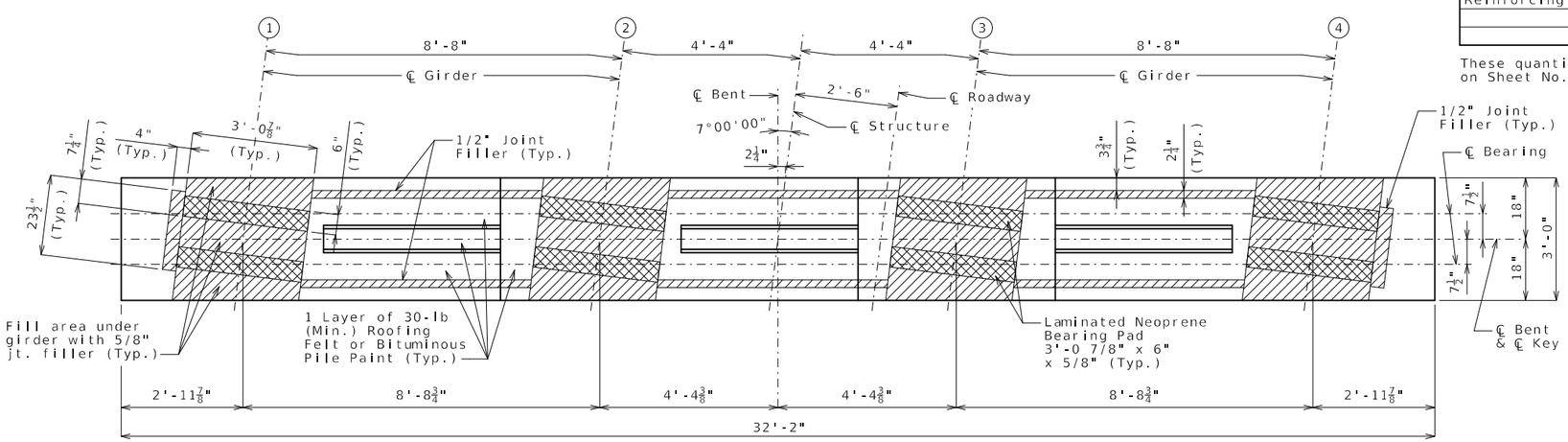

PLAN OF BEAM

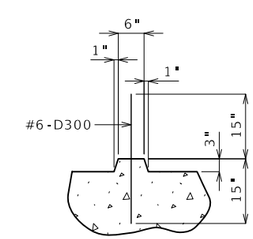

SECTION THRU KEY

Notes:

Reinforcing steel shall be shifted to clear piles.
U bars shall clear piles by at least 1 1/2 inches.

For steps 2 inches or more, use 2 1/4 x 1/2 inch joint filler up vertical face.

DETAILS OF INTERMEDIATE BENT NO. 3

Detailed May 2025
Checked June 2025

Note: This drawing is not to scale. Follow dimensions.

STATE OF MISSOURI
TYLER R. LINDSAY
NUMBER PE-2019000128
PROFESSIONAL ENGINEER
07/24/2025 5:51:46 AM
TYLER R. LINDSAY - CIVIL
MO-PE-2019000128

DATE PREPARED	
7/22/2025	
ROUTE 65 OR	STATE MO
DISTRICT BR	SHEET NO. 10
COUNTY GREENE	
JOB NO. J8S3158	
CONTRACT ID.	
PROJECT NO.	
BRIDGE NO. A8938	

DESCRIPTION

DATE

MISSOURI HIGHWAYS AND TRANSPORTATION COMMISSION
105 WEST CAPITOL
JEFFERSON CITY, MO 65102
1-888-ASK-MODOT (1-888-275-6636)

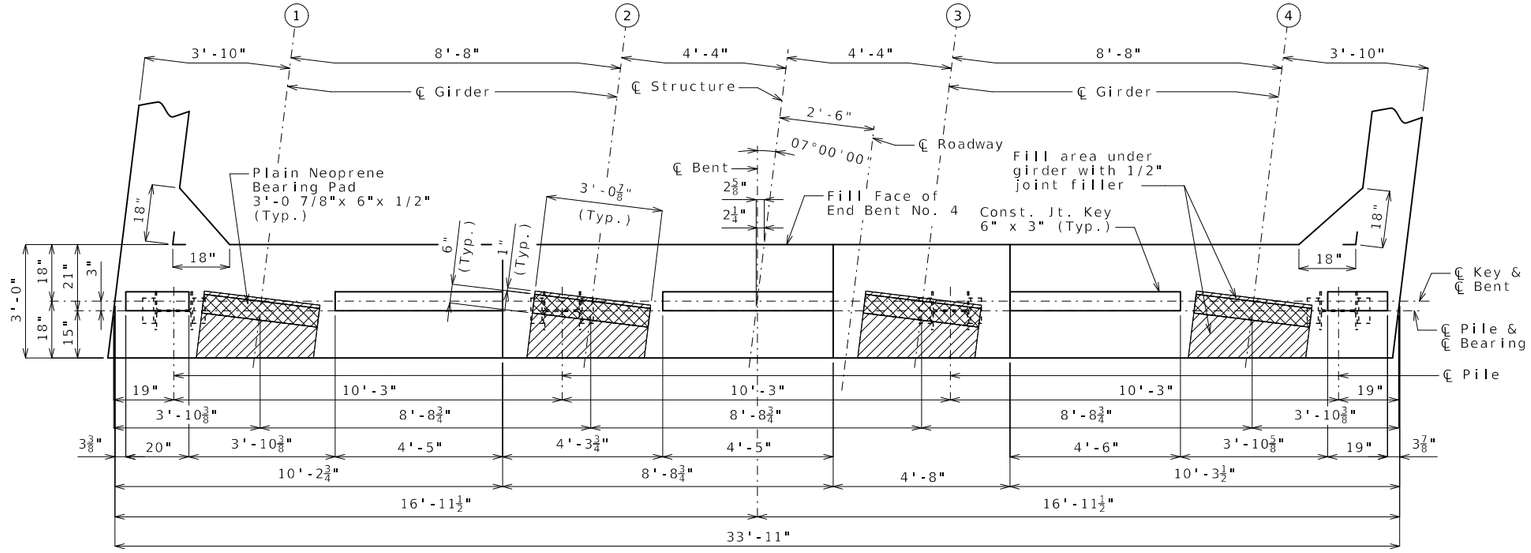

PLAN OF BEAM SHOWING DIMENSIONS

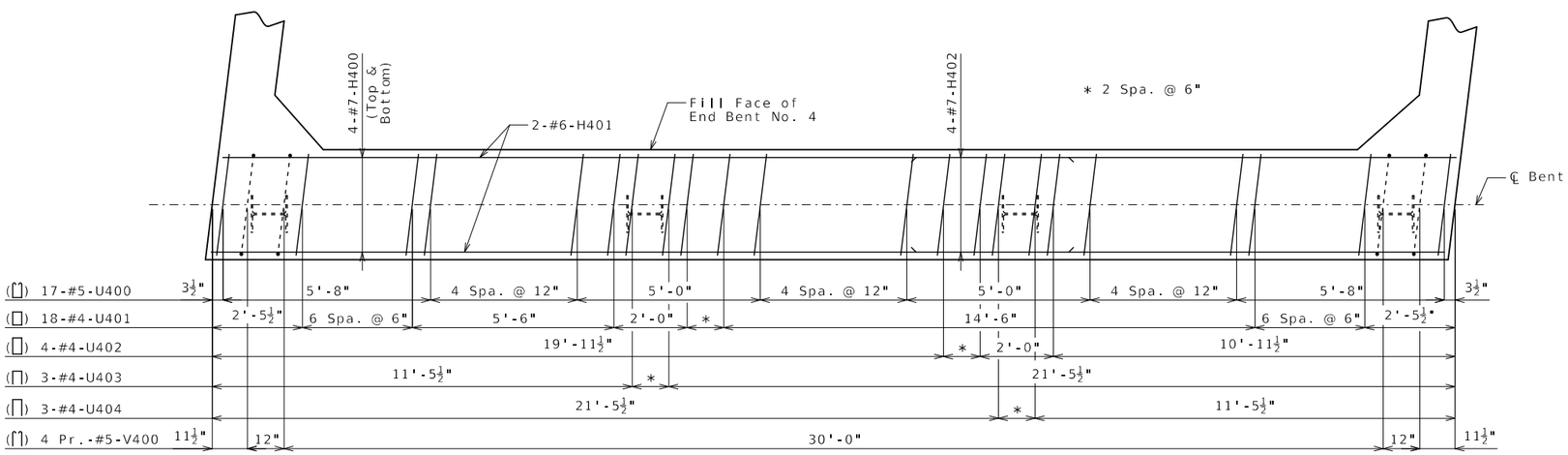

PLAN OF BEAM SHOWING REINFORCEMENT

(Keys and steps not shown for clarity.)

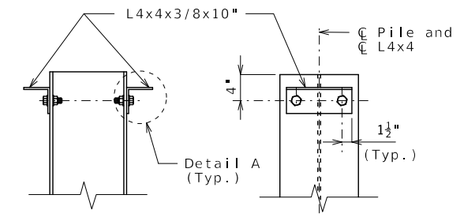

DETAILS OF HP PILE ANCHORS

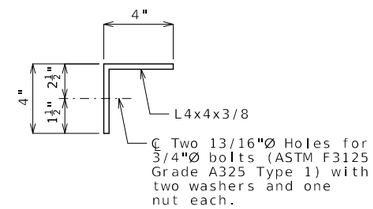

DETAIL A

Angles shall be coated with a minimum of two coats of non-aluminum epoxy mastic primer to provide a dry film thickness of 4 mils minimum, 8 mils maximum, or galvanized in accordance with Sec 1081. Bolts, washers and nuts shall be galvanized in accordance with AASHTO M 232 (ASTM A153), Class C.

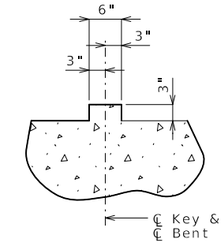

SECTION THRU KEY

Substructure Quantity Table for Bent No. 4		
Item		Quantity
Class 1 Excavation	cu. yard	40
Galvanized Structural Steel Piles (12 in.)	linear foot	136
Pile Point Reinforcement	each	4
Class B Concrete (Substructure)	cu. yard	14.8

These quantities are included in the Estimated Quantities table on Sheet No. 2.

Notes:

For details of End Bent No. 4 not shown, see Sheets No. 12 & 13.

Reinforcing steel shall be shifted to clear piles. U bars shall clear piles by at least 1 1/2".

The U bars and Pr. V bars shall be placed parallel to ℄ Roadway.

For details of Vertical Drain at End Bents, see Sheet No. 7.

DETAILS OF END BENT NO. 4

Detailed May 2025
Checked June 2025

Note: This drawing is not to scale. Follow dimensions.

STATE OF MISSOURI
TYLER R. LINDSAY
NUMBER PE-2019000128
PROFESSIONAL ENGINEER
07/24/2025 5:32:06 AM
TYLER R. LINDSAY - CIVIL
MO-PE-2019000128

DATE PREPARED	7/22/2025
ROUTE	65 OR
STATE	MO
DISTRICT	BR
SHEET NO.	11
COUNTY	GREENE
JOB NO.	J8S3158
CONTRACT ID.	
PROJECT NO.	
BRIDGE NO.	A8938

DESCRIPTION

DATE

MISSOURI HIGHWAYS AND TRANSPORTATION COMMISSION
105 WEST CAPITOL
JEFFERSON CITY, MO 65102
1-888-ASK-MODOT (1-888-275-6636)

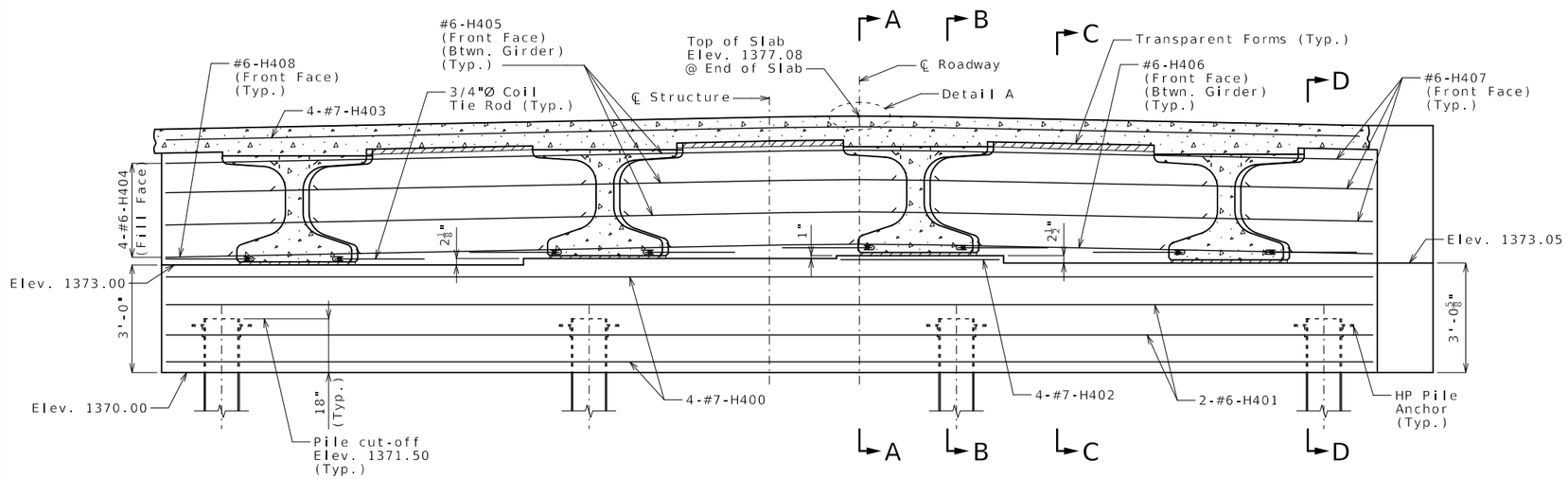

SECTION NEAR END BENT

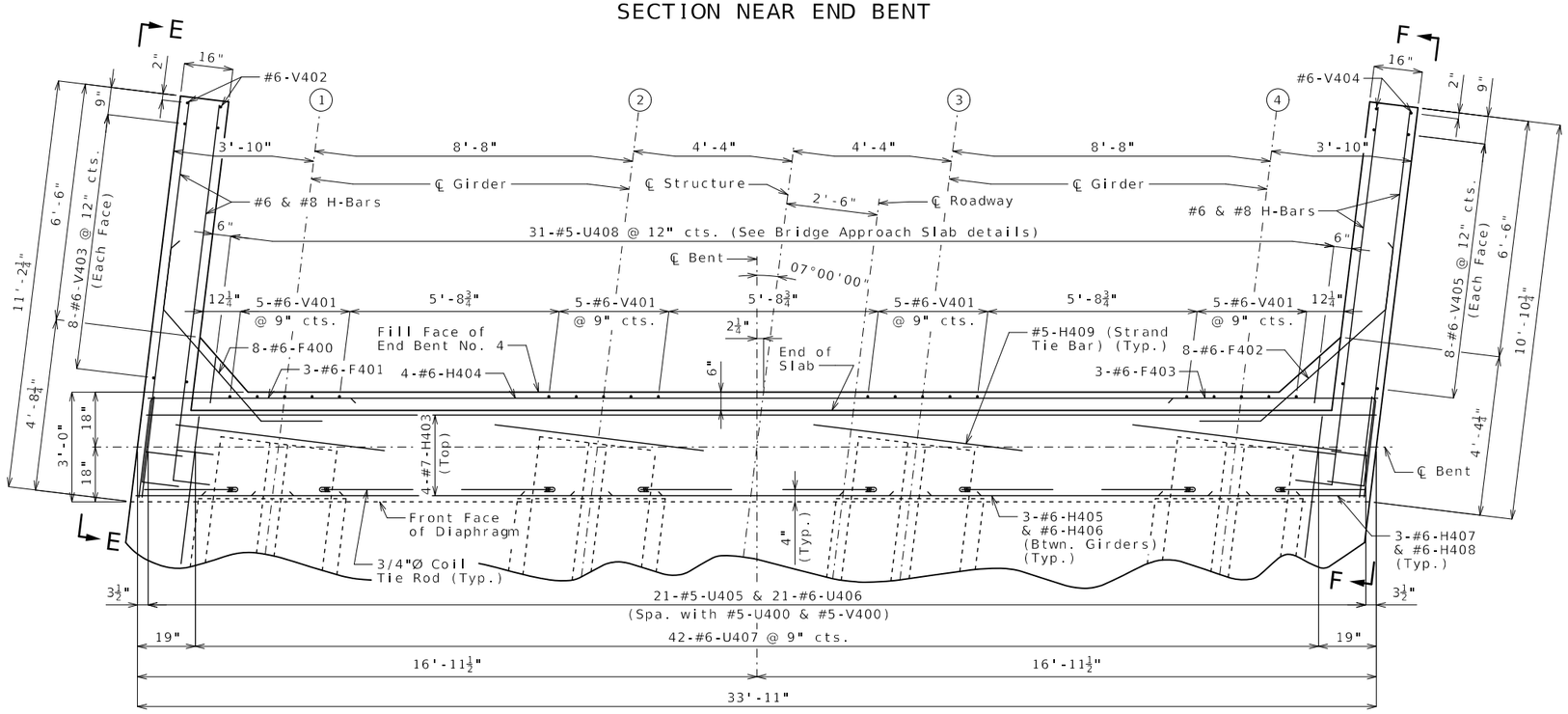

PART PLAN

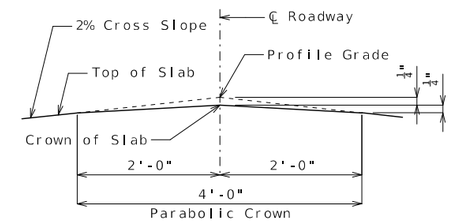

DETAIL A

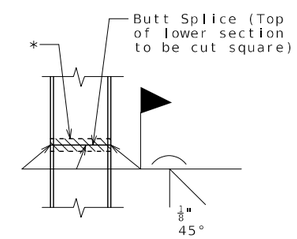

STEEL PILE SPLICE

(If required)

* Galvanizing material shall be omitted or removed one inch clear of weld locations in accordance with Sec 702.

Notes:

For Sections A-A, B-B, C-C & D-D and Elevations E-E & F-F, see Sheet No. 13.

For details of End Bent No. 4 not shown, see Sheets No. 11 & 13.

All concrete in the end bent above top of beam and below top of slab shall be Class B-2.

Strands at end of girders shall be field bent or, if necessary, cut in field to maintain 1 1/2" minimum clearance to fill face of end bent.

For location of Coil Ties & #5-H409 Strand Tie Bars, see Sheets No. 14 & 15.

The U bars shall be placed parallel to ℄ Roadway.

The #6-F400 & #6-F402 bars shall be bent in field to clear girders.

DETAILS OF END BENT NO. 4

Detailed May 2025
Checked June 2025

Note: This drawing is not to scale. Follow dimensions.

STATE OF MISSOURI
TYLER R. LINDSAY
NUMBER PE-2019000128
PROFESSIONAL ENGINEER
07/24/2025 5:52:16 AM
TYLER.R.LINDSAY - CIVIL
MO-PE-2019000128

DATE PREPARED	7/22/2025
ROUTE	65 OR
STATE	MO
DISTRICT	BR
SHEET NO.	12
COUNTY	GREENE
JOB NO.	J8S3158
CONTRACT ID.	
PROJECT NO.	
BRIDGE NO.	A8938

DESCRIPTION

DATE

MISSOURI HIGHWAYS AND TRANSPORTATION COMMISSION

105 WEST CAPITOL
JEFFERSON CITY, MO 65102
1-888-ASK-MODOT (1-888-275-6636)

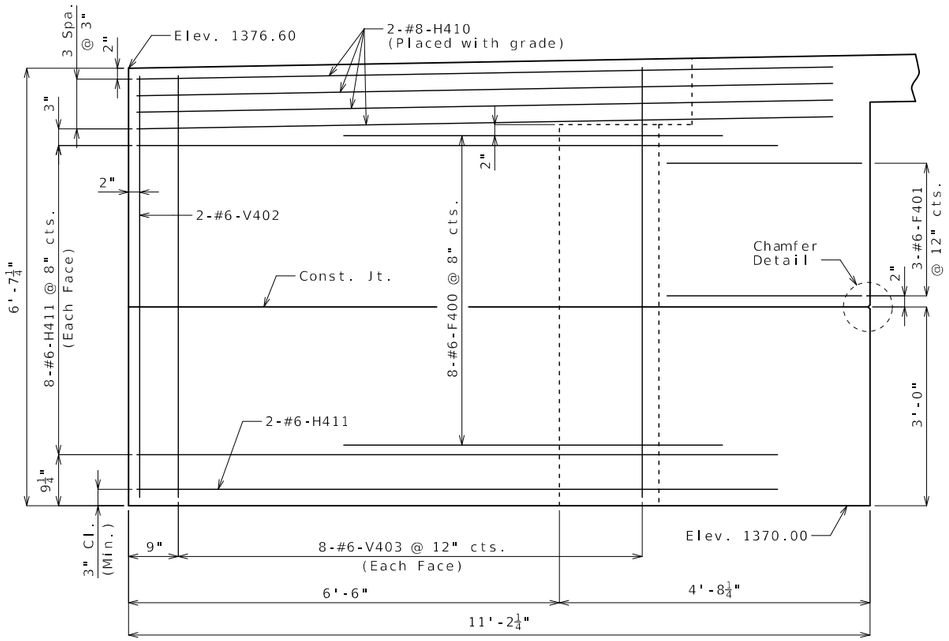

ELEVATION E-E

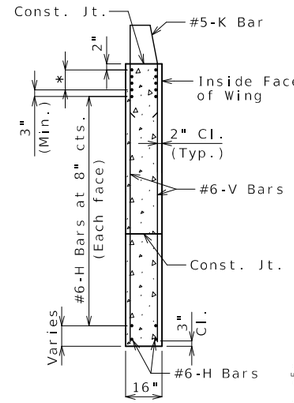

TYPICAL SECTION THRU WING

* #8-H Bars at 3" cts. (Each face)(Place with grade)

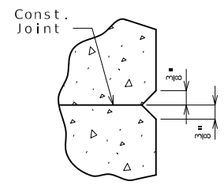

CHAMFER DETAIL

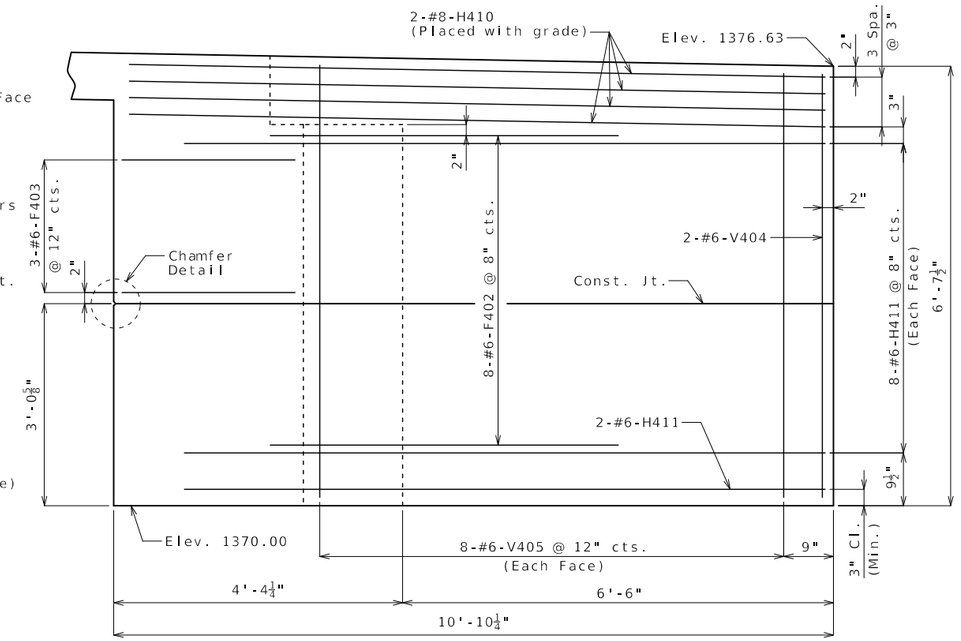

ELEVATION F-F

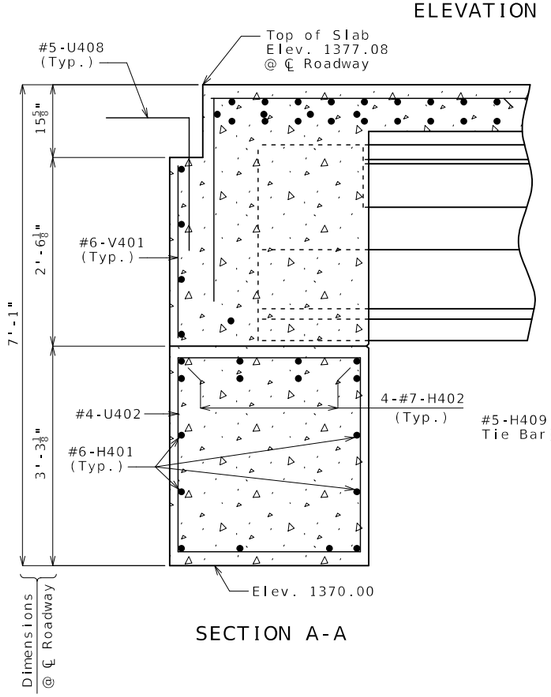

SECTION A-A

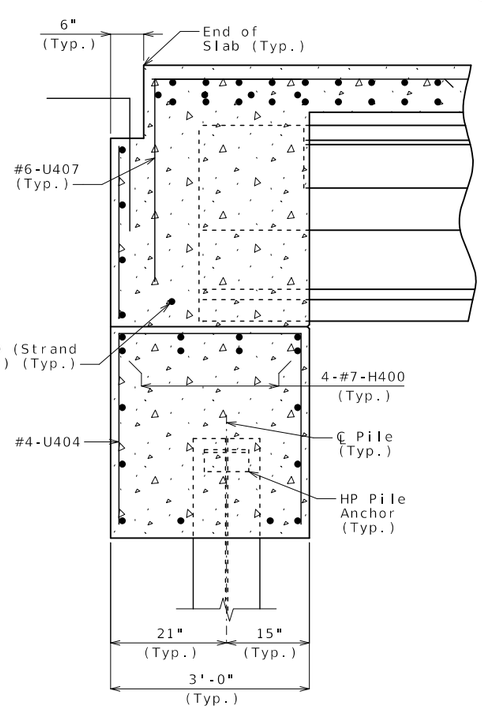

SECTION B-B

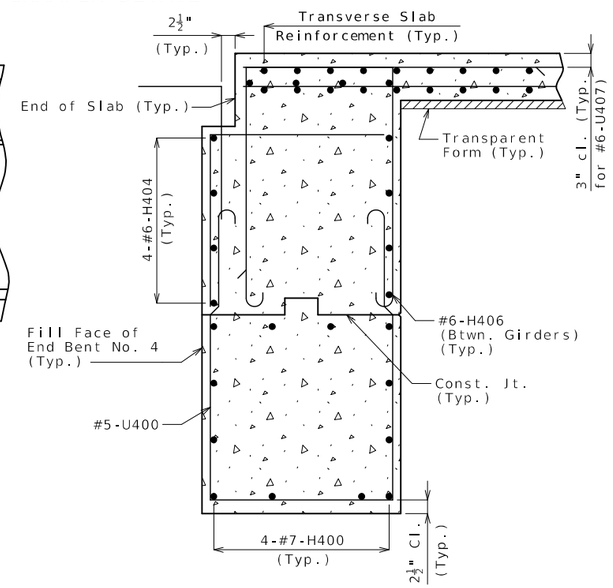

SECTION C-C

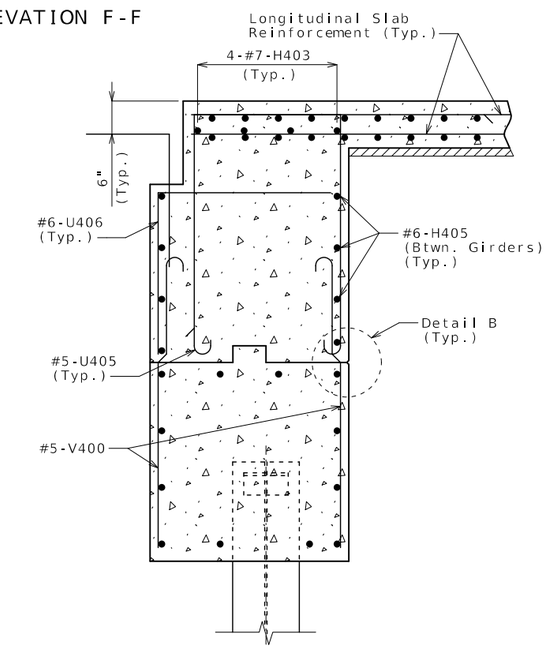

SECTION D-D

Notes:

For details of End Bent No. 4 not shown, see Sheets No. 11 & 12.

For locations of Section A-A, B-B, C-C & D-D and Elevations E-E & F-F, see Sheet No. 12.

For reinforcement of barrier, see Sheets No. 23 & 24.

DETAILS OF END BENT NO. 4

Detailed May 2025
Checked June 2025

Note: This drawing is not to scale. Follow dimensions.

STATE OF MISSOURI
TYLER R. LINDSAY
NUMBER PE-2019000128
PROFESSIONAL ENGINEER
07/24/2025 5:52:36 AM
TYLER R. LINDSAY - CIVIL
MO-PE-2019000128

DATE PREPARED	7/22/2025
ROUTE	65 OR
STATE	MO
DISTRICT	BR
SHEET NO.	13
COUNTY	GREENE
JOB NO.	J8S3158
CONTRACT ID.	
PROJECT NO.	
BRIDGE NO.	A8938

DESCRIPTION

DATE

MISSOURI HIGHWAYS AND TRANSPORTATION COMMISSION

105 WEST CAPITOL
JEFFERSON CITY, MO 65102
1-888-ASK-MODOT (1-888-275-6636)

(1) Fabricator shall apply a bond breaker to this region.

(2) Outer strands tensioned to 2.02 kips/strand and inner strands to 8 kips/strand. Placed symmetrical about ℄ Girder. May be moved laterally in pairs.

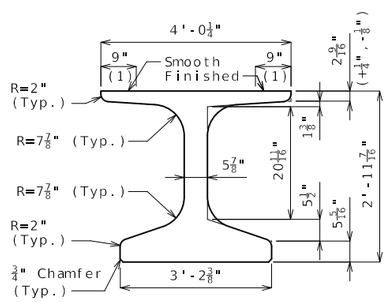

DIMENSIONS

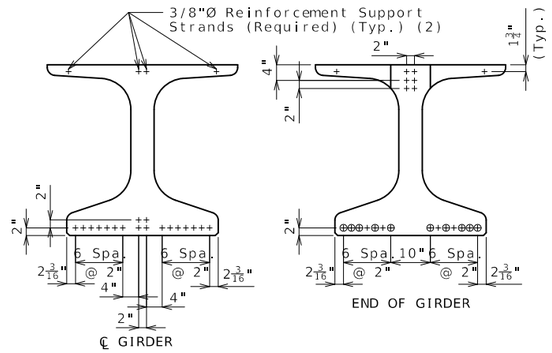

STRAND ARRANGEMENT

+ Indicates prestressing strand.

o Indicates cut & shop bend with 3'-0" projection.

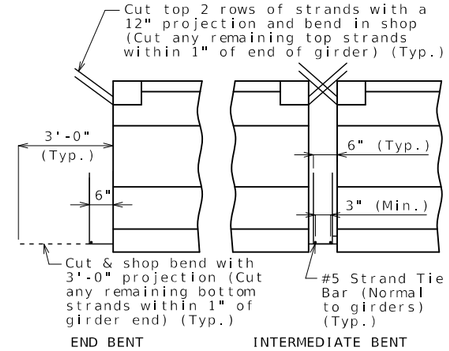

STRANDS AT GIRDER ENDS

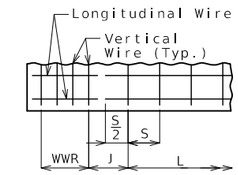

WELDED WIRE PLACEMENT

S = Vertical wire spacing

L = Length of WWR mats

J = Distance between WWR mats

Bill of Reinforcing Steel

Bars Each Girder

No.	Size/Mark	Length	Shape
74	3 G1	2'-10"	8
2	4 G3	3'-10"	20
2	4 G4	2'-3"	20
2	4 G5	2'-9"	20

Welded Wire Each Girder

Mark	Size	S	W	L	J
WWR1	D31	4"	W12	5'-0"	4"
WWR2	D31	12"	W12	10'-0"	12"
WWR3	D31	20"	W12	16'-8"	--
WWR6	D31	2"	W12	16"	4½"

Bending Diagrams

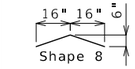

Shape 20

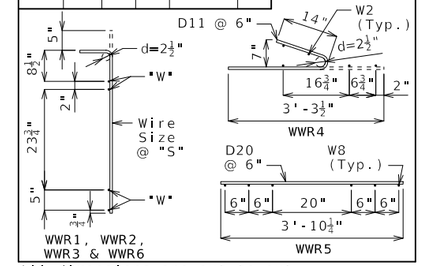

All dimensions are out to out.

Hooks and bends shall be in accordance with the CRSI Manual of Standard Practice for Detailing Reinforced Concrete Structures, Stirrup and Tie Dimensions.

Actual bar lengths are measured along centerline of bar to the nearest inch.

Minimum clearance to reinforcing shall be 1", unless otherwise shown.

All bar reinforcement shall be Grade 60.

WWR shall not be epoxy coated.

G4 and G5 not required for interior girders. G3 not required for exterior girders of intermediate spans. Half no. of G3, G4 and G5 not required for ext. girders of end spans.

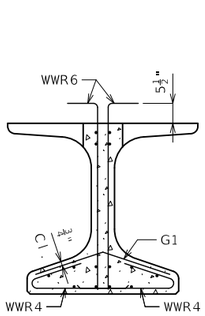

SECTION A-A

Strands not shown for clarity.

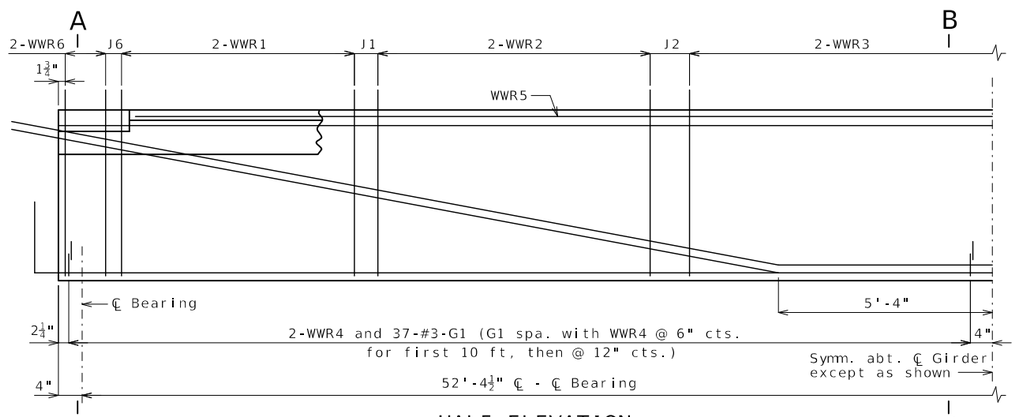

HALF ELEVATION

Reinforcement support strands not shown for clarity.

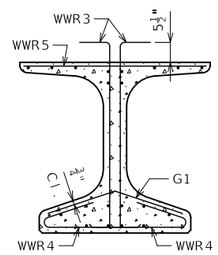

SECTION B-B

Strands not shown for clarity.

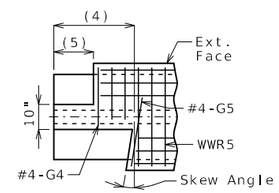

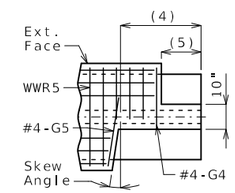

LEFT EXTERIOR GIRDER AT INTERMEDIATE BENT

Rotate 180° for right ext.

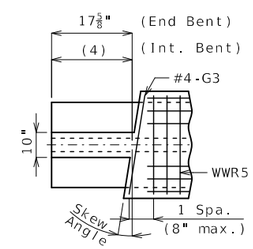

INTERIOR GIRDER AT ALL BENTS & EXTERIOR GIRDER AT END BENT

TOP FLANGE BLOCKOUT

Mirror for right advanced.

General Notes:

Concrete for prestressed beams shall be Class A-1 with f'c = 8000 psi and f'ci = 6500 psi.

Use 18 strands, 0.6"Ø Grade 270, with an initial prestress force of 791 kips.

Pretensioned members shall be in accordance with Sec 1029.

Fabricator shall be responsible for location and design of lifting devices.

Exterior and interior girders are the same except: coil ties, top flange blockout.

The contractor shall provide bracing necessary for lateral and torsional stability of the girders during construction of the concrete slab and remove the bracing after the slab has attained 75% design strength. Contractor shall not drill holes in the girders.

For Girder Camber Diagram, see Sheet No. 19.

For location of coil ties at concrete diaphragms and integral bents, see Sheets No. 5, 12 and 18.

Alternate bar reinforcing steel details are provided and may be used. The same type of reinforcing steel shall be used for all girders in all spans.

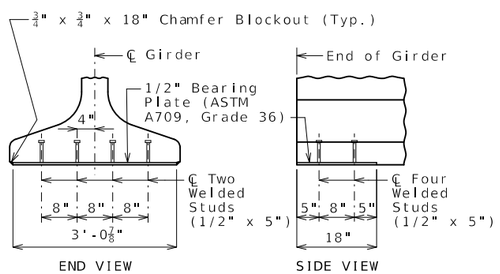

BEARING PLATE

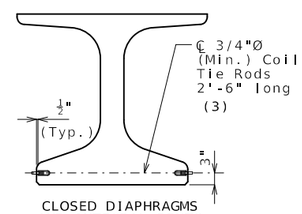

CLOSED DIAPHRAGMS AND INTEGRAL BENTS

COIL TIES

Exclude coil tie at exterior face of exterior girders except at integral end bents.

(3) 2'-4" at exterior face of exterior girders at end bents

(4) 9½" (Int. Bent No. 2)
9⅞" (Int. Bent No. 3)

(5) 6⅞" (Int. Bent No. 2)
7¼" (Int. Bent No. 3)

NU-GIRDERS - SPANS (1-2) AND (3-4)

Detailed May 2025
Checked June 2025

Note: This drawing is not to scale. Follow dimensions.

STATE OF MISSOURI
TYLER R. LINDSAY
NUMBER PE-2019000128
PROFESSIONAL ENGINEER
07/24/2025 5:52:46 AM
TYLER R. LINDSAY - CIVIL
MO-PE-2019000128

DATE PREPARED 7/22/2025

ROUTE	STATE
65 OR	MO
DISTRICT	SHEET NO.
BR	14

COUNTY GREENE

JOB NO. J8S3158

CONTRACT ID.

PROJECT NO.

BRIDGE NO. A8938

DESCRIPTION

DATE

MISSOURI HIGHWAYS AND TRANSPORTATION COMMISSION

105 WEST CAPITOL
JEFFERSON CITY, MO 65102
1-888-ASK-MODOT (1-888-275-6636)

(1) Fabricator shall apply a bond breaker to this region.

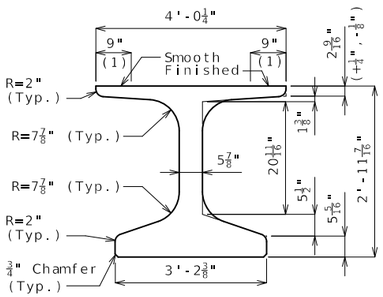

DIMENSIONS

(2) Outer strands tensioned to 2.02 kips/strand and inner strands to 8 kips/strand. Placed symmetrical about ℄ Girder. May be moved laterally in pairs.

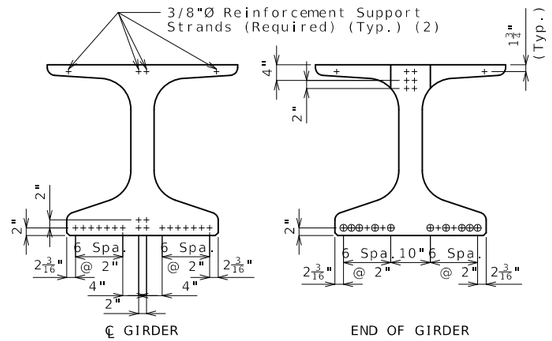

STRAND ARRANGEMENT

+ Indicates prestressing strand.

o Indicates cut & shop bend with 3'-0" projection.

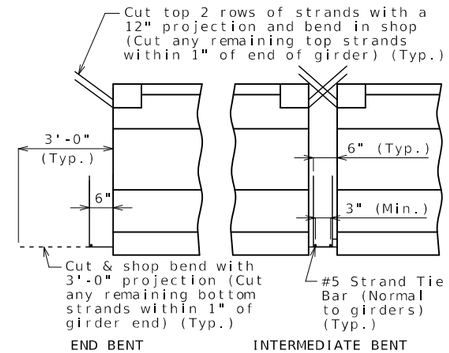

STRANDS AT GIRDER ENDS

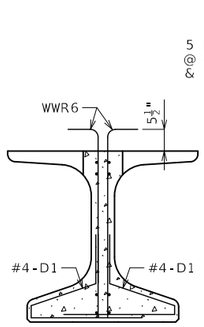

SECTION A-A

Strands not shown for clarity.

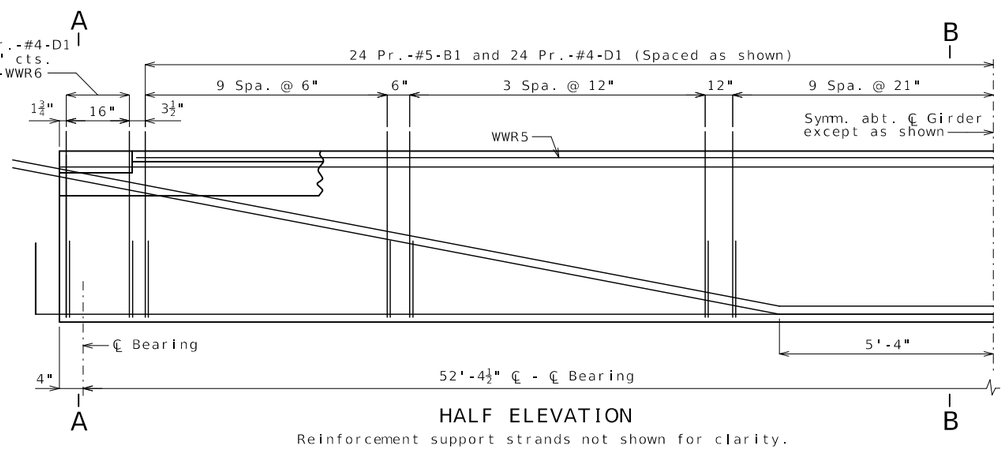

HALF ELEVATION

Reinforcement support strands not shown for clarity.

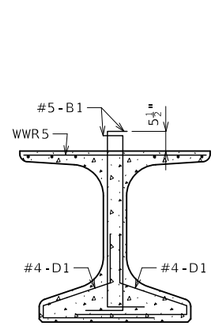

SECTION B-B

Strands not shown for clarity.

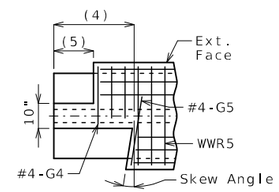

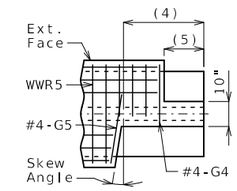

LEFT EXTERIOR GIRDER AT INTERMEDIATE BENT

Rotate 180° for right ext.

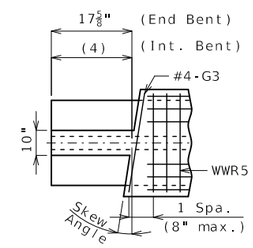

INTERIOR GIRDER AT ALL BENTS & EXTERIOR GIRDER AT END BENT

TOP FLANGE BLOCKOUT

Mirror for right advanced.

(4) 9½" (Int. Bent No. 2)
9⅞" (Int. Bent No. 3)

(5) 6⅞" (Int. Bent No. 2)
7¼" (Int. Bent No. 3)

Bill of Reinforcing Steel - Each Girder			
No.	Size/ Mark	Length	Shape
94	5 B1	4'-4"	11S
114	4 D1	4'-0"	9S
2	4 G3	3'-10"	20
2	4 G4	2'-3"	20
2	4 G5	2'-9"	20

Bending Diagrams

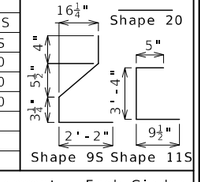

Welded Wire Reinforcement - Each Girder

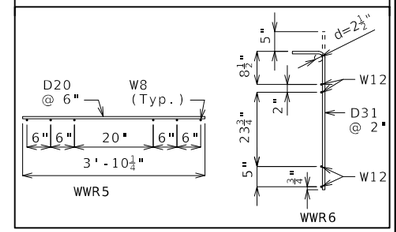

All dimensions are out to out.

Hooks and bends shall be in accordance with the CRSI Manual of Standard Practice for Detailing Reinforced Concrete Structures, Stirrup and Tie Dimensions.

Actual bar lengths are measured along centerline of bar to the nearest inch.

Minimum clearance to reinforcing shall be 1".

All bar reinforcement shall be Grade 60.

The two D1 bars may be furnished as one bar at the fabricator's option.

All B1 bars shall be epoxy coated.

G4 and G5 not required for interior girders. G3 not required for exterior girders of intermediate spans. Half no. of G3, G4 and G5 not required for ext. girders of end spans.

General Notes:

Concrete for prestressed beams shall be Class A-1 with f'c = 8000 psi and f'ci = 6500 psi.

Use 18 strands, 0.6"Ø Grade 270, with an initial prestress force of 791 kips.

Pretensioned members shall be in accordance with Sec 1029.

Fabricator shall be responsible for location and design of lifting devices.

Exterior and interior girders are the same except: coil ties, top flange blockout.

The contractor shall provide bracing necessary for lateral and torsional stability of the girders during construction of the concrete slab and remove the bracing after the slab has attained 75% design strength. Contractor shall not drill holes in the girders.

For Girder Camber Diagram, see Sheet No. 19.

For location of coil ties at concrete diaphragms and integral bents, see Sheets No. 5, 12 and 18.

Alternate bar reinforcing steel details are provided and may be used. The same type of reinforcing steel shall be used for all girders in all spans.

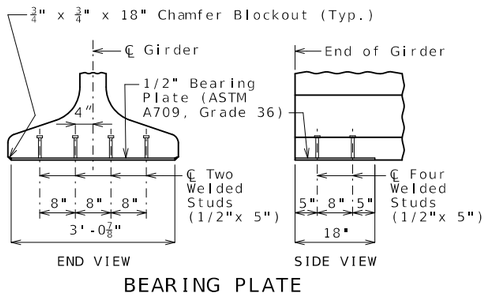

BEARING PLATE

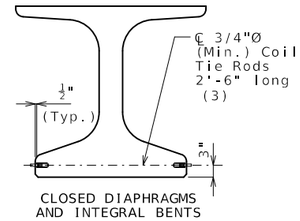

CLOSED DIAPHRAGMS AND INTEGRAL BENTS

COIL TIES

Exclude coil tie at exterior face of exterior girders except at integral end bents.

(3) 2'-4" at exterior face of exterior girders at end bents

NU-GIRDERS (ALTERNATE REINFORCEMENT) - SPANS (1-2) AND (3-4)

Detailed May 2025
Checked June 2025

Note: This drawing is not to scale. Follow dimensions.

STATE OF MISSOURI
TYLER R. LINDSAY
NUMBER PE-2019000128
PROFESSIONAL ENGINEER
07/24/2025 5:52:56 AM
TYLER R. LINDSAY - CIVIL
MO-PE-2019000128

DATE PREPARED 7/22/2025

ROUTE	STATE
65 OR	MO
DISTRICT	SHEET NO.
BR	15

COUNTY: GREENE
JOB NO.: J8S3158
CONTRACT ID.:
PROJECT NO.:
BRIDGE NO.: A8938

DATE	DESCRIPTION

MISSOURI HIGHWAYS AND TRANSPORTATION COMMISSION
105 WEST CAPITOL
JEFFERSON CITY, MO 65102
1-888-ASK-MODOT (1-888-275-6636)

(1) Fabricator shall apply a bond breaker to this region.

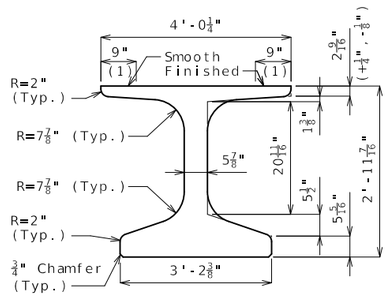

DIMENSIONS

(2) Outer strands tensioned to 2.02 kips/strand and inner strands to 8 kips/strand. Placed symmetrical about ℄ Girder. May be moved laterally in pairs.

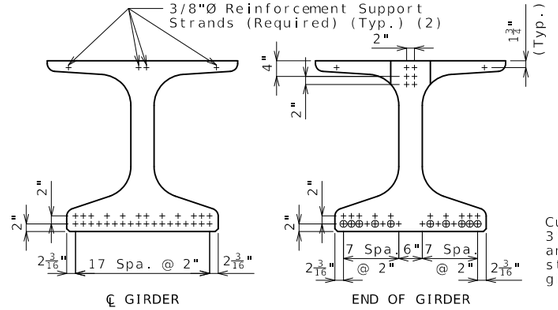

STRAND ARRANGEMENT

+ Indicates prestressing strand.

o Indicates cut & shop bend with 3'-0" projection.

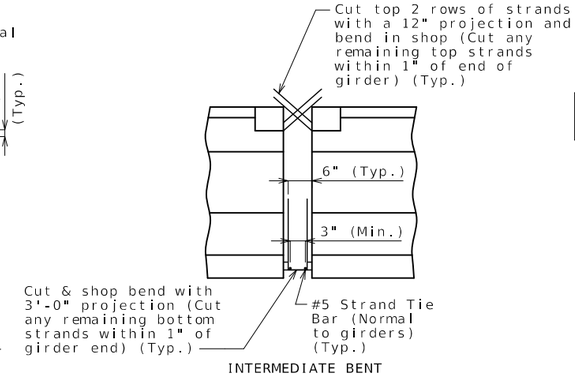

STRANDS AT GIRDER ENDS

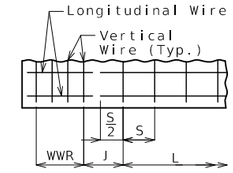

WELDED WIRE PLACEMENT

S = Vertical wire spacing

L = Length of WWR mats

J = Distance between WWR mats

Bill of Reinforcing Steel

Bars Each Girder				
No.	Size/Mark		Length	Shape
109	3	G1	2'-10"	8
2	4	G3	3'-10"	20
2	4	G4	2'-3"	20
2	4	G5	2'-9"	20

Welded Wire Each Girder					
Mark	Size	S	W	L	J
WWR1	D31	4"	W12	16'-8"	4"
WWR2	D31	12"	W12	6'-0"	12"
WWR3	D31	20"	W12	36'-8"	--
WWR6	D31	2"	W12	16"	4¼"

Bending Diagrams

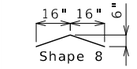

Shape 20

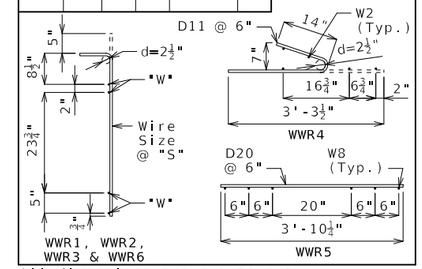

All dimensions are out to out.

Hooks and bends shall be in accordance with the CRSI Manual of Standard Practice for Detailing Reinforced Concrete Structures, Stirrup and Tie Dimensions.

Actual bar lengths are measured along centerline of bar to the nearest inch.

Minimum clearance to reinforcing shall be 1", unless otherwise shown.

All bar reinforcement shall be Grade 60.

WWR shall not be epoxy coated.

G4 and G5 not required for interior girders. G3 not required for exterior girders of intermediate spans. Half no. of G3, G4 and G5 not required for ext. girders of end spans.

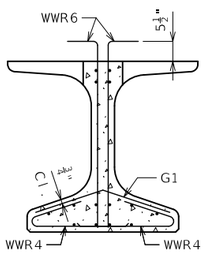

SECTION A-A

Strands not shown for clarity.

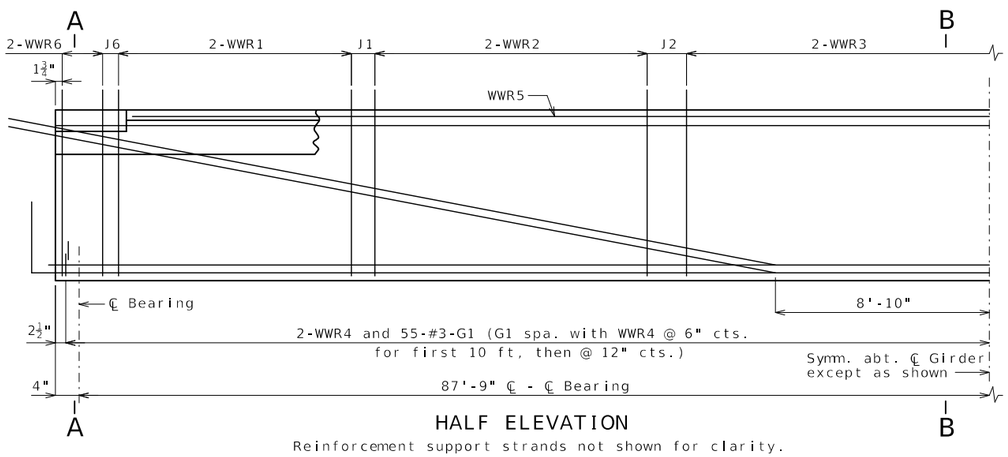

HALF ELEVATION

Reinforcement support strands not shown for clarity.

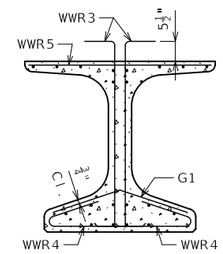

SECTION B-B

Strands not shown for clarity.

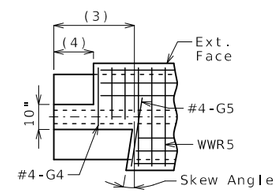

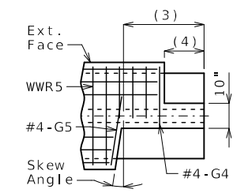

LEFT EXTERIOR GIRDER AT INTERMEDIATE BENT

Rotate 180° for right ext.

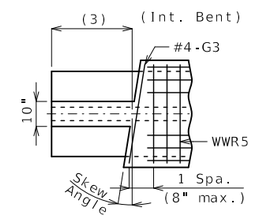

INTERIOR GIRDER AT ALL BENTS

TOP FLANGE BLOCKOUT

Mirror for right advanced.

(3) 10⅛" (Int. Bent No. 2)
10" (Int. Bent No. 3)

(4) 7½" (Int. Bent No. 2)
7⅞" (Int. Bent No. 3)

General Notes:

Concrete for prestressed beams shall be Class A-1 with f'c = 8000 psi and f'ci = 6500 psi.

Use 30 strands, 0.6"Ø Grade 270, with an initial prestress force of 1318 kips.

Pretensioned members shall be in accordance with Sec 1029.

Fabricator shall be responsible for location and design of lifting devices.

Exterior and interior girders are the same except: coil ties, top flange blockout.

The contractor shall provide bracing necessary for lateral and torsional stability of the girders during construction of the concrete slab and remove the bracing after the slab has attained 75% design strength. Contractor shall not drill holes in the girders.

For Girder Camber Diagram, see Sheet No. 19.

For location of coil ties at concrete diaphragms and integral bents, see Sheet No. 18.

Alternate bar reinforcing steel details are provided and may be used. The same type of reinforcing steel shall be used for all girders in all spans.

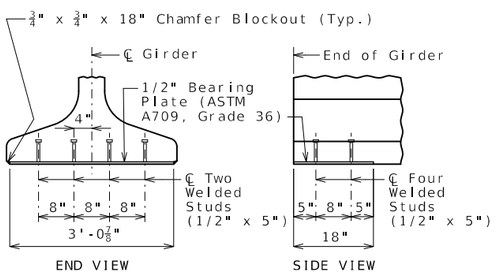

BEARING PLATE

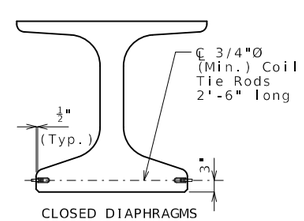

CLOSED DIAPHRAGMS AND INTEGRAL BENTS

COIL TIES

Exclude coil tie at exterior face of exterior girders except at integral end bents.

NU-GIRDERS - SPAN (2-3)

Detailed May 2025
Checked June 2025

Note: This drawing is not to scale. Follow dimensions.

STATE OF MISSOURI
TYLER R. LINDSAY
NUMBER PE-2019000128
PROFESSIONAL ENGINEER
07/24/2025 5:53:07 AM
TYLER R. LINDSAY - CIVIL
MO-PE-2019000128

DATE PREPARED	
7/22/2025	
ROUTE	STATE
65 OR	MO
DISTRICT	SHEET NO.
BR	16
COUNTY	
GREENE	
JOB NO.	
J8S3158	
CONTRACT ID.	
PROJECT NO.	
BRIDGE NO.	
A8938	

DESCRIPTION

DATE

MISSOURI HIGHWAYS AND TRANSPORTATION COMMISSION

105 WEST CAPITOL
JEFFERSON CITY, MO 65102
1-888-ASK-MODOT (1-888-275-6636)

(1) Fabricator shall apply a bond breaker to this region.

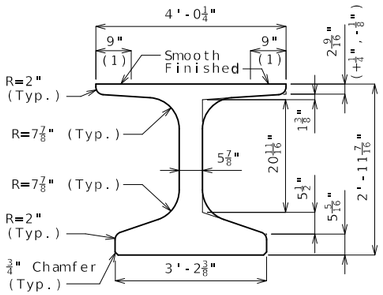

DIMENSIONS

(2) Outer strands tensioned to 2.02 kips/strand and inner strands to 8 kips/strand. Placed symmetrical about ℄ Girder. May be moved laterally in pairs.

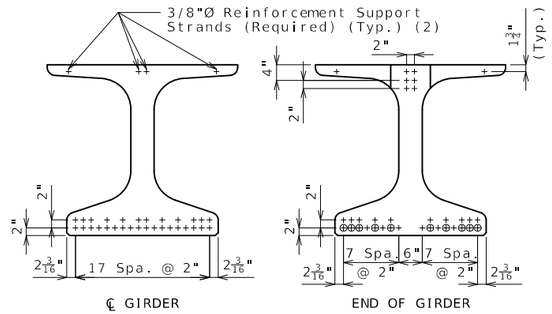

STRAND ARRANGEMENT

\+ Indicates prestressing strand.

o Indicates cut & shop bend with 3'-0" projection.

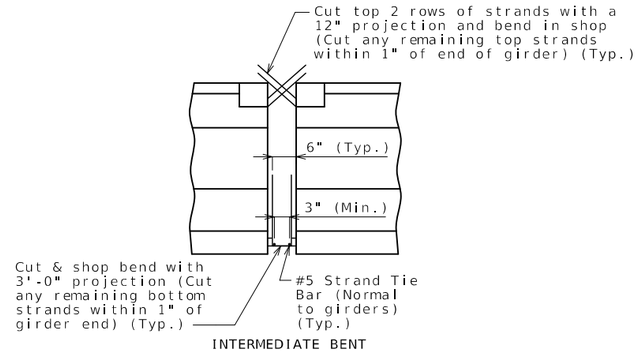

STRANDS AT GIRDER ENDS

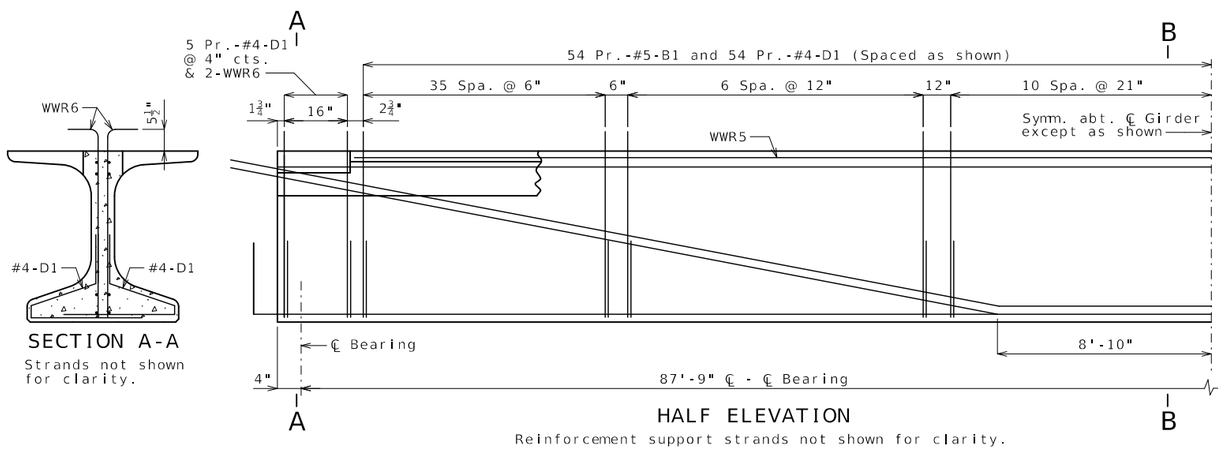

SECTION A-A

Strands not shown for clarity.

HALF ELEVATION

Reinforcement support strands not shown for clarity.

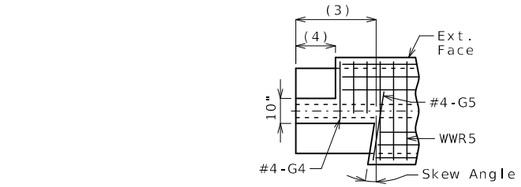

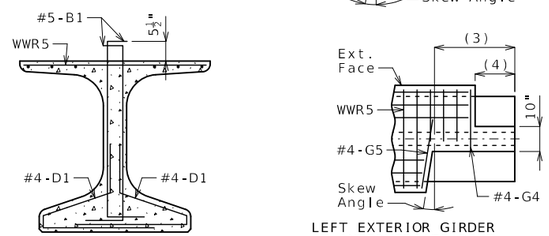

SECTION B-B

Strands not shown for clarity.

LEFT EXTERIOR GIRDER AT INTERMEDIATE BENT

Rotate 180° for right ext.

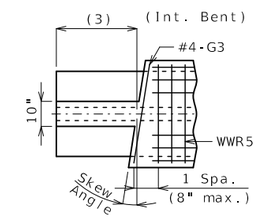

INTERIOR GIRDER AT ALL BENTS & EXTERIOR GIRDER AT END BENT

TOP FLANGE BLOCKOUT

Mirror for right advanced.

(3) 10⅛" (Int. Bent No. 2)
10" (Int. Bent No. 3)

(4) 7½" (Int. Bent No. 2)
7⅜" (Int. Bent No. 3)

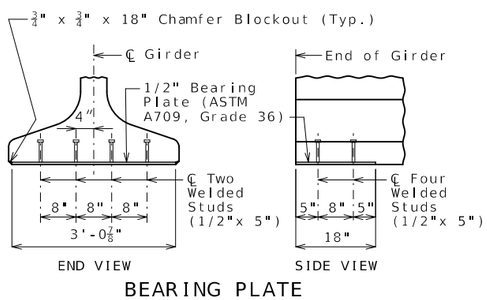

BEARING PLATE

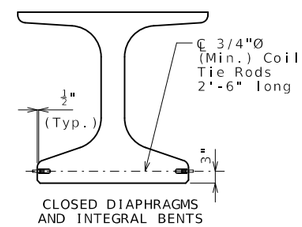

CLOSED DIAPHRAGMS AND INTEGRAL BENTS

COIL TIES

Exclude coil tie at exterior face of exterior girders except at integral end bents.

Bill of Reinforcing Steel - Each Girder			
No.	Size/ Mark	Length	Shape
214	5 B1	4'-4"	11S
234	4 D1	4'-0"	9S
2	4 G3	3'-10"	20
2	4 G4	2'-3"	20
2	4 G5	2'-9"	20

Bending Diagrams

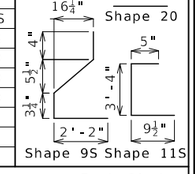

Welded Wire Reinforcement - Each Girder

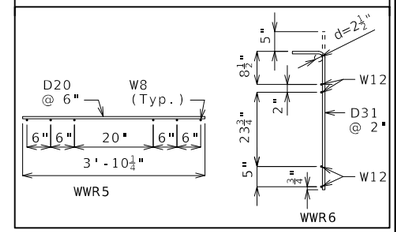

All dimensions are out to out.

Hooks and bends shall be in accordance with the CRSI Manual of Standard Practice for Detailing Reinforced Concrete Structures, Stirrup and Tie Dimensions.

Actual bar lengths are measured along centerline of bar to the nearest inch.

Minimum clearance to reinforcing shall be 1".

All bar reinforcement shall be Grade 60.

The two D1 bars may be furnished as one bar at the fabricator's option.

All B1 bars shall be epoxy coated.

G4 and G5 not required for interior girders. G3 not required for exterior girders of intermediate spans. Half no. of G3, G4 and G5 not required for ext. girders of end spans.

General Notes:

Concrete for prestressed beams shall be Class A-1 with f'c = 8000 psi and f'ci = 6500 psi.

Use 30 strands, 0.6"Ø Grade 270, with an initial prestress force of 1318 kips.

Pretensioned members shall be in accordance with Sec 1029.

Fabricator shall be responsible for location and design of lifting devices.

Exterior and interior girders are the same except: coil ties, top flange blockout.

The contractor shall provide bracing necessary for lateral and torsional stability of the girders during construction of the concrete slab and remove the bracing after the slab has attained 75% design strength. Contractor shall not drill holes in the girders.

For Girder Camber Diagram, see Sheet No. 19.

For location of coil ties at concrete diaphragms and integral bents, see Sheet No. 18.

Alternate bar reinforcing steel details are provided and may be used. The same type of reinforcing steel shall be used for all girders in all spans.

STATE OF MISSOURI
TYLER R. LINDSAY
NUMBER PE-2019000128
PROFESSIONAL ENGINEER
07/24/2025 5:53:26 AM
TYLER R. LINDSAY - CIVIL
MO-PE-2019000128

DATE PREPARED	
7/22/2025	
ROUTE 65 OR	STATE MO
DISTRICT BR	SHEET NO. 17
COUNTY GREENE	
JOB NO. J8S3158	
CONTRACT ID.	
PROJECT NO.	
BRIDGE NO. A8938	

DATE	DESCRIPTION

MISSOURI HIGHWAYS AND TRANSPORTATION COMMISSION
105 WEST CAPITOL
JEFFERSON CITY, MO 65102
1-888-ASK-MODOT (1-888-275-6636)

NU-GIRDERS (ALTERNATE REINFORCEMENT) - SPAN (2-3)

Detailed May 2025
Checked June 2025

Note: This drawing is not to scale. Follow dimensions.

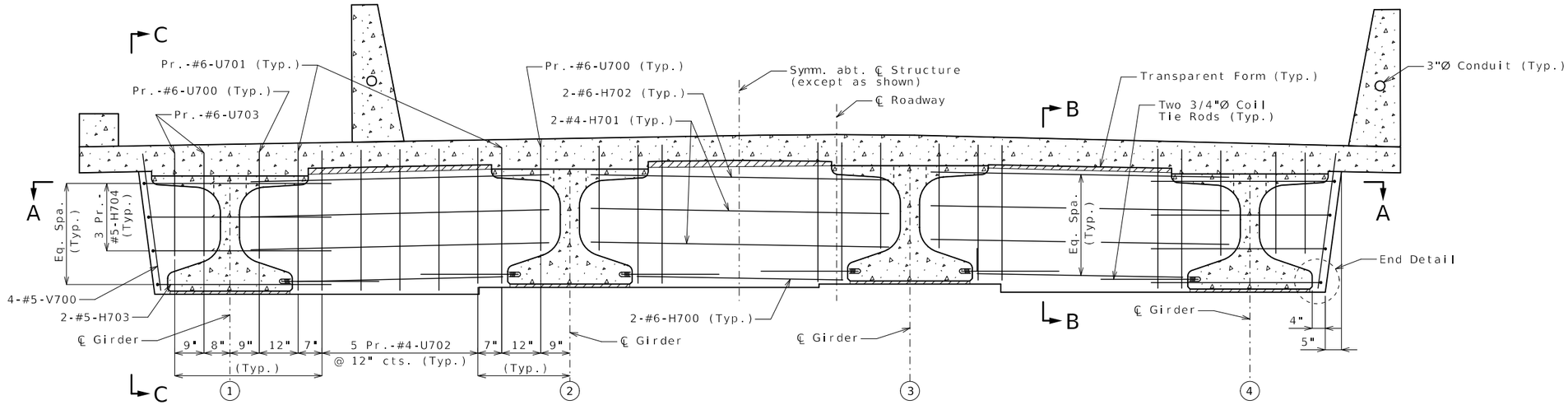

SECTION NEAR INTERMEDIATE BENT

(Normal to ℄ Roadway)

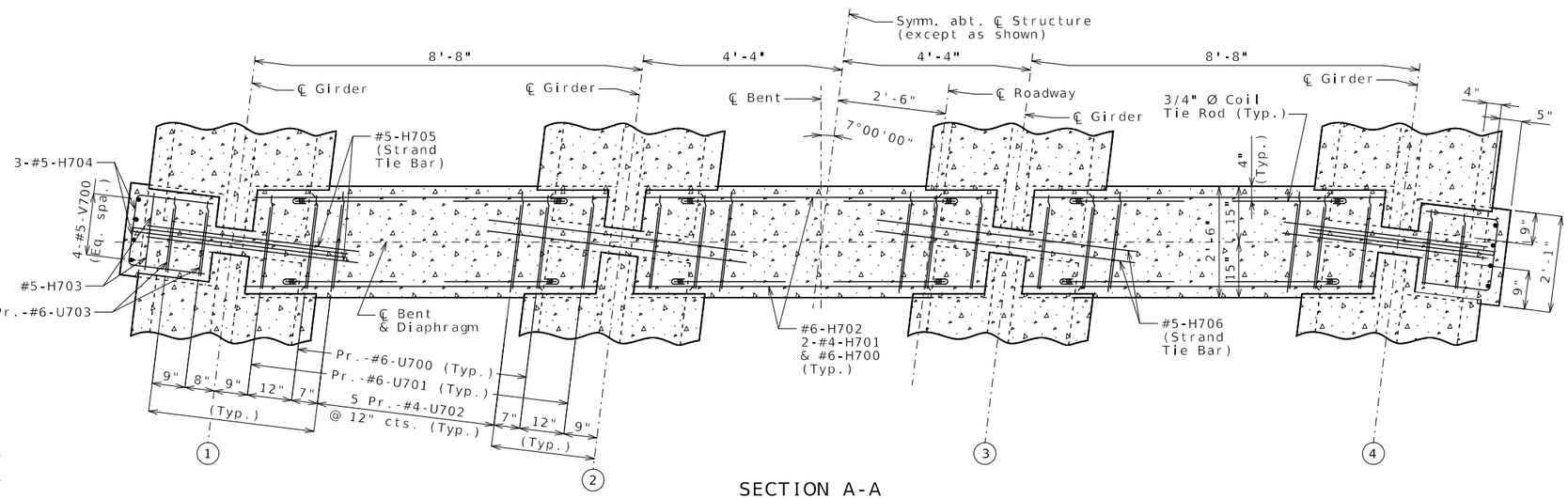

SECTION A-A

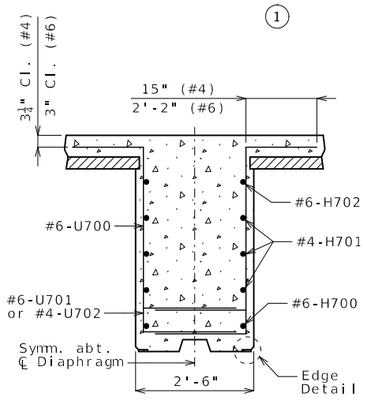

SECTION B-B

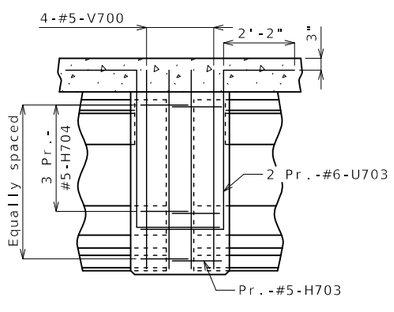

ELEVATION C-C

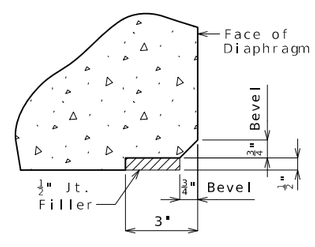

EDGE DETAIL

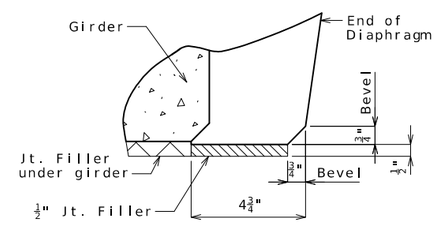

END DETAIL

Notes:

Diaphragm at intermediate bent shall be built vertical.

For location of #5-H705 & #5-H706 (strand tie bars) and coil tie rods, see Sheets No. 13 thru 16.

All U bars in diaphragm shall be placed parallel to centerline of roadway.

CONCRETE DIAPHRAGM AT INTERMEDIATE BENTS NO. 2 & 3

Detailed May 2025
Checked June 2025

Note: This drawing is not to scale. Follow dimensions.

STATE OF MISSOURI
TYLER R. LINDSAY
NUMBER PE-2019000128
PROFESSIONAL ENGINEER
07/24/2025 5:53:36 AM
TYLER R. LINDSAY - CIVIL
MO-PE-2019000128

DATE PREPARED	
7/22/2025	
ROUTE 65 OR	STATE MO
DISTRICT BR	SHEET NO. 18
COUNTY GREENE	
JOB NO. J8S3158	
CONTRACT ID.	
PROJECT NO.	
BRIDGE NO. A8938	

DATE	DESCRIPTION

MISSOURI HIGHWAYS AND TRANSPORTATION COMMISSION
105 WEST CAPITOL
JEFFERSON CITY, MO 65102
1-888-ASK-MODOT (1-888-275-6636)

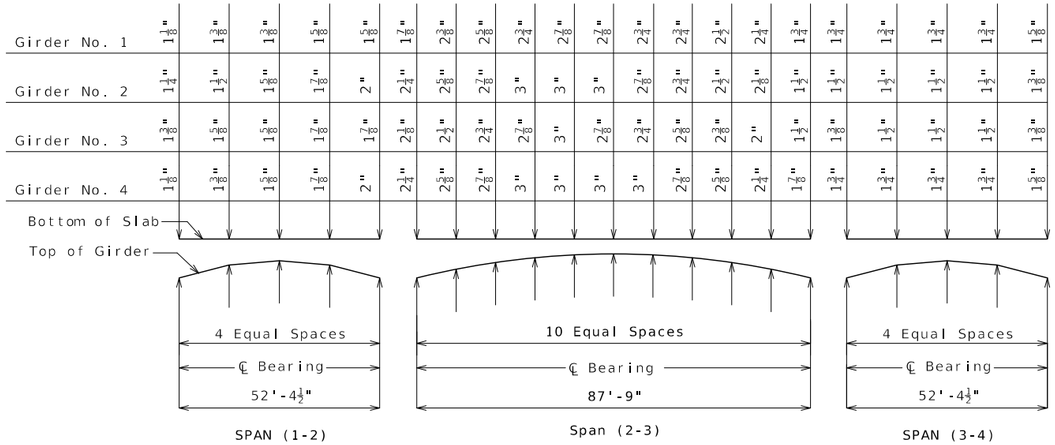

THEORETICAL SLAB HAUNCHING DIAGRAM (ESTIMATED AT 90 DAYS)

If girder camber is different from that shown in the camber diagram, in order to maintain minimum slab thickness, an adjustment of the slab haunches, an increase in slab thickness or a raise in grade uniformly throughout the structure shall be necessary. No payment will be made for additional labor or materials required for variation in haunching, slab thickness or grade adjustment.

Concrete in the slab haunches is included in the Estimated Quantities for Slab on Concrete NU-Girder (with Transparent Forms).

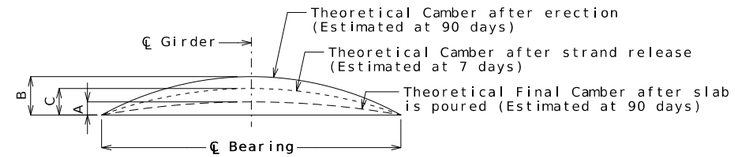

Girder	Span (1-2)			Span (2-3)			Span (3-4)		
	A	B	C	A	B	C	A	B	C
Exterior	7/8"	1 1/8"	3/4"	1 5/8"	3 7/8"	2 5/8"	7/8"	1 1/8"	3/4"
Interior	7/8"			1 1/2"			7/8"		

GIRDER CAMBER DIAGRAM

Conversion Factors for Girder Camber (Estimated at 90 days):

0.1 pt. = 0.314 x 0.5 pt.
0.2 pt. = 0.593 x 0.5 pt.
0.3 pt. = 0.813 x 0.5 pt.
0.4 pt. = 0.952 x 0.5 pt.

0.25 pt. = 0.7125 x 0.5 pt.

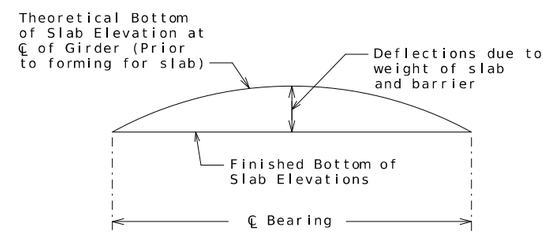

TYPICAL SLAB ELEVATIONS DIAGRAM

Theoretical Bottom of Slab Elevations at Centerline of Girder (Prior to forming for slab) (Estimated at 90 days)											
Girder Number	Span (1-2) (52'-4½" ℄ Brg. - ℄ Brg.)										
	℄ Brg.	.25	.50	.75	℄ Brg.						
1	1374.89	1375.26	1375.58	1375.85	1376.07						
2	1375.10	1375.46	1375.78	1376.05	1376.27						
3	1375.23	1375.59	1375.91	1376.17	1376.38						
4	1375.08	1375.44	1375.76	1376.02	1376.23						
Girder Number	Span (2-3) (87'-9" ℄ Brg. - ℄ Brg.)										
	℄ Brg.	.10	.20	.30	.40	.50	.60	.70	.80	.90	℄ Brg.
1	1376.10	1376.29	1376.46	1376.60	1376.70	1376.78	1376.82	1376.82	1376.79	1376.73	1376.65
2	1376.29	1376.48	1376.65	1376.79	1376.90	1376.97	1377.00	1377.00	1376.97	1376.91	1376.82
3	1376.40	1376.59	1376.76	1376.90	1377.00	1377.07	1377.11	1377.11	1377.07	1377.01	1376.92
4	1376.25	1376.43	1376.59	1376.73	1376.83	1376.90	1376.93	1376.93	1376.89	1376.83	1376.74
Girder Number	Span (3-4) (52'-4½" ℄ Brg. - ℄ Brg.)										
	℄ Brg.	.25	.50	.75	℄ Brg.						
1	1376.65	1376.59	1376.49	1376.34	1376.13						
2	1376.82	1376.76	1376.65	1376.50	1376.29						
3	1376.91	1376.85	1376.74	1376.58	1376.37						
4	1376.73	1376.67	1376.56	1376.39	1376.18						

Elevations are based on a constant slab thickness of 8 1/2" and include allowance for theoretical dead load deflections due to weight of slab and barrier.

STATE OF MISSOURI
TYLER R. LINDSAY
NUMBER PE-2019000128
PROFESSIONAL ENGINEER
07/24/2025 5:53:45 AM
TYLER R. LINDSAY - CIVIL
MO-PE-2019000128

DATE PREPARED 7/22/2025

ROUTE	STATE
65 OR	MO
DISTRICT	SHEET NO.
BR	19

COUNTY GREENE
JOB NO. J8S3158
CONTRACT ID.
PROJECT NO.
BRIDGE NO. A8938

DESCRIPTION
DATE

MISSOURI HIGHWAYS AND TRANSPORTATION COMMISSION
105 WEST CAPITOL
JEFFERSON CITY, MO 65102
1-888-ASK-MODOT (1-888-275-6636)

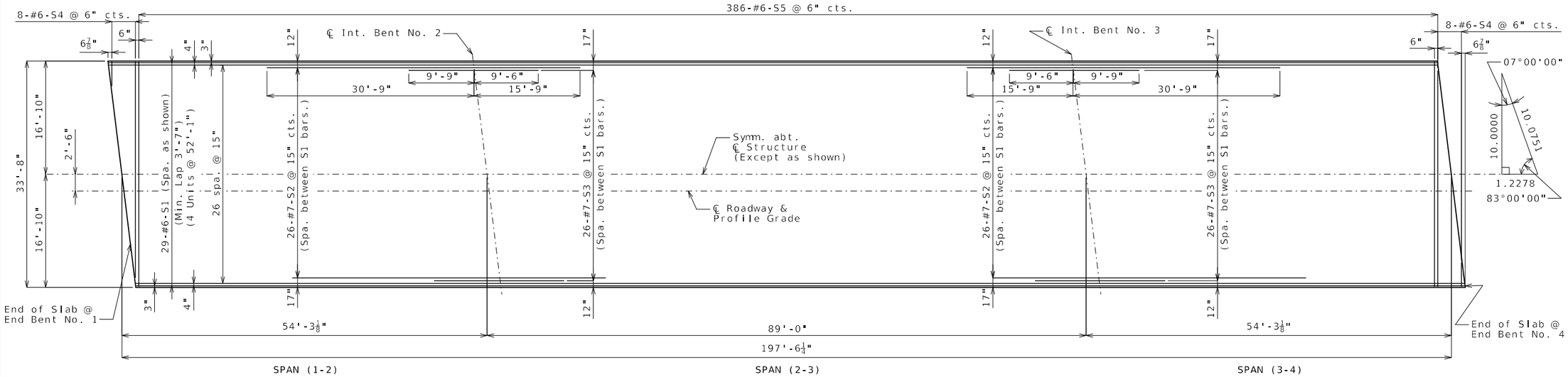

TOP REINFORCEMENT

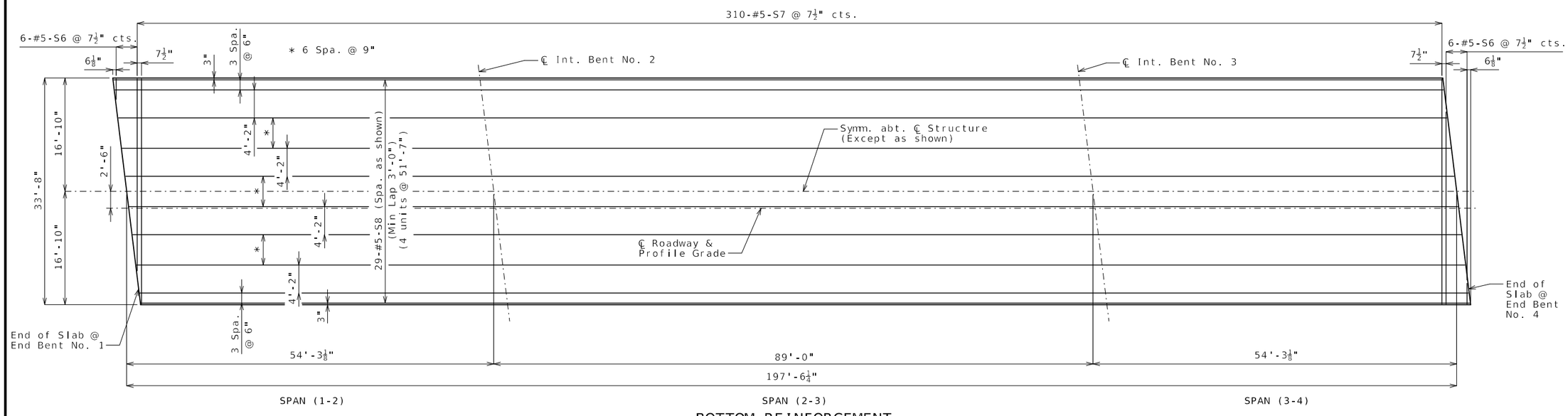

BOTTOM REINFORCEMENT

Notes:

Longitudinal slab dimensions are measured horizontally.

For Section Thru Slab and Slab Pouring Sequence, see Sheet No. 21.

For Theoretical Slab Haunching Diagram and Theoretical Bottom of Slab Elevations, see Sheet No. 19.

For details and reinforcement of Type D Barrier, see Sheet No. 22.

For details and reinforcement of Pedestrian Curb, see Sheet No. 25.

PLANS OF SLAB SHOWING REINFORCMENT

Detailed May 2025
Checked June 2025

Note: This drawing is not to scale. Follow dimensions.

STATE OF MISSOURI
TYLER R. LINDSAY
NUMBER PE-2019000128
PROFESSIONAL ENGINEER
09/03/2025 8:25:36 AM
TYLER R.LINDSAY-CIVIL
MO-PE-2019000128

DATE PREPARED	
7/22/2025	
ROUTE	STATE
65 OR	MO
DISTRICT	SHEET NO.
BR	20
COUNTY	
GREENE	
JOB NO.	
J8S3158	
CONTRACT ID.	
PROJECT NO.	
BRIDGE NO.	
A8938	

DATE	DESCRIPTION

MISSOURI HIGHWAYS AND TRANSPORTATION COMMISSION
105 WEST CAPITOL
JEFFERSON CITY, MO 65102
1-888-ASK-MODOT (1-888-275-6636)

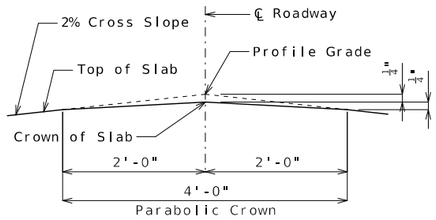

DETAIL A

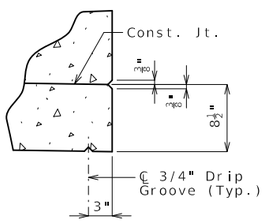

DETAIL B

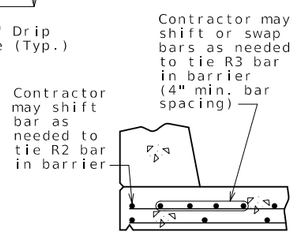

OPTIONAL SHIFTING
TOP BARS AT BARRIER

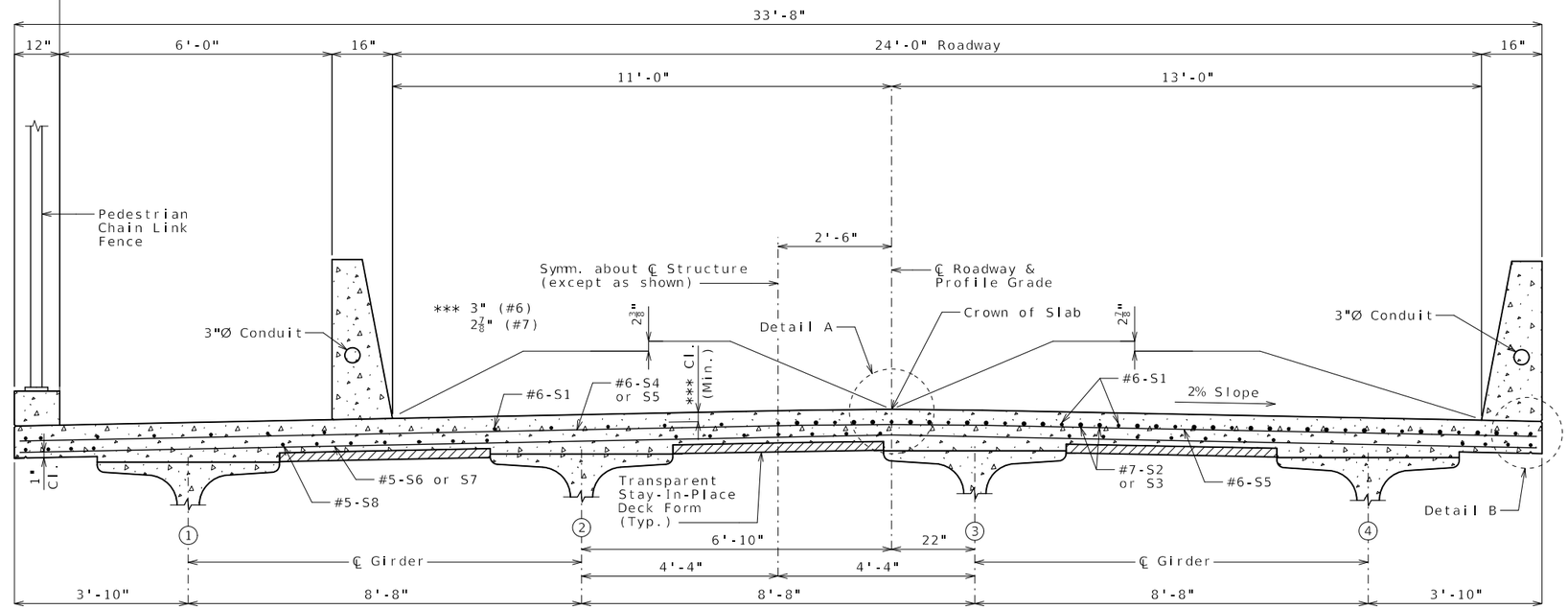

HALF SECTION NEAR MIDSPAN AND END BENT

HALF SECTION NEAR INTERMEDIATE BENT

SECTION THRU SLAB

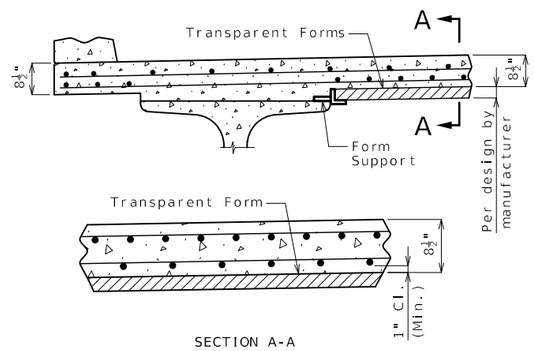

SECTION A-A

TRANSPARENT
FORM DETAILS

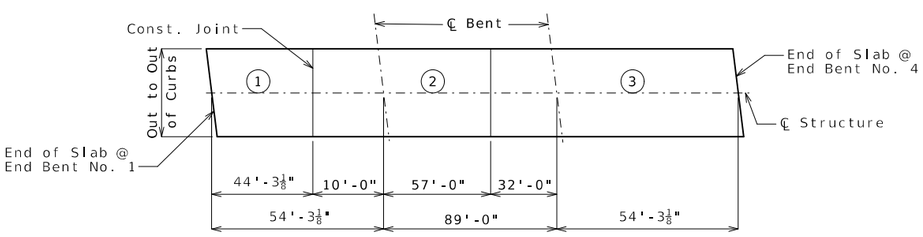

	Sequence of Pours			Min. Rate of Pour Cu. Yds./Hr.
	Direction			With Retarder
Basic Sequence	1	2	3	25
	End to 2	1 to 3	2 to End	
Alternate pours to the basic sequence are subject to the approval of the engineer in accordance with Sec 703.				
Alternate A Pours	1 + 2		3	25
	End to 3		2 to End	
Alternate B Pours	1 + 2 + 3			25
	End to End			

The contractor shall furnish an approved retarder to retard the set of the concrete to 2.5 hours, and shall pour and satisfactorily finish the slab pours at the rate given.

The concrete diaphragm at the intermediate bents and integral end bents shall be poured a minimum of 30 minutes and a maximum of 2 hours before the slab is poured.

SLAB POURING SEQUENCE

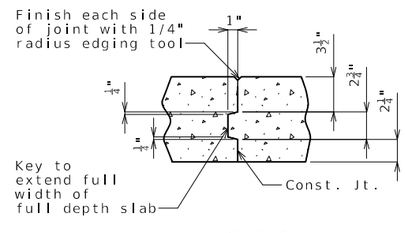

FULL DEPTH SLAB

SLAB CONSTRUCTION JOINT

Notes:

For reinforcement of barrier not shown, see Sheets No. 22 thru 24.

For Theoretical Bottom of Slab Elevations, Girder Camber Diagram and Theoretical Slab Haunching Diagram, see Sheet No. 19.

For Plans of Slab Showing Reinforcement, see Sheet No. 20.

For details of pedestrian curb, see Sheet No. 25.

For details of pedestrian chain link fence on pedestrian curb, see Sheet No. 26.

For details of conduit system on structure, see Sheet No. 27.

SLAB DETAILS

Detailed May 2025
Checked June 2025

Note: This drawing is not to scale. Follow dimensions.

STATE OF MISSOURI
TYLER R. LINDSAY
NUMBER PE-2019000128
PROFESSIONAL ENGINEER
07/24/2025 5:54:06 AM
TYLER R. LINDSAY - CIVIL
MO-PE-2019000128

DATE PREPARED	7/22/2025
ROUTE	65 OR
STATE	MO
DISTRICT	BR
SHEET NO.	21
COUNTY	GREENE
JOB NO.	J8S3158
CONTRACT ID.	
PROJECT NO.	
BRIDGE NO.	A8938

DESCRIPTION

DATE

MISSOURI HIGHWAYS AND TRANSPORTATION COMMISSION

105 WEST CAPITOL
JEFFERSON CITY, MO 65102
1-888-ASK-MODOT (1-888-275-6636)

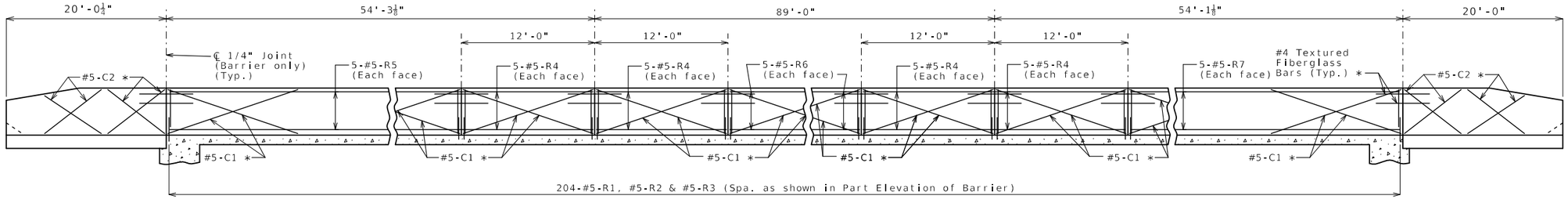

ELEVATION OF LEFT BARRIER

Logitudinal dimensions are horizontal.

Conduit not shown for clarity.

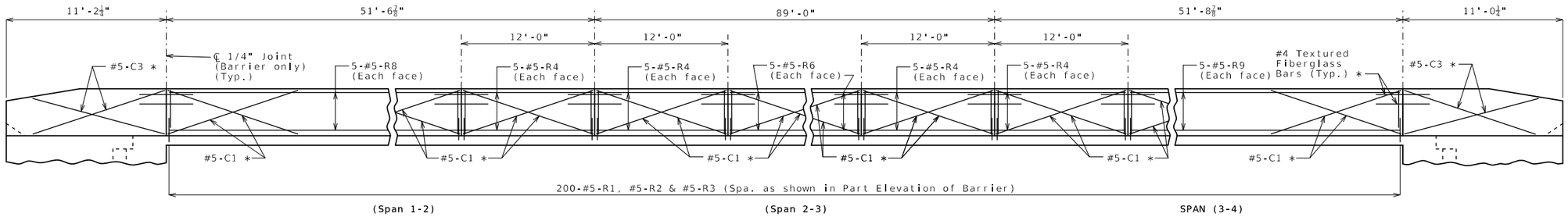

ELEVATION OF RIGHT BARRIER

Logitudinal dimensions are horizontal.

Conduit not shown for clarity.

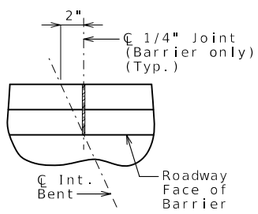

PART PLAN SHOWING JOINT LOCATION

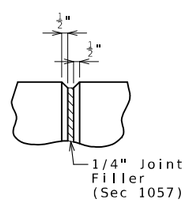

PART ELEVATION AT FORMED JOINT

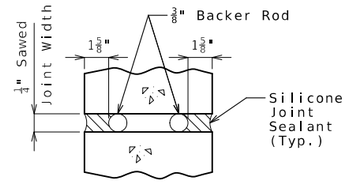

SECTION B-B

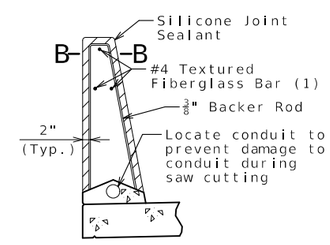

SECTION THRU SAW CUT JOINT

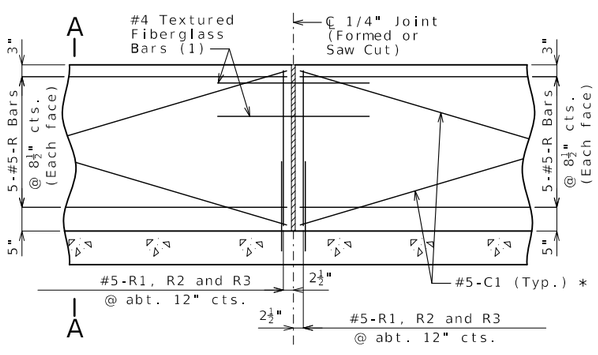

PART ELEVATION OF BARRIER

(1) Four feet long, centered on joint, slip-formed option only

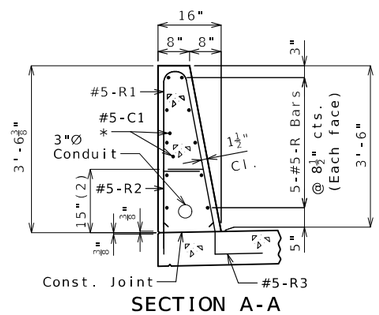

SECTION A-A

Use a minimum lap of 2'-6" for #5 horizontal barrier bars.

The cross-sectional area above the slab is 3.52 square feet.

(2) To top of bar

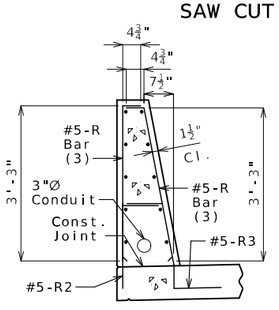

R-BAR PERMISSIBLE ALTERNATE SHAPE

(3) The R1 bar may be separated into two bars as shown, at the contractor's option, only when slip forming is not used. (All dimensions are out to out.)

General Notes:

* Slip-formed option only.

Conventional forming or slip forming may be used. Saw cut joints may be used with conventional forming.

Top of barrier shall be built parallel to grade and barrier joints (except at end bents) normal to grade.

All exposed edges of barrier shall have either a 1/2-inch radius or a 3/8-inch bevel, unless otherwise noted.

Payment for all concrete and reinforcement, complete in place, will be considered completely covered by the contract unit price for Type D Barrier per linear foot.

Concrete in barrier shall be Class B-1.

Measurement of barrier is to the nearest linear foot for each structure, measured along the outside top of slab from end of wing to end of wing (except left barrier end of approach slab to end of approach slab).

Concrete traffic barrier delineators shall be placed on top of the barrier as shown on Missouri Standard Plan 617.10 and in accordance with Sec 617. Delineators on bridges with two-lane, two-way traffic shall have retroreflective sheeting on both sides. Concrete traffic barrier delineators will be considered completely covered by the contract unit price for Type D Barrier.

Joint sealant and backer rods shall be in accordance with Sec 717 for silicone joint sealant for saw cut and formed joints.

For slip-formed option, both sides of barrier shall have a vertically broomed finish and the top shall have a transversely broomed finish.

For details of conduit system on structure, see Sheet No. 27.

TYPE D BARRIER

Detailed May 2025
Checked June 2025

Note: This drawing is not to scale. Follow dimensions.

STATE OF MISSOURI
TYLER R. LINDSAY
NUMBER PE-2019000128
PROFESSIONAL ENGINEER
07/28/2025 8:31:56 AM
TYLER R.LINDSAY-CIVIL
MO-PE-2019000128

DATE PREPARED	7/28/2025
ROUTE	65 OR
STATE	MO
DISTRICT	BR
SHEET NO.	22
COUNTY	GREENE
JOB NO.	J8S3158
CONTRACT ID.	
PROJECT NO.	
BRIDGE NO.	A8938

DESCRIPTION

DATE

MISSOURI HIGHWAYS AND TRANSPORTATION COMMISSION

105 WEST CAPITOL
JEFFERSON CITY, MO 65102
1-888-ASK-MODOT (1-888-275-6636)

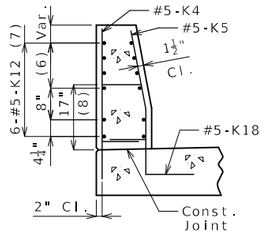

SECTION A-A

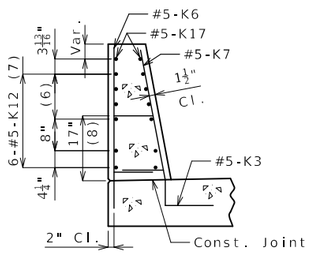

SECTION B-B

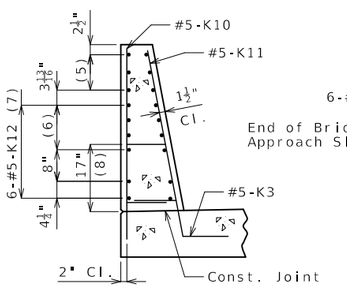

SECTION C-C

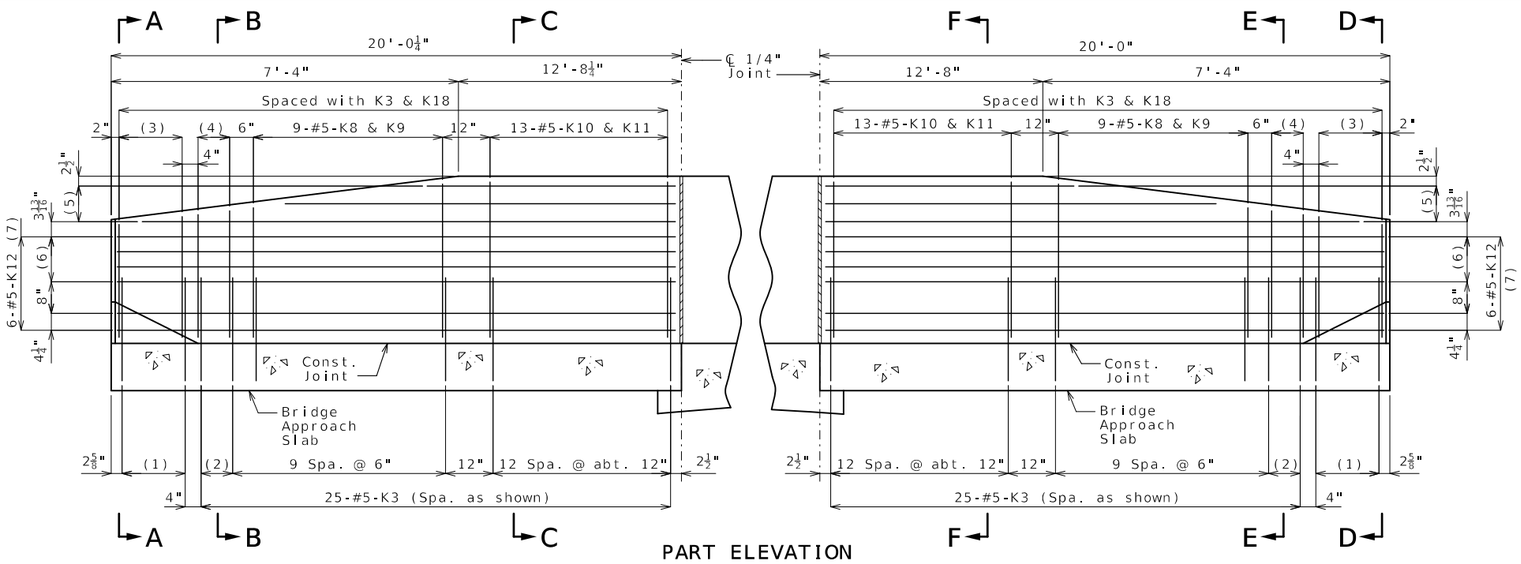

PART ELEVATION

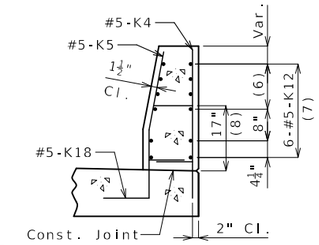

SECTION D-D

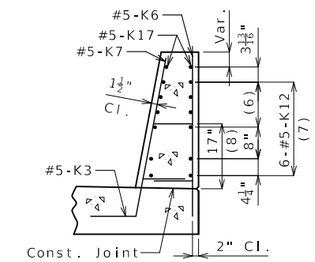

SECTION E-E

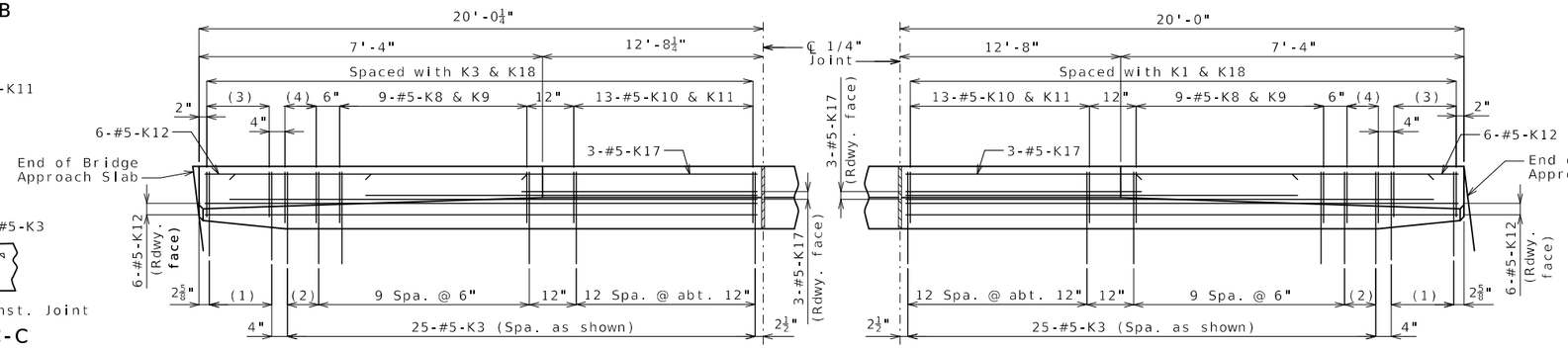

PART PLAN

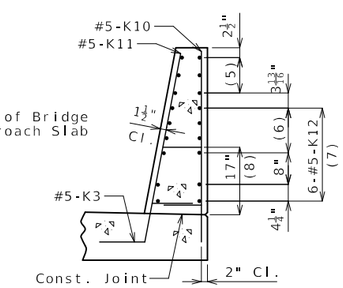

SECTION F-F

(1) 5-#5-K18 @ 4" cts.

(2) 2 spaces @ 4"

(3) 5-#5-K4 & K5

(4) 3-#5-K6 & K7

(5) 3-#5-K17 @ 4½" cts., each face

(6) 3 spaces @ 3 13/16"

(7) Spaced as shown, each face

(8) To top of bar

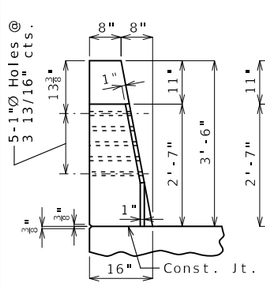

ELEVATION G-G

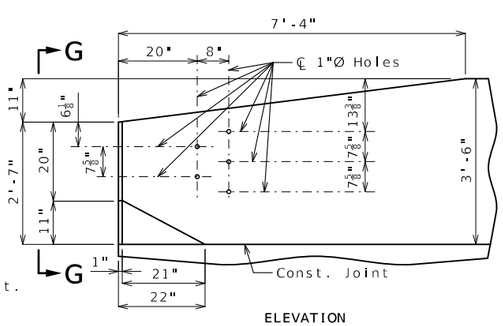

ELEVATION

* Transition to zero at Type A curb for gutter lines to match.

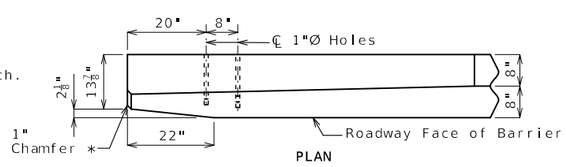

PLAN

DETAILS OF GUARD RAIL ATTACHMENT

General Notes:

Concrete traffic barrier delineators shall be placed on top of the barrier as shown on Missouri Standard Plan 617.10 and in accordance with Sec 617. Delineators on bridges with two-lane, two-way traffic shall have retroreflective sheeting on both sides. Concrete traffic barrier delineators will be considered completely covered by the contract unit price for Type D Barrier.

The #5-K18 bars shall be bent in field to clear the end of the approach slab.

For details of conduit system on structure, see Sheet No. 27.

Conduit system not shown for clarity.

Reinforcing Steel:
Minimum clearance to reinforcing steel shall be 1 1/2" except as shown for bars embedded into end bent.

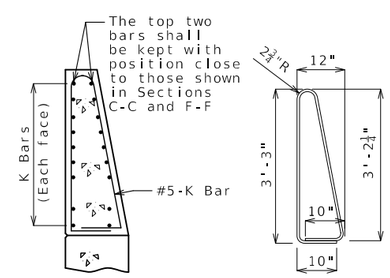

K10-K11 BAR PERMISSIBLE ALTERNATE SHAPE

(Other K bars not shown for clarity)

The K10-K11 bar combination may be furnished as one bar as shown, at the contractor's option.

All dimensions are out to out.

TYPE D BARRIER (LEFT) AT END BENTS

Detailed May 2025
Checked June 2025

Note: This drawing is not to scale. Follow dimensions.

STATE OF MISSOURI
TYLER R. LINDSAY
NUMBER PE-2019000128
PROFESSIONAL ENGINEER
07/28/2025 8:32:06 AM
TYLER R. LINDSAY - CIVIL
MO-PE-2019000128

DATE PREPARED	7/28/2025
ROUTE	65 OR
STATE	MO
DISTRICT	BR
SHEET NO.	23
COUNTY	GREENE
JOB NO.	J8S3158
CONTRACT ID.	
PROJECT NO.	
BRIDGE NO.	A8938

DESCRIPTION | DATE

MISSOURI HIGHWAYS AND TRANSPORTATION COMMISSION
105 WEST CAPITOL
JEFFERSON CITY, MO 65102
1-888-ASK-MODOT (1-888-275-6636)

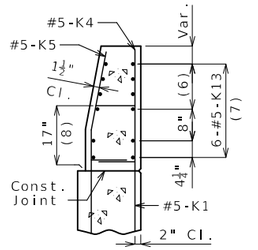

SECTION A-A

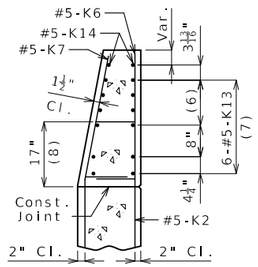

SECTION B-B

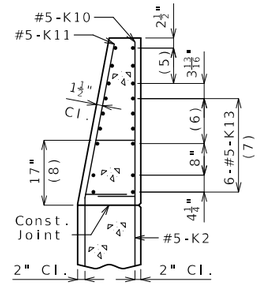

SECTION C-C

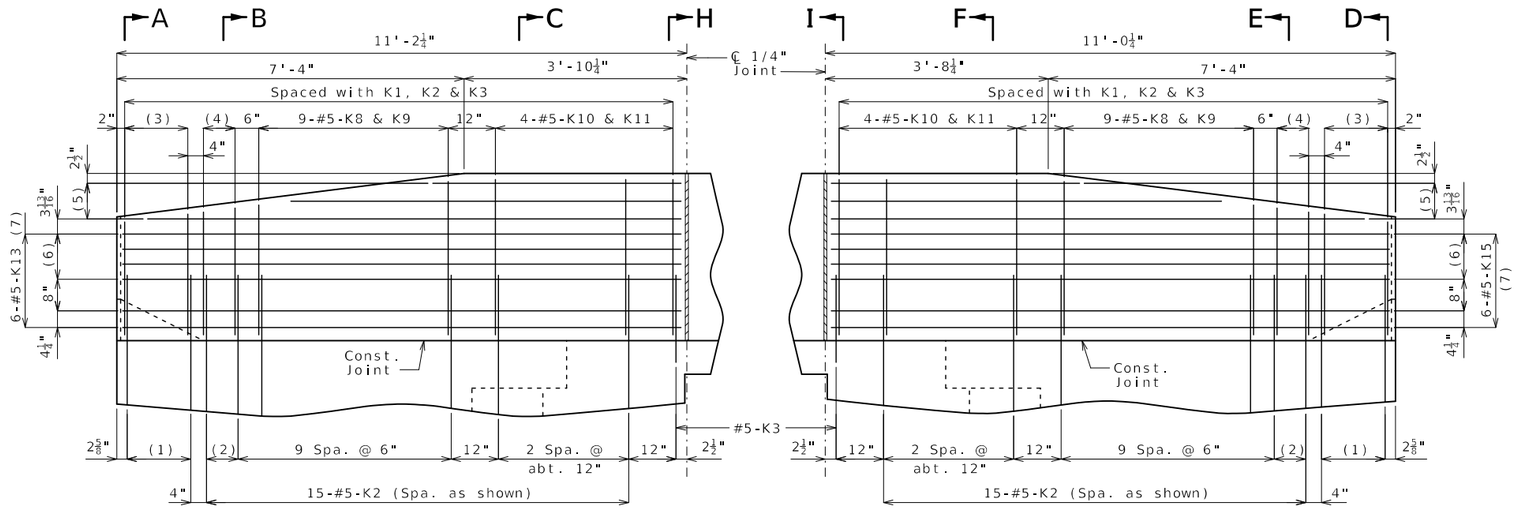

PART ELEVATION

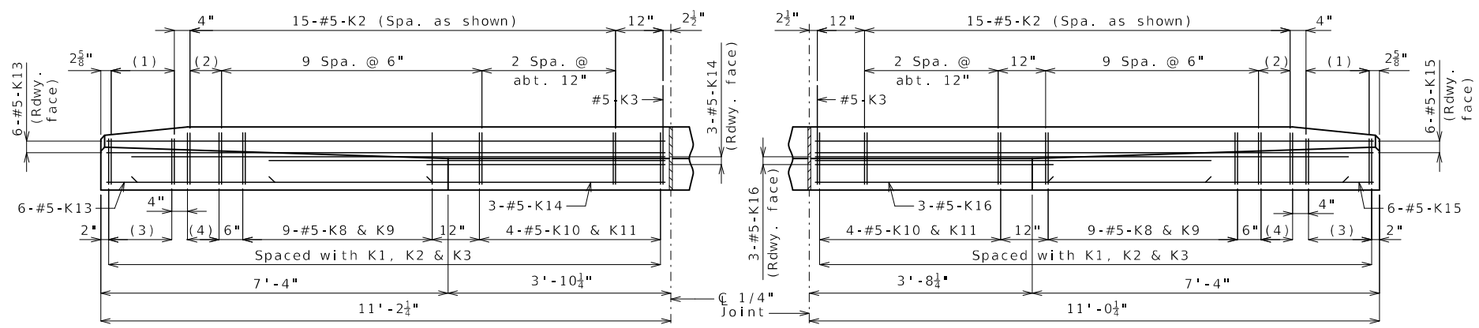

PART PLAN

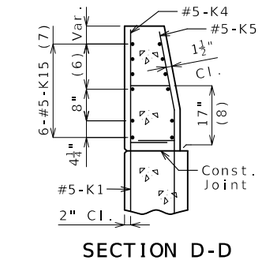

SECTION D-D

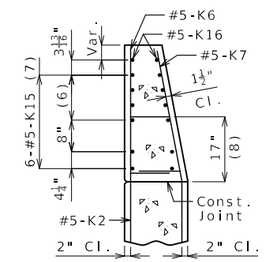

SECTION E-E

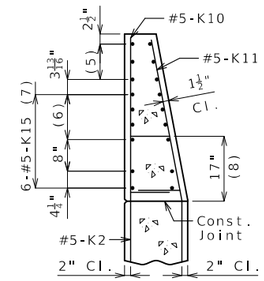

SECTION F-F

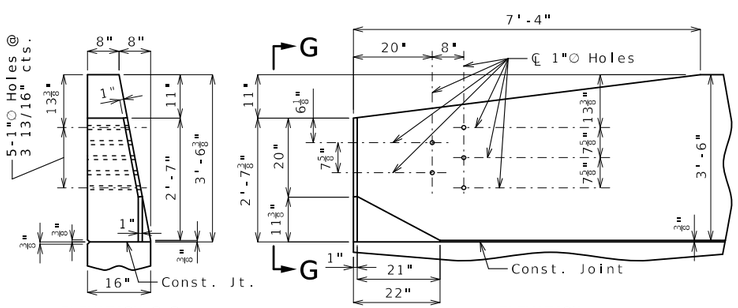

ELEVATION G-G

ELEVATION

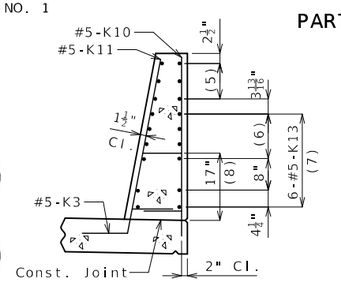

SECTION H-H

(1) 5-#5-K1 @ 4" cts.

(2) 2 spaces @ 4"

(3) 5-#5-K4 & K5

(4) 3-#5-K6 & K7

(5) 3-#5-K14 or K16 @ 4½" cts., each face

(6) 3 spaces @ 3 13/16"

(7) Spaced as shown, each face

(8) To top of bar

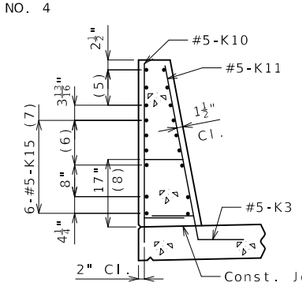

SECTION I-I

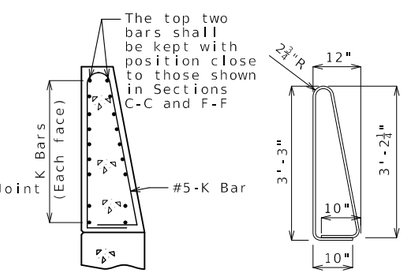

K10-K11 BAR PERMISSIBLE ALTERNATE SHAPE

(Other K bars not shown for clarity)

The K10-K11 bar combination may be furnished as one bar as shown, at the contractor's option.

All dimensions are out to out.

* Transition to zero at Type A curb for gutter lines to match.

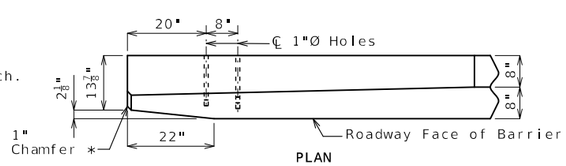

PLAN

DETAILS OF GUARD RAIL ATTACHMENT

General Notes:

Concrete traffic barrier delineators shall be placed on top of the barrier as shown on Missouri Standard Plan 617.10 and in accordance with Sec 617. Delineators on bridges with two-lane, two-way traffic shall have retroreflective sheeting on both sides. Concrete traffic barrier delineators will be considered completely covered by the contract unit price for Type D Barrier.

For details of conduit system on structure, see Sheet No. 27.

Conduit system not shown for clarity.

Reinforcing Steel:
Minimum clearance to reinforcing steel shall be 1 1/2" except as shown for bars embedded into end bent.

TYPE D BARRIER (RIGHT) AT END BENTS

Detailed May 2025
Checked June 2025

Note: This drawing is not to scale. Follow dimensions.

STATE OF MISSOURI
TYLER R. LINDSAY
NUMBER PE-2019000128
PROFESSIONAL ENGINEER
07/24/2025 5:57:26 AM
TYLER R. LINDSAY - CIVIL
MO-PE-2019000128

DATE PREPARED	7/22/2025
ROUTE	65 OR
STATE	MO
DISTRICT	BR
SHEET NO.	24
COUNTY	GREENE
JOB NO.	J8S3158
CONTRACT ID.	
PROJECT NO.	
BRIDGE NO.	A8938

DESCRIPTION

DATE

MISSOURI HIGHWAYS AND TRANSPORTATION COMMISSION
105 WEST CAPITOL
JEFFERSON CITY, MO 65102
1-888-ASK-MODOT (1-888-275-6636)

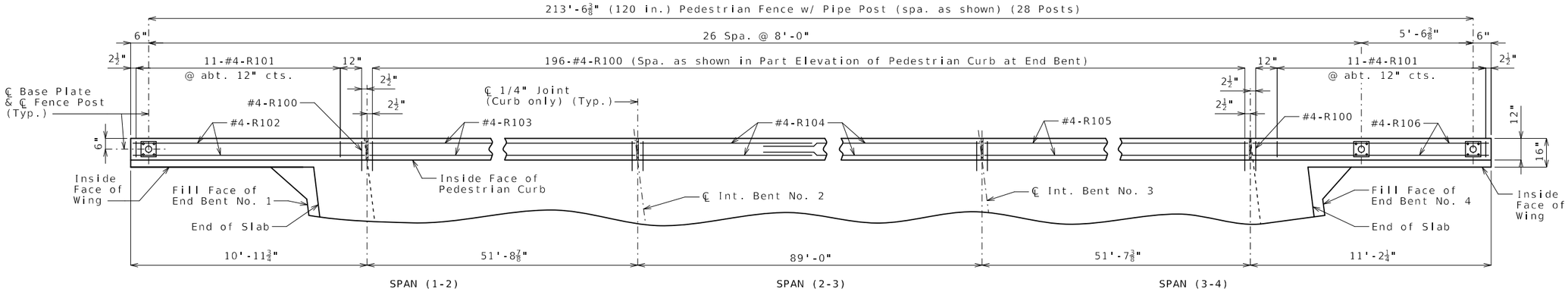

PLAN SHOWING PEDESTRIAN CURB

Longitudinal dimensions are horizontal.

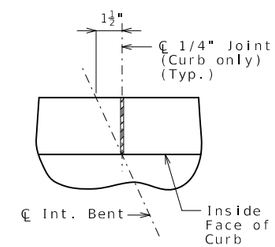

PART PLAN SHOWING JOINT LOCATION

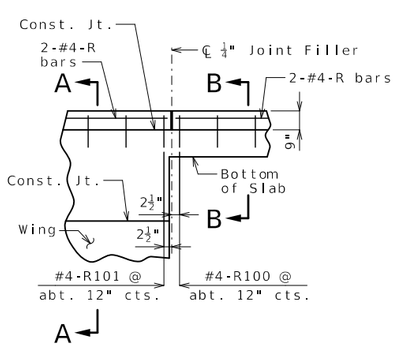

PART ELEVATION OF PEDESTRIAN CURB AT END BENT

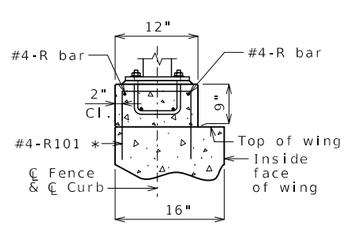

SECTION A-A

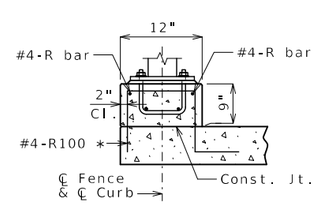

SECTION B-B

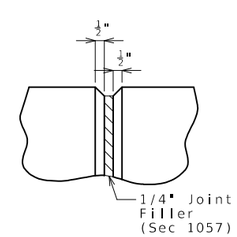

PART ELEVATION AT CURB JOINT

* Shift in field to clear U-bolts.

PEDESTRIAN CURB

Notes:

Top of curb shall be built parallel to grade and curb joints (except at end bents) normal to grade.

All exposed edges of curb shall have either a 1/2-inch radius or a 3/8-inch bevel, unless otherwise noted.

Payment for all concrete and reinforcement, complete in place, will be considered completely covered by the contract unit price for Pedestrian Curb per linear foot.

Concrete in curb shall be Class B-1.

Measurement of pedestrian curb is to the nearest linear foot for each structure, measured along the outside top of curb from end of curb to end of curb.

Center of posts shall clear curb joints or ends by at least 6 inches.

Minimum lap for longitudinal R-bars is 2'-7".

Slab reinforcement not shown for clarity.

For details of pedestrian chain link fence, see Sheet No. 26.

Detailed May 2025
Checked June 2025

Note: This drawing is not to scale. Follow dimensions.

STATE OF MISSOURI
TYLER R. LINDSAY
NUMBER PE-2019000128
PROFESSIONAL ENGINEER
07/24/2025 5:57:36 AM
TYLER R. LINDSAY - CIVIL
MO-PE-2019000128

DATE PREPARED 7/22/2025

ROUTE	STATE
65 OR	MO
DISTRICT	SHEET NO.
BR	25

COUNTY GREENE

JOB NO. J8S3158

CONTRACT ID.

PROJECT NO.

BRIDGE NO. A8938

DATE	DESCRIPTION

MISSOURI HIGHWAYS AND TRANSPORTATION COMMISSION
105 WEST CAPITOL
JEFFERSON CITY, MO 65102
1-888-ASK-MODOT (1-888-275-6636)

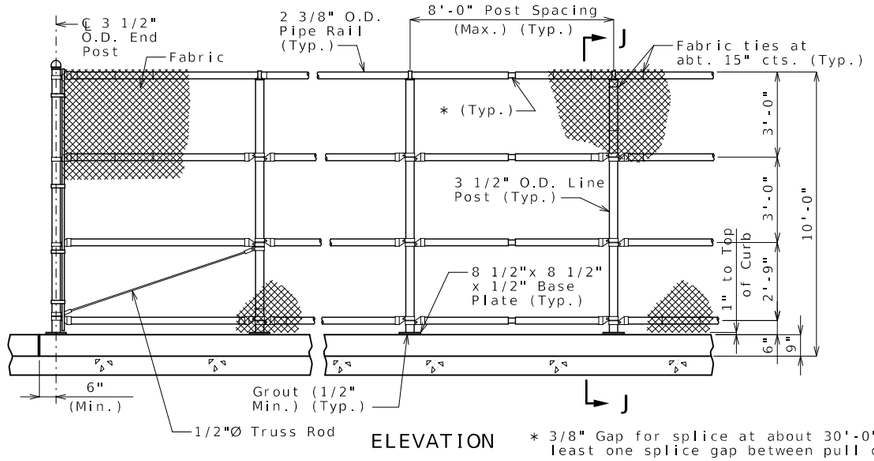

ELEVATION

* 3/8" Gap for splice at about 30'-0" centers with at least one splice gap between pull or end posts.

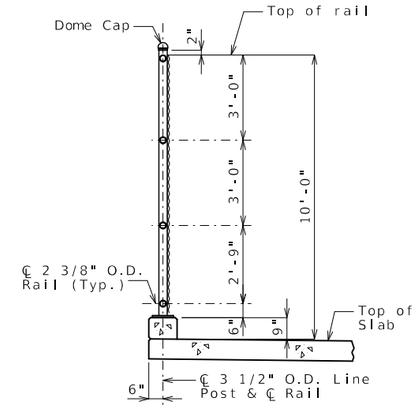

SECTION J-J

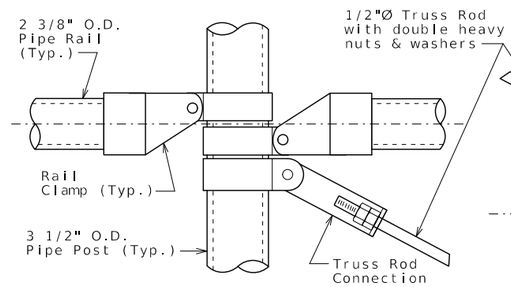

UPPER TRUSS ROD CONNECTION DETAIL

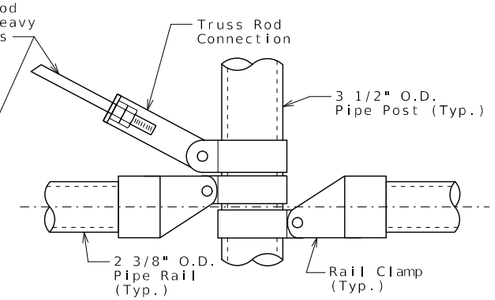

LOWER TRUSS ROD CONNECTION DETAIL

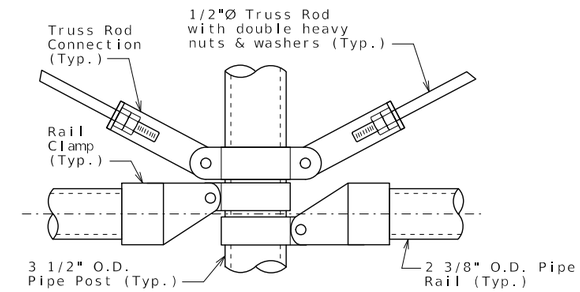

DUAL LOWER TRUSS ROD CONNECTION DETAIL

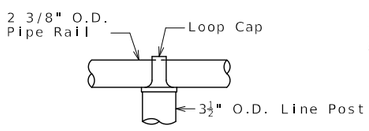

DETAIL A

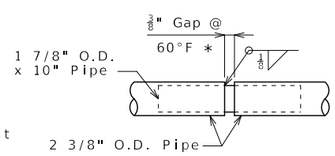

TYPICAL RAIL DETAIL AT SPLICE GAP

Note: At the contractor's option, manufacturer-approved expansion coupling may be used in lieu of detail shown. No additional payment will be made for this substitution.

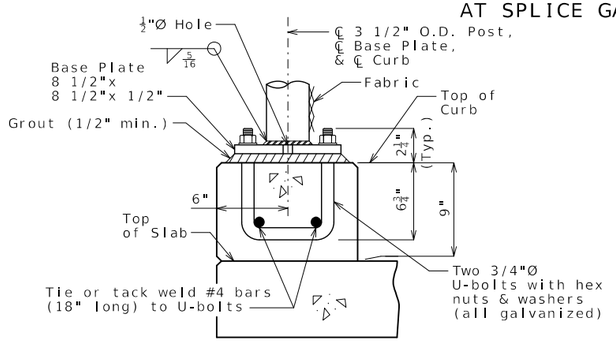

POST CONNECTION (TYPICAL)

Note: Base plate shall be welded to the post prior to galvanizing the post with base plate.

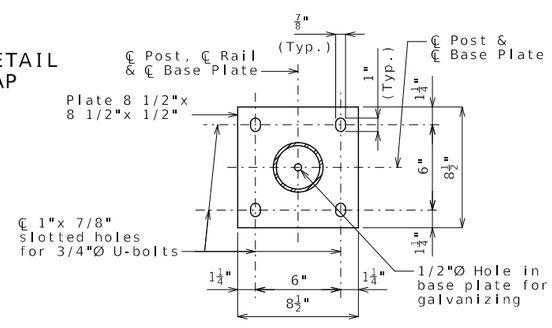

PLAN OF BASE PLATE

GENERAL NOTES:

Pedestrian chain link fence shall be in accordance with Sec 1043 except all fabric shall have the top and bottom edges knuckled and pipe members shall be in accordance with ASTM F1043, high strength grade (minimum yield = 50 ksi) heavy industrial steel pipe Group 1A.

All posts shall be vertical. Grout shall be placed under the post base plates in accordance with Sec 1066.

Payment for furnishing, galvanizing and erecting the fence and frame complete in place will be considered completely covered by the contract unit price for (120 in.) Pedestrian Fence (Structures) per linear foot.

Dimensions of pedestrian chain link fence are measured horizontally.

The maximum spacing allowed between pull posts and end posts is 100 feet. Post brace and 1/2-inch diameter truss rod are required for panels adjacent to pull post and end posts only. Connect the lower end of truss rod to bottom of pull posts and end posts to which the stretcher bar is attached.

Rail clamps, dome cap, bands, tie wires, stretcher bars and truss rod connections shall be in accordance with the manufacturer's recommendations. The truss rod and truss rod connections shall have a minimum capacity of 2000 pounds. Dome cap shall fit tightly.

Expansion joints shall be placed in the horizontal pieces at not more than 30-foot centers and at all joint filler locations in the curb with a minimum gap of 3/8 inch at 60 degrees F.

Steel for truss rods shall be ASTM A709 Grade 36. Steel for base plates shall be ASTM A709 Grade 50.

(120 in.) Pedestrian Fence (Structures) will be measured to the nearest linear foot for each structure, measured along the centerline fence from end of fence to end of fence.

Contractor shall submit complete detailed shop drawings in accordance with Sec 1080.

All base plates, U-bolts, hex nuts and washers shall be galvanized in accordance with ASTM A123 and Sec 1081.

U-bolts shall be ASTM F1554 Grade 36.

Chain link wire fabric shall be 9 gage minimum, 2-inch diamond mesh.

For details of pedestrian curb, see Sheet No. 25.

The chain link fence shall be built in accordance with Sec 607 & Sec 1043.

PEDESTRIAN CHAIN LINK FENCE ON PEDESTRIAN CURB

Detailed May 2025
Checked June 2025

Note: This drawing is not to scale. Follow dimensions.

STATE OF MISSOURI
TYLER R. LINDSAY
NUMBER PE-2019000128
PROFESSIONAL ENGINEER
07/24/2025 5:57:47 AM
TYLER.R.LINDSAY-CIVIL
MO-PE-2019000128

DATE PREPARED	7/22/2025
ROUTE	65 OR
STATE	MO
DISTRICT	BR
SHEET NO.	26
COUNTY	GREENE
JOB NO.	J8S3158
CONTRACT ID.	
PROJECT NO.	
BRIDGE NO.	A8938

DESCRIPTION	DATE

MISSOURI HIGHWAYS AND TRANSPORTATION COMMISSION
105 WEST CAPITOL
JEFFERSON CITY, MO 65102
1-888-ASK-MODOT (1-888-275-6636)

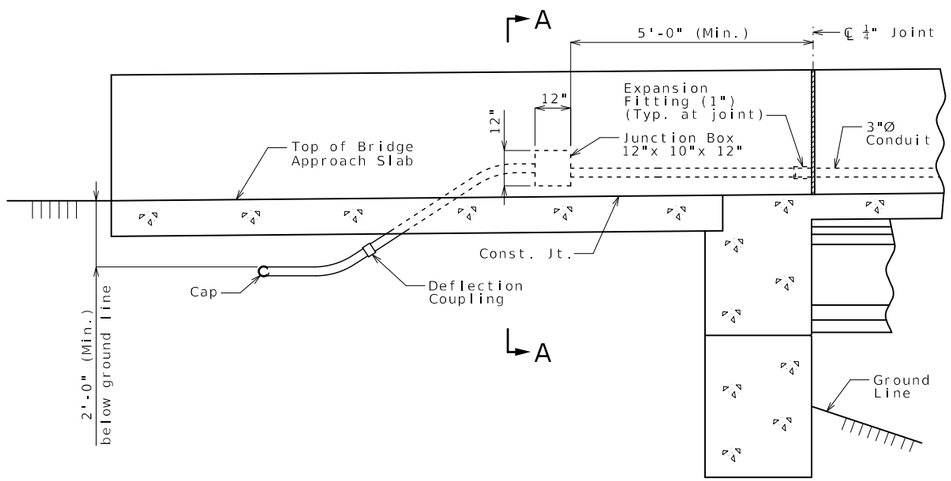

PART ELEVATION SHOWING JUNCTION BOX AT END BENTS

(Left Barrier only)

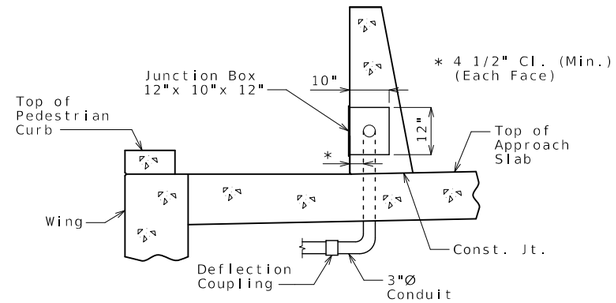

SECTION A-A

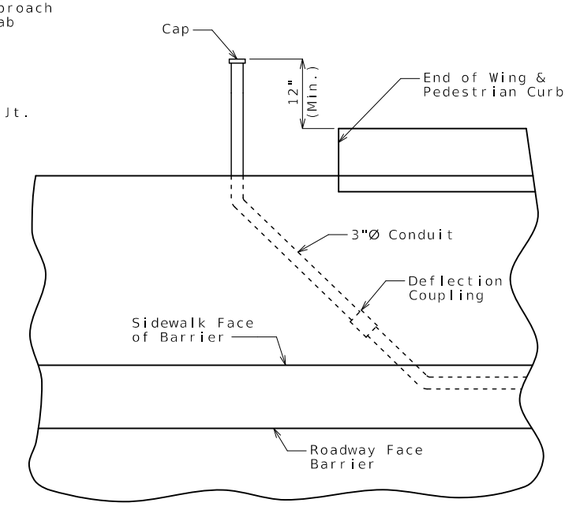

PART PLAN OF LEFT BARRIER SHOWING
CONDUIT SYSTEM AT END BENTS

(End Bent No. 1 shown, End Bent No. 4 similar)

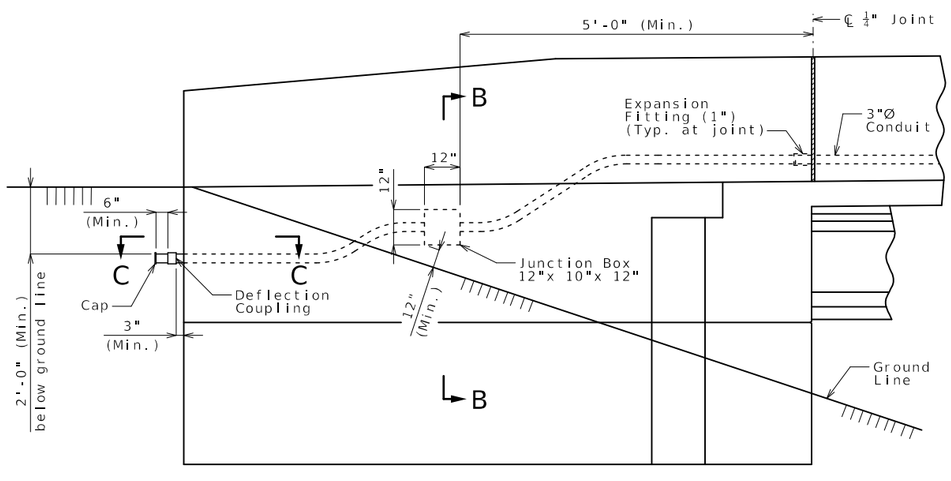

PART ELEVATION SHOWING JUNCTION BOX AT END BENTS

(Right Barrier only)

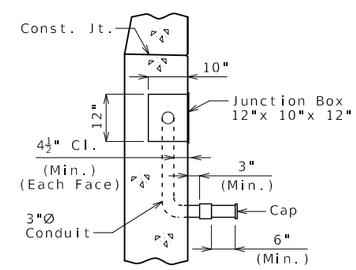

SECTION B-B

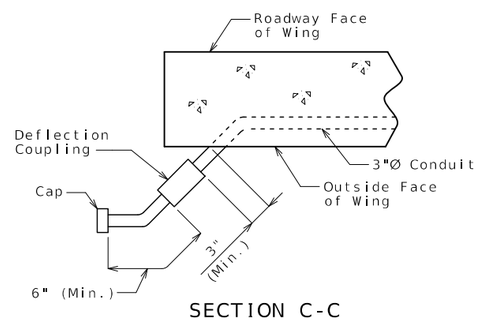

SECTION C-C

Notes:

All conduits shall be rigid nonmetallic schedule 40 heavy wall polyvinyl chloride (PVC) with 3 1/2-inch minimum cover in barrier and 4 1/2-inch minimum cover in abutment wing. Each section of conduit shall bear the Underwriters Laboratories (UL) label.

Shift reinforcing steel in field where necessary to clear conduit and junction boxes.

Expansion fittings shall be placed as shown and set in accordance with the manufacturer's requirements and based on the air temperature at the time of setting given an estimated total expansion movement of one inch at filled joints using a maximum temperature range of 120°F and a maximum temperature of 110°F.

All end bent and barrier junction boxes shall be PVC molded in accordance with Sec 1062 and designed for flush mounting. The conduit terminations shall be permanent or separable. The terminations and covers shall be of watertight construction and shall meet requirements for NEMA 4 or NEMA 4X enclosure.

Drainage shall be provided at low points or other critical locations of all conduits and all junction boxes in accordance with Sec 707. All conduits shall be sloped to drain where possible.

Junction box size shown on plan may require special order. Smaller junction box may be substituted if junction box meets conduit installation, clearance and project requirements.

MoDOT Construction Personnel: Indicate in field and on bridge plans for future work the exact location of buried conduit at ends of bridge that are capped and not immediately used.

Payment for furnishing and installing Conduit System, complete in place, will be considered completely covered by the contract lump sum price for Conduit System on Structure.

DETAILS OF CONDUIT SYSTEM ON STRUCTURE

Detailed May 2025
Checked June 2025

Note: This drawing is not to scale. Follow dimensions.

STATE OF MISSOURI
TYLER R. LINDSAY
NUMBER PE-2019000128
PROFESSIONAL ENGINEER
07/28/2025 8:32:26 AM
TYLER R. LINDSAY - CIVIL
MO-PE-2019000128

DATE PREPARED	
7/28/2025	
ROUTE 65 OR	STATE MO
DISTRICT BR	SHEET NO. 27
COUNTY GREENE	
JOB NO. J8S3158	
CONTRACT ID.	
PROJECT NO.	
BRIDGE NO. A8938	

DATE	DESCRIPTION

MISSOURI HIGHWAYS AND TRANSPORTATION COMMISSION
105 WEST CAPITOL
JEFFERSON CITY, MO 65102
1-888-ASK-MODOT (1-888-275-6636)

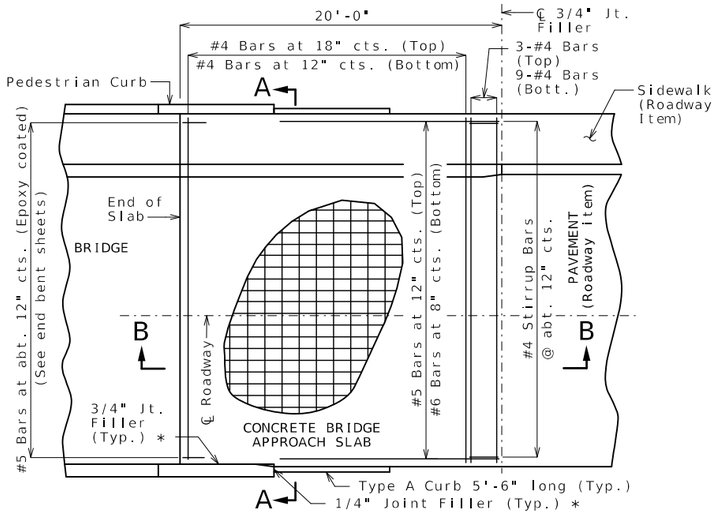

PART PLAN OF SQUARED STRUCTURE
(Skewed structure similar)

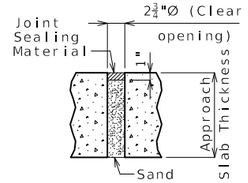

UNDERSEAL ACCESS HOLE DETAIL
(If required)

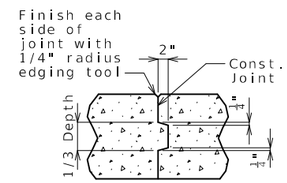

CONSTRUCTION JOINT DETAIL

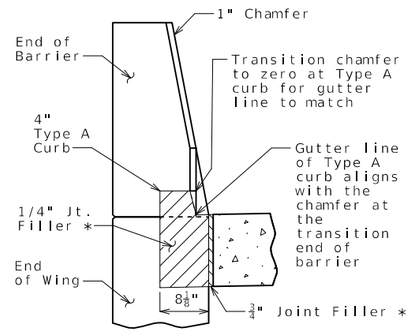

SECTION BETWEEN CURB AND BARRIER

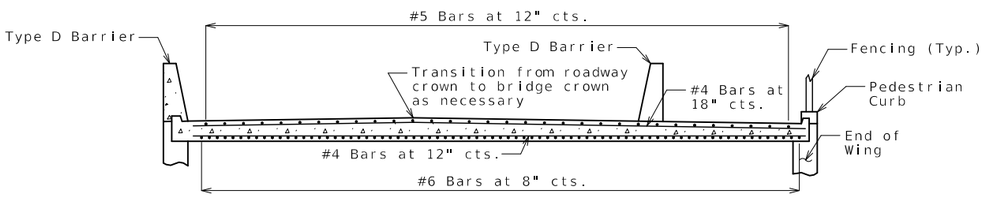

SECTION A-A

With the approval of the engineer, the contractor may crown the bottom of the approach slab to match the crown of the roadway surface.

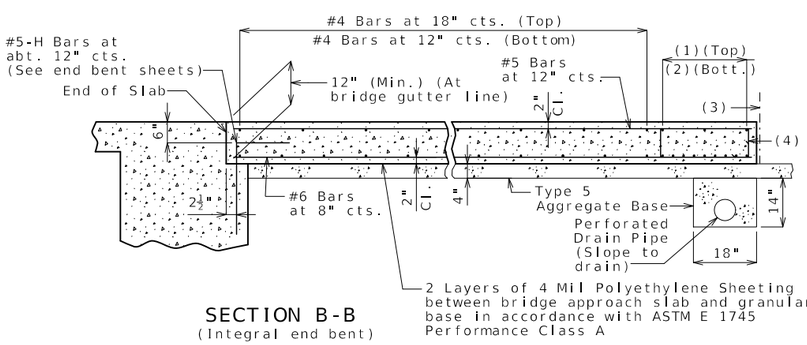

SECTION B-B
(Integral end bent)

(1) 3-#4 Bars

(2) 9-#4 Bars

(3) ℄ 3/4" Jt. Filler

(4) #4 Stirrup Bars at abt. 12" cts.; 2'-0"x 8" (Min.) out to out; Actual length = 5'-10" (Min.); 90° stirrup hook at bottom; Stirrup height (8") and actual length vary due to crown.

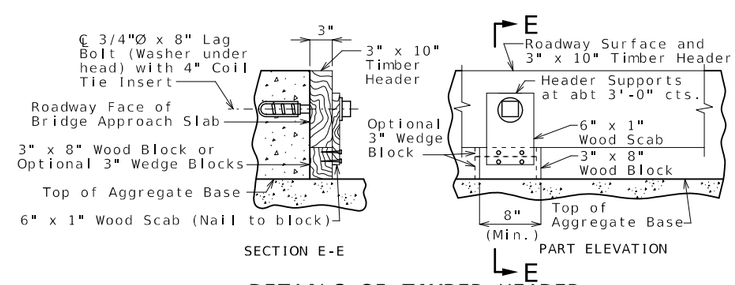

DETAILS OF TIMBER HEADER
Remove timber header when concrete pavement is placed.

General Notes:

All concrete for the bridge approach slab shall be in accordance with Sec 503 (f'c = 4,000 psi).

The reinforcing steel in the bridge approach slab shall be epoxy coated Grade 60 with fy = 60,000 psi.

The contractor shall pour and satisfactorily finish the bridge slab before placing the bridge approach slab.

Drain pipe may be either 6" diameter corrugated metallic-coated pipe underdrain, 4" diameter corrugated polyvinyl chloride (PVC) drain pipe, or 4" diameter corrugated polyethylene (PE) drain pipe.

Longitudinal construction joints in bridge approach slab shall be aligned with longitudinal construction joints in bridge slab.

Minimum clearance to reinforcing steel shall be 1 1/2", unless otherwise shown.

The reinforcing steel in the bridge approach slab shall be continuous. The transverse reinforcing steel may be made continuous by providing a minimum lap splice of 23 inches for #4 bars, or by mechanical bar splice.

Mechanical bar splices shall be in accordance with Sec 710.

All joint filler shall be in accordance with Sec 1057 for preformed fiber expansion joint filler except as noted.

Payment for furnishing all materials, labor and excavation necessary to construct the concrete bridge approach slab, including the timber header, underdrain, Type 5 aggregate base, joint filler, and all other appurtenances and incidental work as shown on this sheet, complete in place, will be considered completely covered by the contract unit price for Bridge Approach Slab (Minor) per square yard.

See Missouri Standard Plan 609.00 for details of Type A curb.

* Seal joint between vertical face of approach slab and wing with sealant in accordance with Sec 717 for silicone joint sealant for saw cut and formed joints.

STATE OF MISSOURI
TYLER R. LINDSAY
NUMBER PE-2019000128
PROFESSIONAL ENGINEER
07/28/2025 8:32:35 AM
TYLER.R.LINDSAY-CIVIL
MO-PE-2019000128

DATE PREPARED	7/28/2025
ROUTE	65 OR
STATE	MO
DISTRICT	BR
SHEET NO.	28
COUNTY	GREENE
JOB NO.	J8S3158
CONTRACT ID.	
PROJECT NO.	
BRIDGE NO.	A8938

DESCRIPTION

DATE

MISSOURI HIGHWAYS AND TRANSPORTATION COMMISSION
105 WEST CAPITOL
JEFFERSON CITY, MO 65102
1-888-ASK-MODOT (1-888-275-6636)

CONCRETE SLAB

BRIDGE APPROACH SLAB (MINOR)

Integral end bents shown, non-integral end bent similar.

Detailed May 2025
Checked June 2025

Note: This drawing is not to scale. Follow dimensions.

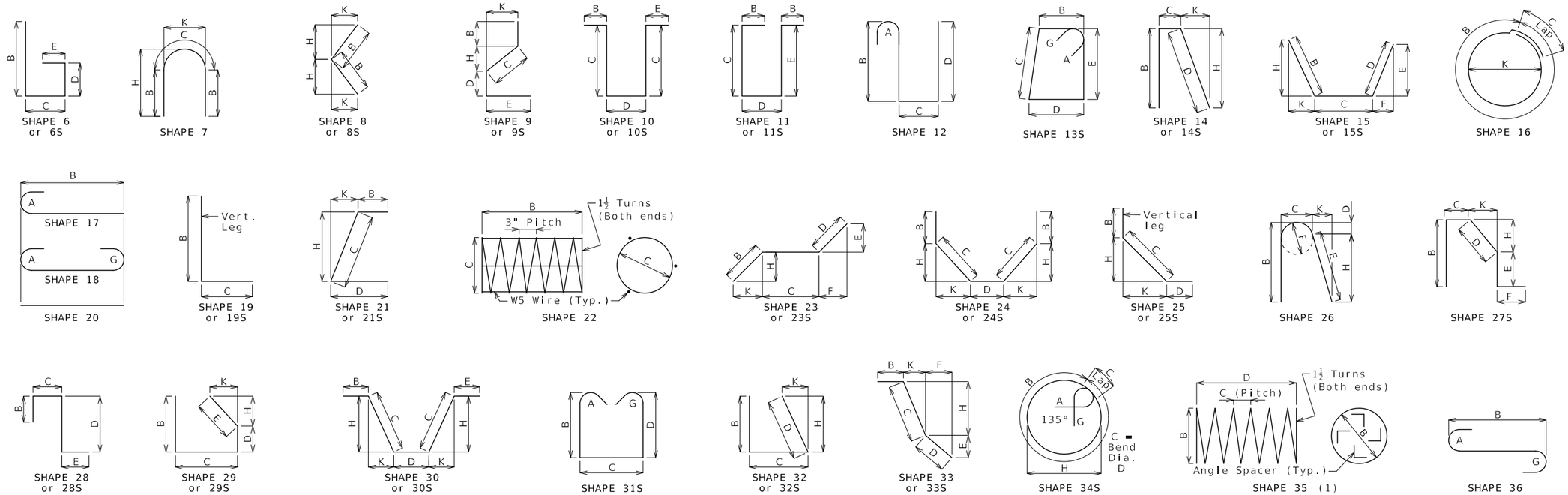

Finished Bend Diameters D and Hook Dimensions

Standard Pin Bend Shapes

Size	Case	D	A or G 90°	A or G 180°	J 180°
#4	1	3"	8"	6"	4"
#5	1	3¾"	10"	7"	5"
#6	1	4½"	12"	8¼"	6"
#7	2	5¼"	14"	9¾"	7"
	3	7"	15"	11½"	8¾"
#8	2	6"	16"	11"	8"
	3	8"	17"	13¼"	10"
#9	1	9½"	19½"	15½"	11¾"
#10	1	10¾"	22"	17½"	13¼"
#11	1	12"	24½"	19½"	14⅞"
#14	1	18¼"	31¼"	27½"	21⅝"
#18	1	24"	41½"	36¼"	28½"

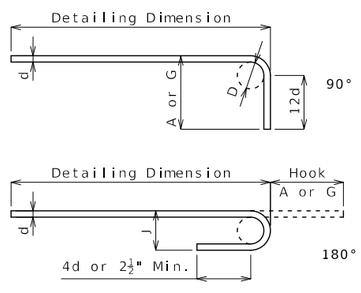

Stirrup Pin Bend Shapes (S)

Size	Case	D	A or G 90°	A or G 135°	A or G 180°	H 135°	J 180°
#4	2	2"	4½"	4½"	5"	2⅞"	3"
	3	3"	5"	5¼"	6"	3"	4"
#5	2	2½"	5¾"	5¾"	5¾"	3⅝"	3¾"
	3	3¾"	6¼"	6½"	7"	3⅞"	5"
#6	1	4½"	12"	7¾"	8¼"	4⅜"	6"

Applicable for all grades of steel.

Case 1 applies to all reinforcement. Case 2 applies to all reinforcement except for galvanized bars. Case 3 applies to galvanized bars only.

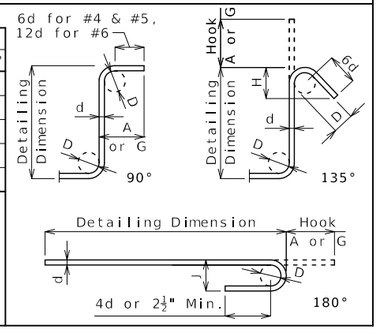

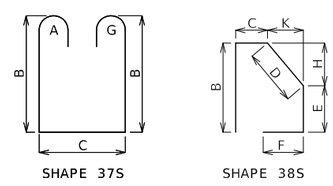

BENDING DIAGRAMS

All dimensions are out to out.

Shapes ending with an S shall be bent in accordance with stirrup pin bend shapes.

Unless otherwise noted, finished bending diameter D is the same for all bends of a shape.

(1) Shall be a deformed or plain spiral bar or wire.

Four angle or channel spacers are required for each column spiral. Spacers are to be placed on inside of spirals. Length and weight of column spirals do not include splices or spacers.

Reinforcing Steel Totals (Pounds)

	Size	Substructure Plain	Substructure Epoxy	Superstructure Slab	Superstructure Barrier	Superstructure Slip Form	Entire Bridge Plain	Entire Bridge Epoxy
By Size	W5	0	0	0	0	0	0	0
	4	534	0	790	838	0	534	1,628
	5	1,198	0	18,904	11,820	605	1,198	31,329
	6	3,004	0	34,471	0	0	3,004	34,471
	7	0	0	8,712	0	0	0	8,712
	8	0	0	990	0	0	0	990
	9	1,872	0	0	0	0	1,872	0
	10	0	0	0	0	0	0	0
	11	0	0	0	0	0	0	0
	14	0	0	0	0	0	0	0
	18	0	0	0	0	0	0	0
By Type		6,608	0	63,867	12,658	605	6,608	77,130

All superstructure reinforcing steel shall be epoxy coated unless otherwise specified.

BENDING DIAGRAMS AND REINFORCING STEEL TOTALS

Detailed May 2025
Checked June 2025

Note: This drawing is not to scale. Follow dimensions.

STATE OF MISSOURI
TYLER R. LINDSAY
NUMBER PE-2019000128
PROFESSIONAL ENGINEER
07/28/2025 8:32:47 AM
TYLER R. LINDSAY - CIVIL
MO-PE-2019000128

DATE PREPARED	7/28/2025
ROUTE	65 OR
STATE	MO
DISTRICT	BR
SHEET NO.	29
COUNTY	GREENE
JOB NO.	J8S3158
CONTRACT ID.	
PROJECT NO.	
BRIDGE NO.	A8938

DESCRIPTION

DATE

MISSOURI HIGHWAYS AND TRANSPORTATION COMMISSION

105 WEST CAPITOL
JEFFERSON CITY, MO 65102
1-888-ASK-MODOT (1-888-275-6636)

Bill of Reinforcing Steel

No. Req.	Size/ Mark	Location	Codes C	Codes SH	Codes V	Dimensions B ft in.	C ft in.	D ft in.	E ft in.	F ft in.	H ft in.	K ft in.	Nom. Length ft in.	Actual Length ft in.	Weight lb
		Substructure													
		Int Bent 2													
18	6 D200	BEAM		20		2 6.00							2 11	2 10	68
8	9 H200	BEAM		18		31 11.00							34 11	34 10	936
10	6 H201	BEAM		20		31 11.00							31 11	31 10	479
14	6 H202	BEAM		18		2 3.00							3 11	3 10	75
4	6 H203	BEAM		20		4 7.00							4 11	4 10	28
14	6 H204	BEAM		10S			12.00	2 7.75					4 11	4 10	91
80	4 P200	CIP PILE		34S		4 2.25	2.00				16.00		5 11	5 10	267
23	5 U200	BEAM		13S		2 9.00	2 9.00	2 9.00	2 9.00				11 11	11 10	278
27	5 U201	BEAM		10S			2 9.00	2 9.00					8 11	8 10	225
4	5 U202	BEAM		13S		2 9.00	3 0.25	2 9.00	3 0.25				12 11	12 10	51
5	5 U203	BEAM		10S			3 0.25	2 9.00					8 11	8 10	45
64	6 V200	CIP PILE		17		7 3.00							7 11	7 10	761
		Int Bent 3													
18	6 D300	BEAM		20		2 6.00							2 11	2 10	68
8	9 H300	BEAM		18		31 11.00							34 11	34 10	936
10	6 H301	BEAM		20		31 11.00							31 11	31 10	479
14	6 H302	BEAM		18		2 3.00							3 11	3 10	75
4	6 H303	BEAM		20		4 7.00							4 11	4 10	28
14	6 H304	BEAM		10S			12.00	2 7.75					4 11	4 10	91
80	4 P300	CIP PILE		34S		4 2.25	2.00				16.00		5 11	5 10	267
23	5 U300	BEAM		13S		2 9.00	2 9.00	2 9.00	2 9.00				11 11	11 10	278
27	5 U301	BEAM		10S			2 9.00	2 9.00					8 11	8 10	225
4	5 U302	BEAM		13S		2 9.00	3 0.25	2 9.00	3 0.25				12 11	12 10	51
5	5 U303	BEAM		10S			3 0.25	2 9.00					8 11	8 10	45
64	6 V300	CIP PILE		17		7 3.00							7 11	7 10	761
		Superstructure													
		End Bent 1													
8	6 F100	WING BRACE	E	15S		20.00	4 10.00	20.00	15.25	13.00	15.25	13.00	8 11	8 10	97
3	6 F101	DIAPHRAGM	E	23S		2 8.25	5 5.00				2 8.00	4.00	8 11	7 10	35
8	6 F102	WING BRACE	E	15S		20.00	5 5.00	20.00	13.25	15.00	13.25	15.00	8 11	8 10	104
3	6 F103	DIAPHRAGM	E	21S			2 8.25	5 8.00			2 8.00	4.00	8 11	8 10	37
8	7 H100	BEAM	E	20		33 8.00							33 11	33 10	551
4	6 H101	BEAM	E	20		33 8.00							33 11	33 10	202
4	7 H102	BEAM	E	20		4 5.00							4 11	4 10	36
4	7 H103	DIAPHRAGM	E	20		33 8.00							33 11	33 10	275
4	6 H104	DIAPHRAGM	E	20		33 8.00							33 11	33 10	202
9	6 H105	DIAPHRAGM	E	20		7 7.00							7 11	7 10	103
3	6 H106	DIAPHRAGM	E	20		5 3.00							5 11	5 10	24
6	6 H107	DIAPHRAGM	E	20		3 2.00							3 11	3 10	29
2	6 H108	DIAPHRAGM	E	20		2 0.00							2 11	2 10	6
4	6 H109	STRAND TIE	E	20		5 9.00							5 11	5 10	35
16	8 H110	WING	E	19		10 6.00	16.00						11 11	11 10	495
36	6 H111	WING	E	19S		9 1.00	12.00						10 11	9 10	536
17	5 U100	BEAM	E	37S		5 4.00	2 9.00						14 11	14 10	251
18	4 U101	BEAM	E	13S		2 9.00	2 8.00	2 9.00	2 8.00				11 11	11 10	136
4	4 U102	BEAM	E	13S		2 9.00	2 11.50	2 9.00	2 11.50				12 11	11 10	32
3	4 U103	BEAM	E	10S			2 8.00	2 9.00					8 11	7 10	16
3	4 U104	BEAM	E	10S			2 11.50	2 9.00					8 11	8 10	17
21	5 U105	DIAPHRAGM	E	37S		3 2.00	2 3.00						9 11	9 10	204
21	6 U106	DIAPHRAGM	E	19S		2 1.75	2 9.00						4 11	4 10	150
42	6 U107	DIAPHRAGM	E	19S		3 0.00	4 6.00						7 11	7 10	463
31	5 U108	APPROACH NOTCH	E	19S		2 0.00	15.00						3 11	3 10	102
8	5 V100	BEAM	E	17		5 4.00							5 11	5 10	49
20	5 V101	DIAPHRAGM	E	20		2 1.00							2 11	2 10	43
2	6 V102	WING	E	20		6 4.00							6 11	6 10	19
16	6 V103	WING	E	20	2	6 5.00							6 11	6 10	
		Incr. = 0.250"				6 7.00							6 7	6 7	156

Bill of Reinforcing Steel

No. Req.	Size/ Mark	Location	Codes C	Codes SH	Codes V	Dimensions B ft in.	C ft in.	D ft in.	E ft in.	F ft in.	H ft in.	K ft in.	Nom. Length ft in.	Actual Length ft in.	Weight lb
2	6 V104	WING	E	20		6 2.00							6 11	6 10	19
16	6 V105	WING	E	20	2	6 2.00							6 11	6 10	
		Incr. = 0.375"				6 5.00							6 5	6 5	151
		End Bent 4													
8	6 F400	WING BRACE	E	15S		20.00	4 10.00	20.00	15.25	13.00	15.25	13.00	8 11	8 10	97
3	6 F401	DIAPHRAGM	E	23S		2 8.25	5 5.00				2 8.00	4.00	8 11	7 10	35
8	6 F402	WING BRACE	E	15S		20.00	5 5.00	20.00	13.25	15.00	13.25	15.00	8 11	8 10	104
3	6 F403	DIAPHRAGM	E	21S			2 8.25	5 8.00			2 8.00	4.00	8 11	8 10	37
8	7 H400	BEAM	E	20		33 8.00							33 11	33 10	551
4	6 H401	BEAM	E	20		33 8.00							33 11	33 10	202
4	7 H402	BEAM	E	20		4 5.00							4 11	4 10	36
4	7 H403	DIAPHRAGM	E	20		33 8.00							33 11	33 10	275
4	6 H404	DIAPHRAGM	E	20		33 8.00							33 11	33 10	202
9	6 H405	DIAPHRAGM	E	20		7 7.00							7 11	7 10	103
3	6 H406	DIAPHRAGM	E	20		5 3.00							5 11	5 10	24
6	6 H407	DIAPHRAGM	E	20		3 2.00							3 11	3 10	29
2	6 H408	DIAPHRAGM	E	20		2 0.00							2 11	2 10	6
4	6 H409	STRAND TIE	E	20		5 9.00							5 11	5 10	35
16	8 H410	WING	E	19		10 6.00	16.00						11 11	11 10	495
36	6 H411	WING	E	19S		9 1.00	12.00						10 11	9 10	536
17	5 U400	BEAM	E	37S		5 4.00	2 9.00						14 11	14 10	251
18	4 U401	BEAM	E	13S		2 9.00	2 8.00	2 9.00	2 8.00				11 11	11 10	136
4	4 U402	BEAM	E	13S		2 9.00	2 11.00	2 9.00	2 11.00				12 11	11 10	32
3	4 U403	BEAM	E	10S			2 8.00	2 9.00					8 11	7 10	16
3	4 U404	BEAM	E	10S			2 11.00	2 9.00					8 11	8 10	17
21	5 U405	DIAPHRAGM	E	37S		3 2.00	2 3.00						9 11	9 10	204
21	6 U406	DIAPHRAGM	E	19S		2 3.00	2 9.00						5 11	4 10	152
42	6 U407	DIAPHRAGM	E	19S		3 0.00	4 6.00						7 11	7 10	463
31	5 U408	APPROACH NOTCH	E	19S		2 0.00	15.00						3 11	3 10	102
8	5 V400	BEAM	E	17		5 4.00							5 11	5 10	49
20	5 V401	DIAPHRAGM	E	20		2 3.00							2 11	2 10	47
2	6 V402	WING	E	20		6 4.00							6 11	6 10	19
16	6 V403	WING	E	20	2	6 4.00							6 11	6 10	
		Incr. = 0.125"				6 5.00							6 5	6 5	153
2	6 V404	WING	E	20		6 4.00							6 11	6 10	19
16	6 V405	WING	E	20	2	6 4.00							6 11	6 10	
		Incr. = 0.250"				6 6.00							6 6	6 6	154
		Int Diaphragms													
12	6 H700	DIAPHRAGM	E	20		5 3.00							5 11	5 10	95
24	4 H701	DIAPHRAGM	E	20		7 11.00							7 11	7 10	127
12	6 H702	DIAPHRAGM	E	20		7 7.00							7 11	7 10	137
8	5 H703	DIAPHRAGM	E	19S		4 6.00	11.50						5 11	5 10	45
24	5 H704	DIAPHRAGM	E	11S	8		4 8.00	11.00	16.00				6 11	6 10	
		Incr. = 2.000"					4 10.00	11.00	18.00				7 3	7	171
8	5 H705	STRAND TIE	E	20		4 6.00							4 11	4 10	38
8	5 H706	STRAND TIE	E	20		5 9.00							5 11	5 10	48
24	6 U700	DIAPHRAGM	E	28S			2 0.00	2 6.00	2 2.00				6 11	6 10	228
24	6 U701	DIAPHRAGM	E	28S			2 0.00	3 5.00	2 2.00				7 11	7 10	261
60	4 U702	DIAPHRAGM	E	28S			2 0.00	3 5.00	15.00				6 11	6 10	261
16	6 U703	DIAPHRAGM	E	28S			16.00	2 6.00	2 2.00				6 11	5 10	136
16	5 V700	DIAPHRAGM	E	20		3 5.00							3 11	3 10	57
		Slab													
116	6 S1	SLAB	E	20		52 1.00							52 11	52 10	9,075
52	7 S2	SLAB	E	20		46 6.00							46 11	46 10	4,942
52	7 S3	SLAB	E	20		19 3.00							19 11	19 10	2,046
16	6 S4	SLAB	E	20	2	3 6.00							3 11	3 10	
		Incr. = 48.875"				32 0.00							32	32	427
386	6 S5	SLAB	E	20		33 5.00							33 11	33 10	19,374
12	5 S6	SLAB	E	20	2	3 0.00							3 11	3 10	
		Incr. = 61.000"				28 5.00							28 5	28 5	197
310	5 S7	SLAB	E	20		33 5.00							33 11	33 10	10,805
116	5 S8	SLAB	E	20		51 7.00							51 11	51 10	6,241

Nominal lengths are based on out to out dimensions shown in bending diagrams and are listed to the nearest inch for fabricator's use. Actual lengths are measured along centerline bar to the nearest inch. Weights are based on actual lengths.

For bending diagrams and steel reinforcing totals, see Sheet No. 29.

All bars shall be Grade 60.

Codes: C = Required coatings, where E = Epoxy Coated and G = Galvanized.

SH = Required shape, see bending diagrams.

V = Sets of varied bars and number of bars of each length. Bar dimensions vary in equal increments between dimensions shown on this line and the following line and the actual length dimension shown on this line and the following line vary by the specified increment.

Detailed May 2025
Checked June 2025

BILL OF REINFORCING STEEL

Note: This drawing is not to scale. Follow dimensions.

STATE OF MISSOURI
TYLER R. LINDSAY
NUMBER PE-2019000128
PROFESSIONAL ENGINEER
07/28/2025 8:32:56 AM
TYLER R. LINDSAY - CIVIL
MO-PE-2019000128

DATE PREPARED 7/28/2025
ROUTE 65 OR
STATE MO
DISTRICT BR
SHEET NO. 30
COUNTY GREENE
JOB NO. J8S3158
CONTRACT ID.
PROJECT NO.
BRIDGE NO. A8938

DESCRIPTION
DATE

MISSOURI HIGHWAYS AND TRANSPORTATION COMMISSION
105 WEST CAPITOL
JEFFERSON CITY, MO 65102
1-888-ASK-MODOT (1-888-275-6636)

Bill of Reinforcing Steel

No. Req.	Size/ Mark	Location	Codes C	Codes SH	Codes V	Dimensions B ft in.	C ft in.	D ft in.	E ft in.	F ft in.	H ft in.	K ft in.	Nom. Length ft in.	Actual Length ft in.	Weight lb
		Barrier													
		Type D													
10	5 K1	BARRIER	E	27S		3 5.00	9.25	5.25	2 11.75		5.25	1.00	7 11	7 10	77
30	5 K2	BARRIER	E	27S		3 5.00	9.25	14.50	2 2.75		14.25	2.75	7 11	7 10	232
52	5 K3	BARRIER	E	27S		22.50	9.25	14.50	7.75	12.00	14.25	2.75	5 11	5 10	280
20	5 K4	BARRIER	E	19S	2	2 4.25	10.00						3 11	3 10	
		Incr. = 0.250"				2 6.25	10.00						3 4	3 3	66
20	5 K5	BARRIER	E	38S	2			18.50	9.50	8.25	18.00	4.00	3 11	2 10	
		Incr. = 0.250"						20.50	9.50	8.25	20.00	4.50	3 2	3 1	63
12	5 K6	BARRIER	E	19S		2 6.75	10.00						3 11	3 10	41
12	5 K7	BARRIER	E	21S			2 6.75	10.00			2 6.00	6.25	3 11	3 10	42
36	5 K8	BARRIER	E	19S	2	2 8.50	10.00						3 11	3 10	
		Incr. = 0.375"				3 2.50	10.00						4 1	3 11	138
36	5 K9	BARRIER	E	21S	2		2 8.50	10.00			2 7.75	6.75	3 11	3 10	
		Incr. = 0.375"					3 2.50	10.00			3 1.75	7.75	4 1	4	141
34	5 K10	BARRIER	E	19S		3 3.00	10.00						4 11	4 10	142
34	5 K11	BARRIER	E	21S			3 3.00	10.00			3 2.25	7.75	4 11	4 10	142
24	5 K12	BARRIER	E	20		19 9.00							19 11	19 10	494
12	5 K13	BARRIER	E	20		10 11.00							10 11	10 10	137
6	5 K14	BARRIER	E	20	2	4 2.00							4 11	4 10	
		Incr. = 36.000"				10 2.00							10 2	10 2	45
12	5 K15	BARRIER	E	20		10 9.00							10 11	10 10	135
6	5 K16	BARRIER	E	20	2	4 0.00							4 11	4 10	
		Incr. = 36.000"				10 0.00							10	10	44
12	5 K17	BARRIER	E	20	4	13 0.00							13 11	13 10	
		Incr. = 36.000"				19 0.00							19	19	200
10	5 K18	BARRIER	E	27S		22.50	9.25	5.25	16.75	12.00	5.25	1.00	5 11	5 10	54
404	5 R1	BARRIER	E	26		3 3.00	5.50	2.25	3 1.25	5.50	3 0.75	6.75	7 11	6 10	2,844
404	5 R2	BARRIER	E	19S		20.50	9.50						2 11	2 10	1,018
404	5 R3	BARRIER	E	27S			9.50	15.25	5.00	12.00	15.00	3.00	3 11	3 10	1,405
80	5 R4	BARRIER	E	20		11 9.00							11 11	11 10	980
10	5 R5	BARRIER	E	20		42 1.00							42 11	42 10	439
40	5 R6	BARRIER	E	20		33 8.00							33 11	33 10	1,405
10	5 R7	BARRIER	E	20		41 10.00							41 11	41 10	436
10	5 R8	BARRIER	E	20		39 3.00							39 11	39 10	409
10	5 R9	BARRIER	E	20		39 5.00							39 11	39 10	411
		Pedestrian Curb													
198	4 R100	PEDESTRIAN CURB	E	10S			12.50	8.00	12.00				3 11	3 10	463
22	4 R101	PEDESTRIAN CURB	E	10S			2 8.00	8.00					6 11	5 10	86
2	4 R102	PEDESTRIAN CURB	E	20		10 8.00							10 11	10 10	14
2	4 R103	PEDESTRIAN CURB	E	20		51 5.00							51 11	51 10	69
4	4 R104	PEDESTRIAN CURB	E	20		45 8.00							45 11	45 10	122
2	4 R105	PEDESTRIAN CURB	E	20		51 4.00							51 11	51 10	69
2	4 R106	PEDESTRIAN CURB	E	20		10 11.00							10 11	10 10	15
		Slip-Form													
40	5 C1	SLIP FORM	E	20		12 0.00							12 11	12 10	501
8	5 C2	SLIP FORM	E	20		8 0.00							8 11	8 10	67
4	5 C3	SLIP FORM	E	20		8 9.00							8 11	8 10	37

Bill of Reinforcing Steel

No. Req.	Size/ Mark	Location	Codes C	Codes SH	Codes V	Dimensions B ft in.	C ft in.	D ft in.	E ft in.	F ft in.	H ft in.	K ft in.	Nom. Length ft in.	Actual Length ft in.	Weight lb

Nominal lengths are based on out to out dimensions shown in bending diagrams and are listed to the nearest inch for fabricator's use. Actual lengths are measured along centerline bar to the nearest inch. Weights are based on actual lengths.

For bending diagrams and steel reinforcing totals, see Sheet No. 29.

All bars shall be Grade 60.

Codes: C = Required coatings, where E = Epoxy Coated and G = Galvanized.

SH = Required shape, see bending diagrams.

V = Sets of varied bars and number of bars of each length. Bar dimensions vary in equal increments between dimensions shown on this line and the following line and the actual length dimension shown on this line and the following line vary by the specified increment.

Detailed May 2025
Checked June 2025

BILL OF REINFORCING STEEL

Note: This drawing is not to scale. Follow dimensions.

STATE OF MISSOURI
TYLER R. LINDSAY
NUMBER PE-2019000128
PROFESSIONAL ENGINEER
07/28/2025 8:33:06 AM
TYLER R. LINDSAY - CIVIL
MO-PE-2019000128

DATE PREPARED 7/28/2025

ROUTE	STATE
65 OR	MO
DISTRICT	SHEET NO.
BR	31

COUNTY GREENE

JOB NO. J8S3158

CONTRACT ID.

PROJECT NO.

BRIDGE NO. A8938

DESCRIPTION	DATE

MISSOURI HIGHWAYS AND TRANSPORTATION COMMISSION
105 WEST CAPITOL
JEFFERSON CITY, MO 65102
1-888-ASK-MODOT (1-888-275-6636)

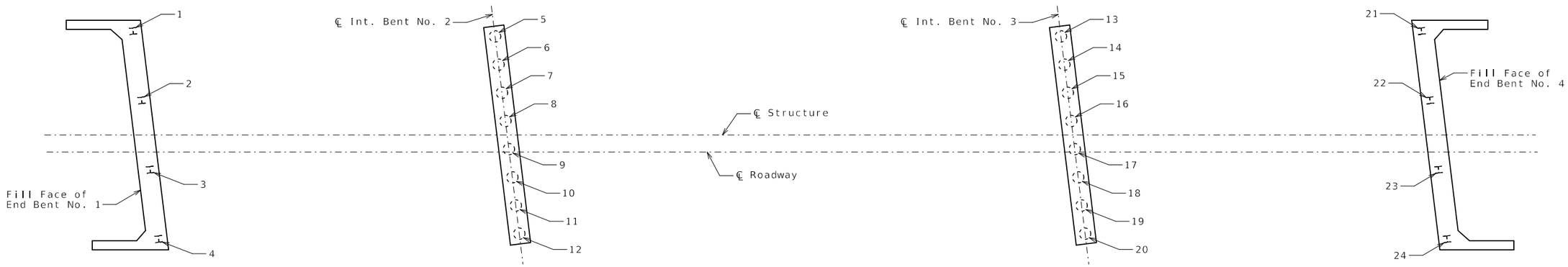

PART PLAN SHOWING PILE NUMBERING FOR RECORDING AS-BUILT PILE DATA

As-Built Pile Data			
Pile No.	Length in Place (ft)	Computed Nominal Axial Compressive Resistance (kips)	Remarks
			End Bent No. 1
1			
2			
3			
4			
			Intermediate Bent No. 2
5			
6			
7			
8			
9			
10			
11			
12			

As-Built Pile Data			
Pile No.	Length in Place (ft)	Computed Nominal Axial Compressive Resistance (kips)	Remarks
			Intermediate Bent No. 3
13			
14			
15			
16			
17			
18			
19			
20			
			End Bent No. 4
21			
22			
23			
24			

Note:
Indicate in remarks column:
A. Pile type and grade
B. Batter
C. Driven to practical refusal

This sheet to be completed by MoDOT construction personnel.

Detailed May 2025
Checked June 2025

Note: This drawing is not to scale. Follow dimensions.

STATE OF MISSOURI
TYLER R. LINDSAY
NUMBER PE-2019000128
PROFESSIONAL ENGINEER
07/24/2025 5:59:06 AM
TYLER.R.LINDSAY-CIVIL
MO-PE-2019000128

DATE PREPARED	7/22/2025
ROUTE	65 OR
STATE	MO
DISTRICT	BR
SHEET NO.	32
COUNTY	GREENE
JOB NO.	J8S3158
CONTRACT ID.	
PROJECT NO.	
BRIDGE NO.	A8938

DESCRIPTION

DATE

MISSOURI HIGHWAYS AND TRANSPORTATION COMMISSION
105 WEST CAPITOL
JEFFERSON CITY, MO 65102
1-888-ASK-MODOT (1-888-275-6636)

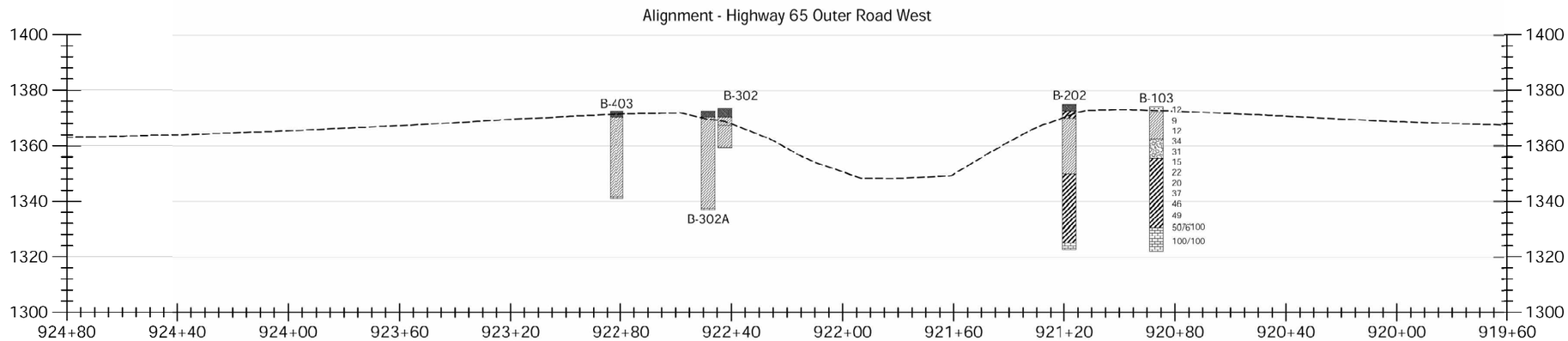

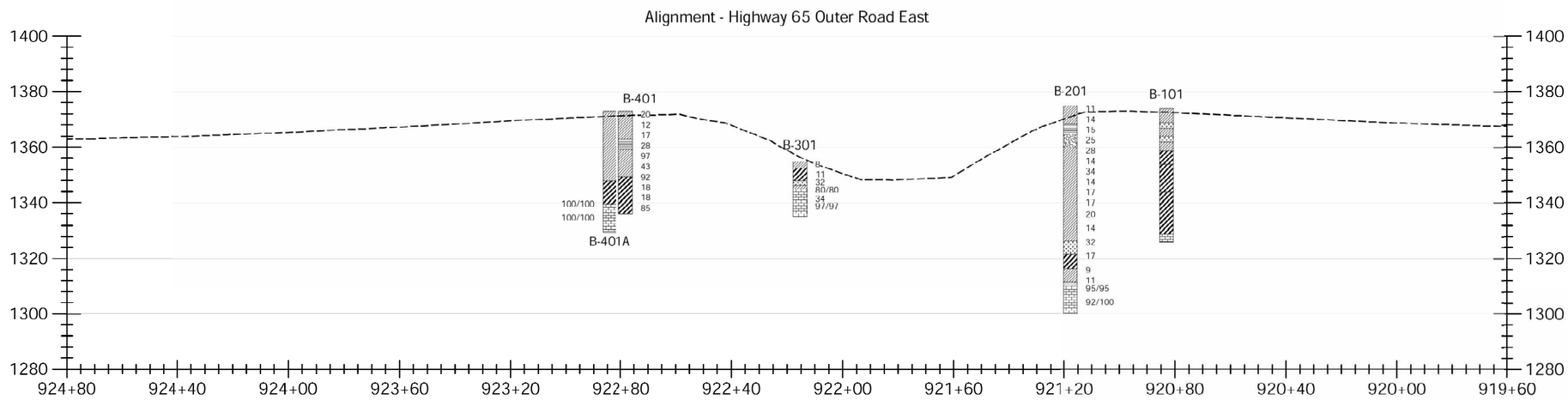

Notes:

1. The subsurface conditions shown are based on interpolation between widely spaced explorations and should be considered approximate; actual subsurface conditions may vary from those shown.
2. This figure is for informational purposes only. It is intended to assist in the identification of features discussed in a related document. Data were compiled from sources as listed in this figure. The data sources do not guarantee these data are accurate or complete. There may have been updates to the data since the publication of this figure. This figure is a copy of a master document. The hard copy is stored by GeoEngineers, Inc. and will serve as the official document of record.

Datum: NAVD 88, unless otherwise noted.

Soil Classification

CL, SP, CH, FILL, GW, GP, SHALE, LIMESTONE

Boring Legend

SPT (N)

40 0 40
Scale In Feet
40 0 40
Vertical Scale in Feet
Vertical Exaggeration: 1X

Subsurface Diagram

MoDOT Bridge A8938
Highway 65 Outer Road over BNSF Railroad
Green County, Missouri

GEOENGINEERS

Figure 3

P:\15\1527302 3\CAD\00\HDD\Boring Location Map\DWG\Boring Location Map.dwg\TAB:FIGURE 3 modified on Apr 13, 2022 - 1:56pm RMARTIN

MF : RBM

STATE OF MISSOURI
TYLER R. LINDSAY
NUMBER PE-2019000128
PROFESSIONAL ENGINEER
07/24/2025 5:59:16 AM
TYLER R. LINDSAY - CIVIL
MO-PE-2019000128

DATE PREPARED	
7/22/2025	
ROUTE: 65 OR	STATE: MO
DISTRICT: BR	SHEET NO.: 33
COUNTY: GREENE	
JOB NO.: J8S3158	
CONTRACT ID.	
PROJECT NO.	
BRIDGE NO.: A8938	

DATE	DESCRIPTION

MISSOURI HIGHWAYS AND TRANSPORTATION COMMISSION
105 WEST CAPITOL
JEFFERSON CITY, MO 65102
1-888-ASK-MODOT (1-888-275-6636)

BORING DATA

Note: For locations of borings, see Sheet No. 1.

Detailed May 2025
Checked June 2025

Note: This drawing is not to scale. Follow dimensions.