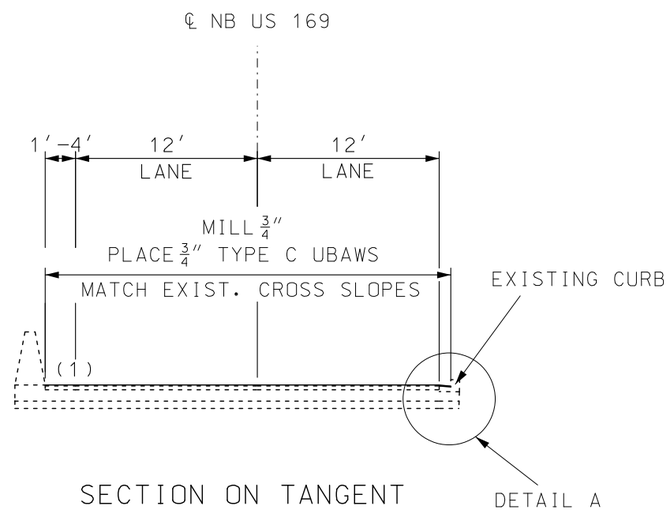

SECTION ON TANGENT
NB US 169
NB LOG MI 1.769 TO 1.907
(FROM NORTH END OF A4649 TO
END OF A4647)

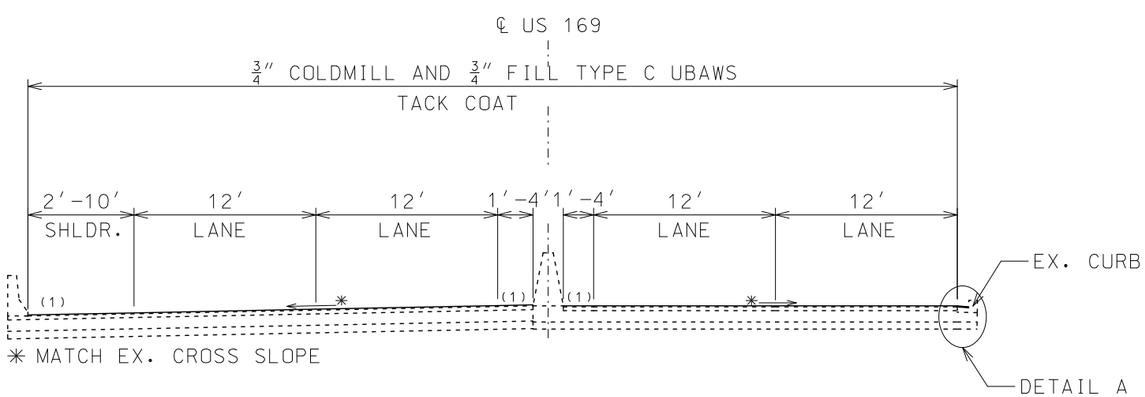

SECTION ON TANGENT
NB & SB US 169
NB LOG MI 1.907 TO 3.479
SB LOG MI 122.487 TO 125.020

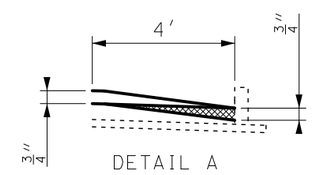

(1) FOR EDGE DROP-OFF BETWEEN EXISTING OVERLAY AND BARRIER, USE SAME MATERIAL AS PARTIAL DEPTH PAVEMENT REPAIR

1 REVISED

NOTE: SEE TYPICAL SECTION SHEET 3 OF 3 FOR BRIDGE EXCEPTION LOCATIONS

TYPICAL SECTION
SHEET 1 OF 3

STATE OF MISSOURI
THANKAM MATHEW
NUMBER PE-2014000056
PROFESSIONAL ENGINEER
10/07/2025 2:34:40 PM
THANKAM MATHEW - CIVIL
MO-PE-2014000056

DATE PREPARED	10/7/2025
ROUTE	169
STATE	MO
DISTRICT	KC
SHEET NO.	2
COUNTY	CLAY
JOB NO.	JKU0064
CONTRACT ID.	
PROJECT NO.	
BRIDGE NO.	

DESCRIPTION	DATE

MISSOURI HIGHWAYS AND TRANSPORTATION COMMISSION
105 WEST CAPITOL
JEFFERSON CITY, MO 65102
1-888-ASK-MODOT (1-888-275-6636)

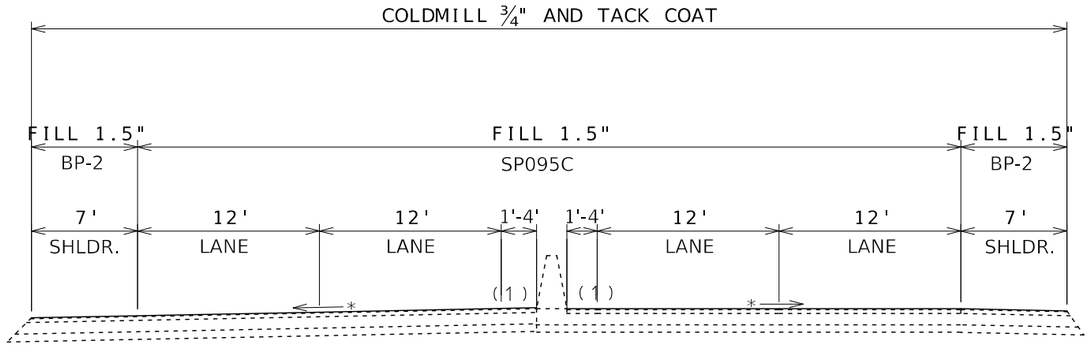

* MATCH THE EX. CROSS SLOPE

SECTION ON TANGENT
NB & SB US 169
NB LOG MI 3.479 TO 5.581
SB LOG MI 121.291 TO 122.487

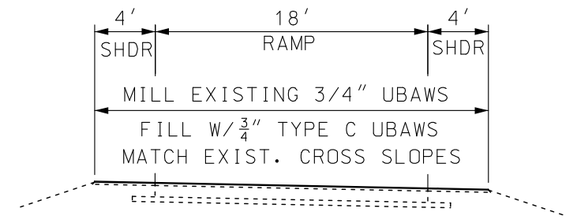

RAMP TYPICAL SECTION

HARLEM/RICHARDS RD
MO ROUTE 9
BRIARCLIFF PKWY ✱✱
VIVION (US 69)

1 REVISED

✱✱ AT BRIARCLIFF PARKWAY RAMPS
MILL TO CONCRETE, FILL WITH 1.5" SP095C PG70-22

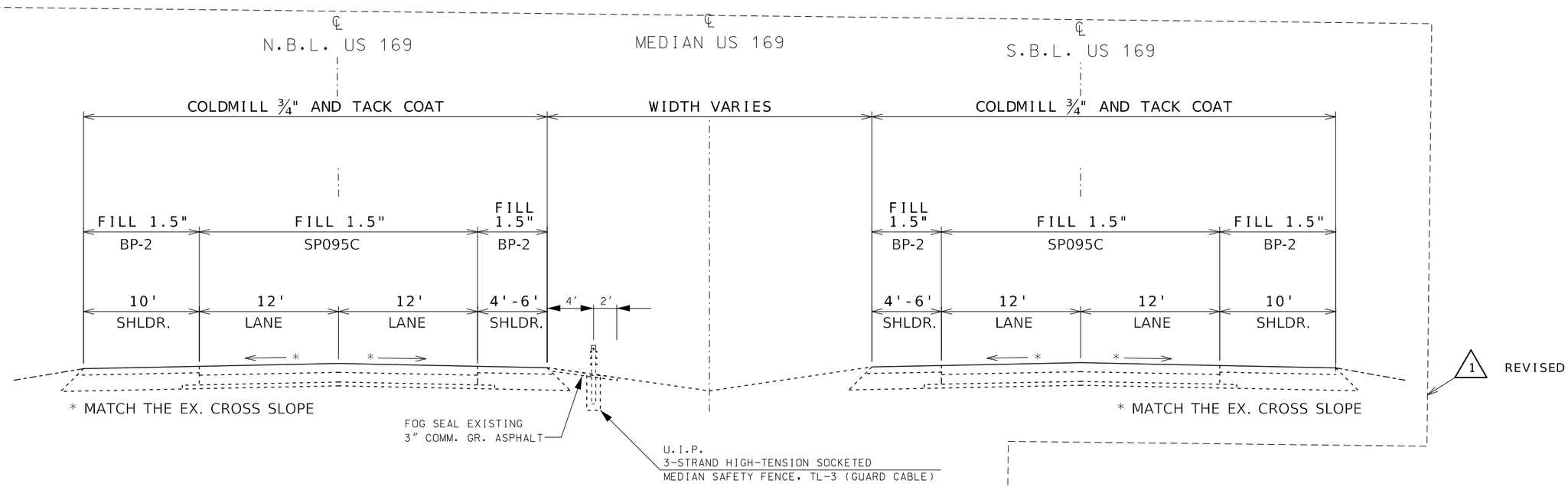

* MATCH THE EX. CROSS SLOPE

* MATCH THE EX. CROSS SLOPE

1 REVISED

SECTION ON TANGENT
NB & SB US 169
S.B. LOG MILE 120.506 TO 121.291
N.B. LOG MILE 5.581 TO 6.370

NOTE: SEE TYPICAL SECTION SHEET 3 OF 3
FOR BRIDGE EXCEPTION LOCATIONS

TYPICAL SECTION
SHEET 2 OF 3

STATE OF MISSOURI
THANKAM MATHEW
NUMBER PE-2014000056
PROFESSIONAL ENGINEER
10/07/2025 3:43 PM
THANKAM MATHEW - CIVIL
MO-PE-2014000056

DATE PREPARED	10/7/2025
ROUTE 169	STATE MO
DISTRICT KC	SHEET NO. 2
COUNTY	CLAY
JOB NO.	JKU0064
CONTRACT ID.	
PROJECT NO.	
BRIDGE NO.	

DESCRIPTION

DATE

MISSOURI HIGHWAYS AND TRANSPORTATION COMMISSION
105 WEST CAPITOL
JEFFERSON CITY, MO 65102
1-888-ASK-MODOT (1-888-275-6636)