MISSOURI HIGHWAYS AND TRANSPORTATION COMMISSION
PLANS FOR PROPOSED
STATE HIGHWAY
JACKSON COUNTY

DESIGN DESIGNATION

A.A.D.T. - 2030 = 6,400
A.A.D.T. - 2050 = 8,100
D.H.V. = 10%
T = 15%
V = 55 M.P.H.
D = 50%/50%

FUNCTIONAL CLASSIFICATION- MAJOR COLLECTOR

NORMAL RIGHT-OF-WAY

CONVENTIONAL SYMBOLS
(USED IN PLANS)

	EXISTING	NEW
BUILDINGS AND STRUCTURES		
GUARD RAIL		
GUARD CABLE		
CONCRETE RIGHT-OF-WAY MARKER		
STEEL RIGHT-OF-WAY MARKER		
LOCATION SURVEY MARKER		
UTILITIES		
FIBER OPTICS	—FO—	—FO—
OVERHEAD CABLE TV	—OTV—	—OTV—
UNDERGROUND CABLE TV	—UTV—	—UTV—
OVERHEAD TELEPHONE	—OT—	—OT—
UNDERGROUND TELEPHONE	—UT—	—UT—
OVERHEAD POWER	—OE—	—OE—
UNDERGROUND POWER	—UE—	—UE—
SANITARY SEWER	—S—	—S—
STORM SEWER	—SS—	—SS—
GAS	—G—	—G—
WATER	—W—	—W—
MANHOLE	SAN	
FIRE HYDRANT	HYD	
WATER VALVE	WV	
WATER METER	WM	
DROP INLET	DI	
DITCH BLOCK		
GROUND MOUNTED SIGN	SIGN	
LIGHT POLE		
H-FRAME POWER POLE		
TELEPHONE PEDESTAL	PED	
FENCE		
CHAIN LINK	—V—	
WOVEN WIRE	—X—	
GATE POST		
BENCHMARK	BM	

NOTE: DASHED OR OPEN SYMBOLS INDICATE EXISTING FEATURES

R30W | R29W

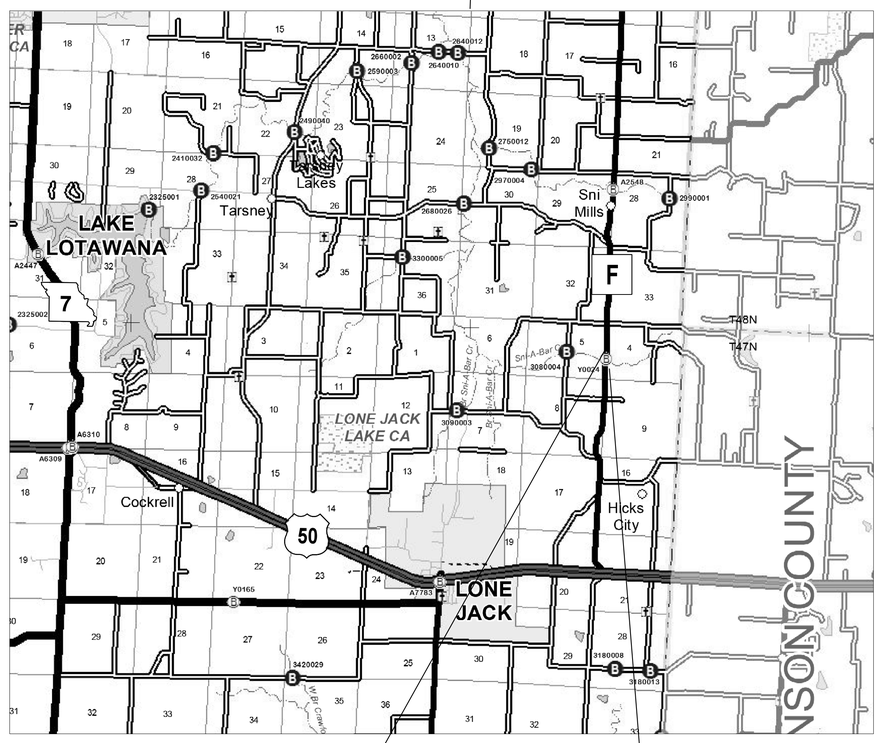

SCALE IN MILES

BEGIN PROJECT
STA. 343+50.00
LOG MI. 7.278

END PROJECT
STA. 351+50.00
LOG MI. 7.430

JOB NO. JKU0110
GRADING, DRAINAGE, PAVEMENT,
AND REPLACE BRIDGE A9583 OVER
A TRIBUTARY TO SNI-A-BAR CREEK
LENGTH = 0.152 MILES

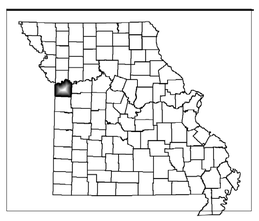

THE EXISTENCE AND APPROXIMATE LOCATION OF UTILITY FACILITIES KNOWN TO EXIST, AS SHOWN ON THE PLANS, ARE BASED ON THE BEST INFORMATION AVAILABLE TO THE COMMISSION AT THIS TIME. THIS INFORMATION IS PROVIDED BY THE COMMISSION "AS-IS" AND THE COMMISSION EXPRESSLY DISCLAIMS ANY REPRESENTATION OR WARRANTY AS TO THE COMPLETENESS, ACCURACY, OR SUITABILITY OF THE INFORMATION FOR ANY USE. RELIANCE UPON THIS INFORMATION IS DONE AT THE RISK AND PERIL OF THE USER, AND THE COMMISSION SHALL NOT BE LIABLE FOR ANY DAMAGES THAT MAY ARISE FROM ANY ERROR IN THE INFORMATION. IT IS, THEREFORE, THE RESPONSIBILITY OF THE CONTRACTOR TO VERIFY THE EXISTENCE, LOCATION AND STATUS OF ANY FACILITY. SUCH VERIFICATION INCLUDES DIRECT CONTACT WITH THE LISTED UTILITIES.

INDEX OF SHEETS

DESCRIPTION	SHEET NUMBER
TITLE SHEET	1
TYPICAL SECTIONS (TS) (1 SHEET)	2
QUANTITIES (QU) (3 SHEETS)	3
PLAN-PROFILE (PP)	4
RIGHT OF WAY (RW)	5
COORDINATE POINTS (CP)	6
TRAFFIC CONTROL SHEETS (TC)	7-8
EROSION CONTROL SHEETS (EC)	9
PAVEMENT MARKING (PM)	10
BRIDGE DRAWINGS (B)	
A9583	1-25
CROSS SECTIONS (XS)	1-11

LENGTH OF PROJECT

BEGINNING OF PROJECT STA. 343 + 50.00
END OF PROJECT STA. 351 + 50.00

APPARENT LENGTH 800.00 FEET

EQUATIONS AND EXCEPTIONS:

TOTAL CORRECTIONS 0.00 FEET
NET LENGTH OF PROJECT 800.00 FEET
STATE LENGTH 0.152 MILES

FOR INFORMATION ONLY
ESTIMATED DISTURBED ACRES 0.856 ACRES

STATE OF MISSOURI
MICHELE R. KEAL
NUMBER PE-2005000711
PROFESSIONAL ENGINEER
THIS SHEET HAS BEEN SIGNED, SEALED AND DATED ELECTRONICALLY.

DATE PREPARED 9/16/2025

ROUTE	STATE
F	MO
DISTRICT	SHEET NO.
KC	1

COUNTY JACKSON
JOB NO. JKU0110
CONTRACT ID.
PROJECT NO.
BRIDGE NO. A9583

DATE	DESCRIPTION

IF A SEAL IS PRESENT ON THIS SHEET IT HAS BEEN ELECTRONICALLY SEALED AND DATED.

MISSOURI HIGHWAYS AND TRANSPORTATION COMMISSION
105 WEST CAPITOL
JEFFERSON CITY, MO 65102
1-888-ASK-MODOT (1-888-275-6636)

benesch
4435 MAIN STREET, SUITE 1150
KANSAS CITY, MO 64111
913/441-1100, FAX 913/441-1468
CERTIFICATE OF AUTHORITY NUMBER F00970024

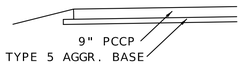

OPTIONAL PAVEMENT DESIGN
9" JPCP @ 15'JOINTS W/ 1.25" DOWELS
ON 6" TYPE 5 AGGR. FOR BASE

RTE. F
P.C.C.P.DESIGN

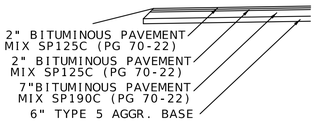

OPTIONAL PAVEMENT DESIGN
11" HMA
ON 6" TYPE 5 AGGR. FOR BASE

RTE. F
HMA DESIGN

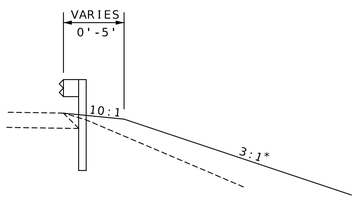

GUARDRAIL GRADING

GUARDRAIL LT.
STA. 345+78.52 TO STA. 346+79.65
STA. 347+97.15 TO STA. 349+98.28

GUARDRAIL RT.
STA. 344+78.52 TO STA. 346+79.65
STA. 347+97.15 TO STA. 348+98.28

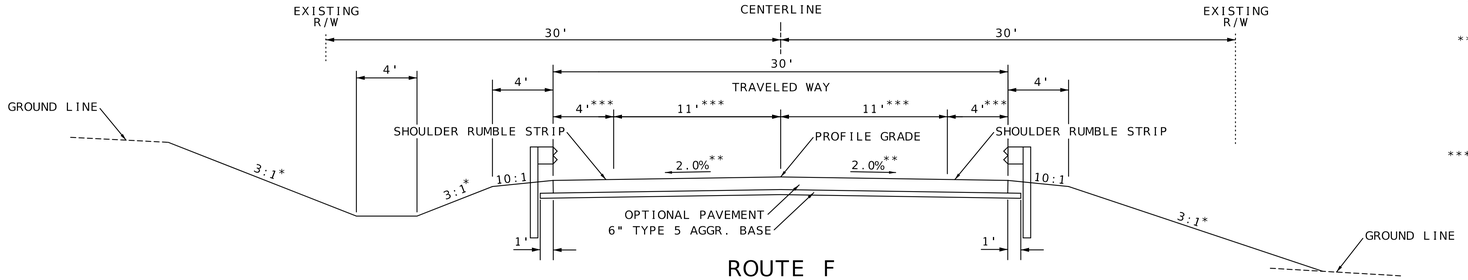

ROUTE F
TYPICAL ROAD SECTION
STA. 345+95.00 TO STA. 346+70.15
STA. 348+06.65 TO STA. 348+85.00

* SEE INDIVIDUAL CROSS SECTIONS FOR VARIATIONS

** CROSS SLOPE TRANSITIONS:
STA. 345+95.00 TO STA. 346+25.00
TRANSITION LEFT -1.86% TO -2.00%
STA. 345+95.00 TO STA. 346+25.00
TRANSITION RIGHT -0.83% TO -2.00%
STA. 348+70.00 TO STA. 348+85.00
TRANSITION LEFT -2.00% TO -2.03%
STA. 348+70.00 TO STA. 348+85.00
TRANSITION RIGHT -2.00% TO -2.58%

*** ROADWAY WIDTH:
STA. 345+95.00 MATCH EXISTING
14.8' LT & 14.7' RT
STA. 345+95.00 TO STA. 346+05.00
TRANSITION LT & RT
STA. 346+05.00 TO STA. 348+75.00
15.0' LT & 15.0' RT
STA. 348+75.00 TO STA. 348+85.00
TRANSITION LT & RT
STA. 348+85.00 MATCH EXISTING
15.4' LT & 15.3' RT

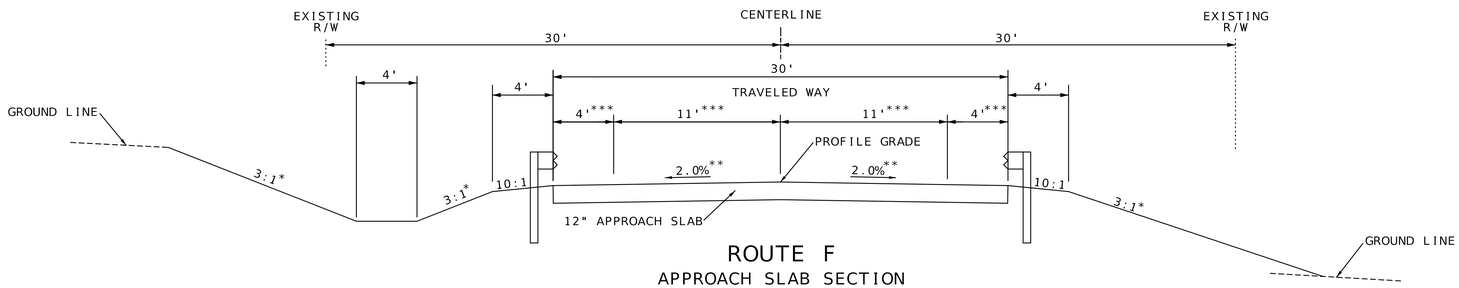

ROUTE F
APPROACH SLAB SECTION
STA. 346+70.15 TO STA. 346+90.15
STA. 347+86.65 TO STA. 348+06.65

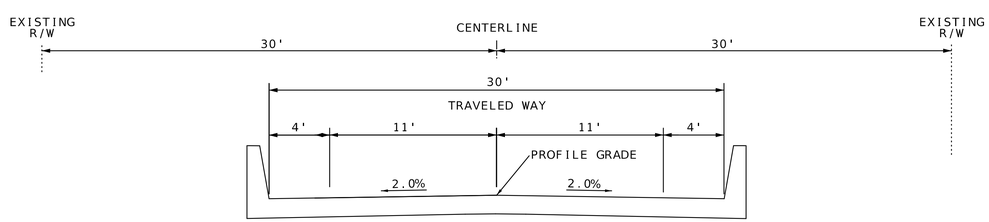

ROUTE F
PROPOSED BRIDGE A9583
STA. 346+90.15 TO STA. 347+86.65

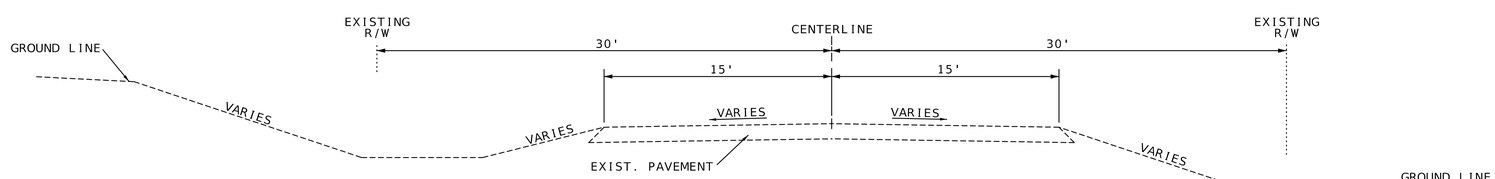

EXISTING ROAD SECTION
TYPICAL ROUTE F

TYPICAL SECTIONS
SHEET 1 OF 1

STATE OF MISSOURI
MICHELE R. KEAL
NUMBER PE-2005000711
PROFESSIONAL ENGINEER
THIS SHEET HAS BEEN SIGNED, SEALED AND DATED ELECTRONICALLY.

DATE PREPARED	
9/16/2025	
ROUTE F	STATE MO
DISTRICT KC	SHEET NO. 2
COUNTY JACKSON	
JOB NO. JKU0110	
CONTRACT ID.	
PROJECT NO.	
BRIDGE NO. A9583	

DESCRIPTION	DATE

IF A SEAL IS PRESENT ON THIS SHEET IT HAS BEEN ELECTRONICALLY SEALED AND DATED.

MISSOURI HIGHWAYS AND TRANSPORTATION COMMISSION
105 WEST CAPITOL
JEFFERSON CITY, MO 65102
1-888-ASK-MODOT (1-888-275-6636)

benesch
4435 MAIN STREET, SUITE 1150
KANSAS CITY, MO 64111
913/441-1100, FAX 913/441-1468
CERTIFICATE OF AUTHORITY NUMBER F00970024

REMOVAL OF IMPROVEMENTS

SHEET	STATION	STATION	LOCATION	SIDE	DESCRIPTION	QUANTITY	UNITS
4	345+67.52	346+62.48	RTE F	LT	FENCE	95.0	LF
4	345+88.96	348+64.61	RTE F	LT	GUARDRAIL	275.7	LF
4	345+89.98	348+67.61	RTE F	RT	GUARDRAIL	277.6	LF
4	345+95.00	-	RTE F	CL	SAWCUT	29.5	LF
4	345+95.00	348+85.00	RTE F	CL	PAVEMENT	983.6	SY
4	348+21.63	350+59.78	RTE F	LT	FENCE	238.2	LF
4	348+85.00	-	RTE F	CL	SAWCUT	30.7	LF
					TOTAL	1	LS

CLEARING AND GRUBBING

SHEET	BEGIN STATION	END STATION	(AC)
8	343+50.00	351+50.00	0.6
		TOTAL	0.6
		PAY TOTAL	1

TEMPORARY SEEDING

	TEMPORARY SEEDING (AC)
TOTALS	0.2

* QNTY is 25% of Permanent Seed quantity

MOBILIZATION

1 LUMP SUM

CONTRACTOR FURNISHED SURVEYING & STAKING

1 LUMP SUM

OPTIONAL PAVEMENT

SHEET	BEGIN STATION	END STATION	LOCATION	MAINLINE OPTIONAL A 11" HMA (SY)	MAINLINE OPTIONAL B 9" PCCP 15' JOINTS 1.25" DIA. DOWELS (SY)	TYPE 5 AGGREGATE BASE (6") (SY)	REMARKS
4	345+95.00	346+70.15	RTE F	250.2	250.2	250.2	
4	348+06.65	348+85.00	RTE F	261.7	261.7	261.7	
			TOTALS	512.0	512.0	512.0	
			PAY TOTALS	512.0		512	

EARTHWORK

BEGIN STATION	END STATION	LOCATION	CLASS A EXCAVATION (CY)	COMPACTING EMBANKMENT (CY)	COMPACTING IN CUT (STA)	WASTE (CY)	REMARKS
344+14.53	350+59.78	RTE F	2,472	1,544	2	542	
		TOTALS	2,472	1,544	2		

NOTE: EXCESS MATERIAL SHALL BE DISPOSED OF BY THE CONTRACTOR OFF RIGHT-OF-WAY AT NO DIRECT PAY.

GUARDRAIL

SHEET	BEGIN STATION	END STATION	LOCATION	SIDE	MGS GUARDRAIL (LF)	TYPE A CRASHWORTHY END TERMINAL (MASH) (EA)	MGS BRIDGE APPROACH TRANSITION (EA)	REMARKS
4	344+78.52	346+79.65	RTE F	RT	112.5	1	1	
4	345+78.52	346+79.65	RTE F	LT	12.5	1	1	
4	347+97.15	348+98.28	RTE F	RT	12.5	1	1	
4	347+97.15	349+98.28	RTE F	LT	112.5	1	1	
				TOTALS	250.0	4	4	
				PAY TOTALS	250	4	4	

PERMANENT PAVEMENT MARKING

SHEET	BEGIN STATION	END STATION	LOCATION	SIDE	CLASS I HIGH BUILD PAINT TYPE P BEADS 4" SOLID WHITE (LF)	CLASS I HIGH BUILD PAINT TYPE P BEADS 4" SOLID YELLOW (LF)	REMARKS
10	345+95.00	348+85.00	RTE F	LT	290.0		EDGE LINE
10	345+95.00	348+85.00	RTE F	RT	290.0		EDGE LINE
10	345+95.00	348+85.00	RTE F	LT		72.5	INTERMITTENT CENTERLINE
10	345+95.00	348+85.00	RTE F	RT		290.0	SOLID CENTERLINE
				TOTALS	580.0	362.5	
				PAY TOTALS	580	363	

EROSION CONTROL

SHEET	BEGIN STATION	END STATION	LOCATION	SIDE	SILT FENCE (LF)	TYPE 3B EROSION CONTROL BLANKET (SY)	ROCK DITCH CHECK (LF)	ALTERNATE DITCH CHECK (LF)	SEDIMENT REMOVAL (CY)	TYPE C BERM (LF)	REMARKS
9	344+14.53	345+00.00	RTE F	RT		189.1					
9	344+14.53	347+23.23	RTE F	RT	311.7				2		
9	345+14.88	347+25.11	RTE F	LT	222.8				3		
9	347+13.85	347+19.93	RTE F	CL						76.2	
9	347+51.1	347+64.27	RTE F	CL						109.4	
9	347+58.03	349+20.74	RTE F	RT	178.6				2		
9	347+66.31	349+13.02	RTE F	LT	146.7				1		
9	346+90.00		RTE F	RT			10		1		
9	349+10.00	350+59.78	RTE F	LT		331.3					
9	349+45.00	350+55.00	RTE F	LT				110	11		11 DITCH CHECKS AT 11' SPACING
9	350+00.00	350+59.78	RTE F	LT		60.3					
				TOTALS	859.86	580.7	10.0	110.0	20.0	185.6	
				PAY TOTALS	860	581	10	110	20	186	

SUMMARY OF QUANTITIES
SHEET 1 OF 3

STATE OF MISSOURI
MICHELE R. KEAL
NUMBER PE-2005000711
PROFESSIONAL ENGINEER
THIS SHEET HAS BEEN SIGNED, SEALED AND DATED ELECTRONICALLY.

DATE PREPARED 9/17/2025
ROUTE F | STATE MO
DISTRICT KC | SHEET NO. 3
COUNTY JACKSON
JOB NO. JKU0110
CONTRACT ID.
PROJECT NO.
BRIDGE NO. A9583

DESCRIPTION | DATE

IF A SEAL IS PRESENT ON THIS SHEET IT HAS BEEN ELECTRONICALLY SEALED AND DATED.

MISSOURI HIGHWAYS AND TRANSPORTATION COMMISSION
105 WEST CAPITOL
JEFFERSON CITY, MO 65102
1-888-ASK-MODOT (1-888-275-6636)

benesch
4435 MAIN STREET, SUITE 1150
KANSAS CITY, MO 64111
913/441-1100, FAX 913/441-1468
CERTIFICATE OF AUTHORITY NUMBER F00970024

PERMANENT EROSION CONTROL

SHEET	BEGIN STATION	END STATION	LOCATION	SIDE	FURNISHING TYPE 2 ROCK BLANKET (CY)	PLACING TYPE 2 ROCK BLANKET (CY)	GEOTEXTILE FABRIC (SY)	PLACING ROCK DITCH LINER TYPE 3 (CY)	FURNISHING ROCK DITCH LINER TYPE 3 (CY)
4	346+70.15	347+17.40	RTE F	CL	294.2	294.2	441.3		
4	347+54.11	347+86.65	RTE F	CL	263.0	263.0	394.5		
9	348+70.77	349+12.50	RTE F	RT				21.8	21.8
9	349+10.00	349+44.70	RTE F	LT				17.6	17.6
TOTALS					557.2	557.2	835.8	39.4	39.4
PAY TOTALS					557	557	836	39	39

SEEDING AND MULCHING

SHEET	BEGIN STATION	END STATION	LOCATION	SIDE	COOL SEASON MIXTURES (AC)	MULCHING (AC)	REMARKS
9	344+14.53	346+70.15	RTE F	RT	0.2	0.2	
9	345+17.03	346+70.15	RTE F	LT	0.1	0.1	
9	347+86.65	349+14.81	RTE F	RT	0.1	0.1	
9	347+86.65	350+59.78	RTE F	LT	0.2	0.2	
TOTALS					0.6	0.6	
PAY TOTALS					1	1	

RUMBLE STRIPS

SHEET	BEGIN STATION	END STATION	LOCATION	SIDE	OPTIONAL RUMBLE STRIP (STA)	REMARKS
4	345+95.00	346+70.15	RTE F	LT	0.8	PAVEMENT BEGIN TO APPROACH
4	345+95.00	346+70.15	RTE F	RT	0.8	PAVEMENT BEGIN TO APPROACH
4	348+06.65	348+85.00	RTE F	LT	0.8	APPROACH TO PAVEMENT END
4	348+06.65	348+85.00	RTE F	RT	0.8	APPROACH TO PAVEMENT END
TOTALS					3.2	
PAY TOTALS					3.2	

SUMMARY OF QUANTITIES
SHEET 2 OF 3

STATE OF MISSOURI
MICHELE R. KEAL
NUMBER PE-2005000711
PROFESSIONAL ENGINEER
THIS SHEET HAS BEEN SIGNED, SEALED AND DATED ELECTRONICALLY.

DATE PREPARED 9/16/2025
ROUTE F | STATE MO
DISTRICT KC | SHEET NO. 3
COUNTY JACKSON
JOB NO. JKU0110
CONTRACT ID.
PROJECT NO.
BRIDGE NO. A9583

DESCRIPTION	DATE

IF A SEAL IS PRESENT ON THIS SHEET IT HAS BEEN ELECTRONICALLY SEALED AND DATED.

MISSOURI HIGHWAYS AND TRANSPORTATION COMMISSION
105 WEST CAPITOL
JEFFERSON CITY, MO 65102
1-888-ASK-MODOT (1-888-275-6636)

benesch
4435 MAIN STREET, SUITE 1150
KANSAS CITY, MO 64111
913/441-1100, FAX 913/441-1468
CERTIFICATE OF AUTHORITY NUMBER F00970024

SIGN	SIZE IN.	AREA SQ.FT.	QTY EACH	TOTAL AREA SQ.FT.	QTY RELOC EACH	TOTAL RELOC SQ.FT.	SIGN NO.	DESCRIPTION
WARNING SIGNS								
WO1-1L	48X48	16.00						TURN (SYMBOL LEFT)
WO1-1R	48X48	16.00						TURN (SYMBOL RIGHT)
WO1-2L	48X48	16.00						CURVE (SYMBOL LEFT)
WO1-2R	48X48	16.00						CURVE (SYMBOL RIGHT)
WO1-3L	48X48	16.00						REVERSE TURN (SYMBOL LEFT)
WO1-3R	48X48	16.00						REVERSE TURN (SYMBOL RIGHT)
WO1-4L	48X48	16.00						REVERSE CURVE (SYMBOL LEFT)
WO1-4R	48X48	16.00						REVERSE CURVE (SYMBOL RIGHT)
WO1-4bL	48X48	16.00						DOUBLE ARROW REVERSE CURVE (SYMBOL LEFT)
WO1-4bR	48X48	16.00						DOUBLE ARROW REVERSE CURVE (SYMBOL RIGHT)
WO1-4cL	48X48	16.00						TRIPLE ARROW REVERSE CURVE (SYMBOL LEFT)
WO1-4cR	48X48	16.00						TRIPLE ARROW REVERSE CURVE (SYMBOL RIGHT)
WO1-6	60X30	12.50						HORIZONTAL ARROW (SYMBOL)
WO1-6a	72X36	18.00						HORIZ. ARROW (SYMBOL ON PERMANENT BARRICADE)
WO1-7	60X30	12.50						DOUBLE HEAD HORIZONTAL ARROW (SYMBOL)
WO1-7a	72X36	18.00						DOUBLE HEAD HORIZ. ARROW (SYMBOL ON PERM. BARR.)
WO1-8	18X24	3.00						CHEVRON (SYMBOL)
WO1-8a	30X36	7.50						CHEVRON (SYMBOL FOR DIVIDED HIGHWAYS)
WO3-1	48X48	16.00						STOP AHEAD (SYMBOL)
WO3-2	48X48	16.00						YIELD AHEAD (SYMBOL)
WO3-3	48X48	16.00						SIGNAL AHEAD (SYMBOL)
WO3-4	48X48	16.00						BE PREPARED TO STOP
WO3-5	48X48	16.00						SPEED LIMIT AHEAD
WO4-1L	48X48	16.00						MERGE (SYMBOL FROM LEFT)
WO4-1R	48X48	16.00						MERGE (SYMBOL FROM RIGHT)
WO4-1aL	48X48	16.00						MERGE (LEFT)
WO4-1aR	48X48	16.00						MERGE (RIGHT)
WO5-1	48X48	16.00						ROAD/BRIDGE/RAMP NARROWS
WO5-3	48X48	16.00						ONE LANE BRIDGE
WO5-5	48X48	16.00						NARROW LANES
WO6-1	48X48	16.00						DIVIDED HIGHWAY (SYMBOL)
WO6-2	48X48	16.00						DIVIDED HIGHWAY END (SYMBOL)
WO6-3	48X48	16.00						TWO WAY TRAFFIC (SYMBOL)
WO7-3a	30X24	5.00						NEXT XX MILES (PLAQUE)
WO8-1	48X48	16.00						BUMP
WO8-2	48X48	16.00						DIP
WO8-3	48X48	16.00						PAVEMENT ENDS
WO8-4	48X48	16.00						SOFT SHOULDER
WO8-5	48X48	16.00						SLIPPERY WHEN WET (SYMBOL)
WO8-6	48X48	16.00						TRUCK CROSSING
WO8-6c	48X48	16.00						TRUCK ENTRANCE
WO8-7	36X36	9.00						LOOSE GRAVEL
WO8-7a	36X36	9.00						FRESH OIL / LOOSE GRAVEL
WO8-9	48X48	16.00						LOW SHOULDER
WO8-11	48X48	16.00						UNEVEN LANES
WO8-12	48X48	16.00						NO CENTER LINE
WO8-15	48X48	16.00						GROOVED PAVEMENT
WO8-15P	30X24	5.00						MOTORCYCLE (PLAQUE)
WO8-17L	48X48	16.00						SHOULDER DROP-OFF (SYMBOL LEFT)
WO8-17R	48X48	16.00						SHOULDER DROP-OFF (SYMBOL RIGHT)
WO8-17P	30X24	5.00						SHOULDER DROP-OFF (PLAQUE)
W10-1	42RND.	9.62						RAILROAD CROSSING
WO12-1	24X24	4.00						DOUBLE DOWN ARROW (SYMBOL)
WO12-2	48X48	16.00						LOW CLEARANCE (SYMBOL)
WO12-2x	24X18	3.00						LOW CLEARANCE (PLAQUE)
WO12-2a	84X24	14.00						OVERHEAD LOW CLEARANCE (FEET AND INCHES)
WO12-4	120X60	50.00						LOW CLEARANCE XX FT XX IN XX MILES AHEAD
WO12-5	120X60	50.00						WIDTH RESTRICTION XX FT XX IN XX MILES AHEAD
WO13-1	30X30	6.25						ADVISORY SPEED (PLAQUE)
WO16-2	30X24	5.00						XXX FEET (PLAQUE)
WO16-3	30X24	5.00						X MILE (PLAQUE)
WO20-1	48X48	16.00						ROAD/BRIDGE/RAMP WORK AHEAD
WO20-2	48X48	16.00	3	48.00			52	DETOUR AHEAD
WO20-3	48X48	16.00	5	80.00			1,3	ROAD CLOSED AHEAD
WO20-4	48X48	16.00						ONE LANE ROAD AHEAD
WO20-5	48X48	16.00						RIGHT/CENTER/LEFT LANE CLOSED AHEAD
WO20-5a	48X48	16.00						2 RIGHT/CENTER/LEFT LANES CLOSED AHEAD
WO20-6a	48X48	16.00						RIGHT/CENTER/LEFT LANE CLOSED
WO20-7a	48X48	16.00						FLAGGER (SYMBOL)
WO21-2	36X36	9.00						FRESH OIL
WO21-5	48X48	16.00						SHOULDER WORK / SHOULDER WORK AHEAD
WO22-1	48X48	16.00						BLASTING ZONE AHEAD
WO22-2	42X36	10.50						TURN OFF 2-WAY RADIO AND PHONE
WO22-3	42X36	10.50						END BLASTING ZONE
GO22-1	21X15	2.19						WET PAINT (ARROW PIVOTS)

SIGN	SIZE IN.	AREA SQ.FT.	QTY EACH	TOTAL SQ.FT.	QTY RELOC EACH	TOTAL RELOC SQ.FT.	SIGN NO.	DESCRIPTION
GUIDE SIGNS								
E05-1	36X48	12.00						GORE EXIT
E05-2	48X36	12.00						EXIT OPEN
E05-2a	48X36	12.00						EXIT CLOSED
GO20-1	60X24	10.00						ROAD WORK NEXT XX MILES
GO20-2	48X24	8.00						END ROAD WORK
GO20-4	36X18	4.50						PILOT CAR FOLLOW ME
GO20-4a	42X30	8.75						PILOT CAR IN USE WAIT & FOLLOW
GO20-4a	18X12	1.50						PILOT CAR IN USE WAIT & FOLLOW
GO20-5aP	36X24	6.00						WORK ZONE (PLAQUE)
MO4-8a	24X18	3.00	2	6.00			51	END DETOUR
MO4-9L	48X36	12.00						DETOUR (LEFT)
MO4-9R	48X36	12.00						DETOUR (RIGHT)
MO4-9P	48X12	4.00						STREET NAME (PLAQUE)
MO4-10L	48X18	6.00						DETOUR ARROW (LEFT)
MO4-10R	48X18	6.00						DETOUR ARROW (RIGHT)
REGULATORY SIGNS								
R1-1	48X48	13.25						STOP
R1-2	48TRI.	6.93						YIELD
R1-2a	36X36	9.00						TO ONCOMING TRAFFIC (PLAQUE)
R1-3P	30X12	2.50						ALL WAY (PLAQUE)
R2-1	36X48	12.00						SPEED LIMIT XX
R3-1	48X48	16.00						NO RIGHT TURN (SYMBOL)
R3-2	48X48	16.00						NO LEFT TURN (SYMBOL)
R3-3	36X36	9.00						NO TURNS
R3-4	48X48	16.00						NO U-TURN (SYMBOL)
R3-7L	30X30	6.25						LEFT LANE MUST TURN LEFT
R3-7R	30X30	6.25						RIGHT LANE MUST TURN RIGHT
R4-1	36X48	12.00						DO NOT PASS
R4-2	36X48	12.00						PASS WITH CARE
R4-7a	36X48	12.00						KEEP RIGHT (HORIZONTAL ARROW)
R4-8a	36X48	12.00						KEEP LEFT (HORIZONTAL ARROW)
R5-1	30X30	6.25						DO NOT ENTER
R5-1a	36X24	6.00						WRONG WAY
R6-1L	54X18	6.75						ONE WAY ARROW (LEFT)
R6-1R	54X18	6.75						ONE WAY ARROW (RIGHT)
R6-2L	24X30	5.00						ONE WAY (LEFT)
R6-2R	24X30	5.00						ONE WAY (RIGHT)
R9-9	24X12	2.00						SIDEWALK CLOSED
R9-11L	24X18	3.00						SIDEWALK CLOSED AHEAD, (ARROW LEFT) CROSS HERE
R9-11R	24X18	3.00						SIDEWALK CLOSED AHEAD, (ARROW RIGHT) CROSS HERE
R10-6	24X36	6.00						STOP HERE ON RED (45^ ARROW)
R11-2	48X30	10.00	2	20.00			2	ROAD CLOSED
R11-3a	60X30	12.50	2	25.00			61B	ROAD CLOSED XX MILES AHEAD LOCAL TRAFFIC ONLY
R11-4	60X30	12.50	2	25.00			62	ROAD CLOSED TO THRU TRAFFIC
CONST-3A	60X48	20.00						FINE SIGN
CONST-3X	56X12	4.67						SPEEDING/PASSING (PLATE)
MISCELLANEOUS SIGNS								
CONST-5	48X36	12.00						POINT OF PRESENCE
CONST-5	96X48	32.00						POINT OF PRESENCE
CONST-8	48X36	12.00						WORK ZONE NO PHONE ZONE
SPECIAL	36X78	19.50	3	58.50			50A	DETOUR ASSEMBLY SOUTH/LEFT
SPECIAL	36X78	19.50	3	58.50			50B	DETOUR ASSEMBLY NORTH/RIGHT
SPECIAL	36X78	19.50	6	117.00			50C	DETOUR ASSEMBLY NORTH/STRAIGHT
SPECIAL	36X78	19.50	8	156.00			50D	DETOUR ASSEMBLY SOUTH/STRAIGHT
SPECIAL	36X78	19.50	2	39.00			50E	DETOUR ASSEMBLY NORTH/DIAGONAL RIGHT
SPECIAL	36X78	19.50	2	39.00			50F	DETOUR ASSEMBLY SOUTH/DIAGONAL RIGHT
SPECIAL	36X78	19.50	2	39.00			50G	DETOUR ASSEMBLY SOUTH/RIGHT
SPECIAL	36X78	19.50	3	58.50			50H	DETOUR ASSEMBLY NORTH/LEFT
SPECIAL	114X54	42.75	2	85.50			SP-1	MO. RTE F CLOSED 7 MILES FOLLOW DETOUR

616-10.05 CONSTRUCTION SIGNS	TOTAL	855.00
616-10.10 RELOCATED SIGNS	TOTAL	0

EFFECTIVE: 07-01-2025

ITEM NUMBER	TOTAL QTY	DESCRIPTION
6122008		IMPACT ATTENUATOR 40 MPH (SAND BARRELS)
6122009		IMPACT ATTENUATOR 45 MPH (SAND BARRELS)
6122010		IMPACT ATTENUATOR 50 MPH (SAND BARRELS)
6122012		IMPACT ATTENUATOR 55 MPH (SAND BARRELS)
6122014		IMPACT ATTENUATOR 60 MPH (SAND BARRELS)
6122017		IMPACT ATTENUATOR 65 MPH (SAND BARRELS)
6122019		IMPACT ATTENUATOR 70 MPH (SAND BARRELS)
6122020		REPLACEMENT SAND BARREL
6122030		IMPACT ATTENUATOR (RELOCATION)
6122040		WORK ZONE CRASH CUSHION (NARROW)
6122041		WORK ZONE CRASH CUSHION (RELOCATION)
6123001		TRUCK MOUNTED ATTENUATOR (TMA)
6161012		BUOYS (BOATS KEEP OUT)
6161013		BUOYS (NO WAKE)
6161014		SPECIAL SIGN ASSEMBLY (BOATS KEEP OUT)
6161020		CHANNELIZER (DRUM-LIKE)
6161022		CHANNELIZER (CONE)
6161025		CHANNELIZER (TRIM-LINE)
6161026		CHANNELIZER (VERTICAL PANEL)
6161030	14	TYPE 3 MOVEABLE BARRICADE
6161033		DIRECTION INDICATOR BARRICADE
6161040		FLASHING ARROW PANEL
6161047		TYPE 3 OBJECT MARKER
6161055		SEQUENTIAL FLASHING WARNING LIGHT
6161070		TUBULAR MARKER
6161095		RADAR SPEED ADVISORY SYSTEM
6161096		CHANGEABLE MESSAGE SIGN, COMMISSION FURNISHED/RETAINED
6161098A	7	CHANGEABLE MESSAGE SIGN WITHOUT COMM. INTERFACE, CONTRACTOR FURNISHED/RETAINED
6161099		CHANGEABLE MESSAGE SIGN WITH COMM. INTERFACE, CONTRACTOR FURNISHED/RETAINED
6162000A		WORK ZONE TRAFFIC SIGNAL SYSTEM
6162002		TEMPORARY LONG-TERM RUMBLE STRIPS
6173600D		TEMPORARY TRAFFIC BARRIER, CONTRACTOR FURNISHED/RETAINED
6173700B		TEMP. TRAFFIC BARRIER ANCHORED, CONTRACTOR FURNISHED/RETAINED
6173706		TEMP. TRAFFIC BARRIER STIFFNESS TRANSITION CONTRACTOR FURNISHED/RETAINED
6174000A		TEMP. TRAFFIC BARRIER HEIGHT TRANSITION, CONTRACTOR FURNISHED/RETAINED
6175010A		RELOCATING TEMPORARY TRAFFIC BARRIER
6175011B		RELOCATING TEMP. TRAFFIC BARRIER ANCHORED
6175013		RELOCATING TEMP. TRAFFIC BARRIER STIFFNESS
6175020A		RELOCATING TEMP. TRAFFIC BARRIER HEIGHT
6208064A		TEMPORARY RAISED PAVEMENT MARKER
9029400		TEMPORARY TRAFFIC SIGNALS
9029401		TEMPORARY TRAFFIC SIGNALS AND LIGHTING

SUMMARY OF QUANTITIES
SHEET 3 OF 3

STATE OF MISSOURI
MICHELE R. KEAL
NUMBER PE-2005000711
PROFESSIONAL ENGINEER
THIS SHEET HAS BEEN SIGNED, SEALED AND DATED ELECTRONICALLY.

DATE PREPARED 9/16/2025
ROUTE F | STATE MO
DISTRICT K-C | SHEET NO. 3
COUNTY JACKSON
JOB NO. JKU0110
CONTRACT ID. .
PROJECT NO. .
BRIDGE NO. A9583

DESCRIPTION	DATE
.	.
.	.
.	.
.	.
.	.
.	.
.	.

IF A SEAL IS PRESENT ON THIS SHEET IT HAS BEEN ELECTRONICALLY SEALED AND DATED.

MISSOURI HIGHWAYS AND TRANSPORTATION COMMISSION
105 WEST CAPITOL
JEFFERSON CITY, MO 65102
1-888-ASK-MODOT (1-888-275-6636)

benesch
4435 MAIN STREET, SUITE 1150
KANSAS CITY, MO 64111
913/441-1100, FAX 913/441-1468
CERTIFICATE OF AUTHORITY NUMBER F00970024

NOT TO SCALE SW CORNER OF SEC. 4-T47N-R29W

00° 01' 28"
N 02° 05' 13" E SEC. LINE
N 02° 06' 41" E 2153.95 FT.
S 02° 00' 15" W ℄ RTE. F
BEGIN PROJECT STA. 343+50.00
N 88° 00' 50" W SEC. LINE

SECTION CORNER TIE
SW CORNER SEC. 4 T47N R29W
FND. COTTON PICKER SPINDLE
N: 1,002,183.993 E: 2,893,383.201

STA 345+78.52 TO 346+79.65 ℄ RTE. F LT.
BUILD (1) MGS BRIDGE APPROACH TRANSITION, 12.5' MGS GUARDRAIL, AND
(1) TYPE A CRASHWORTHY END TERMINAL (MASH)

STA 345+95 TO STA 346+70.15 ℄ RTE. F
BUILD 250.2 SY OPTIONAL PAVEMENT

STA 346+70.15 TO STA 347+17.40 RTE.F
BUILD 294.2 CY TYPE 2 ROCK BLANKET
441.3 SY PERMANENT EROSION CONTROL GEOTEXTILE

STA 347+54.11 TO STA 347+86.65 RTE.F
BUILD 263.0 CY TYPE 2 ROCK BLANKET
394.5 SY PERMANENT EROSION CONTROL GEOTEXTILE

STA 347+97.15 TO 349+98.28 ℄ RTE. F LT.
BUILD (1) MGS BRIDGE APPROACH TRANSITION, 112.5' MGS GUARDRAIL, AND
(1) TYPE A CRASHWORTHY END TERMINAL (MASH)

STA 348+06.65 TO STA 348+85 ℄ RTE. F
BUILD 261.7 SY OPTIONAL PAVEMENT

SCALE
0 50 100 150

LEGEND
ROCK DITCH LINER TYPE 3

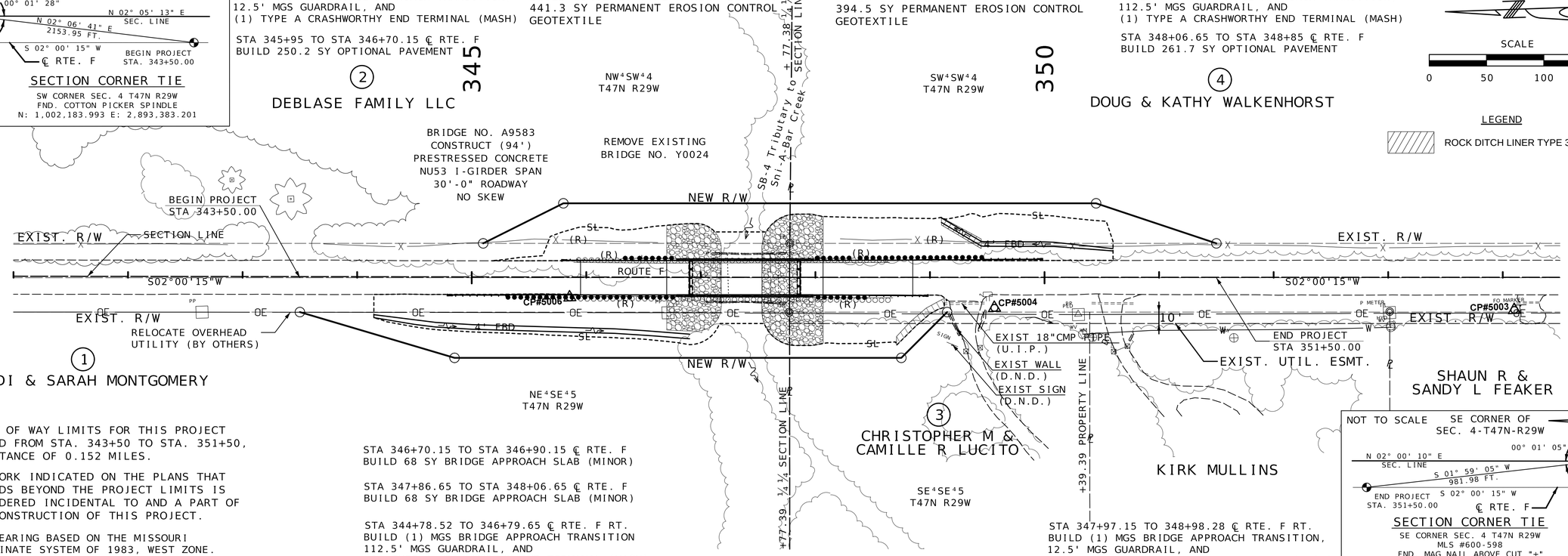

RIGHT OF WAY LIMITS FOR THIS PROJECT EXTEND FROM STA. 343+50 TO STA. 351+50, A DISTANCE OF 0.152 MILES.

ANY WORK INDICATED ON THE PLANS THAT EXTENDS BEYOND THE PROJECT LIMITS IS CONSIDERED INCIDENTAL TO AND A PART OF THE CONSTRUCTION OF THIS PROJECT.

ALL BEARING BASED ON THE MISSOURI COORDINATE SYSTEM OF 1983, WEST ZONE.
PROJECT AVERAGE GRID FACTOR = 0.99991530

STA 346+70.15 TO STA 346+90.15 ℄ RTE. F
BUILD 68 SY BRIDGE APPROACH SLAB (MINOR)

STA 347+86.65 TO STA 348+06.65 ℄ RTE. F
BUILD 68 SY BRIDGE APPROACH SLAB (MINOR)

STA 344+78.52 TO 346+79.65 ℄ RTE. F RT.
BUILD (1) MGS BRIDGE APPROACH TRANSITION
112.5' MGS GUARDRAIL, AND
(1) TYPE A CRASHWORTHY END TERMINAL (MASH)

STA 347+97.15 TO 348+98.28 ℄ RTE. F RT.
BUILD (1) MGS BRIDGE APPROACH TRANSITION, 12.5' MGS GUARDRAIL, AND
(1) TYPE A CRASHWORTHY END TERMINAL (MASH)

NOT TO SCALE SE CORNER OF SEC. 4-T47N-R29W

00° 01' 05"
N 02° 00' 10" E SEC. LINE
S 01° 59' 05" W 981.98 FT.
END PROJECT STA. 351+50.00
S 02° 00' 15" W ℄ RTE. F
N 87° 56' 44" W SEC. LINE

SECTION CORNER TIE
SE CORNER SEC. 4 T47N R29W
MLS #600-598
FND. MAG NAIL ABOVE CUT "+"
N: 998,250.603 E: 2,893,241.858

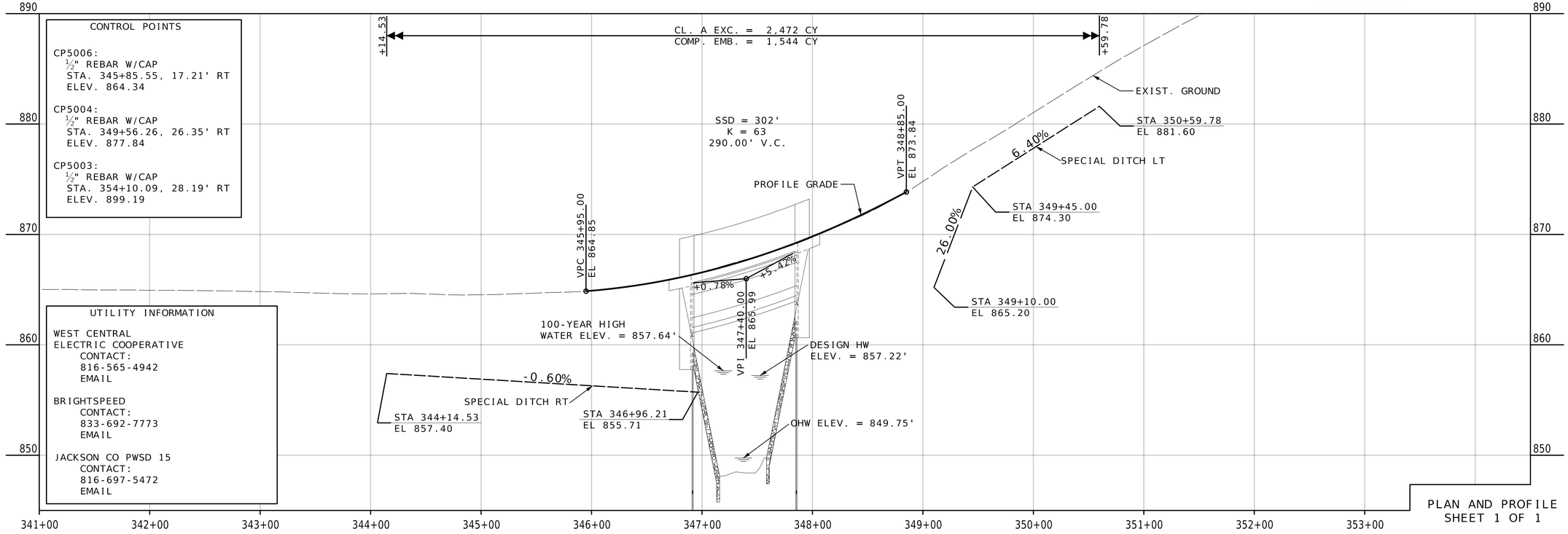

PLAN AND PROFILE
SHEET 1 OF 1

STATE OF MISSOURI
MICHELE R. KEAL
NUMBER PE-2005000711
PROFESSIONAL ENGINEER
THIS SHEET HAS BEEN SIGNED, SEALED AND DATED ELECTRONICALLY.

DATE PREPARED	9/18/2025
ROUTE F	STATE MO
DISTRICT KC	SHEET NO. 4
COUNTY	JACKSON
JOB NO.	JKU0110
CONTRACT ID.	
PROJECT NO.	
BRIDGE NO.	A9583

DESCRIPTION

DATE

IF A SEAL IS PRESENT ON THIS SHEET IT HAS BEEN ELECTRONICALLY SEALED AND DATED.

MISSOURI HIGHWAYS AND TRANSPORTATION COMMISSION
105 WEST CAPITOL
JEFFERSON CITY, MO 65102
1-888-ASK-MODOT (1-888-275-6636)

benesch
4435 MAIN STREET, SUITE 1150
KANSAS CITY, MO 64111
913/441-1100, FAX 913/441-1468
CERTIFICATE OF AUTHORITY NUMBER F00970024

NOT TO SCALE SW CORNER OF SEC. 4-T47N-R29W

00° 01' 28"
N 02° 05' 13" E
SEC. LINE
N 02° 06' 41" E
2153.95 FT.
S 02° 00' 15" W
℄ RTE. F
BEGIN PROJECT
STA. 343+50.00
N 88° 00' 50" W
SEC. LINE

SECTION CORNER TIE
SW CORNER SEC. 4 T47N R29W
FND. COTTON PICKER SPINDLE
N: 1,002,183.993 E: 2,893,383.201

SCALE
0 50 100 150

345

350

② DEBLASE FAMILY LLC
0.19 AC.(8,149 SF) NEW R/W
158.14 AC.(6,899,663 SF) REMAINING

④ DOUG & KATHY WALKENHORST
0.26 AC.(11,189 SF) NEW R/W
34.20 AC.(1,489,724 SF) REMAINING

NW¼SW¼
T47N R29W

SW¼SW¼
T47N R29W

+77.38 ¼ SECTION LINE

SB-4 Tributary to Sni-A-Bar Creek

+10.00 30.00' LT.
+80.00 65.00' LT.
+77.98 65.00' LT.
+77.66 30.00' LT.
+45.00 65.00' LT.
+50.00 30.00' LT.

NEW R/W

BEGIN PROJECT
STA 343+50.00

BEGIN PROJECT
STA 351+50.00

EXIST. R/W

SECTION LINE

ROUTE F

S02°00'15"W

EXIST. UTIL. ESMT.

10'

DND
36"TREE

+50.00 30.00' RT.
+85.00 70.00' RT.
+77.41 30.00' RT.
+77.41 40.00' RT.
+77.44 70.00' RT.
+75.00 70.00' RT.
+05.00 40.00' RT.
+15.00 30.00' RT.

+39.39 PROPERTY LINE

+01.32 PROPERTY LINE

KIRK MULLINS

SHAUN R & SANDY L FEAKER

① CODI & SARAH MONTGOMERY
0.33 AC.(14,397 SF) NEW R/W
37.62 AC.(1,638,630 SF) REMAINING

③ CHRISTOPHER M & CAMILLE R LUCITO
0.11 AC.(4,703 SF) NEW R/W
(INCL. 1,326 SF IN EXIST PERM. ESMT.)
4.89 AC.(213,051 SF) REMAINING

+77.39 ¼ SECTION LINE

NE¼SE¼
T47N R29W

SE¼SE¼
T47N R29W

NOT TO SCALE SE CORNER OF SEC. 4-T47N-R29W

00° 01' 05"
N 02° 00' 10" E
SEC. LINE
S 01° 59' 05" W
981.98 FT.
END PROJECT
STA. 351+50.00
S 02° 00' 15" W
℄ RTE. F
N 87° 56' 44" W
SEC. LINE

SECTION CORNER TIE
SE CORNER SEC. 4 T47N R29W
MLS #600-598
FND. MAG NAIL ABOVE CUT "+"
N: 998,250.603 E: 2,893,241.858

RIGHT OF WAY LIMITS FOR THIS PROJECT EXTEND FROM STA. 343+50 TO STA. 351+50, A DISTANCE OF 0.152 MILES.

ALL BEARING BASED ON THE MISSOURI COORDINATE SYSTEM OF 1983, WEST ZONE. PROJECT AVERAGE GRID FACTOR = 0.99991530

RIGHT OF WAY
SHEET 1 OF 1

STATE OF MISSOURI
MICHELE R. KEAL
NUMBER PE-2005000711
PROFESSIONAL ENGINEER
THIS SHEET HAS BEEN SIGNED, SEALED AND DATED ELECTRONICALLY.

DATE PREPARED	9/16/2025
ROUTE	F
STATE	MO
DISTRICT	KC
SHEET NO.	5
COUNTY	JACKSON
JOB NO.	JKU0110
CONTRACT ID.	
PROJECT NO.	
BRIDGE NO.	A9583

DESCRIPTION

DATE

IF A SEAL IS PRESENT ON THIS SHEET IT HAS BEEN ELECTRONICALLY SEALED AND DATED.

MISSOURI HIGHWAYS AND TRANSPORTATION COMMISSION
105 WEST CAPITOL
JEFFERSON CITY, MO 65102
1-888-ASK-MODOT (1-888-275-6636)

benesch
4435 MAIN STREET, SUITE 1150
KANSAS CITY, MO 64111
913/441-1100, FAX 913/441-1468
CERTIFICATE OF AUTHORITY NUMBER F00970024

ALL PROJECT COORDINATES HAVE BEEN PROJECTED FROM THE MISSOURI STATE PLANE COORDINATE (SPC) SYSTEM OF 1983 USING AN AVERAGE PROJECT PROJECTION (GRID TO GROUND) FACTOR. TO GET BACK TO STATE PLANE COORDINATES MULTIPY THE PROJECT COORDINATES BY THE AVERAGE GRID FACTOR AS SHOWN IN THE "REFERENCE CONTROL INFORMATION" PORTION OF THIS TABLE.

PROJECT COORDINATE INFORMATION

COORDINATE SYSTEM	STATE PLANE
HORIZONTAL DATUM	NAD 83 (2011)
VERTICAL DATUM	NAVD 88
GEOID MODEL	JACKSON COUNTY
ELEVATIONS DETERMINED BY	XX
PROJECT PROJECTION FACTOR	1.00008471

REFERENCE CONTROL INFORMATION

COORDINATE SYSTEM	NAD 1983
CONTROL STATION	JA-79
DESIGNATION	JA-79
CORS_ID	·
PID	95079
LATITUDE	38°55'31.05012"
LONGITUDE	94°07'58.72137"
NORTHING (M)	306220.201
EASTING (M)	881825.364
ZONE	WEST
PROJECT AVERAGE GRID FACTOR	0.99991530

EXAMPLE OF PROJECT COORDINATE TO S.P.C.

PROJECT NORTHING X AVERAGE GRID FACTOR
= STATE PLANE NORTHING
PROJECT EASTING X AVERAGE GRID FACTOR
= STATE PLANE EASTING

EXAMPLE: CONTROL POINT #2
N 999426.54 X 1.00000 = N 999426.54
E 2893256.31 X 1.00000 = E 2893256.31

LINEAR UNIT CONVERSION

1 METER = 3.280833333 US SURVEY FEET (USFT)

COORDINATE POINT LISTING

SHEET NO	STATION	LOCATION	OFFSET (USFT)	MODIFIED STATE PLANE (GROUND) NORTHING (US SURVEY FT)	EASTING (US SURVEY FT)	ELEVATION (US SURVEY FT)	DESCRIPTION	GPK POINT ID
PROJECT CONTROL POINTS								
·	354+10.09	RTE F	28.2	998,973.05	2,893,238.60	899.19	CONTROL - GPS 5003	1
·	349+56.26	RTE F	26.4	999,426.54	2,893,256.31	877.84	CONTROL - GPS 5004	2
·	338+90.81	RTE F	21.2	1,000,491.15	2,893,298.72	865.64	CONTROL - GPS 5005	3
·	345+85.55	RTE F	17.2	999,796.70	2,893,278.41	864.34	CONTROL - GPS 5006	4
·	·	·	·	·	·	·	·	·
·	·	·	·	·	·	·	·	·
·	·	·	·	·	·	·	·	·
·	·	·	·	·	·	·	·	·
·	·	·	·	·	·	·	·	·
·	·	·	·	·	·	·	·	·
·	·	·	·	·	·	·	·	·
ALIGNMENTS								
·	329+20.40	RTE F	·	1,001,460.23	2,893,353.84	·	POT	EX F
·	374+77.85	RTE F	·	996,905.57	2,893,194.46	·	POT	EX F
·	·	·	·	·	·	·	·	·
·	·	·	·	·	·	·	·	·
·	·	·	·	·	·	·	·	·
·	·	·	·	·	·	·	·	·
·	·	·	·	·	·	·	·	·
·	·	·	·	·	·	·	·	·
·	·	·	·	·	·	·	·	·
·	·	·	·	·	·	·	·	·

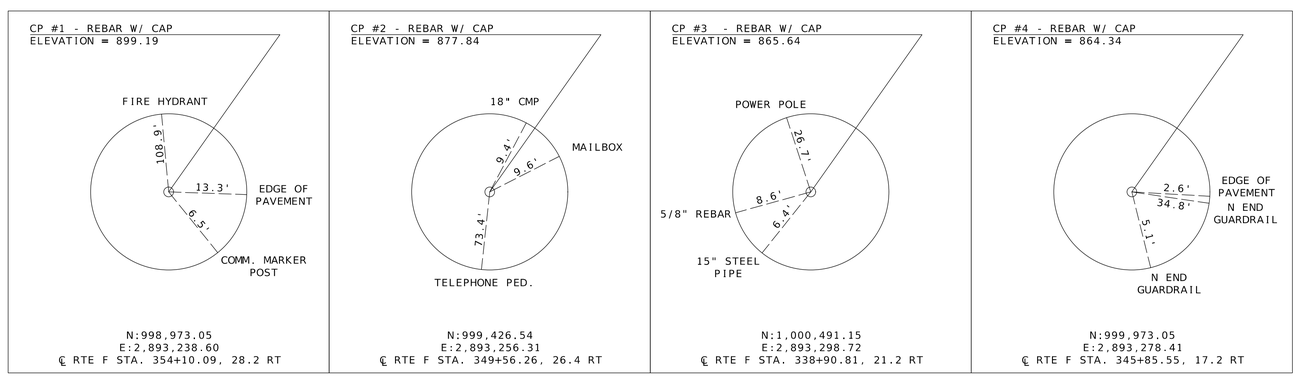

COORDINATE POINT SHEET
SHEET 1 OF 1

STATE OF MISSOURI
MICHELE R. KEAL
NUMBER PE-2005000711
PROFESSIONAL ENGINEER
THIS SHEET HAS BEEN SIGNED, SEALED AND DATED ELECTRONICALLY.

DATE PREPARED	9/16/2025
ROUTE F	STATE MO
DISTRICT KC	SHEET NO. 6
COUNTY	JACKSON
JOB NO.	JKU0110
CONTRACT ID.	
PROJECT NO.	
BRIDGE NO.	A9583

DESCRIPTION
DATE

IF A SEAL IS PRESENT ON THIS SHEET IT HAS BEEN ELECTRONICALLY SEALED AND DATED.

MISSOURI HIGHWAYS AND TRANSPORTATION COMMISSION
105 WEST CAPITOL
JEFFERSON CITY, MO 65102
1-888-ASK-MODOT (1-888-275-6636)

benesch
4435 MAIN STREET, SUITE 1150
KANSAS CITY, MO 64111
913/441-1100, FAX 913/441-1468
CERTIFICATE OF AUTHORITY NUMBER F00970024

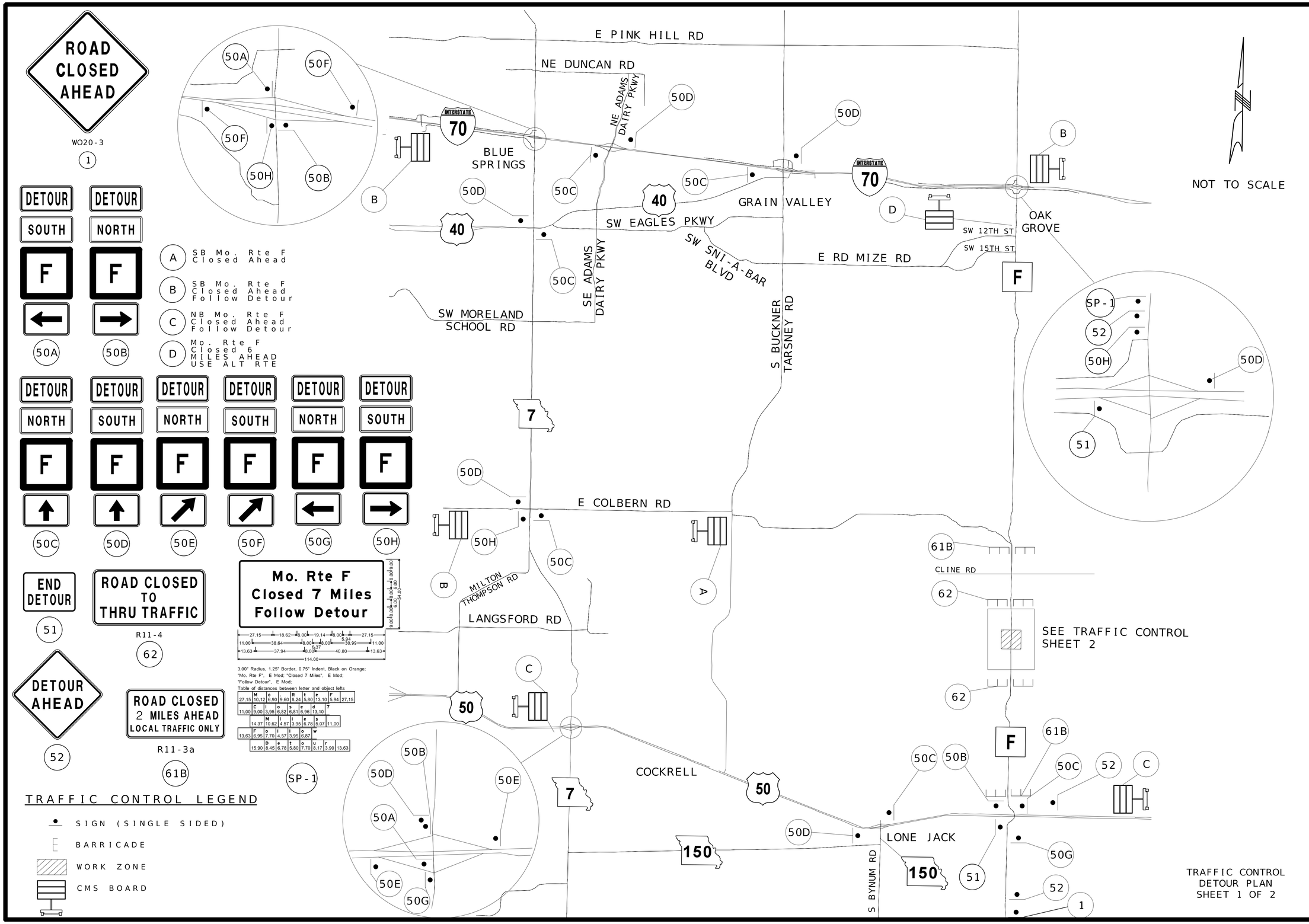

STATE OF MISSOURI
MICHELE R. KEAL
NUMBER PE-2005000711
PROFESSIONAL ENGINEER
THIS SHEET HAS BEEN SIGNED, SEALED AND DATED ELECTRONICALLY.

DATE PREPARED	9/16/2025
ROUTE F	STATE MO
DISTRICT KC	SHEET NO. 7
COUNTY	JACKSON
JOB NO.	JKU0110
CONTRACT ID.	
PROJECT NO.	
BRIDGE NO.	A9583

DESCRIPTION	DATE

IF A SEAL IS PRESENT ON THIS SHEET IT HAS BEEN ELECTRONICALLY SEALED AND DATED.

MISSOURI HIGHWAYS AND TRANSPORTATION COMMISSION
105 WEST CAPITOL
JEFFERSON CITY, MO 65102
1-888-ASK-MODOT (1-888-275-6636)

benesch
4435 MAIN STREET, SUITE 1150
KANSAS CITY, MO 64111
913/441-1100, FAX 913/441-1468
CERTIFICATE OF AUTHORITY NUMBER F00970024

WO20-3

1

R11-2

2

WO20-3

3

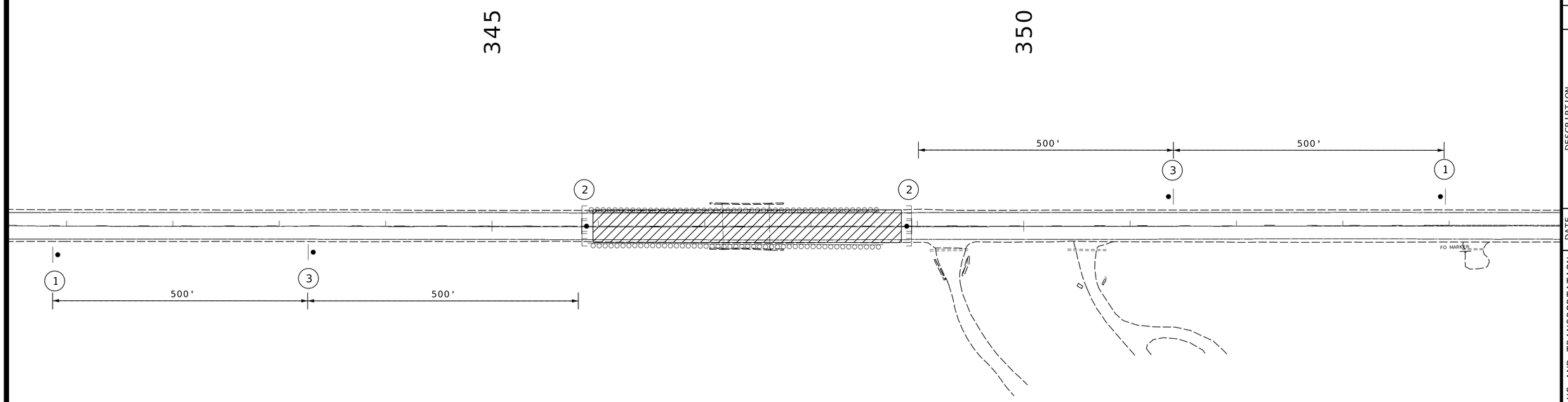

TRAFFIC CONTROL LEGEND

- SIGN (SINGLE SIDED)
- BARRICADE
- WORK ZONE

TRAFFIC CONTROL
SHEET 2 OF 2

STATE OF MISSOURI
MICHELE R. KEAL
NUMBER
PE-2005000711
PROFESSIONAL ENGINEER

THIS SHEET HAS BEEN SIGNED, SEALED AND DATED ELECTRONICALLY.

DATE PREPARED	9/16/2025
ROUTE	F
STATE	MO
DISTRICT	KC
SHEET NO.	8
COUNTY	JACKSON
JOB NO.	JKU0110
CONTRACT ID.	
PROJECT NO.	
BRIDGE NO.	A9583

DATE	DESCRIPTION

MISSOURI HIGHWAYS AND TRANSPORTATION COMMISSION

105 WEST CAPITOL
JEFFERSON CITY, MO 65102
1-888-ASK-MODOT (1-888-275-6636)

benesch

4435 MAIN STREET, SUITE 1150
KANSAS CITY, MO 64111
913/441-1100, FAX 913/441-1468
CERTIFICATE OF AUTHORITY NUMBER F00970024

IF A SEAL IS PRESENT ON THIS SHEET IT HAS BEEN ELECTRONICALLY SEALED AND DATED.

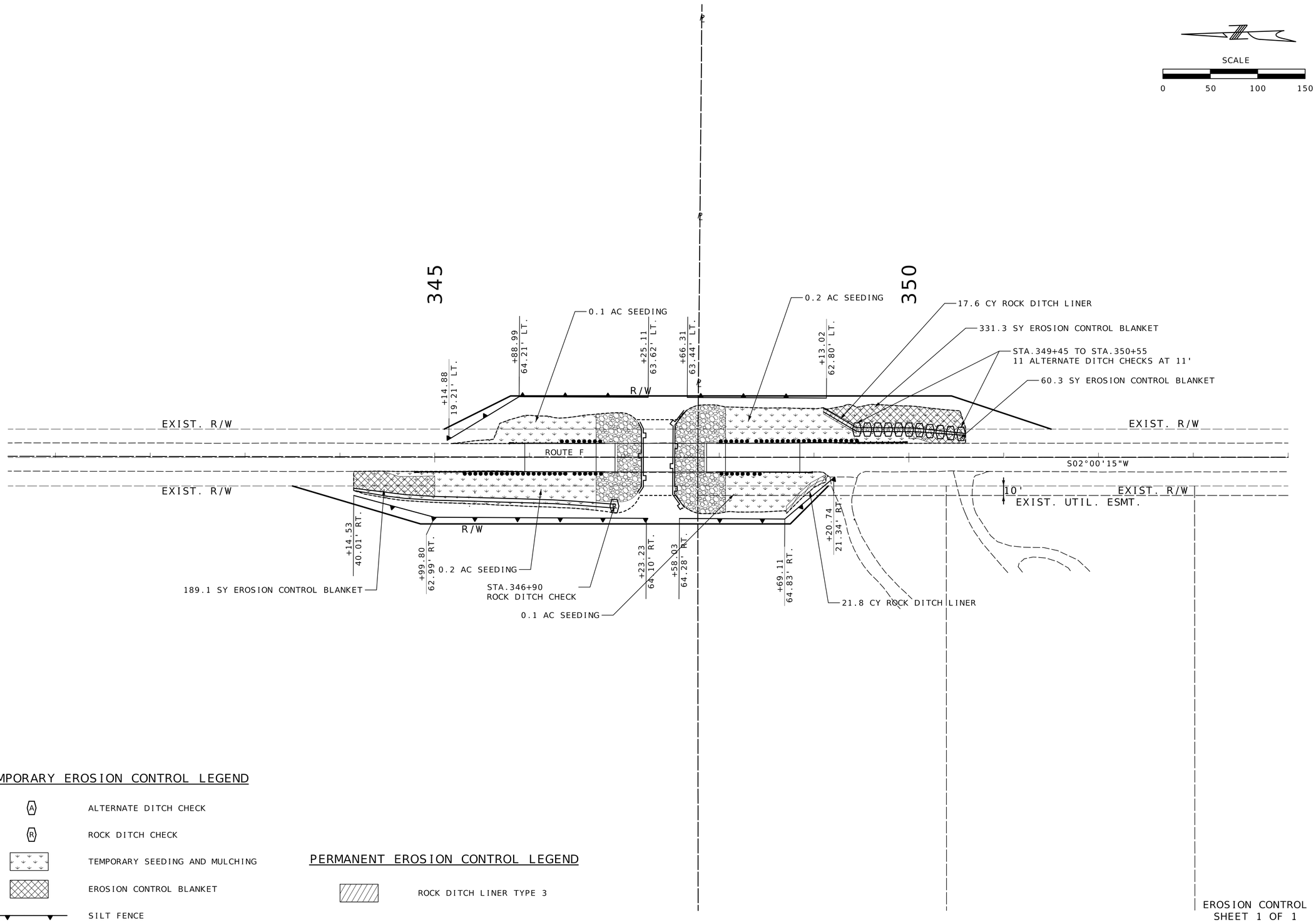

TEMPORARY EROSION CONTROL LEGEND

- (A) ALTERNATE DITCH CHECK
- (R) ROCK DITCH CHECK
- TEMPORARY SEEDING AND MULCHING
- EROSION CONTROL BLANKET
- SILT FENCE

PERMANENT EROSION CONTROL LEGEND

- ROCK DITCH LINER TYPE 3

EROSION CONTROL
SHEET 1 OF 1

STATE OF MISSOURI
MICHELE R. KEAL
NUMBER PE-2005000711
PROFESSIONAL ENGINEER
THIS SHEET HAS BEEN SIGNED, SEALED AND DATED ELECTRONICALLY.

DATE PREPARED	9/18/2025
ROUTE	F
STATE	MO
DISTRICT	KC
SHEET NO.	9
COUNTY	JACKSON
JOB NO.	JKU0110
CONTRACT ID.	
PROJECT NO.	
BRIDGE NO.	A9583

DATE	DESCRIPTION

IF A SEAL IS PRESENT ON THIS SHEET IT HAS BEEN ELECTRONICALLY SEALED AND DATED.

MISSOURI HIGHWAYS AND TRANSPORTATION COMMISSION
105 WEST CAPITOL
JEFFERSON CITY, MO 65102
1-888-ASK-MODOT (1-888-275-6636)

benesch
4435 MAIN STREET, SUITE 1150
KANSAS CITY, MO 64111
913/441-1100, FAX 913/441-1468
CERTIFICATE OF AUTHORITY NUMBER F00970024

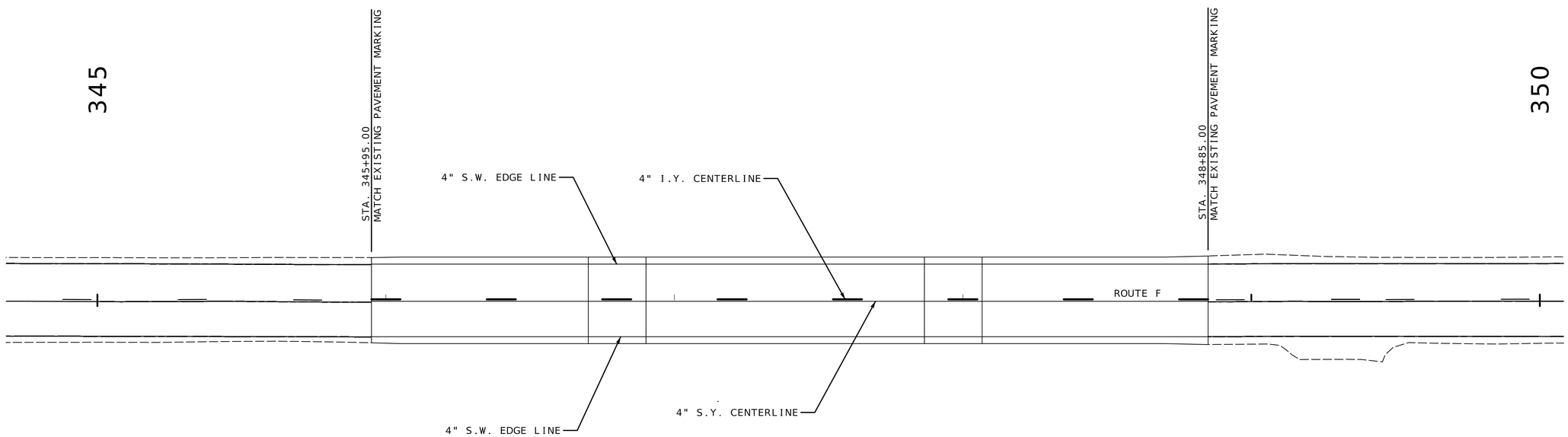

SCALE

0 20 40 60

PAVEMENT MARKING LEGEND

- 4" SOLID WHITE (S.W.)
- 4" INTERMITTENT YELLOW (I.Y.)
- 4" SOLID YELLOW (S.W.)

PAVEMENT MARKING
SHEET 1 OF 1

STATE OF MISSOURI
MICHELE R. KEAL
NUMBER PE-2005000711
PROFESSIONAL ENGINEER

THIS SHEET HAS BEEN SIGNED, SEALED AND DATED ELECTRONICALLY.

DATE PREPARED	9/16/2025
ROUTE	F
STATE	MO
DISTRICT	KC
SHEET NO.	10
COUNTY	JACKSON
JOB NO.	JKU0110
CONTRACT ID.	
PROJECT NO.	
BRIDGE NO.	A9583

DATE	DESCRIPTION

IF A SEAL IS PRESENT ON THIS SHEET IT HAS BEEN ELECTRONICALLY SEALED AND DATED.

MISSOURI HIGHWAYS AND TRANSPORTATION COMMISSION

105 WEST CAPITOL
JEFFERSON CITY, MO 65102
1-888-ASK-MODOT (1-888-275-6636)

benesch

4435 MAIN STREET, SUITE 1150
KANSAS CITY, MO 64111
913/441-1100, FAX 913/441-1468
CERTIFICATE OF AUTHORITY NUMBER F00970024

SEC/SUR 4 TWP 47N RGE 29W

(94') PRESTRESSED CONCRETE NU-GIRDER SPAN

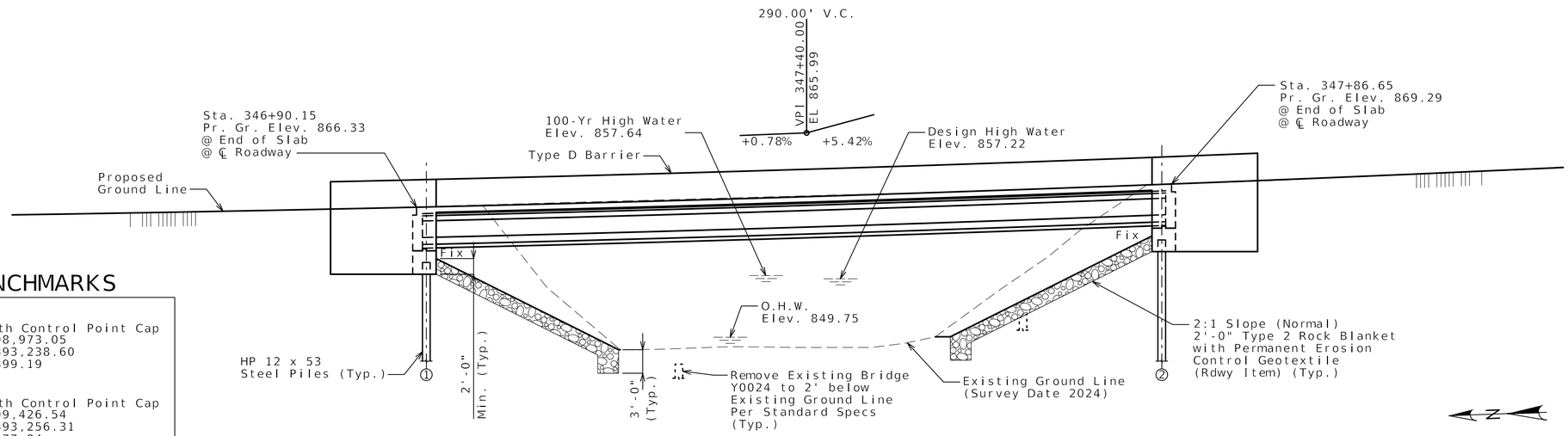

ELEVATION

BENCHMARKS

CP#5003
½" Rebar with Control Point Cap
Northing: 998,973.05
Easting: 2,893,238.60
Elevation: 899.19

CP#5004
½" Rebar with Control Point Cap
Northing: 999,426.54
Easting: 2,893,256.31
Elevation: 877.84

CP#5006
½" Rebar with Control Point Cap
Northing: 999,796.70
Easting: 2,893,278.41
Elevation: 864.34

VERTICAL DATUM SET BY NAVD 88

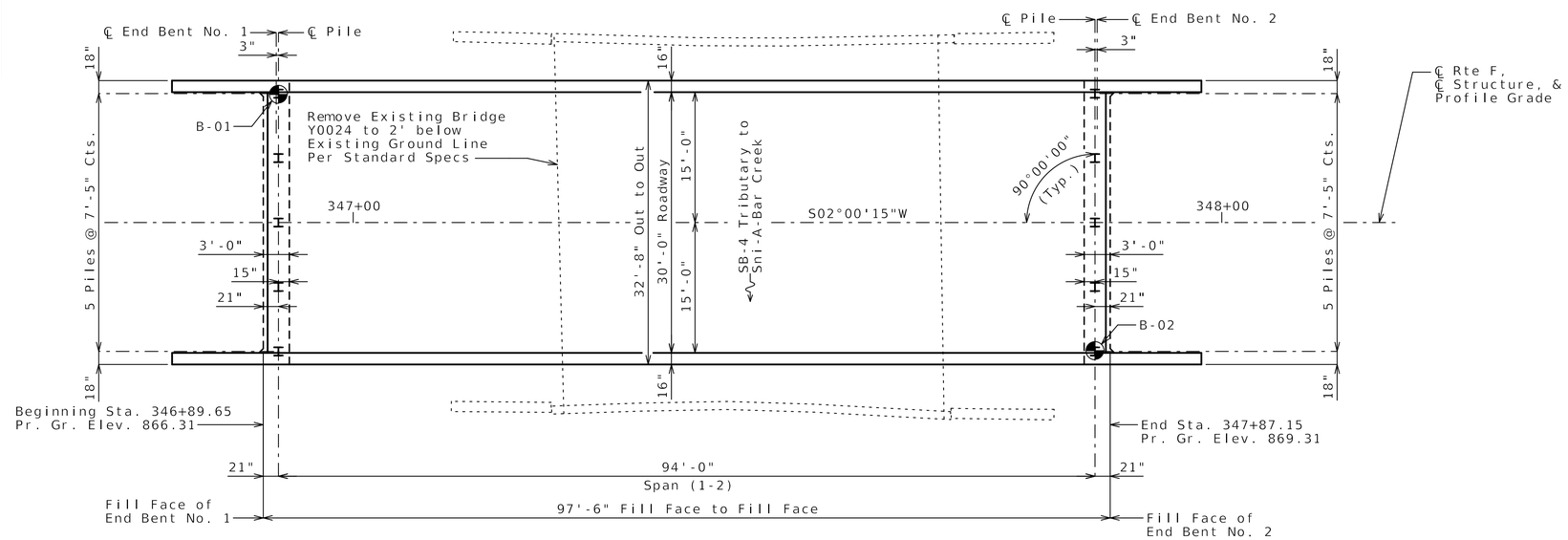

PLAN

Indicates location of borings.

Notice and Disclaimer Regarding Boring Log Data

The locations of all subsurface borings for this structure are shown on the bridge plan sheet for this structure. The boring data for all locations indicated, as well as any other boring logs or other factual records of subsurface data and investigations performed by the department for the design of the project, are shown on Sheets No. 23 thru 25 or will be available from the Project Contact upon written request. No greater significance or weight should be given to the boring data depicted on the plan sheets than is given to the subsurface data available from the district or elsewhere.

The Commission does not represent or warrant that any such boring data accurately depicts the conditions to be encountered in constructing this project. A contractor assumes all risks it may encounter in basing its bid prices, time or schedule of performance on the boring data depicted here or those available from the district, or on any other documentation not expressly warranted, which the contractor may obtain from the Commission.

Designed JUL. 2024
Detailed MAR. 2025
Checked MAR. 2025

Notes:

All bents are parallel.

For General Notes, Estimated Quantities, Location Sketch, & Pile Data, see Sheet No 2.

All stationing shown are along Route F.

All elevations shown are along Route F.

Longitudinal dimensions are measured horizontal.

Existing roadway fill under the ends of the bridge shall be removed as shown. Removal of existing roadway fill will be considered completely covered by the contract unit price for roadway excavation.

Note: This drawing is not to scale. Follow dimensions.

Sheet No. 1 of 25

BRIDGE: ROUTE F OVER SB-4 TRIBUTARY TO SNI-A-BAR CREEK

STATE ROAD FROM INTERSTATE 70 TO ROUTE 50
ABOUT 2.9 MILES N OF ROUTE 50
BEGINNING STATION 346+89.65

STATE OF MISSOURI
CHRISTOPHER TEPEN
NUMBER 28262
REGISTERED PROFESSIONAL ENGINEER
THIS SHEET HAS BEEN ORIGINALLY SEALED AND DATED ELECTRONICALLY

DATE	08/22/2025
DATE PREPARED	8/19/2025
ROUTE	F
STATE	MO
DISTRICT	BR
SHEET NO.	1
COUNTY	JACKSON
JOB NO.	JKU0110
CONTRACT ID.	
PROJECT NO.	
BRIDGE NO.	A9583

DATE	DESCRIPTION

MISSOURI HIGHWAYS AND TRANSPORTATION COMMISSION
105 WEST CAPITOL
JEFFERSON CITY, MO 65102
1-888-ASK-MODOT (1-888-275-6636)

benesch
One Main Plaza, 4435 Main St., Suite 1150,
Kansas City, MO 64111
816/221-4222, FAX 913/441-1468
CERTIFICATE OF AUTHORITY NUMBER F00970024

IF A SEAL IS PRESENT ON THIS SHEET IT HAS BEEN ELECTRONICALLY SEALED AND DATED.

Y:\Kansas\131000S\131047.00_MoDOT_Rte_F\Eng_Docs\Bridge\A9583\Final\B_A9583_001_JKU0110_GP&E.dgn (Default) 11:07 8/19/2025

Estimated Quantities

Item		Substr.	Superstr.	Total
Class 1 Excavation	cu. yard	100		100
Removal of Bridges (Y0024)	lump sum			1
Bridge Approach Slab (Minor)	sq. yard		136	136
Galvanized Structural Steel Piles (12 in)	linear foot	365		365
Pile Point Reinforcement	each	10		10
Class B Concrete (Substructure)	cu. yard	29.2		29.2
Type D Barrier	linear foot		237	237
Slab on Concrete NU-Girder	sq. yard		350	350
NU53, Prestressed Concrete NU-Girder	linear foot		379	379
Steel Intermediate Diaphragm for P/S Concrete Girders	each		6	6
Vertical Drain at End Bents	each			2
Laminated Neoprene Bearing Pad (Tapered)	each		8	8

All concrete above the construction joint in the end bents is included in the Estimated Quantities for Slab on Concrete NU-Girder.

All reinforcement in the end bents is included in the Estimated Quantities for Slab on Concrete NU-Girder.

Hydrologic Data

Drainage Area = 5.5 mi²
Design Flood Frequency = 50 years
Design Flood Discharge = 2,900 cfs
Design Flood (D.F.) Elevation = 857.22
Base Flood (100-year)
Base Flood Elevation = 857.64
Base Flood Discharge = 3,300 cfs
Estimated Backwater = 0.29 ft
Average Velocity thru Opening = 5.75 ft/s
Freeboard (50-year)
Freeboard = 4.44 ft
Roadway Overtopping
Overtopping Flood Discharge = 9,700 cfs
Overtopping Flood Frequency = >500 years
500-Year Flood Elevation = 865.22

Estimated Quantities for Slab on Concrete NU-Girder

Item		Total
Class B-2 Concrete	cu. yard	142.4
Reinforcing Steel (Epoxy Coated)	pound	33,240

The table of Estimated Quantities for Slab on Concrete NU-Girder represents the quantities used by the State in preparing the cost estimate for concrete slabs. The area of the concrete slab will be measured to the nearest square yard longitudinally from end of slab to end of slab and transversely from out to out of bridge slab (or with the horizontal dimensions as shown on the plan of slab). Payment for stay-in-place corrugated steel forms, conventional forms, all concrete, and epoxy coated reinforcing steel will be considered completely covered by the contract unit price for the slab. Variations may be encountered in the estimated quantities but the variations cannot be used for an adjustment in the contract unit price.

Method of forming the slab shall be as shown on the plans and in accordance with Sec 703. All hardware for forming the slab to be left in place as a permanent part of the structure shall be coated in accordance with ASTM A123 or ASTM B633 with a thickness class SC 4 and a finish type I, II, or III.

Slab shall be cast-in-place with conventional forms or stay-in-place corrugated steel forms. Precast prestressed panels will not be permitted.

Corrugated steel forms, supports, closure elements and accessories shall be in accordance with grade requirement and coating designation G165 of ASTM A653. Complete shop drawings of the permanent steel deck forms shall be required in accordance with Sec 1080.

Corrugations of stay-in-place forms shall be filled with an expanded polystyrene material. The polystyrene material shall be placed in the forms with an adhesive in accordance with the manufacturer's recommendations.

Form sheets shall not rest directly on the top of girder flanges. Sheets shall be securely fastened to form supports with a minimum bearing length of one inch on each end. Form supports shall be placed in direct contact with the flange. Welding on or drilling holes in the girder flanges will not be permitted. All steel fabrication and construction shall be in accordance with Sec 1080 and 712. Certified field welders will not be required for welding of the form supports.

Foundation Data

Type	Design Data		Bent Number 1	Bent Number 2
Load Bearing Pile	Pile Type and Size		HP 12x53	HP 12x53
	Number	ea	5	5
	Approximate Length Per Each	ft	48	25
	Pile Point Reinforcement	ea	All	All
	Min. Galvanized Penetration (Elev.)	ft	Full Length	Full Length
	Minimum Tip Penetration (Elev.)	ft	811	837
	Criteria for Min. Tip Penetration		Min. Embed.	Min. Embed.
	Pile Driving Verification Method		DF	DF
	Resistance Factor		0.4	0.4
	Minimum Nominal Axial Compressive Resistance	kip	590	590

DF = FHWA-modified Gates Dynamic Pile Formula

Load Bearing Pile:
Minimum Nominal Axial Compressive Resistance = $\frac{\text{Maximum Factored Loads}}{\text{Resistance Factor}}$

All piles shall be galvanized full length.

Pile point reinforcement need not be galvanized. Shop drawings will not be required for pile point reinforcement.

HP piles are anticipated to be driven to refusal on rock. Review all borings for depth of rock and restrict driving as appropriate to comply with hard rock driving criteria in accordance with Sec 702. When pile refusal on rock occurs, as approved by the engineer, the minimum nominal axial compressive resistance is verified and no additional pile driving verification method is required.

General Notes:

Design Specifications:
2020 AASHTO LRFD Bridge Design Specifications (9th Ed.)
2011 AASHTO Guide Specifications for LRFD Seismic Bridge Design (2nd Ed.) and 2014 Interim Revisions (Seismic Details Only)
Seismic Design Category = A
Design Earthquake Response Spectral Acceleration Coefficient at 1.0 second period, 0.10 ≤ SD1 < 0.15
Acceleration Coefficient (Effective Peak Ground Acceleration Coefficient), As = 0.10g

Design loading:
Vehicular = HL-93
Future Wearing Surface = 35 lb/sf
Earth = 120 lb/cf
Equivalent Fluid Pressure = 45 lb/cf
Superstructure: Non-Composite for dead load.
Composite for live load.

Design Unit Stresses:

Class B Concrete (Substructure)	f'c = 3,000 psi
Class B-1 Concrete (Barrier)	f'c = 4,000 psi
Class B-2 Concrete (Superstructure, except Prestressed Girders and Barrier)	f'c = 4,000 psi
Reinforcing Steel (ASTM A615 Grade 60)	fy = 60,000 psi
Structural Steel HP Pile (ASTM A709 Grade 50)	fy = 50,000 psi

For prestressed girders stresses, see Sheets No. 11 & 12.

Neoprene Pads:
Neoprene bearing pads shall be 60 durometer and shall be in accordance with Sec 716.

Joint Filler:
All joint filler shall be in accordance with Sec 1057 for preformed sponge rubber expansion and partition joint filler, except as noted.

Reinforcing Steel:
Minimum clearance to reinforcing steel shall be 1 1/2", unless otherwise shown.

Traffic Handling:
Structure to be closed during construction. Traffic to be maintained on other routes during construction. See roadway plans for traffic control.

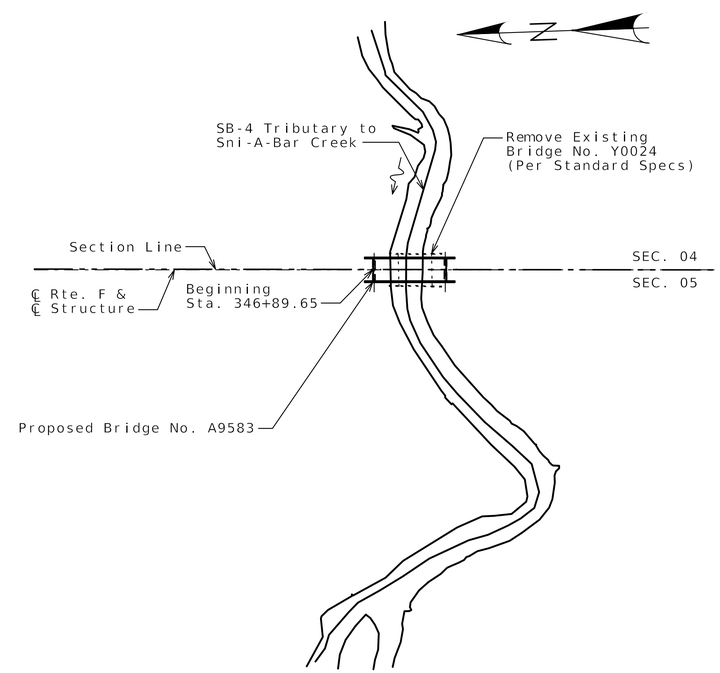

LOCATION SKETCH

STATE OF MISSOURI
CHRISTOPHER TEPEN
NUMBER 28262
REGISTERED PROFESSIONAL ENGINEER
THIS SHEET HAS BEEN SIGNED, SEALED AND DATED ELECTRONICALLY

DATE	08/22/2025
DATE PREPARED	8/19/2025
ROUTE F	STATE MO
DISTRICT BR	SHEET NO. 2
COUNTY	JACKSON
JOB NO.	JKU0110
CONTRACT ID.	
PROJECT NO.	
BRIDGE NO.	A9583

DESCRIPTION

DATE

MISSOURI HIGHWAYS AND TRANSPORTATION COMMISSION
105 WEST CAPITOL
JEFFERSON CITY, MO 65102
1-888-ASK-MODOT (1-888-275-6636)

IF A SEAL IS PRESENT ON THIS SHEET IT HAS BEEN ELECTRONICALLY SEALED AND DATED.

benesch
One Main Plaza, 4435 Main St., Suite 1150,
Kansas City, MO 64111
816/221-4222, FAX 913/441-1468
CERTIFICATE OF AUTHORITY NUMBER F00970024

Designed JUL. 2024
Detailed MAR. 2025
Checked MAR. 2025

Note: This drawing is not to scale. Follow dimensions.

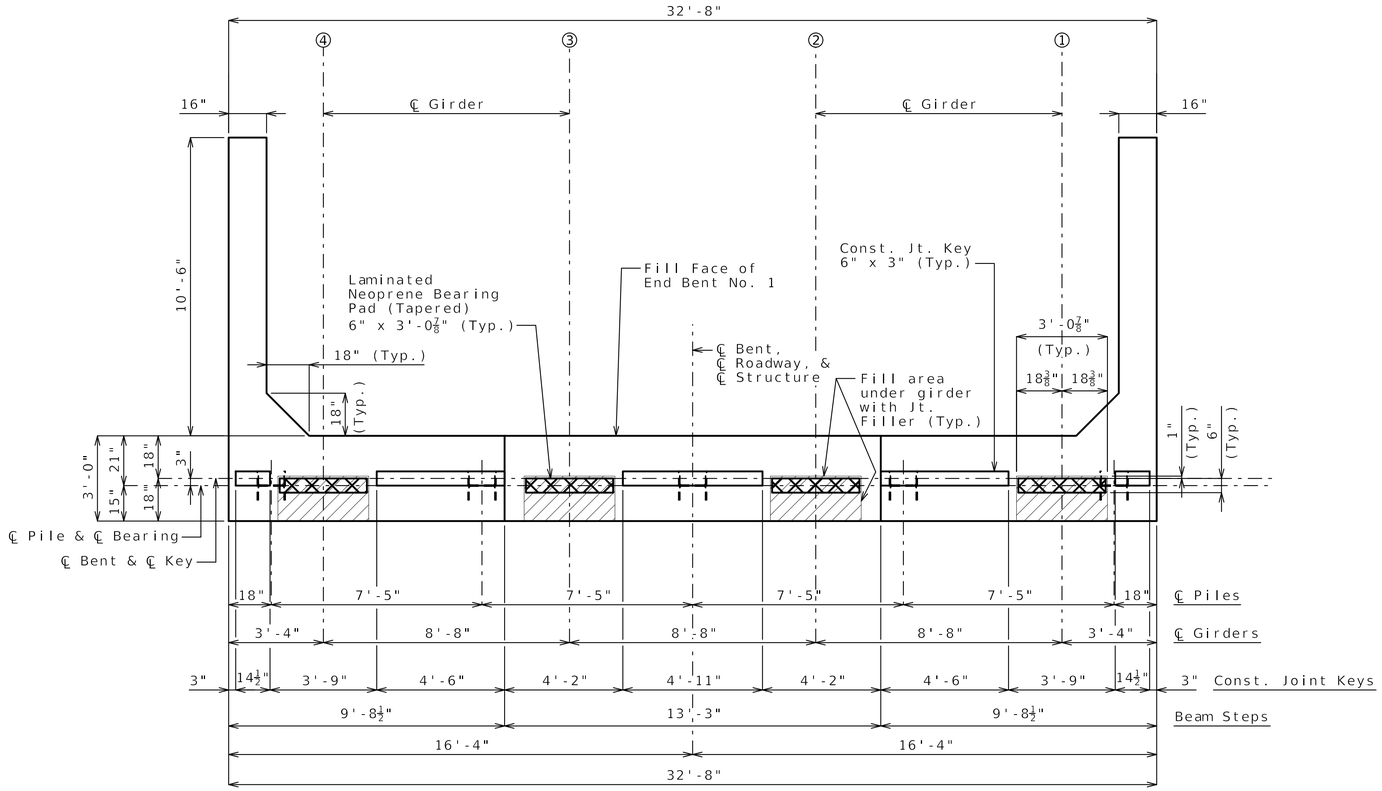

PLAN OF BEAM SHOWING DIMENSIONS

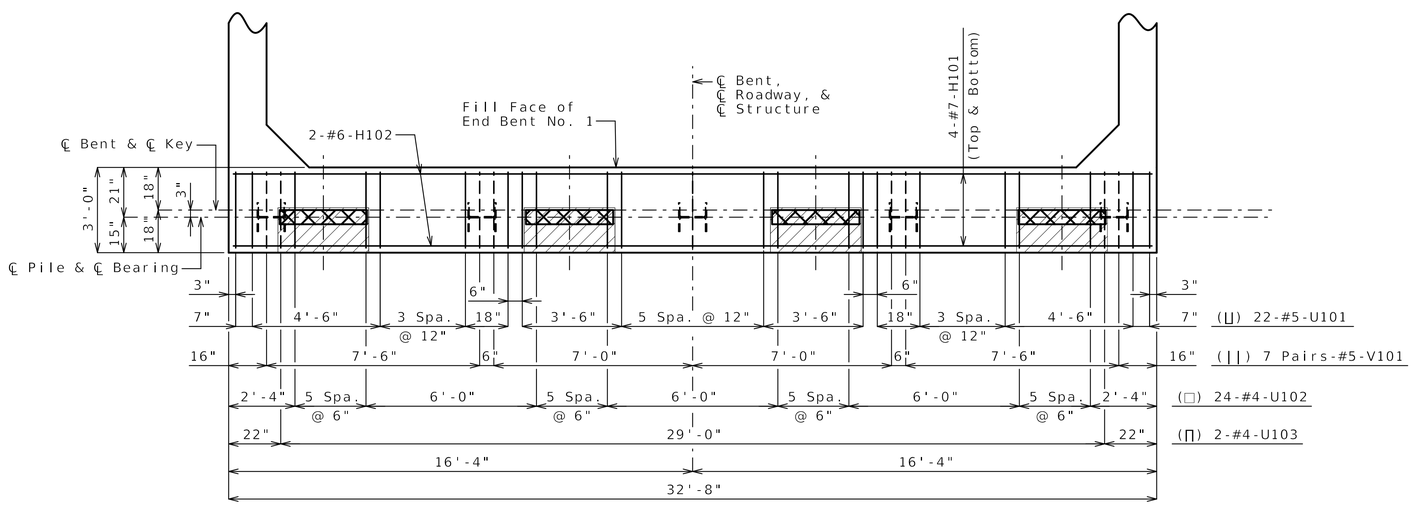

PLAN OF BEAM SHOWING REINFORCEMENT
(Keys & Steps not shown for clarity)

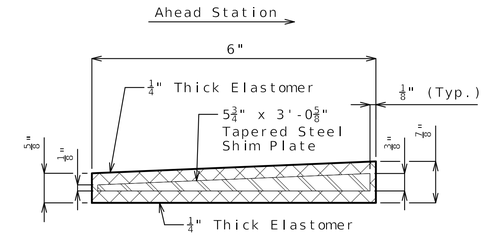

The required shim plate shall be placed between layers of elastomer and molded together to form an intergral unit.

TYPICAL SECTION THRU 6" X 3'-0⅞"
LAMINATED NEOPRENE BEARING PAD (TAPERED)
(4 Required)

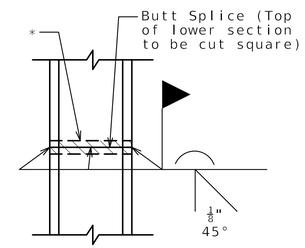

STEEL PILE SPLICE
(If required)

* Galvanizing material shall be omitted or removed one inch clear of weld locations in accordance with Sec 702.

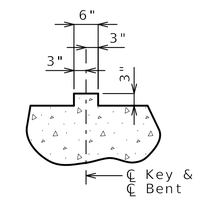

SECTION THRU KEY

Notes:

For details of End Bent No. 1 not shown, see Sheets No. 4 & 5.

For details of Vertical Drain at End Bent see Sheet No. 6.

Reinforcing steel shall be shifted to clear piles. U-bars shall clear piles by at least 1 1/2".

The U-bars and Pairs of V-bars shall be placed parallel to centerline of roadway.

Substructure Quantity Table for End Bent No. 1		
Item		Quantity
Class 1 Excavation	cu. yard	50
Galvanized Structural Steel Piles (12in)	linear foot	240
Pile Point Reinforcement	each	5
Class B Concrete (Substructure)	cu. yard	14.6

Note:
These quantities are included in the Estimated Quantities Table on Sheet No. 2.

DETAILS OF END BENT NO. 1

Designed JUL. 2024
Detailed MAR. 2025
Checked MAR. 2025

Note: This drawing is not to scale. Follow dimensions.

Y:\Kansas\131000S\131047.00_MoDOT_Rte_F\Eng_Docs\Bridge\A9583\Final\B_A9583_003_JKU0110_End Bent 1a.dgn (Default) 11:07 8/19/2025

STATE OF MISSOURI
CHRISTOPHER TEPEN
NUMBER 28262
REGISTERED PROFESSIONAL ENGINEER
THIS SHEET HAS BEEN SIGNED, SEALED AND DATED ELECTRONICALLY

DATE	08/22/2025
DATE PREPARED	8/19/2025
ROUTE	F
STATE	MO
DISTRICT	BR
SHEET NO.	3
COUNTY	JACKSON
JOB NO.	JKU0110
CONTRACT ID.	
PROJECT NO.	
BRIDGE NO.	A9583

DATE	DESCRIPTION
.	.
.	.
.	.
.	.
.	.
.	.

IF A SEAL IS PRESENT ON THIS SHEET IT HAS BEEN ELECTRONICALLY SEALED AND DATED.

MISSOURI HIGHWAYS AND TRANSPORTATION COMMISSION
105 WEST CAPITOL
JEFFERSON CITY, MO 65102
1-888-ASK-MODOT (1-888-275-6636)

benesch
One Main Plaza, 4435 Main St., Suite 1150,
Kansas City, MO 64111
816/221-4222, FAX 913/441-1468
CERTIFICATE OF AUTHORITY NUMBER F00970024

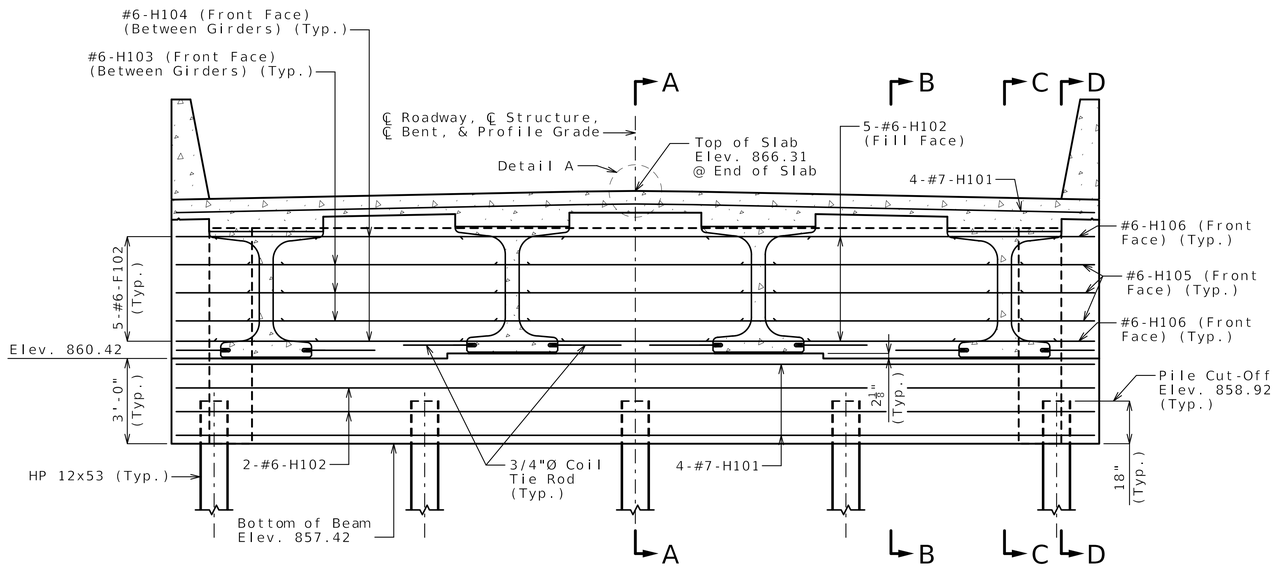

SECTION NEAR END BENT

(Looking back station)

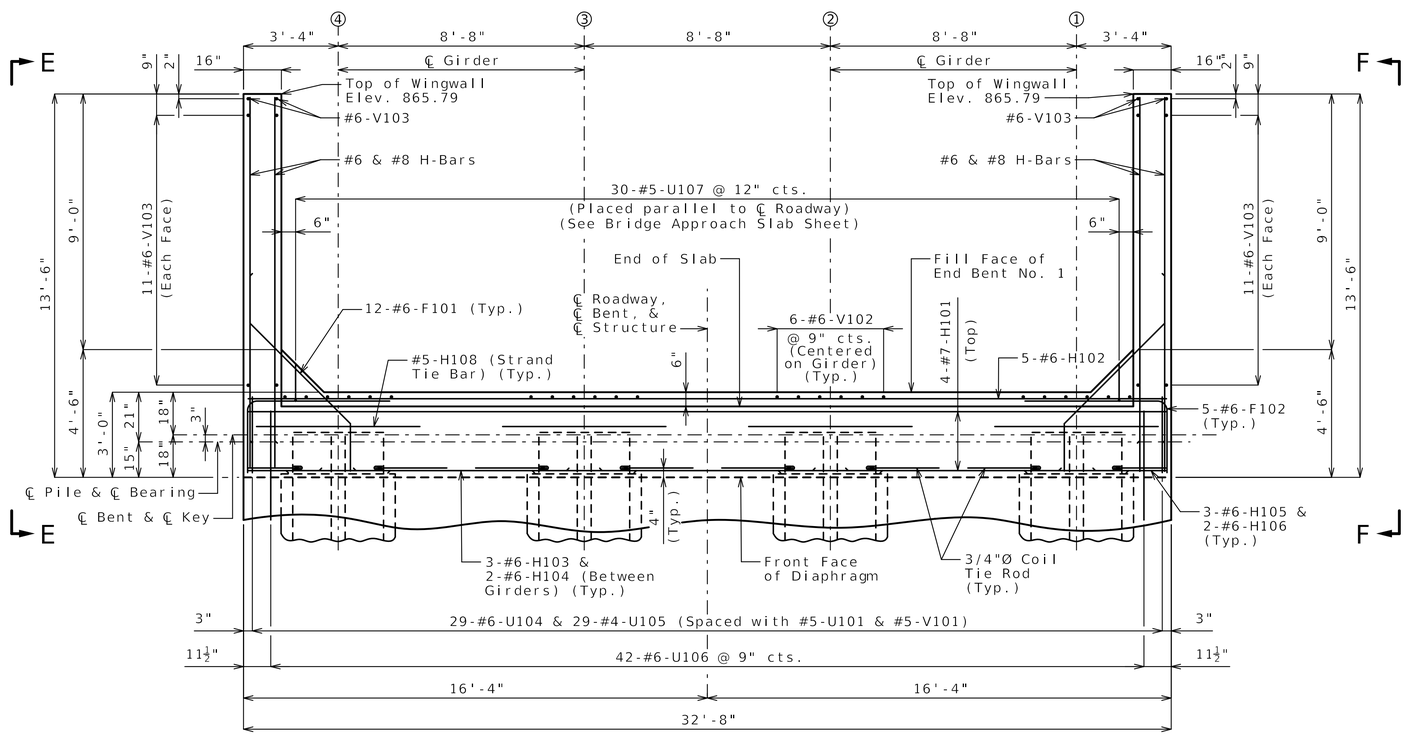

PART PLAN

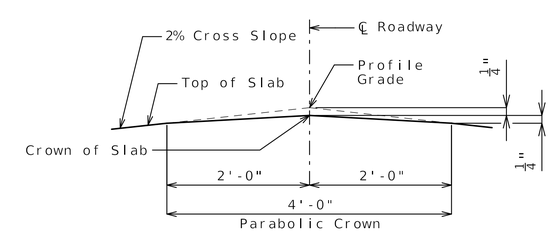

DETAIL "A"

Notes:

For location of Sections A-A, B-B, C-C, & D-D and Elevations E-E & F-F, see Sheet No. 5.

For details of End Bent No. 1 not shown, see Sheets No. 3 & 5.

For details of Vertical Drain at End Bent, see Sheet No. 6.

For Estimated Quantities Table for End Bent No. 1, see Sheet No. 3.

For location of Coil Tie Rods and #5-H108 (Strand Tie Bar), see Sheets No. 11 & 12.

For details and reinforcement of Type D Barrier, see Sheets No. 17 & 18.

For details of Bridge Approach Slab, see Sheet No. 19.

All concrete in the End Bent above top of beam and below top of slab shall be Class B-2.

The U-bars, pairs of V-bars and #5-H107 bars shall be placed parallel to centerline of roadway.

Reinforcing steel shall be shifted to clear piles. U-bars shall clear piles by at least 1 1/2".

Strands at the end of the girders shall be field bent or, if necessary, cut in field to maintain 1 1/2" minimum clearance to fill face of end bent.

The #6-F101 bars shall be bent in field to clear girders.

DETAILS OF END BENT NO. 1

Designed JUL. 2024
Detailed MAR. 2025
Checked MAR. 2025

Note: This drawing is not to scale. Follow dimensions.

STATE OF MISSOURI
CHRISTOPHER TEPEN
NUMBER 28262
REGISTERED PROFESSIONAL ENGINEER
THIS SHEET HAS BEEN SIGNED, SEALED AND DATED ELECTRONICALLY

DATE	08/22/2025
DATE PREPARED	8/19/2025
ROUTE	F
STATE	MO
DISTRICT	BR
SHEET NO.	4
COUNTY	JACKSON
JOB NO.	JKU0110
CONTRACT ID.	
PROJECT NO.	
BRIDGE NO.	A9583

DATE	DESCRIPTION

IF A SEAL IS PRESENT ON THIS SHEET IT HAS BEEN ELECTRONICALLY SEALED AND DATED.

MISSOURI HIGHWAYS AND TRANSPORTATION COMMISSION
105 WEST CAPITOL
JEFFERSON CITY, MO 65102
1-888-ASK-MODOT (1-888-275-6636)

benesch
One Main Plaza, 4435 Main St., Suite 1150,
Kansas City, MO 64111
816/221-4222, FAX 913/441-1468
CERTIFICATE OF AUTHORITY NUMBER F00970024

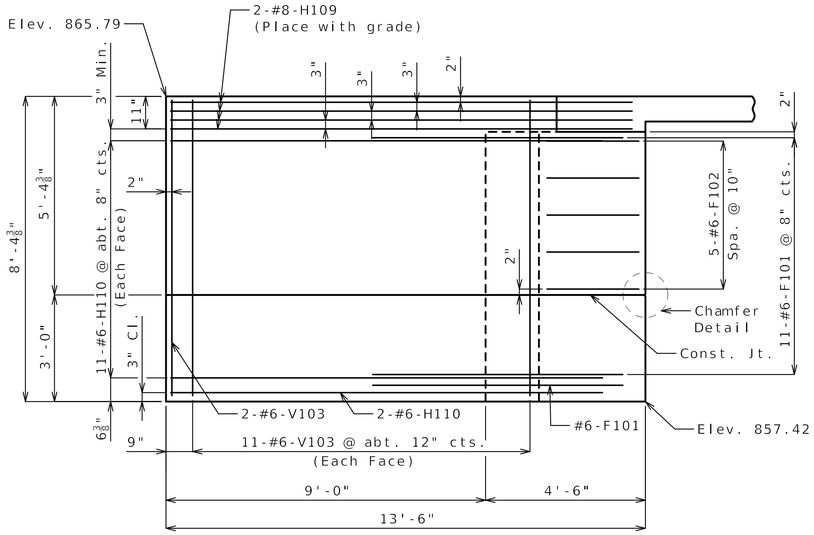

ELEVATION E-E

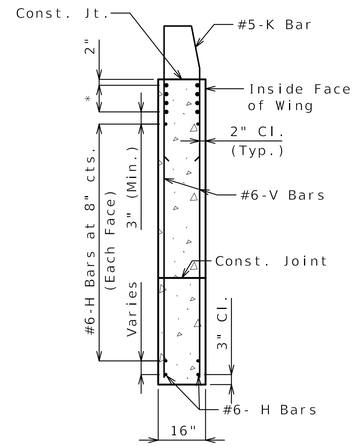

TYPICAL SECTION THRU WING

* #8-H Bars at 3" cts.
(Each face)(Place with grade)

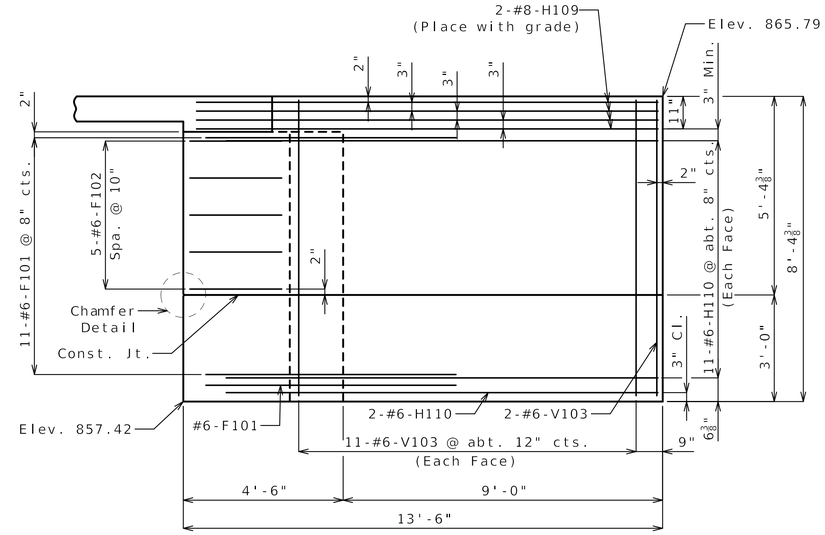

ELEVATION F-F

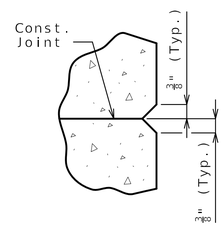

CHAMFER DETAIL

Notes:

For location of Sections A-A, B-B, C-C, & D-D and Elevations E-E & F-F, see Sheet No. 4.

For details of End Bent No. 1 not shown, see Sheets No. 3 & 4.

For Estimated Quantities Table for End Bent No. 1, see Sheet No. 3.

For Details and Reinforcement of Type D Barrier not shown, see Sheets No. 17 & 18.

All concrete in end bent above top of beam and below top of slab, shall be Class B-2.

The #6-F101 bars shall be bent in field to clear girders.

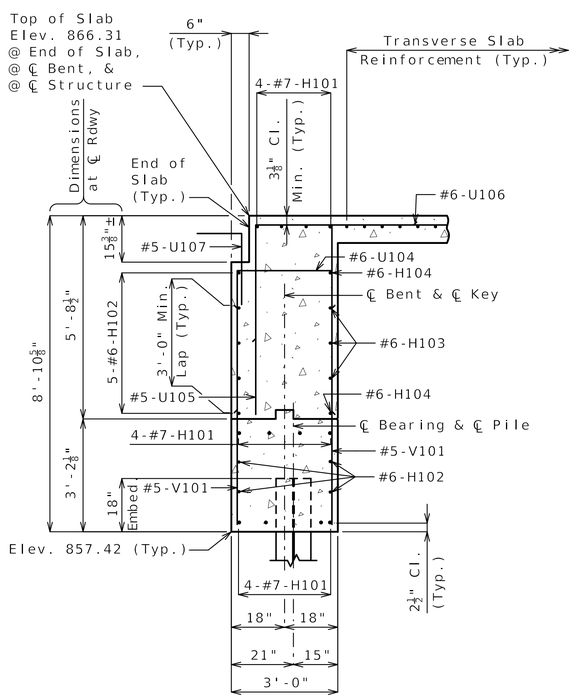

SECTION A-A

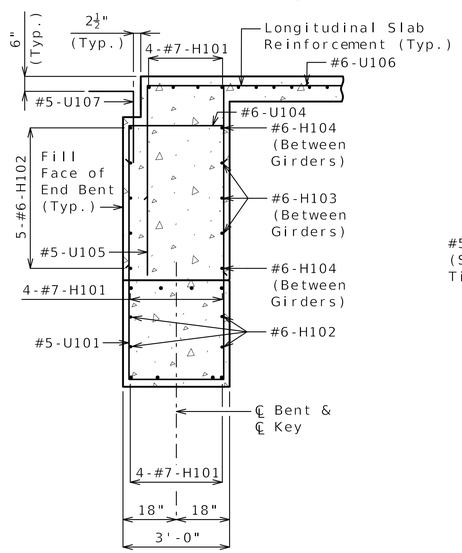

SECTION B-B

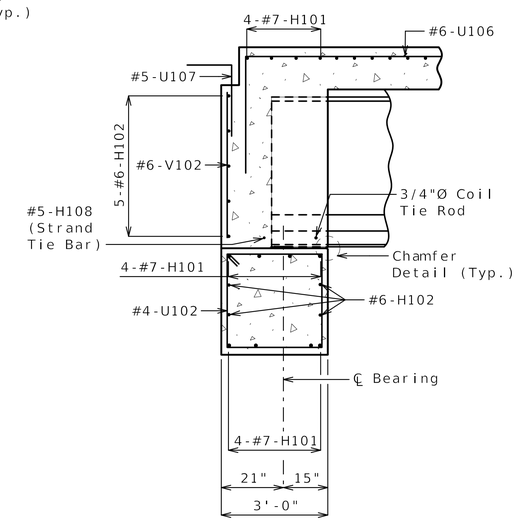

SECTION C-C

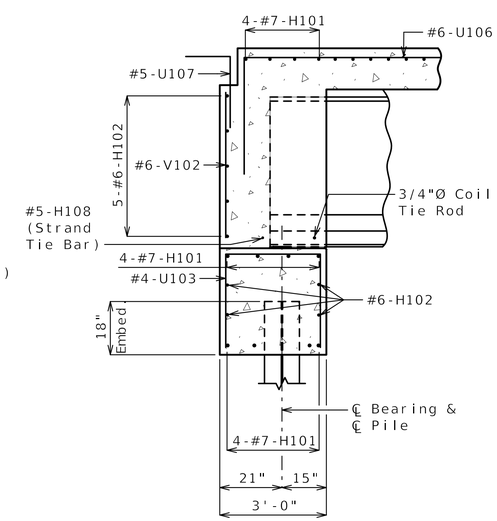

SECTION D-D

DETAILS OF END BENT NO. 1

Designed JUL. 2024
Detailed MAR. 2025
Checked MAR. 2025

Note: This drawing is not to scale. Follow dimensions.

Y:\Kansas\131000S\131047.00_MoDOT_Rte_F\Eng_Docs\Bridge\A9583\Final\B_A9583_005_JKU0110_End Bent 1c.dgn (Default) 11:07 8/19/2025

STATE OF MISSOURI
CHRISTOPHER TEPEN
NUMBER 28262
REGISTERED PROFESSIONAL ENGINEER
THIS SHEET WAS ORIGINALLY SEALED AND DATED ELECTRONICALLY

DATE	08/22/2025
DATE PREPARED	8/19/2025
ROUTE F	STATE MO
DISTRICT BR	SHEET NO. 5
COUNTY	JACKSON
JOB NO.	JKU0110
CONTRACT ID.	
PROJECT NO.	
BRIDGE NO.	A9583

DATE	DESCRIPTION
.	.
.	.
.	.
.	.
.	.
.	.
.	.

IF A SEAL IS PRESENT ON THIS SHEET IT HAS BEEN ELECTRONICALLY SEALED AND DATED.

MISSOURI HIGHWAYS AND TRANSPORTATION COMMISSION
105 WEST CAPITOL
JEFFERSON CITY, MO 65102
1-888-ASK-MODOT (1-888-275-6636)

benesch
One Main Plaza, 4435 Main St., Suite 1150,
Kansas City, MO 64111
816/221-4222, FAX 913/441-1468
CERTIFICATE OF AUTHORITY NUMBER F00970024

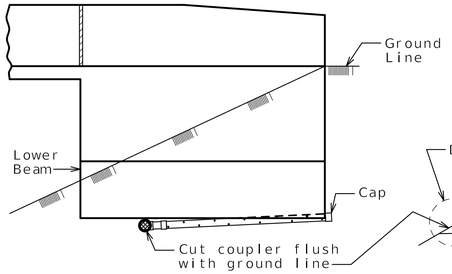

ELEVATION OF WING

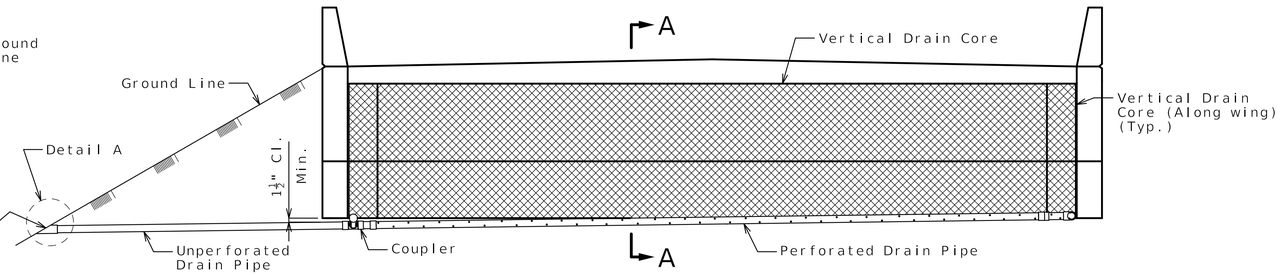

ELEVATION OF END BENT

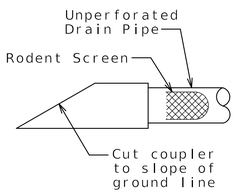

DETAIL A

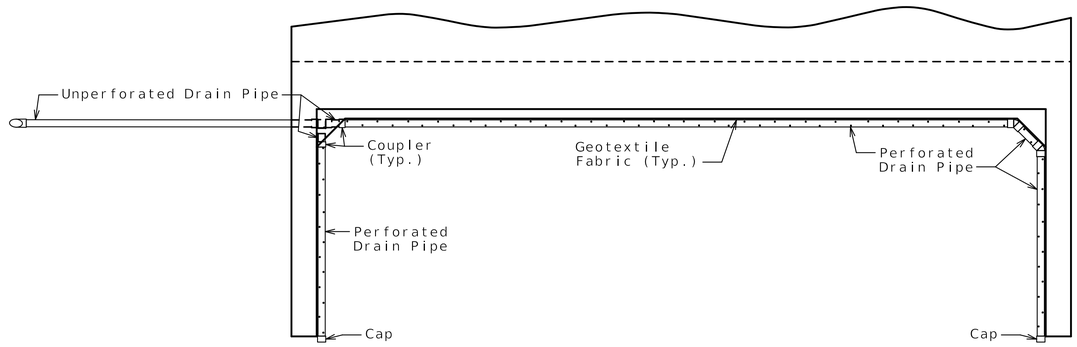

PLAN OF END BENT

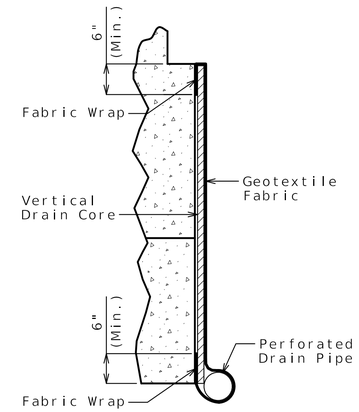

PART SECTION A-A
(Section thru wing similar)

General Notes:

All drain pipe shall be sloped 1 to 2 percent.

Drain pipe may be either 6-inch diameter corrugated metallic-coated steel pipe underdrain, 4-inch diameter corrugated polyvinyl chloride (PVC) drain pipe, or 4-inch diameter corrugated polyethylene (PE) drain pipe.

Drain pipe shall be placed at fill face of end bent and inside face of wings. The pipe shall slope to lowest grade of ground line, also missing the lower beam of end bent by a minimum of 1 1/2 inches.

Perforated pipe shall be placed at fill face side and inside face of wings at the bottom of end bent and plain pipe shall be used where the vertical drain ends to the exit at ground line.

VERTICAL DRAIN AT END BENTS

(Squared end bent shown, skewed end bent similar)

Designed JUL. 2024
Detailed MAR. 2025
Checked MAR. 2025

Note: This drawing is not to scale. Follow dimensions.

Sheet No. 6 of 25

STATE OF MISSOURI
CHRISTOPHER TEPEN
NUMBER 28262
REGISTERED PROFESSIONAL ENGINEER
THIS SHEET HAS BEEN SIGNED, SEALED AND DATED ELECTRONICALLY

DATE 08/22/2025	
DATE PREPARED 8/19/2025	
ROUTE F	STATE MO
DISTRICT BR	SHEET NO. 6
COUNTY JACKSON	
JOB NO. JKU0110	
CONTRACT ID.	
PROJECT NO.	
BRIDGE NO. A9583	

DESCRIPTION	DATE

IF A SEAL IS PRESENT ON THIS SHEET IT HAS BEEN ELECTRONICALLY SEALED AND DATED.

MISSOURI HIGHWAYS AND TRANSPORTATION COMMISSION
105 WEST CAPITOL
JEFFERSON CITY, MO 65102
1-888-ASK-MODOT (1-888-275-6636)

benesch
One Main Plaza, 4435 Main St., Suite 1150,
Kansas City, MO 64111
816/221-4222, FAX 913/441-1468
CERTIFICATE OF AUTHORITY NUMBER F00970024

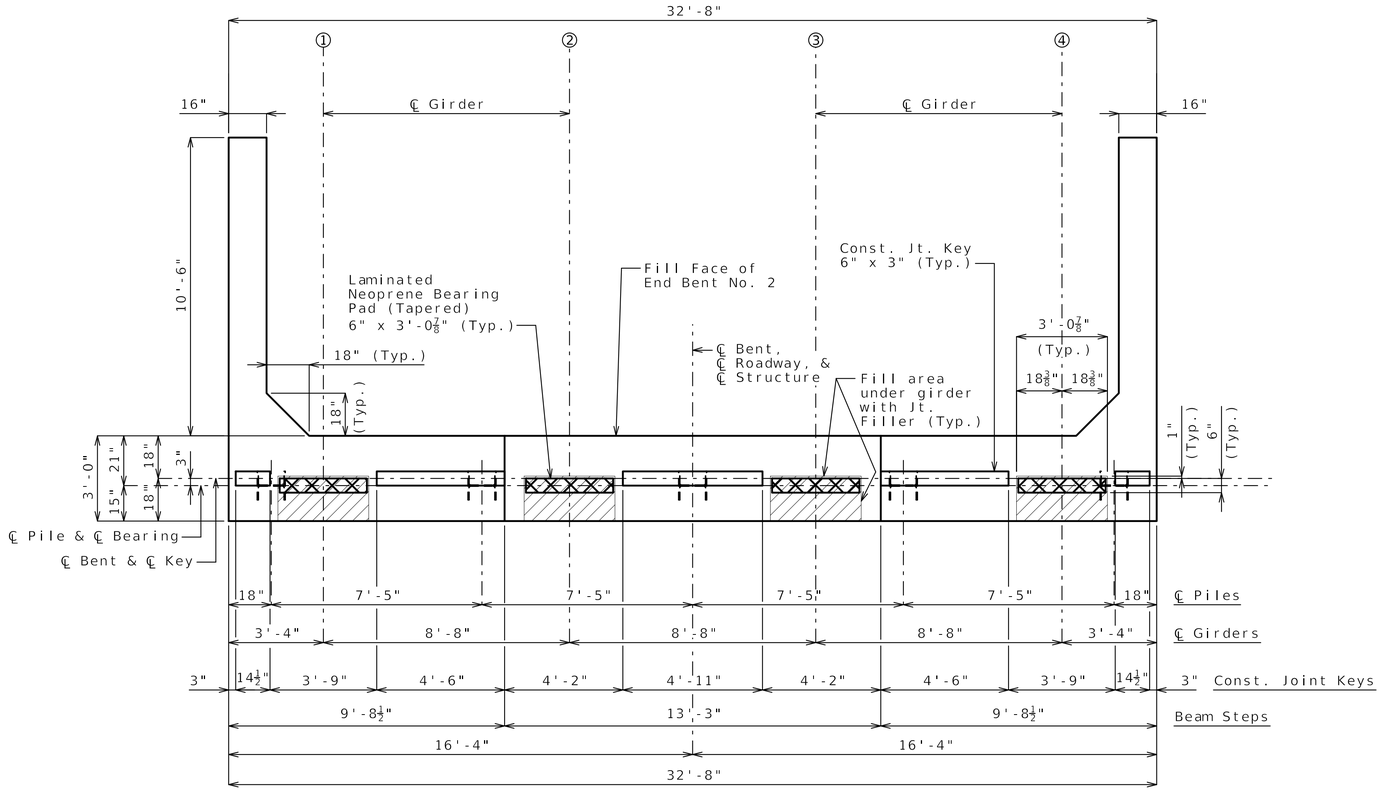

PLAN OF BEAM SHOWING DIMENSIONS

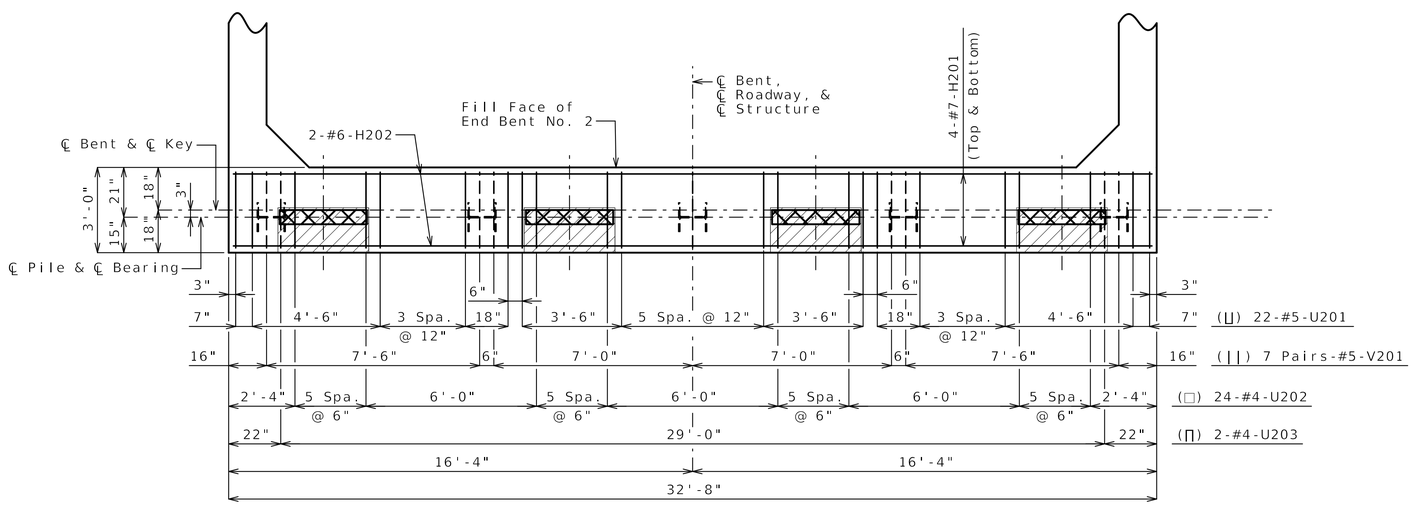

PLAN OF BEAM SHOWING REINFORCEMENT
(Keys & Steps not shown for clarity)

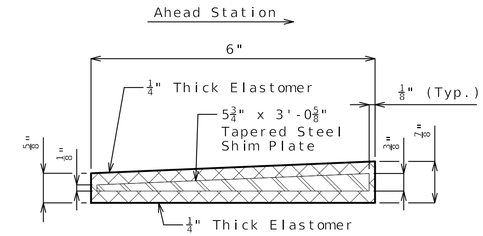

The required shim plate shall be placed between layers of elastomer and molded together to form an intergral unit.

TYPICAL SECTION THRU 6" X 3'-0⅞"
LAMINATED NEOPRENE BEARING PAD (TAPERED)
(4 Required)

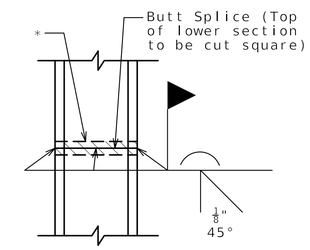

STEEL PILE SPLICE
(If required)

* Galvanizing material shall be omitted or removed one inch clear of weld locations in accordance with Sec 702.

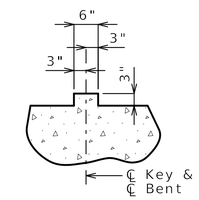

SECTION THRU KEY

Notes:

For details of End Bent No. 2 not shown, see Sheets No. 8 & 9.

For details of Vertical Drain at End Bent see Sheet No. 6.

Reinforcing steel shall be shifted to clear piles. U-bars shall clear piles by at least 1 1/2".

The U-bars and Pairs of V-bars shall be placed parallel to centerline of roadway.

Substructure Quantity Table for End Bent No. 2

Item		Quantity
Class 1 Excavation	cu. yard	50
Galvanized Structural Steel Piles (12in)	linear foot	125
Pile Point Reinforcement	each	5
Class B Concrete (Substructure)	cu. yard	14.6

Note:
These quantities are included in the Estimated Quantities Table on Sheet No. 2.

DETAILS OF END BENT NO. 2

Designed JUL. 2024
Detailed MAR. 2025
Checked MAR. 2025

Note: This drawing is not to scale. Follow dimensions.

Y:\Kansas\131000S\131047.00_MoDOT_Rte_F\Eng_Docs\Bridge\A9583\Final\B_A9583_007_JKU0110_End Bent 2a.dgn (Default) 11:07 8/19/2025

STATE OF MISSOURI
CHRISTOPHER TEPEN
NUMBER 28262
REGISTERED PROFESSIONAL ENGINEER
THIS SHEET HAS BEEN SIGNED, SEALED AND DATED ELECTRONICALLY

DATE	08/22/2025
DATE PREPARED	8/19/2025
ROUTE	F
STATE	MO
DISTRICT	BR
SHEET NO.	7
COUNTY	JACKSON
JOB NO.	JKU0110
CONTRACT ID.	
PROJECT NO.	
BRIDGE NO.	A9583

DATE	DESCRIPTION
.	.
.	.
.	.
.	.
.	.
.	.

IF A SEAL IS PRESENT ON THIS SHEET IT HAS BEEN ELECTRONICALLY SEALED AND DATED.

MISSOURI HIGHWAYS AND TRANSPORTATION COMMISSION
105 WEST CAPITOL
JEFFERSON CITY, MO 65102
1-888-ASK-MODOT (1-888-275-6636)

benesch
One Main Plaza, 4435 Main St., Suite 1150,
Kansas City, MO 64111
816/221-4222, FAX 913/441-1468
CERTIFICATE OF AUTHORITY NUMBER F00970024

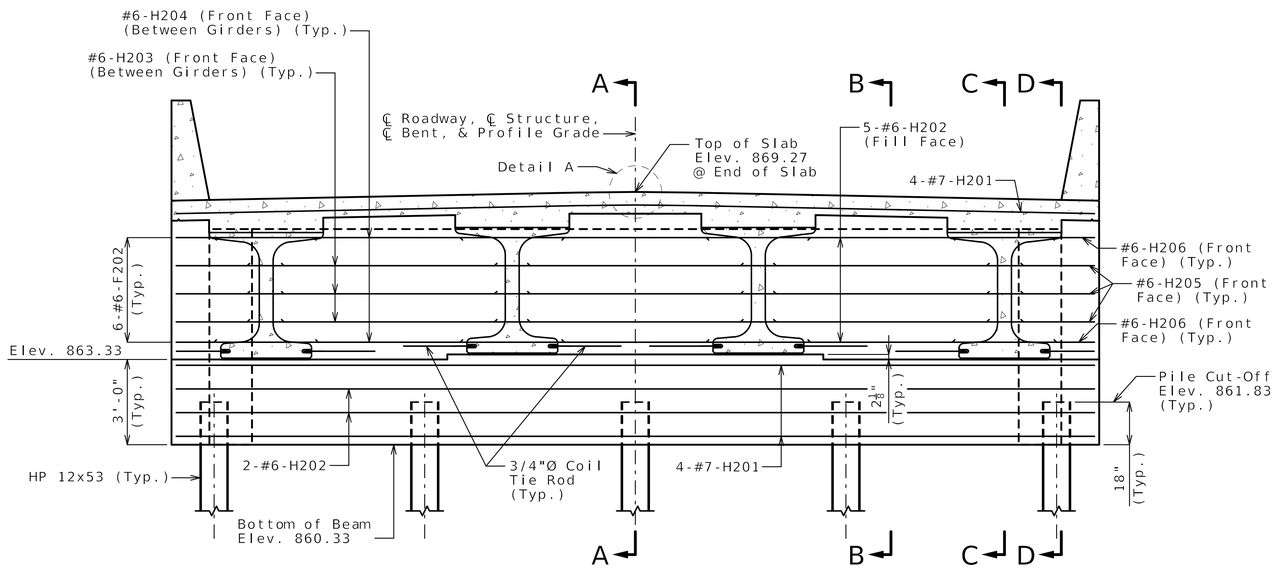

SECTION NEAR END BENT

(Looking back station)

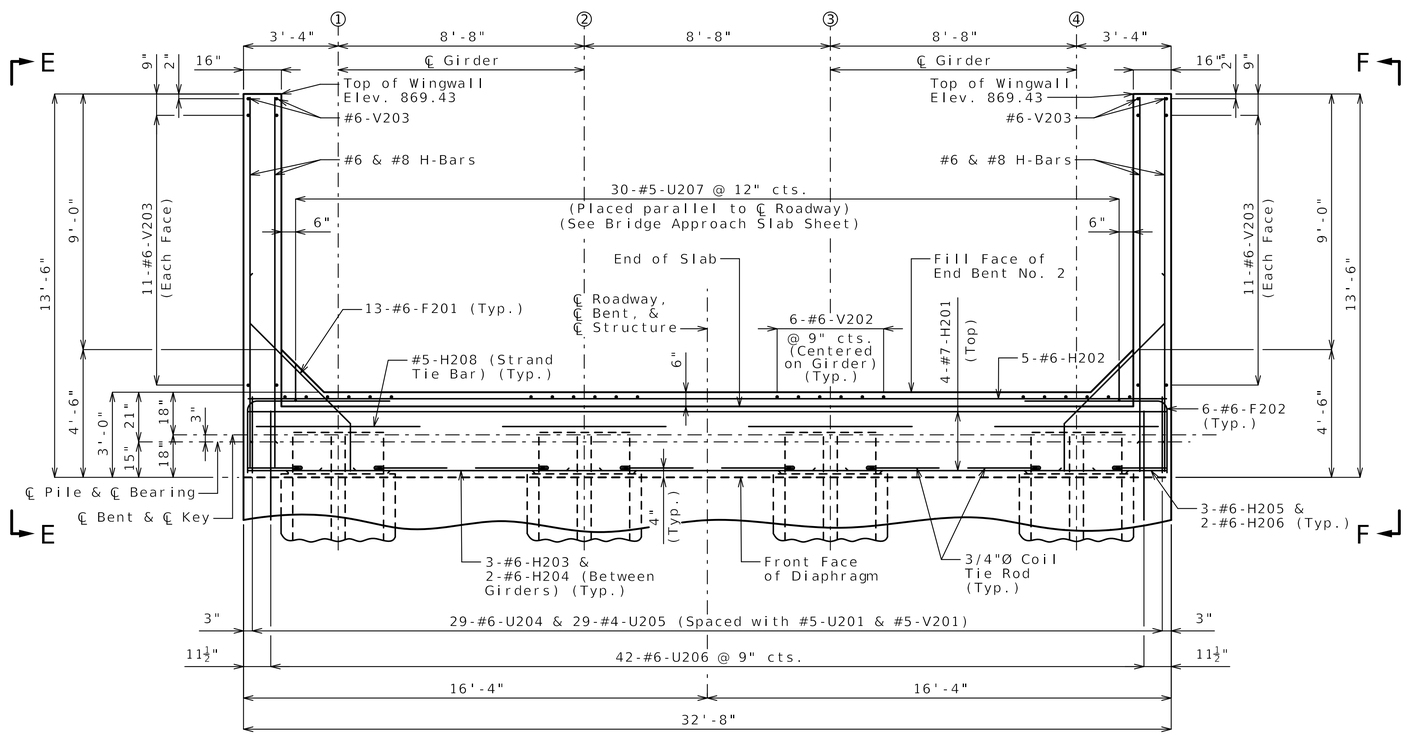

PART PLAN

Notes:

For location of Sections A-A, B-B, C-C, & D-D and Elevations E-E & F-F, see Sheet No. 9.

For details of End Bent No. 2 not shown, see Sheets No. 7 & 9.

For details of Vertical Drain at End Bent, see Sheet No. 6.

For Estimated Quantities Table for End Bent No. 2, see Sheet No. 7.

For location of Coil Tie Rods and #5-H208 (Strand Tie Bar), see Sheets No. 11 & 12.

For details and reinforcement of Type D Barrier, see Sheets No. 17 & 18.

For details of Bridge Approach Slab, see Sheet No. 19.

All concrete in the End Bent above top of beam and below top of slab shall be Class B-2.

The U-bars, pairs of V-bars and #5-H207 bars shall be placed parallel to centerline of roadway.

Reinforcing steel shall be shifted to clear piles. U-bars shall clear piles by at least 1 1/2".

Strands at the end of the girders shall be field bent or, if necessary, cut in field to maintain 1 1/2" minimum clearance to fill face of end bent.

The #6-F201 bars shall be bent in field to clear girders.

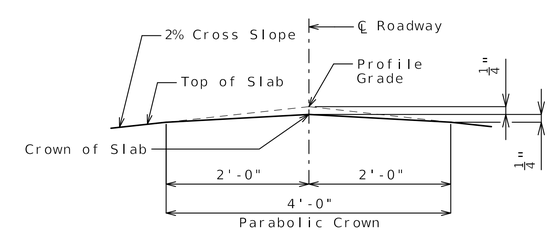

DETAIL "A"

DETAILS OF END BENT NO. 2

Note: This drawing is not to scale. Follow dimensions.

Designed JUL. 2024
Detailed MAR. 2025
Checked MAR. 2025

Sheet No. 8 of 25

STATE OF MISSOURI
CHRISTOPHER TEPEN
NUMBER 28262
REGISTERED PROFESSIONAL ENGINEER

THIS SHEET WAS ORIGINALLY SEALED AND DATED ELECTRONICALLY

DATE	08/22/2025
DATE PREPARED	8/19/2025
ROUTE	F
STATE	MO
DISTRICT	BR
SHEET NO.	8
COUNTY	JACKSON
JOB NO.	JKU0110
CONTRACT ID.	
PROJECT NO.	
BRIDGE NO.	A9583

DATE	DESCRIPTION

IF A SEAL IS PRESENT ON THIS SHEET IT HAS BEEN ELECTRONICALLY SEALED AND DATED.

MISSOURI HIGHWAYS AND TRANSPORTATION COMMISSION
105 WEST CAPITOL
JEFFERSON CITY, MO 65102
1-888-ASK-MODOT (1-888-275-6636)

benesch
One Main Plaza, 4435 Main St., Suite 1150,
Kansas City, MO 64111
816/221-4222, FAX 913/441-1468
CERTIFICATE OF AUTHORITY NUMBER F00970024

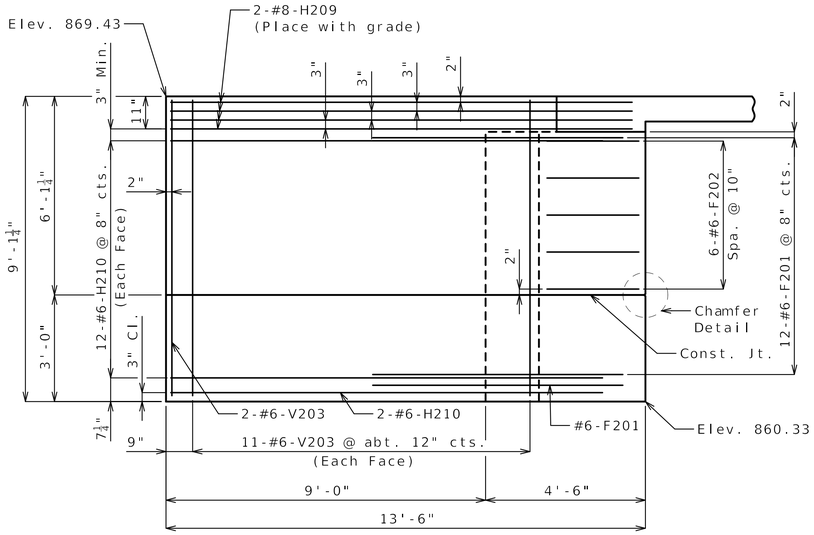

ELEVATION E-E

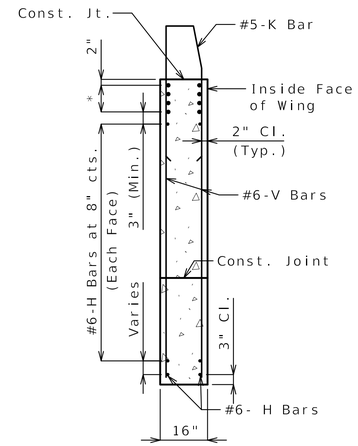

TYPICAL SECTION
THRU WING

* #8-H Bars at 3" cts.
(Each face)(Place with grade)

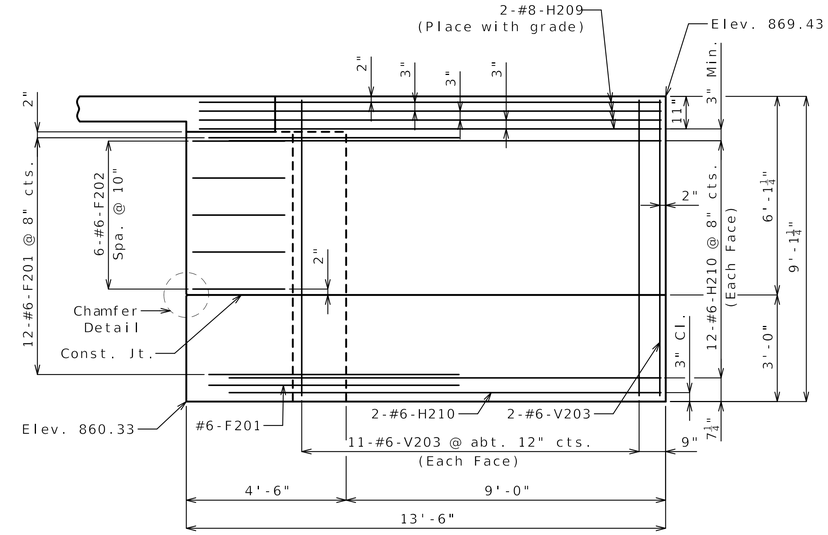

ELEVATION F-F

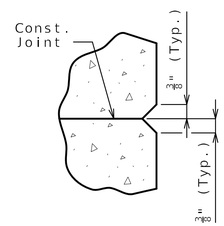

CHAMFER DETAIL

Notes:

For location of Sections A-A, B-B, C-C, & D-D and Elevations E-E & F-F, see Sheet No. 8.

For details of End Bent No. 2 not shown, see Sheets No. 7 & 8.

For Estimated Quantities Table for End Bent No. 2, see Sheet No. 7.

For Details and Reinforcement of Type D Barrier not shown, see Sheets No. 17 & 18.

All concrete in end bent above top of beam and below top of slab, shall be Class B-2.

The #6-F201 bars shall be bent in field to clear girders.

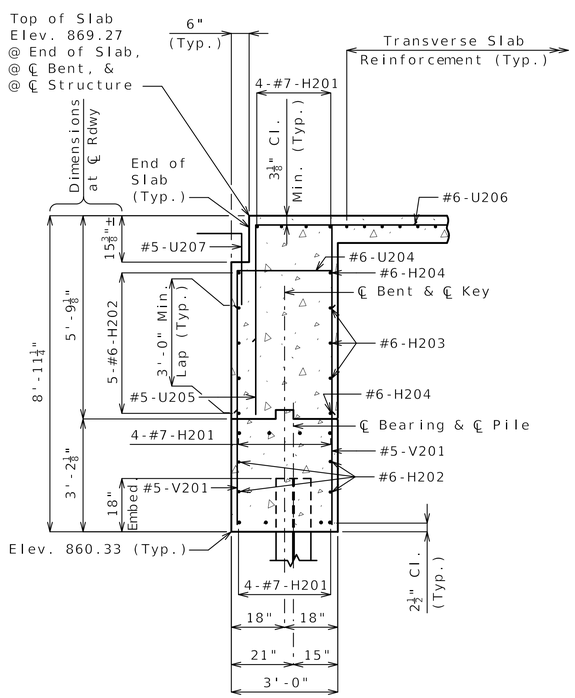

SECTION A-A

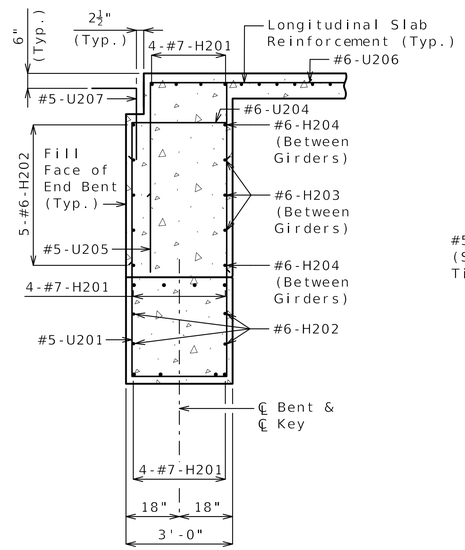

SECTION B-B

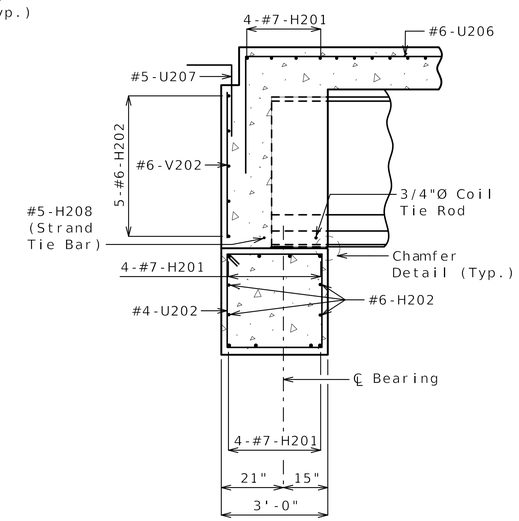

SECTION C-C

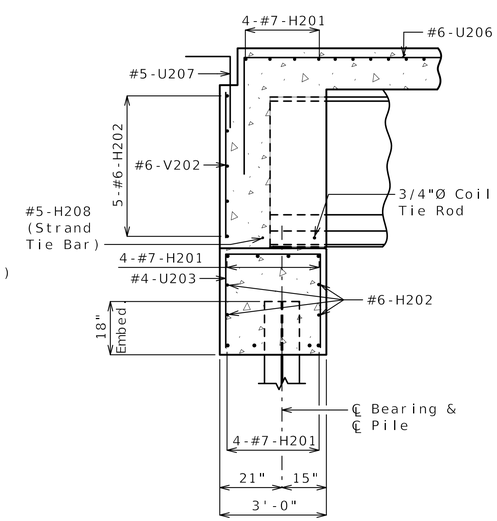

SECTION D-D

DETAILS OF END BENT NO. 2

Designed JUL. 2024
Detailed MAR. 2025
Checked MAR. 2025

Note: This drawing is not to scale. Follow dimensions.

Y:\Kansas\131000S\131047.00_MoDOT_Rte_F\Eng_Docs\Bridge\A9583\Final\B_A9583_009_JKU0110_End Bent 2c.dgn (Default) 11:08 8/19/2025

STATE OF MISSOURI
CHRISTOPHER TEPEN
NUMBER 28262
REGISTERED PROFESSIONAL ENGINEER
THIS SHEET HAS BEEN SIGNED, SEALED AND DATED ELECTRONICALLY

DATE
08/22/2025
DATE PREPARED
8/19/2025

ROUTE	STATE
F	MO
DISTRICT	SHEET NO.
BR	9

COUNTY: JACKSON
JOB NO.: JKU0110
CONTRACT ID.:
PROJECT NO.:
BRIDGE NO.: A9583

DATE	DESCRIPTION

IF A SEAL IS PRESENT ON THIS SHEET IT HAS BEEN ELECTRONICALLY SEALED AND DATED.

MISSOURI HIGHWAYS AND TRANSPORTATION COMMISSION
105 WEST CAPITOL
JEFFERSON CITY, MO 65102
1-888-ASK-MODOT (1-888-275-6636)

benesch
One Main Plaza, 4435 Main St., Suite 1150,
Kansas City, MO 64111
816/221-4222, FAX 913/441-1468
CERTIFICATE OF AUTHORITY NUMBER F00970024

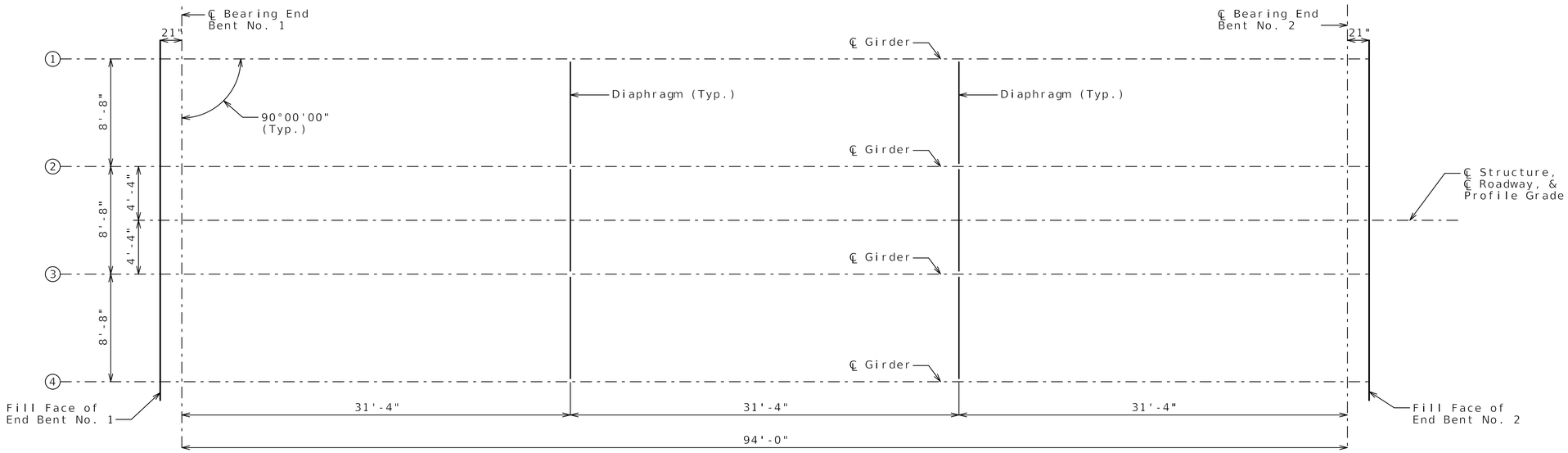

(SPAN 1-2)

LAYOUT PLAN

Note:
All dimensions are measured horizontal.

For details of Steel Intermediate Diaphragms, see Sheet No. 13.

PLAN SHOWING PRESTRESSED CONCRETE NU-GIRDER LAYOUT

Designed JUL. 2024
Detailed MAR. 2025
Checked MAR. 2025

Note: This drawing is not to scale. Follow dimensions.

STATE OF MISSOURI
CHRISTOPHER TEPEN
NUMBER 28262
REGISTERED PROFESSIONAL ENGINEER
THIS SHEET WAS SEALED ELECTRONICALLY AND DATED ELECTRONICALLY

DATE	08/22/2025
DATE PREPARED	8/19/2025
ROUTE	F
STATE	MO
DISTRICT	BR
SHEET NO.	10
COUNTY	JACKSON
JOB NO.	JKU0110
CONTRACT ID.	
PROJECT NO.	
BRIDGE NO.	A9583

DESCRIPTION	DATE
.	.
.	.
.	.
.	.
.	.
.	.

MISSOURI HIGHWAYS AND TRANSPORTATION COMMISSION
105 WEST CAPITOL
JEFFERSON CITY, MO 65102
1-888-ASK-MODOT (1-888-275-6636)

benesch
One Main Plaza, 4435 Main St., Suite 1150,
Kansas City, MO 64111
816/221-4222, FAX 913/441-1468
CERTIFICATE OF AUTHORITY NUMBER F00970024

IF A SEAL IS PRESENT ON THIS SHEET IT HAS BEEN ELECTRONICALLY SEALED AND DATED.

(1) Fabricator shall apply a bond breaker to this region excluding where joint filler will be applied.

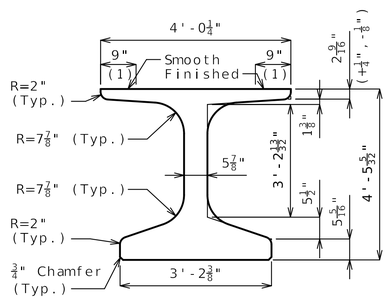

DIMENSIONS

(2) Outer strands tensioned to 2.02 kips/strand and inner strands to 8 kips/strand. Placed symmetrical about ℄ Girder. May be moved laterally in pairs.

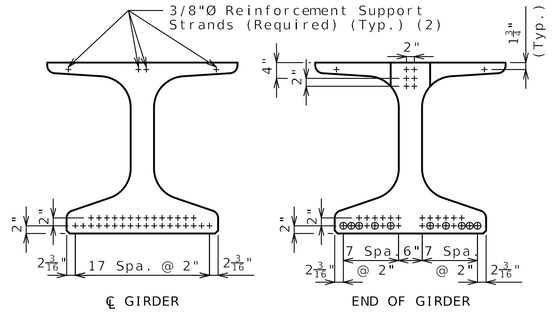

℄ GIRDER

END OF GIRDER

STRAND ARRANGEMENT

+ Indicates prestressing strand.

o Indicates cut & shop bend with 3'-0" projection.

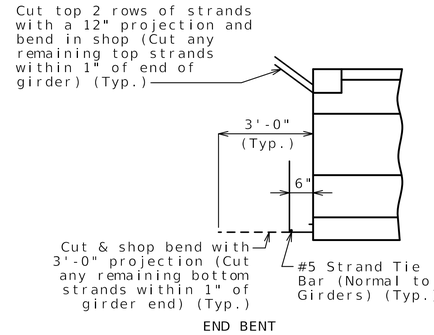

END BENT

STRANDS AT GIRDER ENDS

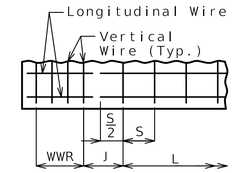

WELDED WIRE PLACEMENT

S = Vertical Wire Spacing

L = Length of WWR Mats

J = Distance between WWR Mats

Bill of Reinforcing Steel

Bars Each Girder

No.	Size/Mark	Length	Shape
116	3 G1	2'-10"	8
2	4 G3	3'-10"	20

Welded Wire Each Girder

Mark	Size	S	W	L	J
WWR1	D18	4"	W8	2'-8"	9"
WWR2	D18	12"	W8	17'-0"	12"
WWR3	D18	20"	W8	48'-4"	--
WWR6	D31	2"	W12	16"	3¼"

Bending Diagrams

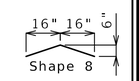

Shape 8

Shape 20

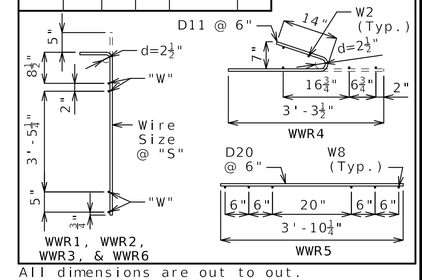

All dimensions are out to out.

Hooks and bends shall be in accordance with the CRSI Manual of Standard Practice for Detailing Reinforced Concrete Structures, Stirrup and Tie Dimensions.

Actual bar lengths are measured along centerline of bar to the nearest inch.

Minimum clearance to reinforcing shall be 1", unless otherwise shown.

All bar reinforcement shall be Grade 60.

WWR shall not be epoxy coated.

G4 and G5 not required for interior girders.

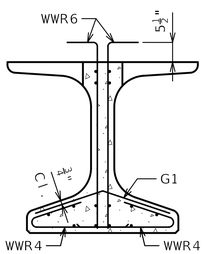

SECTION A-A

Strands not shown for clarity.

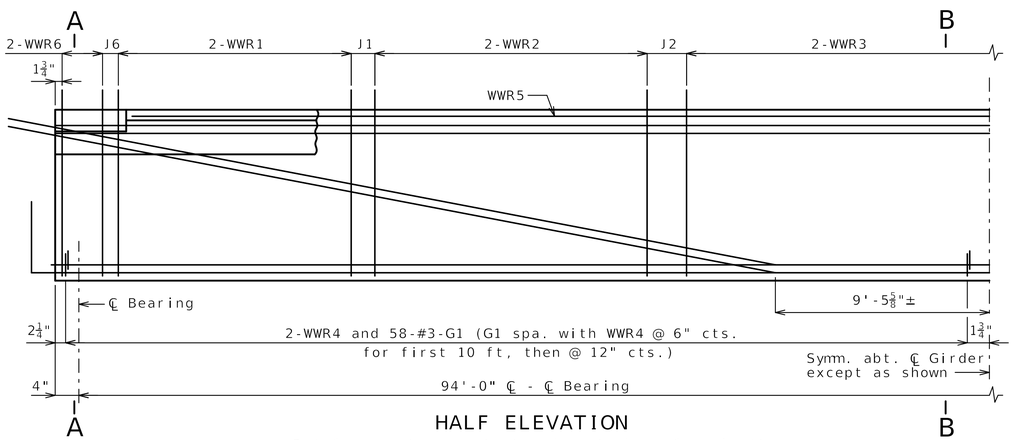

HALF ELEVATION

Reinforcement support strands not shown for clarity.

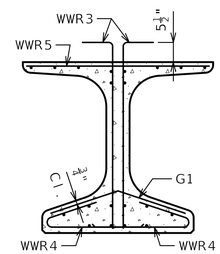

SECTION B-B

Strands not shown for clarity.

General Notes:

Concrete for prestressed beams shall be Class A-1 with f'c = 8000 psi and f'ci = 6500 psi.

Use 32 strands, 0.6"Ø Grade 270, with an initial prestress force of 1406 kips.

Pretensioned members shall be in accordance with Sec 1029.

Fabricator shall be responsible for location and design of lifting devices.

Exterior and interior girders are the same except: coil ties and holes for steel intermediate diaphragms.

For Girder Camber Diagram, see Sheet No. 14.

The 1 1/2"Ø holes shall be cast in the web for steel intermediate diaphragms. Drilling is not allowed. For location of holes and details of steel intermediate diaphragms, see Sheet No. 13.

For location of coil ties at concrete diaphragms and integral bents, see Sheets No. 4 and 8.

Alternate bar reinforcing steel details are provided and may be used. The same type of reinforcing steel shall be used for all girders in all spans.

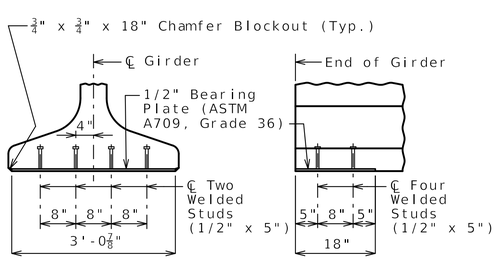

END VIEW

SIDE VIEW

BEARING PLATE

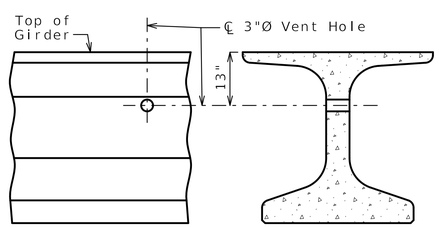

PART ELEVATION

PART SECTION

VENT HOLE

Place vent holes at or near upgrade 1/3 point of girders and clear reinforcing steel or strands by 1 1/2" minimum and steel intermediate diaphragm bolt connections by 6" minimum.

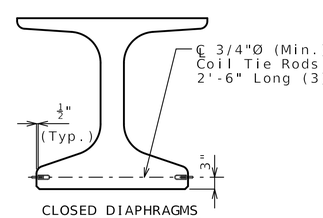

CLOSED DIAPHRAGMS AND INTEGRAL BENTS

COIL TIES

Exclude coil tie at exterior face of exterior girders except at integral end bents.

(3) 1'-6" at exterior face of exterior girders at end bents

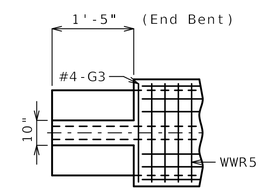

INTERIOR GIRDER AT ALL BENTS & EXTERIOR GIRDER AT END BENT

TOP FLANGE BLOCKOUT

PRESTRESSED NU53 GIRDER DETAILS SPAN (1-2)

Designed JUL. 2024
Detailed MAR. 2025
Checked MAR. 2025

Note: This drawing is not to scale. Follow dimensions.

STATE OF MISSOURI
CHRISTOPHER TEPEN
NUMBER 28262
REGISTERED PROFESSIONAL ENGINEER
THIS SHEET HAS BEEN SIGNED, SEALED AND DATED ELECTRONICALLY

DATE	08/22/2025
DATE PREPARED	8/19/2025
ROUTE F	STATE MO
DISTRICT BR	SHEET NO. 11
COUNTY	JACKSON
JOB NO.	JKU0110
CONTRACT ID.	
PROJECT NO.	
BRIDGE NO.	A9583

DATE	DESCRIPTION

MISSOURI HIGHWAYS AND TRANSPORTATION COMMISSION

105 WEST CAPITOL
JEFFERSON CITY, MO 65102
1-888-ASK-MODOT (1-888-275-6636)

benesch

One Main Plaza, 4435 Main St., Suite 1150,
Kansas City, MO 64111
816/221-4222, FAX 913/441-1468
CERTIFICATE OF AUTHORITY NUMBER F00970024

IF A SEAL IS PRESENT ON THIS SHEET IT HAS BEEN ELECTRONICALLY SEALED AND DATED.

(1) Fabricator shall apply a bond breaker to this region excluding where joint filler will be applied.

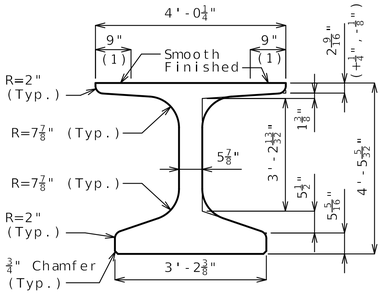

DIMENSIONS

(2) Outer strands tensioned to 2.02 kips/strand and inner strands to 8 kips/strand. Placed symmetrical about ℄ Girder. May be moved laterally in pairs.

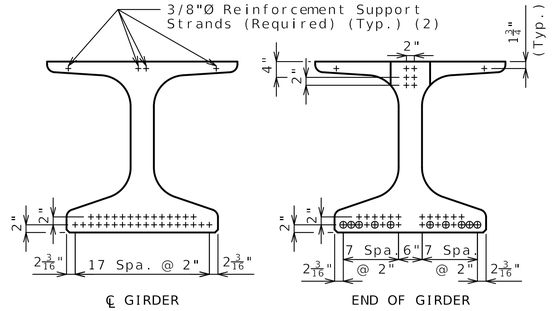

℄ GIRDER END OF GIRDER

STRAND ARRANGEMENT

+ Indicates prestressing strand.

o Indicates cut & shop bend with 3'-0" projection.

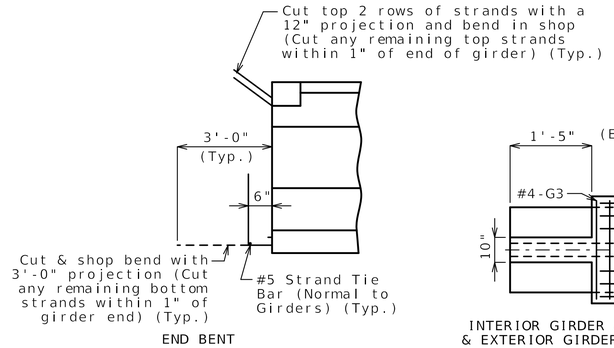

END BENT

STRANDS AT GIRDER ENDS

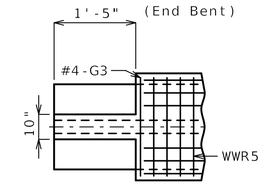

INTERIOR GIRDER AT ALL BENTS & EXTERIOR GIRDER AT END BENT

TOP FLANGE BLOCKOUT

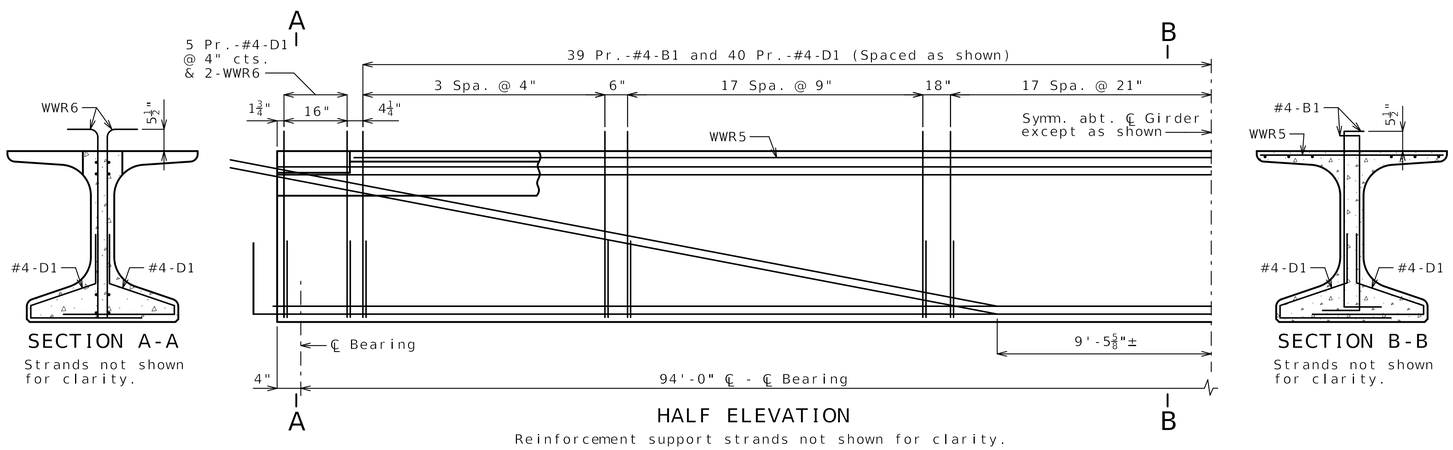

SECTION A-A

Strands not shown for clarity.

HALF ELEVATION

Reinforcement support strands not shown for clarity.

SECTION B-B

Strands not shown for clarity.

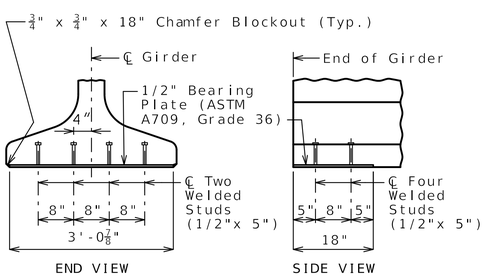

END VIEW SIDE VIEW

BEARING PLATE

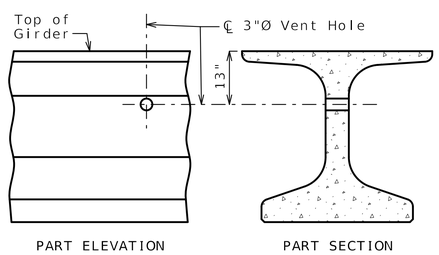

PART ELEVATION PART SECTION

VENT HOLE

Place vent holes at or near upgrade 1/3 point of girders and clear reinforcing steel or strands by 1 1/2" minimum and steel intermediate diaphragm bolt connections by 6" minimum.

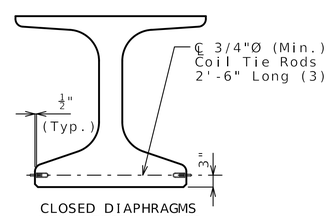

CLOSED DIAPHRAGMS AND INTEGRAL BENTS

COIL TIES

Exclude coil tie at exterior face of exterior girders except at integral end bents.

(3) 1'-6" at exterior face of exterior girders at end bents

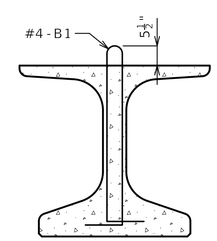

B1 BAR PERMISSIBLE ALTERNATE SHAPE

Bill of Reinforcing Steel - Each Girder

No.	Size/ Mark	Length	Shape
158	4 B1	5'-10"	11S
178	4 D1	4'-0"	9S
2	4 G3	3'-10"	20

Bending Diagrams

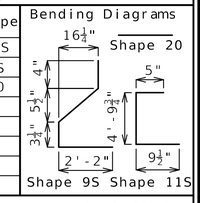

Welded Wire Reinforcement - Each Girder

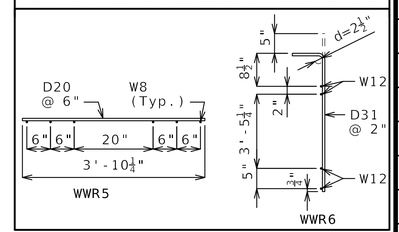

All dimensions are out to out.

Hooks and bends shall be in accordance with the CRSI Manual of Standard Practice for Detailing Reinforced Concrete Structures, Stirrup and Tie Dimensions.

Actual bar lengths are measured along centerline of bar to the nearest inch.

Minimum clearance to reinforcing shall be one inch.

All bar reinforcement shall be Grade 60.

The two D1 bars may be furnished as one bar at the fabricator's option.

All B1 bars shall be epoxy coated.

G4 and G5 not required for interior girders.

General Notes:

Concrete for prestressed girders shall be Class A-1 with f'c = 8000 psi and f'ci = 6500 psi.

Use 32 strands, 0.6"Ø Grade 270, with an initial prestress force of 1406 kips.

Pretensioned members shall be in accordance with Sec 1029.

Fabricator shall be responsible for location and design of lifting devices.

Exterior and interior girders are the same except: coil ties and holes for steel intermediate diaphragms.

For Girder Camber Diagram, see Sheet No. 14.

The 1 1/2"Ø holes shall be cast in the web for steel intermediate diaphragms. Drilling is not allowed. For location of holes and details of steel intermediate diaphragms, see Sheet No. 13.

For location of coil ties at concrete diaphragms and integral bents, see Sheets No. 4 and 8.

Alternate bar reinforcing steel details are provided and may be used. The same type of reinforcing steel shall be used for all girders in all spans.

STATE OF MISSOURI
CHRISTOPHER TEPEN
NUMBER 28262
REGISTERED PROFESSIONAL ENGINEER
THIS SHEET HAS BEEN SIGNED, SEALED AND DATED ELECTRONICALLY

DATE 08/22/2025	
DATE PREPARED 8/19/2025	
ROUTE F	STATE MO
DISTRICT BR	SHEET NO. 12
COUNTY JACKSON	
JOB NO. JKU0110	
CONTRACT ID.	
PROJECT NO.	
BRIDGE NO. A9583	

DATE	DESCRIPTION

IF A SEAL IS PRESENT ON THIS SHEET IT HAS BEEN ELECTRONICALLY SEALED AND DATED.

MISSOURI HIGHWAYS AND TRANSPORTATION COMMISSION
105 WEST CAPITOL
JEFFERSON CITY, MO 65102
1-888-ASK-MODOT (1-888-275-6636)

benesch
One Main Plaza, 4435 Main St., Suite 1150,
Kansas City, MO 64111
816/221-4222, FAX 913/441-1468
CERTIFICATE OF AUTHORITY NUMBER F00970024

Designed JUL. 2024
Detailed MAR. 2025
Checked MAR. 2025

NU-GIRDERS (ALTERNATE REINFORCEMENT) - SPAN (1-2)

Note: This drawing is not to scale. Follow dimensions.

Y:\Kansas\131000S\131047.00_MoDOT_Rte_F\Eng_Docs\Bridge\A9583\Final\B_A9583_012_JKU0110_NU53 Girder_Bars.dgn (Default) 11:08 8/19/2025

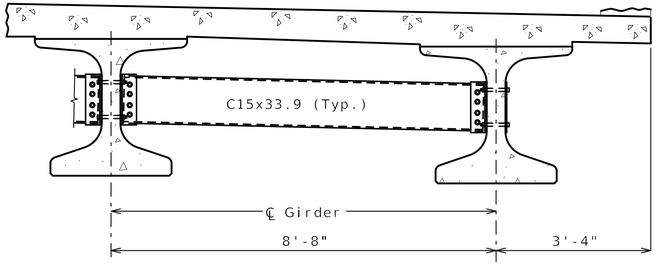

PART SECTION SHOWING
INTERMEDIATE DIAPHRAGMS

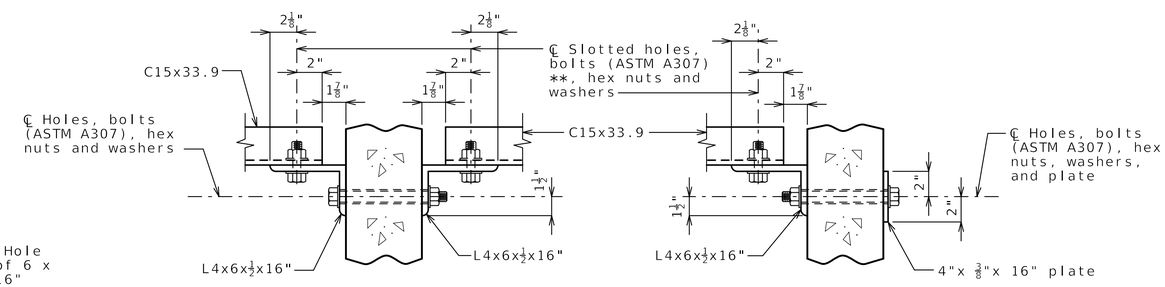

SECTION C-C

SECTION D-D

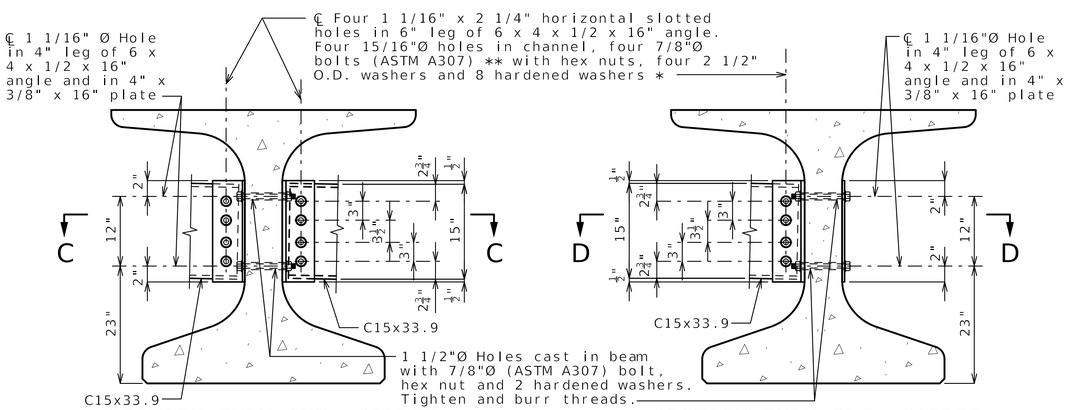

SECTION THRU INT. GIRDER
AT DIAPHRAGM

SECTION THRU EXT. GIRDER
AT DIAPHRAGM

STEEL DIAPHRAGM NOTES:

* In lieu of 2 1/2" outside diameter washers, contractor may substitute a 3/16" (Min. thickness) plate with four 15/16" Ø holes and one hardened washer per bolt.

** Bolts shall be tightened to provide a tension of one-half that specified in Sec 712 for high strength bolt installation. ASTM F3125 Grade A325 Type 1 bolts may be substituted for and installed in accordance with the requirements for the specified ASTM A307 bolts.

All diaphragm materials including bolts, nuts, and washers shall be galvanized.

Fabricated structural steel shall be ASTM A709 Grade 36 except as noted.

Payment for furnishing and installing steel intermediate diaphragms will be considered completely covered by the contract unit price for Steel Intermediate Diaphragm for P/S Concrete Girders.

Shop drawings will not be required for steel intermediate diaphragms and angle connections.

For location of intermediate diaphragms, see Sheet No. 10.

STEEL INTERMEDIATE DIAPHRAGMS

Designed JUL. 2024
Detailed MAR. 2025
Checked MAR. 2025

Note: This drawing is not to scale. Follow dimensions.

Y:\Kansas\1310005\131047.00_MoDOT_Rte_F\Eng_Docs\Bridge\A9583\Final\B_A9583_013_JKU0110_INT. DIAPHRAGM.dgn (Default) 11:08 8/19/2025

STATE OF MISSOURI
CHRISTOPHER TEPEN
NUMBER 28262
REGISTERED PROFESSIONAL ENGINEER
THIS SHEET HAS BEEN SIGNED, SEALED AND DATED ELECTRONICALLY

DATE	08/22/2025
DATE PREPARED	8/19/2025
ROUTE	F
STATE	MO
DISTRICT	BR
SHEET NO.	13
COUNTY	JACKSON
JOB NO.	JKU0110
CONTRACT ID.	
PROJECT NO.	
BRIDGE NO.	A9583

DESCRIPTION	DATE

IF A SEAL IS PRESENT ON THIS SHEET IT HAS BEEN ELECTRONICALLY SEALED AND DATED.

MISSOURI HIGHWAYS AND TRANSPORTATION COMMISSION
105 WEST CAPITOL
JEFFERSON CITY, MO 65102
1-888-ASK-MODOT (1-888-275-6636)

benesch
One Main Plaza, 4435 Main St., Suite 1150,
Kansas City, MO 64111
816/221-4222, FAX 913/441-1468
CERTIFICATE OF AUTHORITY NUMBER F00970024

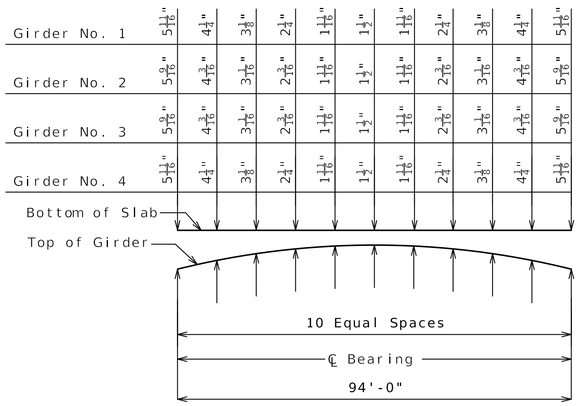

Span (1-2)

THEORETICAL SLAB HAUNCHING DIAGRAM (ESTIMATED AT 90 DAYS)

If girder camber is different from that shown in the camber diagram, in order to maintain minimum slab thickness, an adjustment of the slab haunches, an increase in slab thickness or a raise in grade uniformly throughout the structure shall be necessary. The haunch shall be limited to ensure the projecting girder reinforcement or hairpin bar is embedded into slab at least 2 inches. No payment will be made for additional labor or materials required for variation in haunching, slab thickness, or grade adjustment.

Concrete in the slab haunches is included in the Estimated Quantities for Slab on Concrete NU-Girder.

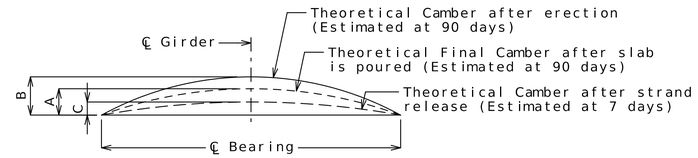

Girder	Span (1-2)		
	A	B	C
Exterior	2 1/16"	3 1/4"	1 13/16"
Interior	1 15/16"		

GIRDER CAMBER DIAGRAM

Conversion Factors for Girder Camber (Estimated at 90 days):

0.1 pt. = 0.314 x 0.5 pt.
0.2 pt. = 0.593 x 0.5 pt.
0.3 pt. = 0.813 x 0.5 pt.
0.4 pt. = 0.952 x 0.5 pt.

Theoretical Bottom of Slab Elevations at Centerline of Girder (Prior to Forming for Slab) (Estimated at 90 Days)											
Girder Number	Span (1-2) (94'-0" ℄ Brg. - ℄ Brg.)										
	℄ Brg.	0.10	0.20	0.30	0.40	0.50	0.60	0.70	0.80	0.90	℄ Brg.
1	865.39	865.64	865.91	866.19	866.47	866.75	867.04	867.34	867.64	867.95	868.28
2	865.56	865.82	866.09	866.37	866.65	866.94	867.23	867.52	867.82	868.13	868.45
3	865.56	865.82	866.09	866.37	866.65	866.94	867.23	867.52	867.82	868.13	868.45
4	865.39	865.64	865.91	866.19	866.47	866.75	867.04	867.34	867.64	867.95	868.28

Elevations are based on a constant slab thickness of 8½" and include allowance for theoretical dead load deflections due to weight of slab (including SIP forms) and barrier.

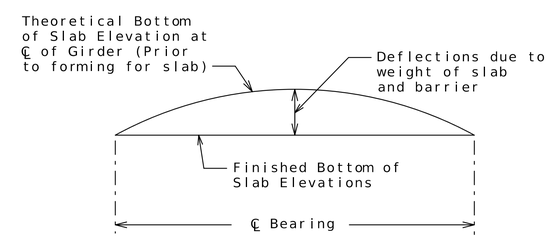

TYPICAL SLAB ELEVATIONS DIAGRAM

SLAB POURING SEQUENCE

The contractor shall pour up grade and satisfactorily finish the roadway slab at a rate of not less than 25 cubic yards per hour.

The concrete diaphragm at the integral end bents shall be poured a minimum of 30 minutes and a maximum of 2 hours before the slab is poured.

Designed JUL. 2024
Detailed MAR. 2025
Checked MAR. 2025

Note: This drawing is not to scale. Follow dimensions.

Y:\Kansas\131000S\131047.00_MoDOT_Rte_F\Eng_Docs\Bridge\A9583\Final\B_A9583_014_JKU0110_Haunch.dgn (Default) 11:08 8/19/2025

STATE OF MISSOURI
CHRISTOPHER TEPEN
NUMBER 28262
REGISTERED PROFESSIONAL ENGINEER
THIS SHEET HAS BEEN SIGNED, SEALED AND DATED ELECTRONICALLY

DATE	08/22/2025
DATE PREPARED	8/19/2025
ROUTE	F
STATE	MO
DISTRICT	BR
SHEET NO.	14
COUNTY	JACKSON
JOB NO.	JKU0110
CONTRACT ID.	
PROJECT NO.	
BRIDGE NO.	A9583

DATE	DESCRIPTION
.	.
.	.
.	.
.	.
.	.
.	.
.	.

IF A SEAL IS PRESENT ON THIS SHEET IT HAS BEEN ELECTRONICALLY SEALED AND DATED.

MISSOURI HIGHWAYS AND TRANSPORTATION COMMISSION
105 WEST CAPITOL
JEFFERSON CITY, MO 65102
1-888-ASK-MODOT (1-888-275-6636)

benesch
One Main Plaza, 4435 Main St., Suite 1150,
Kansas City, MO 64111
816/221-4222, FAX 913/441-1468
CERTIFICATE OF AUTHORITY NUMBER F00970024

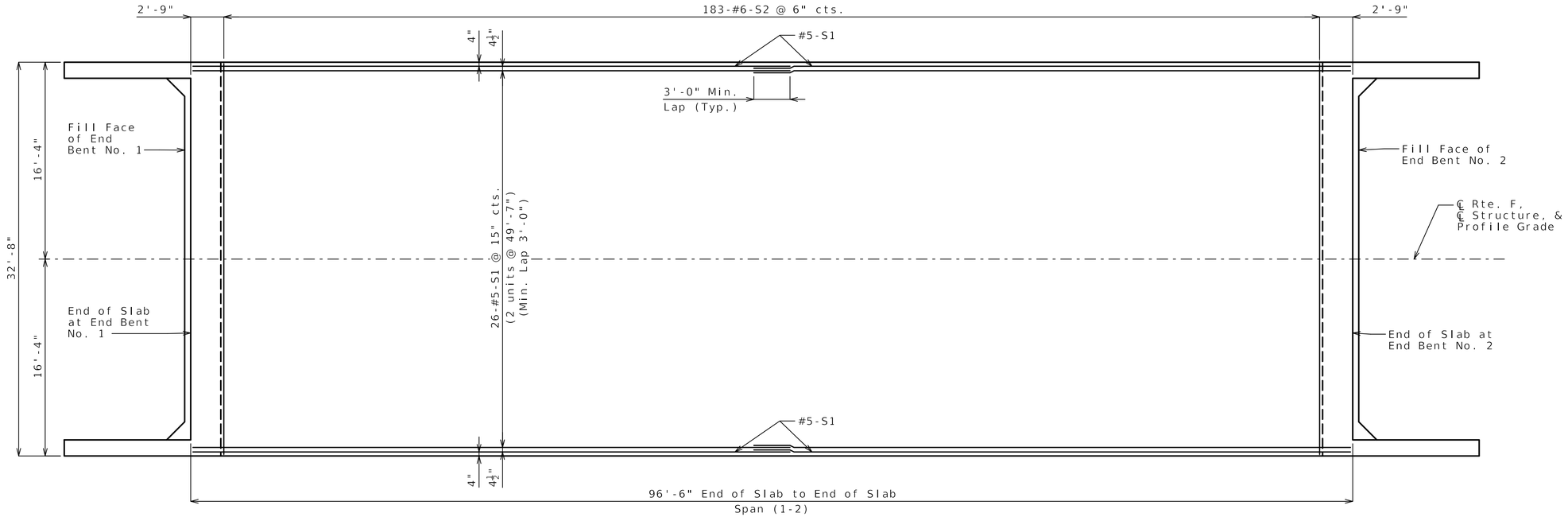

PLAN OF SLAB SHOWING TOP REINFORCEMENT

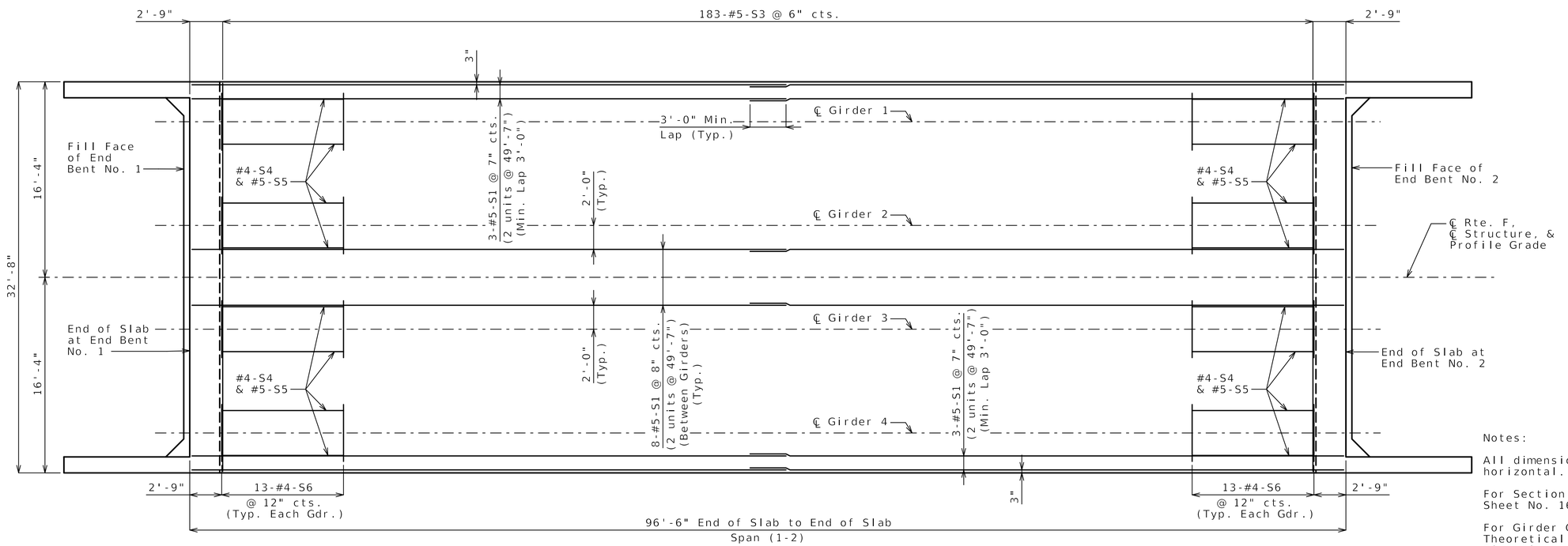

PLAN OF SLAB SHOWING BOTTOM REINFORCEMENT

Notes:

All dimensions are measured horizontal.

For Section thru Slab, see Sheet No. 16.

For Girder Camber Diagram, Theoretical Bottom of Slab Elevations and Theoretical Slab Haunching Diagram, see Sheet No. 14.

For Details and Reinforcement of Type D Barrier, see Sheet No. 18.

Designed JUL. 2024
Detailed MAR. 2025
Checked MAR. 2025

Note: This drawing is not to scale. Follow dimensions.

STATE OF MISSOURI
CHRISTOPHER TEPEN
NUMBER 28262
REGISTERED PROFESSIONAL ENGINEER
THIS SHEET HAS BEEN SIGNED, SEALED AND DATED ELECTRONICALLY

DATE	08/22/2025
DATE PREPARED	8/19/2025
ROUTE / STATE	F / MO
DISTRICT / SHEET NO.	BR / 15
COUNTY	JACKSON
JOB NO.	JKU0110
CONTRACT ID.	
PROJECT NO.	
BRIDGE NO.	A9583

DATE	DESCRIPTION
.	.
.	.
.	.
.	.
.	.
.	.
.	.

IF A SEAL IS PRESENT ON THIS SHEET IT HAS BEEN ELECTRONICALLY SEALED AND DATED.

MISSOURI HIGHWAYS AND TRANSPORTATION COMMISSION
105 WEST CAPITOL
JEFFERSON CITY, MO 65102
1-888-ASK-MODOT (1-888-275-6636)

benesch
One Main Plaza, 4435 Main St., Suite 1150,
Kansas City, MO 64111
816/221-4222, FAX 913/441-1468
CERTIFICATE OF AUTHORITY NUMBER F00970024

REV.

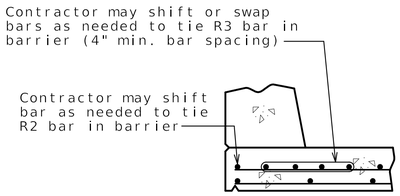

OPTIONAL SHIFTING TOP BARS AT BARRIER

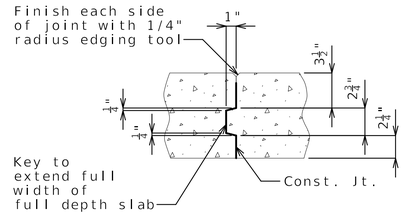

FULL DEPTH SLAB

SLAB CONSTRUCTION JOINT

General Notes:

All dimensions are measured horizontal.

For Plan of Slab Showing Reinforcement, See Sheet No. 15.

For Theoretical Bottom of Slab Elevations and Theoretical Slab Haunching Diagram, See Sheet No. 14.

For Details and Reinforcement of Type D Barrier, See Sheets No. 17 & 18.

Stay-In-Place Forms:

Corrugated steel forms, supports, closure elements, and accessories shall be in accordance with grade requirement and coating designation G165 of ASTM A653. Complete shop drawings of the permanent steel deck forms shall be required in accordance with Sec 1080.

Corrugations of stay-in-place forms shall be filled with an expanded polystyrene material. The polystyrene material shall be placed in the forms with an adhesive in accordance with the manufacturer's recommendations.

Form sheets shall not rest directly on the top of girder flanges. Sheets shall be securely fastened to form supports with a minimum bearing length of one inch on each end. Form supports shall be placed in direct contact with the flange. Welding on or drilling holes in the girder flanges will not be permitted. All steel fabrication and construction shall be in accordance with Sec 1080 and 712. Certified field welders will not be required for welding of the form supports.

The design of stay-in-place corrugated steel forms is per manufacturer which shall be in accordance with Sec 703 for false work and forms. Maximum actual weight of corrugated steel forms allowed shall be 4 psf assumed for girder loading.

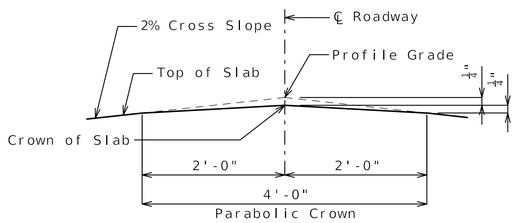

DETAIL A

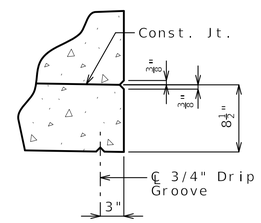

DETAIL B

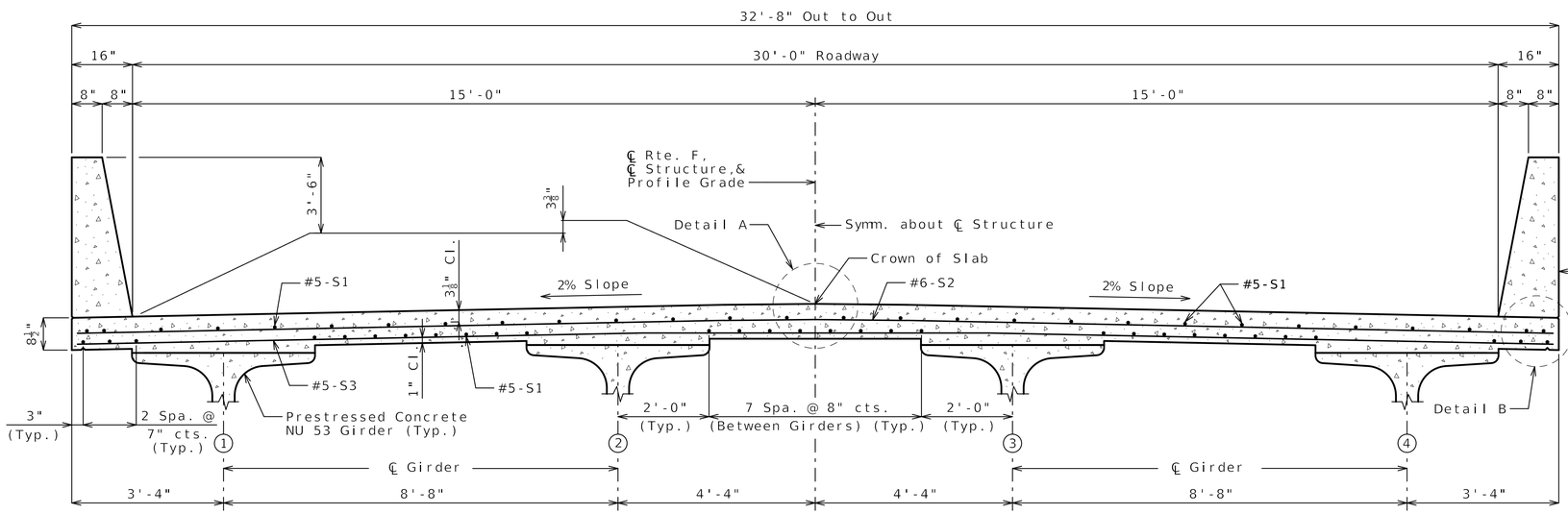

SECTION THRU SLAB

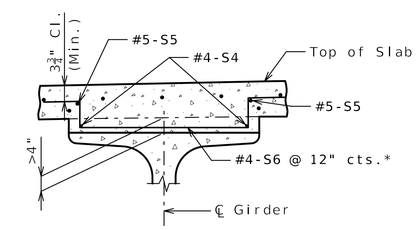

* #4-S6 hairpin bars may be placed at an angle to meet clearances.

PART SECTION SHOWING HAIRPINS

(Top Mat Transverse Bars not shown for clarity)

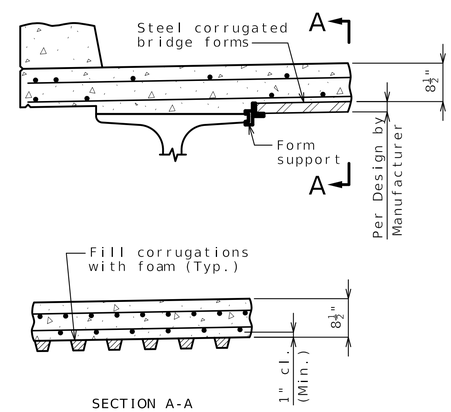

OPTIONAL STAY-IN-PLACE FORM DETAILS

SLAB DETAILS

Designed JUL. 2024
Detailed MAR. 2025
Checked MAR. 2025

Note: This drawing is not to scale. Follow dimensions.

STATE OF MISSOURI
CHRISTOPHER TEPEN
NUMBER 28262
REGISTERED PROFESSIONAL ENGINEER
THIS SHEET HAS BEEN SIGNED, SEALED AND DATED ELECTRONICALLY

DATE	08/22/2025
DATE PREPARED	8/19/2025
ROUTE F	STATE MO
DISTRICT BR	SHEET NO. 16
COUNTY	JACKSON
JOB NO.	JKU0110
CONTRACT ID.	
PROJECT NO.	
BRIDGE NO.	A9583

DATE	DESCRIPTION

IF A SEAL IS PRESENT ON THIS SHEET IT HAS BEEN ELECTRONICALLY SEALED AND DATED.

MISSOURI HIGHWAYS AND TRANSPORTATION COMMISSION
105 WEST CAPITOL
JEFFERSON CITY, MO 65102
1-888-ASK-MODOT (1-888-275-6636)

benesch
One Main Plaza, 4435 Main St., Suite 1150,
Kansas City, MO 64111
816/221-4222, FAX 913/441-1468
CERTIFICATE OF AUTHORITY NUMBER F00970024

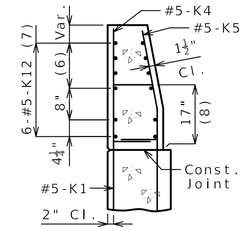

SECTION A-A

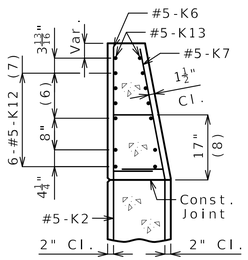

SECTION B-B

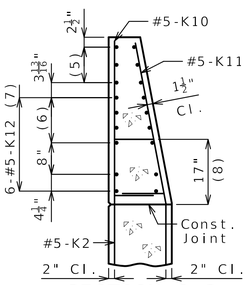

SECTION C-C

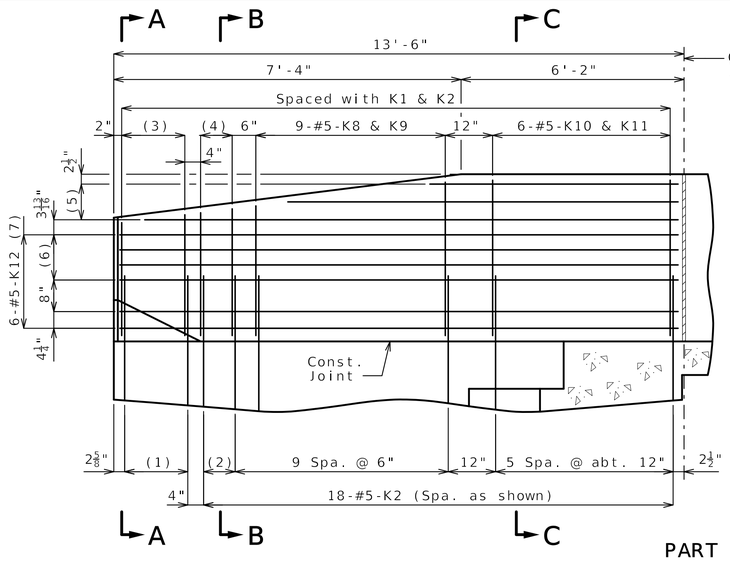

PART ELEVATION

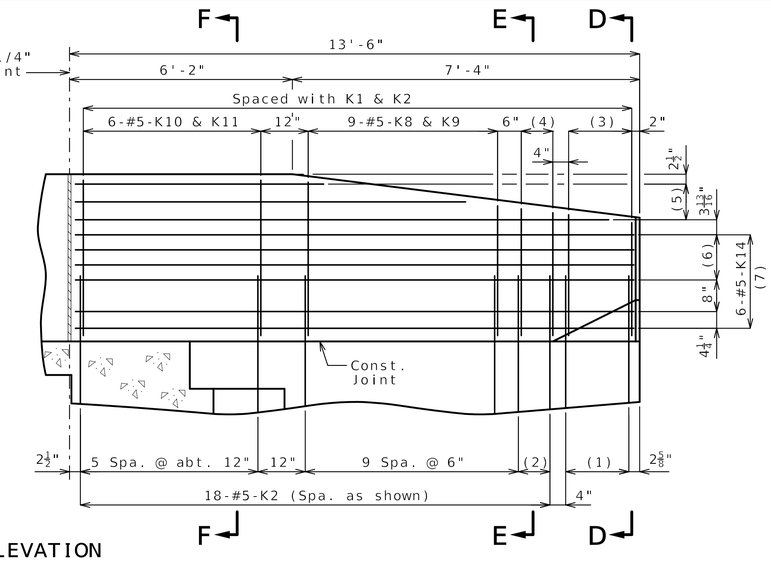

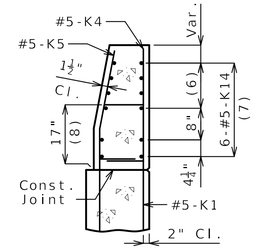

SECTION D-D

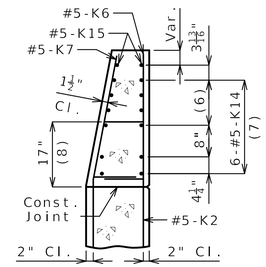

SECTION E-E

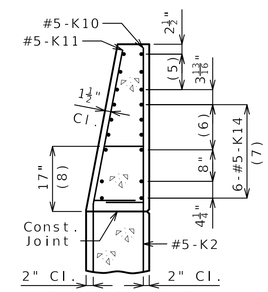

SECTION F-F

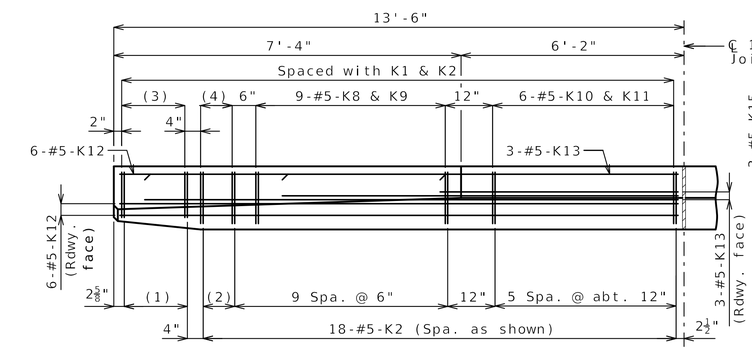

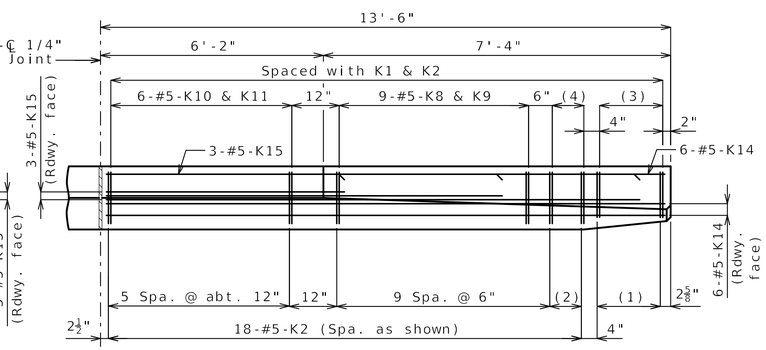

PART PLAN

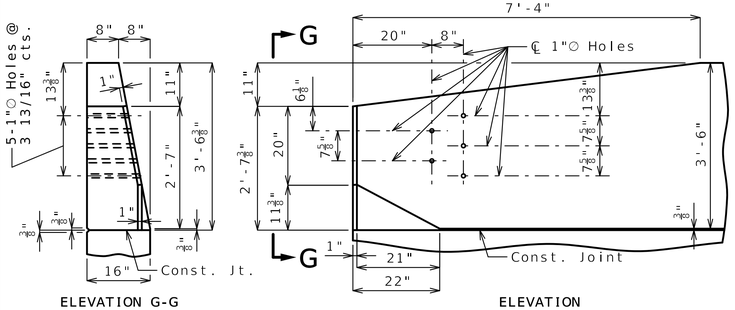

ELEVATION G-G

ELEVATION

(1) 5-#5-K1 @ 4" cts.

(2) 2 spaces @ 4"

(3) 5-#5-K4 & K5

(4) 3-#5-K6 & K7

(5) 3-#5-K13 or K15 @ 4½" cts., each face

(6) 3 spaces @ 3 13/16"

(7) Spaced as shown, each face

(8) To top of bar

K10-K11 BAR PERMISSIBLE ALTERNATE SHAPE

(Other K bars not shown for clarity)

The K10-K11 bar combination may be furnished as one bar as shown, at the contractor's option.

All dimensions are out to out.

* Transition to zero at Type A curb for gutter lines to match.

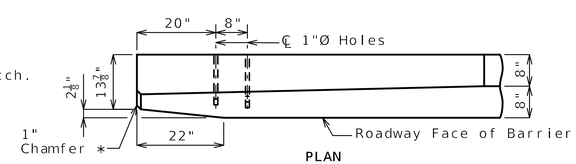

PLAN

DETAILS OF GUARD RAIL ATTACHMENT

General Notes:

Concrete traffic barrier delineators shall be placed on top of the barrier as shown on Missouri Standard Plan 617.10 and in accordance with Sec 617. Delineators on bridges with two-lane, two-way traffic shall have retroreflective sheeting on both sides. Concrete traffic barrier delineators will be considered completely covered by the contract unit price for Type D Barrier.

Reinforcing Steel:
Minimum clearance to reinforcing steel shall be 1 1/2" except as shown for bars embedded into end bent.

TYPE D BARRIER AT END BENTS

(Left barrier shown, right barrier similar)

Designed JUL. 2024
Detailed MAR. 2025
Checked MAR. 2025

Note: This drawing is not to scale. Follow dimensions.

STATE OF MISSOURI
CHRISTOPHER TEPEN
NUMBER 28262
REGISTERED PROFESSIONAL ENGINEER
THIS SHEET HAS BEEN SIGNED, SEALED AND DATED ELECTRONICALLY

DATE	08/22/2025
DATE PREPARED	8/19/2025
ROUTE F	STATE MO
DISTRICT BR	SHEET NO. 17
COUNTY	JACKSON
JOB NO.	JKU0110
CONTRACT ID.	
PROJECT NO.	
BRIDGE NO.	A9583

DATE	DESCRIPTION

IF A SEAL IS PRESENT ON THIS SHEET IT HAS BEEN ELECTRONICALLY SEALED AND DATED.

MISSOURI HIGHWAYS AND TRANSPORTATION COMMISSION
105 WEST CAPITOL
JEFFERSON CITY, MO 65102
1-888-ASK-MODOT (1-888-275-6636)

benesch
One Main Plaza, 4435 Main St., Suite 1150,
Kansas City, MO 64111
816/221-4222, FAX 913/441-1468
CERTIFICATE OF AUTHORITY NUMBER F00970024

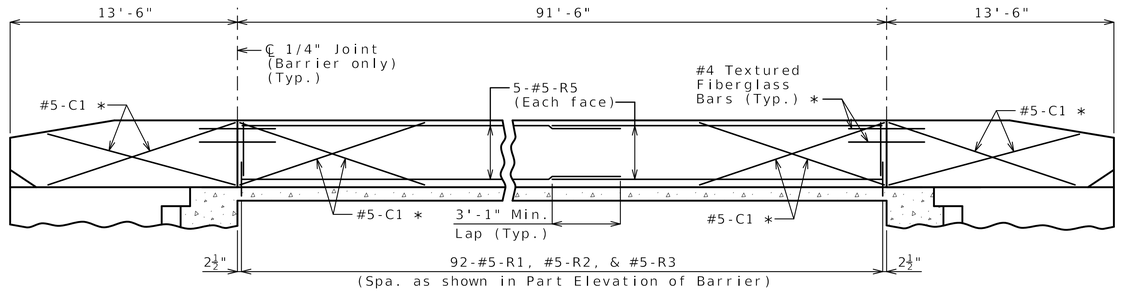

(Span 1-2)

ELEVATION OF BARRIER

(Left barrier shown, right barrier similar)

Longitudinal dimensions are horizontal.

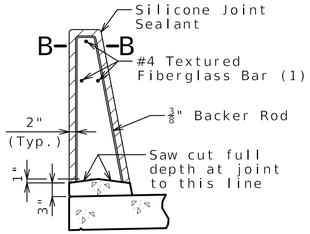

SECTION THRU SAW CUT JOINT

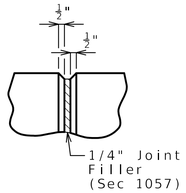

PART ELEVATION AT FORMED JOINT

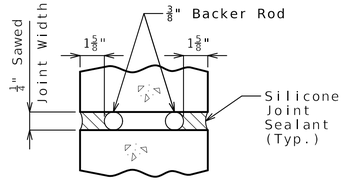

SECTION B-B

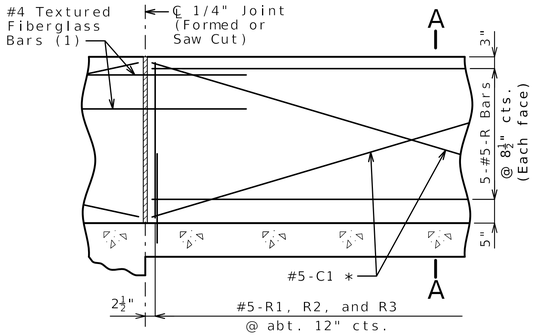

PART ELEVATION OF BARRIER

(1) Four feet long, centered on joint, slip-formed option only

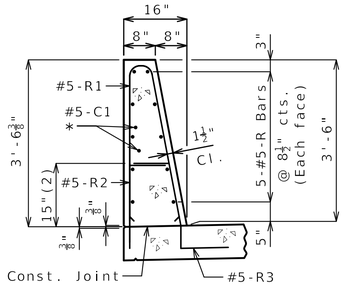

SECTION A-A

Use a minimum lap of 3'-1" for #5 horizontal barrier bars.

The cross-sectional area above the slab is 3.52 square feet.

(2) To top of bar

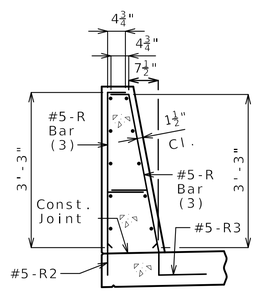

R-BAR PERMISSIBLE ALTERNATE SHAPE

(3) The R1 bar may be separated into two bars as shown, at the contractor's option, only when slip forming is not used. (All dimensions are out to out.)

General Notes:

* Slip-formed option only.

Conventional forming or slip forming may be used. Saw cut joints may be used with conventional forming.

Top of barrier shall be built parallel to grade and barrier joints (except at end bents) normal to grade.

All exposed edges of barrier shall have either a 1/2-inch radius or a 3/8-inch bevel, unless otherwise noted.

Payment for all concrete & reinforcement, complete in place, will be considered completely covered by the contract unit price for Type D Barrier per linear foot.

Concrete in barrier shall be Class B-1.

Measurement of barrier is to the nearest linear foot for each structure, measured along the outside top of slab from end of wing to end of wing.

Concrete traffic barrier delineators shall be placed on top of the barrier as shown on Missouri Standard Plan 617.10 and in accordance with Sec 617. Delineators on bridges with two-lane, two-way traffic shall have retroreflective sheeting on both sides. Concrete traffic barrier delineators will be considered completely covered by the contract unit price for Type D Barrier.

Joint sealant and backer rods shall be in accordance with Sec 717 for silicone joint sealant for saw cut and formed joints.

For slip-formed option, both sides of barrier shall have a vertically broomed finish and the top shall have a transversely broomed finish.

TYPE D BARRIER

Designed JUL. 2024
Detailed MAR. 2025
Checked MAR. 2025

Note: This drawing is not to scale. Follow dimensions.

STATE OF MISSOURI
CHRISTOPHER TEPEN
NUMBER 28262
REGISTERED PROFESSIONAL ENGINEER
THIS SHEET HAS BEEN SIGNED, SEALED AND DATED ELECTRONICALLY

DATE
08/22/2025

DATE PREPARED
8/19/2025

ROUTE	STATE
F	MO
DISTRICT	SHEET NO.
BR	18

COUNTY
JACKSON

JOB NO.
JKU0110

CONTRACT ID.

PROJECT NO.

BRIDGE NO.
A9583

DATE	DESCRIPTION

IF A SEAL IS PRESENT ON THIS SHEET IT HAS BEEN ELECTRONICALLY SEALED AND DATED.

MISSOURI HIGHWAYS AND TRANSPORTATION COMMISSION
105 WEST CAPITOL
JEFFERSON CITY, MO 65102
1-888-ASK-MODOT (1-888-275-6636)

benesch
One Main Plaza, 4435 Main St., Suite 1150,
Kansas City, MO 64111
816/221-4222, FAX 913/441-1468
CERTIFICATE OF AUTHORITY NUMBER F00970024

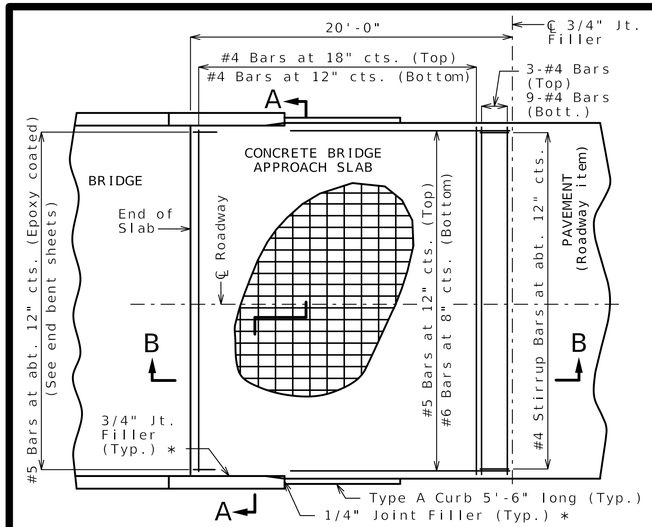

PART PLAN OF SQUARED STRUCTURE
(Skewed structure similar)

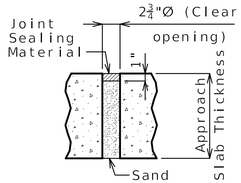

UNDERSEAL ACCESS HOLE DETAIL
(If required)

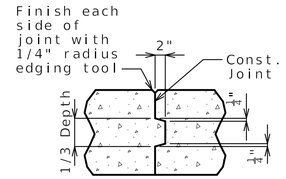

CONSTRUCTION JOINT DETAIL

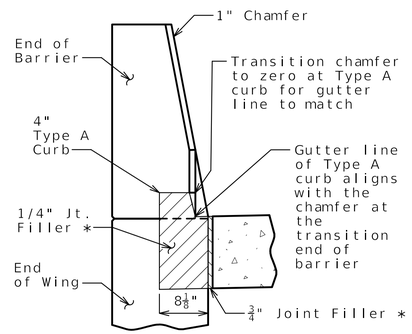

SECTION BETWEEN CURB AND BARRIER

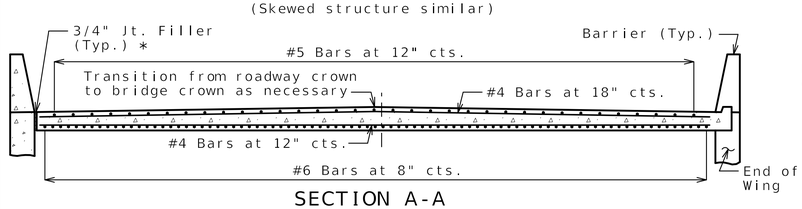

SECTION A-A

With the approval of the engineer, the contractor may crown the bottom of the approach slab to match the crown of the roadway surface.

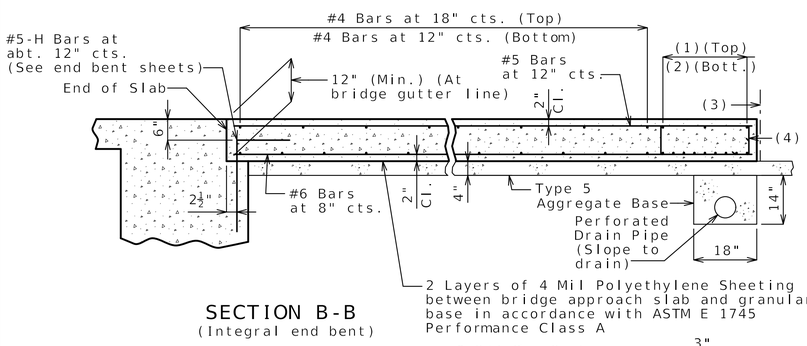

(1) 3-#4 Bars

(2) 9-#4 Bars

(3) ℄ 3/4" Jt. Filler

(4) #4 Stirrup Bars at abt. 12" cts.; 2'-0"x 8" (Min.) out to out; Actual length = 5'-10" (Min.); 90° stirrup hook at bottom; Stirrup height (8") and actual length vary due to crown.

SECTION B-B
(Integral end bent)

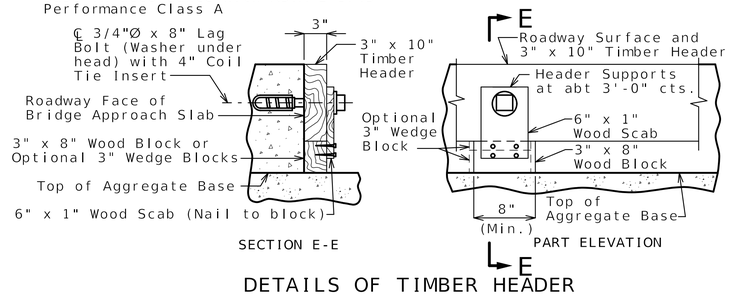

SECTION E-E

PART ELEVATION

DETAILS OF TIMBER HEADER
Remove timber header when concrete pavement is placed.

OPTIONAL CONCRETE SLAB

Notes For Concrete Slab Only:

All concrete for the bridge approach slab shall be in accordance with Sec 503 (f'c = 4,000 psi).

The reinforcing steel in the bridge approach slab shall be epoxy coated Grade 60 with fy = 60,000 psi.

Longitudinal construction joints in bridge approach slab shall be aligned with longitudinal construction joints in bridge slab.

Minimum clearance to reinforcing steel shall be 1 1/2", unless otherwise shown.

The reinforcing steel in the bridge approach slab shall be continuous. The transverse reinforcing steel may be made continuous by providing a minimum lap splice of 23 inches for #4 bars, or by mechanical bar splice.

All joint filler shall be in accordance with Sec 1057 for preformed fiber expansion joint filler except as noted.

Payment for furnishing all materials, labor and excavation necessary to construct the concrete bridge approach slab, including the timber header, underdrain, Type 5 aggregate base, joint filler, and all other appurtenances and incidental work as shown on this sheet, complete in place, will be considered completely covered by the contract unit price for Bridge Approach Slab (Minor) per square yard.

See Missouri Standard Plan 609.00 for details of Type A curb.

Drain pipe may be either 6" diameter corrugated metallic-coated pipe underdrain, 4" diameter corrugated polyvinyl chloride (PVC) drain pipe, or 4" diameter corrugated polyethylene (PE) drain pipe.

* Seal joint between vertical face of approach slab and wing with sealant in accordance with Sec 717 for silicone joint sealant for saw cut and formed joints.

General Notes:

Contractor shall have the option to construct either slab except as noted.

The contractor shall pour and satisfactorily finish the bridge slab before placing the bridge approach slab.

MoDOT Construction personnel will indicate the bridge approach slab used for this structure:

☐ Concrete Bridge Approach Slab

☐ Asphalt Bridge Approach Slab

Notes For Asphalt Slab Only:

Payment for furnishing all materials, labor and excavation necessary to construct the asphalt bridge approach slab, including tack, curb, and Type 5 aggregate base within the pay limits shown, complete in place, will be considered completely covered by the contract unit price for Bridge Approach Slab (Minor) per square yard.

Application of tack is required between lifts per Sec 403.

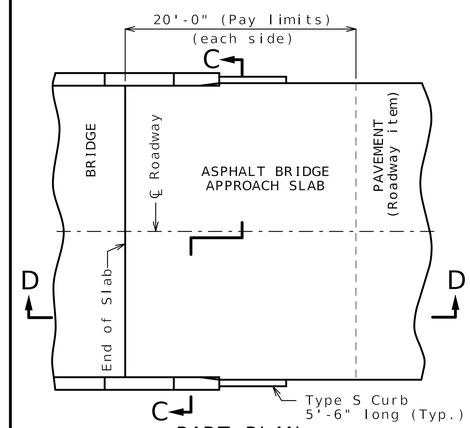

PART PLAN
(Squared structure shown, skewed structure similar)

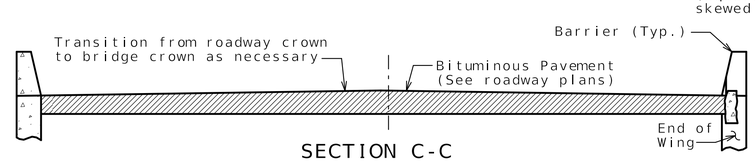

SECTION C-C

With the approval of the engineer, the contractor may crown the bottom of the approach slab to match the crown of the roadway surface.

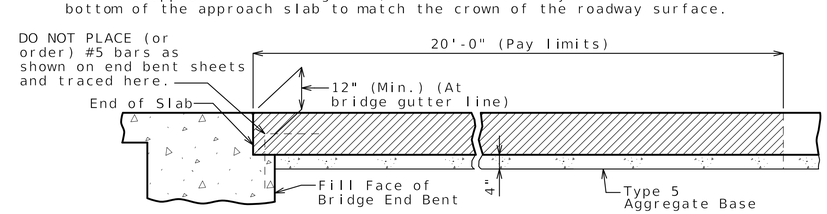

SECTION D-D

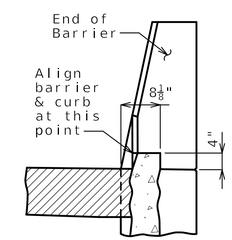

4" TYPE S CURB
See Missouri Standard Plan 609.00 for details of Type S curb.

OPTIONAL ASPHALT SLAB (NOT ALLOWED WITH CONCRETE PAVEMENT)

BRIDGE APPROACH SLAB (MINOR)

Integral end bents shown, non-integral end bent similar.

Designed JUL. 2024
Detailed MAR. 2025
Checked MAR. 2025

Note: This drawing is not to scale. Follow dimensions.

Sheet No. 19 of 25

STATE OF MISSOURI
CHRISTOPHER TEPEN
NUMBER 28262
REGISTERED PROFESSIONAL ENGINEER
THIS SHEET HAS BEEN SIGNED, SEALED AND DATED ELECTRONICALLY

DATE	08/22/2025
DATE PREPARED	8/19/2025
ROUTE F	STATE MO
DISTRICT BR	SHEET NO. 19
COUNTY	JACKSON
JOB NO.	JKU0110
CONTRACT ID.	
PROJECT NO.	
BRIDGE NO.	A9583

DATE	DESCRIPTION
.	.
.	.
.	.
.	.
.	.
.	.

IF A SEAL IS PRESENT ON THIS SHEET IT HAS BEEN ELECTRONICALLY SEALED AND DATED.

MISSOURI HIGHWAYS AND TRANSPORTATION COMMISSION
105 WEST CAPITOL
JEFFERSON CITY, MO 65102
1-888-ASK-MODOT (1-888-275-6636)

benesch
One Main Plaza, 4435 Main St., Suite 1150,
Kansas City, MO 64111
816/221-4222, FAX 913/441-1468
CERTIFICATE OF AUTHORITY NUMBER F00970024

Bill of Reinforcing Steel

No. Req.	Size/ Mark	Location	Codes C	Codes SH	Codes V	B ft in.	C ft in.	D ft in.	E ft in.	F ft in.	H ft in.	K ft in.	Nom. Length ft in.	Actual Length ft in.	Weight lb
		Superstructure End Bent No. 1													
24	6 F101	Wingwall	E	23		0 20.00	5 0.00	0 20.00	1 2.13	1 2.13	1 2.13	1 2.13	8 4	7 10	282
10	6 F102	Diaphragm	E	19		2 9.00	4 11.00						7 8	7 6	113
8	7 H101	Beam	E	20		32 3.00							32 3	32 3	527
13	6 H102	Varies	E	20		32 3.00							32 3	32 3	630
9	6 H103	Diaphragm	E	20		7 11.00							7 11	7 11	107
6	6 H104	Diaphragm	E	20		4 5.00							4 5	4 5	40
6	6 H105	Diaphragm	E	20		2 10.00							2 10	2 10	26
4	6 H106	Diaphragm	E	20		0 17.00							1 5	1 5	9
4	5 H108	Diaphragm	E	20		5 9.00							5 9	5 9	24
16	8 H109	Wingwall	E	20		13 0.00							13 0	13 0	555
48	6 H110	Wingwall	E	20		11 7.50							11 8	11 8	841
22	5 U101	Beam	E	10	S		6 2.00	2 9.00					15 1	14 10	340
24	4 U102	Beam	E	13	S	2 9.00	2 8.00	2 9.00	2 8.00				11 7	11 4	182
2	4 U103	Beam	E	10	S		2 8.00	2 9.00					8 1	7 11	11
29	6 U104	Diaphragm	E	19	S	4 0.00	2 9.00						6 9	6 7	287
29	5 U105	Diaphragm	E	10	S		5 2.00	2 3.00					12 7	12 4	373
42	6 U106	Diaphragm	E	19	S	3 0.00	4 3.00						7 3	7 1	447
30	5 U107	Diaphragm	E	19		2 0.00	0 15.00						3 3	3 1	96
14	5 V101	Beam	E	20		6 2.00							6 2	6 2	90
24	6 V102	Diaphragm	E	20		4 1.00							4 1	4 1	147
48	6 V103	Wingwall	E	20		8 1.00							8 1	8 1	583
		Superstructure End Bent No. 2													
26	6 F201	Wingwall	E	23		0 20.00	5 0.00	0 20.00	1 2.13	1 2.13	1 2.13	1 2.13	8 4	7 10	306
12	6 F202	Diaphragm	E	19		2 9.00	4 11.00						7 8	7 6	135
8	7 H201	Beam	E	20		32 3.00							32 3	32 3	527
13	6 H202	Varies	E	20		32 3.00							32 3	32 3	630
9	6 H203	Diaphragm	E	20		7 11.00							7 11	7 11	107
6	6 H204	Diaphragm	E	20		4 5.00							4 5	4 5	40
6	6 H205	Diaphragm	E	20		2 10.00							2 10	2 10	26
4	6 H206	Diaphragm	E	20		0 17.00							1 5	1 5	9
4	5 H208	Diaphragm	E	20		5 9.00							5 9	5 9	24
16	8 H209	Wingwall	E	20		13 0.00							13 0	13 0	555
52	6 H210	Wingwall	E	20		11 7.50							11 8	11 8	911
22	5 U201	Beam	E	10	S		6 2.00	2 9.00					15 1	14 10	340
24	4 U202	Beam	E	13	S	2 9.00	2 8.00	2 9.00	2 8.00				11 7	11 4	182
2	4 U203	Beam	E	10	S		2 8.00	2 9.00					8 1	7 11	11
29	6 U204	Diaphragm	E	19	S	4 0.00	2 9.00						6 9	6 7	287
29	5 U205	Diaphragm	E	10	S		5 2.00	2 3.00					12 7	12 4	373
42	6 U206	Diaphragm	E	19	S	3 0.00	4 3.00						7 3	7 1	447
30	5 U207	Diaphragm	E	19		2 0.00	0 15.00						3 3	3 1	96
14	5 V201	Beam	E	20		6 2.00							6 2	6 2	90
24	6 V202	Diaphragm	E	20		4 1.00							4 1	4 1	147
48	6 V203	Wingwall	E	20		8 1.00							8 1	8 1	583
		Slab													
116	5 S1	Slab	E	20		49 7.00							49 7	49 7	5999
183	6 S2	Slab	E	20		32 5.00							32 5	32 5	8910
183	5 S3	Slab	E	20		32 5.00							32 5	32 5	6187
16	4 S4	Slab	E	20		10 2.00							10 2	10 2	109
16	5 S5	Slab	E	20		10 2.00							10 2	10 2	170
88	4 S6	Slab	E	10		0 6.00	0 7.75	3 9.00	0 6.00				6 1	5 8	333

Bill of Reinforcing Steel

No. Req.	Size/ Mark	Location	Codes C	Codes SH	Codes V	B ft in.	C ft in.	D ft in.	E ft in.	F ft in.	H ft in.	K ft in.	Nom. Length ft in.	Actual Length ft in.	Weight lb
		Type D Barrier													
184	5 R1	Barrier	E	26		3 3.00	0 5.50	0 2.25		0 5.50	3 0.75	0 6.75	6 10	6 7	1263
184	5 R2	Barrier	E	19	S	0 20.50	0 9.50						2 6	2 5	464
184	5 R3	Barrier	E	27	S		0 9.50	0 15.25	0 5.00	0 12.00	0 15.00	0 3.00	3 6	3 3	624
40	5 R5	Barrier	E	20		47 2.00							47 2	47 2	1968
20	5 K1	End Post	E	27	S	3 5.00	0 9.25	0 5.38	2 11.75		0 5.25	0 1.00	7 7	7 5	155
72	5 K2	End Post	E	27	S	3 5.00	0 9.25	0 14.50	2 2.75		0 14.25	0 2.75	7 8	7 5	557
20	5 K4	End Post	E	19	S V	2 4.25	0 10.00						3 2	3 1	66
						2 6.25	0 10.00						3 4	3 3	
20	5 K5	End Post	E	38	S V			0 18.50	0 9.50	0 8.25	0 18.00	0 4.00	3 0	2 11	63
								0 20.50	0 9.50	0 8.25	0 20.00	0 4.50	3 2	3 1	
12	5 K6	End Post	E	19	S	2 6.75	0 10.00						3 5	3 4	42
12	5 K7	End Post	E	21	S		2 6.63	0 10.00			2 6.00	0 6.25	3 5	3 4	42
36	5 K8	End Post	E	19	S V	2 8.50	0 10.00						3 7	3 5	138
						3 2.50	0 10.00						4 1	3 11	
36	5 K9	End Post	E	21	S V		2 8.50	0 10.00			2 7.75	0 6.75	3 7	3 5	138
							3 2.50	0 10.00			3 1.75	0 7.75	4 1	3 11	
24	5 K10	End Post	E	19	S	3 3.00	0 10.00						4 1	4 0	100
24	5 K11	End Post	E	21	S		3 3.00	0 10.00			3 2.25	0 7.75	4 1	4 0	100
24	5 K12	End Post	E	20		13 2.00							13 2	13 2	330
12	5 K13	End Post	E	20	V	12 5.00							12 5	12 5	118
						6 5.00							6 5	6 5	
24	5 K14	End Post	E	20		13 2.00							13 2	13 2	330
12	5 K15	End Post	E	20	V	12 5.00							12 5	12 5	118
						6 5.00							6 5	6 5	
		Slip Form Option													
16	5 C1	Slip Form	E	20		12 0.00							12 0	12 0	200
	4	Totals													
	4		E												828
	4		G												0
	5														0
	5		E												20818
	5		G												0
	6														0
	6		E												16050
	6		G												0
	7														0
	7		E												1054
	7		G												0
	8														0
	8		E												1110
	8		G												0
		Total													0
		Total	E												39860
		Total	G												0
		Slab on Concrete NU-Girder													
	4		E												828
	5		E												14202
	6		E												16050
	7		E												1054
	8		E												1110
		Total	E												33244
		Type D Barrier													
	4		E												0
	5		E												6616
		Total	E												6616
		Slip Form Option													
	5		E												200
		Total	E												200

Nominal lengths are based on out to out dimensions shown in bending diagrams and are listed to the nearest inch for fabricator's use. Actual lengths are measured along centerline bar to the nearest inch. Weights are based on actual lengths.

For bending diagrams, see Sheet No. 21.

All bars shall be Grade 60.

Codes: C = Required coatings, where E = Epoxy Coated and G = Galvanized.

SH = Required shape, see bending diagrams.

V = Sets of varied bars and number of bars of each length. Bar dimensions vary in equal increments between dimensions shown on this line and the following line and the actual length dimension shown on this line and the following line vary by the specified increment.

Designed JUL. 2024
Detailed MAR. 2025
Checked MAR. 2025

BILL OF REINFORCING STEEL

Note: This drawing is not to scale. Follow dimensions.

STATE OF MISSOURI
CHRISTOPHER TEPEN
NUMBER 28262
REGISTERED PROFESSIONAL ENGINEER
THIS SHEET HAS BEEN SIGNED, SEALED AND DATED ELECTRONICALLY

DATE 08/22/2025
DATE PREPARED 8/19/2025
ROUTE F
STATE MO
DISTRICT BR
SHEET NO. 20
COUNTY JACKSON
JOB NO. JKU0110
CONTRACT ID.
PROJECT NO.
BRIDGE NO. A9583

DESCRIPTION	DATE
.	.
.	.
.	.
.	.
.	.
.	.

IF A SEAL IS PRESENT ON THIS SHEET IT HAS BEEN ELECTRONICALLY SEALED AND DATED.

MISSOURI HIGHWAYS AND TRANSPORTATION COMMISSION
105 WEST CAPITOL
JEFFERSON CITY, MO 65102
1-888-ASK-MODOT (1-888-275-6636)

benesch
One Main Plaza, 4435 Main St., Suite 1150,
Kansas City, MO 64111
816/221-4222, FAX 913/441-1468
CERTIFICATE OF AUTHORITY NUMBER F00970024

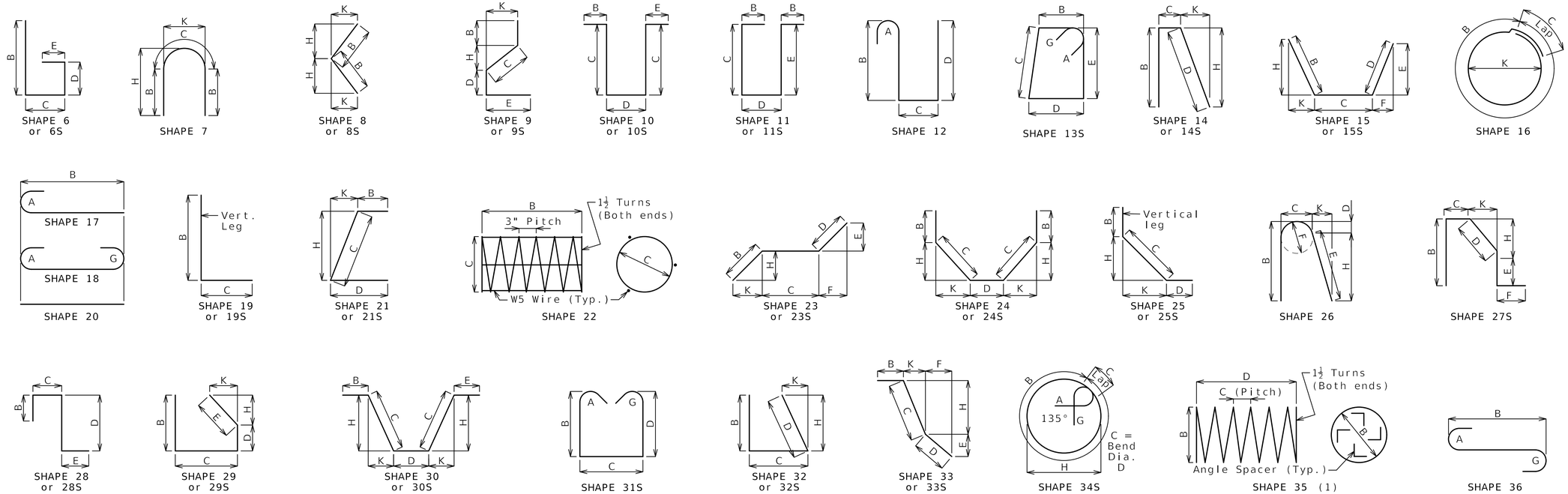

Finished Bend Diameters D and Hook Dimensions

Standard Pin Bend Shapes

Size	Case	D	A or G 90°	A or G 180°	J 180°
#4	1	3"	8"	6"	4"
#5	1	3¾"	10"	7"	5"
#6	1	4½"	12"	8¼"	6"
#7	2	5¼"	14"	9¾"	7"
	3	7"	15"	11½"	8¾"
#8	2	6"	16"	11"	8"
	3	8"	17"	13¼"	10"
#9	1	9½"	19½"	15½"	11¾"
#10	1	10¾"	22"	17½"	13¼"
#11	1	12"	24½"	19½"	14⅞"
#14	1	18¼"	31¼"	27½"	21⅝"
#18	1	24"	41½"	36¼"	28½"

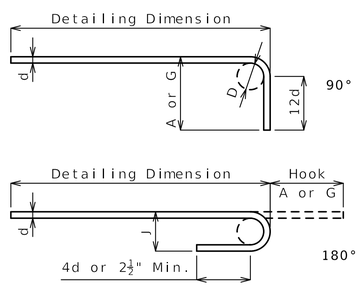

Stirrup Pin Bend Shapes (S)

Size	Case	D	A or G 90°	A or G 135°	A or G 180°	H 135°	J 180°
#4	2	2"	4½"	4½"	5"	2⅞"	3"
	3	3"	5"	5¼"	6"	3"	4"
#5	2	2½"	5¾"	5¾"	5¾"	3⅝"	3¾"
	3	3¾"	6¼"	6½"	7"	3⅞"	5"
#6	1	4½"	12"	7¾"	8¼"	4⅜"	6"

Applicable for all grades of steel.

Case 1 applies to all reinforcement. Case 2 applies to all reinforcement except for galvanized bars. Case 3 applies to galvanized bars only.

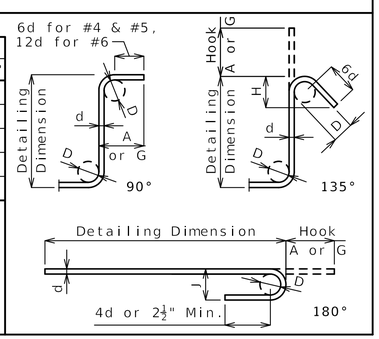

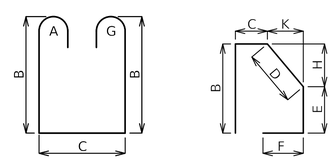

BENDING DIAGRAMS

All dimensions are out to out.

Shapes ending with an S shall be bent in accordance with stirrup pin bend shapes.

Unless otherwise noted, finished bending diameter D is the same for all bends of a shape.

(1) Shall be a deformed or plain spiral bar or wire.

Four angle or channel spacers are required for each column spiral. Spacers are to be placed on inside of spirals. Length and weight of column spirals do not include splices or spacers.

Designed JUL. 2024
Detailed MAR. 2025
Checked MAR. 2025

BENDING DIAGRAMS

Note: This drawing is not to scale. Follow dimensions.

STATE OF MISSOURI
CHRISTOPHER TEPEN
NUMBER 28262
REGISTERED PROFESSIONAL ENGINEER
THIS SHEET HAS BEEN SIGNED, SEALED AND DATED ELECTRONICALLY

DATE 08/22/2025	
DATE PREPARED 8/19/2025	
ROUTE F	STATE MO
DISTRICT BR	SHEET NO. 21
COUNTY JACKSON	
JOB NO. JKU0110	
CONTRACT ID.	
PROJECT NO.	
BRIDGE NO. A9583	

DATE	DESCRIPTION

IF A SEAL IS PRESENT ON THIS SHEET IT HAS BEEN ELECTRONICALLY SEALED AND DATED.

MISSOURI HIGHWAYS AND TRANSPORTATION COMMISSION
105 WEST CAPITOL
JEFFERSON CITY, MO 65102
1-888-ASK-MODOT (1-888-275-6636)

benesch
One Main Plaza, 4435 Main St., Suite 1150,
Kansas City, MO 64111
816/221-4222, FAX 913/441-1468
CERTIFICATE OF AUTHORITY NUMBER F00970024

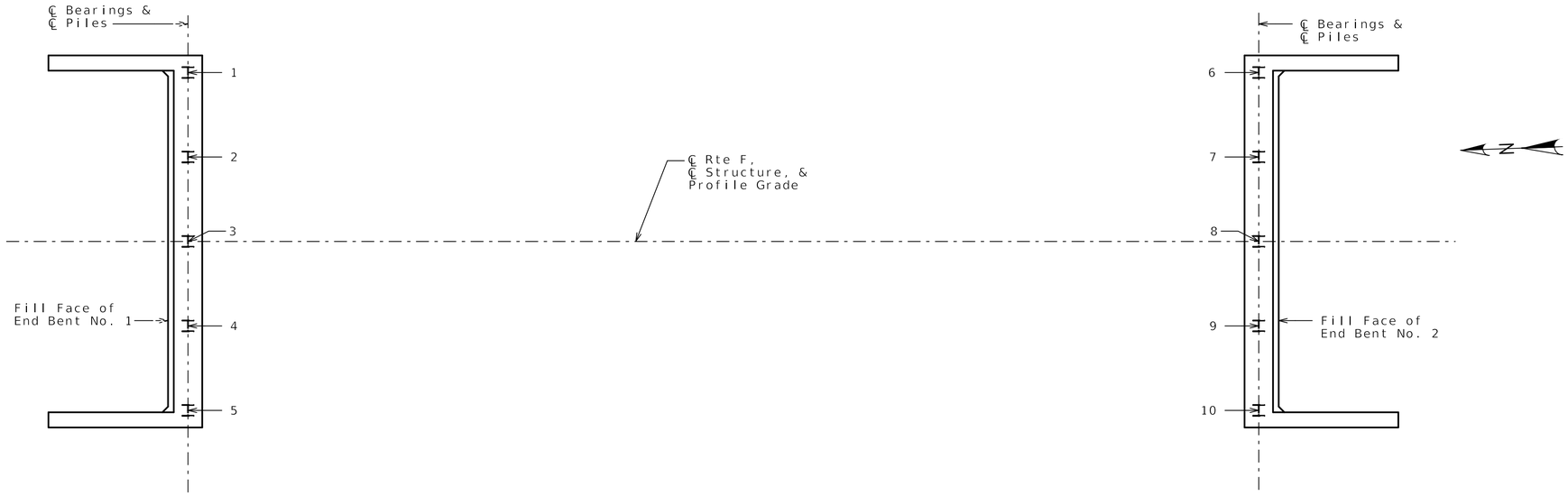

Span (1-2)

PART PLAN SHOWING PILE NUMBERING FOR RECORDING AS-BUILT PILE DATA

As-Built Pile Data

Pile No.	Length in Place (ft)	Computed Nominal Axial Compressive Resistance (kips)	Remarks
			End Bent No. 1 (Galanized HP 12x53 Piles
1			
2			
3			
4			
5			
			End Bent No. 2 (Galanized HP 12x53 Piles
6			
7			
8			
9			
10			

Note:
Indicate in remarks column:
A. Pile type and grade
B. Batter
C. Driven to practical refusal

This sheet to be completed by MoDOT construction personnel.

Designed JUL. 2024
Detailed MAR. 2025
Checked MAR. 2025

Note: This drawing is not to scale. Follow dimensions.

STATE OF MISSOURI
CHRISTOPHER TEPEN
NUMBER 28262
REGISTERED PROFESSIONAL ENGINEER
THIS SHEET HAS BEEN SIGNED, SEALED AND DATED ELECTRONICALLY

DATE	08/22/2025
DATE PREPARED	8/19/2025
ROUTE / STATE	F / MO
DISTRICT / SHEET NO.	BR / 22
COUNTY	JACKSON
JOB NO.	JKU0110
CONTRACT ID.	
PROJECT NO.	
BRIDGE NO.	A9583

DATE	DESCRIPTION
.	.
.	.
.	.
.	.
.	.
.	.
.	.

IF A SEAL IS PRESENT ON THIS SHEET IT HAS BEEN ELECTRONICALLY SEALED AND DATED.

MISSOURI HIGHWAYS AND TRANSPORTATION COMMISSION
105 WEST CAPITOL
JEFFERSON CITY, MO 65102
1-888-ASK-MODOT (1-888-275-6636)

benesch
One Main Plaza, 4435 Main St., Suite 1150,
Kansas City, MO 64111
816/221-4222, FAX 913/441-1468
CERTIFICATE OF AUTHORITY NUMBER F00970024

Missouri Department of Transportation
Construction and Materials

BORING NO. B-1
Page 1 of 3

Job No.: 20242015.00	**County:** Jackson	**Route:** F
Design:	**Skew:**	**Location:** Jackson County, Missouri
Bent:	**Logged By:** JM	**Operator:** LRK
Station:	**Northing:**	**Date of Work:** 03/15/25-03/16/25
Offset: 2.0 ft. north due to access	**Easting:**	**Depth to Water:** 18.0
Elevation: 866.0	**Requested Northing:**	**Depth Hole Open:**
Requested Station:	**Requested Easting:**	**Time Change:**
Requested Offset:	**Equipment:** CME 550X,Split-Spoon Sampler, Shelby Tube	
Requested Elevation:	**Location Note:**	
Drill No.:	**Hammer Efficiency:** 90%	**Drilling Method:** HSA

Depth (ft)	Description	Elevation (ft)	Sample Type	REC % (RQD %)	Blow Counts (N_{60})	Shear Data	Field Tests	Index Tests
0	0.0-0.7' Asphaltic concrete (8.0")							
	0.7-1.2' Portland cement concrete (6.0")	865						
	1.2-5.5' (CL) FILL: Brown, lean CLAY, trace sand and gravel			44	3-3-4 (11)		PP = 2.50 tsf	
	3.0' - trace fine roots and concrete fragments below 3.0 ft.			33		Qu Test Results MC = 21.3% γ_{moist} = 118.6 pcf	PP = 3.50 tsf	
5	5.5-25.0' (CL) Brown, lean CLAY, trace sand	860						
				61	2-2-3 (8)		PP = 2.50 tsf	
	8.5' - brown and gray from 8.5 to 13.5 ft.			56	3-4-5 (14)		PP = 2.50 tsf	MC = 21.4%
10		855						
	13.5' - dark gray, silty, trace fine roots below 13.5 to 15.0 ft.			67	2-2-3 (8)		PP = 1.50 tsf	MC = 27.5%
15		850						
				88		Qu Test Results UCS = 0.623 ksf MC = 14.5% γ_{moist} = 121.0 pcf	PP = 2.00 tsf	LL = 41 PL = 18
20		845						
	23.5' - brown and gray below 23.5 ft.			100	0-2-2 (6)		PP = 0.50 tsf	MC = 29.7%
25								

N_{60} = (Em/60)Nm N_{60} - Corrected N value for standard 60% SPT efficiency; Em - Measured hammer efficiency in percent; Nm - Observed N-value
(1) = Assumed, (2) = Actual

Coordinate System: _____ **Coordinate Zone:** _____ **Coordinate Proj. Factor:** _____

Coordinate Datum: _____ **Coordinate Units:** U.S. Survey Feet

* Persons using this information are cautioned that the materials shown are determined by the equipment noted and accuracy of the "log of materials" is limited thereby and by judgement of the operator. THIS INFORMATION IS FOR DESIGN PURPOSES ONLY.

Missouri Department of Transportation
Construction and Materials

BORING NO. B-1
Page 2 of 3

Job No.: 20242015.00	**County:** Jackson	**Route:** F
Design:	**Skew:**	**Location:** Jackson County, Missouri
Bent:	**Logged By:** JM	**Operator:** LRK
Station:	**Northing:**	**Date of Work:** 03/15/25-03/16/25
Offset: 2.0 ft. north due to access	**Easting:**	**Depth to Water:** 18.0
Elevation: 866.0	**Requested Northing:**	**Depth Hole Open:**
Requested Station:	**Requested Easting:**	**Time Change:**
Requested Offset:	**Equipment:** CME 550X,Split-Spoon Sampler, Shelby Tube	
Requested Elevation:	**Location Note:**	
Drill No.:	**Hammer Efficiency:** 90%	**Drilling Method:** HSA

Depth (ft)	Description	Elevation (ft)	Sample Type	REC % (RQD %)	Blow Counts (N_{60})	Shear Data	Field Tests	Index Tests
25	25.0-39.5' (CL) Brown and gray, lean CLAY, trace sand	840						
	28.5' - gray, silty below 28.5 ft.			100	0-1-1 (3)		PP <0.25 tsf	MC = 33.3%
30		835						
	33.5' - with gravel below 33.5 ft.			44	1-4-4 (12)		PP <0.25 tsf	
35		830						
				56	2-5-29 (51)			MC = 15.9%
40	39.5-45.5' Gray and maroon, SHALE, soft, highly weathered, aphanitic	825						
	43.5' - gray, moderately hard, moderately weathered, fissile below 43.5 ft.			100	50			
45	45.5-50.0' SHALE, gray, soft, slightly weathered, aphanitic, parted	820						
	47.4' - calcareous from 47.4 to 47.5 ft.			96 (80)		Qu Test Results UCS = 19.0 ksf MC = 7.7% γ_{moist} = 139.8 pcf		
50	49.0' - maroon from 49.0 to 51.1 ft. 49.5' - highly weathered below 49.5 ft.							

N_{60} = (Em/60)Nm N_{60} - Corrected N value for standard 60% SPT efficiency; Em - Measured hammer efficiency in percent; Nm - Observed N-value
(1) = Assumed, (2) = Actual

Coordinate System: _____ **Coordinate Zone:** _____ **Coordinate Proj. Factor:** _____

Coordinate Datum: _____ **Coordinate Units:** U.S. Survey Feet

* Persons using this information are cautioned that the materials shown are determined by the equipment noted and accuracy of the "log of materials" is limited thereby and by judgement of the operator. THIS INFORMATION IS FOR DESIGN PURPOSES ONLY.

LETTER BOREHOLE - MODOT 20150728.GDT - 6/6/25 13:02 - P:\A-KANSAS CITY MISSOURI\GEOTECH\2024 PROJECTS\20242015.00 ROUTE F OVER PHILLIPS CREEK\WORKING FILES\GINT\MODOT ROUTE F OVER PHILLIPS CREEK - AB FINAL EDITS.GPJ

STATE OF MISSOURI
CHRISTOPHER TEPEN
NUMBER 28262
REGISTERED PROFESSIONAL ENGINEER
THIS SHEET HAS BEEN SIGNED, SEALED AND DATED ELECTRONICALLY

DATE	08/22/2025
DATE PREPARED	8/19/2025
ROUTE	F
STATE	MO
DISTRICT	BR
SHEET NO.	23
COUNTY	JACKSON
JOB NO.	JKU0110
CONTRACT ID.	
PROJECT NO.	
BRIDGE NO.	A9583

DESCRIPTION

DATE

MISSOURI HIGHWAYS AND TRANSPORTATION COMMISSION
105 WEST CAPITOL
JEFFERSON CITY, MO 65102
1-888-ASK-MODOT (1-888-275-6636)

IF A SEAL IS PRESENT ON THIS SHEET IT HAS BEEN ELECTRONICALLY SEALED AND DATED.

benesch
One Main Plaza, 4435 Main St., Suite 1150,
Kansas City, MO 64111
816/221-4222, FAX 913/441-1468
CERTIFICATE OF AUTHORITY NUMBER F00970024

BORING DATA

Note: For locations of borings, see Sheet No. 1.

Designed JUL. 2024
Detailed MAR. 2025
Checked MAR. 2025

Note: This drawing is not to scale. Follow dimensions.

Missouri Department of Transportation
Construction and Materials

BORING NO. B-1
Page 3 of 3

Job No.: 20242015.00	**County:** Jackson	**Route:** F
Design:	**Skew:**	**Location:** Jackson County, Missouri
Bent:	**Logged By:** JM	**Operator:** LRK
Station:	**Northing:**	**Date of Work:** 03/15/25-03/16/25
Offset: 2.0 ft. north due to access	**Easting:**	**Depth to Water:** 18.0
Elevation: 866.0	**Requested Northing:**	**Depth Hole Open:**
Requested Station:	**Requested Easting:**	**Time Change:**
Requested Offset:	**Equipment:** CME 550X,Split-Spoon Sampler, Shelby Tube	
Requested Elevation:	**Location Note:**	
Drill No.:	**Hammer Efficiency:** 90%	**Drilling Method:** HSA

Depth (ft)	Description	Elevation (ft)	Sample Type	REC % (RQD %)	Blow Counts (N_{60})	Shear Data	Field Tests	Index Tests
50	50.0-55.0' SHALE, maroon, soft, highly weathered, aphanitic, parted 50.5' - fissile below 50.5 ft. 51.1' - gray below 51.1 ft. 53.4' - 6.0" limestone seam at 53.4 ft.	815		100 (18)				
55	55.0-56.5' LIMESTONE, gray, hard, highly weathered, finely crystalline, thin bedded 55.5' - 2.0" shale seam at 55.5 ft. 56.5-58.4' Core loss from 56.5 to 58.4 ft. (possible shale washout)	810		77 (0)				
60	58.4-70.0' Calcareous SHALE, gray, soft to moderately hard, highly weathered, aphanitic to finely crystalline 60.0' - moderately hard below 60.0 ft. 60.1' - moderately weathered from 60.0 to 65.5 ft. 60.5' - 2.0" limestone seam at 60.5 ft. 62.3' - 4.0" limestone seam at 62.3 ft. 63.8' - 4.0" limestone seam at 63.8 ft.	805		100 (77)				
65	65.5' - slightly weathered, parted below 65.5 ft. 66.8' - finely crystalline below 66.8 ft. 67.0' - sandy below 67.0 ft.	800		100 (62)		Qu Test Results UCS = 29.1 ksf MC = 11.4% γ_{moist} = 140.2 pcf		
70	Refusal at 45.5 feet. Bottom of borehole at 70.0 feet.							

N_{60} = (Em/60)Nm N_{60} - Corrected N value for standard 60% SPT efficiency; Em - Measured hammer efficiency in percent; Nm - Observed N-value
(1) = Assumed, (2) = Actual

Coordinate System: _____ **Coordinate Zone:** _____ **Coordinate Proj. Factor:** _____

Coordinate Datum: _____ **Coordinate Units:** U.S. Survey Feet

* Persons using this information are cautioned that the materials shown are determined by the equipment noted and accuracy of the "log of materials" is limited thereby and by judgement of the operator. THIS INFORMATION IS FOR DESIGN PURPOSES ONLY.

LETTER BOREHOLE - MODOT 20150728.GDT - 6/6/25 13:02 - P:\A-KANSAS CITY MISSOURI\GEOTECH\2024 PROJECTS\20242015.00 ROUTE F OVER PHILLIPS CREEK\WORKING FILES\GINT\MODOT ROUTE F OVER PHILLIPS CREEK - AB FINAL EDITS.GPJ

Missouri Department of Transportation
Construction and Materials

BORING NO. B-2
Page 1 of 3

Job No.: 20242015.00	**County:** Jackson	**Route:** F
Design:	**Skew:**	**Location:** Jackson County, Missouri
Bent:	**Logged By:** JM	**Operator:** LRK
Station:	**Northing:**	**Date of Work:** 03/24/25-03/25/25
Offset:	**Easting:**	**Depth to Water:** 23.0
Elevation: 869.0	**Requested Northing:**	**Depth Hole Open:**
Requested Station:	**Requested Easting:**	**Time Change:**
Requested Offset:	**Equipment:** CME 550X,Split-Spoon Sampler, Shelby Tube	
Requested Elevation:	**Location Note:**	
Drill No.:	**Hammer Efficiency:** 90%	**Drilling Method:** HSA

Depth (ft)	Description	Elevation (ft)	Sample Type	REC % (RQD %)	Blow Counts (N_{60})	Shear Data	Field Tests	Index Tests
0	0.0-0.3' Asphaltic concrete (4.0") 0.3-1.0' Portland cement concrete (8.5") 1.0-1.3' Aggregate base (3.6") 1.3-5.5' (CL) FILL: Brown and gray, lean CLAY, trace sand			100	50/0.3'			
5		865		44	2-5-5 (15)		PP = 3.50 tsf	MC = 19.6%
10	5.5-25.0' (CL) Brown and gray, lean CLAY, trace sand 5.6' - Possible fill from 5.5 to 8.5 ft. 8.5' - brown from 8.5 to 18.5 ft.			75			PP = 3.00 tsf	MC = 19.0%
		860		50	1-3-3 (9)		PP = 2.50 tsf	
15		855		58		Qu Test Results UCS = 2.55 ksf MC = 22.3% γ_{moist} = 127.0 pcf	PP = 2.50 tsf	
20	18.5' - brown and dark gray from 18.5 to 23.5 ft. 18.5' - trace gravel below 18.5 ft.	850		67	2-4-5 (14)		PP = 2.50 tsf	MC = 17.8%
25		845		44	0-7-9 (24)		PP <.0.25 tsf	MC = 28.7%

N_{60} = (Em/60)Nm N_{60} - Corrected N value for standard 60% SPT efficiency; Em - Measured hammer efficiency in percent; Nm - Observed N-value
(1) = Assumed, (2) = Actual

Coordinate System: _____ **Coordinate Zone:** _____ **Coordinate Proj. Factor:** _____

Coordinate Datum: _____ **Coordinate Units:** U.S. Survey Feet

* Persons using this information are cautioned that the materials shown are determined by the equipment noted and accuracy of the "log of materials" is limited thereby and by judgement of the operator. THIS INFORMATION IS FOR DESIGN PURPOSES ONLY.

LETTER BOREHOLE - MODOT 20150728.GDT - 6/6/25 13:02 - P:\A-KANSAS CITY MISSOURI\GEOTECH\2024 PROJECTS\20242015.00 ROUTE F OVER PHILLIPS CREEK\WORKING FILES\GINT\MODOT ROUTE F OVER PHILLIPS CREEK - AB FINAL EDITS.GPJ

STATE OF MISSOURI
CHRISTOPHER TEPEN
NUMBER 28262
REGISTERED PROFESSIONAL ENGINEER
THIS SHEET HAS BEEN SIGNED, SEALED AND DATED ELECTRONICALLY

DATE	08/22/2025
DATE PREPARED	8/19/2025
ROUTE	F
STATE	MO
DISTRICT	BR
SHEET NO.	24
COUNTY	JACKSON
JOB NO.	JKU0110
CONTRACT ID.	
PROJECT NO.	
BRIDGE NO.	A9583

DESCRIPTION | DATE

MISSOURI HIGHWAYS AND TRANSPORTATION COMMISSION
105 WEST CAPITOL
JEFFERSON CITY, MO 65102
1-888-ASK-MODOT (1-888-275-6636)

IF A SEAL IS PRESENT ON THIS SHEET IT HAS BEEN ELECTRONICALLY SEALED AND DATED.

benesch
One Main Plaza, 4435 Main St., Suite 1150,
Kansas City, MO 64111
816/221-4222, FAX 913/441-1468
CERTIFICATE OF AUTHORITY NUMBER F00970024

BORING DATA

Note: For locations of borings, see Sheet No. 1.

Designed JUL. 2024
Detailed MAR. 2025
Checked MAR. 2025

Note: This drawing is not to scale. Follow dimensions.

Y:\Kansas\131000S\131047.00_MoDOT_Rte_F\Eng_Docs\Bridge\A9583\Final\B_A9583_024_JKU0110_BORING LOGS.dgn (Default) 11:09 8/19/2025

Missouri Department of Transportation
Construction and Materials

BORING NO. B-2
Page 2 of 3

Job No.: 20242015.00	**County:** Jackson	**Route:** F
Design:	**Skew:**	**Location:** Jackson County, Missouri
Bent:	**Logged By:** JM	**Operator:** LRK
Station:	**Northing:**	**Date of Work:** 03/24/25-03/25/25
Offset:	**Easting:**	**Depth to Water:** 23.0
Elevation: 869.0	**Requested Northing:**	**Depth Hole Open:**
Requested Station:	**Requested Easting:**	**Time Change:**
Requested Offset:	**Equipment:** CME 550X,Split-Spoon Sampler, Shelby Tube	
Requested Elevation:	**Location Note:**	
Drill No.:	**Hammer Efficiency:** 90%	**Drilling Method:** HSA

Depth (ft)	Graphic	Description	Elevation (ft)	Sample Type	REC % (RQD %)	Blow Counts (N_{60})	Shear Data	Field Tests	Index Tests
25		25.0-27.0' (CL) Brown and gray, lean CLAY, trace sand and gravel							
		27.0-31.0' Tan, SHALE, soft, highly weathered	840		100	50/0.4'			
30		31.0-32.0' Calcareous SHALE, gray, moderately hard, weathered, aphanitic, parted							
		32.0-33.5' LIMESTONE, gray, hard, highly weathered, finely crystalline, thin bedded			94 (13)		Qu Test Results UCS = 582 ksf MC = 0.9% γ_{moist} = 154.9 pcf		
		33.5-50.0' SHALE, gray, moderately hard, highly weathered, aphanitic, parted	835						
35		33.5' - calcareous from 33.5 to 35.9 ft.							
		35.9' - soft below 35.9 ft.			100 (27)		Qu Test Results UCS = 19.4 ksf MC = 8.5% γ_{moist} = 143.1 pcf		
			830						
40		40.0' - moderately weathered below 40.0 ft.			100	50/0.1'			
					100 (57)		Qu Test Results UCS = 58.5 ksf MC = 8.1% γ_{moist} = 140.2 pcf		
			825						
45		45.0' - maroon from 45.0 to 47.0 ft.							
					100 (63)				
			820				Qu Test Results UCS = 22.9 ksf MC = 8.5% γ_{moist} = 146.6		
50									

N_{60} = (Em/60)Nm N_{60} - Corrected N value for standard 60% SPT efficiency; Em - Measured hammer efficiency in percent; Nm - Observed N-value
(1) = Assumed, (2) = Actual

Coordinate System: _____ **Coordinate Zone:** _____ **Coordinate Proj. Factor:** _____

Coordinate Datum: _____ **Coordinate Units:** U.S. Survey Feet

* Persons using this information are cautioned that the materials shown are determined by the equipment noted and accuracy of the "log of materials" is limited thereby and by judgement of the operator. THIS INFORMATION IS FOR DESIGN PURPOSES ONLY.

LETTER BOREHOLE - MODOT 20150728.GDT - 8/6/25 13:02 - P:\A-KANSAS CITY MISSOURI\GEOTECH\2024 PROJECTS\20242015.00 ROUTE F OVER PHILLIPS CREEK\WORKING FILES\GINT\MODOT ROUTE F OVER PHILLIPS CREEK - AB FINAL EDITS.GPJ

Missouri Department of Transportation
Construction and Materials

BORING NO. B-2
Page 3 of 3

Job No.: 20242015.00	**County:** Jackson	**Route:** F
Design:	**Skew:**	**Location:** Jackson County, Missouri
Bent:	**Logged By:** JM	**Operator:** LRK
Station:	**Northing:**	**Date of Work:** 03/24/25-03/25/25
Offset:	**Easting:**	**Depth to Water:** 23.0
Elevation: 869.0	**Requested Northing:**	**Depth Hole Open:**
Requested Station:	**Requested Easting:**	**Time Change:**
Requested Offset:	**Equipment:** CME 550X,Split-Spoon Sampler, Shelby Tube	
Requested Elevation:	**Location Note:**	
Drill No.:	**Hammer Efficiency:** 90%	**Drilling Method:** HSA

Depth (ft)	Graphic	Description	Elevation (ft)	Sample Type	REC % (RQD %)	Blow Counts (N_{60})	Shear Data	Field Tests	Index Tests
50		50.0-56.0' SHALE, gray, soft, moderately weathered, aphanitic, parted 51.0' - gray and maroon from 51.0 to 55.0 ft.			100 (51)		pcf		
			815						
55		Refusal at 31.0 feet. Bottom of borehole at 56.0 feet.							

N_{60} = (Em/60)Nm N_{60} - Corrected N value for standard 60% SPT efficiency; Em - Measured hammer efficiency in percent; Nm - Observed N-value
(1) = Assumed, (2) = Actual

Coordinate System: _____ **Coordinate Zone:** _____ **Coordinate Proj. Factor:** _____

Coordinate Datum: _____ **Coordinate Units:** U.S. Survey Feet

* Persons using this information are cautioned that the materials shown are determined by the equipment noted and accuracy of the "log of materials" is limited thereby and by judgement of the operator. THIS INFORMATION IS FOR DESIGN PURPOSES ONLY.

LETTER BOREHOLE - MODOT 20150728.GDT - 8/6/25 13:02 - P:\A-KANSAS CITY MISSOURI\GEOTECH\2024 PROJECTS\20242015.00 ROUTE F OVER PHILLIPS CREEK\WORKING FILES\GINT\MODOT ROUTE F OVER PHILLIPS CREEK - AB FINAL EDITS.GPJ

STATE OF MISSOURI
CHRISTOPHER TEPEN
NUMBER 28262
REGISTERED PROFESSIONAL ENGINEER
THIS SHEET HAS BEEN SIGNED, SEALED AND DATED ELECTRONICALLY

DATE	08/22/2025
DATE PREPARED	8/19/2025
ROUTE	F
STATE	MO
DISTRICT	BR
SHEET NO.	25
COUNTY	JACKSON
JOB NO.	JKU0110
CONTRACT ID.	
PROJECT NO.	
BRIDGE NO.	A9583

DESCRIPTION	DATE

MISSOURI HIGHWAYS AND TRANSPORTATION COMMISSION
105 WEST CAPITOL
JEFFERSON CITY, MO 65102
1-888-ASK-MODOT (1-888-275-6636)

IF A SEAL IS PRESENT ON THIS SHEET IT HAS BEEN ELECTRONICALLY SEALED AND DATED.

benesch
One Main Plaza, 4435 Main St., Suite 1150,
Kansas City, MO 64111
816/221-4222, FAX 913/441-1468
CERTIFICATE OF AUTHORITY NUMBER F00970024

BORING DATA

Note: For locations of borings, see Sheet No. 1.

Designed JUL. 2024
Detailed MAR. 2025
Checked MAR. 2025

Note: This drawing is not to scale. Follow dimensions.