MISSOURI HIGHWAYS AND TRANSPORTATION COMMISSION

PLANS FOR PROPOSED STATE HIGHWAY

PLATTE COUNTY

SECTION 18/19/24/06, TOWNSHIP 52N/51N, RANGE 34W/35W

DESIGN DESIGNATION

RTE D

A.A.D.T. - 2026 = 103

A.A.D.T. - 2036 = 114

T = 5.8%

V = 55 M.P.H.

FUNCTIONAL CLASSIFICATION- MAJOR COLLECTOR

RTE N

A.A.D.T. - 2026 = 441

A.A.D.T. - 2036 = 490

T = 5.0%

V = 55 M.P.H.

FUNCTIONAL CLASSIFICATION- MAJOR COLLECTOR

NO R/W REQUIRED

CONVENTIONAL SYMBOLS

(USED IN PLANS)

	EXISTING	NEW
BUILDINGS AND STRUCTURES		
GUARD RAIL		
GUARD CABLE		
CONCRETE RIGHT-OF-WAY MARKER		
STEEL RIGHT-OF-WAY MARKER		
LOCATION SURVEY MARKER		
UTILITIES		
FIBER OPTICS	—FO—	—FO—
OVERHEAD CABLE TV	—OTV—	—OTV—
UNDERGROUND CABLE TV	—UTV—	—UTV—
OVERHEAD TELEPHONE	—OT—	—OT—
UNDERGROUND TELEPHONE	—UT—	—UT—
OVERHEAD POWER	—OE—	—OE—
UNDERGROUND POWER	—UE—	—UE—
SANITARY SEWER	—S—	—S—
STORM SEWER	—SS—	—SS—
GAS	—G—	—G—
WATER	—W—	—W—
MANHOLE	SAN	
FIRE HYDRANT	HYD	
WATER VALVE	WV	
WATER METER	WM	
DROP INLET	DI	
DITCH BLOCK		
GROUND MOUNTED SIGN	SIGN	
LIGHT POLE		
H-FRAME POWER POLE		
TELEPHONE PEDESTAL	PED	
FENCE		
CHAIN LINK	—V—	
WOVEN WIRE	—X—	
GATE POST		
BENCHMARK	BM	

NOTE: DASHED OR OPEN SYMBOLS INDICATE EXISTING FEATURES

KEY MAP
LOCATION OF PLATTE COUNTY

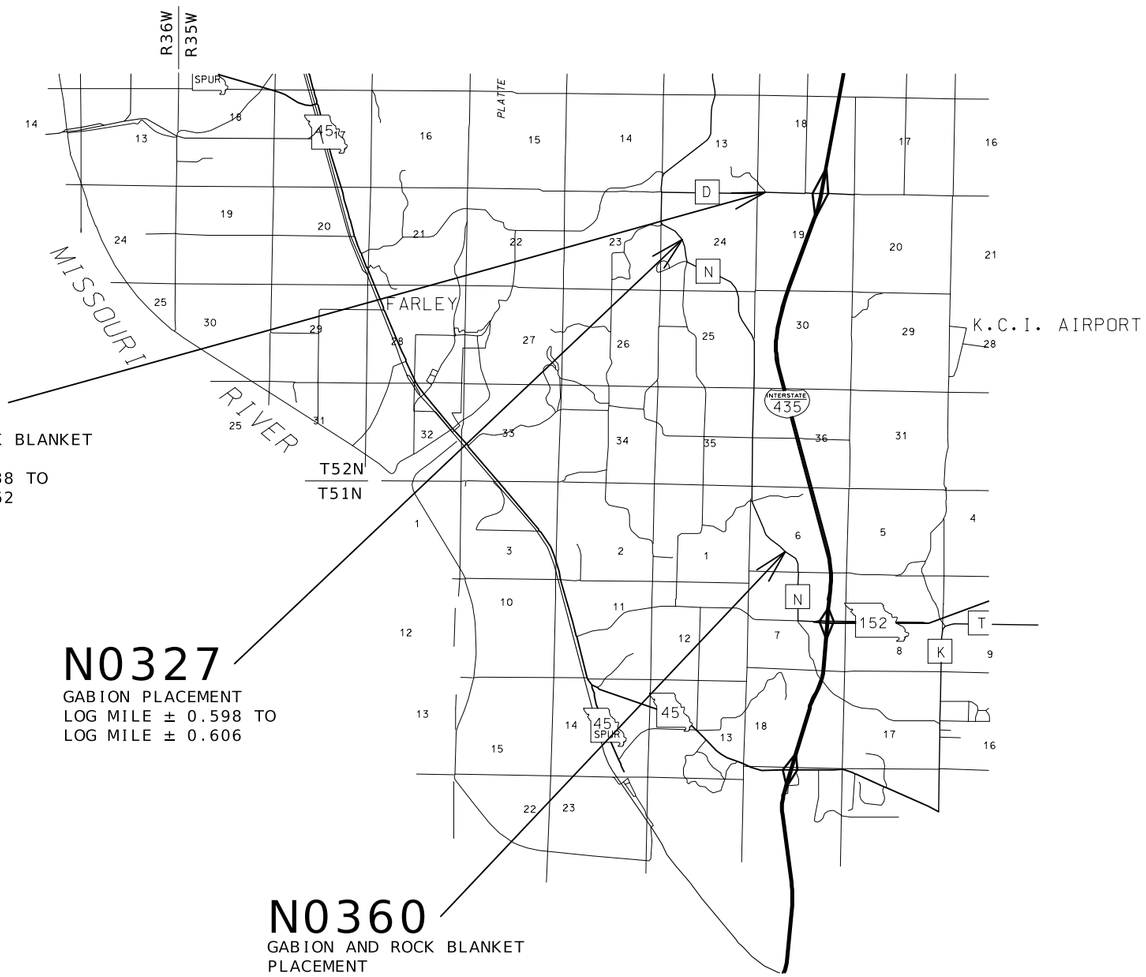

N0836
GABION AND ROCK BLANKET PLACEMENT
LOG MILE ± 1.038 TO
LOG MILE ± 1.062

N0327
GABION PLACEMENT
LOG MILE ± 0.598 TO
LOG MILE ± 0.606

N0360
GABION AND ROCK BLANKET PLACEMENT
LOG MILE ± 4.208 TO
LOG MILE ± 4.218

NOT TO SCALE

TITLE SHEET
1 OF 5

THE EXISTENCE AND APPROXIMATE LOCATION OF UTILITY FACILITIES KNOWN TO EXIST, AS SHOWN ON THE PLANS, ARE BASED ON THE BEST INFORMATION AVAILABLE TO THE COMMISSION AT THIS TIME. THIS INFORMATION IS PROVIDED BY THE COMMISSION "AS-IS" AND THE COMMISSION EXPRESSLY DISCLAIMS ANY REPRESENTATION OR WARRANTY AS TO THE COMPLETENESS, ACCURACY, OR SUITABILITY OF THE INFORMATION FOR ANY USE. RELIANCE UPON THIS INFORMATION IS DONE AT THE RISK AND PERIL OF THE USER, AND THE COMMISSION SHALL NOT BE LIABLE FOR ANY DAMAGES THAT MAY ARISE FROM ANY ERROR IN THE INFORMATION. IT IS, THEREFORE, THE RESPONSIBILITY OF THE CONTRACTOR TO VERIFY THE EXISTENCE, LOCATION AND STATUS OF ANY FACILITY. SUCH VERIFICATION INCLUDES DIRECT CONTACT WITH THE LISTED UTILITIES.

INDEX OF SHEETS

DESCRIPTION	SHEET NUMBER
TITLE SHEET (5 SHEETS)	1
QUANTITIES (QU) (2 SHEETS)	3
PLAN SHEETS (PP)	4-12
TRAFFIC CONTROL SHEETS (TC)	13-22
EROSION CONTROL SHEETS (EC)	23-31
BRIDGE DRAWINGS (B)	
A3980	1
P0609	1-2

LENGTH OF PROJECT

BEGINNING OF PROJECT	RTE D	LOG MILE 1.038
END OF PROJECT		LOG MILE 1.062
BEGINNING OF PROJECT	RTE N	LOG MILE 0.598
END OF PROJECT		LOG MILE 0.606
BEGINNING OF PROJECT	RTE N	LOG MILE 4.208
END OF PROJECT		LOG MILE 4.218

APPARENT LENGTH 221.76 FEET

EQUATIONS AND EXCEPTIONS:

TOTAL CORRECTIONS	0.00 FEET
NET LENGTH OF PROJECT	221.76 FEET
STATE LENGTH	0.042 MILES
FOR INFORMATION ONLY ESTIMATED DISTURBED ACRES	0.09 ACRES

STATE OF MISSOURI
CLARK HARTMANN
NUMBER PE-2023008265
PROFESSIONAL ENGINEER

12/08/2025 3:51:23 PM
CLARK HARTMANN - CIVIL
MO-PE-2023008265

DATE PREPARED	12/8/2025
ROUTE	VAR
STATE	MO
DISTRICT	KC
SHEET NO.	1A
COUNTY	VARIOUS
JOB NO.	JKU0293
CONTRACT ID.	
PROJECT NO.	
BRIDGE NO.	

DATE	DESCRIPTION

MISSOURI HIGHWAYS AND TRANSPORTATION COMMISSION
105 WEST CAPITOL
JEFFERSON CITY, MO 65102
1-888-ASK-MODOT (1-888-275-6636)

MISSOURI HIGHWAYS AND TRANSPORTATION COMMISSION

PLANS FOR PROPOSED STATE HIGHWAY

CLAY COUNTY

SECTION 14, TOWNSHIP 52N, RANGE 33W

DESIGN DESIGNATION

A.A.D.T. - 2026 = 12761 (NB), 12238 (SB)
A.A.D.T. - 2036 = 14166 (NB), 13586 (SB)

T = 13.9%

V = 70 M.P.H.

FUNCTIONAL CLASSIFICATION- INTERSTATE

NO R/W REQUIRED

KEY MAP
LOCATION OF CLAY COUNTY

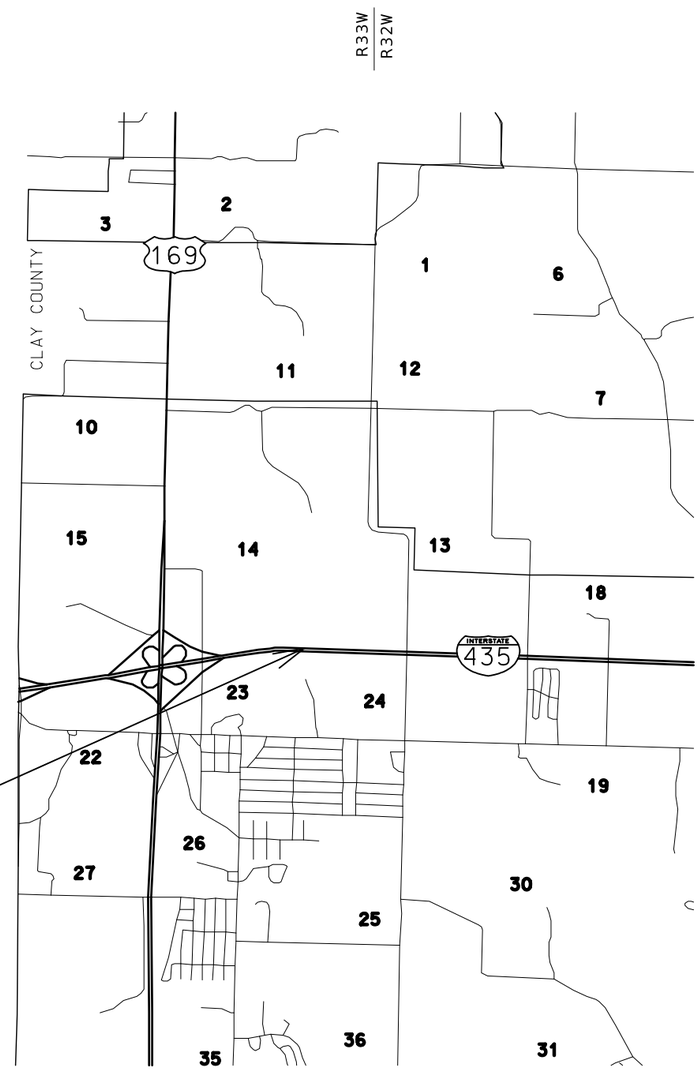

A3301

GABION AND ROCK BLANKET PLACEMENT
LOG MILE ± 33.813 TO
LOG MILE ± 33.820

NOT TO SCALE

T52N
T51N

CONVENTIONAL SYMBOLS
(USED IN PLANS)

	EXISTING	NEW
BUILDINGS AND STRUCTURES		
GUARD RAIL		
GUARD CABLE		
CONCRETE RIGHT-OF-WAY MARKER		
STEEL RIGHT-OF-WAY MARKER		
LOCATION SURVEY MARKER		
UTILITIES		
FIBER OPTICS	FO	FO
OVERHEAD CABLE TV	OTV	OTV
UNDERGROUND CABLE TV	UTV	UTV
OVERHEAD TELEPHONE	OT	OT
UNDERGROUND TELEPHONE	UT	UT
OVERHEAD POWER	OE	OE
UNDERGROUND POWER	UE	UE
SANITARY SEWER	S	S
STORM SEWER	SS	SS
GAS	G	G
WATER	W	W
MANHOLE	SAN	
FIRE HYDRANT	HYD	
WATER VALVE	WV	
WATER METER	WM	
DROP INLET	DI	
DITCH BLOCK		
GROUND MOUNTED SIGN	SIGN	
LIGHT POLE		
H-FRAME POWER POLE		
TELEPHONE PEDESTAL	PED	
FENCE		
CHAIN LINK	V	
WOVEN WIRE	X	
GATE POST		
BENCHMARK	BM	

NOTE: DASHED OR OPEN SYMBOLS INDICATE EXISTING FEATURES

TITLE SHEET
2 OF 5

THE EXISTENCE AND APPROXIMATE LOCATION OF UTILITY FACILITIES KNOWN TO EXIST, AS SHOWN ON THE PLANS, ARE BASED ON THE BEST INFORMATION AVAILABLE TO THE COMMISSION AT THIS TIME. THIS INFORMATION IS PROVIDED BY THE COMMISSION "AS-IS" AND THE COMMISSION EXPRESSLY DISCLAIMS ANY REPRESENTATION OR WARRANTY AS TO THE COMPLETENESS, ACCURACY, OR SUITABILITY OF THE INFORMATION FOR ANY USE. RELIANCE UPON THIS INFORMATION IS DONE AT THE RISK AND PERIL OF THE USER, AND THE COMMISSION SHALL NOT BE LIABLE FOR ANY DAMAGES THAT MAY ARISE FROM ANY ERROR IN THE INFORMATION. IT IS, THEREFORE, THE RESPONSIBILITY OF THE CONTRACTOR TO VERIFY THE EXISTENCE, LOCATION AND STATUS OF ANY FACILITY. SUCH VERIFICATION INCLUDES DIRECT CONTACT WITH THE LISTED UTILITIES.

INDEX OF SHEETS

DESCRIPTION	SHEET NUMBER
TITLE SHEET (5 SHEETS)	1
QUANTITIES (QU) (2 SHEETS)	3
PLAN SHEETS (PP)	4-12
TRAFFIC CONTROL SHEETS (TC)	13-22
EROSION CONTROL SHEETS (EC)	23-31
BRIDGE DRAWINGS (B)	
A3980	1
P0609	1-2

LENGTH OF PROJECT

BEGINNING OF PROJECT I-435 LOG MILE 33.813
END OF PROJECT LOG MILE 33.820

APPARENT LENGTH 36.96 FEET

EQUATIONS AND EXCEPTIONS:

TOTAL CORRECTIONS 0.00 FEET
NET LENGTH OF PROJECT 36.96 FEET
STATE LENGTH 0.007 MILES

FOR INFORMATION ONLY
ESTIMATED DISTURBED ACRES 0.03 ACRES

STATE OF MISSOURI
CLARK HARTMANN
NUMBER PE-2023008265
PROFESSIONAL ENGINEER

12/08/2025 3:48:25 PM
CLARK HARTMANN - CIVIL
MO-PE-2023008265

DATE PREPARED	
12/8/2025	
ROUTE: VAR	STATE: MO
DISTRICT: KC	SHEET NO.: 1B
COUNTY: VARIOUS	
JOB NO.: JKU0293	
CONTRACT ID.	
PROJECT NO.	
BRIDGE NO.	

DESCRIPTION	DATE

MISSOURI HIGHWAYS AND TRANSPORTATION COMMISSION
105 WEST CAPITOL
JEFFERSON CITY, MO 65102
1-888-ASK-MODOT (1-888-275-6636)

MISSOURI HIGHWAYS AND TRANSPORTATION COMMISSION

PLANS FOR PROPOSED STATE HIGHWAY

RAY COUNTY

SECTIONS 9/27/18, TOWNSHIP 54N, RANGE 29W/28W/26W

KEY MAP
LOCATION OF RAY COUNTY

DESIGN DESIGNATION

RTE C
A.A.D.T. - 2026 = 844
A.A.D.T. - 2036 = 937
T = 6.1%
V = 55 M.P.H.
FUNCTIONAL CLASSIFICATION- MAJOR COLLECTOR

RTE D
A.A.D.T. - 2026 = 178
A.A.D.T. - 2036 = 198
T = 6.0%
V = 55 M.P.H.
FUNCTIONAL CLASSIFICATION- MAJOR COLLECTOR

RTE E
A.A.D.T. - 2026 = 142
A.A.D.T. - 2036 = 158
T = 25.6%
V = 55 M.P.H.
FUNCTIONAL CLASSIFICATION- MINOR COLLECTOR

NO R/W REQUIRED

CONVENTIONAL SYMBOLS
(USED IN PLANS)

	EXISTING	NEW
BUILDINGS AND STRUCTURES		
GUARD RAIL		
GUARD CABLE		
CONCRETE RIGHT-OF-WAY MARKER		
STEEL RIGHT-OF-WAY MARKER		
LOCATION SURVEY MARKER		
UTILITIES		
FIBER OPTICS	—FO—	—FO—
OVERHEAD CABLE TV	—OTV—	—OTV—
UNDERGROUND CABLE TV	—UTV—	—UTV—
OVERHEAD TELEPHONE	—OT—	—OT—
UNDERGROUND TELEPHONE	—UT—	—UT—
OVERHEAD POWER	—OE—	—OE—
UNDERGROUND POWER	—UE—	—UE—
SANITARY SEWER	—S—	—S—
STORM SEWER	—SS—	—SS—
GAS	—G—	—G—
WATER	—W—	—W—
MANHOLE	SAN	
FIRE HYDRANT	HYD	
WATER VALVE	WV	
WATER METER	WM	
DROP INLET	D	
DITCH BLOCK		
GROUND MOUNTED SIGN	SIGN	
LIGHT POLE		
H-FRAME POWER POLE		
TELEPHONE PEDESTAL	PED	
FENCE		
CHAIN LINK	—V—	
WOVEN WIRE	—X—	
GATE POST		
BENCHMARK	BM	

NOTE: DASHED OR OPEN SYMBOLS INDICATE EXISTING FEATURES

P0609
COLLAR CENTER WALL
AND REMOVE DRIFT
LOG MILE ± 11.247 TO
LOG MILE ± 11.254

N0299
GABION PLACEMENT
DOWNSTREAM
ROCK PLACEMENT
UPSTREAM
LOG MILE ± 8.132 TO
LOG MILE ± 8.142

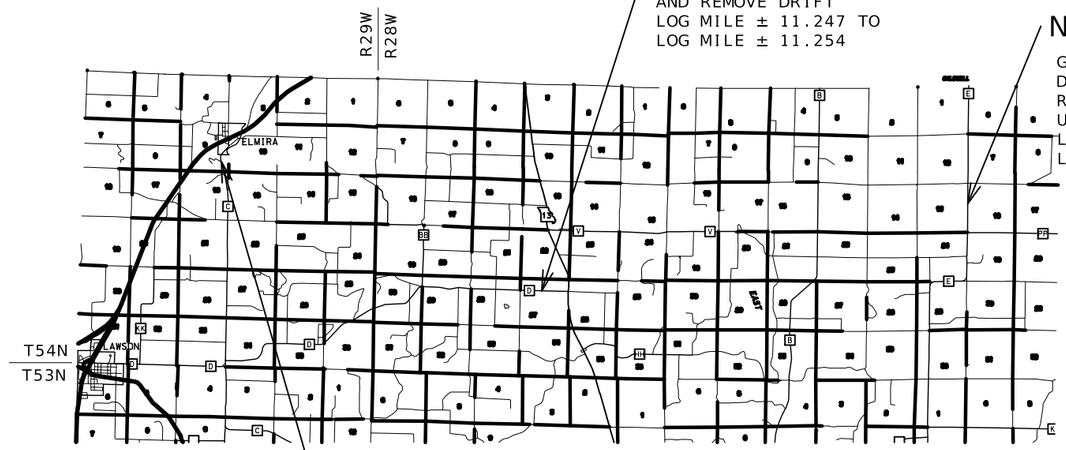

A5622
GABION AND ROCK BLANKET
PLACEMENT DOWNSTREAM
ROCK PLACEMENT UPSTREAM
LOG MILE ± 0.474 TO LOG MILE ± 0.510

NOT TO SCALE

TITLE SHEET
3 OF 5

THE EXISTENCE AND APPROXIMATE LOCATION OF UTILITY FACILITIES KNOWN TO EXIST, AS SHOWN ON THE PLANS, ARE BASED ON THE BEST INFORMATION AVAILABLE TO THE COMMISSION AT THIS TIME. THIS INFORMATION IS PROVIDED BY THE COMMISSION "AS-IS" AND THE COMMISSION EXPRESSLY DISCLAIMS ANY REPRESENTATION OR WARRANTY AS TO THE COMPLETENESS, ACCURACY, OR SUITABILITY OF THE INFORMATION FOR ANY USE. RELIANCE UPON THIS INFORMATION IS DONE AT THE RISK AND PERIL OF THE USER, AND THE COMMISSION SHALL NOT BE LIABLE FOR ANY DAMAGES THAT MAY ARISE FROM ANY ERROR IN THE INFORMATION. IT IS, THEREFORE, THE RESPONSIBILITY OF THE CONTRACTOR TO VERIFY THE EXISTENCE, LOCATION AND STATUS OF ANY FACILITY. SUCH VERIFICATION INCLUDES DIRECT CONTACT WITH THE LISTED UTILITIES.

INDEX OF SHEETS

DESCRIPTION	SHEET NUMBER
TITLE SHEET (5 SHEETS)	1
QUANTITIES (QU) (2 SHEETS)	3
PLAN SHEETS (PP)	4-12
TRAFFIC CONTROL SHEETS (TC)	13-22
EROSION CONTROL SHEETS (EC)	23-31
BRIDGE DRAWINGS (B)	
A3980	1
P0609	1-2

LENGTH OF PROJECT

BEGINNING OF PROJECT	RTE C	LOG MILE 0.474
END OF PROJECT		LOG MILE 0.510
BEGINNING OF PROJECT	RTE D	LOG MILE 11.247
END OF PROJECT		LOG MILE 11.254
BEGINNING OF PROJECT	RTE E	LOG MILE 8.132
END OF PROJECT		LOG MILE 8.142

APPARENT LENGTH 279.84 FEET

EQUATIONS AND EXCEPTIONS:

TOTAL CORRECTIONS 0.00 FEET
NET LENGTH OF PROJECT 279.84 FEET
STATE LENGTH 0.053 MILES

FOR INFORMATION ONLY
ESTIMATED DISTURBED ACRES 0.09 ACRES

STATE OF MISSOURI
CLARK HARTMANN
NUMBER PE-2023008265
PROFESSIONAL ENGINEER
12/08/2025 3:48:45 PM
CLARK HARTMANN - CIVIL
MO-PE-2023008265

DATE PREPARED	
12/8/2025	
ROUTE: VAR	STATE: MO
DISTRICT: KC	SHEET NO.: 1C
COUNTY: VARIOUS	
JOB NO.: JKU0293	
CONTRACT ID.	
PROJECT NO.	
BRIDGE NO.	

DESCRIPTION	DATE

MISSOURI HIGHWAYS AND TRANSPORTATION COMMISSION
105 WEST CAPITOL
JEFFERSON CITY, MO 65102
1-888-ASK-MODOT (1-888-275-6636)

MISSOURI HIGHWAYS AND TRANSPORTATION COMMISSION

PLANS FOR PROPOSED STATE HIGHWAY

JACKSON COUNTY

SECTION 29, TOWNSHIP 48N, RANGE 33W

DESIGN DESIGNATION

A.A.D.T. - 2026 = 5368 (EB), 5558 (WB)

A.A.D.T. - 2036 = 5959 (EB), 6170 (WB)

T = 5.0%

V = 40 M.P.H.

FUNCTIONAL CLASSIFICATION- MINOR ARTERIAL

NO R/W REQUIRED

KEY MAP
LOCATION OF JACKSON COUNTY

A3980
BRIDGE WORK
ADD ROCK AND GABIONS
LOG MILE ± 1.303 TO LOG MILE ± 1.335

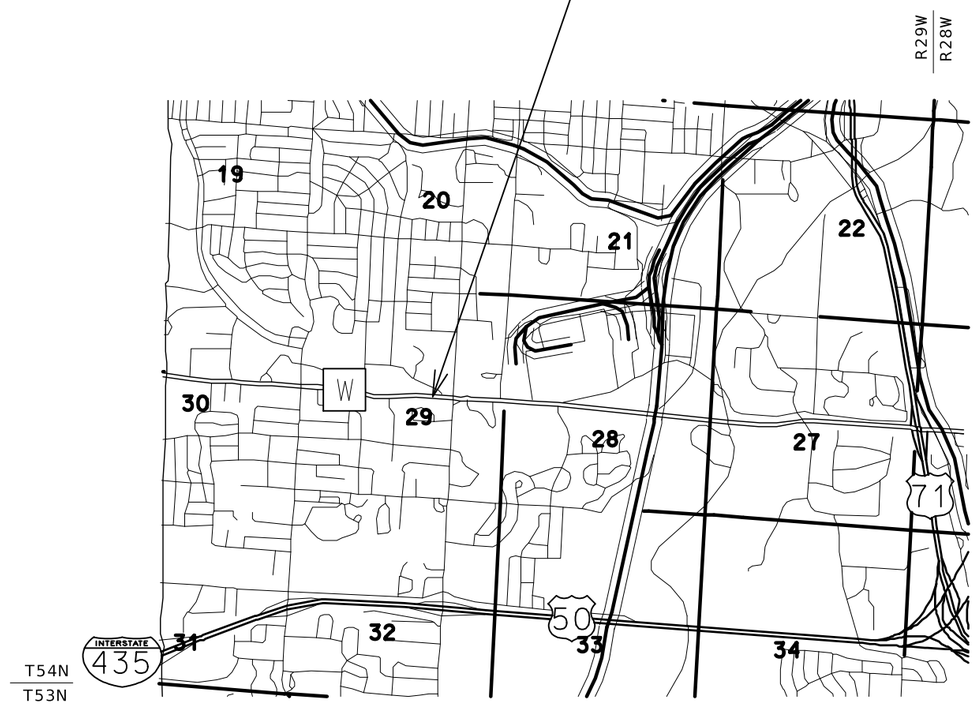

CONVENTIONAL SYMBOLS
(USED IN PLANS)

	EXISTING	NEW
BUILDINGS AND STRUCTURES		
GUARD RAIL		
GUARD CABLE		
CONCRETE RIGHT-OF-WAY MARKER		
STEEL RIGHT-OF-WAY MARKER		
LOCATION SURVEY MARKER		
UTILITIES		
FIBER OPTICS	—FO—	—FO—
OVERHEAD CABLE TV	—OTV—	—OTV—
UNDERGROUND CABLE TV	—UTV—	—UTV—
OVERHEAD TELEPHONE	—OT—	—OT—
UNDERGROUND TELEPHONE	—UT—	—UT—
OVERHEAD POWER	—OE—	—OE—
UNDERGROUND POWER	—UE—	—UE—
SANITARY SEWER	—S—	—S—
STORM SEWER	—SS—	—SS—
GAS	—G—	—G—
WATER	—W—	—W—
MANHOLE	SAN	
FIRE HYDRANT	HYD	
WATER VALVE	WV	
WATER METER	WM	
DROP INLET	D	
DITCH BLOCK		
GROUND MOUNTED SIGN	SIGN	
LIGHT POLE		
H-FRAME POWER POLE		
TELEPHONE PEDESTAL	PED	
FENCE		
CHAIN LINK	—V—	
WOVEN WIRE	—X—	
GATE POST		
BENCHMARK	BM	

NOTE: DASHED OR OPEN SYMBOLS INDICATE EXISTING FEATURES

NOT TO SCALE

TITLE SHEET
4 OF 5

THE EXISTENCE AND APPROXIMATE LOCATION OF UTILITY FACILITIES KNOWN TO EXIST, AS SHOWN ON THE PLANS, ARE BASED ON THE BEST INFORMATION AVAILABLE TO THE COMMISSION AT THIS TIME. THIS INFORMATION IS PROVIDED BY THE COMMISSION "AS-IS" AND THE COMMISSION EXPRESSLY DISCLAIMS ANY REPRESENTATION OR WARRANTY AS TO THE COMPLETENESS, ACCURACY, OR SUITABILITY OF THE INFORMATION FOR ANY USE. RELIANCE UPON THIS INFORMATION IS DONE AT THE RISK AND PERIL OF THE USER, AND THE COMMISSION SHALL NOT BE LIABLE FOR ANY DAMAGES THAT MAY ARISE FROM ANY ERROR IN THE INFORMATION. IT IS, THEREFORE, THE RESPONSIBILITY OF THE CONTRACTOR TO VERIFY THE EXISTENCE, LOCATION AND STATUS OF ANY FACILITY. SUCH VERIFICATION INCLUDES DIRECT CONTACT WITH THE LISTED UTILITIES.

INDEX OF SHEETS

DESCRIPTION	SHEET NUMBER
TITLE SHEET (5 SHEETS)	1
QUANTITIES (QU) (2 SHEETS)	3
PLAN SHEETS (PP)	4-12
TRAFFIC CONTROL SHEETS (TC)	13-22
EROSION CONTROL SHEETS (EC)	23-31
BRIDGE DRAWINGS (B)	
A3980	1
P0609	1-2

LENGTH OF PROJECT

BEGINNING OF PROJECT	RTE W	LOG MILE 1.303
END OF PROJECT		LOG MILE 1.335
APPARENT LENGTH		168.96 FEET

EQUATIONS AND EXCEPTIONS:

TOTAL CORRECTIONS	0.00 FEET
NET LENGTH OF PROJECT	168.96 FEET
STATE LENGTH	0.032 MILES
FOR INFORMATION ONLY ESTIMATED DISTURBED ACRES	0.03 ACRES

STATE OF MISSOURI
CLARK HARTMANN
NUMBER PE-2023008265
PROFESSIONAL ENGINEER

12/08/2025 3:49:04 PM
CLARK HARTMANN - CIVIL
MO-PE-2023008265

DATE PREPARED	12/8/2025
ROUTE	VAR
STATE	MO
DISTRICT	KC
SHEET NO.	1D
COUNTY	VARIOUS
JOB NO.	JKU0293
CONTRACT ID.	
PROJECT NO.	
BRIDGE NO.	

DATE	DESCRIPTION

MISSOURI HIGHWAYS AND TRANSPORTATION COMMISSION
105 WEST CAPITOL
JEFFERSON CITY, MO 65102
1-888-ASK-MODOT (1-888-275-6636)

MISSOURI HIGHWAYS AND TRANSPORTATION COMMISSION

PLANS FOR PROPOSED STATE HIGHWAY

CASS COUNTY

SECTIONs 9,16, TOWNSHIP 44N, RANGE 32W

DESIGN DESIGNATION

A.A.D.T. - 2026 = 3086 (EB), 2955 (WB)

A.A.D.T. - 2036 = 3421 (EB), 3281 (WB)

T = 18.8%

V = 60 M.P.H.

FUNCTIONAL CLASSIFICATION- MINOR ARTERIAL

NO R/W REQUIRED

KEY MAP
LOCATION OF CASS COUNTY

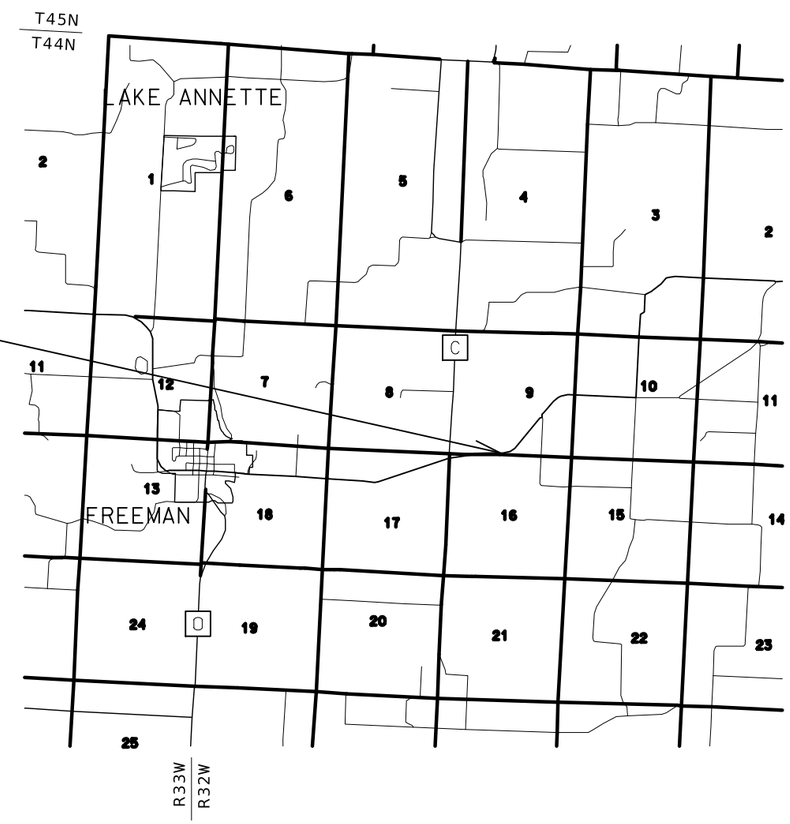

A2087
GABION AND ROCK PLACEMENT
LOG MILE ± 10.386 TO
LOG MILE ± 10.394

CONVENTIONAL SYMBOLS
(USED IN PLANS)

	EXISTING	NEW
BUILDINGS AND STRUCTURES		
GUARD RAIL		
GUARD CABLE		
CONCRETE RIGHT-OF-WAY MARKER		
STEEL RIGHT-OF-WAY MARKER		
LOCATION SURVEY MARKER		
UTILITIES		
FIBER OPTICS	—FO—	—FO—
OVERHEAD CABLE TV	—OTV—	—OTV—
UNDERGROUND CABLE TV	—UTV—	—UTV—
OVERHEAD TELEPHONE	—OT—	—OT—
UNDERGROUND TELEPHONE	—UT—	—UT—
OVERHEAD POWER	—OE—	—OE—
UNDERGROUND POWER	—UE—	—UE—
SANITARY SEWER	—S—	—S—
STORM SEWER	—SS—	—SS—
GAS	—G—	—G—
WATER	—W—	—W—
MANHOLE	SAN	
FIRE HYDRANT	HYD	
WATER VALVE	WV	
WATER METER	WM	
DROP INLET	D	
DITCH BLOCK		
GROUND MOUNTED SIGN	SIGN	
LIGHT POLE		
H-FRAME POWER POLE		
TELEPHONE PEDESTAL	PED	
FENCE		
CHAIN LINK	—V—	
WOVEN WIRE	—X—	
GATE POST		
BENCHMARK	BM	

NOTE: DASHED OR OPEN SYMBOLS INDICATE EXISTING FEATURES

NOT TO SCALE

TITLE SHEET
5 OF 5

THE EXISTENCE AND APPROXIMATE LOCATION OF UTILITY FACILITIES KNOWN TO EXIST, AS SHOWN ON THE PLANS, ARE BASED ON THE BEST INFORMATION AVAILABLE TO THE COMMISSION AT THIS TIME. THIS INFORMATION IS PROVIDED BY THE COMMISSION "AS-IS" AND THE COMMISSION EXPRESSLY DISCLAIMS ANY REPRESENTATION OR WARRANTY AS TO THE COMPLETENESS, ACCURACY, OR SUITABILITY OF THE INFORMATION FOR ANY USE. RELIANCE UPON THIS INFORMATION IS DONE AT THE RISK AND PERIL OF THE USER, AND THE COMMISSION SHALL NOT BE LIABLE FOR ANY DAMAGES THAT MAY ARISE FROM ANY ERROR IN THE INFORMATION. IT IS, THEREFORE, THE RESPONSIBILITY OF THE CONTRACTOR TO VERIFY THE EXISTENCE, LOCATION AND STATUS OF ANY FACILITY. SUCH VERIFICATION INCLUDES DIRECT CONTACT WITH THE LISTED UTILITIES.

INDEX OF SHEETS

DESCRIPTION	SHEET NUMBER
TITLE SHEET (5 SHEETS)	1
QUANTITIES (QU) (2 SHEETS)	3
PLAN SHEETS (PP)	4-12
TRAFFIC CONTROL SHEETS (TC)	13-22
EROSION CONTROL SHEETS (EC)	23-31
BRIDGE DRAWINGS (B)	
A3980	1
P0609	1-2

LENGTH OF PROJECT

BEGINNING OF PROJECT	MO 2	LOG MILE 10.386
END OF PROJECT		LOG MILE 10.394
APPARENT LENGTH		42.24 FEET

EQUATIONS AND EXCEPTIONS:

TOTAL CORRECTIONS	0.00 FEET
NET LENGTH OF PROJECT	42.24 FEET
STATE LENGTH	0.008 MILES
FOR INFORMATION ONLY ESTIMATED DISTURBED ACRES	0.03 ACRES

STATE OF MISSOURI
CLARK HARTMANN
NUMBER PE-2023008265
PROFESSIONAL ENGINEER

12/08/2025 3:49:26 PM
CLARK HARTMANN - CIVIL
MO-PE-2023008265

DATE PREPARED	
12/8/2025	
ROUTE: VAR	STATE: MO
DISTRICT: KC	SHEET NO.: 1E
COUNTY: VARIOUS	
JOB NO.: JKU0293	
CONTRACT ID.	
PROJECT NO.	
BRIDGE NO.	

DATE	DESCRIPTION

MISSOURI HIGHWAYS AND TRANSPORTATION COMMISSION
105 WEST CAPITOL
JEFFERSON CITY, MO 65102
1-888-ASK-MODOT (1-888-275-6636)

CULVERT CLEANOUT

PLAN SHEET NO.	LOCATION	BRIDGE NO.	CULVERT CLEANOUT EACH	REMARKS (W X H X L)
4	ROUTE C, RAY COUNTY, BURNT FORK	BR. A5622	1	14' X 15' X 202' TRIPLE RCB
6	ROUTE D, RAY COUNTY, FIRE BRANCH	BR. P0609	1	12' X 9' X 63' DOUBLE RCB
7	MO 2, CASS COUNTY, ADAMS BRANCH	BR. A2087	1	14' X 13' X 92' DOUBLE RCB
8	I-435, CLAY COUNTY, ROCKY BRANCH	BR. A3301	1	11' X 8' 281 DOUBLE RCB
9	ROUTE W, JAKSON COUNTY, DYKE BRANCH	BR. A3980	1	13' X 14' X 184' TRIPLE RCB
10	ROUTE N, PLATTE COUNTY, SAND BRANCH	BR. N0327	1	10' X 10.5' X 62' DOUBLE RCB
12	ROUTE D, PLATTE COUNTY, FOX CREEK	BR. N0836	1	10' X 6.5' X 114' DOUBLE RCB
	SUBTOTALS		7	
	PAY TOTALS		7	

TEMPORARY EROSION CONTROL

PLAN SHEET NO.	BRIDGE NO.	SEDIMENT TRAP ROCK C.Y.	SEDIMENT REMOVAL C.Y.	SEEDING COOL SEASON GRASSES ACRE	MULCHING ACRE
23	A5622	2	2	0.04	0.04
24	N0299	3	3	0.04	0.04
25	P0609	3	3	0.04	0.04
26	A2087	4	4	0.02	0.02
27	A3301	4	4		
28	A3980	2	2	0.02	0.02
29	N0327	4	4		
30	N0360	2	2	0.01	0.01
31	N0836	4	4		
	SUBTOTALS	28	28	0.2	0.2
	PAY TOTALS	28	28	0.2	0.2

CONTRACTOR FURNISHED SURVEYING & STAKING

1 LUMP SUM

MOBILIZATION

1 LUMP SUM

PERMANENT EROSION CONTROL

PLAN SHEET NO.	LOCATION	BRIDGE NO.	CLASS A EXCAVATION C.Y.	GABIONS C.Y.	ROCK LINING C.Y.	PERMANENT EROSION CONTROL GEOTEXTILE S.Y.	FLOWABLE BACKFILL C.Y.	REMARKS
4	ROUTE C, RAY COUNTY, BURNT FORK	BR. A5622	35	95	180	336	56	INLET
4	ROUTE C, RAY COUNTY, BURNT FORK	BR. A5622	45	92	149	312	56	OUTLET
5	ROUTE E, RAY COUNTY, DRAINS TO MUD CREEK	BR. N0299	20	36	81	135		INLET
5	ROUTE E, RAY COUNTY, DRAINS TO MUD CREEK	BR. N0299	20	52	81	145	18	OUTLET
6	ROUTE D, RAY COUNTY, FIRE BRANCH	BR. P0609			39	39		INLET
6	ROUTE D, RAY COUNTY, FIRE BRANCH	BR. P0609			39	39		OUTLET
7	MO 2, CASS COUNTY, ADAMS BRANCH	BR. A2087	30	56	87	162		INLET
8	I-435, CLAY COUNTY, ROCKY BRANCH	BR. A3301	33	66		83	15	INLET
9	ROUTE W, JACKSON COUNTY, DYKE BRANCH	BR. A3980	54	135	111	231		OUTLET
10	ROUTE N, PLATTE COUNTY, SAND BRANCH	BR. N0327	25	41		94		OUTLET
11	ROUTE N, PLATTE COUNTY, DRAINS TO NAYLOR CREEK	BR. N0360	24	48	35	92		OUTLET
12	ROUTE D, PLATTE COUNTY, FOX CREEK	BR. N0836	30	40		48		INLET
12	ROUTE D, PLATTE COUNTY, FOX CREEK	BR. N0836	40	60		65		OUTLET
	SUBTOTALS		356	721	802	1781	145	
	PAY TOTALS		356	721	802	1781	145	

REMOVAL OF IMPROVEMENTS

SHEET NO.	LOCATION	BRIDGE NUMBER	ITEM	UNIT	QUANTITY
4	ROUTE C, RAY COUNTY, BURNT FORK	BR. A5622	WOOD DEBRIS (INLET)	EACH	1
5	ROUTE E, RAY COUNTY, DRAINS TO MUD CREEK	BR. N0299	EX. GABIONS (OUTLET)	EACH	1
6	ROUTE D, RAY COUNTY, FIRE BRANCH	BR. P0609	WOOD DEBRIS (INLET)	EACH	1
7	MO 2, CASS COUNTY, ADAMS BRANCH	BR. A2087	WOOD DEBRIS (INLET)	EACH	1
7	MO 2, CASS COUNTY, ADAMS BRANCH	BR. A2087	WOOD DEBRIS (OUTLET)	EACH	1
9	ROUTE W, JACKCON COUNTY, DYKE BRANCH	BR. A3980	WOOD DEBRIS (INLET)	EACH	1
10	ROUTE N, PLATTE COUNTY, SAND BRANCH	BR. N0327	WOOD DEBRIS (INLET)	EACH	1
					1 LUMP SUM

REMOVAL OF DEBRIS SHALL BE WITHIN EXISTING MODOT RIGHT OF WAY / DRAINAGE EASEMENT AS DIRECTED BY ENGINEER

SUMMARY OF QUANTITIES

SHEET 1 OF 2

STATE OF MISSOURI
CLARK HARTMANN
NUMBER PE-2023008265
PROFESSIONAL ENGINEER

12/08/2025 3:54:23 PM
CLARK HARTMANN - CIVIL
MO-PE-2023008265

DATE PREPARED 12/8/2025

ROUTE	STATE
VAR	MO
DISTRICT	SHEET NO.
KC	3

COUNTY: VARIOUS

JOB NO. JKU0293

CONTRACT ID.

PROJECT NO.

BRIDGE NO.

DATE	DESCRIPTION

MISSOURI HIGHWAYS AND TRANSPORTATION COMMISSION

105 WEST CAPITOL
JEFFERSON CITY, MO 65102
1-888-ASK-MODOT (1-888-275-6636)

SIGN	SIZE IN.	AREA SQ.FT.	QTY EACH	TOTAL AREA SQ.FT.	QTY RELOC EACH	TOTAL RELOC SQ.FT.	SIGN NO.	DESCRIPTION
WARNING SIGNS								
WO1-1L	48X48	16.00						TURN (SYMBOL LEFT)
WO1-1R	48X48	16.00						TURN (SYMBOL RIGHT)
WO1-2L	48X48	16.00						CURVE (SYMBOL LEFT)
WO1-2R	48X48	16.00						CURVE (SYMBOL RIGHT)
WO1-3L	48X48	16.00						REVERSE TURN (SYMBOL LEFT)
WO1-3R	48X48	16.00						REVERSE TURN (SYMBOL RIGHT)
WO1-4L	48X48	16.00						REVERSE CURVE (SYMBOL LEFT)
WO1-4R	48X48	16.00						REVERSE CURVE (SYMBOL RIGHT)
WO1-4bL	48X48	16.00						DOUBLE ARROW REVERSE CURVE (SYMBOL LEFT)
WO1-4bR	48X48	16.00						DOUBLE ARROW REVERSE CURVE (SYMBOL RIGHT)
WO1-4cL	48X48	16.00						TRIPLE ARROW REVERSE CURVE (SYMBOL LEFT)
WO1-4cR	48X48	16.00						TRIPLE ARROW REVERSE CURVE (SYMBOL RIGHT)
WO1-6	60X30	12.50						HORIZONTAL ARROW (SYMBOL)
WO1-6a	72X36	18.00						HORIZ. ARROW (SYMBOL ON PERMANENT BARRICADE)
WO1-7	60X30	12.50						DOUBLE HEAD HORIZONTAL ARROW (SYMBOL)
WO1-7a	72X36	18.00						DOUBLE HEAD HORIZ. ARROW (SYMBOL ON PERM. BARR.)
WO1-8	18X24	3.00						CHEVRON (SYMBOL)
WO1-8a	30X36	7.50						CHEVRON (SYMBOL FOR DIVIDED HIGHWAYS)
WO3-1	48X48	16.00						STOP AHEAD (SYMBOL)
WO3-2	48X48	16.00						YIELD AHEAD (SYMBOL)
WO3-3	48X48	16.00						SIGNAL AHEAD (SYMBOL)
WO3-4	48X48	16.00						BE PREPARED TO STOP
WO3-5	48X48	16.00						SPEED LIMIT AHEAD
WO4-1L	48X48	16.00						MERGE (SYMBOL FROM LEFT)
WO4-1R	48X48	16.00						MERGE (SYMBOL FROM RIGHT)
WO4-1aL	48X48	16.00	2	32.00			6A	MERGE (LEFT)
WO4-1aR	48X48	16.00						MERGE (RIGHT)
WO5-1	48X48	16.00						ROAD/BRIDGE/RAMP NARROWS
WO5-3	48X48	16.00						ONE LANE BRIDGE
WO5-5	48X48	16.00						NARROW LANES
WO6-1	48X48	16.00						DIVIDED HIGHWAY (SYMBOL)
WO6-2	48X48	16.00						DIVIDED HIGHWAY END (SYMBOL)
WO6-3	48X48	16.00						TWO WAY TRAFFIC (SYMBOL)
WO7-3a	30X24	5.00						NEXT XX MILES (PLAQUE)
WO8-1	48X48	16.00						BUMP
WO8-2	48X48	16.00						DIP
WO8-3	48X48	16.00						PAVEMENT ENDS
WO8-4	48X48	16.00						SOFT SHOULDER
WO8-5	48X48	16.00						SLIPPERY WHEN WET (SYMBOL)
WO8-6	48X48	16.00						TRUCK CROSSING
WO8-6c	48X48	16.00						TRUCK ENTRANCE
WO8-7	36X36	9.00						LOOSE GRAVEL
WO8-7a	36X36	9.00						FRESH OIL / LOOSE GRAVEL
WO8-9	48X48	16.00						LOW SHOULDER
WO8-11	48X48	16.00						UNEVEN LANES
WO8-12	48X48	16.00						NO CENTER LINE
WO8-15	48X48	16.00						GROOVED PAVEMENT
WO8-15P	30X24	5.00						MOTORCYCLE (PLAQUE)
WO8-17L	48X48	16.00						SHOULDER DROP-OFF (SYMBOL LEFT)
WO8-17R	48X48	16.00						SHOULDER DROP-OFF (SYMBOL RIGHT)
WO8-17P	30X24	5.00						SHOULDER DROP-OFF (PLAQUE)
W10-1	42RND.	9.62						RAILROAD CROSSING
WO12-1	24X24	4.00						DOUBLE DOWN ARROW (SYMBOL)
WO12-2	48X48	16.00						LOW CLEARANCE (SYMBOL)
WO12-2x	24X18	3.00						LOW CLEARANCE (PLAQUE)
WO12-2a	84X24	14.00						OVERHEAD LOW CLEARANCE (FEET AND INCHES)
WO12-4	120X60	50.00						LOW CLEARANCE XX FT XX IN XX MILES AHEAD
WO12-5	120X60	50.00						WIDTH RESTRICTION XX FT XX IN XX MILES AHEAD
WO13-1	30X30	6.25						ADVISORY SPEED (PLAQUE)
WO16-2	30X24	5.00						XXX FEET (PLAQUE)
WO16-3	30X24	5.00						X MILE (PLAQUE)
WO20-1	48X48	16.00	6	96.00			2	ROAD/BRIDGE/RAMP WORK AHEAD
WO20-2	48X48	16.00						DETOUR AHEAD
WO20-3	48X48	16.00	4	64.00			57	ROAD CLOSED AHEAD
WO20-4	48X48	16.00						ONE LANE ROAD AHEAD
WO20-5	48X48	16.00	2	32.00			5	RIGHT/CENTER/LEFT LANE CLOSED AHEAD
WO20-5a	48X48	16.00						2 RIGHT/CENTER/LEFT LANES CLOSED AHEAD
WO20-6a	48X48	16.00						RIGHT/CENTER/LEFT LANE CLOSED
WO20-7a	48X48	16.00						FLAGGER (SYMBOL)
WO21-2	36X36	9.00						FRESH OIL
WO21-5	48X48	16.00	4	64.00			21/21A	SHOULDER WORK / SHOULDER WORK AHEAD
WO22-1	48X48	16.00						BLASTING ZONE AHEAD
WO22-2	42X36	10.50						TURN OFF 2-WAY RADIO AND PHONE
WO22-3	42X36	10.50						END BLASTING ZONE
GO22-1	21X15	2.19						WET PAINT (ARROW PIVOTS)

SIGN	SIZE IN.	AREA SQ.FT.	QTY EACH	TOTAL SQ.FT.	QTY RELOC EACH	TOTAL RELOC SQ.FT.	SIGN NO.	DESCRIPTION
GUIDE SIGNS								
E05-1	36X48	12.00						GORE EXIT
E05-2	48X36	12.00						EXIT OPEN
E05-2a	48X36	12.00						EXIT CLOSED
GO20-1	60X24	10.00						ROAD WORK NEXT XX MILES
GO20-2	48X24	8.00						END ROAD WORK
GO20-4	36X18	4.50						PILOT CAR FOLLOW ME
GO20-4a	42X30	8.75						PILOT CAR IN USE WAIT & FOLLOW
GO20-4a	18X12	1.50						PILOT CAR IN USE WAIT & FOLLOW
GO20-5aP	36X24	6.00	2	12.00			54	WORK ZONE (PLAQUE)
MO4-8a	24X18	3.00						END DETOUR
MO4-9L	48X36	12.00						DETOUR (LEFT)
MO4-9R	48X36	12.00						DETOUR (RIGHT)
MO4-9P	48X12	4.00						STREET NAME (PLAQUE)
MO4-10L	48X18	6.00						DETOUR ARROW (LEFT)
MO4-10R	48X18	6.00						DETOUR ARROW (RIGHT)
REGULATORY SIGNS								
R1-1	48X48	13.25						STOP
R1-2	48TRI.	6.93						YIELD
R1-2a	36X36	9.00						TO ONCOMING TRAFFIC (PLAQUE)
R1-3P	30X12	2.50						ALL WAY (PLAQUE)
R2-1	36X48	12.00	4	48.00			25	SPEED LIMIT XX
R3-1	48X48	16.00						NO RIGHT TURN (SYMBOL)
R3-2	48X48	16.00						NO LEFT TURN (SYMBOL)
R3-3	36X36	9.00						NO TURNS
R3-4	48X48	16.00						NO U-TURN (SYMBOL)
R3-7L	30X30	6.25						LEFT LANE MUST TURN LEFT
R3-7R	30X30	6.25						RIGHT LANE MUST TURN RIGHT
R4-1	36X48	12.00						DO NOT PASS
R4-2	36X48	12.00						PASS WITH CARE
R4-7a	36X48	12.00						KEEP RIGHT (HORIZONTAL ARROW)
R4-8a	36X48	12.00						KEEP LEFT (HORIZONTAL ARROW)
R5-1	30X30	6.25						DO NOT ENTER
R5-1a	36X24	6.00						WRONG WAY
R6-1L	54X18	6.75						ONE WAY ARROW (LEFT)
R6-1R	54X18	6.75						ONE WAY ARROW (RIGHT)
R6-2L	24X30	5.00						ONE WAY (LEFT)
R6-2R	24X30	5.00						ONE WAY (RIGHT)
R9-9	24X12	2.00	4	8.00			28	SIDEWALK CLOSED
R9-11L	24X18	3.00						SIDEWALK CLOSED AHEAD, (ARROW LEFT) CROSS HERE
R9-11R	24X18	3.00						SIDEWALK CLOSED AHEAD, (ARROW RIGHT) CROSS HERE
R10-6	24X36	6.00						STOP HERE ON RED (45^ ARROW)
R11-2	48X30	10.00	4	40.00			29	ROAD CLOSED
R11-3a	60X30	12.50	4	50.00			58	ROAD CLOSED XX MILES AHEAD LOCAL TRAFFIC ONLY
R11-4	60X30	12.50						ROAD CLOSED TO THRU TRAFFIC
CONST-3A	60X48	20.00						FINE SIGN
CONST-3X	56X12	4.67						SPEEDING/PASSING (PLATE)
MISCELLANEOUS SIGNS								
CONST-5	48X36	12.00						POINT OF PRESENCE
CONST-5	96X48	32.00						POINT OF PRESENCE
CONST-8	48X36	12.00	2	24.00				WORK ZONE NO PHONE ZONE
SPECIAL	24X18	12.00	4	48.00			28C	

616-10.05 CONSTRUCTION SIGNS	TOTAL	518
616-10.10 RELOCATED SIGNS	TOTAL	

EFFECTIVE: 07-01-2025

ITEM NUMBER	TOTAL QTY	DESCRIPTION
6122008		IMPACT ATTENUATOR 40 MPH (SAND BARRELS)
6122009		IMPACT ATTENUATOR 45 MPH (SAND BARRELS)
6122010		IMPACT ATTENUATOR 50 MPH (SAND BARRELS)
6122012		IMPACT ATTENUATOR 55 MPH (SAND BARRELS)
6122014		IMPACT ATTENUATOR 60 MPH (SAND BARRELS)
6122017		IMPACT ATTENUATOR 65 MPH (SAND BARRELS)
6122019		IMPACT ATTENUATOR 70 MPH (SAND BARRELS)
6122020		REPLACEMENT SAND BARREL
6122030		IMPACT ATTENUATOR (RELOCATION)
6122040		WORK ZONE CRASH CUSHION (NARROW)
6122041		WORK ZONE CRASH CUSHION (RELOCATION)
6123001		TRUCK MOUNTED ATTENUATOR (TMA)
6161012		BUOYS (BOATS KEEP OUT)
6161013		BUOYS (NO WAKE)
6161014		SPECIAL SIGN ASSEMBLY (BOATS KEEP OUT)
6161020		CHANNELIZER (DRUM-LIKE)
6161022		CHANNELIZER (CONE)
6161025	82	CHANNELIZER (TRIM-LINE)
6161026		CHANNELIZER (VERTICAL PANEL)
6161030	16	TYPE 3 MOVEABLE BARRICADE
6161033	28	DIRECTION INDICATOR BARRICADE
6161040	2	FLASHING ARROW PANEL
6161047		TYPE 3 OBJECT MARKER
6161055	28	SEQUENTIAL FLASHING WARNING LIGHT
6161070		TUBULAR MARKER
6161095		RADAR SPEED ADVISORY SYSTEM
6161096		CHANGEABLE MESSAGE SIGN, COMMISSION FURNISHED/RETAINED
6161098A		CHANGEABLE MESSAGE SIGN WITHOUT COMM. INTERFACE, CONTRACTOR FURNISHED/RETAINED
6161099	8	CHANGEABLE MESSAGE SIGN WITH COMM. INTERFACE, CONTRACTOR FURNISHED/RETAINED
6162000A		WORK ZONE TRAFFIC SIGNAL SYSTEM
6162002		TEMPORARY LONG-TERM RUMBLE STRIPS
6173600D		TEMPORARY TRAFFIC BARRIER, CONTRACTOR FURNISHED/RETAINED
6173700B		TEMP. TRAFFIC BARRIER ANCHORED, CONTRACTOR FURNISHED/RETAINED
6173706		TEMP. TRAFFIC BARRIER STIFFNESS TRANSITION CONTRACTOR FURNISHED/RETAINED
6174000A		TEMP. TRAFFIC BARRIER HEIGHT TRANSITION, CONTRACTOR FURNISHED/RETAINED
6175010A		RELOCATING TEMPORARY TRAFFIC BARRIER
6175011B		RELOCATING TEMP. TRAFFIC BARRIER ANCHORED
6175013		RELOCATING TEMP. TRAFFIC BARRIER STIFFNESS
6175020A		RELOCATING TEMP. TRAFFIC BARRIER HEIGHT
6208064A		TEMPORARY RAISED PAVEMENT MARKER
9029400		TEMPORARY TRAFFIC SIGNALS
9029401		TEMPORARY TRAFFIC SIGNALS AND LIGHTING
6169903		TRAFFIC SEPARATOR CURB W/ DELINEATORS
6169902	4	ADA COMPLIANT MOVEABLE BARRICADE

SUMMARY OF QUANTITIES
SHEET 2 OF 2

STATE OF MISSOURI
CLARK HARTMANN
NUMBER PE-2023008265
PROFESSIONAL ENGINEER
12/08/2025 3:54:42 PM
CLARK HARTMANN - CIVIL
MO-PE-2023008265

DATE PREPARED 12/8/2025
ROUTE VAR | STATE MO
DISTRICT KC | SHEET NO. 3
COUNTY VARIOUS
JOB NO. JKU0293
CONTRACT ID.
PROJECT NO.
BRIDGE NO.

DESCRIPTION | DATE

MISSOURI HIGHWAYS AND TRANSPORTATION COMMISSION
105 WEST CAPITOL
JEFFERSON CITY, MO 65102
1-888-ASK-MODOT (1-888-275-6636)

GENERAL NOTES:

1. PLAN SKETCH IS FOR INFORMATION ONLY

2. CHANGES SHALL BE APPROVED AND DIRECTED BY THE ENGINEER

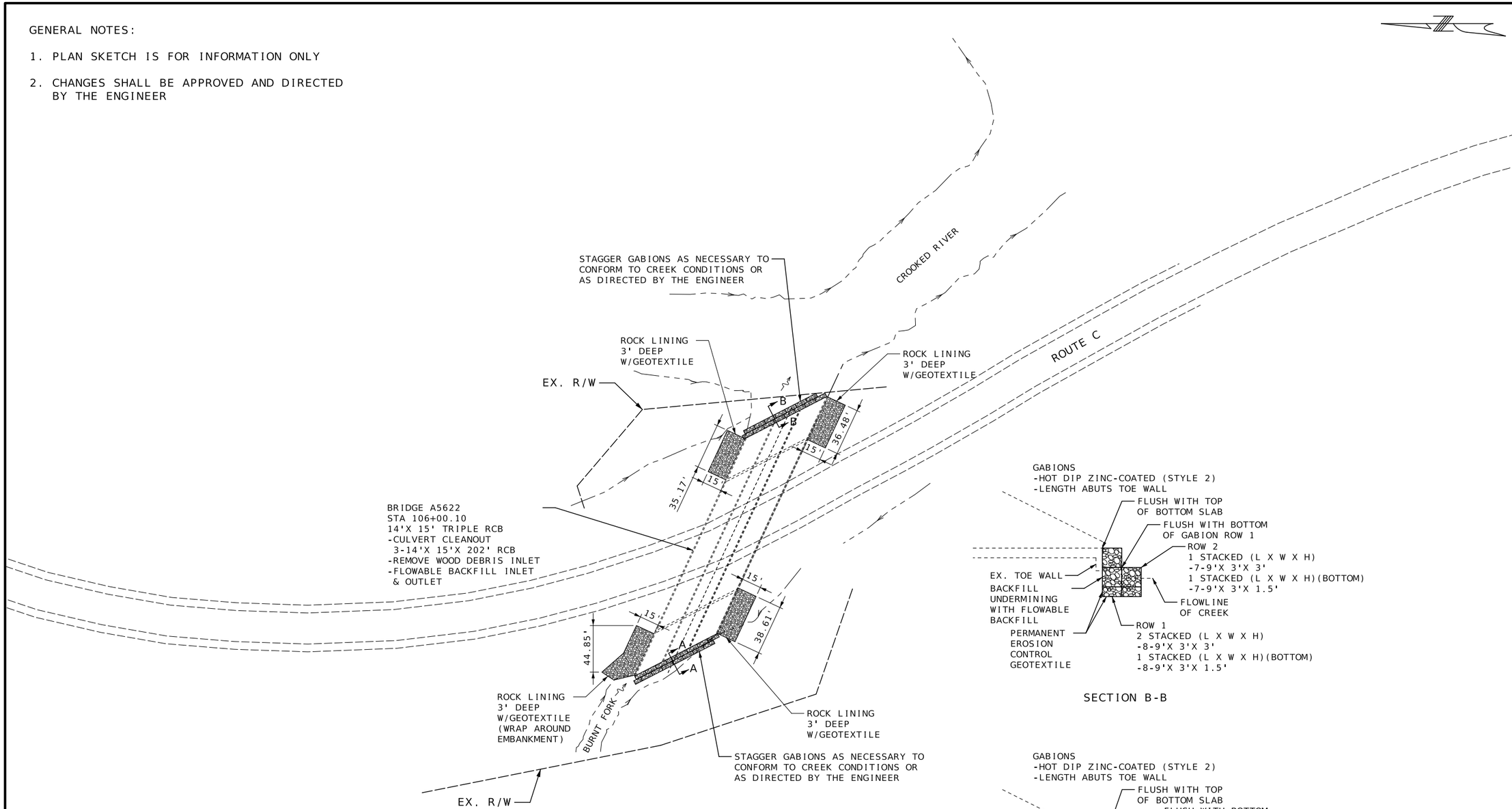

SECTION B-B

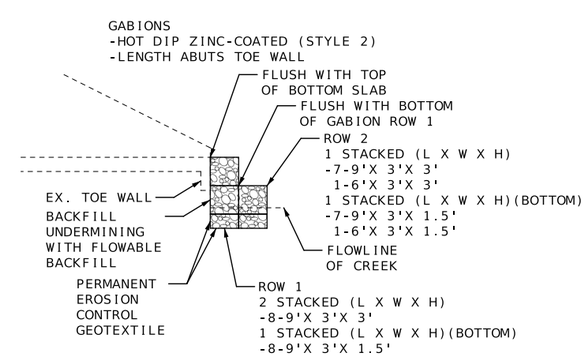

SECTION A-A

NOTES:

WORK LIMITS: LOG MILE ± 0.474 TO LOG MILE ± 0.510

SECTION:9 TOWNSHIP:54N RANGE:29W

SCALE

0 40 80 120

BR. A5622
ROUTE C
RAY COUNTY
PLAN SHEET
1 OF 9

STATE OF MISSOURI
CLARK HARTMANN
NUMBER
PE-2023008265
PROFESSIONAL ENGINEER

12/08/2025 3:54:57 PM
CLARK HARTMANN - CIVIL
MO-PE-2023008265

DATE PREPARED	
12/8/2025	
ROUTE	STATE
VAR	MO
DISTRICT	SHEET NO.
KC	4
COUNTY	
VARIOUS	
JOB NO.	
JKU0293	
CONTRACT ID.	
PROJECT NO.	
BRIDGE NO.	

DATE	DESCRIPTION

MISSOURI HIGHWAYS AND TRANSPORTATION COMMISSION

105 WEST CAPITOL
JEFFERSON CITY, MO 65102
1-888-ASK-MODOT (1-888-275-6636)

GENERAL NOTES:

1. PLAN SKETCH IS FOR INFORMATION ONLY

2. CHANGES SHALL BE APPROVED AND DIRECTED BY THE ENGINEER

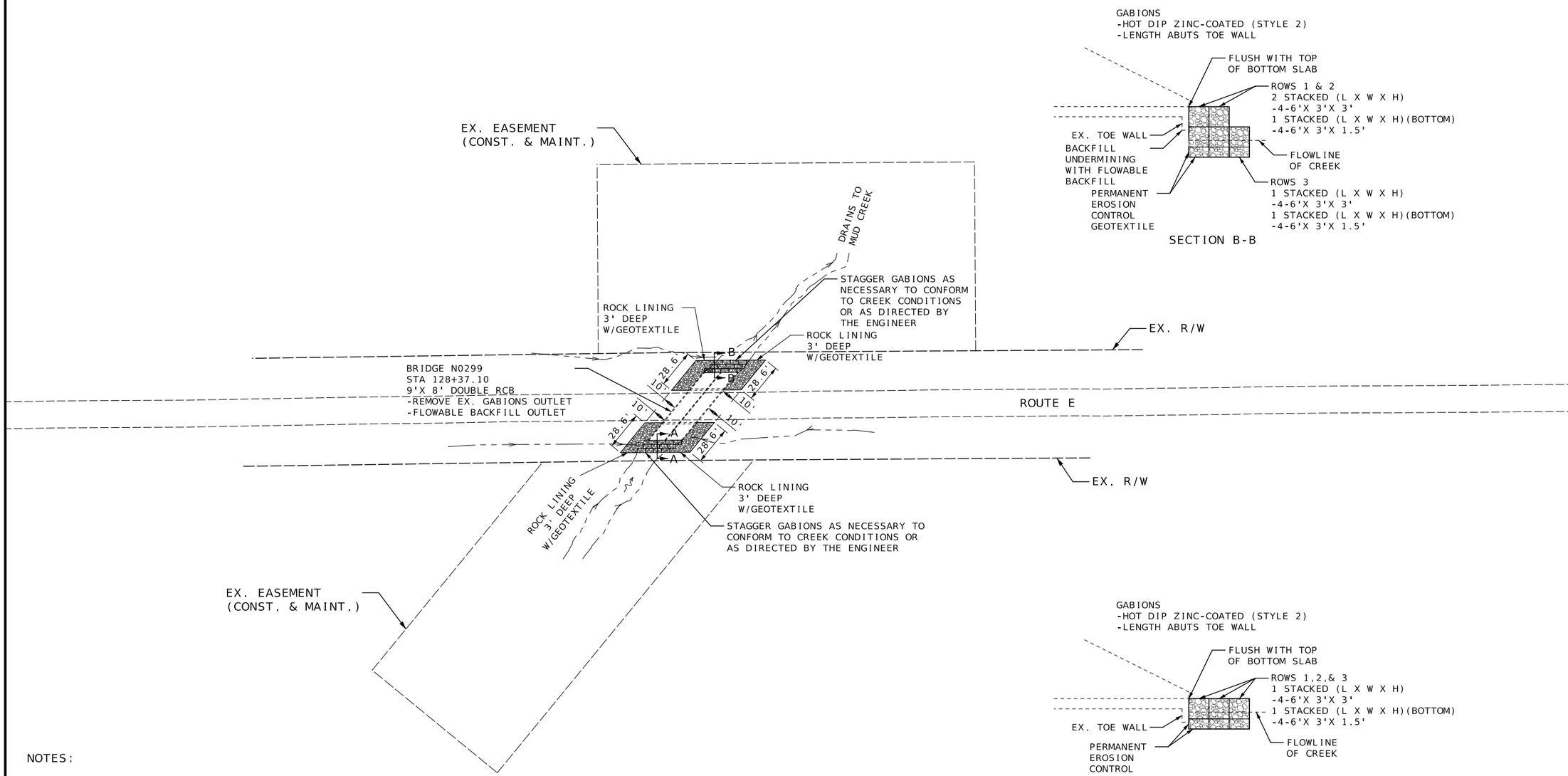

SECTION B-B

SECTION A-A

NOTES:

WORK LIMITS: LOG MILE ± 8.132 TO LOG MILE ± 8.142

SECTION:18 TOWNSHIP:54N RANGE:26W

SCALE

0 40 80 120

BR. N0299
ROUTE E
RAY COUNTY
PLAN SHEET
2 OF 9

STATE OF MISSOURI
CLARK HARTMANN
NUMBER
PE-2023008265
PROFESSIONAL ENGINEER

12/08/2025 3:55:11 PM
CLARK HARTMANN - CIVIL
MO-PE-2023008265

DATE PREPARED	
12/8/2025	
ROUTE	STATE
VAR	MO
DISTRICT	SHEET NO.
KC	5
COUNTY	
VARIOUS	
JOB NO.	
JKU0293	
CONTRACT ID.	
PROJECT NO.	
BRIDGE NO.	

DATE	DESCRIPTION

MISSOURI HIGHWAYS AND TRANSPORTATION COMMISSION

105 WEST CAPITOL
JEFFERSON CITY, MO 65102
1-888-ASK-MODOT (1-888-275-6636)

GENERAL NOTES:

1. PLAN SKETCH IS FOR INFORMATION ONLY

2. CHANGES SHALL BE APPROVED AND DIRECTED BY THE ENGINEER

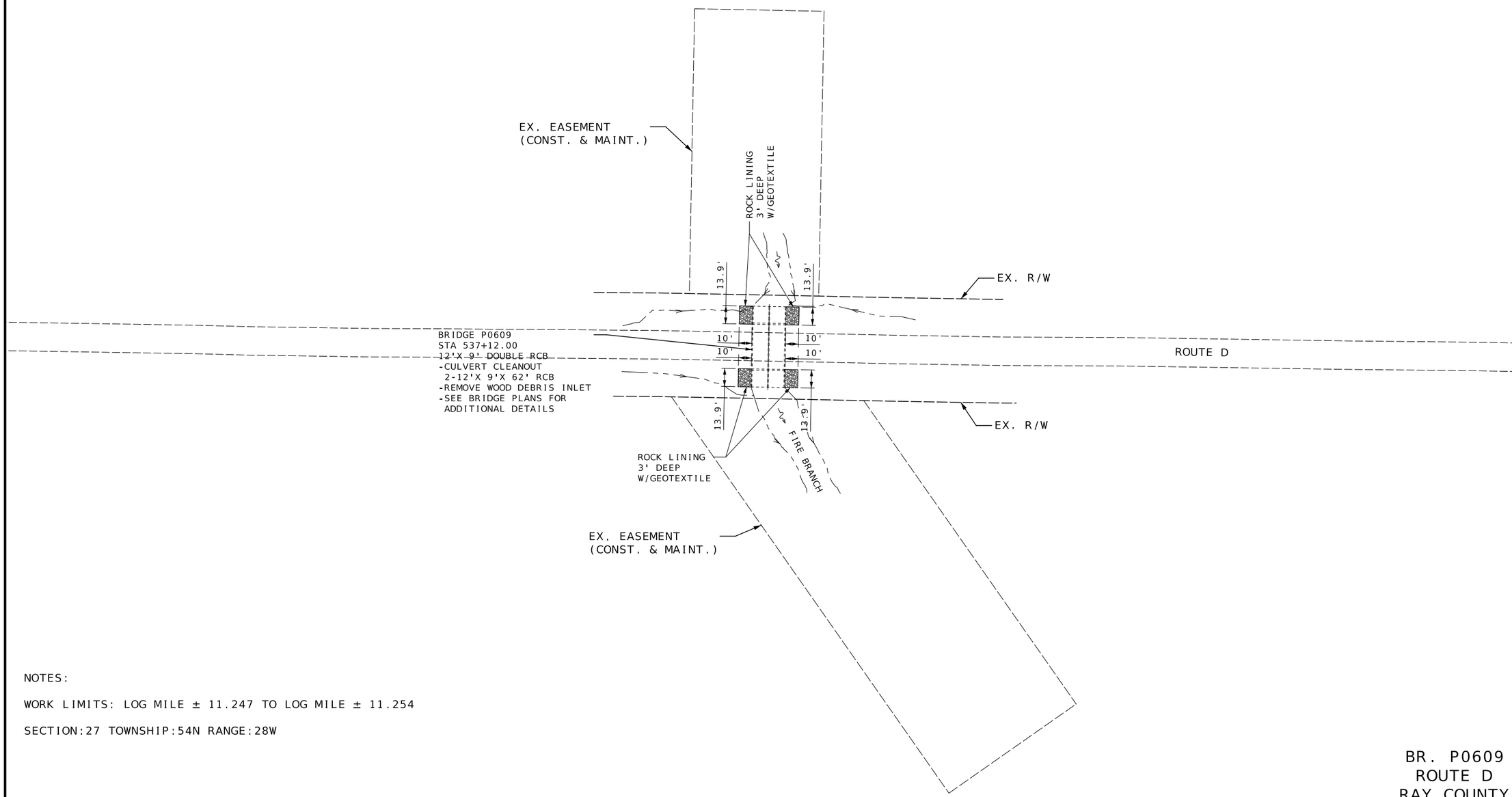

NOTES:

WORK LIMITS: LOG MILE ± 11.247 TO LOG MILE ± 11.254

SECTION:27 TOWNSHIP:54N RANGE:28W

SCALE

0 40 80 120

BR. P0609
ROUTE D
RAY COUNTY
PLAN SHEET
3 OF 9

STATE OF MISSOURI
CLARK HARTMANN
NUMBER
PE-2023008265
PROFESSIONAL ENGINEER

12/08/2025 3:55:27 PM
CLARK HARTMANN - CIVIL
MO-PE-2023008265

DATE PREPARED	
12/8/2025	
ROUTE	STATE
VAR	MO
DISTRICT	SHEET NO.
KC	6
COUNTY	
VARIOUS	
JOB NO.	
JKU0293	
CONTRACT ID.	
PROJECT NO.	
BRIDGE NO.	

DATE	DESCRIPTION

MISSOURI HIGHWAYS AND TRANSPORTATION COMMISSION

105 WEST CAPITOL
JEFFERSON CITY, MO 65102
1-888-ASK-MODOT (1-888-275-6636)

GENERAL NOTES:

1. PLAN SKETCH IS FOR INFORMATION ONLY

2. CHANGES SHALL BE APPROVED AND DIRECTED BY THE ENGINEER

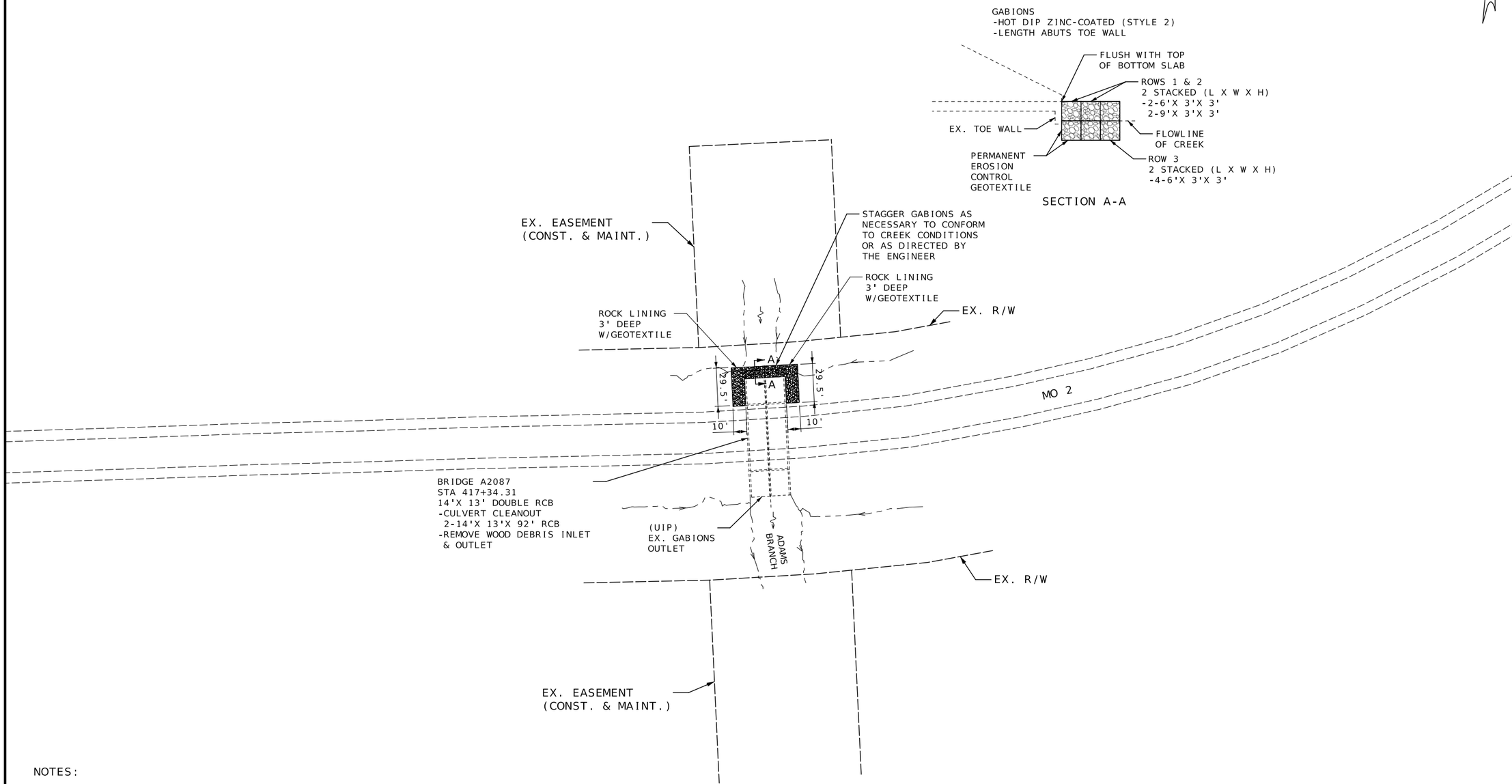

NOTES:

WORK LIMITS: LOG MILE ± 10.386 TO LOG MILE ± 10.394

SECTION:9/16 TOWNSHIP:44N RANGE:32W

SCALE

0 40 80 120

BR. A2087
MO 2
CASS COUNTY
PLAN SHEET
4 OF 9

STATE OF MISSOURI
CLARK HARTMANN
NUMBER
PE-2023008265
PROFESSIONAL ENGINEER

12/08/2025 3:55:44 PM
CLARK HARTMANN - CIVIL
MO-PE-2023008265

DATE PREPARED	12/8/2025
ROUTE	VAR
STATE	MO
DISTRICT	KC
SHEET NO.	7
COUNTY	VARIOUS
JOB NO.	JKU0293
CONTRACT ID.	
PROJECT NO.	
BRIDGE NO.	

DATE	DESCRIPTION

MISSOURI HIGHWAYS AND TRANSPORTATION COMMISSION

105 WEST CAPITOL
JEFFERSON CITY, MO 65102
1-888-ASK-MODOT (1-888-275-6636)

GENERAL NOTES:

1. PLAN SKETCH IS FOR INFORMATION ONLY

2. CHANGES SHALL BE APPROVED AND DIRECTED BY THE ENGINEER

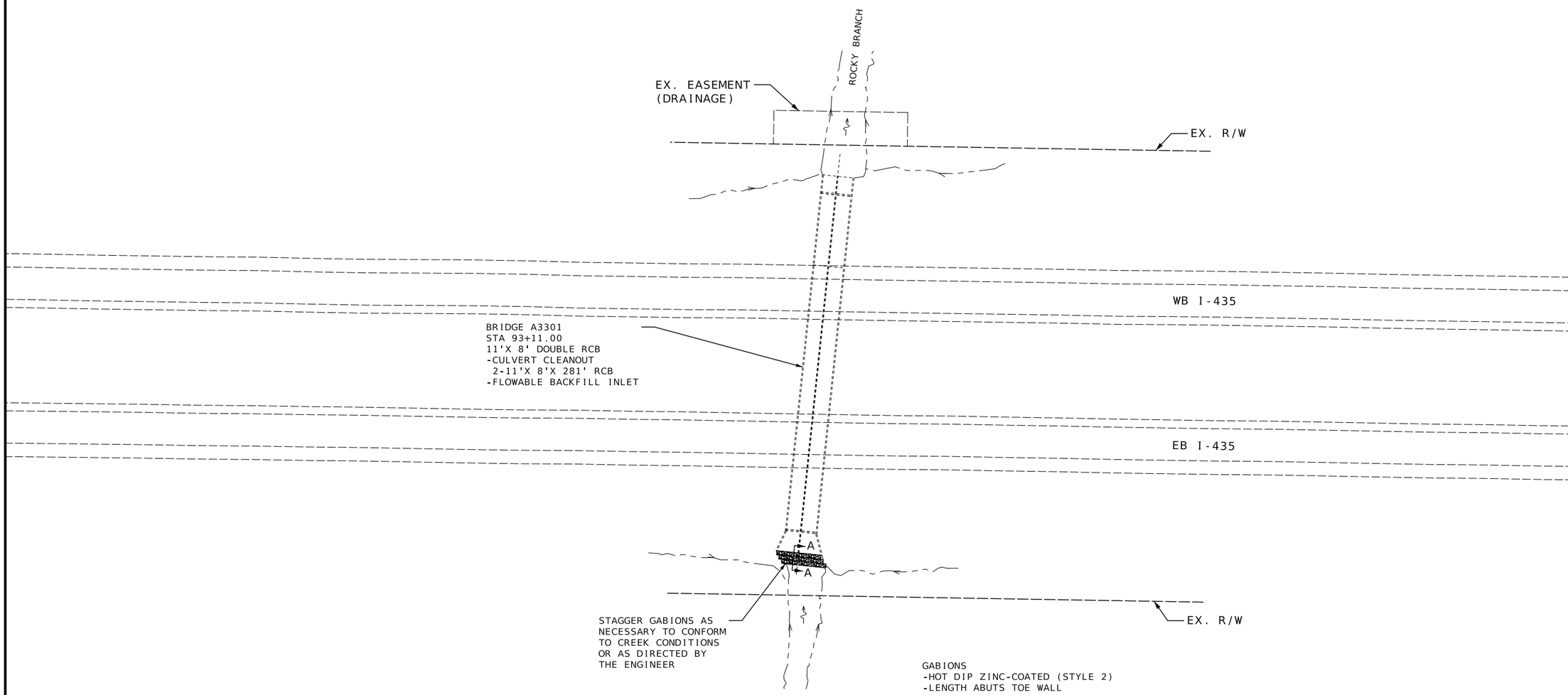

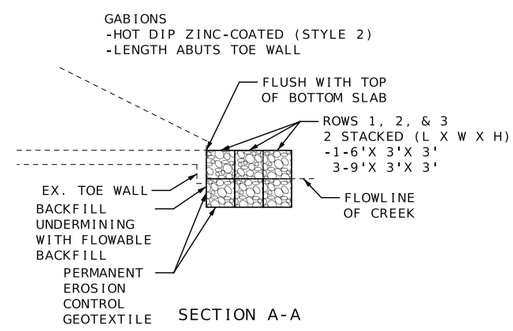

SECTION A-A

NOTES:

WORK LIMITS: LOG MILE ± 33.813 TO LOG MILE ± 33.820

SECTION:14 TOWNSHIP:52N RANGE:33W

SCALE

0 40 80 120

BR. A3301
I-435
CLAY COUNTY
PLAN SHEET
5 OF 9

STATE OF MISSOURI
CLARK HARTMANN
NUMBER
PE-2023008265
PROFESSIONAL ENGINEER

12/08/2025 3:55:56 PM
CLARK HARTMANN - CIVIL
MO-PE-2023008265

DATE PREPARED	
12/8/2025	
ROUTE: VAR	STATE: MO
DISTRICT: KC	SHEET NO.: 8
COUNTY: VARIOUS	
JOB NO.: JKU0293	
CONTRACT ID.	
PROJECT NO.	
BRIDGE NO.	

DESCRIPTION	DATE

MISSOURI HIGHWAYS AND TRANSPORTATION COMMISSION

105 WEST CAPITOL
JEFFERSON CITY, MO 65102
1-888-ASK-MODOT (1-888-275-6636)

GENERAL NOTES:

1. PLAN SKETCH IS FOR INFORMATION ONLY

2. CHANGES SHALL BE APPROVED AND DIRECTED BY THE ENGINEER

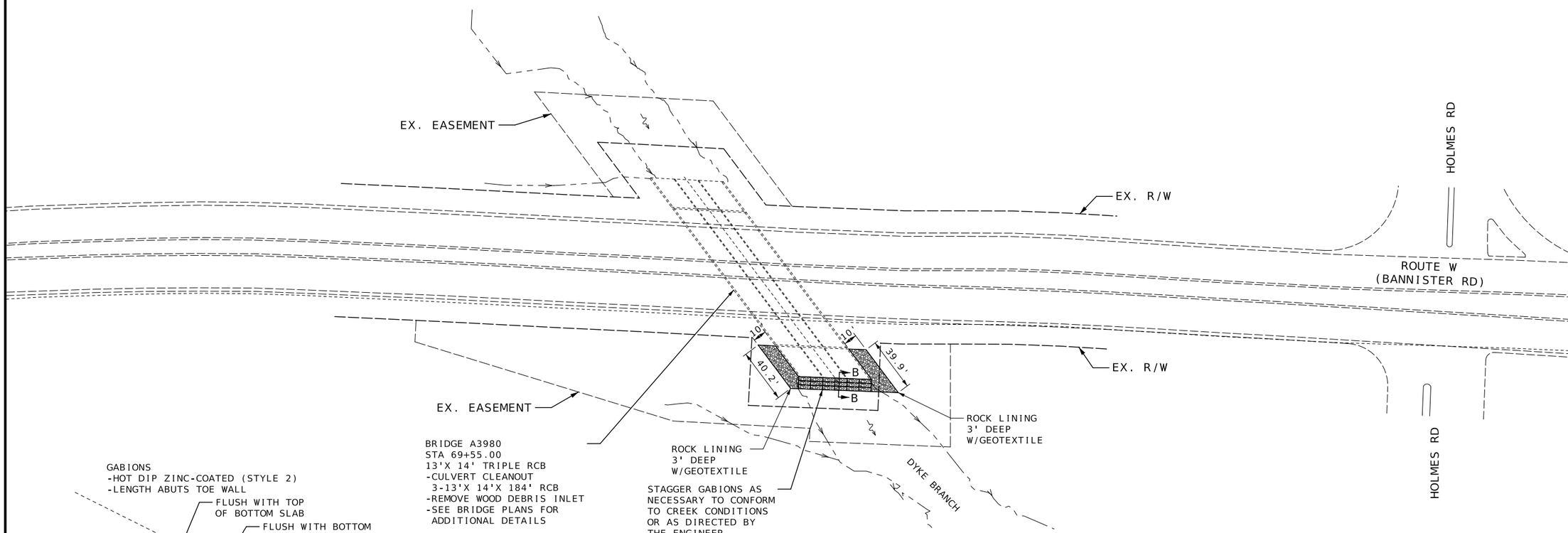

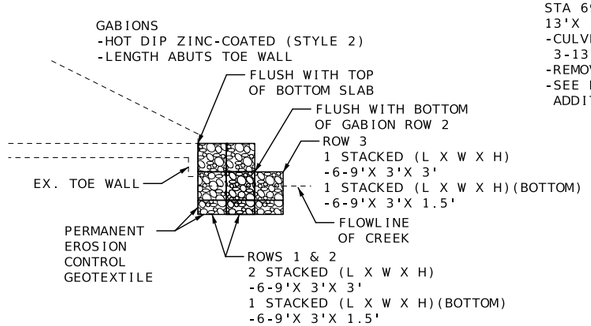

SECTION B-B

SCALE

0 40 80 120

NOTES:

WORK LIMITS: LOG MILE ± 1.303 TO LOG MILE ± 1.335

SECTION:29 TOWNSHIP:48N RANGE:33W

BR. A3980
ROUTE W
JACKSON COUNTY
PLAN SHEET
6 OF 9

STATE OF MISSOURI
CLARK HARTMANN
NUMBER
PE-2023008265
PROFESSIONAL ENGINEER

12/08/2025 3:56:12 PM
CLARK HARTMANN - CIVIL
MO-PE-2023008265

DATE PREPARED	
12/8/2025	
ROUTE	STATE
VAR	MO
DISTRICT	SHEET NO.
KC	9
COUNTY	
VARIOUS	
JOB NO.	
JKU0293	
CONTRACT ID.	
PROJECT NO.	
BRIDGE NO.	

DATE	DESCRIPTION

MISSOURI HIGHWAYS AND TRANSPORTATION COMMISSION

105 WEST CAPITOL
JEFFERSON CITY, MO 65102
1-888-ASK-MODOT (1-888-275-6636)

GENERAL NOTES:

1. PLAN SKETCH IS FOR INFORMATION ONLY

2. CHANGES SHALL BE APPROVED AND DIRECTED BY THE ENGINEER

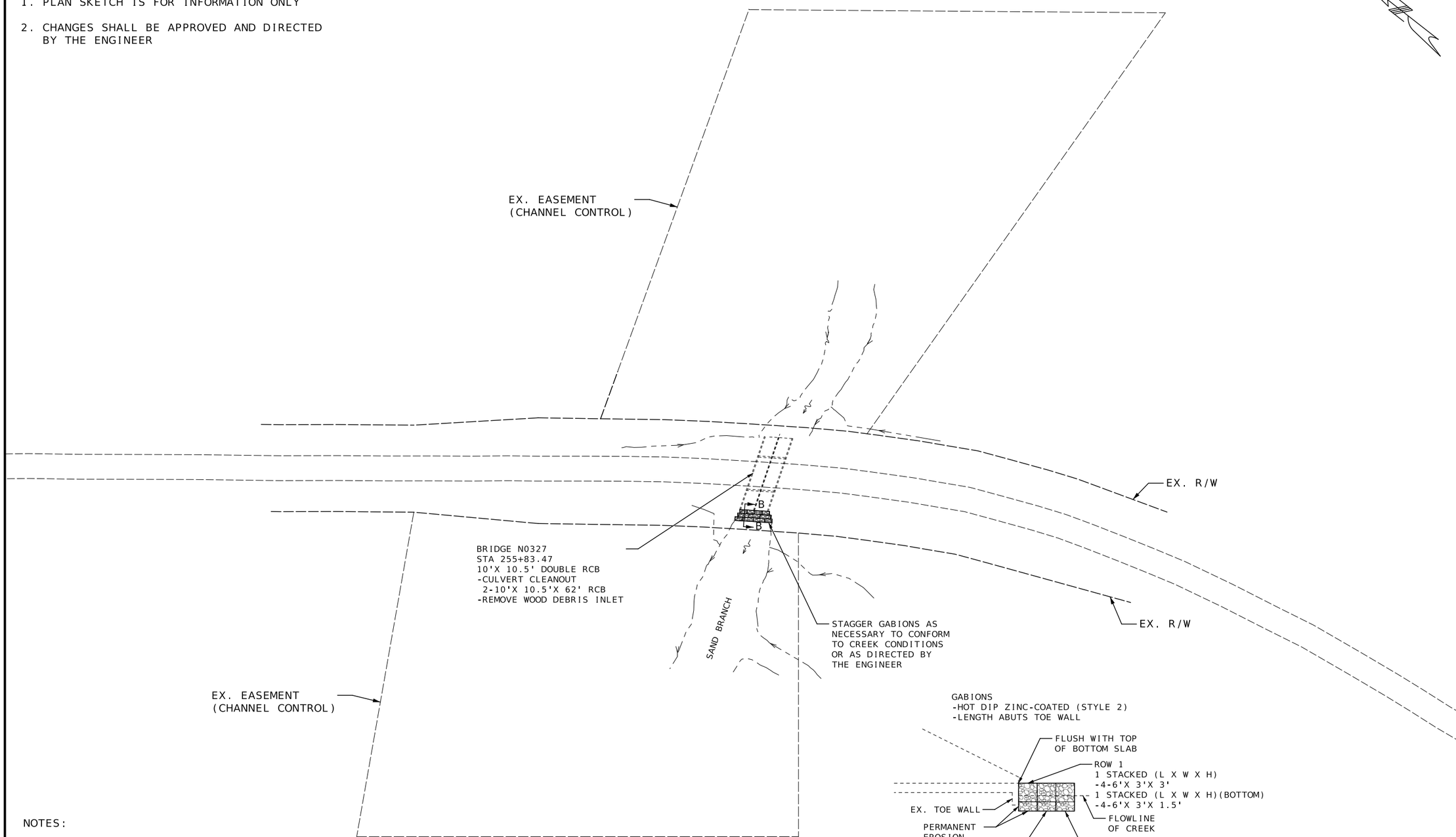

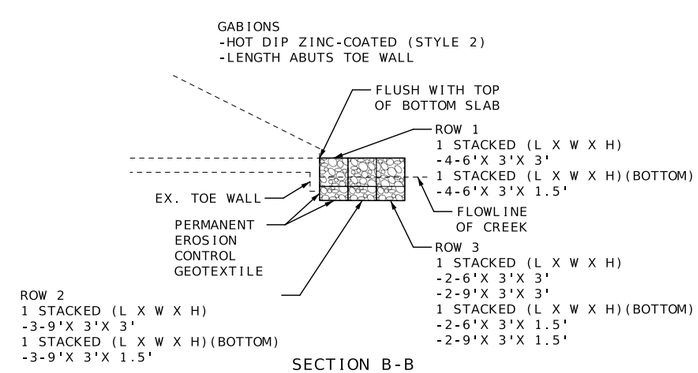

SECTION B-B

NOTES:

WORK LIMITS: LOG MILE ± 0.598 TO LOG MILE ± 0.606

SECTION:24 TOWNSHIP:52N RANGE:35W

SCALE

0 40 80 120

BR. N0327
ROUTE N
PLATTE COUNTY
PLAN SHEET
7 OF 9

STATE OF MISSOURI
CLARK HARTMANN
NUMBER
PE-2023008265
PROFESSIONAL ENGINEER

12/08/2025 3:56:31 PM
CLARK HARTMANN - CIVIL
MO-PE-2023008265

DATE PREPARED	
12/8/2025	
ROUTE	STATE
VAR	MO
DISTRICT	SHEET NO.
KC	10
COUNTY	
VARIOUS	
JOB NO.	
JKU0293	
CONTRACT ID.	
PROJECT NO.	
BRIDGE NO.	

DATE	DESCRIPTION

MISSOURI HIGHWAYS AND TRANSPORTATION COMMISSION

105 WEST CAPITOL
JEFFERSON CITY, MO 65102
1-888-ASK-MODOT (1-888-275-6636)

GENERAL NOTES:

1. PLAN SKETCH IS FOR INFORMATION ONLY

2. CHANGES SHALL BE APPROVED AND DIRECTED BY THE ENGINEER

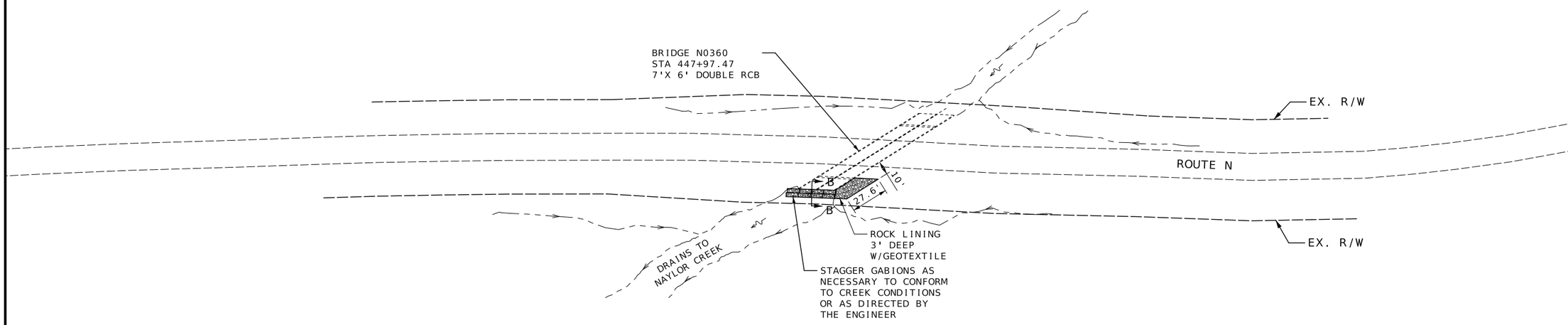

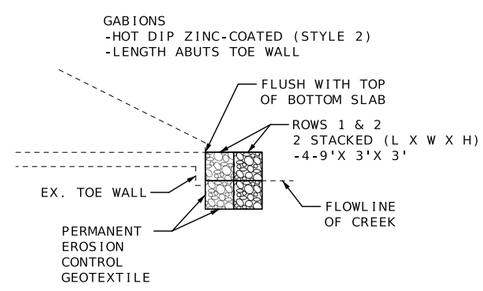

SECTION B-B

NOTES:

WORK LIMITS: LOG MILE ± 4.208 TO LOG MILE ± 4.218

SECTION:6 TOWNSHIP:51N RANGE:34W

SCALE

0 40 80 120

BR. N0360
ROUTE N
PLATTE COUNTY
PLAN SHEET
8 OF 9

STATE OF MISSOURI
CLARK HARTMANN
NUMBER
PE-2023008265
PROFESSIONAL ENGINEER

12/08/2025 3:56:45 PM
CLARK HARTMANN - CIVIL
MO-PE-2023008265

DATE PREPARED	
12/8/2025	
ROUTE	STATE
VAR	MO
DISTRICT	SHEET NO.
KC	11
COUNTY	
VARIOUS	
JOB NO.	
JKU0293	
CONTRACT ID.	
PROJECT NO.	
BRIDGE NO.	

DATE	DESCRIPTION

MISSOURI HIGHWAYS AND TRANSPORTATION COMMISSION

105 WEST CAPITOL
JEFFERSON CITY, MO 65102
1-888-ASK-MODOT (1-888-275-6636)

GENERAL NOTES:

1. PLAN SKETCH IS FOR INFORMATION ONLY

2. CHANGES SHALL BE APPROVED AND DIRECTED BY THE ENGINEER

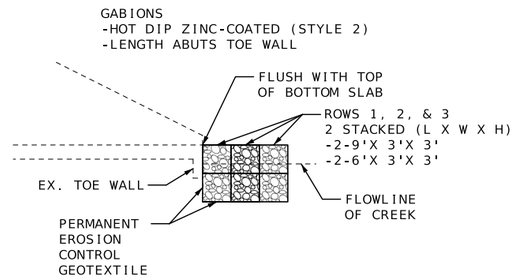

SECTION B-B

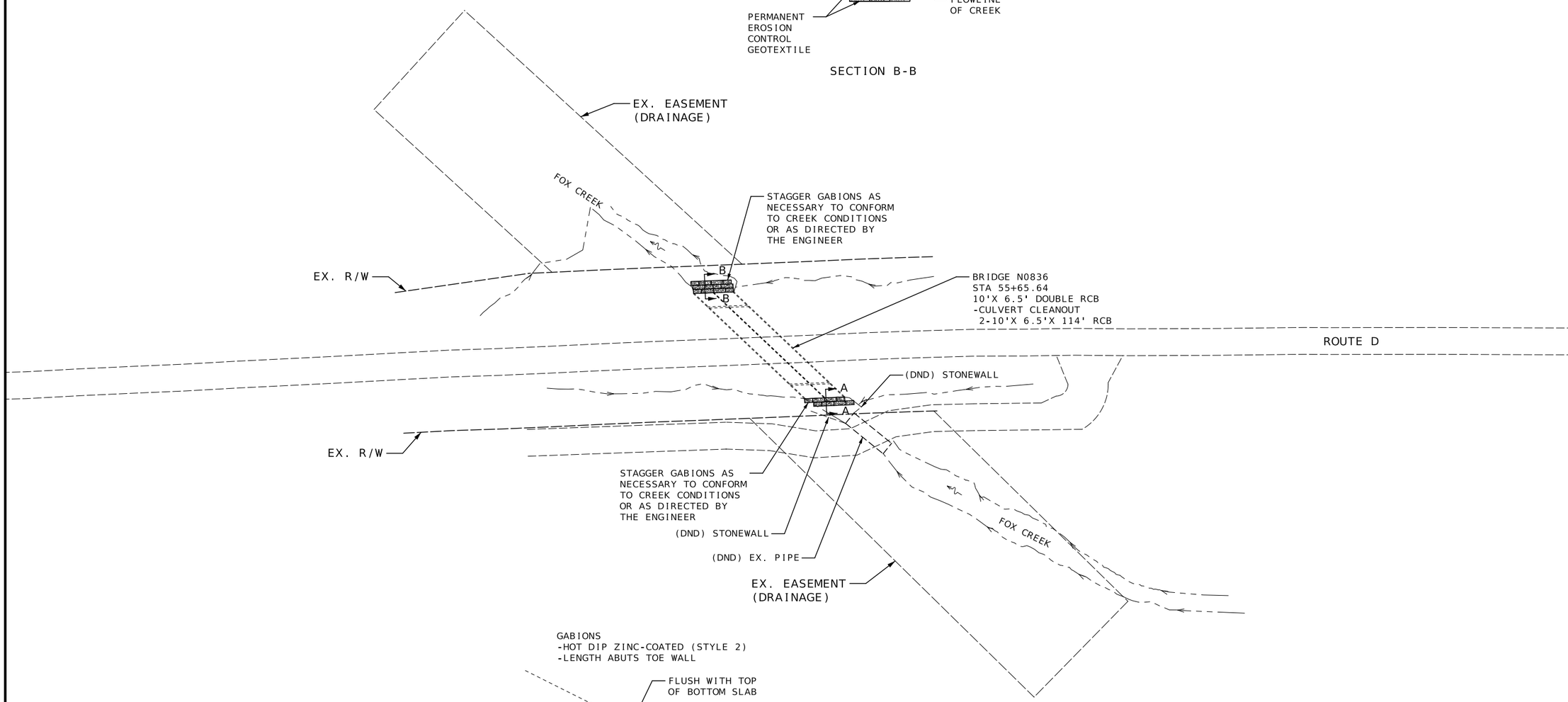

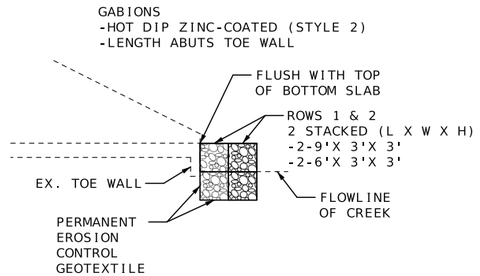

SECTION A-A

NOTES:

WORK LIMITS: LOG MILE ± 1.038 TO LOG MILE ± 1.062

SECTION:18/19 TOWNSHIP:52N RANGE:34W

SCALE

0 40 80 120

BR. N0836
ROUTE D
PLATTE COUNTY
PLAN SHEET
9 OF 9

STATE OF MISSOURI
CLARK HARTMANN
NUMBER PE-2023008265
PROFESSIONAL ENGINEER

12/08/2025 3:57:00 PM
CLARK HARTMANN - CIVIL
MO-PE-2023008265

DATE PREPARED	12/8/2025
ROUTE	VAR
STATE	MO
DISTRICT	KC
SHEET NO.	12
COUNTY	VARIOUS
JOB NO.	JKU0293
CONTRACT ID.	
PROJECT NO.	
BRIDGE NO.	

DESCRIPTION

DATE

MISSOURI HIGHWAYS AND TRANSPORTATION COMMISSION

105 WEST CAPITOL
JEFFERSON CITY, MO 65102
1-888-ASK-MODOT (1-888-275-6636)

Sign Spacing, Device Spacing and Channelizing Taper Lengths

SIGN SPACING (S) FOR ADVANCE SIGN SERIES (1) (2)		
SPEED MPH	UNDIVIDED HIGHWAYS	DIVIDED HIGHWAYS
0-35	200	200
40-45	350	500
50-55	500	1000
60-70	1000	SA-1000 SB-1500 SC-2640

LONGITUDINAL BUFFER SPACE (B)	
SPEED MPH	BUFFER SPACE
0-35	250
40-45	360
50-55	495
60-70	730

TAPER LENGTHS AND SPACING OF CHANNELIZING DEVICES					
SPEED MPH	MINIMUM TAPER LENGTHS (L) FOR LANE WIDTHS (W)			MAXIMUM CHANNELIZER SPACING	
	10 FT	11 FT	12 FT	THROUGH TAPER	THROUGH WORK AREA
0-35	205	225	245	35	40
40-45	450	495	540	40	80
50-55	550	605	660	50	80
60-70	700	770	840	60	120

TAPER LENGTH (L):

$L = WS$ FOR 40 MPH OR MORE

$L = \frac{WS^2}{60}$ FOR 35 MPH OR LESS

FOR SHOULDER TAPER USE L/3

WHERE:

L = TAPER LENGTH IN FEET

W = LATERAL SHIFT IN FEET

S = POSTED SPEED IN MPH

NOTES:

DIMENSIONS IN FEET UNLESS OTHERWISE NOTED.

(1) SPACING BETWEEN SIGNS AND SPACING BETWEEN LAST SIGN AND FLAGGER, BEGINNING OF TAPER, OR SIGNED CONDITION

(2) SPACINGS MAY BE ADJUSTED AS NECESSARY TO MEET FIELD CONDITIONS

TRAFFIC CONTROL DEVICES

GENERAL NOTES:

1. SEE STANDARD PLAN 616.10 FOR DETAILS AND ITEMS NOT SHOWN
2. EXISTING SIGNS SHALL BE COVERED DURING WORKING HOURS ONLY IF IN CONFLICT WITH TRAFFIC CONTROL PLANS.
3. NO DIRECT PAYMENT WILL BE MADE FOR RELOCATING, COVERING, UNCOVERING OR REMOVING SIGNS.
4. CONES ALLOWABLE FOR DAYTIME OPERATIONS ONLY.
6. LOCATE FLASHING ARROW PANEL AT BEGINNING OF TAPER WHEN FEASIBLE, ARROW PANELS ARE ALWAYS LOCATED BEHIND CHANNELIZERS OR CONES.

TRAFFIC CONTROL LEGEND

- SIGN (SINGLE SIDED)
- SIGN (DOUBLE SIDED)
- FLAGGER
- DIRECTION INDICATOR BARRICADE
- CHANNELIZER
- BARRICADE
- CHANGEABLE MESSAGE BOARD
- FLASHING ARROW PANEL
- TMA (TRUCK MOUNTED ATTENUATOR) WITH FLASHING ARROW PANEL

TEMPORARY
TRAFFIC CONTROL
SHEET 1 OF 10

STATE OF MISSOURI
CLARK HARTMANN
NUMBER PE-2023008265
PROFESSIONAL ENGINEER

12/08/2025 3:58:00 PM
CLARK HARTMANN - CIVIL
MO-PE-2023008265

DATE PREPARED	
12/8/2025	
ROUTE: VAR	STATE: MO
DISTRICT: KC	SHEET NO.: 13
COUNTY: VARIOUS	
JOB NO.: JKU0293	
CONTRACT ID.	
PROJECT NO.	
BRIDGE NO.	

DATE	DESCRIPTION

MISSOURI HIGHWAYS AND TRANSPORTATION COMMISSION

105 WEST CAPITOL
JEFFERSON CITY, MO 65102
1-888-ASK-MODOT (1-888-275-6636)

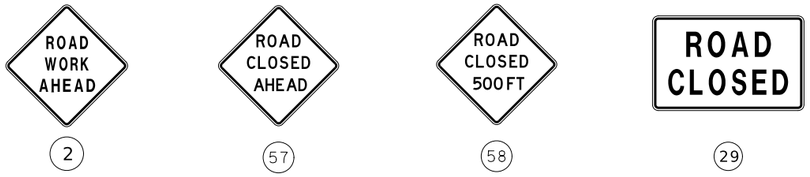

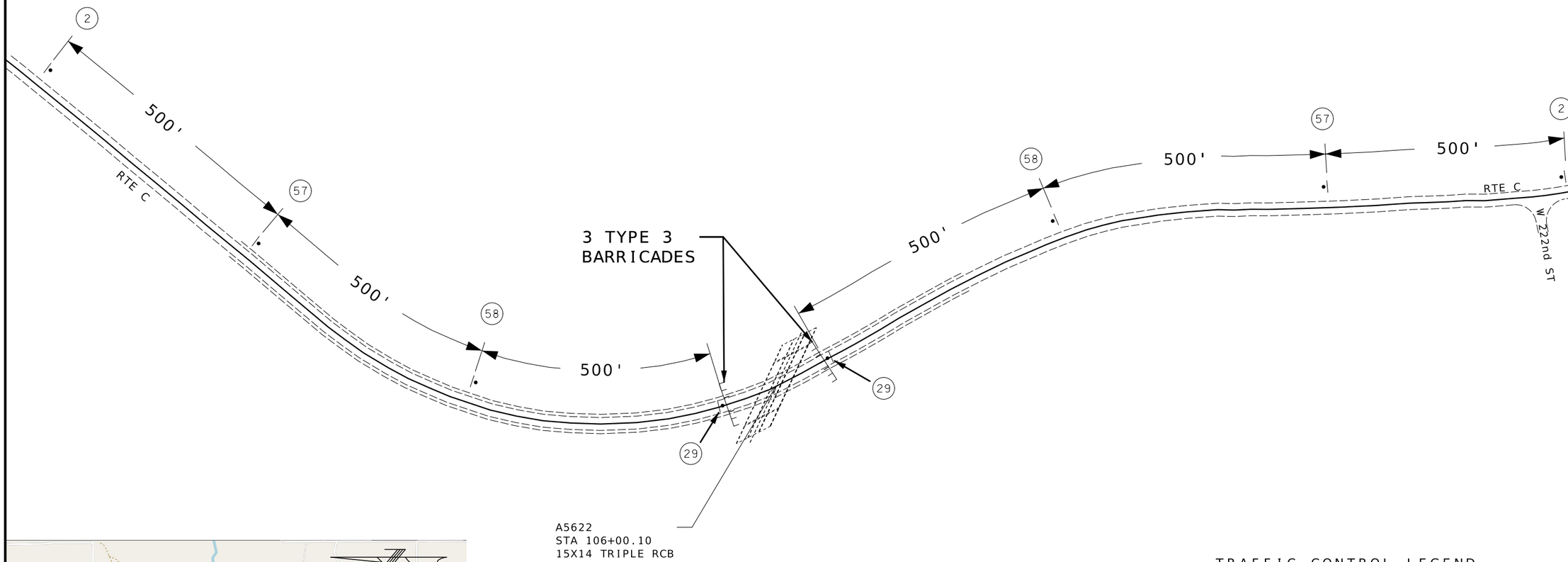

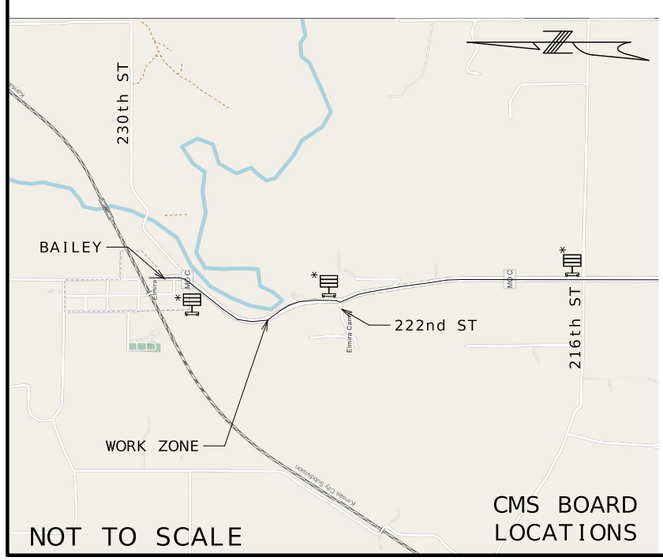

CMS BOARD LOCATIONS

* MESSAGE
-ROUTE C CLOSED AHEAD
-USE ALTERNATE ROUTE

SCALE
0 100 200 300 400 500

TRAFFIC CONTROL LEGEND

- SIGN (SINGLE SIDED)
- DIRECT. IND. BARR.
- CHANNELIZER
- BARRICADE
- CHANGEABLE MESSAGE BOARD

RTE C CLOSURE
RAY COUNTY
TEMPORARY TRAFFIC CONTROL
SHEET 2 OF 10

STATE OF MISSOURI
CLARK HARTMANN
NUMBER PE-2023008265
PROFESSIONAL ENGINEER
12/08/2025 3:58:14 PM
CLARK HARTMANN - CIVIL
MO-PE-2023008265

DATE PREPARED	
12/8/2025	
ROUTE: VAR	STATE: MO
DISTRICT: KC	SHEET NO.: 14
COUNTY: VARIOUS	
JOB NO.: JKU0293	
CONTRACT ID.	
PROJECT NO.	
BRIDGE NO.	

DATE	DESCRIPTION

MISSOURI HIGHWAYS AND TRANSPORTATION COMMISSION
105 WEST CAPITOL
JEFFERSON CITY, MO 65102
1-888-ASK-MODOT (1-888-275-6636)

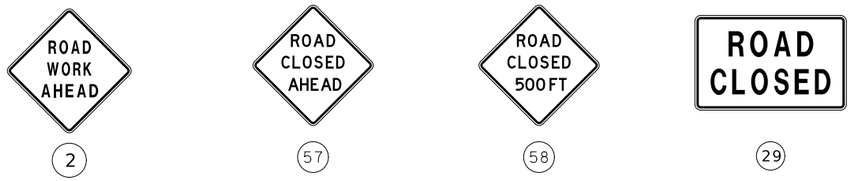

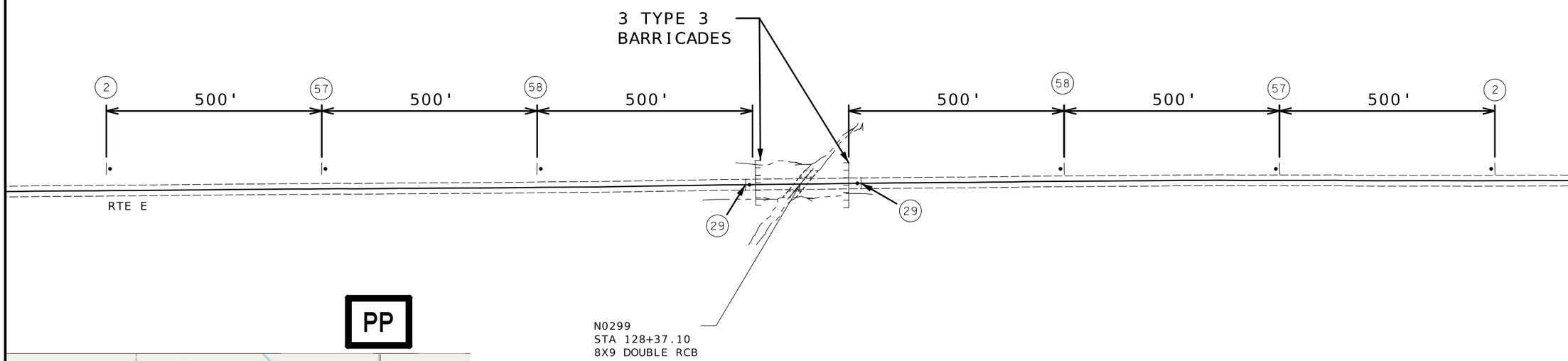

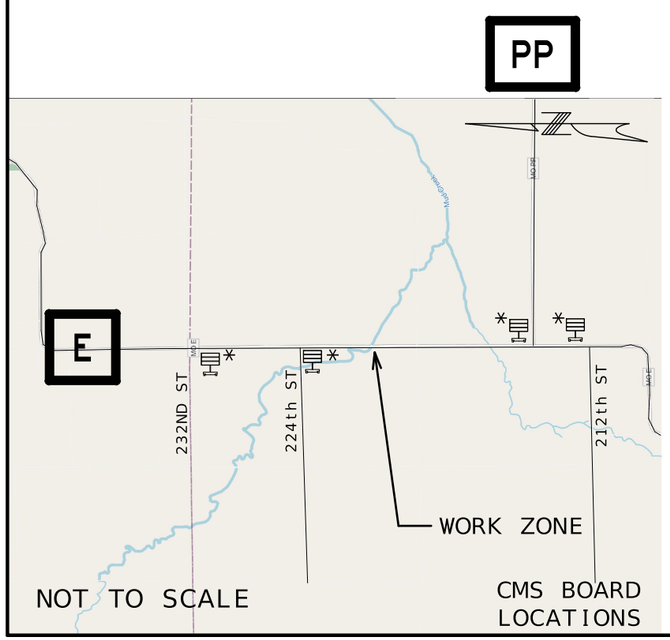

NOT TO SCALE

CMS BOARD LOCATIONS

* MESSAGE
-ROUTE E CLOSED AHEAD
-USE ALTERNATE ROUTE

SCALE

0 100 200 300 400 500

TRAFFIC CONTROL LEGEND

- SIGN (SINGLE SIDED)
- DIRECT. IND. BARR.
- CHANNELIZER
- BARRICADE
- CHANGEABLE MESSAGE BOARD

RTE E CLOSURE
RAY COUNTY
TEMPORARY TRAFFIC CONTROL
SHEET 3 OF 10

STATE OF MISSOURI
CLARK HARTMANN
NUMBER PE-2023008265
PROFESSIONAL ENGINEER

12/08/2025 3:58:26 PM
CLARK HARTMANN - CIVIL
MO-PE-2023008265

DATE PREPARED	
12/8/2025	
ROUTE	STATE
VAR	MO
DISTRICT	SHEET NO.
KC	15
COUNTY	
VARIOUS	
JOB NO.	
JKU0293	
CONTRACT ID.	
PROJECT NO.	
BRIDGE NO.	

DESCRIPTION	DATE

MISSOURI HIGHWAYS AND TRANSPORTATION COMMISSION
105 WEST CAPITOL
JEFFERSON CITY, MO 65102
1-888-ASK-MODOT (1-888-275-6636)

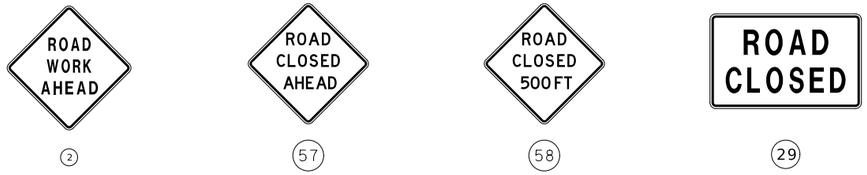

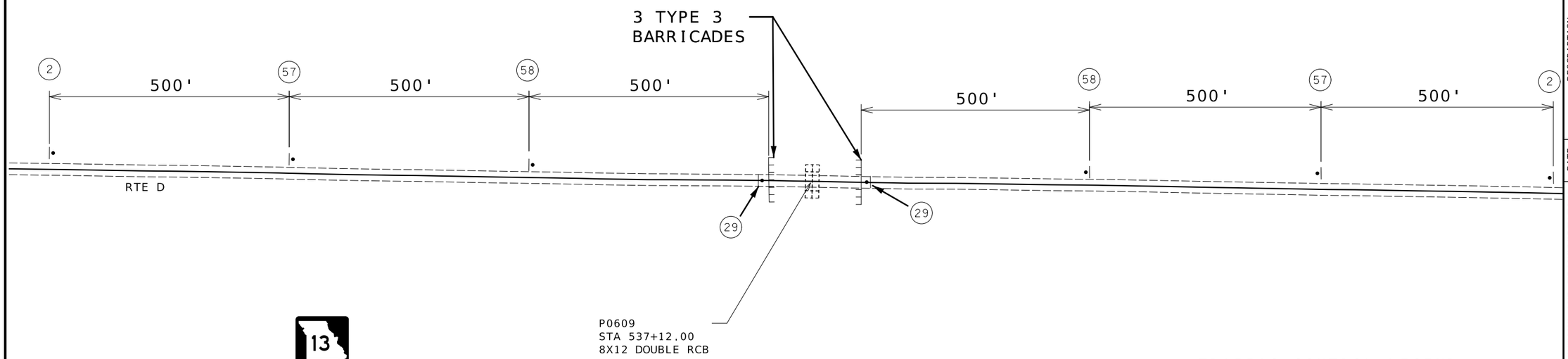

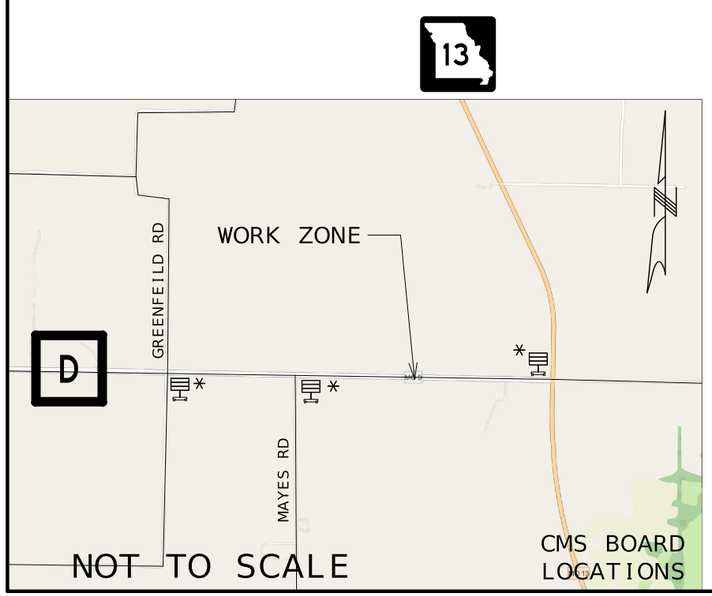

* MESSAGE
-ROUTE D CLOSED AHEAD
-USE ALTERNATE ROUTE

SCALE
0 100 200 300 400 500

TRAFFIC CONTROL LEGEND

- SIGN (SINGLE SIDED)
- DIRECT. IND. BARR.
- CHANNELIZER
- BARRICADE
- CHANGEABLE MESSAGE BOARD

RTE D CLOSURE
RAY COUNTY
TEMPORARY TRAFFIC CONTROL
SHEET 4 OF 10

STATE OF MISSOURI
CLARK HARTMANN
NUMBER PE-2023008265
PROFESSIONAL ENGINEER
12/08/2025 3:58:37 PM
CLARK.HARTMANN - CIVIL
MO-PE-2023008265

DATE PREPARED	12/8/2025
ROUTE	VAR
STATE	MO
DISTRICT	KC
SHEET NO.	16
COUNTY	VARIOUS
JOB NO.	JKU0293
CONTRACT ID.	
PROJECT NO.	
BRIDGE NO.	

DATE	DESCRIPTION

MISSOURI HIGHWAYS AND TRANSPORTATION COMMISSION
105 WEST CAPITOL
JEFFERSON CITY, MO 65102
1-888-ASK-MODOT (1-888-275-6636)

GENERAL NOTE:
NOT TO SCALE FOLLOW DIMENSIONS

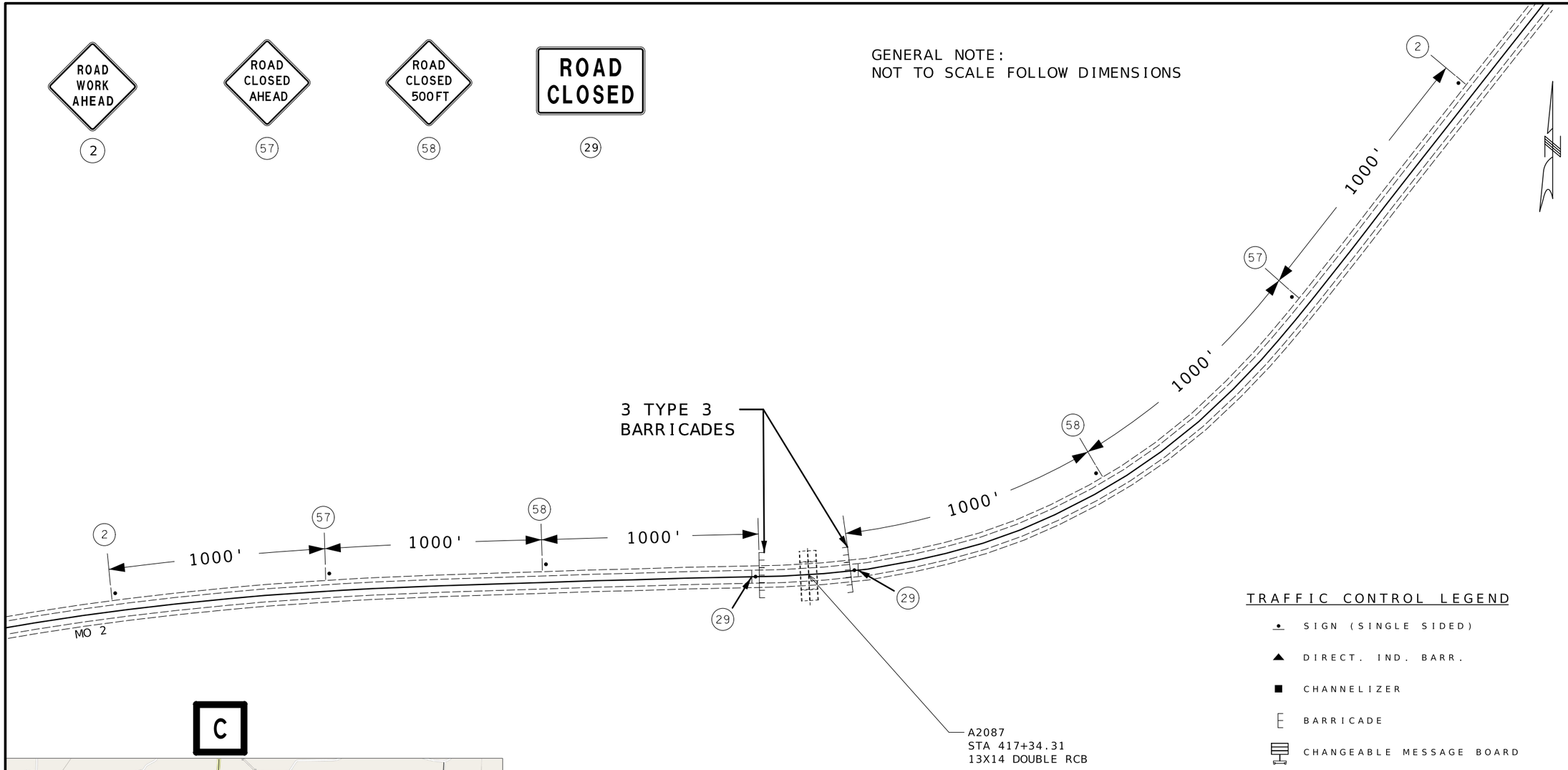

TRAFFIC CONTROL LEGEND

- SIGN (SINGLE SIDED)
- DIRECT. IND. BARR.
- CHANNELIZER
- BARRICADE
- CHANGEABLE MESSAGE BOARD

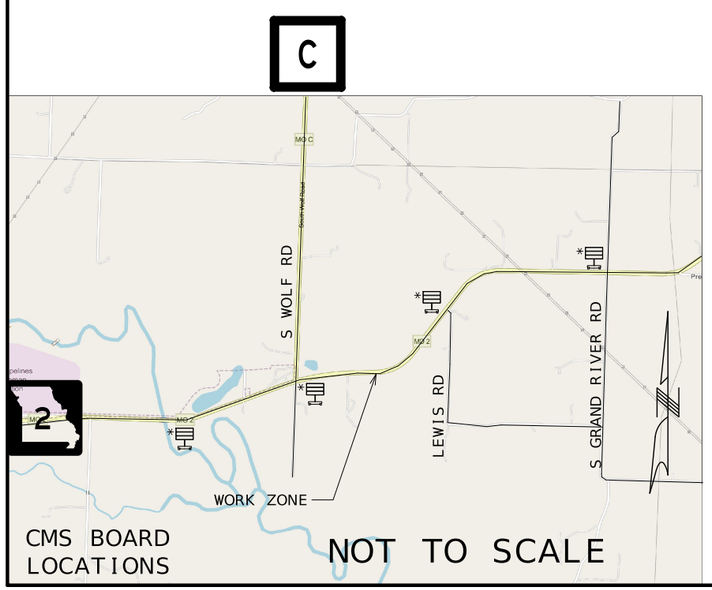

CMS BOARD LOCATIONS

NOT TO SCALE

* MESSAGE
-MO 2
CLOSED
AHEAD
-USE
ALTERNATE
ROUTE

SCALE
0 100 200 300 400 500

MO 2 CLOSURE
CASS COUNTY
TEMPORARY TRAFFIC CONTROL
SHEET 5 OF 10

STATE OF MISSOURI
CLARK HARTMANN
NUMBER
PE-2023008265
PROFESSIONAL ENGINEER
12/08/2025 3:58:51 PM
CLARK HARTMANN - CIVIL
MO-PE-2023008265

DATE PREPARED	
12/8/2025	
ROUTE	STATE
VAR	MO
DISTRICT	SHEET NO.
KC	17
COUNTY	
VARIOUS	
JOB NO.	
JKU0293	
CONTRACT ID.	
PROJECT NO.	
BRIDGE NO.	

DATE	DESCRIPTION

MISSOURI HIGHWAYS AND TRANSPORTATION COMMISSION
105 WEST CAPITOL
JEFFERSON CITY, MO 65102
1-888-ASK-MODOT (1-888-275-6636)

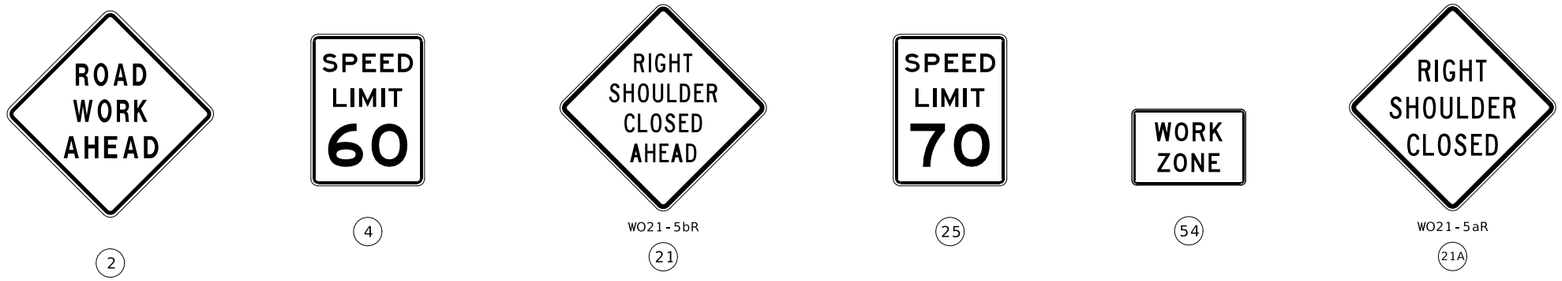

GENERAL NOTES:
(1) CHANNELIZER SPACING AT 120'
(2) CHANNELIZER SPACING AT 60'
(3) NOT TO SCALE FOLLOW DIMENSIONS

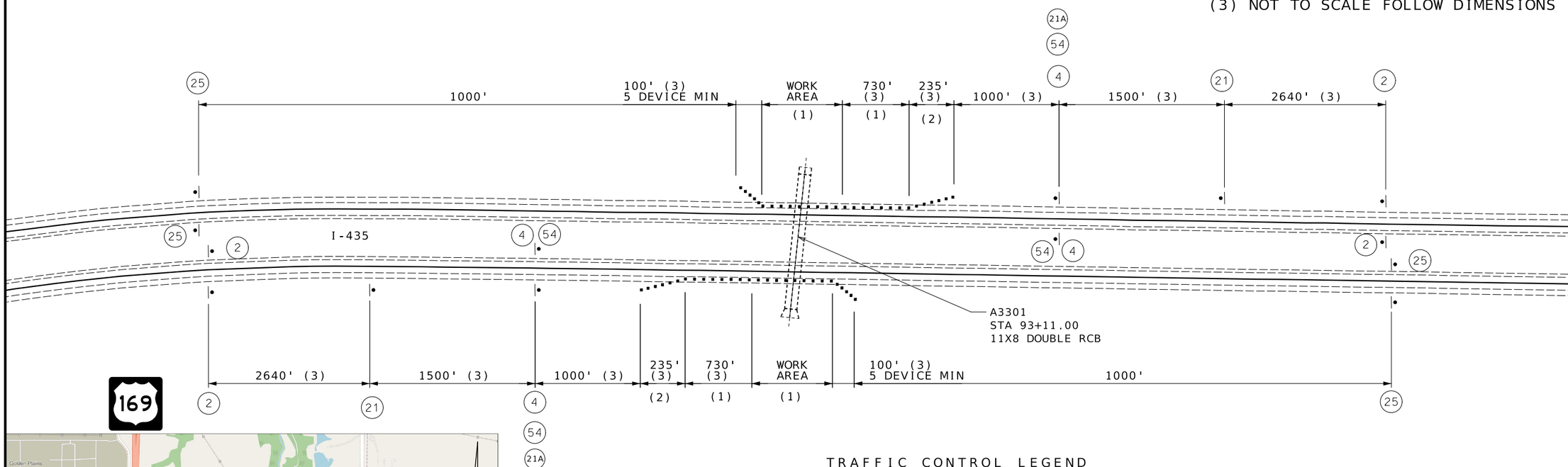

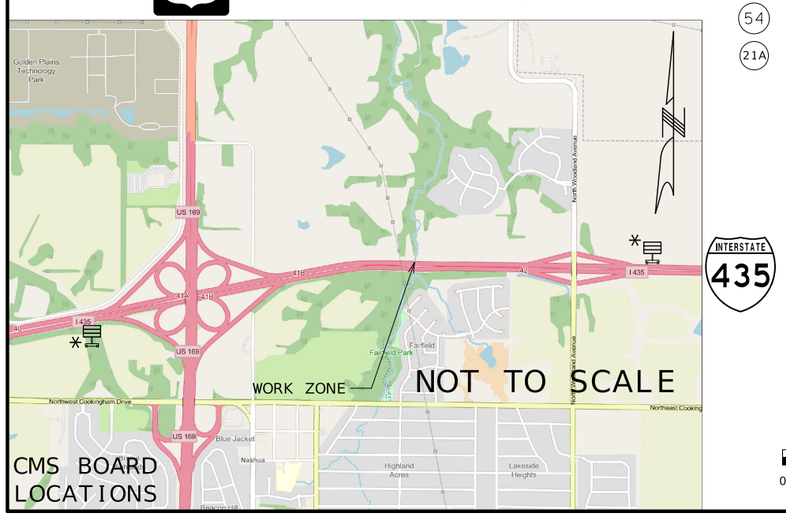

* MESSAGE
- SHOULDER
CLOSURE
AHEAD

TRAFFIC CONTROL LEGEND

- SIGN (SINGLE SIDED)
- DIRECT. IND. BARR.
- CHANNELIZER
- BARRICADE
- CHANGEABLE MESSAGE BOARD

SCALE
0 100 200 300 400 500

I-435 SHOULDER CLOSURE
CLAY COUNTY
TEMPORARY TRAFFIC CONTROL
SHEET 6 OF 10

STATE OF MISSOURI
CLARK HARTMANN
NUMBER PE-2023008265
PROFESSIONAL ENGINEER
12/08/2025 3:59:08 PM
CLARK HARTMANN - CIVIL
MO-PE-2023008265

DATE PREPARED	12/8/2025
ROUTE	VAR
STATE	MO
DISTRICT	KC
SHEET NO.	18
COUNTY	VARIOUS
JOB NO.	JKU0293
CONTRACT ID.	
PROJECT NO.	
BRIDGE NO.	

DESCRIPTION
DATE

MISSOURI HIGHWAYS AND TRANSPORTATION COMMISSION
105 WEST CAPITOL
JEFFERSON CITY, MO 65102
1-888-ASK-MODOT (1-888-275-6636)

(2)

(5)

(6A)

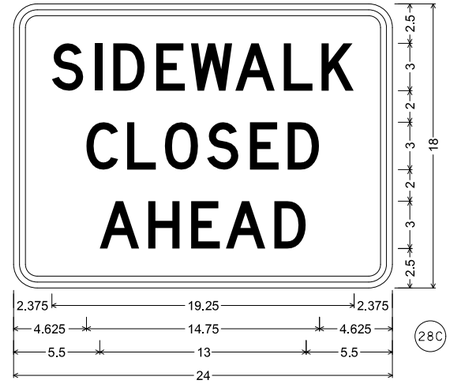

(28C)

SPECIAL SH-FLAT SHEET;
1.500" Radius, 0.375" Border, 0.375" Indent, Black on, White;
"SIDEWALK", D; "CLOSED", D; "AHEAD", D;
Table of letter and object lefts

S	I	D	E	W	A	L	K
2.375	5.125	6.375	9.000	11.250	14.000	17.125	19.500

C	L	O	S	E	D
4.625	7.250	9.625	12.250	15.000	17.375

A	H	E	A	D
5.500	8.500	11.250	13.500	16.500

(4)

R9-9

(28)

TRAFFIC CONTROL LEGEND

- SIGN (SINGLE SIDED)
- DIRECT. IND. BARR.
- CHANNELIZER
- BARRICADE
- CHANGEABLE MESSAGE BOARD

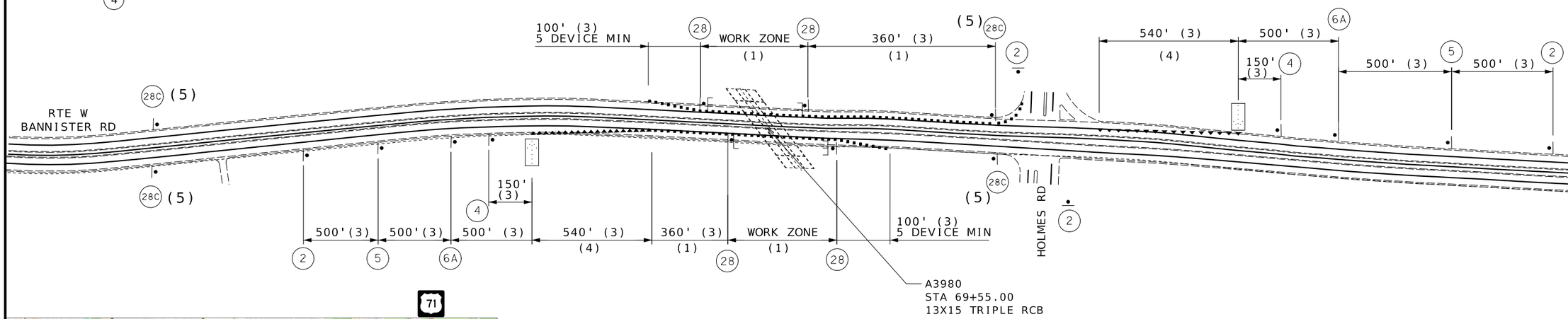

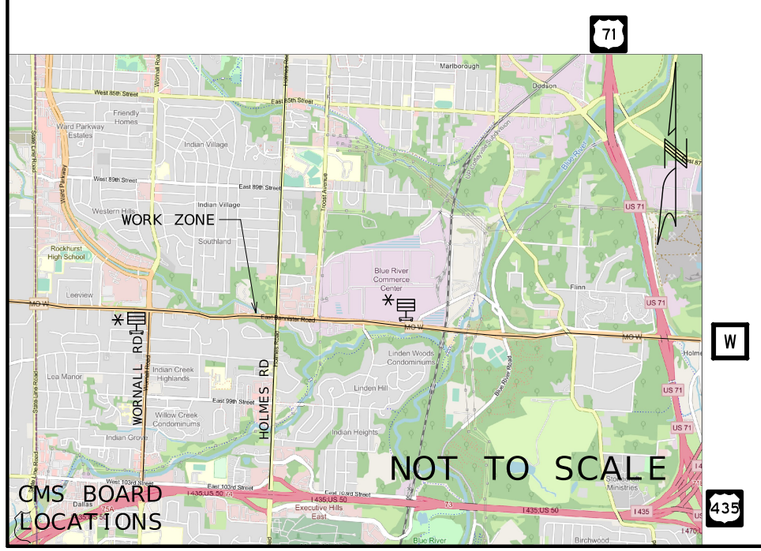

CMS BOARD
LOCATIONS

* MESSAGE
-RIGHT
LANE
CLOSED
AHEAD

SCALE
0 100 200 300 400 500

GENERAL NOTES:
(1) CHANNELIZER SPACING AT 80'
(2) CHANNELIZER SPACING AT 40'
(3) NOT TO SCALE FOLLOW DIMENSIONS
(4) DIRECTION INDICATOR BARRICADE & SEQUENTIAL FLASHING WARNING LIGHT (SPACING AT 40')
(5) LOCATION SHALL BE DETERMINED BY ENGINEER

RTE W LANE CLOSURE
JACKSON COUNTY
TEMPORARY TRAFFIC CONTROL
SHEET 7 OF 10

STATE OF MISSOURI
CLARK HARTMANN
NUMBER
PE-2023008265
PROFESSIONAL ENGINEER
12/08/2025 3:59:22 PM
CLARK HARTMANN - CIVIL
MO-PE-2023008265

DATE PREPARED	12/8/2025
ROUTE	VAR
STATE	MO
DISTRICT	KC
SHEET NO.	19
COUNTY	VARIOUS
JOB NO.	JKU0293
CONTRACT ID.	
PROJECT NO.	
BRIDGE NO.	

DATE	DESCRIPTION

MISSOURI HIGHWAYS AND TRANSPORTATION COMMISSION
105 WEST CAPITOL
JEFFERSON CITY, MO 65102
1-888-ASK-MODOT (1-888-275-6636)

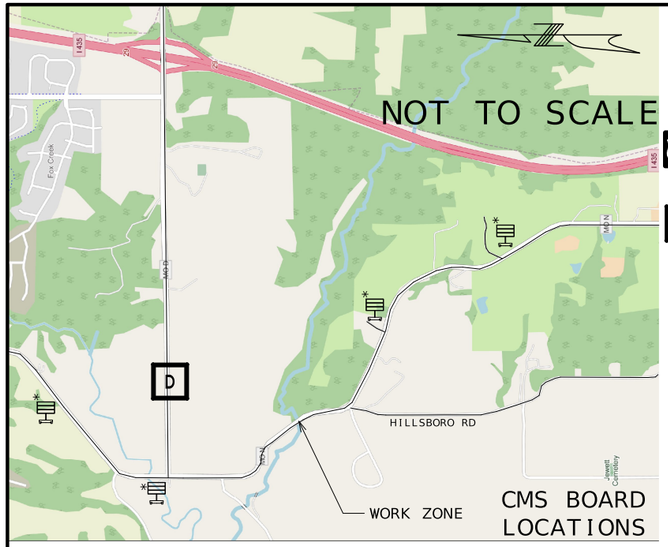

* MESSAGE
-ROUTE N
CLOSED
AHEAD
-USE
ALTERNATE
ROUTE

TRAFFIC CONTROL LEGEND

- SIGN (SINGLE SIDED)
- DIRECT. IND. BARR.
- CHANNELIZER
- BARRICADE
- CHANGEABLE MESSAGE BOARD

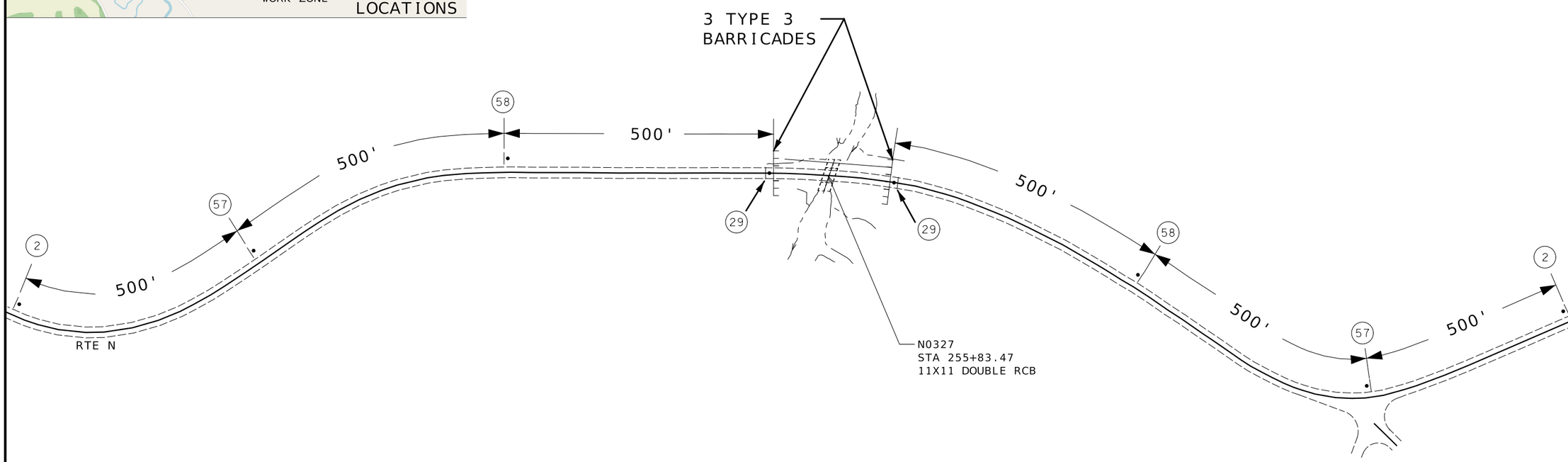

2

57

58

29

SCALE

0 100 200 300 400 500

RTE N CLOSURE
PLATTE COUNTY
TEMPORARY TRAFFIC CONTROL
SHEET 8 OF 10

STATE OF MISSOURI
CLARK HARTMANN
NUMBER
PE-2023008265
PROFESSIONAL ENGINEER
12/08/2025 3:59:36 PM
CLARK HARTMANN - CIVIL
MO-PE-2023008265

DATE PREPARED	
12/8/2025	
ROUTE	STATE
VAR	MO
DISTRICT	SHEET NO.
KC	20
COUNTY	
VARIOUS	
JOB NO.	
JKU0293	
CONTRACT ID.	
PROJECT NO.	
BRIDGE NO.	

DESCRIPTION	DATE

MISSOURI HIGHWAYS AND TRANSPORTATION COMMISSION
105 WEST CAPITOL
JEFFERSON CITY, MO 65102
1-888-ASK-MODOT (1-888-275-6636)

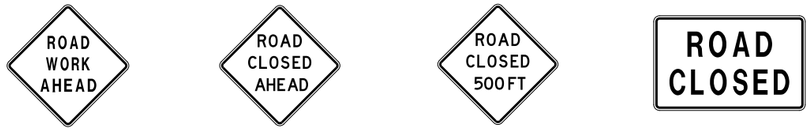

TRAFFIC CONTROL LEGEND

- SIGN (SINGLE SIDED)
- DIRECT. IND. BARR.
- CHANNELIZER
- BARRICADE
- CHANGEABLE MESSAGE BOARD

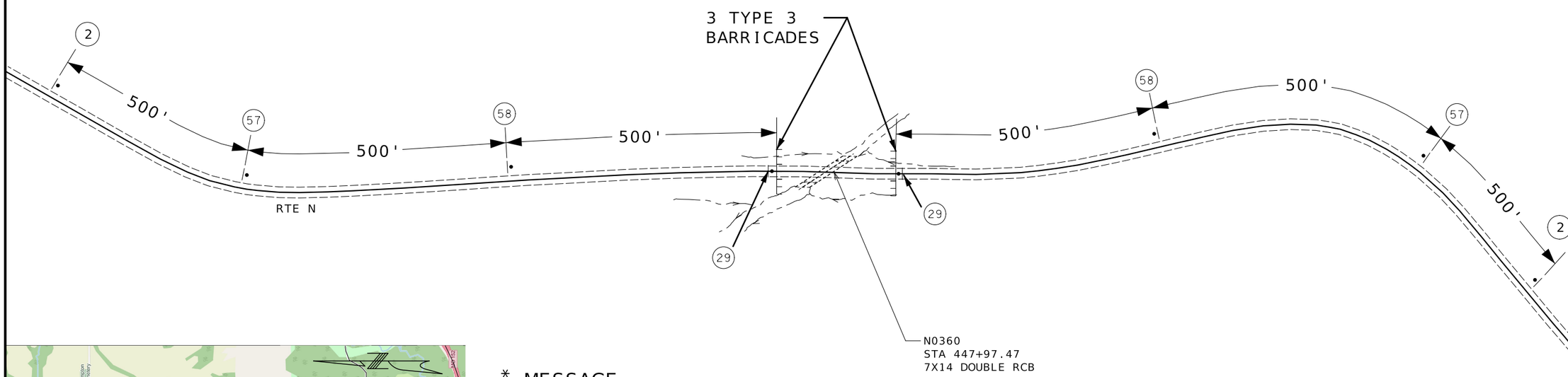

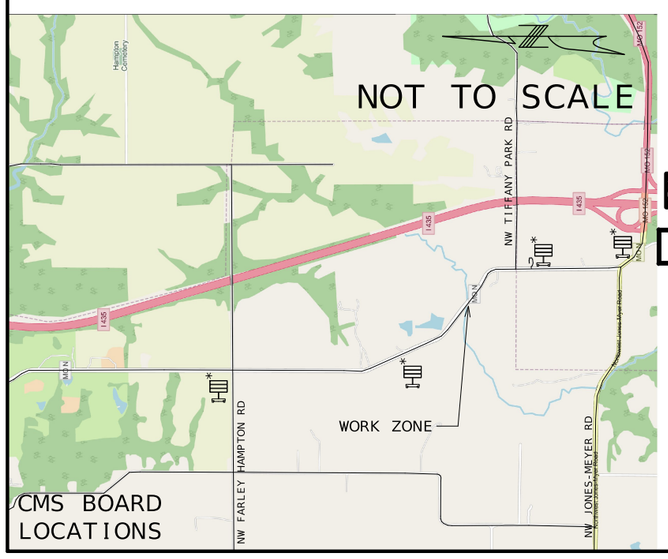

CMS BOARD LOCATIONS

* MESSAGE
-ROUTE N CLOSED AHEAD
-USE ALTERNATE ROUTE

SCALE
0 100 200 300 400 500

RTE N CLOSURE
PLATTE COUNTY
TEMPORARY TRAFFIC CONTROL
SHEET 9 OF 10

STATE OF MISSOURI
CLARK HARTMANN
NUMBER PE-2023008265
PROFESSIONAL ENGINEER
12/08/2025 3:59:49 PM
CLARK HARTMANN - CIVIL
MO-PE-2023008265

DATE PREPARED	12/8/2025
ROUTE	VAR
STATE	MO
DISTRICT	KC
SHEET NO.	21
COUNTY	VARIOUS
JOB NO.	JKU0293
CONTRACT ID.	
PROJECT NO.	
BRIDGE NO.	

DATE	DESCRIPTION

MISSOURI HIGHWAYS AND TRANSPORTATION COMMISSION
105 WEST CAPITOL
JEFFERSON CITY, MO 65102
1-888-ASK-MODOT (1-888-275-6636)

TRAFFIC CONTROL LEGEND

- SIGN (SINGLE SIDED)
- DIRECT. IND. BARR.
- CHANNELIZER
- BARRICADE
- CHANGEABLE MESSAGE BOARD

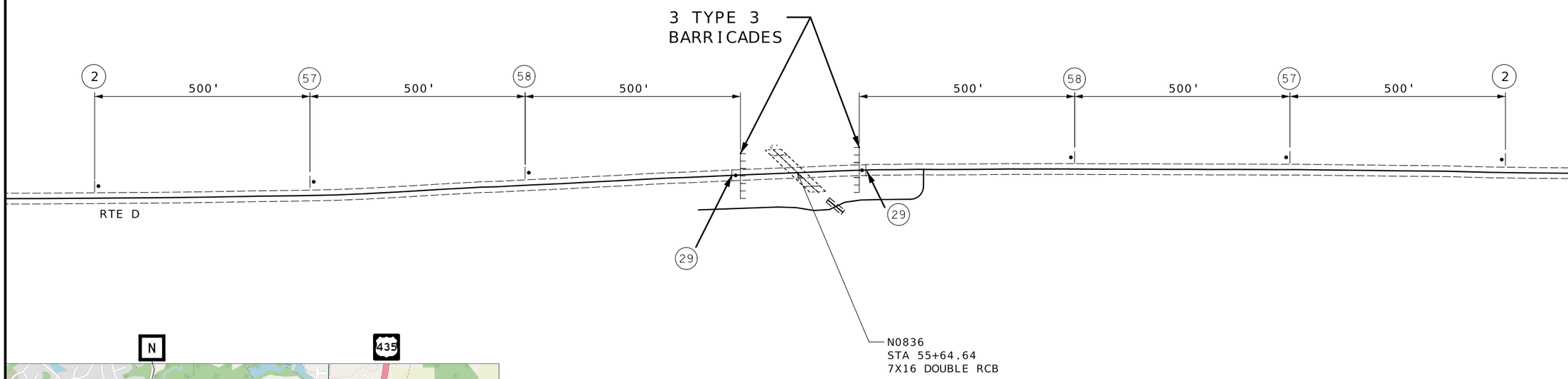

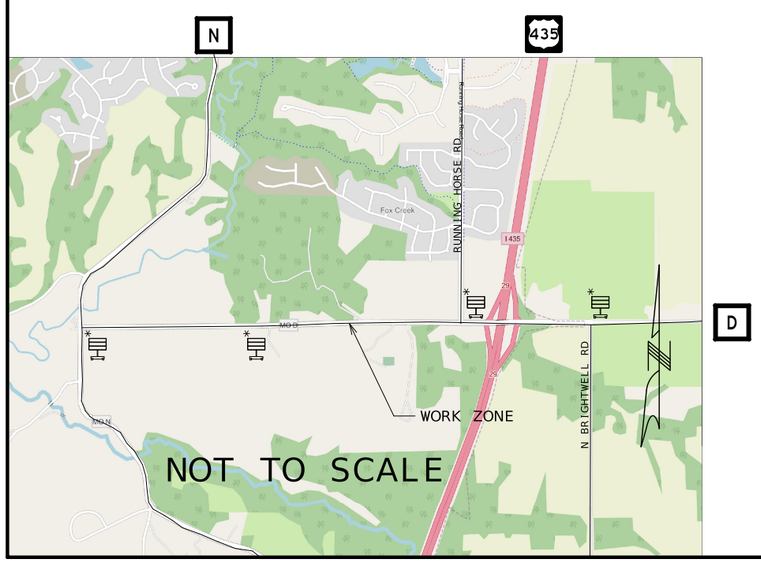

* MESSAGE
-ROUTE D
CLOSED
AHEAD
-USE
ALTERNATE
ROUTE

SCALE

0 100 200 300 400 500

RTE D CLOSURE
PLATTE COUNTY
TEMPORARY TRAFFIC CONTROL
SHEET 10 OF 10

STATE OF MISSOURI
CLARK HARTMANN
NUMBER PE-2023008265
PROFESSIONAL ENGINEER

12/08/2025 4:00:01 PM
CLARK HARTMANN - CIVIL
MO-PE-2023008265

DATE PREPARED	
12/8/2025	
ROUTE: VAR	STATE: MO
DISTRICT: KC	SHEET NO.: 22
COUNTY: VARIOUS	
JOB NO.: JKU0293	
CONTRACT ID.	
PROJECT NO.	
BRIDGE NO.	

DATE	DESCRIPTION

MISSOURI HIGHWAYS AND TRANSPORTATION COMMISSION
105 WEST CAPITOL
JEFFERSON CITY, MO 65102
1-888-ASK-MODOT (1-888-275-6636)

TEMPORARY EROSION CONTROL LEGEND

- ALTERNATE DITCH CHECK
- CURB INLET CHECK
- ROCK DITCH CHECK
- SEDIMENT TRAP
- ENERGY DISSIPATOR
- TEMPORARY BERM TYPE B
- TEMPORARY BERM TYPE C
- SILT FENCE
- TEMPORARY SEDIMENT BASIN
- PERMANENT SEDIMENT BASIN

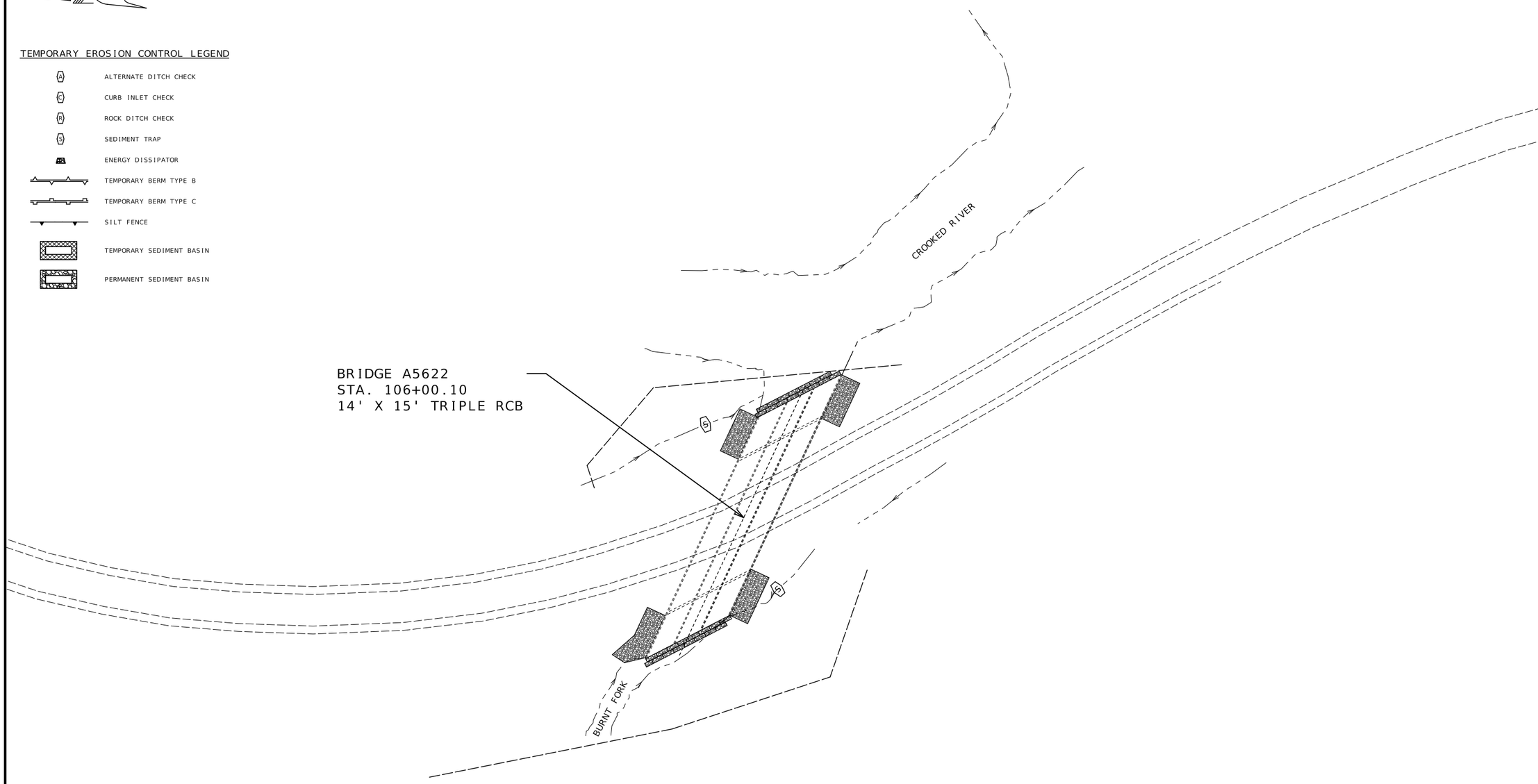

SCALE

0 40 80 120

BR. A5622
TEMPORARY
EROSION CONTROL
SHEET 1 OF 9

STATE OF MISSOURI
CLARK HARTMANN
NUMBER PE-2023008265
PROFESSIONAL ENGINEER

12/08/2025 4:00:15 PM
CLARK HARTMANN - CIVIL
MO-PE-2023008265

DATE PREPARED	12/8/2025
ROUTE	VAR
STATE	MO
DISTRICT	KC
SHEET NO.	23
COUNTY	VARIOUS
JOB NO.	JKU0293
CONTRACT ID.	
PROJECT NO.	
BRIDGE NO.	

DATE	DESCRIPTION

MISSOURI HIGHWAYS AND TRANSPORTATION COMMISSION

105 WEST CAPITOL
JEFFERSON CITY, MO 65102
1-888-ASK-MODOT (1-888-275-6636)

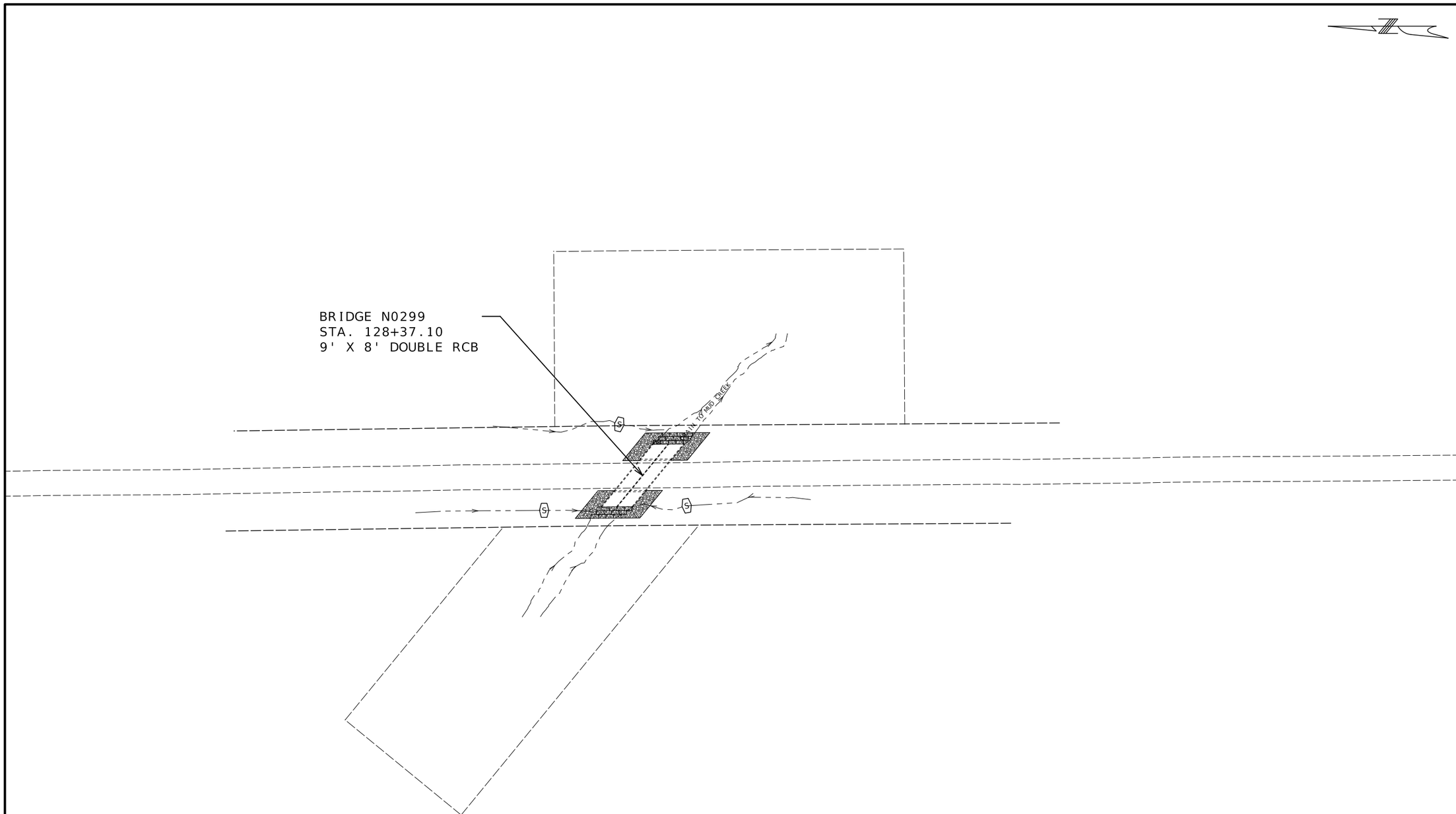

SCALE

0 40 80 120

BR. N0299
TEMPORARY
EROSION CONTROL
SHEET 2 OF 9

STATE OF MISSOURI
CLARK HARTMANN
NUMBER
PE-2023008265
PROFESSIONAL ENGINEER

12/08/2025 4:00:30 PM
CLARK HARTMANN - CIVIL
MO-PE-2023008265

DATE PREPARED	12/8/2025
ROUTE	VAR
STATE	MO
DISTRICT	KC
SHEET NO.	24
COUNTY	VARIOUS
JOB NO.	JKU0293
CONTRACT ID.	
PROJECT NO.	
BRIDGE NO.	

DATE	DESCRIPTION

MISSOURI HIGHWAYS AND TRANSPORTATION COMMISSION

105 WEST CAPITOL
JEFFERSON CITY, MO 65102
1-888-ASK-MODOT (1-888-275-6636)

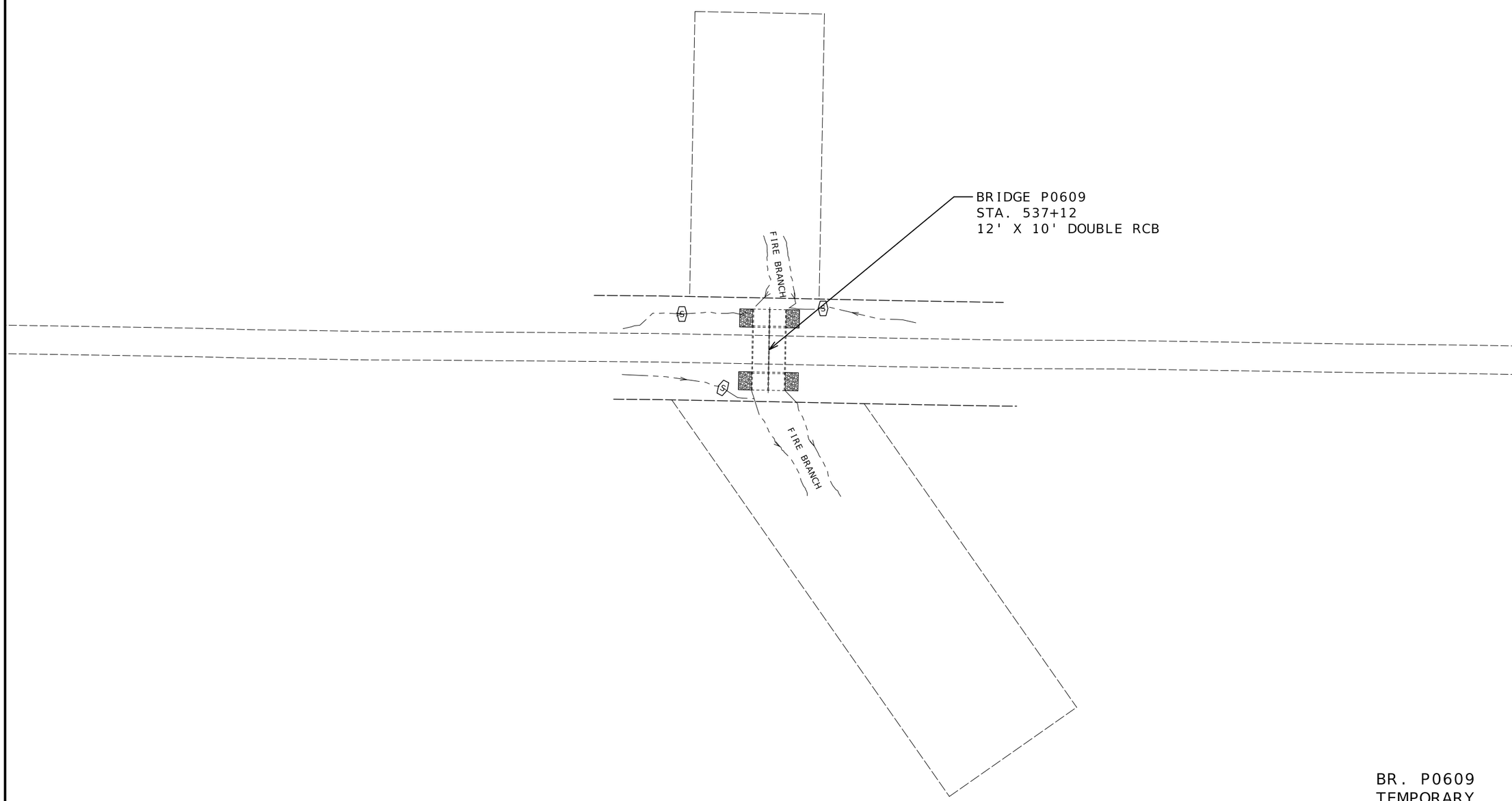

SCALE

0 40 80 120

BR. P0609
TEMPORARY
EROSION CONTROL
SHEET 3 OF 9

STATE OF MISSOURI
CLARK HARTMANN
NUMBER
PE-2023008265
PROFESSIONAL ENGINEER

12/08/2025 4:00:42 PM
CLARK HARTMANN - CIVIL
MO-PE-2023008265

DATE PREPARED	12/8/2025
ROUTE	VAR
STATE	MO
DISTRICT	KC
SHEET NO.	25
COUNTY	VARIOUS
JOB NO.	JKU0293
CONTRACT ID.	
PROJECT NO.	
BRIDGE NO.	

DATE	DESCRIPTION

MISSOURI HIGHWAYS AND TRANSPORTATION COMMISSION

105 WEST CAPITOL
JEFFERSON CITY, MO 65102
1-888-ASK-MODOT (1-888-275-6636)

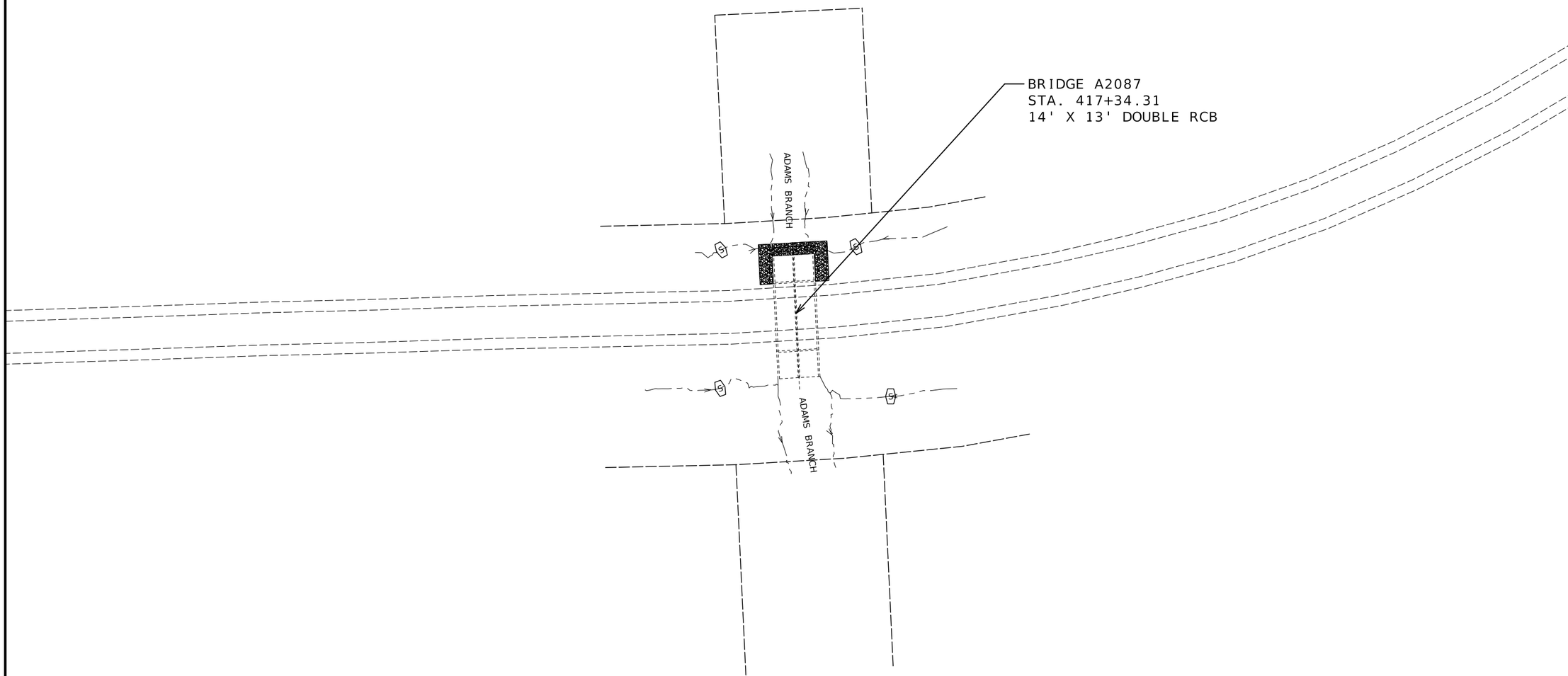

SCALE

0 40 80 120

BR. A2087
TEMPORARY
EROSION CONTROL
SHEET 4 OF 9

STATE OF MISSOURI
CLARK HARTMANN
NUMBER
PE-2023008265
PROFESSIONAL ENGINEER

12/08/2025 4:00:53 PM
CLARK HARTMANN - CIVIL
MO-PE-2023008265

DATE PREPARED	12/8/2025
ROUTE	VAR
STATE	MO
DISTRICT	KC
SHEET NO.	26
COUNTY	VARIOUS
JOB NO.	JKU0293
CONTRACT ID.	
PROJECT NO.	
BRIDGE NO.	

DATE	DESCRIPTION

MISSOURI HIGHWAYS AND TRANSPORTATION COMMISSION

105 WEST CAPITOL
JEFFERSON CITY, MO 65102
1-888-ASK-MODOT (1-888-275-6636)

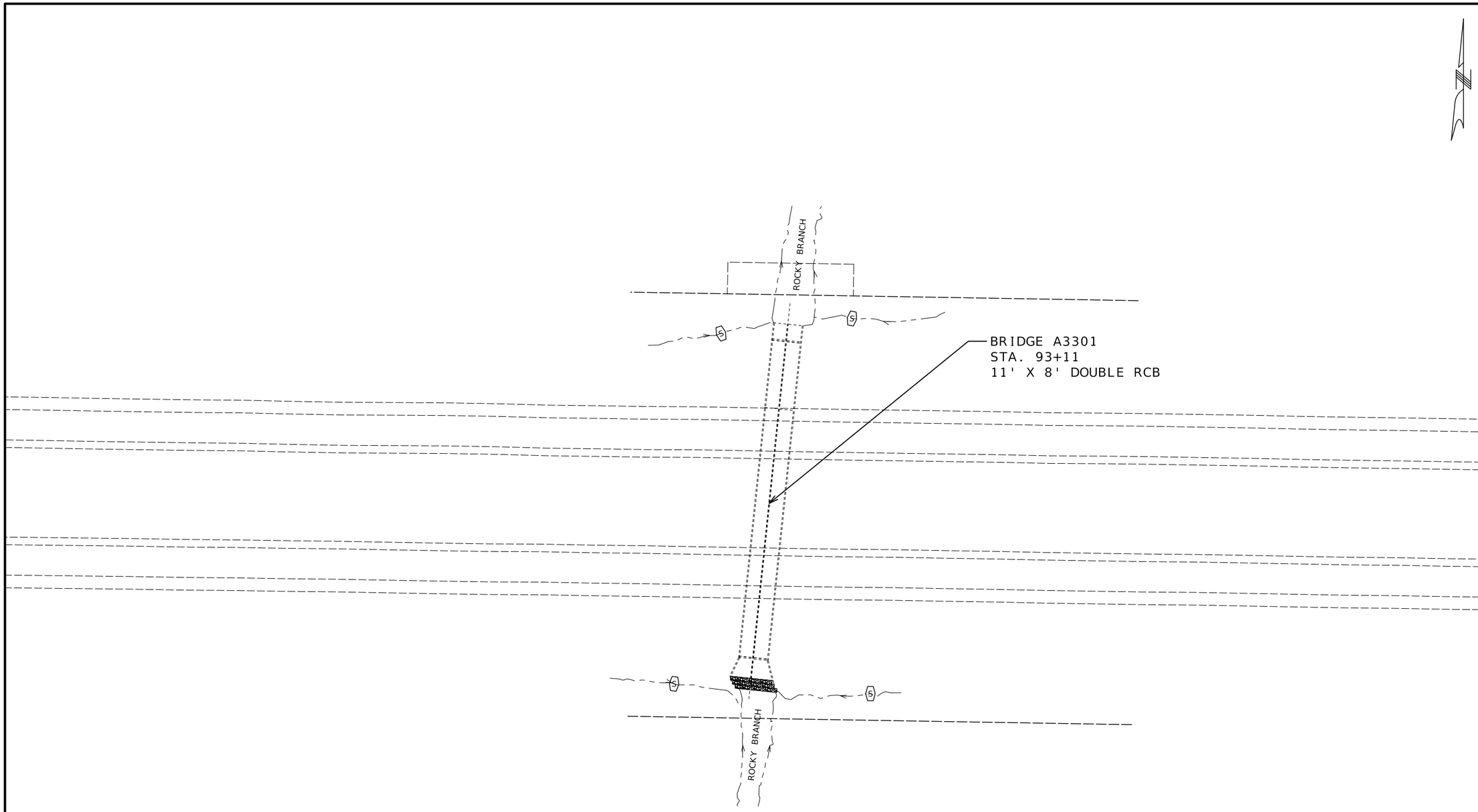

SCALE

0 40 80 120

BR. A3301
TEMPORARY
EROSION CONTROL
SHEET 5 OF 9

STATE OF MISSOURI
CLARK HARTMANN
NUMBER PE-2023008265
PROFESSIONAL ENGINEER

12/08/2025 4:01:07 PM
CLARK HARTMANN - CIVIL
MO-PE-2023008265

DATE PREPARED	
12/8/2025	
ROUTE	STATE
VAR	MO
DISTRICT	SHEET NO.
KC	27
COUNTY	
VARIOUS	
JOB NO.	
JKU0293	
CONTRACT ID.	
PROJECT NO.	
BRIDGE NO.	

DESCRIPTION	DATE

MISSOURI HIGHWAYS AND TRANSPORTATION COMMISSION

105 WEST CAPITOL
JEFFERSON CITY, MO 65102
1-888-ASK-MODOT (1-888-275-6636)

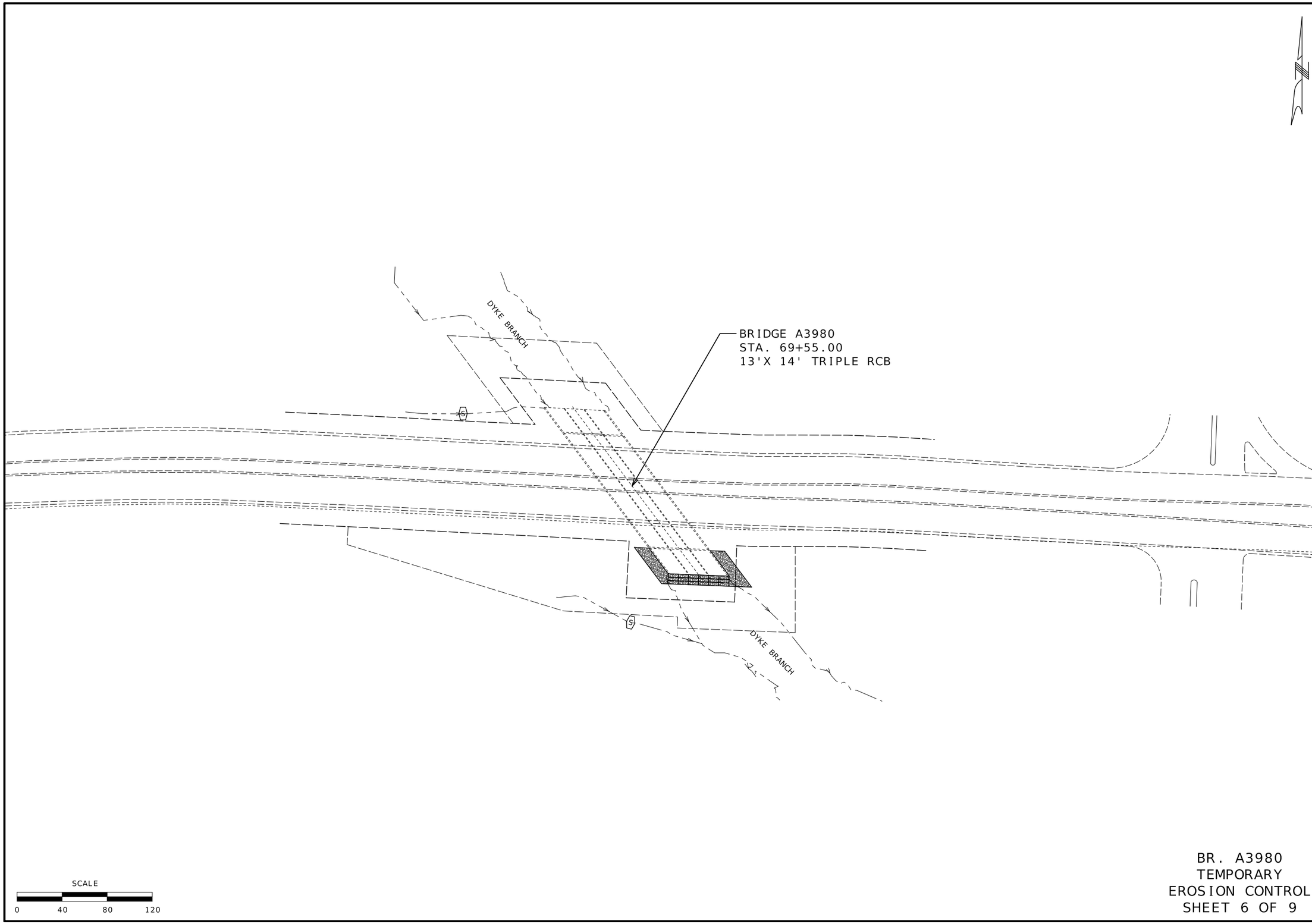

BR. A3980
TEMPORARY
EROSION CONTROL
SHEET 6 OF 9

STATE OF MISSOURI
CLARK HARTMANN
NUMBER
PE-2023008265
PROFESSIONAL ENGINEER

12/08/2025 4:01:31 PM
CLARK HARTMANN - CIVIL
MO-PE-2023008265

DATE PREPARED	
12/8/2025	
ROUTE	STATE
VAR	MO
DISTRICT	SHEET NO.
KC	28
COUNTY	
VARIOUS	
JOB NO.	
JKU0293	
CONTRACT ID.	
PROJECT NO.	
BRIDGE NO.	

DESCRIPTION	DATE

MISSOURI HIGHWAYS AND TRANSPORTATION COMMISSION
105 WEST CAPITOL
JEFFERSON CITY, MO 65102
1-888-ASK-MODOT (1-888-275-6636)

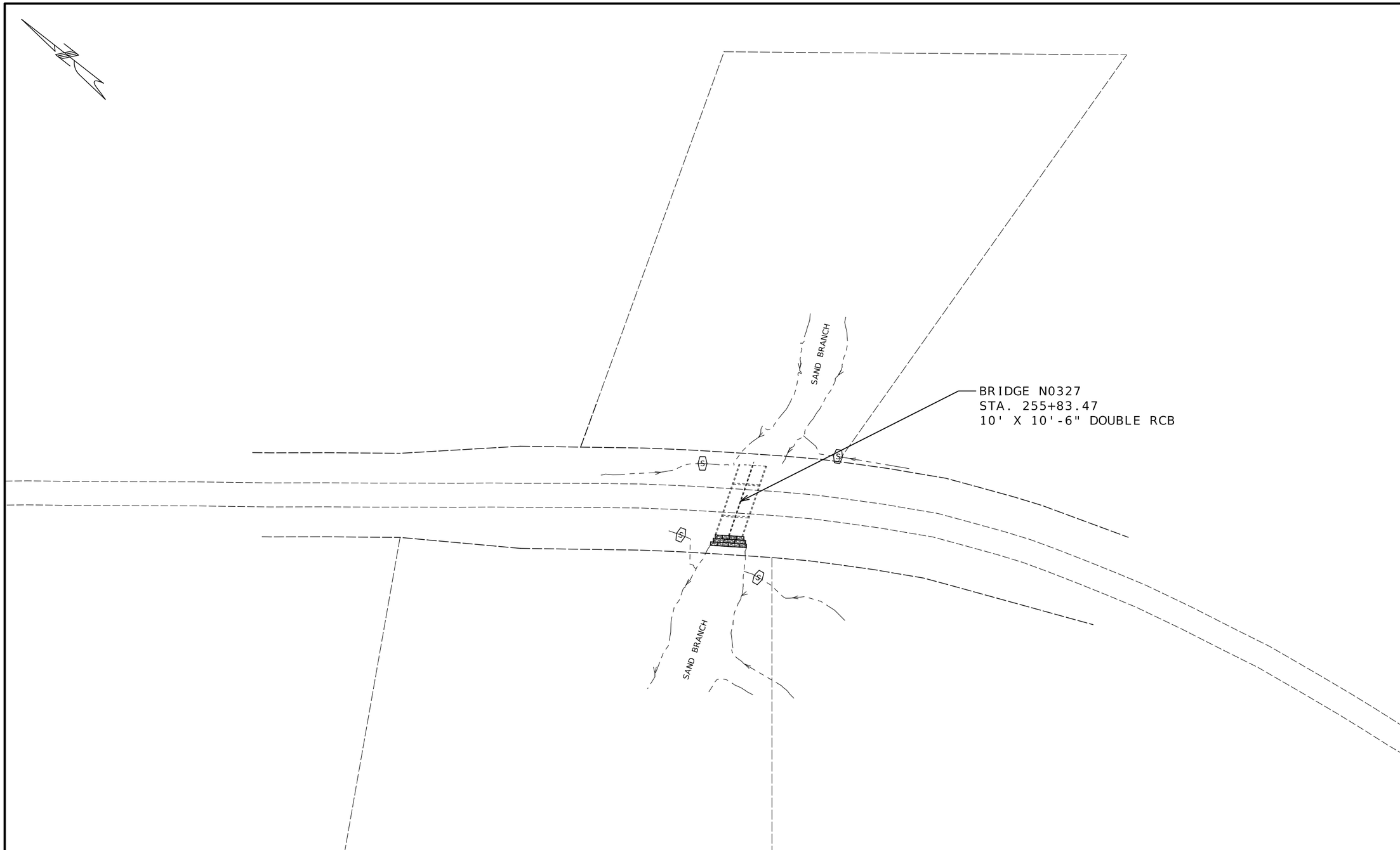

SCALE

0 40 80 120

BR. N0327
TEMPORARY
EROSION CONTROL
SHEET 7 OF 9

STATE OF MISSOURI
CLARK HARTMANN
NUMBER
PE-2023008265
PROFESSIONAL ENGINEER

12/08/2025 4:01:42 PM
CLARK HARTMANN - CIVIL
MO-PE-2023008265

DATE PREPARED	
12/8/2025	
ROUTE	STATE
VAR	MO
DISTRICT	SHEET NO.
KC	29
COUNTY	
VARIOUS	
JOB NO.	
JKU0293	
CONTRACT ID.	
PROJECT NO.	
BRIDGE NO.	

DATE	DESCRIPTION

MISSOURI HIGHWAYS AND TRANSPORTATION COMMISSION

105 WEST CAPITOL
JEFFERSON CITY, MO 65102
1-888-ASK-MODOT (1-888-275-6636)

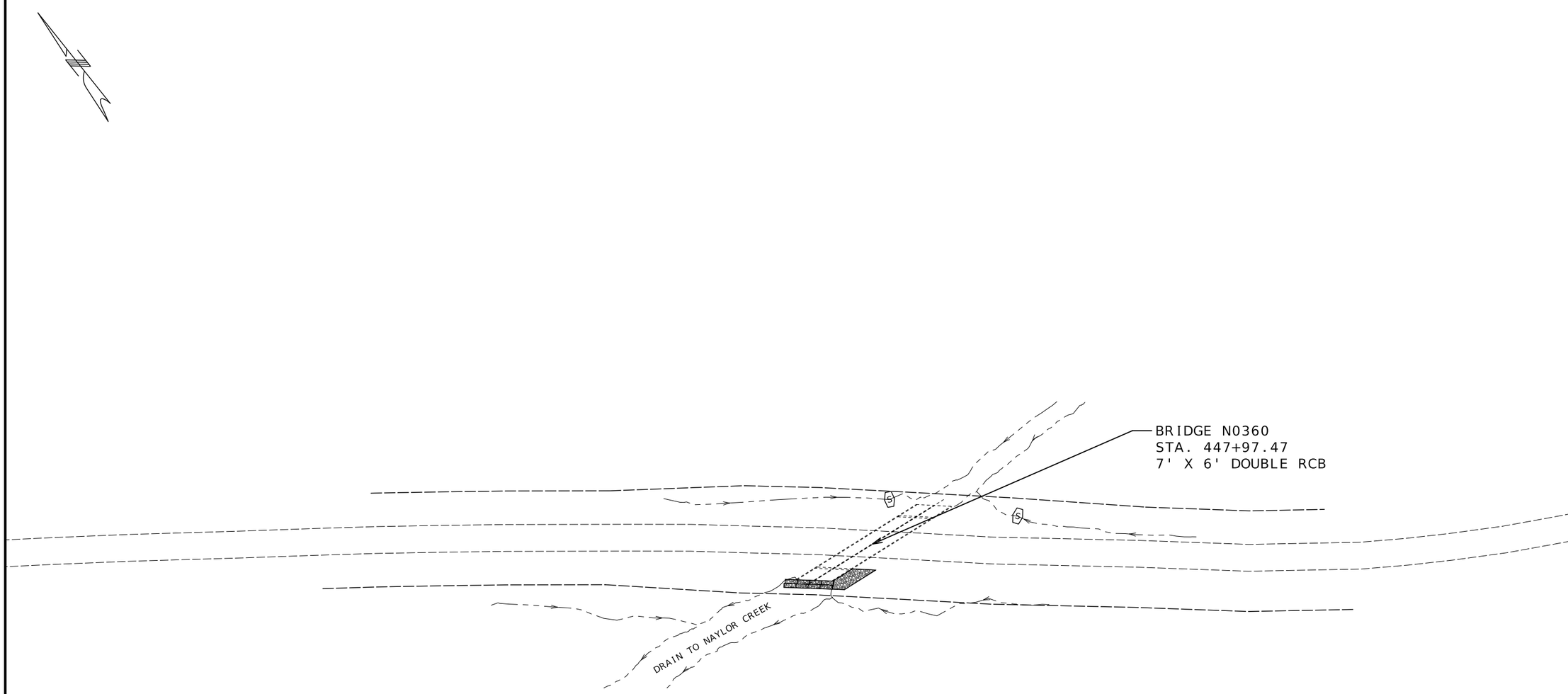

SCALE

0 40 80 120

BR. N0360
TEMPORARY
EROSION CONTROL
SHEET 8 OF 9

STATE OF MISSOURI
CLARK HARTMANN
NUMBER PE-2023008265
PROFESSIONAL ENGINEER

12/08/2025 4:01:55 PM
CLARK HARTMANN - CIVIL
MO-PE-2023008265

DATE PREPARED	
12/8/2025	
ROUTE	STATE
VAR	MO
DISTRICT	SHEET NO.
KC	30
COUNTY	
VARIOUS	
JOB NO.	
JKU0293	
CONTRACT ID.	
PROJECT NO.	
BRIDGE NO.	

DESCRIPTION	DATE

MISSOURI HIGHWAYS AND TRANSPORTATION COMMISSION

105 WEST CAPITOL
JEFFERSON CITY, MO 65102
1-888-ASK-MODOT (1-888-275-6636)

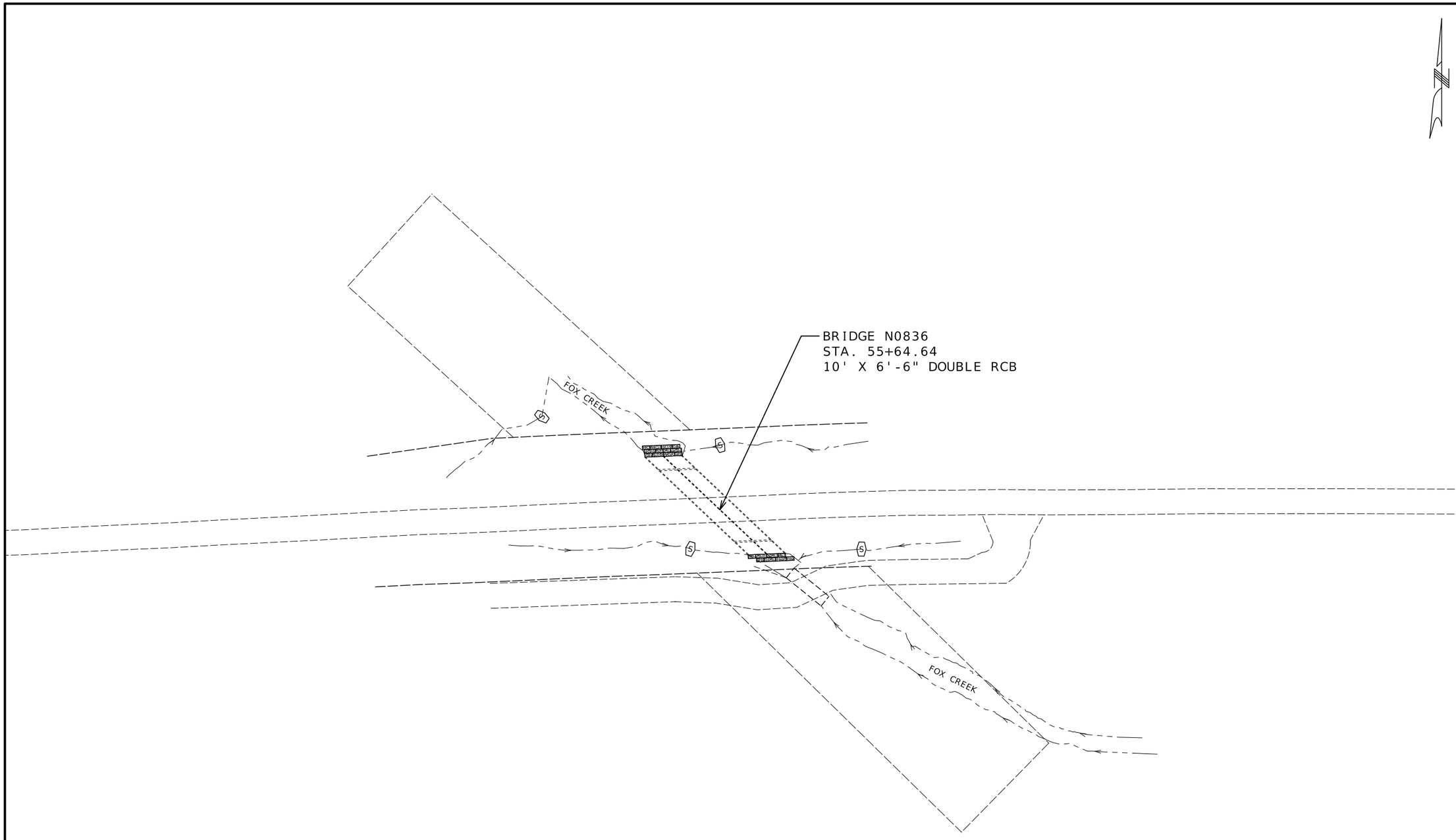

BR. N0836
TEMPORARY
EROSION CONTROL
SHEET 9 OF 9

STATE OF MISSOURI
CLARK HARTMANN
NUMBER
PE-2023008265
PROFESSIONAL ENGINEER

12/08/2025 4:02:09 PM
CLARK HARTMANN - CIVIL
MO-PE-2023008265

DATE PREPARED	
12/8/2025	
ROUTE	STATE
VAR	MO
DISTRICT	SHEET NO.
KC	31
COUNTY	
VARIOUS	
JOB NO.	
JKU0293	
CONTRACT ID.	
PROJECT NO.	
BRIDGE NO.	

DESCRIPTION	DATE

MISSOURI HIGHWAYS AND TRANSPORTATION COMMISSION

105 WEST CAPITOL
JEFFERSON CITY, MO 65102
1-888-ASK-MODOT (1-888-275-6636)

SEC/SUR	29	TWP	48N	RGE	33W

U.I.P. AND REHABILITATE EXISTING 3(13'X14') CONCRETE BOX CULVERT

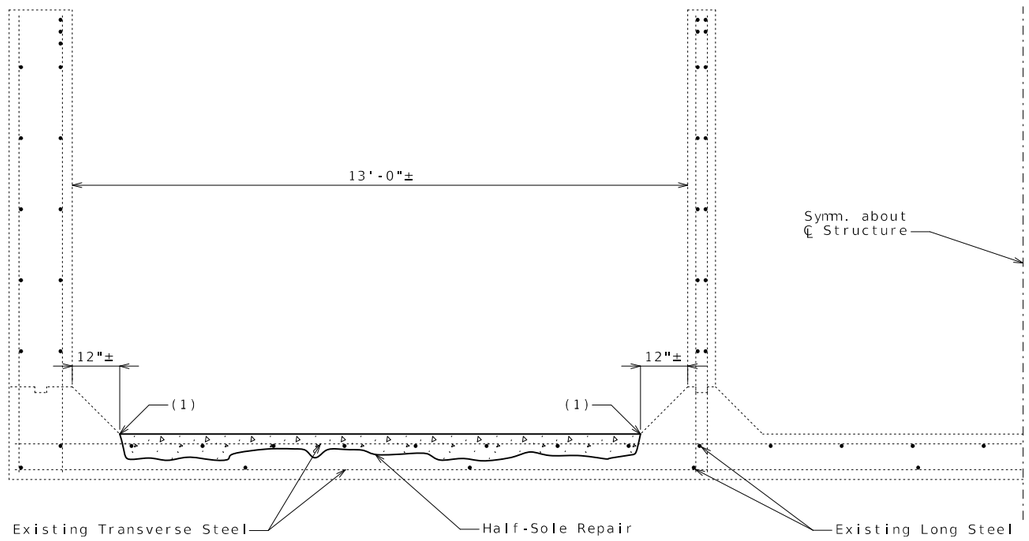

SECTION A-A

(1) 1" vertical side shall be established outside the deteriorated area.

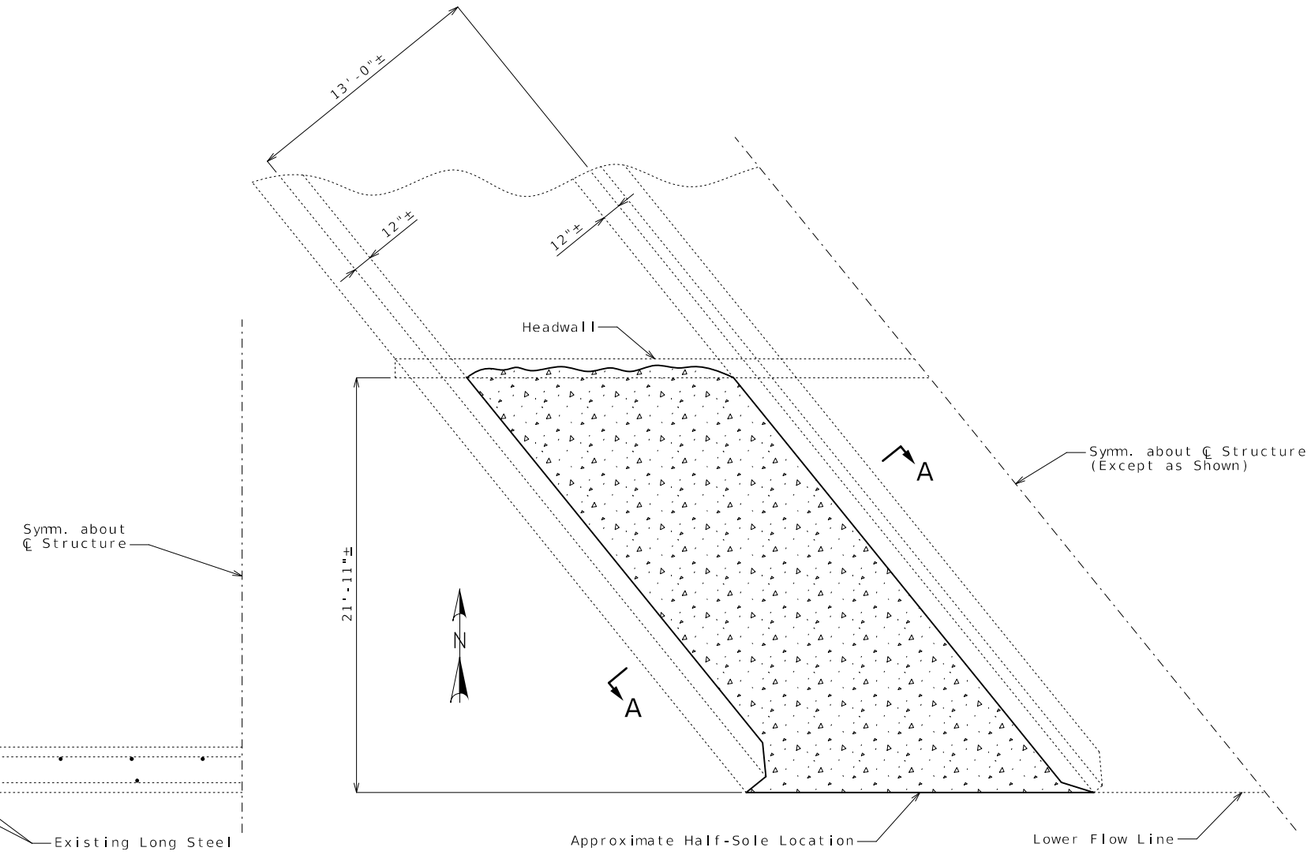

PART PLAN SHOWING CONCRETE REPAIR TO SOUTHWEST APRON

General Notes:

Design Loading:

HS20-44 (1977 & New Construction)

Design Unit Stresses:

Class B-2 Concrete (Half-Sole Repair) f'c = 4,000 psi

Miscellaneous:

All concrete repairs shall be in accordance with SEC 704, unless otherwise noted.

Outline of existing work is indicated by light bashed lines. Heavy Lines indicate new work.

Traffic Handling:

Traffic to be maintained on structure during construction. See Roadway Plans for traffic control.

Estimated Quantities		Final Quantities
Dewatering	lump sum	1
Half-Sole Repair	sq. foot	300

Detailed OCT 2025
Checked NOV 2025

Note: This drawing is not to scale. Follow dimensions.

Sheet No. 1 of 1

REPAIRS TO CULVERT-BRIDGE: ROUTE W OVER DYKE BRANCH

ROUTE W FROM ROUTE 71 TO STATE LINE ROAD
ABOUT 2.36 MILES WEST OF ROUTE 71
TIE STATION 69+55.00± (MATCH EXISTING)

STATE OF MISSOURI
TRENTON B. CRAWFORD
NUMBER PE-2012018053
PROFESSIONAL ENGINEER

THIS SHEET HAS BEEN SIGNED, SEALED AND DATED ELECTRONICALLY.

DATE PREPARED	
12/2/2025	
ROUTE W	STATE MO
DISTRICT BR	SHEET NO. 1
COUNTY JACKSON	
JOB NO. JKU0293	
CONTRACT ID.	
PROJECT NO.	
BRIDGE NO. A39802	

DATE	DESCRIPTION

MISSOURI HIGHWAYS AND TRANSPORTATION COMMISSION
105 WEST CAPITOL
JEFFERSON CITY, MO 65102
1-888-ASK-MODOT (1-888-275-6636)

U.I.P. AND REHABILITATE EXISTING 2(12' X 8') CONCRETE BOX CULVERT ON ROCK

SEC/SUR	27	TWP	54N	RGE	28W

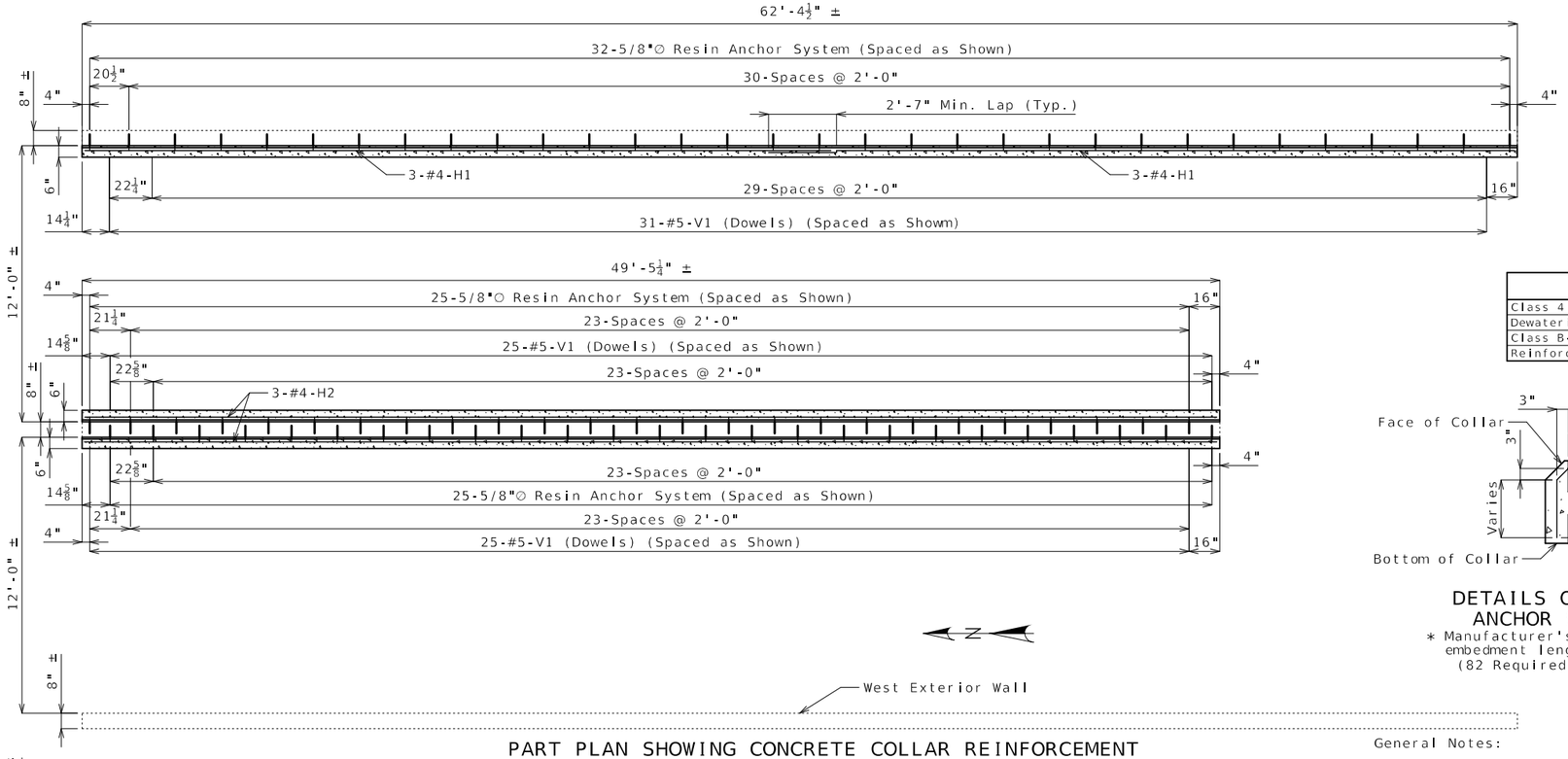

PART PLAN SHOWING CONCRETE COLLAR REINFORCEMENT

Estimated Quantities		Final Quantities
Class 4 Excavation in Rock	cu. yard	4
Dewatering	lump sum	1
Class B-1 Concrete (Culverts-Bridge)	cu. yard	6
Reinforcing Steel (Culverts-Bridge)	pound	580

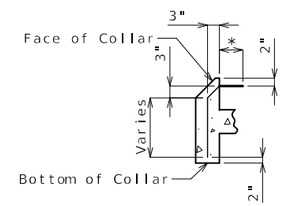

DETAILS OF RESIN ANCHOR SYSTEM

* Manufacturer's recommended embedment length (5" min.)
(82 Required in total)

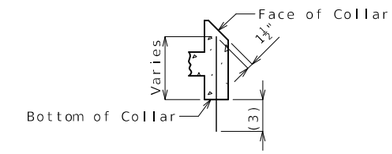

DETAILS OF DOWELS

(81 Required in total)

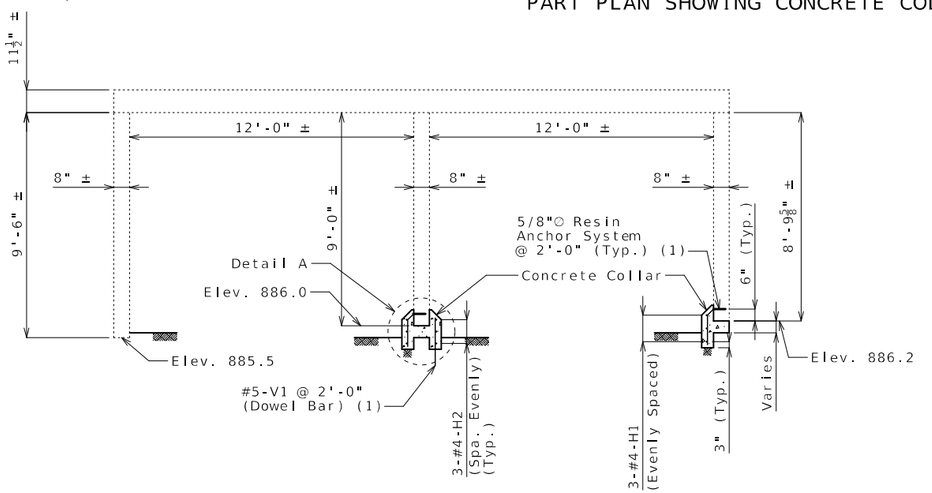

DOWNSTREAM END ELEVATION

(1) Alternate #5-V1 Dowels Bars and Resin Anchor System.

(2) For weak rock or shale, collar shall be keyed in 12" min. For medium to strong rock, collar shall be keyed in 6" min.

(3) Dowels shall be set into rock 6" minimum and have a tight fit into drilled holes.

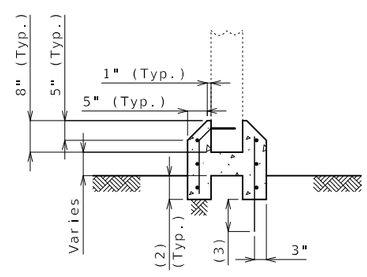

DETAIL A

General Notes:

Design Loading:

H10-44 (1953), HS-20-44 (New Construction)

Earth 120 lb/cf, Equivalent Fluid Pressure 30 lb/cf (min.),60 lb/cf (max.).

Design Unit Stresses:

Class B-1 Concrete (Collars) f'c = 4,000 psi

Reinforcing Steel (ASTM A615 Grade 60) fy = 60,000 psi

Reinforcing Steel:

Minimum clearance to reinforcing steel shall be 1½", unless otherwise noted.

Resin Anchors:

Cost of funishing and installing the resin anchor system, complete in place will be considered completely covered by the contract unit price for Class B-1 Concrete (Culverts-Bridge).

An epoxy coated #5 ASTM A615 Grade 60 reinforcing bar may be substituted for the 5/8" threaded rod.

Contractor shall use one of the qualified resin anshor systems in accordance with Sec 1039.

The minimum embedment depth in concrete with f'c = 4,000 psi for the resin anchor systems shall be that required to meet the minimum ultimate pullout strength in accordance with Sec 1039 but shall not be less than 5".

Miscellaneous:

Outline of existing work is indicated by light dashed lines. Heavy lines indicate new work.

Contractor shall veriry all dimensions in field before ordering new material.

Traffic Handling:

Traffic to be maintained on structure during construction. See Roadway Plans for traffic control.

REPAIRS TO CULVERT-BRIDGE: ROUTE D OVER FIRE BRANCH

ROUTE D FROM ROUTE 13 TO ROUTE BB
ABOUT 0.5 MILES WEST OF ROUTE 13
TIE STATION 537+25.00± (MATCH EXISTING)

Detailed OCT 2025
Checked OCT 2025

Note: This drawing is not to scale. Follow dimensions.

STATE OF MISSOURI
TRENTON B. CRAWFORD
NUMBER PE-2012018053
PROFESSIONAL ENGINEER
THIS SHEET HAS BEEN SIGNED, SEALED AND DATED ELECTRONICALLY.

DATE PREPARED	
12/2/2025	
ROUTE D	STATE MO
DISTRICT BR	SHEET NO. 1
COUNTY RAY	
JOB NO. JKU0293	
CONTRACT ID.	
PROJECT NO.	
BRIDGE NO. P06091	

DESCRIPTION

DATE

MISSOURI HIGHWAYS AND TRANSPORTATION COMMISSION
105 WEST CAPITOL
JEFFERSON CITY, MO 65102
1-888-ASK-MODOT (1-888-275-6636)

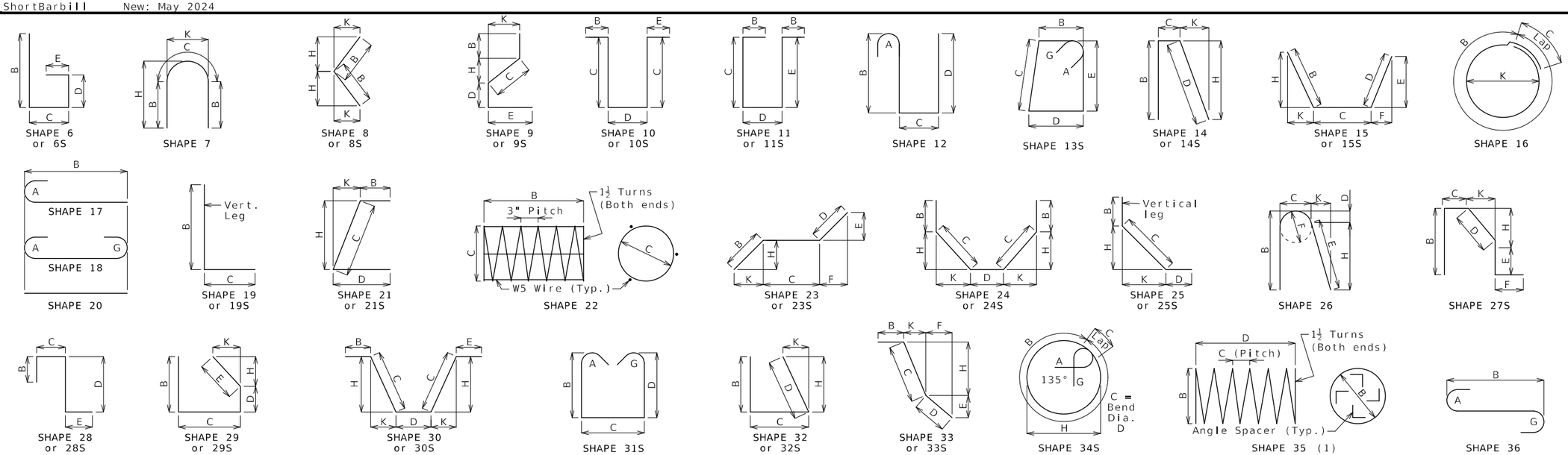

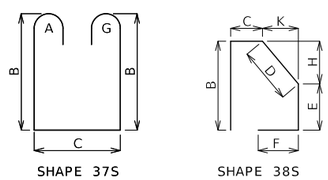

Finished Bend Diameters D and Hook Dimensions

Standard Pin Bend Shapes

Size	Case	D	A or G 90°	A or G 180°	J 180°
#4	1	3"	8"	6"	4"
#5	1	3¾"	10"	7"	5"
#6	1	4½"	12"	8¼"	6"
#7	2	5¼"	14"	9¾"	7"
	3	7"	15"	11½"	8¾"
#8	2	6"	16"	11"	8"
	3	8"	17"	13¼"	10"
#9	1	9½"	19½"	15½"	11¾"
#10	1	10¾"	22"	17½"	13¼"
#11	1	12"	24½"	19½"	14⅞"
#14	1	18¼"	31¼"	27½"	21⅝"
#18	1	24"	41½"	36¼"	28½"

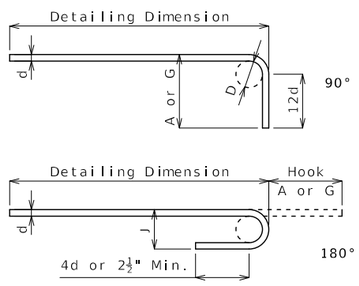

Stirrup Pin Bend Shapes (S)

Size	Case	D	A or G 90°	A or G 135°	A or G 180°	H 135°	J 180°
#4	2	2"	4½"	4½"	5"	2⅞"	3"
	3	3"	5"	5¼"	6"	3"	4"
#5	2	2½"	5¾"	5¾"	5¾"	3⅝"	3¾"
	3	3¾"	6¼"	6½"	7"	3⅞"	5"
#6	1	4½"	12"	7¾"	8¼"	4⅝"	6"

Applicable for all grades of steel.

Case 1 applies to all reinforcement. Case 2 applies to all reinforcement except for galvanized bars. Case 3 applies to galvanized bars only.

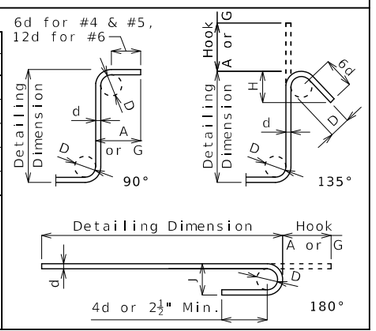

BENDING DIAGRAMS

Nominal lengths are based on out to out dimensions shown in bending diagrams and are listed to the nearest inch for fabricator's use. Actual lengths are measured along centerline bar to the nearest inch. Weights are based on actual lengths.

All bars shall be Grade 60.

Codes: C = Required coatings, where E = Epoxy Coated and G = Galvanized.

SH = Required shape, see bending diagrams.

V = Sets of varied bars and number of bars of each length. Bar dimensions vary in equal increments between dimensions shown on this line and the following line and the actual length dimension shown on this line and the following line vary by the specified increment.

All dimensions are out to out.

Shapes ending with an S shall be bent in accordance with stirrup pin bend shapes.

Unless otherwise noted, finished bending diameter D is the same for all bends of a shape.

(1) Shall be a deformed or plain spiral bar or wire.

Four angle or channel spacers are required for each column spiral. Spacers are to be placed on inside of spirals. Length and weight of column spirals do not include splices or spacers.

Reinforcing Steel Totals (Pounds)

	Size	Substructure Plain	Substructure Epoxy	Superstructure Slab	Superstructure Barrier	Superstructure Slip Form	Entire Bridge Plain	Entire Bridge Epoxy
By Size	4	327	0	0	0	0	327	0
	5	253	0	0	0	0	253	0
By Type		580	0	0	0	0	580	0

All superstructure reinforcing steel shall be epoxy coated unless otherwise specified.

Bill of Reinforcing Steel

No. Req.	Size/ Mark	Location	Codes C	Codes SH	Codes V	Dimensions B ft in.	C ft in.	D ft in.	E ft in.	F ft in.	H ft in.	K ft in.	Nom. Length ft in.	Actual Length ft in.	Weight lb
		Substructure													
81	5 V1	COLLAR		20		3 0.00							2 0	2 0	169
6	4 H1	COLLAR		20		32 5.00							32 5	32 5	130
6	4 H2	COLLAR		20		49 2.00							49 3	49 3	197

BILL OF REINFORCING STEEL

Detailed OCT 2025
Checked OCT 2025

Note: This drawing is not to scale. Follow dimensions.

STATE OF MISSOURI
TRENTON B. CRAWFORD
NUMBER PE-2012018053
PROFESSIONAL ENGINEER
THIS SHEET HAS BEEN SIGNED, SEALED AND DATED ELECTRONICALLY.

DATE PREPARED 12/2/2025

ROUTE	STATE
D	MO
DISTRICT	SHEET NO.
BR	2

COUNTY RAY

JOB NO. JKU0293

CONTRACT ID.

PROJECT NO.

BRIDGE NO. P06091

DATE	DESCRIPTION

MISSOURI HIGHWAYS AND TRANSPORTATION COMMISSION
105 WEST CAPITOL
JEFFERSON CITY, MO 65102
1-888-ASK-MODOT (1-888-275-6636)