MISSOURI HIGHWAYS AND TRANSPORTATION COMMISSION

PLANS FOR PROPOSED STATE HIGHWAY

CALDWELL COUNTY

DESIGN DESIGNATION

ROUTE U

A.A.D.T. - 2026 = 188
A.A.D.T. - 2046 = 207
D.H.V. = 11%
T = 11.96%
V = 55 M.P.H.

FUNCTIONAL CLASSIFICATION - MAJOR COLLECTOR

NORMAL RIGHT OF WAY

THE EXISTENCE AND APPROXIMATE LOCATION OF UTILITY FACILITIES KNOWN TO EXIST, AS SHOWN ON THE PLANS, ARE BASED ON THE BEST INFORMATION AVAILABLE TO THE COMMISSION AT THIS TIME. THIS INFORMATION IS PROVIDED BY THE COMMISSION "AS-IS" AND THE COMMISSION EXPRESSLY DISCLAIMS ANY REPRESENTATION OR WARRANTY AS TO THE COMPLETENESS, ACCURACY, OR SUITABILITY OF THE INFORMATION FOR ANY USE. RELIANCE UPON THIS INFORMATION IS DONE AT THE RISK AND PERIL OF THE USER, AND THE COMMISSION SHALL NOT BE LIABLE FOR ANY DAMAGES THAT MAY ARISE FROM ANY ERROR IN THE INFORMATION. IT IS, THEREFORE, THE RESPONSIBILITY OF THE CONTRACTOR TO VERIFY THE EXISTENCE, LOCATION AND STATUS OF ANY FACILITY. SUCH VERIFICATION INCLUDES DIRECT CONTACT WITH THE LISTED UTILITIES.

CONVENTIONAL SYMBOLS

(USED IN PLANS)

	EXISTING	NEW
BUILDINGS AND STRUCTURES		
GUARD RAIL		
GUARD CABLE		
CONCRETE RIGHT-OF-WAY MARKER		
STEEL RIGHT-OF-WAY MARKER		
LOCATION SURVEY MARKER		
UTILITIES		
FIBER OPTICS	—FO—	—FO—
OVERHEAD CABLE TV	—OTV—	—OTV—
UNDERGROUND CABLE TV	—UTV—	—UTV—
OVERHEAD TELEPHONE	—OT—	—OT—
UNDERGROUND TELEPHONE	—UT—	—UT—
OVERHEAD POWER	—OE—	—OE—
UNDERGROUND POWER	—UE—	—UE—
SANITARY SEWER	—S—	—S—
STORM SEWER	—SS—	—SS—
GAS	—G—	—G—
WATER	—W—	—W—
MANHOLE	SAN	
FIRE HYDRANT	HYD	
WATER VALVE	WV	
WATER METER	WM	
DROP INLET	D	
DITCH BLOCK		
GROUND MOUNTED SIGN	SIGN	
LIGHT POLE		
H-FRAME POWER POLE		
TELEPHONE PEDESTAL	PED	
FENCE		
CHAIN LINK	—V—	
WOVEN WIRE	—X—	
GATE POST		
BENCHMARK	BM	

NOTE: DASHED OR OPEN SYMBOLS INDICATE EXISTING FEATURES

KEY MAP
LOCATION OF CALDWELL COUNTY

BEGIN PROJECT
STA. 45+95.00
LOG MILE 0.841

END PROJECT
STA. 63+00.00
LOG MILE 1.164

JOB NO. JNW0144
REPLACE BRIDGE N0318
LENGTH = 0.323 MILES

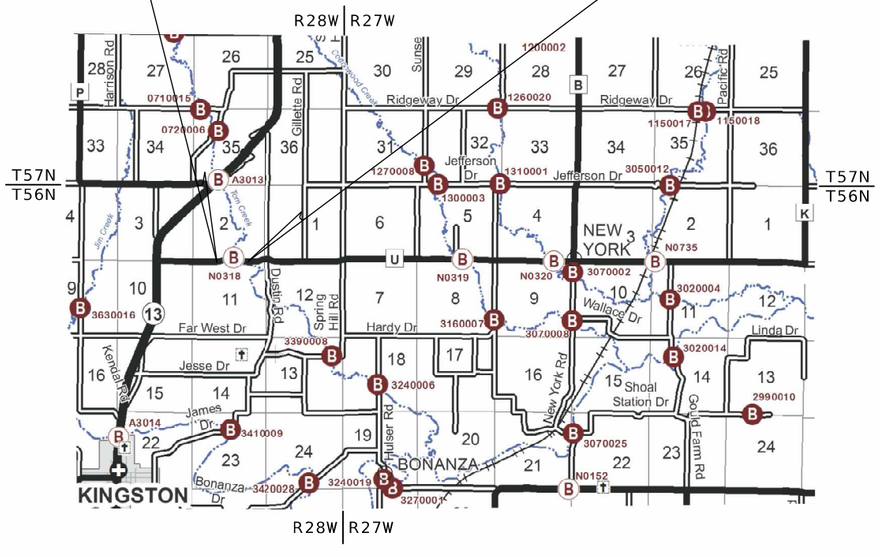

SCALE IN MILES

INDEX OF SHEETS

DESCRIPTION	SHEET NUMBER
TITLE SHEET	1
TYPICAL SECTIONS (TS) (1 SHEET)	2
QUANTITIES (QU) (2 SHEETS)	3
PLAN-PROFILE (PP)	4
COORDINATE POINTS (CP)	5
SPECIAL SHEETS (SS)	6-8
TRAFFIC CONTROL SHEETS (TC)	9
EROSION CONTROL SHEETS (EC)	10
CULVERT SECTIONS (CS)	11
BRIDGE DRAWINGS (B)	
A9660	1-30
CROSS SECTIONS (XS)	1-14

LENGTH OF PROJECT

BEGINNING OF PROJECT	STA. 45+95.00
END OF PROJECT	STA. 63+00.00
APPARENT LENGTH	1,705.00 FEET
EQUATIONS AND EXCEPTIONS:	
TOTAL CORRECTIONS	0.00 FEET
NET LENGTH OF PROJECT	1,705.00 FEET
STATE LENGTH	0.323 MILES
FOR INFORMATION ONLY ESTIMATED DISTURBED ACRES	3 ACRES

STATE OF MISSOURI
RICHARD W. ORR
NUMBER PE-2002003397
PROFESSIONAL ENGINEER

THIS SHEET HAS BEEN SIGNED, SEALED AND DATED ELECTRONICALLY.

DATE PREPARED
12/1/2025

ROUTE	STATE
U	MO
DISTRICT	SHEET NO.
NW	1

COUNTY
CALDWELL

JOB NO.
JNW0144

CONTRACT ID.

PROJECT NO.

BRIDGE NO.

DESCRIPTION	DATE

MISSOURI HIGHWAYS AND TRANSPORTATION COMMISSION
105 WEST CAPITOL
JEFFERSON CITY, MO 65102
1-888-ASK-MODOT (1-888-275-6636)

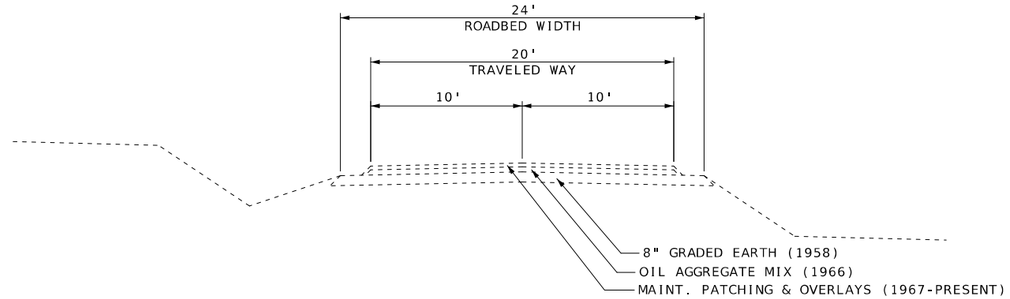

EXISTING TYPICAL SECTION

ROUTE U

STA. 45+95.00 TO STA. 63+00.00

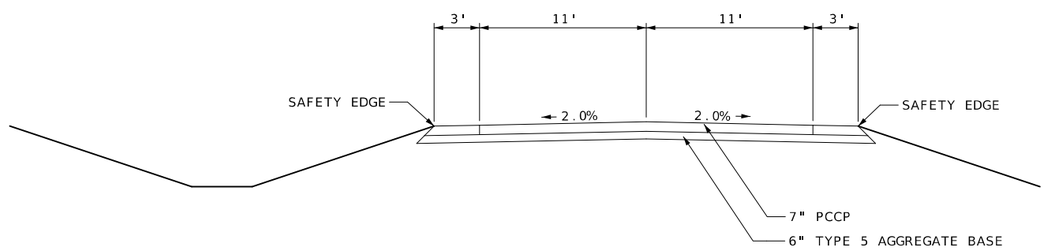

PROPOSED TYPICAL SECTION

ROUTE U - OPTION A: PCCP

STA. 45+95.00 TO STA. 63+00.00

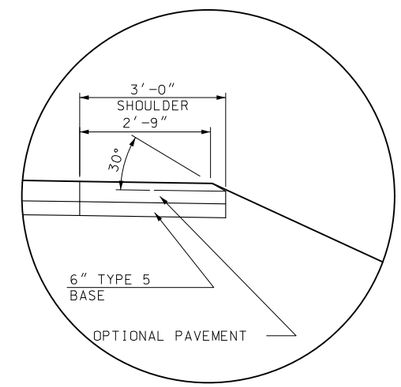

SAFETY EDGE DETAIL

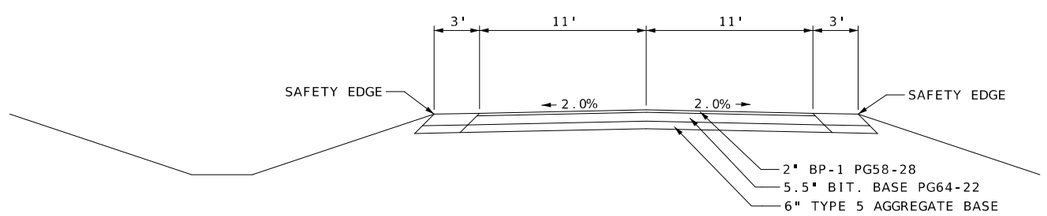

PROPOSED TYPICAL SECTION

ROUTE U - OPTION B: HMA

STA. 45+95.00 TO STA. 63+00.00

NOT TO SCALE

STATE OF MISSOURI
RICHARD W. ORR
NUMBER PE-2002003397
PROFESSIONAL ENGINEER

THIS SHEET HAS BEEN SIGNED, SEALED AND DATED ELECTRONICALLY.

DATE PREPARED	11/26/2025
ROUTE	U
STATE	MO
DISTRICT	NW
SHEET NO.	2
COUNTY	CALDWELL
JOB NO.	JNW0144
CONTRACT ID.	
PROJECT NO.	
BRIDGE NO.	

DATE	DESCRIPTION

MISSOURI HIGHWAYS AND TRANSPORTATION COMMISSION

105 WEST CAPITOL
JEFFERSON CITY, MO 65102
1-888-ASK-MODOT (1-888-275-6636)

TYPICAL SECTIONS

SHEET 1 OF 1

REMOVAL OF IMPROVEMENTS

STATION	STATION	LOCATION	DESCRIPTION	REMOVALS EACH	REMOVALS L.F.	REMOVALS S.Y.
45+99.26		RTE. U	30" X 40' CMP		40	
46+28.62	49+03.96	RTE. U RT.	FENCE		337.3	
49+50.00	52+82.32	RTE. U LT.	FENCE		362.7	
53+70.88	54+12.51	RTE. U RT.	TYPE III OBJECT MARKER	3		
53+72.95	54+12.50	RTE. U LT.	TYPE III OBJECT MARKER	3		
55+10.46	55+50.34	RTE. U LT.	TYPE III OBJECT MARKER	3		
55+11.69	55+49.72	RTE. U RT.	TYPE III OBJECT MARKER	3		
			SUBTOTAL	12	740	
			PAY TOTAL	LUMP SUM = 1		

DRAINAGE STRUCTURES

STATION	LOCATION	30" GROUP B PIPE L.F.	30" GROUP B F.E.S. EACH	15" GROUP C PIPE L.F.	18" CROUP C PIPE L.F.	CLASS 3 EXCAVATION C.Y.	REMARKS
45+99.26	ROUTE U	51	2			46.6	
46+22.00	ROUTE U RT.			50			DRIVEWAY PIPE
50+25.00	ROUTE U RT.				44		DRIVEWAY PIPE
	SUBTOTAL	51	2	50	44	46.6	
	PAY TOTAL	51	2	50	44	47	

CLEARING AND GRUBBING

STATION	STATION	LOCATION	CLEARING AND GRUBBING ACRE	REMARKS
45+50.00	56+50.00	ROUTE U LT.	1.30	TREES REMOVED BY OTHERS, STUMP REMOVAL ONLY
45+50.00	51+50.00	ROUTE U RT	0.92	TREES REMOVED BY OTHERS, STUMP REMOVAL ONLY
61+00.00	63+00.00	ROUTE U RT	0.09	TREES REMOVED BY OTHERS, STUMP REMOVAL ONLY
		SUBTOTAL	2.31	
		PAY TOTAL	2.3	

EROSION CONTROL

STATION	STATION	LOCATION	ROCK DITCH CHECK L.F.	SILT FENCE L.F.	SEDIMENT REMOVAL C.Y.
47+00.00		RTE. U RT.	18		1
47+50.00		RTE. U LT.	25.2		1
49+00.00		RTE. U LT.	20		1
49+75.00		RTE. U RT.	18.7		1
50+50.00		RTE. U LT.	20		1
50+49.68	54+07.48	RTE. U RT.		357.8	3.6
52+00.00		RTE. U LT.	20		1
53+50.00		RTE. U LT.	20		1
55+16.97	57+38.68	RTE. U LT.		221.7	2.2
55+17.31	57+37.25	RTE. U RT.		219.9	2.2
57+60.56	63+00.10	RTE. U RT.		539.5	5.4
57+60.62	62+93.46	RTE. U LT.		532.8	5.3
		SUBTOTAL	141.9	1871.7	25.7
		PAY TOTAL	142	1872	26

MOBILIZATION
LUMP SUM = 1

ADDITIONAL MOBILIZATION FOR SEEDING
4 EACH

CONTRACTOR FURNISHED SURVEYING AND STAKING
LUM SUM =1

EARTHWORK

STATION	STATION	LOCATION	CLASS A EXCAVATION C.Y.	COMPACTING EMBANKMENT C.Y.	EMBANKMENT IN-PLACE C.Y.	REMARKS
45+95.00	54+05.00	RTE. U	7739.9	3096.7		
54+05.00	54+27.84	RTE. U			500	SPILL/ FILL SLOPE
54+90.84	55+18.00	RTE. U			500	SPILL/ FILL SLOPE
55+18.00	63+00.00	RTE. U	134.7	94.3	3166.7	
46+22.00		RTE. U RT.	350.1	22.8		
50+25.00		RTE. U RT.	4.7	3.3	147.7	
57+50.00		RTE. U LT.	1.3	0.9	283.3	
57+50.00		RTE. U RT.	2.3	1.6	236.2	
		SUBTOTAL	8233	3219.6	4833.9	
		PAY TOTAL	8233	3219.6	4833.9	

ROCK LINING

STATION	STATION	LOCATION	ROCK LINING C.Y.	REMARKS
45+96.46	46+16.64	ROUTE U LT.	17.2	CULVERT OUTLET PROTECTION
		SUBTOTAL	17.2	
		PAY TOTAL	17	

TYPE III OBJECT MARKERS

STATION	LOCATION	U-CHANNEL POST, 3 LB. L.F.	SH-FLAT SHEET S.F.
53+67.88	ROUTE U LT	11.5	3
53+87.88	ROUTE U LT	11.5	3
54+07.88	ROUTE U LT	11.5	3
53+66.18	ROUTE U RT.	11.5	3
53+86.18	ROUTE U RT.	11.5	3
54+06.18	ROUTE U RT.	11.5	3
55+16.72	ROUTE U LT	11.5	3
55+36.72	ROUTE U LT	11.5	3
55+56.72	ROUTE U LT	11.5	3
55+18.43	ROUTE U RT.	11.5	3
55+38.43	ROUTE U RT.	11.5	3
55+58.43	ROUTE U RT.	11.5	3
	SUBTOTAL	138	36
	PAY TOTAL	138	36

PAVEMENT

STATION	STATION	LOCATION	OPTIONAL PAVEMENT S.Y.	6" TYPE 5 AGGREGATE BASE S.Y.
45+95.00	47+00.00	ROUTE U	290.00	290.0
47+00.00	54+10.00	ROUTE U	2208.89	2208.9
55+20.00	62+00.00	ROUTE U	2115.56	2115.6
62+00.00	63+00.00	ROUTE U	277.78	277.8
		SUBTOTAL	4892.23	4892.30
		PAY TOTAL	4892.2	4892.0

TYPE 2 ROCK BLANKET

STATION	STATION	LOCATION	FURNISHING TYPE 2 ROCK BLANKET C.Y.	PLACING TYPE 2 ROCK BLANKET C.Y.	PERMANENT EROSION CONTROL GEOTEXTILE S.Y.
54+11.05	54+27.84	ROUTE U	65.5	65.5	98.2
54+90.84	55+13.61	ROUTE U	88.8	88.8	133.2
		SUBTOTAL	154.3	154.3	231.4
		PAY TOTAL	154	154	231

GRAVEL (A) OR CRUSHED STONE (B)

STATION	LOCATION	6" GRAVEL (A) OR CRUSHED STONE (B) TONS	REMARKS
46+22.00	ROUTE U RT.	33.8	TYPE I DRIVEWAY
50+20.00	ROUTE U RT.	29.4	TYPE I DRIVEWAY
57+50.00	ROUTE U LT.	36.2	TYPE I DRIVEWAY
57+50.00	ROUTE U RT.	29.4	TYPE I DRIVEWAY
	SUBTOTAL	128.8	
	PAY TOTAL	129	

SEEDING

STATION	STATION	LOCATION	SEEDING COOL SEASON GRASSES ACRE	TEMPORARY SEEDING ACRE	TYPE 2C EROSION CONTROL BLANKET S.Y.
45+95.00	54+05.00	ROUTE U LT.	1.13	0.11	5469.2
45+95.00	54+05.00	ROUTE U RT.	0.73	0.07	3533.2
55+20.00	63+00.00	ROUTE U LT.	0.34	0.03	1645.6
55+20.00	63+00.00	ROUTE U RT.	0.34	0.03	1645.6
		SUBTOTAL	2.54	0.24	12293.6
		PAY TOTAL	2.5	0.2	12294

PAVEMENT MARKING

STATION	STATION	LOCATION	4" YELLOW CLASS 1 PAVEMENT MARKING PAINT (18-MIL, TYPE P BEADS) L.F.	REMARKS
45+95.00	63+00.00	ROUTE U	3410	DOUBLE YELLOW
		SUBTOTAL	3410	
		PAY TOTAL	3410	

STATE OF MISSOURI
RICHARD W. ORR
NUMBER PE-2002003397
PROFESSIONAL ENGINEER

THIS SHEET HAS BEEN SIGNED, SEALED AND DATED ELECTRONICALLY.

DATE PREPARED 12/23/2025

ROUTE	STATE
U	MO
DISTRICT	SHEET NO.
NW	3

COUNTY CALDWELL

JOB NO. JNW0144

CONTRACT ID.

PROJECT NO.

BRIDGE NO.

DESCRIPTION

DATE

MISSOURI HIGHWAYS AND TRANSPORTATION COMMISSION

105 WEST CAPITOL
JEFFERSON CITY, MO 65102
1-888-ASK-MODOT (1-888-275-6636)

SUMMARY OF QUANTITIES

SHEET 1 OF 2

SIGN	SIZE IN.	AREA SQ.FT.	QTY EACH	TOTAL AREA SQ.FT.	QTY RELOC EACH	TOTAL RELOC SQ.FT.	SIGN NO.	DESCRIPTION
WARNING SIGNS								
WO1-1L	48X48	16.00						TURN (SYMBOL LEFT)
WO1-1R	48X48	16.00						TURN (SYMBOL RIGHT)
WO1-2L	48X48	16.00						CURVE (SYMBOL LEFT)
WO1-2R	48X48	16.00						CURVE (SYMBOL RIGHT)
WO1-3L	48X48	16.00						REVERSE TURN (SYMBOL LEFT)
WO1-3R	48X48	16.00						REVERSE TURN (SYMBOL RIGHT)
WO1-4L	48X48	16.00						REVERSE CURVE (SYMBOL LEFT)
WO1-4R	48X48	16.00						REVERSE CURVE (SYMBOL RIGHT)
WO1-4bL	48X48	16.00						DOUBLE ARROW REVERSE CURVE (SYMBOL LEFT)
WO1-4bR	48X48	16.00						DOUBLE ARROW REVERSE CURVE (SYMBOL RIGHT)
WO1-4cL	48X48	16.00						TRIPLE ARROW REVERSE CURVE (SYMBOL LEFT)
WO1-4cR	48X48	16.00						TRIPLE ARROW REVERSE CURVE (SYMBOL RIGHT)
WO1-6	60X30	12.50						HORIZONTAL ARROW (SYMBOL)
WO1-6a	72X36	18.00						HORIZ. ARROW (SYMBOL ON PERMANENT BARRICADE)
WO1-7	60X30	12.50						DOUBLE HEAD HORIZONTAL ARROW (SYMBOL)
WO1-7a	72X36	18.00						DOUBLE HEAD HORIZ. ARROW (SYMBOL ON PERM. BARR.)
WO1-8	18X24	3.00						CHEVRON (SYMBOL)
WO1-8a	30X36	7.50						CHEVRON (SYMBOL FOR DIVIDED HIGHWAYS)
WO3-1	48X48	16.00						STOP AHEAD (SYMBOL)
WO3-2	48X48	16.00						YIELD AHEAD (SYMBOL)
WO3-3	48X48	16.00						SIGNAL AHEAD (SYMBOL)
WO3-4	48X48	16.00						BE PREPARED TO STOP
WO3-5	48X48	16.00						SPEED LIMIT AHEAD
WO4-1L	48X48	16.00						MERGE (SYMBOL FROM LEFT)
WO4-1R	48X48	16.00						MERGE (SYMBOL FROM RIGHT)
WO4-1aL	48X48	16.00						MERGE (LEFT)
WO4-1aR	48X48	16.00						MERGE (RIGHT)
WO5-1	48X48	16.00						ROAD/BRIDGE/RAMP NARROWS
WO5-3	48X48	16.00						ONE LANE BRIDGE
WO5-5	48X48	16.00						NARROW LANES
WO6-1	48X48	16.00						DIVIDED HIGHWAY (SYMBOL)
WO6-2	48X48	16.00						DIVIDED HIGHWAY END (SYMBOL)
WO6-3	48X48	16.00						TWO WAY TRAFFIC (SYMBOL)
WO7-3a	30X24	5.00						NEXT XX MILES (PLAQUE)
WO8-1	48X48	16.00						BUMP
WO8-2	48X48	16.00						DIP
WO8-3	48X48	16.00						PAVEMENT ENDS
WO8-4	48X48	16.00						SOFT SHOULDER
WO8-5	48X48	16.00						SLIPPERY WHEN WET (SYMBOL)
WO8-6	48X48	16.00						TRUCK CROSSING
WO8-6c	48X48	16.00						TRUCK ENTRANCE
WO8-7	36X36	9.00						LOOSE GRAVEL
WO8-7a	36X36	9.00						FRESH OIL / LOOSE GRAVEL
WO8-9	48X48	16.00						LOW SHOULDER
WO8-11	48X48	16.00						UNEVEN LANES
WO8-12	48X48	16.00						NO CENTER LINE
WO8-15	48X48	16.00						GROOVED PAVEMENT
WO8-15P	30X24	5.00						MOTORCYCLE (PLAQUE)
WO8-17L	48X48	16.00						SHOULDER DROP-OFF (SYMBOL LEFT)
WO8-17R	48X48	16.00						SHOULDER DROP-OFF (SYMBOL RIGHT)
WO8-17P	30X24	5.00						SHOULDER DROP-OFF (PLAQUE)
W10-1	42RND.	9.62						RAILROAD CROSSING
WO12-1	24X24	4.00						DOUBLE DOWN ARROW (SYMBOL)
WO12-2	48X48	16.00						LOW CLEARANCE (SYMBOL)
WO12-2x	24X18	3.00						LOW CLEARANCE (PLAQUE)
WO12-2a	84X24	14.00						OVERHEAD LOW CLEARANCE (FEET AND INCHES)
WO12-4	120X60	50.00						LOW CLEARANCE XX FT XX IN XX MILES AHEAD
WO12-5	120X60	50.00						WIDTH RESTRICTION XX FT XX IN XX MILES AHEAD
WO13-1	30X30	6.25						ADVISORY SPEED (PLAQUE)
WO16-2	30X24	5.00						XXX FEET (PLAQUE)
WO16-3	30X24	5.00						X MILE (PLAQUE)
WO20-1	48X48	16.00						ROAD/BRIDGE/RAMP WORK AHEAD
WO20-2	48X48	16.00						DETOUR AHEAD
WO20-3	48X48	16.00						ROAD CLOSED AHEAD
WO20-4	48X48	16.00						ONE LANE ROAD AHEAD
WO20-5	48X48	16.00						RIGHT/CENTER/LEFT LANE CLOSED AHEAD
WO20-5a	48X48	16.00						2 RIGHT/CENTER/LEFT LANES CLOSED AHEAD
WO20-6a	48X48	16.00						RIGHT/CENTER/LEFT LANE CLOSED
WO20-7a	48X48	16.00						FLAGGER (SYMBOL)
WO21-2	36X36	9.00						FRESH OIL
WO21-5	48X48	16.00						SHOULDER WORK / SHOULDER WORK AHEAD
WO22-1	48X48	16.00						BLASTING ZONE AHEAD
WO22-2	42X36	10.50						TURN OFF 2-WAY RADIO AND PHONE
WO22-3	42X36	10.50						END BLASTING ZONE
GO22-1	21X15	2.19						WET PAINT (ARROW PIVOTS)

SIGN	SIZE IN.	AREA SQ.FT.	QTY EACH	TOTAL SQ.FT.	QTY RELOC EACH	TOTAL RELOC SQ.FT.	SIGN NO.	DESCRIPTION
GUIDE SIGNS								
E05-1	36X48	12.00						GORE EXIT
E05-2	48X36	12.00						EXIT OPEN
E05-2a	48X36	12.00						EXIT CLOSED
GO20-1	60X24	10.00						ROAD WORK NEXT XX MILES
GO20-2	48X24	8.00						END ROAD WORK
GO20-4	36X18	4.50						PILOT CAR FOLLOW ME
GO20-4a	42X30	8.75						PILOT CAR IN USE WAIT & FOLLOW
GO20-4a	18X12	1.50						PILOT CAR IN USE WAIT & FOLLOW
GO20-5aP	36X24	6.00						WORK ZONE (PLAQUE)
MO4-8a	24X18	3.00						END DETOUR
MO4-9L	48X36	12.00						DETOUR (LEFT)
MO4-9R	48X36	12.00						DETOUR (RIGHT)
MO4-9P	48X12	4.00						STREET NAME (PLAQUE)
MO4-10L	48X18	6.00						DETOUR ARROW (LEFT)
MO4-10R	48X18	6.00						DETOUR ARROW (RIGHT)
REGULATORY SIGNS								
R1-1	48X48	13.25						STOP
R1-2	48TRI.	6.93						YIELD
R1-2a	36X36	9.00						TO ONCOMING TRAFFIC (PLAQUE)
R1-3P	30X12	2.50						ALL WAY (PLAQUE)
R2-1	36X48	12.00						SPEED LIMIT XX
R3-1	48X48	16.00						NO RIGHT TURN (SYMBOL)
R3-2	48X48	16.00						NO LEFT TURN (SYMBOL)
R3-3	36X36	9.00						NO TURNS
R3-4	48X48	16.00						NO U-TURN (SYMBOL)
R3-7L	30X30	6.25						LEFT LANE MUST TURN LEFT
R3-7R	30X30	6.25						RIGHT LANE MUST TURN RIGHT
R4-1	36X48	12.00						DO NOT PASS
R4-2	36X48	12.00						PASS WITH CARE
R4-7a	36X48	12.00						KEEP RIGHT (HORIZONTAL ARROW)
R4-8a	36X48	12.00						KEEP LEFT (HORIZONTAL ARROW)
R5-1	30X30	6.25						DO NOT ENTER
R5-1a	36X24	6.00						WRONG WAY
R6-1L	54X18	6.75						ONE WAY ARROW (LEFT)
R6-1R	54X18	6.75						ONE WAY ARROW (RIGHT)
R6-2L	24X30	5.00						ONE WAY (LEFT)
R6-2R	24X30	5.00						ONE WAY (RIGHT)
R9-9	24X12	2.00						SIDEWALK CLOSED
R9-11L	24X18	3.00						SIDEWALK CLOSED AHEAD, (ARROW LEFT) CROSS HERE
R9-11R	24X18	3.00						SIDEWALK CLOSED AHEAD, (ARROW RIGHT) CROSS HERE
R10-6	24X36	6.00						STOP HERE ON RED (45^ ARROW)
R11-2	48X30	10.00	4	40.00			29	ROAD CLOSED
R11-3a	60X30	12.50	9	112.50			56,56a 56b,56c	ROAD CLOSED XX MILES AHEAD LOCAL TRAFFIC ONLY
R11-4	60X30	12.50	4	50.00			55	ROAD CLOSED TO THRU TRAFFIC
CONST-3A	60X48	20.00						FINE SIGN
CONST-3X	56X12	4.67						SPEEDING/PASSING (PLATE)
MISCELLANEOUS SIGNS								
CONST-5	48X36	12.00						POINT OF PRESENCE
CONST-5	96X48	32.00						POINT OF PRESENCE
CONST-8	48X36	12.00						WORK ZONE NO PHONE ZONE
WO20-3	48X48	16.00	2	32.00			20a	ROAD CLOSED 500 FT
WO20-3	48X48	16.00	2	32.00			20b	ROAD CLOSED 1000 FT

616-10.05 CONSTRUCTION SIGNS	TOTAL 267 *	
616-10.10 RELOCATED SIGNS		TOTAL

NOTE: ALL TEMPORARY TRAFFIC CONTROL ITEMS ARE INCLUDED IN PAY ITEM 616-99.01 MISC. LUMP SUM TEMPORARY TRAFFIC CONTROL, UNLESS OTHERWISE NOTED.

EFFECTIVE: 07-01-2025

ITEM NUMBER	TOTAL QTY	DESCRIPTION
6122008		IMPACT ATTENUATOR 40 MPH (SAND BARRELS)
6122009		IMPACT ATTENUATOR 45 MPH (SAND BARRELS)
6122010		IMPACT ATTENUATOR 50 MPH (SAND BARRELS)
6122012		IMPACT ATTENUATOR 55 MPH (SAND BARRELS)
6122014		IMPACT ATTENUATOR 60 MPH (SAND BARRELS)
6122017		IMPACT ATTENUATOR 65 MPH (SAND BARRELS)
6122019		IMPACT ATTENUATOR 70 MPH (SAND BARRELS)
6122020		REPLACEMENT SAND BARREL
6122030		IMPACT ATTENUATOR (RELOCATION)
6122040		WORK ZONE CRASH CUSHION (NARROW)
6122041		WORK ZONE CRASH CUSHION (RELOCATION)
6123001	1 *	TRUCK MOUNTED ATTENUATOR (TMA)
6161012		BUOYS (BOATS KEEP OUT)
6161013		BUOYS (NO WAKE)
6161014		SPECIAL SIGN ASSEMBLY (BOATS KEEP OUT)
6161020		CHANNELIZER (DRUM-LIKE)
6161022		CHANNELIZER (CONE)
6161025		CHANNELIZER (TRIM-LINE)
6161026		CHANNELIZER (VERTICAL PANEL)
6161030	9 *	TYPE 3 MOVEABLE BARRICADE
6161033		DIRECTION INDICATOR BARRICADE
6161040		FLASHING ARROW PANEL
6161047		TYPE 3 OBJECT MARKER
6161055		SEQUENTIAL FLASHING WARNING LIGHT
6161070		TUBULAR MARKER
6161095		RADAR SPEED ADVISORY SYSTEM
6161096		CHANGEABLE MESSAGE SIGN, COMMISSION FURNISHED/RETAINED
6161098A	3 *	CHANGEABLE MESSAGE SIGN WITHOUT COMM. INTERFACE, CONTRACTOR FURNISHED/RETAINED
6161099		CHANGEABLE MESSAGE SIGN WITH COMM. INTERFACE, CONTRACTOR FURNISHED/RETAINED
6162000A		WORK ZONE TRAFFIC SIGNAL SYSTEM
6162002		TEMPORARY LONG-TERM RUMBLE STRIPS
6173600D		TEMPORARY TRAFFIC BARRIER, CONTRACTOR FURNISHED/RETAINED
6173700B		TEMP. TRAFFIC BARRIER ANCHORED, CONTRACTOR FURNISHED/RETAINED
6173706		TEMP. TRAFFIC BARRIER STIFFNESS TRANSITION CONTRACTOR FURNISHED/RETAINED
6174000A		TEMP. TRAFFIC BARRIER HEIGHT TRANSITION, CONTRACTOR FURNISHED/RETAINED
6175010A		RELOCATING TEMPORARY TRAFFIC BARRIER
6175011B		RELOCATING TEMP. TRAFFIC BARRIER ANCHORED
6175013		RELOCATING TEMP. TRAFFIC BARRIER STIFFNESS
6175020A		RELOCATING TEMP. TRAFFIC BARRIER HEIGHT
6208064A		TEMPORARY RAISED PAVEMENT MARKER
9029400		TEMPORARY TRAFFIC SIGNALS
9029401		TEMPORARY TRAFFIC SIGNALS AND LIGHTING

6199901	1
	LUMP SUM TEMPORARY TRAFFIC CONTROL (* ITEM INCLUDED)

STATE OF MISSOURI
RICHARD W. ORR
NUMBER PE-2002003397
PROFESSIONAL ENGINEER
THIS SHEET HAS BEEN SIGNED, SEALED AND DATED ELECTRONICALLY.

DATE PREPARED 1/6/2026

ROUTE	STATE
U	MO
DISTRICT	SHEET NO.
NW	3

COUNTY CALDWELL

JOB NO. JNW0144

CONTRACT ID.

PROJECT NO.

BRIDGE NO.

DATE	DESCRIPTION

MISSOURI HIGHWAYS AND TRANSPORTATION COMMISSION
105 WEST CAPITOL
JEFFERSON CITY, MO 65102
1-888-ASK-MODOT (1-888-275-6636)

SUMMARY OF QUANTITIES

SHEET 2 OF 2

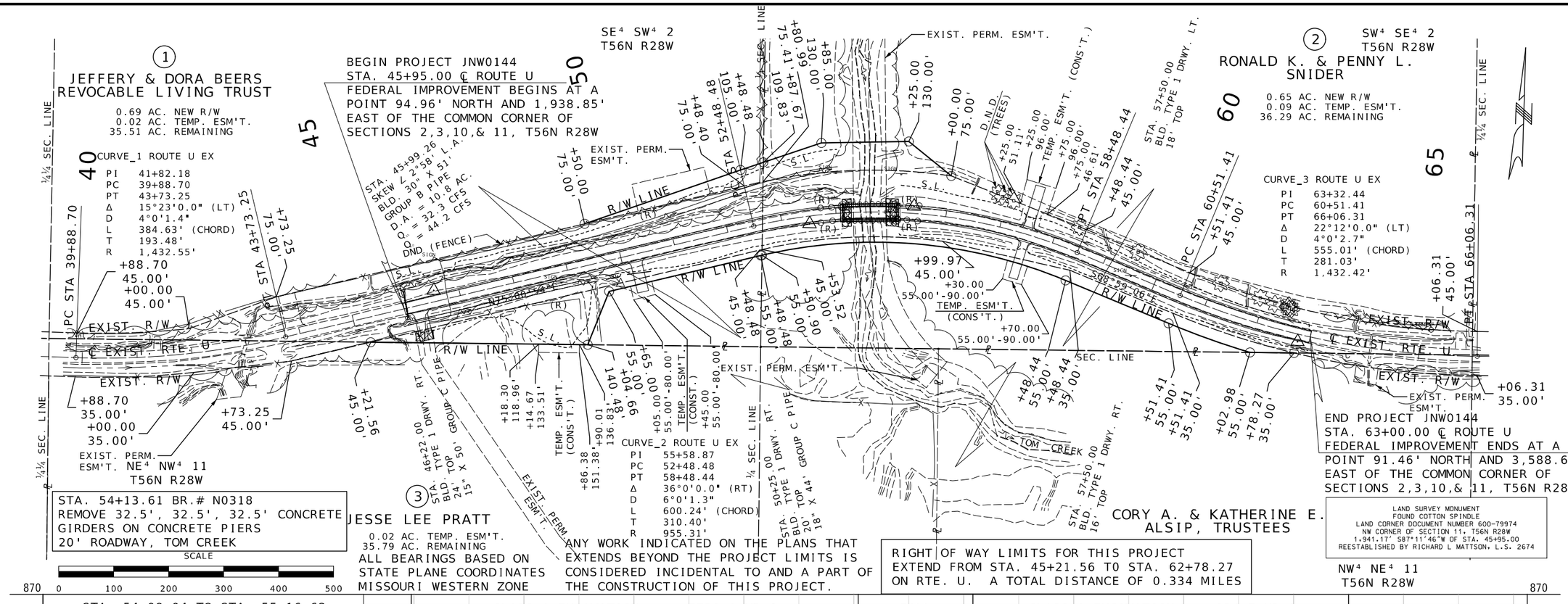

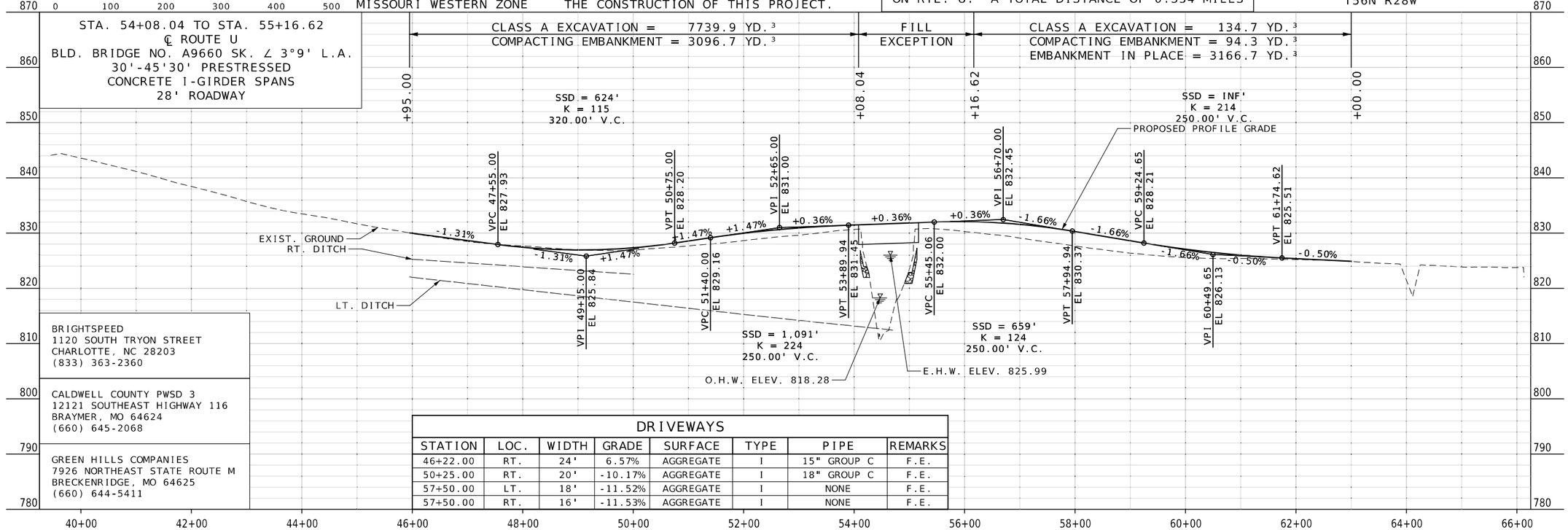

BRIGHTSPEED
1120 SOUTH TRYON STREET
CHARLOTTE, NC 28203
(833) 363-2360

CALDWELL COUNTY PWSD 3
12121 SOUTHEAST HIGHWAY 116
BRAYMER, MO 64624
(660) 645-2068

GREEN HILLS COMPANIES
7926 NORTHEAST STATE ROUTE M
BRECKENRIDGE, MO 64625
(660) 644-5411

DRIVEWAYS

STATION	LOC.	WIDTH	GRADE	SURFACE	TYPE	PIPE	REMARKS
46+22.00	RT.	24'	6.57%	AGGREGATE	I	15" GROUP C	F.E.
50+25.00	RT.	20'	-10.17%	AGGREGATE	I	18" GROUP C	F.E.
57+50.00	LT.	18'	-11.52%	AGGREGATE	I	NONE	F.E.
57+50.00	RT.	16'	-11.53%	AGGREGATE	I	NONE	F.E.

STATE OF MISSOURI
RICHARD W. ORR
NUMBER PE-2002003397
PROFESSIONAL ENGINEER
THIS SHEET HAS BEEN SIGNED, SEALED AND DATED ELECTRONICALLY.

DATE PREPARED	
11/26/2025	
ROUTE	STATE
U	MO
DISTRICT	SHEET NO.
NW	4
COUNTY	
CALDWELL	
JOB NO.	
JNW0144	
CONTRACT ID.	
PROJECT NO.	
BRIDGE NO.	

DESCRIPTION

DATE

MISSOURI HIGHWAYS AND TRANSPORTATION COMMISSION
105 WEST CAPITOL
JEFFERSON CITY, MO 65102
1-888-ASK-MODOT (1-888-275-6636)

ALL PROJECT COORDINATES HAVE BEEN PROJECTED FROM THE MISSOURI STATE PLANE COORDINATE (SPC) SYSTEM OF 1983 USING AN AVERAGE PROJECT PROJECTION (GRID TO GROUND) FACTOR. TO GET BACK TO STATE PLANE COORDINATES MULTIPY THE PROJECT COORDINATES BY THE AVERAGE GRID FACTOR AS SHOWN IN THE "REFERENCE CONTROL INFORMATION" PORTION OF THIS TABLE.

PROJECT COORDINATE INFORMATION

COORDINATE SYSTEM	MISSOURI STATE PLANE, WEST ZONE
HORIZONTAL DATUM	NAD83
VERTICAL DATUM	NAVD88
GEOID MODEL	GEOID 18
ELEVATIONS DETERMINED BY	BARTLETT & WEST RAN 2 - 4 HOUR OPUS SOLUTIONS FOR CONTROL POINTS 100 AND 101. OPUS SOLUTIONS WERE AVERAGED AND HELD FOR CONTROL PTS 100 AND 101. LEVEL LOOPS WERE RAN FROM CONTROL POINT 100 THRU THE REMAINING CONTROL POINTS
PROJECT PROJECTION FACTOR	1.000083252

REFERENCE CONTROL INFORMATION

COORDINATE SYSTEM	MO COORDINATE SYSTEM OF 1983
CONTROL STATION	MISSOURI CORS
DESIGNATION	MODOT ALBANY CORS ARP
CORS_ID	MOAL
PID	DM4112
LATITUDE	N40°15' 20.75415"
LONGITUDE	W94°17' 58.90379"
NORTHING (M)	453884.890
EASTING (M)	867039.790
ZONE	WEST
PROJECT AVERAGE GRID FACTOR	0.999916755

EXAMPLE OF PROJECT COORDINATE TO S.P.C.

PROJECT NORTHING X AVERAGE GRID FACTOR
= STATE PLANE NORTHING
PROJECT EASTING X AVERAGE GRID FACTOR
= STATE PLANE EASTING

EXAMPLE: CONTROL POINT #100
N 1281220.193 X 0.999916755 = N 1281113.538
E 2924978.969 X 0.999916755 = E 2924730.480

LINEAR UNIT CONVERSION

1 METER = 3.280833333 US SURVEY FEET (USFT)

COORDINATE POINT LISTING

SHEET NO	STATION	LOCATION	OFFSET (USFT)	MODIFIED STATE PLANE (GROUND) NORTHING (US SURVEY FT)	EASTING (US SURVEY FT)	ELEVATION (US SURVEY FT)	DESCRIPTION
PROJECT CONTROL POINTS							
	38+83.73	RTE. U	26.38' RT.	1,281,220.19	2,924,978.97	845.38	CONTROL POINT
4	46+54.87	RTE. U	20.18' LT.	1,281,386.83	2,925,731.32	827.98	CONTROL POINT
4	53+49.93	RTE. U	14.25' RT.	1,281,527.73	2,926,411.42	828.95	CONTROL POINT
4	54+13.03	RTE. U	12.20' LT.	1,281,561.66	2,926,470.77	831.53	BENCHMARK
4	55+09.82	RTE. U	13.11' RT.	1,281,540.13	2,926,568.43	830.96	BENCHMARK
4	55+41.04	RTE. U	12.92' LT.	1,281,565.26	2,926,600.39	830.12	CONTROL POINT
4	62+79.55	RTE. U	13.55' RT.	1,281,339.17	2,927,304.84	823.91	CONTROL POINT
	68+97.97	RTE. U	26.93' LT.	1,281,354.97	2,927,923.38	822.10	CONTROL POINT
ALIGNMENTS							
	30+00.00	℄ RTE. U	0	1,281,252.72	2,924,095.45		POINT ON TANGENT
4	39+88.70	℄ RTE. U	0	1,281,245.84	2,925,084.13		P.C.
4	43+73.25	℄ RTE. U	0	1,281,294.52	2,925,464.50		P.T.
4	45+95.00	℄ RTE. U	0	1,281,351.86	2,925,678.71		BEGIN PROJECT
4	52+48.48	℄ RTE. U	0	1,281,520.82	2,926,309.96		P.C.
4	54+08.01	℄ RTE. U	0	1,281,549.05	2,926,466.86		FILL EXCEPTION
4	55+16.60	℄ RTE. U	0	1,281,553.13	2,926,575.37		FILL EXCEPTION
4	58+48.44	℄ RTE. U	0	1,281,489.77	2,926,899.56		P.T.
4	60+51.41	℄ RTE. U	0	1,281,416.98	2,927,089.03		P.C.
4	63+00.00	℄ RTE. U	0	1,281,348.36	2,927,327.68		END PROJECT
4	66+06.31	℄ RTE. U	0	1,281,322.01	2,927,632.33		P.T.
	69+70.57	℄ RTE. U	0	1,281,329.55	2,927,996.51		POINT ON TANGENT

STATE OF MISSOURI
RICHARD W. ORR
NUMBER PE-2002003397
PROFESSIONAL ENGINEER

THIS SHEET HAS BEEN SIGNED, SEALED AND DATED ELECTRONICALLY.

DATE PREPARED 11/26/2025

ROUTE	STATE
U	MO
DISTRICT	SHEET NO.
NW	5

COUNTY CALDWELL

JOB NO. JNW0144

CONTRACT ID.

PROJECT NO.

BRIDGE NO.

DESCRIPTION

DATE

MISSOURI HIGHWAYS AND TRANSPORTATION COMMISSION

105 WEST CAPITOL
JEFFERSON CITY, MO 65102
1-888-ASK-MODOT (1-888-275-6636)

COORDINATE POINTS

SHEET 1 OF 1

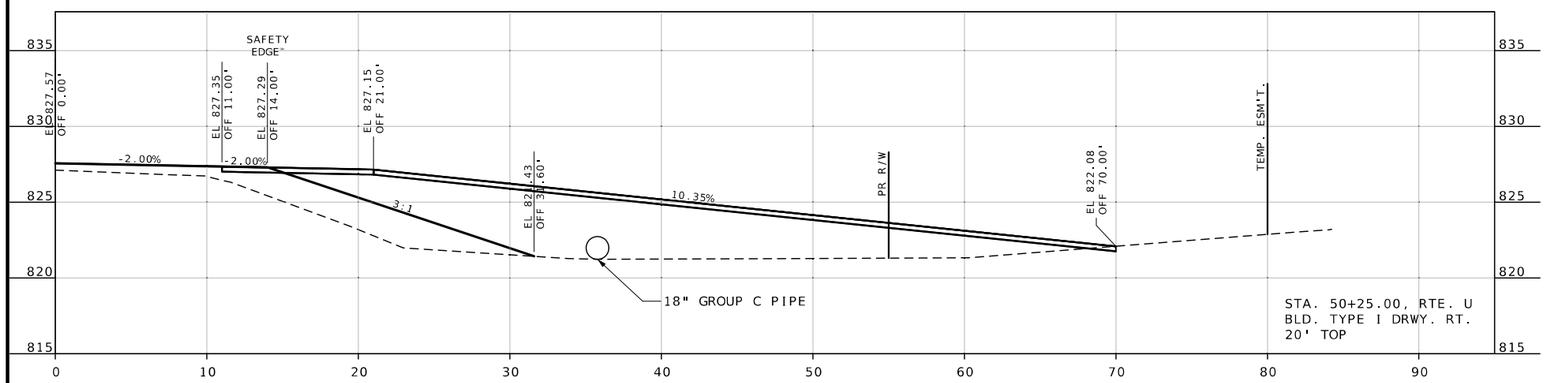

STA 50+20.00

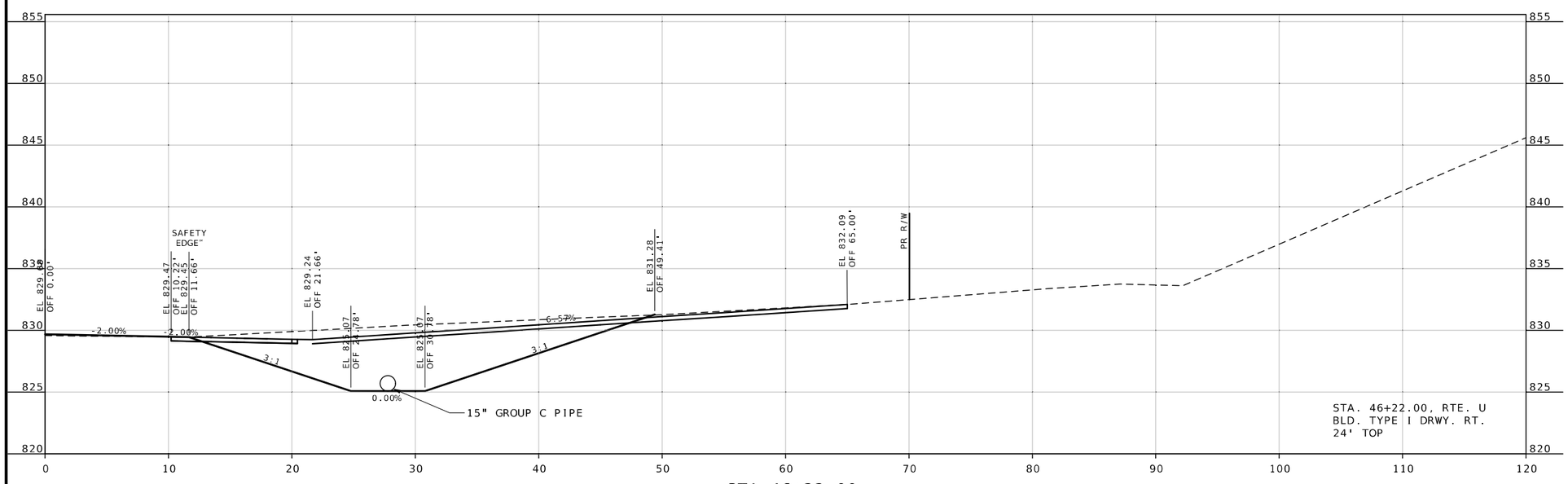

STA 46+22.00

STATE OF MISSOURI
RICHARD W. ORR
NUMBER PE-2002003397
PROFESSIONAL ENGINEER

THIS SHEET HAS BEEN SIGNED, SEALED AND DATED ELECTRONICALLY.

DATE PREPARED	12/18/2025
ROUTE	U
STATE	MO
DISTRICT	NW
SHEET NO.	6
COUNTY	CALDWELL
JOB NO.	JNW0144
CONTRACT ID.	
PROJECT NO.	
BRIDGE NO.	

DATE	DESCRIPTION

MISSOURI HIGHWAYS AND TRANSPORTATION COMMISSION

105 WEST CAPITOL
JEFFERSON CITY, MO 65102
1-888-ASK-MODOT (1-888-275-6636)

DRIVEWAY PROFILES

SPECIAL SHEET 1 OF 3

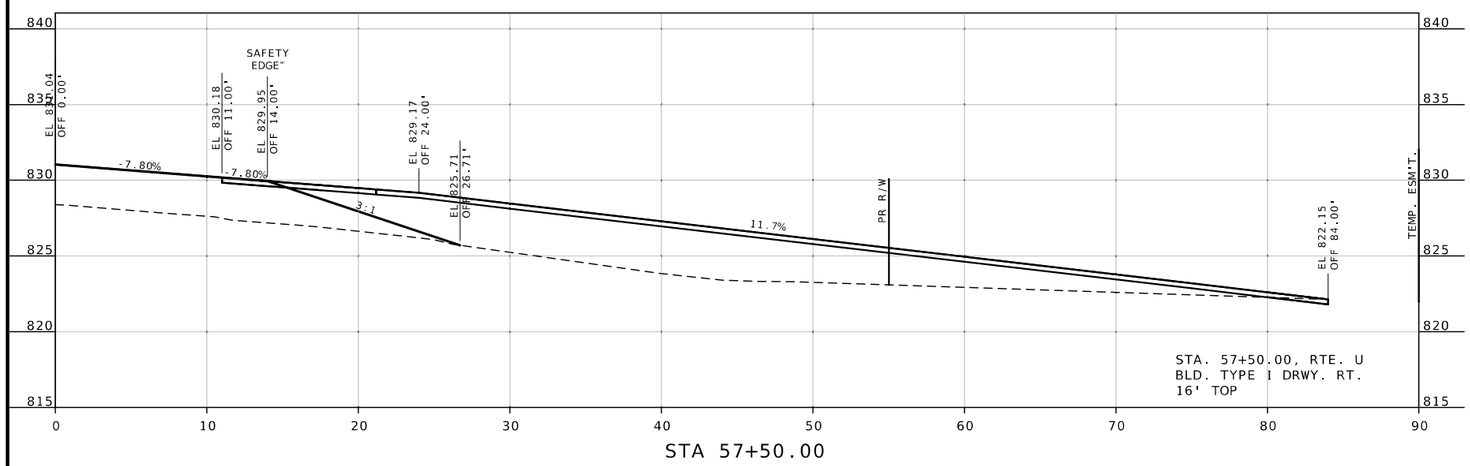

STA 57+50.00

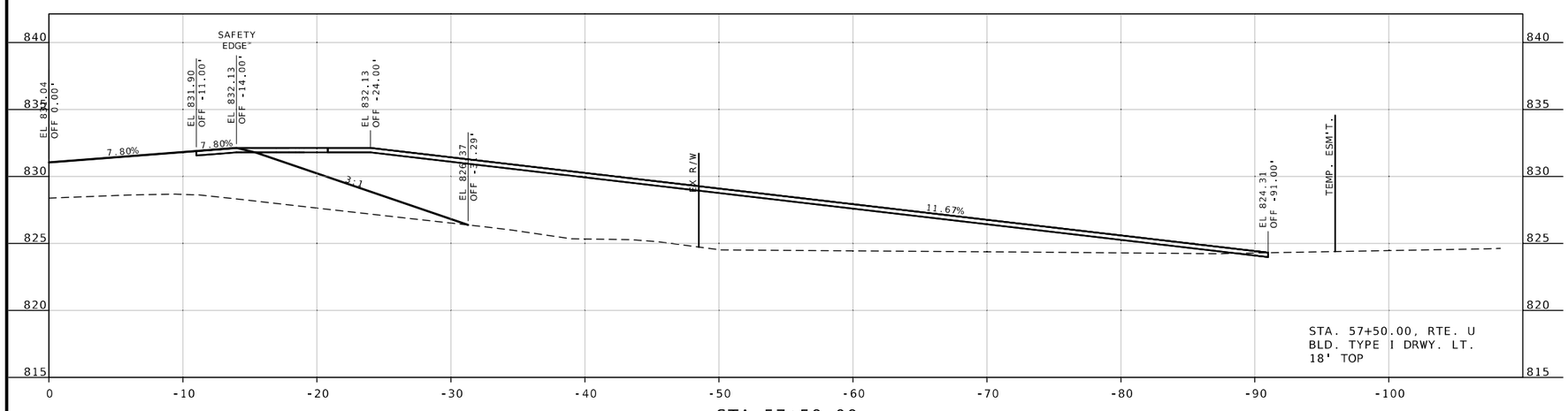

STA 57+50.00

STATE OF MISSOURI
RICHARD W. ORR
NUMBER PE-2002003397
PROFESSIONAL ENGINEER

THIS SHEET HAS BEEN SIGNED, SEALED AND DATED ELECTRONICALLY.

DATE PREPARED	12/18/2025
ROUTE	U
STATE	MO
DISTRICT	NW
SHEET NO.	7
COUNTY	CALDWELL
JOB NO.	JNW0144
CONTRACT ID.	
PROJECT NO.	
BRIDGE NO.	

DATE	DESCRIPTION

MISSOURI HIGHWAYS AND TRANSPORTATION COMMISSION

105 WEST CAPITOL
JEFFERSON CITY, MO 65102
1-888-ASK-MODOT (1-888-275-6636)

DRIVEWAY PROFILES

SPECIAL SHEET 2 OF 3

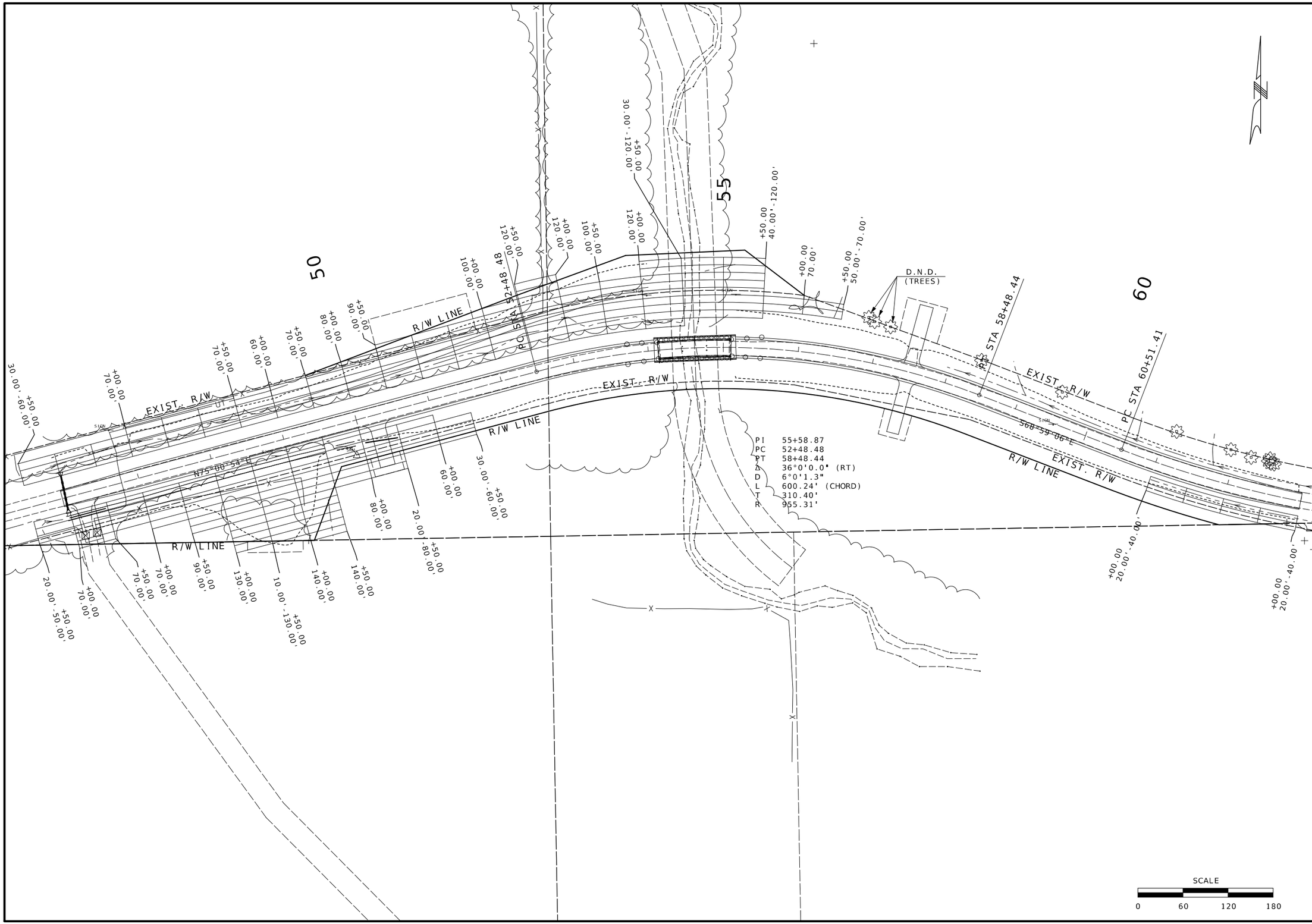

STATE OF MISSOURI
RICHARD W. ORR
NUMBER PE-2002003397
PROFESSIONAL ENGINEER

THIS SHEET HAS BEEN SIGNED, SEALED AND DATED ELECTRONICALLY.

DATE PREPARED	11/26/2025
ROUTE	U
STATE	MO
DISTRICT	NW
SHEET NO.	8
COUNTY	CALDWELL
JOB NO.	JNW0144
CONTRACT ID.	
PROJECT NO.	
BRIDGE NO.	

DATE	DESCRIPTION

MISSOURI HIGHWAYS AND TRANSPORTATION COMMISSION

105 WEST CAPITOL
JEFFERSON CITY, MO 65102
1-888-ASK-MODOT (1-888-275-6636)

GRUBBING LIMITS

SPECIAL SHEET 3 OF 3

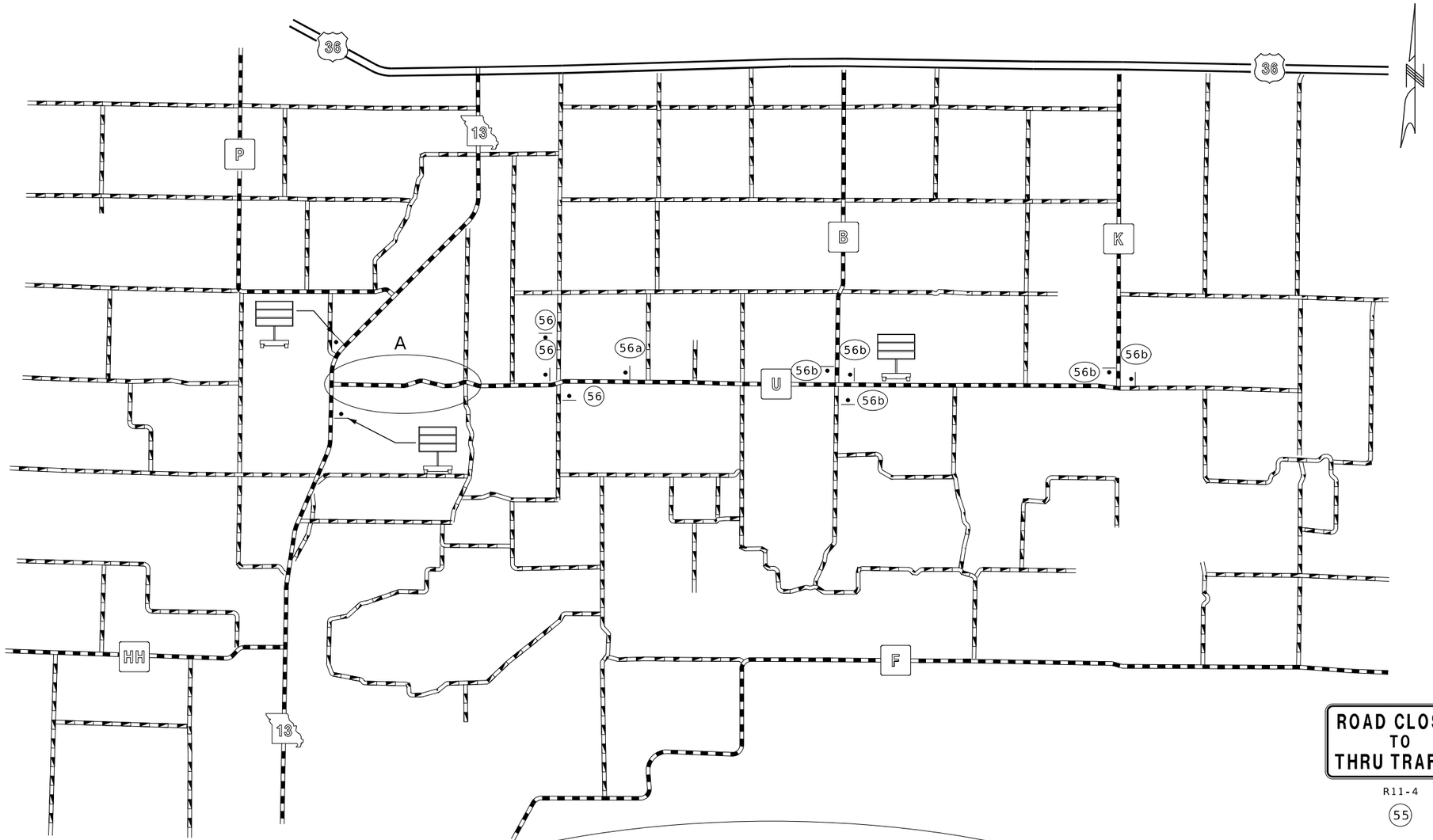

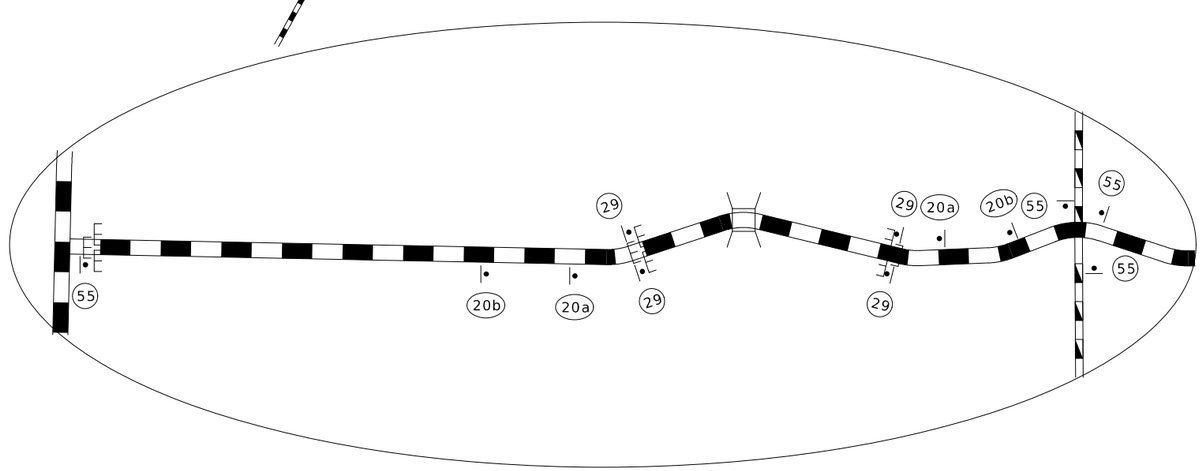

DETAIL A

NOT TO SCALE

WO20-3

20a

WO20-3

20b

R11-2

29

R11-4

55

R11-3a

56a

R11-3a

56

R11-3a

56b

R11-3a

56c

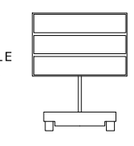

CHANGEABLE
MESSAGE
BOARD

TYPE III
MOVEABLE
BARRICADE

STATE OF MISSOURI
RICHARD W. ORR
NUMBER
PE-2002003397
PROFESSIONAL ENGINEER

THIS SHEET HAS BEEN SIGNED, SEALED AND DATED ELECTRONICALLY.

DATE PREPARED	11/26/2025
ROUTE	U
STATE	MO
DISTRICT	NW
SHEET NO.	9
COUNTY	CALDWELL
JOB NO.	JNW0144
CONTRACT ID.	
PROJECT NO.	
BRIDGE NO.	

DATE	DESCRIPTION

MISSOURI HIGHWAYS AND TRANSPORTATION COMMISSION

105 WEST CAPITOL
JEFFERSON CITY, MO 65102
1-888-ASK-MODOT (1-888-275-6636)

TRAFFIC CONTROL PLAN

SHEET 1 OF 1

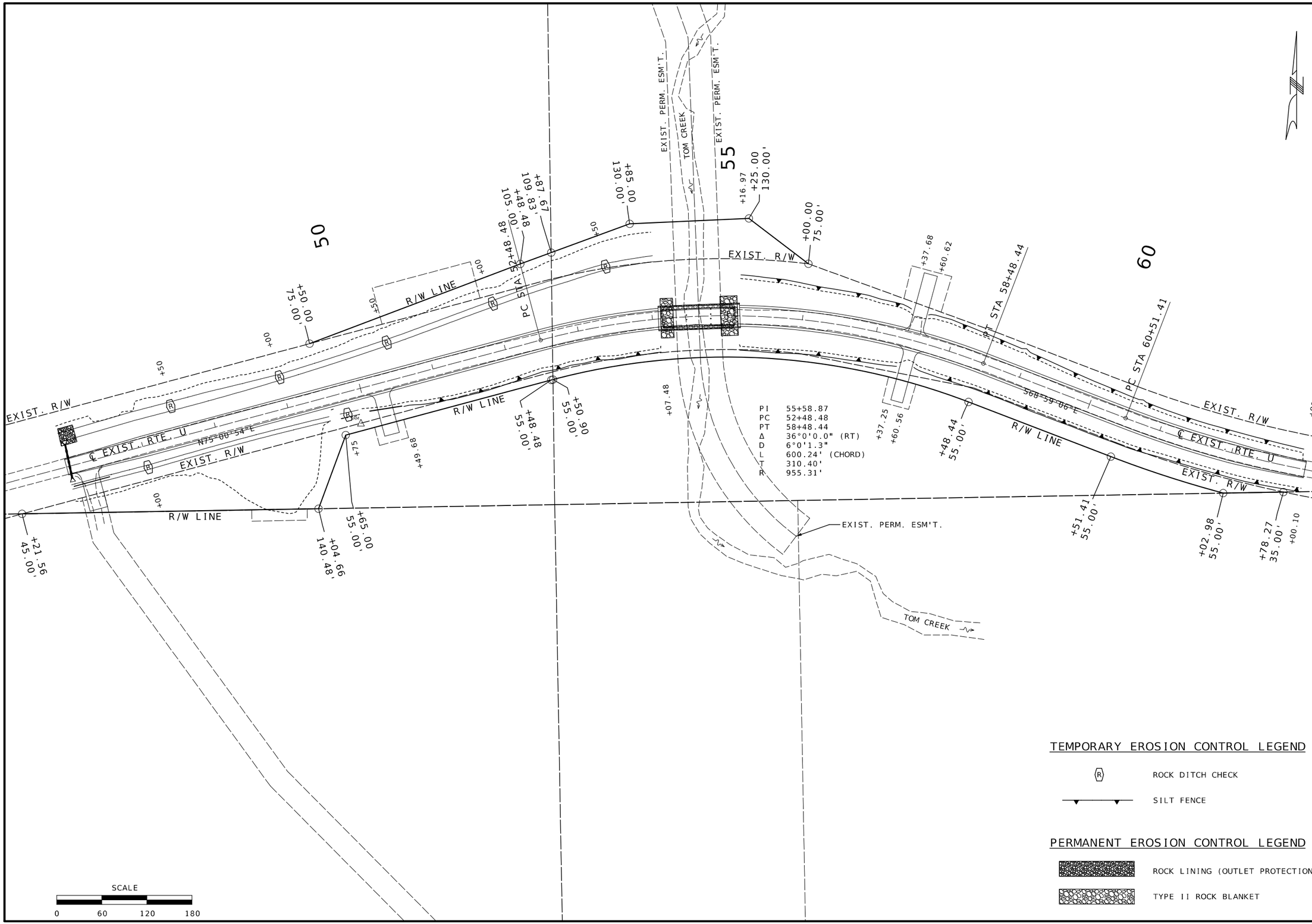

PI	55+58.87
PC	52+48.48
PT	58+48.44
Δ	36°0'0.0" (RT)
D	6°0'1.3"
L	600.24' (CHORD)
T	310.40'
R	955.31'

TEMPORARY EROSION CONTROL LEGEND

- ROCK DITCH CHECK
- SILT FENCE

PERMANENT EROSION CONTROL LEGEND

- ROCK LINING (OUTLET PROTECTION)
- TYPE II ROCK BLANKET

STATE OF MISSOURI
RICHARD W. ORR
NUMBER PE-2002003397
PROFESSIONAL ENGINEER

THIS SHEET HAS BEEN SIGNED, SEALED AND DATED ELECTRONICALLY.

DATE PREPARED	
12/18/2025	
ROUTE: U	STATE: MO
DISTRICT: NW	SHEET NO.: 10
COUNTY: CALDWELL	
JOB NO.: JNW0144	
CONTRACT ID.	
PROJECT NO.	
BRIDGE NO.	

DATE	DESCRIPTION

MISSOURI HIGHWAYS AND TRANSPORTATION COMMISSION

105 WEST CAPITOL
JEFFERSON CITY, MO 65102
1-888-ASK-MODOT (1-888-275-6636)

EROSION CONTROL

SHEET 1 OF 1

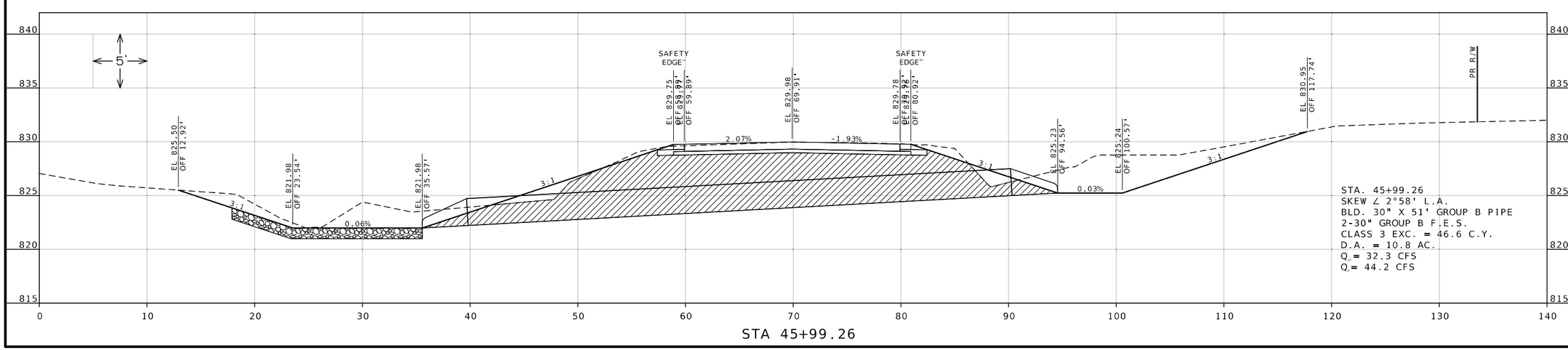

STATE OF MISSOURI
RICHARD W. ORR
NUMBER PE-2002003397
PROFESSIONAL ENGINEER

THIS SHEET HAS BEEN SIGNED, SEALED AND DATED ELECTRONICALLY.

DATE PREPARED	11/26/2025
ROUTE	U
STATE	MO
DISTRICT	NW
SHEET NO.	11
COUNTY	CALDWELL
JOB NO.	JNW0144
CONTRACT ID.	
PROJECT NO.	
BRIDGE NO.	

DATE	DESCRIPTION

MISSOURI HIGHWAYS AND TRANSPORTATION COMMISSION

105 WEST CAPITOL
JEFFERSON CITY, MO 65102
1-888-ASK-MODOT (1-888-275-6636)

CULVERT SECTION

SHEET 1 OF 1

SEC/SUR 2 TWP 56N RGE 28W

(30'-45'-30') PRESTRESSED CONCRETE I-GIRDER SPANS

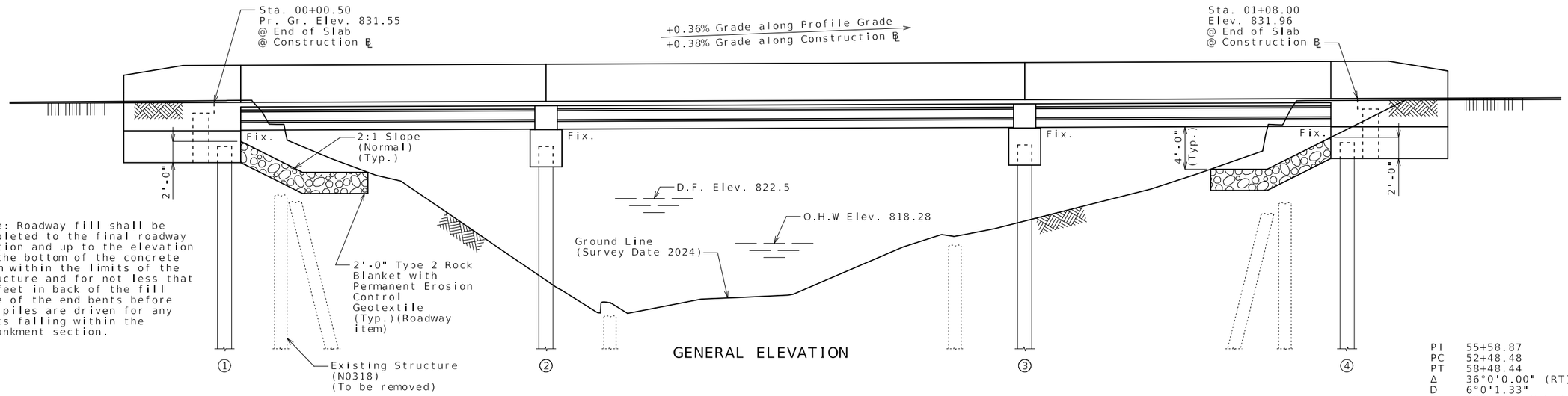

Note: Roadway fill shall be completed to the final roadway section and up to the elevation of the bottom of the concrete beam within the limits of the structure and for not less that 25 feet in back of the fill face of the end bents before any piles are driven for any bents falling within the embankment section.

GENERAL ELEVATION

PI	55+58.87
PC	52+48.48
PT	58+48.44
Δ	36°0'0.00" (RT)
D	6°0'1.33"
L	600.24' (CHORD)
T	310.40'
R	955.31'

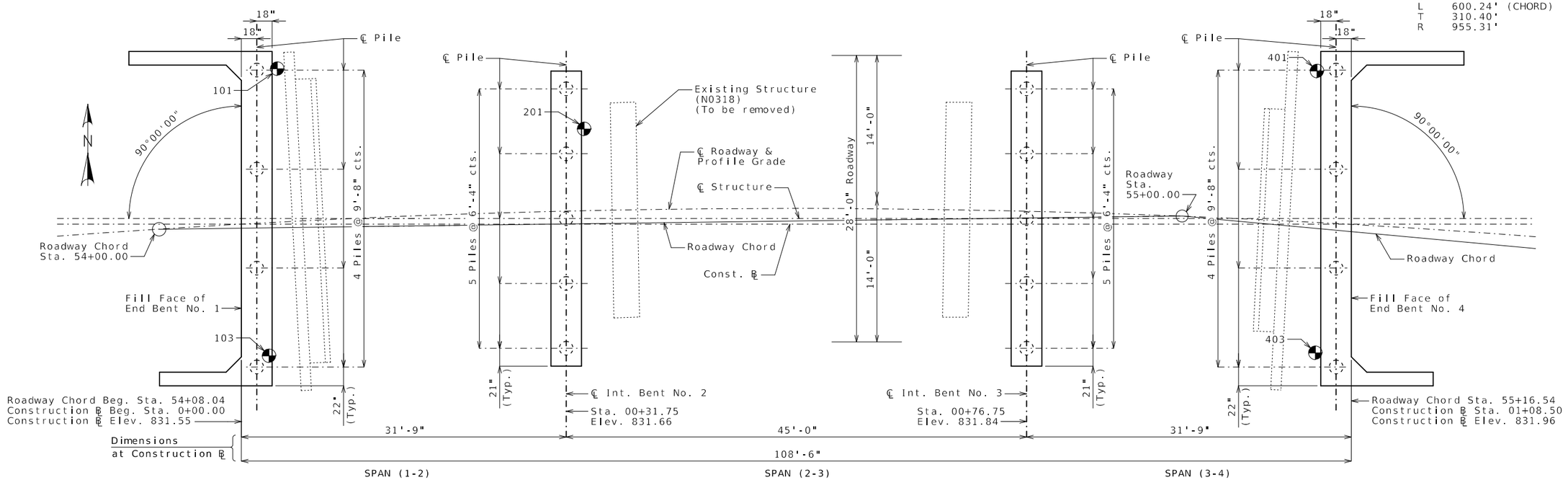

PLAN

(Station and Elevation is along Construction ℄ unless otherwise shown)
(Bridge to be built off of Construction ℄)

Indicates locations of borings.

Notice and Disclaimer Regarding Boring Log Data

The locations of all substructure borings for this structure are shown on the plan(s) sheet for this structure. The boring data for all locations indicated, as well as any other boring logs or other factual records of subsurface data and investigations performed by the department for the design of the project, are shown on Sheet(s) No. 30 and may be included in the Electronic Bridge Deliverables. They will also be available from the Project Contract upon written request. No greater significance or weight should be given to the boring data depicted on the plan sheets than is given to the subsurface data available from the district or elsewhere.

The Commission does not represent or warrant that any such boring data accurately depicts the conditions to be encountered in constructing this project. A contrator assumes all risks it may encounter in basing its bid prices, time or schedule of performance on the boring data depicted here or those available from the district, or on any other documentation not expressly warranted, which the contractor may obtain from the Commission.

Note:

For General Notes, Foundation Data, Estimated Quantities, Estimated Quantities for Slab on Concrete I-Girder, Location Sketch and Hydrologic data, see Sheet No. 2.

B.M.

STA. 54+13.03 12.20' LT. "□" CUT IN WINGWALL ELEV. 831.53
STA. 55+09.82 13.11' RT. "□" CUT IN WINGWALL ELEV. 830.96

BRIDGE: ROUTE U OVER TOM CREEK

ROUTE U FROM ROUTE 13 TO ROUTE B
ABOUT 1.0 MILE EAST OF ROUTE 13
BEGINNING STATION 54+08.04 (ALONG ROADWAY CHORD)

Designed Aug. 2025
Detailed Sep. 2025
Checked Oct. 2025

Note: This drawing is not to scale. Follow dimensions.

STATE OF MISSOURI
TRENTON B. CRAWFORD
NUMBER PE-2012018053
PROFESSIONAL ENGINEER
THIS SHEET HAS BEEN SIGNED, SEALED AND DATED ELECTRONICALLY.

DATE PREPARED	12/17/2025
ROUTE	U
STATE	MO
DISTRICT	BR
SHEET NO.	1
COUNTY	CALDWELL
JOB NO.	JNW0144
CONTRACT ID.	
PROJECT NO.	
BRIDGE NO.	A9660

DESCRIPTION

DATE

MISSOURI HIGHWAYS AND TRANSPORTATION COMMISSION
105 WEST CAPITOL
JEFFERSON CITY, MO 65102
1-888-ASK-MODOT (1-888-275-6636)

Foundation Data

Type	Design Data		Bent Number 1	2	3	4
Load Bearing Pile	Pile Type and Size		CECIP 16"	CECIP 16"	CECIP 16"	CECIP 16"
	Number	ea	4	5	5	4
	Approximate Length Per Each	ft	39	42	42	25
	Pile Point Reinforcement	ea	ALL	ALL	ALL	ALL
	Min. Galvanized Penetration (Elev.)	ft	Full Length	Full Length	Full Length	Full Length
	Est. Max. Scour Depth 100 (Elev.)	ft	-	802.9	803.8	-
	Minimum Tip Penetration (Elev.)	ft	803.46	783.56	783.73	802.86
	Criteria for Min. Tip Penetration		Lat Stability	Scour	Scour	Lat Stability
	Pile Driving Verification Method		WEAP	WEAP	WEAP	WEAP
	Resistance Factor		0.5	0.5	0.5	0.5
	Minimum Nominal Axial Compressive Resistance	kip	295	319	319	294

CECIP= Closed Ended Cast-In-Place concrete pile

WEAP= Wave Equation Analysis of Piles

Load Bearing Pile:
Minimum Nominal Axial Compressive Resistance = Maximum Factored Loads/Resistance Factor

Pile point reinforcement need not be galvanized. Shop drawings will not be required for pile point reinforcement.

All piles shall be galavanized down to the minimum galavanized penetration (elevation).

The contractor shall make every effort to achieve the minimum galvanized penetration (elevation) shown on the plans for all piles. Deviations in penetration less that 5 feet of the minimum will be considered acceptable provided the contractor makes the necessary corrections to ensure the minimum penetration is achieved on subsequent piles.

Prebore for piles at Bents No. 2 and 3 to elevations 802.9 and 803.8, respectively.

Estimated Maximum Scour Depth (Elevation) shown is for verifying Minimum Nominal Axial Compressive Resistance using dynamic testing only where pile resistance contribution above this elevation shall not be considered.

Hydrologic Data

Drainage Area = 11 mi^2
Design Flood Frequency = 15.5 years
Design Flood Discharge = 2800 cfs
Design Flood (D.F.) Elevation = 822.5
Base Flood (100-year)
Base Flood Elevation = 826.1
Base Flood Discharge = 4600 cfs
Estimated Backwater = 0.6 ft
Average Velocity thru Opening = 5.4 ft/s
Freeboard (50-year)
Freeboard = 1.1 ft
Roadway Overtopping
Overtopping Flood Discharge = 2900 cfs
Overtopping Flood Frequency = 17.5 years
Overtopping Flood Elevation = 823.7

Estimated Quantities

Item		Substr.	Superstr.	Total
Class 1 Excavation	cu. yard	90		90
Removal of Bridges	lump sum			1
Bridge Approach Slab (Minor)	sq. yard		136	136
Galvanized Cast-In-Place Concrete Piles (16 in.)	linear foot	676		676
Pile Wave Analysis	each	4		4
Pre-Bore for Piling	linear foot	135		135
Pile Point Reinforcement	each	18		18
Class B Concrete (Substructure)	cu. yard	55.1		55.1
Slab on Concrete I-Girder	sq. yard		390	390
Type D Barrier	linear foot		255	255
Type 2 (32 in.), P/S Concrete I-Girder	linear foot		419	419
Reinforcing Steel (Bridges)	pound	4190		4190
Slab Drain	each		8	8
Vertical Drain at End Bents	each			2
Plain Neoprene Bearing Pad	each		8	8
Laminated Neoprene Bearing Pad	each		16	16

All concrete above the construction joint in the end bents is included in the Estimated Quantities for Slab on Concrete I-Girder.

All reinforcement in the end bents and all reinforcement in cast-in-place pile at end bents is included in the Estimated Quantities for Slab on Concrete I- Girder.

All reinforcement in the intermediate bent concrete diaphragms except reinforcement embedded in the beam cap is included in the Estimated Quantities for Slab on Concrete I-Girder.

All concrete above the intermediate beam cap is included in the Estimated Quantities for Slab on Concrete I-Girder.

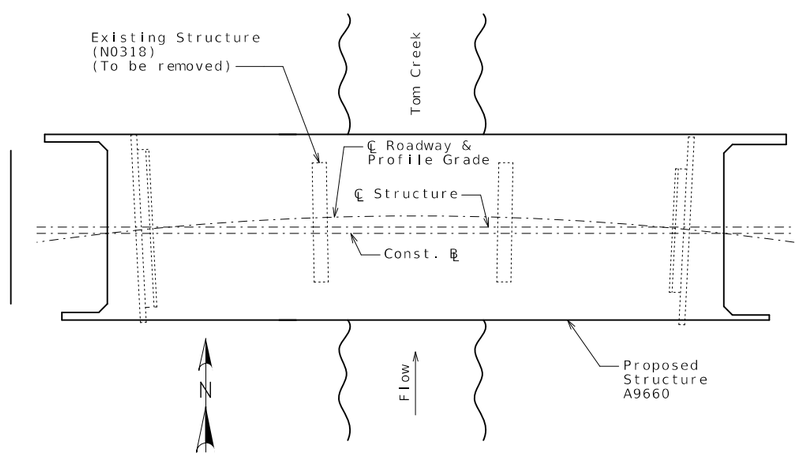

LOCATION SKETCH

Estimated Quantities for Slab on Concrete I-Girder

Item		Total
Class B-2 Concrete	cu. yard	112.4
Reinforcing Steel (Epoxy Coated)	pound	28,600

The table of Estimated Quantities for Slab on Concrete I-Girder represents the quantities used by the State in preparing the cost estimate for concrete slabs. The area of the concrete slab will be measured to the nearest square yard longitudinally from end of slab to end of slab and transversely from out to out of bridge slab (or with the horizontal dimensions as shown on the plan of slab). Payment for prestressed panels, conventional forms, all concrete and epoxy coated reinforcing steel will be considered completely covered by the contract unit price for the slab. Variations may be encountered in the estimated quantities but the variations cannot be used for an adjustment in the contract unit price.

Method of forming the slab shall be as shown on the plans and in accordance with Sec 703. All hardware for forming the slab to be left in place as a permanent part of the structure shall be coated in accordance with ASTM A123 or ASTM B633 with a thickness class SC 4 and a finish type I, II or III.

Class B-2 Concrete quantity is based on minimum top flange thickness and minimum joint material thickness.

The prestressed panel quantities are not included in the table of Estimated Quantities for Slab on Concrete I-Girder.

General Notes:

Design Specifications:

2023 AASHTO Guide Specifications for LRFD Seismic Bridge Design (3rd Ed.)
Seismic Design Category = A (Nonseismic)
Design earthquake response spectral acceleration coefficient at 1.0 second period, SD1 < 0.15
Acceleration Coefficient (effective peak ground acceleration coefficient), As = 0.048g

Design Loading:

Vehicular = HL-93
Future Wearing Surface = 35 lb/sf
Earth = 120 lb/cf
Eqivalent Fluid Pressure = 45 lb/cf (Min.)
Superstructure: Simply-Supported, Non-Composite for dead load.
Continuous Composite for live load.

Design Unit Stresses:

Class B Concrete (Substructure)	f'c = 3,000 psi
Class B-1 Concrete (Barrier)	f'c = 4,000 psi
Class B-2 Concrete (Superstructure, except Prestressed Girders and Barrier)	f'c = 4,000 psi
Reinforcing Steel (ASTM A615 Grade 60)	fy = 60,000 psi
Welded or Seamless steel shell (pipe) for CIP pile (ASTM A252 Modified Grade 3)	fy = 50,000 psi

For precast prestressed panel stresses, see Sheet No. 16.

For prestressed girder stresses, see Sheets No. 13 & 14.

Neoprene Pads:

Neoprene bearing pads shall be 60 durometer and shall be in accordance with Sec 716.

Joint Filler

All joint filler shall be in accordance with Sec 1057 for preformed sponge rubber expansion and partition joint filler, except as noted.

Reinforcing Steel:

Minimum clearance to reinforcing steel shall be 1 1/2", unless otherwise shown.

Minimum clearance between galvanized piles and uncoated (plain) reinforcing steel including bar supports shall be 1 1/2". Nylon, PVC, or polyethylene spacers shall be used to maintain clearance. Nylon cable ties shall be used to bind the spacers to the reinforcement.

Traffic Handling:

Structure to be closed during construction. Traffic to be maintained on other routes. See roadway plans for traffic control.

Miscellaneous:

MoDOT Construction personnel will indicate the type of joint filler option used under the precast panels for this structure:
☐ Constant Joint Filler
☐ Variable Joint Filler

STATE OF MISSOURI
TRENTON B. CRAWFORD
NUMBER PE-2012018053
PROFESSIONAL ENGINEER
THIS SHEET HAS BEEN SIGNED, SEALED AND DATED ELECTRONICALLY.

DATE PREPARED 12/17/2025

ROUTE	STATE
U	MO
DISTRICT	SHEET NO.
BR	2

COUNTY CALDWELL
JOB NO. JNW0144
CONTRACT ID.
PROJECT NO.
BRIDGE NO. A9660

DESCRIPTION | DATE

MISSOURI HIGHWAYS AND TRANSPORTATION COMMISSION
105 WEST CAPITOL
JEFFERSON CITY, MO 65102
1-888-ASK-MODOT (1-888-275-6636)

Detailed Sep. 2025
Checked Oct. 2025

Note: This drawing is not to scale. Follow dimensions.

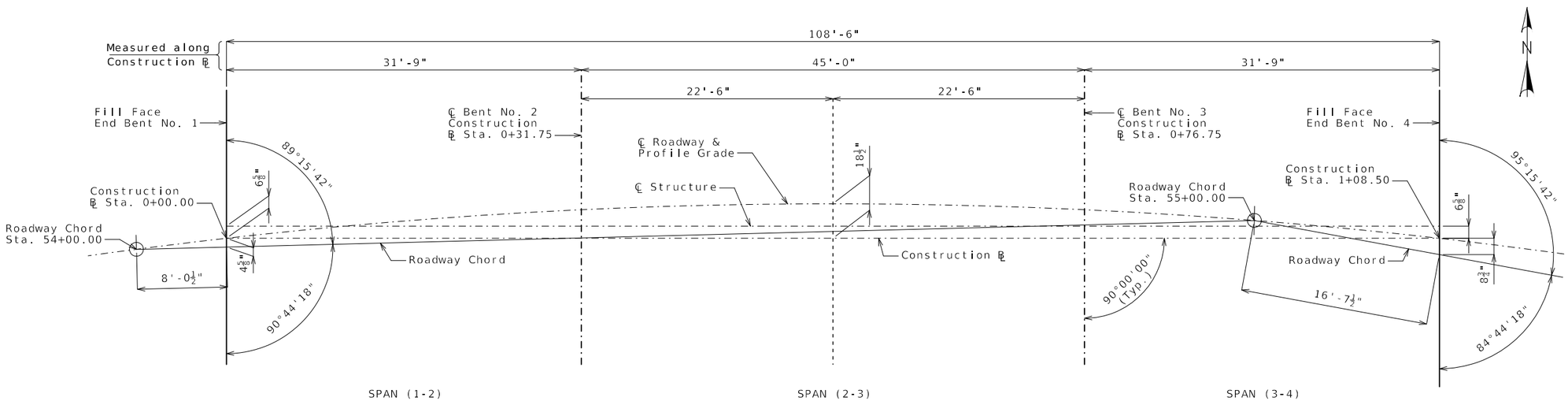

PI	55+58.90
PC	52+48.48
PT	58+48.50
Δ	36°0'0.0" (RT)
D	5°59'59.9"
L	600.28' (CHORD)
T	310.42' (CHORD)
R	955.37'

Note:

All dimensions are horizontal.

SUBSTRUCTURE LAYOUT

Detailed Nov. 2025
Checked Nov. 2025

Note: This drawing is not to scale. Follow dimensions.

STATE OF MISSOURI
TRENTON B. CRAWFORD
NUMBER PE-2012018053
PROFESSIONAL ENGINEER

THIS SHEET HAS BEEN SIGNED, SEALED AND DATED ELECTRONICALLY.

DATE PREPARED	12/17/2025
ROUTE	U
STATE	MO
DISTRICT	BR
SHEET NO.	3
COUNTY	CALDWELL
JOB NO.	JNW0144
CONTRACT ID.	
PROJECT NO.	
BRIDGE NO.	A9660

DESCRIPTION

DATE

MISSOURI HIGHWAYS AND TRANSPORTATION COMMISSION

105 WEST CAPITOL
JEFFERSON CITY, MO 65102
1-888-ASK-MODOT (1-888-275-6636)

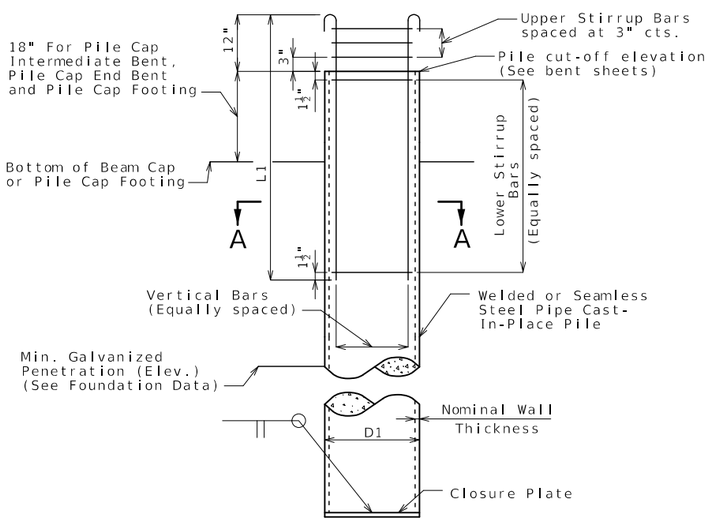

GALVANIZED CLOSED ENDED CAST-IN-PLACE (CECIP) CONCRETE PILE WITHOUT PILE POINT REINFORCEMENT

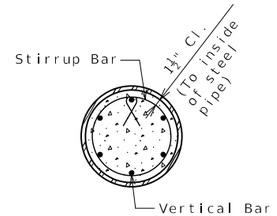

SECTION A-A

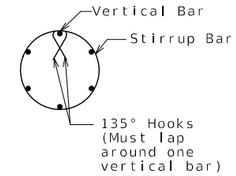

DETAIL OF SEISMIC STIRRUP BAR

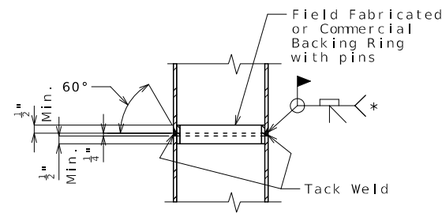

STEEL PIPE PILE SPLICE

* Galvanizing material shall be omitted or removed one inch clear of weld locations in accordance with Sec 702.

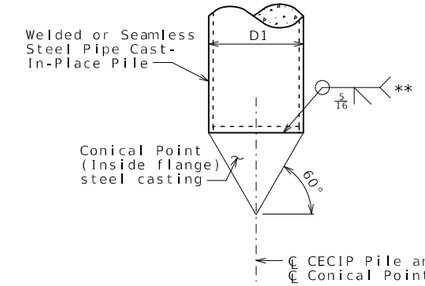

MANUFACTURED CONICAL PILE POINT

(Omit closure plate)

** If the conical pile point is not pre-beveled, place a 3/8" bevel at 40 degrees on the pipe.

Galvanized Closed Ended Cast-In-Place (CECIP) Concrete Pile Data				
Bent Number	1	2	3	4
D1, CECIP Pile (O.D.)	16"	16"	16"	16"
Min. Nominal Wall Thickness	1/2"	1/2"	1/2"	1/2"
Closure Plate Thickness	3/4"	3/4"	3/4"	3/4"
Pile Point Reinforcement	Conical	Conical	Conical	Conical
Vertical Bars	6-#6-V105	6-#6-V200	6-#6-V300	6-#6-V405
L1, Length of Vertical Bars	6'-3"	6'-3"	6'-3"	6'-3"
Upper Stirrup Bars	3-#4-P100	3-#4-P200	3-#4-P300	3-#4-P400
Lower Stirrup Bars	5-#4-P100	5-#4-P200	5-#4-P300	5-#4-P400

Notes:

Welded or seamless steel shell (pipe) shall be ASTM A252 Modified Grade 3 (fy = 50,000 psi) with physical and chemical requirements that meet ASTM A572 Grade 50. Pipe certification and source material certification shall be required.

Concrete for cast-in-place pile shall be Class B-1.

Steel for closure plate shall be ASTM A709 Grade 50.

Steel casting for conical pile point reinforcement shall be ASTM A148 Grade 90-60.

The minimum wall thickness of any spot or local area of any type shall not be more than 12.5% under the specified nominal wall thickness.

The contractor shall determine the pile wall thickness required to avoid damage from all driving activities, but wall thickness shall not be less than the minimum specified. No additional payment will be made for furnishing a thicker pile wall than specified on the plans.

Closure plate shall not project beyond the outside diameter of the pipe pile. Satisfactory weldments may be made by beveling tip end of pipe or by use of inside backing rings. In either case, proper gaps shall be used to obtain weld penetration full thickness of pipe. Payment for furnishing and installing closure plate will be considered completely covered by the contract unit price for Galvanized Cast-In-Place Concrete Piles.

Splices of pipe for cast-in-place concrete pile shall be made watertight and to the full strength of the pipe above and below the splice to permit hard driving without damage. Pipe damaged during driving shall be replaced without cost to the state. Pipe sections used for splicing shall be at least 5 feet in length.

At the contractor's option, the hooks of vertical bars embedded in the beam cap may be oriented inward or outward.

Closure plate need not be galvanized.

Reinforcing steel for cast-in-place piles is included in the Bill of Reinforcing Steel.

All reinforcement for cast-in-place pile at end bents is included in the Estimated Quantities for Slab on Concrete I-Girder. Reinforcement for cast-in-place pile at intermediate bents is included in the substructure quantity tables.

For Foundation Data table, see Sheet No. 2.

STATE OF MISSOURI
TRENTON B. CRAWFORD
NUMBER PE-2012018053
PROFESSIONAL ENGINEER
THIS SHEET HAS BEEN SIGNED, SEALED AND DATED ELECTRONICALLY.

DATE PREPARED 12/17/2025
ROUTE U | STATE MO
DISTRICT BR | SHEET NO. 4
COUNTY CALDWELL
JOB NO. JNW0144
CONTRACT ID.
PROJECT NO.
BRIDGE NO. A9660

DESCRIPTION | DATE

MISSOURI HIGHWAYS AND TRANSPORTATION COMMISSION
105 WEST CAPITOL
JEFFERSON CITY, MO 65102
1-888-ASK-MODOT (1-888-275-6636)

GALVANIZED CLOSED ENDED CAST-IN-PLACE (CECIP) CONCRETE PILE

Detailed Aug. 2025
Checked Oct. 2025

Note: This drawing is not to scale. Follow dimensions.

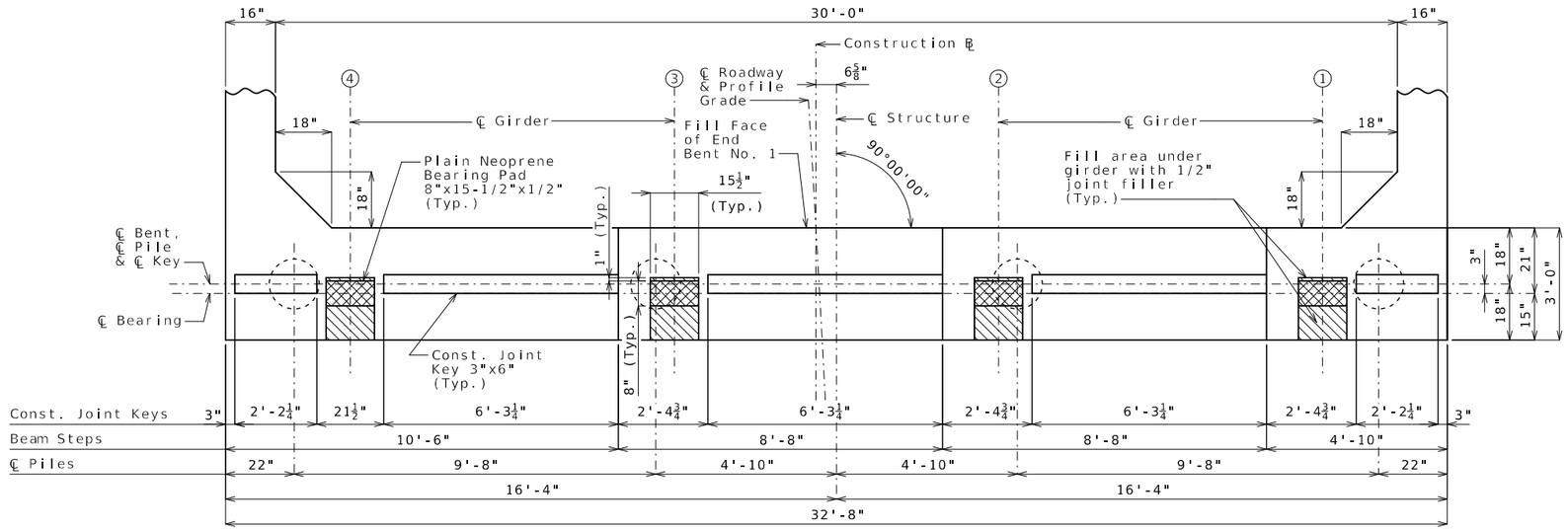

PLAN OF BEAM SHOWING DIMENSIONS

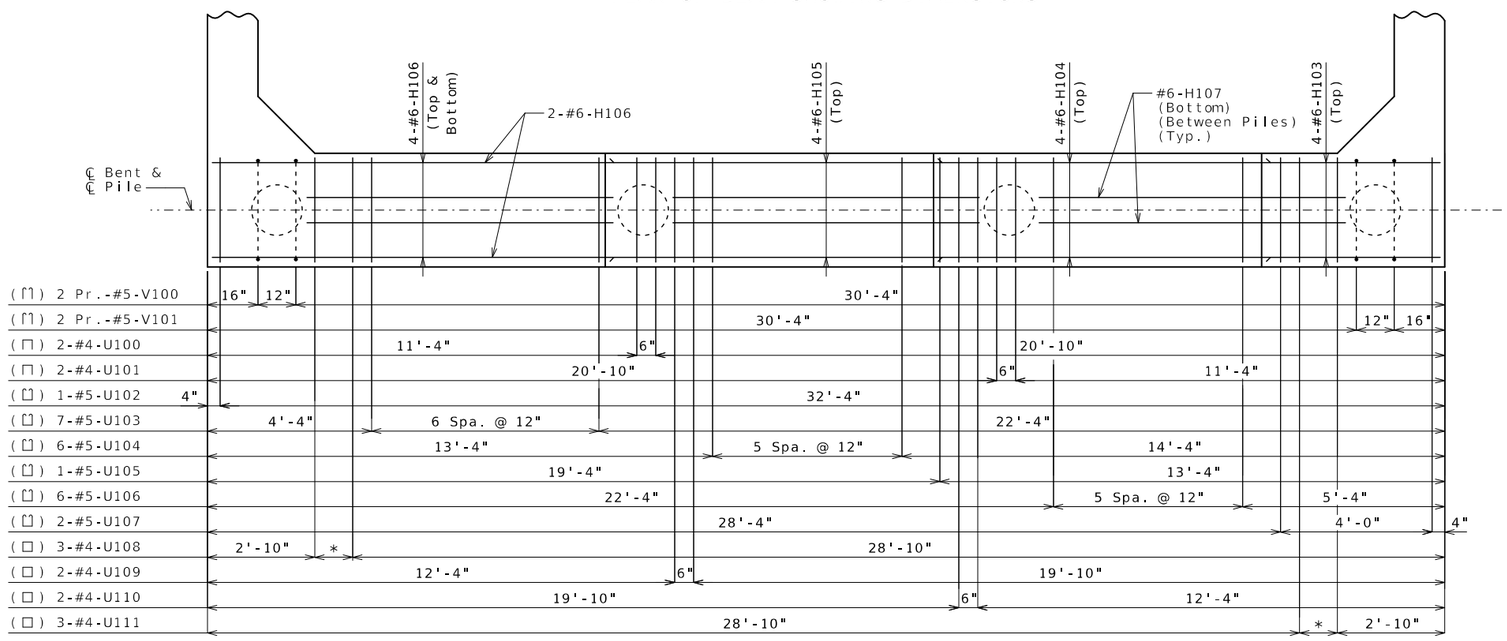

* 2 Spa. @ 6"

PLAN OF BEAM SHOWING REINFORCEMENT

Keys not shown for clarity

Notes:

Work this sheet with Sheets No. 6 & 7.

For details of Vertical Drain at End Bent, see Sheet No. 8.

Reinforcing steel shall be shifted to clear piles. U bars shall clear piles by at least 1 1/2 inches.

All U bars and pairs of V bars shall be placed parallel to centerline of structure.

Substructure Quantity Table for Bent No. 1		
Item		Quantity
Class 1 Excavation	cu. yard	45
Galvanized Cast-In-Place Concrete Piles (16 in.)	linear foot	156
Pile Wave Analysis	each	1
Pile Point Reinforcement	each	4
Class B Concrete (Substructure)	cu. yard	18.0

These quantities are included in the Estimated Quantities table on Sheet No. 2.

END BENT NO. 1

Detailed Sep. 2025
Checked Oct. 2025

Note: This drawing is not to scale. Follow dimensions.

STATE OF MISSOURI
TRENTON B. CRAWFORD
NUMBER PE-2012018053
PROFESSIONAL ENGINEER

THIS SHEET HAS BEEN SIGNED, SEALED AND DATED ELECTRONICALLY.

DATE PREPARED	
12/17/2025	
ROUTE U	STATE MO
DISTRICT BR	SHEET NO. 5
COUNTY CALDWELL	
JOB NO. JNW0144	
CONTRACT ID.	
PROJECT NO.	
BRIDGE NO. A9660	

DESCRIPTION	DATE

MISSOURI HIGHWAYS AND TRANSPORTATION COMMISSION
105 WEST CAPITOL
JEFFERSON CITY, MO 65102
1-888-ASK-MODOT (1-888-275-6636)

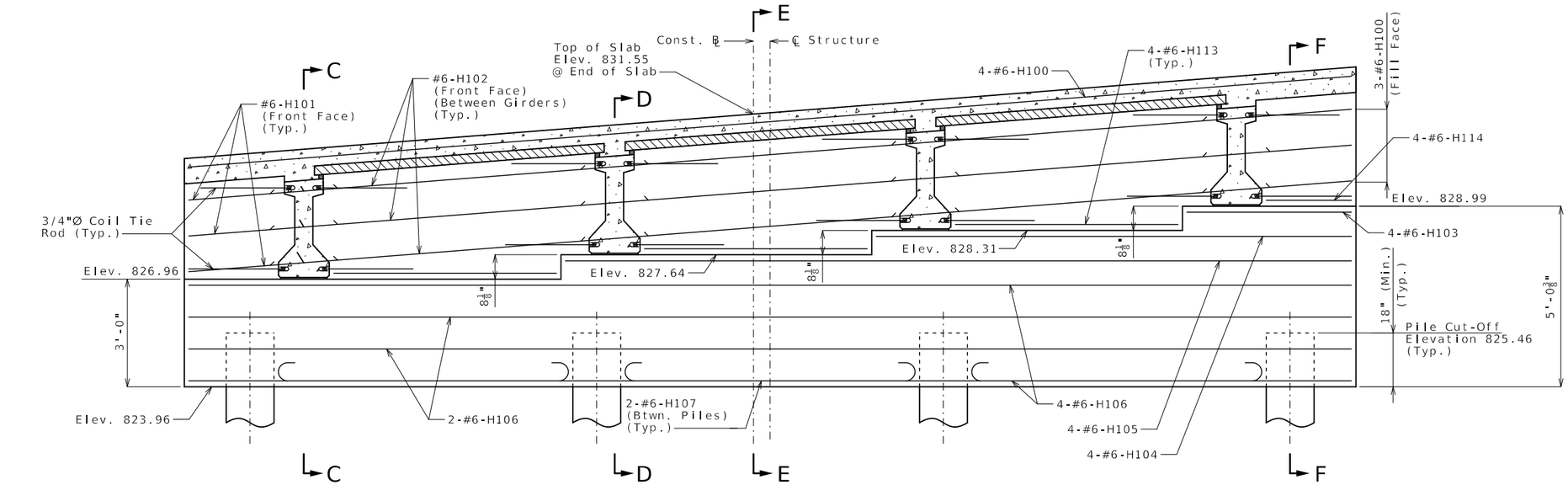

SECTION NEAR END BENT
(Keys not shown for clarity)

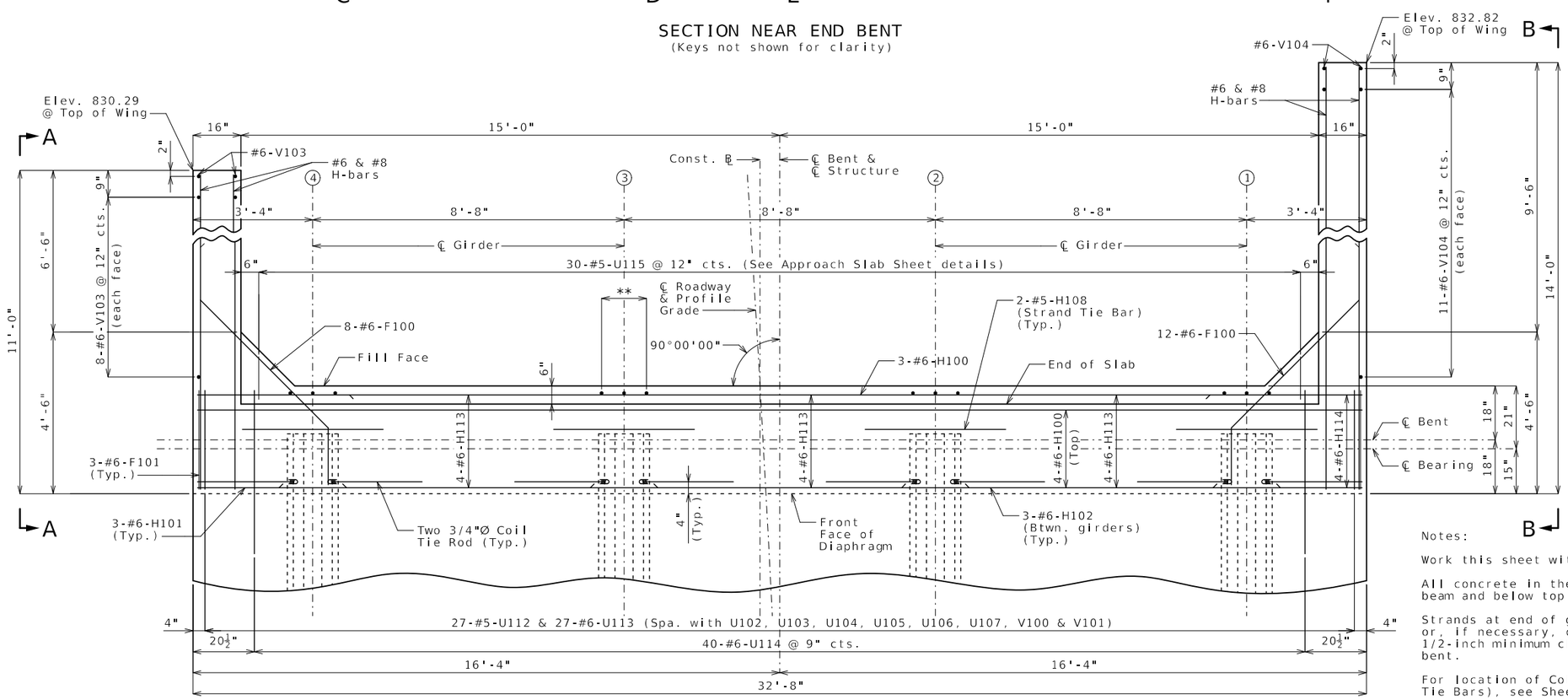

PART PLAN

** 3-#6-V102 @ 9" cts. (Typ.)

END BENT NO. 1

Notes:

Work this sheet with Sheets No. 5 & 7.

All concrete in the end bent above top of beam and below top of slab shall be Class B-2.

Strands at end of girders shall be field bent or, if necessary, cut in field to maintain 1 1/2-inch minimum clearance to fill face of end bent.

For location of Coil Ties & #5-H108 (Strand Tie Bars), see Sheet No. 14.

The #6-F100 bars shall be bent in field to clear girders.

For details of bridge approach slab, see Sheet No. 25.

For details of vertical drain at end bent, see Sheet No. 8.

Detailed Sep. 2025
Checked Oct. 2025

Note: This drawing is not to scale. Follow dimensions.

STATE OF MISSOURI
TRENTON B. CRAWFORD
NUMBER PE-2012018053
PROFESSIONAL ENGINEER
THIS SHEET HAS BEEN SIGNED, SEALED AND DATED ELECTRONICALLY.

DATE PREPARED	12/17/2025
ROUTE	U
STATE	MO
DISTRICT	BR
SHEET NO.	6
COUNTY	CALDWELL
JOB NO.	JNW0144
CONTRACT ID.	
PROJECT NO.	
BRIDGE NO.	A9660

DATE	DESCRIPTION

MISSOURI HIGHWAYS AND TRANSPORTATION COMMISSION
105 WEST CAPITOL
JEFFERSON CITY, MO 65102
1-888-ASK-MODOT (1-888-275-6636)

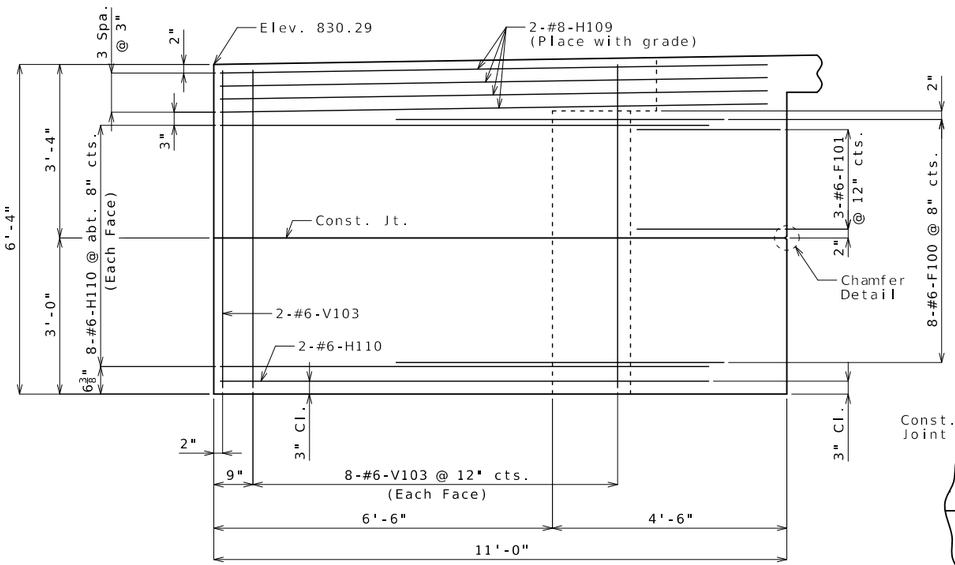

ELEVATION A-A

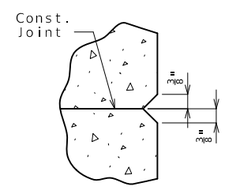

CHAMFER DETAIL

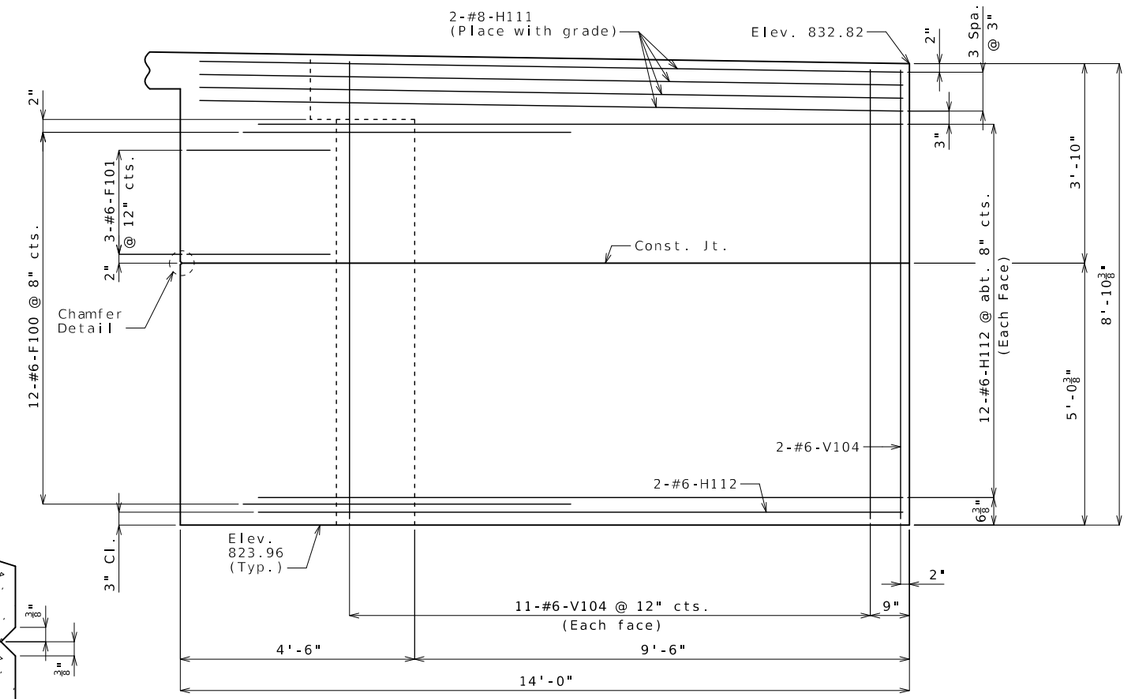

ELEVATION B-B

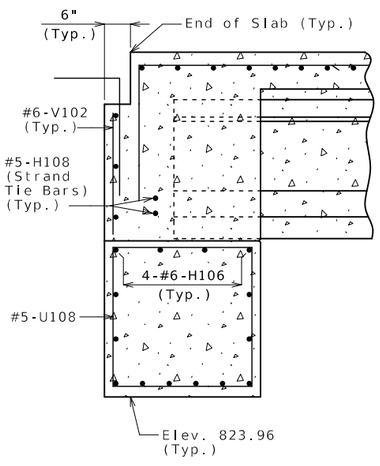

SECTION C-C

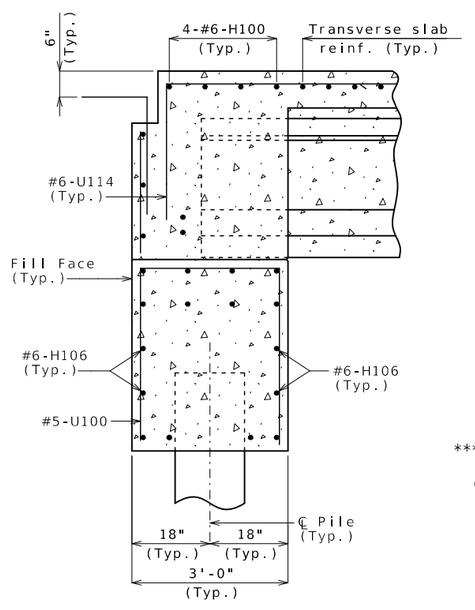

SECTION D-D

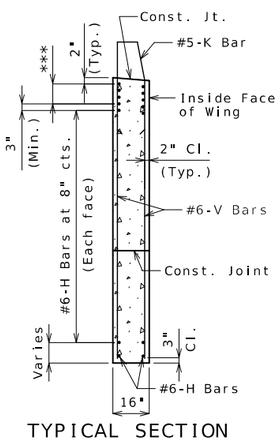

TYPICAL SECTION
THRU WING

*** #8-H Bars at 3" cts.
(Each face)(Place with grade)

(Left wing shown, right wing similar)

Notes:

Work this sheet with Sheets No. 5 & 6.

For reinforcement of the barrier, see Sheets No. 23 & 24.

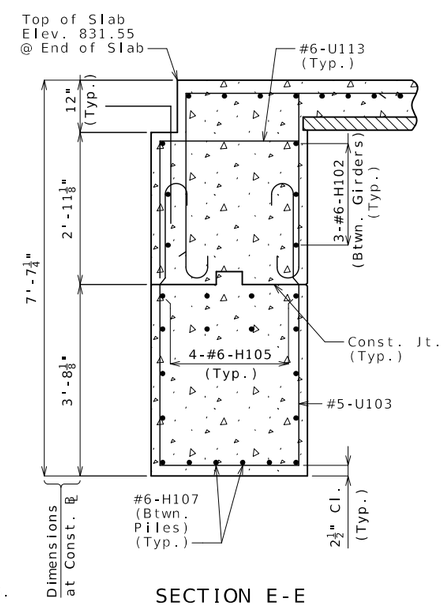

SECTION E-E

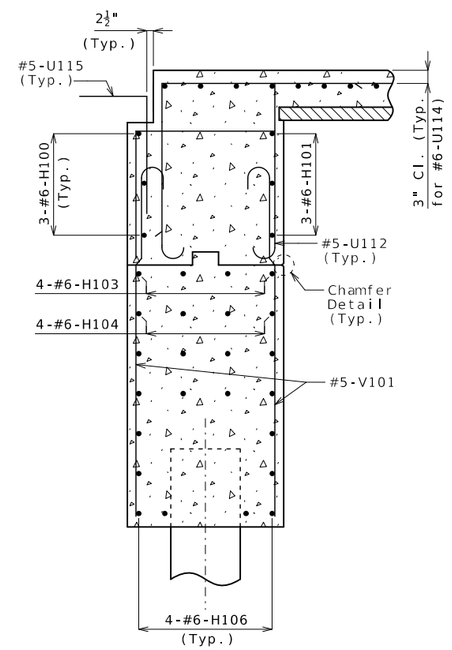

SECTION F-F

END BENT NO. 1

Detailed Sep. 2025
Checked Oct. 2025

Note: This drawing is not to scale. Follow dimensions.

STATE OF MISSOURI
TRENTON B. CRAWFORD
NUMBER PE-2012018053
PROFESSIONAL ENGINEER
THIS SHEET HAS BEEN SIGNED, SEALED AND DATED ELECTRONICALLY.

DATE PREPARED	
12/17/2025	
ROUTE U	STATE MO
DISTRICT BR	SHEET NO. 7
COUNTY CALDWELL	
JOB NO. JNW0144	
CONTRACT ID.	
PROJECT NO.	
BRIDGE NO. A9660	

DATE	DESCRIPTION

MISSOURI HIGHWAYS AND TRANSPORTATION COMMISSION
105 WEST CAPITOL
JEFFERSON CITY, MO 65102
1-888-ASK-MODOT (1-888-275-6636)

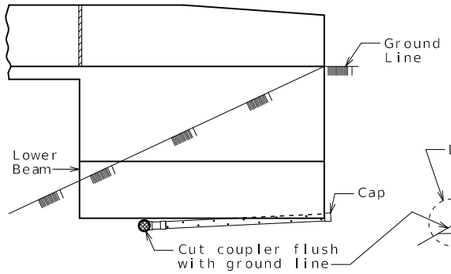

ELEVATION OF WING

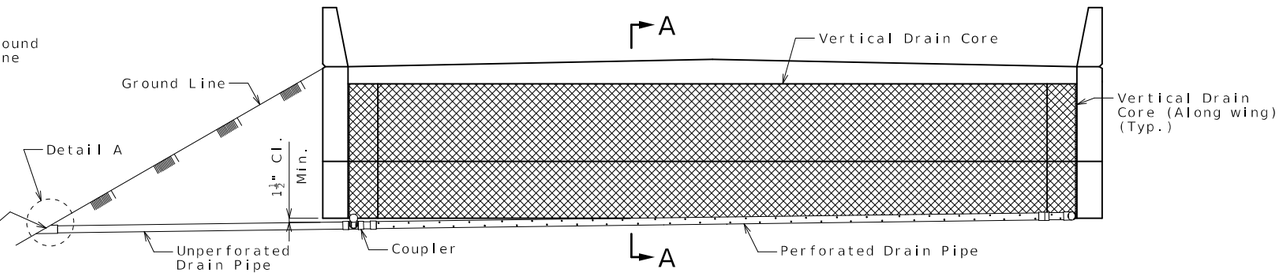

ELEVATION OF END BENT

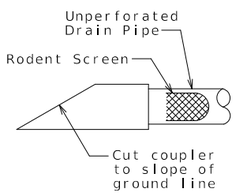

DETAIL A

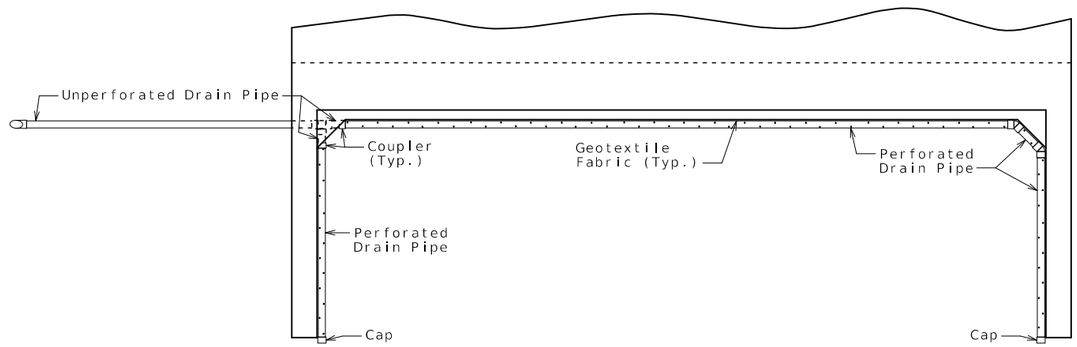

PLAN OF END BENT

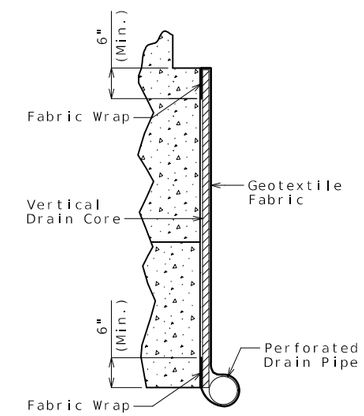

PART SECTION A-A
(Section thru wing similar)

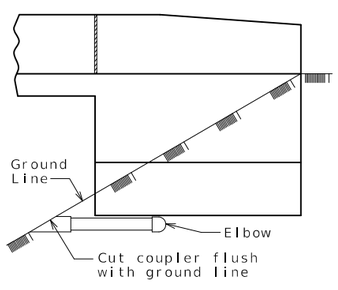

ELEVATION OF WING

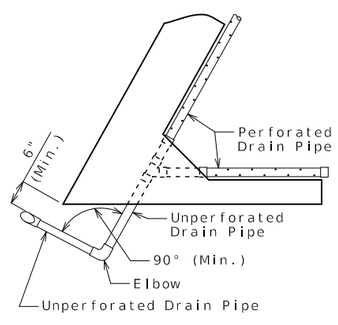

PART PLAN

OPTIONAL TURNED DRAIN
(Use only when straight drain is not practical.)

General Notes:

All drain pipe shall be sloped 1 to 2 percent.

Drain pipe may be either 6-inch diameter corrugated metallic-coated steel pipe underdrain, 4-inch diameter corrugated polyvinyl chloride (PVC) drain pipe, or 4-inch diameter corrugated polyethylene (PE) drain pipe.

Drain pipe shall be placed at fill face of end bent and inside face of wings. The pipe shall slope to lowest grade of ground line, also missing the lower beam of end bent by a minimum of 1 1/2 inches.

Perforated pipe shall be placed at fill face side and inside face of wings at the bottom of end bent and plain pipe shall be used where the vertical drain ends to the exit at ground line.

VERTICAL DRAIN AT END BENTS

(Squared end bent shown, skewed end bent similar)

Detailed Aug. 2025
Checked Oct. 2025

Note: This drawing is not to scale. Follow dimensions.

STATE OF MISSOURI
TRENTON B. CRAWFORD
NUMBER PE-2012018053
PROFESSIONAL ENGINEER
THIS SHEET HAS BEEN SIGNED, SEALED AND DATED ELECTRONICALLY.

DATE PREPARED	
12/17/2025	
ROUTE U	STATE MO
DISTRICT BR	SHEET NO. 8
COUNTY CALDWELL	
JOB NO. JNW0144	
CONTRACT ID.	
PROJECT NO.	
BRIDGE NO. A9660	

DESCRIPTION	DATE

MISSOURI HIGHWAYS AND TRANSPORTATION COMMISSION
105 WEST CAPITOL
JEFFERSON CITY, MO 65102
1-888-ASK-MODOT (1-888-275-6636)

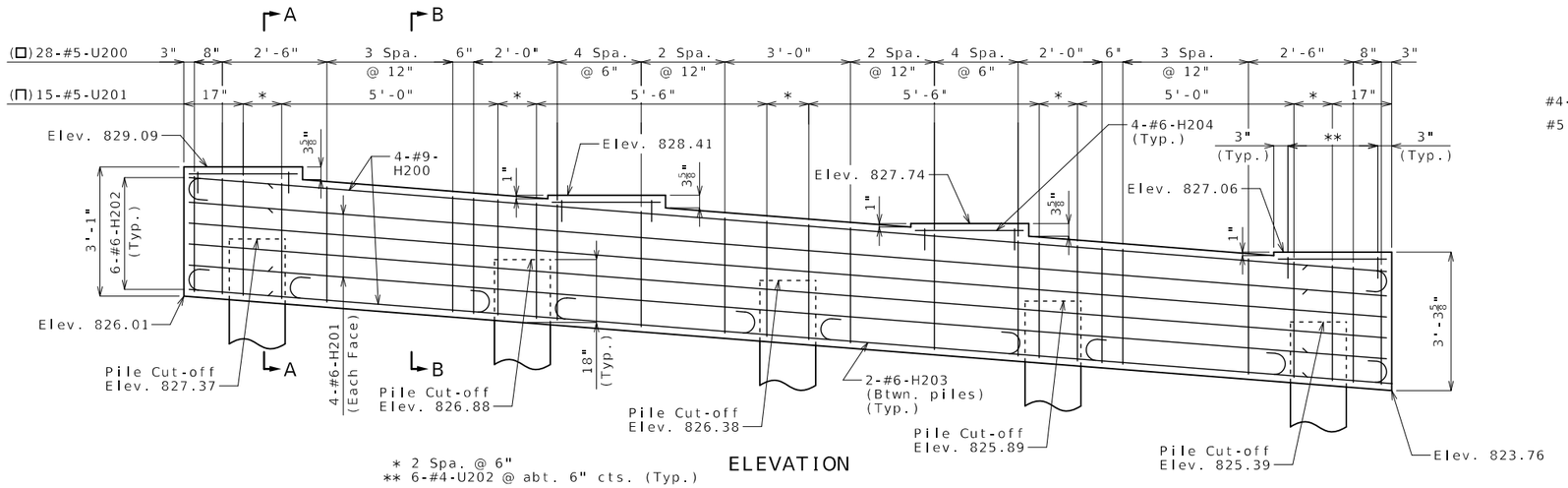

* 2 Spa. @ 6"
** 6-#4-U202 @ abt. 6" cts. (Typ.)

ELEVATION

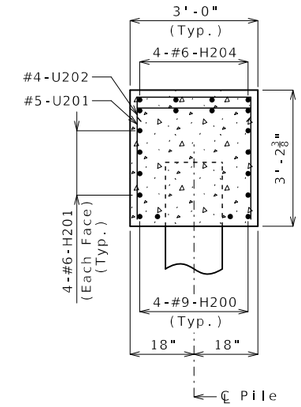

SECTION A-A

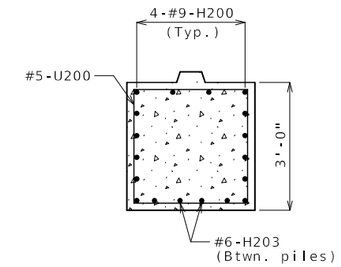

SECTION B-B

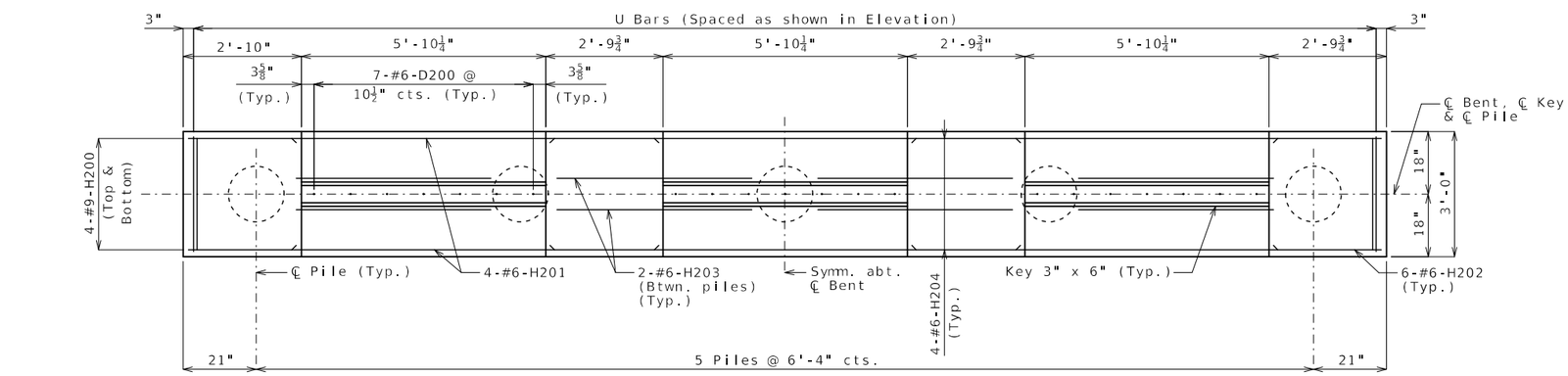

PLAN OF BEAM SHOWING REINFORCEMENT

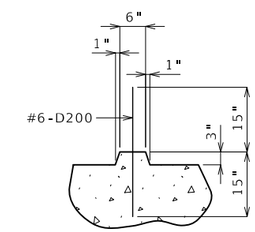

SECTION THRU KEY

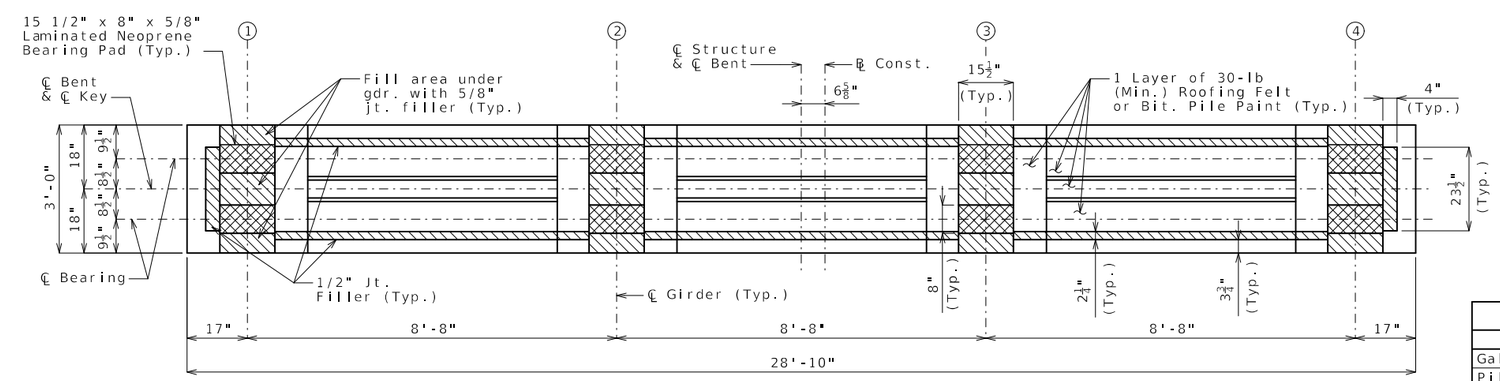

PLAN OF BEAM

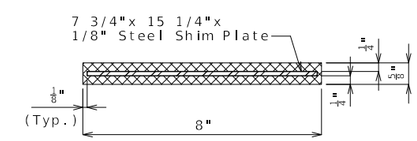

TYPICAL SECTION THRU LAMINATED NEOPRENE BEARING PAD

Notes:

For steps 2 inches or more, use 2 1/4 x 1/2 inch joint filler up vertical face.

Reinforcing steel shall be shifted to clear piles. U bars shall clear piles by at least 1 1/2 inches.

Substructure Quantity Table for Int. Bent No. 2		
Item		Quantity
Galvanized Cast-In-Place Concrete Piles (16 in.)	linear foot	210
Pile Wave Analysis	each	1
Pre-Bore for Piling	linear foot	55
Pile Point Reinforcement	each	5
Class B Concrete (Substructure)	cu. yard	9.6
Reinforcing Steel (Bridges)	pound	2090

These quantities are included in the Estimated Quantities table on Sheet No. 2.

INTERMEDIATE BENT NO. 2

Detailed Oct. 2025
Checked Oct. 2025

Note: This drawing is not to scale. Follow dimensions.

STATE OF MISSOURI
TRENTON B. CRAWFORD
NUMBER PE-2012018053
PROFESSIONAL ENGINEER
THIS SHEET HAS BEEN SIGNED, SEALED AND DATED ELECTRONICALLY.

DATE PREPARED	
12/17/2025	
ROUTE: U	STATE: MO
DISTRICT: BR	SHEET NO.: 9
COUNTY: CALDWELL	
JOB NO.: JNW0144	
CONTRACT ID.	
PROJECT NO.	
BRIDGE NO.: A9660	

DESCRIPTION

DATE

MISSOURI HIGHWAYS AND TRANSPORTATION COMMISSION
105 WEST CAPITOL
JEFFERSON CITY, MO 65102
1-888-ASK-MODOT (1-888-275-6636)

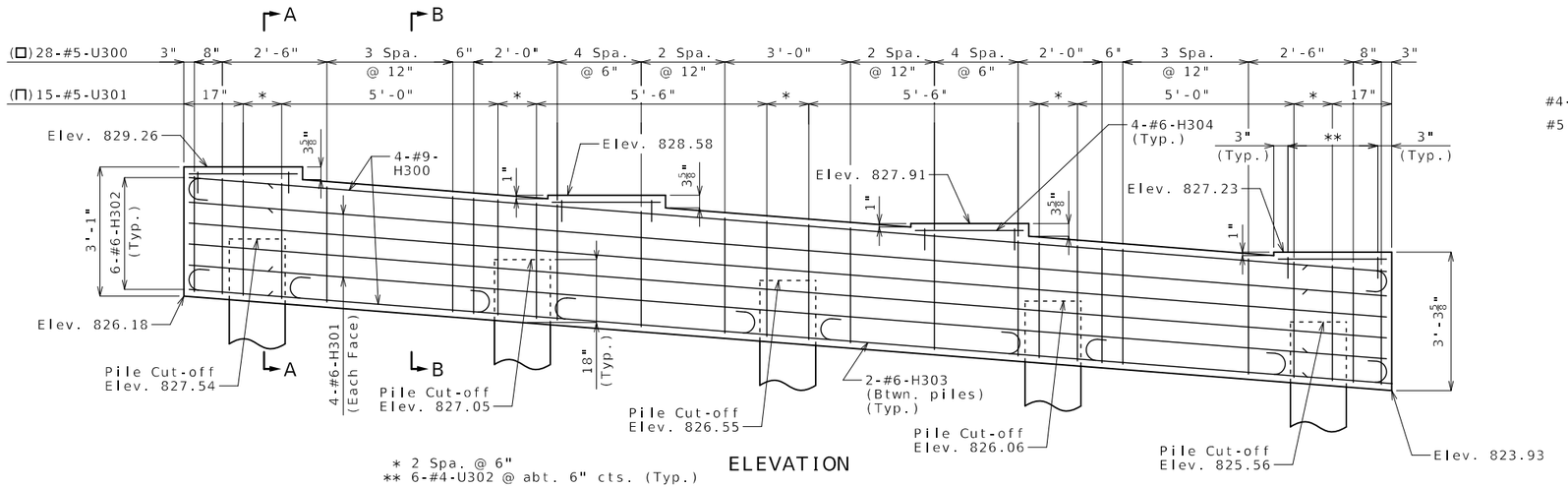

* 2 Spa. @ 6"
** 6-#4-U302 @ abt. 6" cts. (Typ.)

ELEVATION

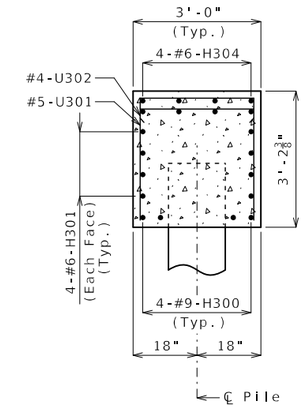

SECTION A-A

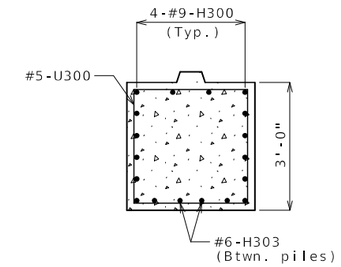

SECTION B-B

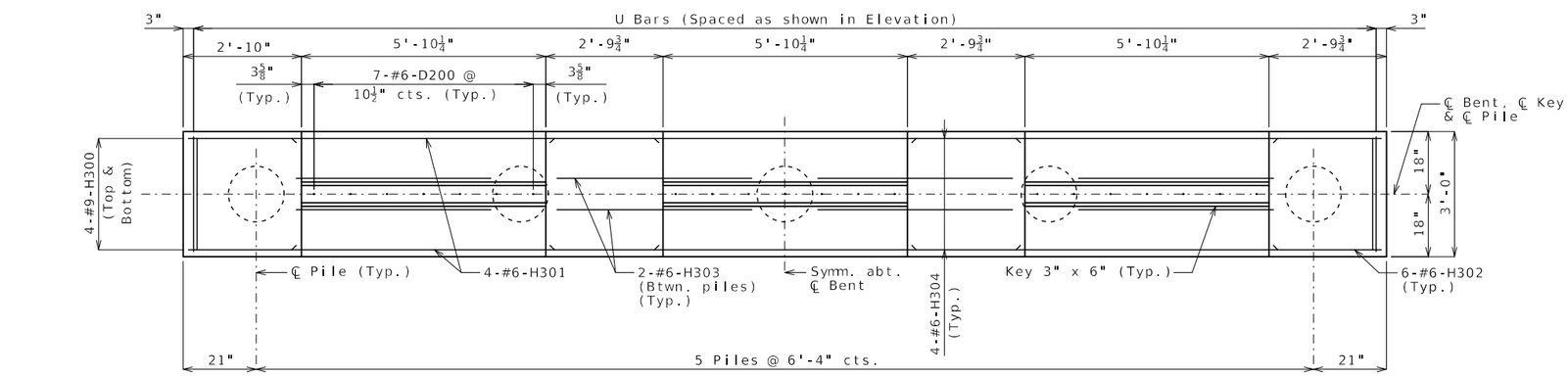

PLAN OF BEAM SHOWING REINFORCEMENT

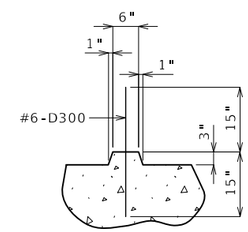

SECTION THRU KEY

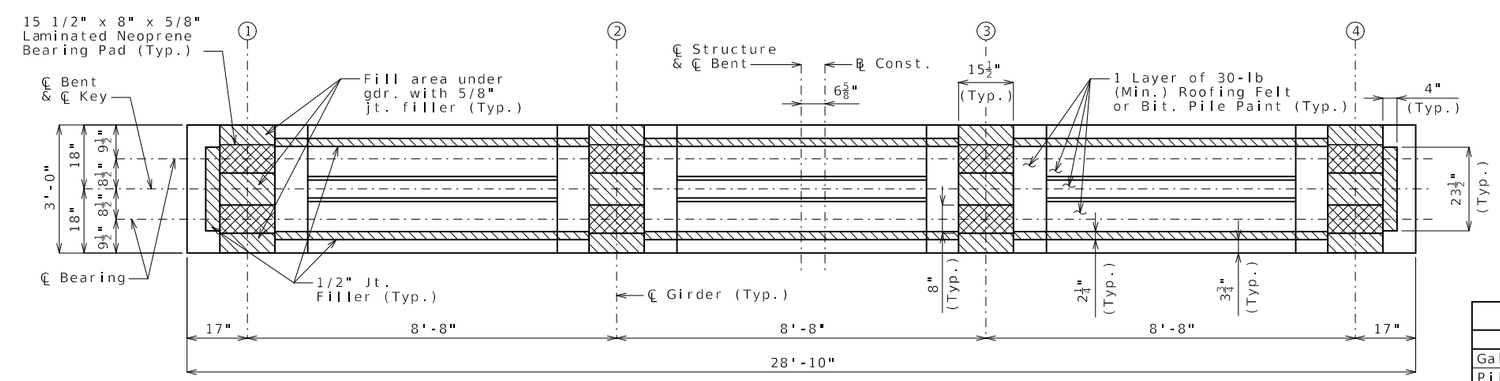

PLAN OF BEAM

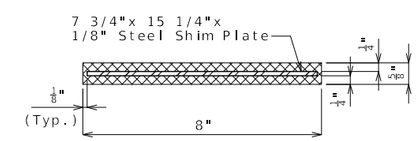

TYPICAL SECTION THRU LAMINATED NEOPRENE BEARING PAD

Notes:

For steps 2 inches or more, use 2 1/4 x 1/2 inch joint filler up vertical face.

Reinforcing steel shall be shifted to clear piles. U bars shall clear piles by at least 1 1/2 inches.

Substructure Quantity Table for Int. Bent No. 3		
Item		Quantity
Galvanized Cast-In-Place Concrete Piles (16 in.)	linear foot	210
Pile Wave Analysis	each	1
Pre-Bore for Piling	linear foot	80
Pile Point Reinforcement	each	5
Class B Concrete (Substructure)	cu. yard	9.6
Reinforcing Steel (Bridges)	pound	2090

These quantities are included in the Estimated Quantities table on Sheet No. 2.

INTERMEDIATE BENT NO. 3

Detailed Oct. 2025
Checked Oct. 2025

Note: This drawing is not to scale. Follow dimensions.

STATE OF MISSOURI
TRENTON B. CRAWFORD
NUMBER PE-2012018053
PROFESSIONAL ENGINEER
THIS SHEET HAS BEEN SIGNED, SEALED AND DATED ELECTRONICALLY.

DATE PREPARED	12/17/2025
ROUTE U	STATE MO
DISTRICT BR	SHEET NO. 10
COUNTY	CALDWELL
JOB NO.	JNW0144
CONTRACT ID.	
PROJECT NO.	
BRIDGE NO.	A9660

DESCRIPTION

DATE

MISSOURI HIGHWAYS AND TRANSPORTATION COMMISSION
105 WEST CAPITOL
JEFFERSON CITY, MO 65102
1-888-ASK-MODOT (1-888-275-6636)

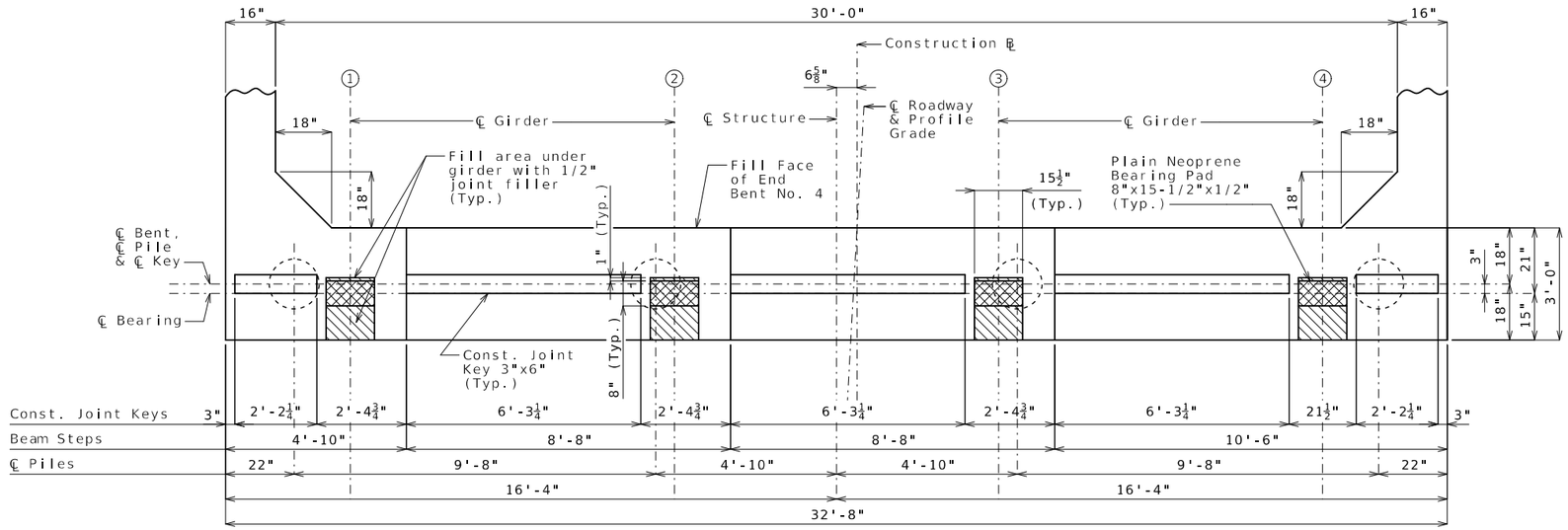

PLAN OF BEAM SHOWING DIMENSIONS

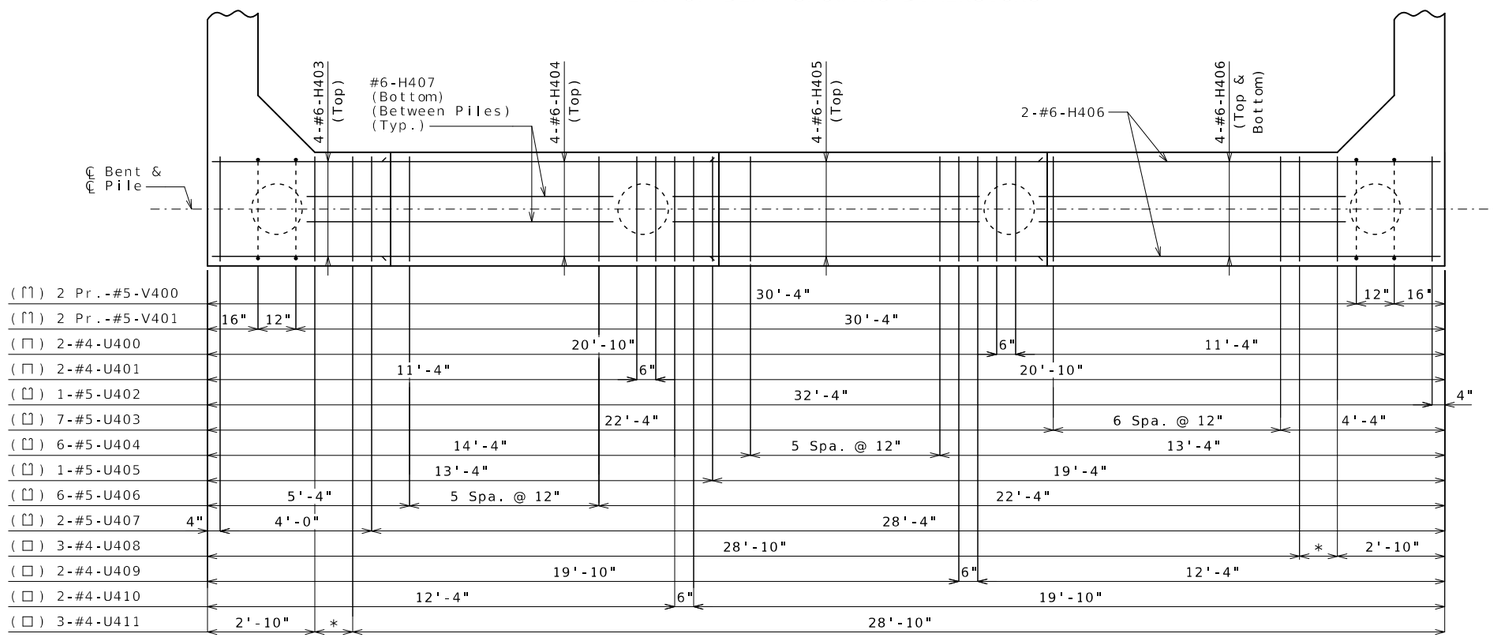

* 2 Spa. @ 6"

PLAN OF BEAM SHOWING REINFORCEMENT

Keys not shown for clarity

Notes:

Work this sheet with Sheets No. 12 & 13.

For details of Vertical Drain at End Bent, see Sheet No. 8.

Reinforcing steel shall be shifted to clear piles. U bars shall clear piles by at least 1 1/2 inches.

All U bars and pairs of V bars shall be placed parallel to centerline of structure.

Substructure Quantity Table for Bent No. 4		
Item		Quantity
Class 1 Excavation	cu. yard	45
Galvanized Cast-In-Place Concrete Piles (16 in.)	linear foot	100
Pile Wave Analysis	each	1
Pile Point Reinforcement	each	4
Class B Concrete (Substructure)	cu. yard	18.0

These quantities are included in the Estimated Quantities table on Sheet No. 2.

END BENT NO. 4

Detailed Sep. 2025
Checked Oct. 2025

Note: This drawing is not to scale. Follow dimensions.

STATE OF MISSOURI
TRENTON B. CRAWFORD
NUMBER PE-2012018053
PROFESSIONAL ENGINEER
THIS SHEET HAS BEEN SIGNED, SEALED AND DATED ELECTRONICALLY.

DATE PREPARED 12/17/2025

ROUTE	STATE
U	MO
DISTRICT	SHEET NO.
BR	11

COUNTY CALDWELL

JOB NO. JNW0144

CONTRACT ID.

PROJECT NO.

BRIDGE NO. A9660

DATE	DESCRIPTION

MISSOURI HIGHWAYS AND TRANSPORTATION COMMISSION
105 WEST CAPITOL
JEFFERSON CITY, MO 65102
1-888-ASK-MODOT (1-888-275-6636)

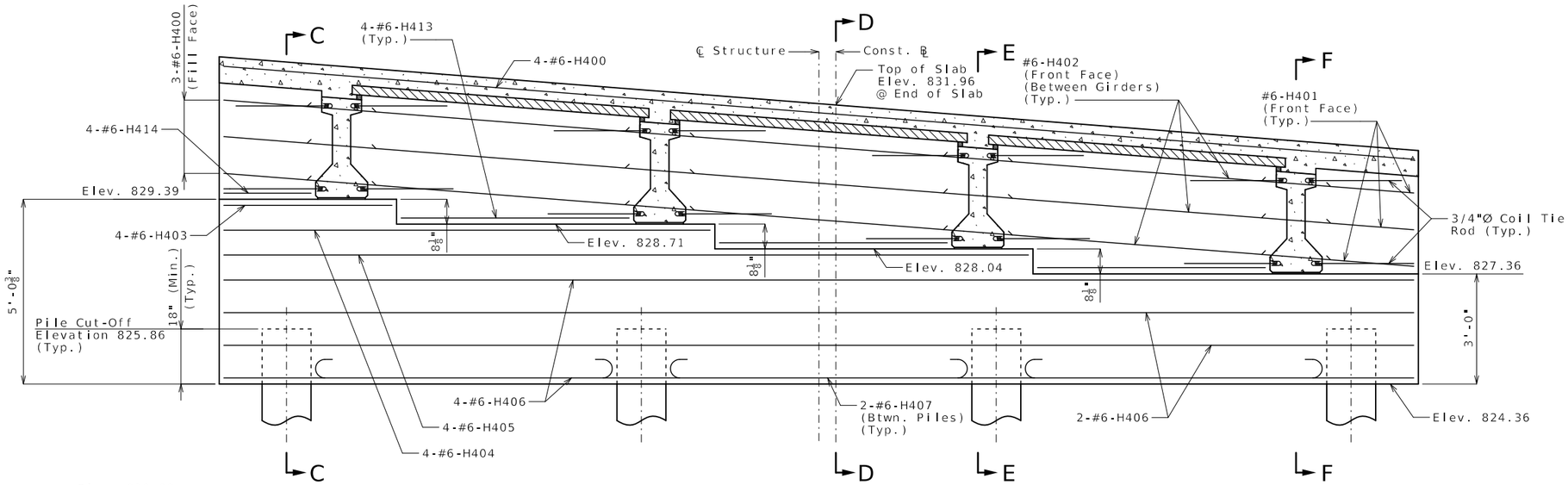

SECTION NEAR END BENT
(Keys not shown for clarity)

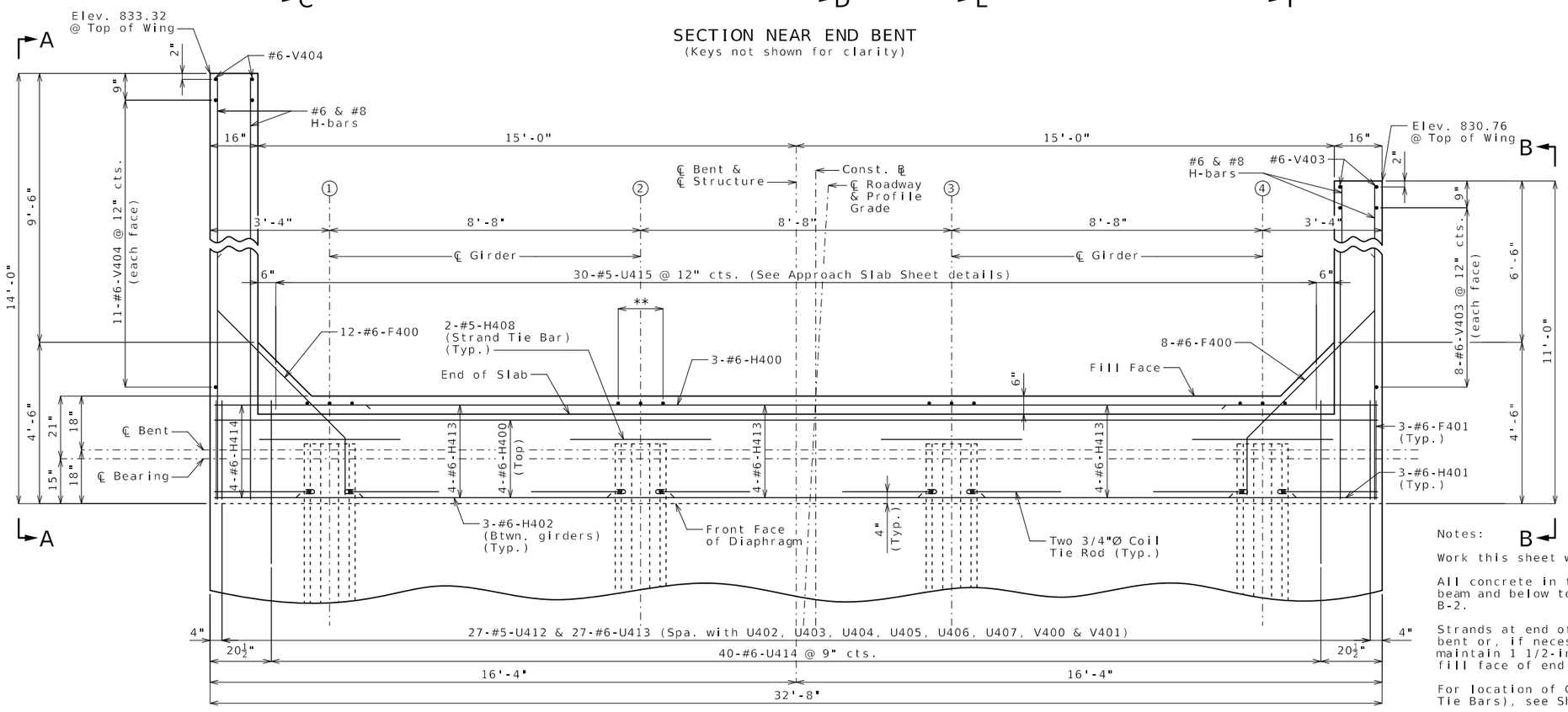

PART PLAN

** 3-#6-V402 @ 9" cts. (Typ.)

END BENT NO. 4

Notes:

Work this sheet with Sheets No. 11 & 13.

All concrete in the end bent above top of beam and below top of slab shall be Class B-2.

Strands at end of girders shall be field bent or, if necessary, cut in field to maintain 1 1/2-inch minimum clearance to fill face of end bent.

For location of Coil Ties & #5-H407 (Strand Tie Bars), see Sheet No. 14.

The #6-F400 bars shall be bent in field to clear girders.

For details of bridge approach slab, see Sheet No. 25.

For details of vertical drain at end bent, see Sheet No. 8.

STATE OF MISSOURI
TRENTON B. CRAWFORD
NUMBER PE-2012018053
PROFESSIONAL ENGINEER
THIS SHEET HAS BEEN SIGNED, SEALED AND DATED ELECTRONICALLY.

DATE PREPARED	12/17/2025
ROUTE	U
STATE	MO
DISTRICT	BR
SHEET NO.	12
COUNTY	CALDWELL
JOB NO.	JNW0144
CONTRACT ID.	
PROJECT NO.	
BRIDGE NO.	A9660

DESCRIPTION

DATE

MISSOURI HIGHWAYS AND TRANSPORTATION COMMISSION
105 WEST CAPITOL
JEFFERSON CITY, MO 65102
1-888-ASK-MODOT (1-888-275-6636)

Detailed Sep. 2025
Checked Oct. 2025

Note: This drawing is not to scale. Follow dimensions.

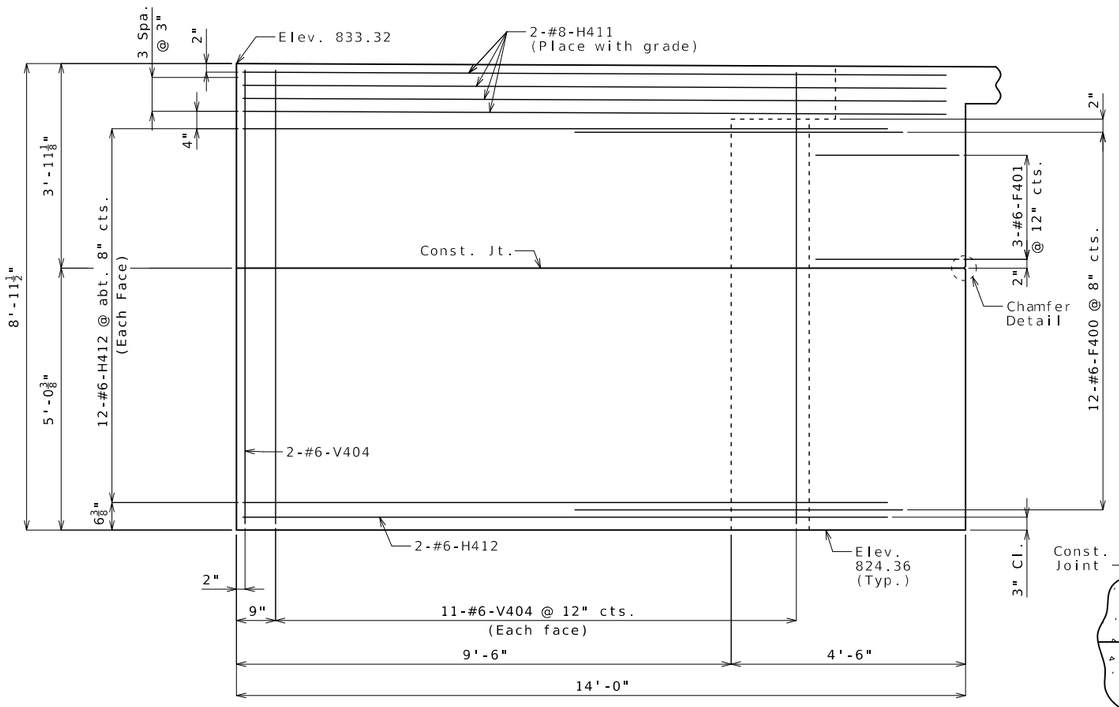

ELEVATION A-A

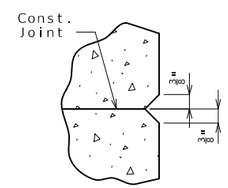

CHAMFER DETAIL

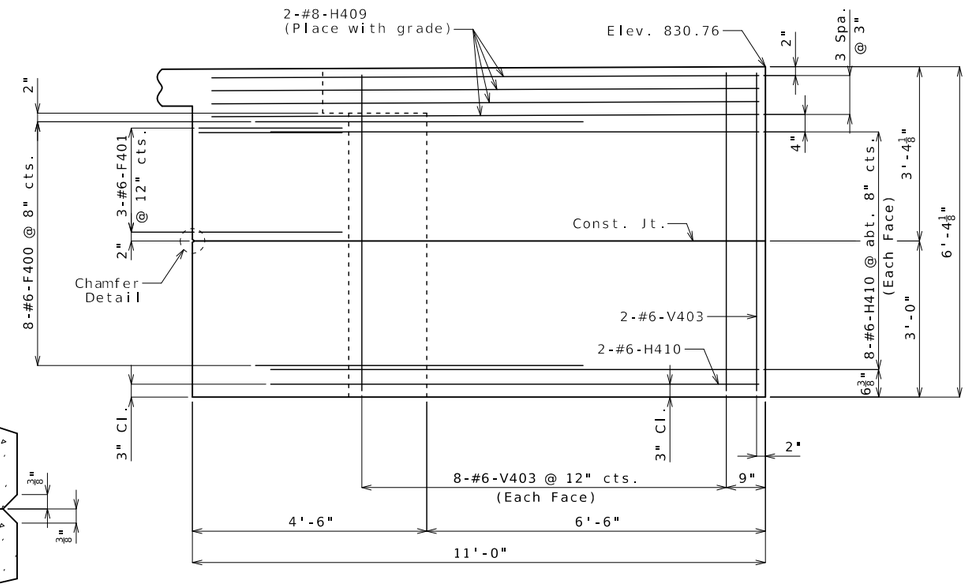

ELEVATION B-B

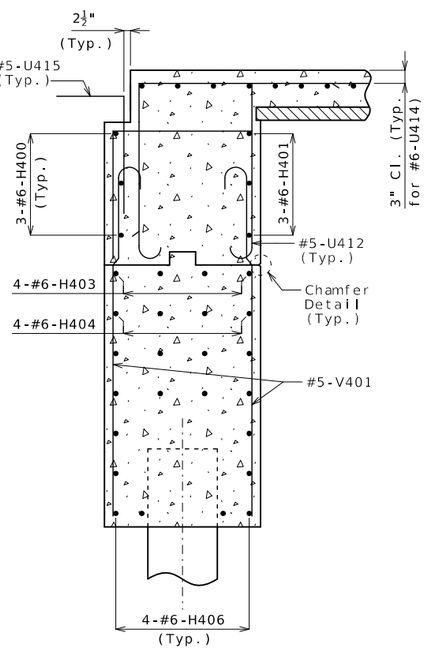

SECTION C-C

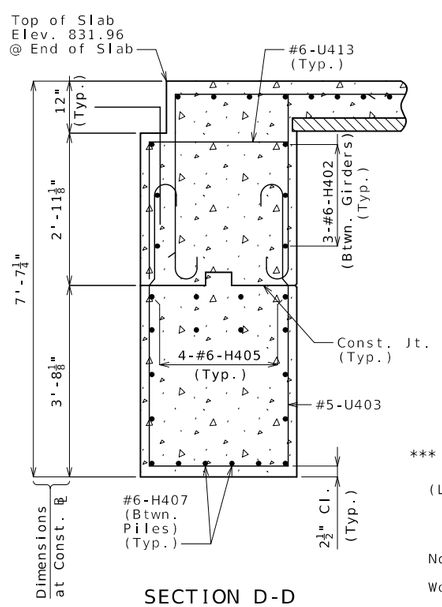

SECTION D-D

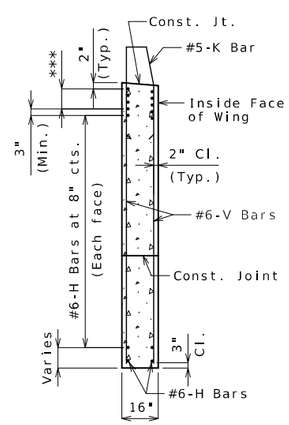

TYPICAL SECTION THRU WING

*** #8-H Bars at 3" cts.
(Each face)(Place with grade)

(Left wing shown, right wing similar)

Notes:

Work this sheet with Sheets No. 11 & 12.

For reinforcement of the barrier, see Sheets No. 23 & 24.

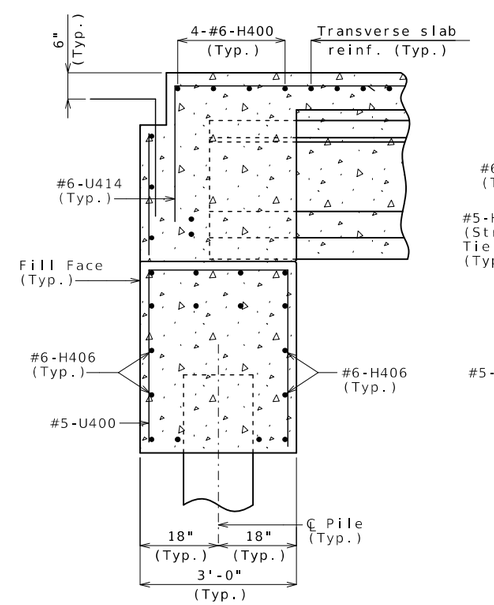

SECTION E-E

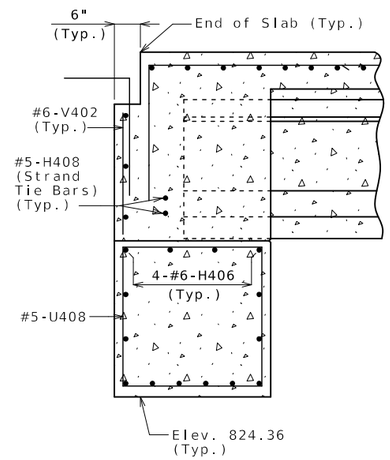

SECTION F-F

END BENT NO. 4

Detailed Oct. 2025
Checked Oct. 2025

Note: This drawing is not to scale. Follow dimensions.

STATE OF MISSOURI
TRENTON B. CRAWFORD
NUMBER PE-2012018053
PROFESSIONAL ENGINEER

THIS SHEET HAS BEEN SIGNED, SEALED AND DATED ELECTRONICALLY.

DATE PREPARED	12/17/2025
ROUTE	U
STATE	MO
DISTRICT	BR
SHEET NO.	13
COUNTY	CALDWELL
JOB NO.	JNW0144
CONTRACT ID.	
PROJECT NO.	
BRIDGE NO.	A9660

DATE	DESCRIPTION

MISSOURI HIGHWAYS AND TRANSPORTATION COMMISSION

105 WEST CAPITOL
JEFFERSON CITY, MO 65102
1-888-ASK-MODOT (1-888-275-6636)

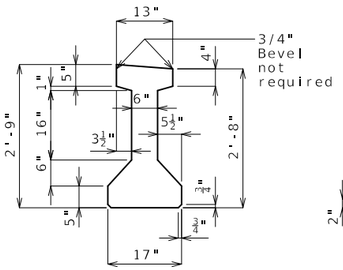

DIMENSIONS

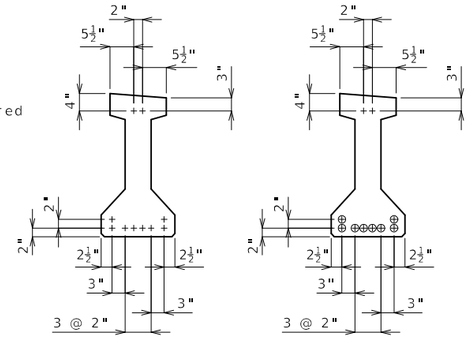

℄ GIRDER END OF GIRDER

STRAND ARRANGEMENT

+ Indicates prestressing strand. ○ Indicates cut & shop bend with 2'-6" projection.

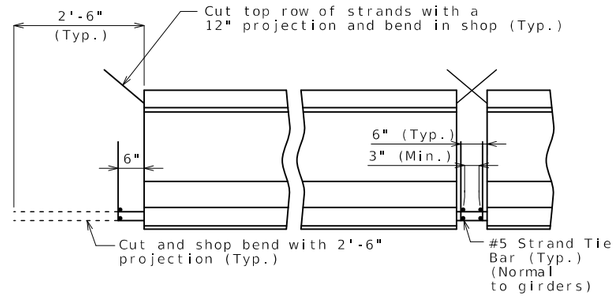

END BENT INTERMEDIATE BENT

STRANDS AT GIRDER ENDS

BILL OF REINFORCING STEEL - EACH GIRDER				
NO.	SIZE & MARK	ACTUAL LENGTH	SHAPE	BENDING DIAGRAM
2	5 A1	29'-10"	20	
72	5 B1	4'-2"	11S	
16	6 B2	3'-5"	11S	
44	4 C1	13"	10S	
88	4 D1	2'-3"	9S	

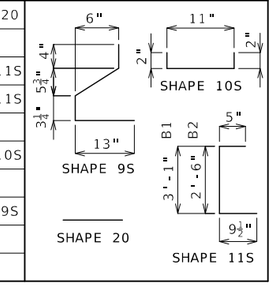

All dimensions are out to out.

Hooks and bends shall be in accordance with the CRSI Manual of Standard Practice for Detailing Reinforced Concrete Structures, Stirrup and Tie Dimensions.

Actual bar lengths are measured along centerline of bar to the nearest inch.

Minimum clearance to reinforcing shall be one inch.

All reinforcement shall be ASTM A615 OR A706 Grade 60.

The two D1 bars may be furnished as one bar at the fabricator's option.

All B1 bars shall be epoxy coated.

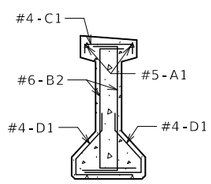

SECTION A-A

Strands not shown for clarity.

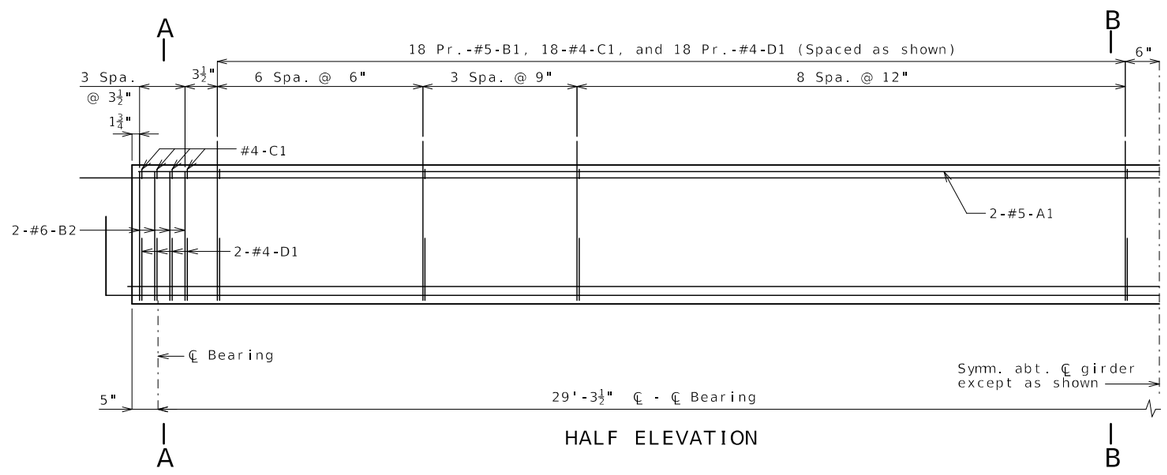

HALF ELEVATION

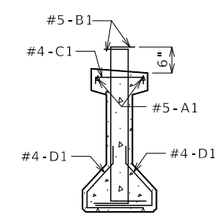

SECTION B-B

Strands not shown for clarity.

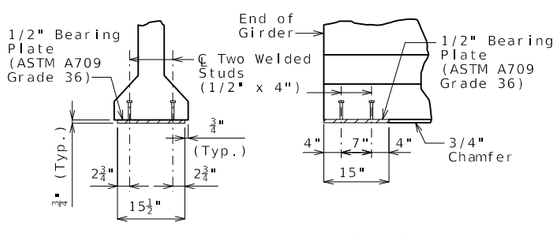

END VIEW SIDE VIEW

BEARING PLATE

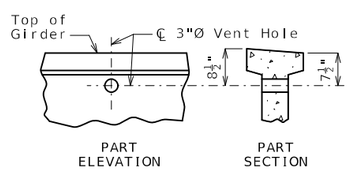

PART ELEVATION PART SECTION

VENT HOLE

Place vent holes at or near upgrade 1/3 point of girders and clear reinforcing steel or strands by 1 1/2" minimum.

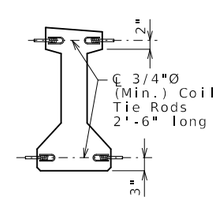

CLOSED DIAPHRAGMS AND INTEGRAL BENTS

COIL TIES

Exclude coil tie at exterior face of exterior girders except at integral end bents.

General Notes:

Concrete for prestressed girders shall be Class A-1 with f'c = 7,000 psi and f'ci = 5,000 psi.

Use 10 strands, 1/2"Ø Grade 270, with an initial prestress force of 310 kips.

Pretensioned members shall be in accordance with Sec 1029.

Fabricator shall be responsible for location and design of lifting devices.

Exterior and interior girders are the same except: coil ties, coil inserts for slab drains.

For Girder Camber Diagram, see Sheet No. 19.

For location of coil inserts at slab drains, see Sheet No. 18.

For location of coil ties at concrete bent diaphragms, see Sheets No. 6, 12 & 15.

STATE OF MISSOURI
TRENTON B. CRAWFORD
NUMBER PE-2012018053
PROFESSIONAL ENGINEER
THIS SHEET HAS BEEN SIGNED, SEALED AND DATED ELECTRONICALLY.

DATE PREPARED 12/17/2025

ROUTE	STATE
U	MO
DISTRICT	SHEET NO.
BR	14

COUNTY CALDWELL

JOB NO. JNW0144

CONTRACT ID.

PROJECT NO.

BRIDGE NO. A9660

DESCRIPTION	DATE

MISSOURI HIGHWAYS AND TRANSPORTATION COMMISSION
105 WEST CAPITOL
JEFFERSON CITY, MO 65102
1-888-ASK-MODOT (1-888-275-6636)

Detailed Sep. 2025
Checked Oct. 2025

I-GIRDERS - SPANS (1-2) AND (3-4)

Note: This drawing is not to scale. Follow dimensions.

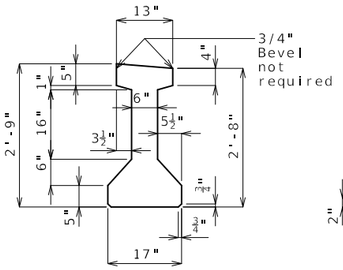

DIMENSIONS

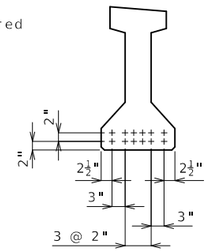

℄ GIRDER

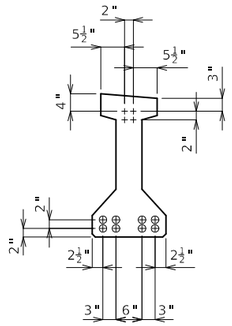

END OF GIRDER

STRAND ARRANGEMENT

+ Indicates prestressing strand.

○ Indicates cut & shop bend with 2'-6" projection.

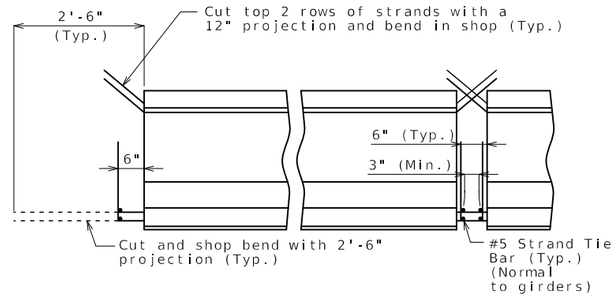

STRANDS AT GIRDER ENDS

BILL OF REINFORCING STEEL - EACH GIRDER				
NO.	SIZE & MARK	ACTUAL LENGTH	SHAPE	BENDING DIAGRAM
2	5 A1	44'-2"	20	
106	5 B1	4'-2"	11S	
16	6 B2	3'-5"	11S	
61	4 C1	13"	10S	
122	4 D1	2'-3"	9S	

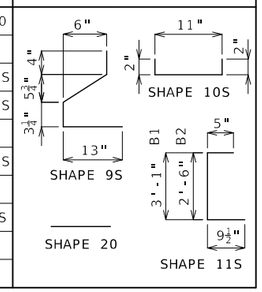

All dimensions are out to out.

Hooks and bends shall be in accordance with the CRSI Manual of Standard Practice for Detailing Reinforced Concrete Structures, Stirrup and Tie Dimensions.

Actual bar lengths are measured along centerline of bar to the nearest inch.

Minimum clearance to reinforcing shall be one inch.

All reinforcement shall be ASTM A615 or A706 Grade 60.

The two D1 bars may be furnished as one bar at the fabricator's option.

All B1 bars shall be epoxy coated.

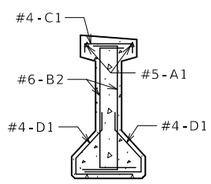

SECTION A-A

Strands not shown for clarity.

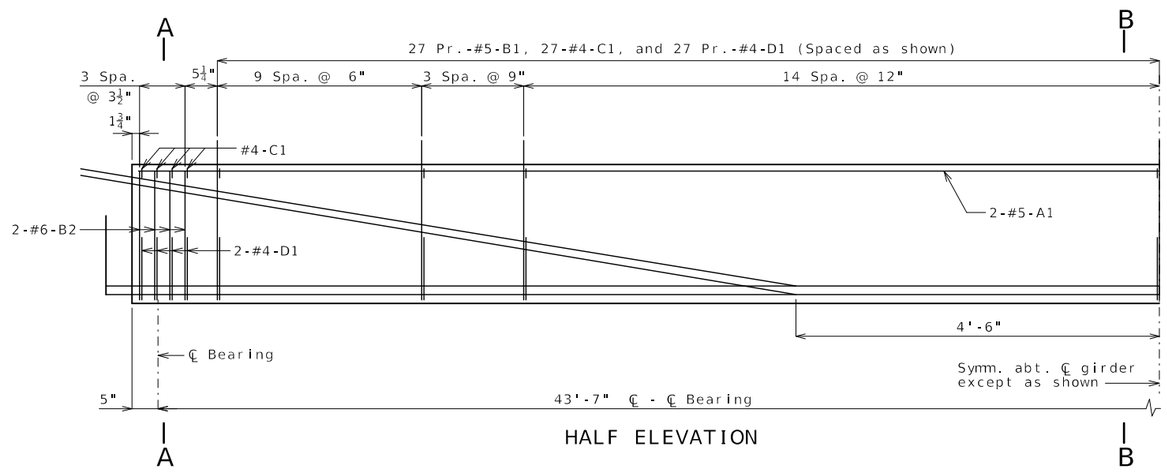

HALF ELEVATION

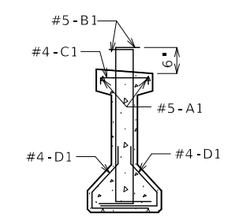

SECTION B-B

Strands not shown for clarity.

General Notes:

Concrete for prestressed girders shall be Class A-1 with f'c = 7,000 psi and f'ci = 5,000 psi.

Use 12 strands, 1/2"Ø Grade 270, with an initial prestress force of 372 kips.

Pretensioned members shall be in accordance with Sec 1029.

Fabricator shall be responsible for location and design of lifting devices.

Exterior and interior girders are the same except: coil ties, coil inserts for slab drains.

For Girder Camber Diagram, see Sheet No. 19.

For location of coil inserts at slab drains, see Sheet No. 18.

For location of coil ties at concrete bent diaphragms, see Sheet No. 16.

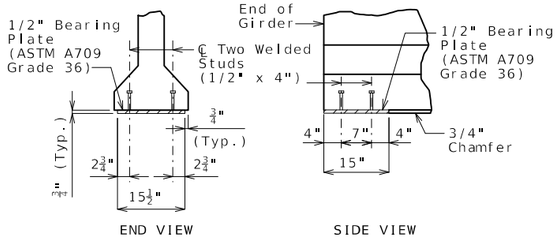

END VIEW SIDE VIEW

BEARING PLATE

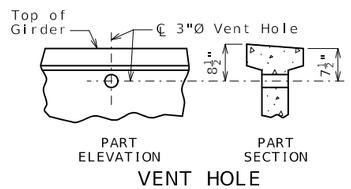

PART ELEVATION PART SECTION

VENT HOLE

Place vent holes at or near upgrade 1/3 point of girders and clear reinforcing steel or strands by 1 1/2" minimum.

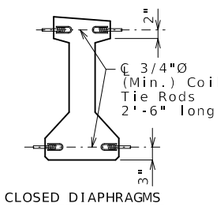

CLOSED DIAPHRAGMS AND INTEGRAL BENTS

COIL TIES

Exclude coil tie at exterior face of exterior girders except at integral end bents.

Detailed Sep. 2025
Checked Oct. 2025

I-GIRDERS - SPAN (2-3)

Note: This drawing is not to scale. Follow dimensions.

STATE OF MISSOURI
TRENTON B. CRAWFORD
NUMBER PE-2012018053
PROFESSIONAL ENGINEER

THIS SHEET HAS BEEN SIGNED, SEALED AND DATED ELECTRONICALLY.

DATE PREPARED	12/17/2025
ROUTE	U
STATE	MO
DISTRICT	BR
SHEET NO.	15
COUNTY	CALDWELL
JOB NO.	JNW0144
CONTRACT ID.	
PROJECT NO.	
BRIDGE NO.	A9660

DATE	DESCRIPTION

MISSOURI HIGHWAYS AND TRANSPORTATION COMMISSION
105 WEST CAPITOL
JEFFERSON CITY, MO 65102
1-888-ASK-MODOT (1-888-275-6636)

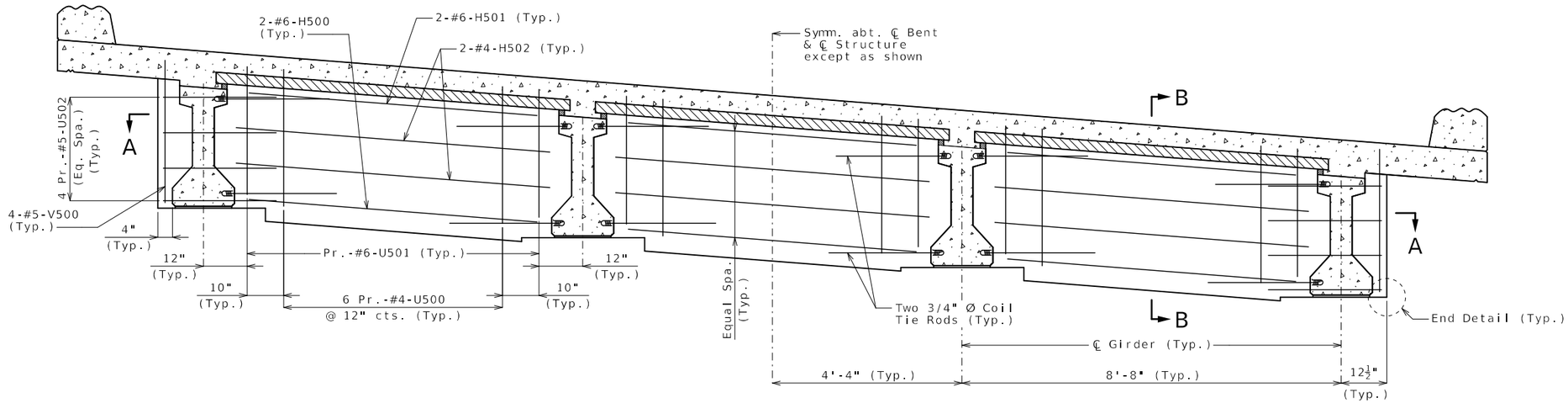

SECTION NEAR INTERMEDIATE BENT

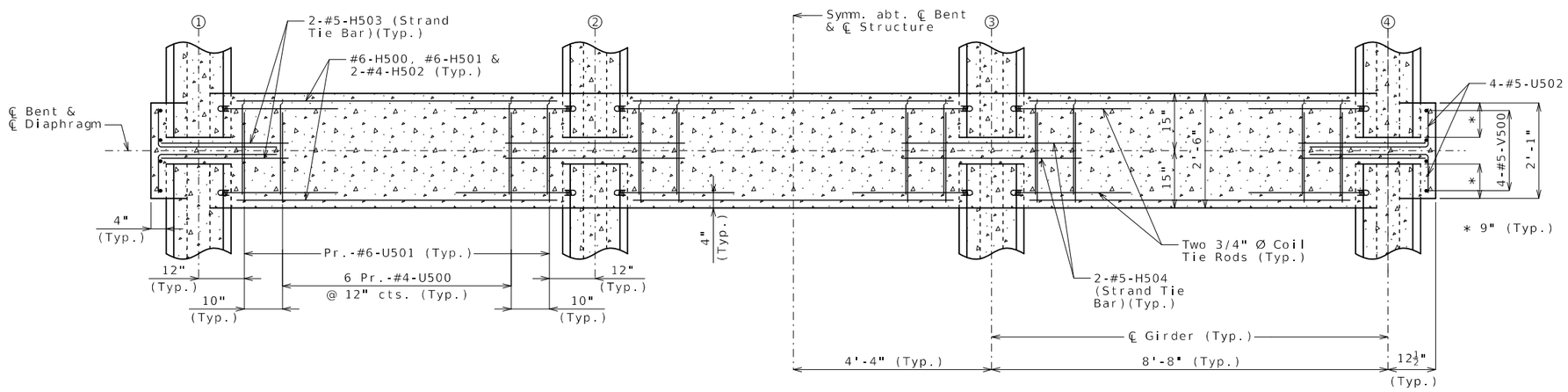

SECTION A-A

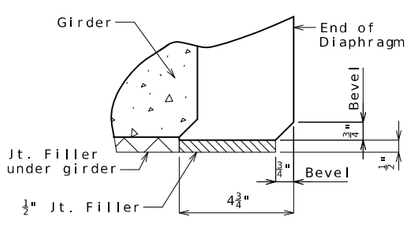

END DETAIL

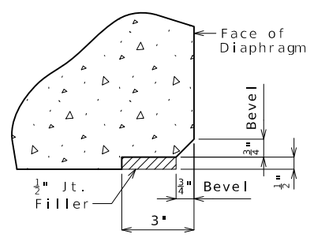

EDGE DETAIL

Notes:

For location of Strand Tie Bars, see Sheets No. 14 & 15.

For location of details of Coil Tie Rods, see Sheets No. 14 & 15.

Diaphragms at intermediate bents shall be built vertical.

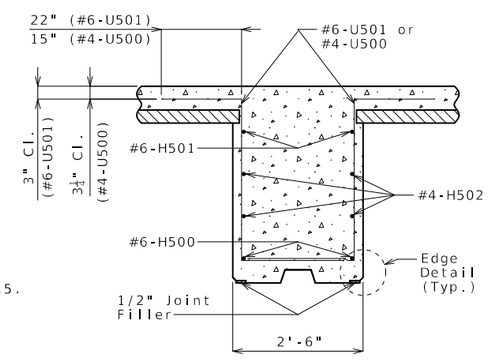

SECTION B-B

CONCRETE DIAPHRAGM AT INTERMEDIATE BENTS NO. 2 & 3

Detailed Oct. 2025
Checked Oct. 2025

Note: This drawing is not to scale. Follow dimensions.

STATE OF MISSOURI
TRENTON B. CRAWFORD
NUMBER PE-2012018053
PROFESSIONAL ENGINEER

THIS SHEET HAS BEEN SIGNED, SEALED AND DATED ELECTRONICALLY.

DATE PREPARED	12/17/2025
ROUTE	U
STATE	MO
DISTRICT	BR
SHEET NO.	16
COUNTY	CALDWELL
JOB NO.	JNW0144
CONTRACT ID.	
PROJECT NO.	
BRIDGE NO.	A9660

DESCRIPTION

DATE

MISSOURI HIGHWAYS AND TRANSPORTATION COMMISSION

105 WEST CAPITOL
JEFFERSON CITY, MO 65102
1-888-ASK-MODOT (1-888-275-6636)

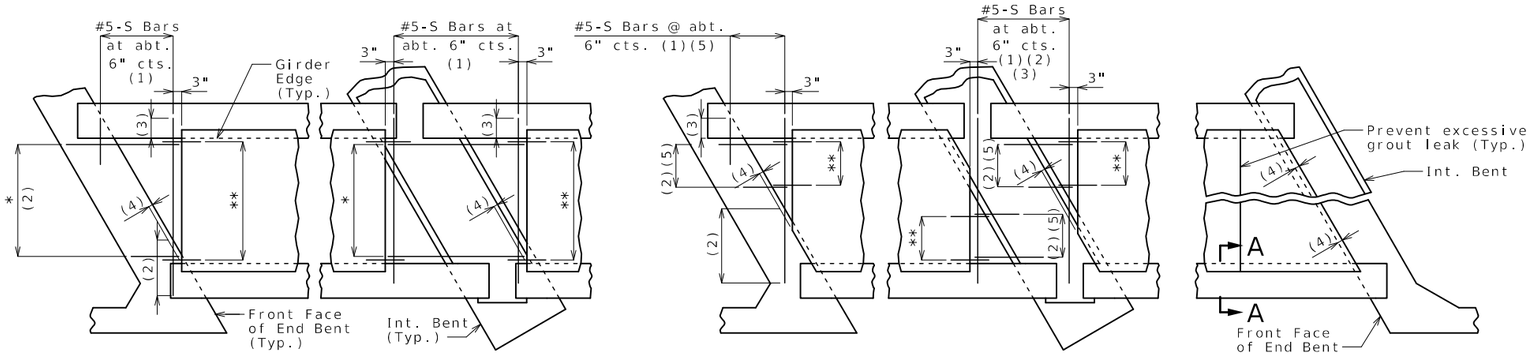

SQUARED END PANELS OR TRUNCATED END PANELS

SKEWED END PANELS

PLAN SHOWING PANEL PLACEMENT

* #5-S Bars at abt. 9" cts. (1)
** #3-P1 at 12" cts. (End panels only)

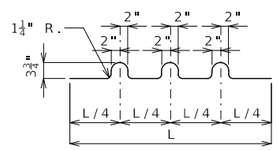

BENDING DIAGRAM FOR U1 BAR

U1 Bars may be oriented at right angles to location and spacing shown. U1 Bars shall be placed between P1 bars.

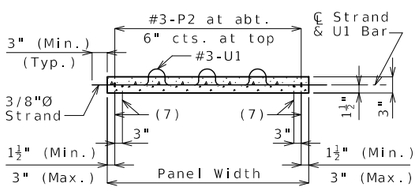

SECTION B-B

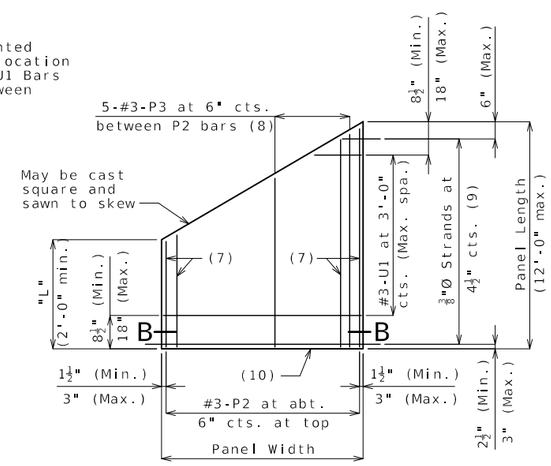

PLAN OF OPTIONAL SKEWED END PANEL

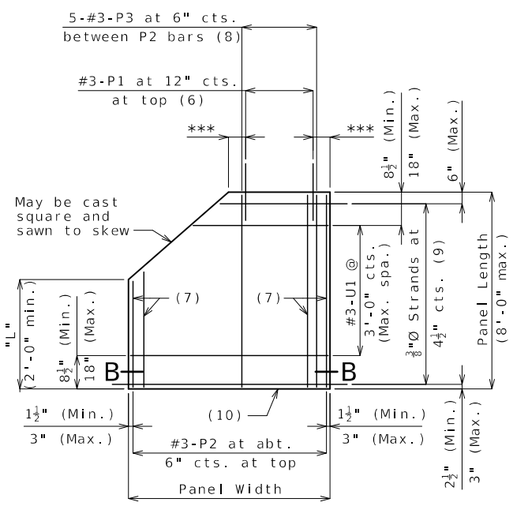

PLAN OF OPTIONAL TRUNCATED END PANEL

*** 3" (Min.), 6" (Max.)

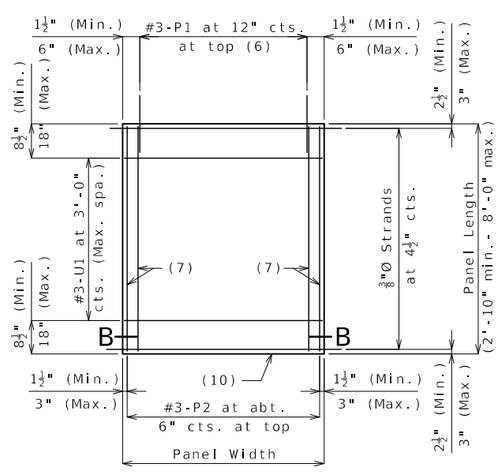

PLAN OF SQUARED PANEL

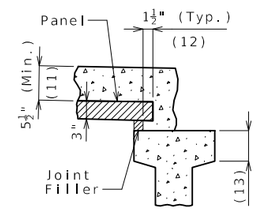

SECTION A-A

Joint Filler Dimensions		
Width	Height	
	Min.	Max.
1½"	1"	2"

Reference Notes:

Plan of Panel Placement:
(1) S-bars shown are bottom steel in slab between panels and used with squared and truncated end panels only.

(2) Extend S-bars 18 inches beyond the front face of end bents and int. bents for squared and truncated end panels only.

(3) Extend S-bars 9 inches beyond edge of girder (Typ.).

(4) End panels shall be dimensioned 1/2" min. to 1 1/2" max. from the inside face of diaphragm.

(5) For truncated end panels, use a min. of #5-S bars at 6" crossings in openings, or min. 4x4-W7xW7.

Plans of Panels:
(6) For end panels only, P1 bars shall be 2'-0" in length and embedded 12". P1 bars will not be required for panels at squared integral end bents.

(7) #3-P2 bars near edge of panel at bottom (under strands).

(8) Use #3-P3 bars if panel is skewed 45° or greater.

(9) Any strand 2'-0" or shorter shall have a #4 reinforcing bar on each side of it, centered between strands. Strands 2'-0" or shorter may then be debonded at the fabricator's option.

(10) Optional 1/2" x 45° Chamfer one or both sides at bottom.

Section A-A:
(11) Slab thickness over prestressed panels varies due to girder camber. In order to maintain minimum slab thickness, it may be necessary to raise the grade uniformly throughout the structure. No payment will be made for additional labor or materials required for necessary grade adjustment.

(12) Contractor shall ensure proper consolidation under and between panels.

(13) At the contractor's option, the variation in slab thickness over prestressed panels may be eliminated or reduced by increasing and varying the girder top flange thickness. Dimensions shall be shown on the shop drawings.

General Notes:

Prestressed Panels:
Concrete for prestressed panels shall be Class A-1 with f'c = 6,000 psi, f'ci = 4,000 psi.

The top surface of all panels shall receive a scored finish with a depth of scoring of 1/8" perpendicular to the prestressing strands in the panels.

Prestressing tendons shall be high-tensile strength, uncoated, seven-wire, low-relaxation strands for prestressed concrete in accordance with AASHTO M 203 Grade 270, with nominal diameter of strand = 3/8" and nominal area = 0.085 sq.in. and minimum ultimate strength = 22.95 kips (270 ksi). Larger strands may be used with the same spacing and initial tension.

Initial prestressing force = 17.2 kips/strand.

The method and sequence of releasing the strands shall be shown on the shop drawings.

Suitable anchorage devices for lifting panels may be cast in panels, provided the devices are shown on the shop drawings and approved by the engineer. Panel lengths shall be determined by the contractor and shown on the shop drawings.

When squared end panels are used at skewed bents, the skewed portion shall be cast full depth. No separate payment will be made for additional concrete and reinforcing required.

Support from diaphragm forms is required under the optional skewed end until cast-in-place concrete has reached 3,000 psi compressive strength.

Prestressed panels shall be brought to saturated surface-dry (SSD) condition just prior to the deck pour. There shall be no free standing water on the panels or in the area to be cast.

The prestressed panel quantities are not included in the table of estimated quantities for the slab.

Reinforcing Steel:
All dimensions are out to out.

Hooks and bends shall be in accordance with the CRSI Manual of Standard Practice for Detailing Reinforced Concrete Structures, Stirrup and Tie Dimensions.

Minimum clearance to reinforcing steel shall be 1 1/2", unless otherwise shown.

If U1 bars interfere with placement of slab steel, U1 loops may be bent over, as necessary, to clear slab steel.

Deformed welded wire reinforcement (WWR) providing a minimum area of reinforcing perpendicular to strands of 0.22 sq in./ft, with spacing parallel to strands sufficient to ensure proper handling, may be used in lieu of the #3-P2 bars shown. Wire diameter shall not be larger than 0.375 inch. The above alternative reinforcement criteria may be used in lieu of the #3-P3 bars, when required, and placed over a width not less than 2 feet.

The following reinforcing steel shall be tied securely to the strands with the following maximum spacing in each direction:
#3-P2 bars at 16 inches.
WWR at 24 inches.

The #3-U1 bars shall be tied securely to #3-P2 bars, to WWR or to strands (when placed between P1 bars) at about 3-foot centers.

Minimum reinforcement steel length shall be 2'-0".

All reinforcement other than prestressing strands shall be epoxy coated.

Precast panels may be in contact with stirrup reinforcing in diaphragms.

S-bars are not listed in the bill of reinforcing.

Cost of S-bars will be considered completely covered by the contract unit price for the slab.

Joint Filler:
Joint filler shall be preformed fiber expansion joint material in accordance with Sec 1057 or expanded or extruded polystyrene bedding material in accordance with Sec 1073.

Use Slab Haunching Diagram on Sheet No. 19 for determining thickness of joint filler within the limits noted in the table of Joint Filler Dimensions.

Thicker material may be used on one or both sides of the girder to reduce cast-in-place concrete thickness to within tolerances.

The same thickness of preformed fiber expansion joint material shall be used under any one edge of any panel except at locations where top flange thickness may be stepped. The maximum change in thickness between adjacent panels shall be 1/2 inch. The polystyrene bedding material may be cut with a transition to match haunch height above top of flange.

Joint filler shall be glued to the girder. When thickness exceeds 1 1/2 inches, the joint filler shall be glued top and bottom. The glue used shall be the type recommended by the joint filler manufacturer.

Edges of panels shall be uniformly seated on the joint filler before slab reinforcement is placed.

STATE OF MISSOURI
TRENTON B. CRAWFORD
NUMBER PE-2012018053
PROFESSIONAL ENGINEER
THIS SHEET HAS BEEN SIGNED, SEALED AND DATED ELECTRONICALLY.

DATE PREPARED	
12/17/2025	
ROUTE U	STATE MO
DISTRICT BR	SHEET NO. 17
COUNTY CALDWELL	
JOB NO. JNW0144	
CONTRACT ID.	
PROJECT NO.	
BRIDGE NO. A9660	

DATE	DESCRIPTION

MISSOURI HIGHWAYS AND TRANSPORTATION COMMISSION
105 WEST CAPITOL
JEFFERSON CITY, MO 65102
1-888-ASK-MODOT (1-888-275-6636)

Detailed Aug. 2025
Checked Oct. 2025

Note: This drawing is not to scale. Follow dimensions.

PRESTRESSED PANELS

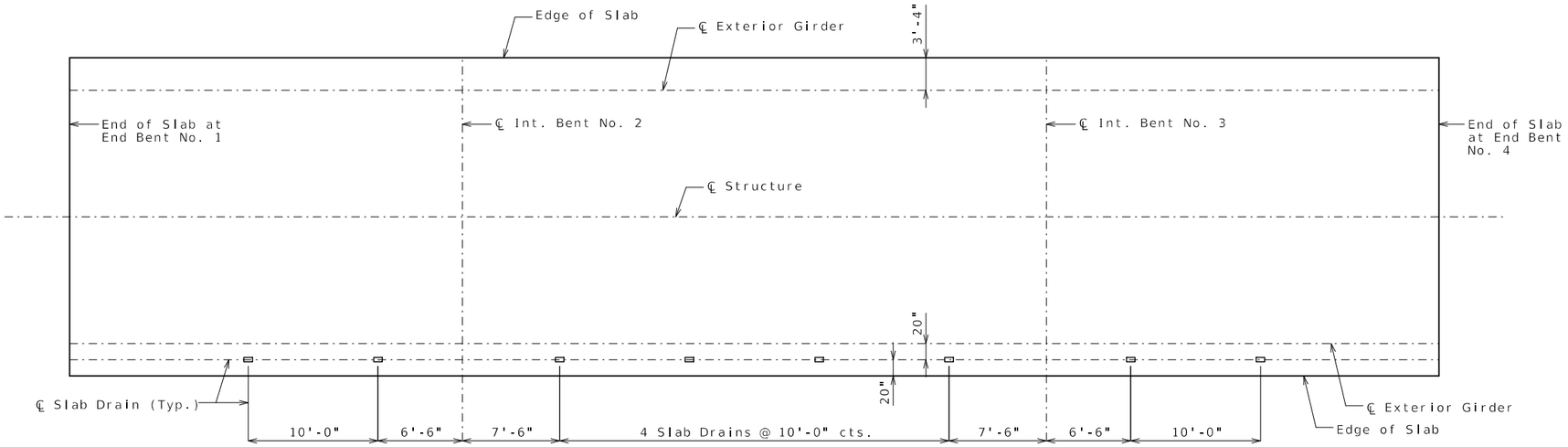

PLAN OF SLAB SHOWING SLAB DRAIN LOCATIONS

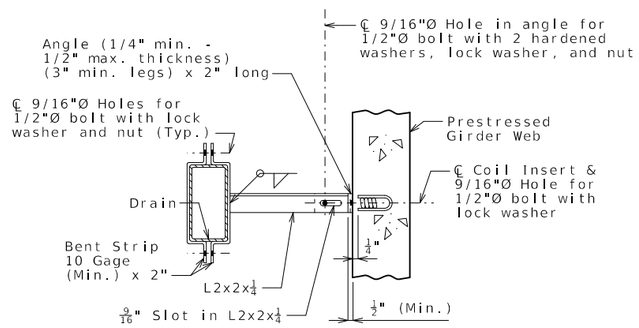

PART SECTION SHOWING BRACKET ASSEMBLY

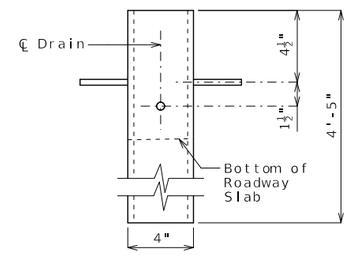

ELEVATION OF DRAIN

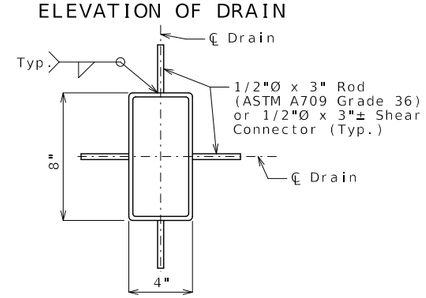

PLAN OF STEEL DRAIN OPTION

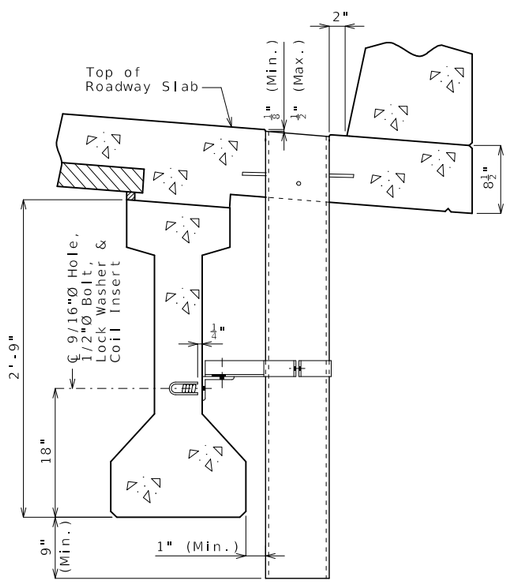

PART SECTION NEAR DRAIN

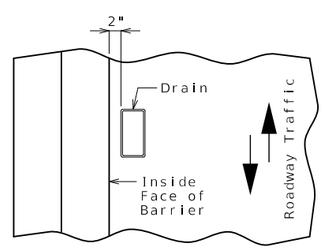

PART PLAN OF SLAB AT DRAIN

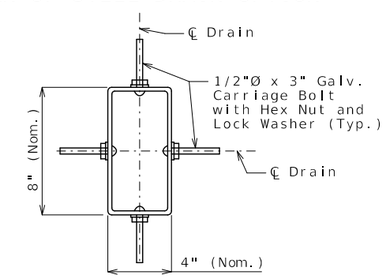

PLAN OF FRP DRAIN OPTION

General Notes:

Contractor shall have the option to construct either steel or FRP slab drains. All drains shall be of same type.

Slab drain bracket assembly shall be ASTM A709 Grade 36 steel.

Locate drains in slab by dimensions shown in Part Section Near Drain.

Reinforcing steel shall be shifted to clear drains.

The coil inserts and bracket assembly shall be galvanized in accordance with ASTM A123.

All bolts, hardened washers, lock washers and nuts shall be galvanized in accordance with AASHTO M 232 (ASTM A153), Class C.

All 1/2"Ø bolts shall be ASTM A307.

Shop drawings will not be required for the slab drains and the bracket assembly.

The coil insert required for the bracket assembly attachment shall be located on the prestressed girder shop drawings.

Coil inserts shall have a concrete pull-out strength (ultimate load) of at least 2,500 pounds in 5,000 psi concrete.

The bolt required to attach the slab drain bracket assembly to the prestressed girder web shall be supplied by the prestressed girder fabricator.

Notes for Steel Drain:

Slab drains may be fabricated of either 1/4" welded sheets of ASTM A709 Grade 36 steel or from 1/4" structural steel tubing ASTM A500 or A501.

Outside dimensions of drains are 8" x 4".

The drains shall be galvanized in accordance with ASTM A123.

Notes for FRP Drain:

Drains shall be machine filament-wound thermosetting resin tubing meeting the requirements of ASTM D2996 with the following exceptions:

Shape of drains shall be rectangular with outside nominal dimensions of 8" x 4".

Minimum reinforced wall thickness shall be 1/4 inch.

The resin used shall be ultraviolet (UV) resistant and/or have UV inhibitors mixed throughout. Drains may have an exterior coating for additional UV resistance.

The color of the slab drain shall be gray (Federal Standard #26373). The color shall be uniform throughout the resin and any coating used.

The combination of materials used in the manufacture of the drains shall be tested for UV resistance in accordance with ASTM D4329 Cycle A. The representative material shall withstand at least 500 hours of testing with only minor discoloration and without any physical deterioration. The contractor shall furnish the results of the required ultraviolet testing prior to acceptance of the slab drains.

At the contractor's option, drains may be field cut. The method of cutting FRP slab drain shall be as recommended by the manufacturer to ensure a smooth, chip free cut.

SLAB DRAINS

Detailed Aug. 2025
Checked Oct. 2025

Note: This drawing is not to scale. Follow dimensions.

STATE OF MISSOURI
TRENTON B. CRAWFORD
NUMBER PE-2012018053
PROFESSIONAL ENGINEER
THIS SHEET HAS BEEN SIGNED, SEALED AND DATED ELECTRONICALLY.

DATE PREPARED	
12/17/2025	
ROUTE: U	STATE: MO
DISTRICT: BR	SHEET NO.: 18
COUNTY: CALDWELL	
JOB NO.: JNW0144	
CONTRACT ID.	
PROJECT NO.	
BRIDGE NO.: A9660	

DATE	DESCRIPTION

MISSOURI HIGHWAYS AND TRANSPORTATION COMMISSION
105 WEST CAPITOL
JEFFERSON CITY, MO 65102
1-888-ASK-MODOT (1-888-275-6636)

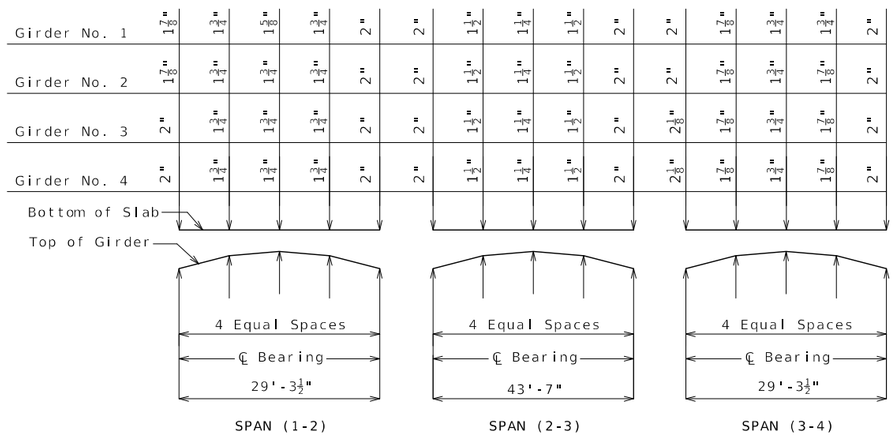

THEORETICAL SLAB HAUNCHING DIAGRAM (ESTIMATED AT 90 DAYS)

If girder camber is different from that shown in the camber diagram, in order to maintain minimum slab thickness, an adjustment of the slab haunches, an increase in slab thickness or a raise in grade uniformly throughout the structure shall be necessary. No payment will be made for additional labor or materials required for variation in haunching, slab thickness or grade adjustment.

Concrete in the slab haunches is included in the Estimated Quantities for Slab on Concrete I-Girder.

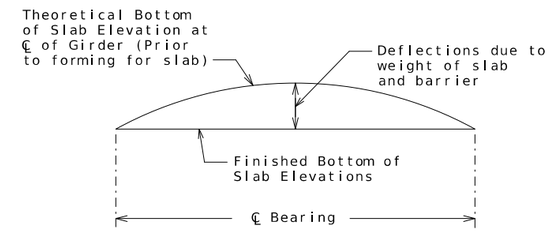

TYPICAL SLAB ELEVATIONS DIAGRAM

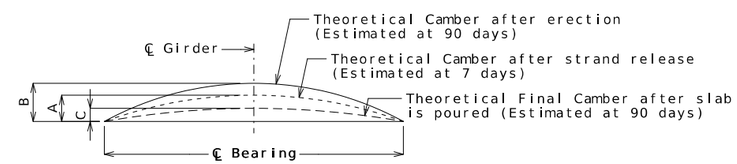

Girder	Span (1-2)			Span (2-3)			Span (3-4)		
	A	B	C	A	B	C	A	B	C
Exterior	¼"	5/8"	¼"	¾"	1⅛"	¾"	¼"	5/8"	¼"
Interior	¼"			¾"			¼"		

GIRDER CAMBER DIAGRAM

Conversion Factors for Girder Camber (Estimated at 90 days):

0.25 pt. = 0.7125 x 0.5 pt.

Theoretical Bottom of Slab Elevations at Centerline of Girder (Prior to forming for slab) (Estimated at 90 days)

Girder Number	Span (1-2) (29'-3½" ℄ Brg. - ℄ Brg.)					Span (2-3) (43'-7" ℄ Brg. - ℄ Brg.)					Span (3-4) (29'-3½" ℄ Brg. - ℄ Brg.)				
	℄ Brg.	.25	.50	.75	℄ Brg.	℄ Brg.	.25	.50	.75	℄ Brg.	℄ Brg.	.25	.50	.75	℄ Brg.
1	831.90	831.93	831.96	831.99	832.01	832.02	832.08	832.13	832.17	832.19	832.19	832.22	832.25	832.28	832.30
2	831.22	831.26	831.29	831.31	831.34	831.34	831.41	831.46	831.49	831.51	831.52	831.55	831.58	831.61	831.63
3	830.55	830.58	830.61	830.64	830.66	830.67	830.73	830.79	830.82	830.83	830.84	830.87	830.90	830.93	830.95
4	829.87	829.91	829.94	829.96	829.99	829.99	830.06	830.11	830.14	830.16	830.16	830.20	830.23	830.25	830.28

Elevations are based on a constant slab thickness of 8 1/2" and include allowance for theoretical dead load deflections due to weight of slab (including precast panel) and barrier.

STATE OF MISSOURI
TRENTON B. CRAWFORD
NUMBER PE-2012018053
PROFESSIONAL ENGINEER

THIS SHEET HAS BEEN SIGNED, SEALED AND DATED ELECTRONICALLY.

DATE PREPARED	
12/17/2025	
ROUTE: U	STATE: MO
DISTRICT: BR	SHEET NO.: 19
COUNTY: CALDWELL	
JOB NO.: JNW0144	
CONTRACT ID.	
PROJECT NO.	
BRIDGE NO.: A9660	

DESCRIPTION

DATE

MISSOURI HIGHWAYS AND TRANSPORTATION COMMISSION
105 WEST CAPITOL
JEFFERSON CITY, MO 65102
1-888-ASK-MODOT (1-888-275-6636)

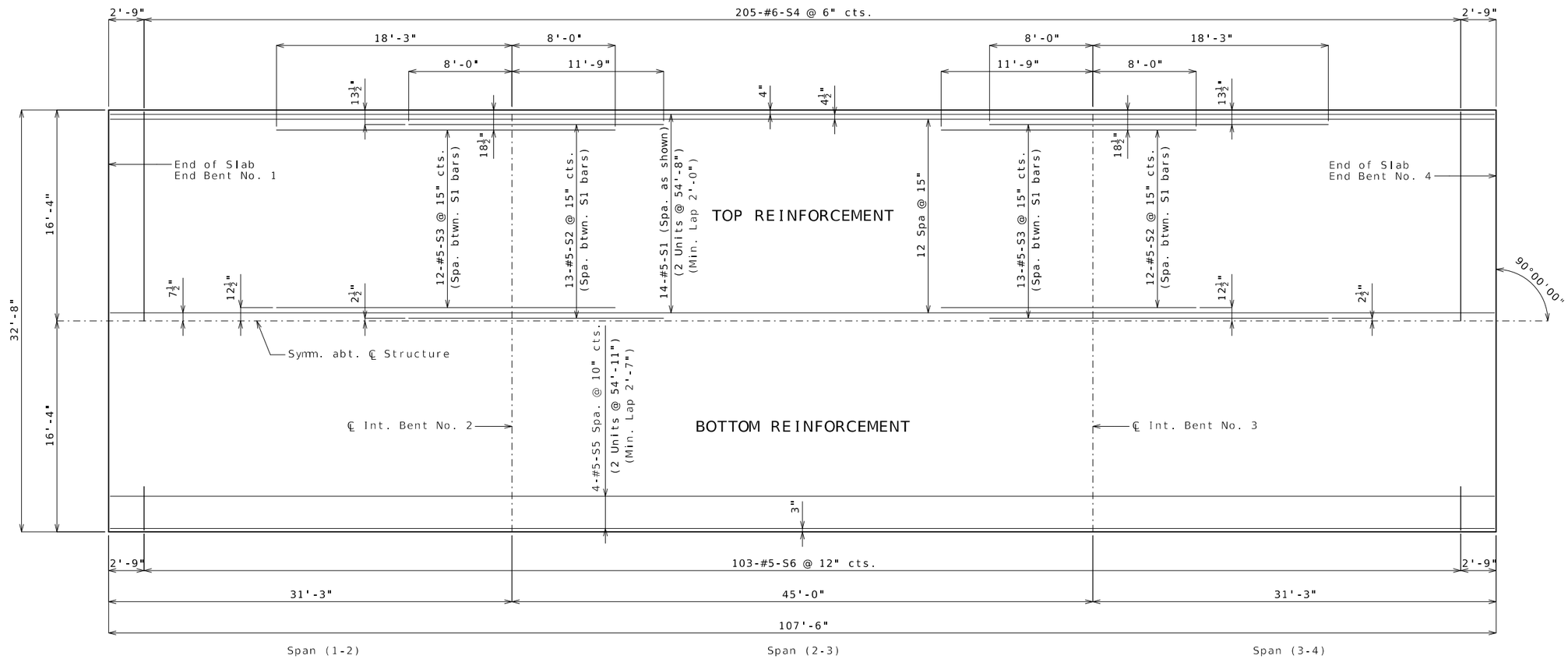

Notes:

Longitudinal slab dimensions are measured horizontally.

For Section Thru Slab and Slab Pouring Sequence, see Sheet No. 21.

For Details and Renforcement of Type D Barrier not shown, see Sheets No. 22, 23 & 24.

For Theoretical Slab Haunching Diagram, see Sheet No. 19.

For Theoretical Bottom of Slab Elevations, see Sheet No. 19.

For details and locations of Slab Drains, see Sheet No. 18.

For details of Precast Prestressed Panels, see Sheet No. 17.

PLAN OF SLAB SHOWING REINFORCEMENT

Detailed Aug. 2025
Checked Oct. 2025

Note: This drawing is not to scale. Follow dimensions.

STATE OF MISSOURI
TRENTON B. CRAWFORD
NUMBER PE-2012018053
PROFESSIONAL ENGINEER

THIS SHEET HAS BEEN SIGNED, SEALED AND DATED ELECTRONICALLY.

DATE PREPARED	12/17/2025
ROUTE	U
STATE	MO
DISTRICT	BR
SHEET NO.	20
COUNTY	CALDWELL
JOB NO.	JNW0144
CONTRACT ID.	
PROJECT NO.	
BRIDGE NO.	A9660

DATE	DESCRIPTION

MISSOURI HIGHWAYS AND TRANSPORTATION COMMISSION
105 WEST CAPITOL
JEFFERSON CITY, MO 65102
1-888-ASK-MODOT (1-888-275-6636)

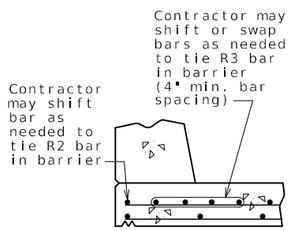

OPTIONAL SHIFTING TOP BARS AT BARRIER

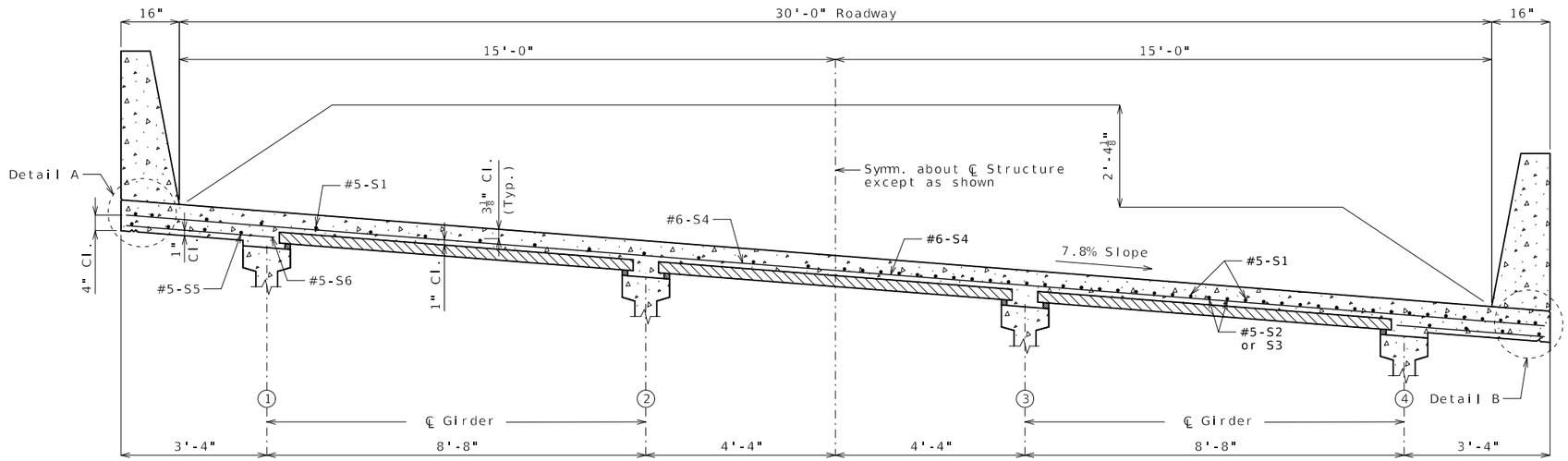

HALF SECTION NEAR MIDSPAN

HALF SECTION NEAR INTERMEDIATE BENT

SECTION THRU SLAB

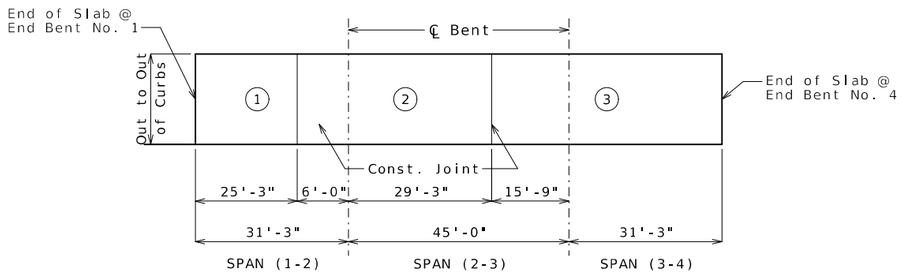

	Sequence of Pours			Min. Rate of Pour Cu. Yds./Hr.
	Direction			With Retarder
Basic Sequence	1	2	3	25
	End to 2	1 to 3	2 to End	
Alternate pours to the basic sequence are subject to the approval of the engineer in accordance with Sec 703.				
Alternate A Pours	1 + 2		3	25
	End to 3		2 to End	
Alternate B Pours	1 + 2 + 3			25
	End to End			

The contractor shall furnish an approved retarder to retard the set of the concrete to 2.5 hours, and shall pour and satisfactorily finish the slab pours at the rate given.

The concrete diaphragm at the intermediate bents and integral end bents shall be poured a minimum of 30 minutes and a maximum of 2 hours before the slab is poured.

SLAB POURING SEQUENCE

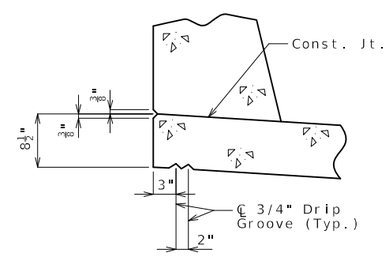

DETAIL A

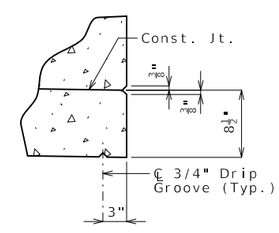

DETAIL B

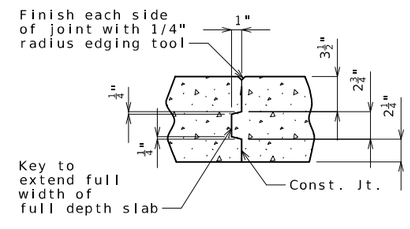

FULL DEPTH SLAB

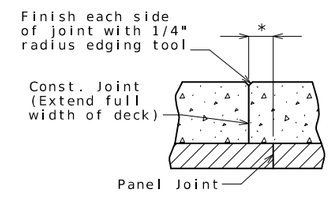

* Adjust the construction joint to a clearance of 6 inches minimum from the panel joint.

SLAB ON PANELS

SLAB CONSTRUCTION JOINT

Notes:

For details of Precast Prestressed Panels, see Sheet No. 17.

For details and reinforcement of barrier not shown, see Sheets No. 22, 23 & 24.

For Theoretical Bottom of Slab Elevations, Girder Camber Diagram and Theoretical Slab Haunching Diagram, see Sheet No. 19.

For Plan of Slab Showing Reinforcement, see Sheet No. 20.

SLAB DETAILS

Detailed Aug. 2025
Checked Oct. 2025

Note: This drawing is not to scale. Follow dimensions.

STATE OF MISSOURI
TRENTON B. CRAWFORD
NUMBER PE-2012018053
PROFESSIONAL ENGINEER
THIS SHEET HAS BEEN SIGNED, SEALED AND DATED ELECTRONICALLY.

DATE PREPARED	
12/17/2025	
ROUTE U	STATE MO
DISTRICT BR	SHEET NO. 21
COUNTY CALDWELL	
JOB NO. JNW0144	
CONTRACT ID.	
PROJECT NO.	
BRIDGE NO. A9660	

DESCRIPTION

DATE

MISSOURI HIGHWAYS AND TRANSPORTATION COMMISSION

105 WEST CAPITOL
JEFFERSON CITY, MO 65102
1-888-ASK-MODOT (1-888-275-6636)

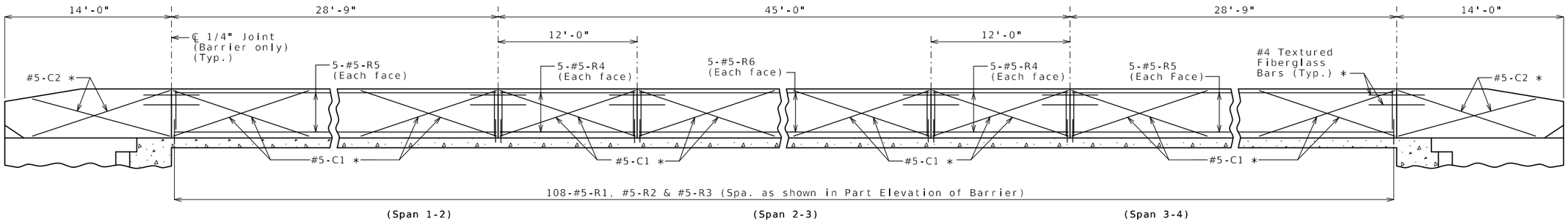

ELEVATION OF LEFT BARRIER

Longitudinal dimensions are horizontal.

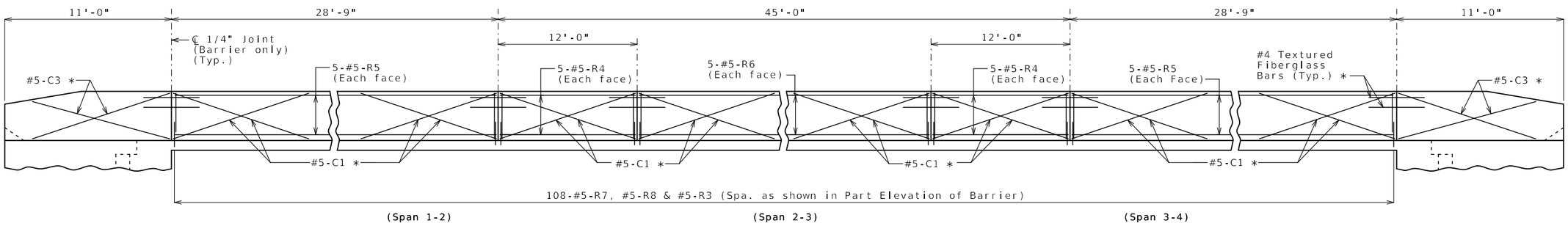

ELEVATION OF RIGHT BARRIER

Longitudinal dimensions are horizontal.

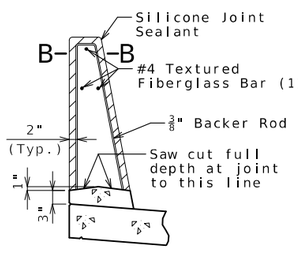

SECTION THRU SAW CUT JOINT

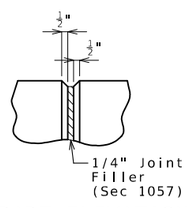

PART ELEVATION AT FORMED JOINT

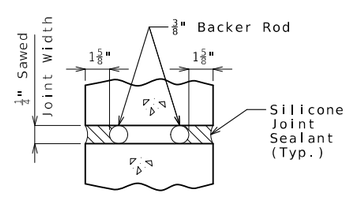

SECTION B-B

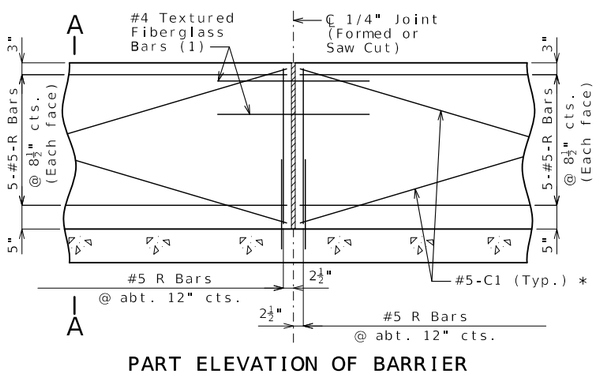

PART ELEVATION OF BARRIER

(1) Four feet long, centered on joint, slip-formed option only

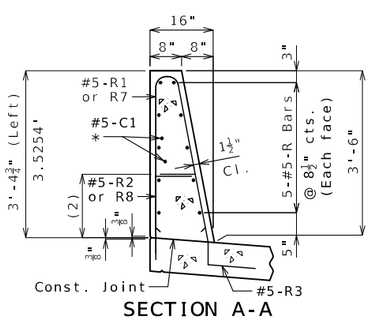

SECTION A-A

Use a minimum lap of 2'-6" for #5 horizontal barrier bars.

The cross-sectional area above the slab is 3.43 square feet (Left) & 3.57 square feet (Right).

(2) 13½" (Left) & 16" (Right) to top of bar

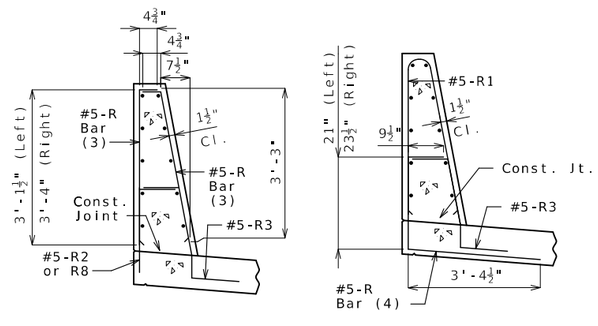

R-BAR PERMISSIBLE ALTERNATE SHAPE

(3) The R1 & R7 bar may be separated into two bars as shown, at the contractor's option, only when slip forming is not used. (All dimensions are out to out.)

(4) The R2 & R8 bar and #5 bottom transverse slab bar in cantilever (prestressed panels only) combination may be furnished as one bar as shown, at the contractor's option.

General Notes:

* Slip-formed option only.

Conventional forming or slip forming may be used. Saw cut joints may be used with conventional forming.

Top of barrier shall be built parallel to grade and barrier joints (except at end bents) normal to grade.

All exposed edges of barrier shall have either a 1/2-inch radius or a 3/8-inch bevel, unless otherwise noted.

Payment for all concrete and reinforcement, complete in place, will be considered completely covered by the contract unit price for Type D Barrier per linear foot.

Concrete in barrier shall be Class B-1.

Measurement of barrier is to the nearest linear foot for each structure, measured along the outside top of slab from end of wing to end of wing.

Concrete traffic barrier delineators shall be placed on top of the barrier as shown on Missouri Standard Plan 617.10 and in accordance with Sec 617. Delineators on bridges with two-lane, two-way traffic shall have retroreflective sheeting on both sides. Concrete traffic barrier delineators will be considered completely covered by the contract unit price for Type D Barrier.

Joint sealant and backer rods shall be in accordance with Sec 717 for silicone joint sealant for saw cut and formed joints.

For slip-formed option, both sides of barrier shall have a vertically broomed finish and the top shall have a transversely broomed finish.

TYPE D BARRIER

Detailed Aug. 2025
Checked Oct. 2025

Note: This drawing is not to scale. Follow dimensions.

STATE OF MISSOURI
TRENTON B. CRAWFORD
NUMBER PE-2012018053
PROFESSIONAL ENGINEER
THIS SHEET HAS BEEN SIGNED, SEALED AND DATED ELECTRONICALLY.

DATE PREPARED	
12/17/2025	
ROUTE: U	STATE: MO
DISTRICT: BR	SHEET NO.: 22
COUNTY: CALDWELL	
JOB NO.: JNW0144	
CONTRACT ID.	
PROJECT NO.	
BRIDGE NO.: A9660	

DATE	DESCRIPTION

MISSOURI HIGHWAYS AND TRANSPORTATION COMMISSION
105 WEST CAPITOL
JEFFERSON CITY, MO 65102
1-888-ASK-MODOT (1-888-275-6636)

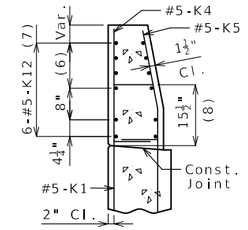

SECTION A-A

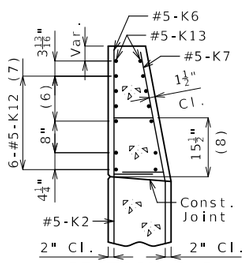

SECTION B-B

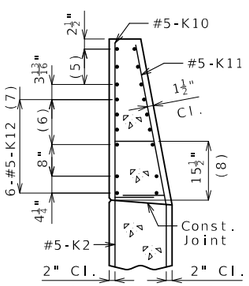

SECTION C-C

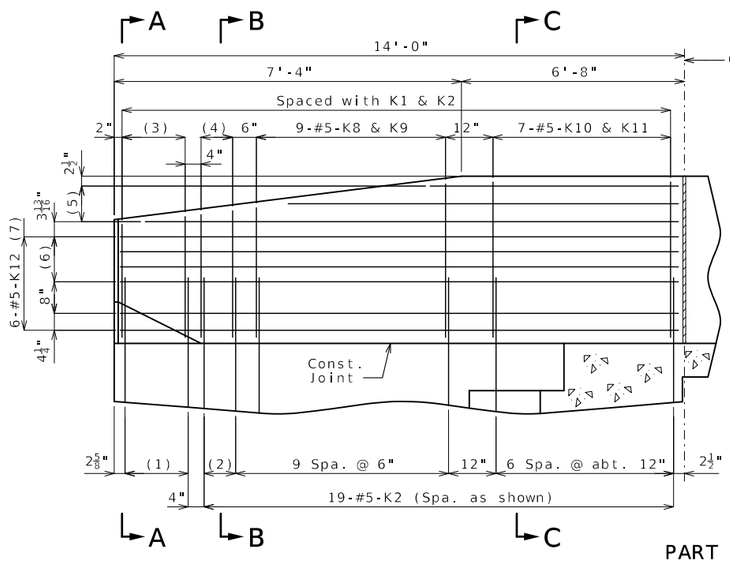

PART ELEVATION

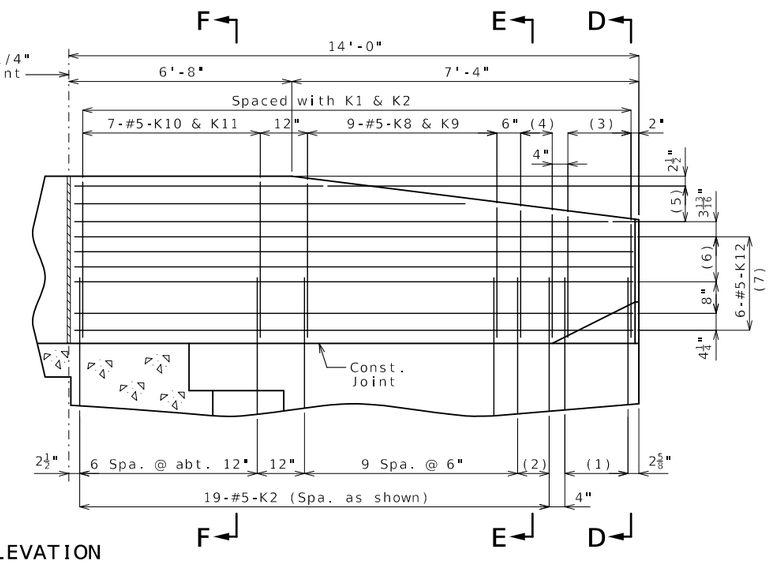

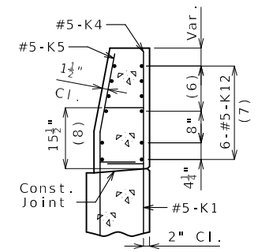

SECTION D-D

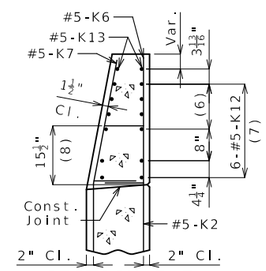

SECTION E-E

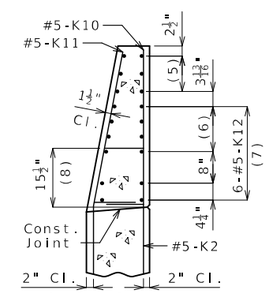

SECTION F-F

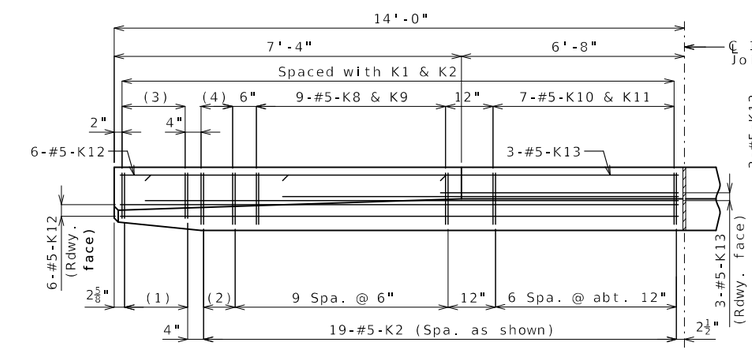

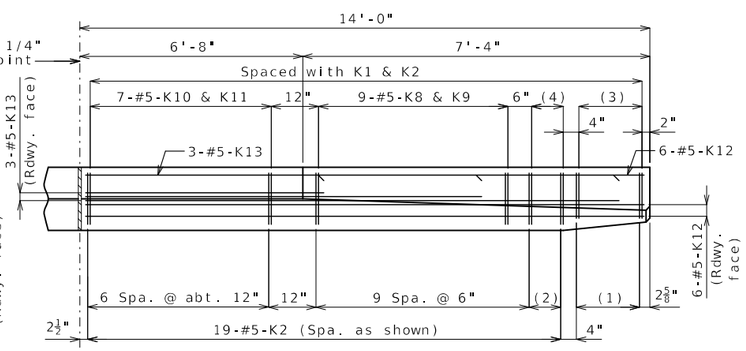

PART PLAN

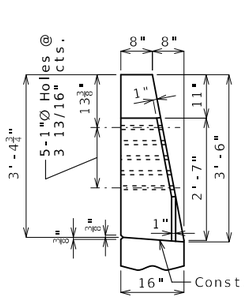

ELEVATION G-G

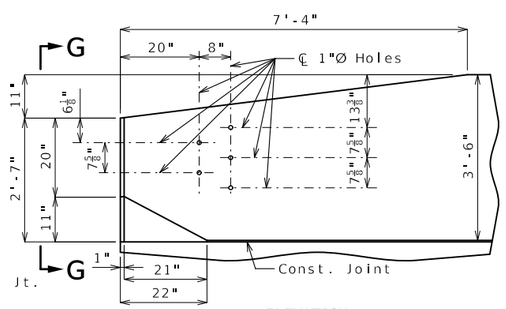

ELEVATION

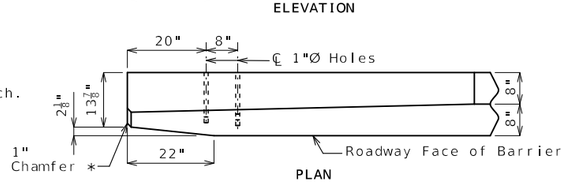

PLAN

DETAILS OF GUARD RAIL ATTACHMENT

* Transition to zero at Type A curb for gutter lines to match.

(1) 5-#5-K1 @ 4" cts.

(2) 2 spaces @ 4"

(3) 5-#5-K4 & K5

(4) 3-#5-K6 & K7

(5) 3-#5-K13 @ 4½" cts. each face

(6) 3 spaces @ 3 13/16"

(7) Spaced as shown, each face

(8) To top of bar

General Notes:

Concrete traffic barrier delineators shall be placed on top of the barrier as shown on Missouri Standard Plan 617.10 and in accordance with Sec 617. Delineators on bridges with two-lane, two-way traffic shall have retroreflective sheeting on both sides. Concrete traffic barrier delineators will be considered completely covered by the contract unit price for Type D Barrier.

Reinforcing Steel:
Minimum clearance to reinforcing steel shall be 1 1/2" except as shown for bars embedded into end bent.

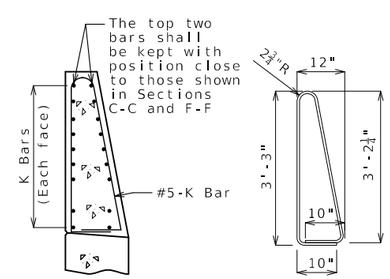

K10-K11 BAR PERMISSIBLE ALTERNATE SHAPE

(Other K bars not shown for clarity)

The K10-K11 bar combination may be furnished as one bar as shown, at the contractor's option.

All dimensions are out to out.

TYPE D BARRIER AT END BENTS (LEFT)

Detailed Aug. 2025
Checked Oct. 2025

Note: This drawing is not to scale. Follow dimensions.

STATE OF MISSOURI
TRENTON B. CRAWFORD
NUMBER PE-2012018053
PROFESSIONAL ENGINEER
THIS SHEET HAS BEEN SIGNED, SEALED AND DATED ELECTRONICALLY.

DATE PREPARED	
12/17/2025	
ROUTE U	STATE MO
DISTRICT BR	SHEET NO. 23
COUNTY CALDWELL	
JOB NO. JNW0144	
CONTRACT ID.	
PROJECT NO.	
BRIDGE NO. A9660	

DATE	DESCRIPTION

MISSOURI HIGHWAYS AND TRANSPORTATION COMMISSION
105 WEST CAPITOL
JEFFERSON CITY, MO 65102
1-888-ASK-MODOT (1-888-275-6636)

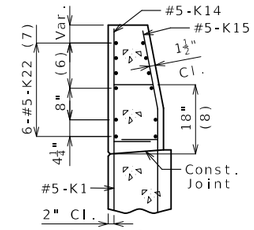

SECTION A-A

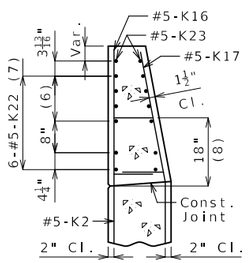

SECTION B-B

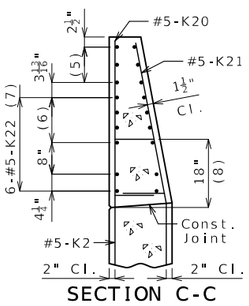

SECTION C-C

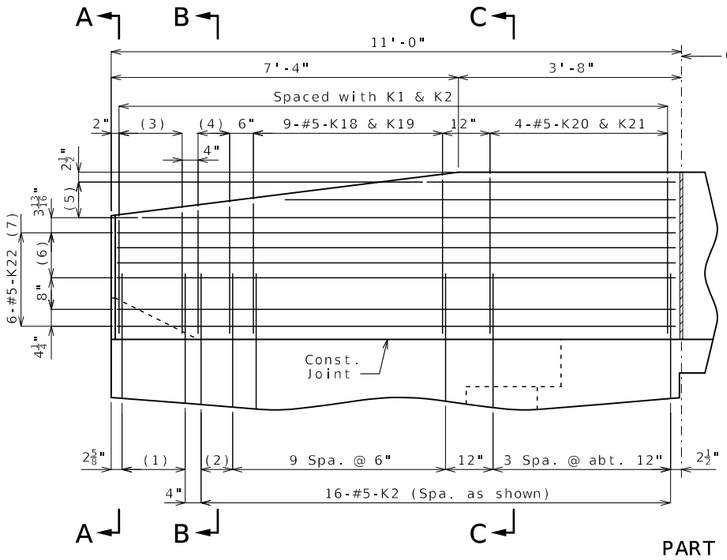

PART ELEVATION

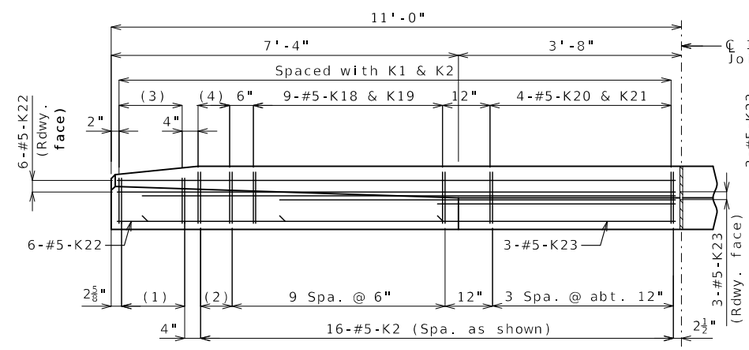

PART PLAN

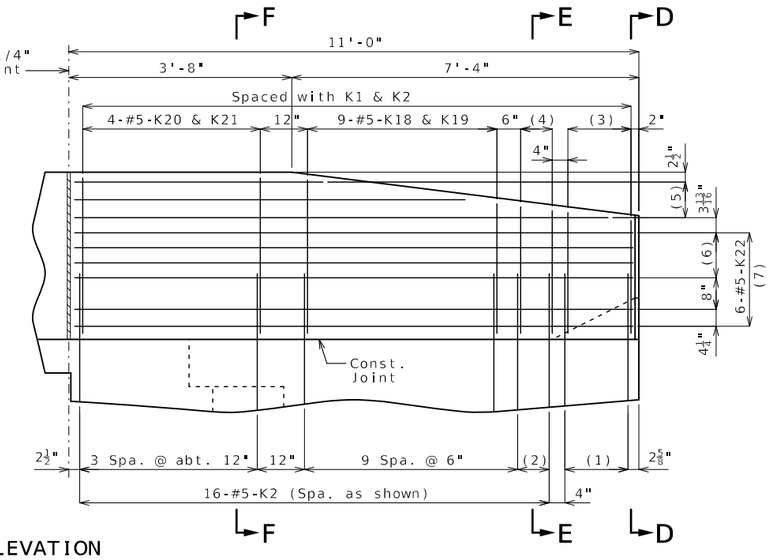

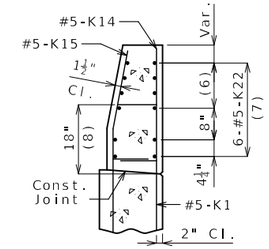

SECTION D-D

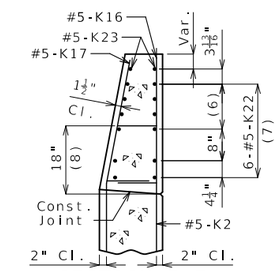

SECTION E-E

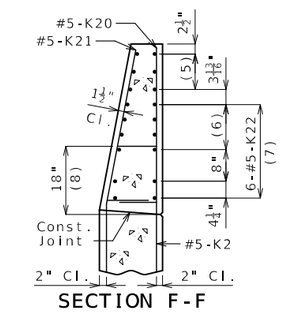

SECTION F-F

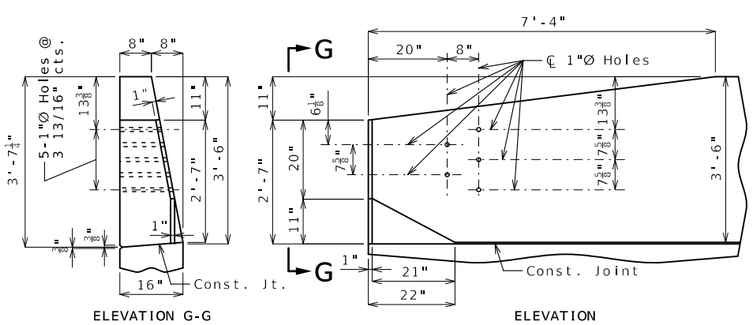

ELEVATION G-G

ELEVATION

(1) 5-#5-K1 @ 4" cts.

(2) 2 spaces @ 4"

(3) 5-#5-K14 & K15

(4) 3-#5-K16 & K17

(5) 3-#5-K23 @ 4½" cts., each face

(6) 3 spaces @ 3 13/16"

(7) Spaced as shown, each face

(8) To top of bar

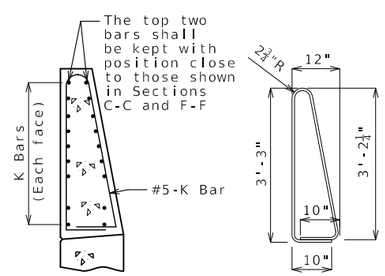

K20-K21 BAR PERMISSIBLE ALTERNATE SHAPE

(Other K bars not shown for clarity)

The K20-K21 bar combination may be furnished as one bar as shown, at the contractor's option.

All dimensions are out to out.

* Transition to zero at Type A curb for gutter lines to match.

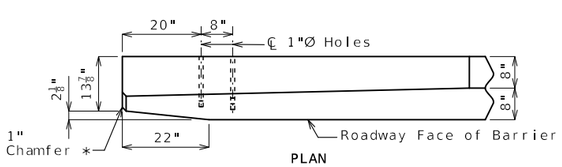

PLAN

DETAILS OF GUARD RAIL ATTACHMENT

General Notes:

Concrete traffic barrier delineators shall be placed on top of the barrier as shown on Missouri Standard Plan 617.10 and in accordance with Sec 617. Delineators on bridges with two-lane, two-way traffic shall have retroreflective sheeting on both sides. Concrete traffic barrier delineators will be considered completely covered by the contract unit price for Type D Barrier.

Reinforcing Steel:
Minimum clearance to reinforcing steel shall be 1 1/2" except as shown for bars embedded into end bent.

TYPE D BARRIER AT END BENTS (RIGHT)

Detailed Aug. 2025
Checked Oct. 2025

Note: This drawing is not to scale. Follow dimensions.

STATE OF MISSOURI
TRENTON B. CRAWFORD
NUMBER PE-2012018053
PROFESSIONAL ENGINEER
THIS SHEET HAS BEEN SIGNED, SEALED AND DATED ELECTRONICALLY.

DATE PREPARED	
12/17/2025	
ROUTE: U	STATE: MO
DISTRICT: BR	SHEET NO.: 24
COUNTY: CALDWELL	
JOB NO.: JNW0144	
CONTRACT ID.	
PROJECT NO.	
BRIDGE NO.: A9660	

DATE	DESCRIPTION

MISSOURI HIGHWAYS AND TRANSPORTATION COMMISSION
105 WEST CAPITOL
JEFFERSON CITY, MO 65102
1-888-ASK-MODOT (1-888-275-6636)

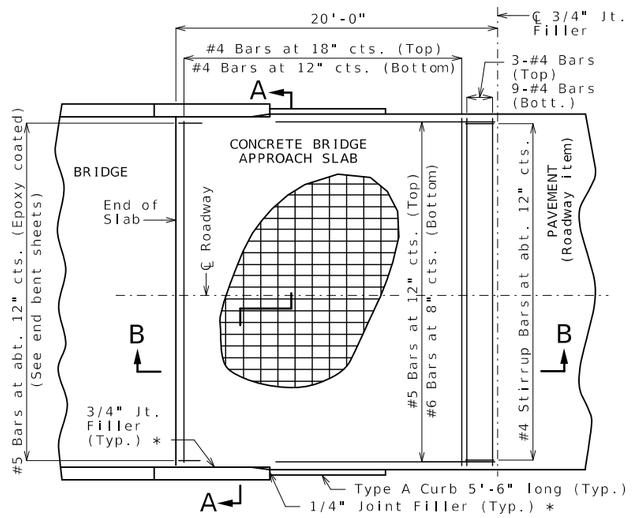

PART PLAN OF SQUARED STRUCTURE
(Skewed structure similar)

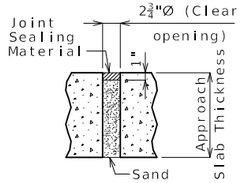

UNDERSEAL ACCESS HOLE DETAIL
(If required)

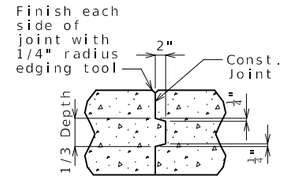

CONSTRUCTION JOINT DETAIL

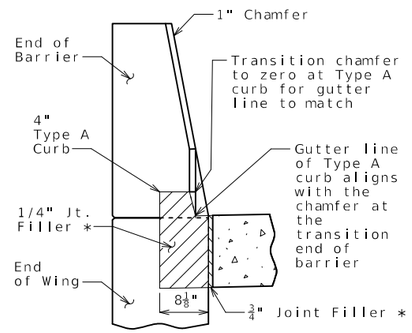

SECTION BETWEEN CURB AND BARRIER

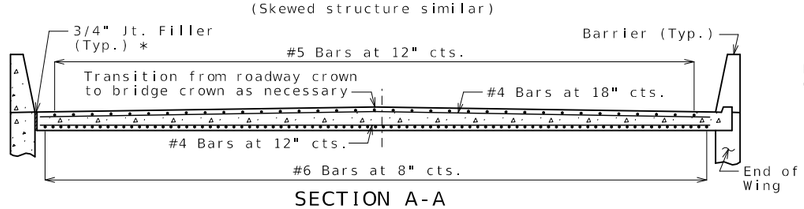

SECTION A-A

With the approval of the engineer, the contractor may crown the bottom of the approach slab to match the crown of the roadway surface.

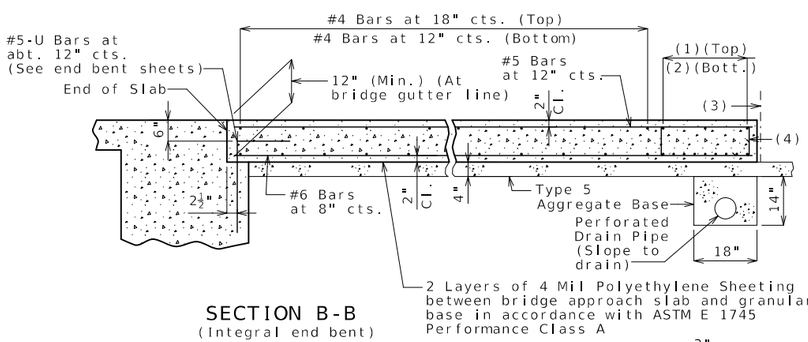

(1) 3-#4 Bars

(2) 9-#4 Bars

(3) ℄ 3/4" Jt. Filler

(4) #4 Stirrup Bars at abt. 12" cts.; 2'-0"x 8" (Min.) out to out; Actual length = 5'-10" (Min.); 90° stirrup hook at bottom; Stirrup height (8") and actual length vary due to crown.

SECTION B-B
(Integral end bent)

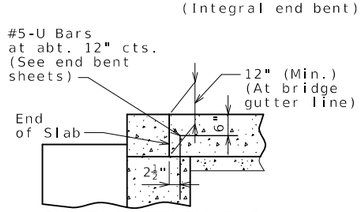

PART SECTION B-B
(Non-integral end bent)

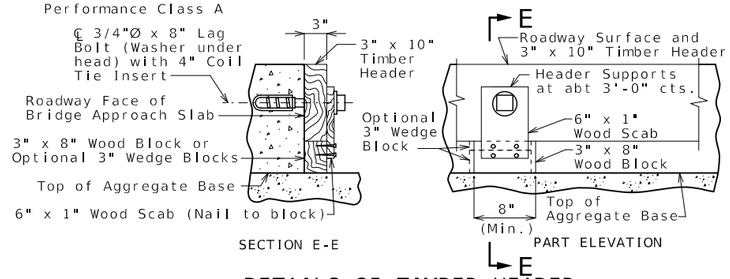

SECTION E-E

PART ELEVATION

DETAILS OF TIMBER HEADER
Remove timber header when concrete pavement is placed.

OPTIONAL CONCRETE SLAB

Notes For Concrete Slab Only:

All concrete for the bridge approach slab shall be in accordance with Sec 503 (f'c = 4,000 psi).

The reinforcing steel in the bridge approach slab shall be epoxy coated Grade 60 with fy = 60,000 psi.

Longitudinal construction joints in bridge approach slab shall be aligned with longitudinal construction joints in bridge slab.

Minimum clearance to reinforcing steel shall be 1 1/2", unless otherwise shown.

The reinforcing steel in the bridge approach slab shall be continuous. The transverse reinforcing steel may be made continuous by providing a minimum lap splice of 26 inches for #4 bars, or by mechanical bar splice.

All joint filler shall be in accordance with Sec 1057 for preformed fiber expansion joint filler except as noted.

Payment for furnishing all materials, labor and excavation necessary to construct the concrete bridge approach slab, including the timber header, underdrain, Type 5 aggregate base, joint filler, and all other appurtenances and incidental work as shown on this sheet, complete in place, will be considered completely covered by the contract unit price for Bridge Approach Slab (Minor) per square yard.

See Missouri Standard Plan 609.00 for details of Type A curb.

Drain pipe may be either 6" diameter corrugated metallic-coated pipe underdrain, 4" diameter corrugated polyvinyl chloride (PVC) drain pipe, or 4" diameter corrugated polyethylene (PE) drain pipe.

* Seal joint between vertical face of approach slab and wing with sealant in accordance with Sec 717 for silicone joint sealant for saw cut and formed joints.

General Notes:

Contractor shall have the option to construct either slab except as noted.

The contractor shall pour and satisfactorily finish the bridge slab before placing the bridge approach slab.

MoDOT Construction personnel will indicate the bridge approach slab used for this structure:

☐ Concrete Bridge Approach Slab

☐ Asphalt Bridge Approach Slab

Notes For Asphalt Slab Only:

Payment for furnishing all materials, labor and excavation necessary to construct the asphalt bridge approach slab, including tack, curb, and Type 5 aggregate base within the pay limits shown, complete in place, will be considered completely covered by the contract unit price for Bridge Approach Slab (Minor) per square yard.

Application of tack is required between lifts per Sec 403.

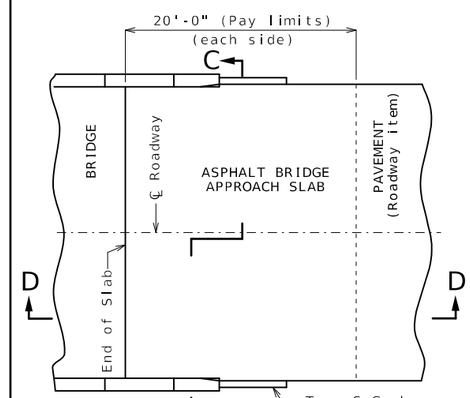

PART PLAN
(Squared structure shown, skewed structure similar)

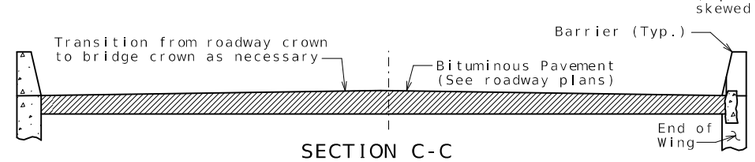

SECTION C-C

With the approval of the engineer, the contractor may crown the bottom of the approach slab to match the crown of the roadway surface.

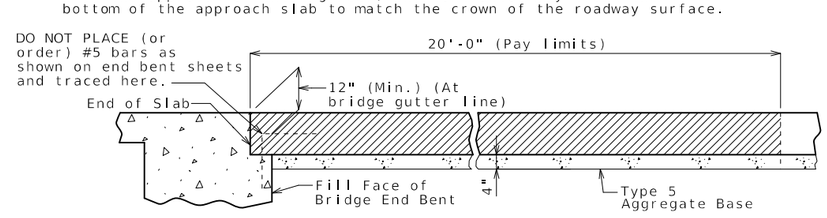

SECTION D-D

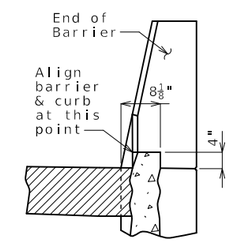

4" TYPE S CURB
See Missouri Standard Plan 609.00 for details of Type S curb.

OPTIONAL ASPHALT SLAB (NOT ALLOWED WITH CONCRETE PAVEMENT)

BRIDGE APPROACH SLAB (MINOR)

Integral end bents shown, non-integral end bent similar.

Detailed Aug. 2025
Checked Oct. 2025

Note: This drawing is not to scale. Follow dimensions.

STATE OF MISSOURI
TRENTON B. CRAWFORD
NUMBER PE-2012018053
PROFESSIONAL ENGINEER
THIS SHEET HAS BEEN SIGNED, SEALED AND DATED ELECTRONICALLY.

DATE PREPARED	12/17/2025
ROUTE U	STATE MO
DISTRICT BR	SHEET NO. 25
COUNTY	CALDWELL
JOB NO.	JNW0144
CONTRACT ID.	
PROJECT NO.	
BRIDGE NO.	A9660

DESCRIPTION

DATE

MISSOURI HIGHWAYS AND TRANSPORTATION COMMISSION

105 WEST CAPITOL
JEFFERSON CITY, MO 65102
1-888-ASK-MODOT (1-888-275-6636)

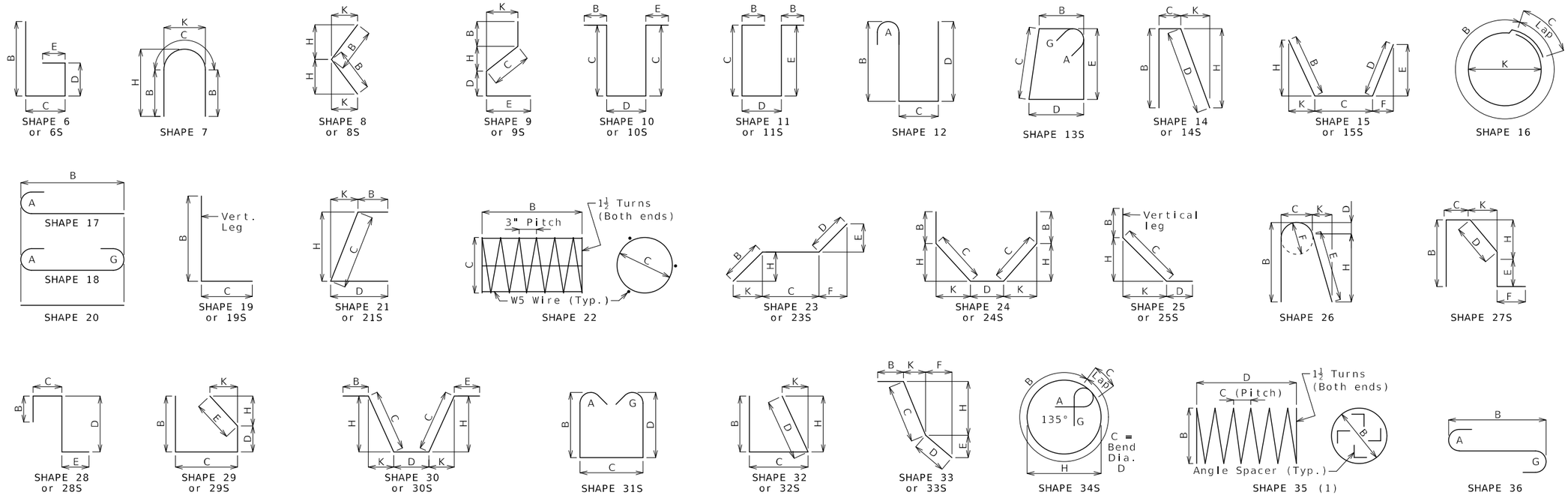

Finished Bend Diameters D and Hook Dimensions

Standard Pin Bend Shapes

Size	Case	D	A or G 90°	A or G 180°	J 180°
#4	1	3"	8"	6"	4"
#5	1	3¾"	10"	7"	5"
#6	1	4½"	12"	8¼"	6"
#7	2	5¼"	14"	9¾"	7"
	3	7"	15"	11½"	8¾"
#8	2	6"	16"	11"	8"
	3	8"	17"	13¼"	10"
#9	1	9½"	19½"	15½"	11¾"
#10	1	10¾"	22"	17½"	13¼"
#11	1	12"	24½"	19½"	14⅞"
#14	1	18¼"	31¼"	27½"	21⅝"
#18	1	24"	41½"	36¼"	28½"

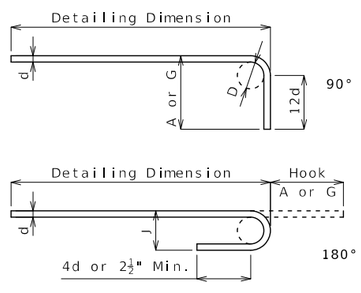

Stirrup Pin Bend Shapes (S)

Size	Case	D	A or G 90°	A or G 135°	A or G 180°	H 135°	J 180°
#4	2	2"	4½"	4½"	5"	2⅞"	3"
	3	3"	5"	5¼"	6"	3"	4"
#5	2	2½"	5¾"	5¾"	5¾"	3⅝"	3¾"
	3	3¾"	6¼"	6½"	7"	3⅞"	5"
#6	1	4½"	12"	7¾"	8¼"	4⅜"	6"

Applicable for all grades of steel.

Case 1 applies to all reinforcement. Case 2 applies to all reinforcement except for galvanized bars. Case 3 applies to galvanized bars only.

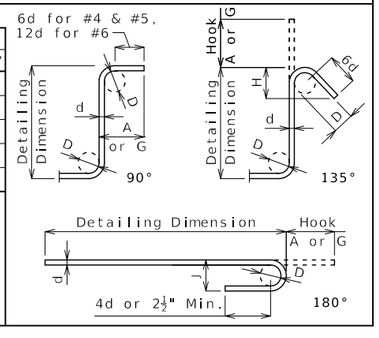

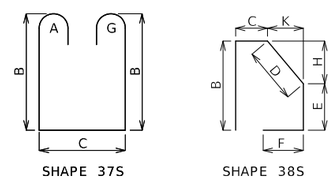

BENDING DIAGRAMS

All dimensions are out to out.

Shapes ending with an S shall be bent in accordance with stirrup pin bend shapes.

Unless otherwise noted, finished bending diameter D is the same for all bends of a shape.

(1) Shall be a deformed or plain spiral bar or wire.

Four angle or channel spacers are required for each column spiral. Spacers are to be placed on inside of spirals. Length and weight of column spirals do not include splices or spacers.

Reinforcing Steel Totals (Pounds)

	Size	Substructure Plain	Substructure Epoxy	Superstructure Slab	Superstructure Barrier	Superstructure Slip Form	Entire Bridge Plain	Entire Bridge Epoxy
By Size	W5	0	0	0	0	0	0	0
	4	168	0	690	0	0	168	690
	5	926	0	9,102	7,093	482	926	16,677
	6	1,396	0	17,780	0	0	1,396	17,780
	7	0	0	0	0	0	0	0
	8	0	0	1,024	0	0	0	1,024
	9	1,696	0	0	0	0	1,696	0
	10	0	0	0	0	0	0	0
	11	0	0	0	0	0	0	0
	14	0	0	0	0	0	0	0
	18	0	0	0	0	0	0	0
By Type		4,186	0	28,596	7,093	482	4,186	36,171

All superstructure reinforcing steel shall be epoxy coated unless otherwise specified.

BENDING DIAGRAMS AND REINFORCING STEEL TOTALS

Detailed Nov. 2025
Checked Nov. 2025

Note: This drawing is not to scale. Follow dimensions.

STATE OF MISSOURI
TRENTON B. CRAWFORD
NUMBER PE-2012018053
PROFESSIONAL ENGINEER
THIS SHEET HAS BEEN SIGNED, SEALED AND DATED ELECTRONICALLY.

DATE PREPARED	
12/17/2025	
ROUTE U	STATE MO
DISTRICT BR	SHEET NO. 26
COUNTY CALDWELL	
JOB NO. JNW0144	
CONTRACT ID.	
PROJECT NO.	
BRIDGE NO. A9660	

DESCRIPTION

DATE

MISSOURI HIGHWAYS AND TRANSPORTATION COMMISSION
105 WEST CAPITOL
JEFFERSON CITY, MO 65102
1-888-ASK-MODOT (1-888-275-6636)

Bill of Reinforcing Steel

No. Req.	Size/ Mark	Location	Codes C	Codes SH	Codes V	Dimensions B ft in.	C ft in.	D ft in.	E ft in.	F ft in.	H ft in.	K ft in.	Nom. Length ft in.	Actual Length ft in.	Weight lb
		Substructure													
		Int Bent 2													
21	6 D200	BEAM		20		2 6.00							2 6	2 6	79
8	9 H200	BEAM		18		28 8.00							31 2	31 2	848
8	6 H201	BEAM		20		28 8.00							28 8	28 8	344
12	6 H202	BEAM		10S			12.00	2 9.00					4 9	4 5	80
8	6 H203	BEAM		18		4 9.00							6 1	6 1	73
16	6 H204	BEAM		20		2 6.00							2 6	2 6	60
8	4 P200	CECIP PILE		34S		3 1.75	2.00				12.00		4 1	3 11	21
28	5 U200	BEAM		13S		2 9.00	2 9.00	2 9.00	2 9.00				11 11	11 7	338
15	5 U201	BEAM		10S			2 9.00	2 9.00					8 3	8	125
24	4 U202	BEAM		10S			8.25	2 9.00					4 2	3 11	63
6	6 V200	CECIP PILE		17		6 3.00							6 11	6 11	62
		Int Bent 3													
21	6 D300	BEAM		20		2 6.00							2 6	2 6	79
8	9 H300	BEAM		18		28 8.00							31 2	31 2	848
8	6 H301	BEAM		20		28 8.00							28 8	28 8	344
12	6 H302	BEAM		10S			12.00	2 9.00					4 9	4 5	80
8	6 H303	BEAM		18		4 9.00							6 1	6 1	73
16	6 H304	BEAM		20		2 6.00							2 6	2 6	60
8	4 P300	CECIP PILE		34S		3 1.75	2.00				12.00		4 1	3 11	21
28	5 U300	BEAM		13S		2 9.00	2 9.00	2 9.00	2 9.00				11 11	11 7	338
15	5 U301	BEAM		10S			2 9.00	2 9.00					8 3	8	125
24	4 U302	BEAM		10S			8.25	2 9.00					4 2	3 11	63
6	6 V300	CECIP PILE		17		6 3.00							6 11	6 11	62
		Superstructure													
		End Bent 1													
20	6 F100	WING BRACE	E	23S		20.00	5 1.00	20.00	14.25	14.00	14.25	14.00	8 5	8 4	250
4	6 F101	DIAPHRAGM	E	19S		4 9.00	2 9.00						7 6	7 4	44
7	6 H100	DIAPHRAGM	E	20		32 5.00							32 5	32 5	341
6	6 H101	DIAPHRAGM	E	20		2 4.00							2 4	2 4	21
9	6 H102	DIAPHRAGM	E	20		7 0.00							7	7	95
4	6 H103	BEAM	E	20		4 7.00							4 7	4 7	28
4	6 H104	BEAM	E	20		13 3.00							13 3	13 3	80
4	6 H105	BEAM	E	20		21 11.00							21 11	21 11	132
12	6 H106	BEAM	E	20		32 5.00							32 5	32 5	584
6	6 H107	BEAM	E	18		8 1.00							9 5	9 5	85
8	5 H108	STRAND TIE	E	20		3 11.00							3 11	3 11	33
8	8 H109	WING	E	20		10 6.00							10 6	10 6	224
18	6 H110	WING	E	20		9 0.00							9	9	243
8	8 H111	WING	E	20		13 6.00							13 6	13 6	288
26	6 H112	WING	E	20		12 0.00							12	12	469
12	6 H113	DIAPHRAGM	E	20		6 2.00							6 2	6 2	111
4	6 H114	DIAPHRAGM	E	20		2 4.00							2 4	2 4	14
8	4 P100	CECIP PILE	E	34S		3 1.75	2.00				12.00		4 1	3 11	21
2	4 U100	BEAM	E	10S			3 4.00	2 9.00					9 5	9 3	12
2	4 U101	BEAM	E	10S			4 0.25	2 9.00					10 10	10 7	14
1	5 U102	BEAM/DIAPHRAGM	E	37S		4 7.50	2 9.00						13	12 9	13
7	5 U103	BEAM/DIAPHRAGM	E	37S		5 5.00	2 9.00						14 7	14 4	105
6	5 U104	BEAM/DIAPHRAGM	E	37S		6 0.50	2 9.00						15 10	15 7	98
1	5 U105	BEAM/DIAPHRAGM	E	37S		6 2.00	2 9.00						16 1	15 10	17
6	5 U106	BEAM/DIAPHRAGM	E	37S		6 9.00	2 9.00						17 3	17	106
2	5 U107	BEAM/DIAPHRAGM	E	37S		7 2.00	2 9.00						18 1	17 10	37
3	4 U108	BEAM	E	13S		2 9.00	2 8.00	2 9.00	2 8.00				11 7	11 4	23
2	4 U109	BEAM	E	13S		2 9.00	3 4.00	2 9.00	3 4.00				12 11	12 8	17
2	4 U110	BEAM	E	13S		2 9.00	4 0.25	2 9.00	4 0.25				14 4	14	19
3	4 U111	BEAM	E	13S		2 9.00	4 8.25	2 9.00	4 8.25				15 8	15 4	31
27	5 U112	DIAPHRAGM	E	37S		3 2.50	2 3.00						9 8	9 5	265
27	6 U113	DIAPHRAGM	E	19S		2 2.00	2 9.00						4 11	4 9	193

Bill of Reinforcing Steel

No. Req.	Size/ Mark	Location	Codes C	Codes SH	Codes V	Dimensions B ft in.	C ft in.	D ft in.	E ft in.	F ft in.	H ft in.	K ft in.	Nom. Length ft in.	Actual Length ft in.	Weight lb
40	6 U114	DIAPHRAGM	E	19S		2 7.00	4 2.50						6 10	6 8	401
30	5 U115	APPROACH TIE	E	19S		2 0.00	15.00						3 3	3 2	99
4	5 V100	BEAM/DIAPHRAGM	E	17		5 0.00							5 7	5 7	23
4	5 V101	BEAM/DIAPHRAGM	E	17		7 1.00							7 8	7 8	32
12	6 V102	DIAPHRAGM	E	20		2 4.00							2 4	2 4	42
18	6 V103	WING	E	20		6 1.00							6 1	6 1	164
24	6 V104	WING	E	20		8 7.00							8 7	8 7	309
6	6 V105	CECIP PILE	E	17		6 3.00							6 11	6 11	62
		End Bent 4													
20	6 F400	WING BRACE	E	23S		20.00	5 1.00	20.00	14.25	14.00	14.25	14.00	8 5	8 4	250
4	6 F401	DIAPHRAGM	E	19S		4 9.00	2 9.00						7 6	7 4	44
7	6 H400	DIAPHRAGM	E	20		32 5.00							32 5	32 5	341
6	6 H401	DIAPHRAGM	E	20		2 4.00							2 4	2 4	21
9	6 H402	DIAPHRAGM	E	20		7 0.00							7	7	95
4	6 H403	BEAM	E	20		4 7.00							4 7	4 7	28
4	6 H404	BEAM	E	20		13 3.00							13 3	13 3	80
4	6 H405	BEAM	E	20		21 11.00							21 11	21 11	132
12	6 H406	BEAM	E	20		32 5.00							32 5	32 5	584
6	6 H407	BEAM	E	18		8 1.00							9 5	9 5	85
8	5 H408	STRAND TIE	E	20		3 11.00							3 11	3 11	33
8	8 H409	WING	E	20		10 6.00							10 6	10 6	224
18	6 H410	WING	E	20		9 0.00							9	9	243
8	8 H411	WING	E	20		13 6.00							13 6	13 6	288
26	6 H412	WING	E	20		12 0.00							12	12	469
12	6 H413	DIAPHRAGM	E	20		6 2.00							6 2	6 2	111
4	6 H414	DIAPHRAGM	E	20		2 4.00							2 4	2 4	14
8	4 P400	CECIP PILE	E	34S		3 1.75	2.00				12.00		4 1	3 11	21
2	4 U400	BEAM	E	10S			3 4.00	2 9.00					9 5	9 3	12
2	4 U401	BEAM	E	10S			4 0.25	2 9.00					10 10	10 7	14
1	5 U402	BEAM/DIAPHRAGM	E	37S		4 7.50	2 9.00						13	12 9	13
7	5 U403	BEAM/DIAPHRAGM	E	37S		5 5.00	2 9.00						14 7	14 4	105
6	5 U404	BEAM/DIAPHRAGM	E	37S		6 0.50	2 9.00						15 10	15 7	98
1	5 U405	BEAM/DIAPHRAGM	E	37S		6 2.00	2 9.00						16 1	15 10	17
6	5 U406	BEAM/DIAPHRAGM	E	37S		6 9.00	2 9.00						17 3	17	106
2	5 U407	BEAM/DIAPHRAGM	E	37S		7 2.00	2 9.00						18 1	17 10	37
3	4 U408	BEAM	E	13S		2 9.00	2 8.00	2 9.00	2 8.00				11 7	11 4	23
2	4 U409	BEAM	E	13S		2 9.00	3 4.00	2 9.00	3 4.00				12 11	12 8	17
2	4 U410	BEAM	E	13S		2 9.00	4 0.25	2 9.00	4 0.25				14 4	14	19
3	4 U411	BEAM	E	13S		2 9.00	4 8.25	2 9.00	4 8.25				15 8	15 4	31
27	5 U412	DIAPHRAGM	E	37S		3 2.50	2 3.00						9 8	9 5	265
27	6 U413	DIAPHRAGM	E	19S		2 2.00	2 9.00						4 11	4 9	193
40	6 U414	DIAPHRAGM	E	19S		2 7.00	4 2.50						6 10	6 8	401
30	5 U415	APPROACH TIE	E	19S		2 0.00	15.00						3 3	3 2	99
4	5 V400	BEAM/DIAPHRAGM	E	17		5 0.00							5 7	5 7	23
4	5 V401	BEAM/DIAPHRAGM	E	17		7 1.00							7 8	7 8	32
12	6 V402	DIAPHRAGM	E	20		2 4.00							2 4	2 4	42
18	6 V403	WING	E	20		6 1.00							6 1	6 1	164
24	6 V404	WING	E	20		8 7.00							8 7	8 7	309
6	6 V405	CECIP PILE	E	17		6 3.00							6 11	6 11	62
		Int Diaphragms													
12	6 H500	DIAPHRAGM	E	20		6 3.00							6 3	6 3	113
12	6 H501	DIAPHRAGM	E	20		6 7.00							6 7	6 7	119
24	4 H502	DIAPHRAGM	E	20		7 2.00							7 2	7 2	115
8	5 H503	STRAND TIE	E	20		2 10.00							2 10	2 10	24
8	5 H504	STRAND TIE	E	20		3 11.00							3 11	3 11	33
72	4 U500	DIAPHRAGM	E	28S			15.00	3 2.00	2 0.00				6 5	6 3	301
24	6 U501	DIAPHRAGM	E	28S			22.00	2 11.00	2 0.00				6 9	6 5	231
32	5 U502	DIAPHRAGM	E	19S		2 7.50	10.00						3 6	3 4	111
16	5 V500	DIAPHRAGM	E	20		3 3.00							3 3	3 3	54
		Slab													
56	5 S1	SLAB	E	20		54 8.00							54 8	54 8	3,193
50	5 S2	SLAB	E	20		19 9.00							19 9	19 9	1,030
50	5 S3	SLAB	E	20		26 3.00							26 3	26 3	1,369
205	6 S4	SLAB	E	20		32 5.00							32 5	32 5	9,981
16	5 S5	SLAB	E	20		54 11.00							54 11	54 11	916

Nominal lengths are based on out to out dimensions shown in bending diagrams and are listed to the nearest inch for fabricator's use. Actual lengths are measured along centerline bar to the nearest inch. Weights are based on actual lengths.

For bending diagrams and steel reinforcing totals, see Sheet No. 26.

Detailed Nov. 2025
Checked Nov. 2025

All bars shall be Reinforcing steel (ASTM A615 Grade 60) fy= 60,000 psi

Note: This drawing is not to scale. Follow dimensions.

Codes: C = Required coatings, where E = Epoxy Coated and G = Galvanized.

SH = Required shape, see bending diagrams.

V = Sets of varied bars and number of bars of each length. Bar dimensions vary in equal increments between dimensions shown on this line and the following line and the actual length dimension shown on this line and the following line vary by the specified increment.

BILL OF REINFORCING STEEL

STATE OF MISSOURI
TRENTON B. CRAWFORD
NUMBER PE-2012018053
PROFESSIONAL ENGINEER
THIS SHEET HAS BEEN SIGNED, SEALED AND DATED ELECTRONICALLY.

DATE PREPARED 12/17/2025
ROUTE U | STATE MO
DISTRICT BR | SHEET NO. 27
COUNTY CALDWELL
JOB NO. JNW0144
CONTRACT ID.
PROJECT NO.
BRIDGE NO. A9660

DESCRIPTION | DATE

MISSOURI HIGHWAYS AND TRANSPORTATION COMMISSION
105 WEST CAPITOL
JEFFERSON CITY, MO 65102
1-888-ASK-MODOT (1-888-275-6636)

Bill of Reinforcing Steel

No. Req.	Size/ Mark	Location	Codes C	Codes SH	Codes V	Dimensions B ft in.	C ft in.	D ft in.	E ft in.	F ft in.	H ft in.	K ft in.	Nom. Length ft in.	Actual Length ft in.	Weight lb
206	5 S6	SLAB	E	20		3 4.00							3 4	3 4	716
		Barrier													
		Type D													
20	5 K1	BARRIER	E	27S		3 5.00	9.25	5.25	2 11.75		5.25	1.00	7 7	7 5	155
70	5 K2	BARRIER	E	27S		3 5.00	9.25	14.50	2 2.75		14.25	2.75	7 8	7 5	541
10	5 K4	BARRIER	E	19S	2	2 2.75	10.00						3 1	2 11	
		Incr. = 0.500"				2 4.75	10.00						3 3	3 1	31
10	5 K5	BARRIER	E	38S	2			18.50	9.50	8.25	18.00	4.00	3	2 11	
		Incr. = 0.500"						20.50	9.50	8.25	20.00	4.50	3 2	3 1	31
6	5 K6	BARRIER	E	19S		2 5.25	10.00						3 3	3 2	20
6	5 K7	BARRIER	E	21S			2 6.75	10.00			2 6.00	6.25	3 5	3 4	21
18	5 K8	BARRIER	E	19S	2	2 7.00	10.00						3 5	3 4	
		Incr. = 0.750"				3 1.00	10.00						3 11	3 10	67
18	5 K9	BARRIER	E	21S	2		2 8.50	10.00			2 7.75	6.75	3 7	3 6	
		Incr. = 0.750"					3 2.50	10.00			3 1.75	7.75	4 1	4	70
14	5 K10	BARRIER	E	19S		3 1.50	10.00						4	3 10	56
14	5 K11	BARRIER	E	21S			3 3.00	10.00			3 2.25	7.75	4 1	4	58
24	5 K12	BARRIER	E	20		13 9.00							13 9	13 9	344
12	5 K13	BARRIER	E	20	4	13 0.00							13	13	
		Incr. = 36.000"				7 0.00							7	7	125
10	5 K14	BARRIER	E	19S	2	2 5.25	10.00						3 3	3 2	
		Incr. = 0.500"				2 7.25	10.00						3 5	3 4	34
10	5 K15	BARRIER	E	38S	2			18.50	9.50	8.25	18.00	4.00	3	2 11	
		Incr. = 0.500"						20.50	9.50	8.25	20.00	4.50	3 2	3 1	31
6	5 K16	BARRIER	E	19S		2 7.75	10.00						3 6	3 4	21
6	5 K17	BARRIER	E	21S			2 6.75	10.00			2 6.00	6.25	3 5	3 4	21
18	5 K18	BARRIER	E	19S	2	2 9.50	10.00						3 8	3 6	
		Incr. = 0.750"				3 3.50	10.00						4 2	4	70
18	5 K19	BARRIER	E	21S	2		2 8.50	10.00			2 7.75	6.75	3 7	3 6	
		Incr. = 0.750"					3 2.50	10.00			3 1.75	7.75	4 1	4	70
8	5 K20	BARRIER	E	19S		3 4.00							3 4	3 3	27
8	5 K21	BARRIER	E	21S			3 3.00	10.00			3 2.25	7.75	4 1	4	33
24	5 K22	BARRIER	E	20		10 9.00							10 9	10 9	269
12	5 K23	BARRIER	E	20	4	10 0.00							10	10	
		Incr. = 36.000"				4 0.00							4	4	88
108	5 R1	BARRIER	E	26		3 1.50	5.50	2.25	3 1.25	5.50	3 0.75	6.75	6 11	6 7	742
108	5 R2	BARRIER	E	19S		19.00	9.50						2 5	2 3	253
216	5 R3	BARRIER	E	27S			9.50	15.25	5.00	12.00	15.00	3.00	3 6	3 4	751
40	5 R4	BARRIER	E	20		11 9.00							11 9	11 9	490
40	5 R5	BARRIER	E	20		28 6.00							28 6	28 6	1,189
20	5 R6	BARRIER	E	20		20 9.00							20 9	20 9	433
108	5 R7	BARRIER	E	26		3 4.00	5.50	2.25	3 1.25	5.50	3 0.75	6.75	7 1	6 10	770
108	5 R8	BARRIER	E	19S		21.50	9.50						2 7	2 6	282
		Slip-Form													
32	5 C1	SLIP FORM	E	20		12 0.00							12	12	401
4	5 C2	SLIP FORM	E	20		10 6.00							10 6	10 6	44
4	5 C3	SLIP FORM	E	20		8 9.00							8 9	8 9	37

Bill of Reinforcing Steel

No. Req.	Size/ Mark	Location	Codes C	Codes SH	Codes V	Dimensions B ft in.	C ft in.	D ft in.	E ft in.	F ft in.	H ft in.	K ft in.	Nom. Length ft in.	Actual Length ft in.	Weight lb

Nominal lengths are based on out to out dimensions shown in bending diagrams and are listed to the nearest inch for fabricator's use. Actual lengths are measured along centerline bar to the nearest inch. Weights are based on actual lengths.

For bending diagrams and steel reinforcing totals, see Sheet No. 26.

Detailed Nov. 2025
Checked Nov. 2025

All bars shall be Reinforcing steel (ASTM A615 Grade 60) fy= 60,000 psi

BILL OF REINFORCING STEEL

Note: This drawing is not to scale. Follow dimensions.

Codes: C = Required coatings, where E = Epoxy Coated and G = Galvanized.

SH = Required shape, see bending diagrams.

V = Sets of varied bars and number of bars of each length. Bar dimensions vary in equal increments between dimensions shown on this line and the following line and the actual length dimension shown on this line and the following line vary by the specified increment.

STATE OF MISSOURI
TRENTON B. CRAWFORD
NUMBER PE-2012018053
PROFESSIONAL ENGINEER

THIS SHEET HAS BEEN SIGNED, SEALED AND DATED ELECTRONICALLY.

DATE PREPARED 12/17/2025

ROUTE	STATE
U	MO

DISTRICT	SHEET NO.
BR	28

COUNTY: CALDWELL

JOB NO. JNW0144

CONTRACT ID.

PROJECT NO.

BRIDGE NO. A9660

DESCRIPTION	DATE

MISSOURI HIGHWAYS AND TRANSPORTATION COMMISSION
105 WEST CAPITOL
JEFFERSON CITY, MO 65102
1-888-ASK-MODOT (1-888-275-6636)

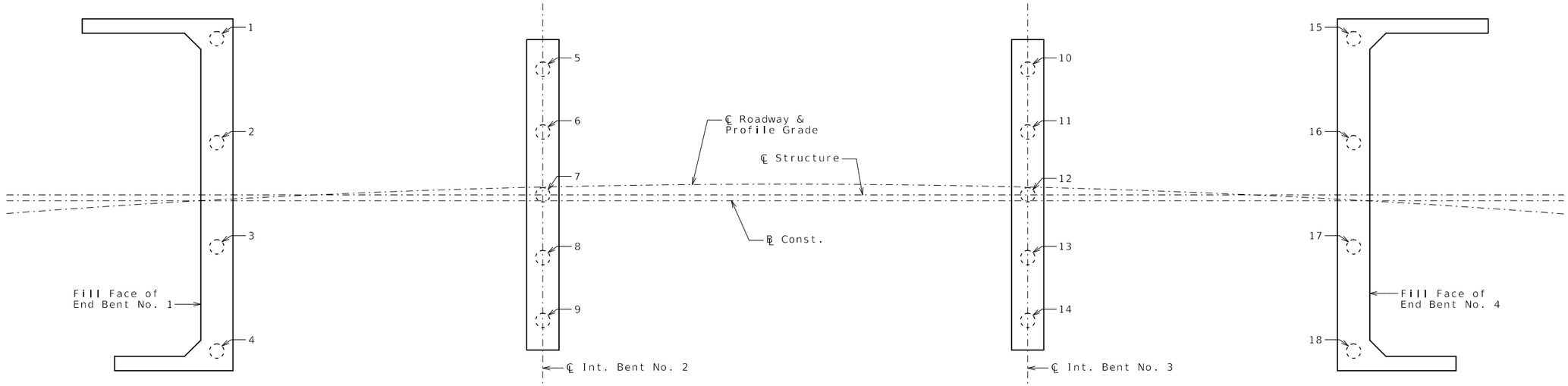

PART PLAN SHOWING PILE NUMBERING FOR RECORDING AS-BUILT PILE DATA

As-Built Pile Data			
Pile No.	Length in Place (ft)	Computed Nominal Axial Compressive Resistance (kips)	Remarks
			End Bent No. 1
1			
2			
3			
4			
			Int. Bent No. 2
5			
6			
7			
8			
9			

As-Built Pile Data			
Pile No.	Length in Place (ft)	Computed Nominal Axial Compressive Resistance (kips)	Remarks
			Int. Bent No. 3
10			
11			
12			
13			
14			
			End Bent No. 4
15			
16			
17			
18			

Note:
Indicate in remarks column:
A. Pile type and grade
B. Batter
C. Driven to practical refusal

This sheet to be completed by MoDOT construction personnel.

Detailed Aug. 2025
Checked Oct. 2025

Note: This drawing is not to scale. Follow dimensions.

STATE OF MISSOURI
TRENTON B. CRAWFORD
NUMBER PE-2012018053
PROFESSIONAL ENGINEER
THIS SHEET HAS BEEN SIGNED, SEALED AND DATED ELECTRONICALLY.

DATE PREPARED	12/17/2025
ROUTE	U
STATE	MO
DISTRICT	BR
SHEET NO.	29
COUNTY	CALDWELL
JOB NO.	JNW0144
CONTRACT ID.	
PROJECT NO.	
BRIDGE NO.	A9660

DESCRIPTION	DATE

MISSOURI HIGHWAYS AND TRANSPORTATION COMMISSION
105 WEST CAPITOL
JEFFERSON CITY, MO 65102
1-888-ASK-MODOT (1-888-275-6636)

Missouri Department of Transportation

SUBSURFACE DIAGRAM

PROJECT NAME Bridge Replacement
PROJECT LOCATION 3.45 Miles NE of Kingston
CLIENT
PROJECT NUMBER JNW0144

USCS Low Plasticity Clay
Boulders and cobbles
USCS Low Plasticity Silty Clay
USCS Clayey Sand
USCS Poorly-graded Sand
Asphalt
Concrete
Shale
Glacial Till
USCS Well-graded Gravel
USCS Low Plasticity Sandy Clay

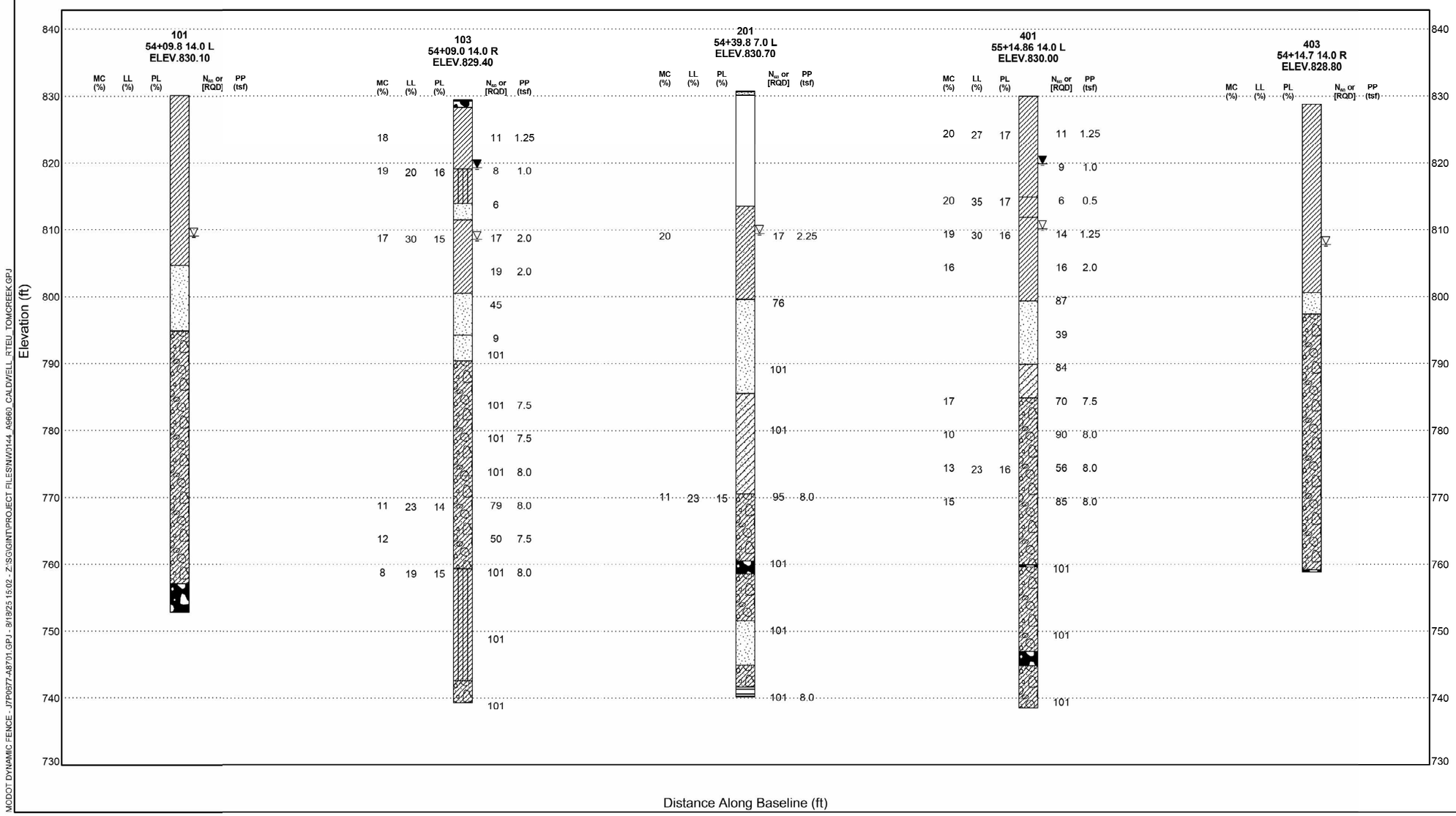

BORING DATA

Note: For locations of borings, see Sheet No. 1.

Note: This drawing is not to scale. Follow dimensions.

Detailed Sep. 2025
Checked Oct. 2025

STATE OF MISSOURI
TRENTON B. CRAWFORD
NUMBER PE-2012018053
PROFESSIONAL ENGINEER
THIS SHEET HAS BEEN SIGNED, SEALED AND DATED ELECTRONICALLY.

DATE PREPARED	
12/17/2025	
ROUTE: U	STATE: MO
DISTRICT: BR	SHEET NO.: 30
COUNTY: CALDWELL	
JOB NO.: JNW0144	
CONTRACT ID.	
PROJECT NO.	
BRIDGE NO.: A9660	

DESCRIPTION | DATE

MISSOURI HIGHWAYS AND TRANSPORTATION COMMISSION
105 WEST CAPITOL
JEFFERSON CITY, MO 65102
1-888-ASK-MODOT (1-888-275-6636)

MODOT DYNAMIC FENCE - J7P0577-A8701.GPJ - 8/19/25 15:02 - Z:\SGI\GINT\PROJECT FILES\NW\0144_A9660_CALDWELL_RTEU_TOMCREEK.GPJ