JST0017B REMOVAL OF IMPROVEMENTS

PLAN SHEET	STA.	STA.	ROUTE	OFFSET	DESCRIPTION	QUANTITY	UNITS	REMARKS
GUARDRAIL (CONT.)								
17	1193+66.68	1207+24.86	I-70	RT	MGS GUARDRAIL	1358.2	LF	INCLUDES TYPE A CRASHWORTHY END TERMINAL(MASH) AND MGS END ANCHOR
18	1220+63.18	1228+51.60	I-70	RT	MGS GUARDRAIL	788.4	LF	INCLUDES TYPE A CRASHWORTHY END TERMINAL(MASH) AND MGS END ANCHOR
18	1229+60.43	1233+28.01	I-70	RT	MGS GUARDRAIL	367.6	LF	INCLUDES TYPE A CRASHWORTHY END TERMINAL(MASH) AND MGS END ANCHOR
18	1230+52.23	1232+64.58	I-70	RT	MGS GUARDRAIL	212.4	LF	INCLUDES TYPE A CRASHWORTHY END TERMINAL(MASH) AND VERTICAL BARRIER TRANSITION SECTION
18-19	1236+36.54	1250+10.42	I-70	RT	MGS GUARDRAIL	1373.9	LF	INCLUDES TYPE A CRASHWORTHY END TERMINAL(MASH) AND MGS END ANCHOR
19-20	1267+01.11	1276+95.01	I-70	RT	MGS GUARDRAIL	993.9	LF	INCLUDES TYPE A CRASHWORTHY END TERMINAL(MASH) AND MGS END ANCHOR
20-21	1294+39.85	1298+14.75	I-70	RT	MGS GUARDRAIL	374.9	LF	INCLUDES TYPE A CRASHWORTHY END TERMINAL(MASH) AND MGS END ANCHOR
21	1304+27.63	1309+54.92	I-70	RT	MGS GUARDRAIL	527.3	LF	INCLUDES TYPE A CRASHWORTHY END TERMINAL(MASH) AND MGS END ANCHOR
21-22	1320+74.46	1324+26.45	I-70	RT	MGS GUARDRAIL	352.0	LF	INCLUDES TYPE A CRASHWORTHY END TERMINAL(MASH) AND MGS END ANCHOR
21	1321+39.48	1323+76.85	I-70	RT	MGS GUARDRAIL	237.4	LF	INCLUDES TYPE A CRASHWORTHY END TERMINAL(MASH) AND VERTICAL BARRIER TRANSITION SECTION
22	1338+27.72	1349+27.07	I-70	RT	MGS GUARDRAIL	1099.4	LF	INCLUDES TYPE A CRASHWORTHY END TERMINAL(MASH) AND MGS END ANCHOR
23	1361+10.88	1365+61.98	I-70	RT	MGS GUARDRAIL	451.1	LF	INCLUDES TYPE A CRASHWORTHY END TERMINAL(MASH) AND MGS END ANCHOR
24	1387+30.24	1393+82.47	I-70	RT	MGS GUARDRAIL	652.2	LF	INCLUDES TYPE A CRASHWORTHY END TERMINAL(MASH) AND MGS END ANCHOR
24-25	1403+34.64	1408+08.26	I-70	RT	MGS GUARDRAIL	473.6	LF	INCLUDES TYPE A CRASHWORTHY END TERMINAL(MASH) AND BRIDGE TRANSITION SECTION
25	1406+20.71	1408+11.00	I-70	RT	MGS GUARDRAIL	190.3	LF	INCLUDES TYPE A CRASHWORTHY END TERMINAL(MASH) AND BRIDGE TRANSITION SECTION
25	1409+80.24	1425+00.00	I-70	RT	MGS GUARDRAIL	1519.8	LF	INCLUDES BRIDGE TRANSITION SECTION
1-2	781+58.14	798+81.88	I-70	LT	MGS GUARDRAIL	1723.7	LF	INCLUDES TYPE A CRASHWORTHY END TERMINAL(MASH) AND MGS END ANCHOR
3	812+85.45	816+37.10	I-70	LT	MGS GUARDRAIL	351.7	LF	INCLUDES TYPE A CRASHWORTHY END TERMINAL(MASH) AND MGS END ANCHOR
3	813+84.78	815+97.04	I-70	LT	MGS GUARDRAIL	212.3	LF	INCLUDES TYPE A CRASHWORTHY END TERMINAL(MASH) AND VERTICAL BARRIER TRANSITION SECTION
3	825+79.88	836+17.74	I-70	LT	MGS GUARDRAIL	1037.9	LF	INCLUDES TYPE A CRASHWORTHY END TERMINAL(MASH) AND MGS END ANCHOR
4	857+99.82	862+61.99	I-70	LT	MGS GUARDRAIL	462.2	LF	INCLUDES TYPE A CRASHWORTHY END TERMINAL(MASH) AND MGS END ANCHOR
5	875+60.23	882+34.14	I-70	LT	MGS GUARDRAIL	673.9	LF	INCLUDES TYPE A CRASHWORTHY END TERMINAL(MASH) AND MGS END ANCHOR
5-6	888+93.11	899+32.19	I-70	LT	MGS GUARDRAIL	1039.1	LF	INCLUDES TYPE A CRASHWORTHY END TERMINAL(MASH) AND MGS END ANCHOR
6	905+87.68	909+41.08	I-70	LT	MGS GUARDRAIL	353.4	LF	INCLUDES TYPE A CRASHWORTHY END TERMINAL(MASH) AND MGS END ANCHOR
6	905+96.87	908+19.13	I-70	LT	MGS GUARDRAIL	222.3	LF	INCLUDES TYPE A CRASHWORTHY END TERMINAL(MASH) AND MGS END ANCHOR
6	912+31.21	916+39.29	I-70	LT	MGS GUARDRAIL	408.1	LF	INCLUDES TYPE A CRASHWORTHY END TERMINAL(MASH) AND MGS END ANCHOR
7	928+71.59	938+20.87	I-70	LT	MGS GUARDRAIL	949.3	LF	INCLUDES TYPE A CRASHWORTHY END TERMINAL(MASH) AND MGS END ANCHOR
8	950+19.77	971+26.32	I-70	LT	MGS GUARDRAIL	2106.6	LF	INCLUDES TYPE A CRASHWORTHY END TERMINAL(MASH) AND MGS END ANCHOR
9-10	998+96.35	1017+72.65	I-70	LT	MGS GUARDRAIL	1876.3	LF	INCLUDES TYPE A CRASHWORTHY END TERMINAL(MASH) AND MGS END ANCHOR
11	1033+30.94	1045+57.48	I-70	LT	MGS GUARDRAIL	1226.5	LF	INCLUDES TYPE A CRASHWORTHY END TERMINAL(MASH) AND MGS END ANCHOR
12	1054+48.02	1059+23.35	I-70	LT	MGS GUARDRAIL	475.3	LF	INCLUDES TYPE A CRASHWORTHY END TERMINAL(MASH) AND MGS END ANCHOR
12	1055+38.41	1057+63.13	I-70	LT	MGS GUARDRAIL	224.7	LF	INCLUDES TYPE A CRASHWORTHY END TERMINAL(MASH) AND MGS END ANCHOR
13-14	1093+93.94	1110+10.07	I-70	LT	MGS GUARDRAIL	1616.1	LF	INCLUDES TYPE A CRASHWORTHY END TERMINAL(MASH) AND MGS END ANCHOR
14	1124+86.25	1129+88.25	I-70	LT	MGS GUARDRAIL	502.0	LF	INCLUDES TYPE A CRASHWORTHY END TERMINAL(MASH) AND MGS END ANCHOR
15-16	1157+31.38	1162+93.54	I-70	LT	MGS GUARDRAIL	562.2	LF	INCLUDES TYPE A CRASHWORTHY END TERMINAL(MASH) AND MGS END ANCHOR
17	1195+65.61	1210+66.22	I-70	LT	MGS GUARDRAIL	1500.6	LF	INCLUDES TYPE A CRASHWORTHY END TERMINAL(MASH) AND MGS END ANCHOR
17	1213+36.14	1215+49.82	I-70	LT	MGS GUARDRAIL	213.7	LF	INCLUDES TYPE A CRASHWORTHY END TERMINAL(MASH) AND MGS END ANCHOR
18	1223+14.67	1227+80.66	I-70	LT	MGS GUARDRAIL	466.0	LF	INCLUDES TYPE A CRASHWORTHY END TERMINAL(MASH) AND MGS END ANCHOR
18	1232+24.90	1235+76.12	I-70	LT	MGS GUARDRAIL	351.2	LF	INCLUDES TYPE A CRASHWORTHY END TERMINAL(MASH) AND MGS END ANCHOR
18	1232+85.28	1234+55.67	I-70	LT	MGS GUARDRAIL	170.4	LF	INCLUDES TYPE A CRASHWORTHY END TERMINAL(MASH) AND VERTICAL BARRIER TRANSITION SECTION
18-19	1237+62.91	1249+87.14	I-70	LT	MGS GUARDRAIL	1224.2	LF	INCLUDES TYPE A CRASHWORTHY END TERMINAL(MASH) AND MGS END ANCHOR
20	1270+60.83	1279+47.06	I-70	LT	MGS GUARDRAIL	886.2	LF	INCLUDES TYPE A CRASHWORTHY END TERMINAL(MASH) AND MGS END ANCHOR
21	1318+03.12	1321+67.95	I-70	LT	MGS GUARDRAIL	364.8	LF	INCLUDES TYPE A CRASHWORTHY END TERMINAL(MASH) AND MGS END ANCHOR
21-22	1323+09.31	1326+62.16	I-70	LT	MGS GUARDRAIL	352.9	LF	INCLUDES TYPE A CRASHWORTHY END TERMINAL(MASH) AND MGS END ANCHOR
21-22	1323+57.44	1325+75.00	I-70	LT	MGS GUARDRAIL	217.6	LF	INCLUDES TYPE A CRASHWORTHY END TERMINAL(MASH) AND VERTICAL BARRIER TRANSITION SECTION
22	1330+08.67	1335+30.65	I-70	LT	MGS GUARDRAIL	522.0	LF	INCLUDES TYPE A CRASHWORTHY END TERMINAL(MASH) AND MGS END ANCHOR
22	1339+06.85	1348+56.50	I-70	LT	MGS GUARDRAIL	949.7	LF	INCLUDES TYPE A CRASHWORTHY END TERMINAL(MASH) AND MGS END ANCHOR
23	1363+26.61	1367+51.11	I-70	LT	MGS GUARDRAIL	424.5	LF	INCLUDES TYPE A CRASHWORTHY END TERMINAL(MASH) AND MGS END ANCHOR
23-24	1376+44.97	1379+68.58	I-70	LT	MGS GUARDRAIL	323.6	LF	INCLUDES TYPE A CRASHWORTHY END TERMINAL(MASH) AND MGS END ANCHOR
24-25	1399+78.69	1407+94.11	I-70	LT	MGS GUARDRAIL	815.4	LF	INCLUDES TYPE A CRASHWORTHY END TERMINAL(MASH) AND BRIDGE TRANSITION SECTION
25	1409+71.50	1425+00.00	I-70	LT	MGS GUARDRAIL	1528.5	LF	INCLUDES BRIDGE TRANSITION SECTION
2-3	788+23.19	811+74.41	I-70	CT	HIGH-TENSION GUARD CABLE	2351.2	LF	
3-4	814+83.70	841+69.56	I-70	CL	HIGH-TENSION GUARD CABLE	2686.3	LF	
4	841+69.56	855+13.76	I-70	CL	HIGH-TENSION GUARD CABLE	1344.5	LF	
4-5	854+64.24	867+76.21	I-70	CL	HIGH-TENSION GUARD CABLE	1312.7	LF	
5	867+76.21	875+17.66	I-70	CL	HIGH-TENSION GUARD CABLE	741.8	LF	
5-6	874+65.88	895+17.78	I-70	CL	HIGH-TENSION GUARD CABLE	2052.5	LF	
6	894+66.30	904+80.73	I-70	CL	HIGH-TENSION GUARD CABLE	1015.1	LF	
6-7	907+77.54	928+61.47	I-70	CL	HIGH-TENSION GUARD CABLE	2083.9	LF	
7	929+35.90	931+00.23	I-70	CL	HIGH-TENSION GUARD CABLE	164.4	LF	
7-8	931+00.23	956+74.01	I-70	CL	HIGH-TENSION GUARD CABLE	2574.1	LF	
8	956+74.01	969+24.10	I-70	CL	HIGH-TENSION GUARD CABLE	1250.1	LF	
8-9	968+74.70	982+82.44	I-70	CL	HIGH-TENSION GUARD CABLE	1407.8	LF	
9	982+82.44	989+56.56	I-70	CL	HIGH-TENSION GUARD CABLE	674.2	LF	
9-11	989+06.94	1042+23.26	I-70	CL	HIGH-TENSION GUARD CABLE	5316.5	LF	
11-12	1043+03.18	1054+01.88	I-70	CL	HIGH-TENSION GUARD CABLE	1096.9	LF	
12	1057+51.98	1075+92.07	I-70	CL	HIGH-TENSION GUARD CABLE	1840.3	LF	
12-13	1076+52.44	1096+79.35	I-70	CL	HIGH-TENSION GUARD CABLE	2028.1	LF	
13	1096+26.59	1100+71.95	I-70	CL	HIGH-TENSION GUARD CABLE	445.4	LF	
13-14	1100+81.10	1115+39.52	I-70	CL	HIGH-TENSION GUARD CABLE	1458.8	LF	
14	1115+39.52	1116+78.52	I-70	CL	HIGH-TENSION GUARD CABLE	139.1	LF	
14	1116+29.04	1128+73.12	I-70	CL	HIGH-TENSION GUARD CABLE	1244.4	LF	
14-15	1128+73.12	1136+83.36	I-70	CL	HIGH-TENSION GUARD CABLE	810.3	LF	
15	1136+31.46	1142+19.74	I-70	CL	HIGH-TENSION GUARD CABLE	588.5	LF	
15	1142+19.74	1156+52.86	I-70	CL	HIGH-TENSION GUARD CABLE	1433.8	LF	
15-16	1156+48.25	1179+91.87	I-70	CL	HIGH-TENSION GUARD CABLE	2043.6	LF	

1 REMOVED

SUMMARY OF QUANTITIES
SHEET 08 OF 27

STATE OF MISSOURI
RONNIE WILLIAMS
NUMBER PE-2010000879
PROFESSIONAL ENGINEER

THIS SHEET HAS BEEN SIGNED, SEALED, AND DATED ELECTRONICALLY

DATE PREPARED 1/7/2026

ROUTE	STATE
I-70	MO
DISTRICT	SHEET NO.
CD	3

COUNTY: COOPER

JOB NO.: JST0017B

CONTRACT ID.: -

PROJECT NO.: -

BRIDGE NO.: -

DATE	DESCRIPTION
01/07/26	1 REMOVED QTY

MISSOURI HIGHWAYS AND TRANSPORTATION COMMISSION
105 WEST CAPITOL
JEFFERSON CITY, MO 65102
1-888-ASK-MODOT (1-888-275-6636)

BURNS McDONNELL
9400 Ward Parkway
Kansas City, MO 64114
(816) 333-9400
Certificate of Authority No.: 000165

JST0017B REMOVAL OF IMPROVEMENTS

PLAN SHEET	STA.	STA.	ROUTE	OFFSET	DESCRIPTION	QUANTITY	UNITS	REMARKS
GUARDRAIL (CONT.)								
16-17	1176+40.33	1196+94.92	I-70	CL	HIGH-TENSION GUARD CABLE	2054.7	LF	
17	1196+43.09	1215+89.88	I-70	CL	HIGH-TENSION GUARD CABLE	1946.9	LF	
18	1216+52.29	1231+28.46	I-70	CL	HIGH-TENSION GUARD CABLE	1476.4	LF	
18-19	1234+23.07	1260+72.88	I-70	CL	HIGH-TENSION GUARD CABLE	2650.1	LF	
19-20	1260+72.88	1274+38.88	I-70	CL	HIGH-TENSION GUARD CABLE	1366.0	LF	
20	1273+91.81	1285+22.25	I-70	CL	HIGH-TENSION GUARD CABLE	1130.8	LF	
20	1284+72.55	1295+83.31	I-70	CL	HIGH-TENSION GUARD CABLE	1111.5	LF	
20-21	1296+45.52	1306+93.93	I-70	CL	HIGH-TENSION GUARD CABLE	1048.8	LF	
21	1306+93.93	1322+18.69	I-70	CL	HIGH-TENSION GUARD CABLE	1525.0	LF	
22	1325+15.71	1338+43.56	I-70	CL	HIGH-TENSION GUARD CABLE	1328.4	LF	
22-23	1338+98.36	1359+29.64	I-70	CL	HIGH-TENSION GUARD CABLE	2032.0	LF	
23-24	1358+76.70	1379+14.63	I-70	CL	HIGH-TENSION GUARD CABLE	2038.0	LF	
24	1378+62.58	1399+21.07	I-70	CL	HIGH-TENSION GUARD CABLE	2058.7	LF	
24-25	1398+68.51	1407+88.48	I-70	CL	HIGH-TENSION GUARD CABLE	920.6	LF	
MEDIAN BARRIER								
62	1417+06	1425+90	I-70	CL	MEDIAN BARRIER	884	LF	
					TOTAL:	1 LUMP SUM		

1 REMOVED

1 ADDED

MEDIAN GUARD CABLE

SHEET	STA.	STA.	ROUTE	OFFSET	MEIDAN GUARD CABLE 3-STRAND (L.F.)	ANCHOR ASSEMBLY, GUARD CABLE 3-STRAND (EA.)	REMARKS
6	784+89.38	786+89.38	I-70	CT / RT	200	1	
				TOTAL:	200	1	

DRAINAGE PAVEMENT REPAIR

STA.	ROUTE	SIDE	PAVEMENT AREA SY	CONCRETE PAVEMENT (10 IN. NON-REINFORCED) SY	ASPHALTIC CONCRETE MIXTURE PG 76-22 (SP125BSM MIX) TONS	REMARKS
797+95	I-70	RT	68	68.0	7.4	Route 5 Ramp 2
897+85	I-70	RT	55	55.0	6.0	Route B Ramp 1
897+85	I-70	LT	44	44.0	4.8	Route B Ramp 2
912+85	I-70	LT	75	75.0	8.2	Route B Ramp 3
952+33	I-70	LT	51	51.0	5.6	Rest Area Ramp 3
1318+75	I-70	RT	139	139.0	15.2	Route 179 Ramp 2
			TOTAL:	432.0	47.2	

NOTES:
1) PAVEMENT EDGE DROP-OFF TREATMENT SHALL BE INCIDENTAL TO PAVING OPERATIONS.
2) PAYMENT FOR DRAINAGE PAVEMENT REPAIR SHALL INCLUDE DOWEL BARS TO TIE INTO EXISTING CONCRETE PAVEMENT, IF PRESENT.

SEEDING AND MULCHING

BEGIN STA.	END STA.	ROUTE	LOCATION	SEEDING COOL SEASON GRASSES (ACRE)	TEMPORARY SEEDING (ACRE)	MULCHING (ACRE)
784+00.00	811+00.00	I-70	LT / RT	1.6	1.6	3.2
811+00.00	838+00.00	I-70	LT / RT	1.7	1.7	3.4
838+00.00	865+00.00	I-70	LT / RT	1.4	1.4	2.8
865+00.00	892+00.00	I-70	LT / RT	1.1	1.1	2.2
892+00.00	919+00.00	I-70	LT / RT	2.0	2.0	4.0
919+00.00	946+00.00	I-70	LT / RT	1.9	1.9	3.8
946+00.00	973+00.00	I-70	LT / RT	1.3	1.3	2.6
973+00.00	1000+00.00	I-70	LT / RT	3.7	3.7	7.4
1000+00.00	1027+00.00	I-70	LT / RT	2.5	2.5	5.0
1027+00.00	1054+00.00	I-70	LT / RT	2.4	2.4	4.8
1054+00.00	1081+00.00	I-70	LT / RT	3.4	3.4	6.8
1081+00.00	1108+00.00	I-70	LT / RT	2.2	2.2	4.4
1108+00.00	1135+00.00	I-70	LT / RT	2.0	2.0	4.0
1135+00.00	1162+00.00	I-70	LT / RT	0.6	0.6	1.2
1162+00.00	1189+00.00	I-70	LT / RT	1.1	1.1	2.2
1189+00.00	1216+00.00	I-70	LT / RT	2.0	2.0	4.0
1216+00.00	1243+00.00	I-70	LT / RT	1.2	1.2	2.4
1243+00.00	1270+00.00	I-70	LT / RT	0.2	0.2	0.4
1270+00.00	1297+00.00	I-70	LT / RT	0.9	0.9	1.8
1297+00.00	1324+00.00	I-70	LT / RT	2.2	2.2	4.4
1324+00.00	1351+00.00	I-70	LT / RT	2.0	2.0	4.0
1351+00.00	1378+00.00	I-70	LT / RT	1.8	1.8	3.6
1378+00.00	1405+00.00	I-70	LT / RT	2.1	2.1	4.2
1405+00.00	1425+00.00	I-70	LT / RT	0.1	0.1	0.2
			TOTAL:	41.4	41.4	82.8

1 ADDED

MOT TEMPORARY PAVEMENT

SHEET	STA.	STA.	ROUTE	BITUMINOUS PAVEMENT MIXTURE: ASPHALT PAVEMENT (SY)	BITUMINOUS PAVEMENT MIXTURE: PG 64-22 BASE (6.25") (Tons)	BITUMINOUS PAVEMENT MIXTURE: PG 64-22 BP-1 (1.75") (Tons)	AGGREGATE BASE TYPE-5 (4") (SY)	COLDMILLING BITUMINOUS PAVEMENT FOR REMOVAL OF SURFACING (GREATER THAN 3" THICK (SY)	REMARKS
106-107	807+30	819+10	I-70 EB	1,302.6	453.4	125.8		1,302.6	
106-107	807+30	819+10	I-70 WB	1,311.1	456.4	126.6		1,311.1	
108	900+30	912+30	I-70 EB	1,309.1	455.7	126.4		1,309.1	
108	900+50	912+10	I-70 WB	1,288.6	448.5	124.5		1,288.6	
111	1049+20	1061+70	I-70 WB	1,376.3	479.1	132.9		1,376.3	
111	1050+80	1061+10	I-70 EB	1,123.8	391.2	108.5		1,123.8	
114	1226+70	1238+80	I-70 EB	1,347.2	468.9	130.1		1,347.2	
114	1226+80	1238+70	I-70 WB	1,316.2	458.2	127.1		1,316.2	
116	1317+60	1329+70	I-70 EB	1,388.5	483.3	134.1		1,388.5	
116	1317+80	1329+50	I-70 WB	1,296.5	451.3	125.2		1,296.5	
122	779+47.56	786+89.38	I-70 XO	2,214.0	770.7	213.9	2,214.0		
			TOTAL	13,059.9	4,546.0	1,261.2	2,214.0	13,059.9	
								15,273.9	5,316.7	1,475.1

1 ADDED

1 REVISED

ASPHALT ESTIMATING FACTORS:
1) PG 64-22 SP250C - 2.036 TONS/CY COMPACTED
2) PG 64-22 SP125C - 1.970 TONS/CY COMPACTED
3) PG 64-22 BASE - 1.970 TONS/CY COMPACTED
4) PG 64-22 BP-1 - 1.970 TONS/CY COMPACTED
5) PG 76-22 SP125B - 1.970 TONS/CY COMPACTED
6) PG 76-22 SP125BSM - 1.970 TONS/CY COMPACTED

1 ADDED

NOTES:
1) PAVEMENT EDGE DROP-OFF TREATMENT SHALL BE INCIDENTAL TO PAVING OPERATIONS.

1 REVISED

EARTHWORK

ROADWAY	TOTAL CUT (CY.)	EARTH CUT (CY.)	PAVEMENT REMOVAL (CY.)	FILL (CY.)	UNCLASSIFIED EXCAVATION (CY.)	EMBANKMENT IN PLACE (CY.)	COMPACTING EMBANKMENT (CY.)	COMPACTING IN CUT (STA)	REVISED	REMARKS
I-70 SEG 01 STA. 784+89.38 TO STA. 875+00	57,184.5	26,416.7	30,767.8	9,891.5	26,417	0	9,892	90.0	180.0	
I-70 SEG 02 STA. 875+00 TO STA.980+00	76,594.6	39,076.0	37,518.6	11,753.4	39,076	0	11754	100.0	200.0	
I-70 SEG 03 STA. 980+00 TO STA.1085+00	82,424.1	45,904.8	36,519.3	11,415.7	45,905	0	11416	105.0	210.0	
I-70 SEG 04 STA.1085+00 TO STA.1190+00	60,584.0	26,035.9	34,548.1	10,737.6	26,036	0	10738	98.0	196.0	
I-70 SEG 05 STA.1190+00 TO STA.1265+00	47,452.1	22,956.5	24,495.6	4,586.5	22,957	0	4587	75.0	150.0	
I-70 SEG 06 STA.1265+00 TO STA.1350+00	75,053.9	44,192.9	30,861.0	4,649.9	44,193	0	4650	85.0	170.0	
I-70 SEG 07 STA.1350+00 TO STA.1420+90	52,204.0	27,358.2	24,845.8	5,631.5	27,359	0	5632	69.0	138.0	
				TOTAL:	231,943	0	58,669	622.0	1244.0	

TOTAL CUT VOLUME AS SHOWN INCLUDES THE VOLUME FOR PAVEMENT REMOVAL. PAVEMENT REMOVAL IS INCLUDED IN REMOVAL OF IMPROVEMENTS.
ASSUMED 15" THICKNESS FOR EXISTING MAINLINE & RAMP PAVEMENTS FOR ROCK CUT AND 12" THICKNESS FOR EXISTING SHOULDER PAVEMENTS FOR ROCK CUT

1 REVISED

SUMMARY OF QUANTITIES
SHEET 09 OF 27

STATE OF MISSOURI
RONNIE L. WILLIAMS
NUMBER PE-2010000879
PROFESSIONAL ENGINEER
THIS SHEET HAS BEEN SIGNED, SEALED, AND DATED ELECTRONICALLY

DATE PREPARED 1/9/2026
ROUTE I-70 | STATE MO
DISTRICT CD | SHEET NO. 3
COUNTY COOPER
JOB NO. JST0017B
CONTRACT ID. -
PROJECT NO. -
BRIDGE NO. -

DATE	DESCRIPTION
01/07/26	1 REMOVED & REVISED QTY

MISSOURI HIGHWAYS AND TRANSPORTATION COMMISSION
105 WEST CAPITOL
JEFFERSON CITY, MO 65102
1-888-ASK-MODOT (1-888-275-6636)

BURNS McDONNELL
9400 Ward Parkway
Kansas City, MO 64114
(816) 333-9400
Certificate of Authority No.: 000165

TEMPORARY EROSION CONTROL (CONT.)

BEGIN STA.	END STA.	ROUTE	SIDE	PHASE	SILT FENCE L.F.	ROCK DITCH CHECK L.F.	ALTERNATE DITCH CHECK L.F.	CURB INLET CHECK EACH	SEDIMENT TRAP EXCAVATION & ROCK C.Y.	EROSION CONTROL BLANKET TYPE 3B S.Y.	SEDIMENT REMOVAL C.Y.
1230+00.00	1235+67.94	I-70	RT	CONSTRUCTION			70				0.7
1239+10.00	1241+10.00	I-70	LT	CONSTRUCTION						153	
1269+90.00	1279+47.06	I-70	LT	CONSTRUCTION						675	
1272+25.00	1275+90.00	I-70	RT	CONSTRUCTION						247	
1284+95.47	1286+39.95	I-70	LT	CONSTRUCTION			70				0.7
1295+70.00	1296+80.00	I-70	LT	CONSTRUCTION		60					0.4
1296+50.00	1297+10.00	I-70	LT	CONSTRUCTION						311	
1305+50.47	1307+90.00	I-70	LT	CONSTRUCTION		165					1.1
1306+25.84	1308+90.00	I-70	LT	CONSTRUCTION						1642	
1307+60.00	1309+20.00	I-70	RT	CONSTRUCTION						228	
1309+50.27	1318+95.17	I-70	LT	CONSTRUCTION							1.0
1310+20.00	1317+12.58	I-70	RT	CONSTRUCTION			70				0.7
1312+10.00	1313+50.00	I-70	RT	CONSTRUCTION						501	
1315+36.53	1331+50.00	I-70	LT	CONSTRUCTION			210				2.1
1315+65.65	1331+98.85	I-70	RT	CONSTRUCTION			170				1.7
1318+88.13		I-70	RT	CONSTRUCTION		36					0.1
1319+15.12		I-70	LT	CONSTRUCTION		36					0.1
1329+48.51		I-70	RT	CONSTRUCTION		36					0.1
1330+89.11	1333+06.32	I-70	RT	CONSTRUCTION		180					1.2
1331+72.58	1332+81.10	I-70	RT	CONSTRUCTION						472	
1333+06.32	1337+70.64	I-70	RT	CONSTRUCTION			50				0.5
1334+81.56	1337+57.57	I-70	LT	CONSTRUCTION							0.4
1347+99.80	1356+10.01	I-70	LT	CONSTRUCTION							0.9
1351+00.00	1361+10.59	I-70	RT	CONSTRUCTION			90				0.9
1366+79.11	1374+35.68	I-70	RT	CONSTRUCTION							0.5
1367+59.76	1373+80.20	I-70	LT	CONSTRUCTION		30					0.2
1374+35.68	1375+10.85	I-70	RT	CONSTRUCTION		30					0.2
1375+20.00	1376+50.00	I-70	RT	CONSTRUCTION						191	
1376+90.00	1378+50.00	I-70	RT	CONSTRUCTION						228	
1378+01.40		I-70	CL	CONSTRUCTION				1			
1378+56.89	1383+80.37	I-70	RT	CONSTRUCTION		60					0.4
1379+80.07	1389+99.83	I-70	LT	CONSTRUCTION			120				1.2
1381+00.60		I-70	CL	CONSTRUCTION				1			
1383+50.00	1383+90.00	I-70	RT	CONSTRUCTION						72	
1384+17.60		I-70	CL	CONSTRUCTION				1			
1384+68.98	1387+99.23	I-70	RT	CONSTRUCTION			70				0.7
1386+70.00	1388+40.00	I-70	LT	CONSTRUCTION						575	
1387+01.58		I-70	CL	CONSTRUCTION				1			
1387+99.23	1388+99.14	I-70	RT	CONSTRUCTION		60					0.4
1390+02.21		I-70	CL	CONSTRUCTION				1			
1393+01.82		I-70	CL	CONSTRUCTION				1			
1393+70.00	1398+19.82	I-70	LT	CONSTRUCTION			190				1.9
1394+00.00	1398+74.27	I-70	RT	CONSTRUCTION			190				1.9
1398+80.00	1399+80.00	I-70	LT	CONSTRUCTION						458	
1399+30.00	1403+10.00	I-70	RT	CONSTRUCTION						569	
1404+00.00	1407+60.48	I-70	RT	CONSTRUCTION			130				1.3
1410+20.00	1410+50.00	I-70	LT	CONSTRUCTION						127	
				TOTAL:	60731	3876	7280	6	277.5	42571	715

NOTE: CLEARING AND GRUBBING SHALL BE COMPLETED PRIOR TO THE INSTALLATION OF EROSION CONTROL DEVICES, UNLESS OTHERWISE DIRECTED BY THE ENGINEER.

PAN TILT ZOOM CAMERA ASSEMBLY

SHEET	ROUTE	STA.	TO	STA.	CTR. TO CTR.	POWER SUPPLY ASSEMBLY TYPE 2 240/120 VOLT SERVICE ITS (EACH)	CCTV CAMERA ASSEMBLY INSTALLED (EACH)	CCTV POLE (60') INSTALLED (EACH)	PULLBOX CONCRETE STANDARD (EACH)	CABLE 2 AWG 1 CONDUCTOR (LF)	PTZ CABLE (LF)	WIRE 2 AWG 1 CONDUCTOR BARE NEUTRAL (LF)	CONDUIT 3 IN. RIGID IN TRENCH (LF)	CONDUIT 3 IN. RIGID PUSHED (LF)
259	I-70	1057+00	TO	1053+83	130'				1		160'		130'	
259	I-70	1056+83	TO	1056+78	50'				1		65'			50'
259	I-70	1056+78	TO	1053+26	60'		1	1			135'		60'	
					TOTAL:	0	1	1	2		360'		190'	50'

NOTE: CCTV CABLE SHOWN FOR INFORMATION ONLY AND SHALL BE INCLUDED IN THE ASSOCIATED LUMP SUM BID ITEM.

1 REVISED FULL TABLE

SUMMARY OF QUANTITIES
SHEET 16 OF 27

STATE OF MISSOURI
RONNIE L. WILLIAMS
NUMBER PE-2010000879
PROFESSIONAL ENGINEER

THIS SHEET HAS BEEN SIGNED, SEALED, AND DATED ELECTRONICALLY

DATE PREPARED 1/8/2026

ROUTE	STATE
I-70	MO
DISTRICT	SHEET NO.
CD	3

COUNTY: COOPER
JOB NO.: JST0017B
CONTRACT ID.: -
PROJECT NO.: -
BRIDGE NO.: -

DATE	DESCRIPTION
01/07/26	1 REVISED TABLE

MISSOURI HIGHWAYS AND TRANSPORTATION COMMISSION
105 WEST CAPITOL
JEFFERSON CITY, MO 65102
1-888-ASK-MODOT (1-888-275-6636)

BURNS McDONNELL
9400 Ward Parkway
Kansas City, MO 64114
(816) 333-9400
Certificate of Authority No.: 000165

MISC. CONCRETE PAVING

SHEET	STA.	STA.	ROUTE	ROCK BASE (12" THICK) FURN/PLACING (SY)	CONCRETE PAVEMENT (5 3/4 IN. NON-REINFORCED 15 FT JOINTS) (SY)	CONCRETE PAVEMENT (12 IN. NON-REINFORCED 15 FT JOINTS) (SY)	SHOULDER RUMBLE STRIP (STA)	MODIFIED SUBGRADE (SY)	REMARKS
		1 REVISED							
34	786+64.38	786+89.38	I-70	11		11.1		11	FOR CRASH CUSHION
58	1374+00.00	1378+00.00	I-70	567	239.1	327.4	16.0	567	FOR MODIFIED MEDIAN BARRIER
60	1378+00.00	1393+50.00	I-70	2,195	926.5	1,268.5	62.0	2,195	FOR MODIFIED MEDIAN BARRIER
			TOTAL:	2,773	1,165.6	1,607.0	78.0	2,773	

NOTES:
1) PAVEMENT EDGE DROP-OFF TREATMENT SHALL BE INCIDENTAL TO PAVING OPERATIONS.

ASPHALT ESTIMATING FACTORS:
1) PG 64-22 SP250C - 2.036 TONS/CY COMPACTED
2) PG 64-22 SP125C - 1.970 TONS/CY COMPACTED
3) PG 64-22 BASE - 1.970 TONS/CY COMPACTED
4) PG 64-22 BP-1 - 1.970 TONS/CY COMPACTED
5) PG 76-22 SP125B - 1.970 TONS/CY COMPACTED
6) PG 76-22 SP125BSM - 1.970 TONS/CY COMPACTED

CONCRETE APPROACH PAVEMENT

SHEET	STA.	STA.	ROUTE	CONCRETE APPROACH PAVEMENT (SY)
62	1407+75.67	1407+93.95	I-70	178.8
62	1409+87.70	1410+05.98	I-70	178.8
			TOTAL	357.6

1 ADDED

ALTERNATE A - CONCRETE PAVEMENT

SHEET	STA.	STA.	ROUTE	ROCK BASE (12" THICK) FURN/PLACING (SY)	CONCRETE PAVEMENT (11 IN. NON-REINFORCED 15 FT JOINTS) (SY)	SHOULDER RUMBLE STRIP (STA)	MODIFIED SUBGRADE (SY)
		1 REVISED					
6	786+89.38	811+00.00	I-70	31,181	27,447.4	87.2	31,181
9	811+00.00	838+00.00	I-70	34,437	30,440.0	98.9	34,437
12	838+00.00	865+00.00	I-70	31,906	26,400.0	108.0	31,906
14	865+00.00	892+00.00	I-70	32,486	27,784.3	108.0	32,486
16	892+00.00	919+00.00	I-70	34,766	30,730.0	97.5	34,766
20	919+00.00	946+00.00	I-70	34,686	31,009.0	105.6	34,686
23	946+00.00	973+00.00	I-70	34,572	30,337.1	103.1	34,572
26	973+00.00	1000+00.00	I-70	32,698	27,091.5	108.0	32,698
28	1000+00.00	1027+00.00	I-70	32,398	26,392.2	108.0	32,398
30	1027+00.00	1054+00.00	I-70	35,759	30,774.5	103.2	35,759
33	1054+00.00	1081+00.00	I-70	34,295	30,036.7	103.2	34,295
36	1081+00.00	1108+00.00	I-70	32,400	26,400.0	108.0	32,400
38	1108+00.00	1135+00.00	I-70	32,366	26,400.0	108.0	32,366
40	1135+00.00	1162+00.00	I-70	32,138	26,399.9	108.0	32,138
42	1162+00.00	1189+00.00	I-70	31,758	26,399.9	108.0	31,758
44	1189+00.00	1216+00.00	I-70	32,400	26,399.9	108.0	32,400
46	1216+00.00	1243+00.00	I-70	31,354	26,399.9	108.0	31,354
48	1243+00.00	1270+00.00	I-70	31,720	26,399.8	108.0	31,720
50	1270+00.00	1297+00.00	I-70	31,855	26,399.8	108.0	31,855
52	1297+00.00	1324+00.00	I-70	34,535	29,990.6	103.0	34,536
55	1324+00.00	1351+00.00	I-70	35,944	30,985.7	103.0	35,944
58	1351+00.00	1378+00.00	I-70	28,966	26,354.8	108.0	28,966
60	1378+00.00	1405+00.00	I-70	27,332	25,688.4	108.0	27,332
62	1405+00.00	1420+90.00	I-70	14,048	14,047.1	57.5	14,048
			TOTAL	766,000	656,708.5	2,474.2	766,000

REVISED 1: 13,295 / 765,247 — 13,294.7 / 655,956.1

ALTERNATE E - CONCRETE STRENGTHENED SHOULDER

SHEET	STA.	STA.	ROUTE	TYPE 5 AGGREGATE BASE (14.5" THICK) (SY)	CONCRETE PAVEMENT (8.5 IN. NON-REINFORCED 12 FT JOINTS) (SY)	MODIFIED SUBGRADE (SY)
6	786+89.38	811+00.00	I-70	344.4	344.4	344.4
9	811+00.00	838+00.00	I-70	850.8	850.8	850.8
16	892+00.00	919+00.00	I-70	1,044.4	1,044.4	1,044.4
30	1027+00.00	1054+00.00	I-70	344.4	344.4	344.4
33	1054+00.00	1081+00.00	I-70	733.3	733.3	733.3
46	1216+00.00	1243+00.00	I-70	1,054.2	1,054.2	1,054.2
52	1297+00.00	1324+00.00	I-70	567.5	567.5	567.5
55	1324+00.00	1351+00.00	I-70	488.9	488.9	488.9
58	1351+00.00	1378+00.00	I-70	3,389.9	3,389.9	3,389.9
60	1378+00.00	1405+00.00	I-70	4,162.6	4,162.6	4,162.6
62	1405+00.00	1420+90.00	I-70	3,790.4	3,790.4	3,790.4
			TOTAL	16,770.8	16,770.8	16,770.8

NOTE:
SEE MOT TYPICAL SECTIONS FOR EXACT STATION RANGES OF STRENGTHENED SHOULDER LOCATIONS.

3,709.0 / 16,689.4 — 1 REVISED

3,709.0 / 16,689.4 — 1 REVISED

REVISED 1: 3,709.0 / 16,689.4

ALTERNATE F - ASPHALT STRENGTHENED SHOULDER

SHEET	STA.	STA.	ROUTE	10.5" ASPHALTIC CONCRETE MIXTURE (SY)	(2) TACK COAT (GAL.)	(1) PG 64-22 SP250C (6.5") (Tons)	(1) PG 70-22 SP125C (4") (Tons)	TYPE 5 AGGREGATE BASE (16" THICK) (SY)	MODIFIED SUBGRADE (SY)
6	786+89.38	811+00.00	I-70	344.4	34	122.5	75.4	344.4	344.4
9	811+00.00	838+00.00	I-70	850.8	85	302.6	186.2	850.8	850.8
16	892+00.00	919+00.00	I-70	1,044.4	104	371.5	228.6	1,044.4	1,044.4
30	1027+00.00	1054+00.00	I-70	344.4	34	122.5	75.4	344.4	344.4
33	1054+00.00	1081+00.00	I-70	733.3	73	260.8	160.5	733.3	733.3
46	1216+00.00	1243+00.00	I-70	1,054.2	105	375.0	230.8	1,054.2	1,054.2
52	1297+00.00	1324+00.00	I-70	567.5	57	201.9	124.2	567.5	567.5
55	1324+00.00	1351+00.00	I-70	488.9	49	173.9	107.0	488.9	488.9
58	1351+00.00	1378+00.00	I-70	3,389.9	339	1,205.8	742.0	3,389.9	3,389.9
60	1378+00.00	1405+00.00	I-70	4,162.6	416	1,480.6	911.1	4,162.6	4,162.6
62	1405+00.00	1420+90.00	I-70	3,790.4	379	1,348.2	829.7	3,790.4	3,790.4
			TOTAL:	16,770.8	1,675	5,965.3	3,670.9	16,770.8	16,770.8

371 / 1,667 — 1,319.3 / 5,936.4 — 811.9 / 3,653.1 — 3,709.0 / 16,689.4 — 3,709.0 / 16,689.4

3,709.0 / 16,689.4 — 1 REVISED (TYP)

ALTERNATE B - ASPHALT PAVEMENT

SHEET	STA.	STA.	ROUTE	14.5" ASPHALTIC CONCRETE MIXTURE (SY)	(2) TACK COAT (GAL.)	(1) PG 64-22 SP250C (10.5") (Tons)	(1) PG 76-22 SP125B (2") (Tons)	(1) PG 76-22 SP125BSM (2") (Tons)	ROCK BASE (12" THICK) FURN/PLACING (SY)	RUMBLE STRIP (STA)	MODIFIED SUBGRADE (SY)
6	786+89.38	811+00.00	I-70	27,447.4	2,745	16,299.2	3,004.0	3,004.0	31,181	87.2	31,181
9	811+00.00	838+00.00	I-70	30,440.0	3,044	18,076.3	3,331.5	3,331.5	34,437	98.9	34,437
12	838+00.00	865+00.00	I-70	26,400.0	2,640	15,677.2	2,889.3	2,889.3	31,906	108.0	31,906
14	865+00.00	892+00.00	I-70	27,784.3	2,778	16,499.2	3,040.8	3,040.8	32,486	108.0	32,486
16	892+00.00	919+00.00	I-70	30,730.0	3,073	18,248.5	3,363.2	3,363.2	34,766	97.5	34,766
20	919+00.00	946+00.00	I-70	31,009.0	3,101	18,414.2	3,393.8	3,393.8	34,686	105.6	34,686
23	946+00.00	973+00.00	I-70	30,337.1	3,034	18,015.2	3,320.2	3,320.2	34,572	103.1	34,572
26	973+00.00	1000+00.00	I-70	27,091.5	2,709	16,087.8	2,965.0	2,965.0	32,698	108.0	32,698
28	1000+00.00	1027+00.00	I-70	26,392.2	2,639	15,672.6	2,888.5	2,888.5	32,398	108.0	32,398
30	1027+00.00	1054+00.00	I-70	30,774.5	3,077	18,274.9	3,368.1	3,368.1	35,759	103.2	35,759
33	1054+00.00	1081+00.00	I-70	30,036.7	3,004	17,836.8	3,287.3	3,287.3	34,295	103.2	34,295
36	1081+00.00	1108+00.00	I-70	26,400.0	2,640	15,677.2	2,889.3	2,889.3	32,400	108.0	32,400
38	1108+00.00	1135+00.00	I-70	26,400.0	2,640	15,677.2	2,889.3	2,889.3	32,366	108.0	32,366
40	1135+00.00	1162+00.00	I-70	26,399.9	2,640	15,677.1	2,889.3	2,889.3	32,138	108.0	32,138
42	1162+00.00	1189+00.00	I-70	26,399.9	2,640	15,677.1	2,889.3	2,889.3	31,758	108.0	31,758
44	1189+00.00	1216+00.00	I-70	26,399.9	2,640	15,677.1	2,889.3	2,889.3	32,400	108.0	32,400
46	1216+00.00	1243+00.00	I-70	26,399.9	2,640	15,677.1	2,889.3	2,889.3	31,354	108.0	31,354
48	1243+00.00	1270+00.00	I-70	26,399.8	2,640	15,677.1	2,889.3	2,889.3	31,720	108.0	31,720
50	1270+00.00	1297+00.00	I-70	26,399.8	2,640	15,677.1	2,889.3	2,889.3	31,855	108.0	31,855
52	1297+00.00	1324+00.00	I-70	29,990.6	2,999	17,809.4	3,282.3	3,282.3	34,535	103.0	34,536
55	1324+00.00	1351+00.00	I-70	30,985.7	3,099	18,400.3	3,391.2	3,391.2	35,944	103.0	35,944
58	1351+00.00	1378+00.00	I-70	26,354.8	2,635	15,650.4	2,884.4	2,884.4	28,966	108.0	28,966
60	1378+00.00	1405+00.00	I-70	25,688.4	2,569	15,254.6	2,811.5	2,811.5	27,332	108.0	27,332
62	1405+00.00	1420+90.00	I-70	14,047.1	1,405	8,341.6	1,537.4	1,537.4	14,048	57.5	14,048
			TOTAL:	656,708.5	65,671	389,975.2	71,872.9	71,872.9	766,000	2474.2	766,000
				13,294.7 / 655,956.1	1,329 / 65,595	7,894.8 / 389,528.4	1,455.0 / 71,790.5	1,455.0 / 71,790.5	13,295 / 765.247		13,295 / 765.247

REVISED 1: 13,295 / 765,247 — 1 REVISED — 1 REVISED

NOTES:
1) ASPHALT TONNAGE SHOWN FOR INFORMATION ONLY.
2) TACK COAT SHOWN FOR INFORMATION ONLY

1 REVISED (TYP)

MOT TEMPORARY PAVEMENT - ASPHALT WEDGE

SEGMENT	ROUTE	BITUMINOUS PAVEMENT MIXTURE: ASPHALT PAVEMENT (CY)	BITUMINOUS PAVEMENT MIXTURE: PG 64-22 BP-1 (VAR.) (Tons)
I-70 SEG 01	I-70 EB	743.2	1,476.7
STA. 784+89 TO STA. 875+00	I-70 WB	1,228.8	2,441.6
I-70 SEG 02	I-70 EB	1,236.0	2,455.9
STA. 875+00 TO STA.980+00	I-70 WB	1,350.1	2,682.6
I-70 SEG 03	I-70 EB	1,106.8	2,199.2
STA. 980+00 TO STA.1085+00	I-70 WB	852.6	1,694.1
I-70 SEG 04	I-70 EB	1,593.3	3,165.9
STA.1085+00 TO STA.1190+00	I-70 WB	1,523.0	3,026.2
I-70 SEG 05	I-70 EB	753.4	1,497.0
STA.1190+00 TO STA.1265+00	I-70 WB	632.3	1,256.4
I-70 SEG 06	I-70 EB	356.0	707.4
STA.1265+00 TO STA.1350+00	I-70 WB	413.2	821.0
I-70 SEG 07	I-70 EB	267.0	530.5
STA.1350+00 TO STA.1420+90	I-70 WB	37.9	75.3
	TOTAL	12,093.6	24,029.8

1 REVISED: 811.9 / 1,613.2 — 1,338.1 / 2,658.8

1 REVISED: 1,280.3 / 2,544.0

1,111.8 / 2,209.1 — 877.0 / 1,742.6

1 REVISED

550.6 / 1,094.0 — 605.0 / 1,202.1

1 REVISED: 12,731.7 / 25,297.7

SUMMARY OF QUANTITIES
SHEET 17 OF 27

STATE OF MISSOURI — RONNIE L. WILLIAMS — NUMBER PE-2010000879 — PROFESSIONAL ENGINEER

THIS SHEET HAS BEEN SIGNED, SEALED, AND DATED ELECTRONICALLY

DATE PREPARED: 1/9/2026
ROUTE: I-70 | STATE: MO
DISTRICT: CD | SHEET NO.: 3
COUNTY: COOPER
JOB NO.: JST0017B
CONTRACT ID.: -
PROJECT NO.: -
BRIDGE NO.: -

DATE	DESCRIPTION
01/07/26	1 REVISED QTY & ADDED TABLE

MISSOURI HIGHWAYS AND TRANSPORTATION COMMISSION
105 WEST CAPITOL
JEFFERSON CITY, MO 65102
1-888-ASK-MODOT (1-888-275-6636)

BURNS McDONNELL
9400 Ward Parkway
Kansas City, MO 64114
(816) 333-9400
Certificate of Authority No.: 000165

c:\bmcd_lib\pw_connect\trn\d0192954\003_QU_JST0017B_I1_Quantities_BMcD.dgn 2:18:38 PM 1/9/2026

GRAVITY WALL

SHEET	STA.	STA.	ROUTE	OFFSET	GRAVITY WALL (S.F.)	CONCRETE GUTTER TYPE B (L.F.)	FURNISHING TYPE 2 ROCK DITCH LINER (C.Y.)	PLACING TYPE 2 ROCK DITCH LINER (C.Y.)	PERMANENT EROSION CONTROL GEOTEXTILE (SY.)	REMARKS
89	789+20.00	792+20.00	I-70	RT	1448.0	310	2	2	6	
				TOTAL	1448.0	310	2	2	6	

PERMANENT TRAFFIC COUNTING SYSTEM

SHEET	STA.	OFFSET	ROUTE	PERMANENT TRAFFIC COUNTING SYSTEM (LUMP SUM)
262	1229+00.00	84' LT	I-70	1
			TOTAL:	1

ROCK BLANKET

SHEET	STA.	STA.	ROUTE	LOCATION	FURNISHING TYPE 1 ROCK BLANKET (CY.)	PLACING TYPE 1 ROCK BLANKET (CY.)	FURNISHING TYPE 2 ROCK BLANKET (CY.)	PLACING TYPE 2 ROCK BLANKET (CY.)	PERMANENT EROSION CONTROL GEOTEXTILE (SY.)
9	811+94.00	812+50.00	I-70	RT	18	18			79
9	812+20.00	812+91.00	I-70	RT			116	116	174
9	813+54.00	814+25.00	I-70	LT			117	117	176
14 & 16	878+80.00	879+40.00	I-70	LT	51	51			228
14 & 16	889+10.00	896+80.00	I-70	RT	562	562			2530
20	929+30.00	931+20.00	I-70	LT	247	247			1112
23	961+50.00	963+30.00	I-70	RT	88	88			396
30	1036+20	1038+60	I-70	LT	300	300			1348
30	1038+40	1041+30	I-70	RT	260	260			1168
36	1095+40.00	1097+90.00	I-70	RT	116	116			524
36	1099+20.00	1103+20.00	I-70	RT	321	321			1445
36	1101+70.00	1102+10.00	I-70	LT	41	41			183
38	1125+90.00	1126+40.00	I-70	LT	33	33			149
40	1158+50.00	1159+80.00	I-70	RT	65	65			294
48	1243+90.00	1245+30.00	I-70	RT	112	112			503
52	1323+11.00	1323+59.00	I-70	LT			96	96	144
52 & 55	1323+78.00	1324+07.00	I-70	RT			96	96	144
58	1376+50.00	1376+90.00	I-70	RT	39	39			177
60	1383+90.00	1384+60.00	I-70	RT	41	41			184
60	1389+40.00	1394+20.00	I-70	RT	337	337			1515
62	1408+16.73	1408+66.73	I-70	CNT			106	106	158
62	1409+14.23	1409+64.23	I-70	CNT			106	106	158
				TOTAL	2631	2631	637	637	12789

TYPE A2 SHOULDERS

SHEET	STA.	STA.	ROUTE	ALT PVMT C TYPE A2 SHOULDER (CONCRETE) (SY)	ALT PVMT D TYPE A2 SHOULDER (ASPHALT) (SY)
6	786+89.38	811+00.00	I-70	3,733.6	3,733.6
9	811+00.00	838+00.00	I-70	3,996.6	3,996.6
12	838+00.00	865+00.00	I-70	5,505.6	5,505.6
14	865+00.00	892+00.00	I-70	4,701.3	4,701.3
16	892+00.00	919+00.00	I-70	4,035.7	4,035.7
20	919+00.00	946+00.00	I-70	3,676.8	3,676.8
23	946+00.00	973+00.00	I-70	4,234.9	4,234.9
26	973+00.00	1000+00.00	I-70	5,605.7	5,605.7
28	1000+00.00	1027+00.00	I-70	6,005.5	6,005.5
30	1027+00.00	1054+00.00	I-70	4,984.2	4,984.2
33	1054+00.00	1081+00.00	I-70	4,257.8	4,257.8
36	1081+00.00	1108+00.00	I-70	6,000.0	6,000.0
38	1108+00.00	1135+00.00	I-70	5,965.6	5,965.6
40	1135+00.00	1162+00.00	I-70	5,737.7	5,737.7
42	1162+00.00	1189+00.00	I-70	5,357.6	5,357.6
44	1189+00.00	1216+00.00	I-70	6,000.1	6,000.1
46	1216+00.00	1243+00.00	I-70	4,953.5	4,953.5
48	1243+00.00	1270+00.00	I-70	5,319.4	5,319.4
50	1270+00.00	1297+00.00	I-70	5,455.1	5,455.1
52	1297+00.00	1324+00.00	I-70	4,543.6	4,543.6
55	1324+00.00	1351+00.00	I-70	4,958.0	4,958.0
58	1351+00.00	1378+00.00	I-70	2,611.1	2,611.1
60	1378+00.00	1405+00.00	I-70	1,642.8	1,642.8
62	1405+00.00	1420+90.00	I-70	0.0	0.0
			TOTAL	109,282.2	109,282.2

REVISED 1 3

TEMPORARY DRAINAGE STRUCTURES

STA.	ROUTE	SIDE	PRECAST CONCRETE DROP INLET 2 FT X 2 FT	CLASS 3 EXCAVATION	REMARKS
			F.T.	CY	
797+96.54	I-70	LT	3.0	7	TC-A1
797+96.54	I-70	RT	6.0	10	TC-A2
826+95.18	I-70	LT	3.0	7	TC-B1
826+95.18	I-70	RT	5.0	9	TC-B2
897+85.50	I-70	LT	3.0	7	TC-C1
897+85.50	I-70	RT	6.0	10	TC-C2
928+82.05	I-70	LT	3.0	7	TC-D1
928+82.05	I-70	RT	6.0	11	TC-D2
1042+74.70	I-70	LT	3.0	7	TC-E1
1042+74.70	I-70	RT	7.0	11	TC-E2
1060+91.32	I-70	LT	6.0	11	TC-F1
1060+91.32	I-70	RT	6.0	11	TC-F2
1229+47.99	I-70	LT	3.0	8	TC-G1
1229+47.99	I-70	RT	4.0	9	TC-G2
1248+77.13	I-70	LT	3.0	7	TC-H1
1248+77.13	I-70	RT	7.0	12	TC-H2
1296+33.90	I-70	LT	3.0	7	TC-I1
1296+33.90	I-70	RT	3.0	7	TC-I2
1338+56.11	I-70	LT	5.0	10	TC-J1
1338+56.11	I-70	RT	3.0	8	TC-J2
1350+54.76	I-70	LT	3.0	8	TC-K1
1350+54.76	I-70	RT	5.0	9	TC-K2
1366+10.99	I-70	LT	3.0	7	TC-L1
1366+10.99	I-70	RT	8.0	13	TC-L2
		TOTAL:	107.0	213	

ADDED 1

FILLING EXISTING BITUMINOUS RUMBLE STRIP

Phase	Direction	Side	STA	TO	STA	L.F.	STA.
1	WB	Outside	807+67	TO	818+74	1,107	11.1
1	WB	Outside	900+88	TO	911+72	1,084	10.8
1 & 2	WB	Outside	1049+56	TO	1061+42	1,186	11.9
1	WB	Outside	1227+25	TO	1238+28	1,103	11.0
1	WB	Outside	1318+24	TO	1329+05	1,081	10.8
1	WB	Outside	1361+59	TO	1424+51	6,138	61.4
2	WB	Inside	781+00	TO	785+66	466	4.7
2	WB	Inside	795+31	TO	802+00	669	6.7
2	WB	Inside	1374+00	TO	1377+00	300	3.0
2	EB	Outside	807+70	TO	818+71	1,101	11.0
1	EB	Outside	900+67	TO	911+87	1,120	11.2
1 & 2	EB	Outside	1049+82	TO	1061+01	1,119	11.2
2	EB	Outside	1227+12	TO	1238+41	1,129	11.3
1	EB	Outside	1318+02	TO	1329+33	1,131	11.3
1	EB	Outside	1362+01	TO	1424+51	6,096	61.0
					TOTAL:	24830'	248.4

MOWING

CYCLES	ACRES
6	41.1
TOTAL:	248.4

TEMPORARY PIPE CULVERT AND END SECTIONS

BEGIN STA.	END STA.	ROUTE	SIDE	18 IN PIPE GROUP A	24 IN PIPE GROUP A	CLASS 3 EXCAVATION	PIPE COLLAR TYPE A	REMARKS
				L.F.	L.F.	C.Y.	EA	
797+96.54	797+96.54	I-70	LT		22	5	1	TC-A1
826+95.18	826+95.18	I-70	LT	20		12	1	TC-B1
897+85.50	897+85.50	I-70	LT		22	14	1	TC-C1
928+82.05	928+82.05	I-70	LT		22	16	1	TC-D1
1042+74.70	1042+74.70	I-70	LT		22	16	1	TC-E1
1229+47.99	1229+47.99	I-70	LT	22		11	1	TC-G1
1248+77.13	1248+77.13	I-70	LT		22	15	1	TC-H1
1296+33.90	1296+33.90	I-70	LT		17	12		TC-I1
1296+33.90	1296+33.90	I-70	RT		17	11		TC-I2
1338+56.11	1338+56.11	I-70	RT		21	16	1	TC-J1
1350+54.76	1350+54.76	I-70	LT	22		12	1	TC-K1
1366+10.99	1366+10.99	I-70	LT		22	13	1	TC-L1
			TOTAL:	64	187	153	10	

ADDED 1

SUMMARY OF QUANTITIES
SHEET 18 OF 27

STATE OF MISSOURI
RONNIE WILLIAMS
NUMBER PE-2010000879
PROFESSIONAL ENGINEER

THIS SHEET HAS BEEN SIGNED, SEALED, AND DATED ELECTRONICALLY

DATE PREPARED 1/7/2026
ROUTE I-70 | STATE MO
DISTRICT CD | SHEET NO. 3
COUNTY COOPER
JOB NO. JST0017B
CONTRACT ID. -
PROJECT NO. -
BRIDGE NO. -

DESCRIPTION | DATE

MISSOURI HIGHWAYS AND TRANSPORTATION COMMISSION
105 WEST CAPITOL
JEFFERSON CITY, MO 65102
1-888-ASK-MODOT (1-888-275-6636)

BURNS McDONNELL
9400 Ward Parkway
Kansas City, MO 64114
(816) 333-9400
Certificate of Authority No.: 000165

CONCRETE TRAFFIC BARRIER

ROADWAY	STA	STA	TYPE C	TYPE D	TYPE D (MODIFIED)	TYPE D (MEDIAN)(MODIFIED)	REMARKS
			L.F.	L.F.	L.F.	L.F.	
I-70 MEDIAN	786+39	1374+00	58761				STANDARD MEDIAN BARRIER
I-70 EB	812+57	512+95		38			TYPE-D ALONG OUTSIDE SHOULDER AT BRIDGE COLUMNS
I-70 WB	813+50	813+88		38			TYPE-D ALONG OUTSIDE SHOULDER AT BRIDGE COLUMNS
I-70 EB	1232+61	1232+88		27			TYPE-D ALONG OUTSIDE SHOULDER AT BRIDGE COLUMNS
I-70 WB	1232+64	1232+91		27			TYPE-D ALONG OUTSIDE SHOULDER AT BRIDGE COLUMNS
I-70 WB	1323+34	1323+59		25			TYPE-D ALONG OUTSIDE SHOULDER AT BRIDGE COLUMNS
I-70 EB	1323+75	1324+02		27			TYPE-D ALONG OUTSIDE SHOULDER AT BRIDGE COLUMNS
I-70 MEDIAN	1374+00	1393+50			1950		TYPE-D BARRIER IN SUPERELEVATED SECTION, LOW SIDE
I-70 MEDIAN	1374+00	1393+50				1950	TYPE-D BARRIER IN SUPERELEVATED SECTION, HIGH SIDE
I-70 MEDIAN	1393+50	1420+90	2740				STANDARD MEDIAN BARRIER
		SUBTOTAL	61501	182	1950	1950	
		PAY TOTAL	61501	182	1950	1950	

REVISED 1 — 1425+90

REVISED 1 — 3240 / 62001 / 62001

NOTE:
1. GLARE SCREEN SHALL BE RELOCATED FROM TEMPORARY TRAFFIC CONTROL BARRIER AND INSTALLED BETWEEN STATIONS 1374+00 TO 1363+50 (NO DIRECT PAY).

WILDLIFE CROSSINGS

PL SHEET NO.	ROADWAY	STA*	WILDLIFE CROSSING (EACH)	REMARKS
3	I-70	835+00	5	
4	I-70	848+50	5	
4	I-70	856+00	5	
5	I-70	866+50	5	
5	I-70	885+00	5	
7	I-70	926+50	5	
9	I-70	981+00	5	
10	I-70	1025+00	5	
13	I-70	1085+00	5	
14	I-70	1112+50	5	
15	I-70	1153+00	5	
17	I-70	1192+00	5	
17	I-70	1213+00	5	
19	I-70	1252+50	5	
19	I-70	1260+00	5	
23	I-70	1351+25	5	
23	I-70	1368+00	5	
24	I-70	1395+00	5	
		SUBTOTAL:	90	
		PAY TOTAL:	90	

*STATION CALLOUT FOR CENTER LOCATION (FIVE INSTALLATIONS PER LOCATION)

DISCLAIMER
THE PROFESSIONAL WHOSE SIGNATURE AND PERSONAL SEAL APPEAR HEREON ASSUMES RESPONSIBILITY ONLY FOR WHAT APPEARS ON THIS PAGE, AND DISCLAIMS (PURSUANT TO SECTION 327.411 RSMO) SPECIFICATION, ESTIMATES, REPORTS, OR OTHER DOCUMENTS OR INSTRUMENTS NOT SEALED BY THE UNDERSIGNED PROFESSIONAL RELATING TO OR INTENDED TO BE USED FOR ANY PART OR PARTS OF THE PROJECT TO WHICH THIS PAGE REFERS.

SUMMARY OF QUANTITIES
SHEET 19 OF 27

STATE OF MISSOURI
CHRIS LINNEMAN
NUMBER PE-2002016690
PROFESSIONAL ENGINEER

01/08/2026 8:23:45 AM
Chris Linneman - Civil
MO PE-2002016690

DATE PREPARED 1/7/2026
ROUTE I-70 | STATE MO
DISTRICT CD | SHEET NO. 3
COUNTY COOPER
JOB NO. JST0017B
CONTRACT ID. -
PROJECT NO. -
BRIDGE NO. -

DESCRIPTION	DATE
1 REVISED QTY	01/07/26

MISSOURI HIGHWAYS AND TRANSPORTATION COMMISSION
105 WEST CAPITOL
JEFFERSON CITY, MO 65102
1-888-ASK-MODOT (1-888-275-6636)

EFK•Moen
Civil Engineering Design
13523 Barrett Parkway Dr
Suite 250
St. Louis, MO 63021
Phone 314-394-3100
Fax 314-394-3199
Missouri Certificate of Authority: 001578

PIPE CULVERT AND END SECTIONS

BEGIN STA.	END STA.	ROUTE	SIDE	18 IN PIPE GROUP A	24 IN PIPE GROUP A	30 IN PIPE GROUP A	36 IN PIPE GROUP A	42 IN PIPE GROUP A	24 IN GROUP A FES	30 IN GROUP A FES	36 IN GROUP A FES	42 IN SAFETY FES	JACKED 24 IN CLASS IV RCP (GASKET TYPE)	JACKED 30 IN CLASS IV RCP (GASKET TYPE)	PIPE COLLAR TYPE A	ROCK LINING	PERMANENT EROSION CONTROL GEOTEXTILE	CLASS 3 EXCAVATION	REMARKS
				L.F.	L.F.	L.F.	L.F.	L.F.	EA	EA	EA	EA	L.F.	L.F.	EA	C.Y.	S.Y.	C.Y.	
797+90.11	797+90.31	I-70	RT			51				1						4	13	63	D01-RT P-1
797+91.82	799+70.83	I-70	RT			179	178	1 REVISED										129	D01-RT P-2
805+89.29	806+10.23	I-70	LT		48				1							3	10	63	D01-LT P-1
823+01.08	824+38.93	I-70	LT		138													143	D02-LT P-1
824+41.81	824+63.82	I-70	LT		55				1							3	10	64	D02-LT P-2
818+82.07	820+48.24	I-70	RT		166													206	D02-RT P-1
820+52.20	822+94.34	I-70	RT		246													375	D02-RT P-2
822+98.34	824+94.15	I-70	RT		196													435	D02-RT P-3
824+98.15	826+97.83	I-70	RT		200				1							3	10	300	D02-RT P-4
846+68.85	846+68.87	I-70	LT			21				1					1			8	CULVERT 4
897+79.62	897+84.94	I-70	LT		51				1							3	10	78	D03-LT P-1
897+80.45	897+85.71	I-70	RT		41				1							3	10	64	D03-RT P-1
911+80.68	911+94.18	I-70	RT		62				1							3	10	28	D04-RT P-1
912+83.46	912+93.10	I-70	LT		65				1							3	10	136	D04-LT P-1
952+32.38	952+36.07	I-70	LT		47				1							3	10	80	D05-LT P-1
969+73.29	969+76.73	I-70	RT		6				1						1	5	14	12	CULVERT 10
1023+10.76	1023+11.63	I-70	RT					10				1			1	15	23	38	CULVERT 12
1023+24.89	1023+25.76	I-70	LT					10				1			1			6	CULVERT 12
1047+55.88	1047+65.51	I-70	LT		51				1							3	10	55	D06-LT P-1
1047+65.23	1048+31.19	I-70	LT		64													67	D06-LT P-2
1047+68.15	1047+74.33	I-70	RT			59				1						4	13	23	D06-RT P-1
1047+75.86	1048+80.25	I-70	RT		105													84	D06-RT P-2
1071+23.88	1071+23.89	I-70	RT		17				1						1			8	CULVERT 14
1117+95.50	1117+99.40	I-70	RT			45				1					1	4	13	80	CULVERT 17
1118+09.36	1118+10.25	I-70	LT			10				1					1			6	CULVERT 17
1137+11.67	1137+14.18	I-70	LT			5				1					1			3	CULVERT 19
1296+82.41	1296+82.47	I-70	LT				15				1				1			6	CULVERT 29
1318+57.15	1318+90.20	I-70	RT			94				1						4	13	345	CULVERT 31 P-1
1318+90.85	1319+15.27	I-70	LT/RT			136	0	1 REVISED						143					CULVERT 31 P-2
1328+69.50	1330+59.88	I-70	LT		191													203	D07-LT P-1
1330+61.02	1330+61.42	I-70	LT		64				1							3	10	76	D07-LT P-2
1329+49.57	1330+35.57	I-70	RT		86													108	D07-RT P-1
1330+39.42	1331+50.43	I-70	RT		120				1							3	10	186	D07-RT P-2
1332+38.36	1332+43.31	I-70	RT				13				1				1			5	CULVERT 32
1372+40.22	1375+40.87	I-70	RT		301													558	D08 P-1
1375+42.87	1377+88.45	I-70	RT		246													769	D08 P-2
1377+79.83	1377+89.45	I-70	RT		117	0		1 REVISED	1				127			3	10		D08 P-3
1377+90.45	1381+00.46	I-70	RT		310													620	D08 P-4
1376+64.80	1376+65.61	I-70	RT		5				1						1			2	CULVERT 35
1384+18.85	1384+20.27	I-70	RT		89	0							100			3	10		D09 P-1
1384+21.26	1387+20.04	I-70	RT		299													706	D09 P-2
1390+20.71	1392+19.95	I-70	RT		199													527	D10 P-1
1392+20.80	1392+20.98	I-70	RT		106	0							116			3	10		D10 P-2
1392+21.94	1395+17.55	I-70	RT		296													480	D10 P-3
1391+87.62	1391+88.09	I-70	RT		10				1						1	3	10	11	CULVERT 36
1402+00.97	1402+15.10	I-70	RT		20				1						1			5	CULVERT 37
1413+90.00	1413+90.00	I-70	LT/RT	3														2	D11 P-1
1413+91.00	1415+89.66	I-70	RT	200											1			210	D11 P-2
			TOTAL:	203	4017	600	28	20	17	7	2	2	343	143	14	81	239	7373	
					3705	463													

1 REVISED

BOX CULVERT EXTENSION

BEGIN STA.	END STA.	ROUTE	SIDE	CLASS B-1 CONCRETE	REINFORCING STEEL	CULVERT CLEANOUT	ROCK LINING	PERMANENT EROSION CONTROL GEOTEXTILE	CLASS 4 EXCAVATION	REMARKS
				C.Y.	LBS	EA	C.Y.	S.Y.	C.Y.	
889+77.42	889+76.65	I-70	LT	18.4	1,735	1			17	CULVERT 6
889+95.75	889+96.43	I-70	RT	17.0	1,599	1	12	14	60	CULVERT 6
930+59.24	930+54.53	I-70	LT	12.8	1,160	1			26	CULVERT 8
1037+12.31	1037+14.65	I-70	LT	37.9	3,689	1			38	CULVERT F
1101+26.71	1101+28.88	I-70	RT	11.8	1,248	1	111	134	32	CULVERT 16
1101+91.54	1101+93.63	I-70	LT	11.6	1,224	1			11	CULVERT 16
			TOTAL:	109.5	10,660	6	123	148	184	

PAVEMENT UNDERDRAINAGE

BEGIN STA.	END STA.	ROUTE	SIDE	PIPE AGGREGATE PAVEMENT EDGE DRAIN	PERMANENT EROSION CONTROL GEOTEXTILE	REMARKS
				L.F.	S.Y.	
1372+36.11	1375+40.87	I-70	RT	305	113	
1375+42.87	1377+88.45	I-70	RT	246	91	
1377+90.45	1381+00.46	I-70	RT	310	115	
1381+04.46	1384+19.27	I-70	RT	315	117	
1384+21.26	1387+20.06	I-70	RT	299	111	
1387+22.03	1390+18.71	I-70	RT	297	110	
1390+20.71	1392+19.95	I-70	RT	199	74	
1392+21.94	1395+17.55	I-70	RT	296	110	
			TOTAL:	2267	841	

DISCLAIMER
THE PROFESSIONAL WHOSE SIGNATURE AND PERSONAL SEAL APPEAR HEREON ASSUMES RESPONSIBILITY ONLY FOR WHAT APPEARS ON THIS PAGE, AND DISCLAIMS (PURSUANT TO SECTION 327.411 RSMO) SPECIFICATION, ESTIMATES, REPORTS, OR OTHER DOCUMENTS OR INSTRUMENTS NOT SEALED BY THE UNDERSIGNED PROFESSIONAL RELATING TO OR INTENDED TO BE USED FOR ANY PART OR PARTS OF THE PROJECT TO WHICH THIS PAGE REFERS.

SUMMARY OF QUANTITIES
SHEET 21 OF 27

STATE OF MISSOURI
MICHAEL WAYNE DUSENBERG
NUMBER E-26546
PROFESSIONAL ENGINEER
THIS SHEET HAS BEEN SIGNED, SEALED AND DATED ELECTRONICALLY.

DATE PREPARED 1/7/2026
ROUTE I-70 | STATE MO
DISTRICT CD | SHEET NO. 3
COUNTY COOPER
JOB NO. JST0017B
CONTRACT ID. -
PROJECT NO. -
BRIDGE NO. -

DATE	DESCRIPTION
01/07/26	1 REVISED QTY TABLE

MISSOURI HIGHWAYS AND TRANSPORTATION COMMISSION
105 WEST CAPITOL
JEFFERSON CITY, MO 65102
1-888-ASK-MODOT (1-888-275-6636)

Bartlett & West
601 MONROE ST. SUITE 201 - JEFFERSON CITY, MO 65101
PHONE 573-634-3181
CERTIFICATE OF AUTHORITY NO. 000167 - ENGINEERING
WWW.BARTLETTWEST.COM

DRAINAGE STRUCTURES

STA.	ROUTE	SIDE	PRECAST CONCRETE DROP INLET 3 FT X 3 FT	PRECAST CONCRETE DROP INLET 4 FT X 2 FT	PRECAST CONCRETE DROP INLET 5 FT X 3 FT	PRECAST CONCRETE MANHOLE 48 IN	GRATE AND BEARING PLATE 3 FT X 3 FT	CURVED GRATE AND BEARING FRAME 4 FT X 2 FT	GRATE AND BEARING PLATE 5 FT X 3 FT	MANHOLE FRAME AND COVER TYPE 4	CLASS 3 EXCAVATION	REMARKS
			F.T.	F.T.	F.T.	F.T.	EA	EA	EA	EA	CY	
797+90.32	I-70	RT	4.0 / 0.0	1 REVISED	4.0 1	ADDED	1 / 0.0	1 REVISED	1 1	ADDED	6	D01-RT I-1
799+72.33	I-70	RT			4.0				1		6	D01-RT I-2
806+10.22	I-70	LT	4.0				1				3	D01-LT I-1
822+99.56	I-70	LT	4.0				1				5	D02-LT I-1
824+40.93	I-70	LT				5.0				1	6	D02-LT MH-1
818+80.57	I-70	RT	3.0				1				7	D02-RT I-1
820+50.24	I-70	RT				7.0				1	7	D02-RT MH-1
822+96.34	I-70	RT				10.0				1	8	D02-RT MH-2
824+96.15	I-70	RT				9.0				1	8	D02-RT MH-3
897+88.01	I-70	LT	4.0				1				4	D03-LT I-1
897+85.75	I-70	RT	4.0				1				4	D03-RT I-1
911+80.72	I-70	RT	4.0				1				4	D04-RT I-1
912+83.42	I-70	LT	4.0				1				2	D04-LT I-1
952+32.31	I-70	LT	4.0				1				4	D05-LT I-1
1047+65.79	I-70	LT				5.0				1	7	D06-LT MH-1
1048+32.19	I-70	LT	4.0				1				5	D06-LT I-1
1047+74.36	I-70	RT	4.0				1				4	D06-RT I-1
1048+81.75	I-70	RT	4.0 / 0.0		4.0		1 / 0.0		1		4	D06-RT I-2
1318+90.55	I-70	RT	7.0 / 0.0	1 REVISED	7.0 1	ADDED	1 / 0.0	1 REVISED	1 1	ADDED	8	CULVERT 31 I-1
1319+15.25	I-70	LT	5.0 / 0.0		5.0		1 / 0.0		1		6	CULVERT 31 I-2
1328+68.00	I-70	LT	4.0				1				5	D07-LT I-1
1328+61.38	I-70	LT	6.0				1				4	D07-LT I-2
1329+48.02	I-70	RT	4.0				1				6	D07-RT I-1
1330+37.57	I-70	RT				5.0				1	7	D07-RT MH-1
1372+39.22	I-70	RT		6.0				1			12	D08 I-1
1375+40.87	I-70	RT		8.0				1			14	D08 I-2
1377+89.45	I-70	RT		14.0 / 0	14.0			1	1		16	D08 I-3
1381+01.46	I-70	RT		6.0				1			11	D08 I-4
1384+20.27	I-70	RT	1 REVISED	12.0 / 0	12.0 1	ADDED	1 REVISED	1	1 1	ADDED	13	D09 I-1
1387+21.03	I-70	RT		5.0				1			16	D09 I-2
1390+19.71	I-70	RT		6.0				1			13	D10 I-1
1392+20.95	I-70	RT		15.0 / 0	15.0			1	1		42	D10 I-2
1395+18.55	I-70	RT		6.0				1			15	D10 I-3
1413+90.00	I-70	LT		5.0				1			5	D11 I-1
1413+90.00	I-70	RT		5.0				1			5	D11 I-2
		TOTAL:	73 / 53	88 / 47	4 / 65	41	17 / 13	11 / 8	1 / 8	6	292	

FLOWABLE BACKFILL

BEGIN STA.	END STA.	ROUTE	SIDE	FLOWABLE BACKFILL	REMARKS
				C.Y.	
797+96.45	797+96.58	I-70	CL/RT	6.6	57' EXISTING 24" PIPE
826+95.03	826+95.13	I-70	CL/RT	4.7	72' EXISTING 18" PIPE
842+92.01	842+92.13	I-70	CL/RT	9.9	85' EXISTING 24" PIPE
861+40.00	861+40.44	I-70	CL/LT	10.0	86' EXISTING 24" PIPE
881+36.62	881+36.69	I-70	CL/LT	14.0	77' EXISTING 30" PIPE
897+85.50	897+85.94	I-70	CL/RT	6.4	55' EXISTING 24" PIPE
928+81.82	928+81.94	I-70	CL/RT	7.8	67' EXISTING 24" PIPE
949+81.26	950+11.63	I-70	CL/LT	17.6	151' EXISTING 24" PIPE
969+59.90	969+60.00	I-70	CL/RT	9.1	78' EXISTING 24" PIPE
987+78.19	987+78.66	I-70	CL/RT	8.1	70' EXISTING 24" PIPE
1006+76.90	1006+76.90	I-70	CL/RT	10.6	91' EXISTING 24" PIPE
1022+76.14	1022+76.16	I-70	CL/RT	9.9	85' EXISTING 24" PIPE
1042+74.57	1042+74.70	I-70	CL/RT	8.5	73' EXISTING 24" PIPE
1100+08.97	1100+09.24	I-70	CL/LT	13.1	72' EXISTING 30" PIPE
1117+79.23	1117+81.34	I-70	CL/RT	8.8	76' EXISTING 24" PIPE
1151+63.34	1151+63.49	I-70	CL/RT	7.8	67' EXISTING 24" PIPE
1159+65.55	1159+65.83	I-70	CL/RT	11.2	96' EXISTING 24" PIPE
1194+64.45	1194+64.62	I-70	CL/RT	9.2	79' EXISTING 24" PIPE
1248+77.13	1248+77.38	I-70	CL/RT	8.4	72' EXISTING 24" PIPE
1258+83.84	1259+03.92	I-70	CL	1.3	20' EXISTING 18" PIPE
1278+59.21	1278+59.73	I-70	CL/RT	8.5	73' EXISTING 24" PIPE
1296+34.43	1296+80.59	I-70	CL	5.4	46' EXISTING 24" PIPE
1330+55.89	1330+56.01	I-70	LT/RT	21.6	119' EXISTING 30" PIPE
1366+10.99	1366+11.18	I-70	CL/RT	9.3	80' EXISTING 24" PIPE
1392+53.16	1392+52.72	I-70	CL/RT	4.2	64' EXISTING 18" PIPE
1407+76.96	1047+77.07	I-70	CL/RT	8.2	125' EXISTING 18" PIPE
			TOTAL:	240	

DITCH LINING

1 REVISED (TYP)

BEGIN STA.	END STA.	ROUTE	SIDE	FURNISHING TYPE 2 ROCK DITCH LINER	PLACING TYPE 2 ROCK DITCH LINER	PERMANENT EROSION CONTROL GEOTEXTILE	REMARKS
				C.Y.	C.Y.	S.Y.	
845+00.00	848+10.00	I-70	LT	81	81	243	323' x 7'
848+10.00	848+90.00	I-70	LT	9	9	27	83' x 4'
857+00.00	858+10.00	I-70	RT	29	29	87	100' x 7'
867+00.00	867+80.00	I-70	LT	9	9	27	81' x 3'
883+10.00	884+30.00	I-70	LT	32	32	96	124' x 7'
986+00.00	987+00.00	I-70	LT	23	23	69	103' x 6'
986+20.00	897+20.00	I-70	RT	29	29	87	100' x 7'
1022+80.00	1023+26.00	I-70	LT	13	13	39	50' x 6'
1023+26.00	1024+10.00	I-70	LT	21	21	63	106' x 4'
1023+50.00	1024+10.00	I-70	RT	16	16	48	61' x 7'
1031+80.00	1032+40.00	I-70	LT	12	12	36	61' x 5'
1069+90.00	1071+24.00	I-70	RT	40	40	120	139' x 8'
1071+24.00	1073+95.00	I-70	RT	72	72	216	274' x 7'
1117+60.00	1118+00.00	I-70	LT	7	7	21	41' x 4'
1119+00.00	1120+00.00	I-70	RT	15	15	45	101' x 4'
1136+19.50	1137+83.50	I-70	LT	44	44	132	168' x 7'
1295+70.00	1297+07.50	I-70	LT	36	36	108	144' x 7'
1305+50.35	1308+10.35	I-70	LT	70	70	210	269' x 7'
1373+80.00	1374+70.00	I-70	LT	23	23	69	90' x 7'
1388+00.00	1389+00.00	I-70	RT	27	27	81	104' x 7'
			TOTAL:	608	608	1824	

MODIFIED EXISTING MEDIAN DROP INLETS

BEGIN STA.	ROUTE	SIDE	MODIFIED EXISTING MEDIAN DROP INLETS	REMARKS
			EA	
1060+91.32	I-70	CL	1	CULVERT 13
		TOTAL:	1	

DISCLAIMER
THE PROFESSIONAL WHOSE SIGNATURE AND PERSONAL SEAL APPEAR HEREON ASSUMES RESPONSIBILITY ONLY FOR WHAT APPEARS ON THIS PAGE, AND DISCLAIMS (PURSUANT TO SECTION 327.411 RSMO) SPECIFICATION, ESTIMATES, REPORTS, OR OTHER DOCUMENTS OR INSTRUMENTS NOT SEALED BY THE UNDERSIGNED PROFESSIONAL RELATING TO OR INTENDED TO BE USED FOR ANY PART OR PARTS OF THE PROJECT TO WHICH THIS PAGE REFERS.

SUMMARY OF QUANTITIES
SHEET 22 OF 27

STATE OF MISSOURI
MICHAEL WAYNE DUSENBERG
NUMBER E-26546
PROFESSIONAL ENGINEER
THIS SHEET WAS SIGNED, SEALED AND DATED ELECTRONICALLY.

DATE PREPARED 1/7/2026
ROUTE I-70 | STATE MO
DISTRICT CD | SHEET NO. 3
COUNTY COOPER
JOB NO. JST0017B
CONTRACT ID. -
PROJECT NO. -
BRIDGE NO. -

DATE	DESCRIPTION
01/07/26	1 REVISED AND ADDED QTY

MISSOURI HIGHWAYS AND TRANSPORTATION COMMISSION
105 WEST CAPITOL
JEFFERSON CITY, MO 65102
1-888-ASK-MODOT (1-888-275-6636)

Bartlett & West
601 MONROE ST. SUITE 201 - JEFFERSON CITY, MO 65101
PHONE 573-634-3181
CERTIFICATE OF AUTHORITY NO. 000167 - ENGINEERING
WWW.BARTLETTWEST.COM

SIGN	SIZE IN.	AREA SQ.FT.	QTY EACH	TOTAL AREA SQ.FT.	QTY RELOC EACH	TOTAL RELOC SQ.FT.	SIGN NUM.	DESCRIPTION
WARNING SIGNS								
WO1-1L	48X48	16.00						TURN (SYMBOL LEFT)
WO1-1R	48X48	16.00						TURN (SYMBOL RIGHT)
WO1-2L	48X48	16.00						CURVE (SYMBOL LEFT)
WO1-2R	48X48	16.00						CURVE (SYMBOL RIGHT)
WO1-3L	48X48	16.00						REVERSE TURN (SYMBOL LEFT)
WO1-3R	48X48	16.00						REVERSE TURN (SYMBOL RIGHT)
WO1-4L	48X48	16.00						REVERSE CURVE (SYMBOL LEFT)
WO1-4R	48X48	16.00						REVERSE CURVE (SYMBOL RIGHT)
WO1-4bL	48X48	16.00	22	352.00	32	512.00	7	DOUBLE ARROW REVERSE CURVE (SYMBOL LEFT)
WO1-4bR	48X48	16.00	24	384.00	44	704.00	6	DOUBLE ARROW REVERSE CURVE (SYMBOL RIGHT)
WO1-4cL	48X48	16.00						TRIPLE ARROW REVERSE CURVE (SYMBOL LEFT)
WO1-4cR	48X48	16.00						TRIPLE ARROW REVERSE CURVE (SYMBOL RIGHT)
WO1-6	60X30	12.50						HORIZONTAL ARROW (SYMBOL)
WO1-6a	72X36	18.00						HORIZ. ARROW (SYMBOL ON PERMANENT BARRICADE)
WO1-7	60X30	12.50						DOUBLE HEAD HORIZONTAL ARROW (SYMBOL)
WO1-7a	72X36	18.00						DOUBLE HEAD HORIZ. ARROW (SYMBOL ON PERM. BARR.)
WO1-8	18X24	3.00						CHEVRON (SYMBOL)
WO1-8a	30X36	7.50						CHEVRON (SYMBOL FOR DIVIDED HIGHWAYS)
WO3-1	48X48	16.00						STOP AHEAD (SYMBOL)
WO3-2	48X48	16.00						YIELD AHEAD (SYMBOL)
WO3-3	48X48	16.00						SIGNAL AHEAD (SYMBOL)
WO3-4	48X48	16.00						BE PREPARED TO STOP
WO3-5	48X48	16.00	4	64.00	12	192.00	2	SPEED LIMIT AHEAD (60)
WO3-5	48X48	16.00	4	64.00	12	192.00	4	SPEED LIMIT AHEAD (50)
WO4-1R	48X48	16.00						MERGE (SYMBOL FROM RIGHT)
WO4-1aL	48X48	16.00						MERGE (LEFT)
WO4-1aR	48X48	16.00						MERGE (RIGHT)
WO5-1	48X48	16.00						ROAD/BRIDGE/RAMP NARROWS
WO5-3	48X48	16.00						ONE LANE BRIDGE
WO5-5	48X48	16.00						NARROW LANES
WO6-1	48X48	16.00						DIVIDED HIGHWAY (SYMBOL)
WO6-2	48X48	16.00						DIVIDED HIGHWAY END (SYMBOL)
WO6-3	48X48	16.00						TWO WAY TRAFFIC (SYMBOL)
WO7-3a	30X24	5.00	2	10.00	6	30.00	13	NEXT XX MILES (PLAQUE)
WO8-1	48X48	16.00						BUMP
WO8-2	48X48	16.00						DIP
WO8-3	48X48	16.00						PAVEMENT ENDS
WO21-5aR	48X48	16.00	26	416.00			9	RIGHT SHOULDER CLOSED
WO8-5	48X48	16.00						SLIPPERY WHEN WET (SYMBOL)
WO8-6	48X48	16.00						TRUCK CROSSING
WO8-6c	48X48	16.00						TRUCK ENTRANCE
WO8-7	36X36	9.00						LOOSE GRAVEL
WO8-7a	36X36	9.00						FRESH OIL / LOOSE GRAVEL
WO8-9	48X48	16.00						LOW SHOULDER
WO8-11	48X48	16.00						UNEVEN LANES
WO8-12	48X48	16.00						NO CENTER LINE
WO8-15	48X48	16.00						GROOVED PAVEMENT
WO8-15P	30X24	5.00						MOTORCYCLE (PLAQUE)
WO8-17L	48X48	16.00						SHOULDER DROP-OFF (SYMBOL LEFT)
WO8-17R	48X48	16.00						SHOULDER DROP-OFF (SYMBOL RIGHT)
WO8-17P	30X24	5.00						SHOULDER DROP-OFF (PLAQUE)
W9-3a	48x48	9.62	7	67.34	1	9.62	34	RAILROAD CROSSING SPLIT LANE (SYMBOL)
WO12-1	24X24	4.00	6	24.00	1	4.00	33	DOUBLE DOWN ARROW (SYMBOL)
WO12-2	48X48	16.00						LOW CLEARANCE (SYMBOL)
WO12-2x	24X18	3.00						LOW CLEARANCE (PLAQUE)
WO12-2a	84X24	14.00						OVERHEAD LOW CLEARANCE (FEET AND INCHES)
WO12-4	120X60	50.00	44	275.00				LOW CLEARANCE XX FT XX IN XX MILES AHEAD
WO12-5	120X60	50.00						WIDTH RESTRICTION XX FT XX IN XX MILES AHEAD
WO13-1	30X30	6.25	46	287.50	32	200.00	11	ADVISORY SPEED (PLAQUE)
WO16-2	30X24	5.00	2	10.00			12	XXX FEET (PLAQUE)
WO16-3	30X24	5.00						X MILE (PLAQUE)
WO20-1	48X48	16.00	15	240.00	16	256.00	1	ROAD/BRIDGE/RAMP WORK AHEAD
WO20-2	48X48	16.00	2	32.00	14	224.00	14	DETOUR AHEAD
WO20-3	48X48	16.00						ROAD CLOSED AHEAD
WO20-4	48X48	16.00						ONE LANE ROAD AHEAD
WO20-5	48X48	16.00						RIGHT/CENTER/LEFT LANE CLOSED AHEAD
WO20-5a	48X48	16.00						2 RIGHT/CENTER/LEFT LANES CLOSED AHEAD
WO20-6a	48X48	16.00						RIGHT/CENTER/LEFT LANE CLOSED
WO20-7a	48X48	16.00						FLAGGER (SYMBOL)
WO21-2	36X36	9.00						FRESH OIL
WO21-5	48X48	16.00	2	32.00	2	32.00	32	SHOULDER WORK / SHOULDER WORK AHEAD
WO22-1	48X48	16.00						BLASTING ZONE AHEAD
WO22-2	42X36	10.50						TURN OFF 2-WAY RADIO AND PHONE
WO22-3	42X36	10.50						END BLASTING ZONE
GO22-1	21X15	2.19						WET PAINT (ARROW PIVOTS)

1 QUAN REMOVED

1 REVISED

1 REVISED

SIGN	SIZE IN.	AREA SQ.FT.	QTY EACH	TOTAL SQ.FT.	QTY RELOC EACH	TOTAL RELOC SQ.FT.	SIGN NUM.	DESCRIPTION
GUIDE SIGNS								
E05-1	36X48	12.00	10	120.00	15	180.00	40	GORE EXIT
E05-2A	48X36	12.00						EXIT CLOSED
E05-2E	48X36	12.00	2	24.00	14	168.00	26	RAMP CLOSED
GO20-1	60X24	10.00	2	20.00	8	80.00	13	ROAD WORK NEXT XX MILES
GO20-2	48X24	8.00	13	104.00	13	104.00	8	END ROAD WORK
GO20-5aP	36X24	6.00	20	120.00	24	144.00	10	WORK ZONE (PLAQUE)
M1-1	36X36	9.00						I-70 SHIELD
M1-5	36X36	9.00			0	0	0	MO 87
M1-5	36X36	9.00						MO 5
M1-5	36X36	9.00						MO 179
M1-5A	36X36	9.00						RT B
MO4-8	24X18	3.00						DETOUR (PLAQUE)
MO4-8a	24X18	3.00						END DETOUR
M3-2	24X18	3.00						EAST
M3-4	24X18	3.00						WEST
MO4-10L	48X18	6.00	1	6.00	7	42.00	27	DETOUR ARROW (LEFT)
M6-1R	21X15	2.19						RIGHT ARROW
M6-1L	21X15	2.19						LEFT ARROW
M6-2R	21X15	2.19						45 DEGREE RIGHT ARROW
REGULATORY SIGNS								
R1-1	48X48	13.25						STOP
R1-2	48TRI.	6.93						YIELD
R1-2a	36X36	9.00						TO ONCOMING TRAFFIC (PLAQUE)
R1-3P	30X12	2.50						ALL WAY (PLAQUE)
R2-1	36X48	12.00	4	48.00	6	72.00	3	SPEED LIMIT 60MPH
R2-1	36X48	12.00	20	240.00	16	192.00	5	SPEED LIMIT 50 MPH
R2-1	36X48	16.00	4	64.00	6	96.00	39	SPEED LIMIT 70 MPH
R3-3	36X36	9.00						NO TURNS
R3-4	48X48	16.00						NO U-TURN (SYMBOL)
R3-7L	30X30	6.25						LEFT LANE MUST TURN LEFT
R3-7R	30X30	6.25						RIGHT LANE MUST TURN RIGHT
R4-1	36X48	12.00						DO NOT PASS
R11-2	48X30	10.00						ROAD CLOSED
								ROAD CLOSED XX MILES AHEAD
R11-4	60X30	12.50					60	ROAD CLOSED TO THRU TRAFFIC
CONST-3A	60X48	20.00	12	240.00	48	960.00	35	FINE SIGN
CONST-3X	56X12	4.67						SPEEDING/PASSING (PLATE)
MISCELLANEOUS SIGNS								
CONST-5	48X36	12.00					61	POINT OF PRESENCE
CONST-5	96X48	32.00	2	64.00	8	256.00	35	POINT OF PRESENCE
CONST-8	48X36	12.00	2	24.00	8	96.00	29	WORK ZONE NO PHONE ZONE
SP-1	90X24	15.00	4	60.00	16		52	"CLOSED" ON EXIT GUIDE SIGNS
SP-2	36x60	15.00	2	30.00	2		15	DETOUR MO 5 LEFT ARROW
SP-3	36x60	15.00	2	30.00	2		16	DETOUR MO 5 45 DEG RIGHT ARROW
SP-4	36x78	19.50	3	58.50	9		17	DETOUR WEST I-70 LEFT ARROW
SP-5	36x78	19.50	1	19.50	3		18	DETOUR WEST I-70 45 DEG RT ARROW
SP-6	36x60	15.00	1	15.00	3		19	DETOUR WEST I-70 RIGHT
SP-7	36x60	15.00	2	30.00	2		20	DETOUR RT B LEFT ARROW
SP-8	36x60	15.00	2	30.00	2		21	DETOUR RT B 45 DEG RIGHT ARROW
SP-9	36x60	15.00	2	30.00	2		22	DETOUR MO 87 LEFT ARROW
SP-10	36x60	15.00	2	30.00	2		23	DETOUR MO 87 45 DEG RIGHT ARROW
SP-11	36x60	15.00	2	30.00	2		24	DETOUR MO 179 LEFT ARROW
SP-12	36x60	15.00	2	30.00	2		35	DETOUR MO 179 45 DEG RIGHT ARROW
SP-13	36x78	19.50	3	58.50	9		36	DETOUR EAST I-70 LEFT ARROW
SP-14	36x78	19.50	1	19.50	3		37	DETOUR E I-70 45 DEG RIGHT ARROW
SP-15	36x78	19.50	1	19.50	3		38	DETOUR EAST I-70 RIGHT ARROW
SP-16	96x48	32.00	1	32.00			53	WIDE LOADS USE RT LANE NEXT X MI
SP-17	96x48	32.00	1	32.00			54	WIDE LOADS USE LT LANE NEXT X MI
SP-18	96x48	32.00	1	32.00			55	WIDE LOADS OVER 12FT USE RT LANE
SP-19	96x48	32.00	1	32.00			56	WIDE LOADS OVER 12FT USE LT LANE
SP-20	114x72	57.00	3	171.00			57	RESTRICTED WIDTH 12FT XMI AHEAD
SP-21	114x72	57.00	3	171.00			58	RESTRICTED WIDTH 12 FT XMI AHEAD
616-10.05 CONSTRUCTION SIGNS				TOTAL 4018				
616-10.10 RELOCATED SIGNS						TOTAL 4746		

1 REVISED

3995

4636

ITEM	TOTAL	EFFECTIVE: 07-01-2024
6122019	2	IMPACT ATTENUATOR 70 MPH (SAND BARRELS)
6122020	10	REPLACEMENT SAND BARREL
6122030	6	IMPACT ATTENUATOR (RELOCATION)
6122040	12	WORK ZONE CRASH CUSION (NARROW)
6122041	24	WORK ZONE CRASH CUSION(NARROW)(RELOCATION)
6161020	1149	CHANNELIZER (DRUM-LIKE)
6161013		CHANNELIZER (CONE)
6161030	50	TYPE III MOVEABLE BARRICADE
6161040	1	FLASHING ARROW PANEL
6161095	2	RADAR SPEED ADVISORY SYSTEM
6161099	5	CHANGEABLE MESSAGE SIGN WITH COMM. INTERFACE- CONTRACTOR FURNISHED/RETAINED
6162002	16	TEMPORARY LONG-TERM RUMBLE STRIPS
6173600D	193521	TEMPORARY TRAFFIC BARRIER CONTRACTOR FURNISHED/RETAINED
6174000A	2	TEMP. TRAFFIC BARRIER HEIGHT TRANSITION
6175010A	138520	RELOCATING TEMPORARY TRAFFIC BARRIER
6178001	1598	TRAFFIC BARRIER DELINEATOR WHITE
6178003A	3196	TRAFFIC BARRIER DELINEATOR YELLOW/YELLOW
6208076	464929	4 IN TEMP. PAVEMENT MARKING PAINT(WHITE)
6208076	379094	4 IN TEMP. PAVEMENT MARKING PAINT(YELLOW)
6207001	311607	PAVEMENT MARKING REMOVAL
6173700B	1179	TEMP TRAFFIC BARRIER ANCHORED CONTRACTOR FURNISHED/RETAINED
6175011B		RELOCATING TEMPORARY TRAFFIC BARRIER ANCHORED
6173707		TEMP TRAFFIC BARRIER STIFFNESS TRANSITION SECTION
6173600D	113452	TEMPORARY TRAFFIC BARRIER CONTRACTOR FURNISHED/RETAINED
6174000A	2	TEMP. TRAFFIC BARRIER HEIGHT TRANSITION
6175010A	203195	RELOCATING TEMPORARY TRAFFIC BARRIER
6178001	0	TRAFFIC BARRIER DELINEATOR WHITE
6178003A	0	TRAFFIC BARRIER DELINEATOR YELLOW/YELLOW
6208076	564026	4 IN TEMP. PAVEMENT MARKING PAINT(WHITE)
6208076	490892	4 IN TEMP. PAVEMENT MARKING PAINT(YELLOW)
6207001	311607	PAVEMENT MARKING REMOVAL
6173700B	35442	TEMP TRAFFIC BARRIER ANCHORED CONTRACTOR FURNISHED/RETAINED
6175011B	23563	RELOCATING TEMPORARY TRAFFIC BARRIER ANCHORED

1 REVISED

STATE OF MISSOURI
RONNIE L. WILLIAMS
NUMBER PE-2010000879
PROFESSIONAL ENGINEER

THIS SHEET HAS BEEN SIGNED, SEALED, AND DATED ELECTRONICALLY

DATE PREPARED 1/8/2026

ROUTE I-70 | STATE MO

DISTRICT CD | SHEET NO. 3

COUNTY COOPER

JOB NO. JST0017B

CONTRACT ID. -

PROJECT NO. -

BRIDGE NO. -

REVISED	QTY	DESCRIPTION	DATE
1			01/07/26

MISSOURI HIGHWAYS AND TRANSPORTATION COMMISSION

105 WEST CAPITOL
JEFFERSON CITY, MO 65102
1-888-ASK-MODOT (1-888-275-6636)

BURNS McDONNELL
9400 Ward Parkway
Kansas City, MO 64114
(816) 333-9400
Certificate of Authority No.: 000165

SUMMARY OF QUANTITIES
SHEET 24 OF 27

JST0017B BID ITEMS

BID ITEM NO.	BID ITEM DESCRIPTION	QUANTITY	UNITS		
GRADING (LUMP SUM BID ITEM NO. 203.99.01)					
2013000	CLEARING AND GRUBBING	41.0	ACRE		
2035000	UNCLASSIFIED EXCAVATION	231,943	C.Y.		
2036000	COMPACTING EMBANKMENT	58,669	C.Y.		
2037075	COMPACTING IN CUT	622	STA.	1244.0	1 REVISED
ALTERNATE PAVEMENT A (LUMP SUM BID ITEM NO. 505.99.01)					
2051010	MODIFIED SUBGRADE	766,000	S.Y.	765,247	1 REVISED
3030610A	PLACING ROCK BASE 12" THICK	766,000	S.Y.	765,247	
5021311	CONCRETE PAVEMENT (11 IN. NON-REINFORCED, 15 FT. JOINTS)	656,708.5	S.Y.	655,956.1	
6262000A	PORTLAND CEMENT CONCRETE SHOULDER RUMBLE STRIP	2,474.2	STA.		
5041000	CONCRETE APPROACH PAVEMENT	357.6	S.Y.		1 ADDED
ALTERNATE PAVEMENT B (LUMP SUM BID ITEM NO. 403.99.01)					
2051010	MODIFIED SUBGRADE	766,000	S.Y.	765,247	1 REVISED
3030610A	PLACING ROCK BASE 12" THICK	766,000	S.Y.	765,247	
4039905	MISC. {14.5 IN. ASPHALTIC CONCRETE MIXTURE}	656,708.5	S.Y.	655,956.1	
6261000A	BITUMINOUS SHOULDER RUMBLE STRIP	2,474.2	STA.		
ALTERNATE PAVEMENT C - TYPE A2 SHOULDERS - CONCRETE (LUMP SUM BID ITEM NO. 505.99.01)					
5021340	TYPE A2 SHOULDER	109,282.2	S.Y.		
ALTERNATE PAVEMENT D - TYPE A2 SHOULDERS - ASPHALT (LUMP SUM BID ITEM NO. 403.99.01)					
4010150	TYPE A2 SHOULDER	109,282.2	S.Y.		
ALTERNATE PAVEMENT E - STRENGTHENED CONCRETE SHOULDERS (LUMP SUM BID ITEM NO. 505.99.01)					
2051010	MODIFIED SUBGRADE	16,771	S.Y.	16,689	1 REVISED
3049905	MISC. {TYPE 5 AGGREGATE FOR BASE (14.5 IN. THICK)}	16,771	S.Y.	16,689	
5029905	CONCRETE PAVEMENT (8 1/2 IN. NON-REINFORCED, 12 FT. JOINTS)	16,770.8	S.Y.	16,689.4	
ALTERNATE PAVEMENT F - STRENGTHENED ASPHALT SHOULDERS (LUMP SUM BID ITEM NO. 403.99.01)					
2051010	MODIFIED SUBGRADE	16,771	S.Y.	16,689	1 REVISED
3049905	MISC. {TYPE 5 AGGREGATE FOR BASE (16 IN. THICK)}	16,771	S.Y.	16,689	
4039905	MISC. {10.5 IN. ASPHALTIC CONCRETE MIXTURE}	16,770.8	S.Y.	16,689.4	
GUARDRAIL AND GUARD CABLE (LUMP SUM BID ITEM NO. 606.99.01)					
2051010	MODIFIED SUBGRADE	11	S.Y.		
6061061	MGS GUARDRIAL, 8 FT. POSTS, 6 FT. - 3IN. SPACING	61,737	L.F.		
6061069	MGS BRIDGE APPROACH TRANSITION SECTION (REGULAR/NO CURB)	4	EACH		
6061070	MGS VERTICAL CONCRETE BARRIER TRANSITION	7	EACH		
6061080	MGS END AHCHOR	46	EACH		
6063014	TYPE A CRASHWORTHY END TERMINAL (MASH)	51	EACH		
6063022	TYPE E CRASHWORTHY END TERMINAL (MASH)	1	EACH		
6064100	MEDIAN GUARD CABLE 3 - STRAND	200	L.F.		
6064110	ANCHOR ASSEMBLY, GUARD CABLE 3-STRAND	1	EACH		
LIGHTING AND ITS (LUMP SUM BID ITEM NO. 901.99.01)					
9011064	LIGHTING POLE, 45 FT. OR 13.5 M, TYPE AT DESIGN 1	19	EACH		
9011115	BRACKET ARM, 15 FT. OR 4.6 M	20	EACH		
9011312	LUMINAIRE, LED-B	20	EACH		
9012230	BASE MOUNTED CONTROL STATION 240 VOLT - 4 CIRCUIT	2	EACH		
9013003	CONDUIT, 3 IN. RIGID, IN TRENCH	36	L.F.		
9014003	CONDUIT, 3 IN. RIDIG, PUSHED	1,302	L.F.		
9015010	TRENCHING TYPE I	10,881	L.F.		
9016120	PULL BOX, CONCRETE, STANDARD	20	EACH		
9017002	CABLE, 2 AWG 1 CONDUCTOR	70	L.F.		
9017110	CABLE, 10 AWG 1 CONDUCTOR, POLE AND BRACKET	2,600	L.F.		
9017202	WIRE, 2 AWG, BARE NEUTRAL	40	L.F.		
9017407	CABLE-CONDUIT, 1 IN., 2 CONDUCTORS AND 1 BARE NEUTRAL, 8 AWG	12,980	L.F.		
9018245	POLE FOUNDATION (45 FT. OR 13.5 M MOUNTING HEIGHT)	20	EACH		
9018610	POWER SUPPLY ASSEMBLY, TYPE 2, 240/120 VOLT SERVICE, LIGHTING ONLY	2	EACH		
9019902	MISC. {LIGHTING POLE, 40 FT. OR 12.2 M, TYPE AT DESIGN 3}	1	EACH		
9103700	CCTV CAMERA ASSEMBLY, INSTALLED	1	EACH		
9105201	CONDUIT, 3 IN., RIGID, IN TRENCH	175	L.F.		
9107201	CONDUIT, 3 IN., RIGID, PUSHED	300	L.F.		
9108202	CABLE, 2 AWG, 1 CONDUCTOR, POWER	530	L.F.	0	
9108402	WIRE, 2 AWG, BARE NEUTRAL	270	L.F.	0	
9108621	POWER SUPPLY ASSEMBLY, TYPE 2, 240/120 VOLT SERVICE, ITS	1	EACH	0	1 REVISED
9108820	PULL BOX, CONCRETE, STANDARD	2	EACH		
9109100	BASE, CONCRETE	1	C.Y.	0	
9109901	MISC. {PERMANENT TRAFFIC COUNTING SYSTEM}	1	L.S.		
9109902	MISC. {CCTV POLE, 60 FT, WITH LOWERING DEVICE, FURNISH AND INSTALL}	1	EACH		
PERMANENT SIGNING (LUMP SUM BID ITEM NO. 903.99.01)					
9031005	SQUARE STEEL SIGN POST (4 IN.) BASE	10	EACH		
9031010	CONCRETE FOOTINGS, EMBEDDED	61.1	C.Y.		
9031020	CONCRETE FOOTINGS, BOLT DOWN	35.7	C.Y.		
9031210	STRUCTURAL STEEL POSTS	29,420	LBS		
9031220	PIPE POSTS	4,600	LBS		
9031230	4 IN. SQUARE STEEL POST	199	L.F.		
9031252	7 FT. CHANNEL POST DELINEATOR, DOUBLE STACKED WHITE	161	EACH		
9031256	7 FT. CHANNEL POST DELINEATOR, WHITE	48	EACH		
9031257A	7 FT. CHANNEL POST DELINEATOR, YELLOW	11	EACH		
9031258	7 FT. CHANNEL POST DELINEATOR, WHITE/RED	36	EACH		
9031259A	7 FT. CHANNEL POST DELINEATOR, YELLOW/RED	17	EACH		
9031270A	2 IN. PSST POST - 12 GA.	1,920	L.F.		
9031274	CONCRETE POST ANCHOR FOR 2 IN. PSST- 7 GA.	120	EACH		
9035004A	SH-FLAT SHEET	1,123	S.F.		
9035011A	ST-STRUCTURAL	5,079	S.F.		
9035069A	SHF-FLAT SHEET FLUORESCENT	316	S.F.		
9035071A	STF-STRUCTURAL FLUORESCENT	82	S.F.		
9038000	TEMPORARY GROUND MOUNTED LOGO SIGNS	18	EACH		
9039901	MISC. {SIGN NO. 47, OVERHEAD CANTILEVER TRUSS, 26' - 6"}	1	L.S.		
9039901	MISC. {SIGN NO. 54, OVERHEAD CANTILEVER TRUSS, 26' - 6"}	1	L.S.		
9039903	MISC. {GLARE SCREEN ON TRAFFIC SAFETY BARRIER}	1,950	L.F.		

SUMMARY OF QUANTITIES
SHEET 25 OF 27

STATE OF MISSOURI
RONNIE L. WILLIAMS
NUMBER PE-2010000879
PROFESSIONAL ENGINEER

THIS SHEET HAS BEEN SIGNED, SEALED, AND DATED ELECTRONICALLY

DATE PREPARED 1/8/2026

ROUTE	STATE
I-70	MO
DISTRICT	SHEET NO.
CD	3

COUNTY: COOPER
JOB NO.: JST0017B
CONTRACT ID.: -
PROJECT NO.: -
BRIDGE NO.: -

DATE	DESCRIPTION
01/07/26	1 REVISED QTY

MISSOURI HIGHWAYS AND TRANSPORTATION COMMISSION
105 WEST CAPITOL
JEFFERSON CITY, MO 65102
1-888-ASK-MODOT (1-888-275-6636)

BURNS McDONNELL
9400 Ward Parkway
Kansas City, MO 64114
(816) 333-9400
Certificate of Authority No.: 000165

c:\bmcd_lib\pw_connect\trn\d0192954\003_QU_JST0017B_I1_Quantities_BMcD.dgn 2:40:12 PM 1/8/2026

JST0017B BID ITEMS

BID ITEM NO.	BID ITEM DESCRIPTION	QUANTITY	UNITS
EROSION CONTROL (LUMP SUM BID ITEM NO. 806.99.01)			
6113010	FURNISHING TYPE 1 ROCK BLANKET	2,631	C.Y.
6113030	PLACING TYPE 1 ROCK BLANKET	2,631	C.Y.
6113020	FURNISHING TYPE 2 ROCK BLANKET	637	C.Y.
6113040	PLACING TYPE 2 ROCK BLANKET	637	C.Y.
6181020	ADDITIONAL MOBILIZATION FOR SEEDING	4	EACH
6240103A	PERMANENT EROSION CONTROL GEOTEXTILE	12,789	S.Y.
8025006	MULCHING	82.8	ACRE
8051000A	SEEDING - COOL SEASON GRASSES	41.4	ACRE
8061003	SEDIMENT TRAP EXCAVATION	277.5	C.Y.
8061004	SEDIMENT TRAP ROCK	277.5	C.Y.
8061005	ROCK DITCH CHECK	3,876	L.F.
8061006	ALTERNATE DITCH CHECK	7,280	L.F.
8061007A	CURB INLET CHECK	6	EACH
8061017	TEMPORARY SEEDING	41.4	ACRE
8061019	SILT FENCE	60,731	L.F.
8064140	TYPE 3B EROSION CONTROL BLANKET	42,571	S.Y.
MEDIAN BARRIER (LUMP SUM BID ITEM NO. 617.99.01)			
2051010	MODIFIED SUBGRADE	2,762	S.Y.
3030610A	PLACING ROCK BASE	2,773	S.Y.
5021305	CONCRETE PAVEMENT (5 3/4 IN. NON-REINFORCED, 15 FT. JOINTS)	1,165.6	S.Y.
5021312	CONCRETE PAVEMENT (12 IN. NON-REINFORCED 15 FT. JOINTS)	1,607	S.Y.
6173000	CONCRETE TRAFFIC BARRIER, TYPE C	61,501	L.F.
6173100	CONCRETE TRAFFIC BARRIER, TYPE D	182	L.F.
6173101	CONCRETE TRAFFIC BARRIER, TYPE D (MODIFIED)	1,950	L.F.
6179902	MISC. {WILDLIFE CROSSINGS}	90	EACH
6179903	MISC. {CONCRETE TRAFFIC BARRIER, TYPE D (MEDIAN)(MODIFIED)}	1,950	L.F.
6262000A	PORTLAND CEMENT CONCRETE SHOULDER RUMBLE STRIP	78	STA.
PERMANENT PAVEMENT MARKING (LUMP SUM BID ITEM NO. 602.99.01)			
6200054	PREFORMED THERMOPLASTIC PAVEMENT MARKING, LANE REDUCTION ARROW	4	EACH
6205902B	6 IN. WHITE CLASS 2 PAVEMENT MARKING PAINT (25-MIL, TYPE L BEADS)	222,184	L.F.
6205903B	6 IN. YELLOW CLASS 2 PAVEMENT MARKING PAINT (25-MIL, TYPE L BEADS)	148,775	L.F.
6205906B	12 IN. WHITE CLASS 2 PAVEMENT MARKING PAINT (25-MIL, TYPE L BEADS)	8,370	L.F.
6209902	MISC. {INLAID PAVEMENT MARKER INSTALLATION}	3,427	EACH
DRAINAGE (LUMP SUM BID ITEM NO. 726.99.01)			
2063000	CLASS 3 EXCAVATION	7,665	C.Y.
2063300	CLASS 4 EXCAVATION	184	C.Y.
2063500	CULVERT CLEANOUT	6	EACH
4030132	ASPHALTIC CONCRETE MIXTURE PG 76-22 (SP125BSM MIX)	47.2	TON
5021110	CONCRETE PAVEMENT (10 IN. NON-REINF)	432	S.Y.
6044011	PIPE COLLAR, TYPE A	14	EACH
6053030A	PIPE AGGREGATE PAVEMENT EDGE DRAIN	2,267	L.F.
6096020	FURNISHING TYPE 2 ROCK DITCH LINER	608	C.Y.
6096042	PLACING TYPE 2 ROCK DITCH LINER	608	C.Y.
6097000	ROCK LINING	204	C.Y.
6141022	GRATE AND BEARING PLATE (3 FT. X 3 FT.)	17	EACH
6141024	GRATE AND BEARING PLATE (5 FT. X 3 FT.)	1	EACH
6141121	CURVED GRATE AND BEARING PLATE (4 FT. X 2 FT)	11	EACH
6143014	MANHOLE FRAME AND COVER, TYPE 4	6	EACH
6214600A	FLOWABLE BACKFILL	240	C.Y.
6240103A	PERMANENT EROSION CONTROL GEOTEXTILE	3,052	S.Y.
7034001	CLASS B-1 CONCRETE	109.5	C.Y.
7061030	REINFORCING STEEL (CULVERTS)	10,660	LBS
7261018	18 IN. PIPE GROUP A	203	L.F.
7261024	24 IN. PIPE GROUP A	4,017	L.F.
7261030	30 IN. PIPE GROUP A	600	L.F.
7261036	36 IN. PIPE GROUP A	28	L.F.
7261042	42 IN. PIPE GROUP A	20	L.F.
7265024	JACKED 24 IN. CLASS III REINFORCED CONCRETE PIPE CULVERTS (GASKET TYPE)	343	L.F.
7265030	JACKED 30 IN. CLASS III REINFORCED CONCRETE PIPE CULVERTS (GASKET TYPE)	143	L.F.
7310048	PRECAST CONCRETE MANHOLE - 48 IN.	41	EACH
7311033	PRECAST CONCRETE DROP INLET 3 FT X 3 FT	73	L.F.
7311042	PRECAST CONCRETE DROP INLET 4 FT X 2 FT	88	L.F.
7311053	PRECAST CONCRETE DROP INLET 5 FT X 3 FT	4	L.F.
7319902	MISC. {MODIFY EXISTING MEDIAN DROP INLETS}	1	EACH
7320624A	24 IN. OR ALLOWED SUBTITUTE GROUP A FLARED END SECTION	17	EACH
7320630A	30 IN. OR ALLOWED SUBTITUTE GROUP A FLARED END SECTION	7	EACH
7320636A	36 IN. OR ALLOWED SUBTITUTE GROUP A FLARED END SECTION	2	EACH
7321019A	42 IN. OR ALLOWED SUBTITUTE SAFETY FLARED END SECTION	2	EACH

62,001 △1 REVISED

SUMMARY OF QUANTITIES
SHEET 26 OF 27

STATE OF MISSOURI
RONNIE L. WILLIAMS
NUMBER PE-2010000879
PROFESSIONAL ENGINEER

THIS SHEET HAS BEEN SIGNED, SEALED, AND DATED ELECTRONICALLY

DATE PREPARED 1/8/2026

ROUTE	STATE
I-70	MO
DISTRICT	SHEET NO.
CD	3

COUNTY: COOPER
JOB NO.: JST0017B
CONTRACT ID.: -
PROJECT NO.: -
BRIDGE NO.: -

DATE	DESCRIPTION
01/07/26	△1 REVISED QTY

MISSOURI HIGHWAYS AND TRANSPORTATION COMMISSION
105 WEST CAPITOL
JEFFERSON CITY, MO 65102
1-888-ASK-MODOT (1-888-275-6636)

BURNS McDONNELL
9400 Ward Parkway
Kansas City, MO 64114
(816) 333-9400
Certificate of Authority No.: 000165

JST0017B BID ITEMS

BID ITEM NO.	BID ITEM DESCRIPTION	QUANTITY	UNITS	
TRAFFIC CONTROL (LUMP SUM BID ITEM NO. 616.99.01)				
2063000	CLASS 3 EXCAVATION	366	C.Y.	1 ADDED ITEM
3040504	TYPE 5 AGGREGATE FOR BASE (4 IN. THICK)	2214	S.Y.	
4011209	BITUMINOUS PAVEMENT MIXTURE PG64-22, (BP-1)	25,291	TON	
4013000	BITUMINOUS PAVEMENT MIXTURE PG64-22 (BASE)	4,546	TON	1,475.1 / 5,316.7 — 1 REVISED
6044011	PIPE COLLAR, TYPE A	10	EACH	
6122019	IMPACT ATTENUATOR 70 MPH (SAND BARREL ARRAY)	2	EACH	1 ADDED ITEM
6122020	REPLACEMENT SAND BARREL	10	EACH	
6122030	IMPACT ATTENUATOR (RELOCATION)	6	EACH	
6122040	WORK ZONE CRASH CUSHION (NARROW)	12	EACH	
6122041	WORK ZONE CRASH CUSHION (NARROW)(RELOCATION)	24	EACH	
6161005	CONSTRUCTION SIGNS	4,018	S.F.	3,995 / 4,636 — 1 REVISED
6161010	RELOCATED SIGNS	4,746	S.F.	
6161020	CHANNELIZER (DRUM-LIKE)	1,149	EACH	
6161030	TYPE 3 MOVEABLE BARRICADE	50	EACH	
6161040	FLASHING ARROW PANEL	1	EACH	
6161095	RADAR SPEED ADVISORY SYSTEM	2	EACH	
6161099	CHANGEABLE MESSAGE SIGN WITH COMMUNICATION INTERFACE, CONTRACTOR FURNISHED / RETAINED	5	EACH	
6162002	TEMPORARY LONG-TERM RUMBLE STRIPS	16	EACH	
6169901	MISC. {WORK ZONE INTELLIGENT TRANSPORTATION SYSTEM}	1	L.S.	
6207001	PAVEMENT MARKING REMOVAL	311,607	L.F.	
6208076	4 IN TEMPORARY PAVEMENT MARKING PAINT	844,023	L.F.	1,054,918 — 1 REVISED
6214600A	FLOWABLE BACKFILL	252	C.Y.	
6221003	COLDMILLING BITUMINOUS PAVEMENT FOR REMOVAL OF SURFACING (GREATER THAN 3 IN. THICK)	13,060	S.Y.	
6229909	FILLING EXISTING BITUMINOUS RUMBLE STRIP	248.3	STA	1 ADDED
7261018	18 IN. PIPE GROUP A	64	L.F.	
7261024	24 IN. PIPE GROUP A	187	L.F.	
7311022	PRECAST CONCRETE DROP INLET 2 FT X 2 FT	107	L.F.	7311032 | PRECAST CONCRETE DROP INLET 3 FT X 2 FT | 107 | L.F. — 1 REVISED
GENERAL - ROADWAY (PAID FOR PER THE UNIT BID PRICE OF EACH BID ITEM)				
2010000	MOWING	248.4	ACRE	
2022010	REMOVAL OF IMPROVEMENTS	1	L.S.	
2069907	EXCAVATING AND DISPOSING OF UNSUITABLE MATERIAL (SMALL AREA)	1	C.Y.	1 ADDED
2069907	EXCAVATING AND DISPOSING OF UNSUITABLE MATERIAL (LARGE AREA)	1	C.Y.	
2143000	PLACING ROCK FILL	1	C.Y.	
4011209	BITUMINOUS PAVEMENT MIXTURE PG64-22, (BP-1)	24,944	TON	1 ADDED ITEM FOR ASPHALT WEDGING
5041000	CONCRETE APPROACH PAVEMENT	357.6	S.Y.	
6181000	MOBILIZATION	1	L.S.	1 ADDED
6181015	RAILROAD PLAN SUBMITTAL	1	L.S.	
6274000	CONTRACTOR FURNISHED SURVEYING AND STAKING	1	L.S.	
8061016	SEDIMENT REMOVAL	715	C.Y.	
6173600D	TEMPORARY TRAFFIC BARRIER, CONTRACTOR FURNISHED / RETAINED	193,521	L.F.	113,452 / 35,442 — 1 REVISED
6173700B	TEMPORARY TRAFFIC BARRIER ANCHORED, CONTRACTOR FURNISHED / RETAINED	1,179	L.F.	
6174000A	TEMPORARY TRAFFIC BARRIER HEIGHT TRANSITION, CONTRACTOR FURNISHED / RETAINED	2	EACH	
6175010A	RELOCATING TEMPORARY TRAFFIC BARRIER	138,520	L.F.	203,195 — 1 ADDED
6175011B	RELOCATING TEMPORARY TRAFFIC BARRIER ANCHORED	22,653	L.F.	
6178003A	TRAFFIC BARRIER DELINEATOR, YELLOW/YELLOW	3,196	EACH	0 / 0 — 1 REVISED
6178004	TRAFFIC BARRIER DELINEATOR, WHITE/WHITE	1,598	EACH	
GENERAL - BRIDGE A01532 (PAID FOR PER THE UNIT BID PRICE OF EACH BID ITEM)				
7011105	DRILLED SHAFTS (3 FT. 6 IN. DIA)	186	L.F.	
7011204	ROCK SOCKETS (3 FT. 0 IN. DIA)	32	L.F.	
RETAINING WALL (LUMP SUM BID ITEM NO. 703.99.01)				
6091042	CONCRETE GUTTER TYPE B	310	L.F.	
6096020	FURNISHING TYPE 2 ROCK DITCH LINER	2	C.Y.	
6096042	PLACING TYPE 2 ROCK DITCH LINER	2	C.Y.	
6240103A	PERMANENT EROSION CONTROL GEOTEXTILE	6	S.Y.	
7039904	MISC. {GRAVITY BLOCK RETAINING WALL}	1,448	S.F.	
BRIDGE A00082 (LUMP SUM BID ITEM NO. 703.99.01)				
7049902	MISC. {PARTIAL REMOVAL OF EXISTING SLAB DRAIN}	4	EA.	
BRIDGE A01532 (LUMP SUM BID ITEM NO. 703.99.01)				
2061000	CLASS 1 EXACAVATION	40	C.Y.	
2163000	PARTIAL REMOVAL OF EXISTING BRIDGE DECK	768	S.F.	
2164000	CURB REMOVAL	337	S.F.	
5031010A	BRIDGE APPROACH SLAB (MAJOR)	479	S.Y.	
6239905	MISC. {EPOXY URETHANE POLYMER WEARING SURFACE WITH HEALER/SEALER}	2,321	S.Y.	
7011300	VIDEO CAMERA INSPECTION	4	EACH	
7011400	FOUNDATION INSPECTION HOLES	72	L.F.	
7011600	SONIC LOGGING TESTING	4	EACH	
7021212	GALVANIZED STRUCTURAL STEEL PILES (12 IN.)	424	L.F.	
7027000	PILE POINT REINFORCEMENT	8	EACH	
7032003	CLASS B CONCRETE (SUBSTRUCTURE)	117.4	C.Y.	
7034212	SLAB ON STEEL	572	S.Y.	
7034219A	TYPE D BARRIER	634	L.F.	
7034413	TYPE C BARRIER TRANSITION	45	L.F.	
7061060	REINFORCING STEEL (BRIDGES)	36,850	LBS	
7121111	FABRICATED STRUCTURAL LOW ALLOY STEEL (I-BEAM) A709, GRADE 50	98,660	LBS	
7123610	SLAB DRAIN	18	EACH	
7123620	DRAINAGE SYSTEM (ON STRUCTURE)	1	L.S.	
7125397	FINISH FIELD COAT (SYSTEM L)	5,000	S.F.	
7151001	VERTICAL DRAINS AT END BENTS	2	EACH	
7161003	LAMINATED NEOPRENE BEARING PAD (TAPERED)	8	EACH	
7162000	LAMINATED NEOPRENE BEARING PAD ASSEMBLY	8	EACH	
NON CONTRACTURAL BID ITEMS				
1099904	MISC. {LOGO SIGNS - ST-STRUCTURAL}	2,538	S.F.	
1099911	MISC. {LOGO SIGNS - STRUCTURAL STEEL POSTS}	9,720	LBS	
1099907	MISC. {LOGO SIGNS - CONCRETE FOOTINGS, EMBEDDED)}	14.2	C.Y.	

SUMMARY OF QUANTITIES
SHEET 27 OF 27

STATE OF MISSOURI
RONNIE L. WILLIAMS
NUMBER PE-2010000879
PROFESSIONAL ENGINEER

THIS SHEET HAS BEEN SIGNED, SEALED, AND DATED ELECTRONICALLY

DATE PREPARED 1/8/2026

ROUTE	STATE
I-70	MO
DISTRICT	SHEET NO.
CD	3

COUNTY: COOPER
JOB NO.: JST0017B
CONTRACT ID.: -
PROJECT NO.: -
BRIDGE NO.: -

DATE	DESCRIPTION
01/07/26	1 REVISED QTY

MISSOURI HIGHWAYS AND TRANSPORTATION COMMISSION
105 WEST CAPITOL
JEFFERSON CITY, MO 65102
1-888-ASK-MODOT (1-888-275-6636)

BURNS McDONNELL
9400 Ward Parkway
Kansas City, MO 64114
(816) 333-9400
Certificate of Authority No.: 000165

D01-LT P-1
STA. 805+89.29 108.60' LT TO
STA. 806+10.23 64.03' LT
INSTALL 48'x 24" PIPE, GROUP A
INCL. 1- 24" GROUP A FLARED END SECTION
ROCK LINING= 3 CY

D01-LT I-1
STA.806+10.22 64.03' LT
INSTALL PRECAST CONCRETE
DROP INLET (3FT X 3FT)
INCL. 1- GRATE AND
BEARING PLATE (3FT X 3FT)

T48NR17WS9

PI	12+40.41
PC	10+00.00
PT	14+79.69
Δ	9°35'34.9" (LT)
D	1°59'59.5"
L	479.69' (ARC)
T	240.41'
R	2,865.00'

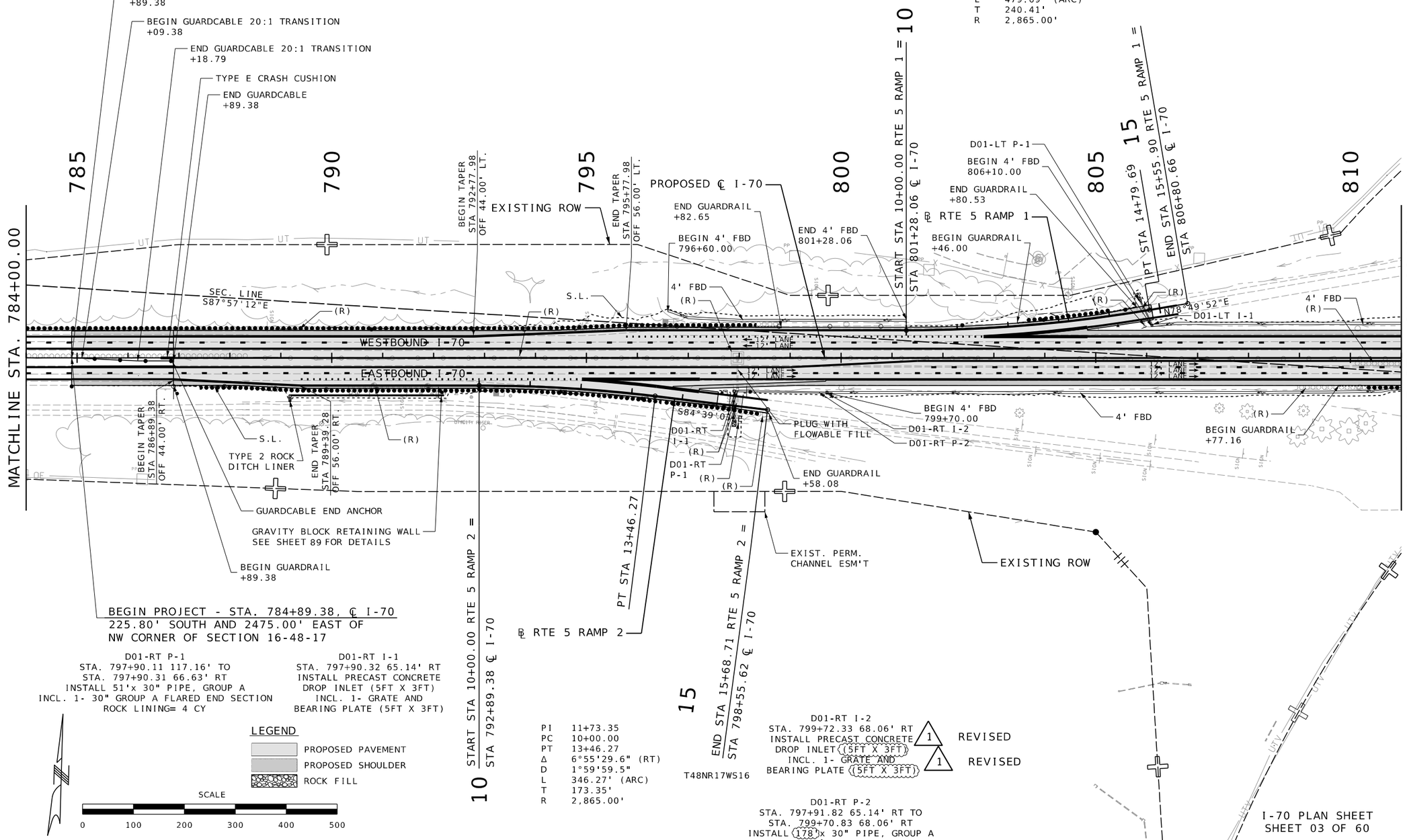

STATE OF MISSOURI
MICHAEL WAYNE DUSENBERG
NUMBER E-26546
PROFESSIONAL ENGINEER
THIS SHEET HAS BEEN SIGNED, SEALED AND DATED ELECTRONICALLY.

DATE PREPARED	1/7/2026
ROUTE	I-70
STATE	MO
DISTRICT	CD
SHEET NO.	6
COUNTY	COOPER
JOB NO.	JST0017B
CONTRACT ID.	-
PROJECT NO.	-
BRIDGE NO.	-

DATE	DESCRIPTION
01/07/26	1 REVISED GROUP A PIPE
01/07/26	1 REVISED DROP INLET
01/07/26	1 REVISED GRATE AND BEARING PLATE

MISSOURI HIGHWAYS AND TRANSPORTATION COMMISSION
105 WEST CAPITOL
JEFFERSON CITY, MO 65102
1-888-ASK-MODOT (1-888-275-6636)

BURNS McDONNELL
9400 Ward Parkway
Kansas City, MO 64114
(816) 333-9400
Certificate of Authority No.: 000165

c:\bmcd_lib\pw_connect\trn\d0185119\006_PP_JST0017B_I100_I-70.dgn 8:46:39 AM 1/7/2026

CULVERT F
STA. 1037+12.31 101.36' LT TO
STA. 1037+14.65 110.12' LT
INSTALL 9 LF 14'x 8' RCB.
REMOVE EXISTING WINGWALL
BUILD STRAIGHT WINGWALL, 15° LA

D06-LT P-1
STA. 1047+55.88 111.25' LT TO
STA. 1047+65.51 60.81' LT
INSTALL 51'x 24" PIPE, GROUP A
INCL. 1- 24" GROUP A FLARED END SECTION
ROCK LINING= 3 CY

PI	11+98.57
PC	10+00.00
PT	13+96.51
Δ	7°55'46.8" (LT)
D	1°59'59.5"
L	396.51' (ARC)
T	198.57'
R	2,865.00'

D06-LT P-2
STA. 1047+65.23 58.83' LT TO
STA. 1048+31.19 62.13' LT
INSTALL 64'x 24" PIPE, GROUP A

D06-LT I-1
STA. 1048+32.19 62.13' LT
INSTALL PRECAST CONCRETE
DROP INLET (3FT X 3FT)
INCL. 1- GRATE AND
BEARING PLATE (3FT X 3FT)

T48NR16WS8

D06-LT MH-1
STA. 1047+65.79 58.83' LT
INSTALL PRECAST CONCRETE
MANHOLE, 48"
INCL. 1- MANHOLE FRAME AND
COVER, TYPE 4

LG2878

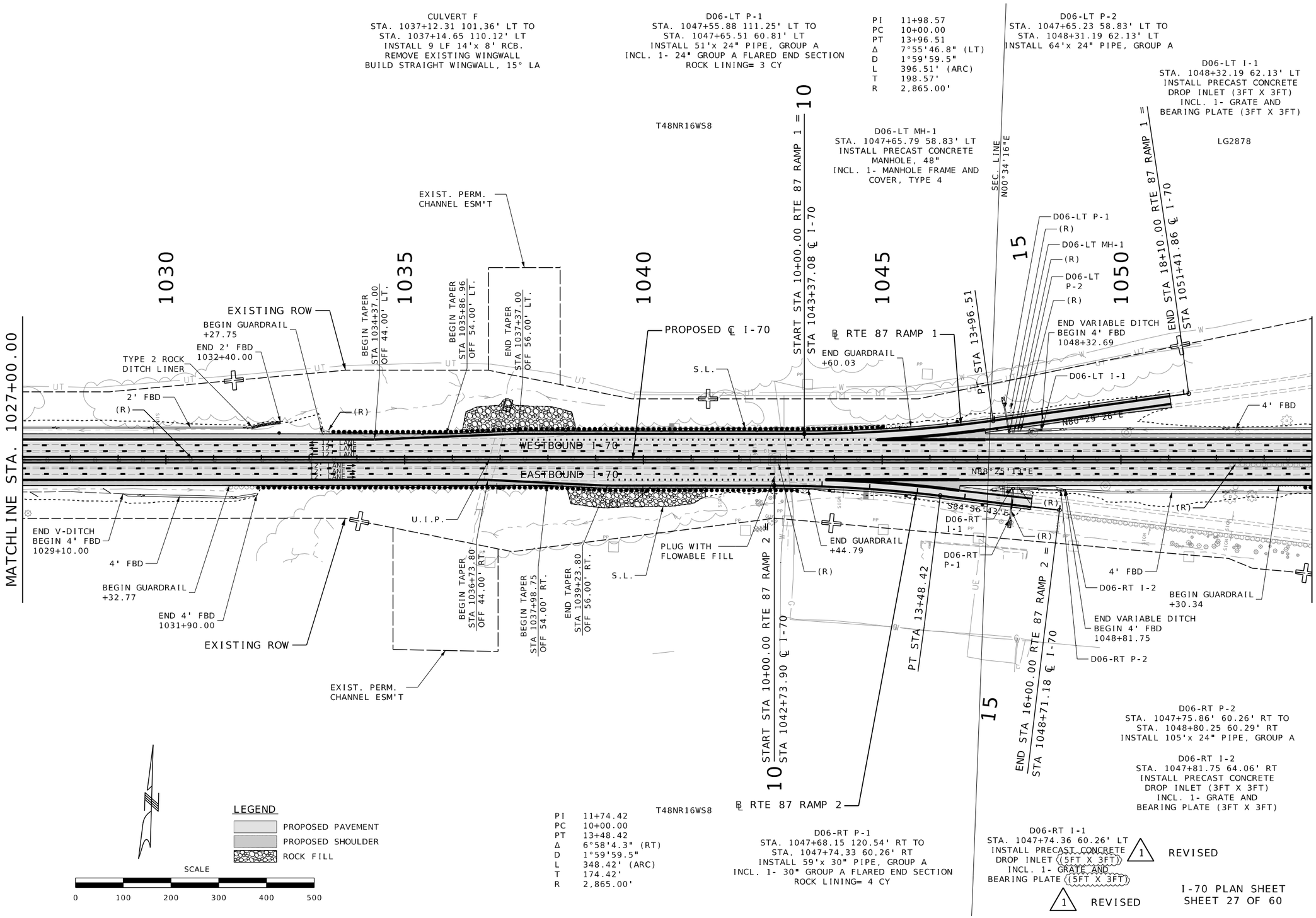

D06-RT P-2
STA. 1047+75.86' 60.26' RT TO
STA. 1048+80.25 60.29' RT
INSTALL 105'x 24" PIPE, GROUP A

D06-RT I-2
STA. 1047+81.75 64.06' RT
INSTALL PRECAST CONCRETE
DROP INLET (3FT X 3FT)
INCL. 1- GRATE AND
BEARING PLATE (3FT X 3FT)

T48NR16WS8

PI	11+74.42
PC	10+00.00
PT	13+48.42
Δ	6°58'4.3" (RT)
D	1°59'59.5"
L	348.42' (ARC)
T	174.42'
R	2,865.00'

D06-RT P-1
STA. 1047+68.15 120.54' RT TO
STA. 1047+74.33 60.26' RT
INSTALL 59'x 30" PIPE, GROUP A
INCL. 1- 30" GROUP A FLARED END SECTION
ROCK LINING= 4 CY

D06-RT I-1
STA. 1047+74.36 60.26' LT
INSTALL PRECAST CONCRETE
DROP INLET (5FT X 3FT)
INCL. 1- GRATE AND
BEARING PLATE (5FT X 3FT)

1 REVISED

1 REVISED

LEGEND
PROPOSED PAVEMENT
PROPOSED SHOULDER
ROCK FILL

SCALE
0 100 200 300 400 500

I-70 PLAN SHEET
SHEET 27 OF 60

STATE OF MISSOURI
MICHAEL WAYNE DUSENBERG
NUMBER E-26546
PROFESSIONAL ENGINEER
THIS SHEET HAS BEEN SIGNED, SEALED AND DATED ELECTRONICALLY.

DATE PREPARED	
1/7/2026	
ROUTE	STATE
I-70	MO
DISTRICT	SHEET NO.
CD	30
COUNTY	
COOPER	
JOB NO.	
JST0017B	
CONTRACT ID.	
-	
PROJECT NO.	
-	
BRIDGE NO.	
-	

DATE		DESCRIPTION
01/07/26	1	REVISED DROP INLET
01/07/26	1	REVISED GRATE AND BEARING PLATE

MISSOURI HIGHWAYS AND TRANSPORTATION COMMISSION
105 WEST CAPITOL
JEFFERSON CITY, MO 65102
1-888-ASK-MODOT (1-888-275-6636)

BURNS McDONNELL
9400 Ward Parkway
Kansas City, MO 64114
(816) 333-9400
Certificate of Authority
No.: 000165

c:\bmcd_lib\pw_connect\trn\d0185119\030_PP_JST0017B_I100_I-70.dgn 8:46:49 AM 1/7/2026

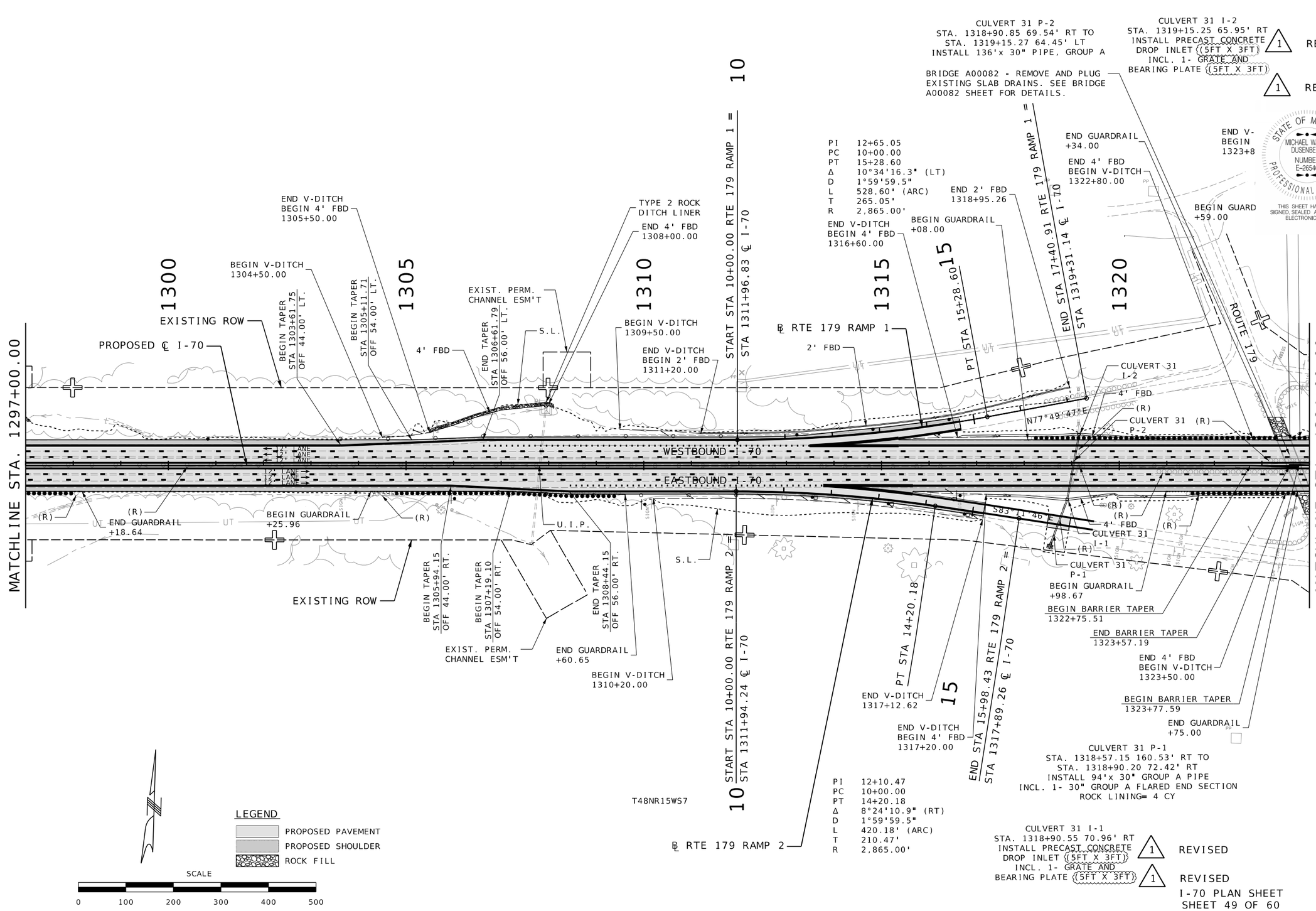

STATE OF MISSOURI
MICHAEL WAYNE DUSENBERG
NUMBER E-26546
PROFESSIONAL ENGINEER
THIS SHEET HAS BEEN SIGNED, SEALED AND DATED ELECTRONICALLY.

DATE PREPARED	
1/7/2026	
ROUTE	STATE
I-70	MO
DISTRICT	SHEET NO.
CD	52
COUNTY	
COOPER	
JOB NO.	
JST0017B	
CONTRACT ID.	
-	
PROJECT NO.	
-	
BRIDGE NO.	
-	

DATE	DESCRIPTION
01/07/26	1 REVISED DROP INLET
01/07/26	1 REVISED GRATE AND BEARING PLATE

MISSOURI HIGHWAYS AND TRANSPORTATION COMMISSION
105 WEST CAPITOL
JEFFERSON CITY, MO 65102
1-888-ASK-MODOT (1-888-275-6636)

BURNS McDONNELL
9400 Ward Parkway
Kansas City, MO 64114
(816) 333-9400
Certificate of Authority No.: 000165

I-70 PLAN SHEET
SHEET 49 OF 60

c:\bmcd_lib\pw_connect\trn\d0185119\052_PP_JST0017B_I100_I-70.dgn 8:46:59 AM 1/7/2026

D08 P-3
STA. 1377+79.83 115.02' LT TO
STA. 1377+89.45 1.60' RT
BUILD 117'x 24" PIPE, GROUP A
INCL. 1- 24" GROUP A FLARED END SECTION
ROCK LINING= 3 CY

1 REVISED

D08 I-3
STA. 1377+89.45 3.53' RT
INSTALL PRECAST CONCRETE
DROP INLET (5FT X 3FT)
INCL. 1- GRATE AND
BEARING PLATE (5FT X 3FT)

1 REVISED

1 REVISED

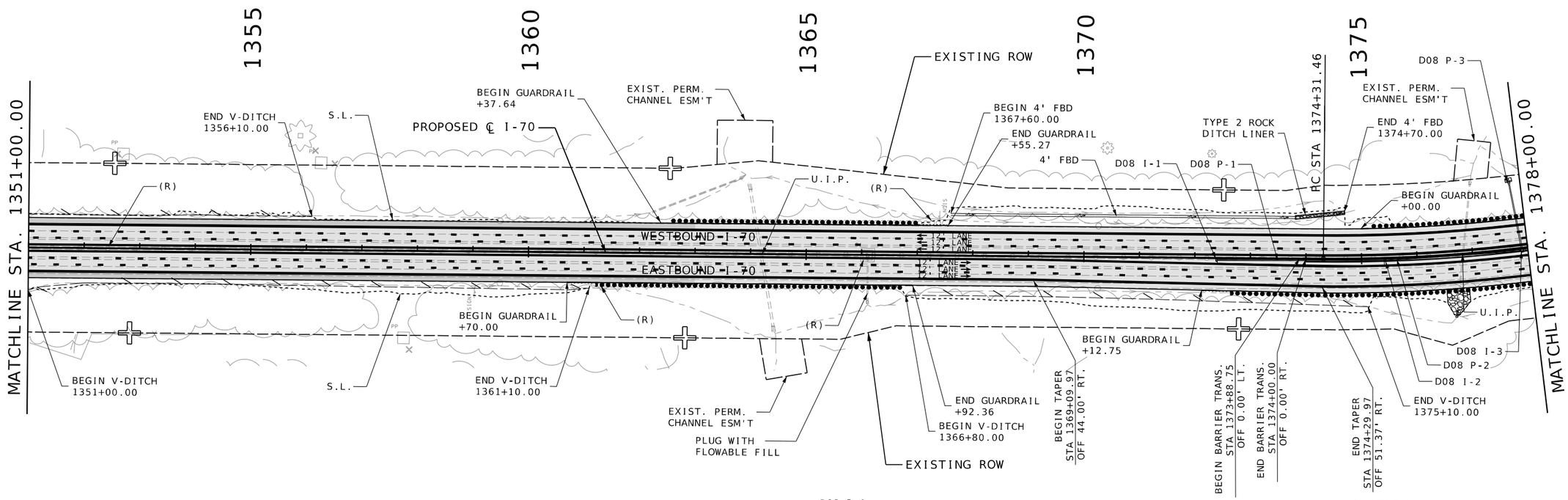

D08 P-1
STA. 1372+40.22 3.80' RT TO
STA. 1375+40.87 3.69' RT
INSTALL 301'x 24" PIPE, GROUP A

D08 P-2
STA. 1375+42.87 3.75' RT TO
STA. 1377+88.45 3.60' RT
INSTALL 246'x 24" PIPE, GROUP A

CULVERT 35
STA. 1376+64.80 106.97' RT TO
STA. 1376+65.61 102.05' RT
BUILD 5'x 24" GROUP A PIPE
INCL. 1- PIPE COLLAR, TYPE A
INCL. 1- 24" GROUP A FLARED END SECTION

T48NR15WS8

D08 I-1
STA. 1372+39.22 3.80' RT
INSTALL PRECAST CONCRETE
DROP INLET (4FT X 2FT)
INCL. 1- GRATE AND
BEARING PLATE (4FT X 2FT)

D08 I-2
STA. 1375+40.87 3.69' RT
INSTALL PRECAST CONCRETE
DROP INLET (4FT X 2FT)
INCL. 1- GRATE AND
BEARING PLATE (4FT X 2FT)

LEGEND

PROPOSED PAVEMENT
PROPOSED SHOULDER
ROCK FILL

SCALE
0 100 200 300 400 500

I-70 PLAN SHEET
SHEET 55 OF 60

STATE OF MISSOURI
MICHAEL WAYNE DUSENBERG
NUMBER E-26546
PROFESSIONAL ENGINEER
THIS SHEET HAS BEEN SIGNED, SEALED AND DATED ELECTRONICALLY.

DATE PREPARED	
1/7/2026	
ROUTE	STATE
I-70	MO
DISTRICT	SHEET NO.
CD	58
COUNTY	
COOPER	
JOB NO.	
JST0017B	
CONTRACT ID.	
-	
PROJECT NO.	
-	
BRIDGE NO.	
-	

DATE	DESCRIPTION
01/07/26	1 REVISED GROUP A PIPE
01/07/26	1 REVISED DROP INLET
01/07/26	1 REVISED GRATE AND BEARING PLATE

MISSOURI HIGHWAYS AND TRANSPORTATION COMMISSION
105 WEST CAPITOL
JEFFERSON CITY, MO 65102
1-888-ASK-MODOT (1-888-275-6636)

BURNS McDONNELL
9400 Ward Parkway
Kansas City, MO 64114
(816) 333-9400
Certificate of Authority
No.: 000165

c:\bmcd_lib\pw_connect\trn\d0185119\058_PP_JST0017B_I100_I-70.dgn 8:47:08 AM 1/7/2026

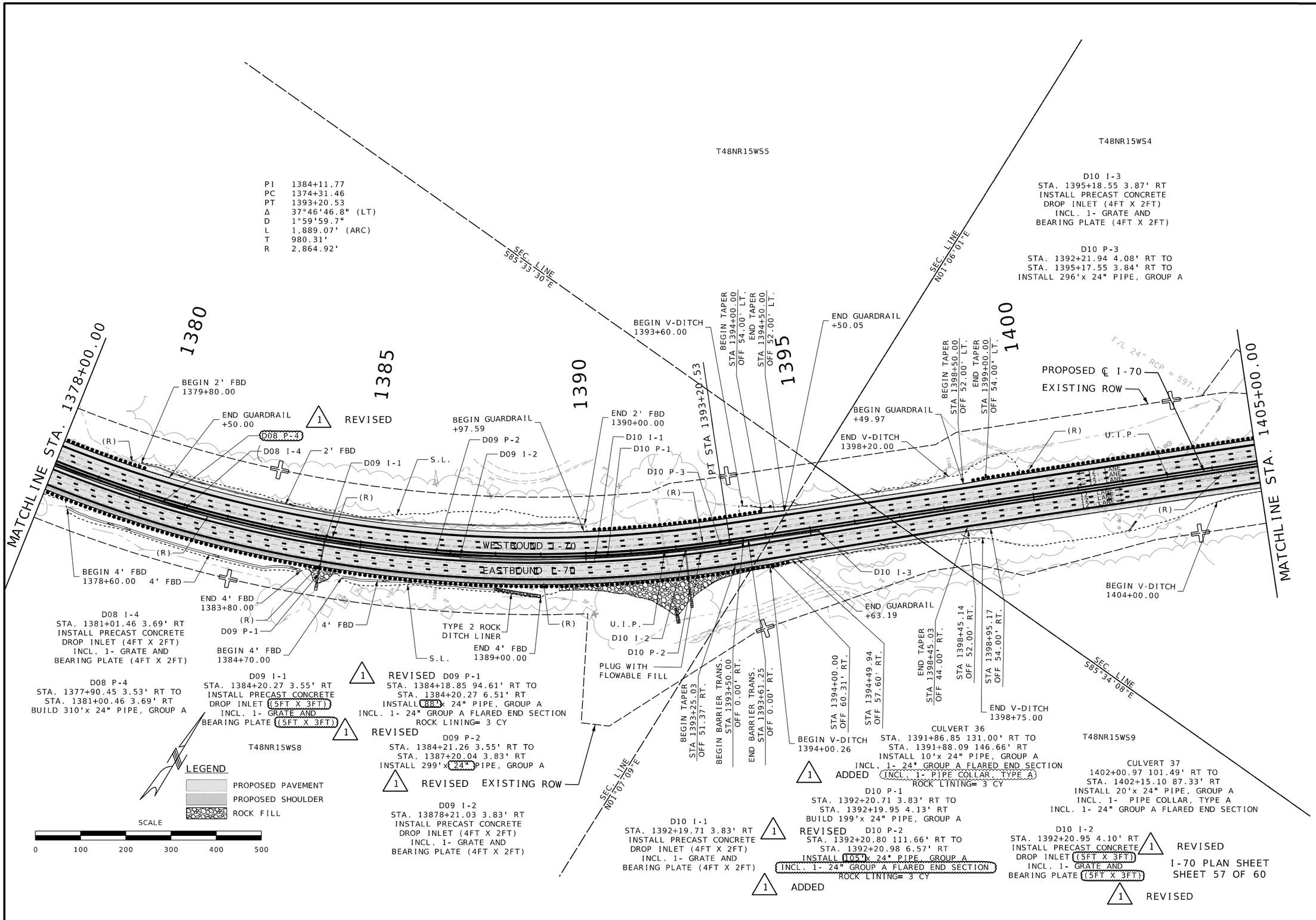

STATE OF MISSOURI
MICHAEL WAYNE DUSENBERG
NUMBER E-26546
PROFESSIONAL ENGINEER

THIS SHEET HAS BEEN SIGNED, SEALED AND DATED ELECTRONICALLY.

DATE PREPARED	
1/7/2026	
ROUTE	STATE
I-70	MO
DISTRICT	SHEET NO.
CD	60
COUNTY	
COOPER	
JOB NO.	
JST0017B	
CONTRACT ID.	
-	
PROJECT NO.	
-	
BRIDGE NO.	
-	

DATE	DESCRIPTION
01/07/26	1 ADDED DRAINAGE NOTE
01/07/26	1 REVISED GROUP A PIPE
01/07/26	1 REVISED DROP INLET
01/07/26	1 REVISED GRATE AND BEARING PLATE

MISSOURI HIGHWAYS AND TRANSPORTATION COMMISSION
105 WEST CAPITOL
JEFFERSON CITY, MO 65102
1-888-ASK-MODOT (1-888-275-6636)

BURNS McDONNELL
9400 Ward Parkway
Kansas City, MO 64114
(816) 333-9400
Certificate of Authority No.: 000165

c:\bmcd_lib\pw_connect\trn\d0185119\060_PP_JST0017B_I100_I-70.dgn 8:47:18 AM 1/7/2026

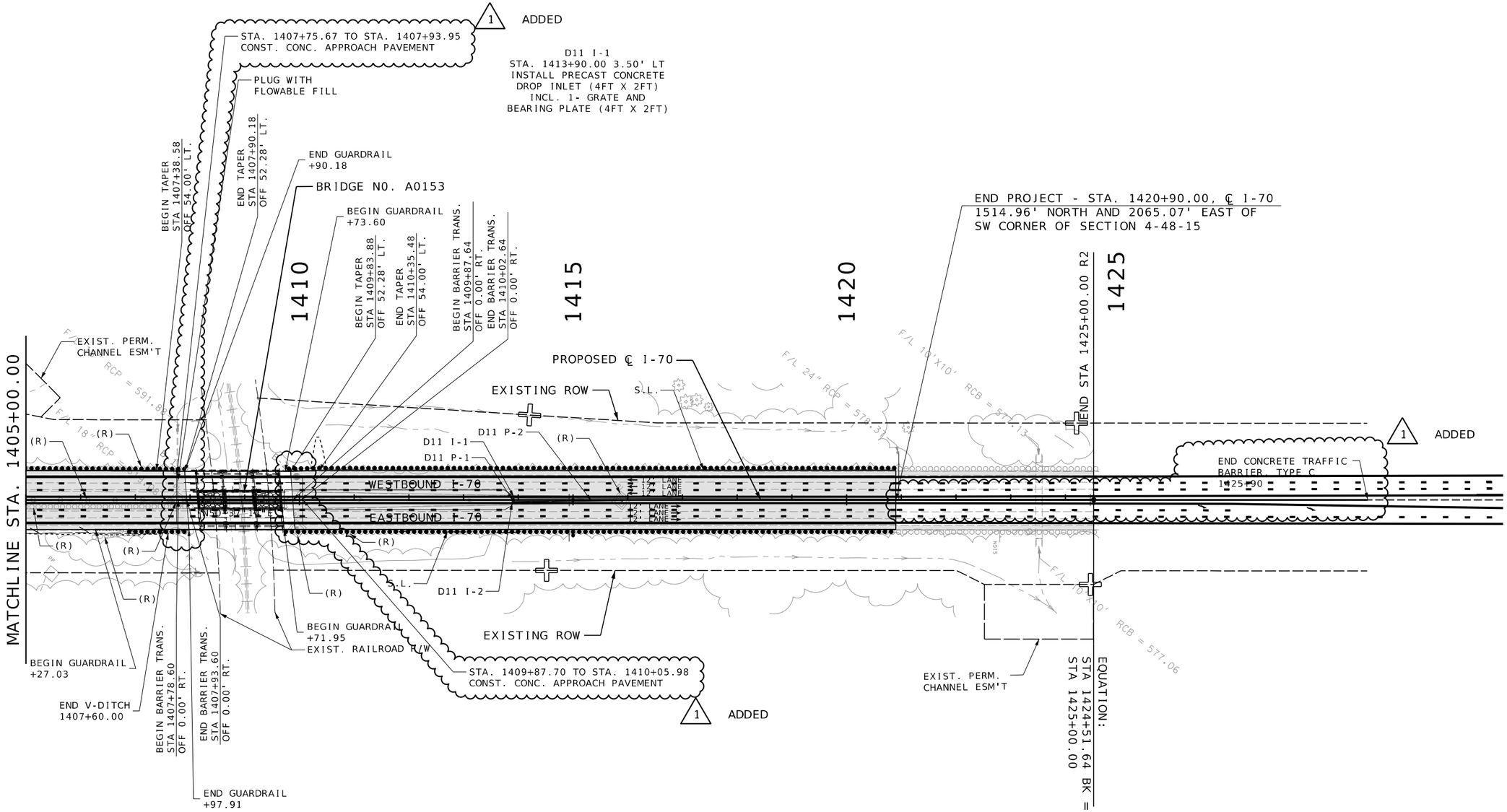

T48NR15WS4

LEGEND

- PROPOSED PAVEMENT
- PROPOSED SHOULDER
- ROCK FILL

SCALE

0 100 200 300 400 500

D11 I-2
STA. 1413+90.00 3.50' RT
INSTALL PRECAST CONCRETE
DROP INLET (4FT X 2FT)
INCL. 1- GRATE AND
BEARING PLATE (4FT X 2FT)

D11 P-1
STA. 1413+90.00 1.50' LT TO
STA. 1413+90.00 1.50' RT
INSTALL 3'x 18" PIPE, GROUP A

D11 P-2
STA. 1413+91.00 3.50' RT TO
STA. 1415+89.66 0.87' RT
INSTALL 200'x 18" PIPE, GROUP A
INCL. 1- PIPE COLLAR, TYPE A

I-70 PLAN SHEET
SHEET 59 OF 60

STATE OF MISSOURI
MICHAEL WAYNE DUSENBERG
NUMBER E-26546
PROFESSIONAL ENGINEER
THIS SHEET HAS BEEN SIGNED, SEALED AND DATED ELECTRONICALLY.

DATE PREPARED	1/7/2026
ROUTE	I-70
STATE	MO
DISTRICT	CD
SHEET NO.	62
COUNTY	COOPER
JOB NO.	JST0017B
CONTRACT ID.	-
PROJECT NO.	-
BRIDGE NO.	-

DATE	DESCRIPTION
01/07/26	1 ADDED APPROACH PAVEMENT & BARRIER

MISSOURI HIGHWAYS AND TRANSPORTATION COMMISSION
105 WEST CAPITOL
JEFFERSON CITY, MO 65102
1-888-ASK-MODOT (1-888-275-6636)

BURNS McDONNELL
9400 Ward Parkway
Kansas City, MO 64114
(816) 333-9400
Certificate of Authority
No.: 000165

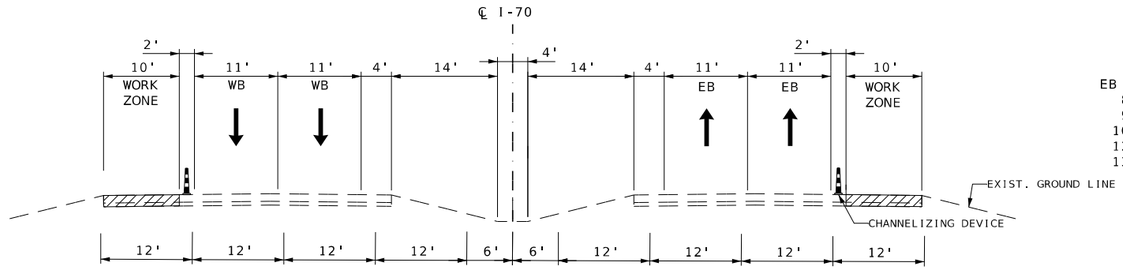

SECTION ON TANGENT
TYPICAL SECTION I-70
PHASE 0

EB TEMP SHOULDER STA.	WB TEMP SHOULDER STA.
807+30 TO 819+10	807+30 TO 819+10
900+30 TO 912+30	900+50 TO 912+10
1050+80 TO 1061+10	1049+20 TO 1061+70
1226+70 TO 1238+80	1226+80 TO 1238+70
1317+60 TO 1329+70	1317+80 TO 1329+50

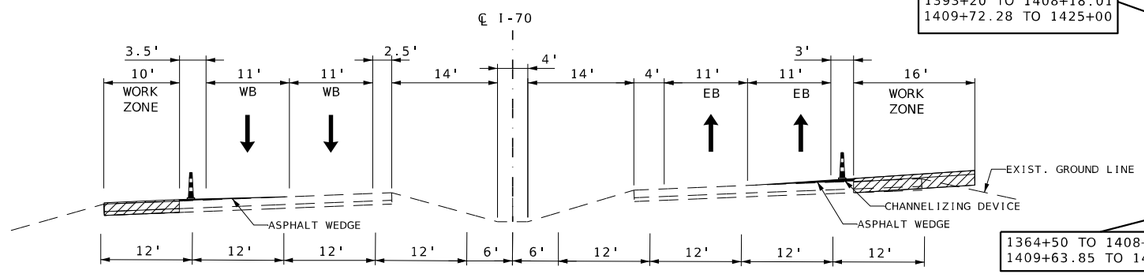

SECTION ON CURVE
TYPICAL SECTION I-70
PHASE 0

1 REVISED

1361+00 TO 1378+70
1393+20 TO 1408+18.01
1409+72.28 TO 1425+00

EB ULTIMATE PAVEMENT WITH STRENGTHENED SHOULDER STA
1361+50 TO 1378+70
1393+20 TO 1425+00

EB ULTIMATE PAVEMENT WITH A2 SHOULDER STA
1378+70 TO 1393+20

WB ULTIMATE PAVEMENT WITH STRENGTHENED SHOULDER STA
1363+00 TO 1425+45

SEE ROADWAY TYPICAL SECTION FOR PAVEMENT SECTION DETAILS

1364+50 TO 1408+10.22
1409+63.85 TO 1425+00

1 REVISED

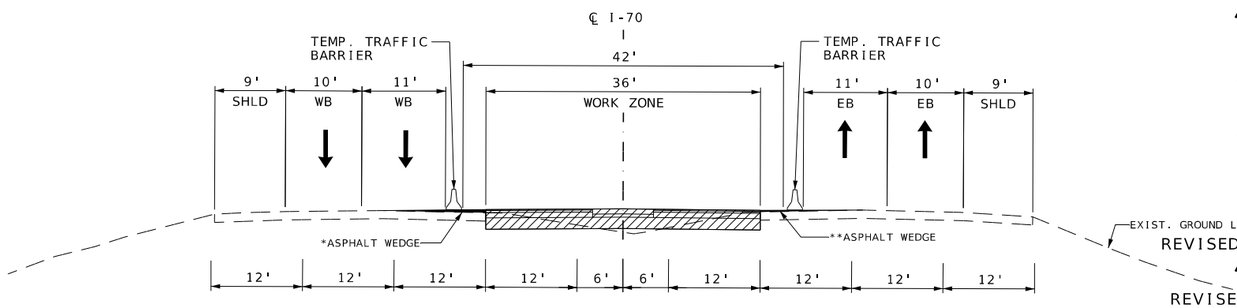

SECTION ON TANGENT
TYPICAL SECTION I-70
PHASE 1

REVISED 1 778+47

* ASPHALT WEDGE INSIDE LEFT
STA. 786+90 TO STA. 809+70
STA. 820+30 TO STA. 866+40
STA. 867+80 TO STA. 902+00
STA. 909+60 TO STA. 922+41
STA. 925+60 TO STA. 969+33
STA. 971+20 TO STA. 1041+00 — REVISED 1 1043+00
STA. 1054+80 TO STA. 1057+32
ADDED 1 STA. 1064+50 TO STA. 1066+80
STA. 1072+50 TO STA. 1225+30
ADDED 1 STA. 1248+30 TO STA. 1295+90
STA. 1306+40 TO STA. 1313+30
STA. 1334+50 TO STA. 1338+30
STA. 1387+38 TO STA. 1397+27

REVISED 1 778+47

REVISED 1 1066+30

** ASPHALT WEDGE INSIDE RIGHT
STA. 786+90 TO STA. 808+20
STA. 822+28 TO STA. 865+50
STA. 867+84 TO STA. 892+80 — REVISED 1 894+80
STA. 913+50 TO STA. 914+90 — 920+00
STA. 924+40 TO STA. 1042+70 — 1043+80
STA. 1053+60 TO STA. 1057+90
STA. 1067+40 TO STA. 1225+30
ADDED 1 STA. 1248+30 TO STA. 1295+90
STA. 1310+70 TO STA. 1313+40
STA. 1334+90 TO STA. 1340+70
STA. 1374+44 TO STA. 1397+27

*** ASPHALT WEDGE OUTSIDE RIGHT
STA. 1372+70 TO STA. 1395+70

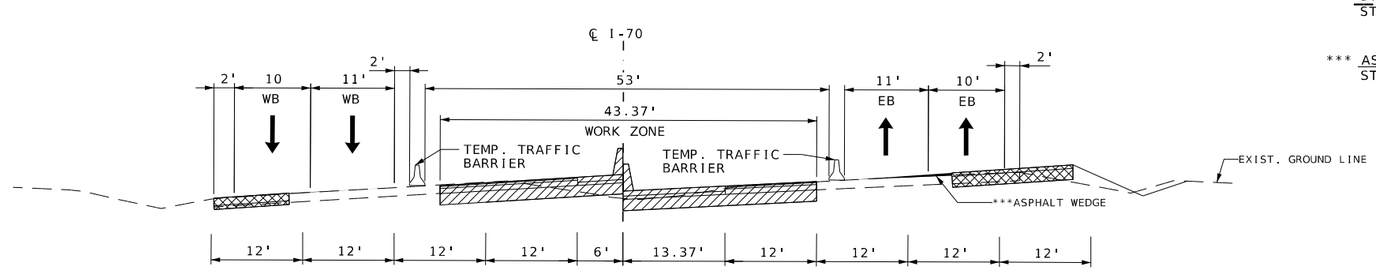

SECTION ON CURVE
TYPICAL SECTION I-70
PHASE 1

MOT TYPICAL SECTION
SHEET 1 OF 3

STATE OF MISSOURI
RONNIE WILLIAMS
NUMBER PE-2010000879
PROFESSIONAL ENGINEER

THIS SHEET HAS BEEN SIGNED, SEALED, AND DATED ELECTRONICALLY

DATE PREPARED	
1/7/2026	
ROUTE	STATE
I-70	MO
DISTRICT	SHEET NO.
CD	92
COUNTY	
COOPER	
JOB NO.	
JST0017B	
CONTRACT ID.	
-	
PROJECT NO.	
-	
BRIDGE NO.	
-	

DATE	DESCRIPTION
01/07/26	1 REVISED STATION RANGES

MISSOURI HIGHWAYS AND TRANSPORTATION COMMISSION
105 WEST CAPITOL
JEFFERSON CITY, MO 65102
1-888-ASK-MODOT (1-888-275-6636)

BURNS McDONNELL
9400 Ward Parkway
Kansas City, MO 64114
(816) 333-9400
Certificate of Authority
No.: 000165

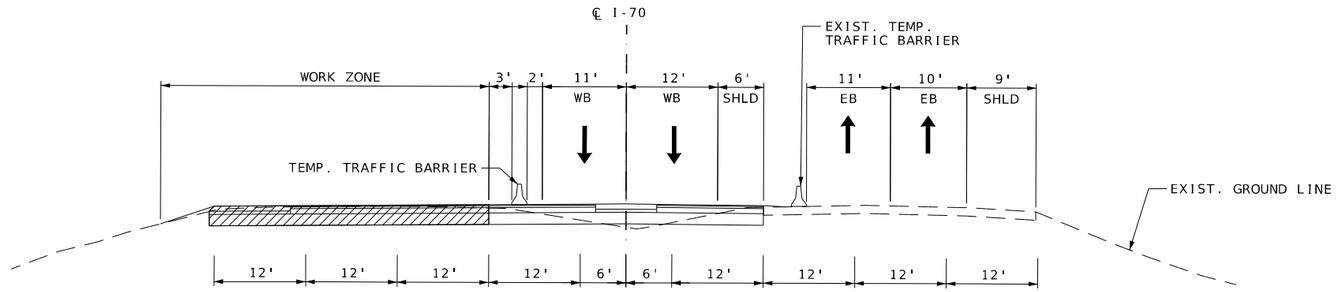

SECTION ON TANGENT
TYPICAL SECTION I-70
PHASE 2

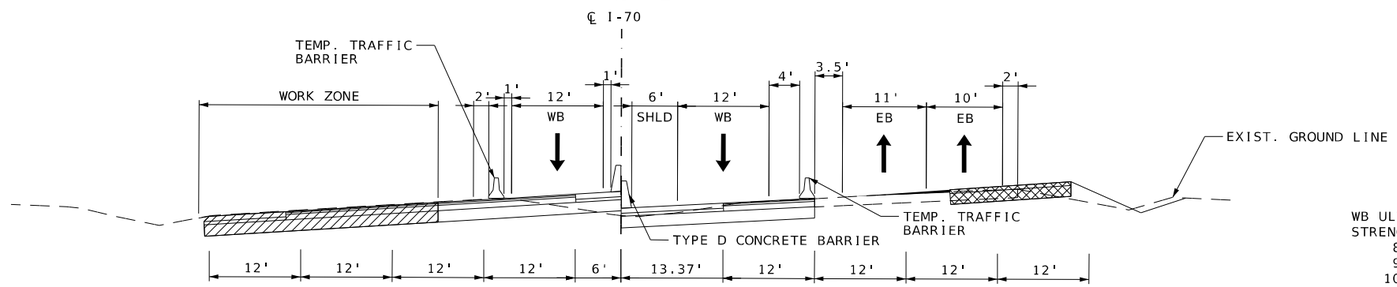

SECTION ON CURVE
TYPICAL SECTION I-70
PHASE 2

WB ULTIMATE PAVEMENT WITH
STRENGTHENED SHOULDER STA
807+90 TO 818+60
901+00 TO 910+40
1050+90 TO 1060+60
1227+40 TO 1236+90
1318+90 TO 1328+40

SEE ROADWAY TYPICAL SECTION FOR
PAVEMENT SECTION DETAILS

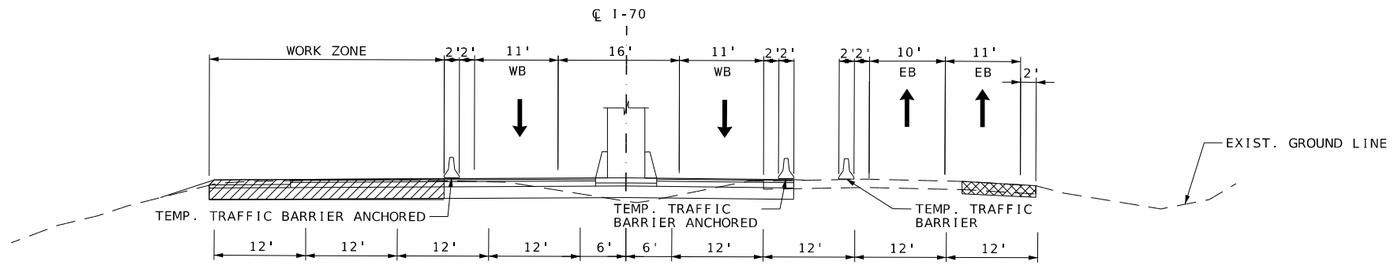

SECTION ON TANGENT
TYPICAL SECTION I-70
PHASE 2
STA. 810+29 TO 816+16
STA. 897+79 TO 903+29
STA. 1052+99 TO 1058+80
STA. 1321+42 TO 1326+20

1 ADDED

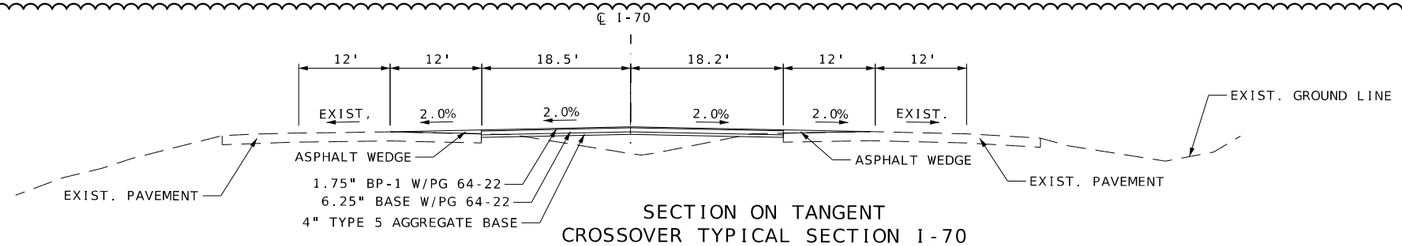

SECTION ON TANGENT
CROSSOVER TYPICAL SECTION I-70
PHASE 1 - 4
STA. 779+48 TO 786+90

MOT TYPICAL SECTION
SHEET 2 OF 3

STATE OF MISSOURI
RONNIE WILLIAMS
NUMBER PE-2010000879
PROFESSIONAL ENGINEER

THIS SHEET HAS BEEN SIGNED, SEALED, AND DATED ELECTRONICALLY

DATE PREPARED	1/7/2026
ROUTE	I-70
STATE	MO
DISTRICT	CD
SHEET NO.	93
COUNTY	COOPER
JOB NO.	JST0017B
CONTRACT ID.	-
PROJECT NO.	-
BRIDGE NO.	-

DATE	DESCRIPTION
01/07/26	1 ADDED CROSSOVER TYPICAL SECTION

MISSOURI HIGHWAYS AND TRANSPORTATION COMMISSION
105 WEST CAPITOL
JEFFERSON CITY, MO 65102
1-888-ASK-MODOT (1-888-275-6636)

BURNS McDONNELL
9400 Ward Parkway
Kansas City, MO 64114
(816) 333-9400
Certificate of Authority
No.: 000165

c:\bmcd_lib\pw_connect\trn\d0185116\093_TC_JST0017B_I100_Typ-02.dgn 2:26:10 PM 1/7/2026

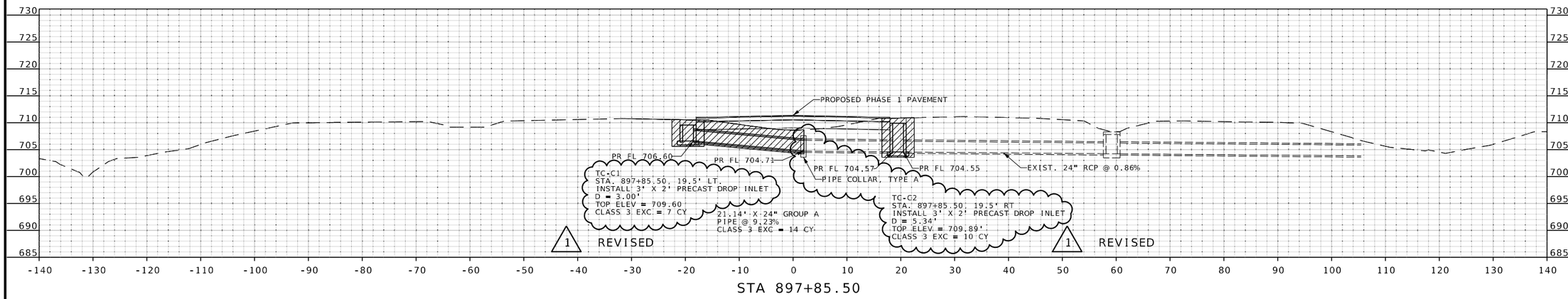

STA 897+85.50

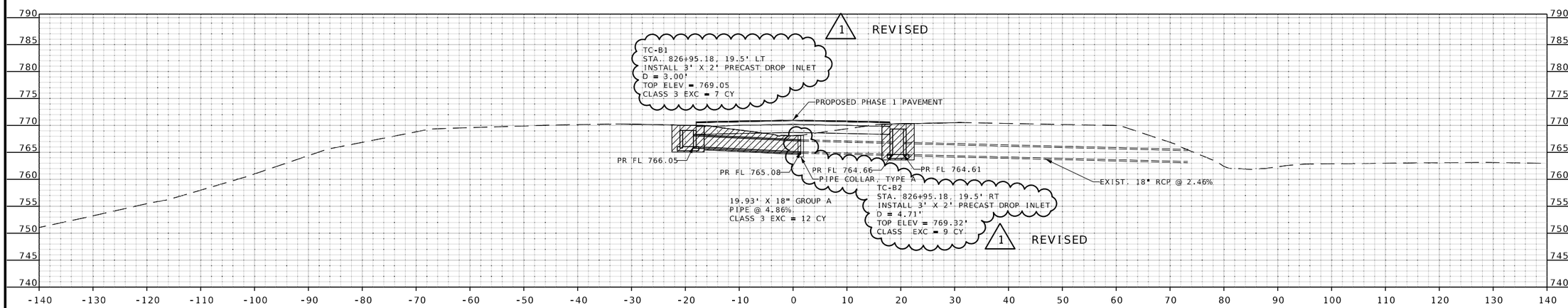

STA 826+95.18

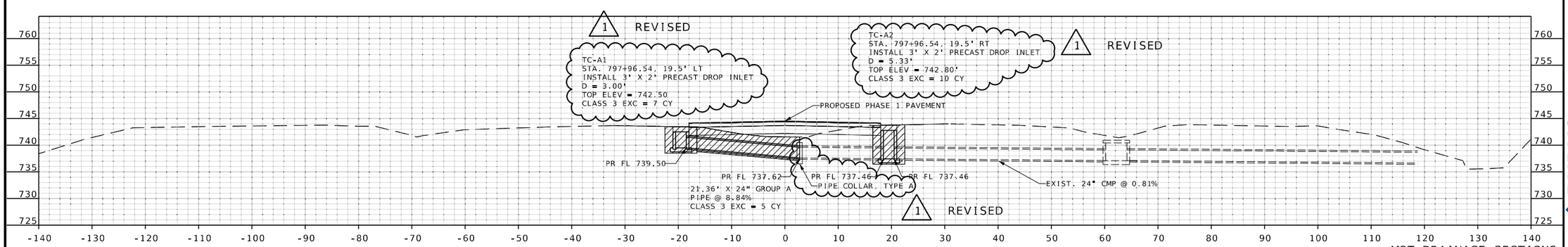

STA 797+96.54

MOT DRAINAGE SECTIONS
SHEET 01 OF 05

STATE OF MISSOURI
RONNIE WILLIAMS
NUMBER PE-2010000879
PROFESSIONAL ENGINEER

THIS SHEET HAS BEEN SIGNED, SEALED, AND DATED ELECTRONICALLY

DATE PREPARED	
1/7/2026	
ROUTE	STATE
I-70	MO
DISTRICT	SHEET NO.
CD	96
COUNTY	
COOPER	
JOB NO.	
JST0017B	
CONTRACT ID.	
-	
PROJECT NO.	
-	
BRIDGE NO.	
-	

DATE	DESCRIPTION
01/07/26	1 REVISED INLET SIZE & PIPE COLLARS

MISSOURI HIGHWAYS AND TRANSPORTATION COMMISSION
105 WEST CAPITOL
JEFFERSON CITY, MO 65102
1-888-ASK-MODOT (1-888-275-6636)

BURNS McDONNELL
9400 Ward Parkway
Kansas City, MO 64114
(816) 333-9400
Certificate of Authority No.: 000165

c:\bmcd_lib\pw_connect\trn\d0185116\096-100_TC_JST0017B_I10_Typ-05-09.dgn 4:56:44 PM 1/7/2026

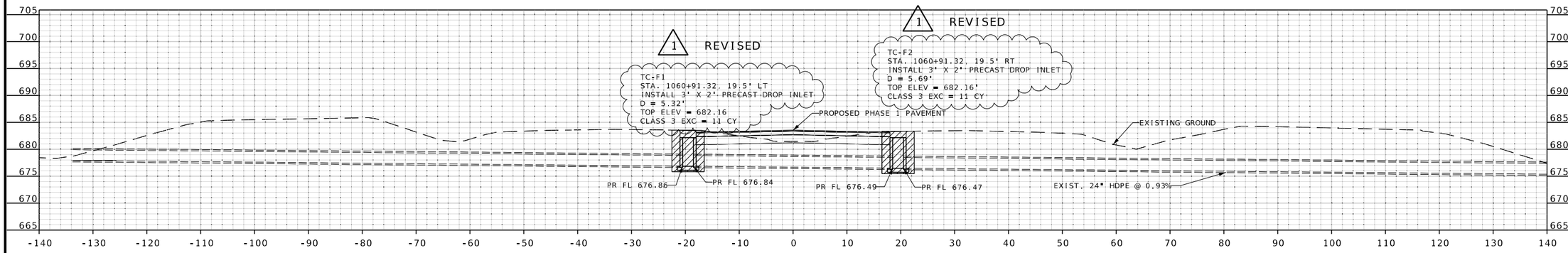

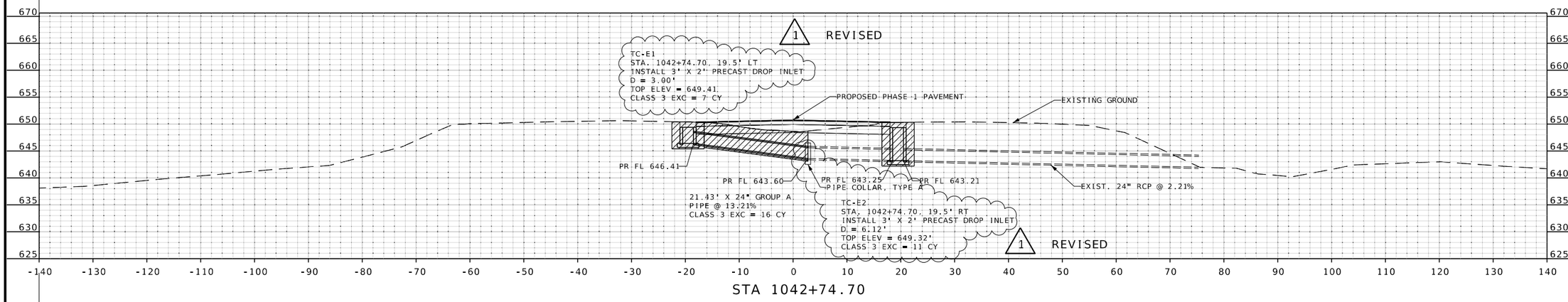

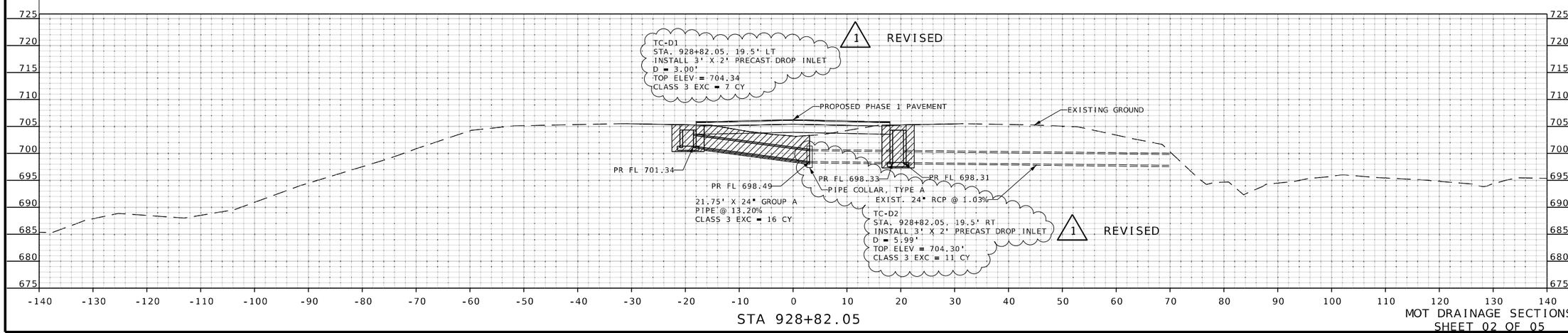

MOT DRAINAGE SECTIONS
SHEET 02 OF 05

STATE OF MISSOURI
RONNIE WILLIAMS
NUMBER PE-2010000879
PROFESSIONAL ENGINEER

THIS SHEET HAS BEEN SIGNED, SEALED, AND DATED ELECTRONICALLY

DATE PREPARED	
1/7/2026	
ROUTE	STATE
I-70	MO
DISTRICT	SHEET NO.
CD	97
COUNTY	
COOPER	
JOB NO.	
JST0017B	
CONTRACT ID.	
-	
PROJECT NO.	
-	
BRIDGE NO.	
-	

DATE	DESCRIPTION
01/07/26	1 REVISED INLET SIZE & PIPE COLLARS

MISSOURI HIGHWAYS AND TRANSPORTATION COMMISSION
105 WEST CAPITOL
JEFFERSON CITY, MO 65102
1-888-ASK-MODOT (1-888-275-6636)

BURNS McDONNELL
9400 Ward Parkway
Kansas City, MO 64114
(816) 333-9400
Certificate of Authority No.: 000165

c:\bmcd_lib\pw_connect\trn\d0185116\096-100_TC_JST0017B_I10_Typ-05-09.dgn 4:58:28 PM 1/7/2026

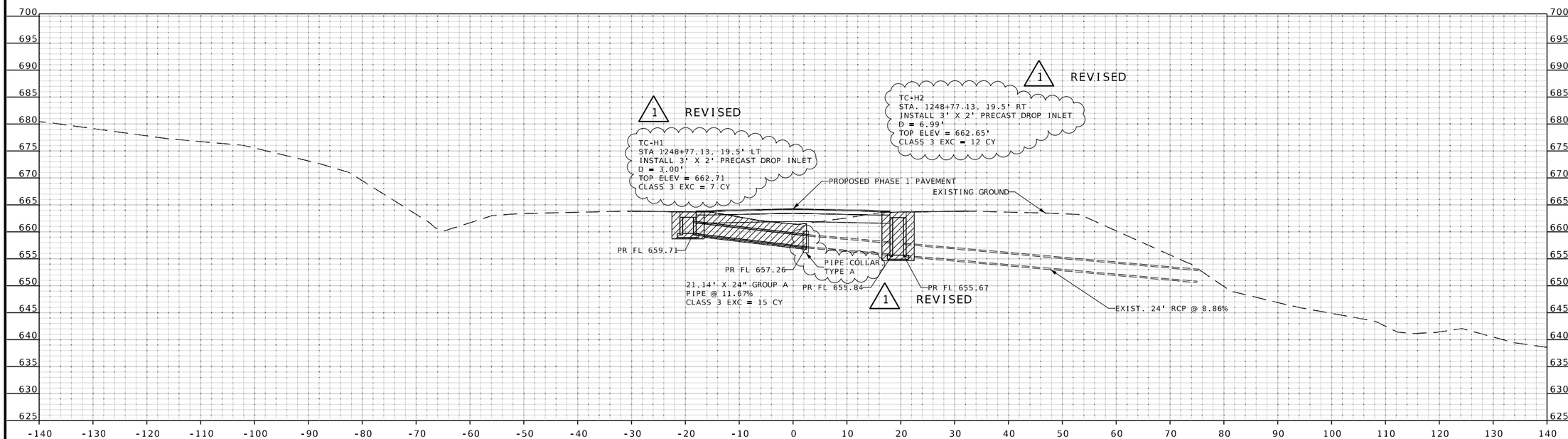

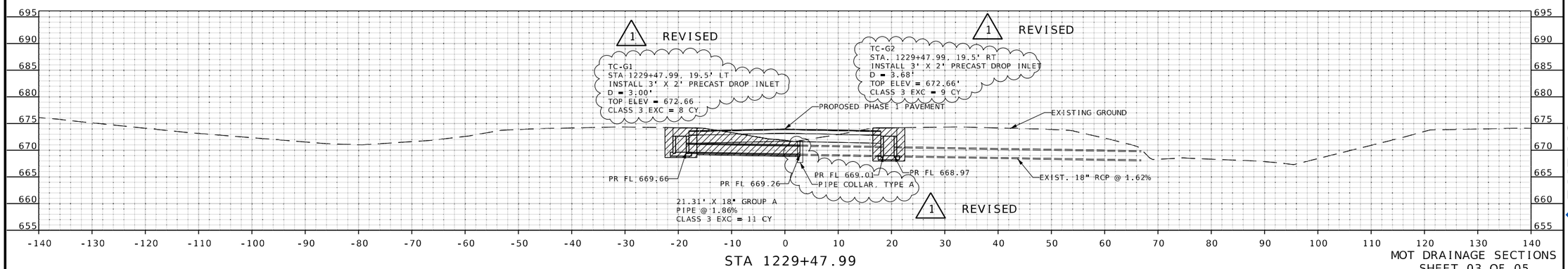

MOT DRAINAGE SECTIONS
SHEET 03 OF 05

STATE OF MISSOURI
RONNIE WILLIAMS
NUMBER PE-2010000879
PROFESSIONAL ENGINEER

THIS SHEET HAS BEEN SIGNED, SEALED, AND DATED ELECTRONICALLY

DATE PREPARED	
1/7/2026	
ROUTE	STATE
I-70	MO
DISTRICT	SHEET NO.
CD	98
COUNTY	
COOPER	
JOB NO.	
JST0017B	
CONTRACT ID.	
-	
PROJECT NO.	
-	
BRIDGE NO.	
-	

DATE	DESCRIPTION
01/07/26	1 REVISED INLET SIZE & PIPE COLLARS

MISSOURI HIGHWAYS AND TRANSPORTATION COMMISSION
105 WEST CAPITOL
JEFFERSON CITY, MO 65102
1-888-ASK-MODOT (1-888-275-6636)

BURNS McDONNELL
9400 Ward Parkway
Kansas City, MO 64114
(816) 333-9400
Certificate of Authority
No.: 000165

c:\bmcd_lib\pw_connect\trn\d0185116\096-100_TC_JST0017B_I10_Typ-05-09.dgn 4:59:10 PM 1/7/2026

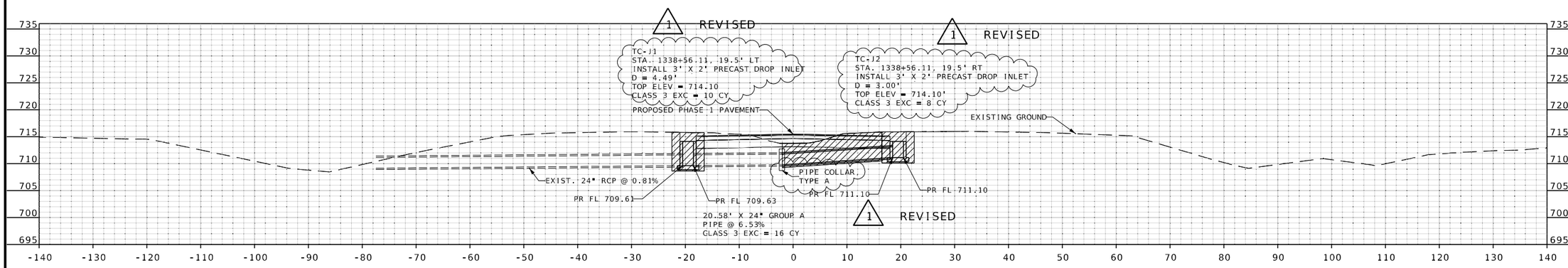

STA 1338+56.11

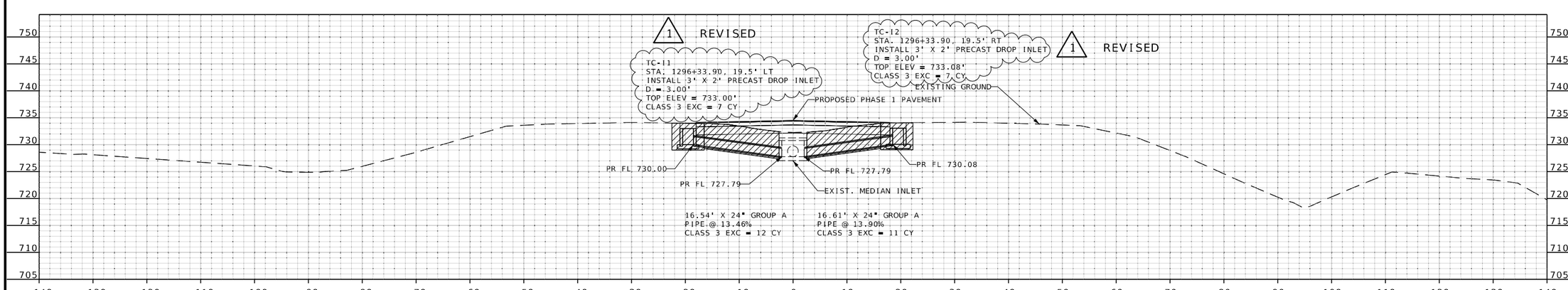

STA 1296+33.90

MOT DRAINAGE SECTIONS
SHEET 04 OF 05

STATE OF MISSOURI
RONNIE WILLIAMS
NUMBER PE-2010000879
PROFESSIONAL ENGINEER

THIS SHEET HAS BEEN SIGNED, SEALED, AND DATED ELECTRONICALLY

DATE PREPARED	
1/7/2026	
ROUTE	STATE
I-70	MO
DISTRICT	SHEET NO.
CD	99
COUNTY	
COOPER	
JOB NO.	
JST0017B	
CONTRACT ID.	
-	
PROJECT NO.	
-	
BRIDGE NO.	
-	

DATE	DESCRIPTION
01/07/26	1 REVISED INLET SIZE & PIPE COLLARS

MISSOURI HIGHWAYS AND TRANSPORTATION COMMISSION
105 WEST CAPITOL
JEFFERSON CITY, MO 65102
1-888-ASK-MODOT (1-888-275-6636)

BURNS McDONNELL
9400 Ward Parkway
Kansas City, MO 64114
(816) 333-9400
Certificate of Authority No.: 000165

c:\bmcd_lib\pw_connect\trn\d0185116\096-100_TC_JST0017B_I10_Typ-05-09.dgn 5:00:04 PM 1/7/2026

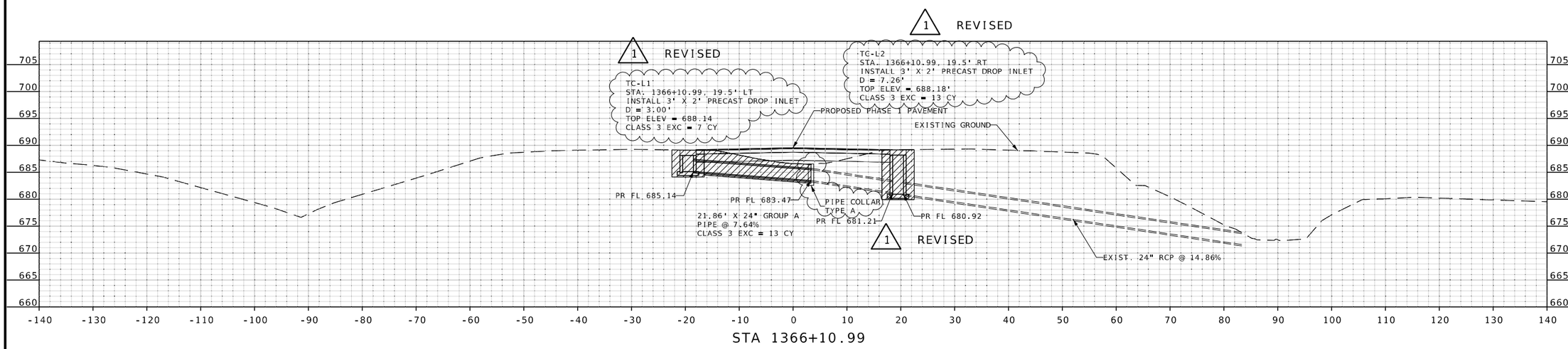

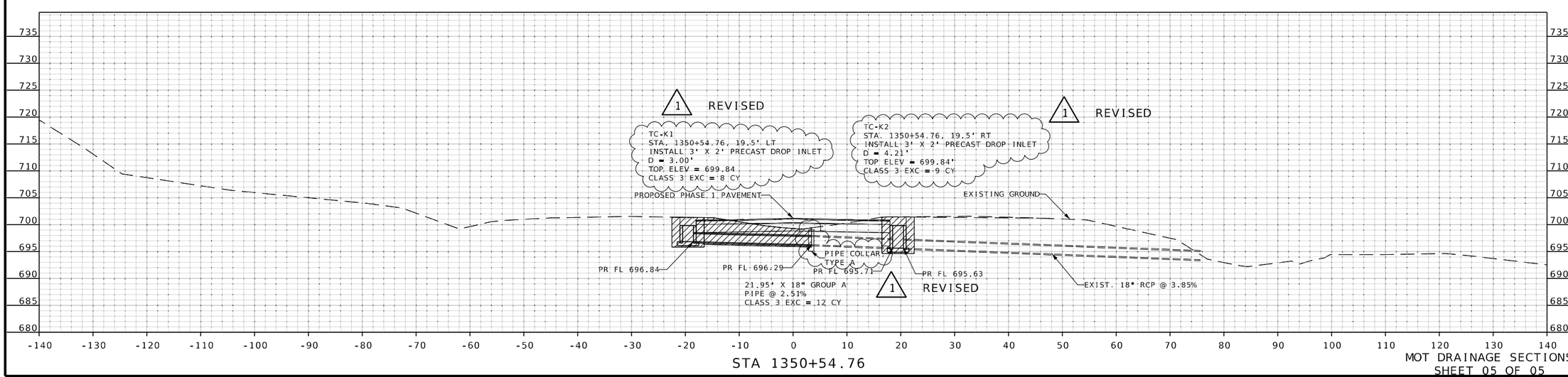

MOT DRAINAGE SECTIONS
SHEET 05 OF 05

STATE OF MISSOURI
RONNIE WILLIAMS
NUMBER PE-2010000879
PROFESSIONAL ENGINEER

THIS SHEET HAS BEEN SIGNED, SEALED, AND DATED ELECTRONICALLY

DATE PREPARED	1/7/2026
ROUTE	I-70
STATE	MO
DISTRICT	CD
SHEET NO.	100
COUNTY	COOPER
JOB NO.	JST0017B
CONTRACT ID.	-
PROJECT NO.	-
BRIDGE NO.	-

DATE	DESCRIPTION
01/07/26	1 REVISED INLET SIZE & PIPE COLLARS

MISSOURI HIGHWAYS AND TRANSPORTATION COMMISSION
105 WEST CAPITOL
JEFFERSON CITY, MO 65102
1-888-ASK-MODOT (1-888-275-6636)

BURNS McDONNELL
9400 Ward Parkway
Kansas City, MO 64114
(816) 333-9400
Certificate of Authority No.: 000165

c:\bmcd_lib\pw_connect\trn\d0185116\096-100_TC_JST0017B_I10_Typ-05-09.dgn 5:00:42 PM 1/7/2026

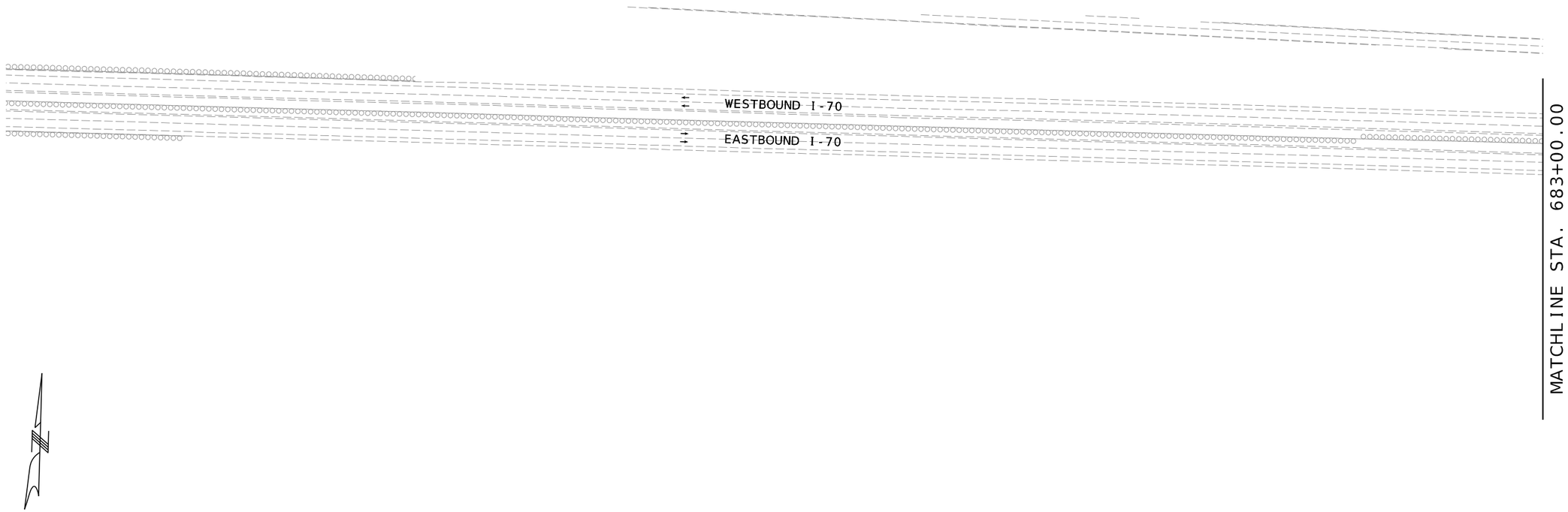

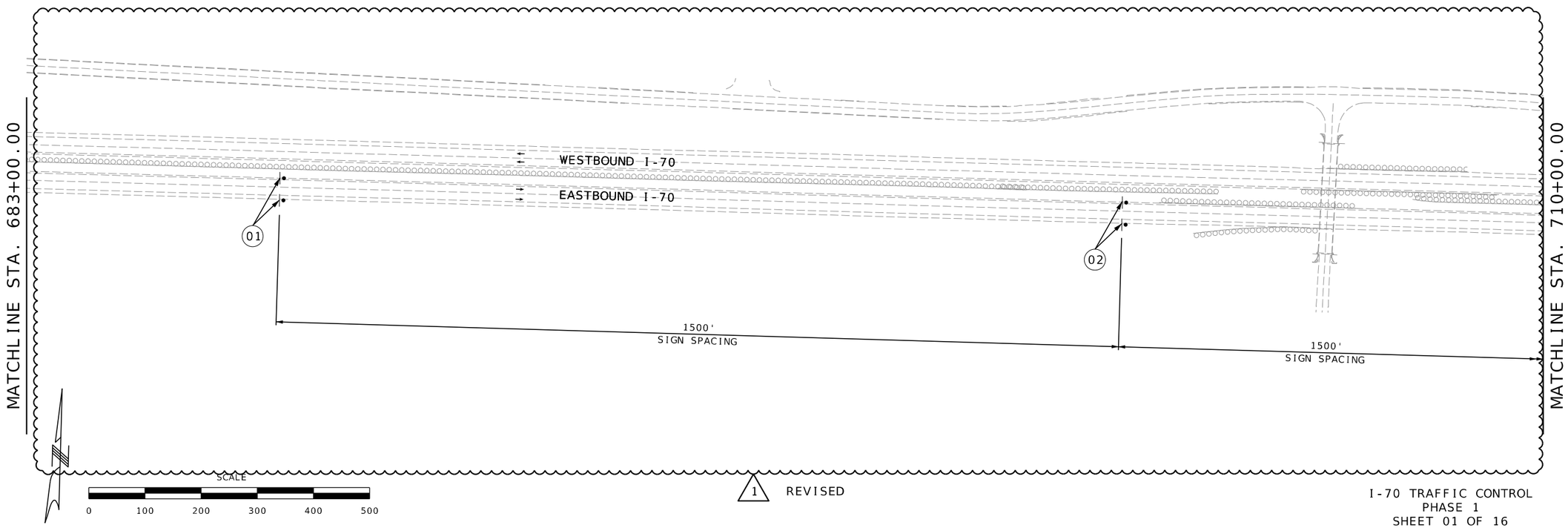

1 REVISED

I-70 TRAFFIC CONTROL
PHASE 1
SHEET 01 OF 16

STATE OF MISSOURI
RONNIE WILLIAMS
NUMBER PE-2010000879
PROFESSIONAL ENGINEER

THIS SHEET HAS BEEN SIGNED, SEALED, AND DATED ELECTRONICALLY

DATE PREPARED	
1/7/2026	
ROUTE	STATE
I-70	MO
DISTRICT	SHEET NO.
CD	120
COUNTY	
COOPER	
JOB NO.	
JST0017B	
CONTRACT ID.	
-	
PROJECT NO.	
-	
BRIDGE NO.	
-	

DATE	DESCRIPTION
01/07/26	1 REVISED SIGN LOCATIONS

MISSOURI HIGHWAYS AND TRANSPORTATION COMMISSION
105 WEST CAPITOL
JEFFERSON CITY, MO 65102
1-888-ASK-MODOT (1-888-275-6636)

BURNS McDONNELL
9400 Ward Parkway
Kansas City, MO 64114
(816) 333-9400
Certificate of Authority
No.: 000165

c:\bmcd_lib\pw_connect\trn\d0185116\120_MOT_Phase 1_JST0017B_I100_I-70.dgn 11:19:47 AM 1/7/2026

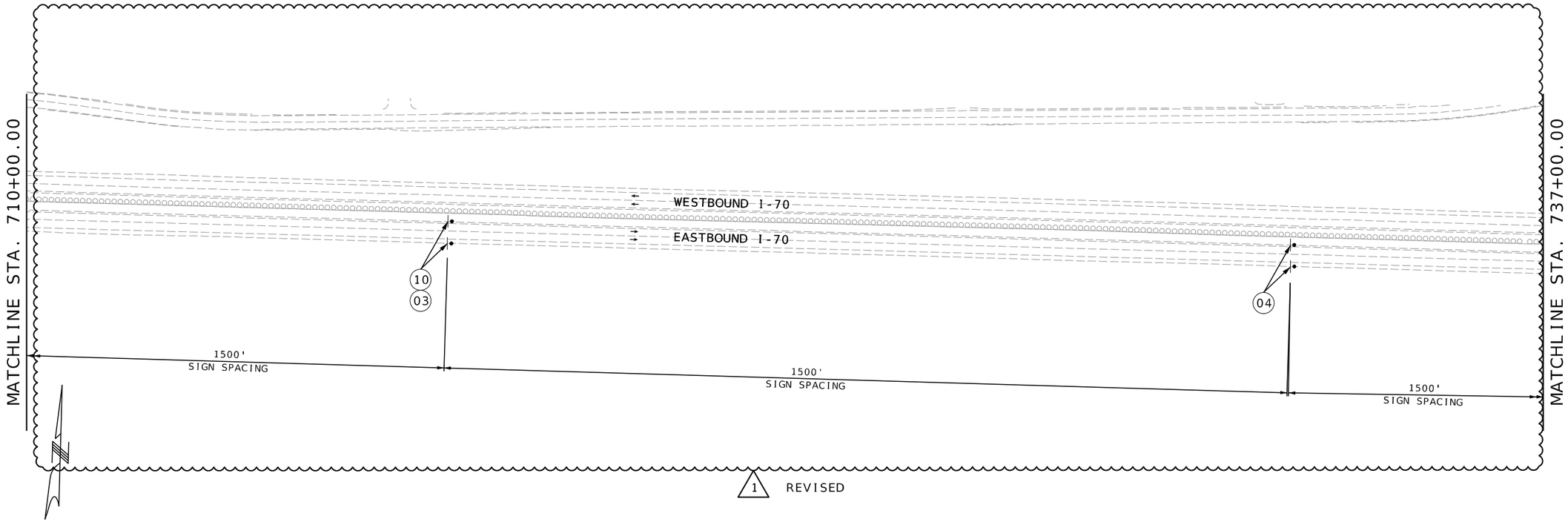

1 REVISED

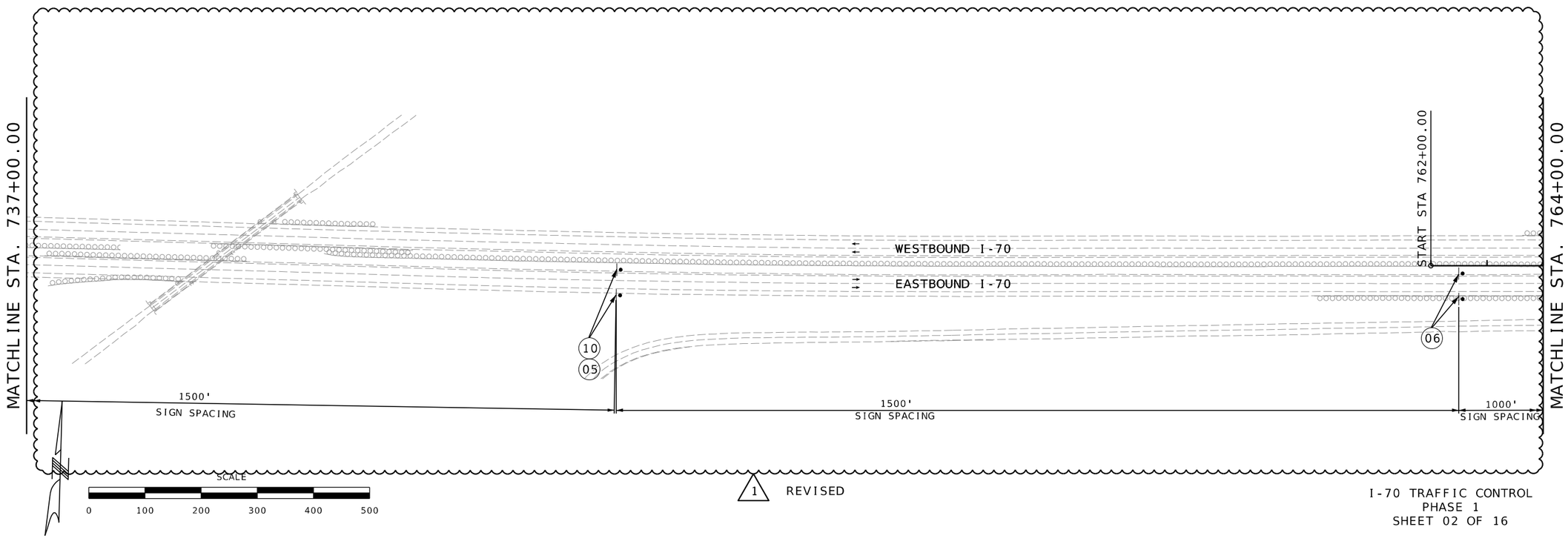

1 REVISED

I-70 TRAFFIC CONTROL
PHASE 1
SHEET 02 OF 16

STATE OF MISSOURI
RONNIE WILLIAMS
NUMBER PE-2010000879
PROFESSIONAL ENGINEER

THIS SHEET HAS BEEN SIGNED, SEALED, AND DATED ELECTRONICALLY

DATE PREPARED	
1/7/2026	
ROUTE	STATE
I-70	MO
DISTRICT	SHEET NO.
CD	121
COUNTY	
COOPER	
JOB NO.	
JST0017B	
CONTRACT ID.	
-	
PROJECT NO.	
-	
BRIDGE NO.	
-	

DATE	DESCRIPTION
01/07/26	1 REVISED SIGN LOCATIONS

MISSOURI HIGHWAYS AND TRANSPORTATION COMMISSION
105 WEST CAPITOL
JEFFERSON CITY, MO 65102
1-888-ASK-MODOT (1-888-275-6636)

BURNS McDONNELL
9400 Ward Parkway
Kansas City, MO 64114
(816) 333-9400
Certificate of Authority
No.: 000165

c:\bmcd_lib\pw_connect\trn\d0185116\121_MOT_Phase 1_JST0017B_I100_I-70.dgn 11:25:34 AM 1/7/2026

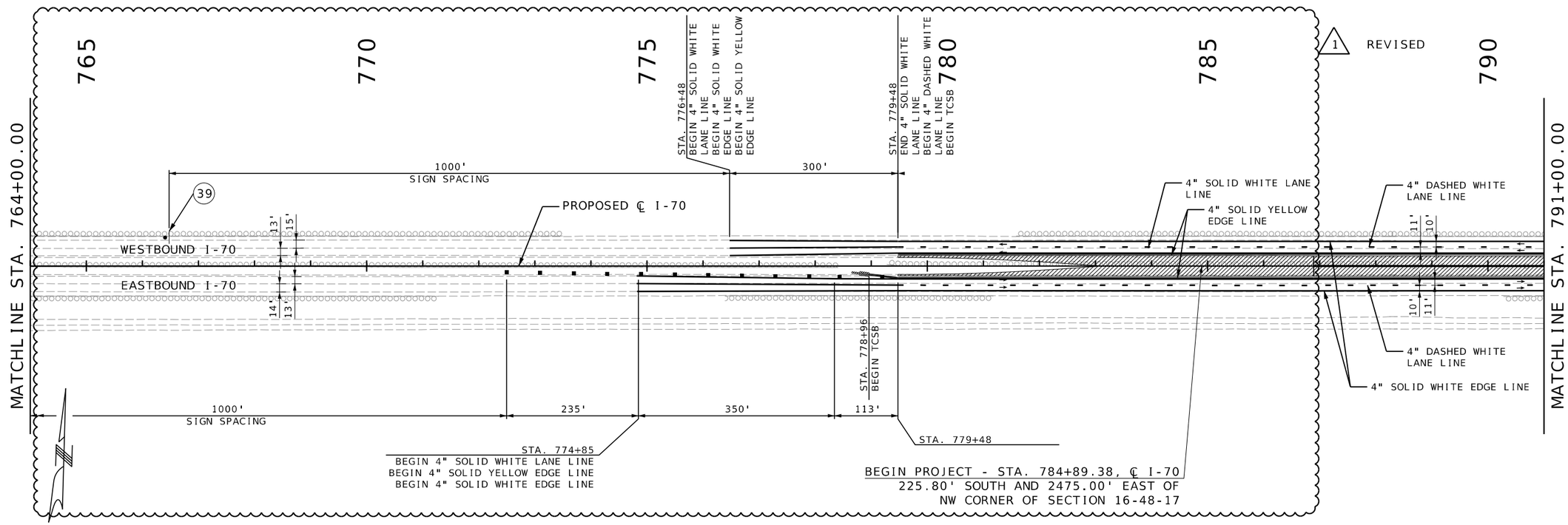

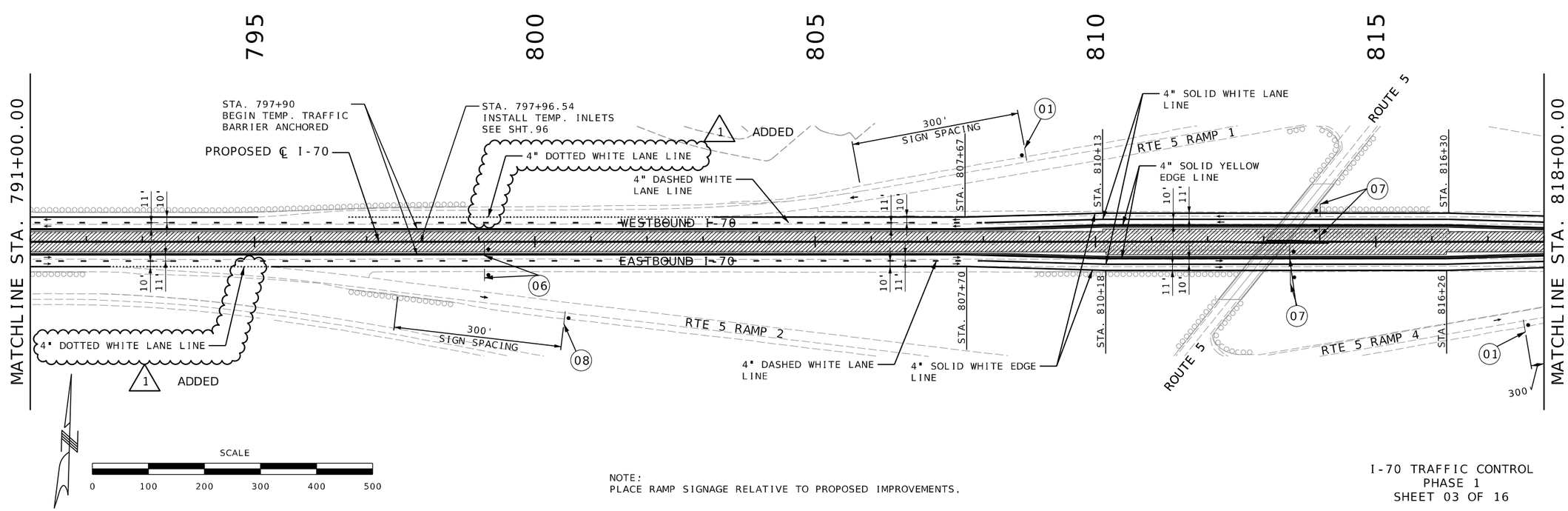

NOTE:
PLACE RAMP SIGNAGE RELATIVE TO PROPOSED IMPROVEMENTS.

I-70 TRAFFIC CONTROL
PHASE 1
SHEET 03 OF 16

STATE OF MISSOURI
RONNIE WILLIAMS
NUMBER PE-2010000879
PROFESSIONAL ENGINEER

THIS SHEET HAS BEEN SIGNED, SEALED, AND DATED ELECTRONICALLY

DATE PREPARED	
1/7/2026	
ROUTE	STATE
I-70	MO
DISTRICT	SHEET NO.
CD	122
COUNTY	
COOPER	
JOB NO.	
JST0017B	
CONTRACT ID.	
-	
PROJECT NO.	
-	
BRIDGE NO.	
-	

DATE	DESCRIPTION
01/07/26	1 ADDED X-OVER AND PAVEMENT MARKING

MISSOURI HIGHWAYS AND TRANSPORTATION COMMISSION
105 WEST CAPITOL
JEFFERSON CITY, MO 65102
1-888-ASK-MODOT (1-888-275-6636)

BURNS McDONNELL
9400 Ward Parkway
Kansas City, MO 64114
(816) 333-9400
Certificate of Authority
No.: 000165

c:\bmcd_lib\pw_connect\trn\d0185116\122_MOT_Phase 1_JST0017B_I100_I-70.dgn 11:35:59 AM 1/7/2026

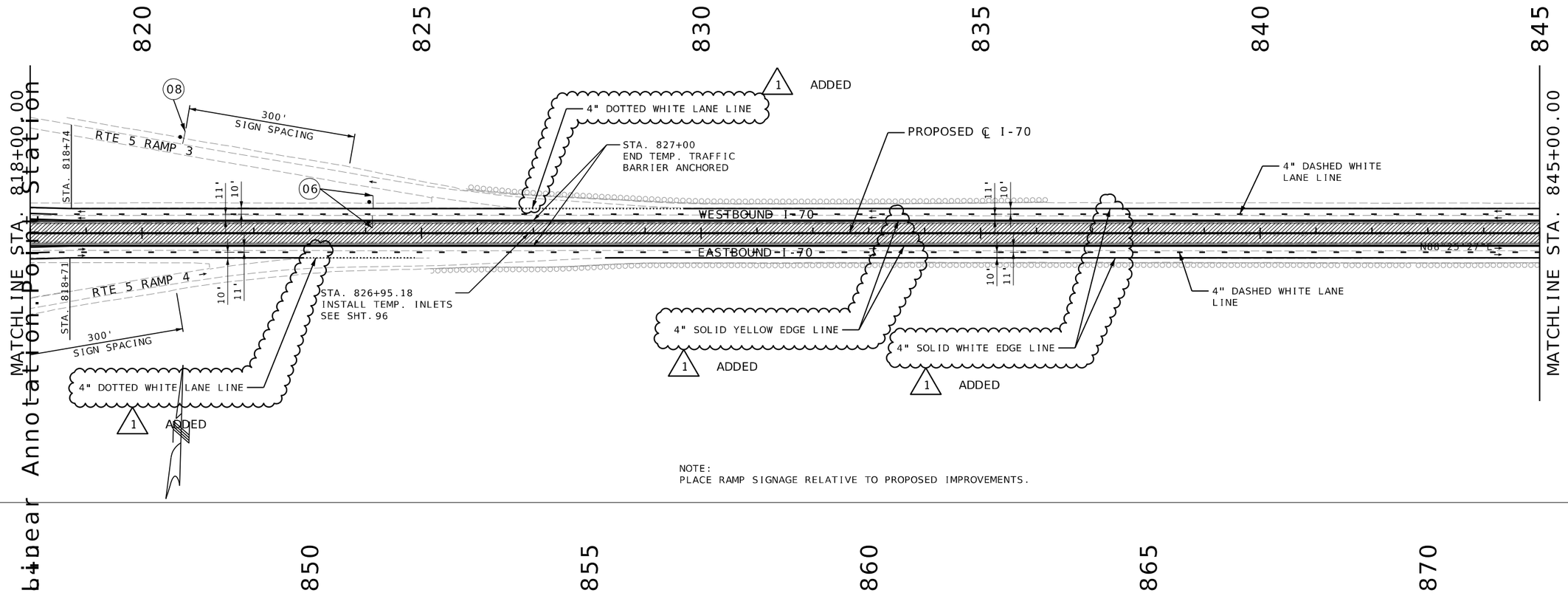

NOTE:
PLACE RAMP SIGNAGE RELATIVE TO PROPOSED IMPROVEMENTS.

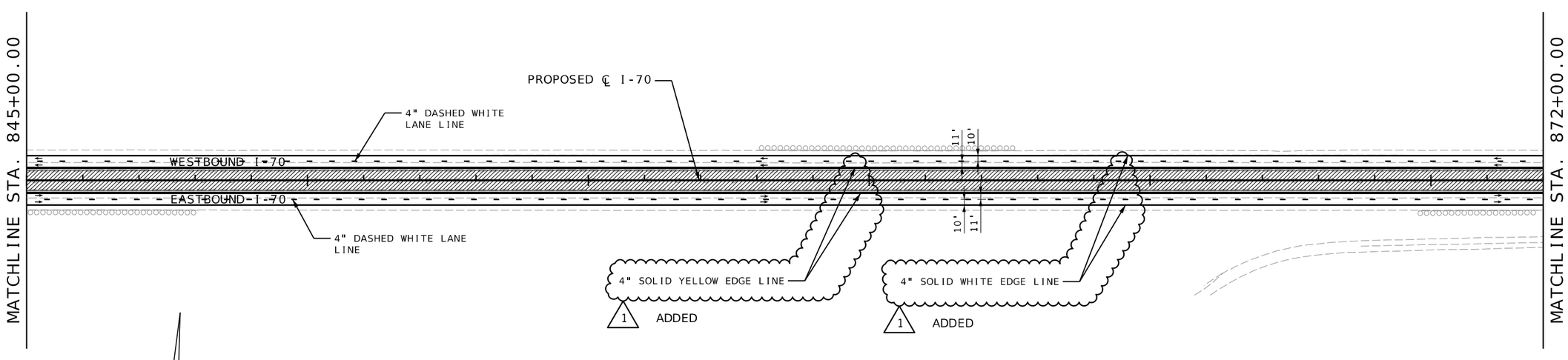

SCALE
0 100 200 300 400 500

I-70 TRAFFIC CONTROL
PHASE 1
SHEET 04 OF 16

STATE OF MISSOURI
RONNIE WILLIAMS
NUMBER PE-2010000879
PROFESSIONAL ENGINEER

THIS SHEET HAS BEEN SIGNED, SEALED, AND DATED ELECTRONICALLY

DATE PREPARED	
1/7/2026	
ROUTE	STATE
I-70	MO
DISTRICT	SHEET NO.
CD	123
COUNTY	
COOPER	
JOB NO.	
JST0017B	
CONTRACT ID.	
-	
PROJECT NO.	
-	
BRIDGE NO.	
-	

DATE	DESCRIPTION
01/07/26	1 ADDED PAVEMENT MARKING

MISSOURI HIGHWAYS AND TRANSPORTATION COMMISSION
105 WEST CAPITOL
JEFFERSON CITY, MO 65102
1-888-ASK-MODOT (1-888-275-6636)

BURNS McDONNELL
9400 Ward Parkway
Kansas City, MO 64114
(816) 333-9400
Certificate of Authority
No.: 000165

c:\bmcd_lib\pw_connect\trn\d0185116\123_MOT_Phase 1_JST0017B_I100_I-70.dgn 11:44:50 AM 1/7/2026

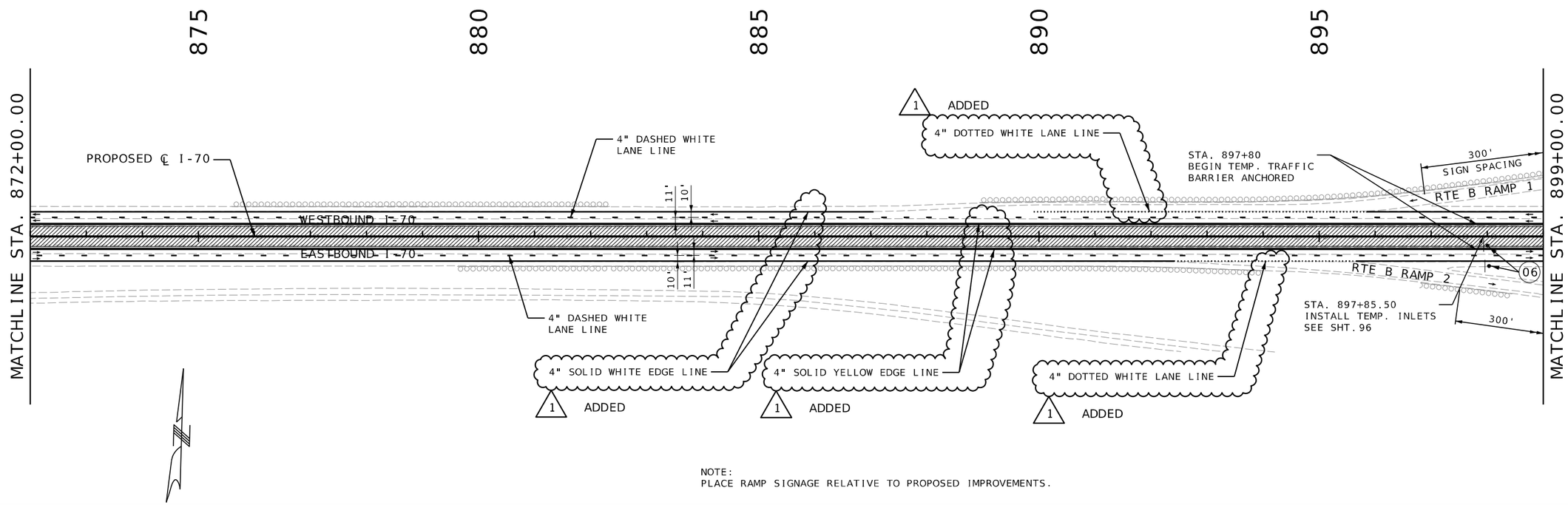

NOTE:
PLACE RAMP SIGNAGE RELATIVE TO PROPOSED IMPROVEMENTS.

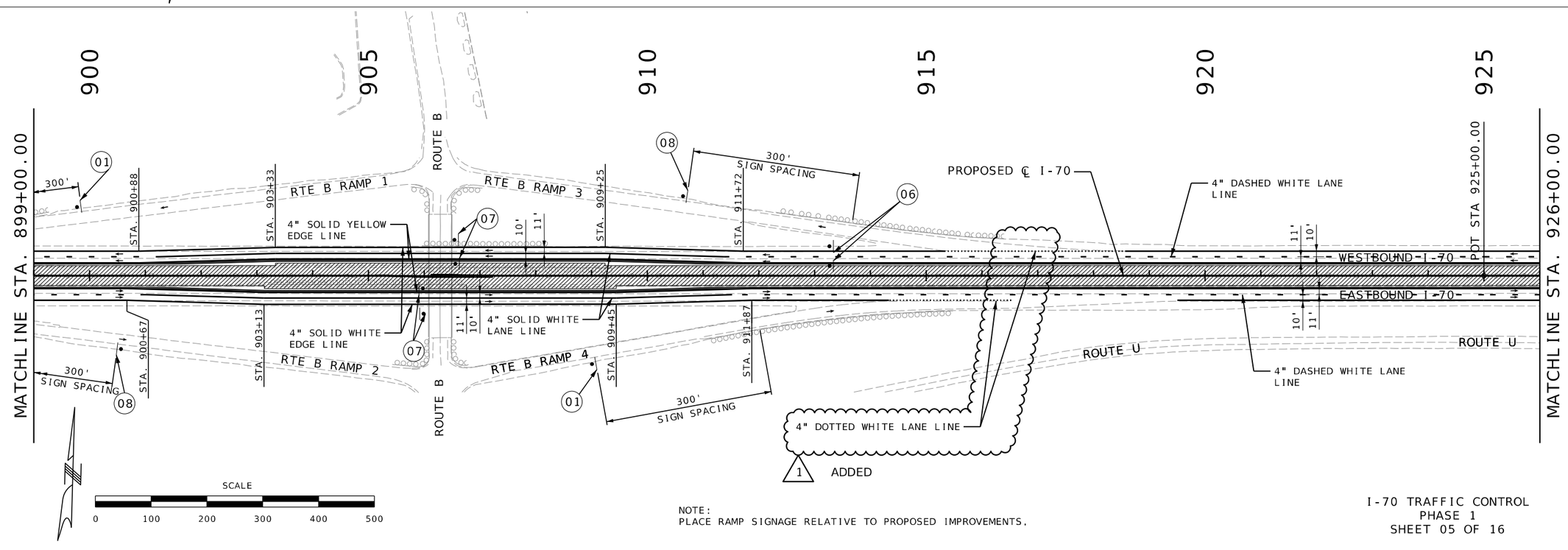

NOTE:
PLACE RAMP SIGNAGE RELATIVE TO PROPOSED IMPROVEMENTS.

I-70 TRAFFIC CONTROL
PHASE 1
SHEET 05 OF 16

STATE OF MISSOURI
RONNIE WILLIAMS
NUMBER PE-2010000879
PROFESSIONAL ENGINEER

THIS SHEET HAS BEEN SIGNED, SEALED, AND DATED ELECTRONICALLY

DATE PREPARED	
1/7/2026	
ROUTE	STATE
I-70	MO
DISTRICT	SHEET NO.
CD	124
COUNTY	
COOPER	
JOB NO.	
JST0017B	
CONTRACT ID.	
-	
PROJECT NO.	
-	
BRIDGE NO.	
-	

DATE	DESCRIPTION
01/07/26	1 ADDED PAVEMENT MARKING

MISSOURI HIGHWAYS AND TRANSPORTATION COMMISSION
105 WEST CAPITOL
JEFFERSON CITY, MO 65102
1-888-ASK-MODOT (1-888-275-6636)

BURNS McDONNELL
9400 Ward Parkway
Kansas City, MO 64114
(816) 333-9400
Certificate of Authority
No.: 000165

c:\bmcd_lib\pw_connect\trn\d0185116\124_MOT_Phase 1_JST0017B_I100_I-70.dgn 11:49:54 AM 1/7/2026

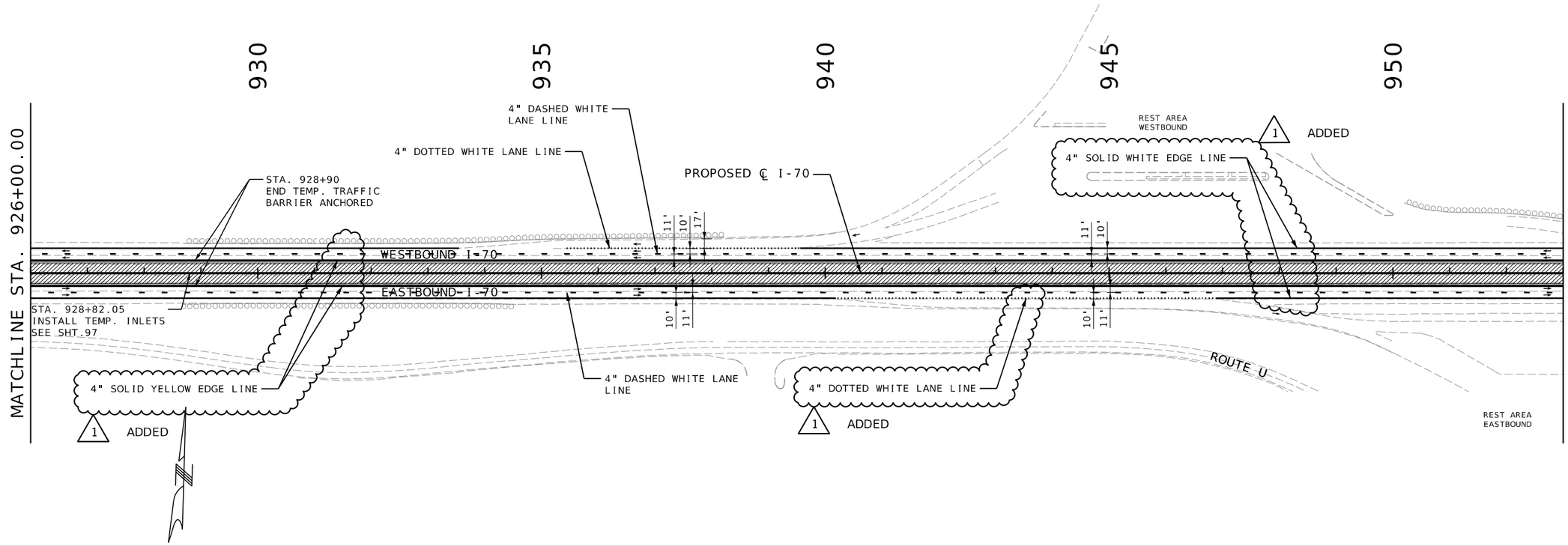

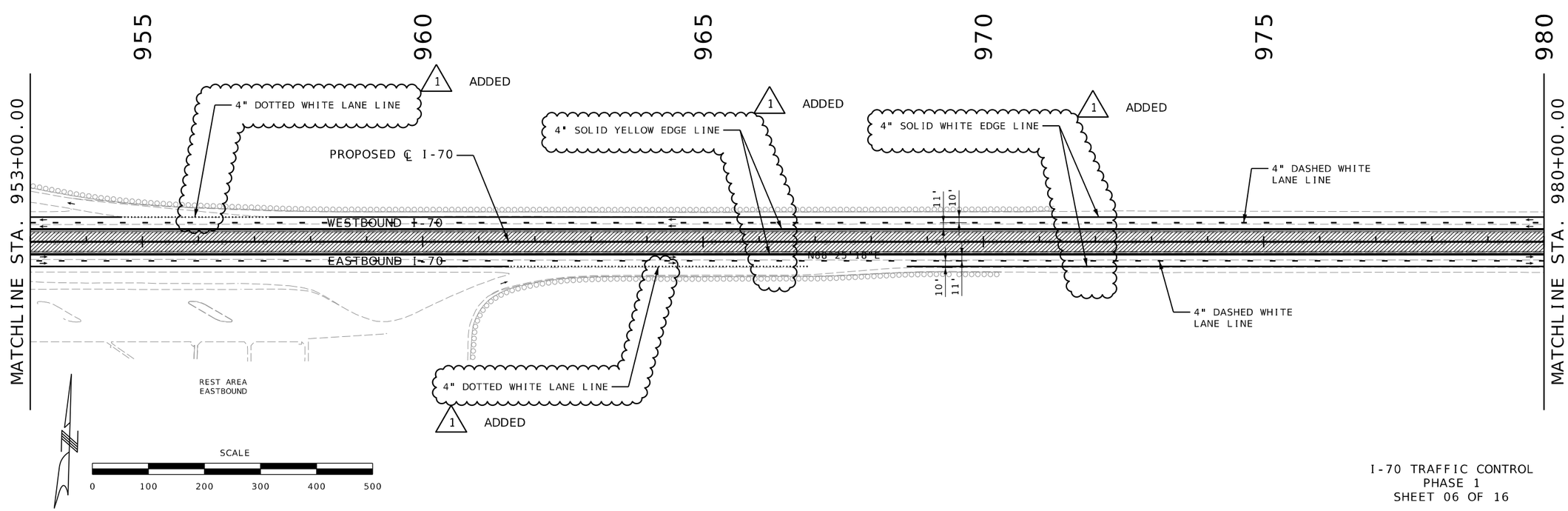

I-70 TRAFFIC CONTROL
PHASE 1
SHEET 06 OF 16

STATE OF MISSOURI
RONNIE WILLIAMS
NUMBER PE-2010000879
PROFESSIONAL ENGINEER

THIS SHEET HAS BEEN SIGNED, SEALED, AND DATED ELECTRONICALLY

DATE PREPARED	1/7/2026
ROUTE	I-70
STATE	MO
DISTRICT	CD
SHEET NO.	125
COUNTY	COOPER
JOB NO.	JST0017B
CONTRACT ID.	-
PROJECT NO.	-
BRIDGE NO.	-

DATE	DESCRIPTION
01/07/26	1 ADDED PAVEMENT MARKING

MISSOURI HIGHWAYS AND TRANSPORTATION COMMISSION
105 WEST CAPITOL
JEFFERSON CITY, MO 65102
1-888-ASK-MODOT (1-888-275-6636)

BURNS McDONNELL
9400 Ward Parkway
Kansas City, MO 64114
(816) 333-9400
Certificate of Authority
No.: 000165

c:\bmcd_lib\pw_connect\trn\d0185116\125_MOT_Phase 1_JST0017B_I100_I-70.dgn 11:57:36 AM 1/7/2026

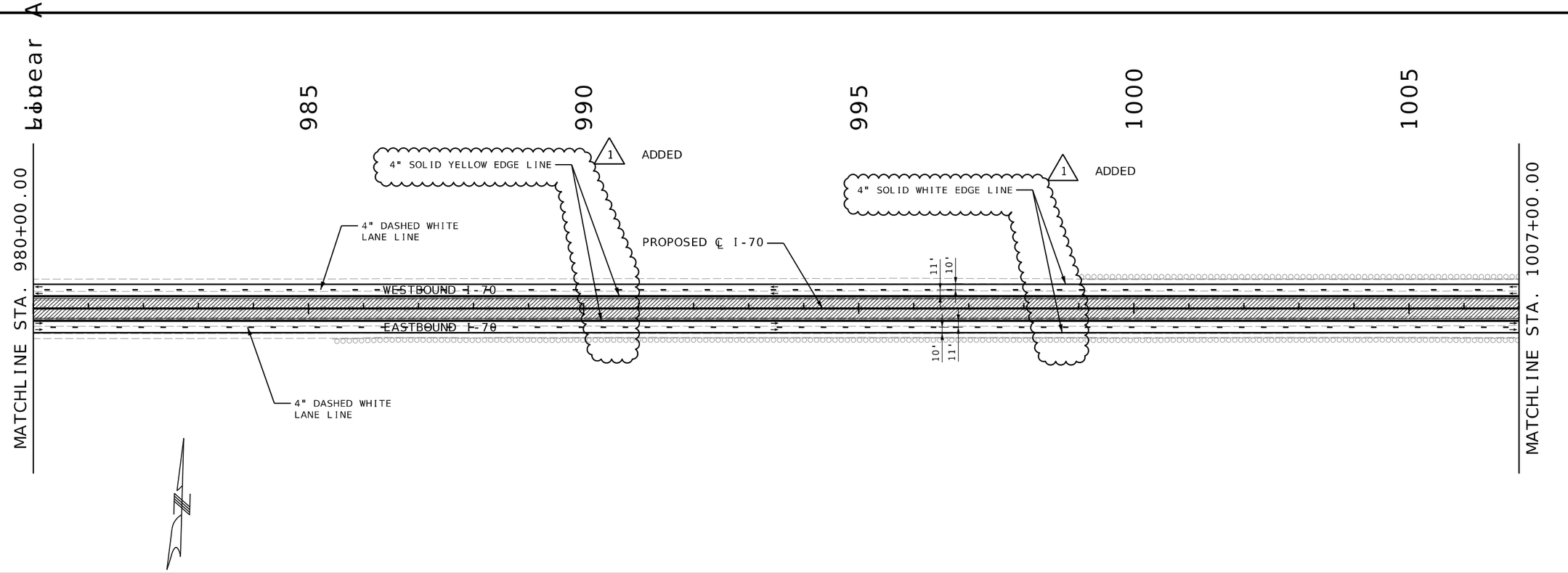

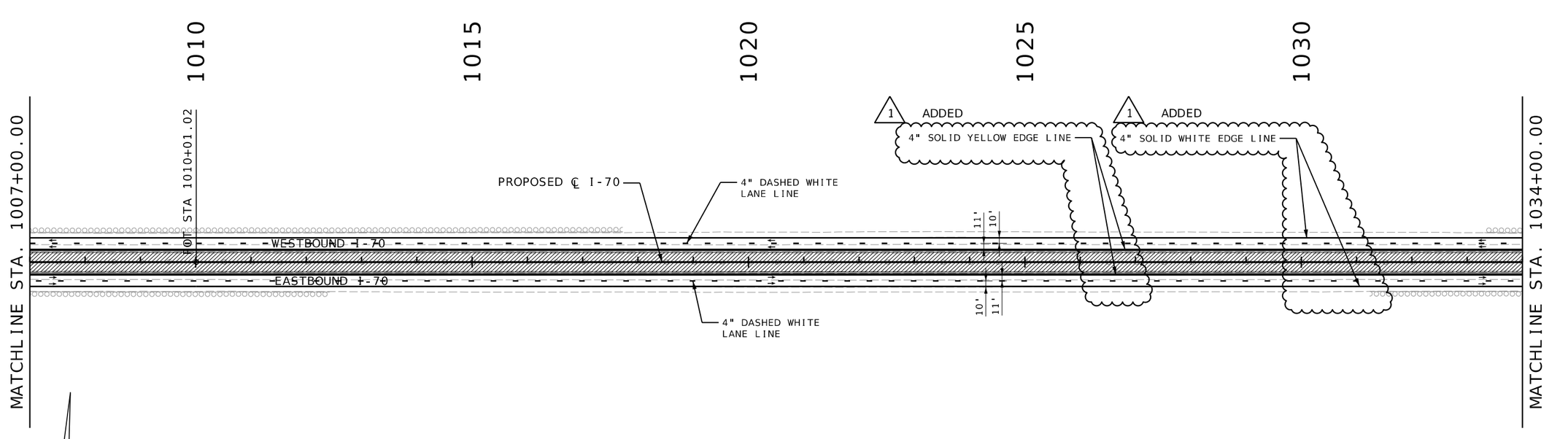

SCALE

0 100 200 300 400 500

I-70 TRAFFIC CONTROL
PHASE 1
SHEET 07 OF 16

STATE OF MISSOURI
RONNIE WILLIAMS
NUMBER PE-2010000879
PROFESSIONAL ENGINEER

THIS SHEET HAS BEEN SIGNED, SEALED, AND DATED ELECTRONICALLY

DATE PREPARED	
1/7/2026	
ROUTE	STATE
I-70	MO
DISTRICT	SHEET NO.
CD	126
COUNTY	
COOPER	
JOB NO.	
JST0017B	
CONTRACT ID.	
-	
PROJECT NO.	
-	
BRIDGE NO.	
-	

DATE	DESCRIPTION
01/07/26	1 ADDED PAVEMENT MARKING

MISSOURI HIGHWAYS AND TRANSPORTATION COMMISSION
105 WEST CAPITOL
JEFFERSON CITY, MO 65102
1-888-ASK-MODOT (1-888-275-6636)

BURNS McDONNELL
9400 Ward Parkway
Kansas City, MO 64114
(816) 333-9400
Certificate of Authority
No.: 000165

c:\bmcd_lib\pw_connect\trn\d0185116\126_MOT_Phase 1_JST0017B_I100_I-70.dgn 1:18:21 PM 1/7/2026

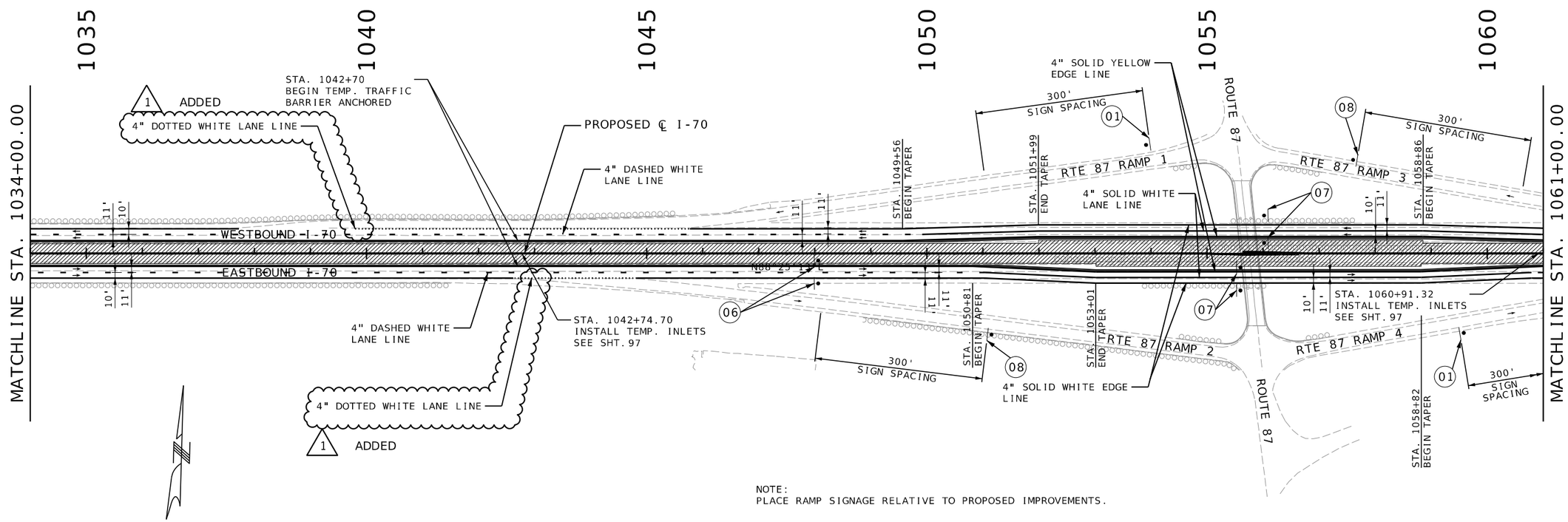

NOTE:
PLACE RAMP SIGNAGE RELATIVE TO PROPOSED IMPROVEMENTS.

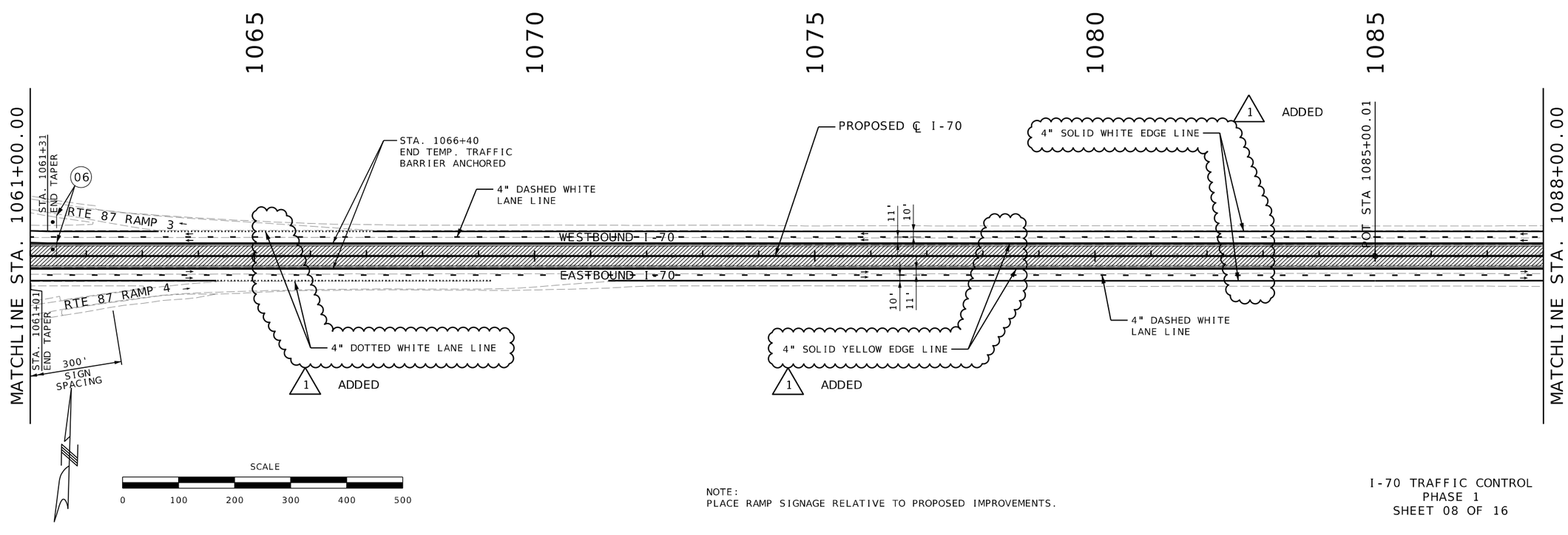

NOTE:
PLACE RAMP SIGNAGE RELATIVE TO PROPOSED IMPROVEMENTS.

I-70 TRAFFIC CONTROL
PHASE 1
SHEET 08 OF 16

STATE OF MISSOURI
RONNIE WILLIAMS
NUMBER PE-2010000879
PROFESSIONAL ENGINEER

THIS SHEET HAS BEEN SIGNED, SEALED, AND DATED ELECTRONICALLY

DATE PREPARED	
1/7/2026	
ROUTE	STATE
I-70	MO
DISTRICT	SHEET NO.
CD	127
COUNTY	
COOPER	
JOB NO.	
JST0017B	
CONTRACT ID.	
-	
PROJECT NO.	
-	
BRIDGE NO.	
-	

DATE	DESCRIPTION
01/07/26	1 ADDED PAVEMENT MARKING

MISSOURI HIGHWAYS AND TRANSPORTATION COMMISSION
105 WEST CAPITOL
JEFFERSON CITY, MO 65102
1-888-ASK-MODOT (1-888-275-6636)

BURNS McDONNELL
9400 Ward Parkway
Kansas City, MO 64114
(816) 333-9400
Certificate of Authority
No.: 000165

c:\bmcd_lib\pw_connect\trn\d0185116\127_MOT_Phase 1_JST0017B_I100_I-70.dgn 1:25:06 PM 1/7/2026

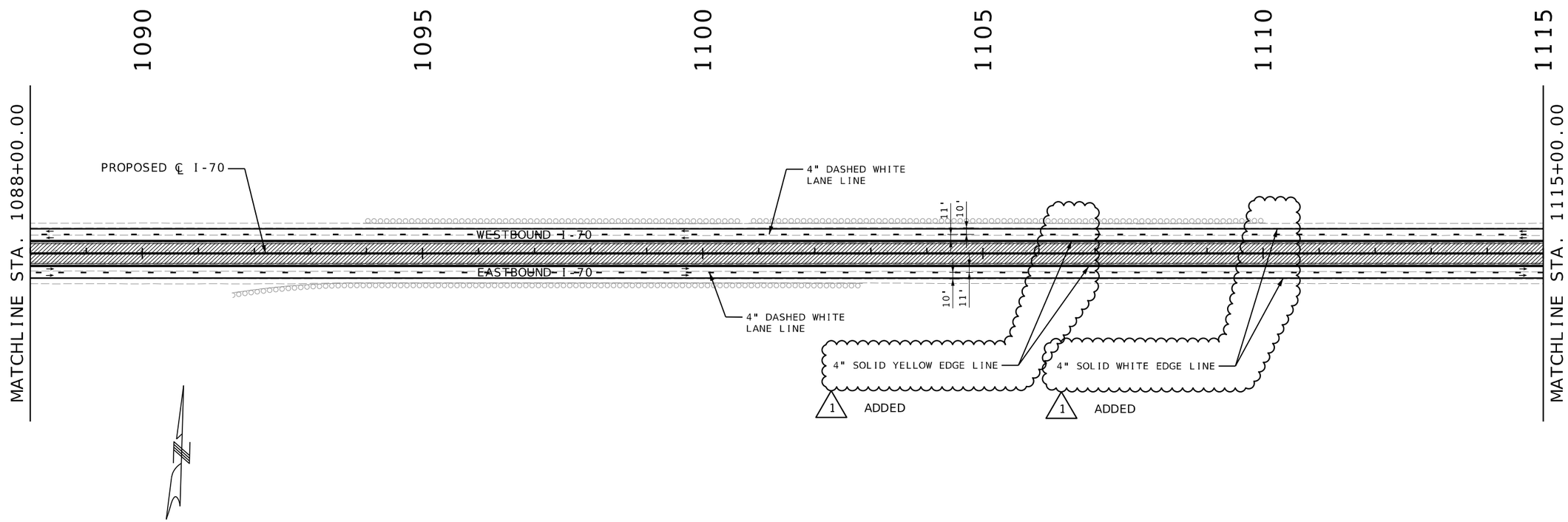

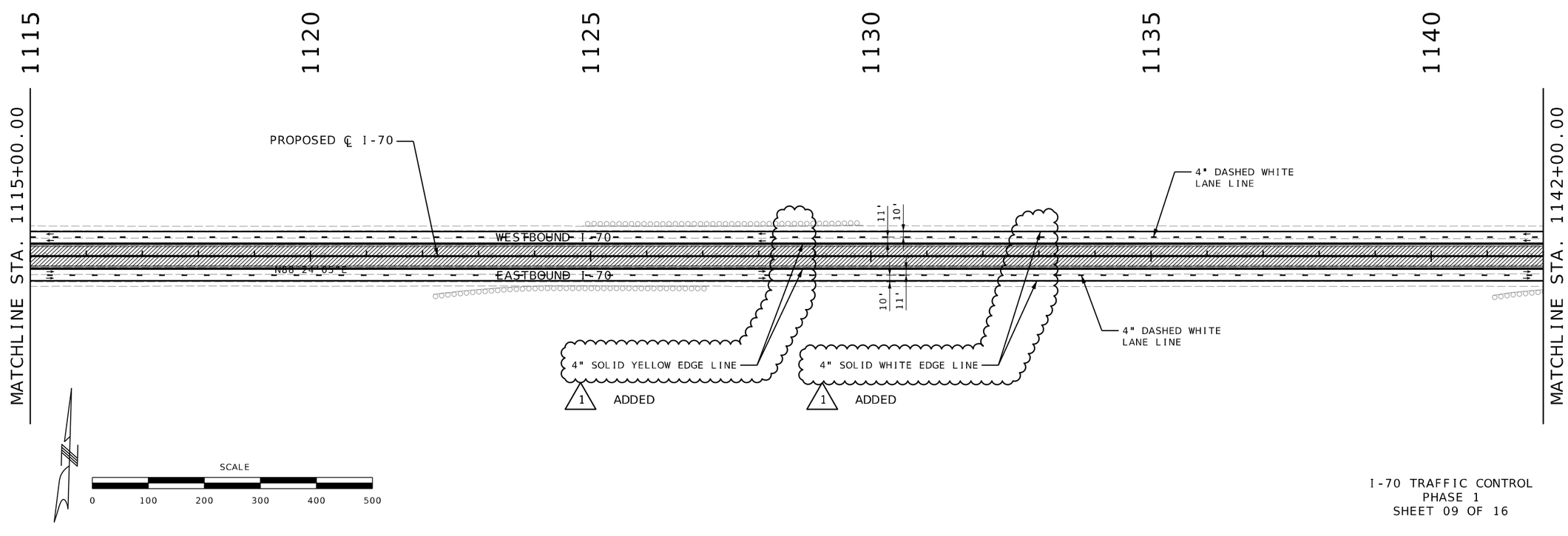

I-70 TRAFFIC CONTROL
PHASE 1
SHEET 09 OF 16

STATE OF MISSOURI
RONNIE WILLIAMS
NUMBER PE-2010000879
PROFESSIONAL ENGINEER

THIS SHEET HAS BEEN SIGNED, SEALED, AND DATED ELECTRONICALLY

DATE PREPARED	
1/7/2026	
ROUTE	STATE
I-70	MO
DISTRICT	SHEET NO.
CD	128
COUNTY	
COOPER	
JOB NO.	
JST0017B	
CONTRACT ID.	
-	
PROJECT NO.	
-	
BRIDGE NO.	
-	

DATE	DESCRIPTION
01/07/26	1 ADDED PAVEMENT MARKING

MISSOURI HIGHWAYS AND TRANSPORTATION COMMISSION
105 WEST CAPITOL
JEFFERSON CITY, MO 65102
1-888-ASK-MODOT (1-888-275-6636)

BURNS McDONNELL
9400 Ward Parkway
Kansas City, MO 64114
(816) 333-9400
Certificate of Authority
No.: 000165

c:\bmcd_lib\pw_connect\trn\d0185116\128_MOT_Phase 1_JST0017B_I100_I-70.dgn 1:27:34 PM 1/7/2026

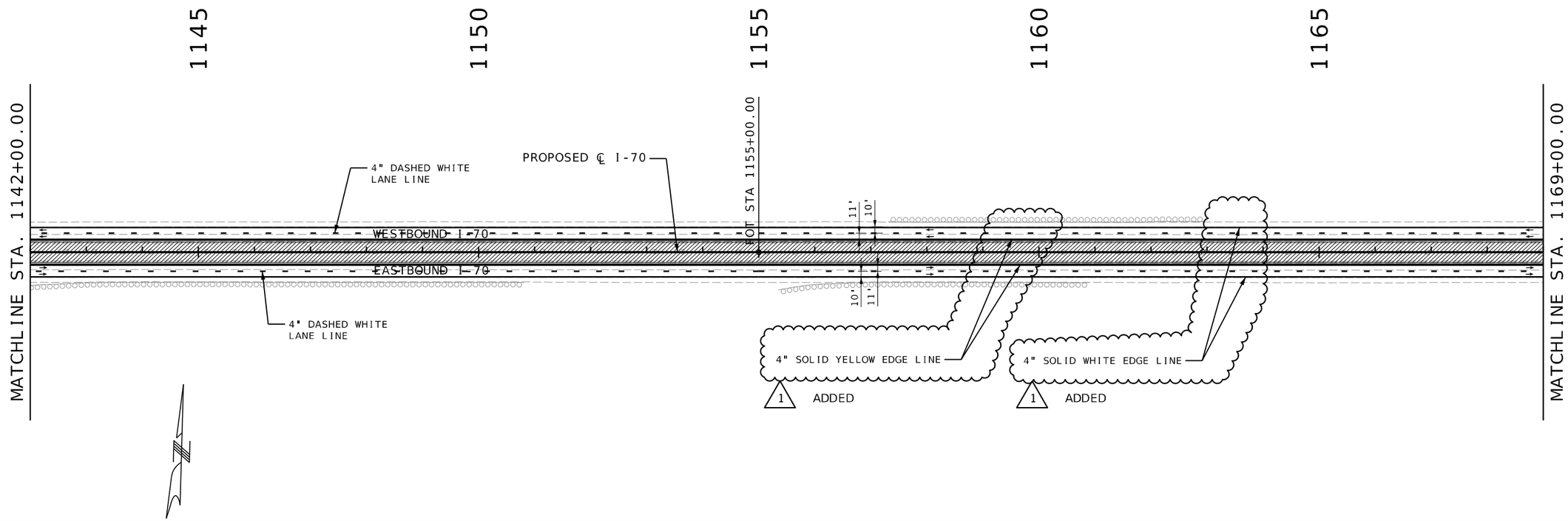

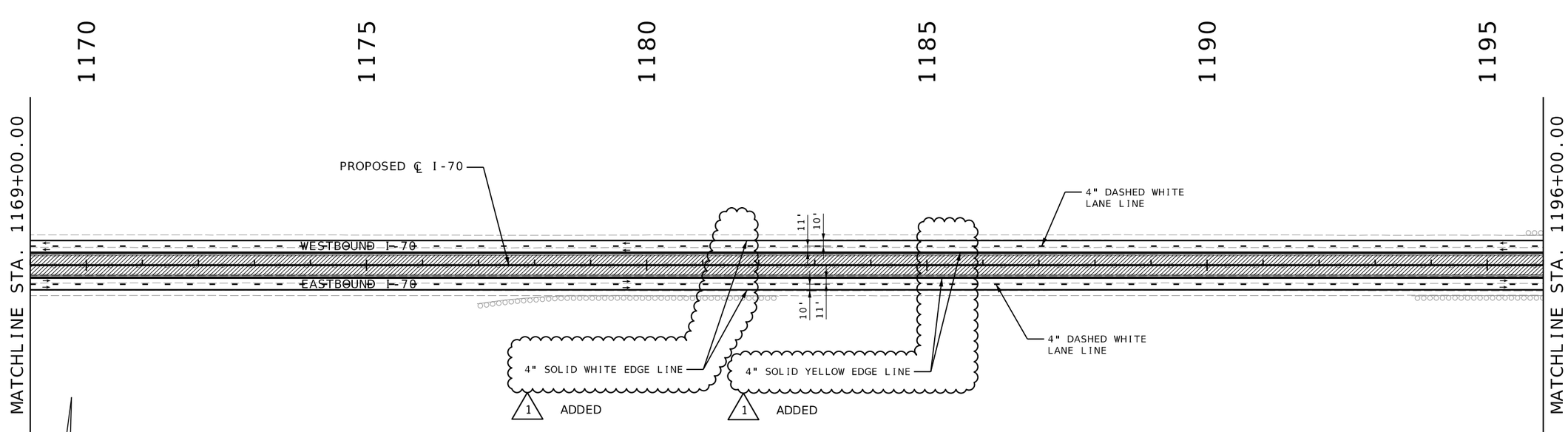

SCALE

0 100 200 300 400 500

I-70 TRAFFIC CONTROL
PHASE 1
SHEET 10 OF 16

STATE OF MISSOURI
RONNIE WILLIAMS
NUMBER PE-2010000879
PROFESSIONAL ENGINEER

THIS SHEET HAS BEEN SIGNED, SEALED, AND DATED ELECTRONICALLY

DATE PREPARED	
1/7/2026	
ROUTE	STATE
I-70	MO
DISTRICT	SHEET NO.
CD	129
COUNTY	
COOPER	
JOB NO.	
JST0017B	
CONTRACT ID.	
-	
PROJECT NO.	
-	
BRIDGE NO.	
-	

DATE	DESCRIPTION
01/07/26	1 ADDED PAVEMENT MARKING

MISSOURI HIGHWAYS AND TRANSPORTATION COMMISSION
105 WEST CAPITOL
JEFFERSON CITY, MO 65102
1-888-ASK-MODOT (1-888-275-6636)

BURNS McDONNELL
9400 Ward Parkway
Kansas City, MO 64114
(816) 333-9400
Certificate of Authority
No.: 000165

c:\bmcd_lib\pw_connect\trn\d0185116\129_MOT_Phase 1_JST0017B_I100_I-70.dgn 1:30:59 PM 1/7/2026

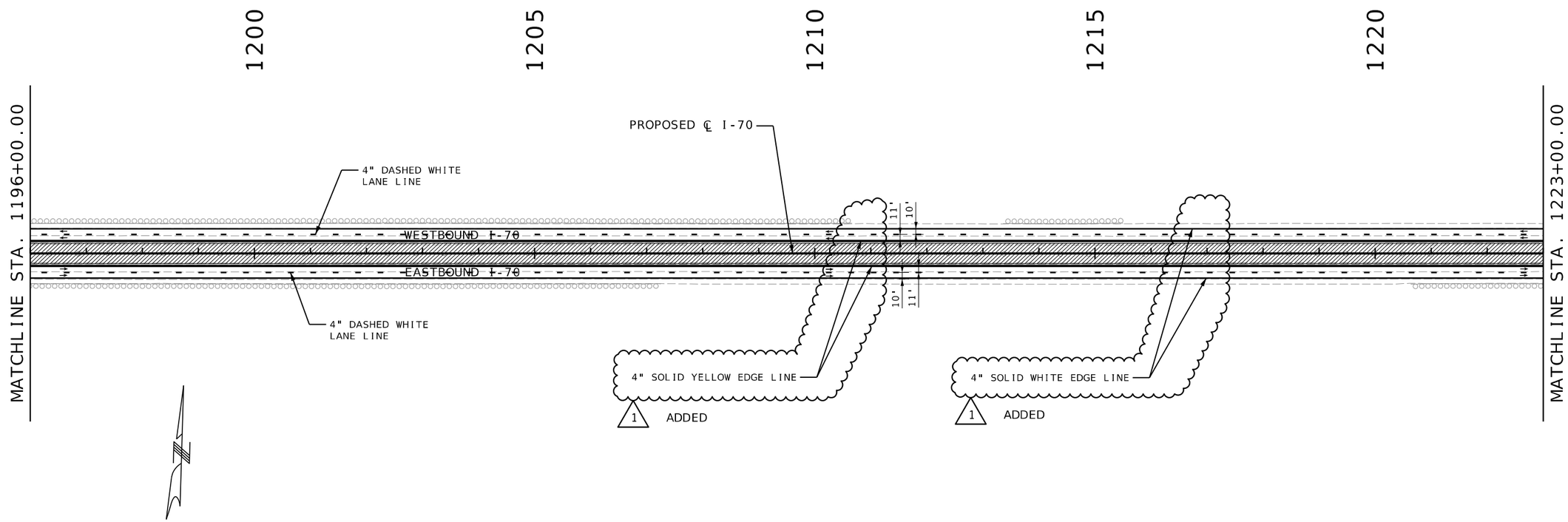

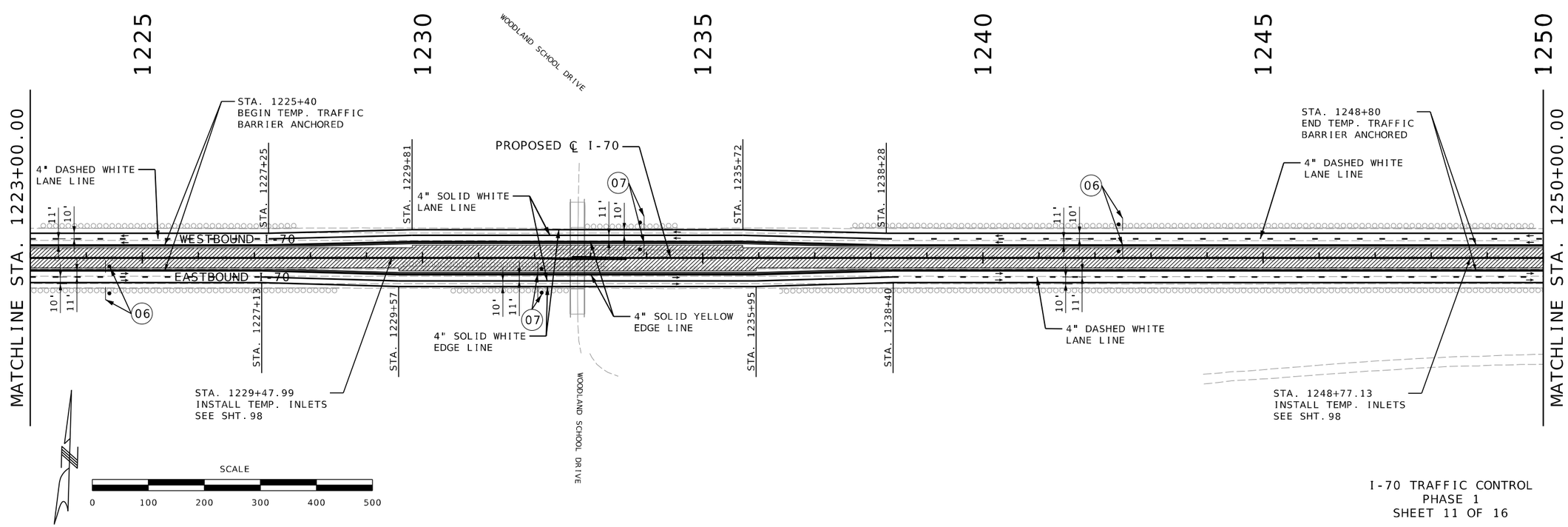

I-70 TRAFFIC CONTROL
PHASE 1
SHEET 11 OF 16

STATE OF MISSOURI
RONNIE WILLIAMS
NUMBER PE-2010000879
PROFESSIONAL ENGINEER

THIS SHEET HAS BEEN SIGNED, SEALED, AND DATED ELECTRONICALLY

DATE PREPARED	1/7/2026
ROUTE	I-70
STATE	MO
DISTRICT	CD
SHEET NO.	130
COUNTY	COOPER
JOB NO.	JST0017B
CONTRACT ID.	-
PROJECT NO.	-
BRIDGE NO.	-

DATE	DESCRIPTION
01/07/26	1 ADDED PAVEMENT MARKING

MISSOURI HIGHWAYS AND TRANSPORTATION COMMISSION
105 WEST CAPITOL
JEFFERSON CITY, MO 65102
1-888-ASK-MODOT (1-888-275-6636)

BURNS McDONNELL
9400 Ward Parkway
Kansas City, MO 64114
(816) 333-9400
Certificate of Authority
No.: 000165

c:\bmcd_lib\pw_connect\trn\d0185116\130_MOT_Phase 1_JST0017B_I100_I-70.dgn 1:55:54 PM 1/7/2026

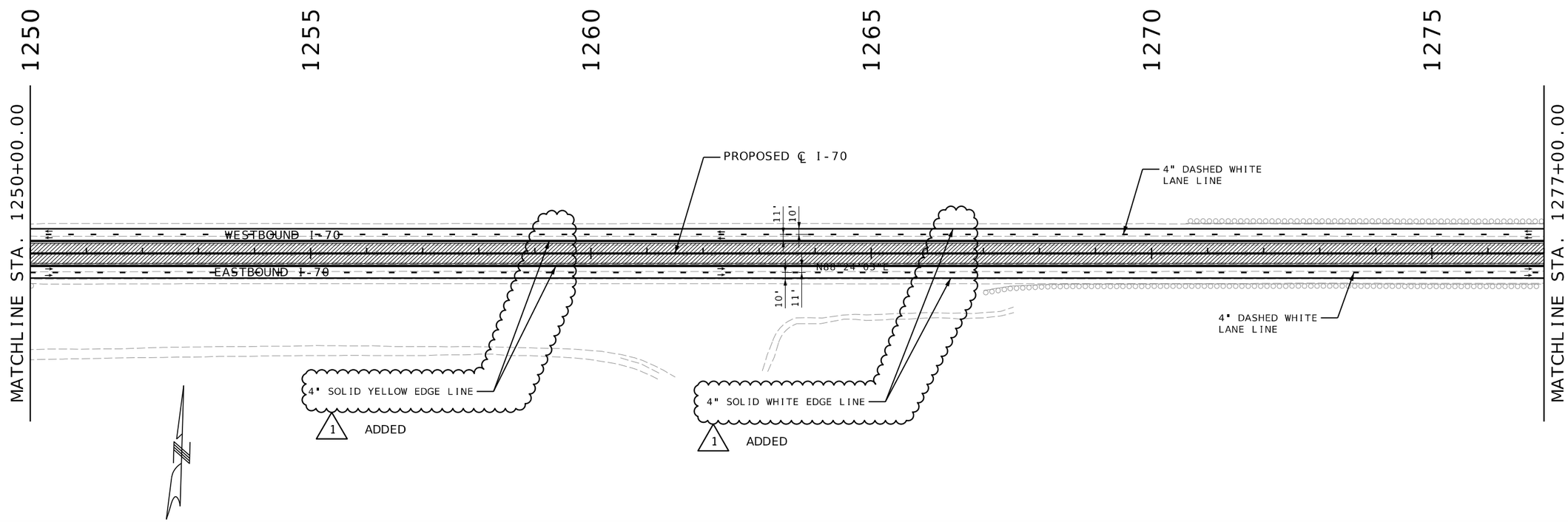

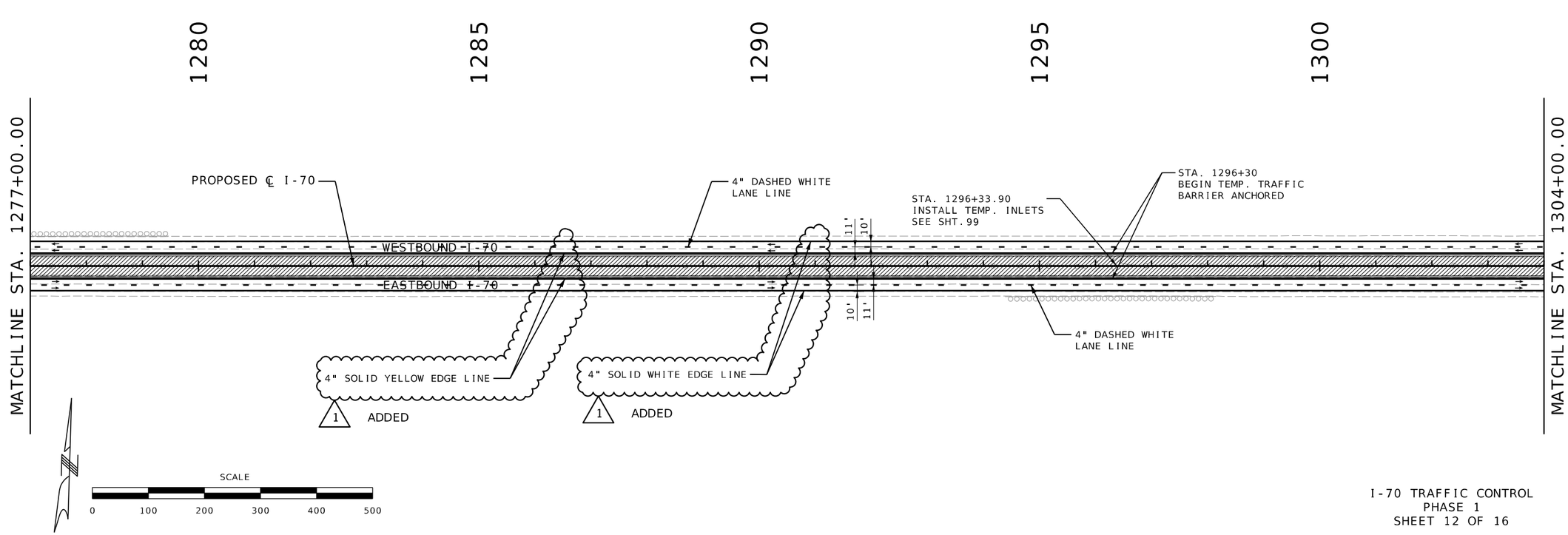

I-70 TRAFFIC CONTROL
PHASE 1
SHEET 12 OF 16

STATE OF MISSOURI
RONNIE WILLIAMS
NUMBER PE-2010000879
PROFESSIONAL ENGINEER

THIS SHEET HAS BEEN SIGNED, SEALED, AND DATED ELECTRONICALLY

DATE PREPARED	
1/7/2026	
ROUTE	STATE
I-70	MO
DISTRICT	SHEET NO.
CD	131
COUNTY	
COOPER	
JOB NO.	
JST0017B	
CONTRACT ID.	
-	
PROJECT NO.	
-	
BRIDGE NO.	
-	

DATE	DESCRIPTION
01/07/26	1 ADDED PAVEMENT MARKING

MISSOURI HIGHWAYS AND TRANSPORTATION COMMISSION
105 WEST CAPITOL
JEFFERSON CITY, MO 65102
1-888-ASK-MODOT (1-888-275-6636)

BURNS McDONNELL
9400 Ward Parkway
Kansas City, MO 64114
(816) 333-9400
Certificate of Authority
No.: 000165

c:\bmcd_lib\pw_connect\trn\d0185116\131_MOT_Phase 1_JST0017B_I100_I-70.dgn 1:48:53 PM 1/7/2026

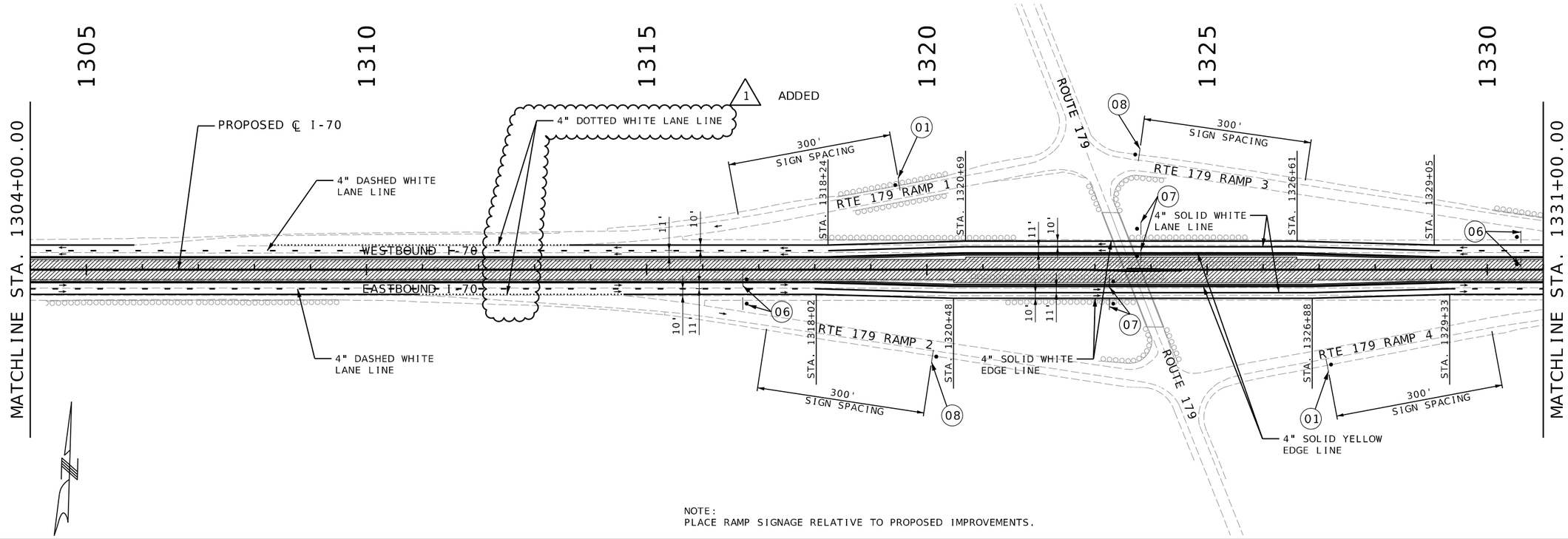

NOTE:
PLACE RAMP SIGNAGE RELATIVE TO PROPOSED IMPROVEMENTS.

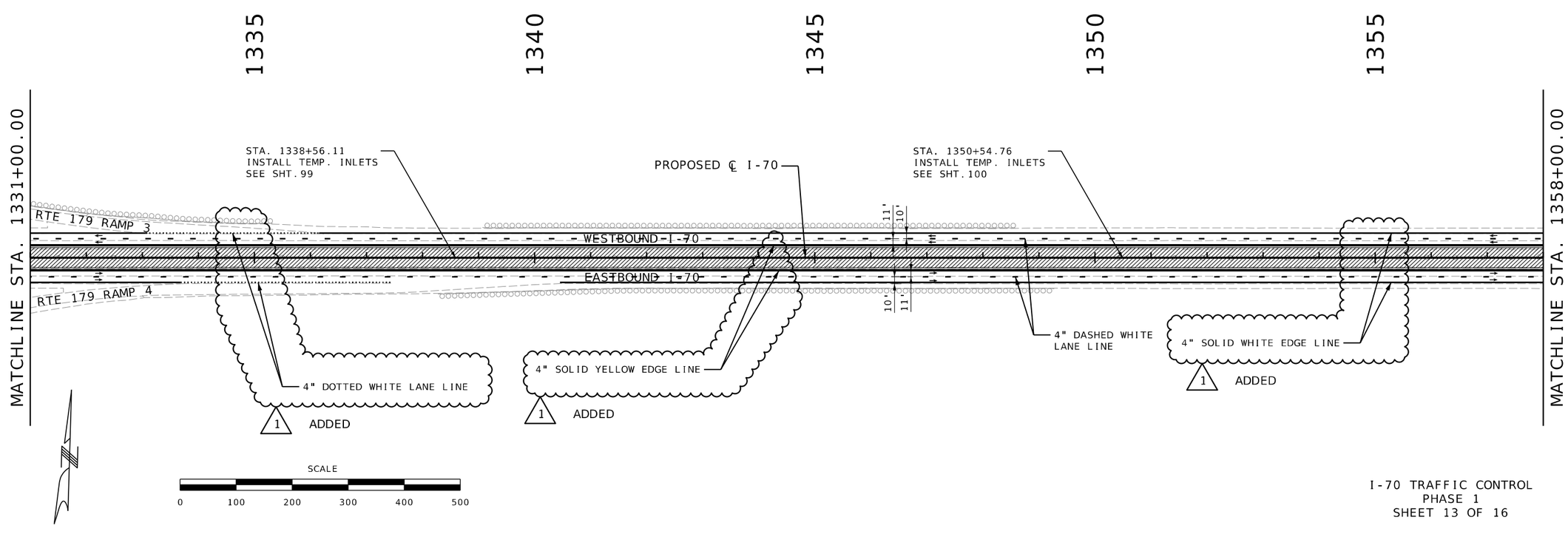

I-70 TRAFFIC CONTROL
PHASE 1
SHEET 13 OF 16

STATE OF MISSOURI
RONNIE WILLIAMS
NUMBER PE-2010000879
PROFESSIONAL ENGINEER

THIS SHEET HAS BEEN SIGNED, SEALED, AND DATED ELECTRONICALLY

DATE PREPARED	1/7/2026
ROUTE	I-70
STATE	MO
DISTRICT	CD
SHEET NO.	132
COUNTY	COOPER
JOB NO.	JST0017B
CONTRACT ID.	-
PROJECT NO.	-
BRIDGE NO.	-

DATE	DESCRIPTION
01/07/26	1 ADDED PAVEMENT MARKING

MISSOURI HIGHWAYS AND TRANSPORTATION COMMISSION
105 WEST CAPITOL
JEFFERSON CITY, MO 65102
1-888-ASK-MODOT (1-888-275-6636)

BURNS McDONNELL
9400 Ward Parkway
Kansas City, MO 64114
(816) 333-9400
Certificate of Authority
No.: 000165

c:\bmcd_lib\pw_connect\trn\d0185116\132_MOT_Phase 1_JST0017B_I100_I-70.dgn 1:54:03 PM 1/7/2026

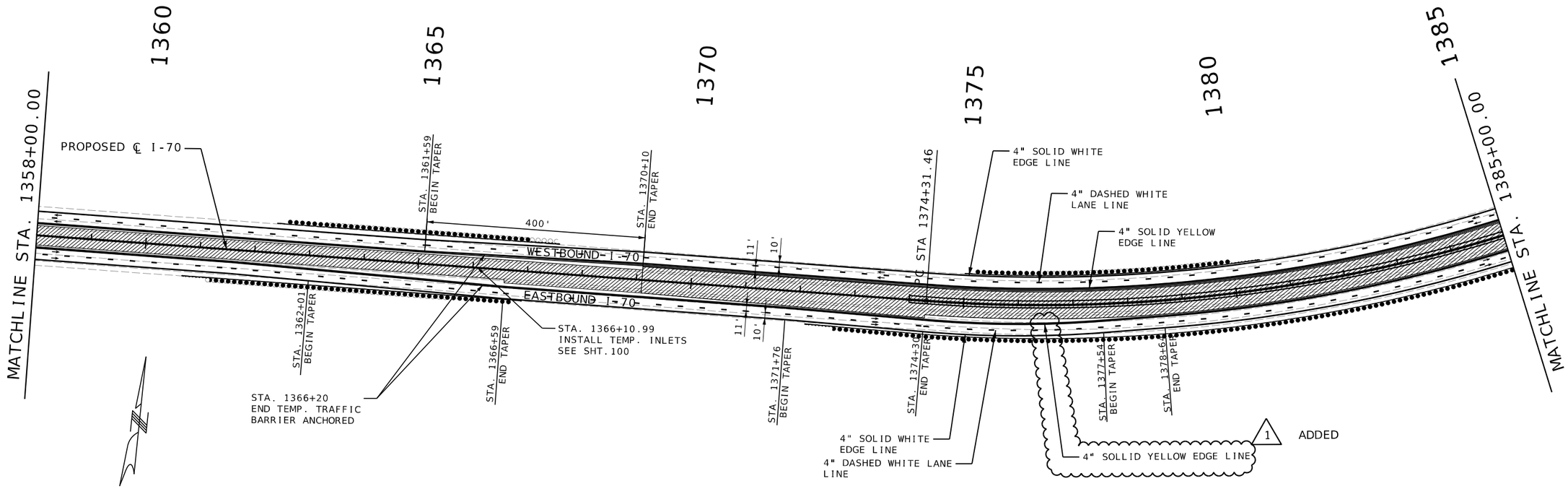

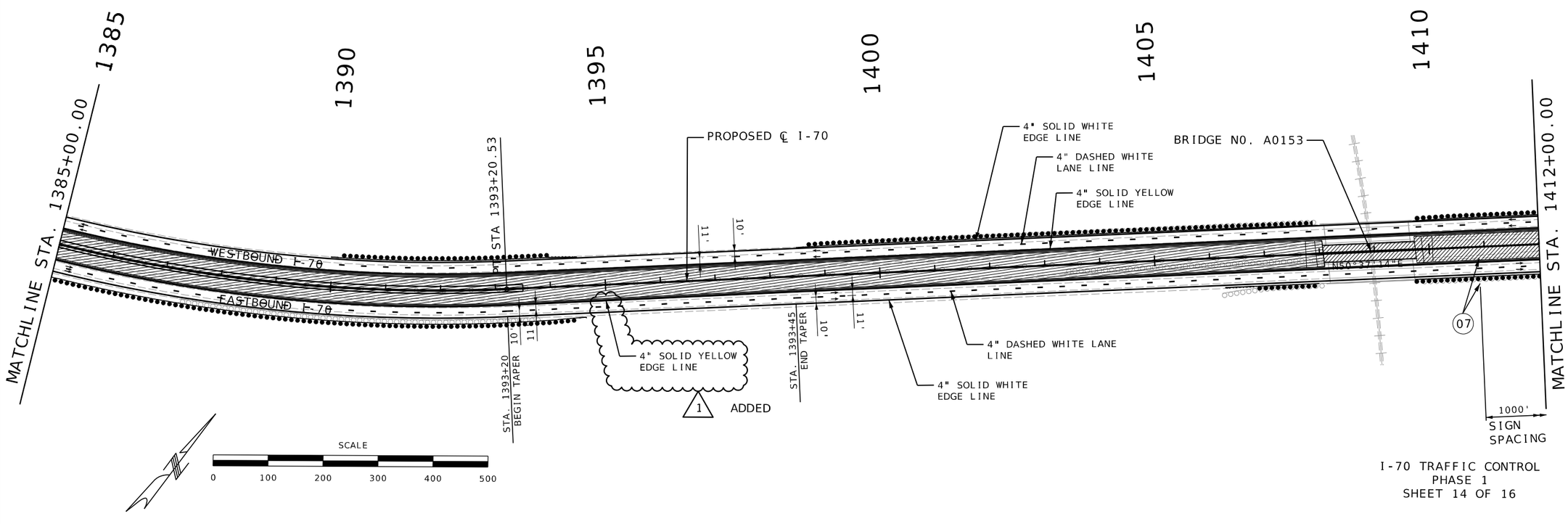

I-70 TRAFFIC CONTROL
PHASE 1
SHEET 14 OF 16

STATE OF MISSOURI
RONNIE WILLIAMS
NUMBER PE-2010000879
PROFESSIONAL ENGINEER

THIS SHEET HAS BEEN SIGNED, SEALED, AND DATED ELECTRONICALLY

DATE PREPARED	
1/7/2026	
ROUTE	STATE
I-70	MO
DISTRICT	SHEET NO.
CD	133
COUNTY	
COOPER	
JOB NO.	
JST0017B	
CONTRACT ID.	
-	
PROJECT NO.	
-	
BRIDGE NO.	
-	

DATE	DESCRIPTION
01/07/26	1 ADDED PAVEMENT MARKING

MISSOURI HIGHWAYS AND TRANSPORTATION COMMISSION
105 WEST CAPITOL
JEFFERSON CITY, MO 65102
1-888-ASK-MODOT (1-888-275-6636)

BURNS McDONNELL
9400 Ward Parkway
Kansas City, MO 64114
(816) 333-9400
Certificate of Authority
No.: 000165

c:\bmcd_lib\pw_connect\trn\d0185116\133_MOT_Phase 1_JST0017B_I100_I-70.dgn 2:00:07 PM 1/7/2026

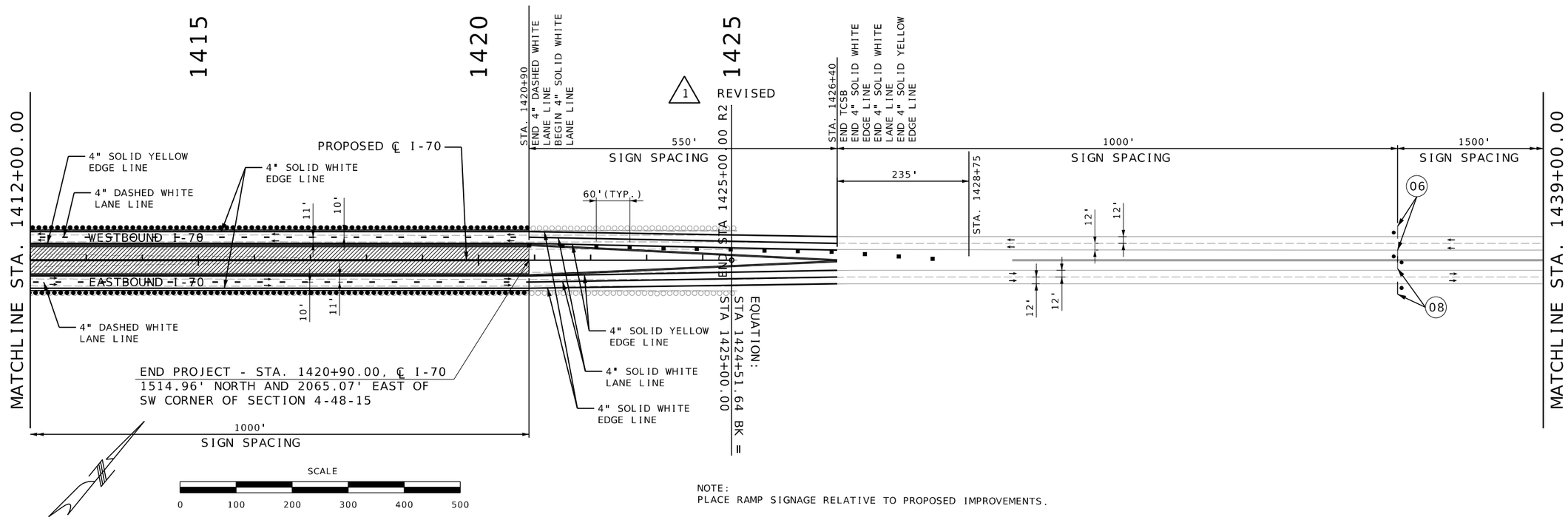

NOTE:
PLACE RAMP SIGNAGE RELATIVE TO PROPOSED IMPROVEMENTS.

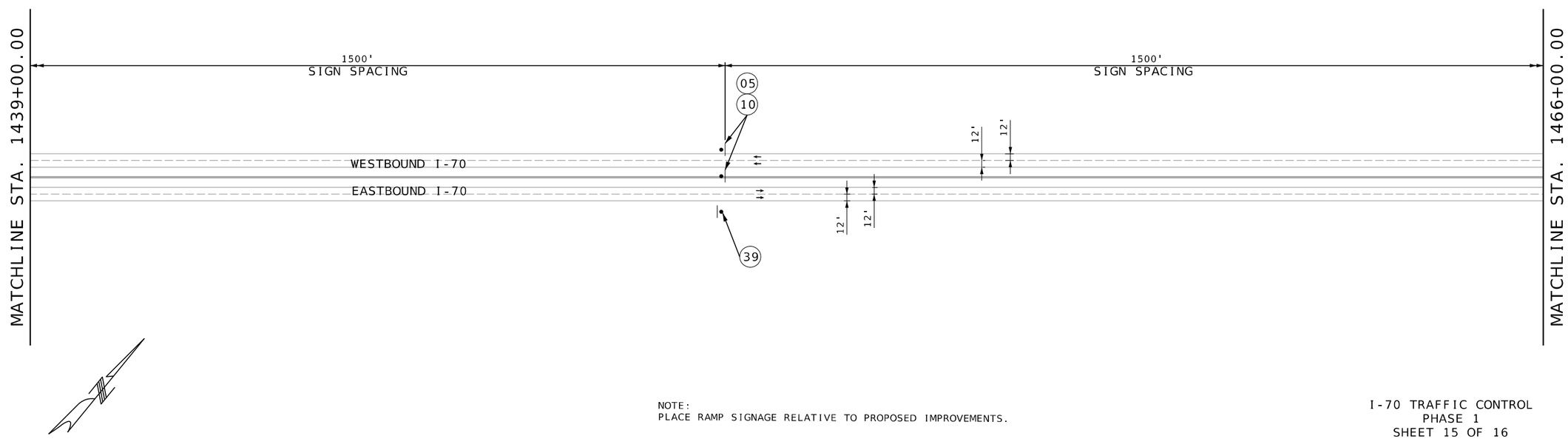

NOTE:
PLACE RAMP SIGNAGE RELATIVE TO PROPOSED IMPROVEMENTS.

I-70 TRAFFIC CONTROL
PHASE 1
SHEET 15 OF 16

STATE OF MISSOURI
RONNIE WILLIAMS
NUMBER PE-2010000879
PROFESSIONAL ENGINEER

THIS SHEET HAS BEEN SIGNED, SEALED, AND DATED ELECTRONICALLY

DATE PREPARED	
1/6/2026	
ROUTE	STATE
I-70	MO
DISTRICT	SHEET NO.
CD	134
COUNTY	
COOPER	
JOB NO.	
JST0017B	
CONTRACT ID.	
-	
PROJECT NO.	
-	
BRIDGE NO.	
-	

DATE	DESCRIPTION
01/07/26	1 FIXED OVERLAPPING TEXT

MISSOURI HIGHWAYS AND TRANSPORTATION COMMISSION
105 WEST CAPITOL
JEFFERSON CITY, MO 65102
1-888-ASK-MODOT (1-888-275-6636)

BURNS McDONNELL
9400 Ward Parkway
Kansas City, MO 64114
(816) 333-9400
Certificate of Authority
No.: 000165

c:\bmcd_lib\pw_connect\trn\d0185116\134_MOT_Phase 1_JST0017B_I100_I-70.dgn 8:43:48 PM 1/6/2026

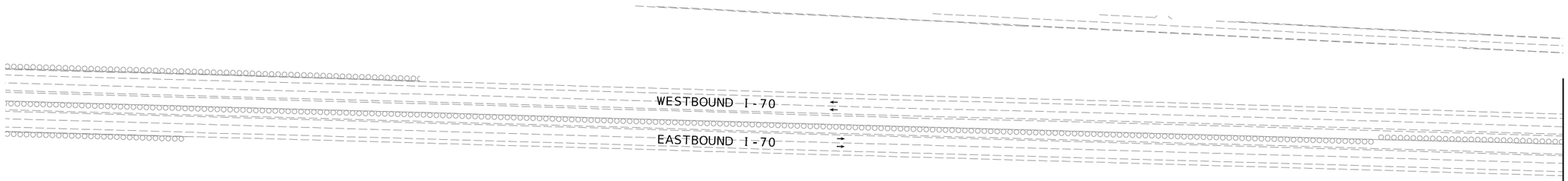

MATCHLINE STA. 683+00.00

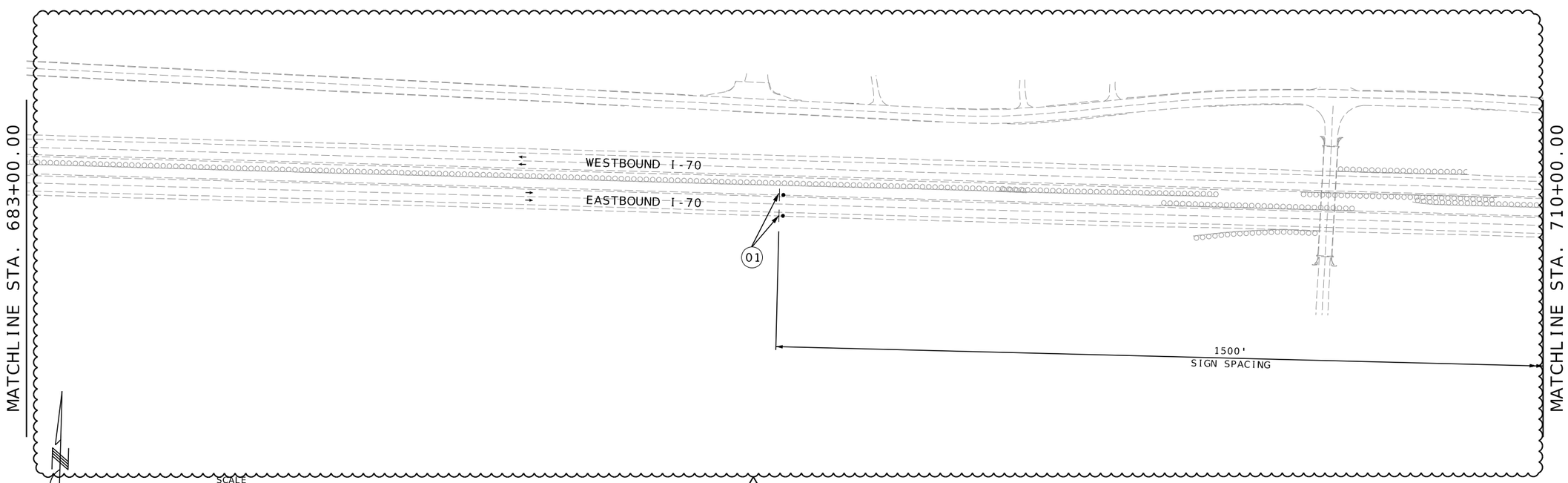

1 REVISED

I-70 TRAFFIC CONTROL
PHASE 2
SHEET 01 OF 21

STATE OF MISSOURI
RONNIE WILLIAMS
NUMBER
PE-2010000879
PROFESSIONAL ENGINEER

THIS SHEET HAS BEEN SIGNED, SEALED, AND DATED ELECTRONICALLY

DATE PREPARED	
1/7/2026	
ROUTE	STATE
I-70	MO
DISTRICT	SHEET NO.
CD	136
COUNTY	
COOPER	
JOB NO.	
JST0017B	
CONTRACT ID.	
-	
PROJECT NO.	
-	
BRIDGE NO.	
-	

DATE	DESCRIPTION
01/07/26	1 REVISED SIGN LOCATIONS

MISSOURI HIGHWAYS AND TRANSPORTATION COMMISSION
105 WEST CAPITOL
JEFFERSON CITY, MO 65102
1-888-ASK-MODOT (1-888-275-6636)

BURNS McDONNELL
9400 Ward Parkway
Kansas City, MO 64114
(816) 333-9400
Certificate of Authority
No.: 000165

c:\bmcd_lib\pw_connect\trn\d0185116\136_MOT_Phase 2_JST0017B_I100_I-70.dgn 2:07:44 PM 1/7/2026

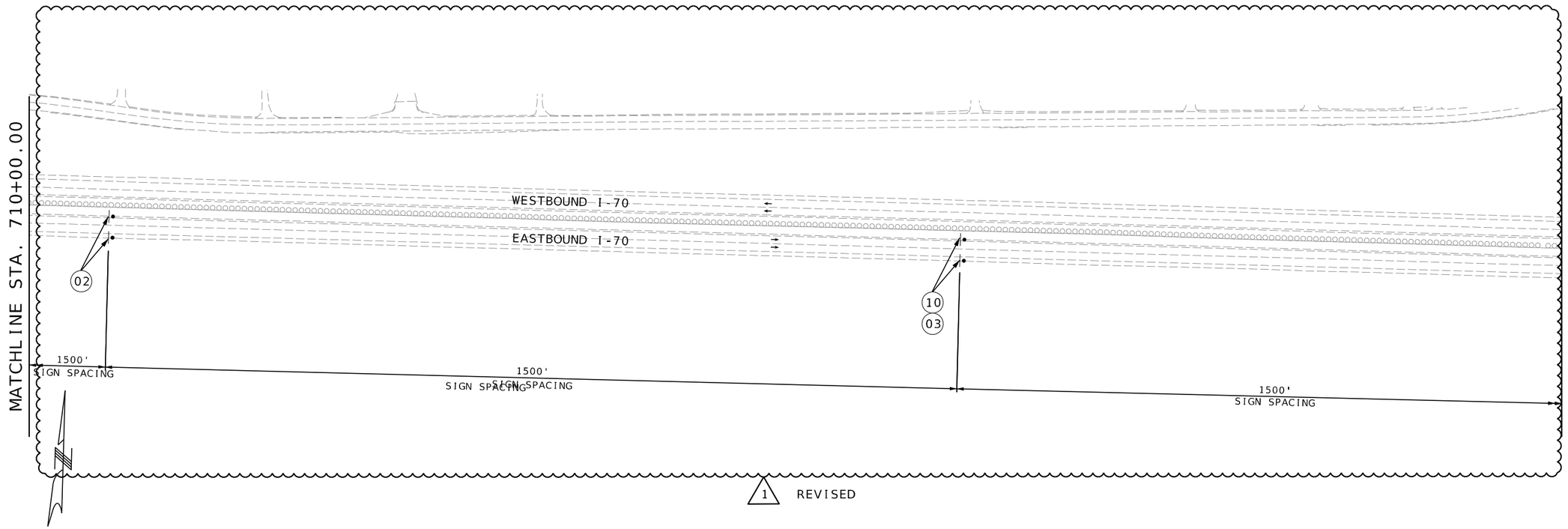

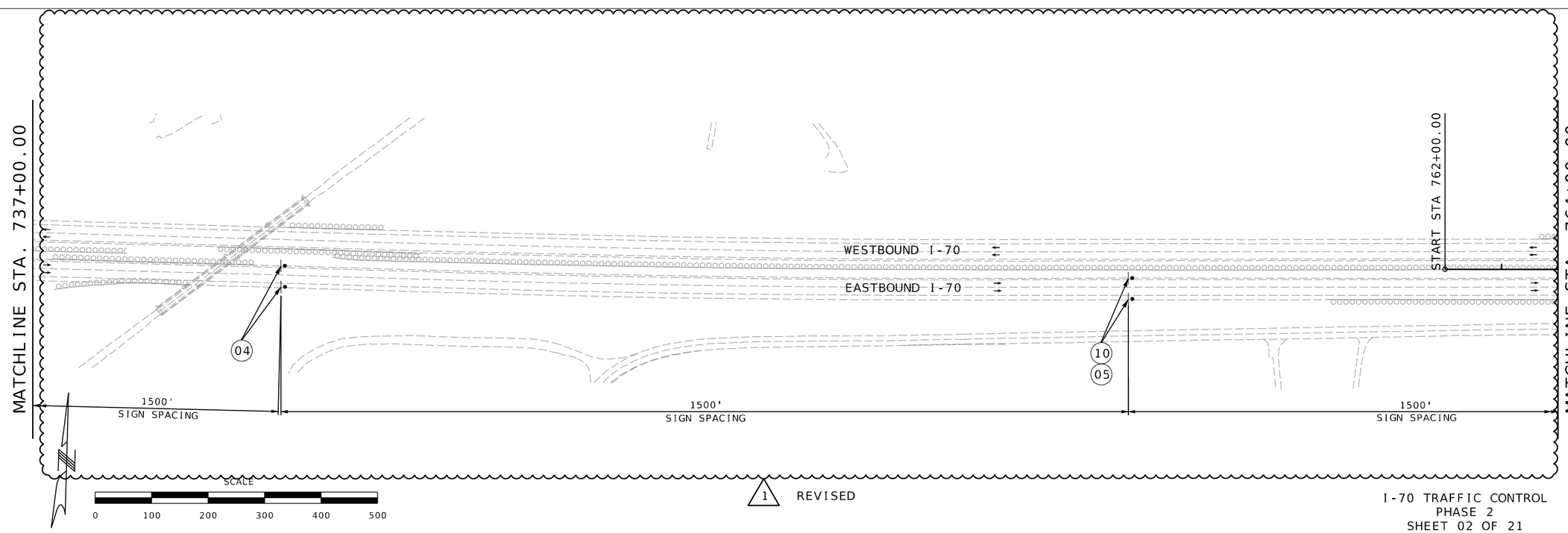

I-70 TRAFFIC CONTROL
PHASE 2
SHEET 02 OF 21

STATE OF MISSOURI
RONNIE WILLIAMS
NUMBER PE-2010000879
PROFESSIONAL ENGINEER

THIS SHEET HAS BEEN SIGNED, SEALED, AND DATED ELECTRONICALLY

DATE PREPARED	
1/7/2026	
ROUTE	STATE
I-70	MO
DISTRICT	SHEET NO.
CD	137
COUNTY	
COOPER	
JOB NO.	
JST0017B	
CONTRACT ID.	
-	
PROJECT NO.	
-	
BRIDGE NO.	
-	

DATE	DESCRIPTION
01/07/26	1 REVISED SIGN LOCATIONS

MISSOURI HIGHWAYS AND TRANSPORTATION COMMISSION
105 WEST CAPITOL
JEFFERSON CITY, MO 65102
1-888-ASK-MODOT (1-888-275-6636)

BURNS McDONNELL
9400 Ward Parkway
Kansas City, MO 64114
(816) 333-9400
Certificate of Authority
No.: 000165

c:\bmcd_lib\pw_connect\trn\d0185116\137_MOT_Phase 2_JST0017B_I100_I-70.dgn 2:13:13 PM 1/7/2026

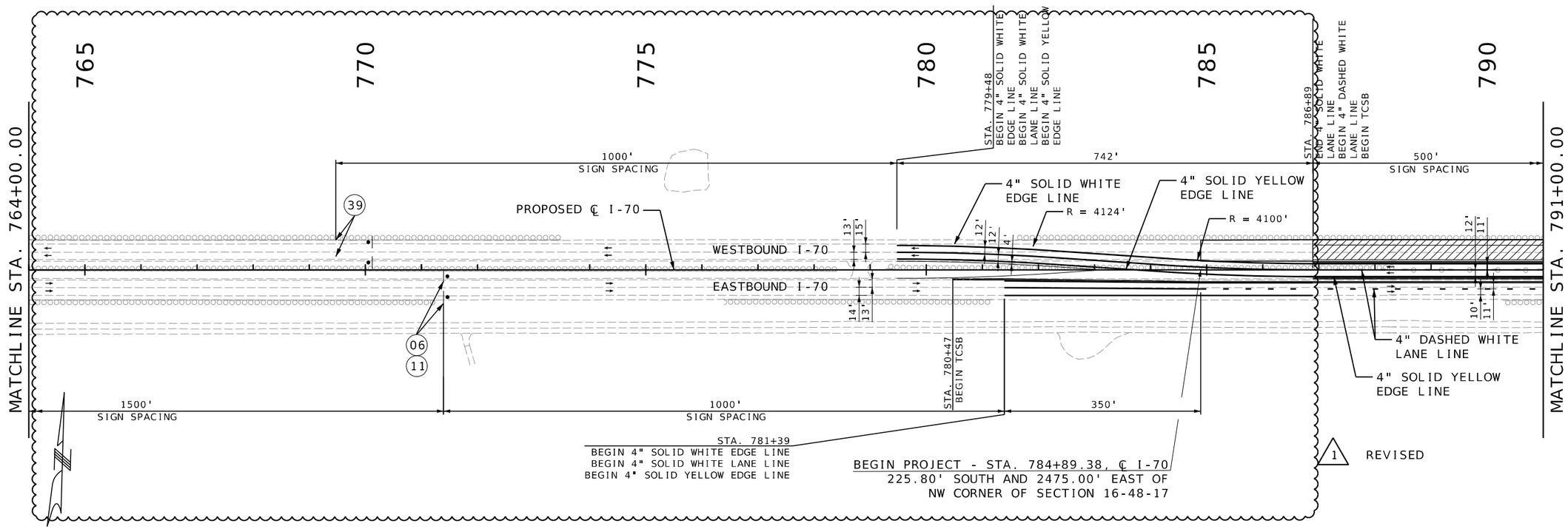

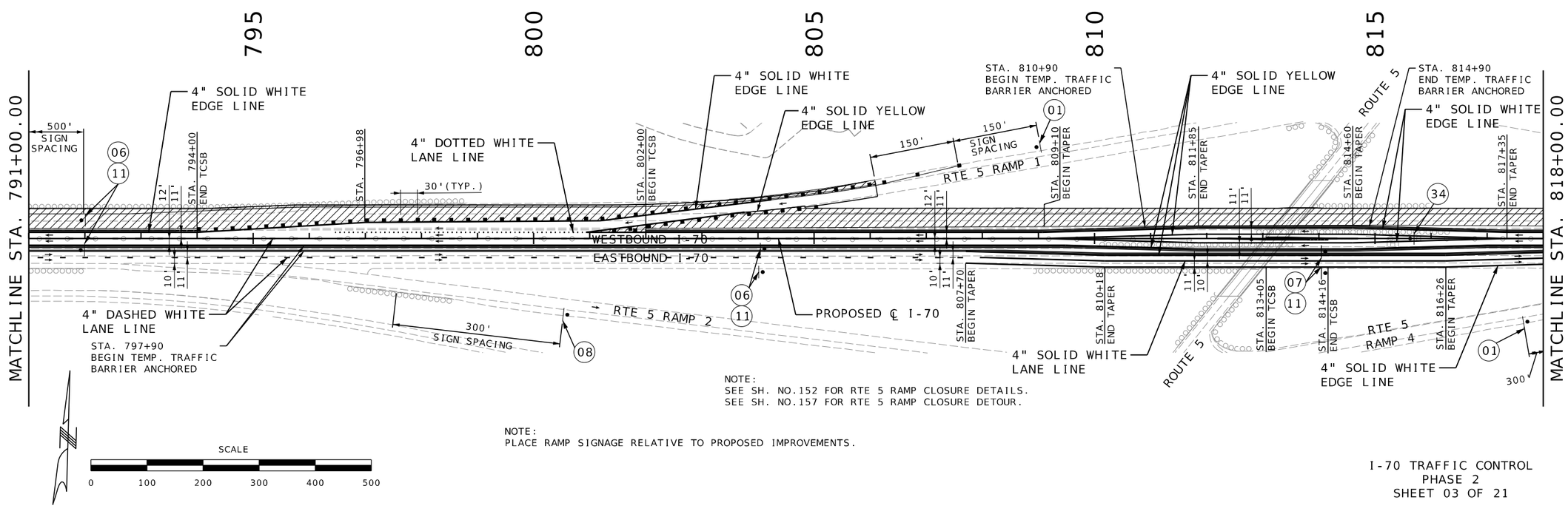

NOTE:
SEE SH. NO.152 FOR RTE 5 RAMP CLOSURE DETAILS.
SEE SH. NO.157 FOR RTE 5 RAMP CLOSURE DETOUR.

NOTE:
PLACE RAMP SIGNAGE RELATIVE TO PROPOSED IMPROVEMENTS.

SCALE
0 100 200 300 400 500

I-70 TRAFFIC CONTROL
PHASE 2
SHEET 03 OF 21

STATE OF MISSOURI
RONNIE WILLIAMS
NUMBER PE-2010000879
PROFESSIONAL ENGINEER

THIS SHEET HAS BEEN SIGNED, SEALED, AND DATED ELECTRONICALLY

DATE PREPARED	1/7/2026
ROUTE	I-70
STATE	MO
DISTRICT	CD
SHEET NO.	138
COUNTY	COOPER
JOB NO.	JST0017B
CONTRACT ID.	-
PROJECT NO.	-
BRIDGE NO.	-

DATE	DESCRIPTION
01/07/26	1 REVISED LAYOUT & PAVEMENT MARKING

MISSOURI HIGHWAYS AND TRANSPORTATION COMMISSION
105 WEST CAPITOL
JEFFERSON CITY, MO 65102
1-888-ASK-MODOT (1-888-275-6636)

BURNS McDONNELL
9400 Ward Parkway
Kansas City, MO 64114
(816) 333-9400
Certificate of Authority
No.: 000165

c:\bmcd_lib\pw_connect\trn\d0185116\138_MOT_Phase 2_JST0017B_I100_I-70.dgn 3:23:00 PM 1/7/2026

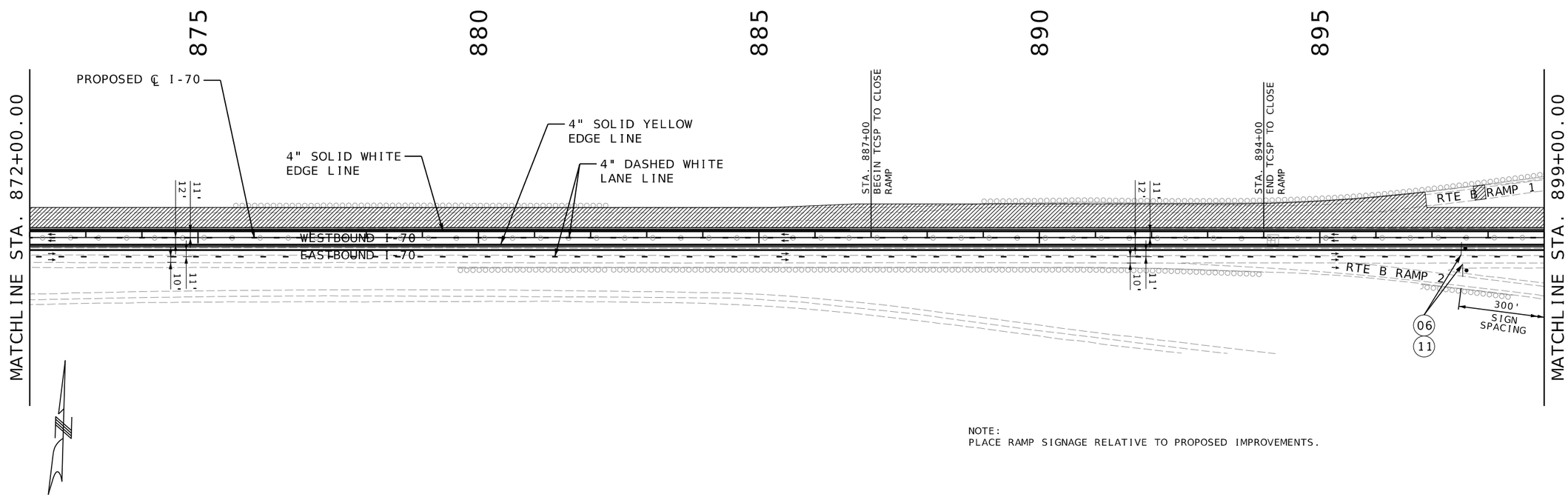

NOTE:
PLACE RAMP SIGNAGE RELATIVE TO PROPOSED IMPROVEMENTS.

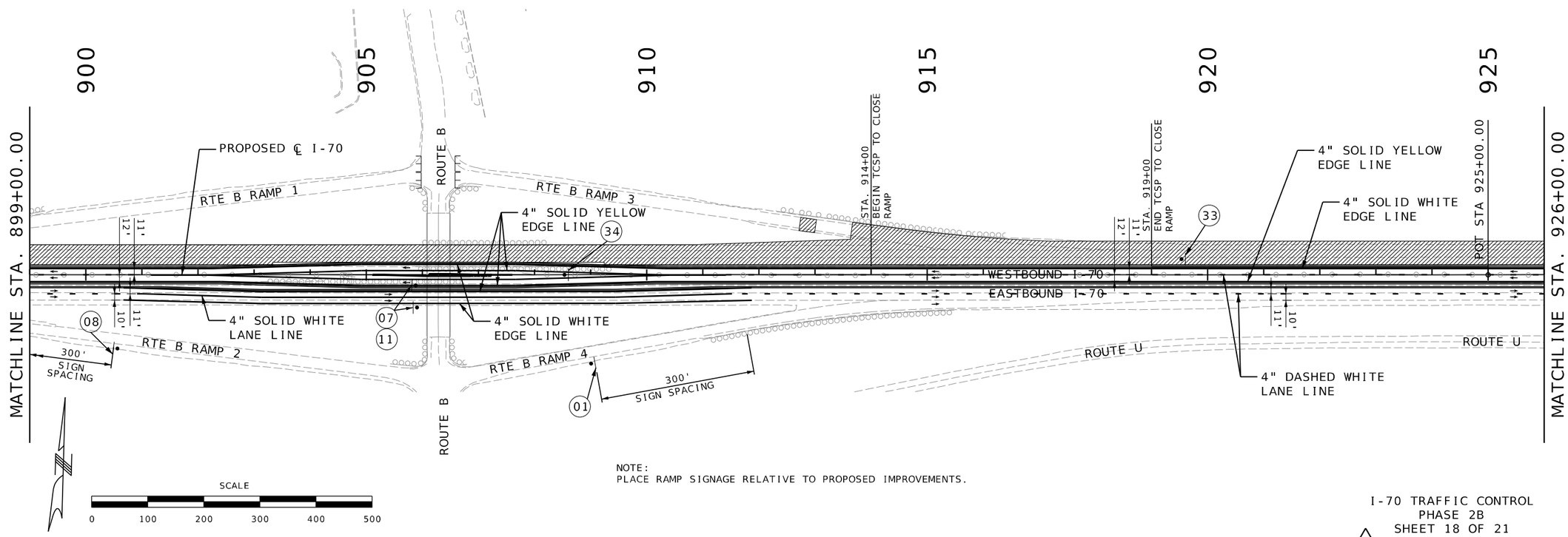

NOTE:
PLACE RAMP SIGNAGE RELATIVE TO PROPOSED IMPROVEMENTS.

I-70 TRAFFIC CONTROL
PHASE 2B
SHEET 18 OF 21
1 CORRECTED SHEET NUMBER

STATE OF MISSOURI
RONNIE WILLIAMS
NUMBER PE-2010000879
PROFESSIONAL ENGINEER

THIS SHEET HAS BEEN SIGNED, SEALED, AND DATED ELECTRONICALLY

DATE PREPARED	
1/6/2026	
ROUTE	STATE
I-70	MO
DISTRICT	SHEET NO.
CD	153
COUNTY	
COOPER	
JOB NO.	
JST0017B	
CONTRACT ID.	
-	
PROJECT NO.	
-	
BRIDGE NO.	
-	

DATE	DESCRIPTION
01/07/26	1 CORRECTED SHEET NUMBER

MISSOURI HIGHWAYS AND TRANSPORTATION COMMISSION
105 WEST CAPITOL
JEFFERSON CITY, MO 65102
1-888-ASK-MODOT (1-888-275-6636)

BURNS McDONNELL
9400 Ward Parkway
Kansas City, MO 64114
(816) 333-9400
Certificate of Authority
No.: 000165

c:\bmcd_lib\pw_connect\trn\d0185116\153_TC_JST0017B_Phase 2B-1.dgn 8:50:31 PM 1/6/2026

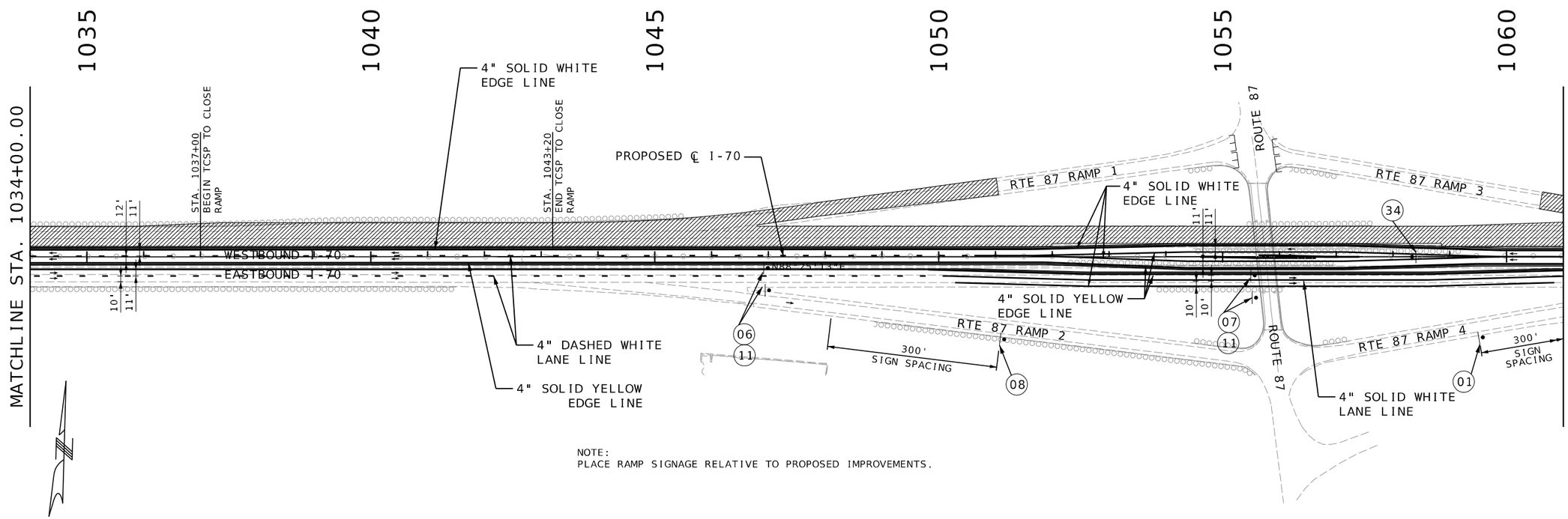

NOTE:
PLACE RAMP SIGNAGE RELATIVE TO PROPOSED IMPROVEMENTS.

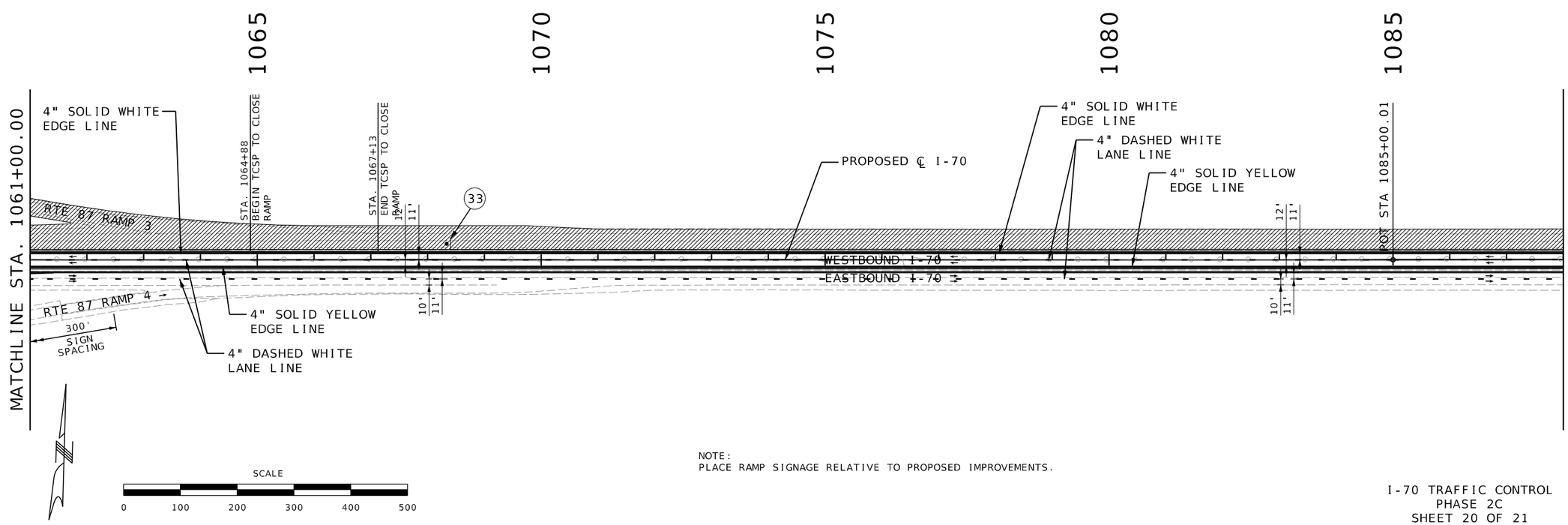

NOTE:
PLACE RAMP SIGNAGE RELATIVE TO PROPOSED IMPROVEMENTS.

SCALE
0 100 200 300 400 500

I-70 TRAFFIC CONTROL
PHASE 2C
SHEET 20 OF 21

STATE OF MISSOURI
RONNIE WILLIAMS
NUMBER PE-2010000879
PROFESSIONAL ENGINEER

THIS SHEET HAS BEEN SIGNED, SEALED, AND DATED ELECTRONICALLY

DATE PREPARED	
1/7/2026	
ROUTE	STATE
I-70	MO
DISTRICT	SHEET NO.
CD	155
COUNTY	
COOPER	
JOB NO.	
JST0017B	
CONTRACT ID.	
-	
PROJECT NO.	
-	
BRIDGE NO.	
-	

DATE	DESCRIPTION
01/07/26	1 DELETED ERRANT LINE

MISSOURI HIGHWAYS AND TRANSPORTATION COMMISSION
105 WEST CAPITOL
JEFFERSON CITY, MO 65102
1-888-ASK-MODOT (1-888-275-6636)

BURNS McDONNELL
9400 Ward Parkway
Kansas City, MO 64114
(816) 333-9400
Certificate of Authority
No.: 000165

c:\bmcd_lib\pw_connect\trn\d0185116\155_TC_JST0017B_Phase 2C.dgn 7:34:59 AM 1/7/2026

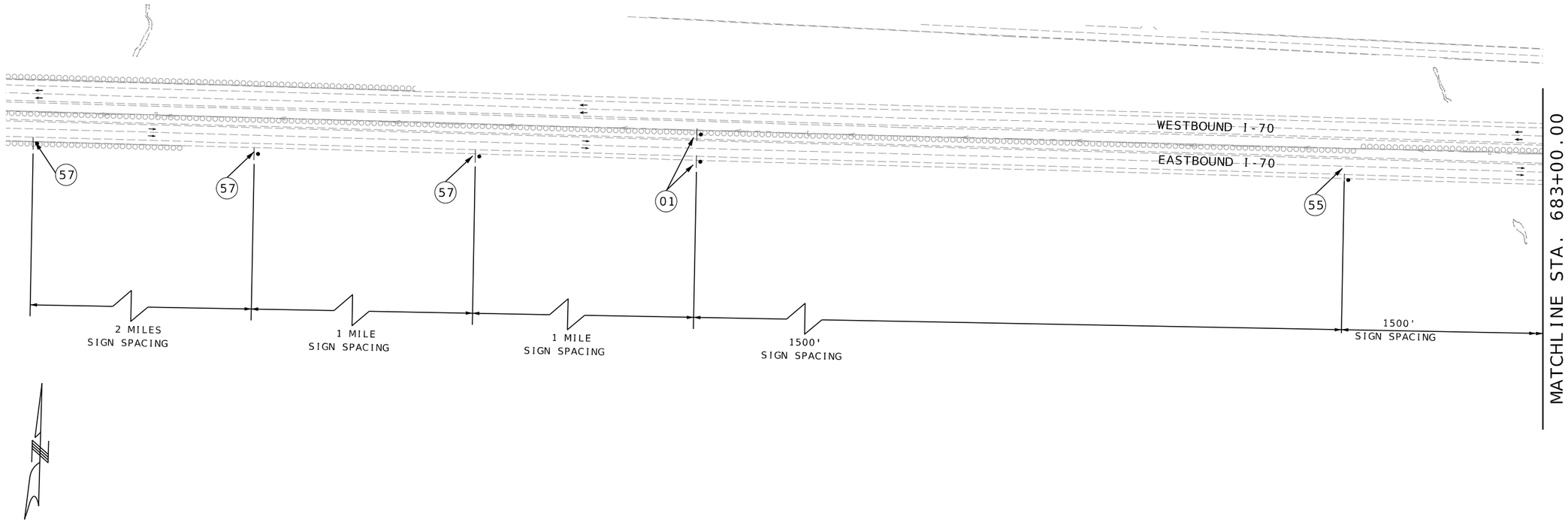

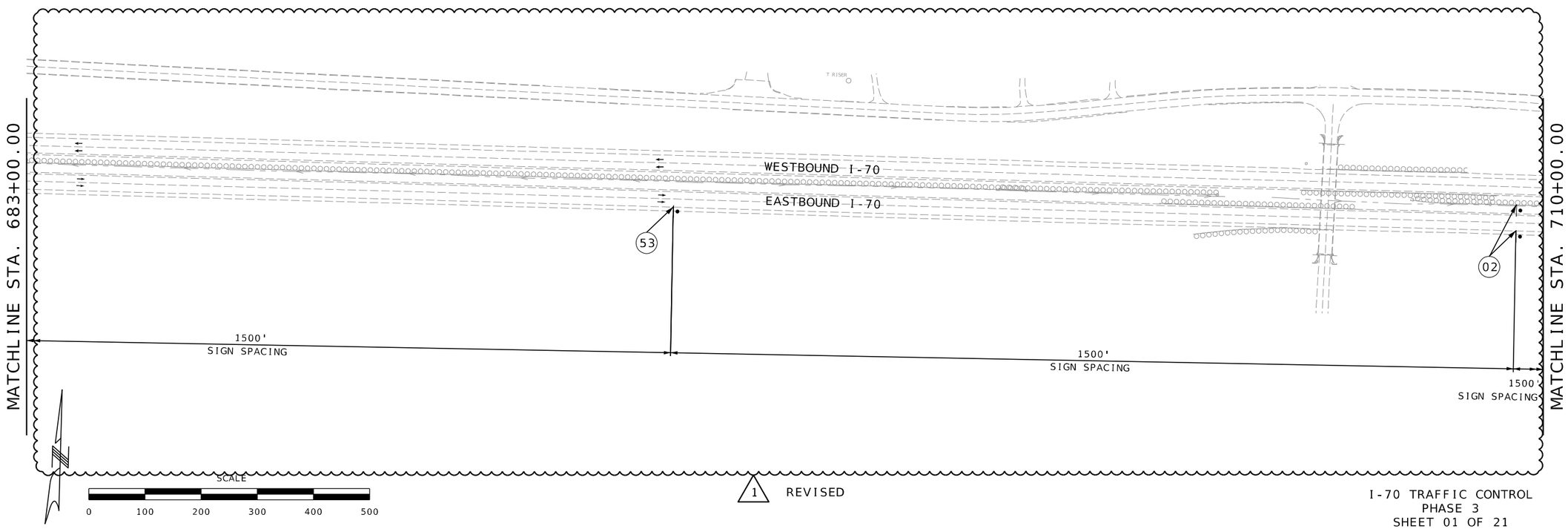

1 REVISED

I-70 TRAFFIC CONTROL
PHASE 3
SHEET 01 OF 21

STATE OF MISSOURI
RONNIE WILLIAMS
NUMBER PE-2010000879
PROFESSIONAL ENGINEER

THIS SHEET HAS BEEN SIGNED, SEALED, AND DATED ELECTRONICALLY

DATE PREPARED	
1/7/2026	
ROUTE	STATE
I-70	MO
DISTRICT	SHEET NO.
CD	161
COUNTY	
COOPER	
JOB NO.	
JST0017B	
CONTRACT ID.	
-	
PROJECT NO.	
-	
BRIDGE NO.	
-	

DATE	DESCRIPTION
01/07/26	1 REVISED SIGN LOCATIONS

MISSOURI HIGHWAYS AND TRANSPORTATION COMMISSION
105 WEST CAPITOL
JEFFERSON CITY, MO 65102
1-888-ASK-MODOT (1-888-275-6636)

BURNS McDONNELL
9400 Ward Parkway
Kansas City, MO 64114
(816) 333-9400
Certificate of Authority
No.: 000165

c:\bmcd_lib\pw_connect\trn\d0185116\161_MOT_Phase 3_JST0017B_I100_I-70.dgn 2:25:36 PM 1/7/2026

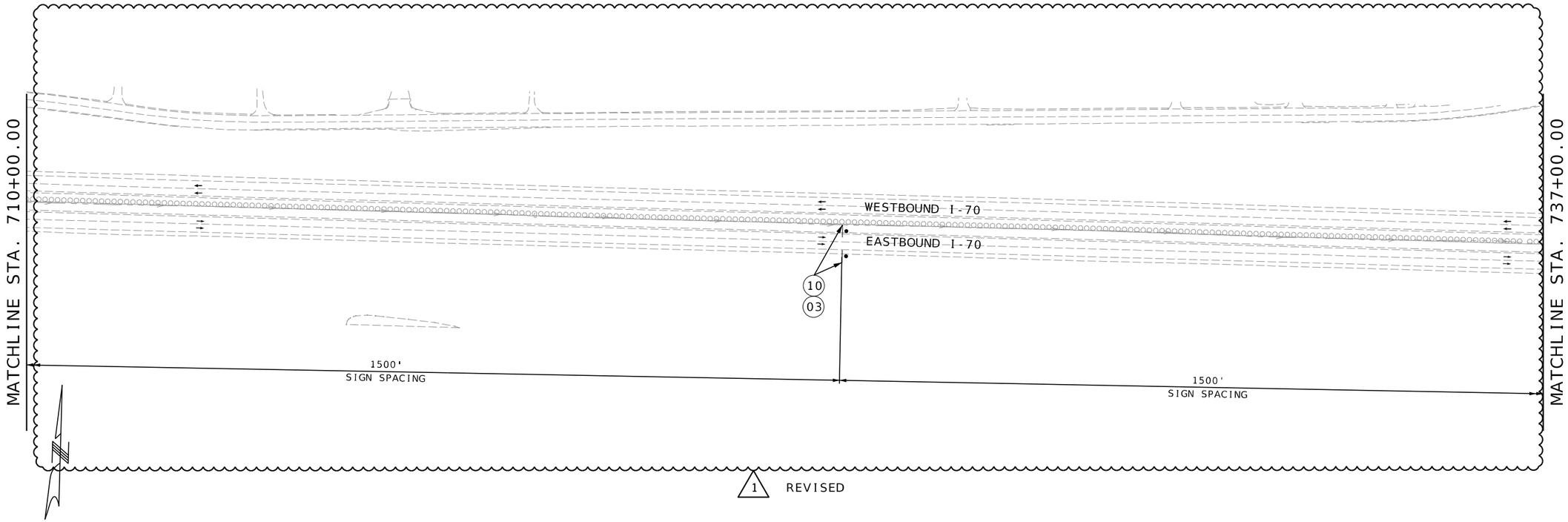

1 REVISED

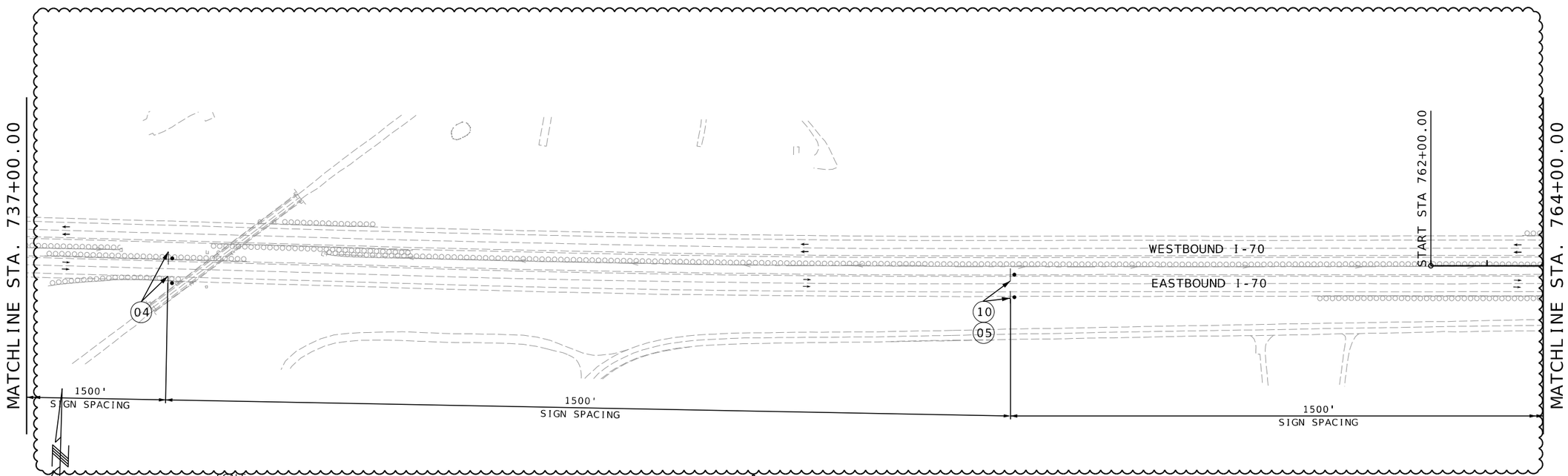

1 REVISED

I-70 TRAFFIC CONTROL
PHASE 3
SHEET 02 OF 21

STATE OF MISSOURI
RONNIE WILLIAMS
NUMBER PE-2010000879
PROFESSIONAL ENGINEER

THIS SHEET HAS BEEN SIGNED, SEALED, AND DATED ELECTRONICALLY

DATE PREPARED	
1/7/2026	
ROUTE	STATE
I-70	MO
DISTRICT	SHEET NO.
CD	162
COUNTY	
COOPER	
JOB NO.	
JST0017B	
CONTRACT ID.	
-	
PROJECT NO.	
-	
BRIDGE NO.	
-	

DATE	DESCRIPTION
01/07/26	1 REVISED SIGN LOCATIONS

MISSOURI HIGHWAYS AND TRANSPORTATION COMMISSION
105 WEST CAPITOL
JEFFERSON CITY, MO 65102
1-888-ASK-MODOT (1-888-275-6636)

BURNS McDONNELL
9400 Ward Parkway
Kansas City, MO 64114
(816) 333-9400
Certificate of Authority
No.: 000165

c:\bmcd_lib\pw_connect\trn\d0185116\162_MOT_Phase 3_JST0017B_I100_I-70.dgn 2:29:03 PM 1/7/2026

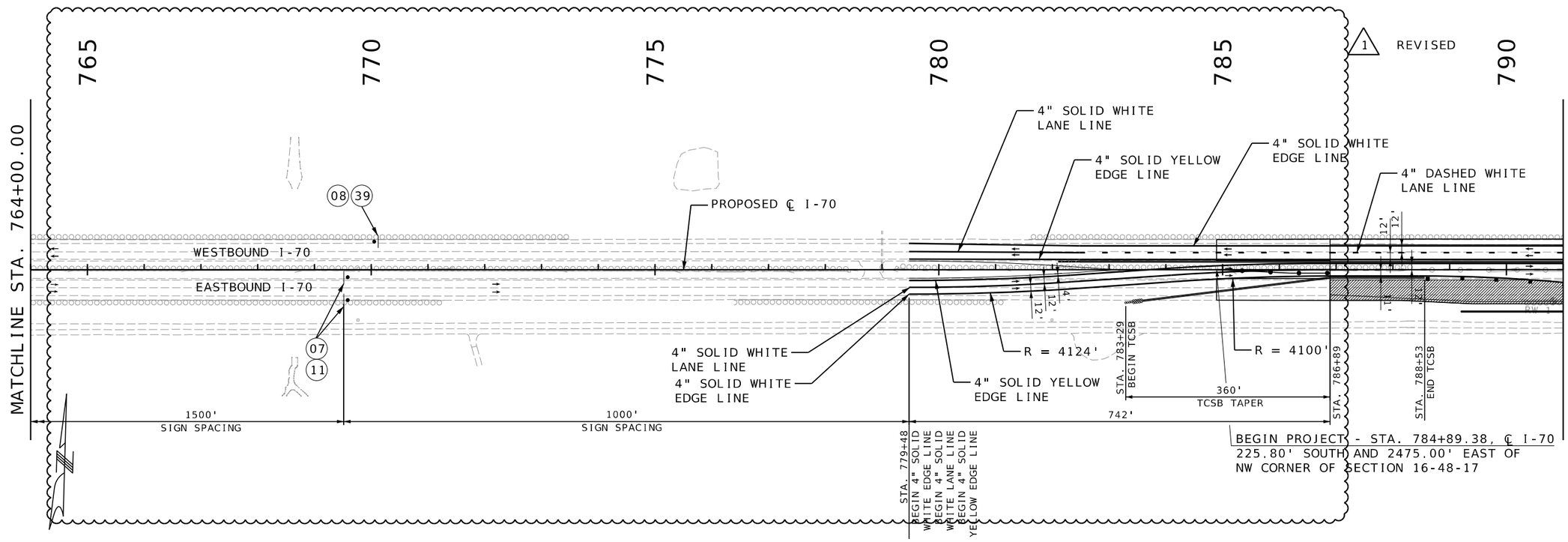

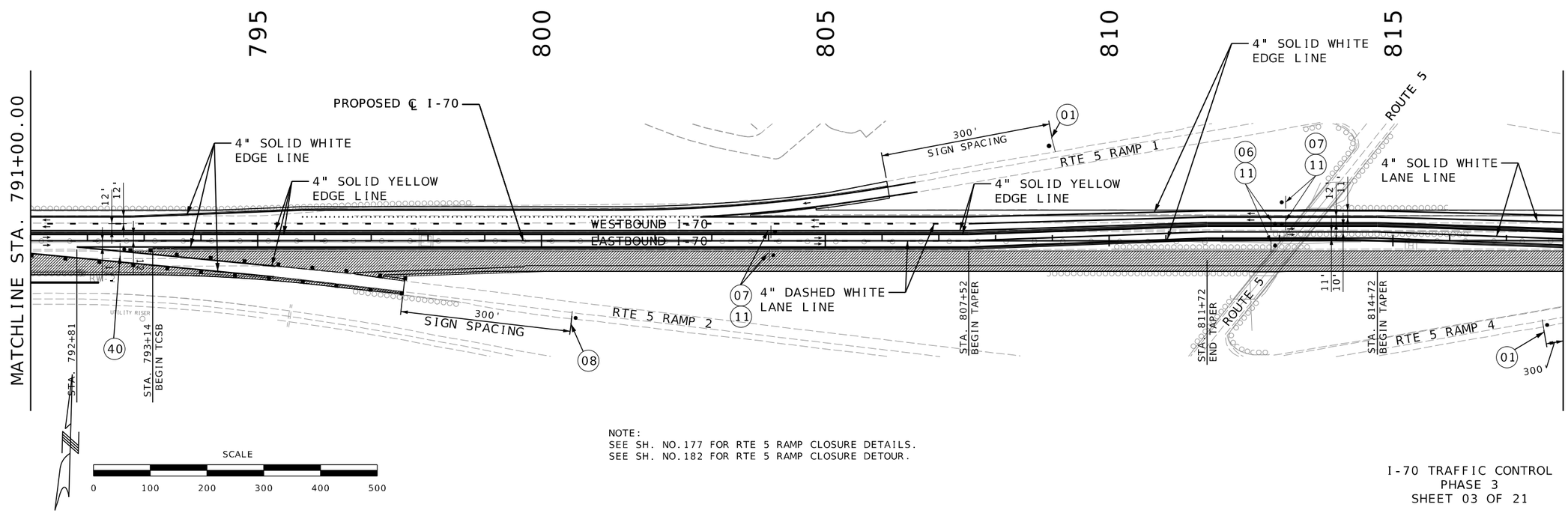

NOTE:
SEE SH. NO.177 FOR RTE 5 RAMP CLOSURE DETAILS.
SEE SH. NO.182 FOR RTE 5 RAMP CLOSURE DETOUR.

SCALE
0 100 200 300 400 500

I-70 TRAFFIC CONTROL
PHASE 3
SHEET 03 OF 21

STATE OF MISSOURI
RONNIE WILLIAMS
NUMBER PE-2010000879
PROFESSIONAL ENGINEER

THIS SHEET HAS BEEN SIGNED, SEALED, AND DATED ELECTRONICALLY

DATE PREPARED	
1/7/2026	
ROUTE	STATE
I-70	MO
DISTRICT	SHEET NO.
CD	163
COUNTY	
COOPER	
JOB NO.	
JST0017B	
CONTRACT ID.	
-	
PROJECT NO.	
-	
BRIDGE NO.	
-	

DATE	DESCRIPTION
01/07/26	1 REVISED LAYOUT & PAVEMENT MARKING

MISSOURI HIGHWAYS AND TRANSPORTATION COMMISSION
105 WEST CAPITOL
JEFFERSON CITY, MO 65102
1-888-ASK-MODOT (1-888-275-6636)

BURNS McDONNELL
9400 Ward Parkway
Kansas City, MO 64114
(816) 333-9400
Certificate of Authority
No.: 000165

c:\bmcd_lib\pw_connect\trn\d0185116\163_MOT_Phase 3_JST0017B_I100_I-70.dgn 3:19:07 PM 1/7/2026

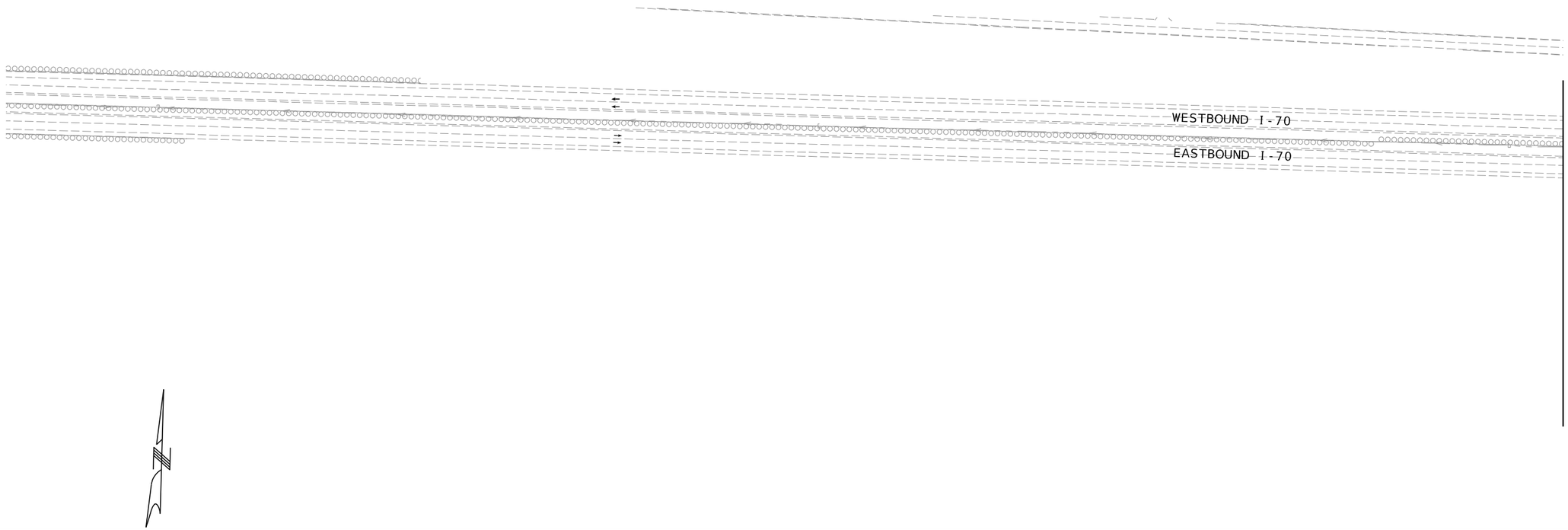

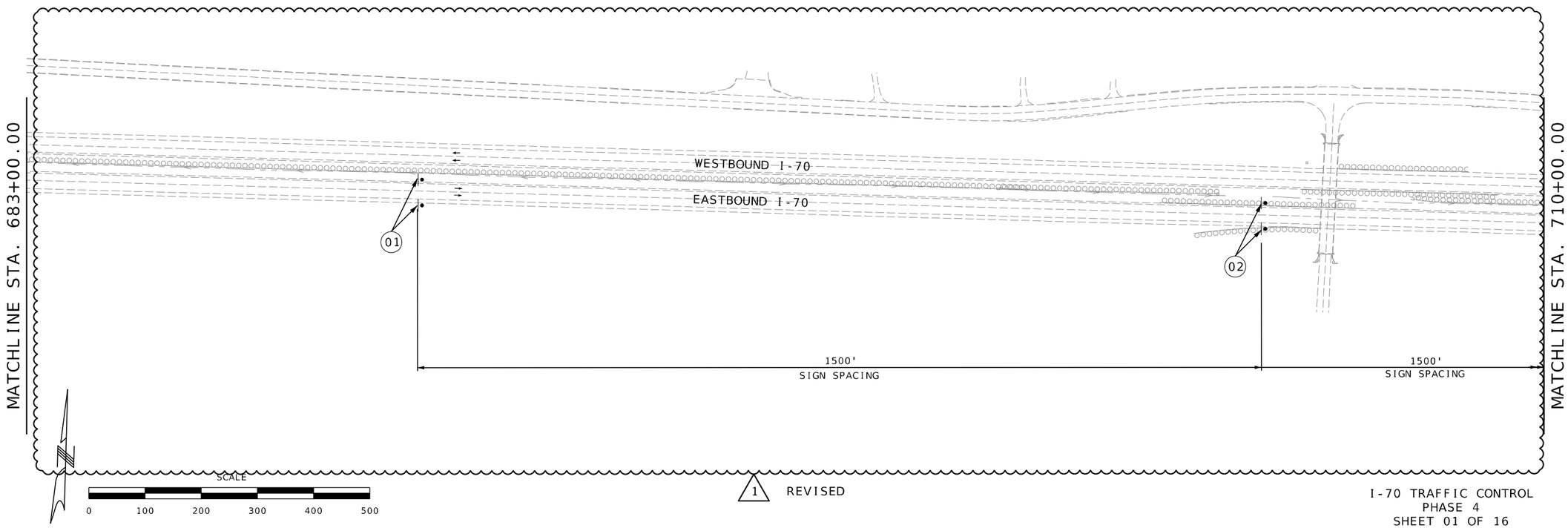

1 REVISED

I-70 TRAFFIC CONTROL
PHASE 4
SHEET 01 OF 16

STATE OF MISSOURI
RONNIE WILLIAMS
NUMBER PE-2010000879
PROFESSIONAL ENGINEER

THIS SHEET HAS BEEN SIGNED, SEALED, AND DATED ELECTRONICALLY

DATE PREPARED	
1/7/2026	
ROUTE	STATE
I-70	MO
DISTRICT	SHEET NO.
CD	186
COUNTY	
COOPER	
JOB NO.	
JST0017B	
CONTRACT ID.	
-	
PROJECT NO.	
-	
BRIDGE NO.	
-	

DATE	DESCRIPTION
01/07/26	1 REVISED SIGN LOCATIONS

MISSOURI HIGHWAYS AND TRANSPORTATION COMMISSION
105 WEST CAPITOL
JEFFERSON CITY, MO 65102
1-888-ASK-MODOT (1-888-275-6636)

BURNS McDONNELL
9400 Ward Parkway
Kansas City, MO 64114
(816) 333-9400
Certificate of Authority
No.: 000165

c:\bmcd_lib\pw_connect\trn\d0185116\186_MOT_Phase 4_JST0017B_I100_I-70.dgn 2:39:27 PM 1/7/2026

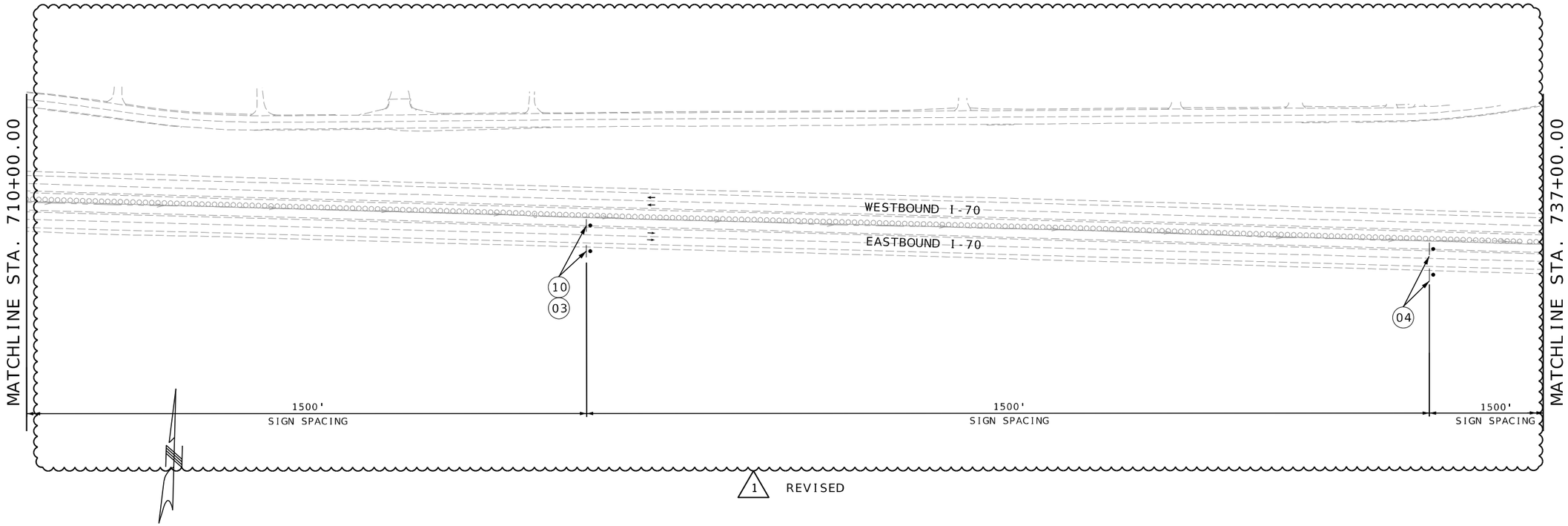

1 REVISED

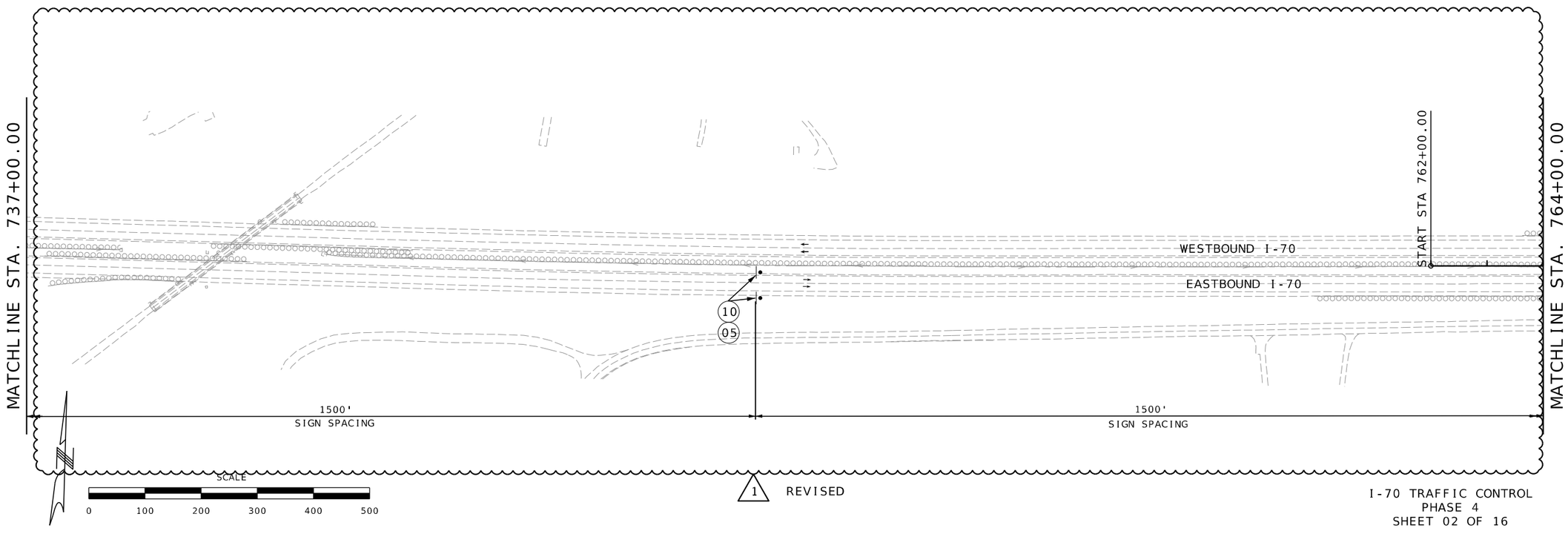

1 REVISED

I-70 TRAFFIC CONTROL
PHASE 4
SHEET 02 OF 16

STATE OF MISSOURI
RONNIE WILLIAMS
NUMBER PE-2010000879
PROFESSIONAL ENGINEER

THIS SHEET HAS BEEN SIGNED, SEALED, AND DATED ELECTRONICALLY

DATE PREPARED	
1/7/2026	
ROUTE	STATE
I-70	MO
DISTRICT	SHEET NO.
CD	187
COUNTY	
COOPER	
JOB NO.	
JST0017B	
CONTRACT ID.	
-	
PROJECT NO.	
-	
BRIDGE NO.	
-	

DATE	DESCRIPTION
01/07/26	1 REVISED SIGN LOCATIONS

MISSOURI HIGHWAYS AND TRANSPORTATION COMMISSION
105 WEST CAPITOL
JEFFERSON CITY, MO 65102
1-888-ASK-MODOT (1-888-275-6636)

BURNS McDONNELL
9400 Ward Parkway
Kansas City, MO 64114
(816) 333-9400
Certificate of Authority
No.: 000165

c:\bmcd_lib\pw_connect\trn\d0185116\187_MOT_Phase 4_JST0017B_I100_I-70.dgn 2:43:17 PM 1/7/2026

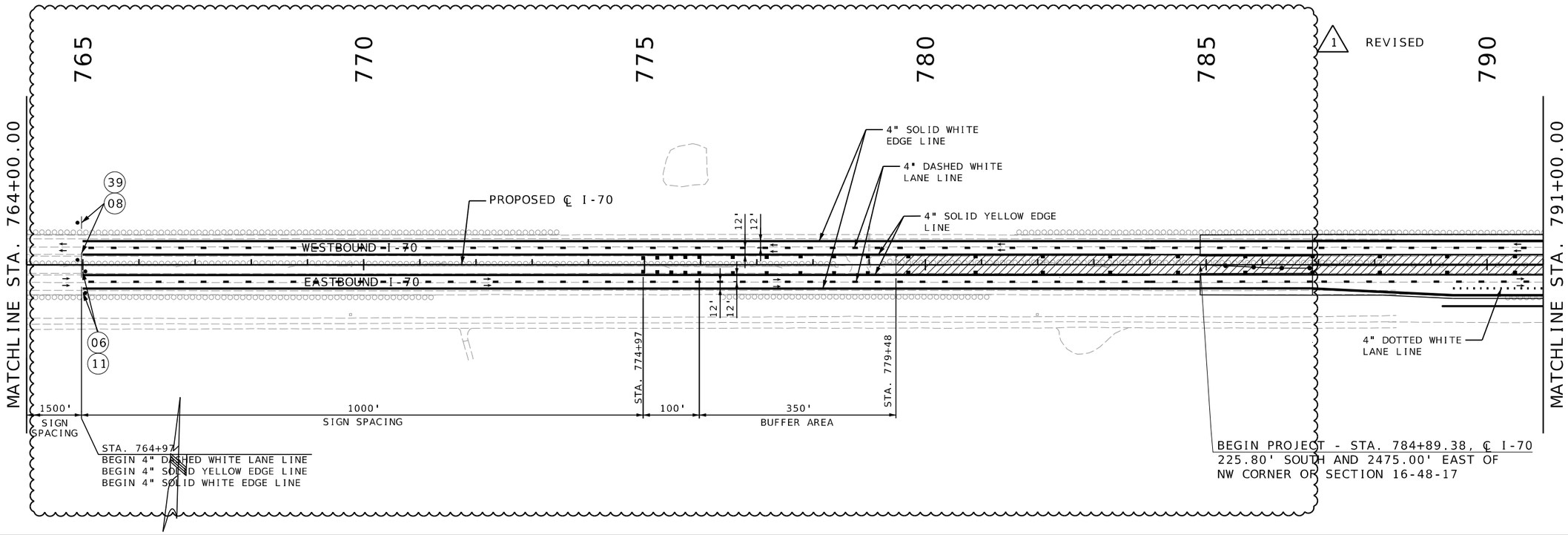

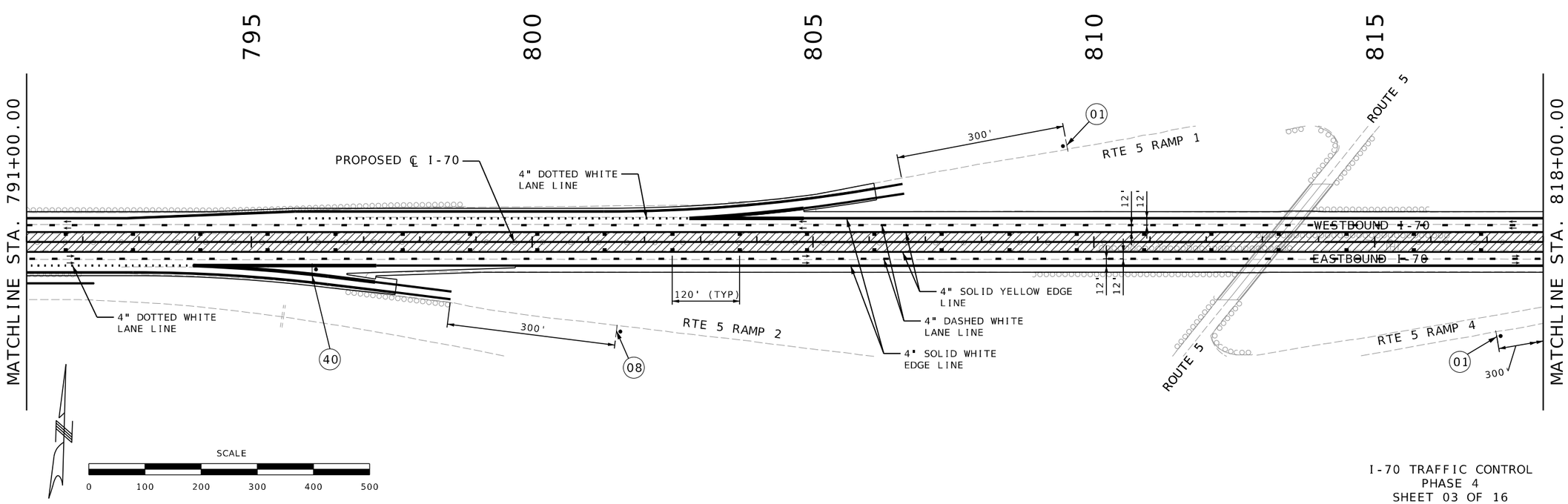

I-70 TRAFFIC CONTROL
PHASE 4
SHEET 03 OF 16

STATE OF MISSOURI
RONNIE WILLIAMS
NUMBER PE-2010000879
PROFESSIONAL ENGINEER

THIS SHEET HAS BEEN SIGNED, SEALED, AND DATED ELECTRONICALLY

DATE PREPARED	
1/7/2026	
ROUTE	STATE
I-70	MO
DISTRICT	SHEET NO.
CD	188
COUNTY	
COOPER	
JOB NO.	
JST0017B	
CONTRACT ID.	
-	
PROJECT NO.	
-	
BRIDGE NO.	
-	

DATE	DESCRIPTION
01/07/26	1 REVISED LAYOUT & PAVEMENT MARKING

MISSOURI HIGHWAYS AND TRANSPORTATION COMMISSION
105 WEST CAPITOL
JEFFERSON CITY, MO 65102
1-888-ASK-MODOT (1-888-275-6636)

BURNS McDONNELL
9400 Ward Parkway
Kansas City, MO 64114
(816) 333-9400
Certificate of Authority
No.: 000165

c:\bmcd_lib\pw_connect\trn\d0185116\188_MOT_Phase 4_JST0017B_I100_I-70.dgn 2:46:39 PM 1/7/2026

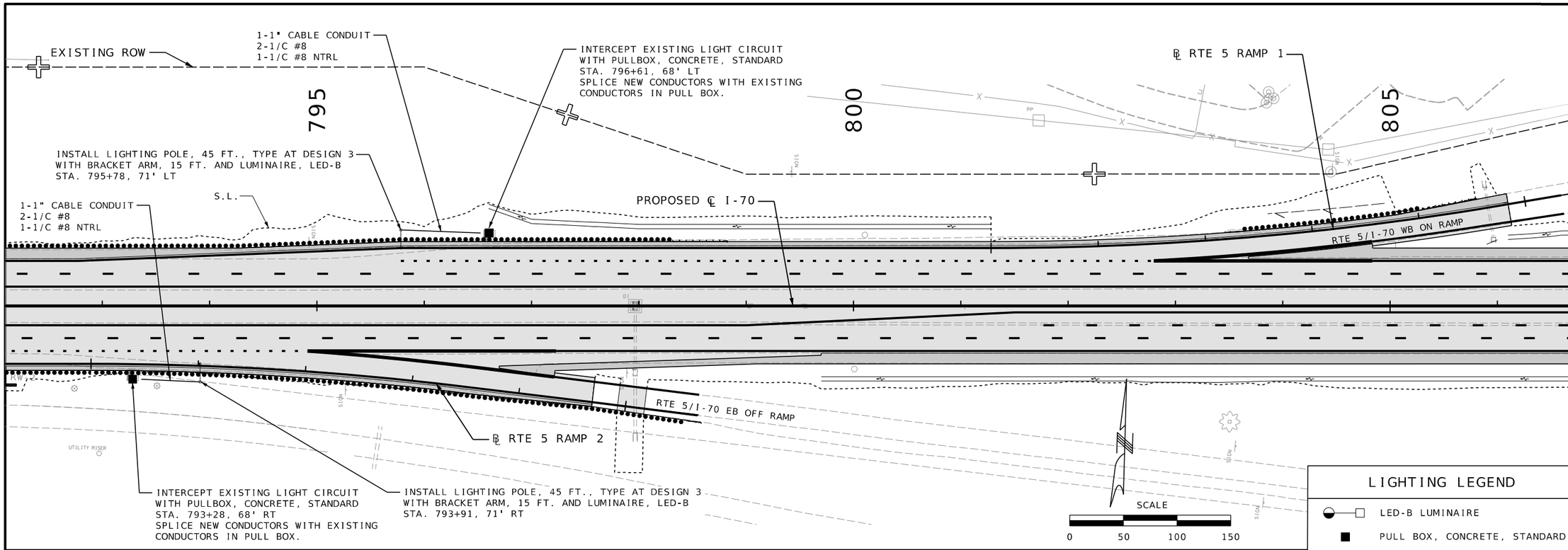

LIGHTING GENERAL NOTES:

1. LIGHTING SYSTEM MODIFICATIONS ARE BASED ON AVAILABLE INFORMATION AND MAY NOT NECESSARILY REPRESENT THE ACTUAL FIELD CONDITIONS. WHERE FIELD CONDITIONS ARE DISCOVERED BY THE CONTRACTOR TO VARY FROM THE LIGHTING PLAN MODIFICATIONS HEREIN, THE CONTRACTOR SHALL NOTIFY THE ENGINEER PRIOR TO PERFORMING THE CONFLICTING WORK SUCH THAT AN AGREEABLE SOLUTION CAN BE DETERMINED.
2. THE LIGHTING SYSTEM SHALL BE COMPLETE AND THE CONTRACTOR SHALL FURNISH AND INSTALL ALL EQUIPMENT AND MATERIALS NECESSARY FOR THE SATISFACTORY OPERATION OF ALL ELECTRICAL APPARATUS AND FOR COMPLETE OPERATION OF THE LIGHTING SYSTEM WHETHER SPECIFICALLY DETAILED/QUANTIFIED OR NOT.
3. THE LIGHTING SYSTEM SHALL BE CONSTRUCTED IN COMPLIANCE WITH THE LATEST VERSION OF THE NEC.
4. WORK ASSOCIATED WITH ROUTING EXISTING LIGHTING CONDUCTORS INTO NEW OR EXISTING PULL BOXES AND/OR NEW CONDUITS IS CONSIDERED INCIDENTAL TO THE CONDUIT PAY ITEM. WORK ASSOCIATED WITH ROUTING NEW LIGHTING CONDUCTORS INTO EXISTING CONDUITS AND/OR NEW OR EXISTING PULL BOXES IS CONSIDERED INCIDENTAL TO THE CONDUCTORS PAY ITEM.
5. EXISTING STREET LIGHT AND FOUNDATION SHALL BE REMOVED AND SALVAGED BY THE CONTRACTOR. THE CONTRACTOR SHALL USE IN PLACE THE EXISTING LIGHTING CONDUCTORS AND INTERCEPT WITH A PULL BOX AT THE LOCATION OF THE REMOVED STREET LIGHT POLE.

STATE OF MISSOURI
RONNIE WILLIAMS
NUMBER PE-2010000879
PROFESSIONAL ENGINEER

THIS SHEET HAS BEEN SIGNED, SEALED, AND DATED ELECTRONICALLY

DATE PREPARED	
1/6/2026	
ROUTE	STATE
I-70	MO
DISTRICT	SHEET NO.
CD	251
COUNTY	
COOPER	
JOB NO.	
JST0017B	
CONTRACT ID.	
-	
PROJECT NO.	
-	
BRIDGE NO.	
-	

DATE	DESCRIPTION
01/07/26	1 ADDED NOTE 5

MISSOURI HIGHWAYS AND TRANSPORTATION COMMISSION
105 WEST CAPITOL
JEFFERSON CITY, MO 65102
1-888-ASK-MODOT (1-888-275-6636)

BURNS McDONNELL
9400 Ward Parkway
Kansas City, MO 64114
(816) 333-9400
Certificate of Authority
No.: 000165

LIGHTING PLAN
I-70 & ROUTE 5 INTERCHANGE
SHEET 01 OF 08

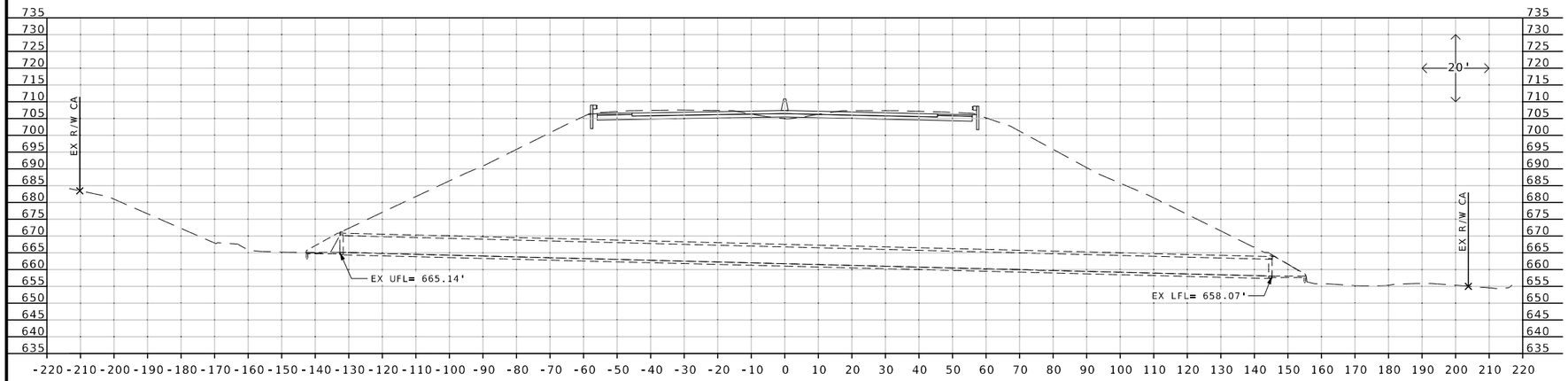

CULVERT 33 (STA 1345+34.79)

℄ I-70
STA 1345+00.61 128.26' LT TO
STA 1345+72.24 140.36' RT
278' x 5' x 5' RCB @ 2.54%
U.I.P.

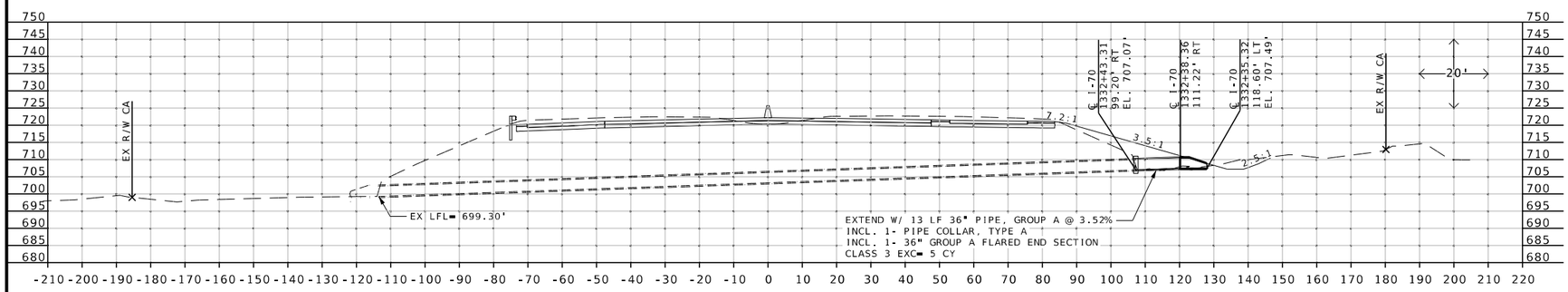

CULVERT 32 (STA 1332+84.15)

℄ I-70
STA 1332+43.31 99.20' LT TO
STA 1333+27.37 104.91' RT
221' x 36" RCP @ 3.52%

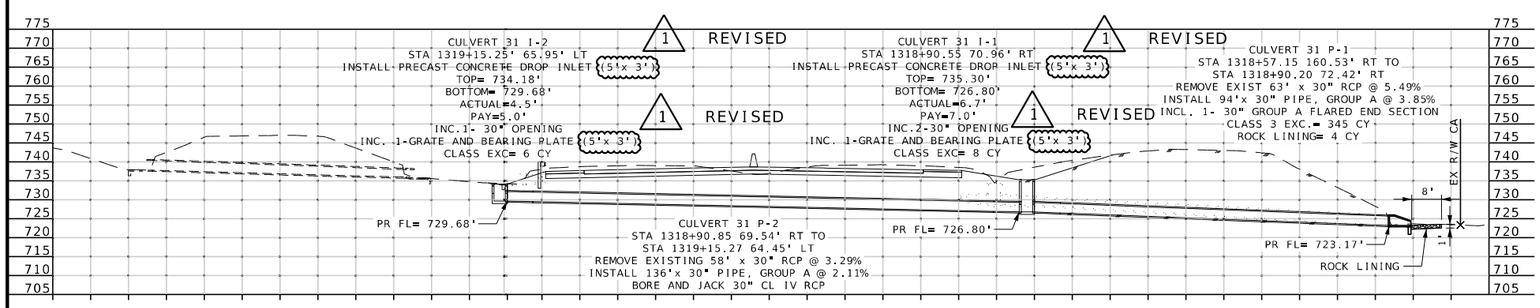

CULVERT 31 (STA 1319+14.41)

I-70 CULVERT SECTIONS
SHEET 13 OF 15

STATE OF MISSOURI
MICHAEL WAYNE DUSENBERG
NUMBER E-26546
PROFESSIONAL ENGINEER
THIS SHEET HAS BEEN SIGNED, SEALED AND DATED ELECTRONICALLY.

DATE PREPARED	1/7/2026
ROUTE	I-70
STATE	MO
DISTRICT	CD
SHEET NO.	338
COUNTY	COOPER
JOB NO.	JST0017B
CONTRACT ID.	-
PROJECT NO.	-
BRIDGE NO.	-

DATE	DESCRIPTION
01/07/26	1 REVISED DROP INLET
01/07/26	1 REVISED GRATE AND BEARING PLATE

MISSOURI HIGHWAYS AND TRANSPORTATION COMMISSION
105 WEST CAPITOL
JEFFERSON CITY, MO 65102
1-888-ASK-MODOT (1-888-275-6636)

Bartlett & West
601 MONROE ST. SUITE 201 - JEFFERSON CITY, MO 65101
PHONE 573-634-3181
CERTIFICATE OF AUTHORITY NO. 000167 - ENGINEERING
WWW.BARTLETTWEST.COM

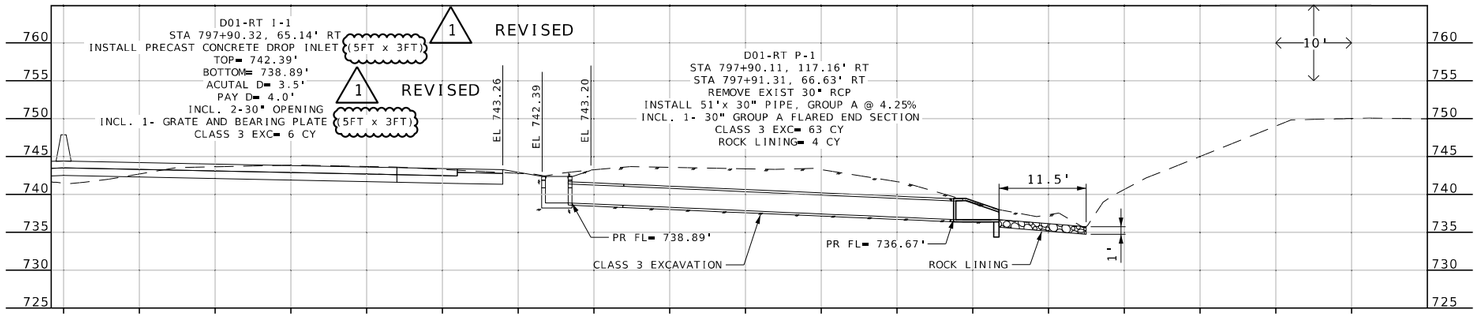

D01-RT

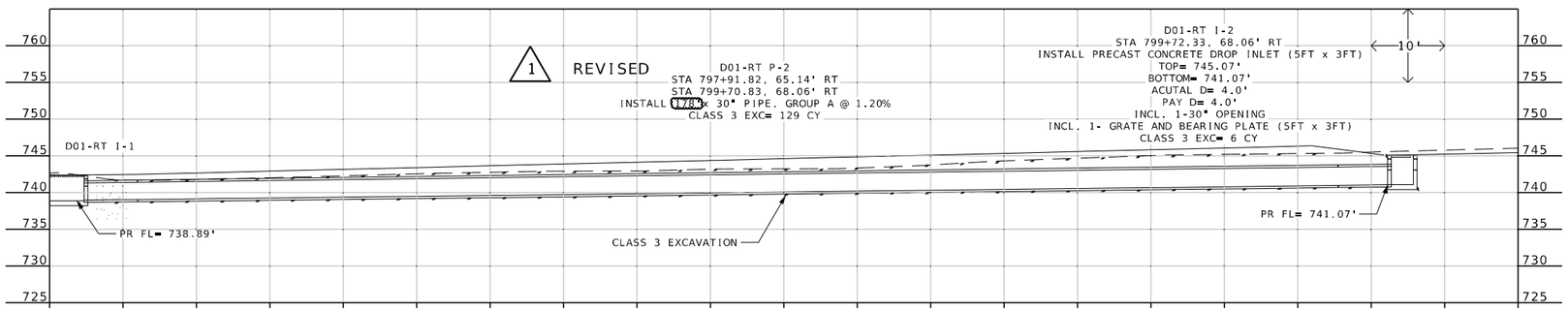

D01-RT

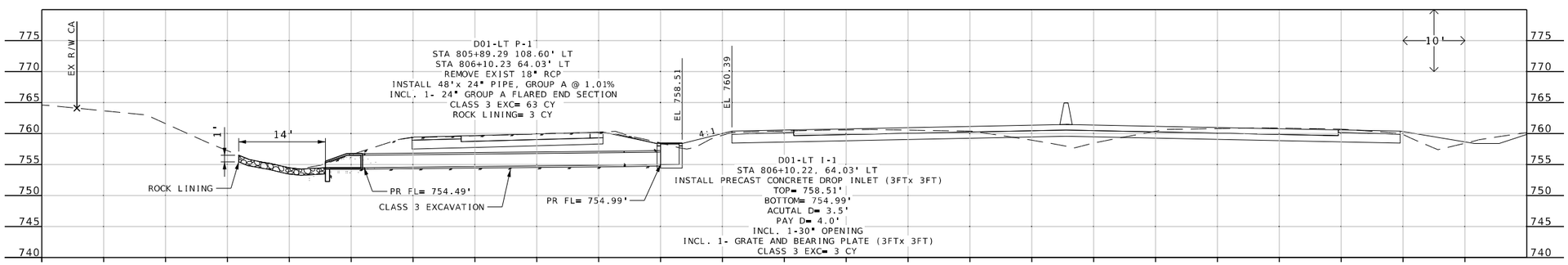

D01-LT

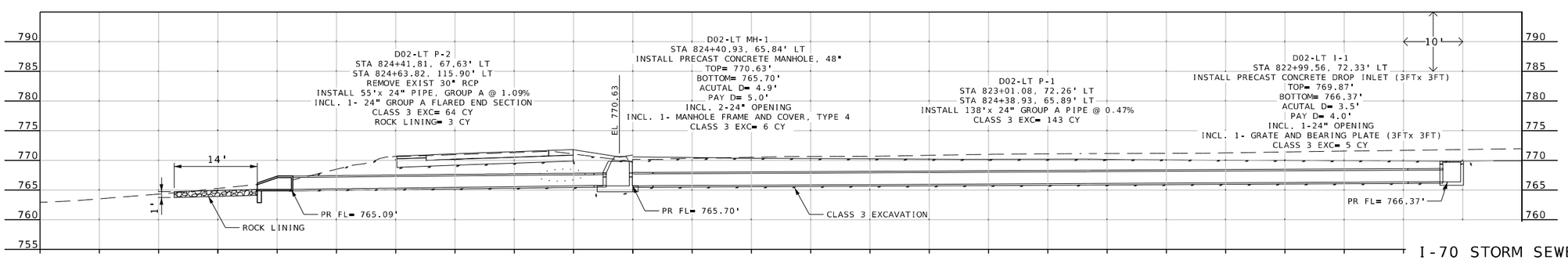

D02-LT

I-70 STORM SEWER SYSTEM
SHEET 1 OF 6

STATE OF MISSOURI
MICHAEL WAYNE DUSENBERG
NUMBER E-26546
PROFESSIONAL ENGINEER
THIS SHEET HAS BEEN SIGNED, SEALED AND DATED ELECTRONICALLY.

DATE PREPARED	1/7/2026
ROUTE	I-70
STATE	MO
DISTRICT	CD
SHEET NO.	341
COUNTY	COOPER
JOB NO.	JST0017B
CONTRACT ID.	-
PROJECT NO.	-
BRIDGE NO.	-

DATE	DESCRIPTION
01/07/26	1 REVISED DROP INLET
01/07/26	1 REVISED GRATE AND BEARING PLATE
01/07/26	1 REVISED GROUP A PIPE

MISSOURI HIGHWAYS AND TRANSPORTATION COMMISSION
105 WEST CAPITOL
JEFFERSON CITY, MO 65102
1-888-ASK-MODOT (1-888-275-6636)

Bartlett & West
601 MONROE ST. SUITE 201 - JEFFERSON CITY, MO 65101
PHONE 573-634-3181
CERTIFICATE OF AUTHORITY NO. 000167 - ENGINEERING
WWW.BARTLETTWEST.COM

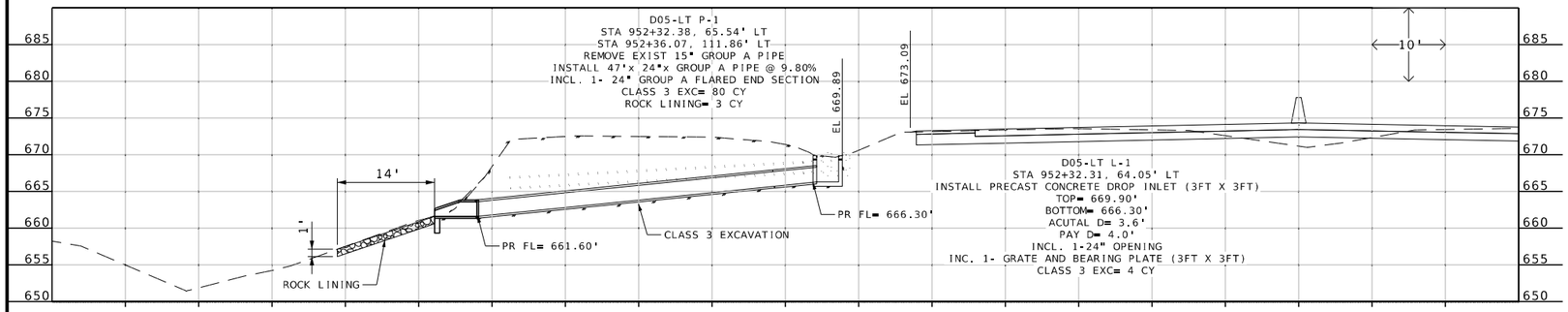

D05-LT

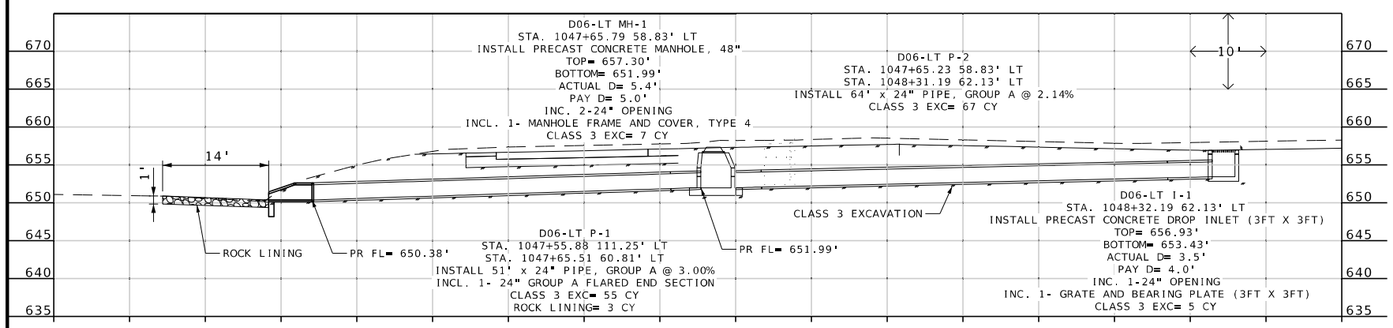

D06-LT

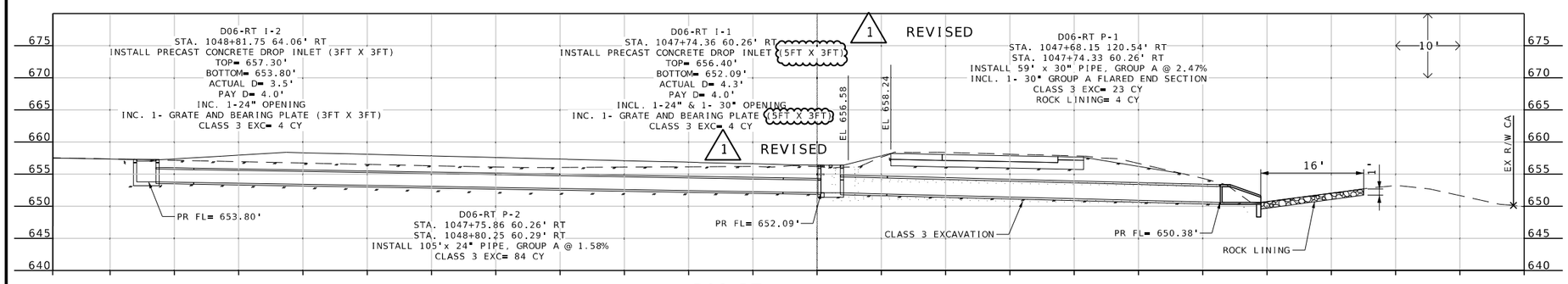

D06-RT

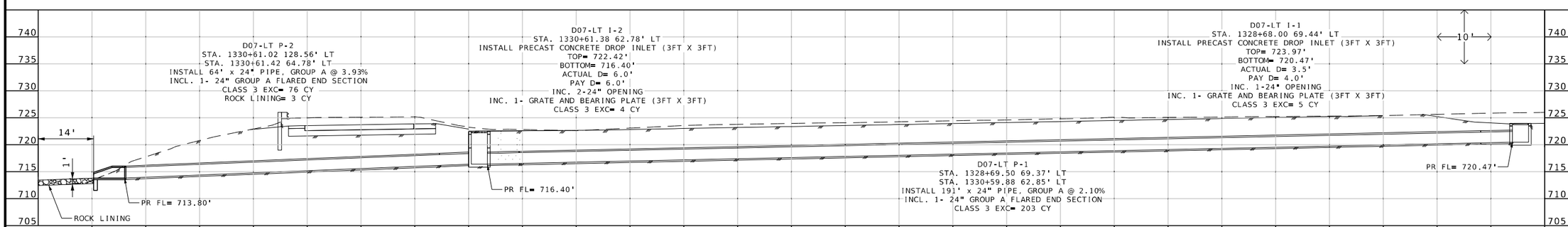

D07-LT

I-70 STORM SEWER SYSTEM
SHEET 4 OF 6

STATE OF MISSOURI
MICHAEL WAYNE DUSENBERG
NUMBER E-26546
PROFESSIONAL ENGINEER
THIS SHEET WAS BEEN SIGNED, SEALED AND DATED ELECTRONICALLY.

DATE PREPARED	1/7/2026
ROUTE	I-70
STATE	MO
DISTRICT	CD
SHEET NO.	344
COUNTY	COOPER
JOB NO.	JST0017B
CONTRACT ID.	-
PROJECT NO.	-
BRIDGE NO.	-

DATE	DESCRIPTION
01/07/26	1 REVISED DROP INLET
01/07/26	1 REVISED GRATE AND BEARING PLATE

MISSOURI HIGHWAYS AND TRANSPORTATION COMMISSION
105 WEST CAPITOL
JEFFERSON CITY, MO 65102
1-888-ASK-MODOT (1-888-275-6636)

Bartlett&West
601 MONROE ST. SUITE 201 - JEFFERSON CITY, MO 65101
PHONE 573-634-3181
CERTIFICATE OF AUTHORITY NO. 000167 - ENGINEERING
WWW.BARTLETTWEST.COM

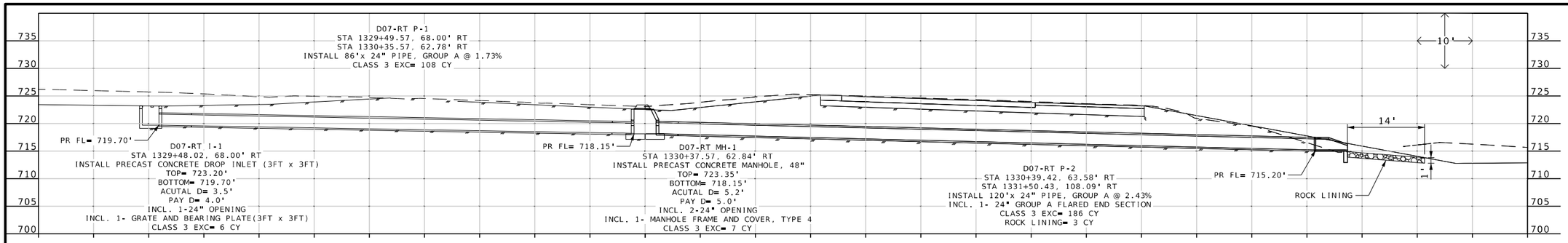

D07-RT

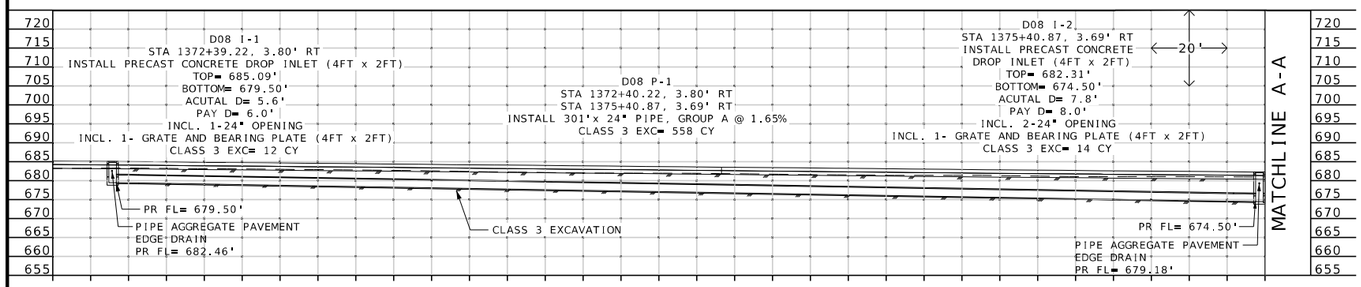

D08

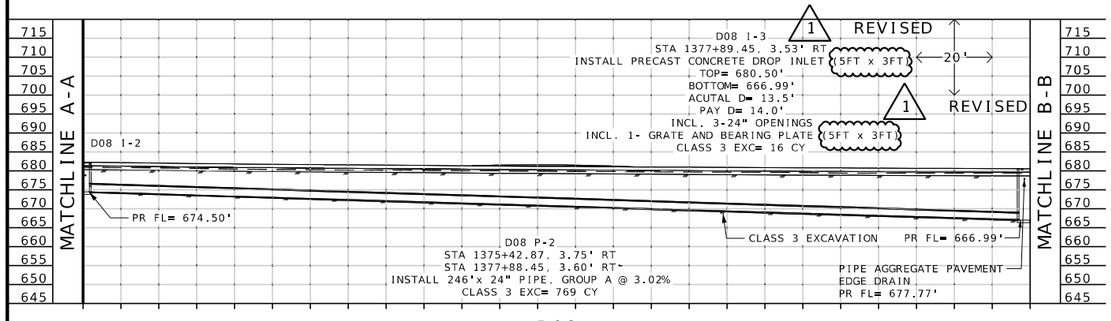

D08

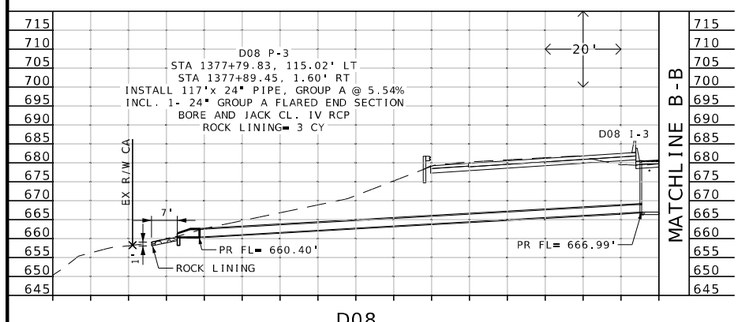

D08

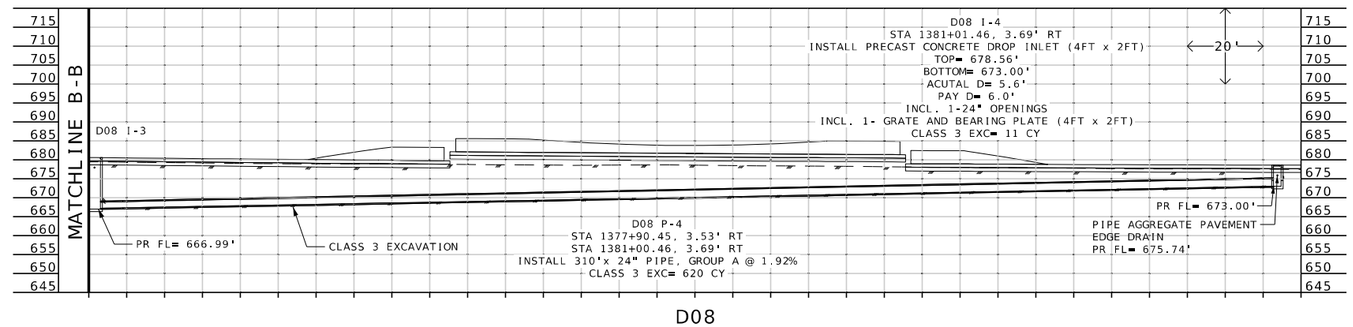

D08

I-70 STORM SEWER SYSTEM
SHEET 5 OF 6

STATE OF MISSOURI
MICHAEL WAYNE DUSENBERG
NUMBER E-26546
PROFESSIONAL ENGINEER
THIS SHEET HAS BEEN SIGNED, SEALED AND DATED ELECTRONICALLY.

DATE PREPARED	1/7/2026
ROUTE	I-70
STATE	MO
DISTRICT	CD
SHEET NO.	345
COUNTY	COOPER
JOB NO.	JST0017B
CONTRACT ID.	-
PROJECT NO.	-
BRIDGE NO.	-

DATE	DESCRIPTION

MISSOURI HIGHWAYS AND TRANSPORTATION COMMISSION
105 WEST CAPITOL
JEFFERSON CITY, MO 65102
1-888-ASK-MODOT (1-888-275-6636)

Bartlett&West
601 MONROE ST. SUITE 201 - JEFFERSON CITY, MO 65101
PHONE 573-634-3181
CERTIFICATE OF AUTHORITY NO. 000167 - ENGINEERING
WWW.BARTLETTWEST.COM

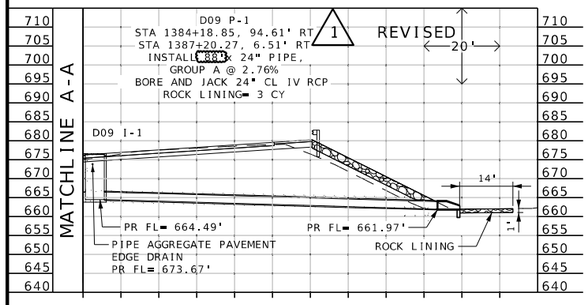

D09

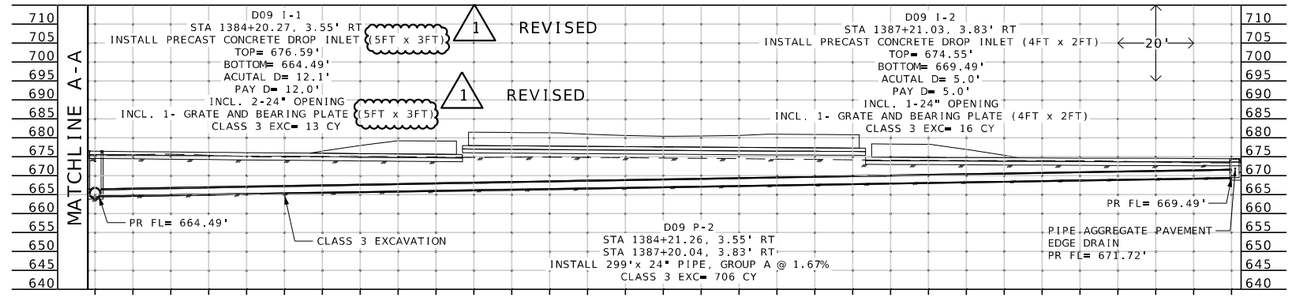

D09

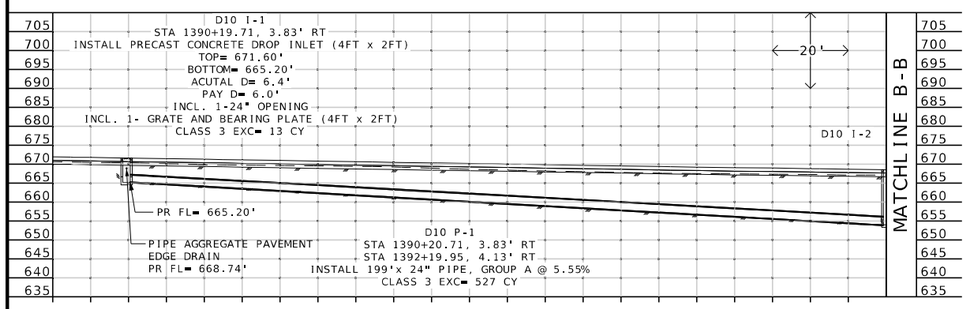

D10

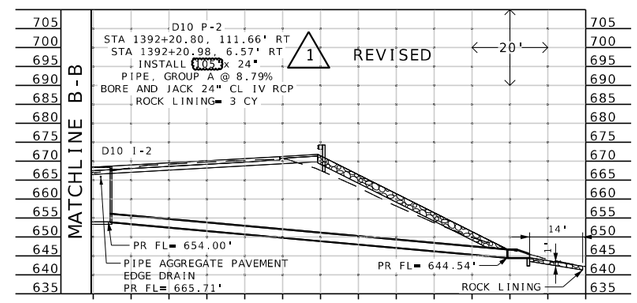

D10

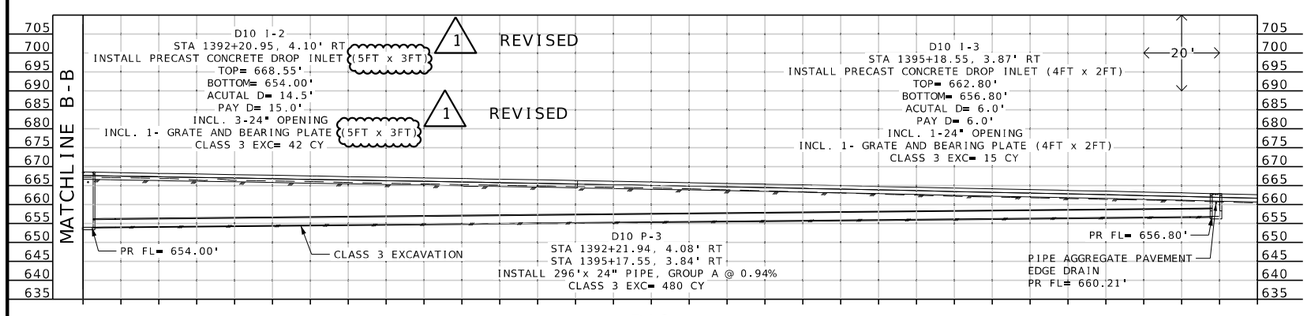

D10

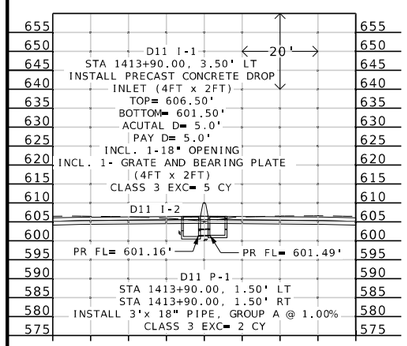

D11

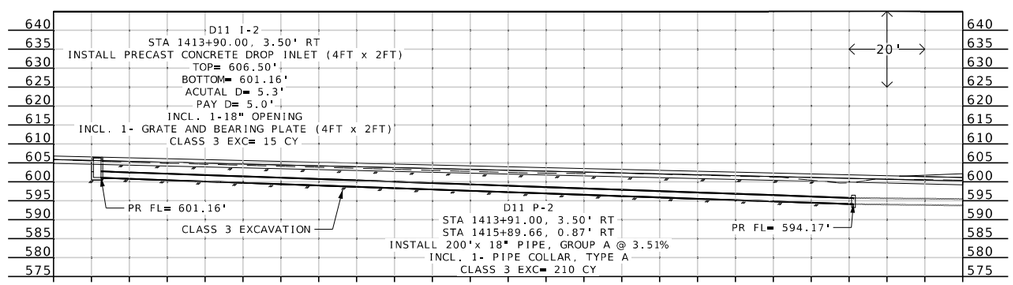

D11

I-70 STORM SEWER SYSTEM
SHEET 6 OF 6

STATE OF MISSOURI
MICHAEL WAYNE DUSENBERG
NUMBER E-26546
PROFESSIONAL ENGINEER
THIS SHEET HAS BEEN SIGNED, SEALED AND DATED ELECTRONICALLY.

DATE PREPARED	
1/7/2026	
ROUTE	STATE
I-70	MO
DISTRICT	SHEET NO.
CD	346
COUNTY	
COOPER	
JOB NO.	
JST0017B	
CONTRACT ID.	
-	
PROJECT NO.	
-	
BRIDGE NO.	
-	

DATE	DESCRIPTION
01/07/26	1 REVISED GROUP A PIPE
01/07/26	1 REVISED DROP INLET
01/07/26	1 REVISED GRATE AND BEARING PLATE

MISSOURI HIGHWAYS AND TRANSPORTATION COMMISSION
105 WEST CAPITOL
JEFFERSON CITY, MO 65102
1-888-ASK-MODOT (1-888-275-6636)

Bartlett & West
601 MONROE ST., SUITE 201 - JEFFERSON CITY, MO 65101
PHONE 573-634-3181
CERTIFICATE OF AUTHORITY NO. 000167 - ENGINEERING
WWW.BARTLETTWEST.COM