MISSOURI HIGHWAYS AND TRANSPORTATION COMMISSION

PLANS FOR PROPOSED STATE HIGHWAY

POLK COUNTY

DESIGN DESIGNATION

A.A.D.T. - 2023 = 6534
A.A.D.T. - 2043 = 11434
T = 35.7 %
V = 65 M.P.H.

FUNCTIONAL CLASSIFICATION - RURAL FREEWAY

NO NEW R/W OR EASEMENTS TO BE ACQUIRED

KEY MAP
LOCATION OF POLK COUNTY

NOT TO SCALE

BEGIN PROJECT STA. 181+25.00

PROJECT LIMITS BRIDGE A9573
BRIDGE REPLACEMENT, EMBANKMENT, PAVING, PAVEMENT MARKING, GUARDRAIL
MO 13

END PROJECT STA. 188+28.00

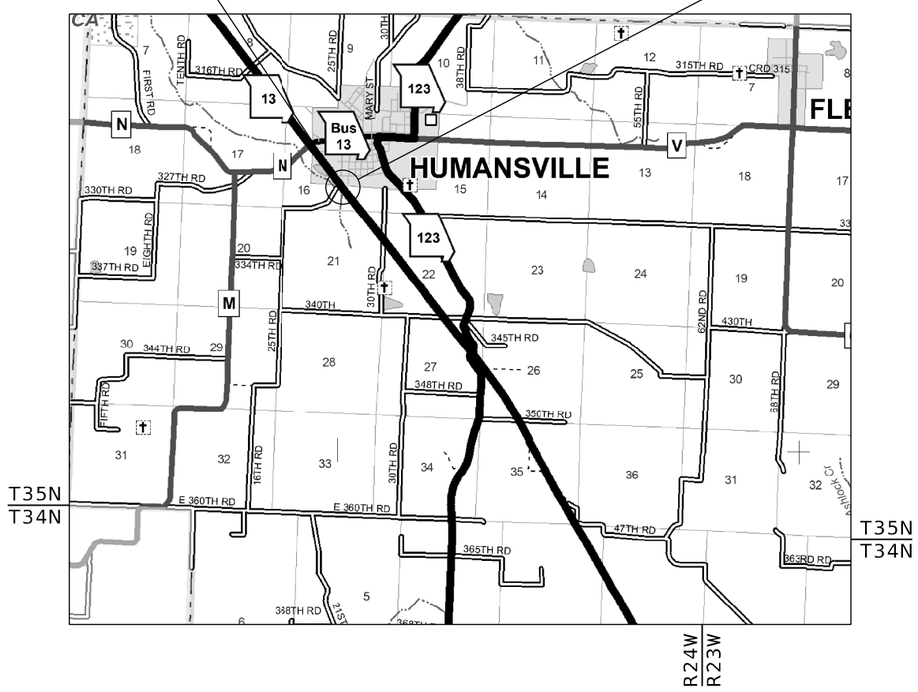

THE EXISTENCE AND APPROXIMATE LOCATION OF UTILITY FACILITIES KNOWN TO EXIST, AS SHOWN ON THE PLANS, ARE BASED ON THE BEST INFORMATION AVAILABLE TO THE COMMISSION AT THIS TIME. THIS INFORMATION IS PROVIDED BY THE COMMISSION "AS-IS" AND THE COMMISSION EXPRESSLY DISCLAIMS ANY REPRESENTATION OR WARRANTY AS TO THE COMPLETENESS, ACCURACY, OR SUITABILITY OF THE INFORMATION FOR ANY USE. RELIANCE UPON THIS INFORMATION IS DONE AT THE RISK AND PERIL OF THE USER, AND THE COMMISSION SHALL NOT BE LIABLE FOR ANY DAMAGES THAT MAY ARISE FROM ANY ERROR IN THE INFORMATION. IT IS, THEREFORE, THE RESPONSIBILITY OF THE CONTRACTOR TO VERIFY THE EXISTENCE, LOCATION AND STATUS OF ANY FACILITY. SUCH VERIFICATION INCLUDES DIRECT CONTACT WITH THE LISTED UTILITIES.

CONVENTIONAL SYMBOLS
(USED IN PLANS)

	EXISTING	NEW
BUILDINGS AND STRUCTURES		
GUARD RAIL		
GUARD CABLE		
CONCRETE RIGHT-OF-WAY MARKER		
STEEL RIGHT-OF-WAY MARKER		
LOCATION SURVEY MARKER		
UTILITIES		
FIBER OPTICS	—FO—	—FO—
OVERHEAD CABLE TV	—OTV—	—OTV—
UNDERGROUND CABLE TV	—UTV—	—UTV—
OVERHEAD TELEPHONE	—OT—	—OT—
UNDERGROUND TELEPHONE	—UT—	—UT—
OVERHEAD POWER	—OE—	—OE—
UNDERGROUND POWER	—UE—	—UE—
SANITARY SEWER	—S—	—S—
STORM SEWER	—SS—	—SS—
GAS	—G—	—G—
WATER	—W—	—W—
MANHOLE	SAN	
FIRE HYDRANT	HYD	
WATER VALVE	WV	
WATER METER	WM	
DROP INLET	D	
DITCH BLOCK		
GROUND MOUNTED SIGN	SIGN	
LIGHT POLE		
H-FRAME POWER POLE		
TELEPHONE PEDESTAL	PED	
FENCE		
CHAIN LINK	—V—	
WOVEN WIRE	—X—	
GATE POST		
BENCHMARK	BM	

NOTE: DASHED OR OPEN SYMBOLS INDICATE EXISTING FEATURES

INDEX OF SHEETS

LENGTH OF PROJECT

BEGINNING OF PROJECT	STA. 181+25.00	
END OF PROJECT	STA. 188+28.00	
APPARENT LENGTH	703.00	FEET
EQUATIONS AND EXCEPTIONS:		
TOTAL CORRECTIONS	0.00	FEET
NET LENGTH OF PROJECT	703.00	FEET
STATE LENGTH	0.133	MILES
FOR INFORMATION ONLY ESTIMATED DISTURBED ACRES	1.5	ACRES

STATE OF MISSOURI
SCOTT MICHAEL MCDONALD
NUMBER PE-2018000240
PROFESSIONAL ENGINEER

THIS SHEET HAS BEEN SIGNED, SEALED AND DATED ELECTRONICALLY.

DATE PREPARED 12/1/2025

ROUTE	STATE
13	MO
DISTRICT	SHEET NO.
SW	1

COUNTY POLK
JOB NO. JSR0049
CONTRACT ID.
PROJECT NO.
BRIDGE NO. A9573

DATE	DESCRIPTION

MISSOURI HIGHWAYS AND TRANSPORTATION COMMISSION
105 WEST CAPITOL
JEFFERSON CITY, MO 65102
1-888-ASK-MODOT (1-888-275-6636)

VEENSTRA & KIMM INC.
A Kleinfelder Company
9788 N Ash Avenue Kansas City, Missouri 64157
816-781-6182 816-781-0643 (FAX)
Certificate of Authority No. 2002006347

NOTES:

EDGELINE RUMBLE STRIPS SHALL BE CONSTRUCTED ON MO. 13 ROADWAY PAVEMENT PER SPECIFICATIONS.

TYPE 2 ROCK BLANKET TO BE INSTALLED ON EMBANKMENT SLOPES NEAR BRIDGE STRUCTURE. SEE SPECIAL SHEETS FOR DETAILS.

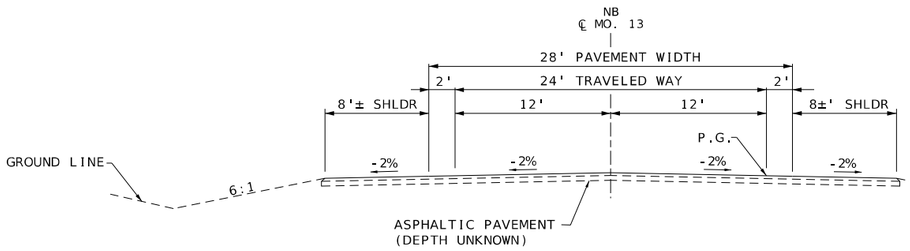

EXISTING SECTION ON TANGENT
TYPICAL SECTION MO. 13
STA. 181+25.00 TO STA. 188+28.00

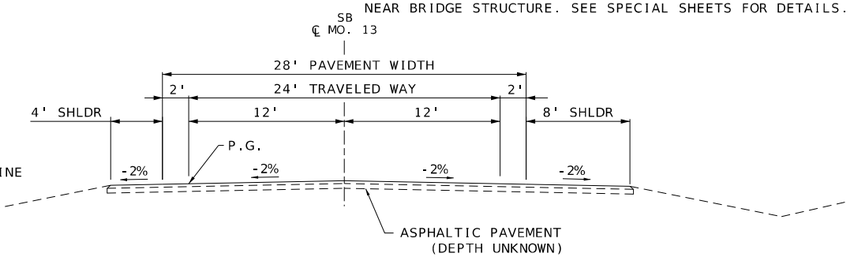

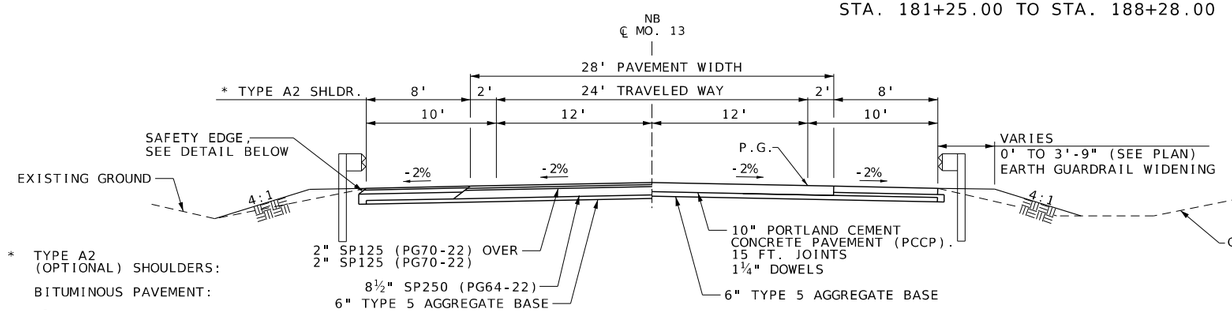

* TYPE A2 (OPTIONAL) SHOULDERS:

BITUMINOUS PAVEMENT:

1¾" SURFACE (PG 64-22, BP-1)
4" BASE (PG 64-22)
6¾" INCIDENTAL BASE
6" TYPE 5 AGG FOR BASE

PCC PAVEMENT:

5¾" PCC PAVEMENT
4¼" INCIDENTAL BASE
6" TYPE 5 AGG FOR BASE

PROPOSED SECTION ON TANGENT
TYPICAL SECTION MO. 13
STA. 181+25.00 TO STA. 188+28.00
(EXCLUDING BRIDGE)

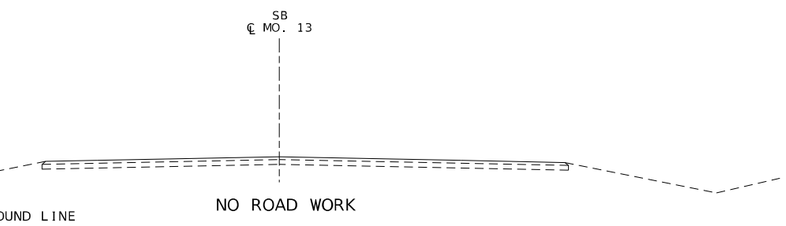

ESTIMATE FACTORS

BITUMINOUS PAVEMENT MIXTURE PG 70-22 (SP125C)	= 1.927	TON/CY
BITUMINOUS PAVEMENT MIXTURE PG 64-22 (SP250C)	= 1.946	TON/CY
BITUMINOUS PAVEMENT MIXTURE PG 64-22 (BP-1)	= 1.948	TON/CY
BITUMINOUS PAVEMENT MIXTURE PG 64-22 (BASE)	= 1.943	TON/CY
TACK COAT	= 0.05	GAL/SY

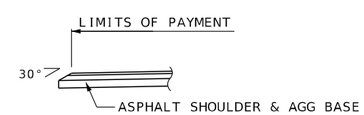

SAFETY EDGE-ASPHALT SHOULDER

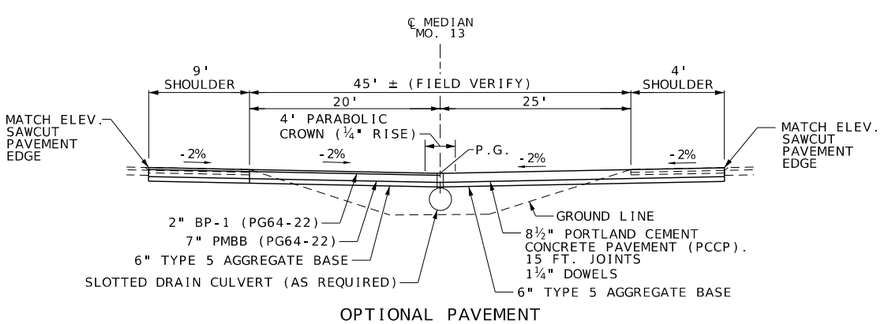

PERMANENT CROSSOVER
MEDIAN BETWEEN N.B. & S.B. LANES
NORTH CROSSOVER - STA. 0+00.00 TO STA. 9+48.36
SOUTH CROSSOVER - STA. 0+00.00 TO STA. 9+48.36

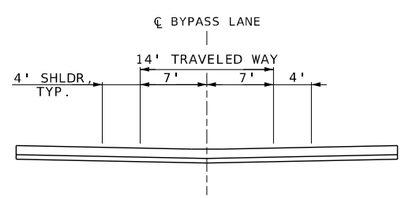

PROPOSED SECTION - BYPASS LANE
MEDIAN BETWEEN N.B. & S.B. LANES
NORTH CROSSOVER - STA. 0+00.00 TO STA. 9+48.36
SOUTH CROSSOVER - STA. 0+00.00 TO STA. 9+48.36

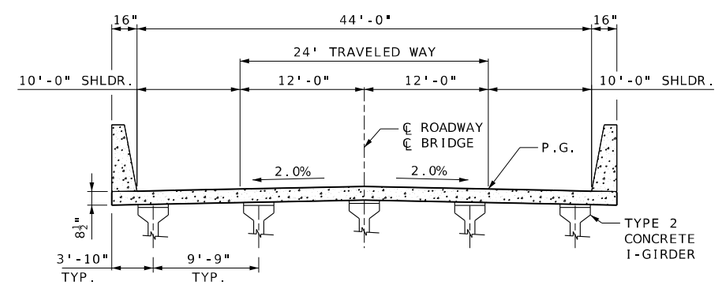

PROPOSED BRIDGE SECTION
MO. 13 - BRIDGE A9573
STA. 183+53.14 TO STA. 185+00.86

TYPICAL SECTION
SHEET 1 OF 1

STATE OF MISSOURI
SCOTT MICHAEL MCDONALD
NUMBER
PE-2018000240
PROFESSIONAL ENGINEER

THIS SHEET HAS BEEN SIGNED, SEALED AND DATED ELECTRONICALLY.

DATE PREPARED	
12/1/2025	
ROUTE 13	STATE MO
DISTRICT SW	SHEET NO. 2
COUNTY POLK	
JOB NO. JSR0049	
CONTRACT ID.	
PROJECT NO.	
BRIDGE NO. A9573	

DATE	DESCRIPTION

MISSOURI HIGHWAYS AND TRANSPORTATION COMMISSION
105 WEST CAPITOL
JEFFERSON CITY, MO 65102
1-888-ASK-MODOT (1-888-275-6636)

VEENSTRA & KIMM INC.
A Kleinfelder Company
9788 N Ash Avenue Kansas City, Missouri 64157
816-781-6182 816-781-0643 (FAX)
Certificate of Authority No. 2002006347

002_TS_01_JSR0049_TypSect.dgn 2:09:56 PM 12/1/2025

TEMPORARY PAVEMENT MARKING

STATION	LOCATION	SIDE	4" SOLID YELLOW TEMPORARY PAVEMENT MARKING PAINT (LF)	4" SOLID WHITE TEMPORARY PAVEMENT MARKING PAINT (LF)	PAVEMENT MARKING REMOVAL (LF)	REMARKS
168+76 TO 177+12	MO. 13	LT/RT	836		836	WEST CROSSOVER
160+35 TO 168+75	MO. 13	RT	840		840	LANE TAPER
168+75 TO 177+12	MO. 13	RT	837		837	℄ ROAD
177+12 TO 189+78	MO. 13	RT	2532		2532	DOUBLE SOLID YELLOW ℄
189+78 TO 198+08	MO. 13	LT/RT	834		834	WEST SIDE CROSSOVER
189+78 TO 198+83	MO. 13	RT	905		905	EDGELINE MARKING
198+83 TO 199+83	MO. 13	RT	100		100	LANE TAPER
168+76 TO 178+21	MO. 13	LT/RT		949	949	EAST SIDE CROSSOVER
178+21 TO 188+63	MO. 13	RT		1042	1042	EDGELINE EAST SIDE
188+63 TO 198+08	MO. 13	LT/RT		949	949	EAST SIDE CROSSOVER
198+08 TO 206+48	MO. 13	LT		840	840	EDGELINE MARKING ℄ ROAD
206+48 TO 214+88	MO. 13	LT		840	840	LANE TAPER
		TOTAL	6884	4620		
		PAY TOTAL	11504		11504	

CLEARING & GRUBBING

STATION	LOCATION	SIDE	QUANTITY (AC)	REMARKS
168+76 TO 178+21	MO. 13	LT/RT	1.0	EXISTING MEDIAN
181+25 TO CREEK	MO. 13	LT/RT	0.3	EXISTING MEDIAN, EAST SIDE EMBANKMENT
CREEK TO 188+28	MO. 13	LT/RT	0.5	EXISTING MEDIAN, EAST SIDE EMBANKMENT
188+63 TO 198+08	MO. 13	LT/RT	1.0	EXISTING MEDIAN
		TOTAL	2.8	
		PAY TOTAL	3	

REMOVAL OF IMPROVEMENTS

STATION	LOCATION	SIDE	QUANTITY (LS)	REMARKS
183+60 TO 183+80	MO. 13	LT	-	REMOVE EXISTING APPROACH SLAB
184+76 TO 184+96	MO. 13	LT	-	REMOVE EXISTING APPROACH SLAB
181+25 TO 183+80	MO. 13	LT	-	REMOVE EXISTING PAVEMENT
184+76 TO 188+28	MO. 13	LT	-	REMOVE EXISTING PAVEMENT
175+72	MO. 13	LT	-	REMOVE EXISTING SIGNS (1 EACH)
183+46	MO. 13	LT		REMOVE EXISTING GUARDRAIL
183+73	MO. 13	LT		REMOVE EXISTING GUARDRAIL
184+82	MO. 13	LT		REMOVE EXISTING GUARDRAIL
184+71	MO. 13	LT		REMOVE EXISTING GUARDRAIL
171+00	MO. 13	RT		REMOVE EXISTING 18" Ø FLARED END SECTION
		PAY TOTAL	1	

TYPE 5 AGGREGATE FOR BASE (6 IN. THICK)

STATION	LOCATION	SIDE	QUANTITY (SY)	REMARKS
168+76 TO 178+21	MO. 13	LT/RT	3911	NORTH CROSSOVER
181+25 TO 183+11	MO. 13	LT	908	ROADWAY
185+43 TO 188+28	MO. 13	LT	1392	ROADWAY
188+63 TO 198+08	MO. 13	LT/RT	3963	SOUTH CROSSOVER
		PAY TOTAL	10174	

SURFACE-MOUNT DELINEATOR POST

STATION	LOCATION	SIDE	36" YELLOW (EA)	REMARKS
171+25 TO 175+65	MO. 13	LT	23	NORTH CROSSOVER
170+85 TO 176+25	MO. 13	LT	28	NORTH CROSSOVER
191+06 TO 195+46	MO. 13	LT	23	SOUTH CROSSOVER
190+46 TO 195+86	MO. 13	LT	28	SOUTH CROSSOVER
		TOTAL	102	
		PAY TOTAL	102	

MGS BRIDGE APPROACH TRANSITION SECTION (REGULAR/NO CURB)

STATION	LOCATION	SIDE	QUANTITY (EA)	REMARKS
185+16	MO. 13	LT	1	LENGTH = 37.5'
185+00	MO. 13	LT	1	LENGTH = 37.5'
		PAY TOTAL	2	

MGS GUARDRAIL

STATION	LOCATION	SIDE	QUANTITY (LF)	REMARKS
185+54	MO. 13	LT	200.0	16 SECTIONS
185+38	MO. 13	LT	200.0	16 SECTIONS
		TOTAL	400.0	
		PAY TOTAL	400	

TYPE A CRASHWORTHY END TERMINAL (MASH)

STATION	LOCATION	SIDE	QUANTITY (EA)	REMARKS
188+54	MO. 13	LT	1	LENGTH = 50'
188+38	MO. 13	LT	1	LENGTH = 50'
		PAY TOTAL	2	

PIPE CULVERTS

STATION	LOCATION	SIDE	18 IN. Ø CMP (LF)	18 IN. Ø CMP FLARED END SECTION (EA)	18 IN. Ø CMP SLOTTED DRAIN (LF)	REMARKS
172+05 TO 174+95	MO. 13	℄			280	NORTH CROSSOVER
171+30 TO 172+05	MO. 13	℄	74	1		NORTH CROSSOVER
191+92 TO 194+72	MO. 13	℄			280	SOUTH CROSSOVER
191+08 TO 191+92	MO. 13	℄	84	1		SOUTH CROSSOVER
171+00	MO. 13	℄	4	1		EXISTING PIPE EXENSION
174+95 TO 175+95	MO. 13	℄	100	1		NORTH CROSSOVER
194+72 TO 195+68	MO. 13	℄	96	1		SOUTH CROSSOVER
		PAY TOTAL	358	5	560	

TYPE A2 SHOULDER

STATION	LOCATION	SIDE	QUANTITY (SY)	REMARKS
181+25 TO 183+11	MO. 13	LT	330.1	SEE STD. PLAN 401.00
185+43 TO 188+25	MO. 13	LT	506.1	ROADWAY SHOULDER
		PAY TOTAL	836.2	

OPTIONAL PAVEMENT

STATION	LOCATION	SIDE	ROUTE 13 QUANTITY (SY)	PERMANENT CROSSOVER QUANTITY (SY)	REMARKS
168+76 TO 178+21	MO. 13	LT/RT		3911	NORTH CROSSOVER
181+25 TO 183+11	MO. 13	LT	578		ROADWAY
185+43 TO 188+28	MO. 13	LT	886		ROADWAY
188+63 TO 198+08	MO. 13	LT/RT		3963	SOUTH CROSSOVER
		PAY TOTAL	1464	7874	

TYPE 5 AGGREGATE FOR BASE (4 IN. THICK)

STATION	LOCATION	SIDE	QUANTITY (SY)	REMARKS
183+11 TO 183+34	MO. 13	LT	105	CONCRETE APPROACH PAVEMENT
185+20 TO 185+43	MO. 13	LT	105	CONCRETE APPROACH PAVEMENT
		PAY TOTAL	210	

QUANTITIES
SHEET 1 OF 3

STATE OF MISSOURI
SCOTT MICHAEL MCDONALD
NUMBER PE-2018000240
PROFESSIONAL ENGINEER

THIS SHEET HAS BEEN SIGNED, SEALED AND DATED ELECTRONICALLY.

DATE PREPARED 12/1/2025

ROUTE	STATE
13	MO
DISTRICT	SHEET NO.
SW	3

COUNTY: POLK
JOB NO.: JSR0049
CONTRACT ID.:
PROJECT NO.:
BRIDGE NO.: A9573

DATE	DESCRIPTION

MISSOURI HIGHWAYS AND TRANSPORTATION COMMISSION
105 WEST CAPITOL
JEFFERSON CITY, MO 65102
1-888-ASK-MODOT (1-888-275-6636)

VEENSTRA & KIMM INC.
A Kleinfelder Company
9788 N Ash Avenue Kansas City, Missouri 64157
816-781-6182 816-781-0643 (FAX)
Certificate of Authority No. 2002006347

EARTHWORK

STATION	LOCATION	SIDE	UNCLASSIFIED EXCAVATION (CY)	COMPACTING EMBANKMENT (CY)	COMPACTING IN CUT (STA)	SUBGRADE COMPACTION (6") (100 FT)	SUBGRADE SCARIFYING (100 FT)	REMARKS
188+63 TO 198+06	MO. 13	LT/RT	886	761		18.9	18.9	PHASE 1; 945' x 2 SHOULDERS. EXCESS CUT = 125 CY
168+76 TO 178+22	MO. 13	LT/RT	771	887		18.9	18.9	PHASE 1; 945' x 2 SHOULDERS. USE 116 CY EXCESS FROM SOUTH CROSSOVER
181+25 TO 183+46	MO. 13	LT	543	73	2.2			PHASE 2; EXCESS CUT = 470 CY
185+08 TO 188+25	MO. 13	LT	798	215	3.2			PHASE 2; EXCESS CUT = 583 CY
BRIDGE/CREEK	MO. 13	LT	1261		1.5			PHASE 2; EXCESS CUT = 1261 CY
		PAY TOTAL	4259	1936	6.9	37.8	37.8	

NOTES:
- NO SOIL PROPERTY DATA AVAILABLE. SHRINK/SWELL FACTOR WAS NOT USED IN QUANTITIES SHOWN. UNSUITABLE AND EXCESS EXCAVATED MATERIAL SHALL BE REMOVED FROM PROJECT SITE BY CONTRACTOR. DISPOSAL SITE SHALL BE APPROVED BY ENGINEER. NO DIRECT PAY.

- LOCATION FOR STOCKPILE OF EXCAVATED MATERIAL TO BE APPROVED BY ENGINEER.

ADDITIONAL MOBILIZATION FOR SEEDING	
LUMP SUM	1

CONTRACTOR FURNISHED SURVEYING & STAKING	
LUMP SUM	1

MOBILIZATION	
LUMP SUM	1

TEMPORARY EROSION CONTROL

STATION	LOCATION	SIDE	SILT FENCE (LF)	DROP INLET CHECK (EA)	SEDIMENT REMOVAL (CY)	ALTERNATE DITCH CHECK (LF)	REMARKS
168+76 TO 170+22	MO. 13	LT/RT	295		3.0		
176+59 TO 178+20	MO. 13	LT/RT	325		3.3		
188+64 TO 190+44	MO. 13	LT/RT	365		3.7		
196+30 TO 198+07	MO. 13	LT/RT	360		3.6		
181+25 TO CREEK	MO. 13	LT/RT	680		6.8		
CREEK TO 188+28	MO. 13	LT/RT	840		8.4		
185+00	MO. 13	LT/RT		1	1.0		
189+75	MO. 13	LT/RT			1.0	33	
190+85	MO. 13	LT/RT			1.0	10	
195+90	MO. 13	LT/RT			1.0	10	
196+85	MO. 13	LT/RT			1.0	30	
170+35	MO. 13	LT/RT			1.0	16	
170+90	MO. 13	LT/RT			1.0	10	
176+25	MO. 13	LT/RT			1.0	10	
176+75	MO. 13	LT/RT			1.0	27	
		TOTAL	2865	1	37.8	146	
		PAY TOTAL	2865	1	38	146	

PERMANENT PAVEMENT MARKING

STATION	LOCATION	SIDE	6" SOLID YELLOW CLASS 2 PAINT TYPE L BEADS (LF)	6" SOLID WHITE CLASS 2 PAINT TYPE L BEADS (LF)	REMARKS
181+25 TO 188+28	MO. 13	LT		176	INTERMITTENT CENTERLINE
181+25 TO 188+28	MO. 13	LT		703	SOLID EDGE LINE (EAST)
181+25 TO 188+28	MO. 13	LT	703		SOLID EDGE LINE (WEST)
		PAY TOTAL	703	879	

RUMBLE STRIPS FOR OPTIONAL PAVEMENT

STATION	LOCATION	SIDE	EDGELINE RUMBLE STRIP (STA)	REMARKS
181+25 TO 183+39	MO. 13	LT	2.2	LEFT EDGELINE
181+25 TO 183+28	MO. 13	LT	2.0	RIGHT EDGELINE
185+26 TO 188+28	MO. 13	LT	3.0	LEFT EDGELINE
185+15 TO 188+28	MO. 13	LT	3.1	RIGHT EDGELINE
		PAY TOTAL	10.3	

SEEDING/MULCHING

STATION	LOCATION	SIDE	SEEDING (AC)	MULCHING (AC)	TEMPORARY SEEDING (AC)	REMARKS
168+76 TO 178+21	MO. 13	LT/RT	0.5	0.5	0.5	NORTH CROSSOVER
181+25 TO 188+28	MO. 13	LT/RT	0.8	0.8	0.8	ROADWAY
188+63 TO 198+08	MO. 13	LT/RT	0.5	0.5	0.5	SOUTH CROSSOVER
		TOTAL	1.8	1.8	1.8	
		PAY TOTAL	1.8	1.8	1.8	

CONCRETE APPROACH PAVEMENT

STATION	LOCATION	SIDE	QUANTITY (SY)	REMARKS
183+11 TO 183+34	MO. 13	LT	112.5	SEE STD. PLAN 504.00
185+20 TO 185+43	MO. 13	LT	112.5	SEE STD. PLAN 504.00
		PAY TOTAL	225.0	

PERMANENT EROSION CONTROL

STATION	LOCATION	SIDE	FURNISHING TYPE 1 ROCK DITCH LINER (CY)	PLACING TYPE 1 ROCK DITCH LINER (CY)	FURNISHING TYPE 2 ROCK BLANKET (CY)	PLACING TYPE 2 ROCK BLANKET (CY)	PERMANENT EROSION CONTROL GEOTEXTILE (SY)	ROCK LINING (CY)	REMARKS
183+26 TO CREEK	MO. 13	LT			354	354	609		2' ROCK BLANKET
CREEK TO 185+28	MO. 13	LT			337	337	590		2' ROCK BLANKET
183+46 TO 183+49	MO. 13	LT	3.3	3.3			10		DRAIN FLUME
183+30 TO 183+33	MO. 13	LT	2.1	2.1			6		DRAIN FLUME
185+21 TO 185+24	MO. 13	LT	5.0	5.0			15		DRAIN FLUME
185+05 TO 185+08	MO. 13	LT	2.2	2.2			7		DRAIN FLUME
171+30	MO. 13	℄						1.8	1'x4'x12'
175+95	MO. 13	℄						3.6	1'x8'x12'
191+08	MO. 13	℄						1.8	1'x4'x12'
195+68	MO. 13	℄						1.8	1'x4'x12'
		TOTAL	12.6	12.6	691	691	1237	9.0	
		PAY TOTAL	13	13	691	691	1237	9	

QUANTITIES
SHEET 2 OF 3

STATE OF MISSOURI
SCOTT MICHAEL MCDONALD
NUMBER PE-2018000240
PROFESSIONAL ENGINEER

THIS SHEET HAS BEEN SIGNED, SEALED AND DATED ELECTRONICALLY.

DATE PREPARED 12/1/2025
ROUTE 13 | STATE MO
DISTRICT SW | SHEET NO. 3
COUNTY POLK
JOB NO. JSR0049
CONTRACT ID.
PROJECT NO.
BRIDGE NO. A9573

DESCRIPTION | DATE

MISSOURI HIGHWAYS AND TRANSPORTATION COMMISSION
105 WEST CAPITOL
JEFFERSON CITY, MO 65102
1-888-ASK-MODOT (1-888-275-6636)

VEENSTRA & KIMM INC.
A Kleinfelder Company
9788 N Ash Avenue Kansas City, Missouri 64157
816-781-6182 816-781-0643 (FAX)
Certificate of Authority No. 2002006347

SIGN	SIZE IN.	AREA SQ.FT.	QTY EACH	TOTAL AREA SQ.FT.	QTY RELOC EACH	TOTAL RELOC SQ.FT.	SIGN NUM.	DESCRIPTION
WARNING SIGNS								
WO1-1L	48X48	16.00						TURN (SYMBOL LEFT)
WO1-1R	48X48	16.00						TURN (SYMBOL RIGHT)
WO1-2L	48X48	16.00						CURVE (SYMBOL LEFT)
WO1-2R	48X48	16.00						CURVE (SYMBOL RIGHT)
WO1-3L	48X48	16.00						REVERSE TURN (SYMBOL LEFT)
WO1-3R	48X48	16.00						REVERSE TURN (SYMBOL RIGHT)
WO1-4L	48X48	16.00	1	16.00			15L	REVERSE CURVE (SYMBOL LEFT)
WO1-4R	48X48	16.00	1	16.00			15R	REVERSE CURVE (SYMBOL RIGHT)
WO1-4bL	48X48	16.00						DOUBLE ARROW REVERSE CURVE (SYMBOL LEFT)
WO1-4bR	48X48	16.00						DOUBLE ARROW REVERSE CURVE (SYMBOL RIGHT)
WO1-4cL	48X48	16.00						TRIPLE ARROW REVERSE CURVE (SYMBOL LEFT)
WO1-4cR	48X48	16.00						TRIPLE ARROW REVERSE CURVE (SYMBOL RIGHT)
WO1-6	60X30	12.50	6	75.00			16	HORIZONTAL ARROW (SYMBOL)
WO1-6a	72X36	18.00						HORIZ. ARROW (SYMBOL ON PERMANENT BARRICADE)
WO1-7	60X30	12.50						DOUBLE HEAD HORIZONTAL ARROW (SYMBOL)
WO1-7a	72X36	18.00						DOUBLE HEAD HORIZ. ARROW (SYMBOL ON PERM. BARR.)
WO1-8	18X24	3.00						CHEVRON (SYMBOL)
WO1-8a	30X36	7.50						CHEVRON (SYMBOL FOR DIVIDED HIGHWAYS)
WO3-1	48X48	16.00						STOP AHEAD (SYMBOL)
WO3-2	48X48	16.00						YIELD AHEAD (SYMBOL)
WO3-3	48X48	16.00						SIGNAL AHEAD (SYMBOL)
WO3-4	48X48	16.00						BE PREPARED TO STOP
WO3-5	48X48	16.00						SPEED LIMIT AHEAD
WO4-1L	48X48	16.00						MERGE (SYMBOL FROM LEFT)
WO4-1R	48X48	16.00						MERGE (SYMBOL FROM RIGHT)
WO4-1aL	48X48	16.00	1	16.00			6B	MERGE (LEFT)
WO4-1aR	48X48	16.00	1	16.00			6A	MERGE (RIGHT)
WO5-1	48X48	16.00						ROAD/BRIDGE/RAMP NARROWS
WO5-3	48X48	16.00						ONE LANE BRIDGE
WO5-5	48X48	16.00						NARROW LANES
WO6-1	48X48	16.00						DIVIDED HIGHWAY (SYMBOL)
WO6-2	48X48	16.00						DIVIDED HIGHWAY END (SYMBOL)
WO6-3	48X48	16.00	3	48.00			31	TWO WAY TRAFFIC (SYMBOL)
WO7-3a	30X24	5.00						NEXT XX MILES (PLAQUE)
WO8-1	48X48	16.00						BUMP
WO8-2	48X48	16.00						DIP
WO8-3	48X48	16.00						PAVEMENT ENDS
WO8-4	48X48	16.00						SOFT SHOULDER
WO8-5	48X48	16.00						SLIPPERY WHEN WET (SYMBOL)
WO8-6	48X48	16.00						TRUCK CROSSING
WO8-6c	48X48	16.00						TRUCK ENTRANCE
WO8-7	36X36	9.00						LOOSE GRAVEL
WO8-7a	36X36	9.00						FRESH OIL / LOOSE GRAVEL
WO8-9	48X48	16.00						LOW SHOULDER
WO8-11	48X48	16.00						UNEVEN LANES
WO8-12	48X48	16.00						NO CENTER LINE
WO8-15	48X48	16.00						GROOVED PAVEMENT
WO8-15P	30X24	5.00						MOTORCYCLE (PLAQUE)
WO8-17L	48X48	16.00						SHOULDER DROP-OFF (SYMBOL LEFT)
WO8-17R	48X48	16.00						SHOULDER DROP-OFF (SYMBOL RIGHT)
WO8-17P	30X24	5.00						SHOULDER DROP-OFF (PLAQUE)
W10-1	42RND.	9.62						RAILROAD CROSSING
WO12-1	24X24	4.00						DOUBLE DOWN ARROW (SYMBOL)
WO12-2	48X48	16.00						LOW CLEARANCE (SYMBOL)
WO12-2x	24X18	3.00						LOW CLEARANCE (PLAQUE)
WO12-2a	84X24	14.00						OVERHEAD LOW CLEARANCE (FEET AND INCHES)
WO12-4	120X60	50.00						LOW CLEARANCE XX FT XX IN XX MILES AHEAD
WO12-5	120X60	50.00						WIDTH RESTRICTION XX FT XX IN XX MILES AHEAD
WO13-1	30X30	6.25	2	12.50			44	ADVISORY SPEED (PLAQUE) 55 MPH
WO16-2	30X24	5.00						XXX FEET (PLAQUE)
WO16-3	30X24	5.00						X MILE (PLAQUE)
WO20-1	48X48	16.00	4	64.00	4	64.00	2	ROAD/BRIDGE/RAMP WORK AHEAD
WO20-2	48X48	16.00						DETOUR AHEAD
WO20-3	48X48	16.00						ROAD CLOSED AHEAD
WO20-4	48X48	16.00						ONE LANE ROAD AHEAD
WO20-5	48X48	16.00	4	64.00			5R	RIGHT LANE CLOSED AHEAD
WO20-5	48X8	2.67	2	5.34			5L	LEFT LANE PLAQUE
WO20-6a	48X48	16.00	6	96.00			6R	RIGHT LANE CLOSED
WO20-6a	36X8	2.00	3	6.00			6L	LEFT PLAQUE
WO21-2	36X36	9.00						FRESH OIL
WO21-5	48X48	16.00	4	64.00			21	SHOULDER WORK
WO22-1	48X48	16.00						BLASTING ZONE AHEAD
WO22-2	42X36	10.50						TURN OFF 2-WAY RADIO AND PHONE
WO22-3	42X36	10.50						END BLASTING ZONE
GO22-1	21X15	2.19	4	8.76			62	WET PAINT (ARROW PIVOTS)

SIGN	SIZE IN.	AREA SQ.FT.	QTY EACH	TOTAL SQ.FT.	QTY RELOC EACH	TOTAL RELOC SQ.FT.	SIGN NUM.	DESCRIPTION
GUIDE SIGNS								
E05-1	36X48	12.00						GORE EXIT
E05-2	48X36	12.00						EXIT OPEN
E05-2a	48X36	12.00						EXIT CLOSED
GO20-1	60X24	10.00	4	40.00			1	ROAD WORK NEXT 2 MILES
GO20-2	48X24	8.00	4	32.00			26	END ROAD WORK
GO20-4	36X18	4.50						PILOT CAR FOLLOW ME
GO20-4a	42X30	8.75						PILOT CAR IN USE WAIT & FOLLOW
GO20-4a	18X12	1.50						PILOT CAR IN USE WAIT & FOLLOW
GO20-5aP	36X24	6.00	6	36.00			54	WORK ZONE (PLAQUE)
MO4-8a	24X18	3.00						END DETOUR
MO4-9L	48X36	12.00						DETOUR (LEFT)
MO4-9R	48X36	12.00						DETOUR (RIGHT)
MO4-9P	48X12	4.00						STREET NAME (PLAQUE)
MO4-10L	48X18	6.00						DETOUR ARROW (LEFT)
MO4-10R	48X18	6.00						DETOUR ARROW (RIGHT)
REGULATORY SIGNS								
R1-1	48X48	13.25						STOP
R1-2	48TRI.	6.93						YIELD
R1-2a	36X36	9.00						TO ONCOMING TRAFFIC (PLAQUE)
R1-3P	30X12	2.50						ALL WAY (PLAQUE)
R2-1	36X48	12.00	6	72.00			4	SPEED LIMIT 55 MPH
R3-1	48X48	16.00						NO RIGHT TURN (SYMBOL)
R3-2	48X48	16.00						NO LEFT TURN (SYMBOL)
R3-3	36X36	9.00						NO TURNS
R3-4	48X48	16.00						NO U-TURN (SYMBOL)
R3-7L	30X30	6.25						LEFT LANE MUST TURN LEFT
R3-7R	30X30	6.25						RIGHT LANE MUST TURN RIGHT
R4-1	36X48	12.00	4	48.00			46	DO NOT PASS
R4-2	36X48	12.00						PASS WITH CARE
R4-7a	36X48	12.00						KEEP RIGHT (HORIZONTAL ARROW)
R4-8a	36X48	12.00						KEEP LEFT (HORIZONTAL ARROW)
R5-1	30X30	6.25	4	25.00			35	DO NOT ENTER
R5-1a	36X24	6.00						WRONG WAY
R6-1L	54X18	6.75						ONE WAY ARROW (LEFT)
R6-1R	54X18	6.75						ONE WAY ARROW (RIGHT)
R6-2L	24X30	5.00						ONE WAY (LEFT)
R6-2R	24X30	5.00						ONE WAY (RIGHT)
R9-9	24X12	2.00						SIDEWALK CLOSED
R9-11L	24X18	3.00						SIDEWALK CLOSED AHEAD, (ARROW LEFT) CROSS HERE
R9-11R	24X18	3.00						SIDEWALK CLOSED AHEAD, (ARROW RIGHT) CROSS HERE
R10-6	24X36	6.00						STOP HERE ON RED (45^ ARROW)
R11-2	48X30	10.00	2	20.00			29	ROAD CLOSED
R11-3a	60X30	12.50						ROAD CLOSED 1 MILE AHEAD LOCAL TRAFFIC ONLY
R11-4	60X30	12.50						ROAD CLOSED TO THRU TRAFFIC
CONST-3A	60X48	20.00						FINE SIGN
CONST-3X	56X12	4.67						SPEEDING/PASSING (PLATE)
MISCELLANEOUS SIGNS								
CONST-5	48X36	12.00						POINT OF PRESENCE
CONST-5	96X48	32.00	2	64.00			58A	POINT OF PRESENCE
CONST-8	48X36	12.00	4	48.00			70	WORK ZONE NO PHONE ZONE
SPECIAL	48X48	16.00	4	64.00			71	RUMBLE STRIPS AHEAD
CONST-5P	60X8	3.33	2	6.66			58B	COMPLETED AS PROMISED
R2-1	36X48	12.00	4	48.00			25	SPEED LIMIT 65 MPH

616-10.05 CONSTRUCTION SIGNS	TOTAL	1012
616-10.10 RELOCATED SIGNS	TOTAL	64

EFFECTIVE: 07-01-2025

ITEM NUMBER	TOTAL QTY	DESCRIPTION
6122008		IMPACT ATTENUATOR 40 MPH (SAND BARRELS)
6122009		IMPACT ATTENUATOR 45 MPH (SAND BARRELS)
6122010		IMPACT ATTENUATOR 50 MPH (SAND BARRELS)
6122012		IMPACT ATTENUATOR 55 MPH (SAND BARRELS)
6122014		IMPACT ATTENUATOR 60 MPH (SAND BARRELS)
6122017	2	IMPACT ATTENUATOR 65 MPH (SAND BARRELS)
6122019		IMPACT ATTENUATOR 70 MPH (SAND BARRELS)
6122020	2	REPLACEMENT SAND BARREL
6122030		IMPACT ATTENUATOR (RELOCATION)
6122040		WORK ZONE CRASH CUSHION (NARROW)
6122041		WORK ZONE CRASH CUSHION (RELOCATION)
6123001		TRUCK MOUNTED ATTENUATOR (TMA)
6161012		BUOYS (BOATS KEEP OUT)
6161013		BUOYS (NO WAKE)
6161014		SPECIAL SIGN ASSEMBLY (BOATS KEEP OUT)
6161020		CHANNELIZER (DRUM-LIKE)
6161022		CHANNELIZER (CONE)
6161025	105	CHANNELIZER (TRIM-LINE)
6161026		CHANNELIZER (VERTICAL PANEL)
6161030	10	TYPE 3 MOVEABLE BARRICADE
6161033	30	DIRECTIONAL INDICATOR BARRICADE
6161040	2	FLASHING ARROW PANEL
6161047		TYPE 3 OBJECT MARKER
6161055	30	SEQUENTIAL FLASHING WARNING LIGHT
6161070	93	TUBULAR MARKER
6161095		RADAR SPEED ADVISORY SYSTEM
6161096		CHANGEABLE MESSAGE SIGN, COMMISSION FURNISHED/RETAINED
6161098A		CHANGEABLE MESSAGE SIGN WITHOUT COMM. INTERFACE, CONTRACTOR FURNISHED/RETAINED
6161099	2	CHANGEABLE MESSAGE SIGN WITH COMM. INTERFACE, CONTRACTOR FURNISHED/RETAINED
6162000A		WORK ZONE TRAFFIC SIGNAL SYSTEM
6162002	4	TEMPORARY LONG-TERM RUMBLE STRIPS
6173600D		TEMPORARY TRAFFIC BARRIER CONTRACTOR FURNISHED/RETAINED
6173700B		TEMP. TRAFFIC BARRIER ANCHORED, CONTRACTOR FURNISHED/RETAINED
6173706		TEMP. TRAFFIC BARRIER STIFFNESS TRANSITION CONTRACTOR FURNISHED/RETAINED
6174000A		TEMP. TRAFFIC BARRIER HEIGHT TRANSITION CONTRACTOR FURNISHED/RETAINED
6175010A		RELOCATING TEMPORARY TRAFFIC BARRIER
6175011B		RELOCATING TEMP. TRAFFIC BARRIER ANCHORED
6175013		RELOCATING TEMP. TRAFFIC BARRIER STIFFNESS
6175020A		RELOCATING TEMP. TRAFFIC BARRIER HEIGHT
6208064A		TEMPORARY RAISED PAVEMENT MARKER
9029400		TEMPORARY TRAFFIC SGNALS
9029401		TEMPORARY TRAFFIC SIGNALS AND LIGHTING

QUANTITIES
SHEET 3 OF 3

STATE OF MISSOURI
SCOTT MICHAEL MCDONALD
NUMBER PE-2018000240
PROFESSIONAL ENGINEER

THIS SHEET HAS BEEN SIGNED, SEALED AND DATED ELECTRONICALLY.

DATE PREPARED 12/1/2025
ROUTE 13 | STATE MO
DISTRICT SW | SHEET NO. 3
COUNTY POLK
JOB NO. JSR0049
CONTRACT ID.
PROJECT NO.
BRIDGE NO. A9573

DESCRIPTION | DATE

MISSOURI HIGHWAYS AND TRANSPORTATION COMMISSION
105 WEST CAPITOL
JEFFERSON CITY, MO 65102
1-888-ASK-MODOT (1-888-275-6636)

VEENSTRA & KIMM INC.
A Kleinfelder Company
9788 N Ash Avenue Kansas City, Missouri 64157
816-781-6182 816-781-0643 (FAX)
Certificate of Authority No. 2002006347

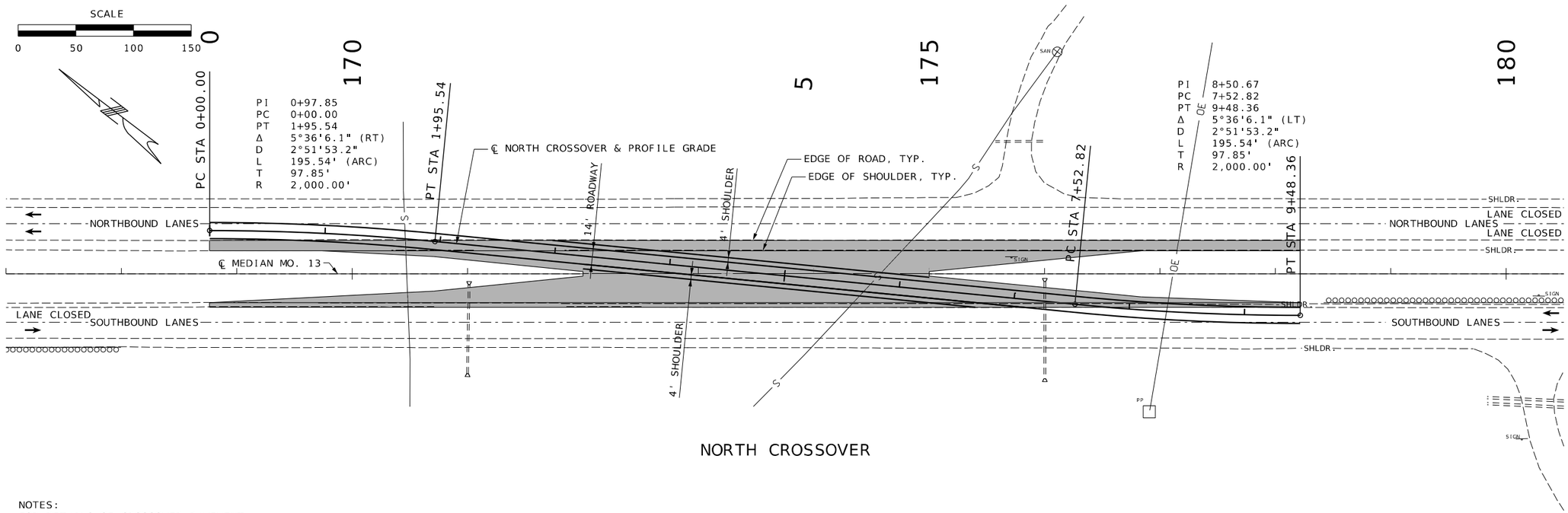

NORTH CROSSOVER

NOTES:
FOR DETAILS OF CROSSOVER PAVEMENT CONSTRUCTION, SEE SPECIAL SHEET 3.

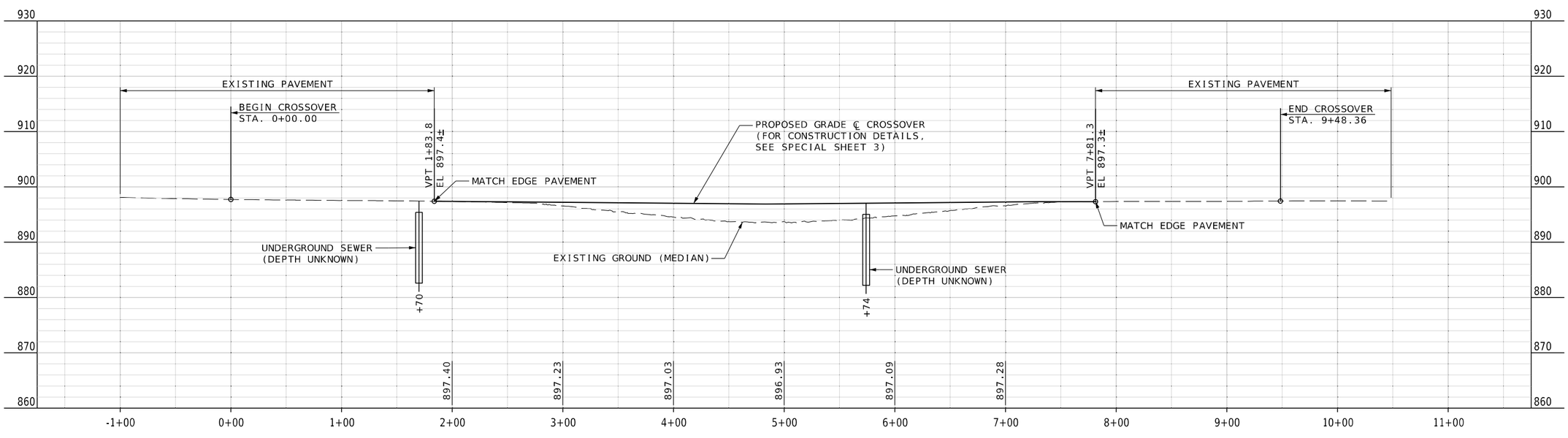

PROFILE ℄ NORTH CROSSOVER

NORTH CROSSOVER

PLAN-PROFILE
SHEET 1 OF 3

STATE OF MISSOURI
SCOTT MICHAEL MCDONALD
NUMBER PE-2018000240
PROFESSIONAL ENGINEER

THIS SHEET HAS BEEN SIGNED, SEALED AND DATED ELECTRONICALLY.

DATE PREPARED	
12/1/2025	
ROUTE 13	STATE MO
DISTRICT SW	SHEET NO. 4
COUNTY POLK	
JOB NO. JSR0049	
CONTRACT ID.	
PROJECT NO.	
BRIDGE NO. A9573	

DATE	DESCRIPTION

MISSOURI HIGHWAYS AND TRANSPORTATION COMMISSION
105 WEST CAPITOL
JEFFERSON CITY, MO 65102
1-888-ASK-MODOT (1-888-275-6636)

VEENSTRA & KIMM INC.
A Kleinfelder Company
9788 N Ash Avenue Kansas City, Missouri 64157
816-781-6182 816-781-0643 (FAX)
Certificate of Authority No. 2002006347

004_PP_01_JSR0049_PlanProfile.dgn 2:10:08 PM 12/1/2025

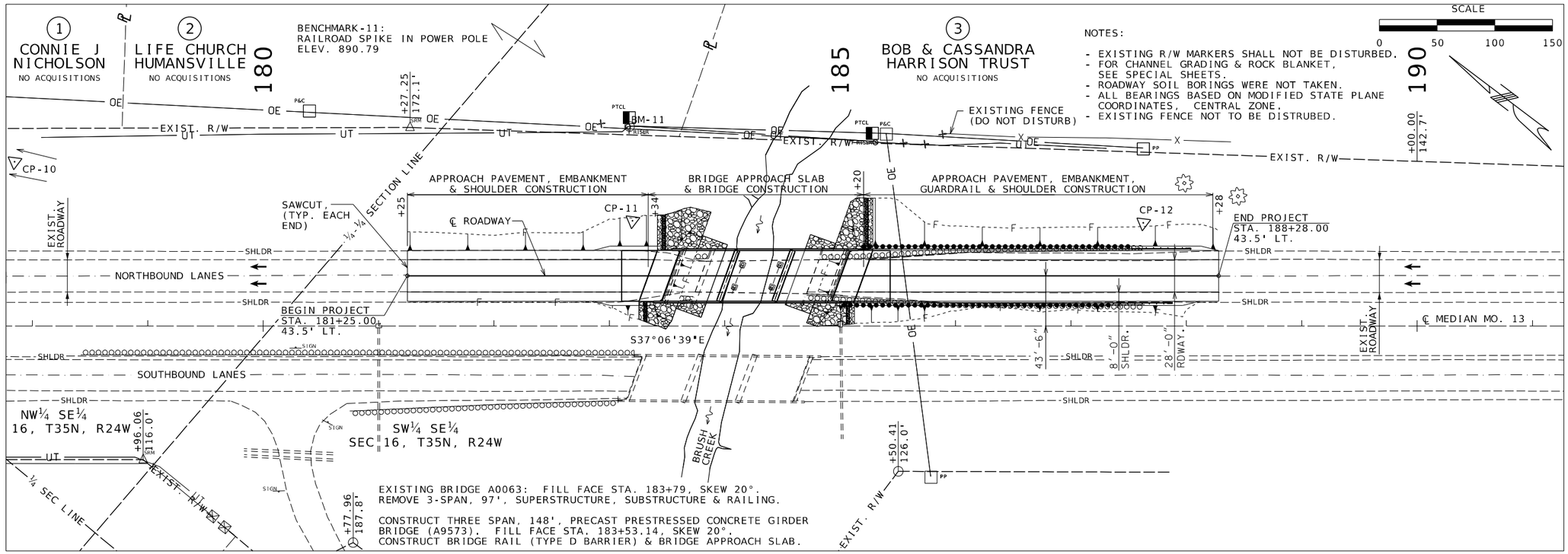

THE APPROXIMATE LOCATION OF PROPERTY LINES AS SHOWN ON THE PLANS ARE BASED ON THE BEST INFORMATION AVAILABLE TO THE COMMISSION AT THIS TIME. THIS INFORMATION IS PROVIDED BY THE COMMISSION "AS-IS" AND THE COMMISSION EXPRESSLY DISCLAIMS ANY REPRESENATION OR WARRANTY AS TO THE COMPLETENESS, ACCURACY, OR SUITABILITY OF THE INFORMATION FOR ANY USE.

MO.13 DESIGN SPEED = 65 MPH

LAND CORNER TIE: FOUND EXISTING IRON PIN
CENTER SEC 16, T35N, R24W
CERTIFIED CORNER DOCUMENT #600-70459

BEARING S10°37'07"E; 1365.03 FEET
TO ℄ MEDIAN, STA. 181+25.00

ANY WORK INDICATED ON THE PLANS THAT EXTENDS BEYOND THE PROJECT LIMITS IS CONSIDERED INCIDENTAL TO AND A PART OF THE CONSTRUCTION OF THIS PROJECT.

UTILITY CONTACTS

ELECTRIC:
LIBERTY UITILITIES (AKA EMPIRE DISTRICT)
REGIN BELISLE
2690 W BROADWAY ST
BOLIVAR, MO 65613
417-777-1649
REGIN.BELISLE@LIBERTYUTILITIES.COM

FIBER:
BRIGHTSPEED
KELLY WEIGLE
117 NORTH MADISON AVENUE
LEBANON, MISSOURI 65536
417-733-7866
KELLY.WEIGLE1@BRIGHTSPEED.COM

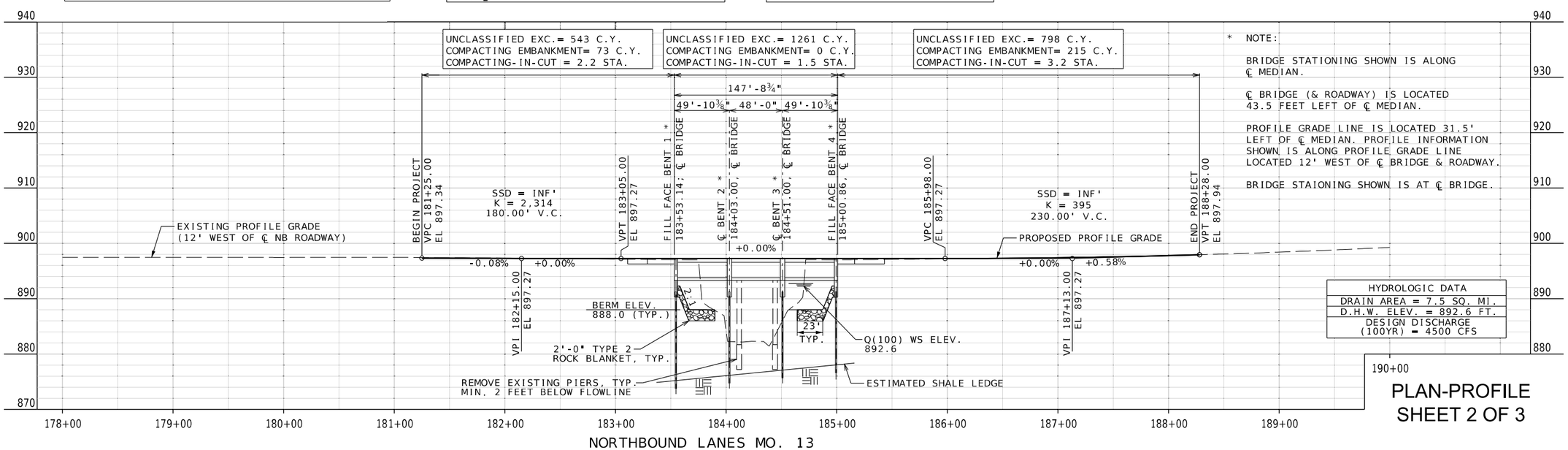

* NOTE:

BRIDGE STATIONING SHOWN IS ALONG ℄ MEDIAN.

℄ BRIDGE (& ROADWAY) IS LOCATED 43.5 FEET LEFT OF ℄ MEDIAN.

PROFILE GRADE LINE IS LOCATED 31.5' LEFT OF ℄ MEDIAN. PROFILE INFORMATION SHOWN IS ALONG PROFILE GRADE LINE LOCATED 12' WEST OF ℄ BRIDGE & ROADWAY.

BRIDGE STAIONING SHOWN IS AT ℄ BRIDGE.

HYDROLOGIC DATA
DRAIN AREA = 7.5 SQ. MI.
D.H.W. ELEV. = 892.6 FT.
DESIGN DISCHARGE (100YR) = 4500 CFS

PLAN-PROFILE
SHEET 2 OF 3

STATE OF MISSOURI
SCOTT MICHAEL MCDONALD
NUMBER PE-2018000240
PROFESSIONAL ENGINEER

THIS SHEET HAS BEEN SIGNED, SEALED AND DATED ELECTRONICALLY.

DATE PREPARED	
12/1/2025	
ROUTE 13	STATE MO
DISTRICT SW	SHEET NO. 5
COUNTY POLK	
JOB NO. JSR0049	
CONTRACT ID.	
PROJECT NO.	
BRIDGE NO. A9573	

DATE	DESCRIPTION

MISSOURI HIGHWAYS AND TRANSPORTATION COMMISSION
105 WEST CAPITOL
JEFFERSON CITY, MO 65102
1-888-ASK-MODOT (1-888-275-6636)

VEENSTRA & KIMM INC.
A Kleinfelder Company
9788 N Ash Avenue Kansas City, Missouri 64157
816-781-6182 816-781-0643 (FAX)
Certificate of Authority No. 2002006347

005-PP_02_JSR0049_PlanProfile.dgn 2:10:11 PM 12/1/2025

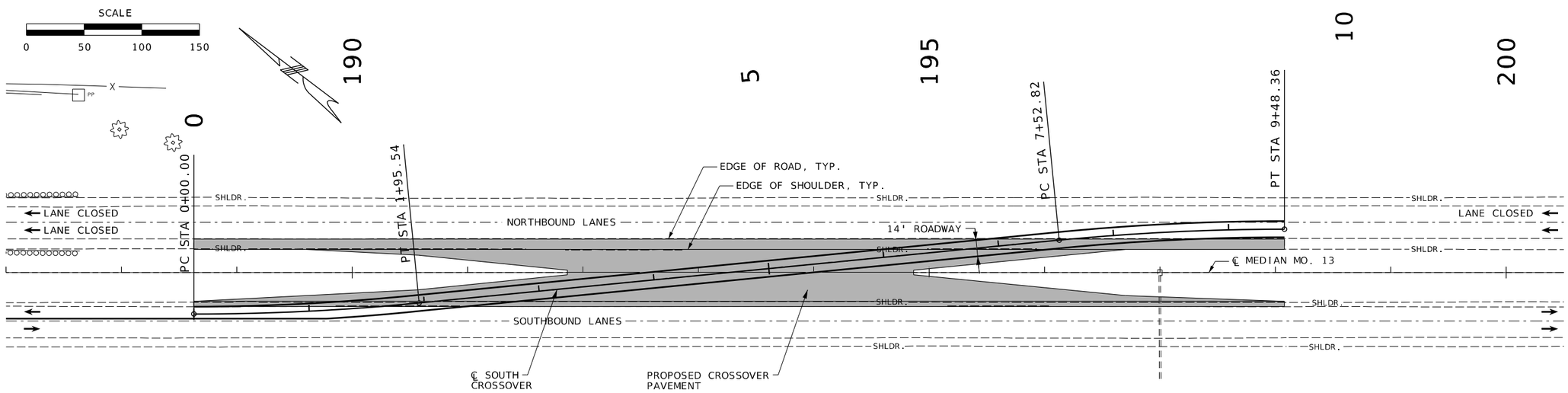

SOUTH CROSSOVER

NOTES:
FOR DETAILS OF CROSSOVER PAVEMENT CONSTRUCTION, SEE SPECIAL SHEET 4.

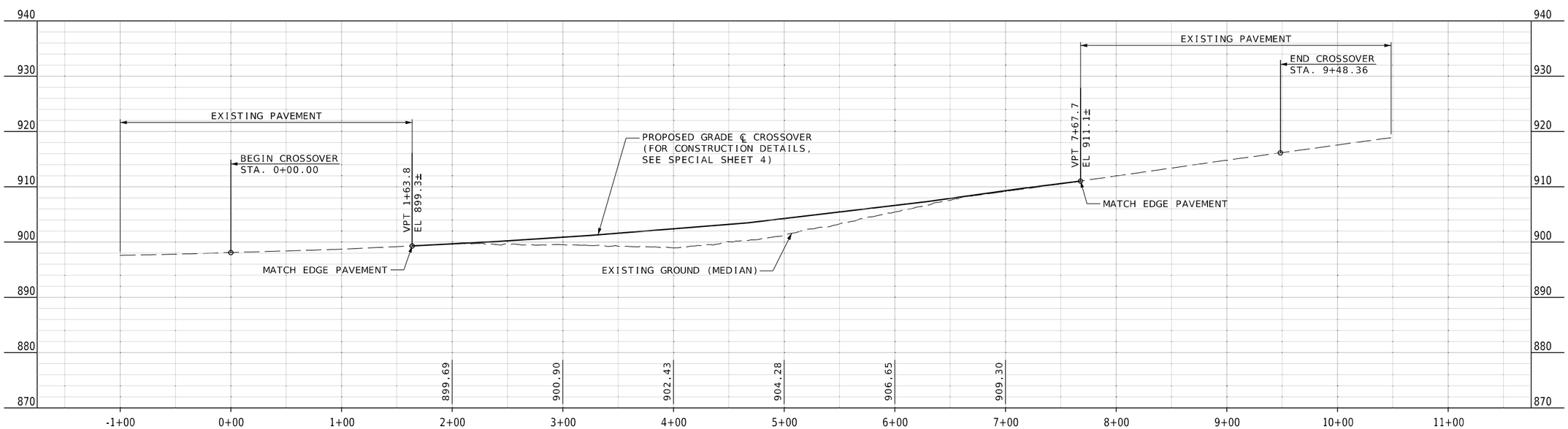

PROFILE ℄ SOUTH CROSSOVER

SOUTH CROSSOVER

PLAN-PROFILE
SHEET 3 OF 3

STATE OF MISSOURI
SCOTT MICHAEL MCDONALD
NUMBER PE-2018000240
PROFESSIONAL ENGINEER

THIS SHEET HAS BEEN SIGNED, SEALED AND DATED ELECTRONICALLY.

DATE PREPARED	
12/1/2025	
ROUTE 13	STATE MO
DISTRICT SW	SHEET NO. 6
COUNTY POLK	
JOB NO. JSR0049	
CONTRACT ID.	
PROJECT NO.	
BRIDGE NO. A9573	

DATE	DESCRIPTION

MISSOURI HIGHWAYS AND TRANSPORTATION COMMISSION
105 WEST CAPITOL
JEFFERSON CITY, MO 65102
1-888-ASK-MODOT (1-888-275-6636)

VEENSTRA & KIMM INC.
A Kleinfelder Company
9788 N Ash Avenue Kansas City, Missouri 64157
816-781-6182 816-781-0643 (FAX)
Certificate of Authority No. 2002006347

ELEV. 895.52

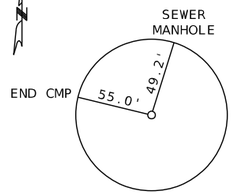

CONTROL POINT - 10
REBAR WITH CAP

ELEV. 890.72

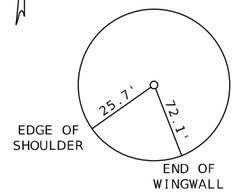

CONTROL POINT - 11
REBAR WITH CAP

ELEV. 892.45

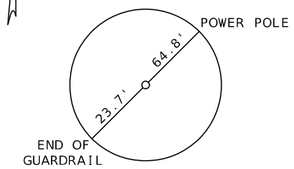

CONTROL POINT - 12
REBAR WITH CAP

REFERENCE POINTS
SHEET 1 OF 1

STATE OF MISSOURI
SCOTT MICHAEL MCDONALD
NUMBER
PE-2018000240
PROFESSIONAL ENGINEER

THIS SHEET HAS BEEN SIGNED, SEALED AND DATED ELECTRONICALLY.

DATE PREPARED	
12/1/2025	
ROUTE	STATE
13	MO
DISTRICT	SHEET NO.
SW	7
COUNTY	
POLK	
JOB NO.	
JSR0049	
CONTRACT ID.	
PROJECT NO.	
BRIDGE NO.	
A9573	

DESCRIPTION	DATE

MISSOURI HIGHWAYS AND TRANSPORTATION COMMISSION
105 WEST CAPITOL
JEFFERSON CITY, MO 65102
1-888-ASK-MODOT (1-888-275-6636)

VEENSTRA & KIMM INC.
A Kleinfelder Company
9788 N Ash Avenue Kansas City, Missouri 64157
816-781-6182 816-781-0643 (FAX)
Certificate of Authority No. 2002006347

007_RP_01_JSR0049_ReferencePoints.dgn 2:10:13 PM 12/1/2025

ALL PROJECT COORDINATES HAVE BEEN PROJECTED FROM THE MISSOURI STATE PLANE COORDINATE (SPC) SYSTEM OF 1983 USING AN AVERAGE PROJECT PROJECTION (GRID TO GROUND) FACTOR. TO GET BACK TO STATE PLANE COORDINATES MULTIPLY THE PROJECT COORDINATES BY THE AVERAGE GRID FACTOR AS SHOWN IN THE "REFERENCE CONTROL INFORMATION" PORTION OF THIS TABLE.

PROJECT COORDINATE INFORMATION

COORDINATE SYSTEM	MODIFIED STATE PLANE
HORIZONTAL DATUM	NAD83
VERTICAL DATUM	NAVD88
GEOID MODEL	GEOID18
ELEVATIONS DETERMINED BY	GNSS
PROJECT PROJECTION FACTOR	0.9999853

REFERENCE CONTROL INFORMATION

COORDINATE SYSTEM	MODIFIED STATE PLANE
CONTROL STATION	
DESIGNATION	MODOT BUFFALO CORS ARP
CORS_ID	MOBU
PID	DM4668
LATITUDE	37°39'35.05468"
LONGITUDE	93°06'10.47465"
NORTHING (M)	202838.895
EASTING (M)	446804.519
ZONE	2402 (MO-CENTRAL)
PROJECT AVERAGE GRID FACTOR	0.99992007

EXAMPLE OF PROJECT COORDINATE TO S.P.C.

PROJECT NORTHING X AVERAGE GRID FACTOR
= STATE PLANE NORTHING
PROJECT EASTING X AVERAGE GRID FACTOR
= STATE PLANE EASTING

EXAMPLE: CONTROL POINT #10
N 714,043.34 X 0.99992007 = N 716,986.27
E 1,327,255.15 X 0.99992007 = E 1,327,149.06

LINEAR UNIT CONVERSION

1 METER = 3.280833333 US SURVEY FEET (USFT)

COORDINATE POINT LISTING

SHEET NO	STATION	LOCATION	OFFSET (US FT)	MODIFIED STATE PLANE (GROUND) NORTHING (US SURVEY FT)	EASTING (US SURVEY FT)	ELEVATION (US SURVEY FT)	DESCRIPTION	POINT ID
PROJECT CONTROL POINTS								
5	176+39.17	℄ MEDIAN	152.1 LT	714,043.34	1,327,255.15	895.52	REBAR WITH CAP	10
5,9	183+20.07	℄ MEDIAN	91.2 LT	713,463.61	1,327,617.43	890.72	REBAR WITH CAP	11
5,10	187+62.71	℄ MEDIAN	89.4 LT	713,109.56	1,327,883.10	892.45	REBAR WITH CAP	12
ALIGNMENTS								
5	160+00.00	℄ MEDIAN	0.00	715,258.77	1,326,144.87		BASELINE - MEDIAN MO. 13	
5	207+00.00	℄ MEDIAN	0.00	711,510.66	1,328,980.66		BASELINE - MEDIAN MO. 13	
5,9	181+25.00	℄ MEDIAN	43.50 LT.	713,590.39	1,327,461.70		BEGIN PROJECT - ℄ NB ROADWAY	
5,10	188+28.00	℄ MEDIAN	43.50 LT.	713,029.77	1,327,885.86		END PROJECT - ℄ NB ROADWAY	
5,9	183+53.14	℄ MEDIAN	43.50 LT.	713,408.46	1,327,599.35		FILL FACE BRIDGE A9573 - ℄ NB ROADWAY	
5,10	185+00.86	℄ MEDIAN	43.50 LT.	713,290.65	1,327,688.48		FILL FACE BRIDGE A9573 - ℄ NB ROADWAY	
4	168+76.44	℄ MEDIAN	37.50' LT	714,582.46	1,326,703.58		PC STA 0+00.00 NORTH CROSSOVER	
4	169+74.28	℄ MEDIAN	37.50' LT	714,504.43	1,326,762.62		PI STA 0+97.85 NORTH CROSSOVER	
4	170+71.66	℄ MEDIAN	27.95' LT	714,421.02	1,326,813.76		PT STA 1+95.54 NORTH CROSSOVER	
4	176+26.29	℄ MEDIAN	26.45' RT	713,945.90	1,327,105.01		PC STA 7+52.82 NORTH CROSSOVER	
4	177+23.67	℄ MEDIAN	36.00' RT	713,862.48	1,327,156.15		PI STA 8+50.67 NORTH CROSSOVER	
4	178+21.51	℄ MEDIAN	36.00' RT	713,784.45	1,327,215.19		PT STA 9+48.36 NORTH CROSSOVER	
6	188+62.74	℄ MEDIAN	36.00' RT	712,954.10	1,327,843.42		PC STA 0+00.00 SOUTH CROSSOVER	
6	189+60.59	℄ MEDIAN	36.00' RT	712,876.07	1,327,902.46		PI STA 0+97.85 SOUTH CROSSOVER	
6	190+57.97	℄ MEDIAN	26.45' RT	712,804.18	1,327,968.83		PT STA 1+95.54 SOUTH CROSSOVER	
6	196+12.59	℄ MEDIAN	27.95' LT	712,394.70	1,328,346.85		PC STA 7+52.82 SOUTH CROSSOVER	
6	197+09.97	℄ MEDIAN	37.50' LT	712,322.81	1,328,413.22		PI STA 8+50.67 SOUTH CROSSOVER	
6	198+07.82	℄ MEDIAN	37.50' LT	712,244.78	1,328,472.26		PT STA 9+48.36 SOUTH CROSSOVER	

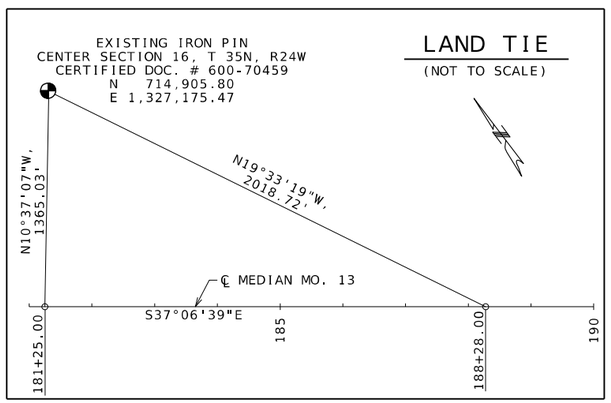

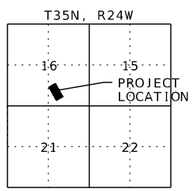

LOCATION MAP

COORDINATE POINTS
SHEET 1 OF 1

STATE OF MISSOURI
SCOTT MICHAEL MCDONALD
NUMBER
PE-2018000240
PROFESSIONAL ENGINEER

THIS SHEET HAS BEEN SIGNED, SEALED AND DATED ELECTRONICALLY.

DATE PREPARED 12/1/2025
ROUTE 13 | STATE MO
DISTRICT SW | SHEET NO. 8
COUNTY POLK
JOB NO. JSR0049
CONTRACT ID.
PROJECT NO.
BRIDGE NO. A9573

DESCRIPTION | DATE

MISSOURI HIGHWAYS AND TRANSPORTATION COMMISSION
105 WEST CAPITOL
JEFFERSON CITY, MO 65102
1-888-ASK-MODOT (1-888-275-6636)

VEENSTRA & KIMM INC.
A Kleinfelder Company
9788 N Ash Avenue Kansas City, Missouri 64157
816-781-6182 816-781-0643 (FAX)
Certificate of Authority No. 2002006347

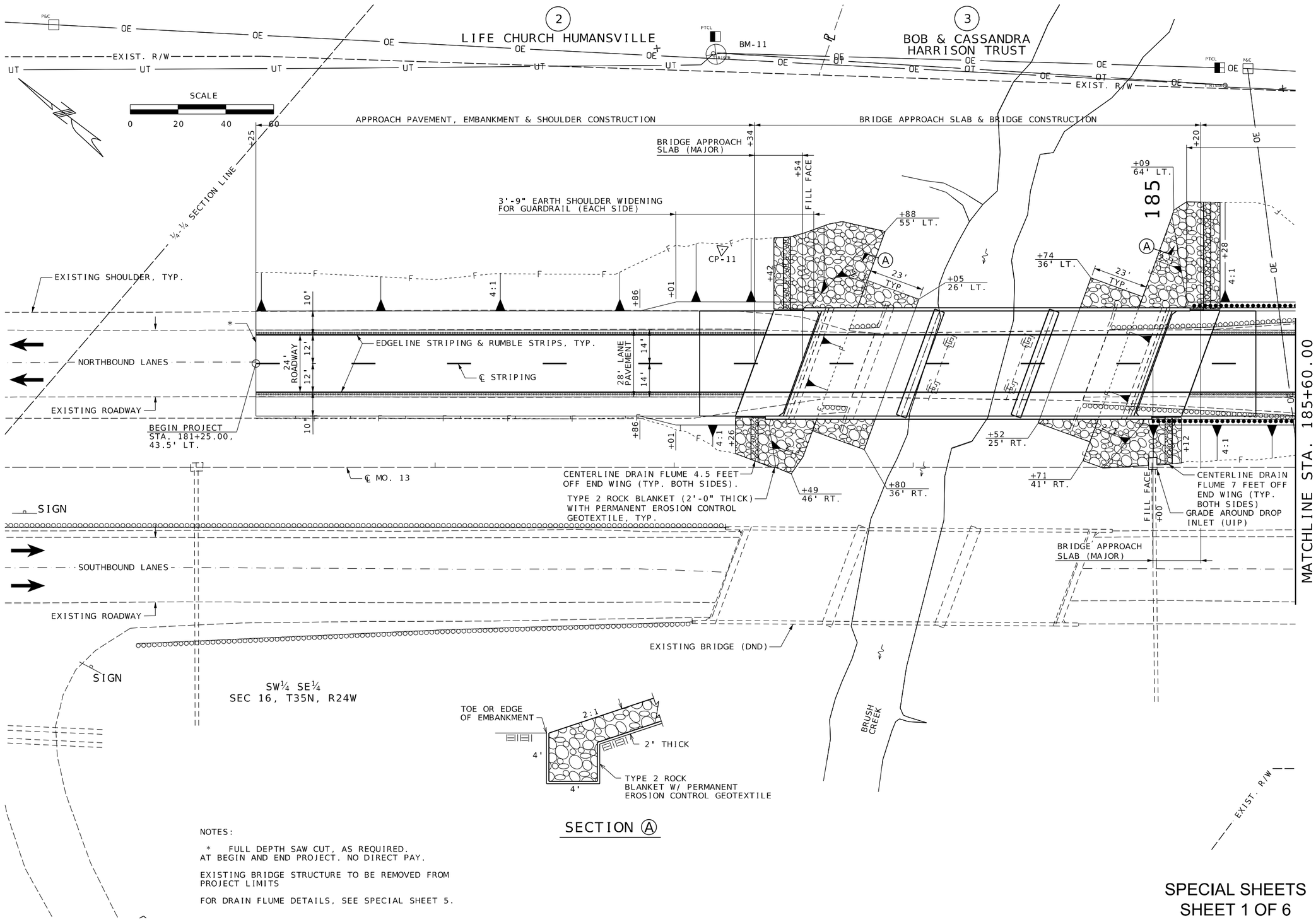

NOTES:

* FULL DEPTH SAW CUT, AS REQUIRED. AT BEGIN AND END PROJECT. NO DIRECT PAY.

EXISTING BRIDGE STRUCTURE TO BE REMOVED FROM PROJECT LIMITS

FOR DRAIN FLUME DETAILS, SEE SPECIAL SHEET 5.

SPECIAL SHEETS
SHEET 1 OF 6

STATE OF MISSOURI
SCOTT MICHAEL MCDONALD
NUMBER PE-2018000240
PROFESSIONAL ENGINEER

THIS SHEET HAS BEEN SIGNED, SEALED AND DATED ELECTRONICALLY.

DATE PREPARED	12/1/2025
ROUTE	13
STATE	MO
DISTRICT	SW
SHEET NO.	9
COUNTY	POLK
JOB NO.	JSR0049
CONTRACT ID.	
PROJECT NO.	
BRIDGE NO.	A9573

DATE | DESCRIPTION

MISSOURI HIGHWAYS AND TRANSPORTATION COMMISSION
105 WEST CAPITOL
JEFFERSON CITY, MO 65102
1-888-ASK-MODOT (1-888-275-6636)

VEENSTRA & KIMM INC.
A Kleinfelder Company
9788 N Ash Avenue Kansas City, Missouri 64157
816-781-6182 816-781-0643 (FAX)
Certificate of Authority No. 2002006347

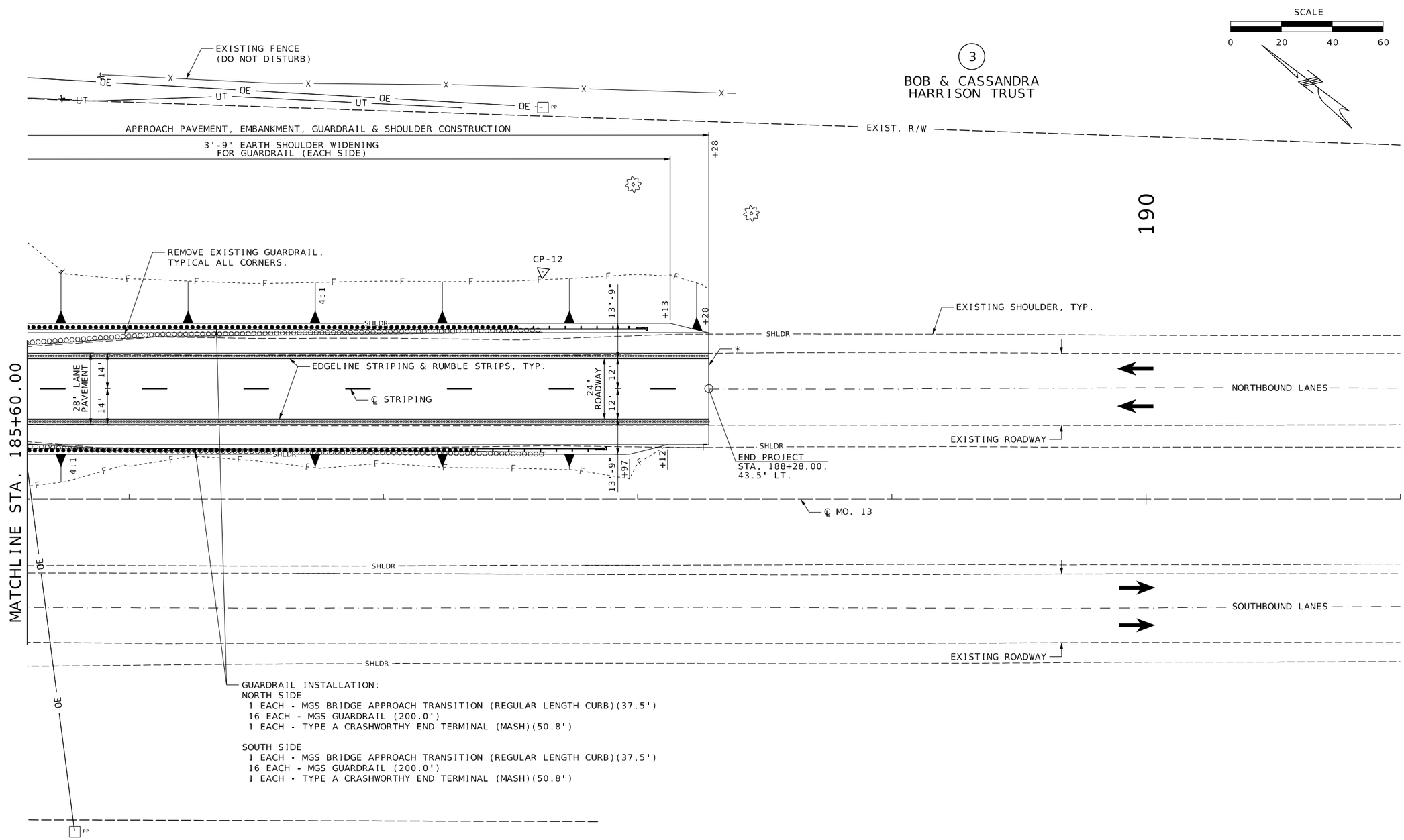

NOTES:

* FULL DEPTH SAW CUT, AS REQUIRED.
AT BEGIN AND END PROJECT. NO DIRECT PAY.

EXISTING BRIDGE STRUCTURE TO BE REMOVED FROM
PROJECT LIMITS

FOR DRAIN FLUME DETAILS, SEE SPECIAL SHEET 5.

SPECIAL SHEETS
SHEET 2 OF 6

STATE OF MISSOURI
SCOTT MICHAEL MCDONALD
NUMBER
PE-2018000240
PROFESSIONAL ENGINEER

THIS SHEET HAS BEEN SIGNED, SEALED AND DATED ELECTRONICALLY.

DATE PREPARED	12/1/2025
ROUTE	13
STATE	MO
DISTRICT	SW
SHEET NO.	10
COUNTY	POLK
JOB NO.	JSR0049
CONTRACT ID.	
PROJECT NO.	
BRIDGE NO.	A9573

DESCRIPTION

DATE

MISSOURI HIGHWAYS AND TRANSPORTATION COMMISSION
105 WEST CAPITOL
JEFFERSON CITY, MO 65102
1-888-ASK-MODOT (1-888-275-6636)

VEENSTRA & KIMM INC.
A Kleinfelder Company
9788 N Ash Avenue Kansas City, Missouri 64157
816-781-6182 816-781-0643 (FAX)
Certificate of Authority No. 2002006347

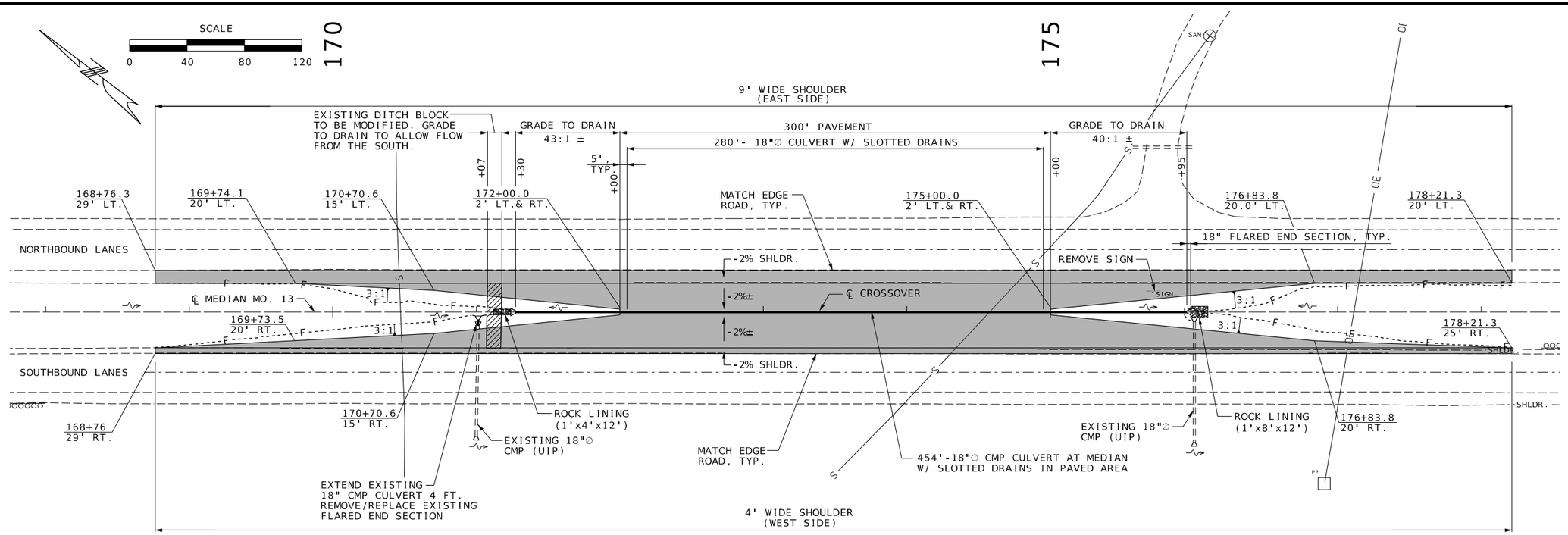

NOTEs:
FOR TRAFFIC LANE ALIGNMENT, SEE PLAN-PROFILE SHEET 1.

SLOTTED DRAINS SHALL BE TYPE A OR B, 6-INCH GRATE WITH EXTENSIONS.

NORTH CROSSOVER

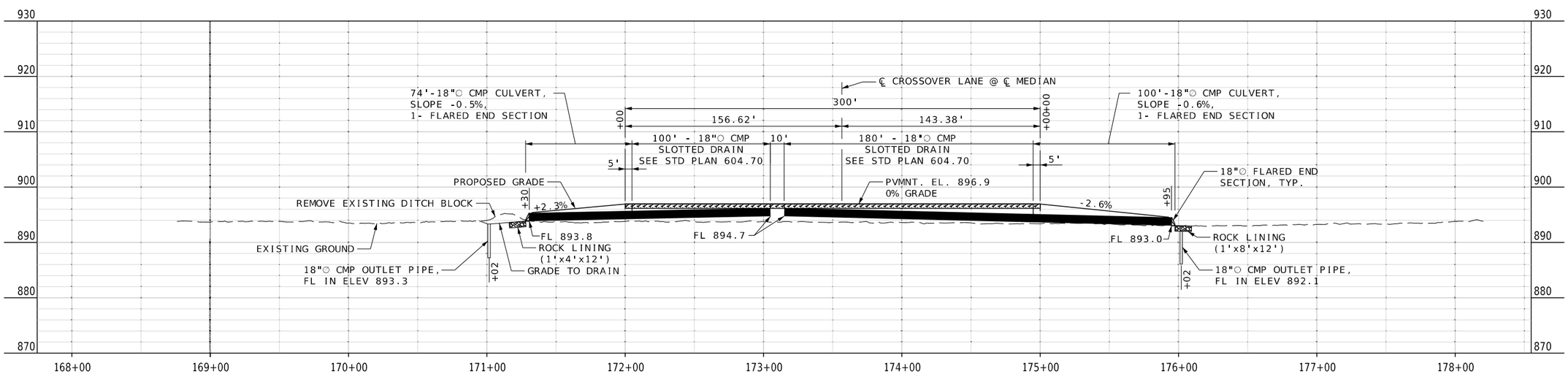

PROFILE ℄ MEDIAN

NORTH CROSSOVER

SPECIAL SHEETS
SHEET 3 OF 6

STATE OF MISSOURI
SCOTT MICHAEL MCDONALD NUMBER PE-2018000240
PROFESSIONAL ENGINEER

THIS SHEET HAS BEEN SIGNED, SEALED AND DATED ELECTRONICALLY.

DATE PREPARED	
12/1/2025	
ROUTE 13	STATE MO
DISTRICT SW	SHEET NO. 11
COUNTY POLK	
JOB NO. JSR0049	
CONTRACT ID.	
PROJECT NO.	
BRIDGE NO. A9573	

DATE	DESCRIPTION

MISSOURI HIGHWAYS AND TRANSPORTATION COMMISSION
105 WEST CAPITOL
JEFFERSON CITY, MO 65102
1-888-ASK-MODOT (1-888-275-6636)

VEENSTRA & KIMM INC.
A Kleinfelder Company
9788 N Ash Avenue Kansas City, Missouri 64157
816-781-6182 816-781-0643 (FAX)
Certificate of Authority No. 2002006347

011_SS_03_JSR0049_SpecialSheets.dgn 2:10:18 PM 12/1/2025

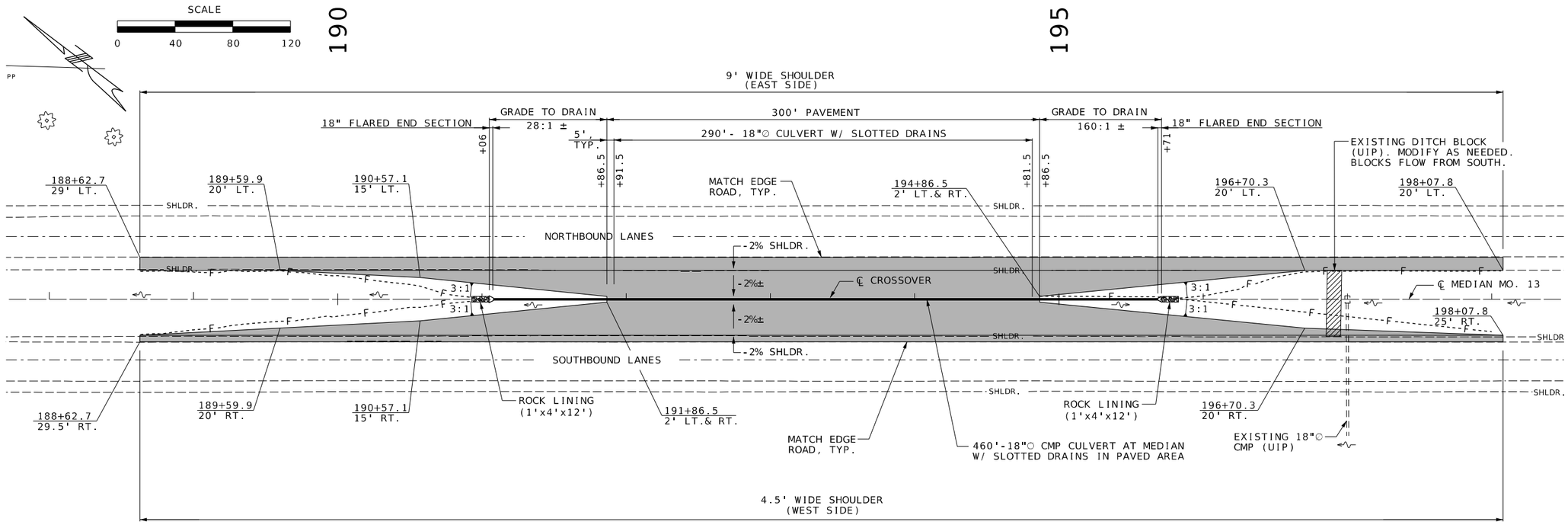

NOTES:
FOR TRAFFIC LANE ALIGNMENT, SEE PLAN-PROFILE SHEET 3.

SLOTTED DRAINS SHALL BE TYPE A OR B, 6-INCH GRATES WITH EXTENSIONS.

SOUTH CROSSOVER

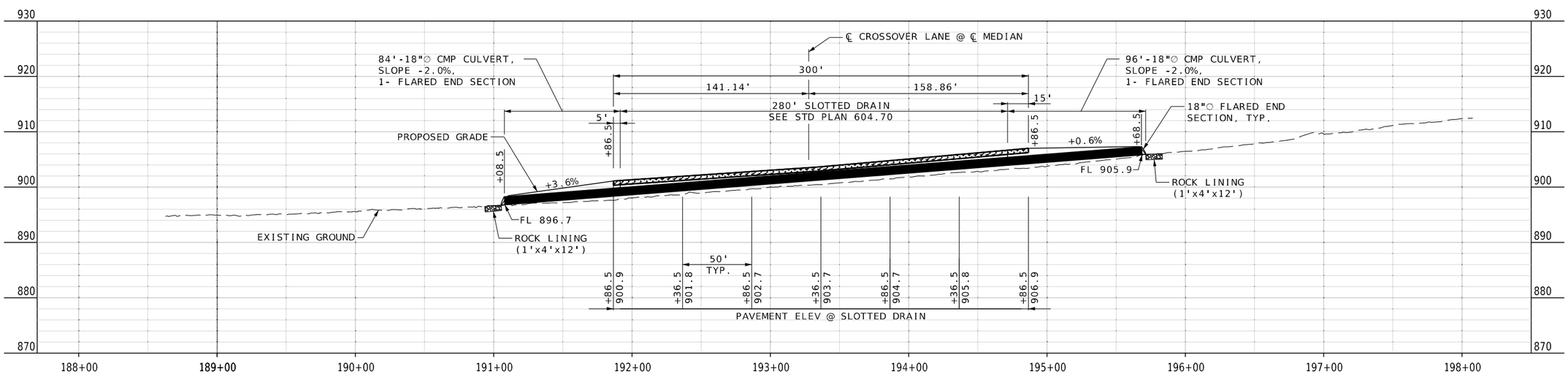

PROFILE ℄ MEDIAN

SOUTH CROSSOVER

SPECIAL SHEETS
SHEET 4 OF 6

STATE OF MISSOURI
SCOTT MICHAEL MCDONALD
NUMBER
PE-2018000240
PROFESSIONAL ENGINEER

THIS SHEET HAS BEEN SIGNED, SEALED AND DATED ELECTRONICALLY.

DATE PREPARED	
12/1/2025	
ROUTE 13	STATE MO
DISTRICT SW	SHEET NO. 12
COUNTY POLK	
JOB NO. JSR0049	
CONTRACT ID.	
PROJECT NO.	
BRIDGE NO. A9573	

DESCRIPTION	DATE

MISSOURI HIGHWAYS AND TRANSPORTATION COMMISSION
105 WEST CAPITOL
JEFFERSON CITY, MO 65102
1-888-ASK-MODOT (1-888-275-6636)

VEENSTRA & KIMM INC.
A Kleinfelder Company
9788 N Ash Avenue Kansas City, Missouri 64157
816-781-6182 816-781-0643 (FAX)
Certificate of Authority No. 2002006347

012_SS_04_JSR0049_SpecialSheets.dgn 2:10:19 PM 12/1/2025

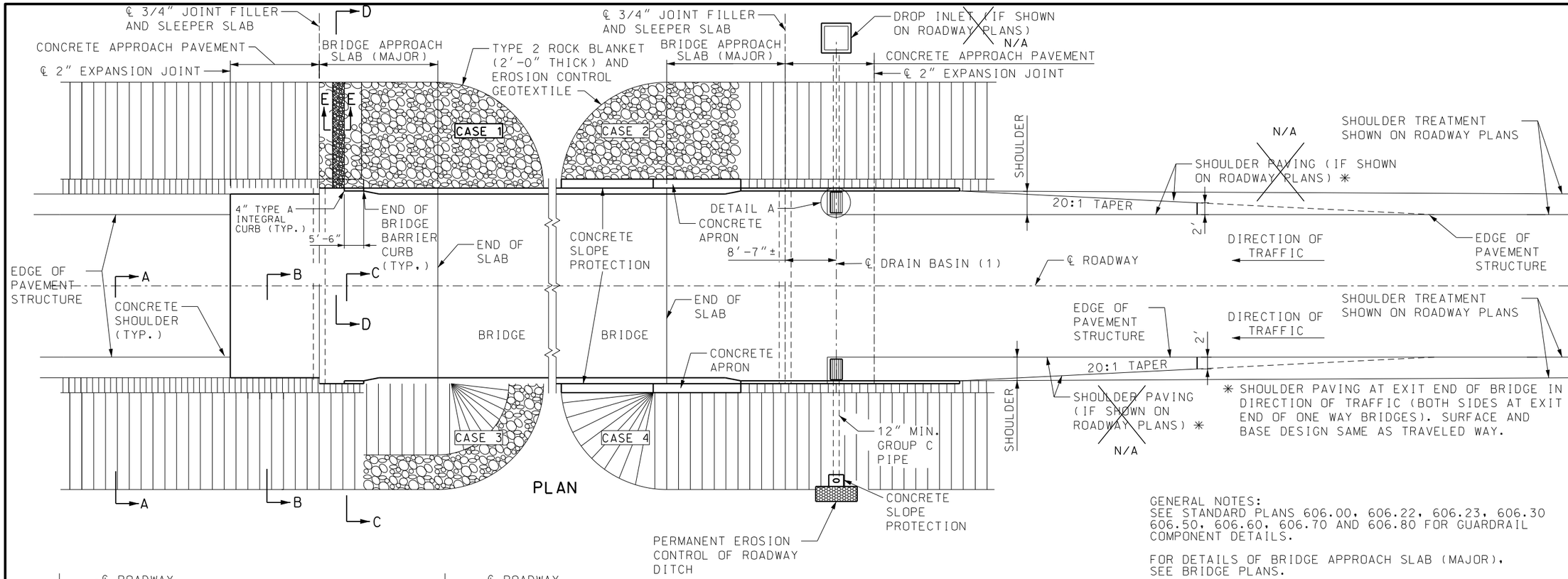

GENERAL NOTES:
SEE STANDARD PLANS 606.00, 606.22, 606.23, 606.30 606.50, 606.60, 606.70 AND 606.80 FOR GUARDRAIL COMPONENT DETAILS.

FOR DETAILS OF BRIDGE APPROACH SLAB (MAJOR), SEE BRIDGE PLANS.

TYPE A CURB IS TO BE CONSTRUCTED AS SHOWN. SEE STANDARD PLAN 609.00 FOR TYPE A CURB.

SEE STANDARD PLAN 504.00 FOR DETAILS OF CONCRETE APPROACH PAVEMENT.

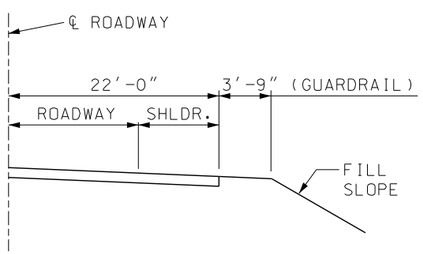

SECTION A-A

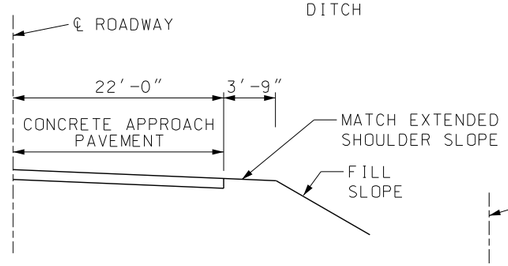

SECTION B-B

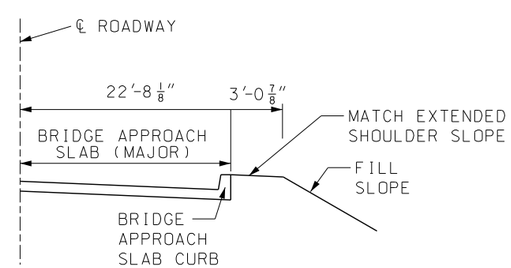

SECTION C-C

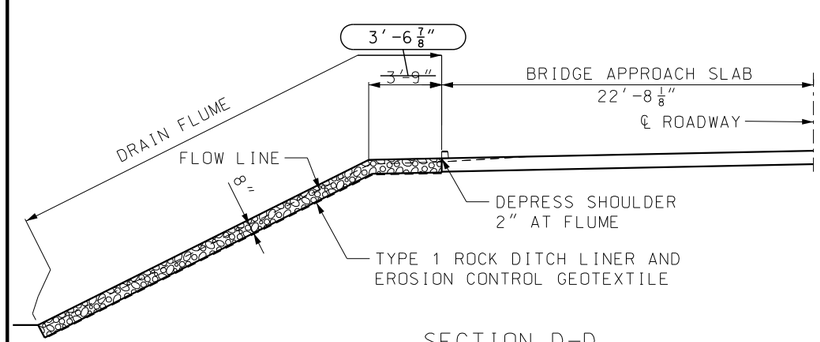

SECTION D-D

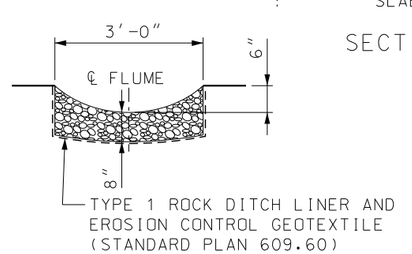

SECTION E-E

CASE	FILL SLOPE PROTECTION
1	ROCK BLANKET FILL SLOPE
2	ROCK BLANKET FILL SLOPE WITH CONCRETE SLOPE PROTECTION
3	FILL SLOPE WITH PARTIAL ROCK BLANKET
4	FILL SLOPE WITH CONCRETE SLOPE PROTECTION

USE

REVISED STD. PLAN
FOR HIGHWAY CONSTRUCTION
609.40U

DRAIN FLUME, SHOULDER PAVING AND FILL SLOPES AT BRIDGE ENDS

SPECIAL SHEETS
SHEET 5 OF 6

STATE OF MISSOURI
SCOTT MICHAEL MCDONALD
NUMBER PE-2018000240
PROFESSIONAL ENGINEER

THIS SHEET HAS BEEN SIGNED, SEALED AND DATED ELECTRONICALLY.

DATE PREPARED	
12/1/2025	
ROUTE 13	STATE MO
DISTRICT SW	SHEET NO. 13
COUNTY POLK	
JOB NO. JSR0049	
CONTRACT ID.	
PROJECT NO.	
BRIDGE NO. A9573	

DESCRIPTION

DATE

MISSOURI HIGHWAYS AND TRANSPORTATION COMMISSION
105 WEST CAPITOL
JEFFERSON CITY, MO 65102
1-888-ASK-MODOT (1-888-275-6636)

VEENSTRA & KIMM INC.
A Kleinfelder Company
9788 N Ash Avenue Kansas City, Missouri 64157
816-781-6182 816-781-0643 (FAX)
Certificate of Authority No. 2002006347

NOTE:

PAVEMENT MARKING IS NOT REQUIRED ADJACENT TO TUBULAR MARKERS.

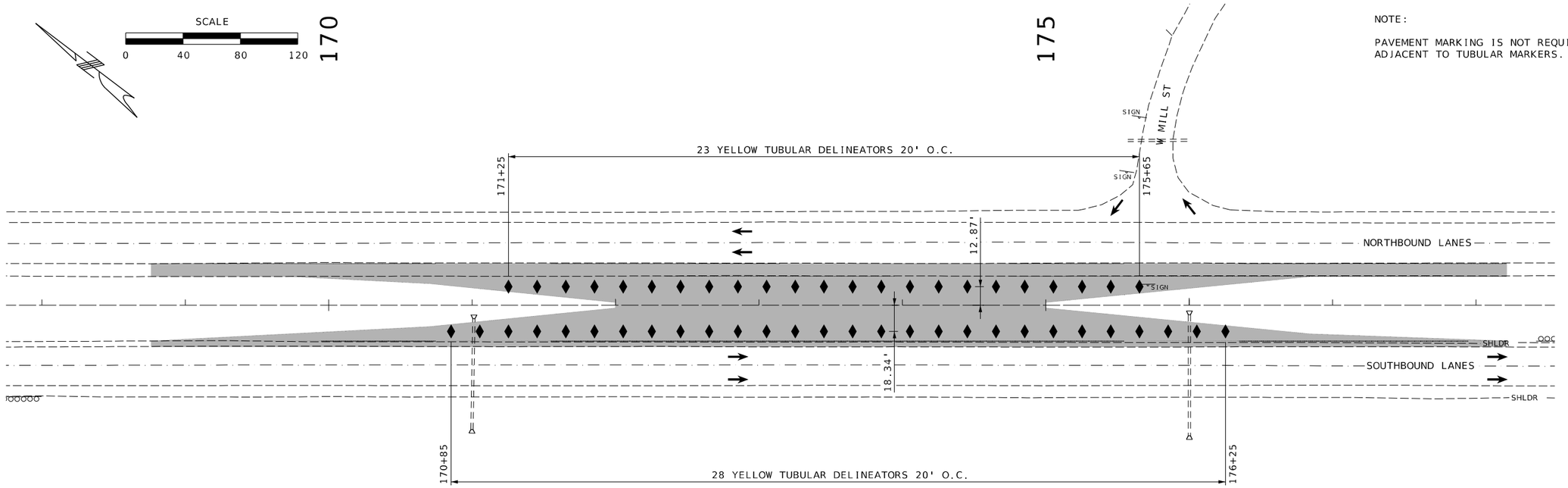

NORTH CROSSOVER

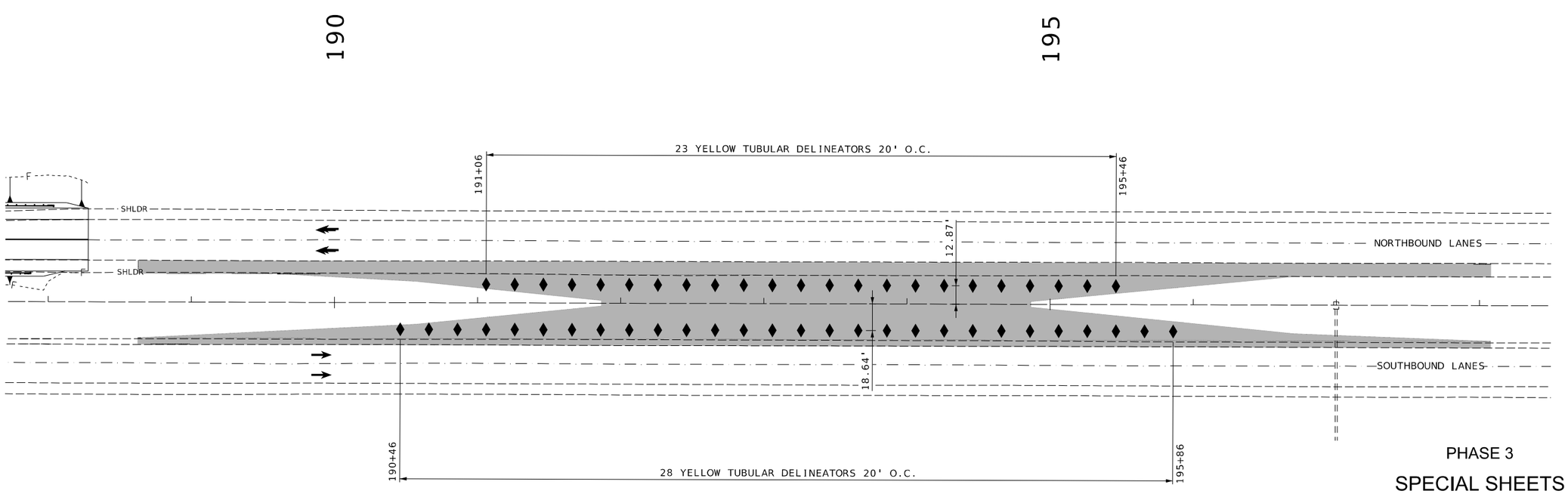

SOUTH CROSSOVER

PHASE 3

SPECIAL SHEETS
SHEET 6 OF 6

STATE OF MISSOURI
SCOTT MICHAEL MCDONALD NUMBER PE-2018000240
PROFESSIONAL ENGINEER

THIS SHEET HAS BEEN SIGNED, SEALED AND DATED ELECTRONICALLY.

DATE PREPARED	12/1/2025
ROUTE	13
STATE	MO
DISTRICT	SW
SHEET NO.	14
COUNTY	POLK
JOB NO.	JSR0049
CONTRACT ID.	
PROJECT NO.	
BRIDGE NO.	A9573

DESCRIPTION	DATE

MISSOURI HIGHWAYS AND TRANSPORTATION COMMISSION
105 WEST CAPITOL
JEFFERSON CITY, MO 65102
1-888-ASK-MODOT (1-888-275-6636)

VEENSTRA & KIMM INC.
A Kleinfelder Company
9788 N Ash Avenue Kansas City, Missouri 64157
816-781-6182 816-781-0643 (FAX)
Certificate of Authority No. 2002006347

TRAFFIC CONTROL LEGEND

- PROPOSED SIGN (SINGLE SIDED)
- EXISTING SIGN (SINGLE SIDED)
- CHANNELIZER
- DIRECTIONAL INDICATOR BARRICADE
- TUBULAR MARKERS
- TYPE III MOVEABLE BARRICADE
- SEQUENTIAL FLASHING WARNING LIGHT
- TEMPORARY CONCRETE TRAFFIC BARRIER (TYPE F)
- IMPACT ATTENUATOR 65 MPH (SAND BARRELS)
- VEHICLE WITH TRAILER MOUNTED ATTENUATOR
- CHANGEABLE MESSAGE BOARD
- FLASHING ARROW PANEL
- TEMPORARY LONG-TERM RUMBLE STRIPS

STATIONARY LANE CLOSURE ON MULTI-LANE HIGHWAY

SPEED	SIGN SPACING (FT.)	TAPER LENGTH (FT.)		RECOMMENDED	CHANNELIZER SPACING (FT.)	
PERMANENT POSTED (MPH)	DIVIDED (S)	SHOULDER (1) (T1)	LANE (2) (T2)	BUFFER LENGTH (FT.) (B)	TAPERS	BUFFER/ WORK AREAS
0-35	200	70	245	250	35	40
40-45	500	150	540	360	40	80
50-55	1000	185	660	495	50	80
60-70	SA - 1000 SB - 1500 SC - 2640	235	840	730	60	120

1. SHOULDER TAPER LENGTH BASED ON 10 FT. (STANDARD SHOULDER WIDTH) OFFSET.
2. LANE TAPER LENGTH BASED ON 12 FT. (STANDARD LANE WIDTH) OFFSET.

PHASING:

PHASE 1 - CONSTRUCT PERMANENT CROSSOVERS NORTH AND SOUTH OF THE BRIDGE. NO PAVEMENT MARKINGS.

PHASE 2 - INSTALL TEMPORARY PAVEMENT MARKINGS FOR TRAFFIC CONTROL. CONSTRUCT BRIDGE REPLACEMENT ON NORTHBOUND MO 13. REMOVE ALL TEMPORARY PAVEMENT MARKINGS FOR TRAFFIC CONTROL. INSTALL PERMANENT PAVEMENT MARKING & RUMBLE STRIPS.

PHASE 3 - BRIDGE/ROAD CONSTRUCTION COMPLETE. INSTALL TUBULAR MARKERS ON BOTH CROSSOVERS. NO PAVEMENT MARKINGS.

NOTES:

ANY EXISTING WARNING OR REGULATORY SIGNS (NOT SHOWN) THAT INTEREFERE WITH THE TRAFFIC CONTROL SIGNING SHALL BE REMOVED OR COMPLETELY COVERED.

ALL TRAFFIC CONTROL SIGNS ARE TO BE NON-PORTABLE UNLESS NOTED OTHERWISE.

MODIFICATIONS TO EXISTING SIGN LEGENDS MAY INCLUDE REMOVAL, COVERING AND UNCOVERING OF LEGENDS. NO DIRECT PAY WILL BE MADE FOR THE LABOR OR MATERIALS REQUIRED TO MAKE THESE MODIFICATIONS.

ALL SPACING AND DISTANCES SHOWN ARE APPROXIMATE. DISTANCES MAY BE ADJUSTED BY THE ENGINEER TO ACCOMODATE SPECIFIC FIELD CONDITIONS.

SEE STANDARD PLAN DRAWINGS 616.10, 903.02, AND 903.03 FOR ADDITIONAL DETAILS REGARDING TRAFFIC CONTROL AND HIGHWAY SIGNING.

"POINT OF PRESENCE" SIGN 68 TO BE FURNISHED BY THE CONTRACTOR.

ALL RELOCATED TRAFFIC SIGNS ARE TO BE NON-PORTABLE UNLESS NOTED OTHERWISE. EXISTING POST(S) & MOUNTINGS MAY BE USED FOR TEMPORARY SIGN RELOCATIONS.

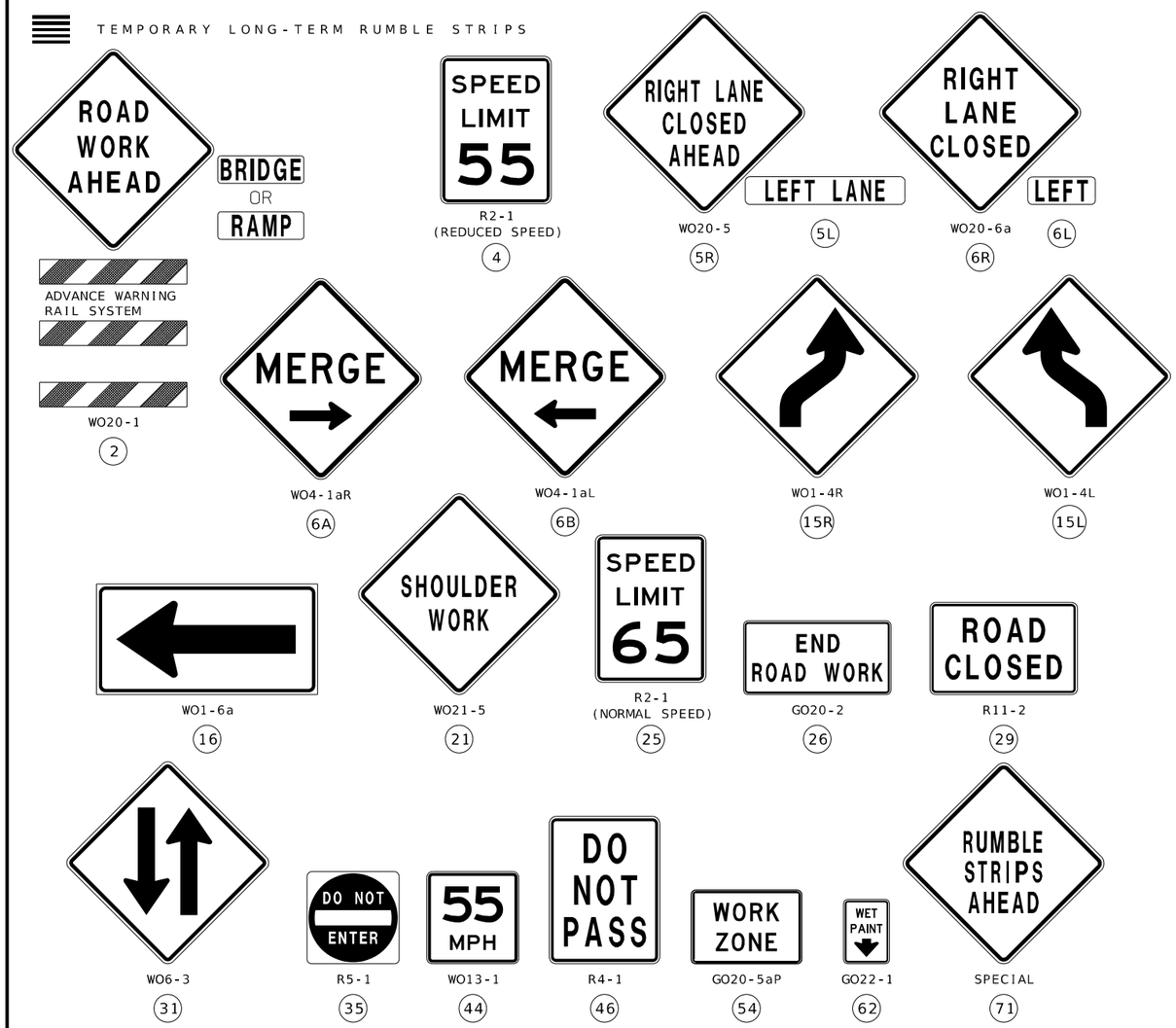

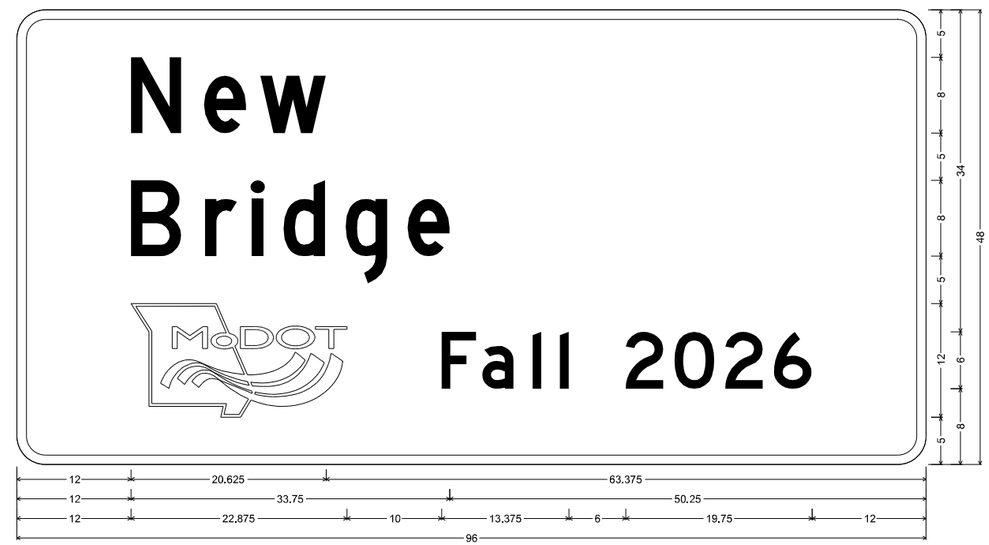

CONST-5 SH-FLAT SHEET;
3.000" Radius, 1.000" Border, White on, Blue;
"New", D; "Bridge", D; "Fall 2026", D;
Table of letter and object lefts

N 12.000	e 19.750	w 25.625							
B 12.000	r 19.875	i 24.875	d 28.125	g 34.750	e 41.250				
🚚 12.000	F 44.875	a 49.125	l 54.500	l 57.375	2 64.250	0 69.375	2 74.750	6 79.875	

58A

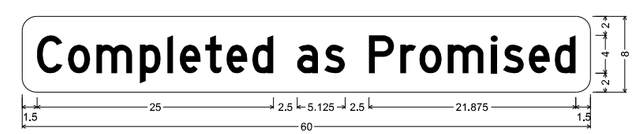

CONST-5P-60 SHF-FLAT SHEET FLUORESCENT;
1.500" Radius, No border, Yellow;
"Completed as Promised" Black, D 65% spacing;
Table of letter and object lefts

C 1.500	o 4.875	m 7.875	p 12.375	l 15.375	e 16.625	t 19.375	e 21.500	d 24.250	a 29.000	s 31.875	
P 36.625	r 39.875	o 41.875	m 44.875	l 49.500	s 50.750	e 53.500	d 56.250				

58B

ALL PHASES

TRAFFIC CONTROL
SHEET 1 OF 23

STATE OF MISSOURI
SCOTT MICHAEL MCDONALD NUMBER PE-2018000240
PROFESSIONAL ENGINEER

THIS SHEET HAS BEEN SIGNED, SEALED AND DATED ELECTRONICALLY.

DATE PREPARED 12/1/2025

ROUTE	STATE
13	MO
DISTRICT	SHEET NO.
SW	15

COUNTY: POLK
JOB NO.: JSR0049
CONTRACT ID.:
PROJECT NO.:
BRIDGE NO.: A9573

DESCRIPTION	DATE

MISSOURI HIGHWAYS AND TRANSPORTATION COMMISSION
105 WEST CAPITOL
JEFFERSON CITY, MO 65102
1-888-ASK-MODOT (1-888-275-6636)

VEENSTRA & KIMM INC.
A Kleinfelder Company
9788 N Ash Avenue Kansas City, Missouri 64157
816-781-6182 816-781-0643 (FAX)
Certificate of Authority No. 2002006347

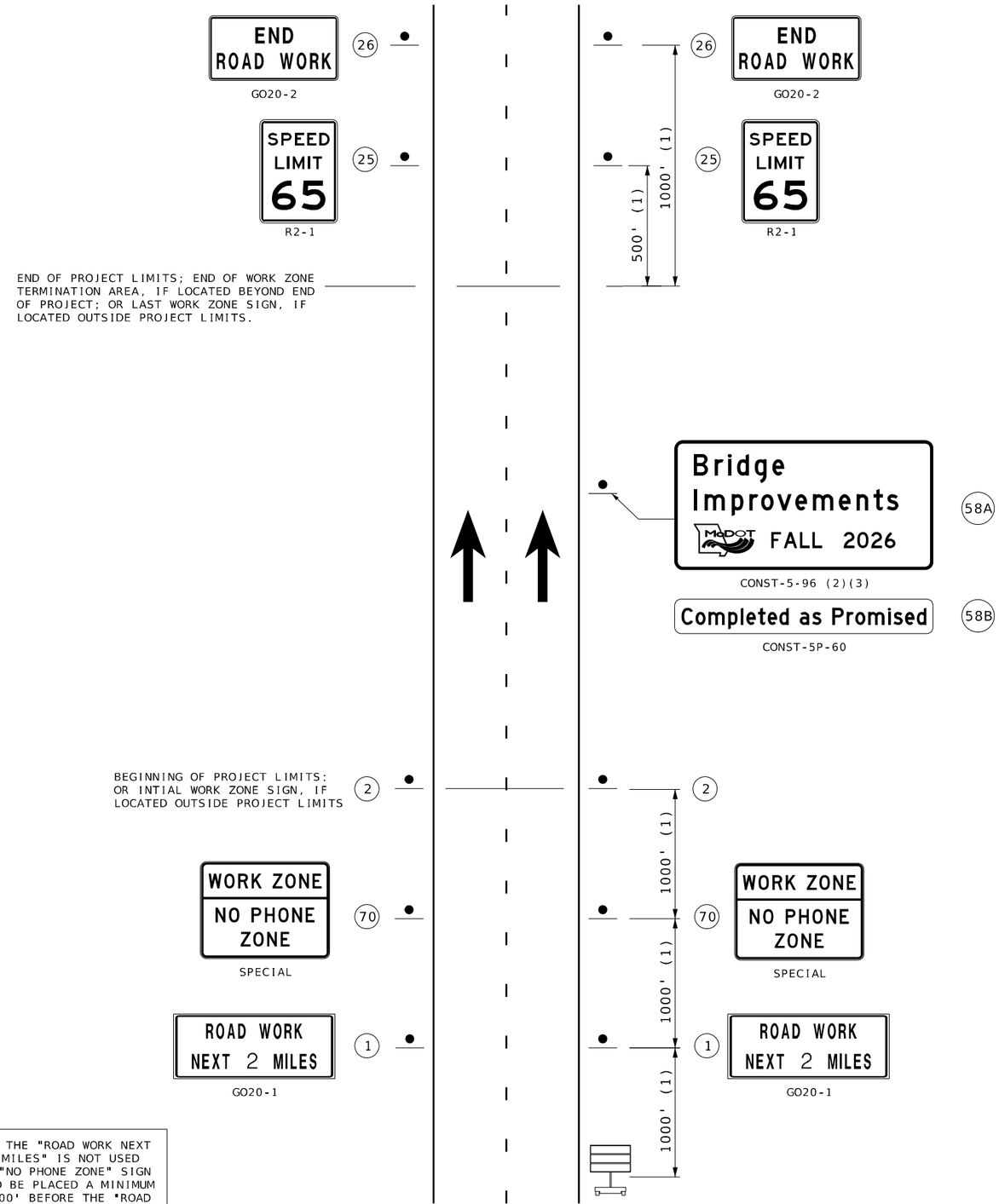

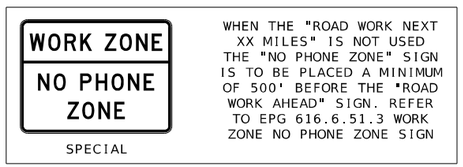

WHEN THE "ROAD WORK NEXT XX MILES" IS NOT USED THE "NO PHONE ZONE" SIGN IS TO BE PLACED A MINIMUM OF 500' BEFORE THE "ROAD WORK AHEAD" SIGN. REFER TO EPG 616.6.51.3 WORK ZONE NO PHONE ZONE SIGN

MULTI-LANE DIVIDED
BEGIN/END OF PROJECT SIGNING
(FOR USE ON ALL PROJECTS)

NOT TO SCALE. FOLLOW DIMENSIONS.

TRAFFIC CONTROL LEGEND

- PROPOSED SIGN (SINGLE SIDED)
- EXISTING SIGN (SINGLE SIDED)
- CHANNELIZER
- DIRECTIONAL INDICATOR BARRICADE
- TUBULAR MARKERS
- TYPE III MOVEABLE BARRICADE
- SEQUENTIAL FLASHING WARNING LIGHT
- IMPACT ATTENUATOR 65 MPH (SAND BARRELS)
- VEHICLE WITH TRAILER MOUNTED ATTENUATOR
- CHANGEABLE MESSAGE BOARD
- FLASHING ARROW PANEL
- TEMPORARY CONCRETE TRAFFIC BARRIER (TYPE F)
- TEMPORARY LONG-TERM RUMBLE STRIPS

NOTES:

SIGN G020-1 IS REQUIRED PER EPG 616.6.56.

SIGN G020-2 IS USED ON ALL PROJECTS WHERE SIGN G020-1 IS USED.

OTHER SIGNS SUCH AS DETOUR OR ALTERNATE ROUTE SIGNING MAY BE USED OUTSIDE THE PROJECT LIMITS.

ANY EXISTING SIGNING THAT CONFLICTS WITH THE TRAFFIC CONTROL SIGNING SHALL BE COMPLETELY CONVERED OR REMOVED.

(1) DISTANCE MAY BE ADJUSTED ACCORDING TO FIELD CONDITIONS. WHERE TRAFFIC BACKUPS ARE EXPECTED BEYOND THE ADVANCE WARNING AREA. ADDITIONAL SIGNING MAY BE NEEEDED.

(2) SIGN CONST-5-96 OR CONST-5-48 IS PLACED IN A VISIBLE AREA WITHIN THE PROJECT LIMITS PROVIDED ITS PLACEMENT DOES NOT DISRUPT A SEQUENCE OF SIGNS. IF A VISIBLE LOCATION WITHIN THE PROJECT IS NOT AVAILABLE, THE SIGN MAY BE PLACED 500 FEET BEFORE SIGN 70.

(3) THE "POINT OF PRESENCE" SIGN IS AVAILABLE IN TWO SIZES DEPENDING ON ROADWAY CONDITION. THE 48 IN. X 36 IN. SIGN IS USED ON LOW VOLUME ROUTES THAT CARRY 400 AADT OR LESS, ON PROJECTS THAT HAVE A DURATION OF 4 WEEKS OR LESS OR IN URBAN AREAS WHERE THERE IS INSUFFICIENT RIGHT OF WAY FOR AN EIGHT FOOT WIDE SIGN. THE 96 IN. X 48 IN. VERSION OF THE SIGN IS USED IN ALL OTHER APPLICATIONS, BUT CAN ALSO BE USED IN PLACE OF THE 48 IN. X 36 IN. SIGN IF ADDED EMPHASIS IS DEEMED NECESSARY.

PHASING:

PHASE 1 - CONSTRUCT PERMANENT CROSSOVERS NORTH AND SOUTH OF THE BRIDGE. NO PAVEMENT MARKINGS.

PHASE 2 - INSTALL TEMPORARY PAVEMENT MARKINGS FOR TRAFFIC CONTROL. CONSTRUCT BRIDGE REPLACEMENT ON NORTHBOUND MO 13. REMOVE ALL TEMPORARY PAVEMENT MARKINGS FOR TRAFFIC CONTROL. INSTALL PERMANENT PAVEMENT MARKING & RUMBLE STRIPS.

PHASE 3 - BRIDGE/ROAD CONSTRUCTION COMPLETE. INSTALL TUBULAR MARKERS ON BOTH CROSSOVERS. NO PAVEMENT MARKINGS.

ADDITIONAL SIGNS

TRAFFIC CONTROL
SHEET 2 OF 23

STATE OF MISSOURI
SCOTT MICHAEL MCDONALD
NUMBER PE-2018000240
PROFESSIONAL ENGINEER

THIS SHEET HAS BEEN SIGNED, SEALED AND DATED ELECTRONICALLY.

DATE PREPARED	12/1/2025
ROUTE	13
STATE	MO
DISTRICT	SW
SHEET NO.	16
COUNTY	POLK
JOB NO.	JSR0049
CONTRACT ID.	
PROJECT NO.	
BRIDGE NO.	A9573

DATE	DESCRIPTION

MISSOURI HIGHWAYS AND TRANSPORTATION COMMISSION
105 WEST CAPITOL
JEFFERSON CITY, MO 65102
1-888-ASK-MODOT (1-888-275-6636)

VEENSTRA & KIMM INC.
A Kleinfelder Company
9788 N Ash Avenue Kansas City, Missouri 64157
816-781-6182 816-781-0643 (FAX)
Certificate of Authority No. 2002006347

016_TC_02_JSR0049_TrafficControl.dgn 2:10:24 PM 12/1/2025

SCALE

0 50 100 150

PHASING:

PHASE 1 - CONSTRUCT PERMANENT CROSSOVERS NORTH AND SOUTH OF THE BRIDGE. NO PAVEMENT MARKINGS.

PHASE 2 - INSTALL TEMPORARY PAVEMENT MARKINGS FOR TRAFFIC CONTROL. CONSTRUCT BRIDGE REPLACEMENT ON NORTHBOUND MO 13. REMOVE ALL TEMPORARY PAVEMENT MARKINGS FOR TRAFFIC CONTROL. INSTALL PERMANENT PAVEMENT MARKING & RUMBLE STRIPS.

PHASE 3 - BRIDGE/ROAD CONSTRUCTION COMPLETE. INSTALL TUBULAR MARKERS ON BOTH CROSSOVERS. NO PAVEMENT MARKINGS.

TRAFFIC CONTROL LEGEND

- PROPOSED SIGN (SINGLE SIDED)
- EXISTING SIGN (SINGLE SIDED)
- CHANNELIZER
- DIRECTIONAL INDICATOR BARRICADE
- TUBULAR MARKERS
- TYPE III MOVEABLE BARRICADE
- SEQUENTIAL FLASHING WARNING LIGHT
- TEMPORARY CONCRETE TRAFFIC BARRIER (TYPE F)
- IMPACT ATTENUATOR 65 MPH (SAND BARRELS)
- VEHICLE WITH TRAILER MOUNTED ATTENUATOR
- CHANGEABLE MESSAGE BOARD
- FLASHING ARROW PANEL
- TEMPORARY LONG-TERM RUMBLE STRIPS

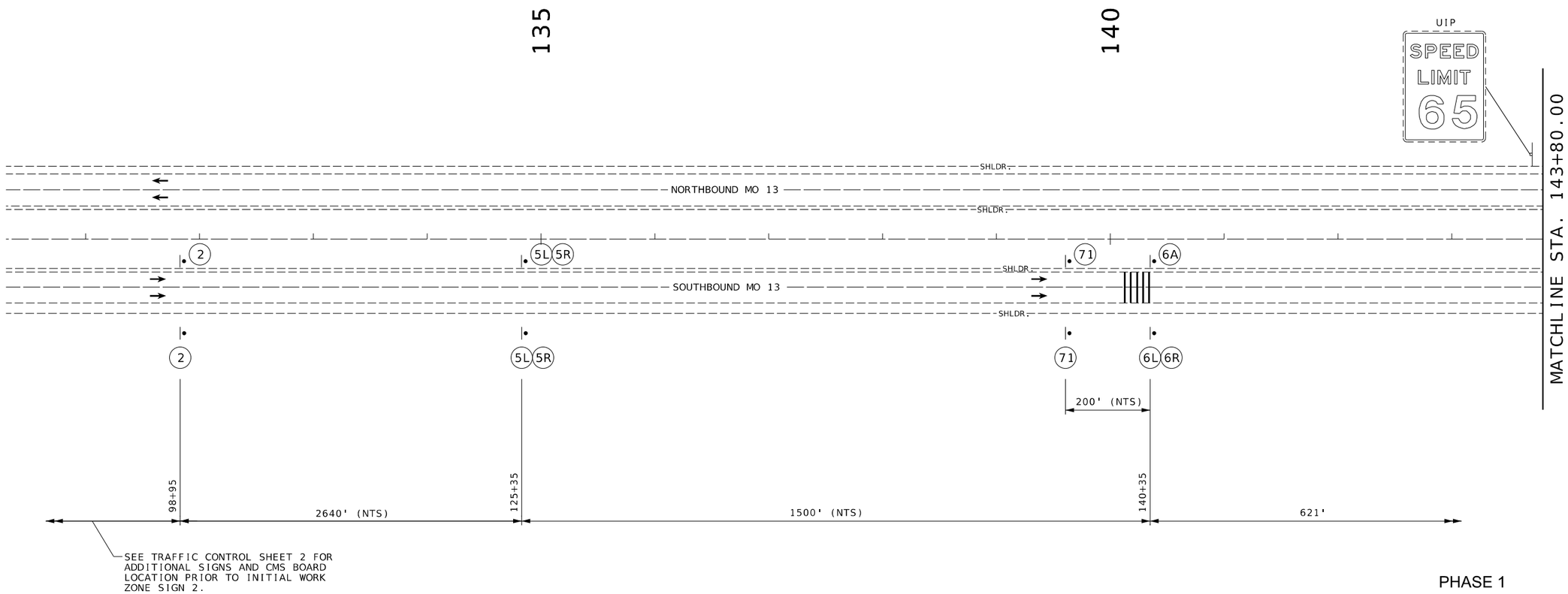

SEE TRAFFIC CONTROL SHEET 2 FOR ADDITIONAL SIGNS AND CMS BOARD LOCATION PRIOR TO INITIAL WORK ZONE SIGN 2.

(NTS) - NOT TO SCALE

PHASE 1

TRAFFIC CONTROL
SHEET 3 OF 23

STATE OF MISSOURI
SCOTT MICHAEL MCDONALD
NUMBER
PE-2018000240
PROFESSIONAL ENGINEER

THIS SHEET HAS BEEN SIGNED, SEALED AND DATED ELECTRONICALLY.

DATE PREPARED	12/1/2025
ROUTE 13	STATE MO
DISTRICT SW	SHEET NO. 17
COUNTY	POLK
JOB NO.	JSR0049
CONTRACT ID.	
PROJECT NO.	
BRIDGE NO.	A9573

DATE	DESCRIPTION

MISSOURI HIGHWAYS AND TRANSPORTATION COMMISSION
105 WEST CAPITOL
JEFFERSON CITY, MO 65102
1-888-ASK-MODOT (1-888-275-6636)

VEENSTRA & KIMM INC.
A Kleinfelder Company
9788 N Ash Avenue Kansas City, Missouri 64157
816-781-6182 816-781-0643 (FAX)
Certificate of Authority No. 2002006347

017_TC_03-10_JSR0049_TrafficControl.dgn 2:10:26 PM 12/1/2025

SCALE

0 50 100 150

PHASING:

PHASE 1 - CONSTRUCT PERMANENT CROSSOVERS NORTH AND SOUTH OF THE BRIDGE. NO PAVEMENT MARKINGS.

PHASE 2 - INSTALL TEMPORARY PAVEMENT MARKINGS FOR TRAFFIC CONTROL. CONSTRUCT BRIDGE REPLACEMENT ON NORTHBOUND MO 13. REMOVE ALL TEMPORARY PAVEMENT MARKINGS FOR TRAFFIC CONTROL. INSTALL PERMANENT PAVEMENT MARKING & RUMBLE STRIPS.

PHASE 3 - BRIDGE/ROAD CONSTRUCTION COMPLETE. INSTALL TUBULAR MARKERS ON BOTH CROSSOVERS. NO PAVEMENT MARKINGS.

TRAFFIC CONTROL LEGEND

- PROPOSED SIGN (SINGLE SIDED)
- EXISTING SIGN (SINGLE SIDED)
- CHANNELIZER
- DIRECTIONAL INDICATOR BARRICADE
- TUBULAR MARKERS
- TYPE III MOVEABLE BARRICADE
- SEQUENTIAL FLASHING WARNING LIGHT
- TEMPORARY CONCRETE TRAFFIC BARRIER (TYPE F)
- IMPACT ATTENUATOR 65 MPH (SAND BARRELS)
- VEHICLE WITH TRAILER MOUNTED ATTENUATOR
- CHANGEABLE MESSAGE BOARD
- FLASHING ARROW PANEL
- TEMPORARY LONG-TERM RUMBLE STRIPS

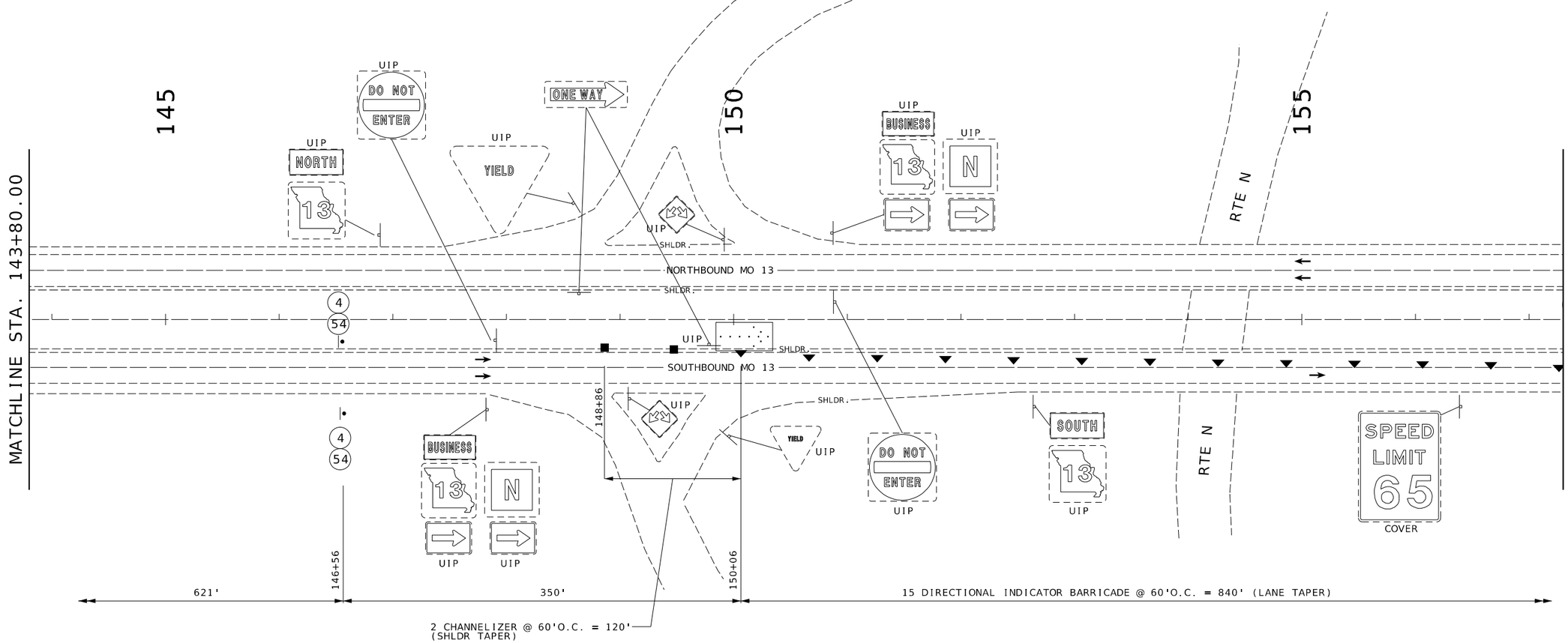

PHASE 1

TRAFFIC CONTROL
SHEET 4 OF 23

STATE OF MISSOURI
SCOTT MICHAEL MCDONALD
NUMBER PE-2018000240
PROFESSIONAL ENGINEER

THIS SHEET HAS BEEN SIGNED, SEALED AND DATED ELECTRONICALLY.

DATE PREPARED	12/1/2025
ROUTE	13
STATE	MO
DISTRICT	SW
SHEET NO.	18
COUNTY	POLK
JOB NO.	JSR0049
CONTRACT ID.	
PROJECT NO.	
BRIDGE NO.	A9573

DATE	DESCRIPTION

MISSOURI HIGHWAYS AND TRANSPORTATION COMMISSION
105 WEST CAPITOL
JEFFERSON CITY, MO 65102
1-888-ASK-MODOT (1-888-275-6636)

VEENSTRA & KIMM INC.
A Kleinfelder Company
9788 N Ash Avenue Kansas City, Missouri 64157
816-781-6182 816-781-0643 (FAX)
Certificate of Authority No. 2002006347

017_TC_03-10_JSR0049_TrafficControl.dgn 2:10:27 PM 12/1/2025

SCALE

0 50 100 150

PHASING:

PHASE 1 - CONSTRUCT PERMANENT CROSSOVERS NORTH AND SOUTH OF THE BRIDGE. NO PAVEMENT MARKINGS.

PHASE 2 - INSTALL TEMPORARY PAVEMENT MARKINGS FOR TRAFFIC CONTROL. CONSTRUCT BRIDGE REPLACEMENT ON NORTHBOUND MO 13. REMOVE ALL TEMPORARY PAVEMENT MARKINGS FOR TRAFFIC CONTROL. INSTALL PERMANENT PAVEMENT MARKING & RUMBLE STRIPS.

PHASE 3 - BRIDGE/ROAD CONSTRUCTION COMPLETE. INSTALL TUBULAR MARKERS ON BOTH CROSSOVERS. NO PAVEMENT MARKINGS.

TRAFFIC CONTROL LEGEND

- PROPOSED SIGN (SINGLE SIDED)
- EXISTING SIGN (SINGLE SIDED)
- CHANNELIZER
- DIRECTIONAL INDICATOR BARRICADE
- TUBULAR MARKERS
- TYPE III MOVEABLE BARRICADE
- SEQUENTIAL FLASHING WARNING LIGHT
- TEMPORARY CONCRETE TRAFFIC BARRIER (TYPE F)
- IMPACT ATTENUATOR 65 MPH (SAND BARRELS)
- VEHICLE WITH TRAILER MOUNTED ATTENUATOR
- CHANGEABLE MESSAGE BOARD
- FLASHING ARROW PANEL
- TEMPORARY LONG-TERM RUMBLE STRIPS

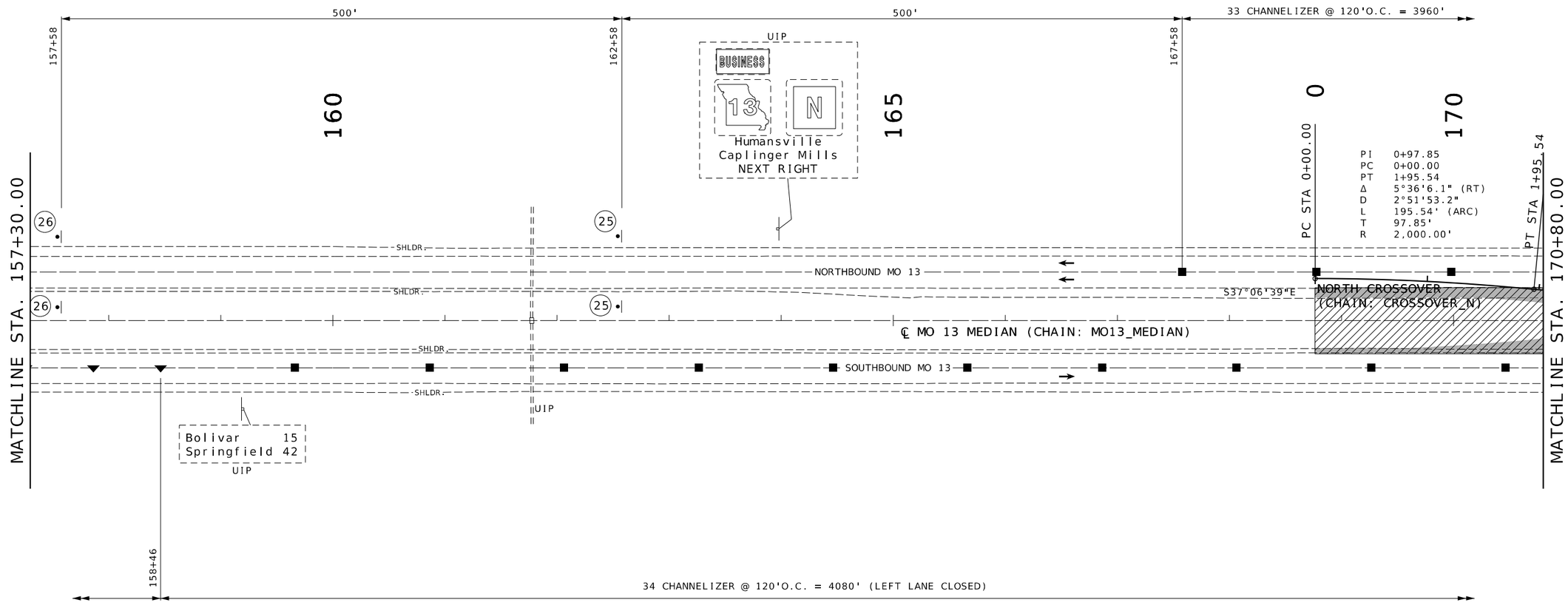

PHASE 1

TRAFFIC CONTROL
SHEET 5 OF 23

STATE OF MISSOURI
SCOTT MICHAEL MCDONALD
NUMBER PE-2018000240
PROFESSIONAL ENGINEER

THIS SHEET HAS BEEN SIGNED, SEALED AND DATED ELECTRONICALLY.

DATE PREPARED	12/1/2025
ROUTE	13
STATE	MO
DISTRICT	SW
SHEET NO.	19
COUNTY	POLK
JOB NO.	JSR0049
CONTRACT ID.	
PROJECT NO.	
BRIDGE NO.	A9573

DATE	DESCRIPTION

MISSOURI HIGHWAYS AND TRANSPORTATION COMMISSION
105 WEST CAPITOL
JEFFERSON CITY, MO 65102
1-888-ASK-MODOT (1-888-275-6636)

VEENSTRA & KIMM INC.
A Kleinfelder Company
9788 N Ash Avenue Kansas City, Missouri 64157
816-781-6182 816-781-0643 (FAX)
Certificate of Authority No. 2002006347

017_TC_03-10_JSR0049_TrafficControl.dgn 2:10:27 PM 12/1/2025

SCALE

0 50 100 150

PHASING:

PHASE 1 - CONSTRUCT PERMANENT CROSSOVERS NORTH AND SOUTH OF THE BRIDGE. NO PAVEMENT MARKINGS.

PHASE 2 - INSTALL TEMPORARY PAVEMENT MARKINGS FOR TRAFFIC CONTROL. CONSTRUCT BRIDGE REPLACEMENT ON NORTHBOUND MO 13. REMOVE ALL TEMPORARY PAVEMENT MARKINGS FOR TRAFFIC CONTROL. INSTALL PERMANENT PAVEMENT MARKING & RUMBLE STRIPS.

PHASE 3 - BRIDGE/ROAD CONSTRUCTION COMPLETE. INSTALL TUBULAR MARKERS ON BOTH CROSSOVERS. NO PAVEMENT MARKINGS.

TRAFFIC CONTROL LEGEND

- PROPOSED SIGN (SINGLE SIDED)
- EXISTING SIGN (SINGLE SIDED)
- CHANNELIZER
- DIRECTIONAL INDICATOR BARRICADE
- TUBULAR MARKERS
- TYPE III MOVEABLE BARRICADE
- SEQUENTIAL FLASHING WARNING LIGHT
- TEMPORARY CONCRETE TRAFFIC BARRIER (TYPE F)
- IMPACT ATTENUATOR 65 MPH (SAND BARRELS)
- VEHICLE WITH TRAILER MOUNTED ATTENUATOR
- CHANGEABLE MESSAGE BOARD
- FLASHING ARROW PANEL
- TEMPORARY LONG-TERM RUMBLE STRIPS

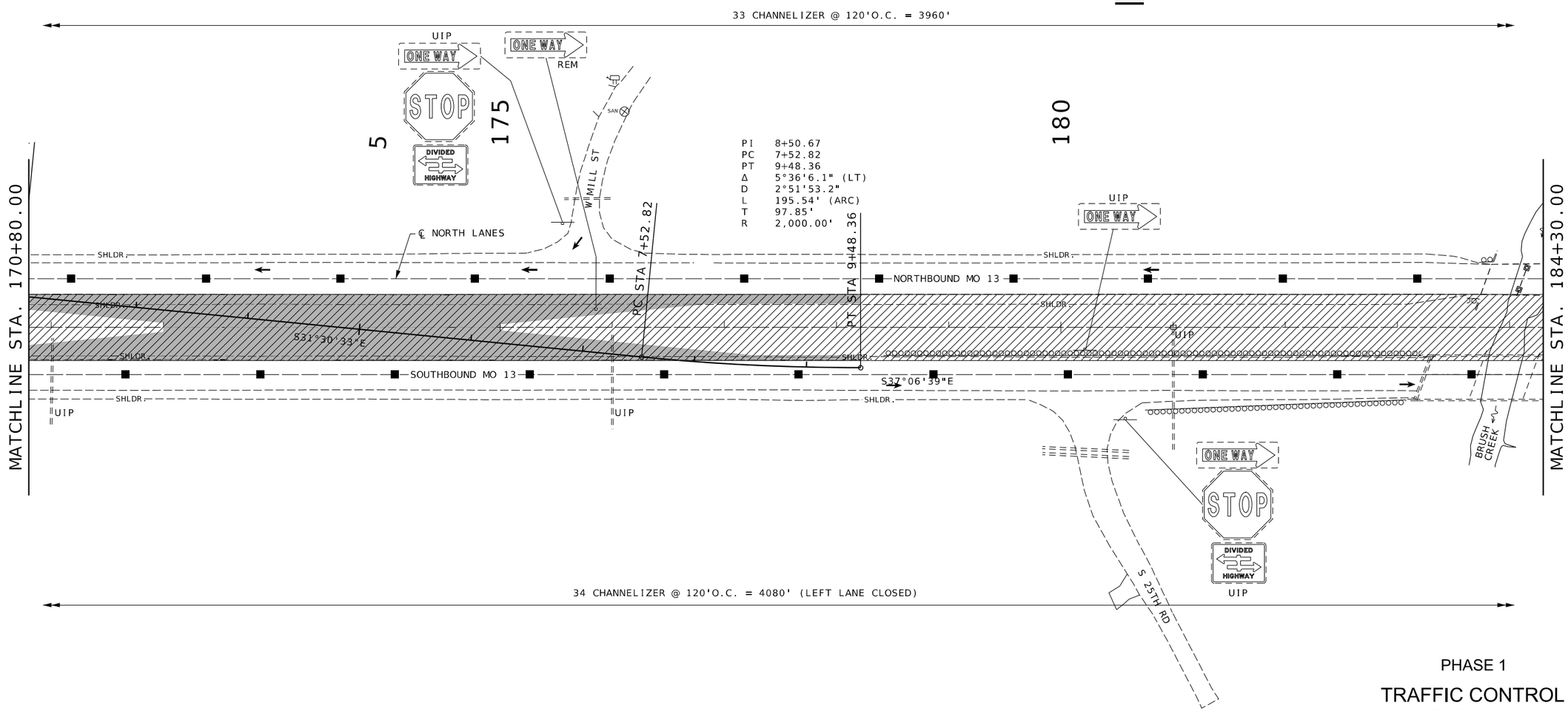

PHASE 1

TRAFFIC CONTROL
SHEET 6 OF 23

STATE OF MISSOURI
SCOTT MICHAEL MCDONALD
NUMBER PE-2018000240
PROFESSIONAL ENGINEER

THIS SHEET HAS BEEN SIGNED, SEALED AND DATED ELECTRONICALLY.

DATE PREPARED	12/1/2025
ROUTE	13
STATE	MO
DISTRICT	SW
SHEET NO.	20
COUNTY	POLK
JOB NO.	JSR0049
CONTRACT ID.	
PROJECT NO.	
BRIDGE NO.	A9573

DATE	DESCRIPTION

MISSOURI HIGHWAYS AND TRANSPORTATION COMMISSION
105 WEST CAPITOL
JEFFERSON CITY, MO 65102
1-888-ASK-MODOT (1-888-275-6636)

VEENSTRA & KIMM INC.
A Kleinfelder Company
9788 N Ash Avenue Kansas City, Missouri 64157
816-781-6182 816-781-0643 (FAX)
Certificate of Authority No. 2002006347

SCALE

0 50 100 150

PHASING:

PHASE 1 - CONSTRUCT PERMANENT CROSSOVERS NORTH AND SOUTH OF THE BRIDGE. NO PAVEMENT MARKINGS.

PHASE 2 - INSTALL TEMPORARY PAVEMENT MARKINGS FOR TRAFFIC CONTROL. CONSTRUCT BRIDGE REPLACEMENT ON NORTHBOUND MO 13. REMOVE ALL TEMPORARY PAVEMENT MARKINGS FOR TRAFFIC CONTROL. INSTALL PERMANENT PAVEMENT MARKING & RUMBLE STRIPS.

PHASE 3 - BRIDGE/ROAD CONSTRUCTION COMPLETE. INSTALL TUBULAR MARKERS ON BOTH CROSSOVERS. NO PAVEMENT MARKINGS.

TRAFFIC CONTROL LEGEND

- PROPOSED SIGN (SINGLE SIDED)
- EXISTING SIGN (SINGLE SIDED)
- CHANNELIZER
- DIRECTIONAL INDICATOR BARRICADE
- TUBULAR MARKERS
- TYPE III MOVEABLE BARRICADE
- SEQUENTIAL FLASHING WARNING LIGHT
- TEMPORARY CONCRETE TRAFFIC BARRIER (TYPE F)
- IMPACT ATTENUATOR 65 MPH (SAND BARRELS)
- VEHICLE WITH TRAILER MOUNTED ATTENUATOR
- CHANGEABLE MESSAGE BOARD
- FLASHING ARROW PANEL
- TEMPORARY LONG-TERM RUMBLE STRIPS

33 CHANNELIZER @ 120'O.C. = 3960' (LEFT LANE CLOSED)

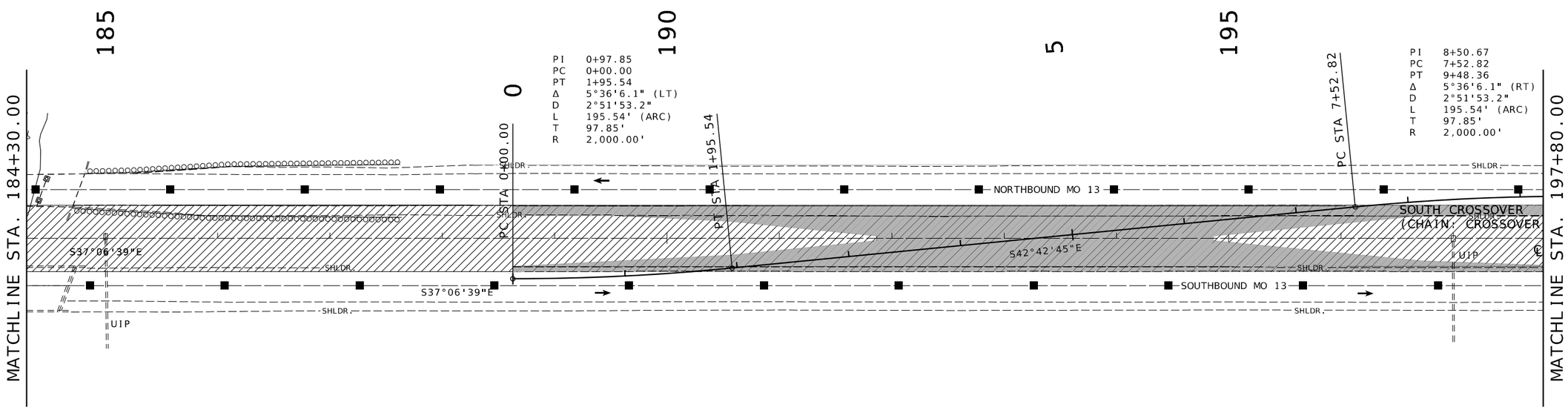

34 CHANNELIZER @ 120'O.C. = 4080' (LEFT LANE CLOSED)

PHASE 1

TRAFFIC CONTROL
SHEET 7 OF 23

STATE OF MISSOURI
SCOTT MICHAEL MCDONALD
NUMBER PE-2018000240
PROFESSIONAL ENGINEER

THIS SHEET HAS BEEN SIGNED, SEALED AND DATED ELECTRONICALLY.

DATE PREPARED	
12/1/2025	
ROUTE 13	STATE MO
DISTRICT SW	SHEET NO. 21
COUNTY POLK	
JOB NO. JSR0049	
CONTRACT ID.	
PROJECT NO.	
BRIDGE NO. A9573	

DATE	DESCRIPTION

MISSOURI HIGHWAYS AND TRANSPORTATION COMMISSION
105 WEST CAPITOL
JEFFERSON CITY, MO 65102
1-888-ASK-MODOT (1-888-275-6636)

VEENSTRA & KIMM INC.
A Kleinfelder Company
9788 N Ash Avenue Kansas City, Missouri 64157
816-781-6182 816-781-0643 (FAX)
Certificate of Authority No. 2002006347

017_TC_03-10_JSR0049_TrafficControl.dgn 2:10:28 PM 12/1/2025

SCALE

0 50 100 150

PHASING:

PHASE 1 - CONSTRUCT PERMANENT CROSSOVERS NORTH AND SOUTH OF THE BRIDGE. NO PAVEMENT MARKINGS.

PHASE 2 - INSTALL TEMPORARY PAVEMENT MARKINGS FOR TRAFFIC CONTROL. CONSTRUCT BRIDGE REPLACEMENT ON NORTHBOUND MO 13. REMOVE ALL TEMPORARY PAVEMENT MARKINGS FOR TRAFFIC CONTROL. INSTALL PERMANENT PAVEMENT MARKING & RUMBLE STRIPS.

PHASE 3 - BRIDGE/ROAD CONSTRUCTION COMPLETE. INSTALL TUBULAR MARKERS ON BOTH CROSSOVERS. NO PAVEMENT MARKINGS.

TRAFFIC CONTROL LEGEND

- PROPOSED SIGN (SINGLE SIDED)
- EXISTING SIGN (SINGLE SIDED)
- CHANNELIZER
- DIRECTIONAL INDICATOR BARRICADE
- TUBULAR MARKERS
- TYPE III MOVEABLE BARRICADE
- SEQUENTIAL FLASHING WARNING LIGHT
- TEMPORARY CONCRETE TRAFFIC BARRIER (TYPE F)
- IMPACT ATTENUATOR 65 MPH (SAND BARRELS)
- VEHICLE WITH TRAILER MOUNTED ATTENUATOR
- CHANGEABLE MESSAGE BOARD
- FLASHING ARROW PANEL
- TEMPORARY LONG-TERM RUMBLE STRIPS

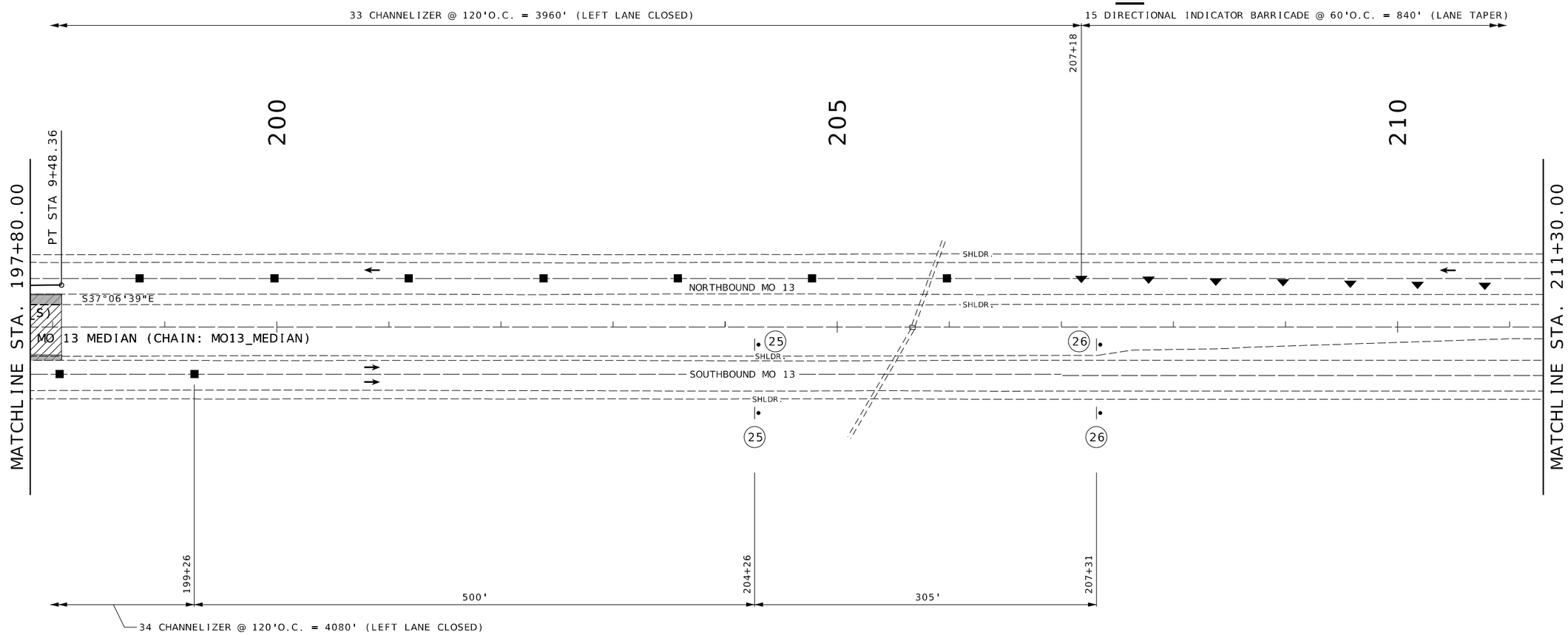

PHASE 1

TRAFFIC CONTROL
SHEET 8 OF 23

STATE OF MISSOURI
SCOTT MICHAEL MCDONALD
NUMBER PE-2018000240
PROFESSIONAL ENGINEER

THIS SHEET HAS BEEN SIGNED, SEALED AND DATED ELECTRONICALLY.

DATE PREPARED	12/1/2025
ROUTE 13	STATE MO
DISTRICT SW	SHEET NO. 22
COUNTY	POLK
JOB NO.	JSR0049
CONTRACT ID.	
PROJECT NO.	
BRIDGE NO.	A9573

DATE	DESCRIPTION

MISSOURI HIGHWAYS AND TRANSPORTATION COMMISSION
105 WEST CAPITOL
JEFFERSON CITY, MO 65102
1-888-ASK-MODOT (1-888-275-6636)

VEENSTRA & KIMM INC.
A Kleinfelder Company
9788 N Ash Avenue Kansas City, Missouri 64157
816-781-6182 816-781-0643 (FAX)
Certificate of Authority No. 2002006347

017_TC_03-10_JSR0049_TrafficControl.dgn 2:10:29 PM 12/1/2025

SCALE

0 50 100 150

PHASING:

PHASE 1 - CONSTRUCT PERMANENT CROSSOVERS NORTH AND SOUTH OF THE BRIDGE. NO PAVEMENT MARKINGS.

PHASE 2 - INSTALL TEMPORARY PAVEMENT MARKINGS FOR TRAFFIC CONTROL. CONSTRUCT BRIDGE REPLACEMENT ON NORTHBOUND MO 13. REMOVE ALL TEMPORARY PAVEMENT MARKINGS FOR TRAFFIC CONTROL. INSTALL PERMANENT PAVEMENT MARKING & RUMBLE STRIPS.

PHASE 3 - BRIDGE/ROAD CONSTRUCTION COMPLETE. INSTALL TUBULAR MARKERS ON BOTH CROSSOVERS. NO PAVEMENT MARKINGS.

TRAFFIC CONTROL LEGEND

- PROPOSED SIGN (SINGLE SIDED)
- EXISTING SIGN (SINGLE SIDED)
- CHANNELIZER
- DIRECTIONAL INDICATOR BARRICADE
- TUBULAR MARKERS
- TYPE III MOVEABLE BARRICADE
- SEQUENTIAL FLASHING WARNING LIGHT
- TEMPORARY CONCRETE TRAFFIC BARRIER (TYPE F)
- IMPACT ATTENUATOR 65 MPH (SAND BARRELS)
- VEHICLE WITH TRAILER MOUNTED ATTENUATOR
- CHANGEABLE MESSAGE BOARD
- FLASHING ARROW PANEL
- TEMPORARY LONG-TERM RUMBLE STRIPS

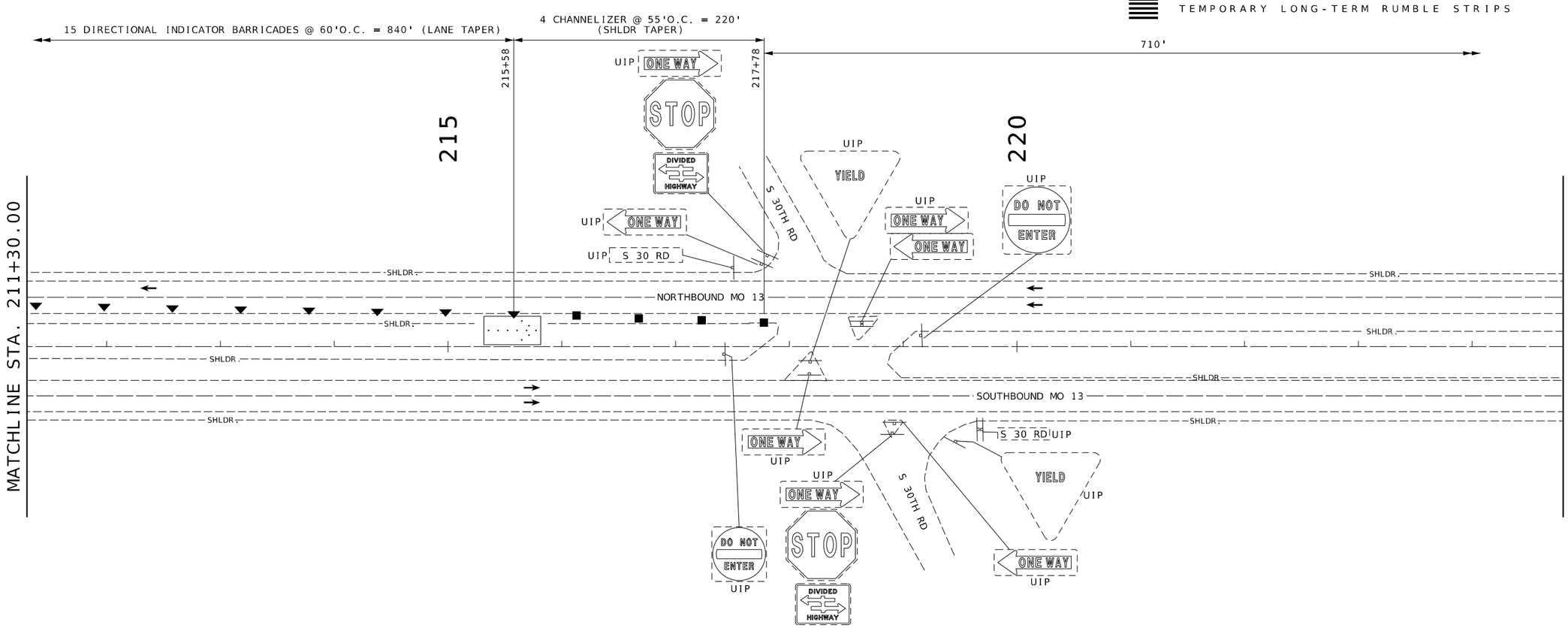

PHASE 1

TRAFFIC CONTROL
SHEET 9 OF 23

STATE OF MISSOURI
SCOTT MICHAEL MCDONALD
NUMBER PE-2018000240
PROFESSIONAL ENGINEER

THIS SHEET HAS BEEN SIGNED, SEALED AND DATED ELECTRONICALLY.

DATE PREPARED	12/1/2025
ROUTE	13
STATE	MO
DISTRICT	SW
SHEET NO.	23
COUNTY	POLK
JOB NO.	JSR0049
CONTRACT ID.	
PROJECT NO.	
BRIDGE NO.	A9573

DESCRIPTION	DATE

MISSOURI HIGHWAYS AND TRANSPORTATION COMMISSION
105 WEST CAPITOL
JEFFERSON CITY, MO 65102
1-888-ASK-MODOT (1-888-275-6636)

VEENSTRA & KIMM INC.
A Kleinfelder Company
9788 N Ash Avenue Kansas City, Missouri 64157
816-781-6182 816-781-0643 (FAX)
Certificate of Authority No. 2002006347

SCALE

0 50 100 150

PHASING:

PHASE 1 - CONSTRUCT PERMANENT CROSSOVERS NORTH AND SOUTH OF THE BRIDGE. NO PAVEMENT MARKINGS.

PHASE 2 - INSTALL TEMPORARY PAVEMENT MARKINGS FOR TRAFFIC CONTROL. CONSTRUCT BRIDGE REPLACEMENT ON NORTHBOUND MO 13. REMOVE ALL TEMPORARY PAVEMENT MARKINGS FOR TRAFFIC CONTROL. INSTALL PERMANENT PAVEMENT MARKING & RUMBLE STRIPS.

PHASE 3 - BRIDGE/ROAD CONSTRUCTION COMPLETE. INSTALL TUBULAR MARKERS ON BOTH CROSSOVERS. NO PAVEMENT MARKINGS.

TRAFFIC CONTROL LEGEND

- PROPOSED SIGN (SINGLE SIDED)
- EXISTING SIGN (SINGLE SIDED)
- CHANNELIZER
- DIRECTIONAL INDICATOR BARRICADE
- TUBULAR MARKERS
- TYPE III MOVEABLE BARRICADE
- SEQUENTIAL FLASHING WARNING LIGHT
- TEMPORARY CONCRETE TRAFFIC BARRIER (TYPE F)
- IMPACT ATTENUATOR 65 MPH (SAND BARRELS)
- VEHICLE WITH TRAILER MOUNTED ATTENUATOR
- CHANGEABLE MESSAGE BOARD
- FLASHING ARROW PANEL
- TEMPORARY LONG-TERM RUMBLE STRIPS

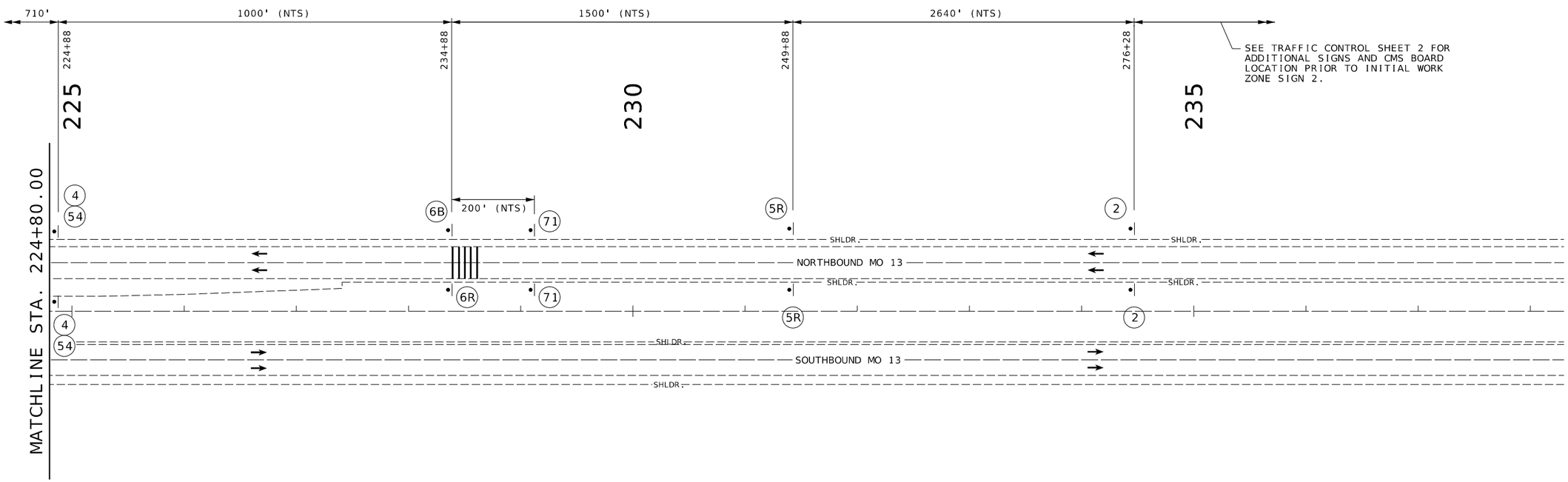

SEE TRAFFIC CONTROL SHEET 2 FOR ADDITIONAL SIGNS AND CMS BOARD LOCATION PRIOR TO INITIAL WORK ZONE SIGN 2.

(NTS) - NOT TO SCALE

PHASE 1

TRAFFIC CONTROL
SHEET 10 OF 23

STATE OF MISSOURI
SCOTT MICHAEL MCDONALD
NUMBER PE-2018000240
PROFESSIONAL ENGINEER

THIS SHEET HAS BEEN SIGNED, SEALED AND DATED ELECTRONICALLY.

DATE PREPARED	
12/1/2025	
ROUTE 13	STATE MO
DISTRICT SW	SHEET NO. 24
COUNTY POLK	
JOB NO. JSR0049	
CONTRACT ID.	
PROJECT NO.	
BRIDGE NO. A9573	

DATE	DESCRIPTION

MISSOURI HIGHWAYS AND TRANSPORTATION COMMISSION
105 WEST CAPITOL
JEFFERSON CITY, MO 65102
1-888-ASK-MODOT (1-888-275-6636)

VEENSTRA & KIMM INC.
A Kleinfelder Company
9788 N Ash Avenue Kansas City, Missouri 64157
816-781-6182 816-781-0643 (FAX)
Certificate of Authority No. 2002006347

017_TC_03-10_JSR0049_TrafficControl.dgn 2:10:30 PM 12/1/2025

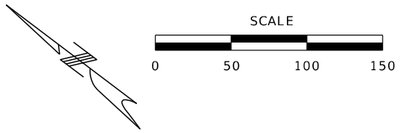

NOTE:
FOR PAVEMENT MARKING DETAILS
SEE PAVEMENT MARKING SHEETS.

PHASING:

PHASE 1 - CONSTRUCT PERMANENT CROSSOVERS NORTH AND SOUTH OF THE BRIDGE. NO PAVEMENT MARKINGS.

PHASE 2 - INSTALL TEMPORARY PAVEMENT MARKINGS FOR TRAFFIC CONTROL. CONSTRUCT BRIDGE REPLACEMENT ON NORTHBOUND MO 13. REMOVE ALL TEMPORARY PAVEMENT MARKINGS FOR TRAFFIC CONTROL. INSTALL PERMANENT PAVEMENT MARKING & RUMBLE STRIPS.

PHASE 3 - BRIDGE/ROAD CONSTRUCTION COMPLETE. INSTALL TUBULAR MARKERS ON BOTH CROSSOVERS. NO PAVEMENT MARKINGS.

TRAFFIC CONTROL LEGEND

- PROPOSED SIGN (SINGLE SIDED)
- EXISTING SIGN (SINGLE SIDED)
- CHANNELIZER
- DIRECTIONAL INDICATOR BARRICADE
- TUBULAR MARKERS
- TYPE III MOVEABLE BARRICADE
- SEQUENTIAL FLASHING WARNING LIGHT
- TEMPORARY CONCRETE TRAFFIC BARRIER (TYPE F)
- IMPACT ATTENUATOR 65 MPH (SAND BARRELS)
- VEHICLE WITH TRAILER MOUNTED ATTENUATOR
- CHANGEABLE MESSAGE BOARD
- FLASHING ARROW PANEL
- TEMPORARY LONG-TERM RUMBLE STRIPS

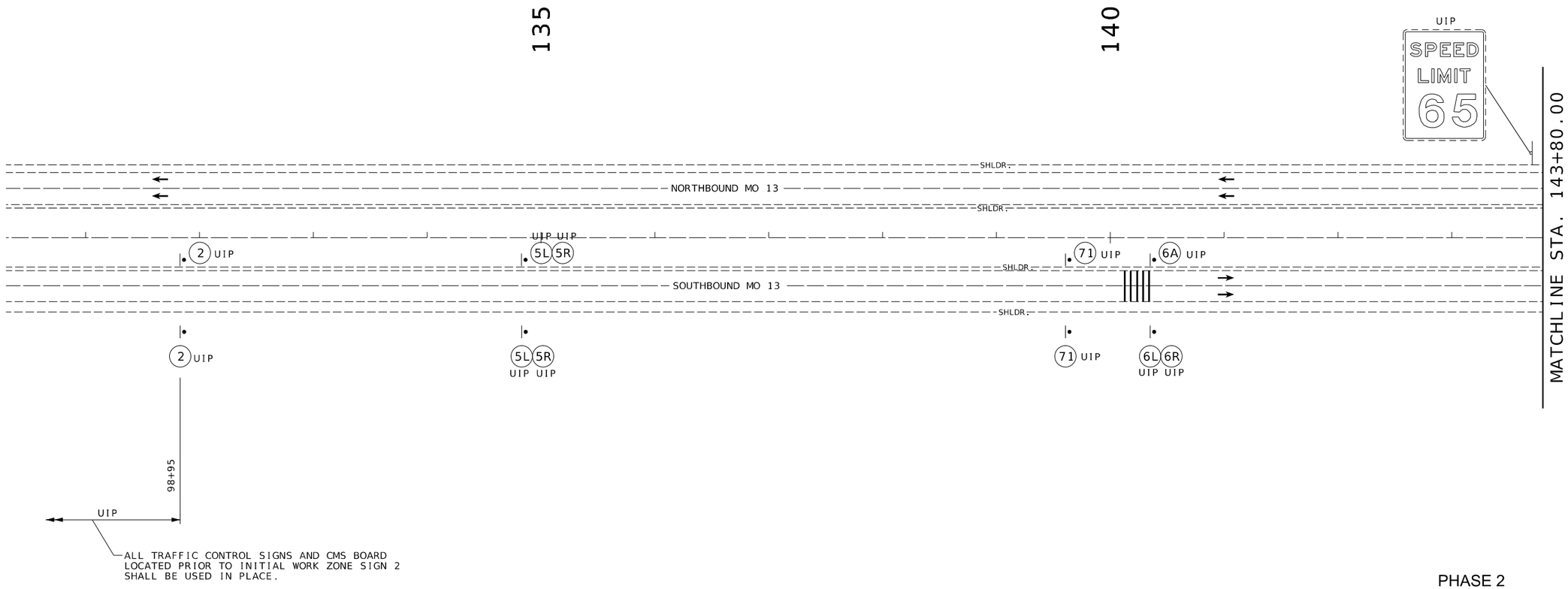

ALL TRAFFIC CONTROL SIGNS AND CMS BOARD LOCATED PRIOR TO INITIAL WORK ZONE SIGN 2 SHALL BE USED IN PLACE.

(NTS) - NOT TO SCALE

PHASE 2

TRAFFIC CONTROL
SHEET 11 OF 23

STATE OF MISSOURI
SCOTT MICHAEL MCDONALD
NUMBER
PE-2018000240
PROFESSIONAL ENGINEER

THIS SHEET HAS BEEN SIGNED, SEALED AND DATED ELECTRONICALLY.

DATE PREPARED	12/1/2025
ROUTE	13
STATE	MO
DISTRICT	SW
SHEET NO.	25
COUNTY	POLK
JOB NO.	JSR0049
CONTRACT ID.	
PROJECT NO.	
BRIDGE NO.	A9573

DATE	DESCRIPTION

MISSOURI HIGHWAYS AND TRANSPORTATION COMMISSION
105 WEST CAPITOL
JEFFERSON CITY, MO 65102
1-888-ASK-MODOT (1-888-275-6636)

VEENSTRA & KIMM INC.
A Kleinfelder Company
9788 N Ash Avenue Kansas City, Missouri 64157
816-781-6182 816-781-0643 (FAX)
Certificate of Authority No. 2002006347

SCALE

0 50 100 150

PHASING:

PHASE 1 - CONSTRUCT PERMANENT CROSSOVERS NORTH AND SOUTH OF THE BRIDGE. NO PAVEMENT MARKINGS.

PHASE 2 - INSTALL TEMPORARY PAVEMENT MARKINGS FOR TRAFFIC CONTROL. CONSTRUCT BRIDGE REPLACEMENT ON NORTHBOUND MO 13. REMOVE ALL TEMPORARY PAVEMENT MARKINGS FOR TRAFFIC CONTROL. INSTALL PERMANENT PAVEMENT MARKING & RUMBLE STRIPS.

PHASE 3 - BRIDGE/ROAD CONSTRUCTION COMPLETE. INSTALL TUBULAR MARKERS ON BOTH CROSSOVERS. NO PAVEMENT MARKINGS.

NOTE:
FOR PAVEMENT MARKING DETAILS
SEE PAVEMENT MARKING SHEETS.

TRAFFIC CONTROL LEGEND

- PROPOSED SIGN (SINGLE SIDED)
- EXISTING SIGN (SINGLE SIDED)
- CHANNELIZER
- DIRECTIONAL INDICATOR BARRICADE
- TUBULAR MARKERS
- TYPE III MOVEABLE BARRICADE
- SEQUENTIAL FLASHING WARNING LIGHT
- TEMPORARY CONCRETE TRAFFIC BARRIER (TYPE F)
- IMPACT ATTENUATOR 65 MPH (SAND BARRELS)
- VEHICLE WITH TRAILER MOUNTED ATTENUATOR
- CHANGEABLE MESSAGE BOARD
- FLASHING ARROW PANEL
- TEMPORARY LONG-TERM RUMBLE STRIPS

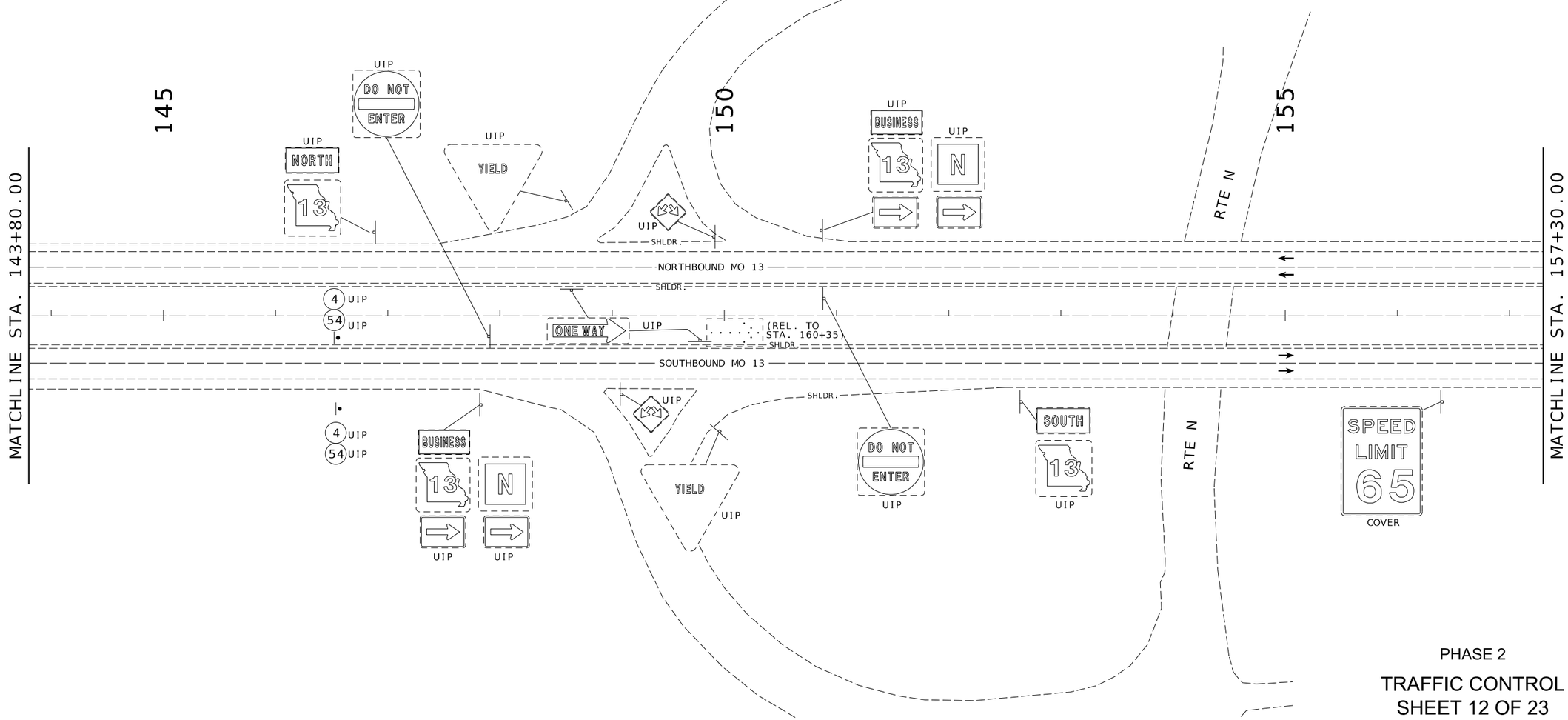

PHASE 2

TRAFFIC CONTROL
SHEET 12 OF 23

STATE OF MISSOURI
SCOTT MICHAEL MCDONALD
NUMBER PE-2018000240
PROFESSIONAL ENGINEER

THIS SHEET HAS BEEN SIGNED, SEALED AND DATED ELECTRONICALLY.

DATE PREPARED	
12/1/2025	
ROUTE 13	STATE MO
DISTRICT SW	SHEET NO. 26
COUNTY POLK	
JOB NO. JSR0049	
CONTRACT ID.	
PROJECT NO.	
BRIDGE NO. A9573	

DATE	DESCRIPTION

MISSOURI HIGHWAYS AND TRANSPORTATION COMMISSION
105 WEST CAPITOL
JEFFERSON CITY, MO 65102
1-888-ASK-MODOT (1-888-275-6636)

VEENSTRA & KIMM INC.
A Kleinfelder Company
9788 N Ash Avenue Kansas City, Missouri 64157
816-781-6182 816-781-0643 (FAX)
Certificate of Authority No. 2002006347

SCALE

0 50 100 150

PHASING:

PHASE 1 - CONSTRUCT PERMANENT CROSSOVERS NORTH AND SOUTH OF THE BRIDGE. NO PAVEMENT MARKINGS.

PHASE 2 - INSTALL TEMPORARY PAVEMENT MARKINGS FOR TRAFFIC CONTROL. CONSTRUCT BRIDGE REPLACEMENT ON NORTHBOUND MO 13. REMOVE ALL TEMPORARY PAVEMENT MARKINGS FOR TRAFFIC CONTROL. INSTALL PERMANENT PAVEMENT MARKING & RUMBLE STRIPS.

PHASE 3 - BRIDGE/ROAD CONSTRUCTION COMPLETE. INSTALL TUBULAR MARKERS ON BOTH CROSSOVERS. NO PAVEMENT MARKINGS.

NOTE:
FOR PAVEMENT MARKING DETAILS
SEE PAVEMENT MARKING SHEETS.

TRAFFIC CONTROL LEGEND

- PROPOSED SIGN (SINGLE SIDED)
- EXISTING SIGN (SINGLE SIDED)
- CHANNELIZER
- DIRECTIONAL INDICATOR BARRICADE
- TUBULAR MARKERS
- TYPE III MOVEABLE BARRICADE
- SEQUENTIAL FLASHING WARNING LIGHT
- TEMPORARY CONCRETE TRAFFIC BARRIER (TYPE F)
- IMPACT ATTENUATOR 65 MPH (SAND BARRELS)
- VEHICLE WITH TRAILER MOUNTED ATTENUATOR
- CHANGEABLE MESSAGE BOARD
- FLASHING ARROW PANEL
- TEMPORARY LONG-TERM RUMBLE STRIPS

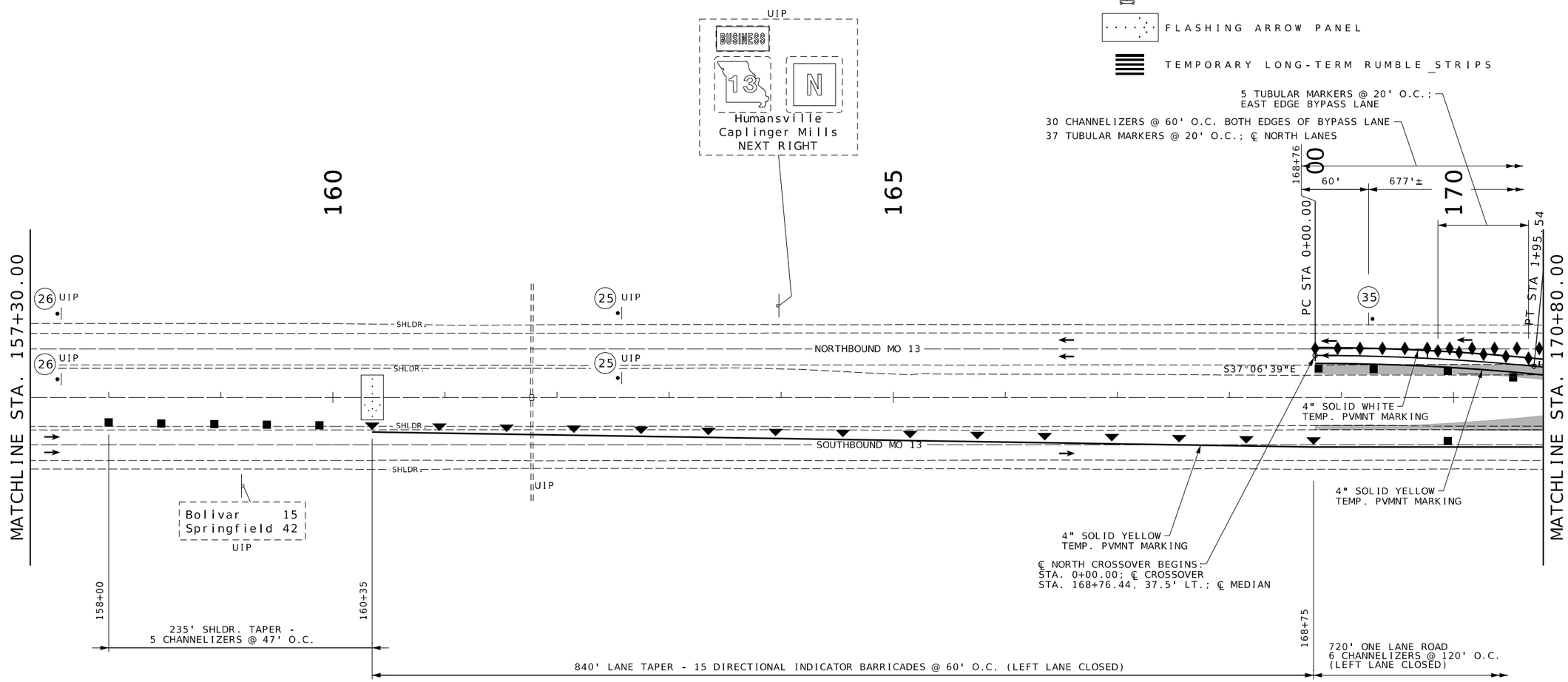

PHASE 2

TRAFFIC CONTROL
SHEET 13 OF 23

STATE OF MISSOURI
SCOTT MICHAEL MCDONALD
NUMBER PE-2018000240
PROFESSIONAL ENGINEER

THIS SHEET HAS BEEN SIGNED, SEALED AND DATED ELECTRONICALLY.

DATE PREPARED	12/1/2025
ROUTE 13	STATE MO
DISTRICT SW	SHEET NO. 27
COUNTY POLK	
JOB NO. JSR0049	
CONTRACT ID.	
PROJECT NO.	
BRIDGE NO. A9573	

DATE	DESCRIPTION

MISSOURI HIGHWAYS AND TRANSPORTATION COMMISSION
105 WEST CAPITOL
JEFFERSON CITY, MO 65102
1-888-ASK-MODOT (1-888-275-6636)

VEENSTRA & KIMM INC.
A Kleinfelder Company
9788 N Ash Avenue Kansas City, Missouri 64157
816-781-6182 816-781-0643 (FAX)
Certificate of Authority No. 2002006347

SCALE

0 50 100 150

PHASING:

PHASE 1 - CONSTRUCT PERMANENT CROSSOVERS NORTH AND SOUTH OF THE BRIDGE. NO PAVEMENT MARKINGS.

PHASE 2 - INSTALL TEMPORARY PAVEMENT MARKINGS FOR TRAFFIC CONTROL. CONSTRUCT BRIDGE REPLACEMENT ON NORTHBOUND MO 13. REMOVE ALL TEMPORARY PAVEMENT MARKINGS FOR TRAFFIC CONTROL. INSTALL PERMANENT PAVEMENT MARKING & RUMBLE STRIPS.

PHASE 3 - BRIDGE/ROAD CONSTRUCTION COMPLETE. INSTALL TUBULAR MARKERS ON BOTH CROSSOVERS. NO PAVEMENT MARKINGS.

NOTE:
FOR PAVEMENT MARKING DETAILS
SEE PAVEMENT MARKING SHEETS.

TRAFFIC CONTROL LEGEND

- PROPOSED SIGN (SINGLE SIDED)
- EXISTING SIGN (SINGLE SIDED)
- CHANNELIZER
- DIRECTIONAL INDICATOR BARRICADE
- TUBULAR MARKERS
- TYPE III MOVEABLE BARRICADE
- SEQUENTIAL FLASHING WARNING LIGHT
- TEMPORARY CONCRETE TRAFFIC BARRIER (TYPE F)
- IMPACT ATTENUATOR 65 MPH (SAND BARRELS)
- VEHICLE WITH TRAILER MOUNTED ATTENUATOR
- CHANGEABLE MESSAGE BOARD
- FLASHING ARROW PANEL
- TEMPORARY LONG-TERM RUMBLE STRIPS

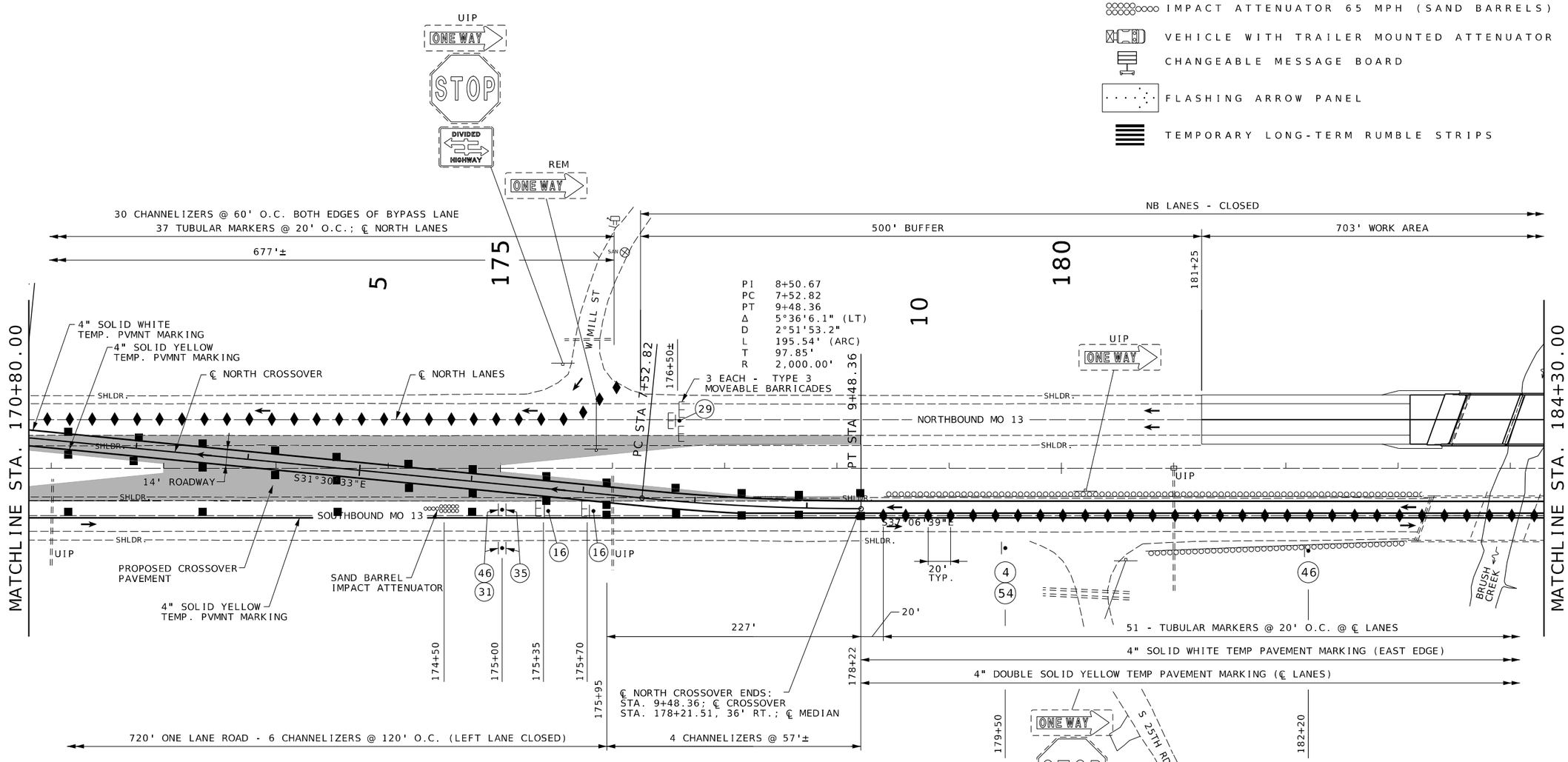

PHASE 2

TRAFFIC CONTROL
SHEET 14 OF 23

STATE OF MISSOURI
SCOTT MICHAEL MCDONALD
NUMBER PE-2018000240
PROFESSIONAL ENGINEER

THIS SHEET HAS BEEN SIGNED, SEALED AND DATED ELECTRONICALLY.

DATE PREPARED	
12/1/2025	
ROUTE 13	STATE MO
DISTRICT SW	SHEET NO. 28
COUNTY POLK	
JOB NO. JSR0049	
CONTRACT ID.	
PROJECT NO.	
BRIDGE NO. A9573	

DATE	DESCRIPTION

MISSOURI HIGHWAYS AND TRANSPORTATION COMMISSION
105 WEST CAPITOL
JEFFERSON CITY, MO 65102
1-888-ASK-MODOT (1-888-275-6636)

VEENSTRA & KIMM INC.
A Kleinfelder Company
9788 N Ash Avenue Kansas City, Missouri 64157
816-781-6182 816-781-0643 (FAX)
Certificate of Authority No. 2002006347

SCALE

0 50 100 150

PHASING:

PHASE 1 - CONSTRUCT PERMANENT CROSSOVERS NORTH AND SOUTH OF THE BRIDGE. NO PAVEMENT MARKINGS.

PHASE 2 - INSTALL TEMPORARY PAVEMENT MARKINGS FOR TRAFFIC CONTROL. CONSTRUCT BRIDGE REPLACEMENT ON NORTHBOUND MO 13. REMOVE ALL TEMPORARY PAVEMENT MARKINGS FOR TRAFFIC CONTROL. INSTALL PERMANENT PAVEMENT MARKING & RUMBLE STRIPS.

PHASE 3 - BRIDGE/ROAD CONSTRUCTION COMPLETE. INSTALL TUBULAR MARKERS ON BOTH CROSSOVERS. NO PAVEMENT MARKINGS.

NOTE:
FOR PAVEMENT MARKING DETAILS
SEE PAVEMENT MARKING SHEETS.

TRAFFIC CONTROL LEGEND

- PROPOSED SIGN (SINGLE SIDED)
- EXISTING SIGN (SINGLE SIDED)
- CHANNELIZER
- DIRECTIONAL INDICATOR BARRICADE
- TUBULAR MARKERS
- TYPE III MOVEABLE BARRICADE
- SEQUENTIAL FLASHING WARNING LIGHT
- TEMPORARY CONCRETE TRAFFIC BARRIER (TYPE F)
- IMPACT ATTENUATOR 65 MPH (SAND BARRELS)
- VEHICLE WITH TRAILER MOUNTED ATTENUATOR
- CHANGEABLE MESSAGE BOARD
- FLASHING ARROW PANEL
- TEMPORARY LONG-TERM RUMBLE STRIPS

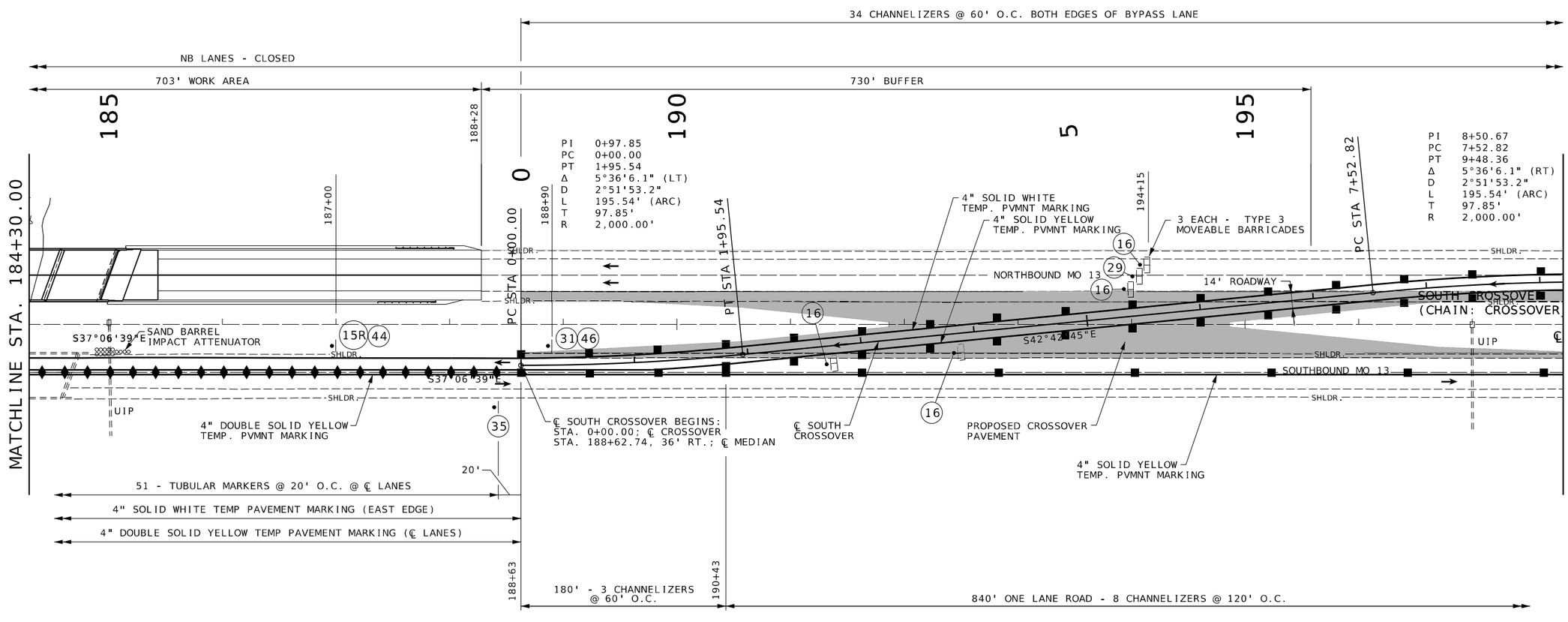

PHASE 2

TRAFFIC CONTROL
SHEET 15 OF 23

STATE OF MISSOURI
SCOTT MICHAEL MCDONALD
NUMBER PE-2018000240
PROFESSIONAL ENGINEER

THIS SHEET HAS BEEN SIGNED, SEALED AND DATED ELECTRONICALLY.

DATE PREPARED	12/1/2025
ROUTE	13
STATE	MO
DISTRICT	SW
SHEET NO.	29
COUNTY	POLK
JOB NO.	JSR0049
CONTRACT ID.	
PROJECT NO.	
BRIDGE NO.	A9573

DESCRIPTION

DATE

MISSOURI HIGHWAYS AND TRANSPORTATION COMMISSION

105 WEST CAPITOL
JEFFERSON CITY, MO 65102
1-888-ASK-MODOT (1-888-275-6636)

VEENSTRA & KIMM INC.
A Kleinfelder Company
9788 N Ash Avenue Kansas City, Missouri 64157
816-781-6182 816-781-0643 (FAX)
Certificate of Authority No. 2002006347

SCALE

0 50 100 150

PHASING:

PHASE 1 - CONSTRUCT PERMANENT CROSSOVERS NORTH AND SOUTH OF THE BRIDGE. NO PAVEMENT MARKINGS.

PHASE 2 - INSTALL TEMPORARY PAVEMENT MARKINGS FOR TRAFFIC CONTROL. CONSTRUCT BRIDGE REPLACEMENT ON NORTHBOUND MO 13. REMOVE ALL TEMPORARY PAVEMENT MARKINGS FOR TRAFFIC CONTROL. INSTALL PERMANENT PAVEMENT MARKING & RUMBLE STRIPS.

PHASE 3 - BRIDGE/ROAD CONSTRUCTION COMPLETE. INSTALL TUBULAR MARKERS ON BOTH CROSSOVERS. NO PAVEMENT MARKINGS.

NOTE:
FOR PAVEMENT MARKING DETAILS
SEE PAVEMENT MARKING SHEETS.

TRAFFIC CONTROL LEGEND

- PROPOSED SIGN (SINGLE SIDED)
- EXISTING SIGN (SINGLE SIDED)
- CHANNELIZER
- DIRECTIONAL INDICATOR BARRICADE
- TUBULAR MARKERS
- TYPE III MOVEABLE BARRICADE
- SEQUENTIAL FLASHING WARNING LIGHT
- TEMPORARY CONCRETE TRAFFIC BARRIER (TYPE F)
- IMPACT ATTENUATOR 65 MPH (SAND BARRELS)
- VEHICLE WITH TRAILER MOUNTED ATTENUATOR
- CHANGEABLE MESSAGE BOARD
- FLASHING ARROW PANEL
- TEMPORARY LONG-TERM RUMBLE STRIPS

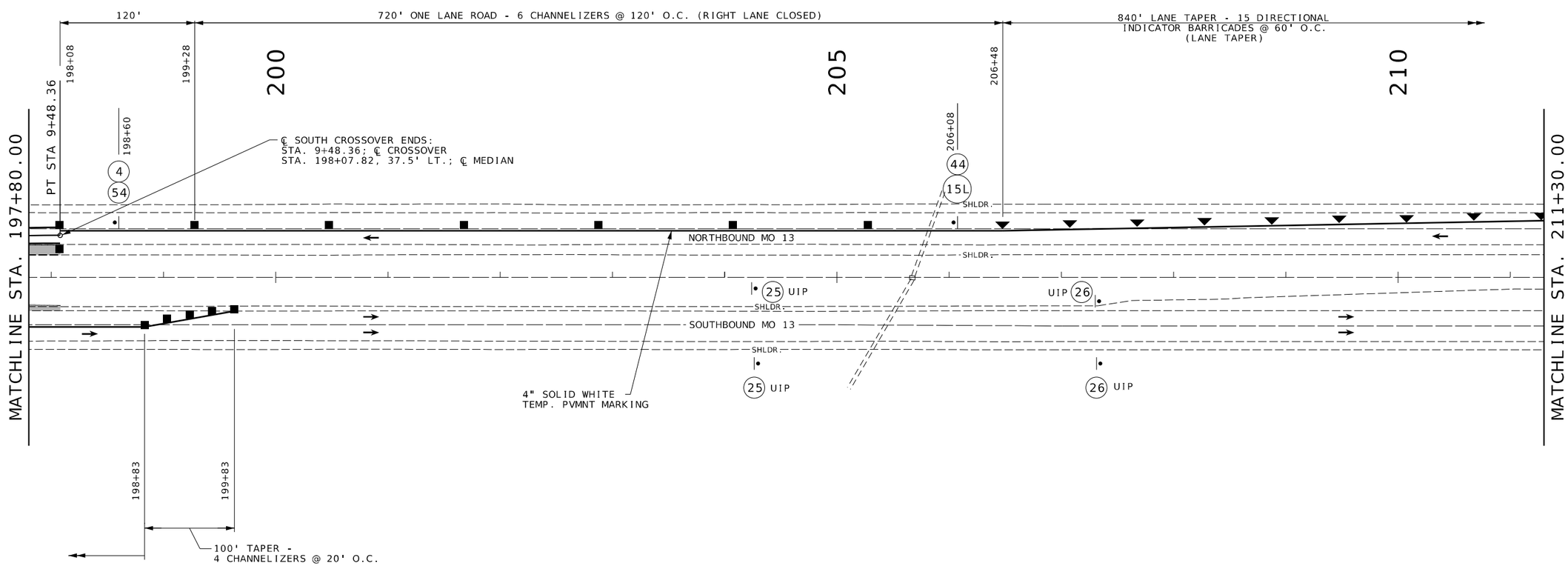

PHASE 2

TRAFFIC CONTROL
SHEET 16 OF 23

STATE OF MISSOURI
SCOTT MICHAEL MCDONALD
NUMBER
PE-2018000240
PROFESSIONAL ENGINEER

THIS SHEET HAS BEEN SIGNED, SEALED AND DATED ELECTRONICALLY.

DATE PREPARED	12/1/2025
ROUTE	13
STATE	MO
DISTRICT	SW
SHEET NO.	30
COUNTY	POLK
JOB NO.	JSR0049
CONTRACT ID.	
PROJECT NO.	
BRIDGE NO.	A9573

DATE	DESCRIPTION

MISSOURI HIGHWAYS AND TRANSPORTATION COMMISSION
105 WEST CAPITOL
JEFFERSON CITY, MO 65102
1-888-ASK-MODOT (1-888-275-6636)

VEENSTRA & KIMM INC.
A Kleinfelder Company
9788 N Ash Avenue Kansas City, Missouri 64157
816-781-6182 816-781-0643 (FAX)
Certificate of Authority No. 2002006347

025_TC_11-18_JSR0049_TrafficControl.dgn 2:10:34 PM 12/1/2025

SCALE

0 50 100 150

PHASING:

PHASE 1 - CONSTRUCT PERMANENT CROSSOVERS NORTH AND SOUTH OF THE BRIDGE. NO PAVEMENT MARKINGS.

PHASE 2 - INSTALL TEMPORARY PAVEMENT MARKINGS FOR TRAFFIC CONTROL. CONSTRUCT BRIDGE REPLACEMENT ON NORTHBOUND MO 13. REMOVE ALL TEMPORARY PAVEMENT MARKINGS FOR TRAFFIC CONTROL. INSTALL PERMANENT PAVEMENT MARKING & RUMBLE STRIPS.

PHASE 3 - BRIDGE/ROAD CONSTRUCTION COMPLETE. INSTALL TUBULAR MARKERS ON BOTH CROSSOVERS. NO PAVEMENT MARKINGS.

NOTE:
FOR PAVEMENT MARKING DETAILS
SEE PAVEMENT MARKING SHEETS.

TRAFFIC CONTROL LEGEND

- PROPOSED SIGN (SINGLE SIDED)
- EXISTING SIGN (SINGLE SIDED)
- CHANNELIZER
- DIRECTIONAL INDICATOR BARRICADE
- TUBULAR MARKERS
- TYPE III MOVEABLE BARRICADE
- SEQUENTIAL FLASHING WARNING LIGHT
- TEMPORARY CONCRETE TRAFFIC BARRIER (TYPE F)
- IMPACT ATTENUATOR 65 MPH (SAND BARRELS)
- VEHICLE WITH TRAILER MOUNTED ATTENUATOR
- CHANGEABLE MESSAGE BOARD
- FLASHING ARROW PANEL
- TEMPORARY LONG-TERM RUMBLE STRIPS

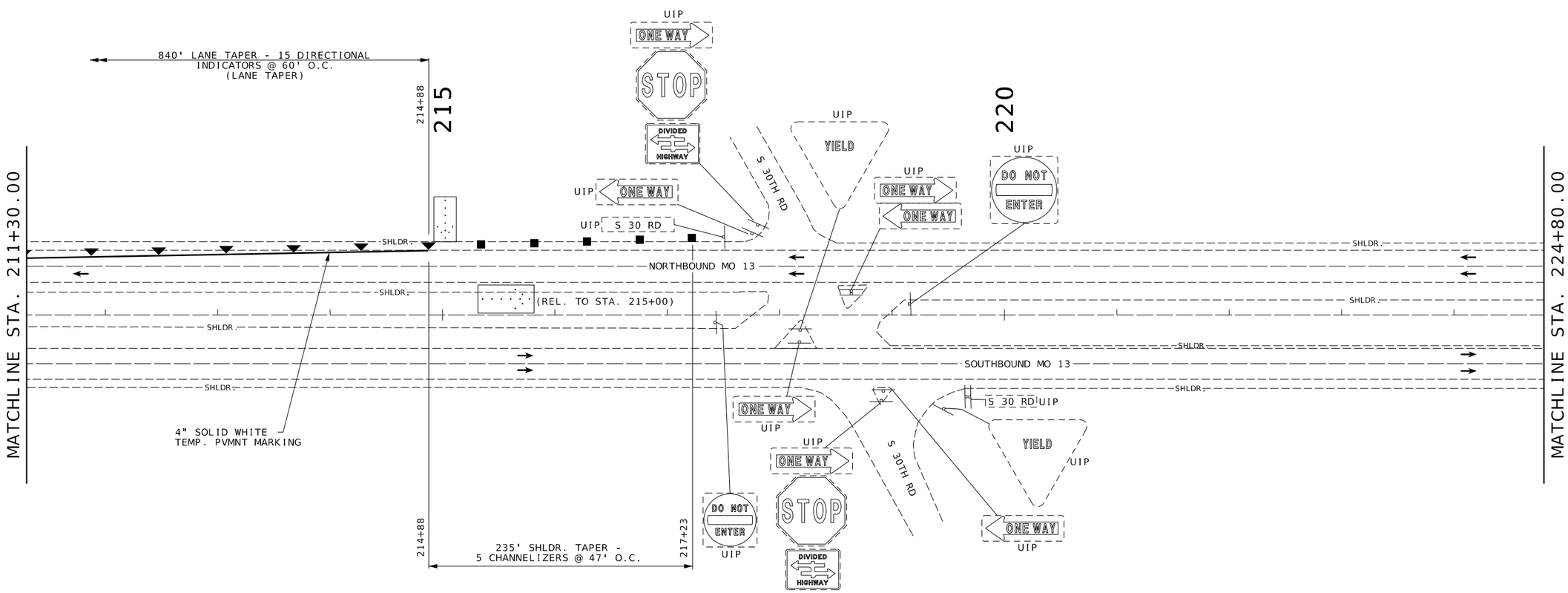

PHASE 2

TRAFFIC CONTROL
SHEET 17 OF 23

STATE OF MISSOURI
SCOTT MICHAEL MCDONALD
NUMBER PE-2018000240
PROFESSIONAL ENGINEER

THIS SHEET HAS BEEN SIGNED, SEALED AND DATED ELECTRONICALLY.

DATE PREPARED	12/1/2025
ROUTE 13	STATE MO
DISTRICT SW	SHEET NO. 31
COUNTY	POLK
JOB NO.	JSR0049
CONTRACT ID.	
PROJECT NO.	
BRIDGE NO.	A9573

DATE	DESCRIPTION

MISSOURI HIGHWAYS AND TRANSPORTATION COMMISSION
105 WEST CAPITOL
JEFFERSON CITY, MO 65102
1-888-ASK-MODOT (1-888-275-6636)

VEENSTRA & KIMM INC.
A Kleinfelder Company
9788 N Ash Avenue Kansas City, Missouri 64157
816-781-6182 816-781-0643 (FAX)
Certificate of Authority No. 2002006347

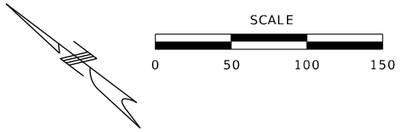

NOTE:
FOR PAVEMENT MARKING DETAILS
SEE PAVEMENT MARKING SHEETS.

PHASING:

PHASE 1 - CONSTRUCT PERMANENT CROSSOVERS NORTH AND SOUTH OF THE BRIDGE. NO PAVEMENT MARKINGS.

PHASE 2 - INSTALL TEMPORARY PAVEMENT MARKINGS FOR TRAFFIC CONTROL. CONSTRUCT BRIDGE REPLACEMENT ON NORTHBOUND MO 13. REMOVE ALL TEMPORARY PAVEMENT MARKINGS FOR TRAFFIC CONTROL. INSTALL PERMANENT PAVEMENT MARKING & RUMBLE STRIPS.

PHASE 3 - BRIDGE/ROAD CONSTRUCTION COMPLETE. INSTALL TUBULAR MARKERS ON BOTH CROSSOVERS. NO PAVEMENT MARKINGS.

TRAFFIC CONTROL LEGEND

- PROPOSED SIGN (SINGLE SIDED)
- EXISTING SIGN (SINGLE SIDED)
- CHANNELIZER
- DIRECTIONAL INDICATOR BARRICADE
- TUBULAR MARKERS
- TYPE III MOVEABLE BARRICADE
- SEQUENTIAL FLASHING WARNING LIGHT
- TEMPORARY CONCRETE TRAFFIC BARRIER (TYPE F)
- IMPACT ATTENUATOR 65 MPH (SAND BARRELS)
- VEHICLE WITH TRAILER MOUNTED ATTENUATOR
- CHANGEABLE MESSAGE BOARD
- FLASHING ARROW PANEL
- TEMPORARY LONG-TERM RUMBLE STRIPS

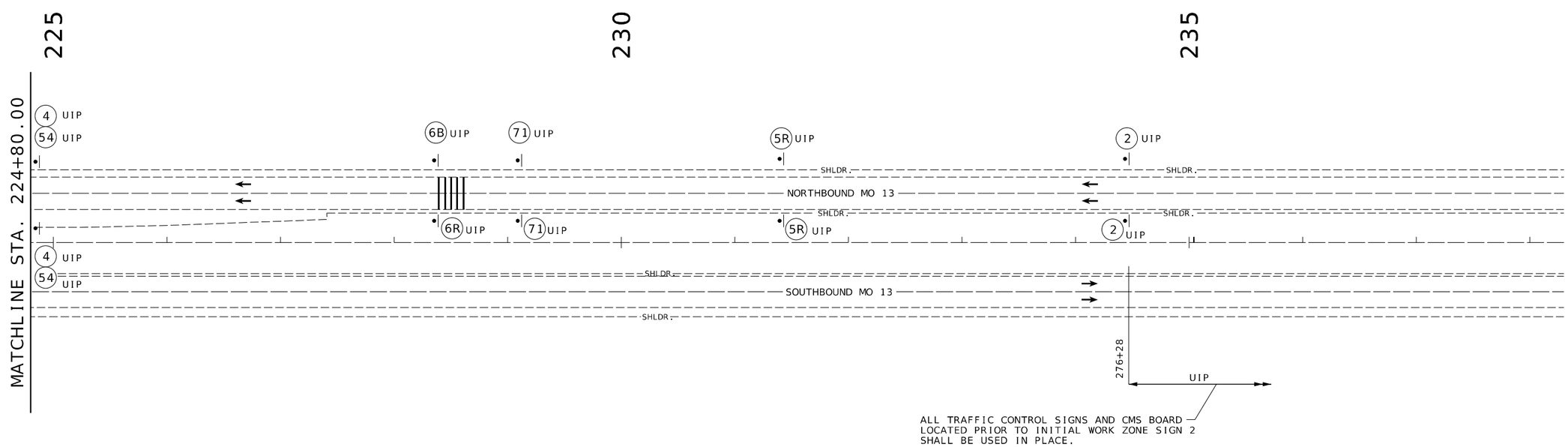

(NTS) - NOT TO SCALE

PHASE 2

TRAFFIC CONTROL
SHEET 18 OF 23

STATE OF MISSOURI
SCOTT MICHAEL MCDONALD
NUMBER PE-2018000240
PROFESSIONAL ENGINEER

THIS SHEET HAS BEEN SIGNED, SEALED AND DATED ELECTRONICALLY.

DATE PREPARED 12/1/2025	
ROUTE 13	STATE MO
DISTRICT SW	SHEET NO. 32
COUNTY POLK	
JOB NO. JSR0049	
CONTRACT ID.	
PROJECT NO.	
BRIDGE NO. A9573	

DATE	DESCRIPTION

MISSOURI HIGHWAYS AND TRANSPORTATION COMMISSION
105 WEST CAPITOL
JEFFERSON CITY, MO 65102
1-888-ASK-MODOT (1-888-275-6636)

VEENSTRA & KIMM INC.
A Kleinfelder Company
9788 N Ash Avenue Kansas City, Missouri 64157
816-781-6182 816-781-0643 (FAX)
Certificate of Authority No. 2002006347

025_TC_11-18_JSR0049_TrafficControl.dgn 2:10:35 PM 12/1/2025

SCALE

0 50 100 150

PHASING:

PHASE 1 - CONSTRUCT PERMANENT CROSSOVERS NORTH AND SOUTH OF THE BRIDGE. NO PAVEMENT MARKINGS.

PHASE 2 - INSTALL TEMPORARY PAVEMENT MARKINGS FOR TRAFFIC CONTROL. CONSTRUCT BRIDGE REPLACEMENT ON NORTHBOUND MO 13. REMOVE ALL TEMPORARY PAVEMENT MARKINGS FOR TRAFFIC CONTROL. INSTALL PERMANENT PAVEMENT MARKING & RUMBLE STRIPS.

PHASE 3 - BRIDGE/ROAD CONSTRUCTION COMPLETE. INSTALL TUBULAR MARKERS ON BOTH CROSSOVERS. NO PAVEMENT MARKINGS.

TRAFFIC CONTROL LEGEND

- PROPOSED SIGN (SINGLE SIDED)
- EXISTING SIGN (SINGLE SIDED)
- CHANNELIZER
- DIRECTIONAL INDICATOR BARRICADE
- TUBULAR MARKERS
- TYPE III MOVEABLE BARRICADE
- SEQUENTIAL FLASHING WARNING LIGHT
- TEMPORARY CONCRETE TRAFFIC BARRIER (TYPE F)
- IMPACT ATTENUATOR 65 MPH (SAND BARRELS)
- VEHICLE WITH TRAILER MOUNTED ATTENUATOR
- CHANGEABLE MESSAGE BOARD
- FLASHING ARROW PANEL
- TEMPORARY LONG-TERM RUMBLE STRIPS

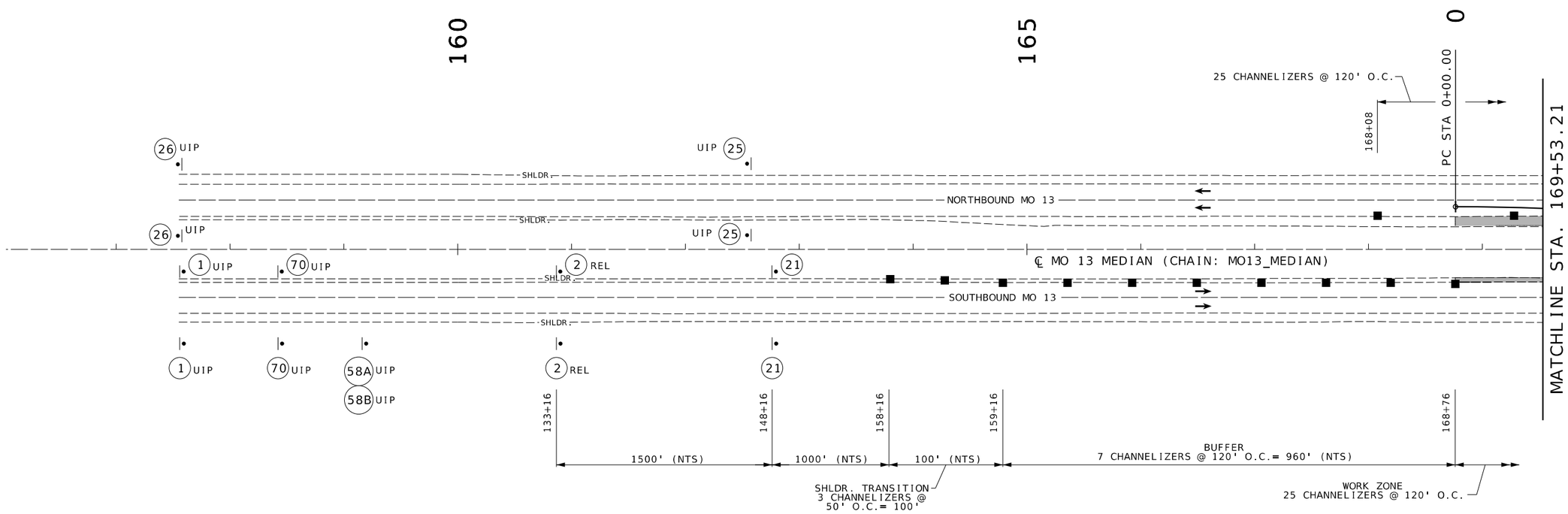

(NTS) - NOT TO SCALE

PHASE 3

TRAFFIC CONTROL
SHEET 19 OF 23

STATE OF MISSOURI
SCOTT MICHAEL MCDONALD
NUMBER PE-2018000240
PROFESSIONAL ENGINEER

THIS SHEET HAS BEEN SIGNED, SEALED AND DATED ELECTRONICALLY.

DATE PREPARED	
12/1/2025	
ROUTE 13	STATE MO
DISTRICT SW	SHEET NO. 33
COUNTY POLK	
JOB NO. JSR0049	
CONTRACT ID.	
PROJECT NO.	
BRIDGE NO. A9573	

DATE	DESCRIPTION

MISSOURI HIGHWAYS AND TRANSPORTATION COMMISSION
105 WEST CAPITOL
JEFFERSON CITY, MO 65102
1-888-ASK-MODOT (1-888-275-6636)

VEENSTRA & KIMM INC.
A Kleinfelder Company
9788 N Ash Avenue Kansas City, Missouri 64157
816-781-6182 816-781-0643 (FAX)
Certificate of Authority No. 2002006347

033_TC_19-22_JSR0049_TrafficControl.dgn 2:10:37 PM 12/1/2025

SCALE

0 50 100 150

PHASING:

PHASE 1 - CONSTRUCT PERMANENT CROSSOVERS NORTH AND SOUTH OF THE BRIDGE. NO PAVEMENT MARKINGS.

PHASE 2 - INSTALL TEMPORARY PAVEMENT MARKINGS FOR TRAFFIC CONTROL. CONSTRUCT BRIDGE REPLACEMENT ON NORTHBOUND MO 13. REMOVE ALL TEMPORARY PAVEMENT MARKINGS FOR TRAFFIC CONTROL. INSTALL PERMANENT PAVEMENT MARKING & RUMBLE STRIPS.

PHASE 3 - BRIDGE/ROAD CONSTRUCTION COMPLETE. INSTALL TUBULAR MARKERS ON BOTH CROSSOVERS. NO PAVEMENT MARKINGS.

TRAFFIC CONTROL LEGEND

- PROPOSED SIGN (SINGLE SIDED)
- EXISTING SIGN (SINGLE SIDED)
- CHANNELIZER
- DIRECTIONAL INDICATOR BARRICADE
- TUBULAR MARKERS
- TYPE III MOVEABLE BARRICADE
- SEQUENTIAL FLASHING WARNING LIGHT
- TEMPORARY CONCRETE TRAFFIC BARRIER (TYPE F)
- IMPACT ATTENUATOR 65 MPH (SAND BARRELS)
- VEHICLE WITH TRAILER MOUNTED ATTENUATOR
- CHANGEABLE MESSAGE BOARD
- FLASHING ARROW PANEL
- TEMPORARY LONG-TERM RUMBLE STRIPS

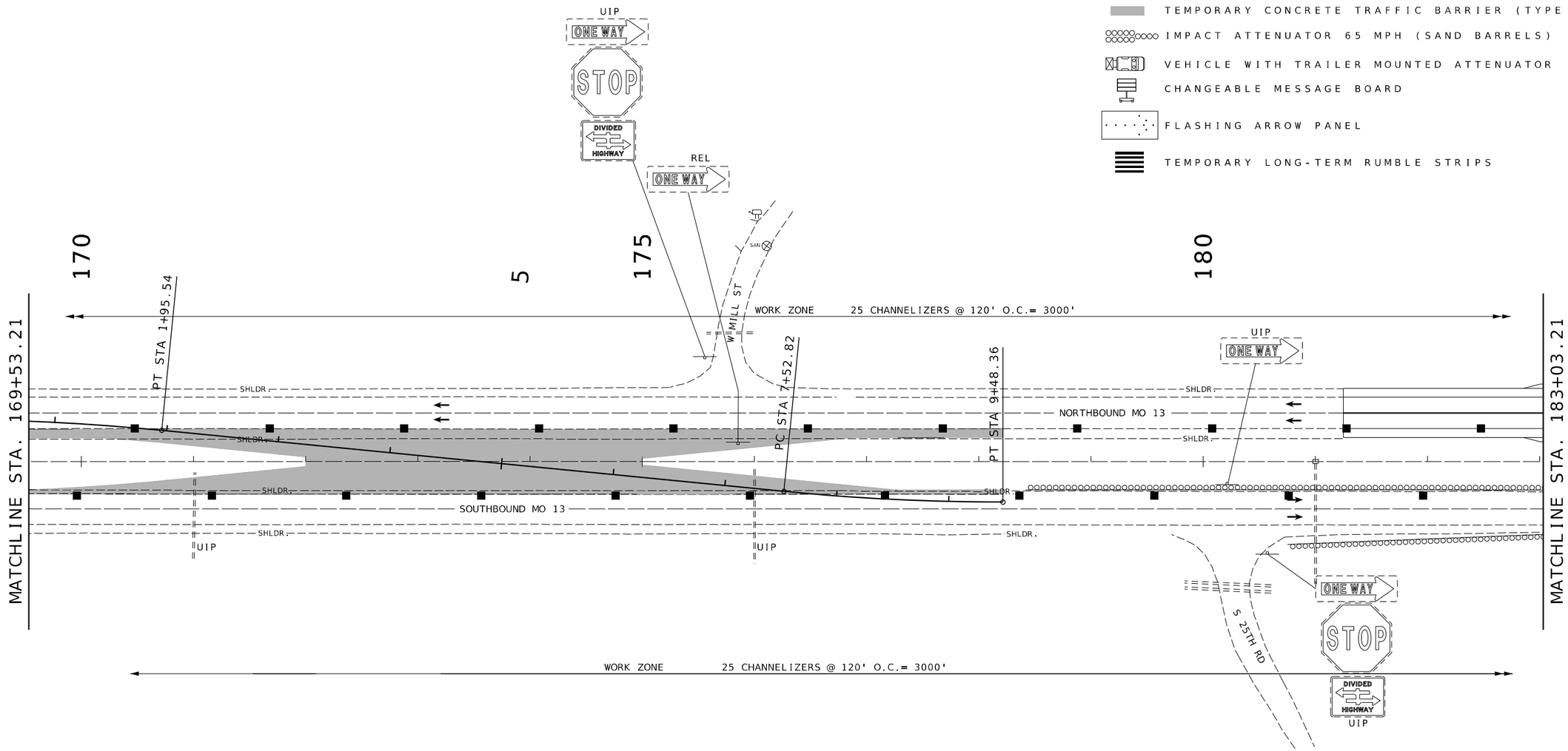

PHASE 3

TRAFFIC CONTROL
SHEET 20 OF 23

STATE OF MISSOURI
SCOTT MICHAEL MCDONALD
NUMBER PE-2018000240
PROFESSIONAL ENGINEER

THIS SHEET HAS BEEN SIGNED, SEALED AND DATED ELECTRONICALLY.

DATE PREPARED	
12/1/2025	
ROUTE 13	STATE MO
DISTRICT SW	SHEET NO. 34
COUNTY POLK	
JOB NO. JSR0049	
CONTRACT ID.	
PROJECT NO.	
BRIDGE NO. A9573	

DESCRIPTION	DATE

MISSOURI HIGHWAYS AND TRANSPORTATION COMMISSION
105 WEST CAPITOL
JEFFERSON CITY, MO 65102
1-888-ASK-MODOT (1-888-275-6636)

VEENSTRA & KIMM INC.
A Kleinfelder Company
9788 N Ash Avenue Kansas City, Missouri 64157
816-781-6182 816-781-0643 (FAX)
Certificate of Authority No. 2002006347

SCALE

0 50 100 150

PHASING:

PHASE 1 - CONSTRUCT PERMANENT CROSSOVERS NORTH AND SOUTH OF THE BRIDGE. NO PAVEMENT MARKINGS.

PHASE 2 - INSTALL TEMPORARY PAVEMENT MARKINGS FOR TRAFFIC CONTROL. CONSTRUCT BRIDGE REPLACEMENT ON NORTHBOUND MO 13. REMOVE ALL TEMPORARY PAVEMENT MARKINGS FOR TRAFFIC CONTROL. INSTALL PERMANENT PAVEMENT MARKING & RUMBLE STRIPS.

PHASE 3 - BRIDGE/ROAD CONSTRUCTION COMPLETE. INSTALL TUBULAR MARKERS ON BOTH CROSSOVERS. NO PAVEMENT MARKINGS.

TRAFFIC CONTROL LEGEND

- PROPOSED SIGN (SINGLE SIDED)
- EXISTING SIGN (SINGLE SIDED)
- CHANNELIZER
- DIRECTIONAL INDICATOR BARRICADE
- TUBULAR MARKERS
- TYPE III MOVEABLE BARRICADE
- SEQUENTIAL FLASHING WARNING LIGHT
- TEMPORARY CONCRETE TRAFFIC BARRIER (TYPE F)
- IMPACT ATTENUATOR 65 MPH (SAND BARRELS)
- VEHICLE WITH TRAILER MOUNTED ATTENUATOR
- CHANGEABLE MESSAGE BOARD
- FLASHING ARROW PANEL
- TEMPORARY LONG-TERM RUMBLE STRIPS

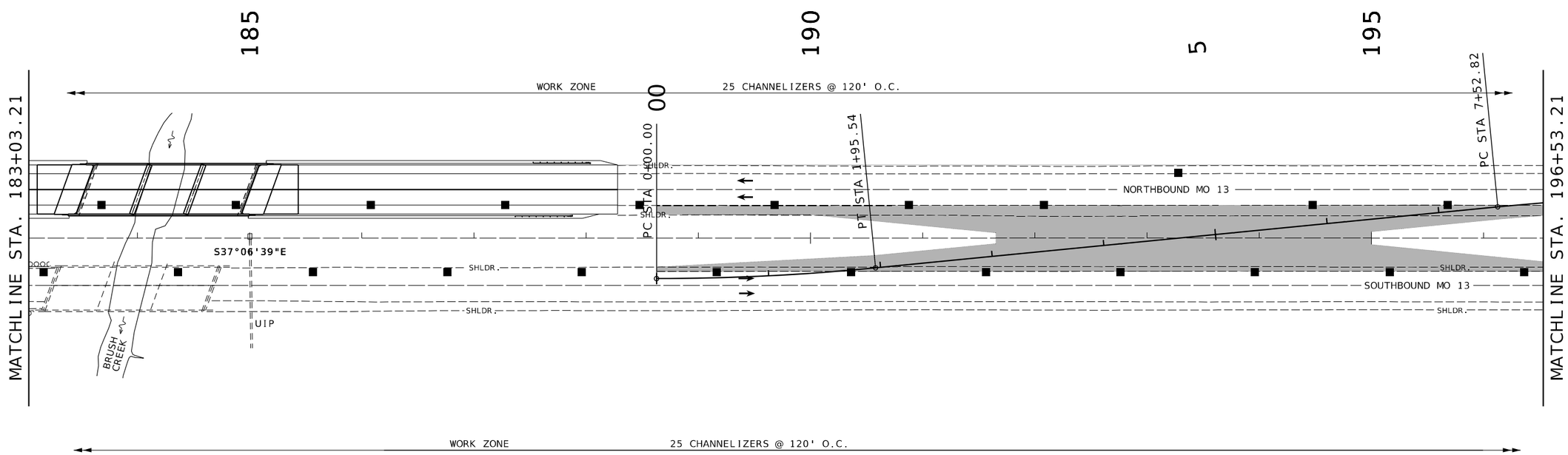

PHASE 3

TRAFFIC CONTROL
SHEET 21 OF 23

STATE OF MISSOURI
SCOTT MICHAEL MCDONALD
NUMBER PE-2018000240
PROFESSIONAL ENGINEER

THIS SHEET HAS BEEN SIGNED, SEALED AND DATED ELECTRONICALLY.

DATE PREPARED	12/1/2025
ROUTE	13
STATE	MO
DISTRICT	SW
SHEET NO.	35
COUNTY	POLK
JOB NO.	JSR0049
CONTRACT ID.	
PROJECT NO.	
BRIDGE NO.	A9573

DATE	DESCRIPTION

MISSOURI HIGHWAYS AND TRANSPORTATION COMMISSION
105 WEST CAPITOL
JEFFERSON CITY, MO 65102
1-888-ASK-MODOT (1-888-275-6636)

VEENSTRA & KIMM INC.
A Kleinfelder Company
9788 N Ash Avenue Kansas City, Missouri 64157
816-781-6182 816-781-0643 (FAX)
Certificate of Authority No. 2002006347

033_TC_19-22_JSR0049_TrafficControl.dgn 2:10:38 PM 12/1/2025

SCALE

0 50 100 150

PHASING:

PHASE 1 - CONSTRUCT PERMANENT CROSSOVERS NORTH AND SOUTH OF THE BRIDGE. NO PAVEMENT MARKINGS.

PHASE 2 - INSTALL TEMPORARY PAVEMENT MARKINGS FOR TRAFFIC CONTROL. CONSTRUCT BRIDGE REPLACEMENT ON NORTHBOUND MO 13. REMOVE ALL TEMPORARY PAVEMENT MARKINGS FOR TRAFFIC CONTROL. INSTALL PERMANENT PAVEMENT MARKING & RUMBLE STRIPS.

PHASE 3 - BRIDGE/ROAD CONSTRUCTION COMPLETE. INSTALL TUBULAR MARKERS ON BOTH CROSSOVERS. NO PAVEMENT MARKINGS.

TRAFFIC CONTROL LEGEND

- PROPOSED SIGN (SINGLE SIDED)
- EXISTING SIGN (SINGLE SIDED)
- CHANNELIZER
- DIRECTIONAL INDICATOR BARRICADE
- TUBULAR MARKERS
- TYPE III MOVEABLE BARRICADE
- SEQUENTIAL FLASHING WARNING LIGHT
- TEMPORARY CONCRETE TRAFFIC BARRIER (TYPE F)
- IMPACT ATTENUATOR 65 MPH (SAND BARRELS)
- VEHICLE WITH TRAILER MOUNTED ATTENUATOR
- CHANGEABLE MESSAGE BOARD
- FLASHING ARROW PANEL
- TEMPORARY LONG-TERM RUMBLE STRIPS

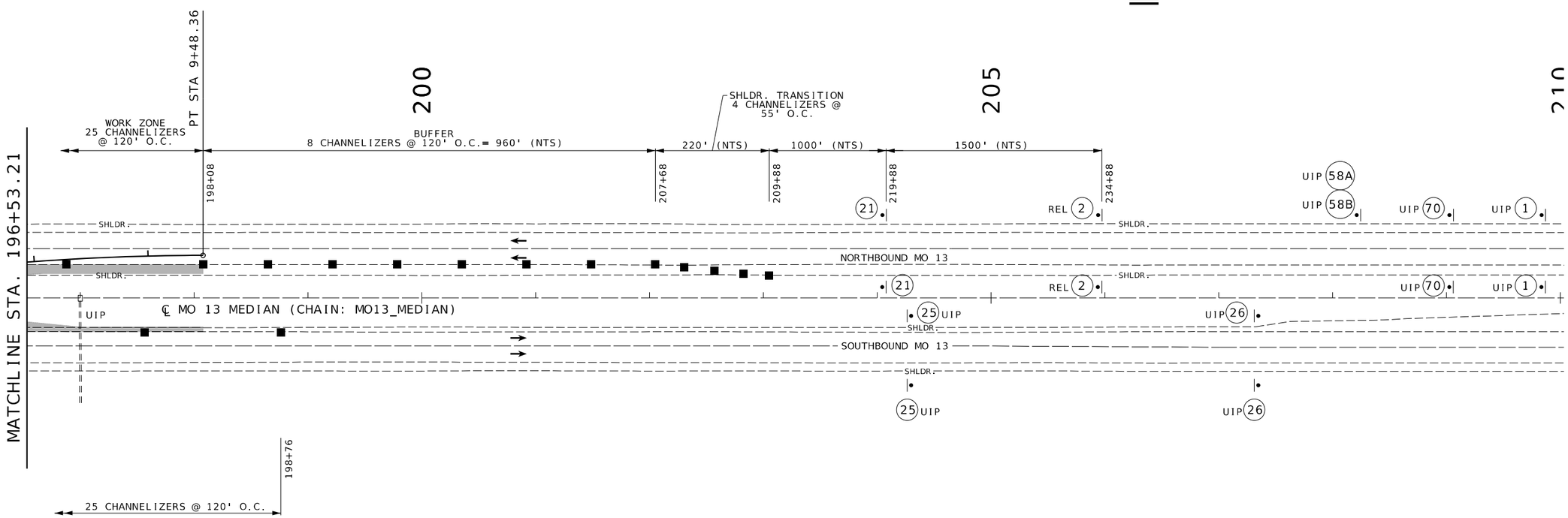

(NTS) - NOT TO SCALE

PHASE 3

TRAFFIC CONTROL
SHEET 22 OF 23

STATE OF MISSOURI
SCOTT MICHAEL MCDONALD
NUMBER
PE-2018000240
PROFESSIONAL ENGINEER

THIS SHEET HAS BEEN SIGNED, SEALED AND DATED ELECTRONICALLY.

DATE PREPARED	12/1/2025
ROUTE	13
STATE	MO
DISTRICT	SW
SHEET NO.	36
COUNTY	POLK
JOB NO.	JSR0049
CONTRACT ID.	
PROJECT NO.	
BRIDGE NO.	A9573

DATE	DESCRIPTION

MISSOURI HIGHWAYS AND TRANSPORTATION COMMISSION
105 WEST CAPITOL
JEFFERSON CITY, MO 65102
1-888-ASK-MODOT (1-888-275-6636)

VEENSTRA & KIMM INC.
A Kleinfelder Company
9788 N Ash Avenue Kansas City, Missouri 64157
816-781-6182 816-781-0643 (FAX)
Certificate of Authority No. 2002006347

033_TC_19-22_JSR0049_TrafficControl.dgn 2:10:38 PM 12/1/2025

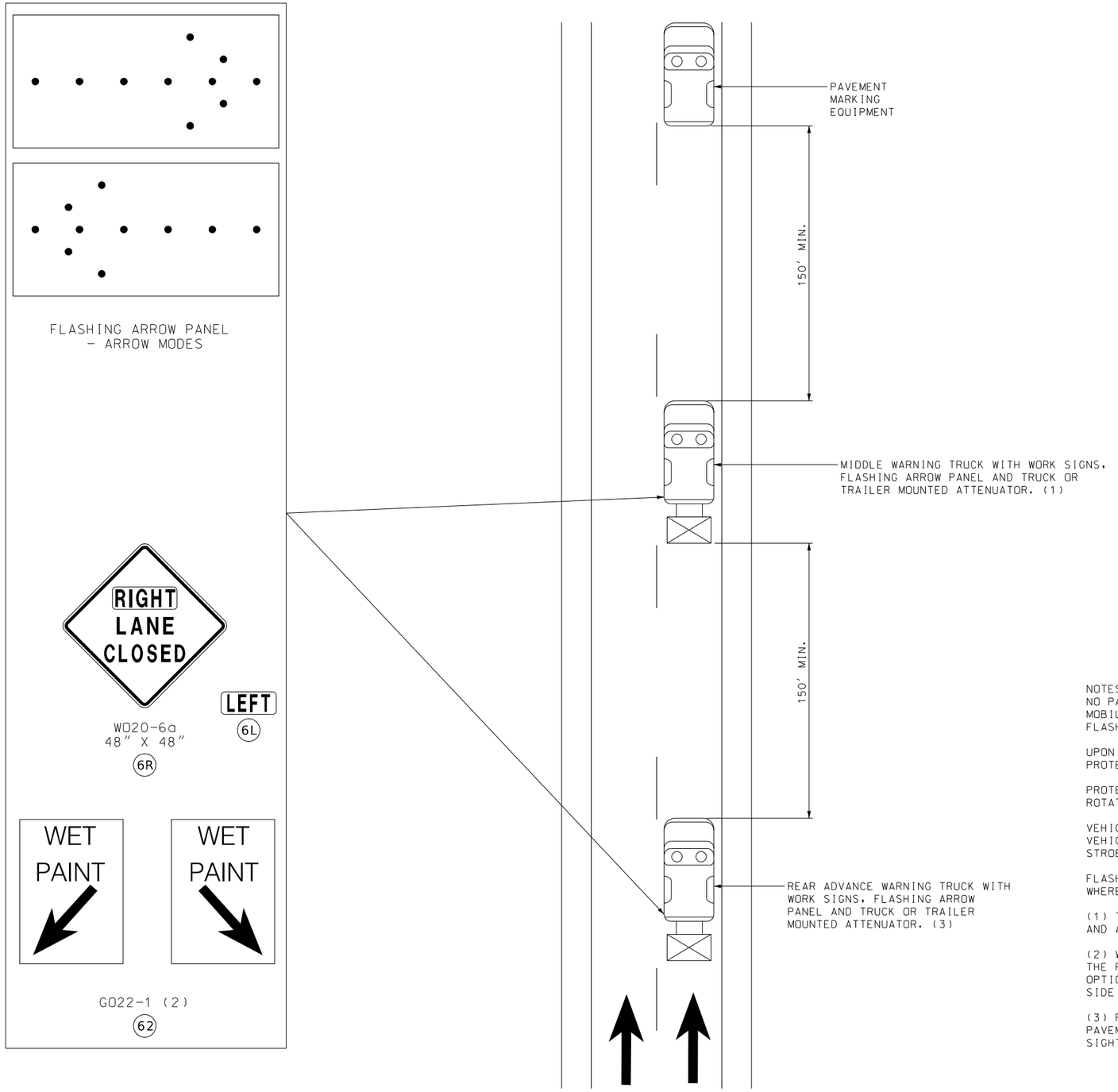

STRIPING ON MULTI-LANE DIVIDED HIGHWAY

TRAFFIC CONTROL LEGEND

- PROPOSED SIGN (SINGLE SIDED)
- EXISTING SIGN (SINGLE SIDED)
- CHANNELIZER
- DIRECTIONAL INDICATOR BARRICADE
- TUBULAR MARKERS
- TYPE III MOVEABLE BARRICADE
- SEQUENTIAL FLASHING WARNING LIGHT
- IMPACT ATTENUATOR 65 MPH (SAND BARRELS)
- VEHICLE WITH TRAILER MOUNTED ATTENUATOR
- CHANGEABLE MESSAGE BOARD
- FLASHING ARROW PANEL
- TEMPORARY CONCRETE TRAFFIC BARRIER (TYPE F)
- TEMPORARY LONG-TERM RUMBLE STRIPS

NOTES:
NO PAYMENT WILL BE MADE FOR TRUCK MOUNTED ATTENATORS (TMA) USED IN MOBILE OPERATIONS OR FOR ANY TMAS DESIGNATED AS OPTIONAL. THIS INCLUDES FLASHING ARROW PANEL AND PROTECTIVE VEHICLE ASSOCIATED WITH TMA.

UPON APPROVAL OF THE ENGINEER, THE CONTRACTOR MAY PROVIDE ADDITIONAL PROTECTIVE TRUCK EQUIPPED WITH PROPER WARNING DEVICES.

PROTECTIVE TRUCK AND WORK VEHICLES SHALL DISPLAY HIGH-INTENSITY ROTATING, FLASHING, OSCILLATING, OR STROBE LIGHTS.

VEHICLE HAZARD WARNING SIGNALS SHALL NOT BE USED INSTEAD OF THE VEHICLE'S HIGH-INTENSITY ROTATING, FLASHING, OSCILLATING, OR STROBE LIGHTS.

FLASHING ARROW PANELS SHALL BE INCIDENTAL TO TRUCK MOUNTED ATTENUATORS, WHEREVER USED. NO ADDITIONAL PAYMENT SHALL BE MADE.

(1) TRUCK IS OPTIONAL ON TWO-LANE UNDIVIDED HIGHWAYS IF SIGNING AND ARROW BOARD IS MOUNTED ON THE PAVEMENT MARKING EQUIPMENT.

(2) WET PAINT SIGNS ARE INSTALLED TO INDICATE THE SIDE IN WHICH THE PAVEMENT MARKING MATERIAL IS BEING APPLIED. AT THE CONTRACTOR'S OPTION, A FRONT FACING WET PAINT SIGN MAY BE INSTALLED ON THE LEFT SIDE OF THE PAVEMENT MARKING EQUIPMENT.

(3) REAR ADVANCE WARNING TRUCK IS POSITIONED AT THE NO TRACK POINT OF THE PAVEMENT MARKING MATERIAL, OR VERTICAL OR HORIZONTAL CURVES THAT RESTRICT SIGHT DISTANCE, OR SPACING SHOWN.

TRAFFIC CONTROL
SHEET 23 OF 23

STATE OF MISSOURI
SCOTT MICHAEL MCDONALD
NUMBER PE-2018000240
PROFESSIONAL ENGINEER

THIS SHEET HAS BEEN SIGNED, SEALED AND DATED ELECTRONICALLY.

DATE PREPARED	12/1/2025
ROUTE	13
STATE	MO
DISTRICT	SW
SHEET NO.	37
COUNTY	POLK
JOB NO.	JSR0049
CONTRACT ID.	
PROJECT NO.	
BRIDGE NO.	A9573

DATE	DESCRIPTION

MISSOURI HIGHWAYS AND TRANSPORTATION COMMISSION
105 WEST CAPITOL
JEFFERSON CITY, MO 65102
1-888-ASK-MODOT (1-888-275-6636)

VEENSTRA & KIMM INC.
A Kleinfelder Company
9788 N Ash Avenue Kansas City, Missouri 64157
816-781-6182 816-781-0643 (FAX)
Certificate of Authority No. 2002006347

TEMPORARY EROSION CONTROL LEGEND

(A)	ALTERNATE DITCH CHECK
(D)	DROP INLET CHECK
▼——▼	SILT FENCE

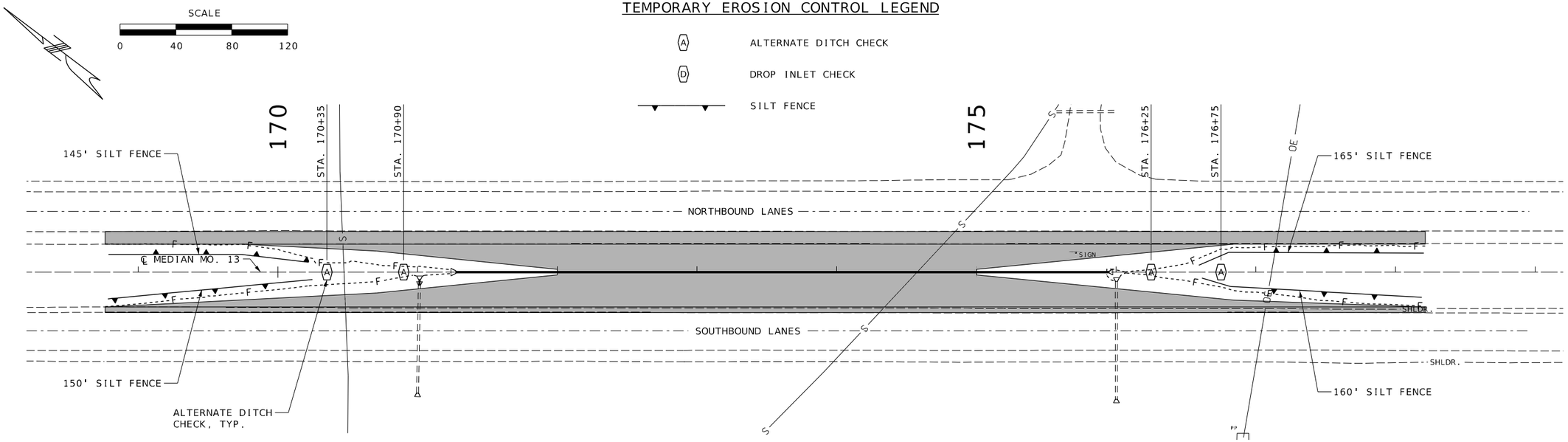

NORTH CROSSOVER

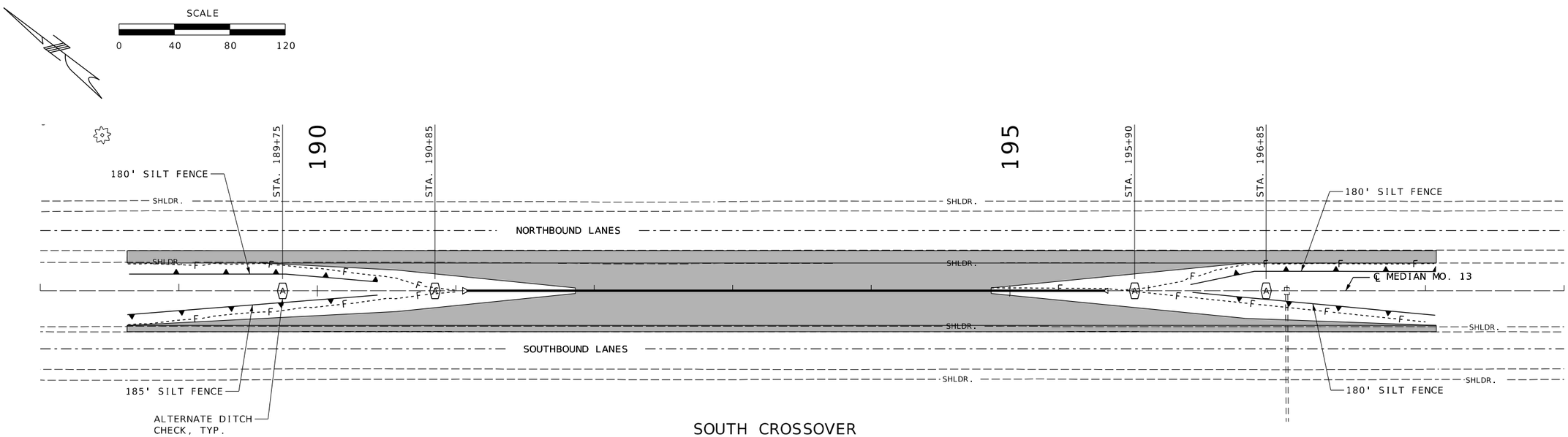

SOUTH CROSSOVER

EROSION CONTROL
SHEET 1 OF 2

STATE OF MISSOURI
SCOTT MICHAEL MCDONALD
NUMBER PE-2018000240
PROFESSIONAL ENGINEER

THIS SHEET HAS BEEN SIGNED, SEALED AND DATED ELECTRONICALLY.

DATE PREPARED	
12/1/2025	
ROUTE 13	STATE MO
DISTRICT SW	SHEET NO. 38
COUNTY POLK	
JOB NO. JSR0049	
CONTRACT ID.	
PROJECT NO.	
BRIDGE NO. A9573	

DESCRIPTION	DATE

MISSOURI HIGHWAYS AND TRANSPORTATION COMMISSION
105 WEST CAPITOL
JEFFERSON CITY, MO 65102
1-888-ASK-MODOT (1-888-275-6636)

VEENSTRA & KIMM INC.
A Kleinfelder Company
9788 N Ash Avenue Kansas City, Missouri 64157
816-781-6182 816-781-0643 (FAX)
Certificate of Authority No. 2002006347

038_EC_01_JSR0049_ErosionControl.dgn 2:11:34 PM 12/1/2025

TEMPORARY EROSION CONTROL LEGEND

SCALE

0 40 80 120

(A) ALTERNATE DITCH CHECK

(D) DROP INLET CHECK

SILT FENCE

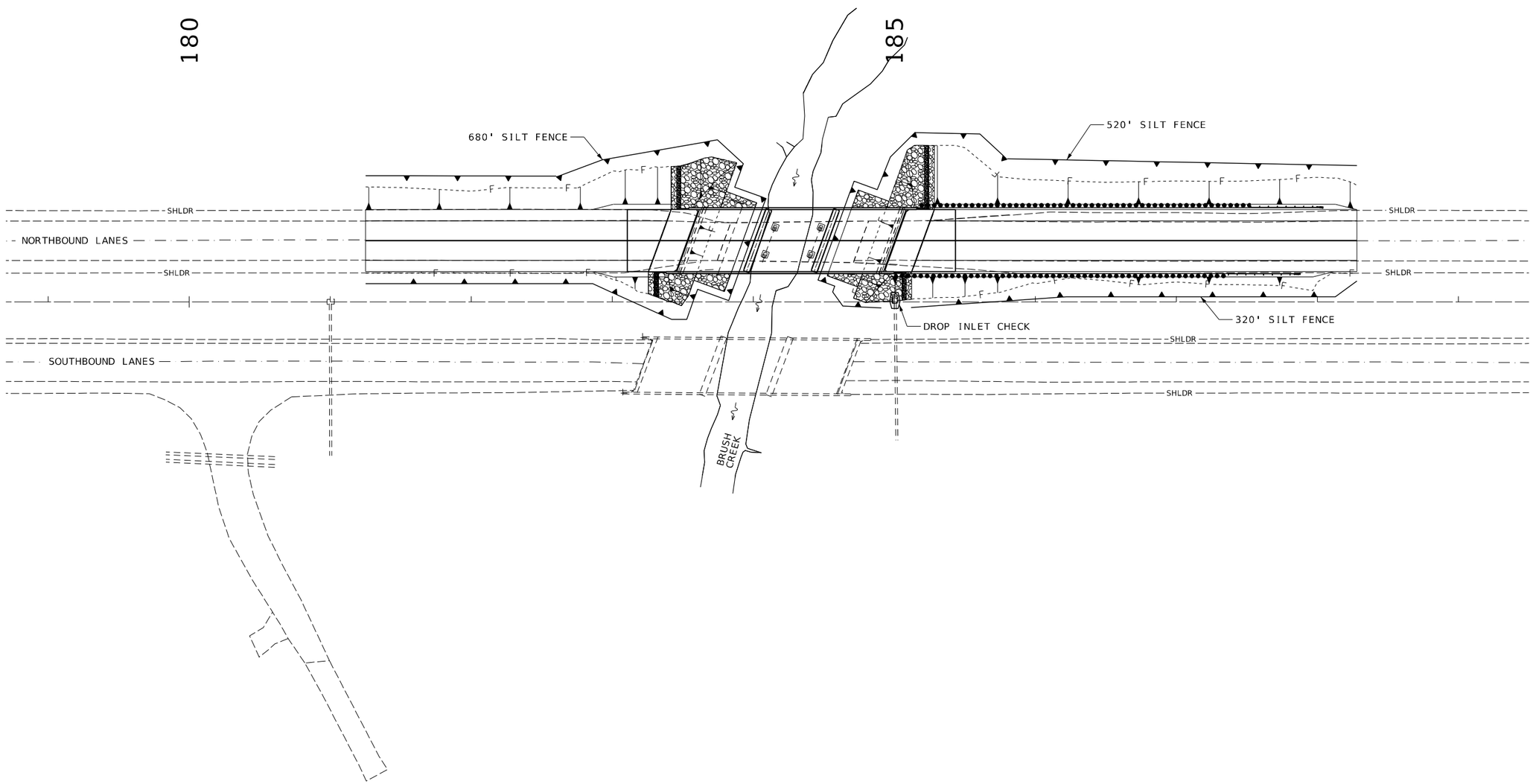

EROSION CONTROL
SHEET 2 OF 2

STATE OF MISSOURI
SCOTT MICHAEL MCDONALD
NUMBER
PE-2018000240
PROFESSIONAL ENGINEER

THIS SHEET HAS BEEN SIGNED, SEALED AND DATED ELECTRONICALLY.

DATE PREPARED	12/1/2025
ROUTE	13
STATE	MO
DISTRICT	SW
SHEET NO.	39
COUNTY	POLK
JOB NO.	JSR0049
CONTRACT ID.	
PROJECT NO.	
BRIDGE NO.	A9573

DATE	DESCRIPTION

MISSOURI HIGHWAYS AND TRANSPORTATION COMMISSION
105 WEST CAPITOL
JEFFERSON CITY, MO 65102
1-888-ASK-MODOT (1-888-275-6636)

VEENSTRA & KIMM INC.
A Kleinfelder Company
9788 N Ash Avenue Kansas City, Missouri 64157
816-781-6182 816-781-0643 (FAX)
Certificate of Authority No. 2002006347

039_EC_02_JSR0049_ErosionControl.dgn 2:11:36 PM 12/1/2025

SCALE

0 30 60 90

SIGNING LEGEND

EXISTING SIGN (SINGLE SIDED)

PROPOSED SIGN (SINGLE SIDED)

(REM) - "REMOVE"
(UIP) - "USE IN PLACE"

NOTES:

ALL EXISTING SIGNS AND POSTS THAT ARE REMOVED SHALL BE DELIVERED TO THE MODOT MAINTENANCE LOCATION PER THE JOB SPECIAL PROVISIONS.

SIGN LOCATIONS		
SIGN NO.	STATION	OFFSET
1	175+72	9.0' LT.

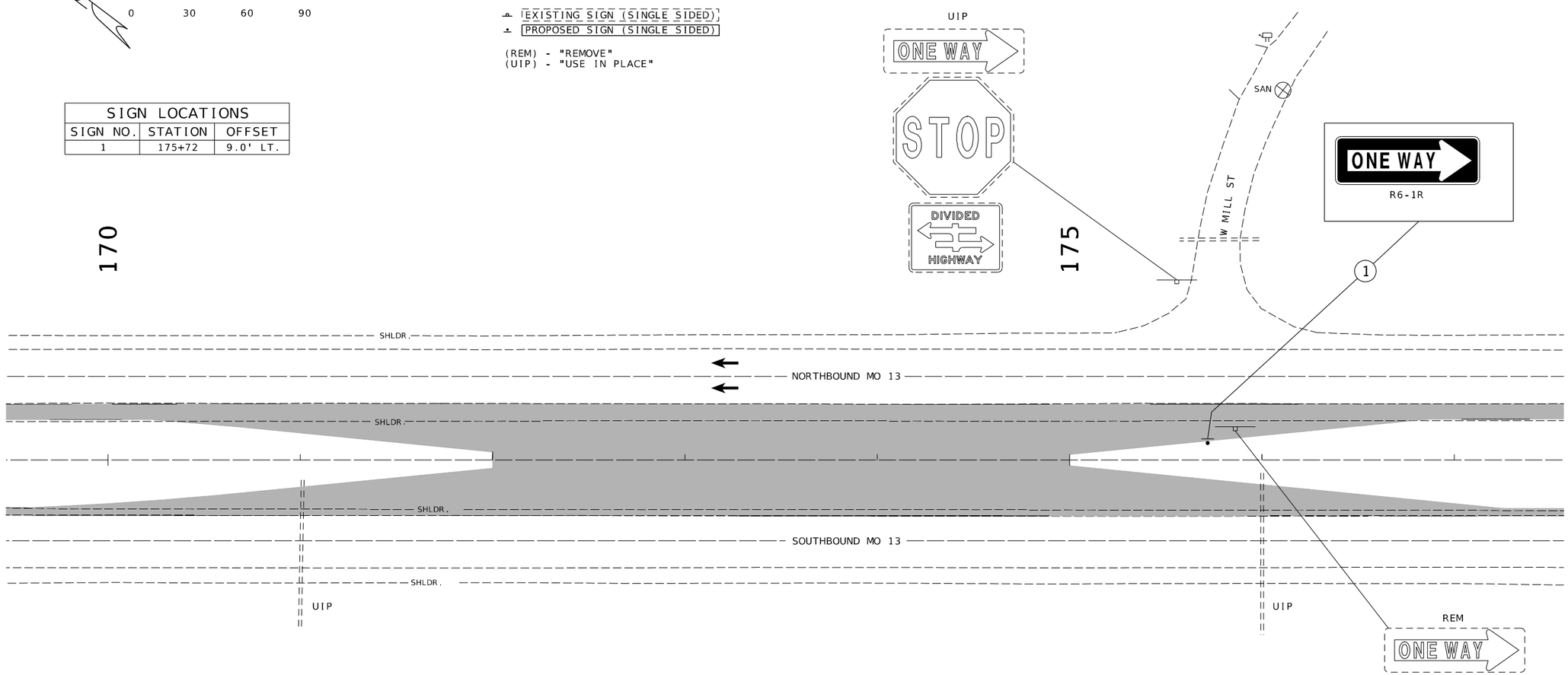

SIGNING
SHEET 1 OF 4

STATE OF MISSOURI
SCOTT MICHAEL MCDONALD
NUMBER PE-2018000240
PROFESSIONAL ENGINEER

THIS SHEET HAS BEEN SIGNED, SEALED AND DATED ELECTRONICALLY.

DATE PREPARED	12/1/2025
ROUTE 13	STATE MO
DISTRICT SW	SHEET NO. 40
COUNTY	POLK
JOB NO.	JSR0049
CONTRACT ID.	
PROJECT NO.	
BRIDGE NO.	A9573

DATE	DESCRIPTION

MISSOURI HIGHWAYS AND TRANSPORTATION COMMISSION
105 WEST CAPITOL
JEFFERSON CITY, MO 65102
1-888-ASK-MODOT (1-888-275-6636)

VEENSTRA & KIMM INC.
A Kleinfelder Company
9788 N Ash Avenue Kansas City, Missouri 64157
816-781-6182 816-781-0643 (FAX)
Certificate of Authority No. 2002006347

SIGN NO.	1
STATION	175+72, LT.
ROADWAY	MO. 13

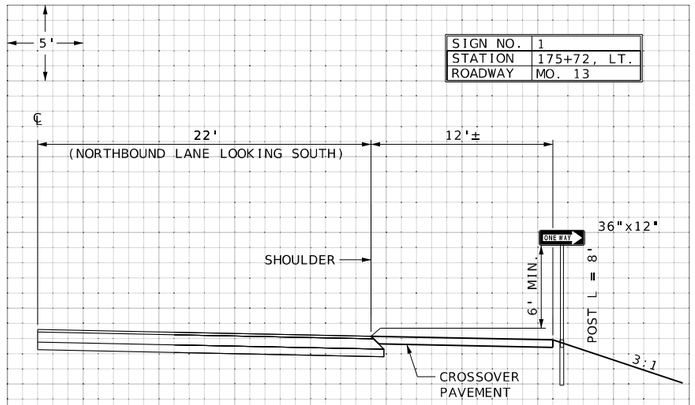

NOTE:
SIGN IS TURNED PARALLEL TO ROAD
AND IS FACING EAST.

1-36"X12"	(R6-1R SIGN)
1-2 3/4" SQ.	PSST POST (12 GA.)
1-2 3/4" SQ.	INSERT (6 FT.)
1-2 3/4" SQ.	PSST POST ANCHOR (7 GA.)

SIGN NO.	
STATION	
ROADWAY	

SIGN NO.	
STATION	
ROADWAY	

SIGN NO.	
STATION	
ROADWAY	

SIGNING
SHEET 2 OF 4

STATE OF MISSOURI
SCOTT MICHAEL MCDONALD
NUMBER
PE-2018000240
PROFESSIONAL ENGINEER

THIS SHEET HAS BEEN SIGNED, SEALED AND DATED ELECTRONICALLY.

DATE PREPARED
12/1/2025

ROUTE	STATE
13	MO
DISTRICT	SHEET NO.
SW	41

COUNTY
POLK

JOB NO.
JSR0049

CONTRACT ID.

PROJECT NO.

BRIDGE NO.
A9573

DESCRIPTION	DATE

MISSOURI HIGHWAYS AND TRANSPORTATION COMMISSION
105 WEST CAPITOL
JEFFERSON CITY, MO 65102
1-888-ASK-MODOT (1-888-275-6636)

VEENSTRA & KIMM INC.
A Kleinfelder Company
9788 N Ash Avenue Kansas City, Missouri 64157
816-781-6182 816-781-0643 (FAX)
Certificate of Authority No. 2002006347

041_SN_02_JSR0049_Signing.dgn 2:11:38 PM 12/1/2025

EFFECTIVE: 07-01-2024

SIGNS (902 SIGNAL SIGNS TABULATED ON D-37A SHEET)						CONCRETE FOOTINGS EMBEDDED	STRUCTURAL STEEL POSTS*						PIPE POSTS*					BACKING BARS**				U-CHANNEL POST	PERFORATED SQUARE STEEL TUBE: 2-INCH POST						2.5-INCH POST						BREAK-AWAY ASSEMBLY	REMARKS AND OTHER REQUIRED ITEMS
SIGN NO.	SIGN SIZE	STATION OR LOG MILE	HORIZ CLEAR IF NOT STD	LOCATION	SIGN DTL SHT NO.	ITEM NO. 9031010	POST DES NO.	POST NO. 1	POST NO. 2	POST NO. 3	LBS PER FT	TOTAL ITEM NO. 9031210	PIPE SIZE	POST NO. 1	POST NO. 2	LBS PER FT	TOTAL ITEM NO. 9031220	2" X 3/8" BARS AT 2.55 LBS/FT NO.	LGTH	TOTAL	TOTAL	ITEM NO. 9031250A	POST NO. 1	POST NO. 2	TOTAL ITEM NO. 9031270A	ANCHORS DRIVEN 12 GA. ITEM NO. 9031271A	DRIVEN 7 GA. ITEM NO. 9031273A	CONCRETE 7 GA. ITEM NO. 9031274	POST NO. 1	POST NO. 2	TOTAL ITEM NO. 9031280	2.25" INSERT (6 FT) ITEM NO. 9031272A	ANCHORS DRIVEN 7 GA. ITEM NO. 9031281A	CONCRETE 7 GA. ITEM NO. 9031285	ITEM NO. 9031241	
						CY		LF	LF	LF		LBS	IN	LF	LF		LBS	EACH	IN.	LF	LBS	LF	LF	LF	LF	EACH	EACH	EACH	LF	LF	LF	EACH	EACH	EACH	EACH	
1	3'x1'	175+72	STD.	MO. 13																									8		8	1	1			
SUBTOTAL																															8	1	1			
TOTAL																					**										8	1	1			

*BREAKAWAY ASSEMBLY IS INCIDENTAL FOR STRUCTURAL STEEL AND PIPE POSTS.
**BACKING BARS ARE TOTALED WITH STRUCTURAL STEEL OR PIPE POSTS.

ROUND PIPE POST AND FOOTING DATA TABLE

NOM.SIZE (IN.)	WEIGHT LBS/FT	WEIGHT LBS/IN	STUB LENGTH	FOOTING DIA.	FOOTING DEPTH	CONCRETE C.Y.
2½	5.79	0.48	4'- 3¼"	12"	4~6"	0.13
4	10.79	0.90	5'- 3¼"	18"	5~6"	0.36

STRUCTURAL STEEL POST AND FOOTING DATA TABLE

POST DES. NO.	NOM. SIZE	POST WEIGHT LBS/FT	POST WEIGHT LBS/IN	STUB LENGTH	FOOTING DIA.	LEVEL GROUND DEPTH	LEVEL GROUND C.Y.	6:1 GRADE DEPTH	6:1 GRADE C.Y.	4:1 GRADE DEPTH	4:1 GRADE C.Y.	3:1 OR 2:1 GRADE DEPTH	3:1 OR 2:1 GRADE C.Y.
1	W6	9.0	0.75	3'-0"	15"	3'-0"	0.14	3'-2"	0.15	3'-3"	0.16	3'-6"	0.17
2	W6	15.0	1.25	4'-0"	24"	4'-0"	0.47	4'-2"	0.50	4'-3"	0.51	4'-6"	0.54
3	W8	18.0	1.50	4'-6"	28"	4'-6"	0.71	4'-8"	0.73	4'-9"	0.74	5'-0"	0.78
4	W10	22.0	1.83	5'-0"	36"	5'-0"	1.31	5'-2"	1.36	5'-3"	1.39	5'-6"	1.45
5	W10	26.0	2.17	5'-0"	36"	5'-0"	1.31	5'-3"	1.37	5'-5"	1.43	5'-9"	1.52
6	W12	35.0	2.92	5'-6"	36"	5'-6"	1.44	5'-9"	1.52	5'-11"	1.56	6'-3"	1.65

SIGNING
SHEET 3 OF 4

D-29

STATE OF MISSOURI
SCOTT MICHAEL MCDONALD
NUMBER PE-2018000240
PROFESSIONAL ENGINEER

THIS SHEET HAS BEEN SIGNED, SEALED AND DATED ELECTRONICALLY.

DATE PREPARED 12/1/2025
ROUTE 13 | STATE MO
DISTRICT SW | SHEET NO. 42
COUNTY POLK
JOB NO. JSR0049
CONTRACT ID.
PROJECT NO.
BRIDGE NO. A9573

DESCRIPTION	DATE

MISSOURI HIGHWAYS AND TRANSPORTATION COMMISSION
105 WEST CAPITOL
JEFFERSON CITY, MO 65102
1-888-ASK-MODOT (1-888-275-6636)

VEENSTRA & KIMM INC.
A Kleinfelder Company
9788 N Ash Avenue Kansas City, Missouri 64157
816-781-6182 816-781-0643 (FAX)
Certificate of Authority No. 2002006347

042_SN_03_JSR0049_Signing.dgn 2:11:38 PM 12/1/2025

EFFECTIVE: 10-01-2016

STANDARD SIGN ASSEMBLIES

SIGN NUMBER	STATION	LOCATION	TYPE: SHR2L-1 — SIGN DESCRIPTION, SIZES & NUMBER OF EACH: R6-1R (ONE WAY) 36"x12"
1	175+72	MO 13	1

SIGN SUMMARY

STANDARD SIGN OR SPECIAL SIGN NUMBER	SIGN DETAIL SHEET NO.	NO. EACH	SIZE, TYPE & SQUARE FEET: SIZE	FLAT SHEET SH ITEM NO. 9035004A	FLAT SHEET FLUORESCENT SHF * ITEM NO. 9035069A	STRUCTURAL ST ITEM NO. 9035011A	STRUCTURAL FLUORESCENT STF * ITEM NO. 9035071A
R6-1R (ONE WAY)	STD.	1	36"x12"	3			
TOTAL				3			

SIGNING
SHEET 4 OF 4

STATE OF MISSOURI
SCOTT MICHAEL MCDONALD NUMBER PE-2018000240
PROFESSIONAL ENGINEER

THIS SHEET HAS BEEN SIGNED, SEALED AND DATED ELECTRONICALLY.

DATE PREPARED 12/1/2025

ROUTE	STATE
13	MO
DISTRICT	SHEET NO.
SW	43

COUNTY: POLK
JOB NO.: JSR0049
CONTRACT ID.:
PROJECT NO.:
BRIDGE NO.: A9573

DESCRIPTION	DATE

MISSOURI HIGHWAYS AND TRANSPORTATION COMMISSION
105 WEST CAPITOL
JEFFERSON CITY, MO 65102
1-888-ASK-MODOT (1-888-275-6636)

VEENSTRA & KIMM INC.
A Kleinfelder Company
9788 N Ash Avenue Kansas City, Missouri 64157
816-781-6182 816-781-0643 (FAX)
Certificate of Authority No. 2002006347

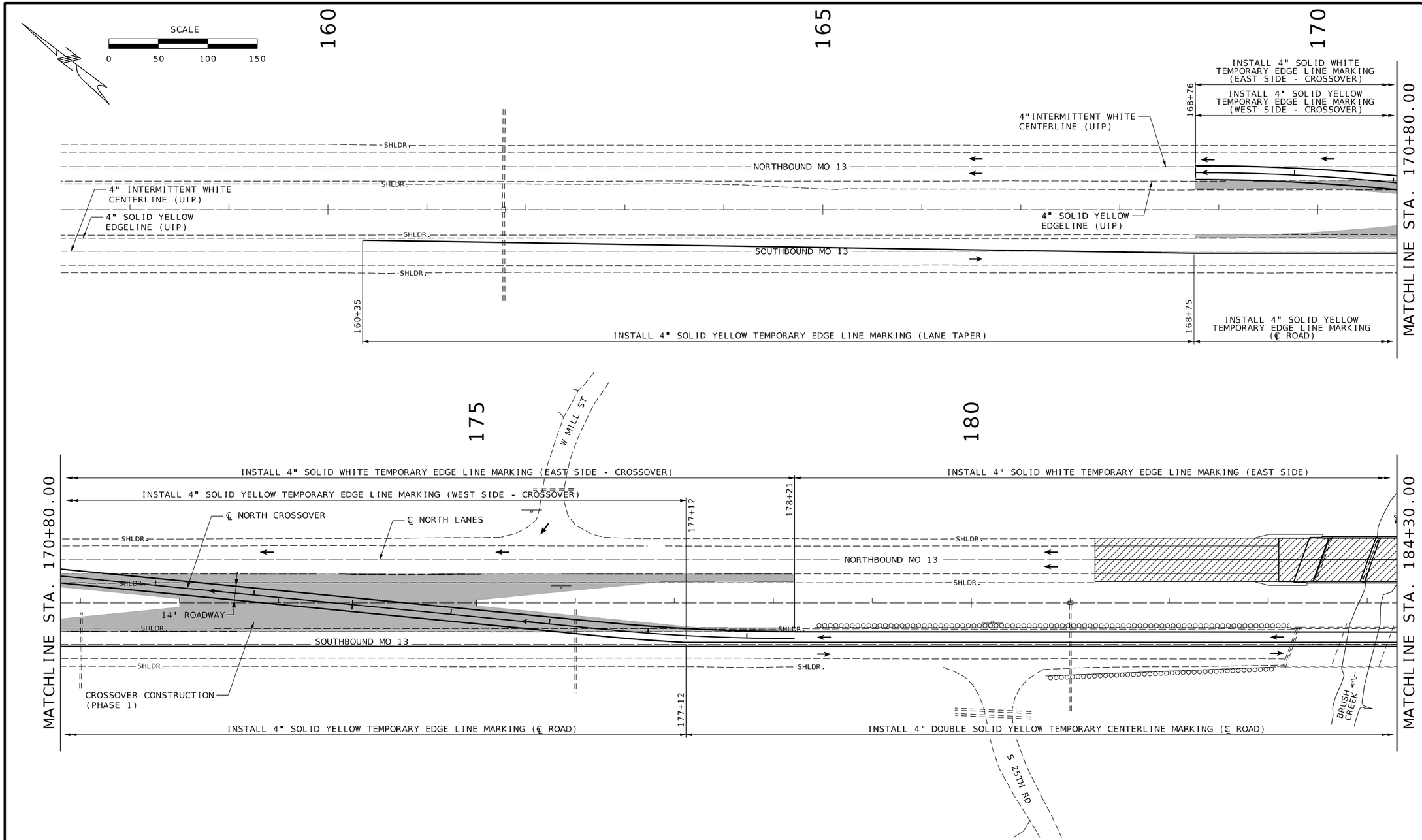

PHASING:

PHASE 1 - CONSTRUCT PERMANENT CROSSOVERS NORTH AND SOUTH OF THE BRIDGE. NO PAVEMENT MARKINGS.

PHASE 2 - INSTALL TEMPORARY PAVEMENT MARKINGS FOR TRAFFIC CONTROL. CONSTRUCT BRIDGE REPLACEMENT ON NORTHBOUND MO 13. REMOVE ALL TEMPORARY PAVEMENT MARKINGS FOR TRAFFIC CONTROL. INSTALL PERMANENT PAVEMENT MARKING & RUMBLE STRIPS.

PHASE 3 - BRIDGE/ROAD CONSTRUCTION COMPLETE. INSTALL TUBULAR MARKERS ON BOTH CROSSOVERS. NO PAVEMENT MARKINGS.

PHASE 2

PAVEMENT MARKING
SHEET 1 OF 4

STATE OF MISSOURI
SCOTT MICHAEL MCDONALD NUMBER PE-2018000240
PROFESSIONAL ENGINEER

THIS SHEET HAS BEEN SIGNED, SEALED AND DATED ELECTRONICALLY.

DATE PREPARED	
12/1/2025	
ROUTE 13	STATE MO
DISTRICT SW	SHEET NO. 44
COUNTY POLK	
JOB NO. JSR0049	
CONTRACT ID.	
PROJECT NO.	
BRIDGE NO. A9573	

DATE	DESCRIPTION

MISSOURI HIGHWAYS AND TRANSPORTATION COMMISSION
105 WEST CAPITOL
JEFFERSON CITY, MO 65102
1-888-ASK-MODOT (1-888-275-6636)

VEENSTRA & KIMM INC.
A Kleinfelder Company
9788 N Ash Avenue Kansas City, Missouri 64157
816-781-6182 816-781-0643 (FAX)
Certificate of Authority No. 2002006347

044_PM_01-03_JSR0049_PavementMarking.dgn 2:11:41 PM 12/1/2025

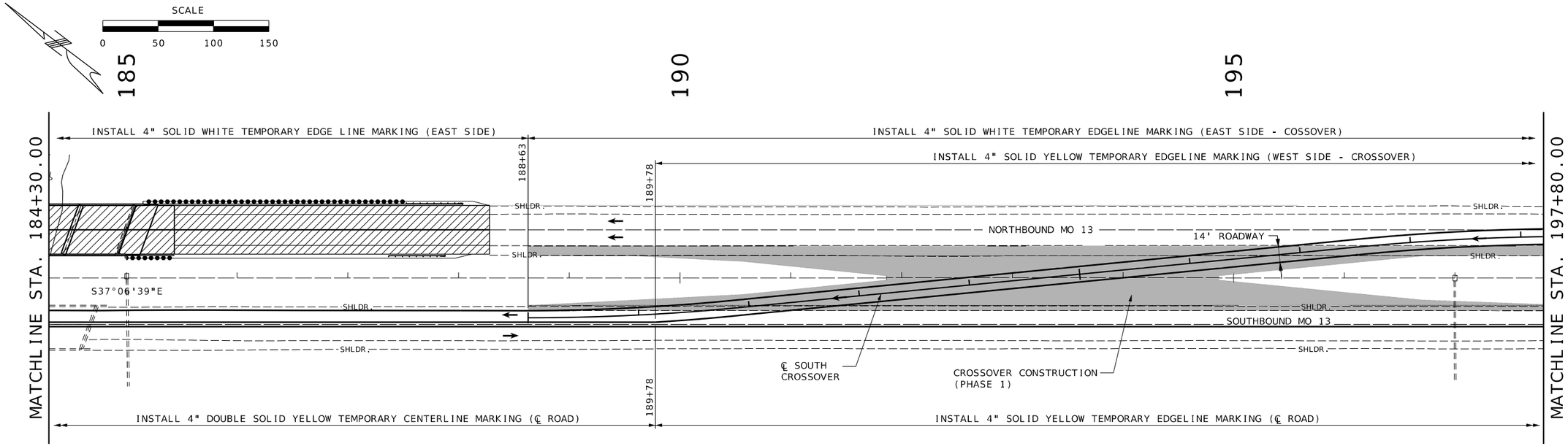

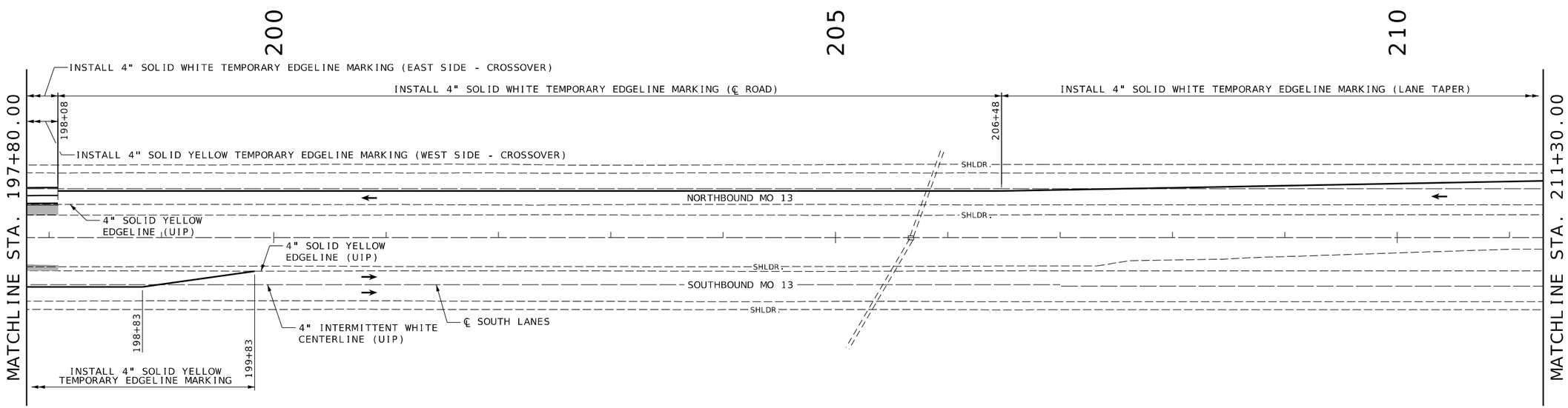

PHASING:

PHASE 1 - CONSTRUCT PERMANENT CROSSOVERS NORTH AND SOUTH OF THE BRIDGE. NO PAVEMENT MARKINGS.

PHASE 2 - INSTALL TEMPORARY PAVEMENT MARKINGS FOR TRAFFIC CONTROL. CONSTRUCT BRIDGE REPLACEMENT ON NORTHBOUND MO 13. REMOVE ALL TEMPORARY PAVEMENT MARKINGS FOR TRAFFIC CONTROL. INSTALL PERMANENT PAVEMENT MARKING & RUMBLE STRIPS.

PHASE 3 - BRIDGE/ROAD CONSTRUCTION COMPLETE. INSTALL TUBULAR MARKERS ON BOTH CROSSOVERS. NO PAVEMENT MARKINGS.

PHASE 2

PAVEMENT MARKING
SHEET 2 OF 4

STATE OF MISSOURI
SCOTT MICHAEL MCDONALD
NUMBER PE-2018000240
PROFESSIONAL ENGINEER

THIS SHEET HAS BEEN SIGNED, SEALED AND DATED ELECTRONICALLY.

DATE PREPARED	
12/1/2025	
ROUTE 13	STATE MO
DISTRICT SW	SHEET NO. 45
COUNTY POLK	
JOB NO. JSR0049	
CONTRACT ID.	
PROJECT NO.	
BRIDGE NO. A9573	

DESCRIPTION	DATE

MISSOURI HIGHWAYS AND TRANSPORTATION COMMISSION
105 WEST CAPITOL
JEFFERSON CITY, MO 65102
1-888-ASK-MODOT (1-888-275-6636)

VEENSTRA & KIMM INC.
A Kleinfelder Company
9788 N Ash Avenue Kansas City, Missouri 64157
816-781-6182 816-781-0643 (FAX)
Certificate of Authority No. 2002006347

044_PM_01-03_JSR0049_PavementMarking.dgn 2:11:41 PM 12/1/2025

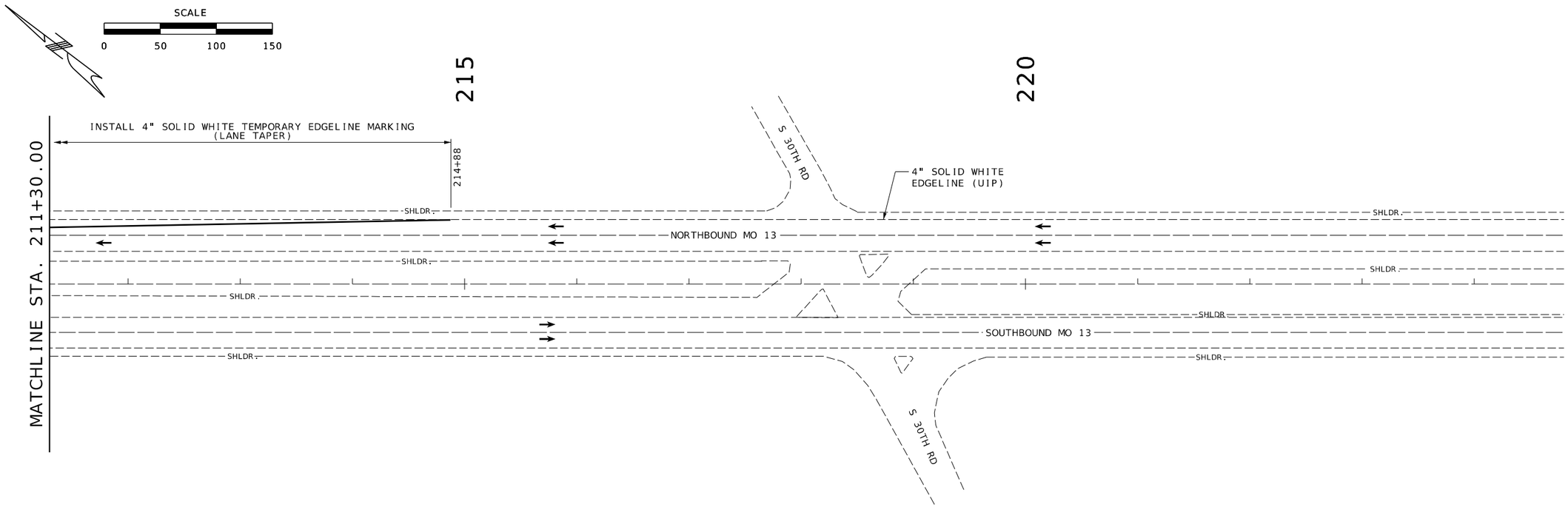

PHASING:

PHASE 1 - CONSTRUCT PERMANENT CROSSOVERS NORTH AND SOUTH OF THE BRIDGE. NO PAVEMENT MARKINGS.

PHASE 2 - INSTALL TEMPORARY PAVEMENT MARKINGS FOR TRAFFIC CONTROL. CONSTRUCT BRIDGE REPLACEMENT ON NORTHBOUND MO 13. REMOVE ALL TEMPORARY PAVEMENT MARKINGS FOR TRAFFIC CONTROL. INSTALL PERMANENT PAVEMENT MARKING & RUMBLE STRIPS.

PHASE 3 - BRIDGE/ROAD CONSTRUCTION COMPLETE. INSTALL TUBULAR MARKERS ON BOTH CROSSOVERS. NO PAVEMENT MARKINGS.

PHASE 2

PAVEMENT MARKING
SHEET 3 OF 4

STATE OF MISSOURI
SCOTT MICHAEL MCDONALD
NUMBER
PE-2018000240
PROFESSIONAL ENGINEER

THIS SHEET HAS BEEN SIGNED, SEALED AND DATED ELECTRONICALLY.

DATE PREPARED	12/1/2025
ROUTE	13
STATE	MO
DISTRICT	SW
SHEET NO.	46
COUNTY	POLK
JOB NO.	JSR0049
CONTRACT ID.	
PROJECT NO.	
BRIDGE NO.	A9573

DESCRIPTION	DATE

MISSOURI HIGHWAYS AND TRANSPORTATION COMMISSION
MoDOT
105 WEST CAPITOL
JEFFERSON CITY, MO 65102
1-888-ASK-MODOT (1-888-275-6636)

VEENSTRA & KIMM INC.
A Kleinfelder Company
9788 N Ash Avenue Kansas City, Missouri 64157
816-781-6182 816-781-0643 (FAX)
Certificate of Authority No. 2002006347

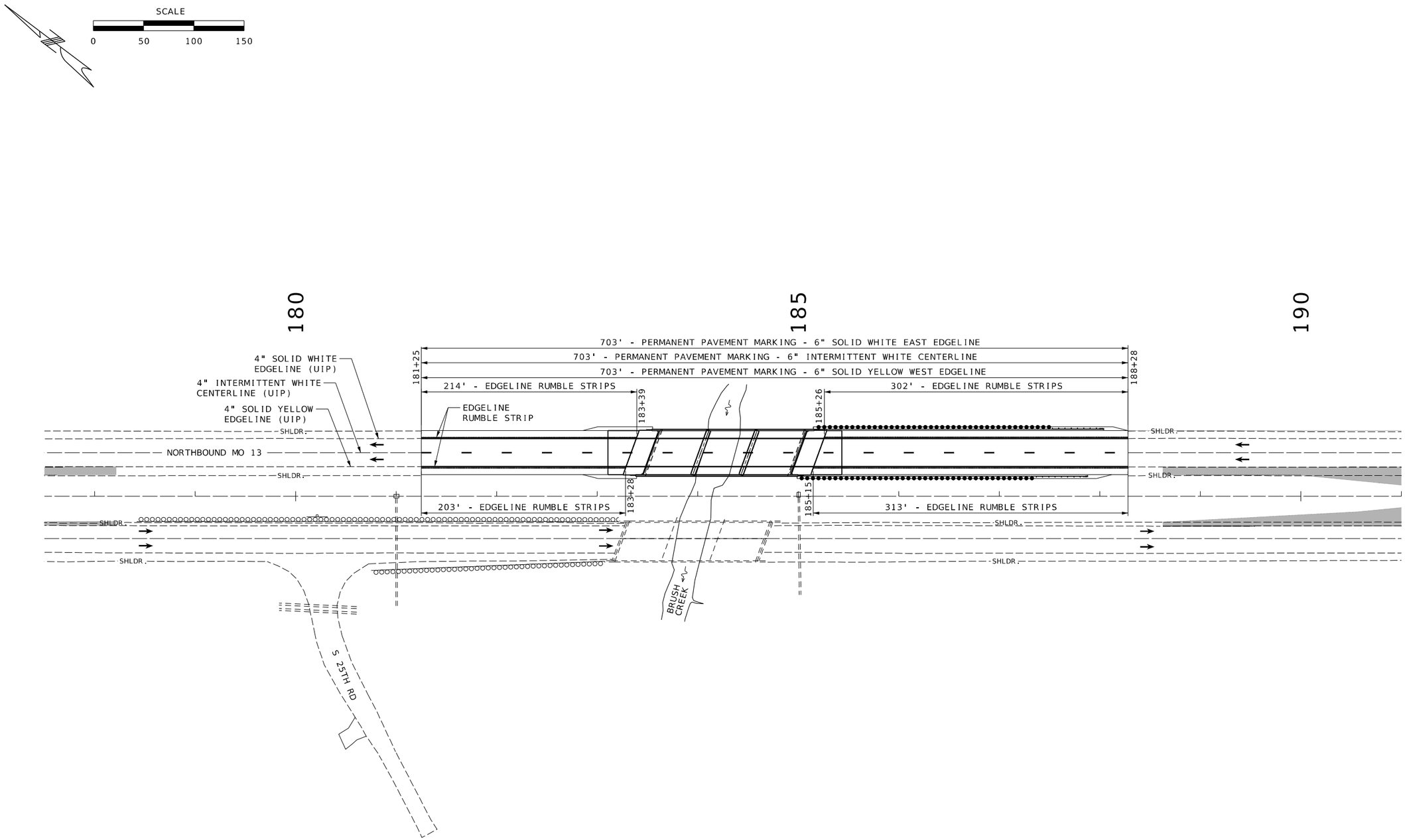

PHASING:

PHASE 1 - CONSTRUCT PERMANENT CROSSOVERS NORTH AND SOUTH OF THE BRIDGE. NO PAVEMENT MARKINGS.

PHASE 2 - INSTALL TEMPORARY PAVEMENT MARKINGS FOR TRAFFIC CONTROL. CONSTRUCT BRIDGE REPLACEMENT ON NORTHBOUND MO 13. REMOVE ALL TEMPORARY PAVEMENT MARKINGS FOR TRAFFIC CONTROL. INSTALL PERMANENT PAVEMENT MARKING & RUMBLE STRIPS.

PHASE 3 - BRIDGE/ROAD CONSTRUCTION COMPLETE. INSTALL TUBULAR MARKERS ON BOTH CROSSOVERS. NO PAVEMENT MARKINGS.

PHASE 2

PAVEMENT MARKING
SHEET 4 OF 4

STATE OF MISSOURI
SCOTT MICHAEL MCDONALD
NUMBER
PE-2018000240
PROFESSIONAL ENGINEER

THIS SHEET HAS BEEN SIGNED, SEALED AND DATED ELECTRONICALLY.

DATE PREPARED	12/1/2025
ROUTE	13
STATE	MO
DISTRICT	SW
SHEET NO.	47
COUNTY	POLK
JOB NO.	JSR0049
CONTRACT ID.	
PROJECT NO.	
BRIDGE NO.	A9573

DESCRIPTION

DATE

MISSOURI HIGHWAYS AND TRANSPORTATION COMMISSION
105 WEST CAPITOL
JEFFERSON CITY, MO 65102
1-888-ASK-MODOT (1-888-275-6636)

VEENSTRA & KIMM INC.
A Kleinfelder Company
9788 N Ash Avenue Kansas City, Missouri 64157
816-781-6182 816-781-0643 (FAX)
Certificate of Authority No. 2002006347

SEC/SUR 16 TWP 35N RGE 24W

(48'-48'-48') PRESTRESSED CONCRETE I-GIRDER SPANS

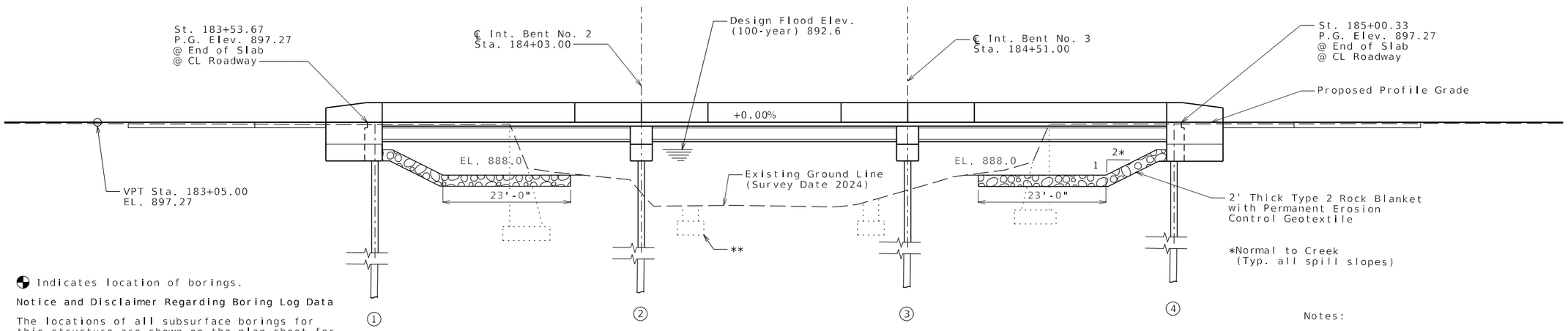

GENERAL ELEVATION

Indicates location of borings.

Notice and Disclaimer Regarding Boring Log Data

The locations of all subsurface borings for this structure are shown on the plan sheet for this structure. The boring data for all locations indicated, as well as any other boring logs or other factual records of subsurface data and investigations performed by the department for the design of the project, are shown on Sheets No. 27 thru 29 and may be included in the Electronic Bridge Deliverables. They will also be available from the Project Contact upon written request. No greater significance or weight should be given to the boring data depicted on the plan sheets than is given to the subsurface data available from the district or elsewhere.

The Commission does not represent or warrant that any such boring data accurately depicts the conditions to be encountered in constructing this project. A contractor assumes all risks it may encounter in basing its bid prices, time or schedule of performance on the boring data depicted here or those available from the district, or on any other documentation not expressly warranted, which the contractor may obtain from the Commission.

Notes:

** Existing Bridge No. A0063 to be removed per Standard Specifications.

Roadway fill shall be completed to the final roadway section and up to the elevation of the bottom of the concrete beam within the limits of the structure and for not less than 25 feet in back of the fill face of the end bents before any piles are driven for any bents falling within the embankment section.

For General Notes, Rehab Details, Location Sketch,Hydrologic Data, Foundation Data, Estimated Quantities and Estimated Quantities for Slab on Concrete I-Girder, see Sheet No. 2.

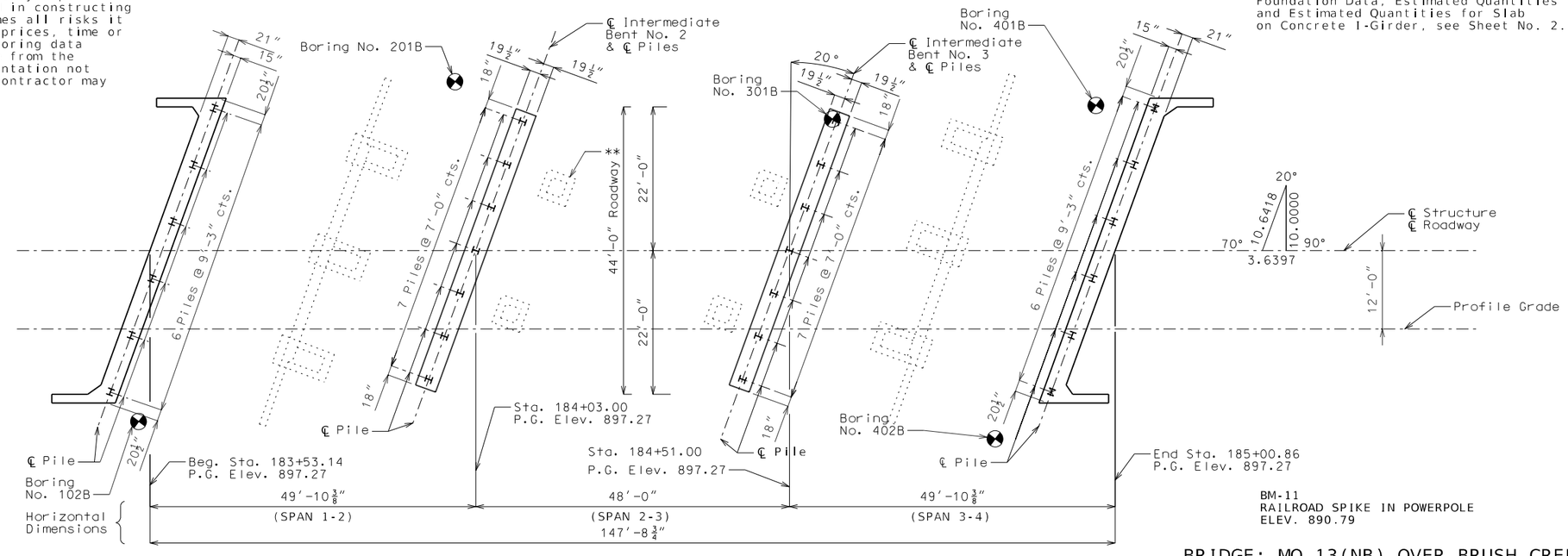

GENERAL PLAN

BM-11
RAILROAD SPIKE IN POWERPOLE
ELEV. 890.79

BRIDGE: MO.13(NB) OVER BRUSH CREEK

MO. 13(NB) FROM ROUTE 123 TO ROUTE N
ABOUT 2.0 MILES NORTH OF ROUTE 123
BEGINNING STATION 183+53.14

Designed Apr. 2025
Detailed Jun. 2025
Checked Aug. 2025

Note: This drawing is not to scale. Follow dimensions.

STATE OF MISSOURI
SCOTT MICHAEL MCDONALD
NUMBER PE-2018000240
PROFESSIONAL ENGINEER

THIS SHEET HAS BEEN SIGNED, SEALED AND DATED ELECTRONICALLY.

DATE PREPARED	12/01/2025
ROUTE	13
STATE	MO
DISTRICT	BR
SHEET NO.	1
COUNTY	POLK
JOB NO.	JSR0049
CONTRACT ID.	
PROJECT NO.	
BRIDGE NO.	A9573

DESCRIPTION

DATE

MISSOURI HIGHWAYS AND TRANSPORTATION COMMISSION
105 WEST CAPITOL
JEFFERSON CITY, MO 65102
1-888-ASK-MODOT (1-888-275-6636)

VEENSTRA & KIMM INC.
A Kleinfelder Company
9788 N Ash Avenue Kansas City, Missouri 64157
816-781-6182 816-781-0643 (FAX)
Certificate of Authority No. 2002006347

General Notes:

Design Specifications:

2020 AASHTO LRFD Bridge Design Specifications (9th Ed.)

2023 AASHTO Guide Specifications for LRFD Seismic Bridge Design (3rd Ed.)

Seismic Design Category = A (Nonseismic Details)

Design earthquake response spectral acceleration coefficient at 1.0 second period, SD1 = 0.081

Acceleration Coefficient (effective peak ground acceleration coefficient), As = 0.052

Design Loading:

Vehicular = HL-93
Future Wearing Surface = 35 Lb./Sq. Ft.
Earth = 120 Lb./Cu. Ft.
Equivalent Fluid Pressure = 45 Lb./Cu. Ft.
Superstructure: Simply-Supported, Non-Composite for dead load.
Continuous Composite for live load.

Design Unit Stresses:

Class B Concrete (Substructure) f'c = 3,000 psi
Class B-1 Concrete (Barrier) f'c = 4,000 psi
Class B-2 Concrete (Superstructure, except Barrier, Ped. Curb and Prestressed I-Girders) f'c = 4,000 psi
Reinforcing Steel (ASTM A615 Grade 60) fy = 60,000 psi
Structural Steel HP Pile (ASTM A709 Grade 50) fy = 50,000 psi
For Prestressed I-Girder Stresses, see Sheets No. 14 & 15.

Neoprene Pads:

Plain and Laminated Neoprene Bearing Pads shall be 60 durometer and shall be in accordance with Sec. 716.

Joint Filler:

All joint filler shall be in accordance with Sec. 1057 for preformed sponge rubber expansion and partition joint filler, except as noted.

Reinforcing Steel:

Minimum clearance to reinforcing steel shall be 1 1/2", unless otherwise shown.

Minimum clearance between galvanized piles and uncoated (plain) reinforcing steel including bar supports shall be 1 1/2". Nylon, PVC, or polyethylene spacers shall be used to maintain clearance. Nylon cable ties shall be used to bind the spacers to the reinforcement.

Traffic Handling:

Structure to be closed during construction.
Traffic to be maintained on other routes during construction.
See roadway plans for traffic control.

Estimated Quantities for Slab on Concrete I-Girder

Item		Total
Class B-2 Concrete	cu. yard	238
Reinforcing Steel (Epoxy Coated)	pound	66,090

Notes:

The table of Estimated Quantities for Slab on Concrete I-Girder represents the quantities used by the State in preparing the cost estimate for concrete slabs. The area of the concrete slab will be measured to the nearest square yard longitudinally from end of slab to end of slab and transversely from out to out of bridge slab (or with the horizontal dimensions as shown on the plan of slab). Payment for stay-in-place corrugated steel forms or conventional forms, all concrete, and epoxy coated reinforcing steel will be considered completely covered by the contract unit price for the slab. Variations may be encountered in the estimated quantities but the variations cannot be used for an adjustment in the contract unit price.

Method of forming the slab shall be as shown on the plans and in accordance with Sec 703. All hardware for forming the slab to be left in place as a permanent part of the structure shall be coated in accordance with ASTM A123 or ASTM B633 with a thickness class SC 4 and a finish type I, II or III.

Slab shall be cast-in-place with conventional forms or stay-in-place corrugated steel forms. Precast panels will not be permitted.

Estimated Quantities

Item		Substr.	Superstr.	Total
Class 1 Excavation	cu. yard	115		115
Removal of Bridges (A0063)	lump sum			1
Bridge Approach Slab (Major)	sq. yard		200	200
Galvanized Structural Steel Pile (12 in.)	linear foot	240		240
Galvanized Structural Steel Pile (14 in.)	linear foot	434		434
Pre-Bore for Piling	linear foot	507		507
Pile Point Reinforcement	each	26		26
Class B Concrete (Substructure)	cu. yard	76.0		76.0
Slab on Concrete I-Girder	sq. yard		761	761
Type D Barrier	linear foot		324	324
Type 2 (32 in.) Prestressed Concrete I-Girder	linear foot		719	719
Reinforcing Steel (Bridges)	pound	6280		6280
Slab Drain	each		24	24
Vertical Drain at End Bents	each			2
Plain Neoprene Bearing Pad	each		10	10
Laminated Neoprene Bearing Pad	each		20	20

Notes:

All concrete above the construction joint in the end bents is included in the Estimated Quantities for Slab on Concrete I-Girder.

All reinforcement in the end bents is included in the Estimated Quantities for Slab on Concrete I-Girder.

All reinforcement in the intermediate bent concrete diaphragms except reinforcement embedded in the beam cap is included in the Estimated Quantities for Slab on Concrete I-Girder.

All concrete above the intermediate beam cap is included in the Estimated Quantities for Slab on Concrete I-Girder.

Foundation Data

Type	Design Data		Bent Number 1	2	3	4
Load Bearing Pile	Pile Type and Size		HP12x53	HP14x73	HP14x73	HP12x53
	Number	ea	6	7	7	6
	Approximate Length Per Each	ft	20	31	31	20
	Pile Point Reinforcement	ea	All	All	All	All
	Min. Galvanized Penetration (Elev.)	ft	Full Length	Full Length	Full Length	Full Length
	Est. Max. Scour Depth (Elev.)	ft	-	879.6	880.6	-
	Minimum Tip Penetration (Elev.)	ft	874	864	865	874
	Criteria for Min. Tip Penetration		Min. Embed	Min. Embed	Min. Embed	Min. Embed
	Pile Driving Verification Method		DF	DF	DF	DF
	Resistance Factor		0.4	0.4	0.4	0.4
	Minimum Nominal Axial Compressive Resistance	kip	418	509	509	418

$$\text{Minimum Nominal Axial Compressive Resistance} = \frac{\text{Maximum Factored Loads}}{\text{Resistance Factor}}$$

DF = FHWA - Modified Gates Dynamic Pile Formula

Pile point reinforcement need not be galvanized. Shop drawings will not be required for pile point reinforcement.

Piles are to be placed in prebored holes and driven to refusal on rock. Review all borings for depth of rock and restrict driving as appropriate to comply with hard rock driving criteria in accordance with Sec 702. When pile refusal on rock occurs as approved by the engineer, the minimum nominal axial compressive resistance is verified and no additional pile driving verification method is required.

Prebore for piles at End Bent No. 1 to elevation 874.2, Intermediate Bent No. 2 to elevation 864.6, Intermediate Bent No. 3 to elevation 865.6, and End Bent No. 4 to elevation 874.5.

List of Drawings

Hydrologic Data

Drainage Area = 7.5 mi^2
Design Flood Frequency = 100 years
Design Flood Discharge = 4500 cfs
Design Flood (D.F.) Elevation = 892.6
Base Flood (100-year)
Base Flood Elevation = 892.6
Base Flood Discharge = 4500 cfs
Estimated Backwater = 1.5 ft
Average Velocity thru Opening = 6.7 ft/s
Freeboard (50-year)
Freeboard = 1.5 ft
Roadway Overtopping
Overtopping Flood Discharge = N/A cfs
Overtopping Flood Frequency = >500 years
500-year Flood Elevation = 894.8

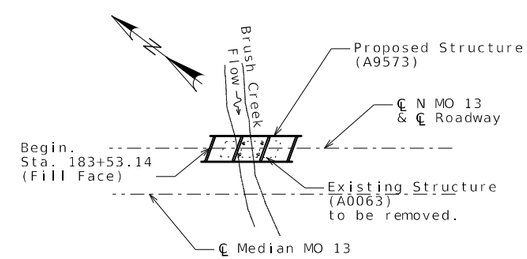

LOCATION SKETCH

STATE OF MISSOURI
SCOTT MICHAEL MCDONALD
NUMBER PE-2018000240
PROFESSIONAL ENGINEER

THIS SHEET HAS BEEN SIGNED, SEALED AND DATED ELECTRONICALLY.

DATE PREPARED 12/01/2025

ROUTE	STATE
13	MO
DISTRICT	SHEET NO.
BR	2

COUNTY: POLK
JOB NO.: JSR0049
CONTRACT ID.:
PROJECT NO.:
BRIDGE NO.: A9573

DATE	DESCRIPTION

MISSOURI HIGHWAYS AND TRANSPORTATION COMMISSION
105 WEST CAPITOL
JEFFERSON CITY, MO 65102
1-888-ASK-MODOT (1-888-275-6636)

VEENSTRA & KIMM INC.
A Kleinfelder Company
9788 N Ash Avenue Kansas City, Missouri 64157
816-781-6182 816-781-0643 (FAX)
Certificate of Authority No. 2002006347

Detailed Jun. 2025
Checked Aug. 2025

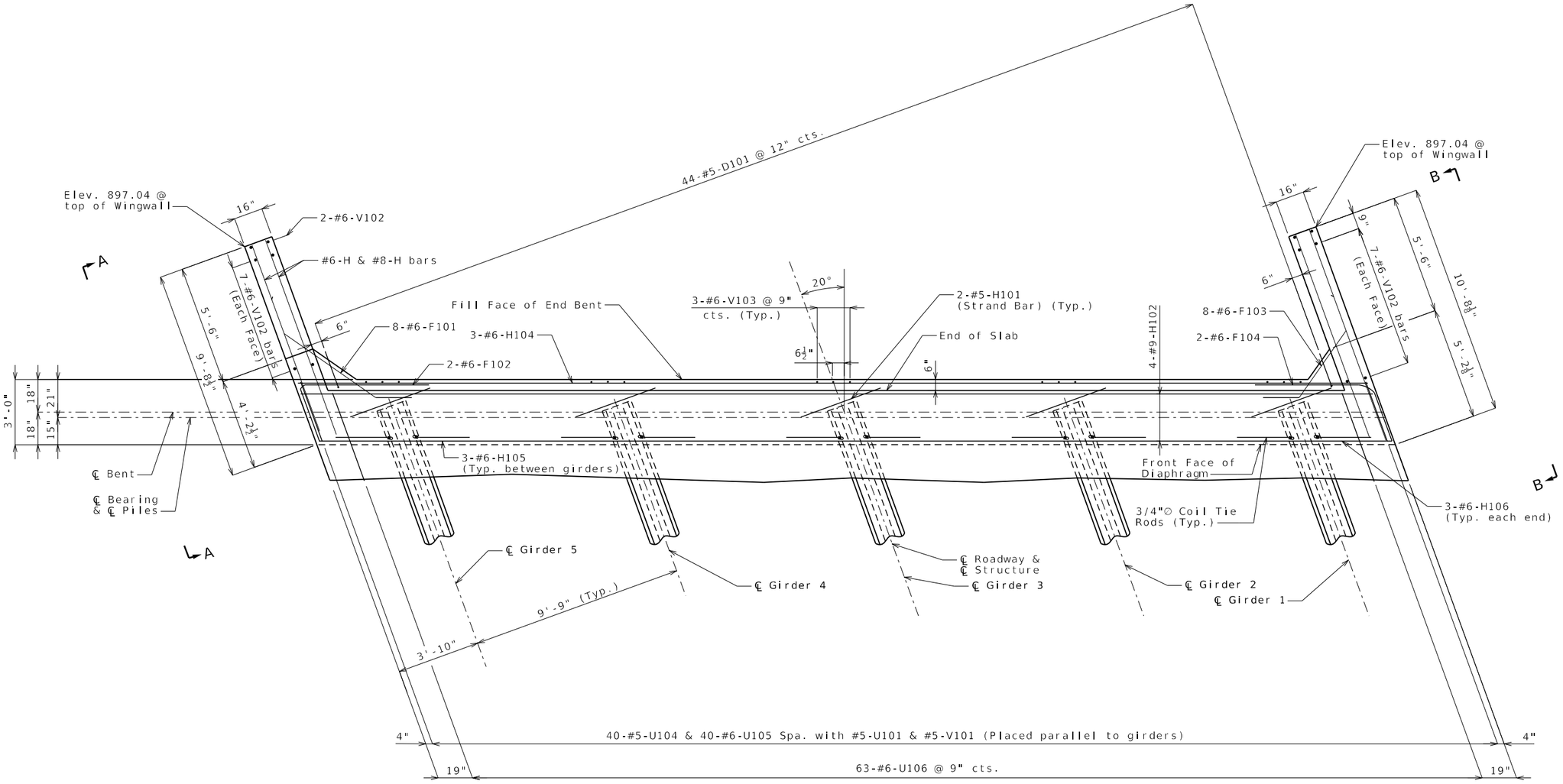

PART PLAN

Note: All U bars and V bar pairs in the End Bent shall be placed parallel to the girders.

Substructure Quantity Table for Bent No. 1		
Item		Quantity
Class 1 Excavation	cu. yard	55
Structural Steel Pile (12 in.)	linear foot	120
Pre-Bore for Piling	linear foot	115
Pile Point Reinforcement	each	6
Class B Concrete (Substructure)	cu. yard	19.6

These quantities are included in the Estimated Quantities table on Sheet No. 2.

NOTES:

All concrete in the end bent above top of beam and below top of slab shall be Class B-2.

Strands at end of the beams shall be field bent or, if necessary, cut in field to maintain 1 1/2-inch minimum clearance to fill face of end bent.

For location of coil tie rods and #5-H101 (strand tie bar), see Sheets No. 14 and 15.

For Elevation A-A and Elevation B-B see Sheet No. 6.

For details of Vertical Drain at End Bent, see Sheet No. 7.

For details of Bridge Approach Slab, see Sheets No. 22.

For details of End Bent No. 1 not shown, see Sheets No. 4, 5 & 6.

DETAILS OF END BENT NO. 1

Detailed Jun. 2025
Checked Jul. 2025

Note: This drawing is not to scale. Follow dimensions.

STATE OF MISSOURI
SCOTT MICHAEL MCDONALD
NUMBER PE-2018000240
PROFESSIONAL ENGINEER

THIS SHEET HAS BEEN SIGNED, SEALED AND DATED ELECTRONICALLY.

DATE PREPARED	
12/01/2025	
ROUTE 13	STATE MO
DISTRICT BR	SHEET NO. 3
COUNTY POLK	
JOB NO. JSR0049	
CONTRACT ID.	
PROJECT NO.	
BRIDGE NO. A9573	

DESCRIPTION

DATE

MISSOURI HIGHWAYS AND TRANSPORTATION COMMISSION
105 WEST CAPITOL
JEFFERSON CITY, MO 65102
1-888-ASK-MODOT (1-888-275-6636)

VEENSTRA & KIMM INC.
A Kleinfelder Company
9788 N Ash Avenue Kansas City, Missouri 64157
816-781-6182 816-781-0643 (FAX)
Certificate of Authority No. 2002006347

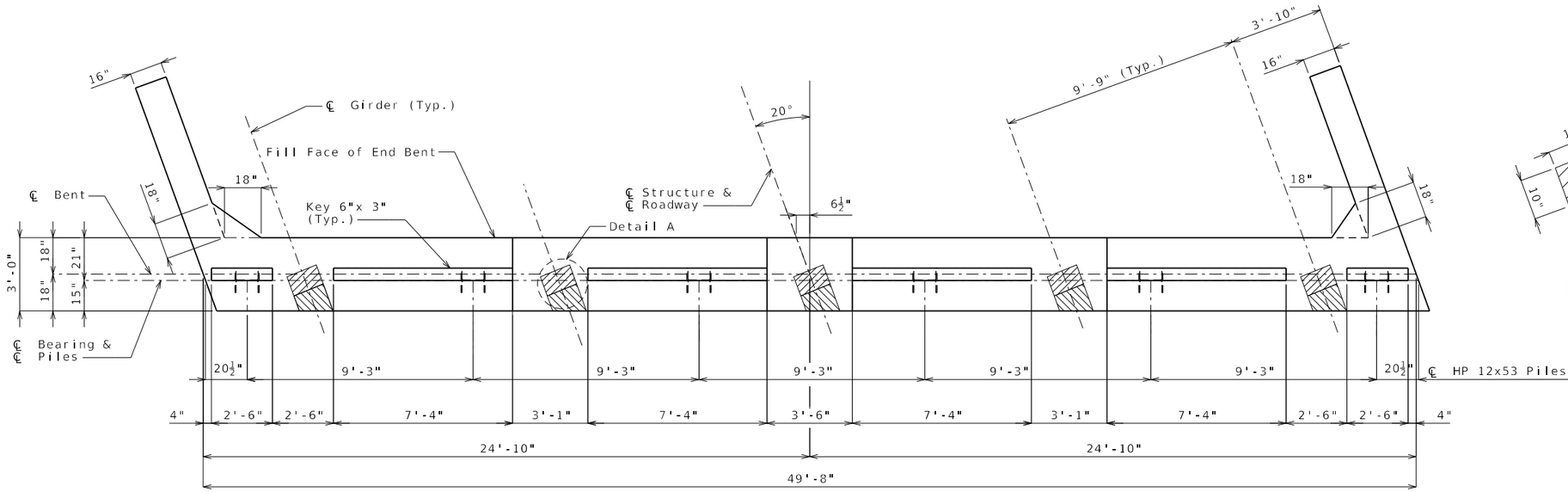

PLAN OF BEAM

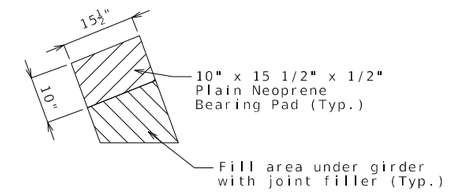

DETAIL A

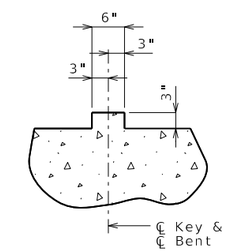

SECTION THRU KEY

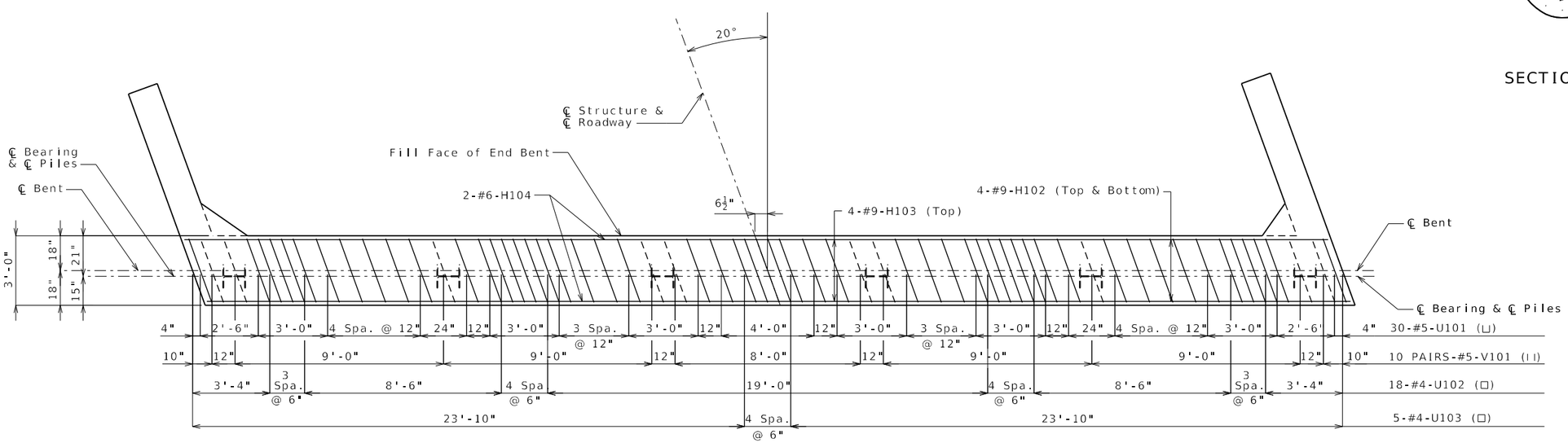

PLAN OF BEAM SHOWING REINFORCEMENT

NOTES:

For details of End Bent No. 1 not shown, see Sheets No. 3, 5 & 6.

DETAILS OF END BENT NO. 1

Detailed Jun. 2025
Checked Jul. 2025

Note: This drawing is not to scale. Follow dimensions.

STATE OF MISSOURI
SCOTT MICHAEL MCDONALD
NUMBER
PE-2018000240
PROFESSIONAL ENGINEER

THIS SHEET HAS BEEN SIGNED, SEALED AND DATED ELECTRONICALLY.

DATE PREPARED	
12/01/2025	
ROUTE 13	STATE MO
DISTRICT BR	SHEET NO. 4
COUNTY POLK	
JOB NO. JSR0049	
CONTRACT ID.	
PROJECT NO.	
BRIDGE NO. A9573	

DESCRIPTION	DATE

MISSOURI HIGHWAYS AND TRANSPORTATION COMMISSION
105 WEST CAPITOL
JEFFERSON CITY, MO 65102
1-888-ASK-MODOT (1-888-275-6636)

VEENSTRA & KIMM INC.
A Kleinfelder Company
9788 N Ash Avenue Kansas City, Missouri 64157
816-781-6182 816-781-0643 (FAX)
Certificate of Authority No. 2002006347

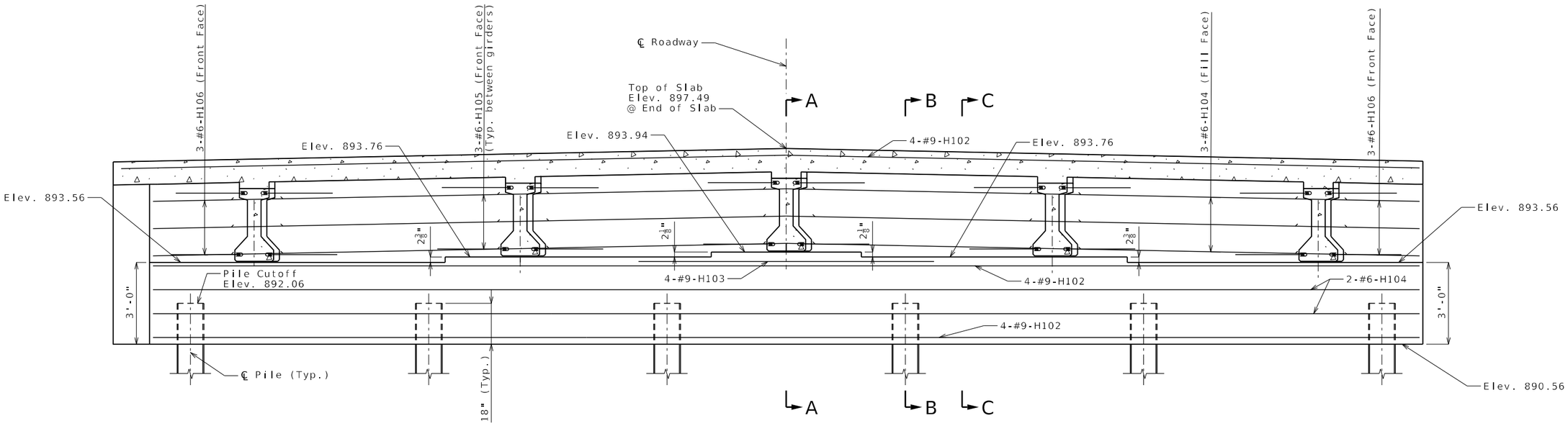

SECTION NEAR END BENT

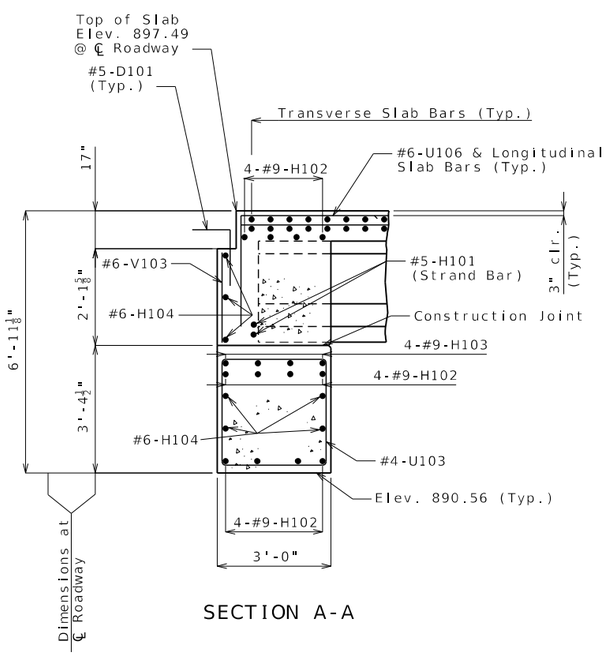

SECTION A-A

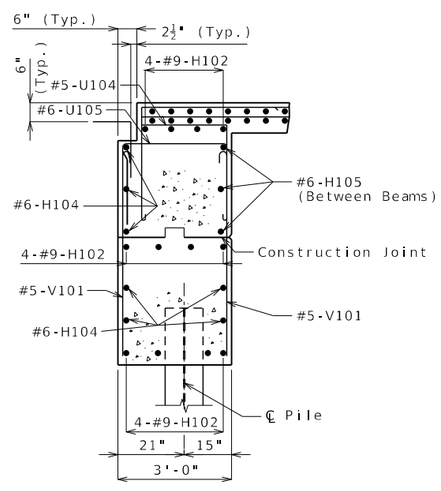

SECTION B-B

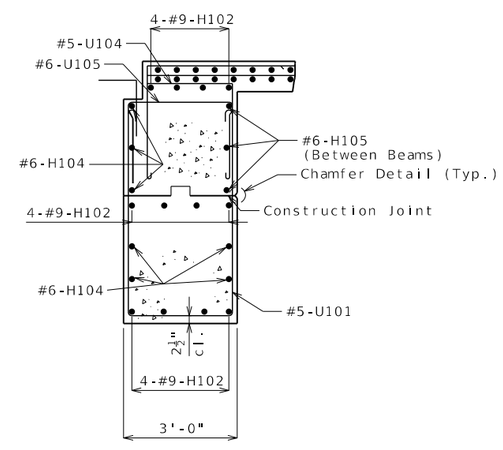

SECTION C-C

DETAILS OF END BENT NO. 1

NOTES:

For details of End Bent No. 1 not shown, see Sheets 3, 4, & 6.

Detailed May 2025
Checked Jul. 2025

Note: This drawing is not to scale. Follow dimensions.

STATE OF MISSOURI
SCOTT MICHAEL MCDONALD
NUMBER
PE-2018000240
PROFESSIONAL ENGINEER

THIS SHEET HAS BEEN SIGNED, SEALED AND DATED ELECTRONICALLY.

DATE PREPARED	
12/01/2025	
ROUTE 13	STATE MO
DISTRICT BR	SHEET NO. 5
COUNTY POLK	
JOB NO. JSR0049	
CONTRACT ID.	
PROJECT NO.	
BRIDGE NO. A9573	

DATE	DESCRIPTION

MISSOURI HIGHWAYS AND TRANSPORTATION COMMISSION
105 WEST CAPITOL
JEFFERSON CITY, MO 65102
1-888-ASK-MODOT (1-888-275-6636)

VEENSTRA & KIMM INC.
A Kleinfelder Company
9788 N Ash Avenue Kansas City, Missouri 64157
816-781-6182 816-781-0643 (FAX)
Certificate of Authority No. 2002006347

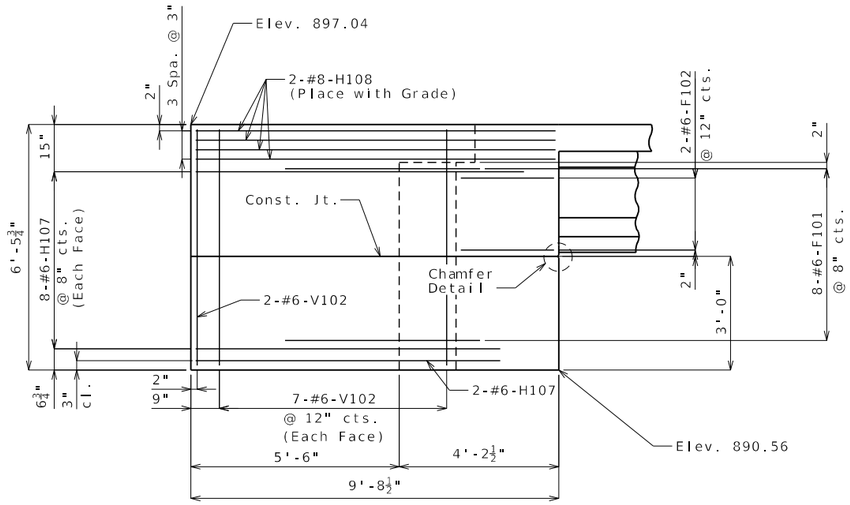

ELEVATION A-A

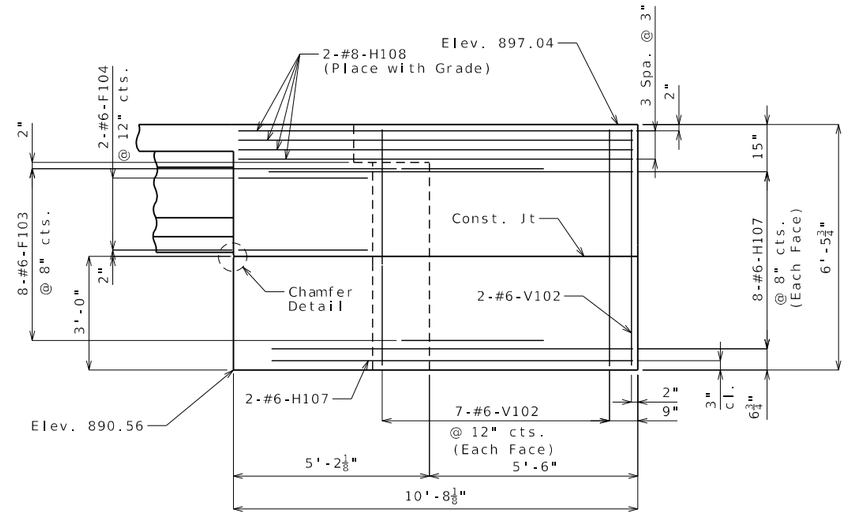

ELEVATION B-B

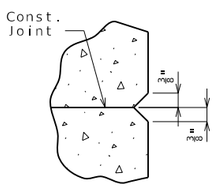

CHAMFER DETAIL

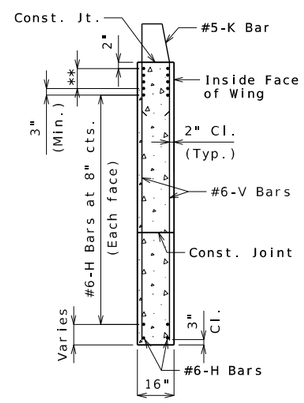

TYPICAL SECTION THRU WING

** #8-H Bars at 3" cts. (Each face)(Place with grade)

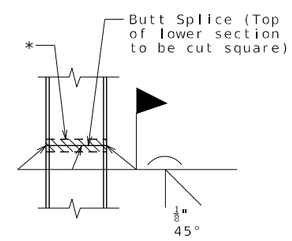

STEEL PILE SPLICE

(If required)

* Galvanizing material shall be omitted or removed one inch clear of weld locations in accordance with Sec 702.

NOTES:

For location of Elevation A-A and Elevation B-B, see Sheet No. 3.

For details of End Bent No. 1 not shown, see Sheets No. 3, 4, & 5.

For reinforcement of the barrier, see Sheet No. 21.

DETAILS OF END BENT NO. 1

Detailed Jun. 2025
Checked Jul. 2025

Note: This drawing is not to scale. Follow dimensions.

STATE OF MISSOURI
SCOTT MICHAEL MCDONALD
NUMBER PE-2018000240
PROFESSIONAL ENGINEER

THIS SHEET HAS BEEN SIGNED, SEALED AND DATED ELECTRONICALLY.

DATE PREPARED	
12/01/2025	
ROUTE 13	STATE MO
DISTRICT BR	SHEET NO. 6
COUNTY POLK	
JOB NO. JSR0049	
CONTRACT ID.	
PROJECT NO.	
BRIDGE NO. A9573	

DATE	DESCRIPTION

MISSOURI HIGHWAYS AND TRANSPORTATION COMMISSION
105 WEST CAPITOL
JEFFERSON CITY, MO 65102
1-888-ASK-MODOT (1-888-275-6636)

VEENSTRA & KIMM INC.
A Kleinfelder Company
9788 N Ash Avenue Kansas City, Missouri 64157
816-781-6182 816-781-0643 (FAX)
Certificate of Authority No. 2002006347

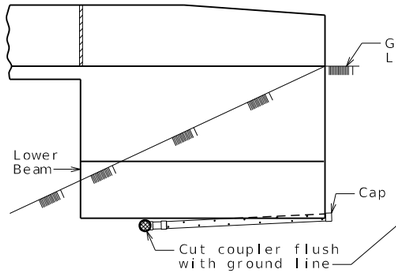

ELEVATION OF WING

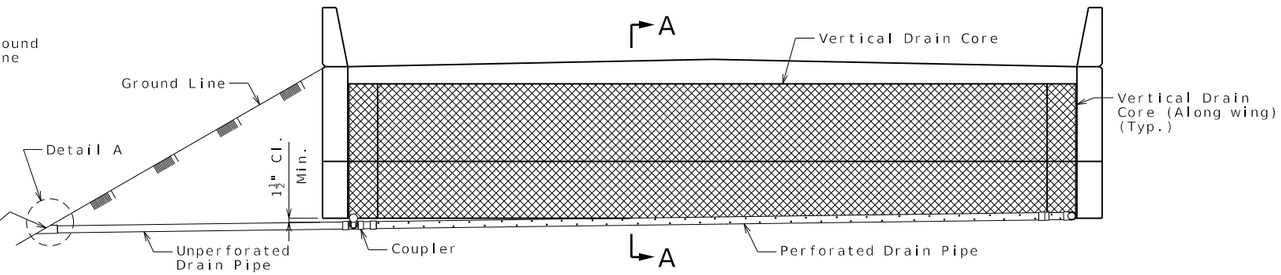

ELEVATION OF END BENT

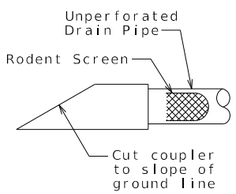

DETAIL A

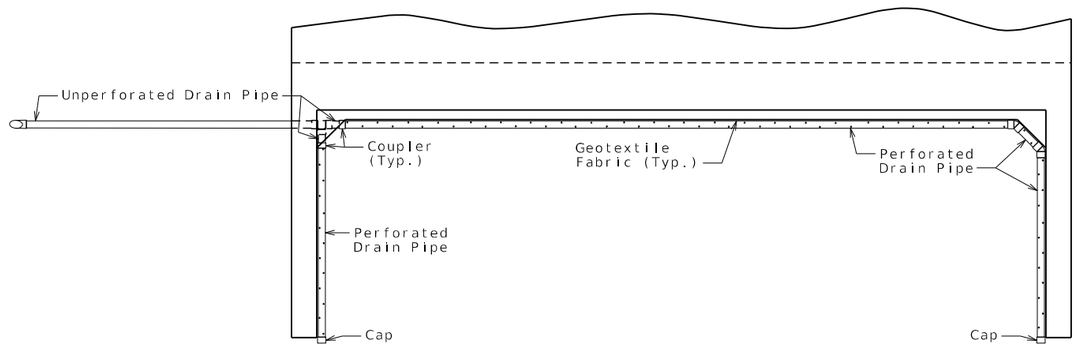

PLAN OF END BENT

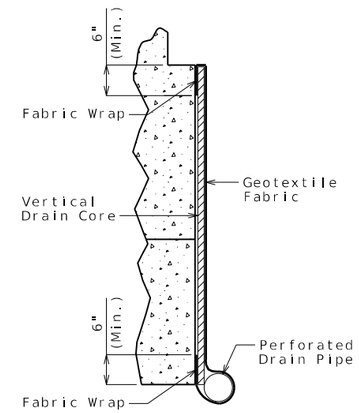

PART SECTION A-A
(Section thru wing similar)

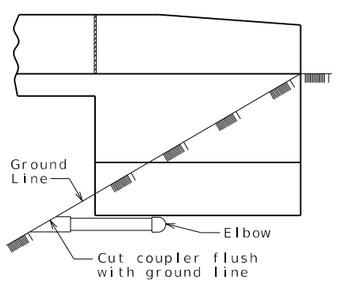

ELEVATION OF WING

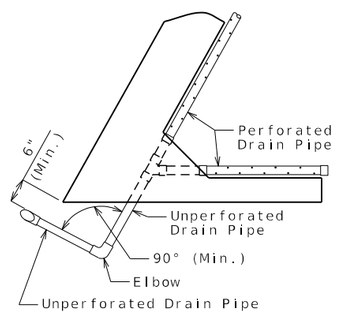

PART PLAN

OPTIONAL TURNED DRAIN
(Use only when straight drain is not practical.)

General Notes:

All drain pipe shall be sloped 1 to 2 percent.

Drain pipe may be either 6-inch diameter corrugated metallic-coated steel pipe underdrain, 4-inch diameter corrugated polyvinyl chloride (PVC) drain pipe, or 4-inch diameter corrugated polyethylene (PE) drain pipe.

Drain pipe shall be placed at fill face of end bent and inside face of wings. The pipe shall slope to lowest grade of ground line, also missing the lower beam of end bent by a minimum of 1 1/2 inches.

Perforated pipe shall be placed at fill face side and inside face of wings at the bottom of end bent and plain pipe shall be used where the vertical drain ends to the exit at ground line.

VERTICAL DRAIN AT END BENTS

(Squared end bent shown, skewed end bent similar)

Detailed May 2025
Checked Jul. 2025

Note: This drawing is not to scale. Follow dimensions.

STATE OF MISSOURI
SCOTT MICHAEL MCDONALD
NUMBER PE-2018000240
PROFESSIONAL ENGINEER

THIS SHEET HAS BEEN SIGNED, SEALED AND DATED ELECTRONICALLY.

DATE PREPARED	12/01/2025
ROUTE 13	STATE MO
DISTRICT BR	SHEET NO. 7
COUNTY	POLK
JOB NO.	JSR0049
CONTRACT ID.	
PROJECT NO.	
BRIDGE NO.	A9573

DATE	DESCRIPTION

MISSOURI HIGHWAYS AND TRANSPORTATION COMMISSION
105 WEST CAPITOL
JEFFERSON CITY, MO 65102
1-888-ASK-MODOT (1-888-275-6636)

VEENSTRA & KIMM INC.
A Kleinfelder Company
9788 N Ash Avenue Kansas City, Missouri 64157
816-781-6182 816-781-0643 (FAX)
Certificate of Authority No. 2002006347

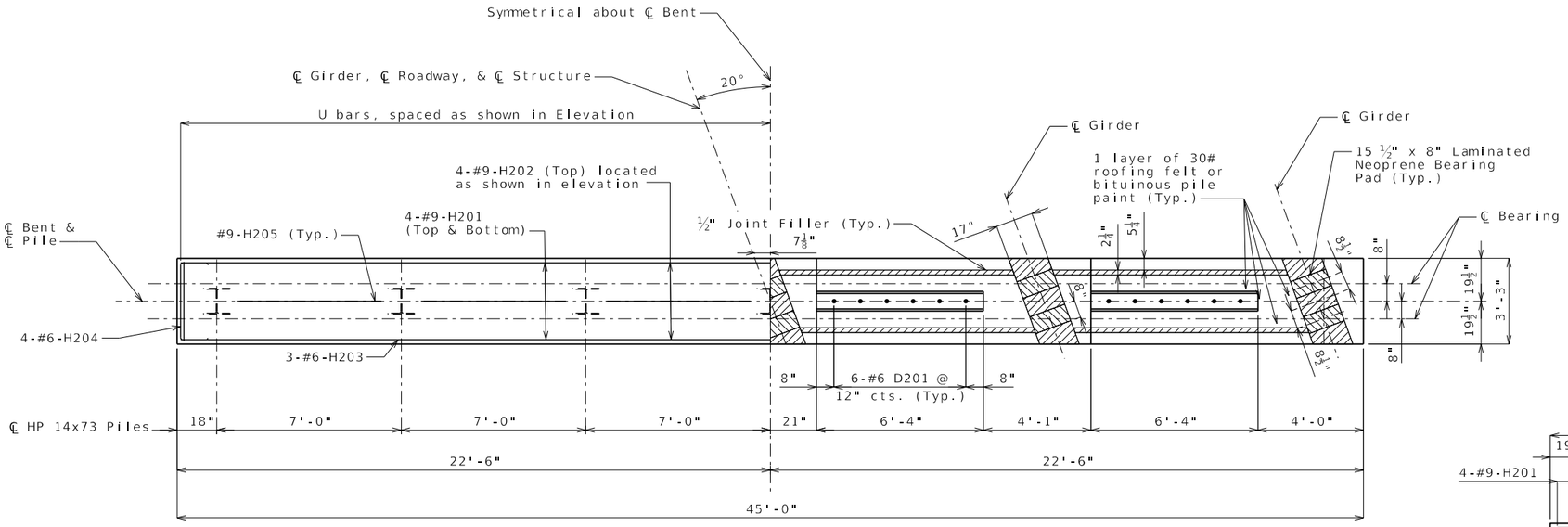

PLAN

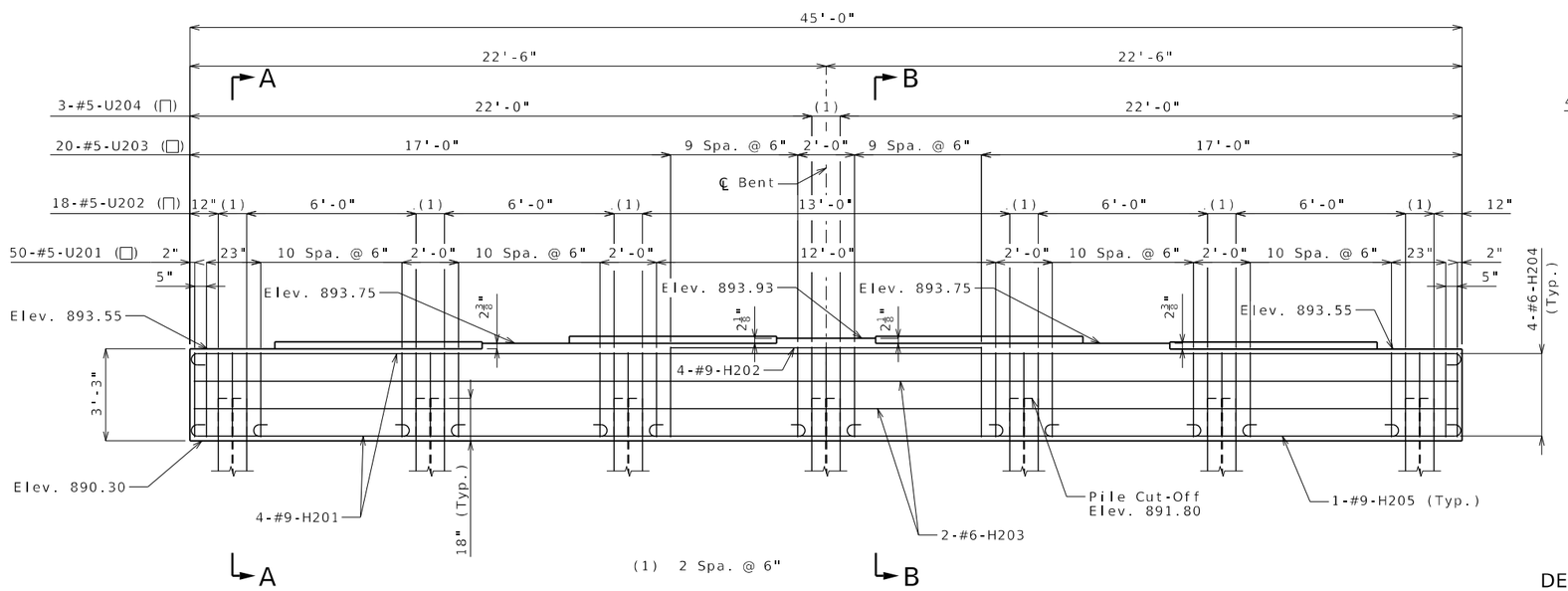

ELEVATION

(Looking Ahead Station)

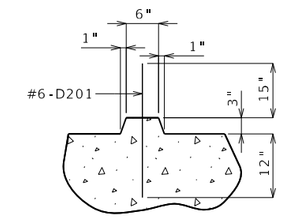

SECTION THRU KEY

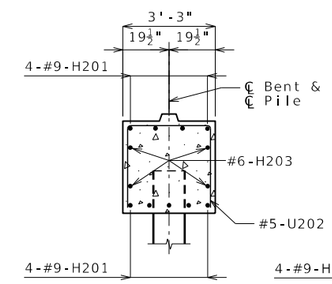

SECTION A-A

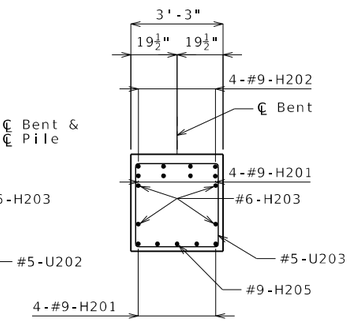

SECTION B-B

Notes:

Reinforcing steel shall be shifted to clear piles. U bars shall clear piles by at least 1 1/2 inches.

For steps 2 inches or more, use 2 1/4 x 1/2 inch joint filler up vertical face.

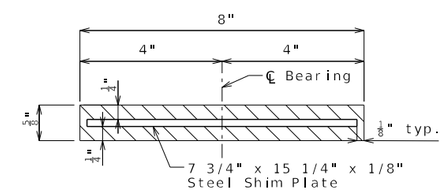

DETAIL OF LAMINATED NEOPRENE BEARING PAD

Substructure Quantity Table for Bent No. 2		
Item		Quantity
Galvanized Structural Steel Piles (14 in.)	linear foot	217
Pre-Bore for Piling	linear foot	141
Pile Point Reinforcement	each	7
Class B Concrete (Substructure)	cu. yard	18.4
Reinforcing Steel (Bridges)	pound	3140

These quantities are included in the Estimated Quantities table on Sheet No. 2.

DETAILS OF INTERMEDIATE BENT NO. 2

Detailed Jun. 2025
Checked Jul. 2025

Note: This drawing is not to scale. Follow dimensions.

STATE OF MISSOURI
SCOTT MICHAEL MCDONALD
NUMBER PE-2018000240
PROFESSIONAL ENGINEER

THIS SHEET HAS BEEN SIGNED, SEALED AND DATED ELECTRONICALLY.

DATE PREPARED	
12/01/2025	
ROUTE 13	STATE MO
DISTRICT BR	SHEET NO. 8
COUNTY POLK	
JOB NO. JSR0049	
CONTRACT ID.	
PROJECT NO.	
BRIDGE NO. A9573	

DATE	DESCRIPTION

MISSOURI HIGHWAYS AND TRANSPORTATION COMMISSION
105 WEST CAPITOL
JEFFERSON CITY, MO 65102
1-888-ASK-MODOT (1-888-275-6636)

VEENSTRA & KIMM INC.
A Kleinfelder Company
9788 N Ash Avenue Kansas City, Missouri 64157
816-781-6182 816-781-0643 (FAX)
Certificate of Authority No. 2002006347

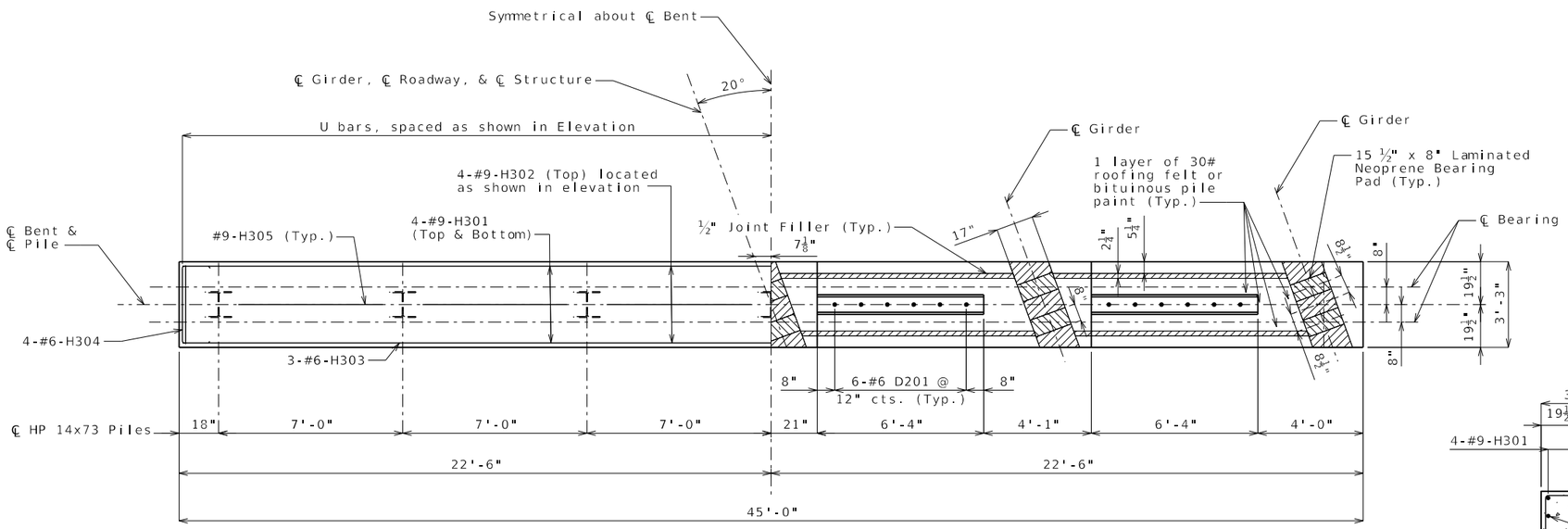

PLAN

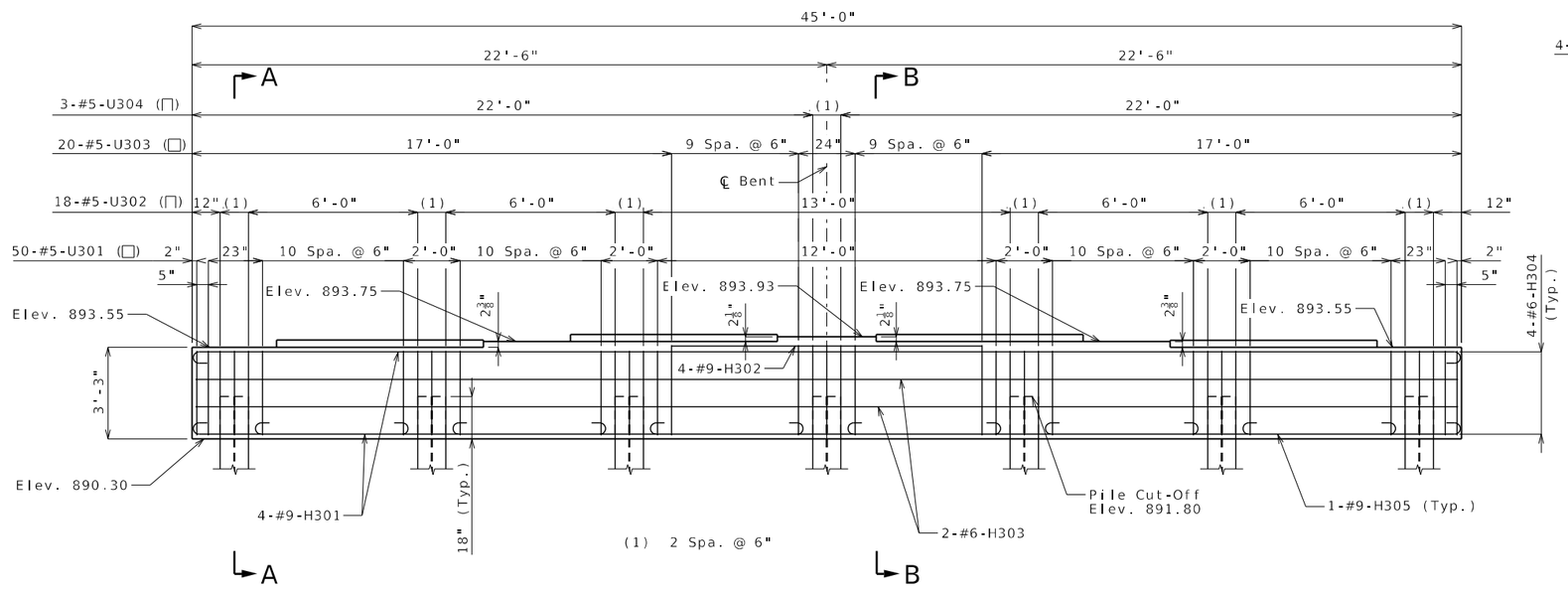

ELEVATION

(Looking Ahead Station)

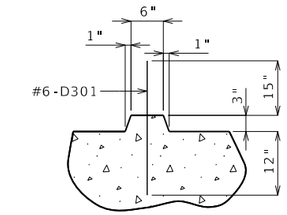

SECTION THRU KEY

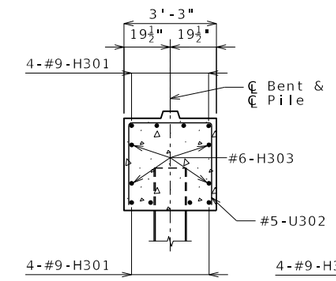

SECTION A-A

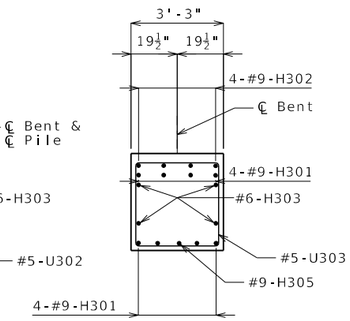

SECTION B-B

Notes:

Reinforcing steel shall be shifted to clear piles. U bars shall clear piles by at least 1 1/2 inches.

For steps 2 inches or more, use 2 1/4 x 1/2 inch joint filler up vertical face.

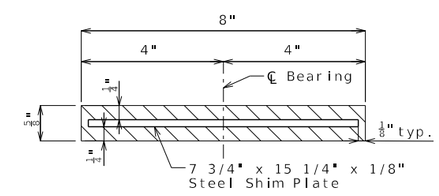

DETAIL OF LAMINATED NEOPRENE BEARING PAD

Substructure Quantity Table for Bent No. 3		
Item		Quantity
Galvanized Structural Steel Piles (14 in.)	linear foot	217
Pre-Bore for Piling	linear foot	138
Pile Point Reinforcement	each	7
Class B Concrete (Substructure)	cu. yard	18.4
Reinforcing Steel (Bridges)	pound	3140

These quantities are included in the Estimated Quantities table on Sheet No. 2.

DETAILS OF INTERMEDIATE BENT NO. 3

Detailed Jun. 2025
Checked Jul. 2025

Note: This drawing is not to scale. Follow dimensions.

STATE OF MISSOURI
SCOTT MICHAEL MCDONALD
NUMBER PE-2018000240
PROFESSIONAL ENGINEER

THIS SHEET HAS BEEN SIGNED, SEALED AND DATED ELECTRONICALLY.

DATE PREPARED	
12/01/2025	
ROUTE 13	STATE MO
DISTRICT BR	SHEET NO. 9
COUNTY POLK	
JOB NO. JSR0049	
CONTRACT ID.	
PROJECT NO.	
BRIDGE NO. A9573	

DATE	DESCRIPTION

MISSOURI HIGHWAYS AND TRANSPORTATION COMMISSION
105 WEST CAPITOL
JEFFERSON CITY, MO 65102
1-888-ASK-MODOT (1-888-275-6636)

VEENSTRA & KIMM INC.
A Kleinfelder Company
9788 N Ash Avenue Kansas City, Missouri 64157
816-781-6182 816-781-0643 (FAX)
Certificate of Authority No. 2002006347

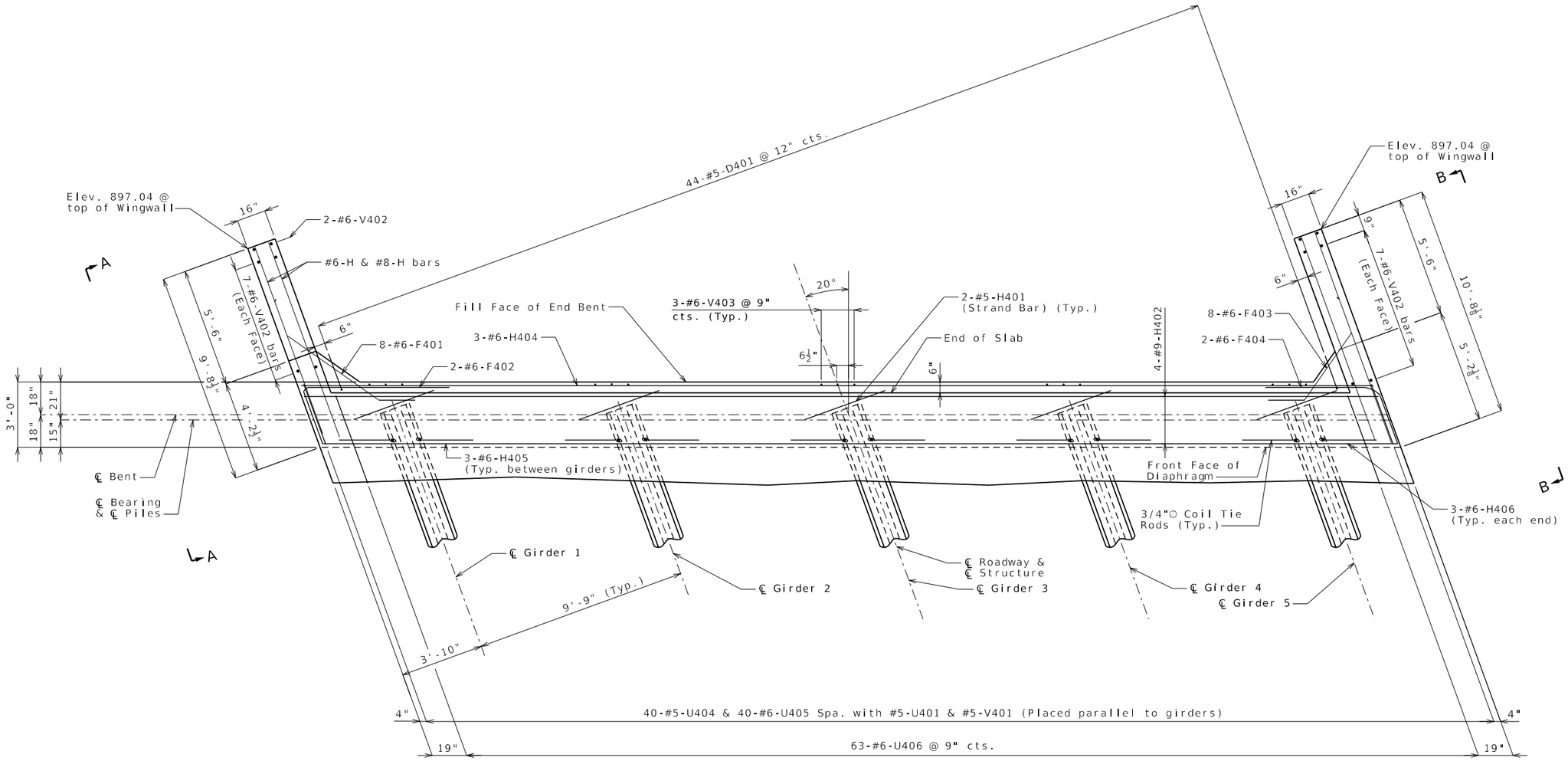

PART PLAN

Note: All U bars and V bar pairs in the End Bent shall be placed parallel to the girders.

Substructure Quantity Table for Bent No. 4		
Item		Quantity
Class 1 Excavation	cu. yard	60
Structural Steel Pile (12 in.)	linear foot	120
Pre-Bore for Piling	linear foot	113
Pile Point Reinforcement	each	6
Class B Concrete (Substructure)	cu. yard	19.6

These quantities are included in the Estimated Quantities table on Sheet No. 2.

NOTES:

All concrete in the end bent above top of beam and below top of slab shall be Class B-2.

Strands at end of the beams shall be field bent or, if necessary, cut in field to maintain 1 1/2-inch minimum clearance to fill face of end bent.

For location of coil tie rods and #5-H101 (strand tie bar), see Sheets No. 14 and 15.

For Elevation A-A and Elevation B-B see Sheet No. 13.

For details of Vertical Drain at End Bent, see Sheet No. 7.

For details of Bridge Approach Slab, see Sheets No. 22.

For details of End Bent No. 4 not shown, see Sheets No. 11, 12 & 13.

DETAILS OF END BENT NO. 4

Detailed Jun. 2025
Checked Jul. 2025

Note: This drawing is not to scale. Follow dimensions.

STATE OF MISSOURI
SCOTT MICHAEL MCDONALD
NUMBER PE-2018000240
PROFESSIONAL ENGINEER

THIS SHEET HAS BEEN SIGNED, SEALED AND DATED ELECTRONICALLY.

DATE PREPARED	12/01/2025
ROUTE 13	STATE MO
DISTRICT BR	SHEET NO. 10
COUNTY	POLK
JOB NO.	JSR0049
CONTRACT ID.	
PROJECT NO.	
BRIDGE NO.	A9573

DESCRIPTION

DATE

MISSOURI HIGHWAYS AND TRANSPORTATION COMMISSION
105 WEST CAPITOL
JEFFERSON CITY, MO 65102
1-888-ASK-MODOT (1-888-275-6636)

VEENSTRA & KIMM INC.
A Kleinfelder Company
9788 N Ash Avenue Kansas City, Missouri 64157
816-781-6182 816-781-0643 (FAX)
Certificate of Authority No. 2002006347

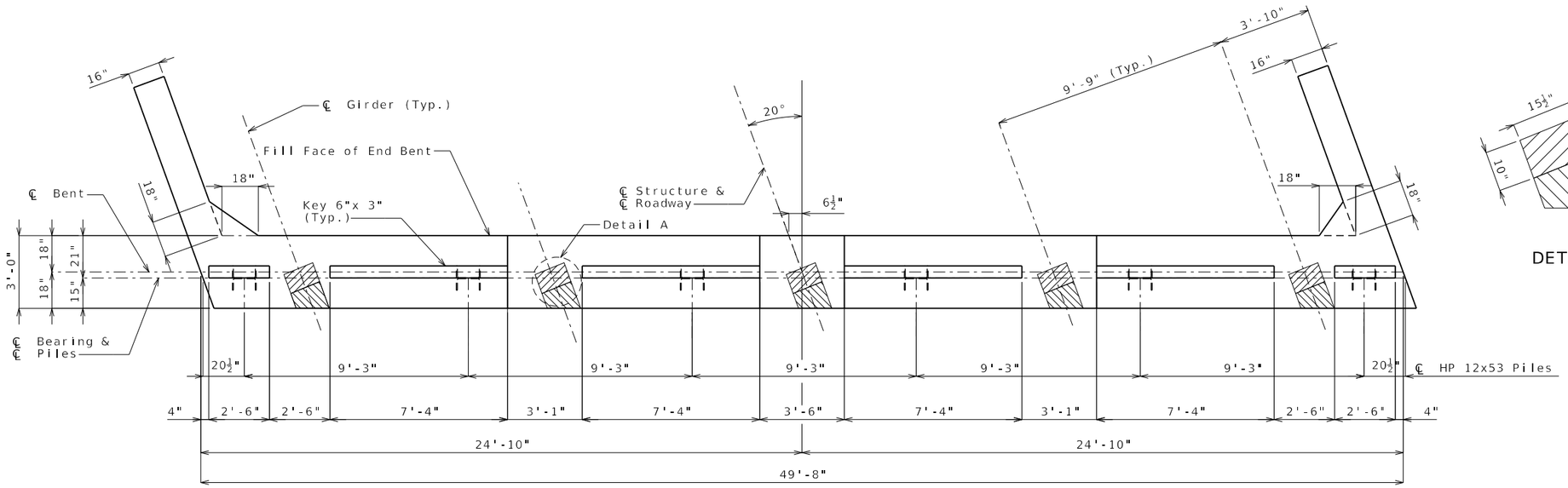

PLAN OF BEAM

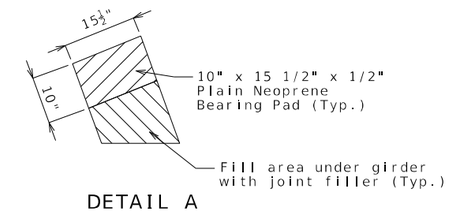

DETAIL A

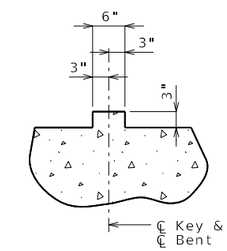

SECTION THRU KEY

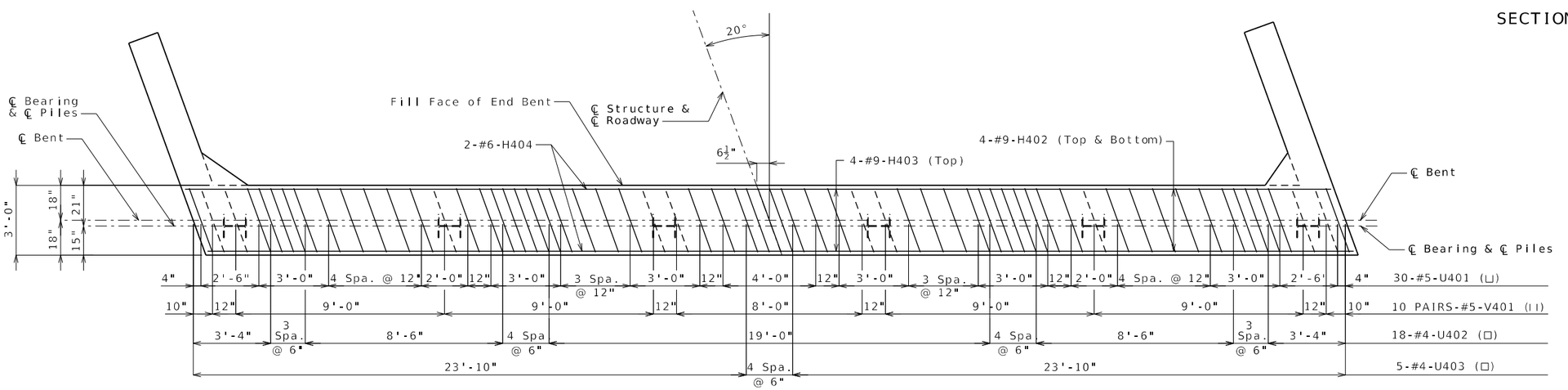

PLAN OF BEAM SHOWING REINFORCEMENT

DETAILS OF END BENT NO. 4

NOTES:

For details of End Bent No. 4 not shown, see Sheets No. 10, 12 & 13.

Detailed Jun. 2025
Checked Jul. 2025

Note: This drawing is not to scale. Follow dimensions.

STATE OF MISSOURI
SCOTT MICHAEL MCDONALD
NUMBER PE-2018000240
PROFESSIONAL ENGINEER

THIS SHEET HAS BEEN SIGNED, SEALED AND DATED ELECTRONICALLY.

DATE PREPARED	12/01/2025
ROUTE 13	STATE MO
DISTRICT BR	SHEET NO. 11
COUNTY	POLK
JOB NO.	JSR0049
CONTRACT ID.	
PROJECT NO.	
BRIDGE NO.	A9573

DESCRIPTION	DATE

MISSOURI HIGHWAYS AND TRANSPORTATION COMMISSION
105 WEST CAPITOL
JEFFERSON CITY, MO 65102
1-888-ASK-MODOT (1-888-275-6636)

VEENSTRA & KIMM INC.
A Kleinfelder Company
9788 N Ash Avenue Kansas City, Missouri 64157
816-781-6182 816-781-0643 (FAX)
Certificate of Authority No. 2002006347

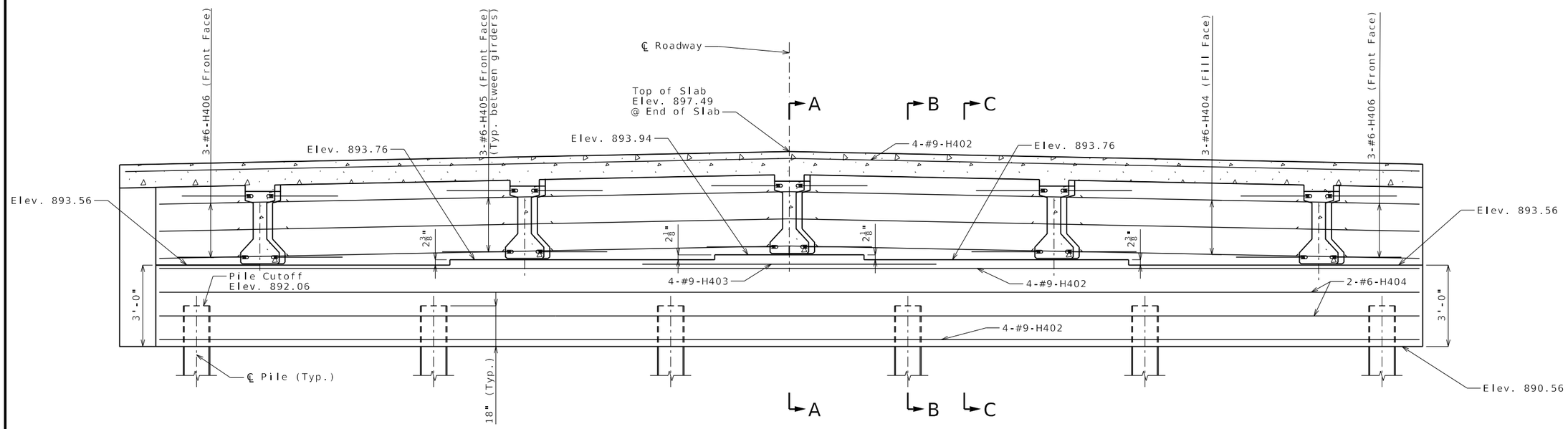

SECTION NEAR END BENT

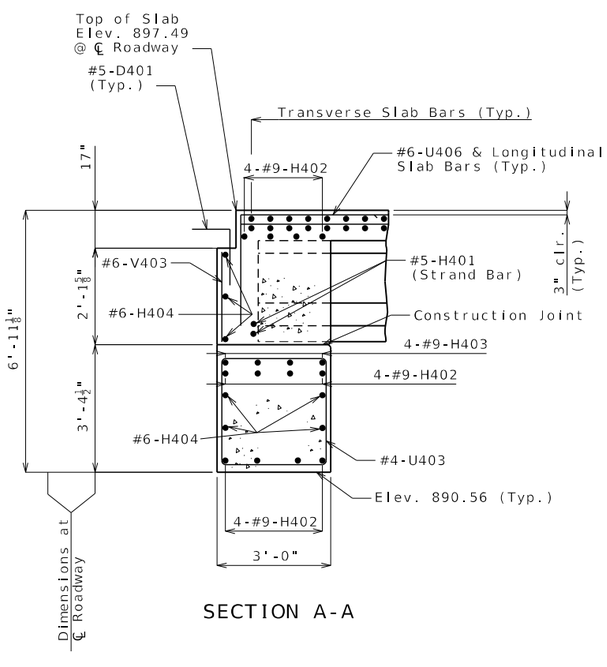

SECTION A-A

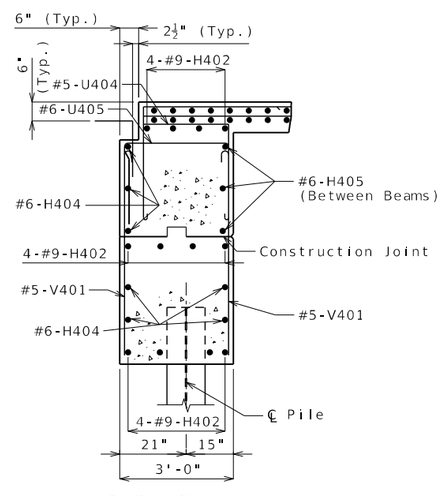

SECTION B-B

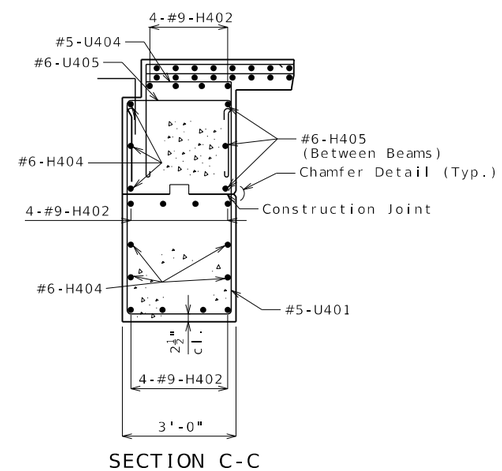

SECTION C-C

DETAILS OF END BENT NO. 4

NOTES:

For details of End Bent No. 4 not shown, see Sheets No. 10, 11, & 13.

Detailed Jun. 2025
Checked Jul. 2025

Note: This drawing is not to scale. Follow dimensions.

STATE OF MISSOURI
SCOTT MICHAEL MCDONALD
NUMBER PE-2018000240
PROFESSIONAL ENGINEER

THIS SHEET HAS BEEN SIGNED, SEALED AND DATED ELECTRONICALLY.

DATE PREPARED	
12/01/2025	
ROUTE 13	STATE MO
DISTRICT BR	SHEET NO. 12
COUNTY POLK	
JOB NO. JSR0049	
CONTRACT ID.	
PROJECT NO.	
BRIDGE NO. A9573	

DATE	DESCRIPTION

MISSOURI HIGHWAYS AND TRANSPORTATION COMMISSION
105 WEST CAPITOL
JEFFERSON CITY, MO 65102
1-888-ASK-MODOT (1-888-275-6636)

VEENSTRA & KIMM INC.
A Kleinfelder Company
9788 N Ash Avenue Kansas City, Missouri 64157
816-781-6182 816-781-0643 (FAX)
Certificate of Authority No. 2002006347

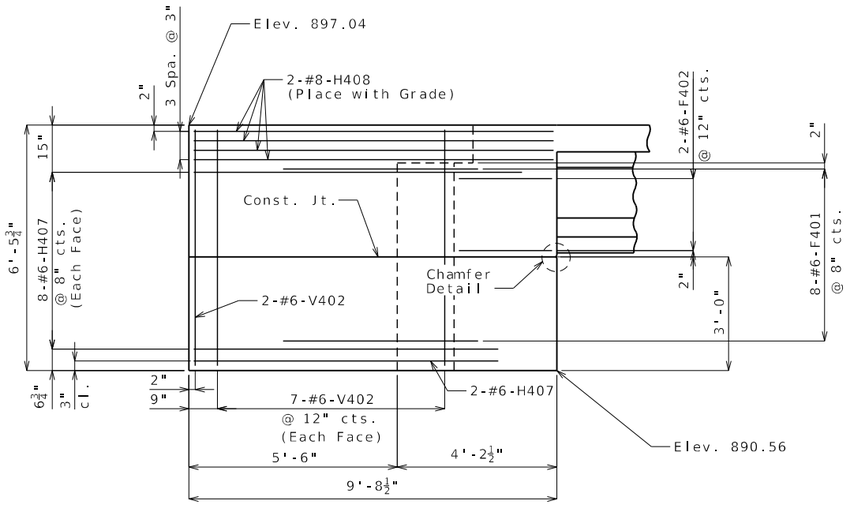

ELEVATION A-A

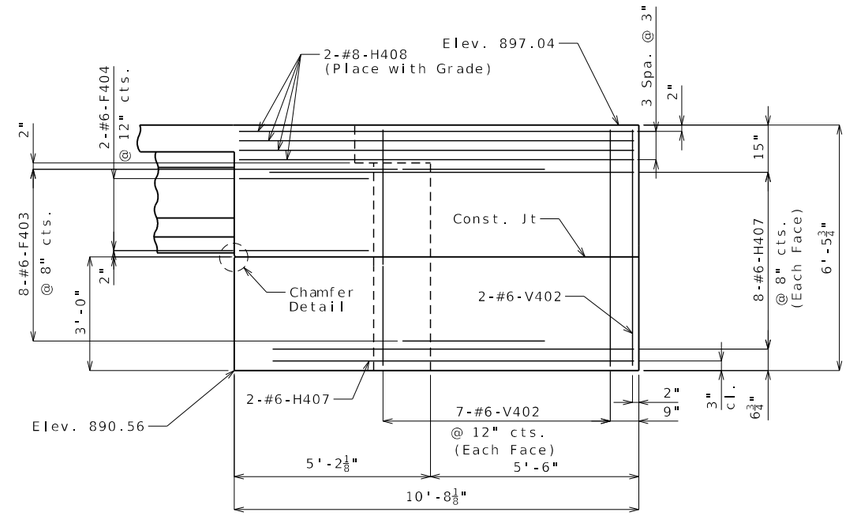

ELEVATION B-B

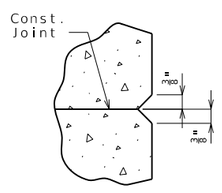

CHAMFER DETAIL

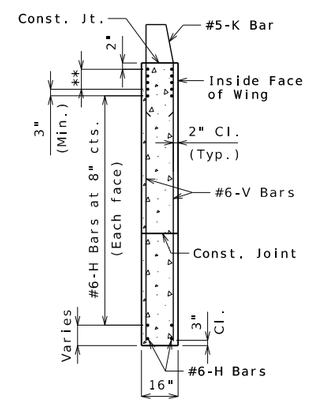

TYPICAL SECTION
THRU WING

** #8-H Bars at 3" cts.
(Each face)(Place with grade)

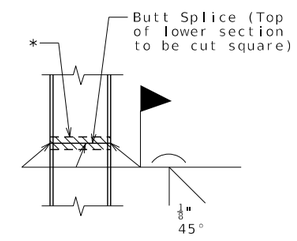

STEEL PILE SPLICE
(If required)

* Galvanizing material shall be omitted or removed one inch clear of weld locations in accordance with Sec 702.

NOTES:

For location of Elevation A-A and Elevation B-B, see Sheet No. 10.

For details of End Bent No. 4 not shown, see Sheets No. 10, 11, & 12.

For reinforcement of the barrier, see Sheets No. 21.

DETAILS OF END BENT NO. 4

Detailed Jun. 2025
Checked Jul. 2025

Note: This drawing is not to scale. Follow dimensions.

B_A9573_013_JSR0049_EB4.dgn 4:47:32 PM 12/1/2025

STATE OF MISSOURI
SCOTT MICHAEL MCDONALD
NUMBER
PE-2018000240
PROFESSIONAL ENGINEER

THIS SHEET HAS BEEN SIGNED, SEALED AND DATED ELECTRONICALLY.

DATE PREPARED	
12/01/2025	
ROUTE 13	STATE MO
DISTRICT BR	SHEET NO. 13
COUNTY POLK	
JOB NO. JSR0049	
CONTRACT ID.	
PROJECT NO.	
BRIDGE NO. A9573	

DATE	DESCRIPTION

MISSOURI HIGHWAYS AND TRANSPORTATION COMMISSION
105 WEST CAPITOL
JEFFERSON CITY, MO 65102
1-888-ASK-MODOT (1-888-275-6636)

VEENSTRA & KIMM INC.
A Kleinfelder Company
9788 N Ash Avenue Kansas City, Missouri 64157
816-781-6182 816-781-0643 (FAX)
Certificate of Authority No. 2002006347

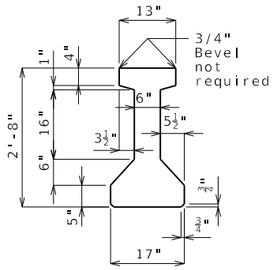

DIMENSIONS

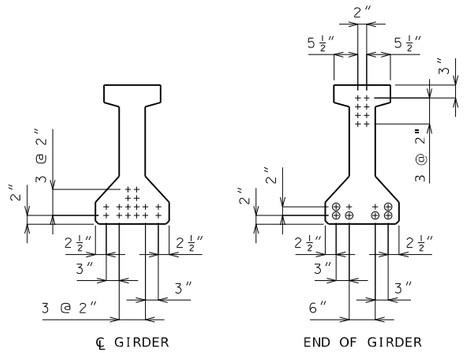

STRAND ARRANGEMENT

+ Indicates prestressing strand.

○ Indicates cut & shop bend with 2'-6" projection.

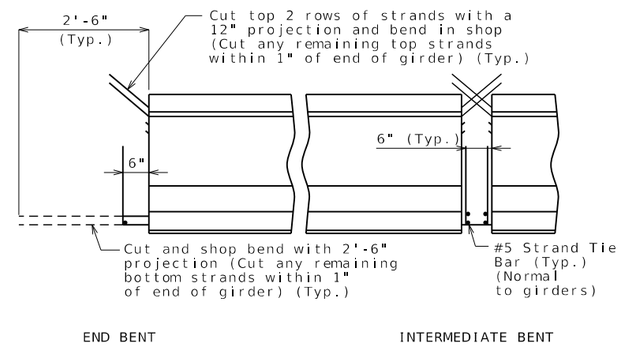

STRANDS AT GIRDER ENDS

BILL OF REINFORCING STEEL - EACH GIRDER			
NO.	SIZE & MARK	ACTUAL LENGTH	SHAPE
2	5 A1	47'-11"	20
162	5 B1	4'-1"	11S
16	6 B2	3'-5"	11S
89	4 C1	13"	10S
178	4 D1	2'-3"	9S

BENDING DIAGRAM

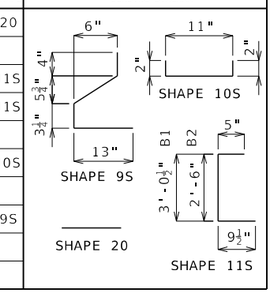

All dimensions are out to out.

Hooks and bends shall be in accordance with the CRSI Manual of Standard Practice for Detailing Reinforced Concrete Structures, Stirrup and Tie Dimensions.

Actual lengths are measured along centerline of bar to the nearest inch.

Minimum clearance to reinforcing shall be one inch.

All reinforcement shall be Grade 60.

The two D1 bars may be furnished as one bar at the fabricator's option.

All B1 bars shall be epoxy coated.

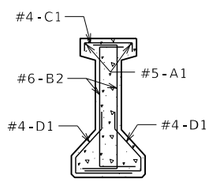

SECTION A-A

Strands not shown for clarity.

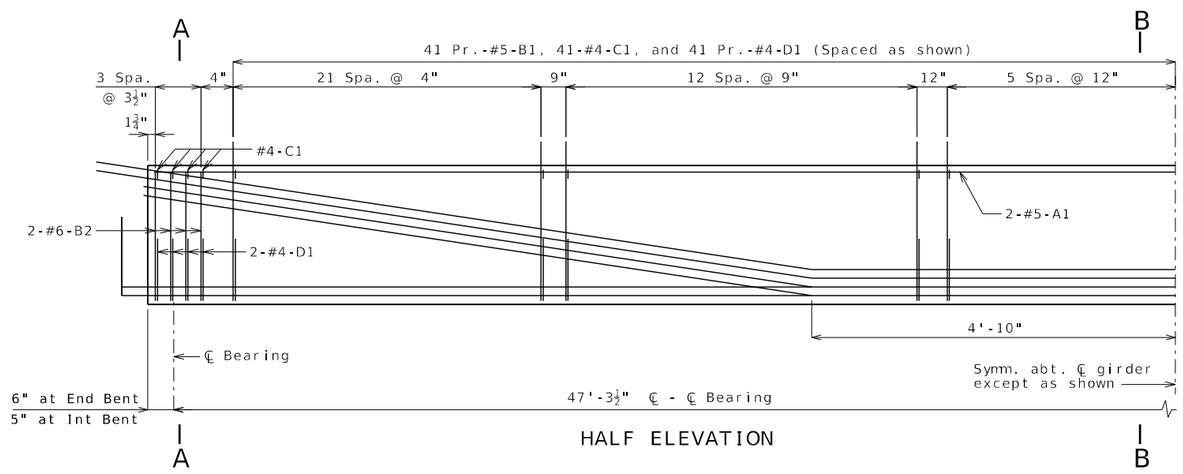

HALF ELEVATION

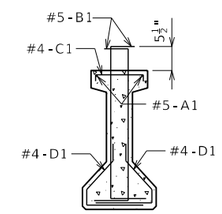

SECTION B-B

Strands not shown for clarity.

General Notes:

Concrete for prestressed girders shall be Class A-1 with f'c = 6,000 psi and f'ci = 4,500 psi.

Use 16 strands, 1/2"Ø Grade 270, with an initial prestress force of 496 kips.

Pretensioned members shall be in accordance with Sec 1029.

Fabricator shall be responsible for location and design of lifting devices.

Exterior and interior girders are the same except: coil ties, coil inserts for slab drains.

For Girder Camber Diagram, see Sheet No. 18.

For location of coil inserts at slab drains, see Sheet No. 17.

For location of coil ties at concrete bent diaphragms, see Sheets No. 3,10 & 16.

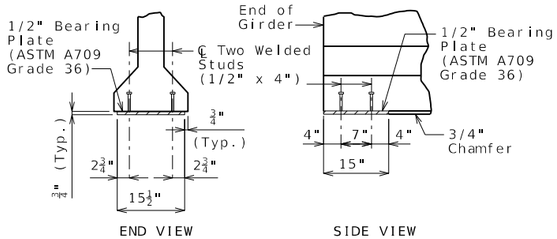

BEARING PLATE

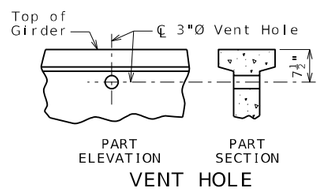

VENT HOLE

Place vent holes at or near upgrade 1/3 point of girders and clear reinforcing steel or strands by 1 1/2" minimum.

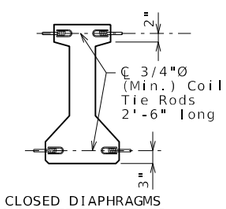

CLOSED DIAPHRAGMS AND INTEGRAL BENTS

COIL TIES

Exclude coil tie at exterior face of exterior girders except at integral end bents.

Detailed May 2025
Checked Jul. 2025

I-GIRDERS - SPANS (1-2) AND (3-4)

Note: This drawing is not to scale. Follow dimensions.

STATE OF MISSOURI
SCOTT MICHAEL MCDONALD
NUMBER PE-2018000240
PROFESSIONAL ENGINEER

THIS SHEET HAS BEEN SIGNED, SEALED AND DATED ELECTRONICALLY.

DATE PREPARED	
12/01/2025	
ROUTE 13	STATE MO
DISTRICT BR	SHEET NO. 14
COUNTY POLK	
JOB NO. JSR0049	
CONTRACT ID.	
PROJECT NO.	
BRIDGE NO. A9573	

DATE	DESCRIPTION

MISSOURI HIGHWAYS AND TRANSPORTATION COMMISSION
105 WEST CAPITOL
JEFFERSON CITY, MO 65102
1-888-ASK-MODOT (1-888-275-6636)

VEENSTRA & KIMM INC.
A Kleinfelder Company
9788 N Ash Avenue Kansas City, Missouri 64157
816-781-6182 816-781-0643 (FAX)
Certificate of Authority No. 2002006347

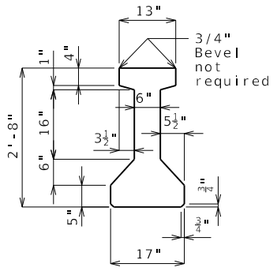

DIMENSIONS

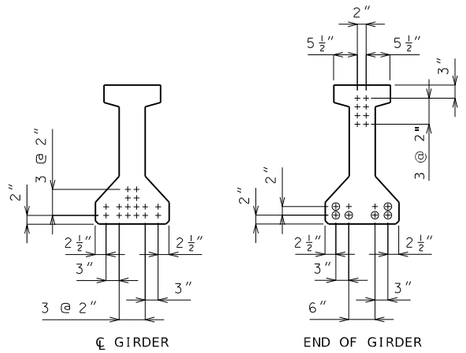

STRAND ARRANGEMENT

+ Indicates prestressing strand.

○ Indicates cut & shop bend with 2'-6" projection.

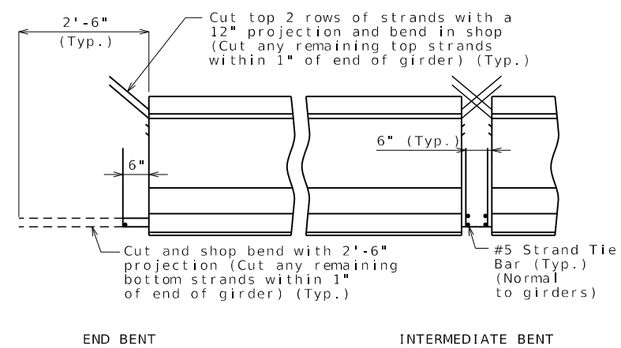

STRANDS AT GIRDER ENDS

BILL OF REINFORCING STEEL - EACH GIRDER				
NO.	SIZE & MARK	ACTUAL LENGTH	SHAPE	BENDING DIAGRAM
2	5 A1	47'-2"	20	
126	5 B1	4'-1"	11S	
16	6 B2	3'-5"	11S	
71	4 C1	13"	10S	
142	4 D1	2'-3"	9S	

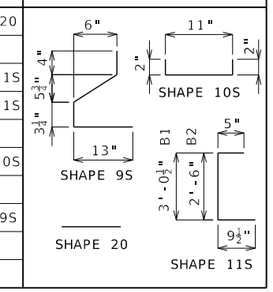

All dimensions are out to out.

Hooks and bends shall be in accordance with the CRSI Manual of Standard Practice for Detailing Reinforced Concrete Structures, Stirrup and Tie Dimensions.

Actual lengths are measured along centerline of bar to the nearest inch.

Minimum clearance to reinforcing shall be one inch.

All reinforcement shall be Grade 60.

The two D1 bars may be furnished as one bar at the fabricator's option.

All B1 bars shall be epoxy coated.

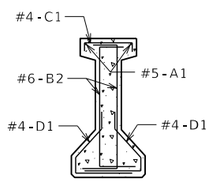

SECTION A-A

Strands not shown for clarity.

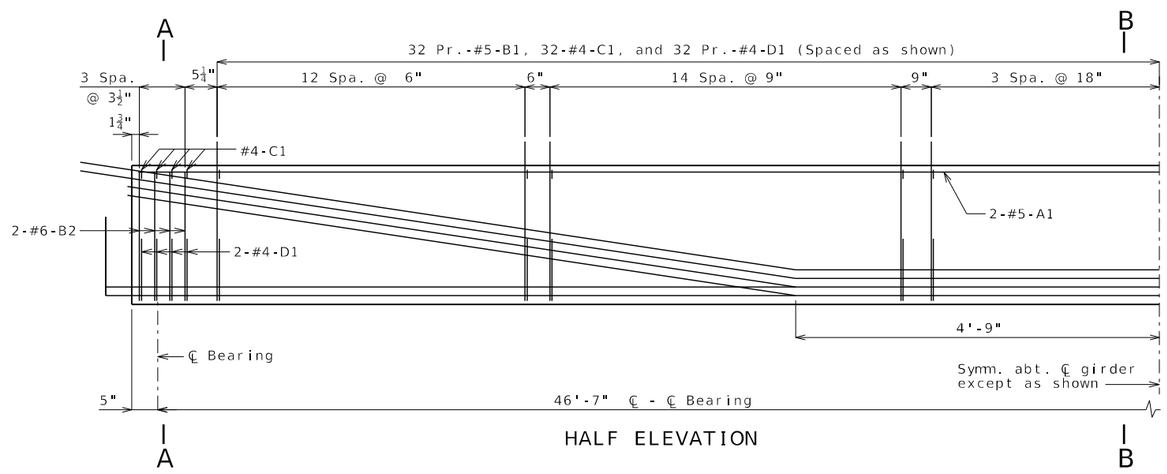

HALF ELEVATION

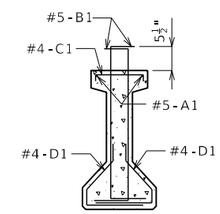

SECTION B-B

Strands not shown for clarity.

General Notes:

Concrete for prestressed girders shall be Class A-1 with f'c = 6,000 psi and f'ci = 4,500 psi.

Use 16 strands, 1/2"Ø Grade 270, with an initial prestress force of 496 kips.

Pretensioned members shall be in accordance with Sec 1029.

Fabricator shall be responsible for location and design of lifting devices.

Exterior and interior girders are the same except: coil ties, coil inserts for slab drains.

For Girder Camber Diagram, see Sheet No. 18.

For location of coil inserts at slab drains, see Sheet No. 17.

For location of coil ties at concrete bent diaphragms, see Sheets No. 3,10 & 16.

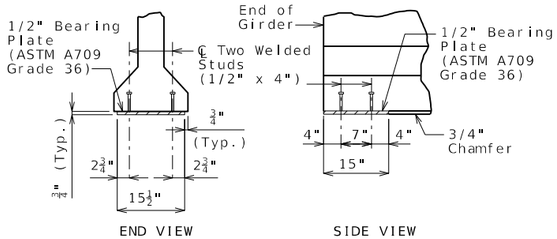

BEARING PLATE

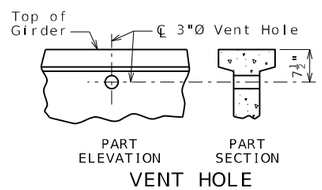

VENT HOLE

Place vent holes at or near upgrade 1/3 point of girders and clear reinforcing steel or strands by 1 1/2" minimum.

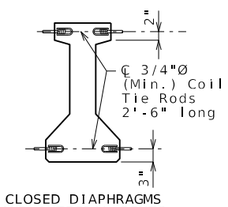

CLOSED DIAPHRAGMS AND INTEGRAL BENTS

COIL TIES

Exclude coil tie at exterior face of exterior girders except at integral end bents.

Detailed May 2025
Checked Jul. 2025

Note: This drawing is not to scale. Follow dimensions.

I-GIRDERS - SPAN (2-3)

STATE OF MISSOURI
SCOTT MICHAEL MCDONALD
NUMBER PE-2018000240
PROFESSIONAL ENGINEER

THIS SHEET HAS BEEN SIGNED, SEALED AND DATED ELECTRONICALLY.

DATE PREPARED 12/01/2025

ROUTE	STATE
13	MO
DISTRICT	SHEET NO.
BR	15

COUNTY POLK

JOB NO. JSR0049

CONTRACT ID.

PROJECT NO.

BRIDGE NO. A9573

DATE	DESCRIPTION

MISSOURI HIGHWAYS AND TRANSPORTATION COMMISSION
105 WEST CAPITOL
JEFFERSON CITY, MO 65102
1-888-ASK-MODOT (1-888-275-6636)

VEENSTRA & KIMM INC.
A Kleinfelder Company
9788 N Ash Avenue Kansas City, Missouri 64157
816-781-6182 816-781-0643 (FAX)
Certificate of Authority No. 2002006347

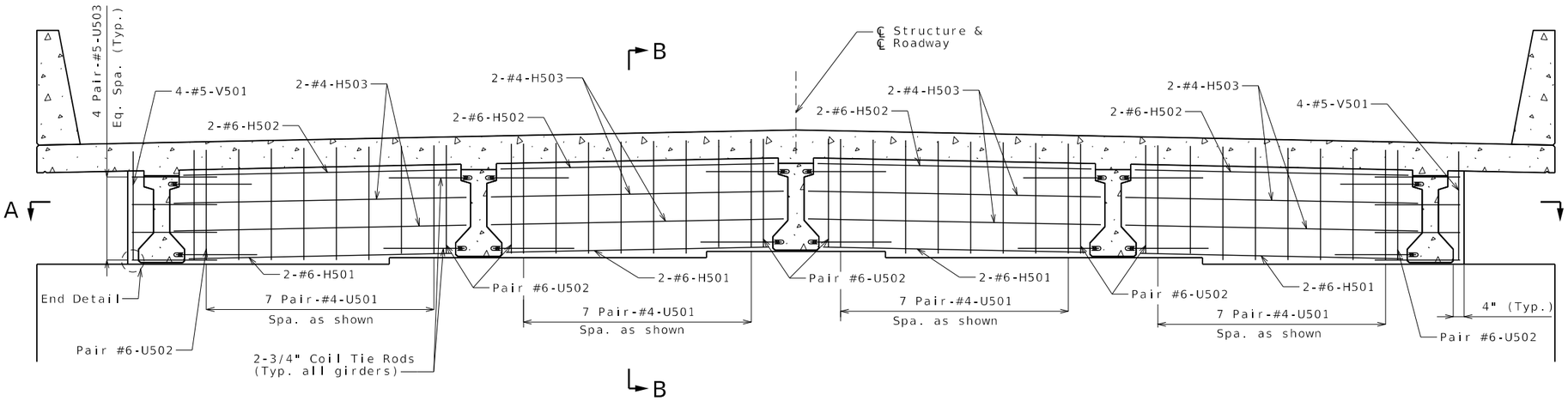

SECTION NEAR INTERMEDIATE BENTS NO. 2 & 3

(Looking Ahead Station)

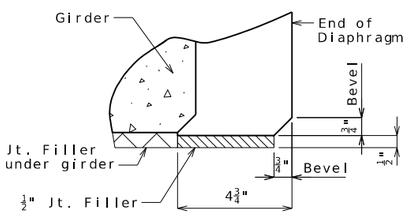

END DETAIL

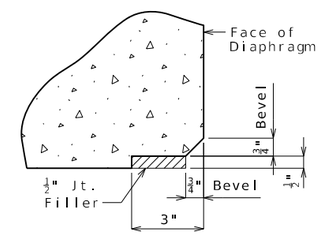

EDGE DETAIL

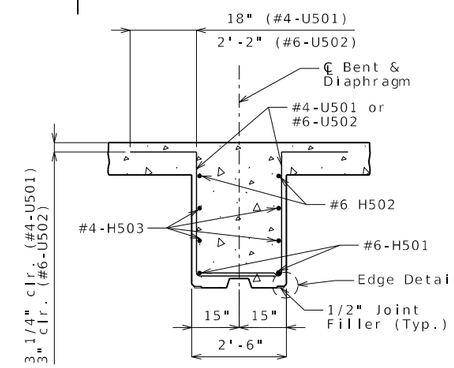

SECTION B-B

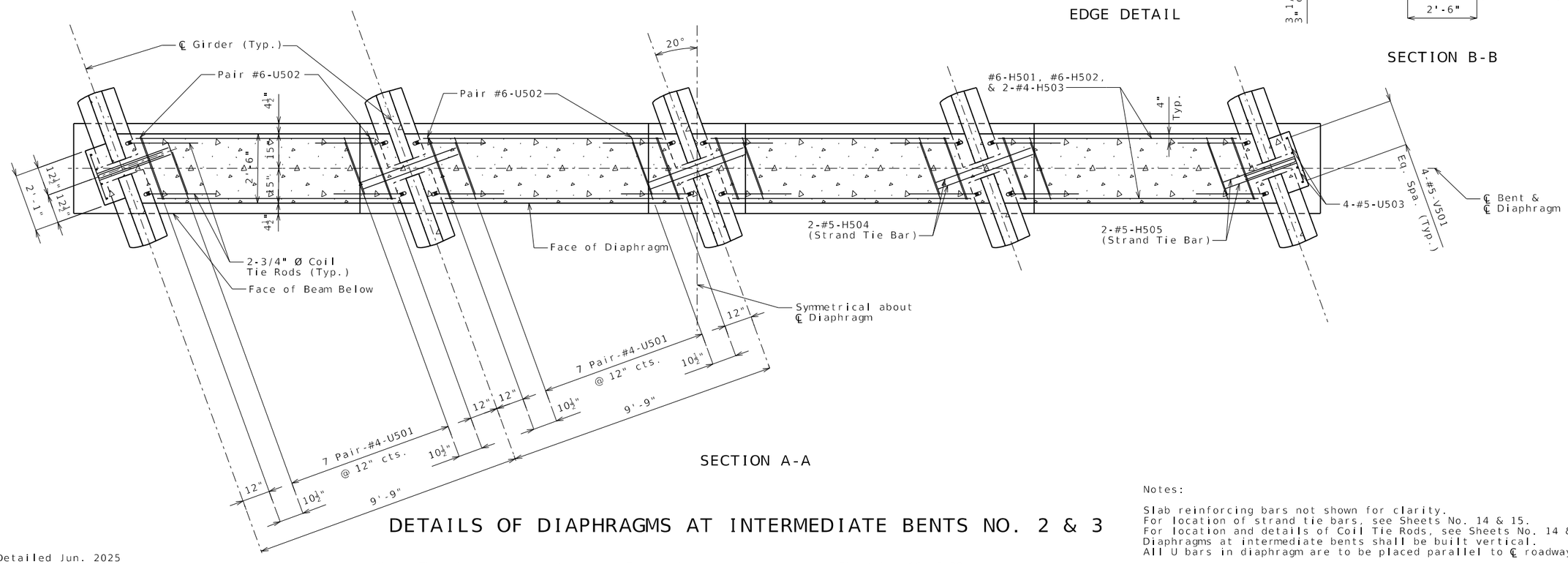

SECTION A-A

DETAILS OF DIAPHRAGMS AT INTERMEDIATE BENTS NO. 2 & 3

Notes:

Slab reinforcing bars not shown for clarity.
For location of strand tie bars, see Sheets No. 14 & 15.
For location and details of Coil Tie Rods, see Sheets No. 14 & 15.
Diaphragms at intermediate bents shall be built vertical.
All U bars in diaphragm are to be placed parallel to ℄ roadway.

Detailed Jun. 2025
Checked Jul. 2025

Note: This drawing is not to scale. Follow dimensions.

STATE OF MISSOURI
SCOTT MICHAEL MCDONALD
NUMBER PE-2018000240
PROFESSIONAL ENGINEER

THIS SHEET HAS BEEN SIGNED, SEALED AND DATED ELECTRONICALLY.

DATE PREPARED	12/01/2025
ROUTE 13	STATE MO
DISTRICT BR	SHEET NO. 16
COUNTY	POLK
JOB NO.	JSR0049
CONTRACT ID.	
PROJECT NO.	
BRIDGE NO.	A9573

DESCRIPTION

DATE

MISSOURI HIGHWAYS AND TRANSPORTATION COMMISSION
105 WEST CAPITOL
JEFFERSON CITY, MO 65102
1-888-ASK-MODOT (1-888-275-6636)

VEENSTRA & KIMM INC.
A Kleinfelder Company
9788 N Ash Avenue Kansas City, Missouri 64157
816-781-6182 816-781-0643 (FAX)
Certificate of Authority No. 2002006347

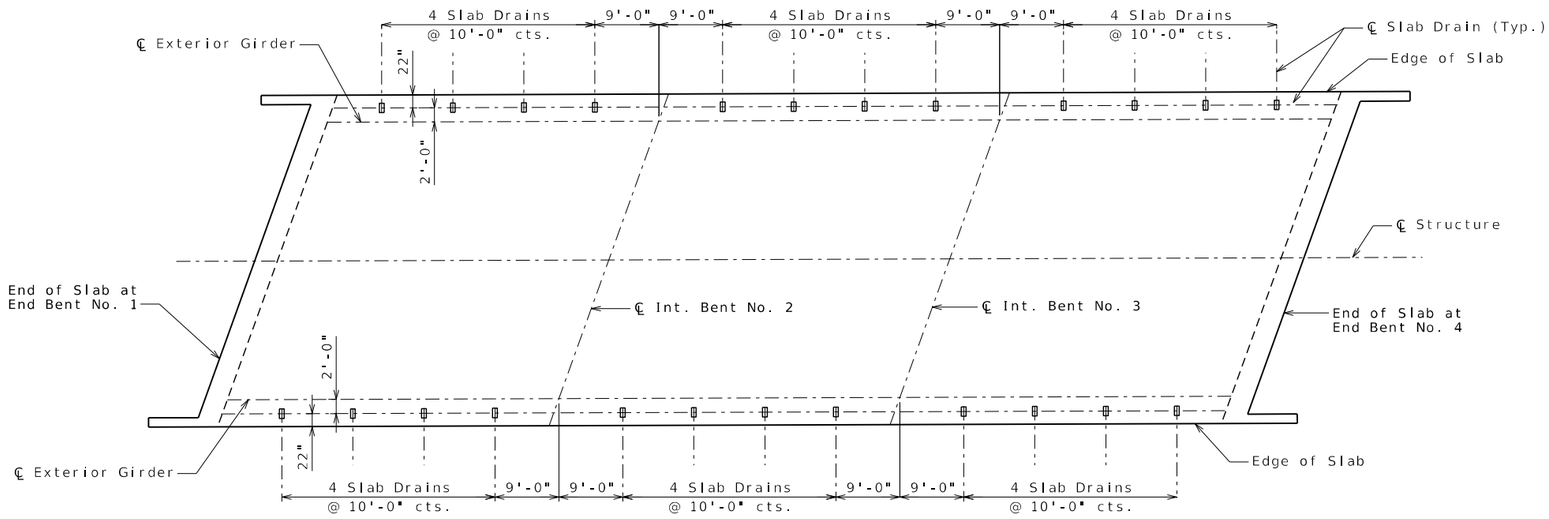

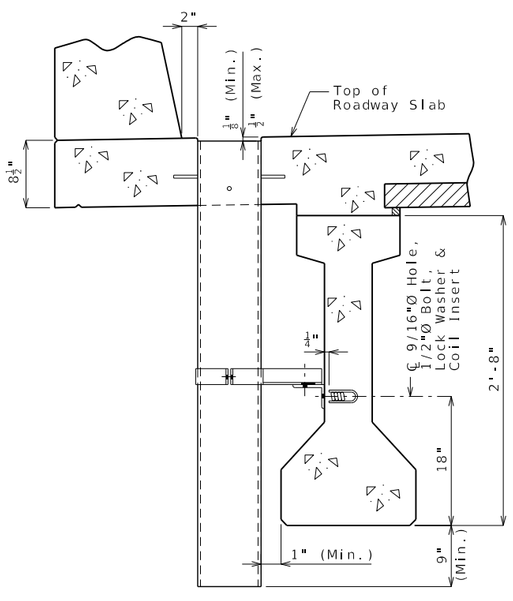

PART SECTION NEAR DRAIN

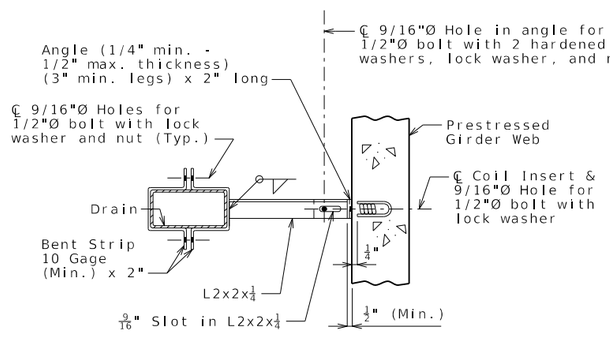

PART SECTION SHOWING BRACKET ASSEMBLY

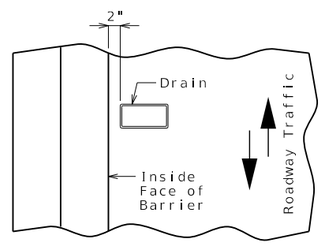

PART PLAN OF SLAB AT DRAIN

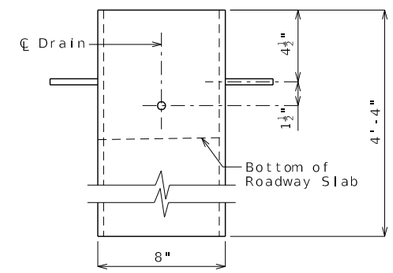

ELEVATION OF DRAIN

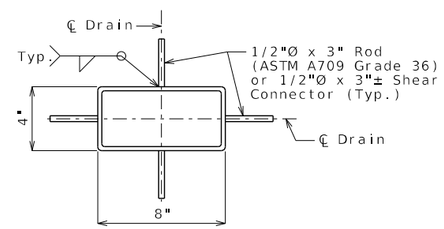

PLAN OF STEEL DRAIN OPTION

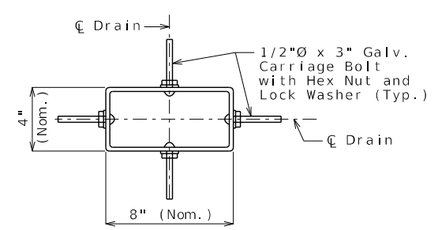

PLAN OF FRP DRAIN OPTION

SLAB DRAINS

General Notes:

Contractor shall have the option to construct either steel or FRP slab drains. All drains shall be of same type.

Slab drain bracket assembly shall be ASTM A709 Grade 36 steel.

Locate drains in slab by dimensions shown in Part Section Near Drain.

Reinforcing steel shall be shifted to clear drains.

The coil inserts and bracket assembly shall be galvanized in accordance with ASTM A123.

All bolts, hardened washers, lock washers and nuts shall be galvanized in accordance with AASHTO M 232 (ASTM A153), Class C.

All 1/2"Ø bolts shall be ASTM A307.

Shop drawings will not be required for the slab drains and the bracket assembly.

The coil insert required for the bracket assembly attachment shall be located on the prestressed girder shop drawings.

Coil inserts shall have a concrete pull-out strength (ultimate load) of at least 2,500 pounds in 5,000 psi concrete.

The bolt required to attach the slab drain bracket assembly to the prestressed girder web shall be supplied by the prestressed girder fabricator.

Notes for Steel Drain:

Slab drains may be fabricated of either 1/4" welded sheets of ASTM A709 Grade 36 steel or from 1/4" structural steel tubing ASTM A500 or A501.

Outside dimensions of drains are 8" x 4".

The drains shall be galvanized in accordance with ASTM A123.

Notes for FRP Drain:

Drains shall be machine filament-wound thermosetting resin tubing meeting the requirements of ASTM D2996 with the following exceptions:

Shape of drains shall be rectangular with outside nominal dimensions of 8" x 4".

Minimum reinforced wall thickness shall be 1/4 inch.

The resin used shall be ultraviolet (UV) resistant and/or have UV inhibitors mixed throughout. Drains may have an exterior coating for additional UV resistance.

The color of the slab drain shall be gray (Federal Standard #26373). The color shall be uniform throughout the resin and any coating used.

The combination of materials used in the manufacture of the drains shall be tested for UV resistance in accordance with ASTM D4329 Cycle A. The representative material shall withstand at least 500 hours of testing with only minor discoloration and without any physical deterioration. The contractor shall furnish the results of the required ultraviolet testing prior to acceptance of the slab drains.

At the contractor's option, drains may be field cut. The method of cutting FRP slab drain shall be as recommended by the manufacturer to ensure a smooth, chip free cut.

STATE OF MISSOURI
SCOTT MICHAEL MCDONALD
NUMBER PE-2018000240
PROFESSIONAL ENGINEER

THIS SHEET HAS BEEN SIGNED, SEALED AND DATED ELECTRONICALLY.

DATE PREPARED	
12/01/2025	
ROUTE 13	STATE MO
DISTRICT BR	SHEET NO. 17
COUNTY POLK	
JOB NO. JSR0049	
CONTRACT ID.	
PROJECT NO.	
BRIDGE NO. A9573	

DATE	DESCRIPTION

MISSOURI HIGHWAYS AND TRANSPORTATION COMMISSION
105 WEST CAPITOL
JEFFERSON CITY, MO 65102
1-888-ASK-MODOT (1-888-275-6636)

VEENSTRA & KIMM INC.
A Kleinfelder Company
9788 N Ash Avenue Kansas City, Missouri 64157
816-781-6182 816-781-0643 (FAX)
Certificate of Authority No. 2002006347

Detailed Jun. 2025
Checked Aug. 2025

Note: This drawing is not to scale. Follow dimensions.

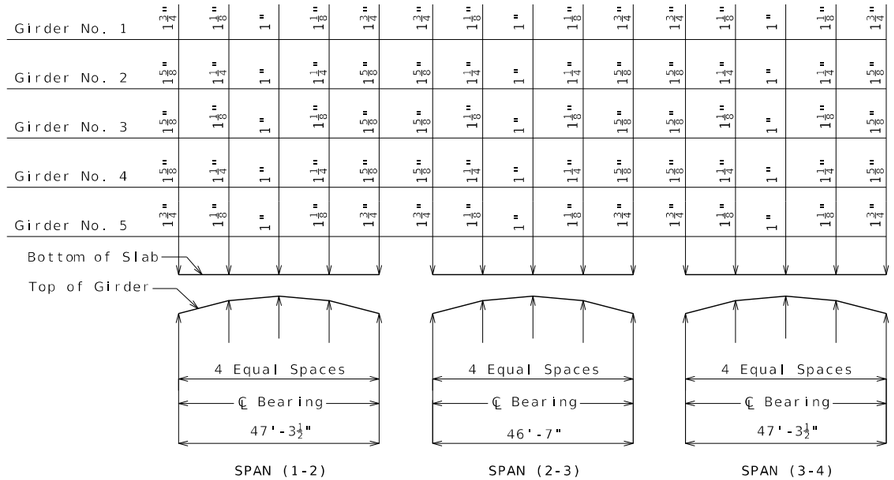

THEORETICAL SLAB HAUNCHING DIAGRAM (ESTIMATED AT 90 DAYS)

If girder camber is different from that shown in the camber diagram, in order to maintain minimum slab thickness, an adjustment of the slab haunches, an increase in slab thickness or a raise in grade uniformly throughout the structure shall be necessary. No payment will be made for additional labor or materials required for variation in haunching, slab thickness or grade adjustment.

Concrete in the slab haunches is included in the Estimated Quantities for Slab on Concrete I-Girder

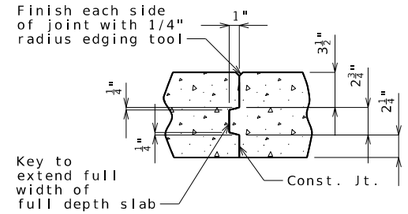

FULL DEPTH SLAB

SLAB CONSTRUCTION JOINT

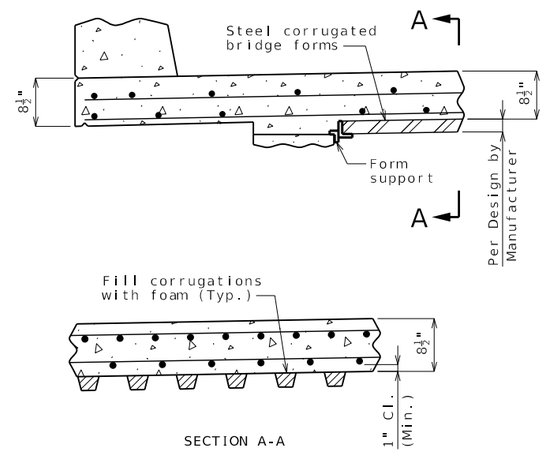

SECTION A-A

OPTIONAL STAY-IN-PLACE FORM DETAILS

Stay-In-Place Forms:

Corrugated steel forms, supports, closure elements and accessories shall be in accordance with grade requirement and coating designation G165 of ASTM A653. Complete shop drawings of the permanent steel deck forms shall be required in accordance with Sec 1080.

Corrugations of stay-in-place forms shall be filled with an expanded polystyrene material. The polystyrene material shall be placed in the forms with an adhesive in accordance with the manufacturer's recommendations.

Form sheets shall not rest directly on the top of girder flanges. Sheets shall be securely fastened to form supports with a minimum bearing length of one inch on each end. Form supports shall be placed in direct contact with the flange. Drilling holes in the girder flanges will not be permitted. All steel fabrication and construction shall be in accordance with Sec 1080 and 712. Certified field welders will not be required for welding of the form supports.

The design of stay-in-place corrugated steel forms is per manufacturer which shall be in accordance with Sec 703 for false work and forms. Maximum actual weight of corrugated steel forms allowed shall be 4 psf assumed for girder loading.

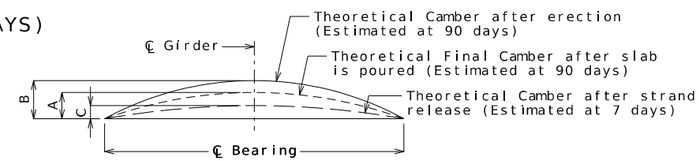

Girder	Span (1-2)			Span (2-3)			Span (3-4)		
	A	B	C	A	B	C	A	B	C
Exterior	3/4"	1½"	7/8"	3/4"	1⅜"	3/4"	3/4"	1½"	7/8"
Interior	5/8"			5/8"			5/8"		

GIRDER CAMBER DIAGRAM

Conversion Factors for Girder Camber (Estimated at 90 days):

0.25 pt. = 0.7125 x 0.5 pt.

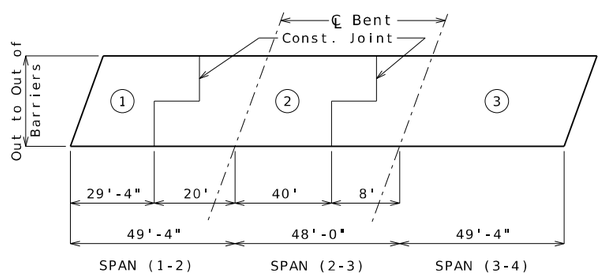

	Sequence of Pours			Min. Rate of Pour Cu. Yds./Hr.
	Direction			With Retarder
Basic Sequence	1	2	3	25
	End to 2	1 to 3	2 to End	
Alternate pours to the basic sequence are subject to the approval of the engineer in accordance with Sec 703.				
Alternate A Pours	1 + 2		3	25
	End to 3		2 to End	
Alternate B Pours	1 + 2 + 3			25
	End to End			

The contractor shall furnish an approved retarder to retard the set of the concrete to 2.5 hours, and shall pour and satisfactorily finish the slab pours at the rate given.

The concrete diaphragm at the intermediate bents and integral end bents shall be poured a minimum of 30 minutes and a maximum of 2 hours before the slab is poured.

SLAB POURING SEQUENCE

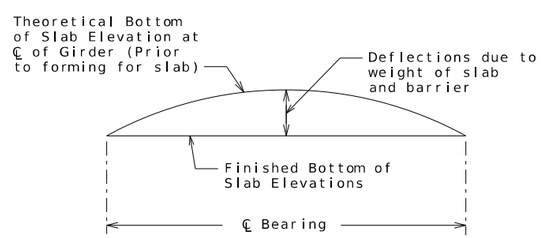

TYPICAL SLAB ELEVATIONS DIAGRAM

Theoretical Bottom of Slab Elevations at Centerline of Girder (Prior to forming for slab) (Estimated at 90 days)

Girder Number	Span (1-2) (47'-3½" ℄ Brg. - ℄ Brg.)					Span (2-3) (46'-7" ℄ Brg. - ℄ Brg.)					Span (3-4) (47'-3½" ℄ Brg. - ℄ Brg.)				
	℄ Brg.	.25	.50	.75	℄ Brg.	℄ Brg.	.25	.50	.75	℄ Brg.	℄ Brg.	.25	.50	.75	℄ Brg.
1	896.41	896.45	896.47	896.45	896.41	896.41	896.45	896.47	896.45	896.41	896.41	896.45	896.47	896.45	896.41
2	896.61	896.65	896.68	896.65	896.61	896.61	896.65	896.67	896.65	896.61	896.61	896.65	896.68	896.65	896.61
3	896.78	896.83	896.85	896.83	896.78	896.78	896.82	896.84	896.82	896.78	896.78	896.83	896.85	896.83	896.78
4	896.61	896.65	896.68	896.65	896.61	896.61	896.65	896.67	896.65	896.61	896.61	896.65	896.68	896.65	896.61
5	896.41	896.45	896.47	896.45	896.41	896.41	896.45	896.47	896.45	896.41	896.41	896.45	896.47	896.45	896.41

Elevations are based on a constant slab thickness of 8 1/2" and include allowance for theoretical dead load deflections due to weight of slab (including precast panel) and barrier.

GIRDER CAMBER DIAGRAM & MISC. SLAB DETAILS

Detailed Jun. 2025
Checked Aug. 2025

Note: This drawing is not to scale. Follow dimensions.

STATE OF MISSOURI
SCOTT MICHAEL MCDONALD
NUMBER PE-2018000240
PROFESSIONAL ENGINEER

THIS SHEET HAS BEEN SIGNED, SEALED AND DATED ELECTRONICALLY.

DATE PREPARED	
12/01/2025	
ROUTE 13	STATE MO
DISTRICT BR	SHEET NO. 18
COUNTY POLK	
JOB NO. JSR0049	
CONTRACT ID.	
PROJECT NO.	
BRIDGE NO. A9573	

DATE	DESCRIPTION

MISSOURI HIGHWAYS AND TRANSPORTATION COMMISSION
105 WEST CAPITOL
JEFFERSON CITY, MO 65102
1-888-ASK-MODOT (1-888-275-6636)

VEENSTRA & KIMM INC.
A Kleinfelder Company
9788 N Ash Avenue Kansas City, Missouri 64157
816-781-6182 816-781-0643 (FAX)
Certificate of Authority No. 2002006347

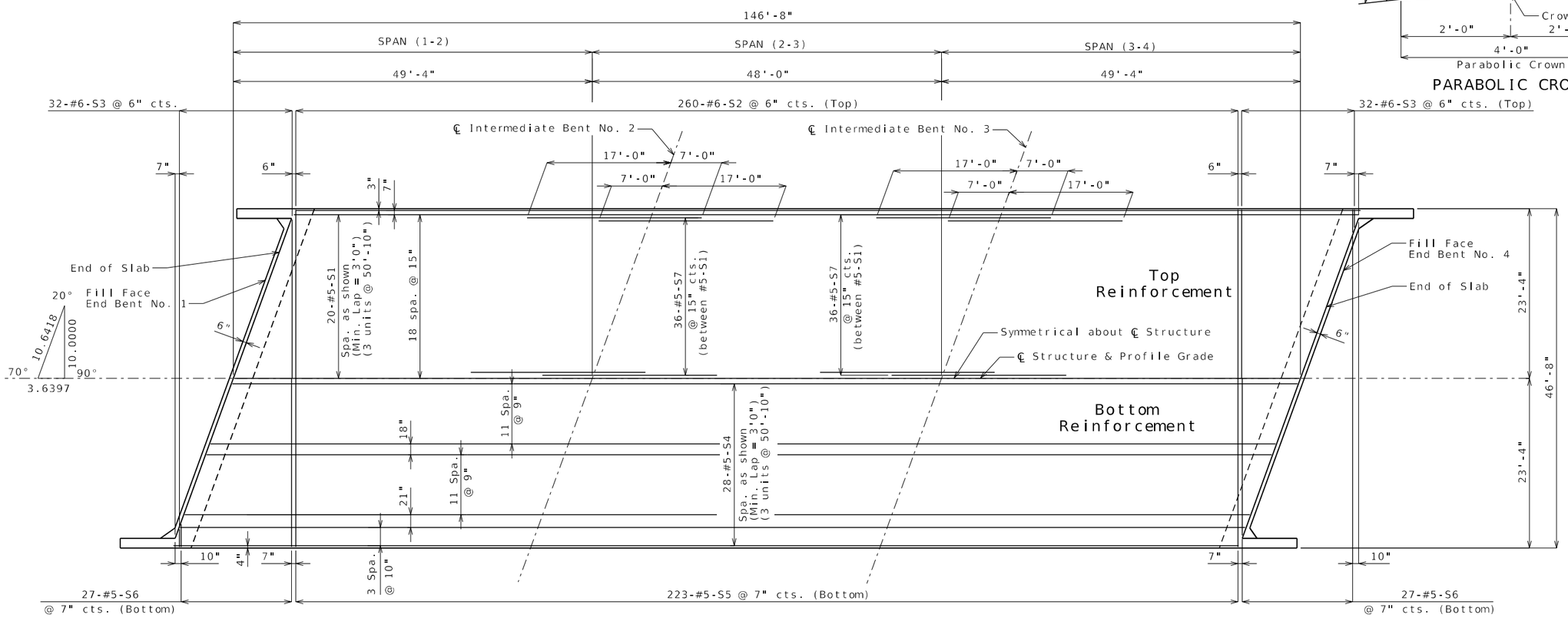

PLAN OF SLAB SHOWING REINFORCEMENT

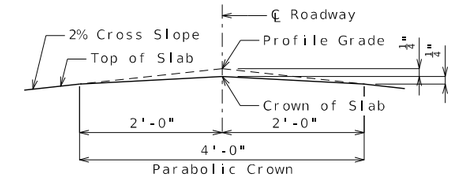

PARABOLIC CROWN

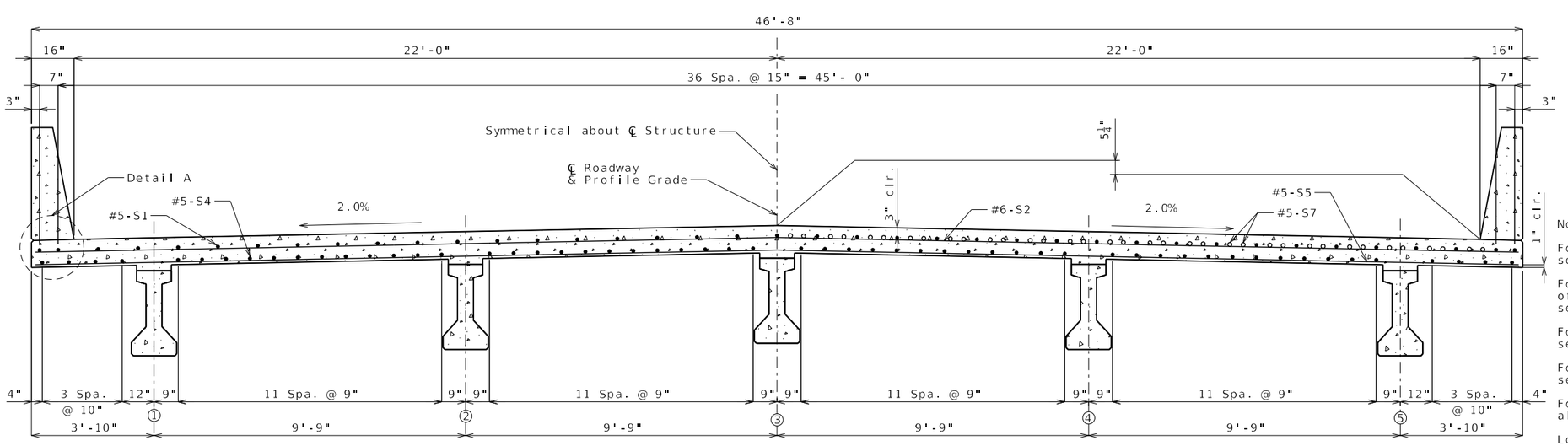

TYPICAL HALF SECTION NEAR MID SPAN TYPICAL HALF SECTION NEAR INTERMEDIATE BENT

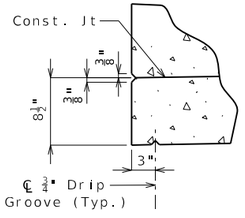

DETAIL A

Notes:

For details of barrier, see Sheets No.20 & 21.

For details and locations of slab drains, see Sheet No. 17.

For theoretical haunch, see Sheet No. 18.

For slab pouring sequence, see Sheet No. 18.

For bottom of slab elevations along beam, see Sheet No. 18.

Longitudinal slab dimensions are measured horizontally.

STATE OF MISSOURI
SCOTT MICHAEL MCDONALD
NUMBER PE-2018000240
PROFESSIONAL ENGINEER

THIS SHEET HAS BEEN SIGNED, SEALED AND DATED ELECTRONICALLY.

DATE PREPARED	
12/01/2025	
ROUTE 13	STATE MO
DISTRICT BR	SHEET NO. 19
COUNTY POLK	
JOB NO. JSR0049	
CONTRACT ID.	
PROJECT NO.	
BRIDGE NO. A9573	

DESCRIPTION

DATE

MISSOURI HIGHWAYS AND TRANSPORTATION COMMISSION
105 WEST CAPITOL
JEFFERSON CITY, MO 65102
1-888-ASK-MODOT (1-888-275-6636)

VEENSTRA & KIMM INC.
A Kleinfelder Company
9788 N Ash Avenue Kansas City, Missouri 64157
816-781-6182 816-781-0643 (FAX)
Certificate of Authority No. 2002006347

Detailed Jun. 2025
Checked Jul. 2025

Note: This drawing is not to scale. Follow dimensions.

B_A9573_019_JSR0049_SlabPlan.dgn 4:47:38 PM 12/1/2025

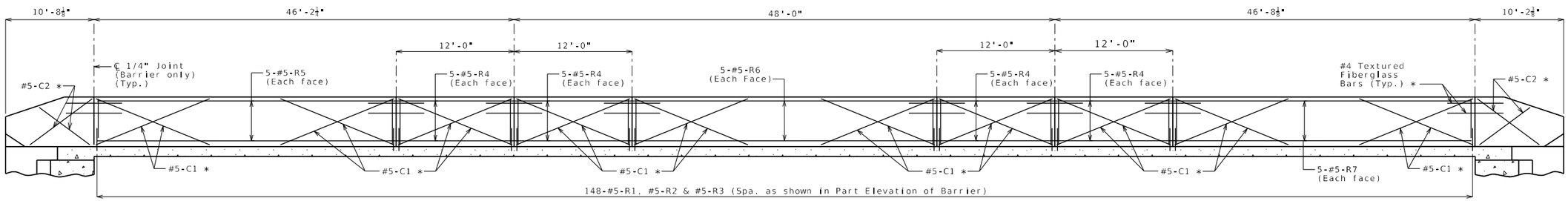

ELEVATION OF BARRIER

(Left barrier shown, right barrier similar)

Longitudinal dimensions are horizontal.

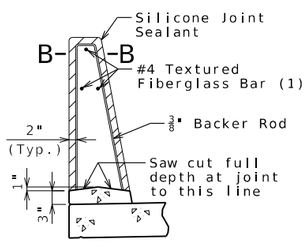

SECTION THRU SAW CUT JOINT

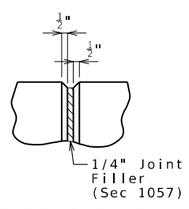

PART ELEVATION AT FORMED JOINT

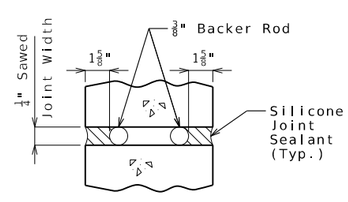

SECTION B-B

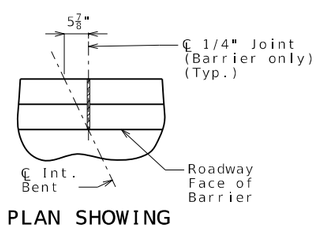

PART PLAN SHOWING JOINT LOCATION

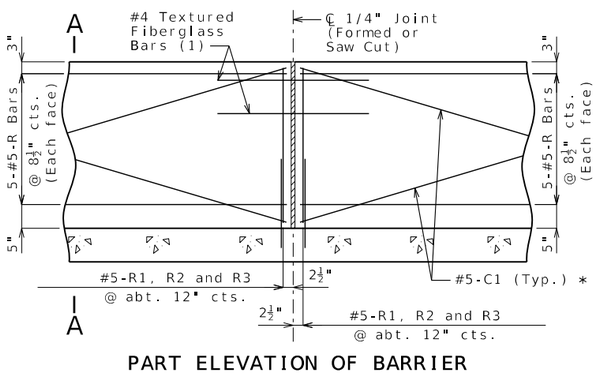

PART ELEVATION OF BARRIER

(1) Four feet long, centered on joint, slip-formed option only

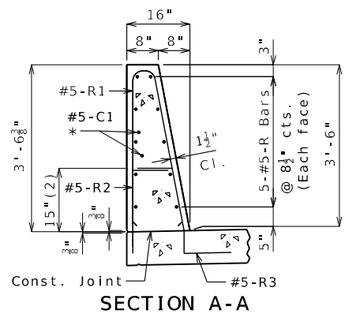

SECTION A-A

Use a minimum lap of 2'-6" for #5 horizontal barrier bars.

The cross-sectional area above the slab is 3.52 square feet.

(2) To top of bar

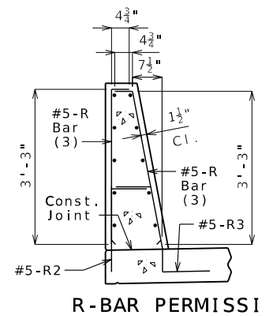

R-BAR PERMISSIBLE ALTERNATE SHAPE

(3) The R1 bar may be separated into two bars as shown, at the contractor's option, only when slip forming is not used. (All dimensions are out to out.)

General Notes:

* Slip-formed option only.

Conventional forming or slip forming may be used. Saw cut joints may be used with conventional forming.

Top of barrier shall be built parallel to grade and barrier joints (except at end bents) normal to grade.

All exposed edges of barrier shall have either a 1/2-inch radius or a 3/8-inch bevel, unless otherwise noted.

Payment for all concrete and reinforcement, complete in place, will be considered completely covered by the contract unit price for Type D Barrier per linear foot.

Concrete in barrier shall be Class B-1.

Measurement of barrier is to the nearest linear foot for each structure, measured along the outside top of slab from end of wing to end of wing.

Concrete traffic barrier delineators shall be placed on top of the barrier as shown on Missouri Standard Plan 617.10 and in accordance with Sec 617. Delineators on bridges with two-lane, two-way traffic shall have retroreflective sheeting on both sides. Concrete traffic barrier delineators will be considered completely covered by the contract unit price for Type D Barrier.

Joint sealant and backer rods shall be in accordance with Sec 717 for silicone joint sealant for saw cut and formed joints.

For slip-formed option, both sides of barrier shall have a vertically broomed finish and the top shall have a transversely broomed finish.

TYPE D BARRIER

Detailed May 2025
Checked Jul. 2025

Note: This drawing is not to scale. Follow dimensions.

STATE OF MISSOURI
SCOTT MICHAEL MCDONALD
NUMBER PE-2018000240
PROFESSIONAL ENGINEER

THIS SHEET HAS BEEN SIGNED, SEALED AND DATED ELECTRONICALLY.

DATE PREPARED 12/01/2025	
ROUTE 13	STATE MO
DISTRICT BR	SHEET NO. 20
COUNTY POLK	
JOB NO. JSR0049	
CONTRACT ID.	
PROJECT NO.	
BRIDGE NO. A9573	

DESCRIPTION	DATE

MISSOURI HIGHWAYS AND TRANSPORTATION COMMISSION
105 WEST CAPITOL
JEFFERSON CITY, MO 65102
1-888-ASK-MODOT (1-888-275-6636)

VEENSTRA & KIMM INC.
A Kleinfelder Company
9788 N Ash Avenue Kansas City, Missouri 64157
816-781-6182 816-781-0643 (FAX)
Certificate of Authority No. 2002006347

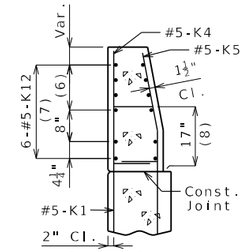

SECTION A-A

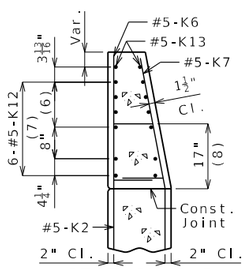

SECTION B-B

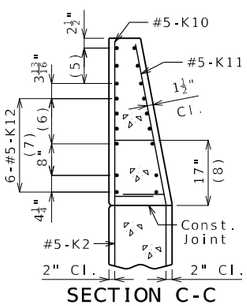

SECTION C-C

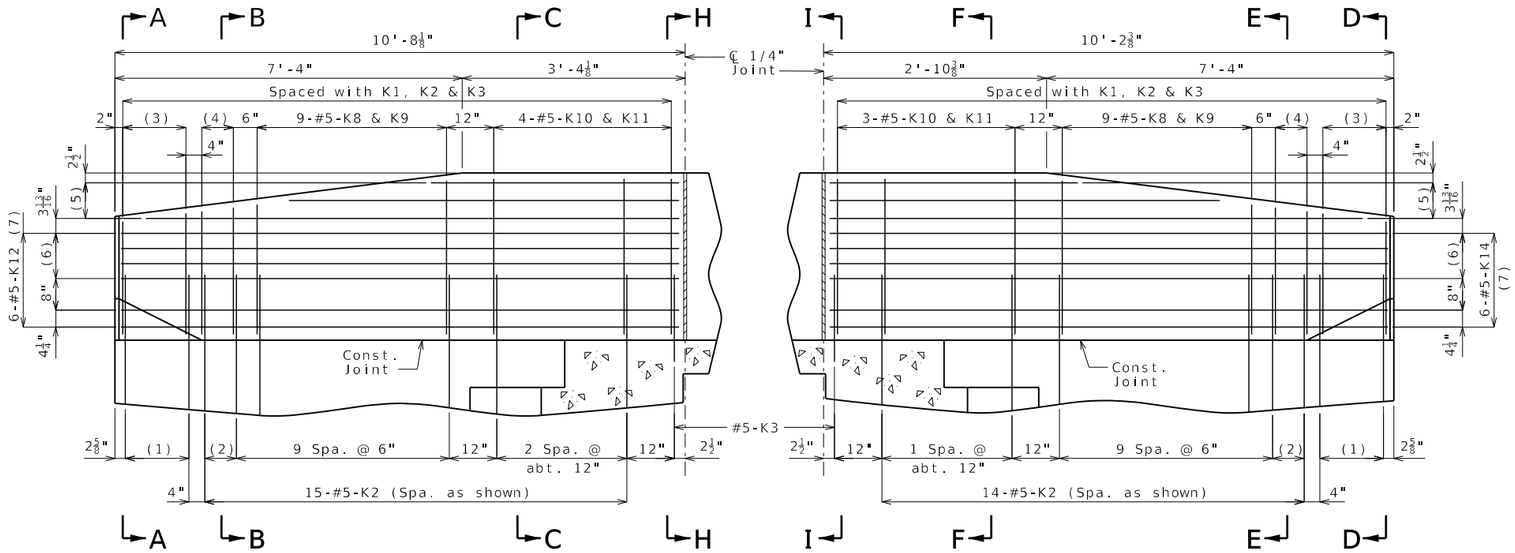

PART ELEVATION

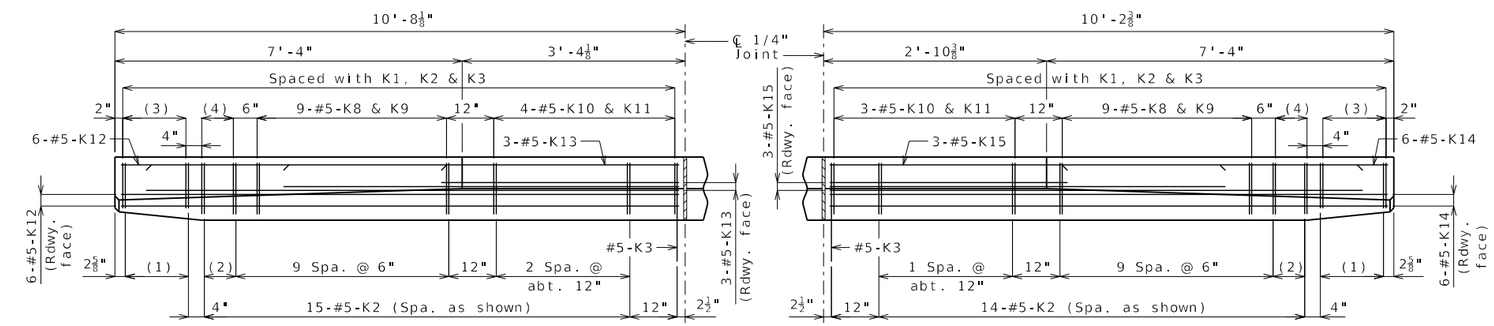

PART PLAN

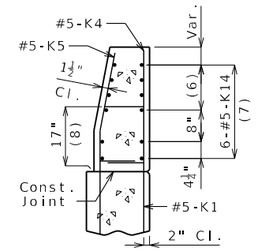

SECTION D-D

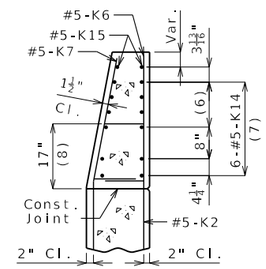

SECTION E-E

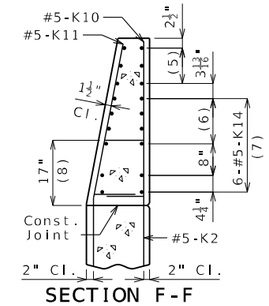

SECTION F-F

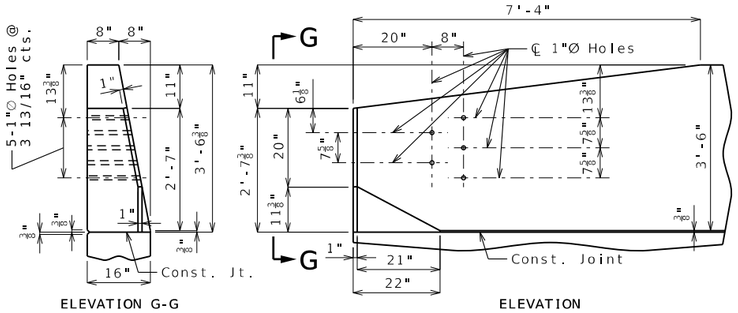

ELEVATION G-G

ELEVATION

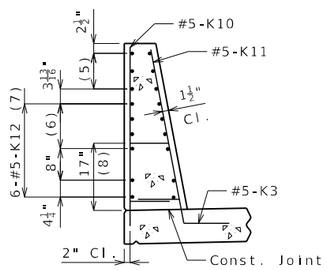

SECTION H-H

(1) 5-#5-K1 @ 4" cts.

(2) 2 spaces @ 4"

(3) 5-#5-K4 & K5

(4) 3-#5-K6 & K7

(5) 3-#5-K13 or K15 @ 4½" cts., each face

(6) 3 spaces @ 3 13/16"

(7) Spaced as shown, each face

(8) To top of bar

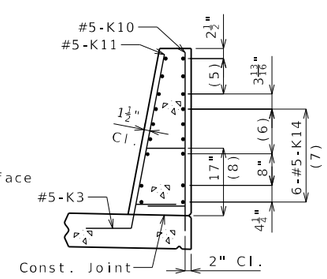

SECTION I-I

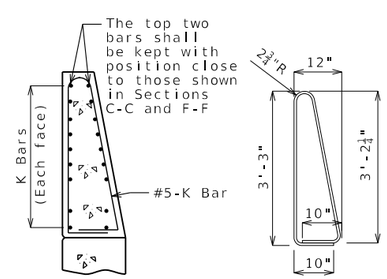

K10-K11 BAR PERMISSIBLE ALTERNATE SHAPE

(Other K bars not shown for clarity)

The K10-K11 bar combination may be furnished as one bar as shown, at the contractor's option.

All dimensions are out to out.

* Transition to zero at Type A curb for gutter lines to match.

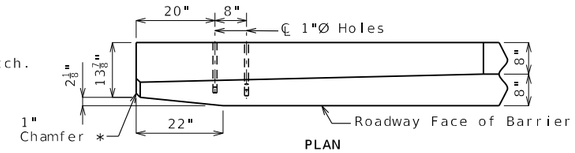

PLAN

DETAILS OF GUARD RAIL ATTACHMENT

General Notes:

Concrete traffic barrier delineators shall be placed on top of the barrier as shown on Missouri Standard Plan 617.10 and in accordance with Sec 617. Delineators on bridges with two-lane, two-way traffic shall have retroreflective sheeting on both sides. Concrete traffic barrier delineators will be considered completely covered by the contract unit price for Type D Barrier.

Reinforcing Steel:
Minimum clearance to reinforcing steel shall be 1 1/2" except as shown for bars embedded into end bent.

TYPE D BARRIER AT END BENTS

(Left barrier shown, right barrier similar)

Detailed Jun. 2025
Checked Jul. 2025

Note: This drawing is not to scale. Follow dimensions.

STATE OF MISSOURI
SCOTT MICHAEL MCDONALD
NUMBER PE-2018000240
PROFESSIONAL ENGINEER

THIS SHEET HAS BEEN SIGNED, SEALED AND DATED ELECTRONICALLY.

DATE PREPARED	
12/01/2025	
ROUTE 13	STATE MO
DISTRICT BR	SHEET NO. 21
COUNTY POLK	
JOB NO. JSR0049	
CONTRACT ID.	
PROJECT NO.	
BRIDGE NO. A9573	

DATE	DESCRIPTION

MISSOURI HIGHWAYS AND TRANSPORTATION COMMISSION
105 WEST CAPITOL
JEFFERSON CITY, MO 65102
1-888-ASK-MODOT (1-888-275-6636)

VEENSTRA & KIMM INC.
A Kleinfelder Company
9788 N Ash Avenue Kansas City, Missouri 64157
816-781-6182 816-781-0643 (FAX)
Certificate of Authority No. 2002006347

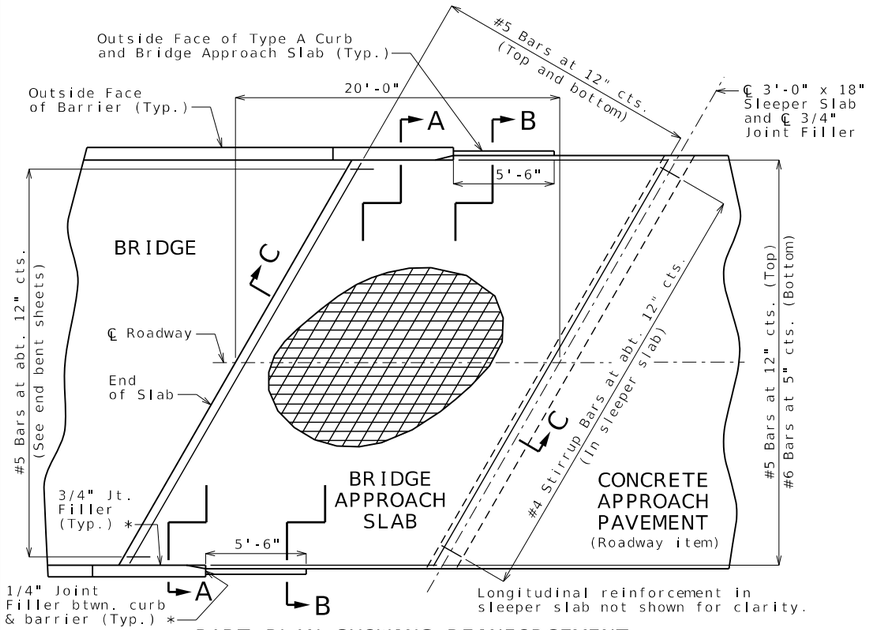

PART PLAN SHOWING REINFORCEMENT

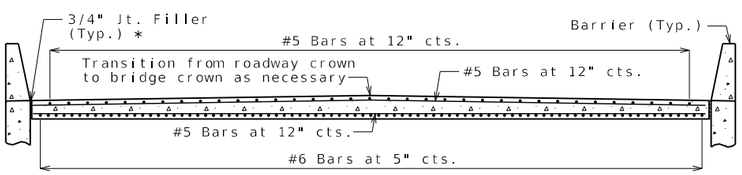

SECTION A-A

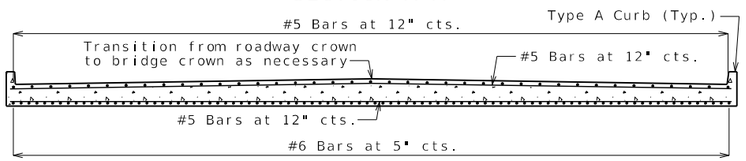

SECTION B-B

With the approval of the engineer, the contractor may crown the bottom of the approach slab to match the crown of the roadway surface.

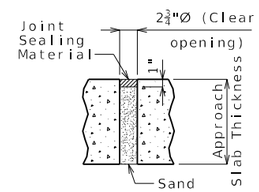

UNDERSEAL ACCESS HOLE DETAIL

(If required)

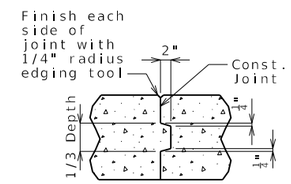

CONSTRUCTION JOINT DETAIL

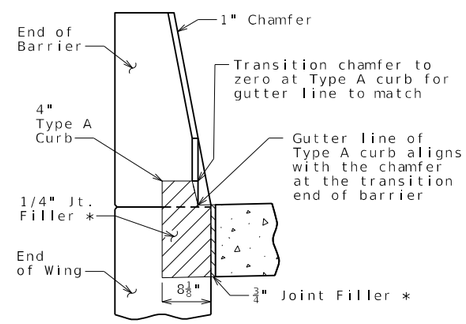

SECTION BETWEEN CURB AND BARRIER

General Notes:

All concrete for the bridge approach slab and sleeper slab shall be in accordance with Sec 503 (f'c = 4,000 psi).

The reinforcing steel in the bridge approach slab and the sleeper slab shall be epoxy coated Grade 60 with fy = 60,000 psi.

Drain pipe may be either 6" diameter corrugated metallic-coated pipe underdrain, 4" diameter corrugated polyvinyl chloride (PVC) drain pipe, or 4" diameter corrugated polyethylene (PE) drain pipe.

Minimum clearance to reinforcing steel shall be 1 1/2", unless otherwise shown.

The reinforcing steel in the bridge approach slab and the sleeper slab shall be continuous. The transverse reinforcing steel may be made continuous by providing a minimum lap splice of 24 inches for #5 bars and 40 inches for #6 bars, or by mechanical bar splice.

Mechanical bar splices shall be in accordance with Sec 710.

All joint filler shall be in accordance with Sec 1057 for preformed fiber expansion joint filler except as noted.

The contractor shall pour and satisfactorily finish the bridge slab before placing the bridge approach slab.

Longitudinal construction joints in approach slab and sleeper slab shall be aligned with longitudinal construction joints in bridge slab.

For concrete approach pavement details, see roadway plans.

See Missouri Standard Plan 609.00 for details of Type A curb.

Payment for furnishing all materials, labor and excavation necessary to construct the approach slab, including the timber header, sleeper slab, underdrain, Type 5 aggregate base, joint filler and all other appurtenances and incidental work as shown on this sheet, complete in place, will be considered completely covered by the contract unit price for Bridge Approach Slab (Major) per square yard.

* Seal joint between vertical face of approach slab and wing with sealant in accordance with Sec 717 for silicone joint sealant for saw cut and formed joints.

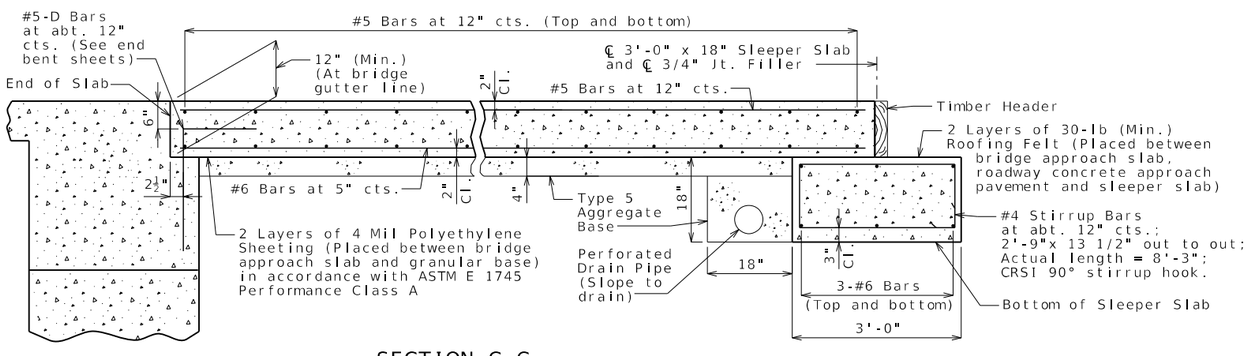

SECTION C-C

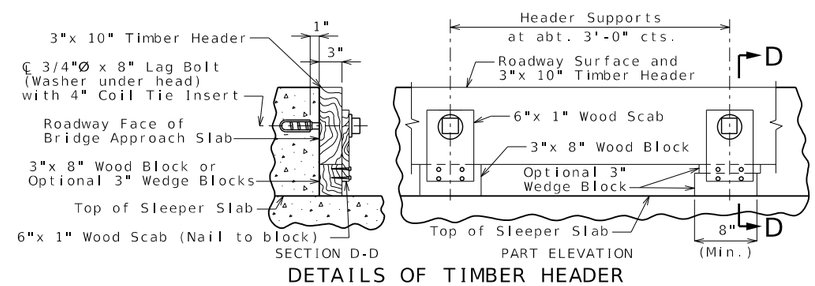

DETAILS OF TIMBER HEADER

Remove timber header when concrete pavement is placed.

BRIDGE APPROACH SLAB (MAJOR)

Detailed May 2025
Checked Aug. 2025

Note: This drawing is not to scale. Follow dimensions.

STATE OF MISSOURI
SCOTT MICHAEL MCDONALD
NUMBER PE-2018000240
PROFESSIONAL ENGINEER

THIS SHEET HAS BEEN SIGNED, SEALED AND DATED ELECTRONICALLY.

DATE PREPARED	
12/01/2025	
ROUTE 13	STATE MO
DISTRICT BR	SHEET NO. 22
COUNTY POLK	
JOB NO. JSR0049	
CONTRACT ID.	
PROJECT NO.	
BRIDGE NO. A9573	

DATE	DESCRIPTION

MISSOURI HIGHWAYS AND TRANSPORTATION COMMISSION
105 WEST CAPITOL
JEFFERSON CITY, MO 65102
1-888-ASK-MODOT (1-888-275-6636)

VEENSTRA & KIMM INC.
A Kleinfelder Company
9788 N Ash Avenue Kansas City, Missouri 64157
816-781-6182 816-781-0643 (FAX)
Certificate of Authority No. 2002006347

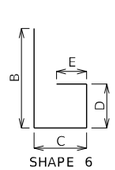

SHAPE 6
or 6S

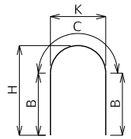

SHAPE 7

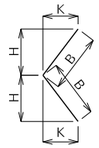

SHAPE 8
or 8S

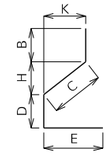

SHAPE 9
or 9S

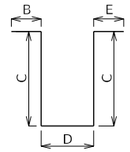

SHAPE 10
or 10S

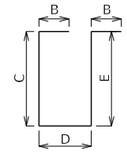

SHAPE 11
or 11S

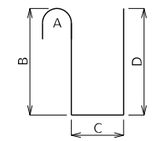

SHAPE 12

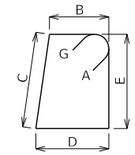

SHAPE 13S

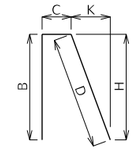

SHAPE 14
or 14S

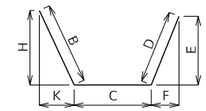

SHAPE 15
or 15S

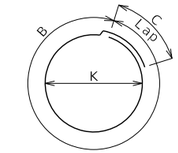

SHAPE 16

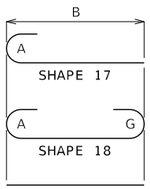

SHAPE 17
SHAPE 18
SHAPE 20

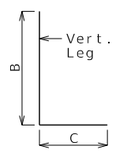

SHAPE 19
or 19S

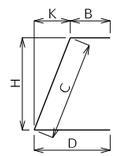

SHAPE 21
or 21S

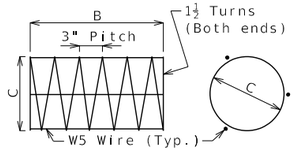

SHAPE 22

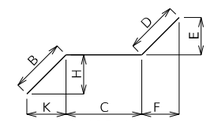

SHAPE 23
or 23S

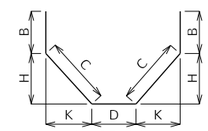

SHAPE 24
or 24S

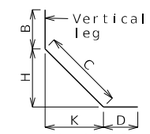

SHAPE 25
or 25S

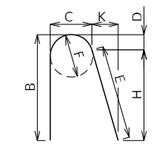

SHAPE 26

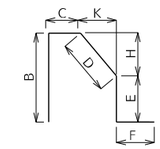

SHAPE 27S

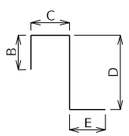

SHAPE 28
or 28S

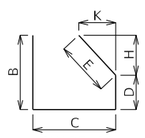

SHAPE 29
or 29S

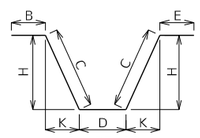

SHAPE 30
or 30S

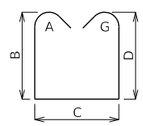

SHAPE 31S

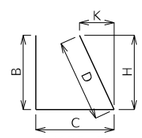

SHAPE 32
or 32S

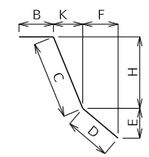

SHAPE 33
or 33S

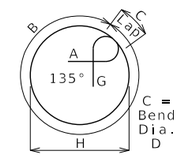

SHAPE 34S

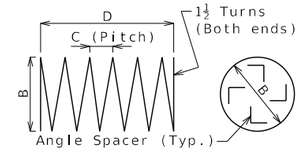

SHAPE 35 (1)

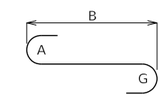

SHAPE 36

Finished Bend Diameters D and Hook Dimensions

Standard Pin Bend Shapes

Size	Case	D	A or G 90°	A or G 180°	J 180°
#4	1	3"	8"	6"	4"
#5	1	3¾"	10"	7"	5"
#6	1	4½"	12"	8¼"	6"
#7	2	5¼"	14"	9¾"	7"
	3	7"	15"	11½"	8¾"
#8	2	6"	16"	11"	8"
	3	8"	17"	13¼"	10"
#9	1	9½"	19½"	15½"	11¾"
#10	1	10¾"	22"	17½"	13¼"
#11	1	12"	24½"	19½"	14⅞"
#14	1	18¼"	31¼"	27½"	21⅝"
#18	1	24"	41½"	36¼"	28½"

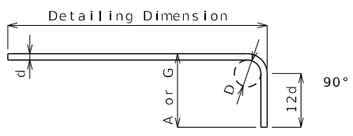

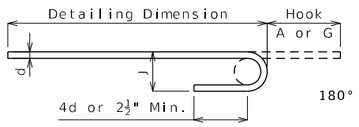

Stirrup Pin Bend Shapes (S)

Size	Case	D	A or G 90°	A or G 135°	A or G 180°	H 135°	J 180°
#4	2	2"	4½"	4½"	5"	2⅝"	3"
	3	3"	5"	5¼"	6"	3"	4"
#5	2	2½"	5¾"	5¾"	5¾"	3⅝"	3¾"
	3	3¾"	6¼"	6½"	7"	3⅞"	5"
#6	1	4½"	12"	7¾"	8¼"	4⅜"	6"

Applicable for all grades of steel.

Case 1 applies to all reinforcement. Case 2 applies to all reinforcement except for galvanized bars. Case 3 applies to galvanized bars only.

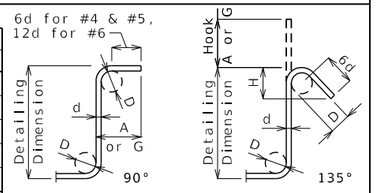

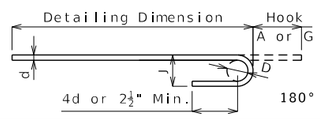

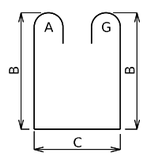

SHAPE 37S

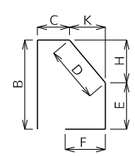

SHAPE 38S

BENDING DIAGRAMS

All dimensions are out to out.

Shapes ending with an S shall be bent in accordance with stirrup pin bend shapes.

Unless otherwise noted, finished bending diameter D is the same for all bends of a shape.

(1) Shall be a deformed or plain spiral bar or wire.

Four angle or channel spacers are required for each column spiral. Spacers are to be placed on inside of spirals. Length and weight of column spirals do not include splices or spacers.

Reinforcing Steel Totals (Pounds)

	Size	Substructure Plain	Substructure Epoxy	Superstructure Slab Plain	Superstructure Slab Epoxy	Superstructure Barrier	Superstructure Slip Form	Entire Bridge Plain	Entire Bridge Epoxy
By Size	W5	0	0	0	0	0	0	0	0
	4	0	0	0	1019	0	0	0	1019
	5	2244	0	0	33,400	8646	566	2244	42,612
	6	826	0	0	26,516	0	0	826	26,516
	7	0	0	0	0	0	0	0	0
	8	0	0	0	826	0	0	0	826
	9	3210	0	0	4326	0	0	3210	4326
	10	0	0	0	0	0	0	0	0
	11	0	0	0	0	0	0	0	0
	14	0	0	0	0	0	0	0	0
	18	0	0	0	0	0	0	0	0
By Type		6280	0	0	66,087	8646	566	6280	75,299

All superstructure reinforcing steel shall be epoxy coated unless otherwise specified.

BENDING DIAGRAMS AND REINFORCING STEEL TOTALS

Detailed May 2025
Checked Aug. 2025

Note: This drawing is not to scale. Follow dimensions.

STATE OF MISSOURI
SCOTT MICHAEL MCDONALD
NUMBER PE-2018000240
PROFESSIONAL ENGINEER

THIS SHEET HAS BEEN SIGNED, SEALED AND DATED ELECTRONICALLY.

DATE PREPARED	12/01/2025
ROUTE 13	STATE MO
DISTRICT BR	SHEET NO. 23
COUNTY	POLK
JOB NO.	JSR0049
CONTRACT ID.	
PROJECT NO.	
BRIDGE NO.	A9573

DATE	DESCRIPTION

MISSOURI HIGHWAYS AND TRANSPORTATION COMMISSION
105 WEST CAPITOL
JEFFERSON CITY, MO 65102
1-888-ASK-MODOT (1-888-275-6636)

VEENSTRA & KIMM INC.
A Kleinfelder Company
9788 N Ash Avenue Kansas City, Missouri 64157
816-781-6182 816-781-0643 (FAX)
Certificate of Authority No. 2002006347

Bill of Reinforcing Steel

No. Req.	Size/ Mark	Location	Codes C	SH	V	Dimensions B ft in.	C ft in.	D ft in.	E ft in.	F ft in.	H ft in.	K ft in.	Nom. Length ft in.	Actual Length ft in.	Weight lb
		SUBSTRUCTURE													
		INT. BENT NO. 2													
8	9 H201	CAP		18		44 9.000							47 3	47 3	1286
4	9 H202	CAP		20		10 10.000							10 10	10 10	147
4	6 H203	CAP		20		44 9.000							44 9	44 9	269
8	6 H204	CAP		10S			12.000	2 10.000					4 10	4 6	54
6	9 H205	CAP		18		5 10.000							8 5	8 5	172
50	5 U201	CAP		13S		3 0.000	3 0.000	3 0.000					13 0	12 7	656
18	5 U202	CAP		10S			3 0.000	3 0.000					9 0	8 9	164
20	5 U203	CAP		13S		3 0.000	3 3.000	3 0.000	3 3.000				13 6	13 1	273
3	5 U204	CAP		10S			3 3.000	3 0.000					9 6	9 3	29
24	6 D201	CAP		20		2 6.000							2 6	2 6	90
		INT. BENT NO. 3													
8	9 H301	CAP		18		44 9.000							47 3	47 3	1286
4	9 H302	CAP		20		10 10.000							10 10	10 10	147
4	6 H303	CAP		20		44 9.000							44 9	44 9	269
8	6 H304	CAP		10S			12.000	2 10.000					4 10	4 6	54
6	9 H305	CAP		18		5 10.000							8 5	8 5	172
50	5 U301	CAP		13S		3 0.000	3 0.000	3 0.000	3 0.000				13 0	12 7	656
18	5 U302	CAP		10S			3 0.000	3 0.000					9 0	8 9	164
20	5 U303	CAP		13S		3 0.000	3 3.000	3 0.000	3 3.000				13 6	13 1	273
3	5 U304	CAP		10S			3 3.000	3 0.000					9 6	9 3	29
24	6 D301	CAP		20		2 6.000							2 6	2 6	90

Bill of Reinforcing Steel

No. Req.	Size/ Mark	Location	Codes C	SH	V	Dimensions B ft in.	C ft in.	D ft in.	E ft in.	F ft in.	H ft in.	K ft in.	Nom. Length ft in.	Actual Length ft in.	Weight lb
		SUPERSTRUCTURE													
		END BENT NO. 1													
8	6 F101	WING BRACE	E	15		20.000	5 8.000	20.000	11.500	16.375	11.500	16.375	9 0	8 11	107
2	6 F102	DIAPHRAGM	E	21			5 10.000	2 10.500			5 5.750	24.000	8 8	8 6	26
8	6 F103	WING BRACE	E	15		20.000	4 3.000	20.000	16.375	11.500	16.375	11.500	7 7	7 5	89
2	6 F104	DIAPHRAGM	E	21		2 10.500	5 10.000				5 5.750	24.000	8 8	8 6	26
10	5 H101	DIAPHRAGM	E	20		3 11.000							3 11	3 11	41
12	9 H102	BEAM & DIAPH.	E	20		49 5.000							49 5	49 5	2016
4	9 H103	BEAM	E	20		10 10.000							10 10	10 10	147
7	6 H104	BEAM & DIAPH.	E	20		49 5.000							49 5	49 5	520
12	6 H105	DIAPHRAGM	E	20		9 0.000							9 0	9 0	162
6	6 H106	DIAPHRAGM	E	20		3 3.000							3 3	3 3	29
36	6 H107	WINGWALL	E	20		8 2.000							8 2	8 2	442
16	8 H108	WINGWALL	E	20		9 8.000							9 8	9 8	413
30	5 U101	BEAM	E	37S		5 2.000	2 9.000						14 0	13 8	428
18	4 U102	BEAM	E	13S		2 9.000	2 8.000	2 9.000	2 8.000				11 7	11 3	136
5	4 U103	BEAM	E	13S		2 9.000	2 10.375	2 9.000	2 10.375				12 0	11 8	39
40	5 U104	DIAPHRAGM	E	37S		3 1.000	2 3.000						9 4	9 1	378
40	6 U105	DIAPHRAGM	E	19S		22.500	2 9.000						4 7	4 5	265
63	6 U106	DIAPHRAGM	E	19S		3 0.000	4 3.000						7 3	7 1	670
20	5 V101	BEAM	E	17		5 2.000							5 9	5 9	119
32	6 V102	WINGWALL	E	20		6 2.000							6 2	6 2	298
15	6 V103	DIAPHRAGM	E	20		22.000							1 10	1 10	41
44	5 D101	DIAPHRAGM	E	19		24.000	15.000						3 3	3 1	143
		END BENT NO. 4													
8	6 F401	WING BRACE	E	15		20.000	5 8.000	20.000	11.500	16.375	11.500	16.375	9 0	8 11	107
2	6 F402	DIAPHRAGM	E	21			5 10.000	2 10.500			5 5.750	24.000	8 8	8 6	26
8	6 F403	WING BRACE	E	15		20.000	4 3.000	20.000	16.375	11.500	16.375	11.500	7 7	7 5	89
2	6 F404	DIAPHRAGM	E	21		2 10.500	5 10.000				5 5.750	24.000	8 8	8 6	26
10	5 H401	DIAPHRAGM	E	20		3 11.000							3 11	3 11	41
12	9 H402	BEAM & DIAPH.	E	20		49 5.000							49 5	49 5	2016
4	9 H403	BEAM	E	20		10 10.000							10 10	10 10	147
7	6 H404	BEAM & DIAPH.	E	20		49 5.000							49 5	49 5	520
12	6 H405	DIAPHRAGM	E	20		9 0.000							9 0	9 0	162
6	6 H406	DIAPHRAGM	E	20		3 3.000							3 3	3 3	29
36	6 H407	WINGWALL	E	20		8 2.000							8 2	8 2	442
16	8 H408	WINGWALL	E	20		9 8.000							9 8	9 8	413
30	5 U401	BEAM	E	37S		5 2.000	2 9.000						14 0	13 8	428
18	4 U402	BEAM	E	13S		2 9.000	2 8.000	2 9.000	2 8.000				11 7	11 3	136
5	4 U403	BEAM	E	13S		2 9.000	2 10.375	2 9.000	2 10.375				12 0	11 8	39
40	5 U404	DIAPHRAGM	E	37S		3 1.000	2 3.000						9 4	9 1	378
40	6 U405	DIAPHRAGM	E	19S		22.500	2 9.000						4 7	4 5	265
63	6 U406	DIAPHRAGM	E	19S		3 0.000	4 3.000						7 3	7 1	670
20	5 V401	BEAM	E	17		5 2.000							5 9	5 9	119
32	6 V402	WINGWALL	E	20		6 2.000							6 2	6 2	298
15	6 V403	DIAPHRAGM	E	20		22.000							1 10	1 10	41
44	5 D401	DIAPHRAGM	E	19		24.000	15.000						3 3	3 1	143

Nominal lengths are based on out to out dimensions shown in bending diagrams and are listed to the nearest inch for fabricator's use. Actual lengths are measured along centerline bar to the nearest inch. Weights are based on actual lengths.

For bending diagrams and steel reinforcing totals, see Sheet No. 23.

Detailed Aug. 2025
Checked Aug. 2025

All bars shall be ASTM A615 Grade 60.

Codes: C = Required coatings, where E = Epoxy Coated and G = Galvanized.

SH = Required shape, see bending diagrams.

V = Sets of varied bars and number of bars of each length. Bar dimensions vary in equal increments between dimensions shown on this line and the following line and the actual length dimension shown on this line and the following line vary by the specified increment.

BILL OF REINFORCING STEEL

Note: This drawing is not to scale. Follow dimensions.

STATE OF MISSOURI
SCOTT MICHAEL MCDONALD
NUMBER PE-2018000240
PROFESSIONAL ENGINEER

THIS SHEET HAS BEEN SIGNED, SEALED AND DATED ELECTRONICALLY.

DATE PREPARED 12/01/2025

ROUTE	STATE
13	MO
DISTRICT	SHEET NO.
BR	24

COUNTY: POLK
JOB NO.: JSR0049
CONTRACT ID.:
PROJECT NO.:
BRIDGE NO.: A9573

DATE	DESCRIPTION

MISSOURI HIGHWAYS AND TRANSPORTATION COMMISSION
105 WEST CAPITOL
JEFFERSON CITY, MO 65102
1-888-ASK-MODOT (1-888-275-6636)

VEENSTRA & KIMM INC.
A Kleinfelder Company
9788 N Ash Avenue Kansas City, Missouri 64157
816-781-6182 816-781-0643 (FAX)
Certificate of Authority No. 2002006347

Bill of Reinforcing Steel

No. Req.	Size/ Mark	Location	Codes C	Codes SH	Codes V	Dimensions B ft in.	C ft in.	D ft in.	E ft in.	F ft in.	H ft in.	K ft in.	Nom. Length ft in.	Actual Length ft in.	Weight lb
		SUPERSTRUCTURE													
		DIAPHRAGM AT INT. BENTS NO. 2 & 3													
16	6 H501	DIAPHRAGM	E	20		8 6.000							8 6	8 6	204
16	6 H502	DIAPHRAGM	E	20		8 10.000							8 10	8 10	212
32	4 H503	DIAPHRAGM	E	20		9 5.000							9 5	9 5	201
24	5 H504	DIAPHRAGM	E	20		3 11.000							3 11	3 11	98
16	5 H505	DIAPHRAGM	E	20		2 10.000							2 10	2 10	47
112	4 U501	DIAPHRAGM	E	28S			2 1.000	2 11.250	18.000				6 6	6 3	468
32	6 U502	DIAPHRAGM	E	28S			2 4.750	2 11.250	2 2.000				7 6	7 2	344
32	5 U503	DIAPHRAGM	E	6S		2 8.000	12.000						3 8	3 6	117
16	5 V501	DIAPHRAGM	E	20		3 2.000							3 2	3 2	53
		SLAB													
117	5 S1	SLAB	E	20		50 10.000							50 10	50 10	6203
260	6 S2	SLAB	E	20		46 5.000							46 5	46 5	18127
64	6 S3	SLAB	E	20	2	2 5.000							2 5	2 5	
		INCREMENT = 16.500 INCH				45 0.500							45 0	45 0	2279
168	5 S4	SLAB	E	20		50 10.000							50 10	50 10	8907
223	5 S5	SLAB	E	20		46 5.000							46 5	46 5	10796
54	5 S6	SLAB	E	20	2	3 1.500							3 2	3 2	
		INCREMENT = 19.250 INCH				44 10.000							44 10	44 10	1356
144	5 S7	SLAB	E	20		24 0.000							24 0	24 0	3605

Bill of Reinforcing Steel

No. Req.	Size/ Mark	Location	Codes C	Codes SH	Codes V	Dimensions B ft in.	C ft in.	D ft in.	E ft in.	F ft in.	H ft in.	K ft in.	Nom. Length ft in.	Actual Length ft in.	Weight lb
		SUPERSTRUCTURE													
		BARRIER													
20	5 K1	BARRIER	E	27S		3 5.000	9.250	5.375	2 11.750		5.250	1.000	7 7	7 3	151
58	5 K2	BARRIER	E	27S		3 5.000	9.250	14.500	2 2.750		14.250	2.750	7 8	7 5	449
4	5 K3	BARRIER	E	27S		22.500	9.250	14.500	7.750	12.000	14.250	2.750	5 6	5 1	21
20	5 K4	BARRIER	E	19S	4	2 4.250	10.000						3 2	3 0	
		INCREMENT = 0.500 INCH				2 6.250	10.000						3 4	3 2	64
20	5 K5	BARRIER	E	38S	4			18.500	9.500	8.250	18.000	4.000	3 0	2 10	
		INCREMENT = 0.500 INCH						20.500	9.500	8.250	20.000	4.250	3 2	3 0	61
12	5 K6	BARRIER	E	19S		2 6.750	10.000						3 5	3 3	41
12	5 K7	BARRIER	E	21S			2 6.625	10.000			2 6.000	6.250	3 5	3 3	41
36	5 K8	BARRIER	E	19S	4	2 8.500	10.000						3 7	3 5	
		INCREMENT = 0.750 INCH				3 2.500	10.000						4 1	3 11	138
36	5 K9	BARRIER	E	21S	4		2 8.500	10.000			2 7.750	6.750	3 7	3 5	
		INCREMENT = 0.750 INCH					3 2.500	10.000			3 1.750	7.750	4 1	3 11	138
14	5 K10	BARRIER	E	19S		3 3.000	10.000						4 1	3 11	57
14	5 K11	BARRIER	E	21S			3 3.000	10.000			3 2.250	7.750	4 1	3 11	57
24	5 K12	BARRIER	E	20		10 5.000							10 5	10 5	261
12	5 K13	BARRIER	E	20	4	3 8.000							3 8	3 8	
		INCREMENT = 36.000 INCH				9 8.000							9 8	9 8	83
24	5 K14	BARRIER	E	20		9 11.000							9 11	9 11	248
12	5 K15	BARRIER	E	20	4	3 2.000							3 2	3 2	
		INCREMENT = 36.000 INCH				9 2.000							9 2	9 2	77
296	5 R1	BARRIER	E	26S		3 3.000	5.500	2.250	3 1.375	5.500	3 0.750	6.750	6 11	6 11	2135
296	5 R2	BARRIER	E	19S		20.500	9.500						2 6	2 4	720
296	5 R3	BARRIER	E	27S			9.500	15.250	5.000	12.000	15.000	3.000	3 6	3 3	1003
80	5 R4	BARRIER	E	20		11 9.000							11 9	11 9	980
20	5 R5	BARRIER	E	20		33 11.000							33 11	33 11	708
20	5 R6	BARRIER	E	20		23 9.000							23 9	23 9	495
20	5 R7	BARRIER	E	20		34 5.000							34 5	34 5	718
		SLIP FORM OPTION													
40	5 C1	SLIP FORM	E	20		12 0.000							12 0	12 0	501
8	5 C2	SLIP FORM	E	20		7 9.000							7 9	7 9	65

Nominal lengths are based on out to out dimensions shown in bending diagrams and are listed to the nearest inch for fabricator's use. Actual lengths are measured along centerline bar to the nearest inch. Weights are based on actual lengths.

For bending diagrams and steel reinforcing totals, see Sheet No. 23.

Detailed Aug. 2025
Checked Aug. 2025

All bars shall be ASTM A615 Grade 60.

BILL OF REINFORCING STEEL

Note: This drawing is not to scale. Follow dimensions.

Codes: C = Required coatings, where E = Epoxy Coated and G = Galvanized.

SH = Required shape, see bending diagrams.

V = Sets of varied bars and number of bars of each length. Bar dimensions vary in equal increments between dimensions shown on this line and the following line and the actual length dimension shown on this line and the following line vary by the specified increment.

STATE OF MISSOURI
SCOTT MICHAEL MCDONALD
NUMBER PE-2018000240
PROFESSIONAL ENGINEER

THIS SHEET HAS BEEN SIGNED, SEALED AND DATED ELECTRONICALLY.

DATE PREPARED 12/01/2025

ROUTE	STATE
13	MO
DISTRICT	SHEET NO.
BR	25

COUNTY: POLK

JOB NO.: JSR0049

CONTRACT ID.

PROJECT NO.

BRIDGE NO.: A9573

DESCRIPTION	DATE

MISSOURI HIGHWAYS AND TRANSPORTATION COMMISSION
105 WEST CAPITOL
JEFFERSON CITY, MO 65102
1-888-ASK-MODOT (1-888-275-6636)

VEENSTRA & KIMM INC.
A Kleinfelder Company
9788 N Ash Avenue Kansas City, Missouri 64157
816-781-6182 816-781-0643 (FAX)
Certificate of Authority No. 2002006347

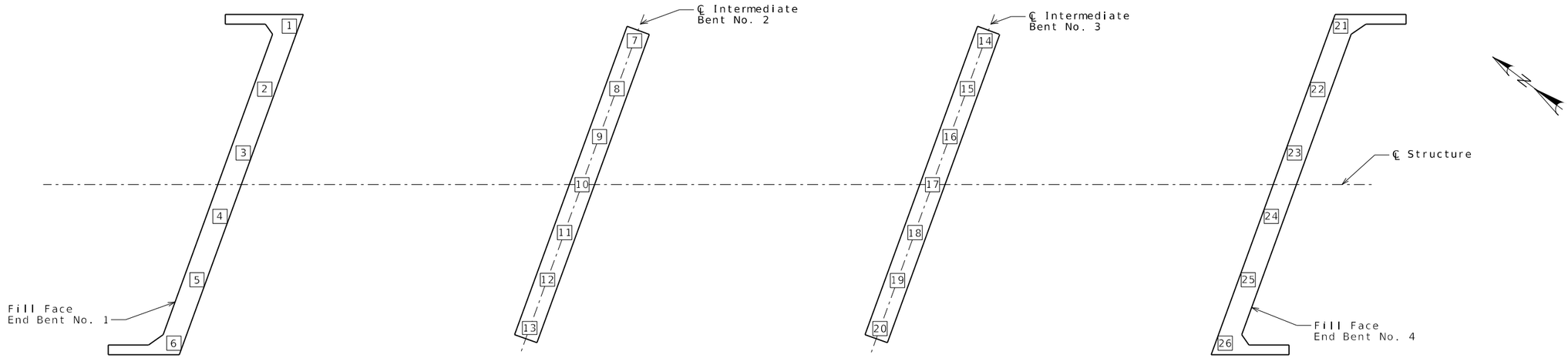

PART PLAN SHOWING PILE NUMBERING FOR RECORDING AS-BUILT PILE DATA

As-Built Pile Data

Pile No.	Length in Place (ft)	Computed Nominal Axial Compressive Resistance (kips)	Remarks
			End Bent No. 1
1			
2			
3			
4			
5			
6			

As-Built Pile Data

Pile No.	Length in Place (ft)	Computed Nominal Axial Compressive Resistance (kips)	Remarks
			Intermediate Bent No. 2
7			
8			
9			
10			
11			
12			
13			
			Intermediate Bent No. 3
14			
15			
16			
17			
18			
19			
20			

As-Built Pile Data

Pile No.	Length in Place (ft)	Computed Nominal Axial Compressive Resistance (kips)	Remarks
			End Bent No.4
21			
22			
23			
24			
25			
26			

Note:
Indicate in remarks column:
A. Pile type and grade
B. Batter
C. Driven to practical refusal

This sheet to be completed by MoDOT construction personnel.

Detailed May 2025
Checked Aug. 2025

Note: This drawing is not to scale. Follow dimensions.

STATE OF MISSOURI
SCOTT MICHAEL MCDONALD
NUMBER PE-2018000240
PROFESSIONAL ENGINEER

THIS SHEET HAS BEEN SIGNED, SEALED AND DATED ELECTRONICALLY.

DATE PREPARED 12/01/2025

ROUTE	STATE
13	MO
DISTRICT	SHEET NO.
BR	26

COUNTY POLK
JOB NO. JSR0049
CONTRACT ID.
PROJECT NO.
BRIDGE NO. A9573

DESCRIPTION	DATE

MISSOURI HIGHWAYS AND TRANSPORTATION COMMISSION
105 WEST CAPITOL
JEFFERSON CITY, MO 65102
1-888-ASK-MODOT (1-888-275-6636)

VEENSTRA & KIMM INC.
A Kleinfelder Company
9788 N Ash Avenue Kansas City, Missouri 64157
816-781-6182 816-781-0643 (FAX)
Certificate of Authority No. 2002006347

Missouri Department of Transportation
Construction and Materials

BORING NO. 102B
Page 1 of 1

Job No.: JSR0049 **County:** Polk **Route:** 13
Design: A9573 **Skew:** 20 Deg LA **Location:** 0.6 Miles South of Route N in Humansville
Bent: 1 **Logged By:** Ricardo Todd **Operator:** Josh Starey
Station: 183+42.6 **Northing:** 713393.4 **Date of Work:** 04/15/24-04/15/24
Offset: 24.7 R **Easting:** 1327577.9 **Depth to Water:**
Elevation: 895.7 **Requested Northing:** **Depth Hole Open:**
Requested Station: **Requested Easting:** **Time Change:**
Requested Offset: **Equipment:** CME 55 LC ,Split-Spoon Sampler, NQ
Requested Elevation: **Location Note:**
Drill No.: 360485-PPI **Hammer Efficiency:** **Drilling Method:** Hollow Stem Auger

Depth (ft)	Graphic	Description	Elevation (ft)	Sample Type	REC % (RQD %)	Blow Counts (N_{60})	Shear Data	Field Tests	Index Tests
0		0.0-10.1' Grayish tan, GRAVELLY LEAN CLAY trace cobbles, stiff, moist	895						
5			890		67	2-4-9 (18)		PP = 1.00 tsf	
10		10.1-13.2' Gray, LEAN CLAY scattered gravel, trace cobbles, stiff, moist	885		73	1-5-2 (10)		PP = 1.25 tsf	MC = 25.7% γ_{sat} = 124 pcf(1) LL = 31 PL = 17
15		13.2-16.0' Whitish gray, GRAVEL, loose to medium dense, moist, medium grained	880		33	2-8-15 (32)		PP = 7.50 tsf	
		16.0-16.5' Shale, gray, highly weathered 16.5-30.0' Shale, gray, thinly laminated, very weak rock to weak rock			57				
20			875		98		Qu Test Results MC = 7.249467% γ_{moist} = 150.9 pcf	PP = 9.00 tsf	
25			870		88		Qu Test Results	PP = 9.00 tsf	
30		Bottom of borehole at 30.0 feet.							

N_{60} = (Em/60)Nm N_{60} - Corrected N value for standard 60% SPT efficiency; Em - Measured hammer efficiency in percent; Nm - Observed N-value; (1) = Assumed, (2) = Actual

Coordinate System: Modified U.S. State Plane 1983 **Coordinate Zone:** Missouri Central **Coordinate Proj. Factor:** .9999853
Coordinate Datum: NAD 83 (CONUS) **Coordinate Units:** U.S. Survey Feet

* Persons using this information are cautioned that the materials shown are determined by the equipment noted and accuracy of the "log of materials" is limited thereby and by judgement of the operator. THIS INFORMATION IS FOR DESIGN PURPOSES ONLY.

LETTER BOREHOLE MODOT_20151118.GDT - 6/24/24 15:57 - Z:\SG\GINT\PROJECT FILES\JSR0049_A9573_POLK_RTE.13.GPJ

Missouri Department of Transportation
Construction and Materials

BORING NO. 201B
Page 1 of 1

Job No.: JSR0049 **County:** Polk **Route:** 13
Design: A9573 **Skew:** 20 Deg LA **Location:** 0.6 Miles South of Route N in Humansville
Bent: 2 **Logged By:** Ricardo Todd **Operator:** Josh Starey
Station: 183+73.3 **Northing:** 713386.2 **Date of Work:** 04/09/24-04/10/24
Offset: 27.3 L **Easting:** 1327648.6 **Depth to Water:**
Elevation: 887.7 **Requested Northing:** **Depth Hole Open:**
Requested Station: **Requested Easting:** **Time Change:**
Requested Offset: **Equipment:** CME 55 LC ,Grab Sample, Split-Spoon Sampler, NQ
Requested Elevation: **Location Note:**
Drill No.: 360485-PPI **Hammer Efficiency:** **Drilling Method:** Hollow Stem Auger

Depth (ft)	Graphic	Description	Elevation (ft)	Sample Type	REC % (RQD %)	Blow Counts (N_{60})	Shear Data	Field Tests	Index Tests
0		0.0-6.3' Gray, GRAVEL with lean clay, with sand, scattered cobbles, stiff, moist	885						
5					67	7-7-3 (14)			Sieve Analysis Sieve # % Passing 1½" 100.0 1" 93.3 3/4" 76.3 3/8" 50.5 #4 33.2 #10 19.8 #16 14.0 #40 10.0 #50 9.1 #100 8.0 #200 7.7
		6.3-7.3' Shale, gray, highly weathered 7.3-28.7' Shale, gray, thinly laminated, very weak rock to weak rock	880		100	50/0.3', 10/0'		PP = 7.00 tsf	
10					67		Qu Test Results MC = 7.746479% γ_{moist} = 153 pcf	PP = 9.00 tsf	
15			875		86		Qu Test Results MC = 7.322176% γ_{moist} = 153.9 pcf	PP = 9.00 tsf	
20			870		100		Qu Test Results MC = 7.757405% γ_{moist} = 152.8 pcf	PP = 9.00 tsf	
25			865		86		Qu Test Results MC = 8.195542% γ_{moist} = 150.5 pcf	PP = 9.00 tsf	
			860		100 (70)		Qu Test Results MC = 7.247387% γ_{moist} = 153.9 pcf	PP = 9.00 tsf	
30		28.7-35.3' Cherty Dolomite, whitish gray, thin bedded to medium bedded, strong rock to very strong rock, slightly weathered, fine grained	855		100 (60)		Qu Test Results UCS = 1330 ksf MC = 0% γ_{moist} = 161.8 pcf		
35		Bottom of borehole at 35.3 feet.							

N_{60} = (Em/60)Nm N_{60} - Corrected N value for standard 60% SPT efficiency; Em - Measured hammer efficiency in percent; Nm - Observed N-value; (1) = Assumed, (2) = Actual

Coordinate System: Modified U.S. State Plane 1983 **Coordinate Zone:** Missouri Central **Coordinate Proj. Factor:** .9999853
Coordinate Datum: NAD 83 (CONUS) **Coordinate Units:** U.S. Survey Feet

* Persons using this information are cautioned that the materials shown are determined by the equipment noted and accuracy of the "log of materials" is limited thereby and by judgement of the operator. THIS INFORMATION IS FOR DESIGN PURPOSES ONLY.

LETTER BOREHOLE MODOT_20151118.GDT - 6/24/24 15:57 - Z:\SG\GINT\PROJECT FILES\JSR0049_A9573_POLK_RTE.13.GPJ

STATE OF MISSOURI
SCOTT MICHAEL MCDONALD
NUMBER PE-2018000240
PROFESSIONAL ENGINEER

THIS SHEET HAS BEEN SIGNED, SEALED AND DATED ELECTRONICALLY.

DATE PREPARED 12/01/2025
ROUTE 13 STATE MO
DISTRICT BR SHEET NO. 27
COUNTY POLK
JOB NO. JSR0049
CONTRACT ID.
PROJECT NO.
BRIDGE NO. A9573

DESCRIPTION
DATE

MISSOURI HIGHWAYS AND TRANSPORTATION COMMISSION
105 WEST CAPITOL
JEFFERSON CITY, MO 65102
1-888-ASK-MODOT (1-888-275-6636)

VEENSTRA & KIMM INC.
A Kleinfelder Company
9788 N Ash Avenue Kansas City, Missouri 64157
816-781-6182 816-781-0643 (FAX)
Certificate of Authority No. 2002006347

BORING DATA

Note: For locations of borings, see Sheet No. 1.

Detailed May 2025
Checked X X

Note: This drawing is not to scale. Follow dimensions.

Missouri Department of Transportation
Construction and Materials

BORING NO. 301B
Page 1 of 1

Job No.: JSR0049 **County:** Polk **Route:** 13
Design: A9573 **Skew:** 20 Deg LA **Location:** 0.6 Miles South of Route N in Humansville
Bent: 3 **Logged By:** Ricardo Todd **Operator:** Josh Starey
Station: 184+31.2 **Northing:** 713336.7 **Date of Work:** 04/08/24-04/08/24
Offset: 21.6 L **Easting:** 1327678.9 **Depth to Water:**
Elevation: 886.3 **Requested Northing:** **Depth Hole Open:**
Requested Station: **Requested Easting:** **Time Change:**
Requested Offset: **Equipment:** CME 55 LC ,Split-Spoon Sampler, NQ
Requested Elevation: **Location Note:**
Drill No.: 360485-PPI **Hammer Efficiency:** **Drilling Method:** Hollow Stem Auger

Depth (ft)	Description	Elevation (ft)	Sample Type	REC % (RQD %)	Blow Counts (N_{60})	Shear Data	Field Tests	Index Tests
0	0.0-5.2' Gray, GRAVELLY LEAN CLAY scattered cobbles, moist	885						
5	5.2-5.8' Shale, gray, highly weathered	880		75	45-50/0.2', 10/0'		PP = 7.50 tsf	
	5.8-26.2' Shale, gray, thinly laminated, very weak rock to weak rock			91		Qu Test Results MC = 8.446671% γ_{moist} = 151.5 pcf	PP = 9.00 tsf	
10		875		96		Qu Test Results MC = 8.327351% γ_{moist} = 150.9 pcf	PP = 9.00 tsf	
15		870		84		Qu Test Results MC = 8.327299% γ_{moist} = 149.6 pcf	PP = 9.00 tsf	
20		865		100		Qu Test Results UCS = 98.4 ksf MC = 6.9% γ_{moist} = 152.1 pcf	PP = 9.00 tsf	
25	26.2-35.3' Cherty Dolomite, whitish gray, thin bedded to medium bedded, very strong rock, slightly weathered, fine grained	860		100 (72)		Qu Test Results UCS = 1450 ksf MC = 0% γ_{moist} = 162.8 pcf		
30		855		94 (60)		Qu Test Results UCS = 1320 ksf MC = 0% γ_{moist} = 146 pcf		
35	Bottom of borehole at 35.3 feet.							

N_{60} = (Em/60)Nm N_{60} - Corrected N value for standard 60% SPT efficiency; Em - Measured hammer efficiency in percent; Nm - Observed N-value; (1) = Assumed, (2) = Actual

Coordinate System: Modified U.S. State Plane 1983 **Coordinate Zone:** Missouri Central **Coordinate Proj. Factor:** .9999853
Coordinate Datum: NAD 83 (CONUS) **Coordinate Units:** U.S. Survey Feet

* Persons using this information are cautioned that the materials shown are determined by the equipment noted and accuracy of the "log of materials" is limited thereby and by judgement of the operator. THIS INFORMATION IS FOR DESIGN PURPOSES ONLY.

LETTER BOREHOLE_MODOT_20151118.GDT - 6/24/24 15:57 - Z:\SG\GINT\PROJECT FILES\SR0049_A9573_POLK_RTE 13.GPJ

Missouri Department of Transportation
Construction and Materials

BORING NO. 402B
Page 1 of 1

Job No.: JSR0049 **County:** Polk **Route:** 13
Design: A9573 **Skew:** 20 Deg LA **Location:** 0.6 Miles South of Route N in Humansville
Bent: 4 **Logged By:** Ricardo Todd **Operator:** Josh Starey
Station: 184+56.0 **Northing:** 713287.3 **Date of Work:** 04/09/24-04/09/24
Offset: 27.3 R **Easting:** 1327654.9 **Depth to Water:**
Elevation: 895.2 **Requested Northing:** **Depth Hole Open:**
Requested Station: **Requested Easting:** **Time Change:**
Requested Offset: **Equipment:** CME 55 LC ,Split-Spoon Sampler, NQ
Requested Elevation: **Location Note:**
Drill No.: 360485-PPI **Hammer Efficiency:** **Drilling Method:** Hollow Stem Auger

Depth (ft)	Description	Elevation (ft)	Sample Type	REC % (RQD %)	Blow Counts (N_{60})	Shear Data	Field Tests	Index Tests
0	0.0-3.2' Grayish tan, GRAVELLY LEAN CLAY scattered cobbles, moist	895						
	3.2-4.5' Cobbles & Boulders							
5	4.5-9.3' Orangish tan, GRAVELLY LEAN CLAY trace cobbles, stiff, moist	890		67	4-6-7 (18)		PP = 1.50 tsf	MC = 14.5% γ_{sat} = 138 pcf(1) LL = 46 PL = 18
10	9.3-9.7' BOULDERS	885						
	9.7-10.3' Tan, GRAVELLY LEAN CLAY trace cobbles, moist			73	2-2-5 (10)		PP = 1.25 tsf	MC = 21.8% γ_{sat} = 128 pcf(1) LL = 30 PL = 18
	10.3-14.7' Gray, LEAN CLAY trace gravel, and organics, stiff, moist							
15	14.7-15.7' Shale, gray, highly weathered	880		66	35-50/0.1', 10/0'		PP = 7.50 tsf	MC = 12.3% γ_{sat} = 141 pcf(1)
	15.7-23.4' Shale, gray, thinly laminated, very weak rock to weak rock			100		Qu Test Results MC = 8.764368% γ_{moist} = 151.4 pcf	PP = 9.00 tsf	
20		875		100 (20)		Qu Test Results MC = 6.821378% γ_{moist} = 151.9 pcf		
25	23.4-25.7' Cherty Dolomite, whitish gray, thin bedded, strong rock to very strong rock, slightly weathered, fine grained	870						
	Bottom of borehole at 25.7 feet.							

N_{60} = (Em/60)Nm N_{60} - Corrected N value for standard 60% SPT efficiency; Em - Measured hammer efficiency in percent; Nm - Observed N-value; (1) = Assumed, (2) = Actual

Coordinate System: Modified U.S. State Plane 1983 **Coordinate Zone:** Missouri Central **Coordinate Proj. Factor:** .9999853
Coordinate Datum: NAD 83 (CONUS) **Coordinate Units:** U.S. Survey Feet

* Persons using this information are cautioned that the materials shown are determined by the equipment noted and accuracy of the "log of materials" is limited thereby and by judgement of the operator. THIS INFORMATION IS FOR DESIGN PURPOSES ONLY.

LETTER BOREHOLE_MODOT_20151118.GDT - 6/24/24 15:57 - Z:\SG\GINT\PROJECT FILES\SR0049_A9573_POLK_RTE 13.GPJ

STATE OF MISSOURI
SCOTT MICHAEL MCDONALD
NUMBER PE-2018000240
PROFESSIONAL ENGINEER

THIS SHEET HAS BEEN SIGNED, SEALED AND DATED ELECTRONICALLY.

DATE PREPARED 12/01/2025
ROUTE 13 STATE MO
DISTRICT BR SHEET NO. 28
COUNTY POLK
JOB NO. JSR0049
CONTRACT ID.
PROJECT NO.
BRIDGE NO. A9573

DESCRIPTION
DATE

MISSOURI HIGHWAYS AND TRANSPORTATION COMMISSION
105 WEST CAPITOL
JEFFERSON CITY, MO 65102
1-888-ASK-MODOT (1-888-275-6636)

VEENSTRA & KIMM INC.
A Kleinfelder Company
9788 N Ash Avenue Kansas City, Missouri 64157
816-781-6182 816-781-0643 (FAX)
Certificate of Authority No. 2002006347

BORING DATA

Note: For locations of borings, see Sheet No. 1.

Detailed Jun. 2025
Checked X X

Note: This drawing is not to scale. Follow dimensions.

Missouri Department of Transportation
Construction and Materials

BORING NO. Anger-1 (401B)
Page 1 of 1

Job No.:	JSR0049	**County:**	Polk	**Route:**	13
Design:	A9573	**Skew:**	20 Deg LA	**Location:**	0.6 Miles South of Route N in Humansville
Bent:	4	**Logged By:**	Ricardo Todd	**Operator:**	Josh Starey
Station:	184+74.4	**Northing:**	713305.8	**Date of Work:**	04/08/24-04/09/24
Offset:	23.7 L	**Easting:**	1327704.9	**Depth to Water:**	
Elevation:	895.3	**Requested Northing:**		**Depth Hole Open:**	
Requested Station:		**Requested Easting:**		**Time Change:**	
Requested Offset:		**Equipment:**	CME 55 LC ,NQ		
Requested Elevation:		**Location Note:**			
Drill No.:	360485-PPI	**Hammer Efficiency:**		**Drilling Method:**	Continuous Flight Auger

Depth (ft)	Graphic	Description	Elevation (ft)	Sample Type	REC % (RQD %)	Blow Counts (N_{60})	Shear Data	Field Tests	Index Tests
0			895						
		0.0-15.4' Dark brownish gray, GRAVELLY LEAN CLAY scattered cobbles, stiff, moist							
5			890						
10			885						
15			880						
		15.4-17.4' Shale, gray, thinly laminated, soft							
		Bottom of borehole at 17.4 feet.							

N_{60} = (Em/60)Nm N_{60} - Corrected N value for standard 60% SPT efficiency; Em - Measured hammer efficiency in percent; Nm - Observed N-value; (1) = Assumed, (2) = Actual

Coordinate System: Modified U.S. State Plane 1983 **Coordinate Zone:** Missouri Central **Coordinate Proj. Factor:** .9999853

Coordinate Datum: NAD 83 (CONUS) **Coordinate Units:** U.S. Survey Feet

* Persons using this information are cautioned that the materials shown are determined by the equipment noted and accuracy of the "log of materials" is limited thereby and by judgement of the operator. THIS INFORMATION IS FOR DESIGN PURPOSES ONLY.

LETTER BOREHOLE - MODOT_20151118.GDT - 6/24/24 15:57 - Z:\SG\GINT\PROJECT FILES\SR0049_A9573_POLK_RTE.13.GPJ

Missouri Department of Transportation

KEY TO SYMBOLS

CLIENT **PROJECT NAME** Bridge Replacement

PROJECT NUMBER JSR0049 **PROJECT LOCATION** 0.6 Miles South of Route N in Humansville

LITHOLOGIC SYMBOLS
(Unified Soil Classification System)

- Boulders and cobbles
- USCS Low Plasticity Clay
- USCS Low Plasticity Gravelly Clay
- Dolomite
- USCS Poorly-graded Gravel
- USCS Well-graded Gravel with Clay
- Shale

SAMPLER SYMBOLS

- Rock Core Barrel
- Grab Sample
- Split-Spoon Sampler

WELL CONSTRUCTION SYMBOLS

ABBREVIATIONS

LL - LIQUID LIMIT (%)
PI - PLASTIC INDEX (%)
W - MOISTURE CONTENT (%)
DD - DRY DENSITY (PCF)
NP - NON PLASTIC
-200 - PERCENT PASSING NO. 200 SIEVE
PP - POCKET PENETROMETER (TSF)
Qu - UNCONFINED COMPRESSIVE STRENGTH (PSF)

TV - TORVANE
PID - PHOTOIONIZATION DETECTOR
UC - UNCONFINED COMPRESSION
ppm - PARTS PER MILLION

Water Level at Time of Drilling
Water Level at End of Drilling
Water Level after Drilling

KEY TO SYMBOLS - MODOT_20150728.GDT - 6/24/24 15:56 - Z:\SG\GINT\PROJECT FILES\SR0049_A9573_POLK_RTE.13.GPJ

STATE OF MISSOURI
SCOTT MICHAEL MCDONALD
NUMBER PE-2018000240
PROFESSIONAL ENGINEER

THIS SHEET HAS BEEN SIGNED, SEALED AND DATED ELECTRONICALLY.

DATE PREPARED	
12/01/2025	
ROUTE 13	STATE MO
DISTRICT BR	SHEET NO. 29
COUNTY POLK	
JOB NO. JSR0049	
CONTRACT ID.	
PROJECT NO.	
BRIDGE NO. A9573	

DATE	DESCRIPTION

MISSOURI HIGHWAYS AND TRANSPORTATION COMMISSION
105 WEST CAPITOL
JEFFERSON CITY, MO 65102
1-888-ASK-MODOT (1-888-275-6636)

VEENSTRA & KIMM INC.
A Kleinfelder Company
9788 N Ash Avenue Kansas City, Missouri 64157
816-781-6182 816-781-0643 (FAX)
Certificate of Authority No. 2002006347

BORING DATA

Note: For locations of borings, see Sheet No. 1.

Detailed Jun. 2025
Checked X X

Note: This drawing is not to scale. Follow dimensions.

MISSOURI HIGHWAYS AND TRANSPORTATION COMMISSION

PLANS FOR PROPOSED STATE HIGHWAY

POLK COUNTY

DESIGN DESIGNATION

A.A.D.T. - 2023 = 9847
A.A.D.T. - 2043 = 17232
T = 15.7%
V = 65 M.P.H.

FUNCTIONAL CLASSIFICATION - RURAL FREEWAY

NO NEW R/W OR EASEMENTS TO BE ACQUIRED

KEY MAP
LOCATION OF POLK COUNTY

NOT TO SCALE

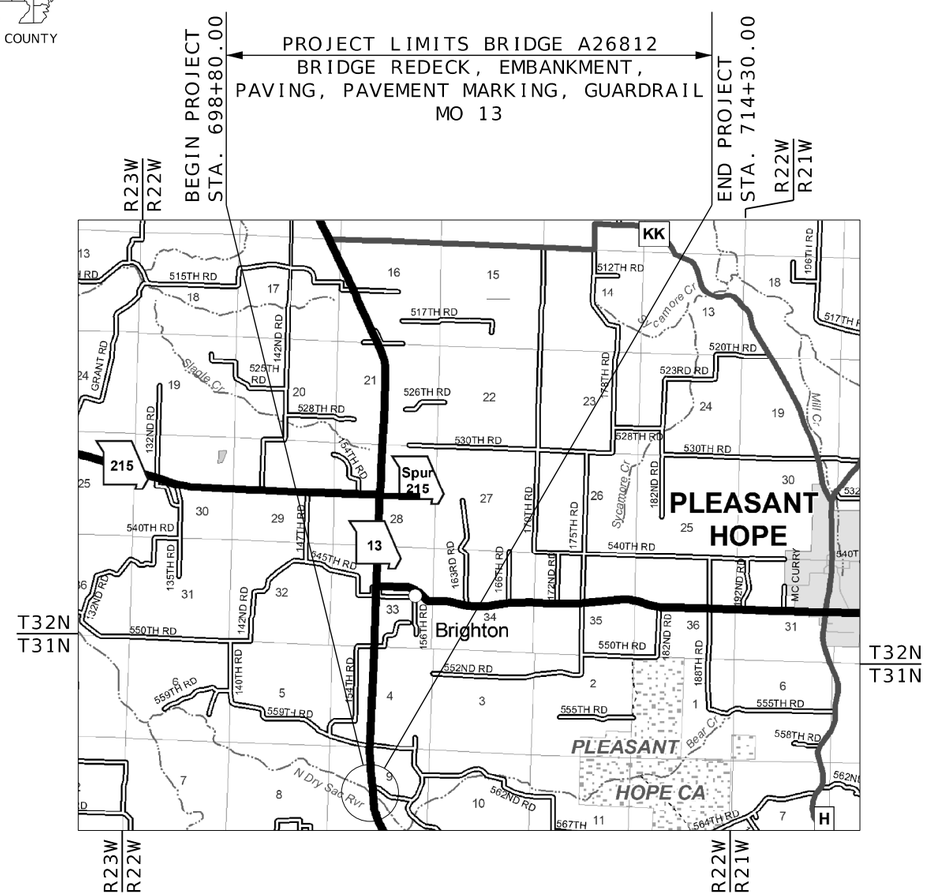

CONVENTIONAL SYMBOLS
(USED IN PLANS)

	EXISTING	NEW
BUILDINGS AND STRUCTURES		
GUARD RAIL		
GUARD CABLE		
CONCRETE RIGHT-OF-WAY MARKER		
STEEL RIGHT-OF-WAY MARKER		
LOCATION SURVEY MARKER		
UTILITIES		
FIBER OPTICS	—FO—	—FO—
OVERHEAD CABLE TV	—OTV—	—OTV—
UNDERGROUND CABLE TV	—UTV—	—UTV—
OVERHEAD TELEPHONE	—OT—	—OT—
UNDERGROUND TELEPHONE	—UT—	—UT—
OVERHEAD POWER	—OE—	—OE—
UNDERGROUND POWER	—UE—	—UE—
SANITARY SEWER	—S—	—S—
STORM SEWER	—SS—	—SS—
GAS	—G—	—G—
WATER	—W—	—W—
MANHOLE	SAN	
FIRE HYDRANT	HYD	
WATER VALVE	WV	
WATER METER	WM	
DROP INLET	DI	
DITCH BLOCK		
GROUND MOUNTED SIGN	SIGN	
LIGHT POLE		
H-FRAME POWER POLE		
TELEPHONE PEDESTAL	PED	
FENCE		
CHAIN LINK	—V—	
WOVEN WIRE	—X—	
GATE POST		
BENCHMARK	BM	

NOTE: DASHED OR OPEN SYMBOLS INDICATE EXISTING FEATURES

THE EXISTENCE AND APPROXIMATE LOCATION OF UTILITY FACILITIES KNOWN TO EXIST, AS SHOWN ON THE PLANS, ARE BASED ON THE BEST INFORMATION AVAILABLE TO THE COMMISSION AT THIS TIME. THIS INFORMATION IS PROVIDED BY THE COMMISSION "AS-IS" AND THE COMMISSION EXPRESSLY DISCLAIMS ANY REPRESENTATION OR WARRANTY AS TO THE COMPLETENESS, ACCURACY, OR SUITABILITY OF THE INFORMATION FOR ANY USE. RELIANCE UPON THIS INFORMATION IS DONE AT THE RISK AND PERIL OF THE USER, AND THE COMMISSION SHALL NOT BE LIABLE FOR ANY DAMAGES THAT MAY ARISE FROM ANY ERROR IN THE INFORMATION. IT IS, THEREFORE, THE RESPONSIBILITY OF THE CONTRACTOR TO VERIFY THE EXISTENCE, LOCATION AND STATUS OF ANY FACILITY. SUCH VERIFICATION INCLUDES DIRECT CONTACT WITH THE LISTED UTILITIES.

INDEX OF SHEETS

LENGTH OF PROJECT

BEGINNING OF PROJECT	STA. 698+80.00	
END OF PROJECT	STA. 714+30.00	
APPARENT LENGTH	1550.00	FEET
EQUATIONS AND EXCEPTIONS:		
TOTAL CORRECTIONS	0.00	FEET
NET LENGTH OF PROJECT	1550.00	FEET
STATE LENGTH	0.293	MILES
FOR INFORMATION ONLY ESTIMATED DISTURBED ACRES	1	ACRE

STATE OF MISSOURI
SCOTT MICHAEL MCDONALD
NUMBER PE-2018000240
PROFESSIONAL ENGINEER

THIS SHEET HAS BEEN SIGNED, SEALED AND DATED ELECTRONICALLY.

DATE PREPARED 12/1/2025

ROUTE	STATE
13	MO
DISTRICT	SHEET NO.
SW	1

COUNTY POLK
JOB NO. JSR0183
CONTRACT ID.
PROJECT NO.
BRIDGE NO. A26812

DESCRIPTION	DATE

MISSOURI HIGHWAYS AND TRANSPORTATION COMMISSION
105 WEST CAPITOL
JEFFERSON CITY, MO 65102
1-888-ASK-MODOT (1-888-275-6636)

VEENSTRA & KIMM INC.
A Kleinfelder Company
9788 N Ash Avenue Kansas City, Missouri 64157
816-781-6182 816-781-0643 (FAX)
Certificate of Authority No. 2002006347

001_TITLE_01_JSR0183_i1.dgn 11:04:30 AM 1/6/2026

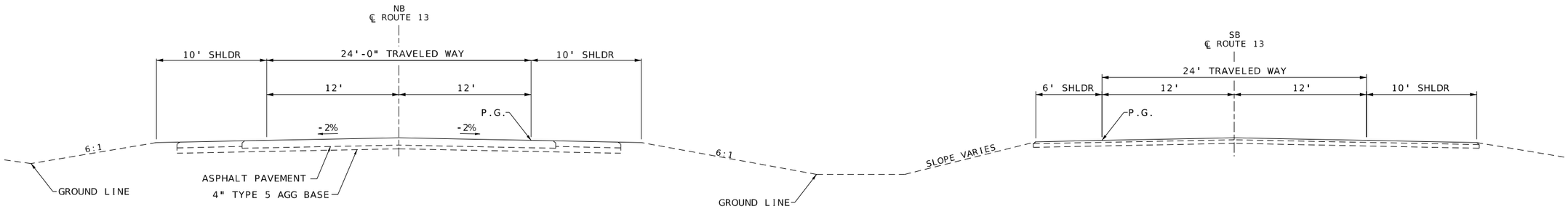

EXISTING SECTION ON TANGENT
TYPICAL SECTION MO. 13
STA. 698+80 TO STA. 714+30

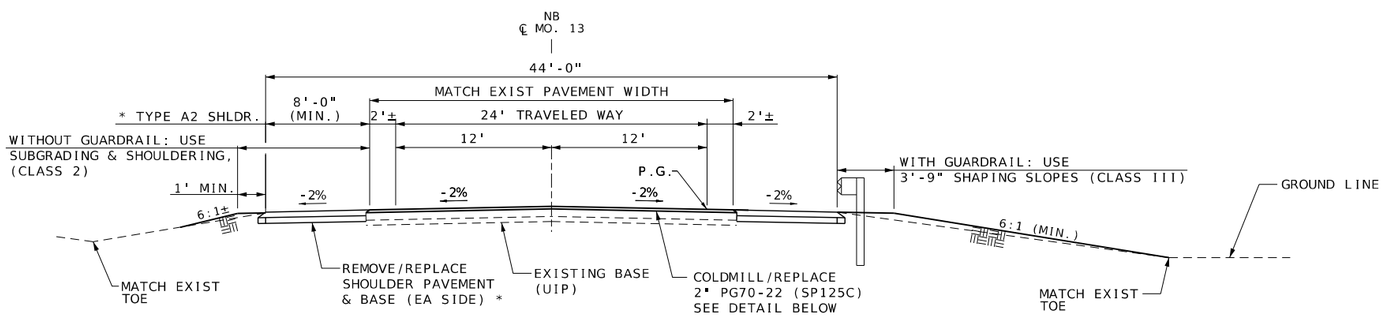

PROPOSED SECTION ON TANGENT
TYPICAL SECTION MO. 13
STA. 698+80 TO STA. 714+30
(EXCLUDING BRIDGE)

* TYPE A2
(OPTIONAL) SHOULDERS:

BITUMINOUS PAVEMENT:

1¾" SURFACE (PG 64-22,BP-1)
4" BASE (PG 64-22)
6" TYPE 5 AGG FOR BASE

PCC PAVEMENT:

5¾" PCC PAVEMENT
6" TYPE 5 AGG FOR BASE

REMOVE/REPLACE ASPHALT SHOULDER,
PHASE 1 & 2.

STA. 700+00 TO 702+08, LT.
STA. 698+80 TO 701+71, RT.
STA. 705+22 TO 714+30, LT.
STA. 704+86 TO 714+10, RT.

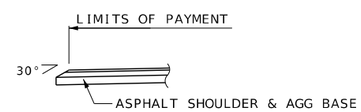

SAFETY EDGE-ASPHALT SHOULDER

NOTES:

EDGELINE RUMBLE STRIPS SHALL BE CONSTRUCTED ON SHOULDERS PER SPECIFICATIONS.

CONSTRUCTION PHASING: NORTHBOUND LANES BRIDGE NO. A2681

PHASE 1: CONSTRUCT NEW ROADWAY SHOULDERS ON EAST SIDE OF ROADWAY. SHOULDERS TO BE UTILIZED FOR TEMPORARY CONSTRUCTION TRAFFIC. USE STATIONARY LANE CLOSURE ON EAST SIDE OF ROADWAY.

PHASE 2: CONSTRUCT NEW ROADWAY SHOULDERS ON WEST SIDE OF ROADWAY. SHOULDERS TO BE UTILIZED FOR TEMPORARY CONSTRUCTION TRAFFIC. USE STATIONARY LANE CLOSURE ON WEST SIDE OF ROADWAY.

PHASE 3: CONSTRUCT BRIDGE IMPROVEMENTS ON WEST SIDE OF BRIDGE. USE STATIONARY LANE CLOSURE WITH TEMPORARY TRAFFIC BARRIER ON WEST SIDE OF NORTHBOUND LANES.

PHASE 4: CONSTRUCT BRIDGE IMPROVEMENTS ON EAST SIDE OF BRIDGE. USE STATIONARY LANE CLOSURE WITH TEMPORARY TRAFFIC BARRIER ON EAST SIDE OF NORTHBOUND LANES.

ESTIMATE FACTORS

ASPHALTIC CONCRETE MIXTURE PG 70-22 (SP125C)	= 1.927	TON/CY
BITUMINOUS PAVEMENT MIXTURE PG 64-22 (BP-1)	= 1.948	TON/CY
BITUMINOUS PAVEMENT MIXTURE PG 64-22 (BASE)	= 1.943	TON/CY
TACK COAT	= 0.100	GAL/SY

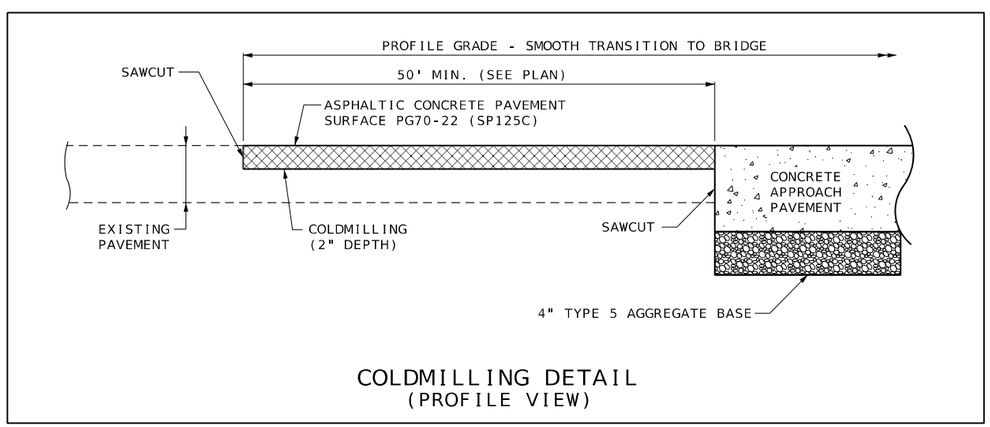

COLDMILLING DETAIL
(PROFILE VIEW)

TYPICAL SECTION
SHEET 1 OF 2

STATE OF MISSOURI
SCOTT MICHAEL MCDONALD
NUMBER PE-2018000240
PROFESSIONAL ENGINEER

THIS SHEET HAS BEEN SIGNED, SEALED AND DATED ELECTRONICALLY.

DATE PREPARED	12/1/2025
ROUTE	13
STATE	MO
DISTRICT	SW
SHEET NO.	2
COUNTY	POLK
JOB NO.	JSR0183
CONTRACT ID.	
PROJECT NO.	
BRIDGE NO.	A26812

DESCRIPTION

DATE

MISSOURI HIGHWAYS AND TRANSPORTATION COMMISSION
105 WEST CAPITOL
JEFFERSON CITY, MO 65102
1-888-ASK-MODOT (1-888-275-6636)

VEENSTRA & KIMM INC.
A Kleinfelder Company
9788 N Ash Avenue Kansas City, Missouri 64157
816-781-6182 816-781-0643 (FAX)
Certificate of Authority No. 2002006347

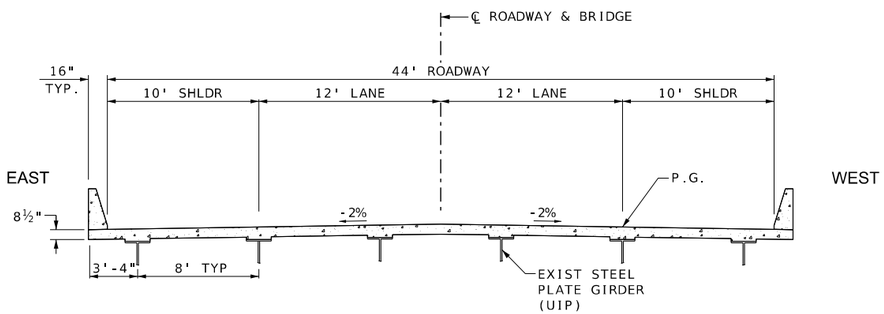

PROPOSED BRIDGE SECTION
(LOOKING UPSTATION)

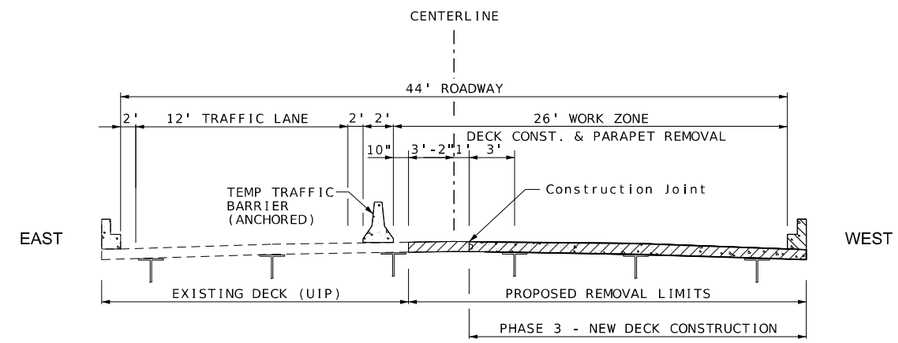

PHASE 3 - TEMPORARY TRAFFIC LANE ON BRIDGE
(LOOKING UPSTATION)

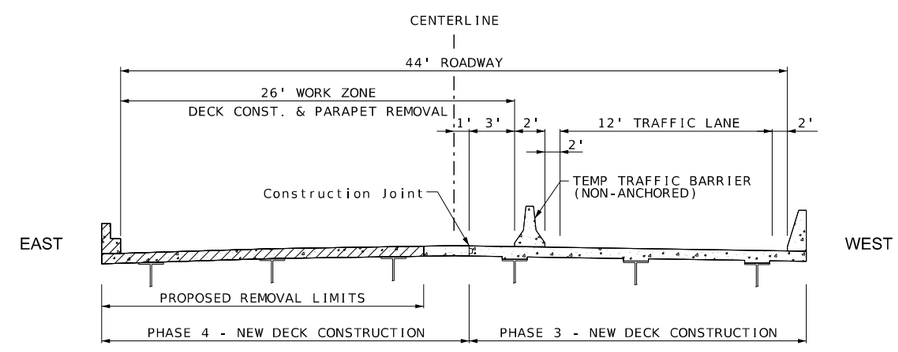

PHASE 4 - TEMPORARY TRAFFIC LANE ON BRIDGE
(LOOKING UPSTATION)

TYPICAL SECTION
SHEET 2 OF 2

STATE OF MISSOURI
SCOTT MICHAEL MCDONALD
NUMBER
PE-2018000240
PROFESSIONAL ENGINEER

THIS SHEET HAS BEEN SIGNED, SEALED AND DATED ELECTRONICALLY.

DATE PREPARED	12/1/2025
ROUTE	13
STATE	MO
DISTRICT	SW
SHEET NO.	2
COUNTY	POLK
JOB NO.	JSR0183
CONTRACT ID.	
PROJECT NO.	
BRIDGE NO.	A26812

DESCRIPTION	DATE

MISSOURI HIGHWAYS AND TRANSPORTATION COMMISSION
105 WEST CAPITOL
JEFFERSON CITY, MO 65102
1-888-ASK-MODOT (1-888-275-6636)

VEENSTRA & KIMM INC.
A Kleinfelder Company
9788 N Ash Avenue Kansas City, Missouri 64157
816-781-6182 816-781-0643 (FAX)
Certificate of Authority No. 2002006347

002_TS_02_JSR0183_TypSect.dgn 2:22:52 PM 12/1/2025

RUMBLE STRIPS FOR OPTIONAL PAVEMENT

STATION	LOCATION	SIDE	SHOULDER RUMBLE STRIP (STA)	REMARKS
700+98 TO 701+97	MO. 13	LT	1.0	LEFT EDGELINE
705+20 TO 705+96	MO. 13	LT	0.8	LEFT EDGELINE
700+98 TO 701+71	MO. 13	LT	0.7	RIGHT EDGELINE
704+95 TO 705+96	MO. 13	LT	1.0	RIGHT EDGELINE
		PAY TOTAL	3.5	

REMOVAL OF IMPROVEMENTS

STATION	LOCATION	SIDE	QUANTITY (LS)	REMARKS
700+00 TO 714+30	MO. 13	LT	-	LEFT ROADWAY SHOULDER
698+80 TO 714+10	MO. 13	LT	-	RIGHT ROADWAY SHOULDER
700+98 TO 702+05	MO. 13	LT	-	EXISTING ROAD & APPROACH SLAB
704+89 TO 705+96	MO. 13	LT	-	EXISTING ROAD & APPROACH SLAB
704+89 TO 708+90	MO. 13	LT	-	EXISTING GUARDRAIL, 2 SIDES OF ROAD
705+25	MO. 13	LT	-	EXISTING SIGN (AS REQUIRED)
		PAY TOTAL	1	

SEEDING/MULCHING

STATION	LOCATION	SIDE	SEEDING (AC)	MULCHING (AC)	REMARKS
699+00 TO 702+35	MO. 13	LT	0.2	0.2	EAST SIDE EMBANKMENT
699+00 TO 701+93	MO. 13	LT	0.2	0.2	WEST SIDE EMBANKMENT
705+08 TO 714+30	MO. 13	LT	0.4	0.4	EAST SIDE EMBANKMENT
704+63 TO 714+10	MO. 13	LT	0.4	0.4	WEST SIDE EMBANKMENT
		TOTAL	1.2	1.2	
		PAY TOTAL	1.2	1.2	

TYPE 5 AGGREGATE FOR BASE (4 IN. THICK)

STATION	LOCATION	SIDE	QUANTITY (SY)	REMARKS
701+48 TO 701+85	MO. 13	LT	165.0	SEE STD. PLAN 504.00
705+08 TO 705+46	MO. 13	LT	165.0	SEE STD. PLAN 504.00
		TOTAL	330.0	
		PAY TOTAL	330	

TYPE 5 AGGREGATE FOR BASE (6 IN. THICK)

STATION	LOCATION	SIDE	QUANTITY (SY)	REMARKS
700+00 TO 702+25	MO. 13	LT	313.1	LEFT SHOULDER
698+80 TO 701+48	MO. 13	LT	281.7	RIGHT SHOULDER
705+08 TO 714+30	MO. 13	LT	865.0	LEFT SHOULDER
705+46 TO 714+10	MO. 13	LT	795.5	RIGHT SHOULDER
		TOTAL	2255.3	
		PAY TOTAL	2256	

ADDITIONAL MOBILIZATION FOR SEEDING

EACH	4

CONCRETE APPROACH PAVEMENT

STATION	LOCATION	SIDE	QUANTITY (SY)	REMARKS
701+48 TO 701+85	MO. 13	LT	181.8	SEE STD. PLAN 504.00
705+08 TO 705+46	MO. 13	LT	181.8	SEE STD. PLAN 504.00
		PAY TOTAL	363.6	

TYPE A2 SHOULDER

STATION	LOCATION	SIDE	QUANTITY (SY)	REMARKS
700+00 TO 702+25	MO. 13	LT	313.1	LEFT SHOULDER
698+80 TO 701+48	MO. 13	LT	281.7	RIGHT SHOULDER
705+08 TO 714+30	MO. 13	LT	865.0	LEFT SHOULDER
705+46 TO 714+10	MO. 13	LT	795.5	RIGHT SHOULDER
		PAY TOTAL	2255.3	

PAVEMENT AND BASE

STATION	LOCATION	SIDE	ASPHALT SP 125C (PG 70-22) (TON)	TACK COAT (GAL)	COLDMILLING (2") (SY)	REMARKS
700+98 TO 701+48	MO. 13	LT	16.7	15.6	155.6	2" PAVEMENT
705+46 TO 705+96	MO. 13	LT	16.7	15.6	155.6	2" PAVEMENT
		TOTAL	33.4	31.2	311.2	
		PAY TOTAL	33.4	31.2	312	

EARTHWORK

STATION	LOCATION	SIDE	SUBGRADING & SHOULDERING (CLASS 2) (100 FT)	SHAPING SLOPES (CLASS 3) (100 FT)	COMPACTING IN CUT (STA)	REMARKS
698+80 TO 702+05	MO. 13	LT	3.4			SHOULDER CONSTRUCTION, LEFT & RIGHT
704+89 TO 714+30	MO. 13	LT	9.4			SHOULDER CONSTRUCTION, LEFT & RIGHT
705+21 TO 708+35	MO. 13	LT		3.1		GUARDRAIL WIDENING, LEFT & RIGHT
704+77 TO 707+90	MO. 13	LT		3.1		GUARDRAIL WIDENING, LEFT & RIGHT
701+48 TO 702+05	MO. 13	LT			0.6	ROADWAY COMPACTION, POST EXCAVATION
704+89 TO 705+46	MO. 13	LT			0.6	ROADWAY COMPACTION, POST EXCAVATION
		TOTAL	12.8	6.2	1.2	
		PAY TOTAL	13	7	1.2	

QUANTITIES
SHEET 1 OF 3

STATE OF MISSOURI
LUCAS ERSILAS ANDERSHAN
NUMBER
PE-2004011822
12/01/2025
62-0250
PROFESSIONAL ENGINEER

DATE PREPARED: 12/1/2025
ROUTE: 13 | STATE: MO
DISTRICT: SW | SHEET NO.: 3
COUNTY: POLK
JOB NO.: JSR0183
CONTRACT ID.
PROJECT NO.
BRIDGE NO.: A26812

DATE	DESCRIPTION

MISSOURI HIGHWAYS AND TRANSPORTATION COMMISSION
105 WEST CAPITOL
JEFFERSON CITY, MO 65102
1-888-ASK-MODOT (1-888-275-6636)

Taliaferro & Browne, Inc.
Civil / Structural Engineering
Landscape Architecture & Surveying
1020 E. 8th STREET
KANSAS CITY, MISSOURI 64106
PH (816) 283-2456 FAX (816) 283-0810
PROFESSIONAL ENGINEERING CORPORATION
MISSOURI LICENSE NO. 000406 KANSAS LICENSE NO. E-1481
PROFESSIONAL LANDSCAPE ARCHITECTURAL CORPORATION
MISSOURI LICENSE NO. 000094

TEMPORARY PAVEMENT MARKING

STATION	LOCATION	SIDE	4" YELLOW TEMPORARY PAVEMENT MARKING PAINT (LF)	4" WHITE TEMPORARY PAVEMENT MARKING PAINT (LF)	PAVEMENT MARKING REMOVAL (LF)	REMARKS
698+81 TO 711+00	MO. 13	LT		1219		BEGIN PHASE 3 - EAST EDGE TRAFFIC LANE
699+27 TO 731+78	MO. 13	LT	3251			BEGIN PHASE 3 - WEST EDGE TRAFFIC LANE
698+81 TO 700+98	MO. 13	LT			54	BEGIN PHASE 3 - EXIST. INTERMITTENT ℄ MARKING (LANE LINE)
705+96 TO 731+78	MO. 13	LT			646	BEGIN PHASE 3 - EXIST. INTERMITTENT ℄ MARKING (LANE LINE)
698+81 TO 711+00	MO. 13	LT			1219	BEGIN PHASE 3 - EAST EDGE EXIST LANE LINE
698+81 TO 731+78	MO. 13	LT		3297		BEGIN PHASE 4 - EAST EDGE TRAFFIC LANE
698+81 TO 714+09	MO. 13	LT	1528			BEGIN PHASE 4 - WEST EDGE TRAFFIC LANE
698+81 TO 714+09	MO. 13	LT			1528	BEGIN PHASE 4 - WEST EDGE EXIST. LANE
709+50 TO 731+78	MO. 13	LT			2228	BEGIN PHASE 4 - WEST EDGE TRAFFIC LANE
698+81 TO 700+98	MO. 13	LT			217	BEGIN PHASE 4 - TEMP. EAST EDGE TRAFFIC LANE
705+96 TO 711+00	MO. 13	LT			504	BEGIN PHASE 4 - TEMP. EAST EDGE TRAFFIC LANE
699+27 TO 700+98	MO. 13	LT			171	BEGIN PHASE 4 - TEMP. WEST EDGE TRAFFIC LANE
705+96 TO 709+50	MO. 13	LT			354	BEGIN PHASE 4 - TEMP. EDGELINE, EAST SIDE 4" WHITE/YELLOW
698+81 TO 714+09	MO. 13	LT			1528	END PHASE 4 - TEMP. WEST EDGE TRAFFIC LANE
698+81 TO 731+78	MO. 13	LT			3297	END PHASE 4 - TEMP. EAST EDGE TRAFFIC LANE
		TOTAL	4779	4516		
		PAY TOTAL	9295		11743	

CONTRACTOR FURNISHED SURVEYING & STAKING	
LUMP SUM	1

MOBILIZATION	
LUMP SUM	1

TEMPORARY EROSION CONTROL

STATION	LOCATION	SIDE	SILT FENCE (LF)	SEDIMENT REMOVAL (CY)	REMARKS
700+00 TO CREEK	MO. 13	LT	227	2.3	
698+80 TO CREEK	MO. 13	LT	300	3.0	
CREEK TO 714+30	MO. 13	LT	844	8.5	
CREEK TO 714+10	MO. 13	LT	877	8.8	
		TOTAL	2248	22.6	
		PAY TOTAL	2248	23	

PERMANENT PAVEMENT MARKING

STATION	LOCATION	SIDE	6" SOLID YELLOW CLASS 2 PAINT TYPE L BEADS (LF)	6" SOLID WHITE CLASS 2 PAINT TYPE L BEADS (LF)	REMARKS
698+81 TO 731+78	MO. 13	LT		825	3297' INTERMITTENT CENTERLINE
698+81 TO 711+00	MO. 13	LT		1219	SOLID EDGE LINE (EAST)
698+81 TO 714+10	MO. 13	LT	1529		SOLID EDGE LINE (WEST)
		PAY TOTAL	1529	2044	

MGS GUARDRAIL

STATION	LOCATION	SIDE	QUANTITY (LF)	REMARKS
705+59	MO. 13	LT	200	16 SECTIONS
705+15	MO. 13	RT	200	16 SECTIONS
		TOTAL	400	
		PAY TOTAL	400	

MGS BRIDGE APPROACH TRANSITION SECTION (SHORTENED CURB)

STATION	LOCATION	SIDE	QUANTITY (EA)	REMARKS
705+21	MO. 13	LT	1	LENGTH = 37.5'
704+78	MO. 13	RT	1	LENGTH = 37.5'
		PAY TOTAL	2	

TYPE A CRASHWORTHY END TERMINAL (MASH)

STATION	LOCATION	SIDE	QUANTITY (EA)	REMARKS
707+59	MO. 13	LT	1	LENGTH = 50'
707+15	MO. 13	RT	1	LENGTH = 50'
		PAY TOTAL	2	

QUANTITIES
SHEET 2 OF 3

STATE OF MISSOURI
BRIAN ERMIAS ANDERHIAN
NUMBER PE-2004011822
12/01/2025
62-0250
PROFESSIONAL ENGINEER

DATE PREPARED 12/1/2025
ROUTE 13 | STATE MO
DISTRICT SW | SHEET NO. 3
COUNTY POLK
JOB NO. JSR0183
CONTRACT ID.
PROJECT NO.
BRIDGE NO. A26812

DESCRIPTION	DATE

MISSOURI HIGHWAYS AND TRANSPORTATION COMMISSION
105 WEST CAPITOL
JEFFERSON CITY, MO 65102
1-888-ASK-MODOT (1-888-275-6636)

Taliaferro & Browne, Inc.
Civil / Structural Engineering
Landscape Architecture & Surveying
1020 E. 9th STREET
KANSAS CITY, MISSOURI 64106
PH (816) 283-5456 FAX (816) 283-0810
PROFESSIONAL ENGINEERING CORPORATION
MISSOURI LICENSE NO. 000406 KANSAS LICENSE NO. E-1481
PROFESSIONAL LANDSCAPE ARCHITECTURE CORPORATION
MISSOURI LICENSE NO. 000094

SIGN	SIZE IN.	AREA SQ.FT.	QTY EACH	TOTAL AREA SQ.FT.	QTY RELOC EACH	TOTAL RELOC SQ.FT.	SIGN NUM.	DESCRIPTION
WARNING SIGNS								
WO1-1L	48X48	16.00						TURN (SYMBOL LEFT)
WO1-1R	48X48	16.00						TURN (SYMBOL RIGHT)
WO1-2L	48X48	16.00						CURVE (SYMBOL LEFT)
WO1-2R	48X48	16.00						CURVE (SYMBOL RIGHT)
WO1-3L	48X48	16.00						REVERSE TURN (SYMBOL LEFT)
WO1-3R	48X48	16.00						REVERSE TURN (SYMBOL RIGHT)
WO1-4L	48X48	16.00						REVERSE CURVE (SYMBOL LEFT)
WO1-4R	48X48	16.00						REVERSE CURVE (SYMBOL RIGHT)
WO1-4bL	48X48	16.00						DOUBLE ARROW REVERSE CURVE (SYMBOL LEFT)
WO1-4bR	48X48	16.00						DOUBLE ARROW REVERSE CURVE (SYMBOL RIGHT)
WO1-4cL	48X48	16.00						TRIPLE ARROW REVERSE CURVE (SYMBOL LEFT)
WO1-4cR	48X48	16.00						TRIPLE ARROW REVERSE CURVE (SYMBOL RIGHT)
WO1-6	60X30	12.50						HORIZONTAL ARROW (SYMBOL)
WO1-6a	72X36	18.00						HORIZ. ARROW (SYMBOL ON PERMANENT BARRICADE)
WO1-7	60X30	12.50						DOUBLE HEAD HORIZONTAL ARROW (SYMBOL)
WO1-7a	72X36	18.00						DOUBLE HEAD HORIZ. ARROW (SYMBOL ON PERM. BARR.)
WO1-8	18X24	3.00						CHEVRON (SYMBOL)
WO1-8a	30X36	7.50						CHEVRON (SYMBOL FOR DIVIDED HIGHWAYS)
WO3-1	48X48	16.00						STOP AHEAD (SYMBOL)
WO3-2	48X48	16.00						YIELD AHEAD (SYMBOL)
WO3-3	48X48	16.00						SIGNAL AHEAD (SYMBOL)
WO3-4	48X48	16.00						BE PREPARED TO STOP
WO3-5	48X48	16.00	2	32.00			3	SPEED LIMIT AHEAD
WO4-1L	48X48	16.00						MERGE (SYMBOL FROM LEFT)
WO4-1R	48X48	16.00						MERGE (SYMBOL FROM RIGHT)
WO4-1aL	48X48	16.00	1	16.00	1	16.00	43	MERGE (LEFT)
WO4-1aR	48X48	16.00	1	16.00			43A	MERGE (RIGHT)
WO5-1	48X48	16.00						ROAD/BRIDGE/RAMP NARROWS
WO5-3	48X48	16.00						ONE LANE BRIDGE
WO5-5	48X48	16.00						NARROW LANES
WO6-1	48X48	16.00						DIVIDED HIGHWAY (SYMBOL)
WO6-2	48X48	16.00						DIVIDED HIGHWAY END (SYMBOL)
WO6-3	48X48	16.00						TWO WAY TRAFFIC (SYMBOL)
WO7-3a	30X24	5.00						NEXT XX MILES (PLAQUE)
WO8-1	48X48	16.00						BUMP
WO8-2	48X48	16.00						DIP
WO8-3	48X48	16.00						PAVEMENT ENDS
WO8-4	48X48	16.00						SOFT SHOULDER
WO8-5	48X48	16.00						SLIPPERY WHEN WET (SYMBOL)
WO8-6	48X48	16.00						TRUCK CROSSING
WO8-6c	48X48	16.00						TRUCK ENTRANCE
WO8-7	36X36	9.00						LOOSE GRAVEL
WO8-7a	36X36	9.00						FRESH OIL / LOOSE GRAVEL
WO8-9	48X48	16.00						LOW SHOULDER
WO8-11	48X48	16.00						UNEVEN LANES
WO8-12	48X48	16.00						NO CENTER LINE
WO8-15	48X48	16.00						GROOVED PAVEMENT
WO8-15P	30X24	5.00						MOTORCYCLE (PLAQUE)
WO8-17L	48X48	16.00						SHOULDER DROP-OFF (SYMBOL LEFT)
WO8-17R	48X48	16.00						SHOULDER DROP-OFF (SYMBOL RIGHT)
WO8-17P	30X24	5.00						SHOULDER DROP-OFF (PLAQUE)
W10-1	42RND.	9.62						RAILROAD CROSSING
WO12-1	24X24	4.00						DOUBLE DOWN ARROW (SYMBOL)
WO12-2	48X48	16.00						LOW CLEARANCE (SYMBOL)
WO12-2x	24X18	3.00						LOW CLEARANCE (PLAQUE)
WO12-2a	84X24	14.00						OVERHEAD LOW CLEARANCE (FEET AND INCHES)
WO12-4	120X60	50.00						LOW CLEARANCE XX FT XX IN XX MILES AHEAD
WO12-5	120X60	50.00						WIDTH RESTRICTION XX FT XX IN XX MILES AHEAD
WO13-1	30X30	6.25						ADVISORY SPEED (PLAQUE) 55 MPH
WO16-2	30X24	5.00						XXX FEET (PLAQUE)
WO16-3	30X24	5.00						X MILE (PLAQUE)
WO20-1	48X48	16.00	2	32.00			2	BRIDGE WORK AHEAD
WO20-2	48X48	16.00						DETOUR AHEAD
WO20-3	48X48	16.00						ROAD CLOSED AHEAD
WO20-4	48X48	16.00						ONE LANE ROAD AHEAD
WO20-5	48X48	16.00	2	32.00			5	RIGHT LANE CLOSED AHEAD
WO20-5	48X8	2.67	2	5.34			5L	LEFT LANE PLAQUE
WO20-6a	48X48	16.00	3	48.00	2	32.00	6	RIGHT LANE CLOSED
WO20-6a	36X8	2.00	2	4.00	1	2.00	6L	LEFT PLAQUE
WO21-2	36X36	9.00						FRESH OIL
WO21-5	48X48	16.00						SHOULDER WORK
WO22-1	48X48	16.00						BLASTING ZONE AHEAD
WO22-2	42X36	10.50						TURN OFF 2-WAY RADIO AND PHONE
WO22-3	42X36	10.50						END BLASTING ZONE
GO22-1	21X15	2.19	4	8.76			62	WET PAINT (ARROW PIVOTS)

SIGN	SIZE IN.	AREA SQ.FT.	QTY EACH	TOTAL SQ.FT.	QTY RELOC EACH	TOTAL RELOC SQ.FT.	SIGN NUM.	DESCRIPTION
GUIDE SIGNS								
E05-1	36X48	12.00						GORE EXIT
E05-2	48X36	12.00						EXIT OPEN
E05-2a	48X36	12.00						EXIT CLOSED
GO20-1	60X24	10.00	2	20.00			1	ROAD WORK NEXT 2 MILES
GO20-2	48X24	8.00	2	16.00			26	END ROAD WORK
GO20-4	36X18	4.50						PILOT CAR FOLLOW ME
GO20-4a	42X30	8.75						PILOT CAR IN USE WAIT & FOLLOW
GO20-4a	18X12	1.50						PILOT CAR IN USE WAIT & FOLLOW
GO20-5aP	36X24	6.00						WORK ZONE (PLAQUE)
MO4-8a	24X18	3.00						END DETOUR
MO4-9L	48X36	12.00						DETOUR (LEFT)
MO4-9R	48X36	12.00						DETOUR (RIGHT)
MO4-9P	48X12	4.00						STREET NAME (PLAQUE)
MO4-10L	48X18	6.00						DETOUR ARROW (LEFT)
MO4-10R	48X18	6.00						DETOUR ARROW (RIGHT)
REGULATORY SIGNS								
R1-1	48X48	13.25						STOP
R1-2	48TRI.	6.93						YIELD
R1-2a	36X36	9.00						TO ONCOMING TRAFFIC (PLAQUE)
R1-3P	30X12	2.50						ALL WAY (PLAQUE)
R2-1	36X48	12.00	2	24.00			4	SPEED LIMIT 55 MPH
R3-1	48X48	16.00						NO RIGHT TURN (SYMBOL)
R3-2	48X48	16.00						NO LEFT TURN (SYMBOL)
R3-3	36X36	9.00						NO TURNS
R3-4	48X48	16.00						NO U-TURN (SYMBOL)
R3-7L	30X30	6.25						LEFT LANE MUST TURN LEFT
R3-7R	30X30	6.25						RIGHT LANE MUST TURN RIGHT
R4-1	36X48	12.00						DO NOT PASS
R4-2	36X48	12.00						PASS WITH CARE
R4-7a	36X48	12.00						KEEP RIGHT (HORIZONTAL ARROW)
R4-8a	36X48	12.00						KEEP LEFT (HORIZONTAL ARROW)
R5-1	30X30	6.25						DO NOT ENTER
R5-1a	36X24	6.00						WRONG WAY
R6-1L	54X18	6.75						ONE WAY ARROW (LEFT)
R6-1R	54X18	6.75						ONE WAY ARROW (RIGHT)
R6-2L	24X30	5.00						ONE WAY (LEFT)
R6-2R	24X30	5.00						ONE WAY (RIGHT)
R9-9	24X12	2.00						SIDEWALK CLOSED
R9-11L	24X18	3.00						SIDEWALK CLOSED AHEAD, (ARROW LEFT) CROSS HERE
R9-11R	24X18	3.00						SIDEWALK CLOSED AHEAD, (ARROW RIGHT) CROSS HERE
R10-6	24X36	6.00						STOP HERE ON RED (45^ ARROW)
R11-2	48X30	10.00	2	20.00	2	20.00	29	ROAD CLOSED
R11-3a	60X30	12.50						ROAD CLOSED 1 MILE AHEAD LOCAL TRAFFIC ONLY
R11-4	60X30	12.50						ROAD CLOSED TO THRU TRAFFIC
CONST-3A	60X48	20.00						FINE SIGN
CONST-3X	56X12	4.67						SPEEDING/PASSING (PLATE)
MISCELLANEOUS SIGNS								
CONST-5	48X36	12.00						POINT OF PRESENCE
CONST-5	96X48	32.00	1	32.00			58A	POINT OF PRESENCE
CONST-8	48X36	12.00	2	24.00			70	WORK ZONE NO PHONE ZONE
SPECIAL	48X48	16.00	2	32.00			71	RUMBLE STRIPS AHEAD
CONST-5P	60X8	3.33	1	3.33			58B	COMPLETED AS PROMISED
R2-1	36X48	12.00	2	24.00			25	SPEED LIMIT 65 MPH

616-10.05 CONSTRUCTION SIGNS	TOTAL	390
616-10.10 RELOCATED SIGNS	TOTAL	70

EFFECTIVE: 07-01-2025

ITEM NUMBER	TOTAL QTY	DESCRIPTION
6122008		IMPACT ATTENUATOR 40 MPH (SAND BARRELS)
6122009		IMPACT ATTENUATOR 45 MPH (SAND BARRELS)
6122010		IMPACT ATTENUATOR 50 MPH (SAND BARRELS)
6122012		IMPACT ATTENUATOR 55 MPH (SAND BARRELS)
6122014		IMPACT ATTENUATOR 60 MPH (SAND BARRELS)
6122017	1	IMPACT ATTENUATOR 65 MPH (SAND BARRELS)
6122019		IMPACT ATTENUATOR 70 MPH (SAND BARRELS)
6122020	1	REPLACEMENT SAND BARREL
6122030	1	IMPACT ATTENUATOR (RELOCATION)
6122040		WORK ZONE CRASH CUSHION (NARROW)
6122041		WORK ZONE CRASH CUSHION (RELOCATION)
6123001	1	TRUCK MOUNTED ATTENUATOR (TMA)
6161012		BUOYS (BOATS KEEP OUT)
6161013		BUOYS (NO WAKE)
6161014		SPECIAL SIGN ASSEMBLY (BOATS KEEP OUT)
6161020		CHANNELIZER (DRUM-LIKE)
6161022		CHANNELIZER (CONE)
6161025	32	CHANNELIZER (TRIM-LINE)
6161026		CHANNELIZER (VERTICAL PANEL)
6161030	2	TYPE 3 MOVEABLE BARRICADE
6161033	15	DIRECTIONAL INDICATOR BARRICADE
6161040	1	FLASHING ARROW PANEL
6161047		TYPE 3 OBJECT MARKER
6161055	15	SEQUENTIAL FLASHING WARNING LIGHT
6161070		TUBULAR MARKER
6161095		RADAR SPEED ADVISORY SYSTEM
6161096		CHANGEABLE MESSAGE SIGN, COMMISSION FURNISHED/RETAINED
6161098A		CHANGEABLE MESSAGE SIGN WITHOUT COMM. INTERFACE, CONTRACTOR FURNISHED/RETAINED
6161099	1	CHANGEABLE MESSAGE SIGN WITH COMM. INTERFACE, CONTRACTOR FURNISHED/RETAINED
6162000A		WORK ZONE TRAFFIC SIGNAL SYSTEM
6162002	2	TEMPORARY LONG-TERM RUMBLE STRIPS
6173600D	639	TEMPORARY TRAFFIC BARRIER CONTRACTOR FURNISHED/RETAINED
6173700B	283	TEMP. TRAFFIC BARRIER ANCHORED, CONTRACTOR FURNISHED/RETAINED
6173706		TEMP. TRAFFIC BARRIER STIFFNESS TRANSITION CONTRACTOR FURNISHED/RETAINED
6174000A		TEMP. TRAFFIC BARRIER HEIGHT TRANSITION CONTRACTOR FURNISHED/RETAINED
6175010A	870*	RELOCATING TEMPORARY TRAFFIC BARRIER
6175011B		RELOCATING TEMP. TRAFFIC BARRIER ANCHORED
6175013		RELOCATING TEMP. TRAFFIC BARRIER STIFFNESS
6175020A		RELOCATING TEMP. TRAFFIC BARRIER HEIGHT
6208064A		TEMPORARY RAISED PAVEMENT MARKER
9029400		TEMPORARY TRAFFIC SGNALS
9029401		TEMPORARY TRAFFIC SIGNALS AND LIGHTING

*NOTE: PHASE 3-
283 FT. TRAFFIC BARRIER (ANCHORED)
TO BE RELOCATED AND USED AS
(NON-ANCHORED) IN PHASE 4.

QUANTITIES
SHEET 3 OF 3

STATE OF MISSOURI
JASON FERMAS
AND BRIAN
NUMBER
PE-2004014822
12/01/2025
62-0250
PROFESSIONAL ENGINEER

DATE PREPARED 12/1/2025
ROUTE 13 | STATE MO
DISTRICT SW | SHEET NO. 3
COUNTY POLK
JOB NO. JSR0183
CONTRACT ID.
PROJECT NO.
BRIDGE NO. A26812

DESCRIPTION | DATE

MISSOURI HIGHWAYS AND TRANSPORTATION COMMISSION
105 WEST CAPITOL
JEFFERSON CITY, MO 65102
1-888-ASK-MODOT (1-888-275-6636)

Taliaferro & Browne, Inc.
Civil / Structural Engineering
Landscape Architecture & Surveying
1020 E. 8th STREET
KANSAS CITY, MISSOURI 64106
PH (816) 283-3456 FAX (816) 283-0810
PROFESSIONAL ENGINEERING CORPORATION
MISSOURI LICENSE NO. 000646 KANSAS LICENSE NO. E-1481
PROFESSIONAL LANDSCAPE ARCHITECTURAL CORPORATION
MISSOURI LICENSE NO. 000094

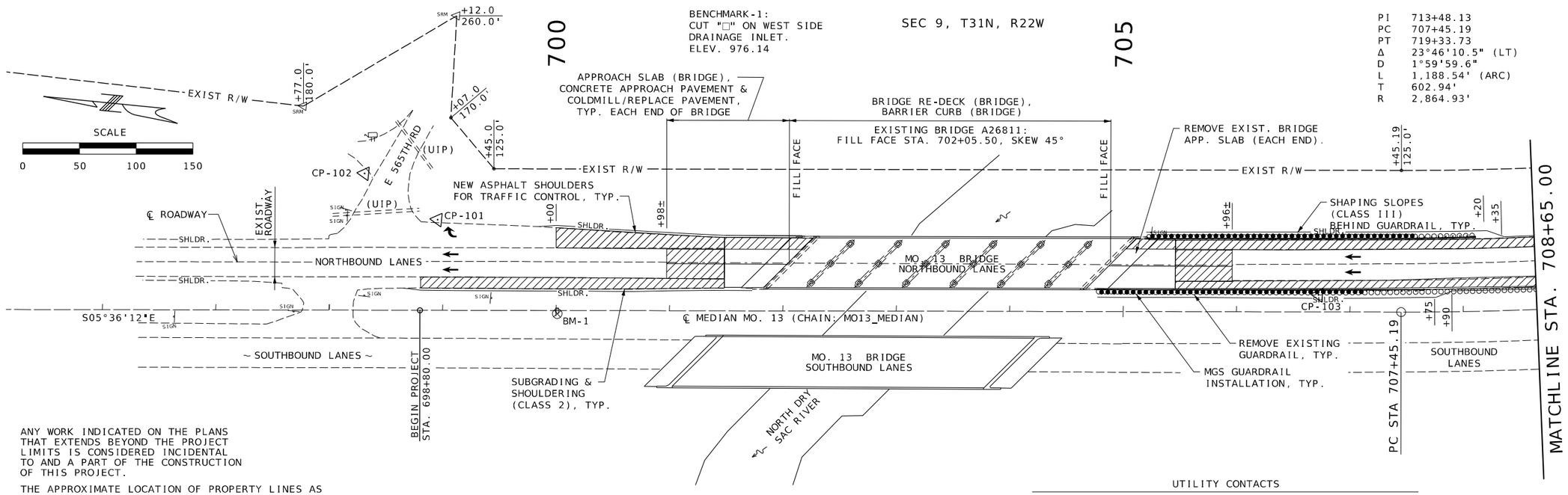

ANY WORK INDICATED ON THE PLANS THAT EXTENDS BEYOND THE PROJECT LIMITS IS CONSIDERED INCIDENTAL TO AND A PART OF THE CONSTRUCTION OF THIS PROJECT.

THE APPROXIMATE LOCATION OF PROPERTY LINES AS SHOWN ON THE PLANS ARE BASED ON THE BEST INFORMATION AVAILABLE TO THE COMMISSION AT THIS TIME. THIS INFORMATION IS PROVIDED BY THE COMMISSION "AS-IS" AND THE COMMISSION EXPRESSLY DISCLAIMS ANY REPRESENATION OR WARRANTY AS TO THE COMPLETENESS, ACCURACY, OR SUITABILITY OF THE INFORMATION FOR ANY USE.

UTILITY CONTACTS

ELECTRIC:	INTERNET:
WINDSTREAM	TOTAL HIGH SPEED INTERNET
STEVEN MOORE	CHRIS HARNESS
1705 S LILLIAN AVE	1091 W KATHRYN ST
BOLIVAR, MO 65613	NIXA, MISSOURI 65714
417-599-9233	417-720-0676
STEVENMOORE@WINDSTREAM.COM	CHARNESS@TOTALHIGHSPEED.NET

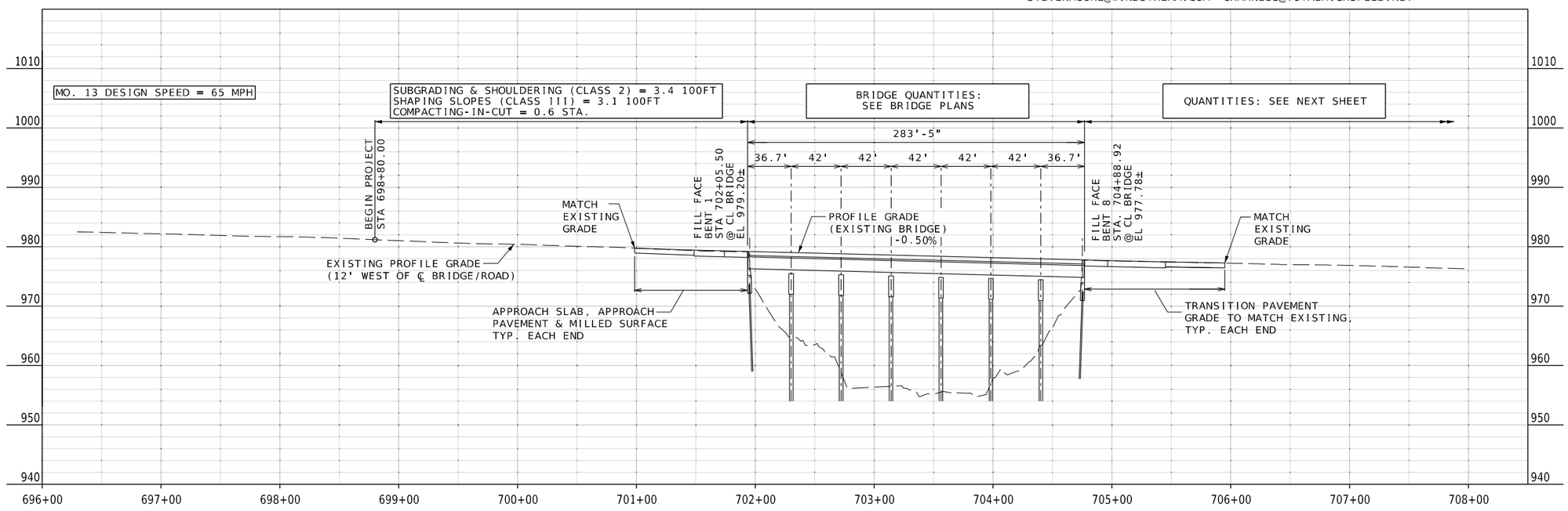

PLAN-PROFILE
SHEET 1 OF 2

STATE OF MISSOURI
SCOTT MICHAEL MCDONALD NUMBER PE-2018000240
PROFESSIONAL ENGINEER

THIS SHEET HAS BEEN SIGNED, SEALED AND DATED ELECTRONICALLY.

DATE PREPARED	
12/1/2025	
ROUTE 13	STATE MO
DISTRICT SW	SHEET NO. 4
COUNTY POLK	
JOB NO. JSR0183	
CONTRACT ID.	
PROJECT NO.	
BRIDGE NO. A26812	

DESCRIPTION

DATE

MISSOURI HIGHWAYS AND TRANSPORTATION COMMISSION
105 WEST CAPITOL
JEFFERSON CITY, MO 65102
1-888-ASK-MODOT (1-888-275-6636)

VEENSTRA & KIMM INC.
A Kleinfelder Company
9788 N Ash Avenue Kansas City, Missouri 64157
816-781-6182 816-781-0643 (FAX)
Certificate of Authority No. 2002006347

004_PP_01-02_JSR0183_PlanProf.dgn 2:23:03 PM 12/1/2025

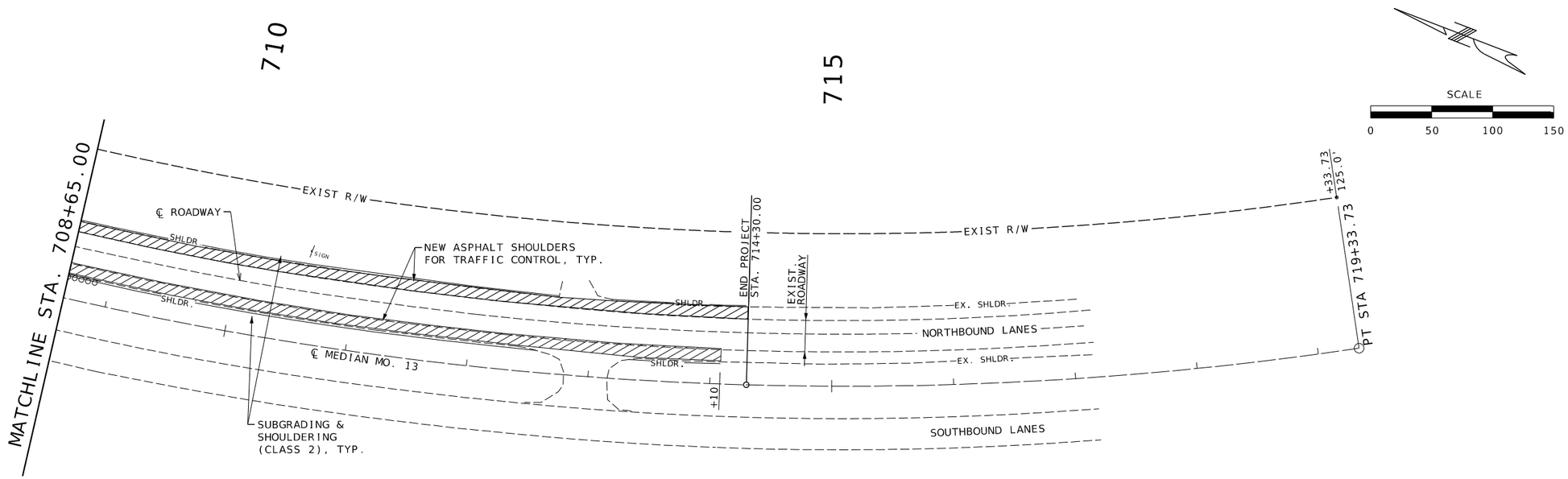

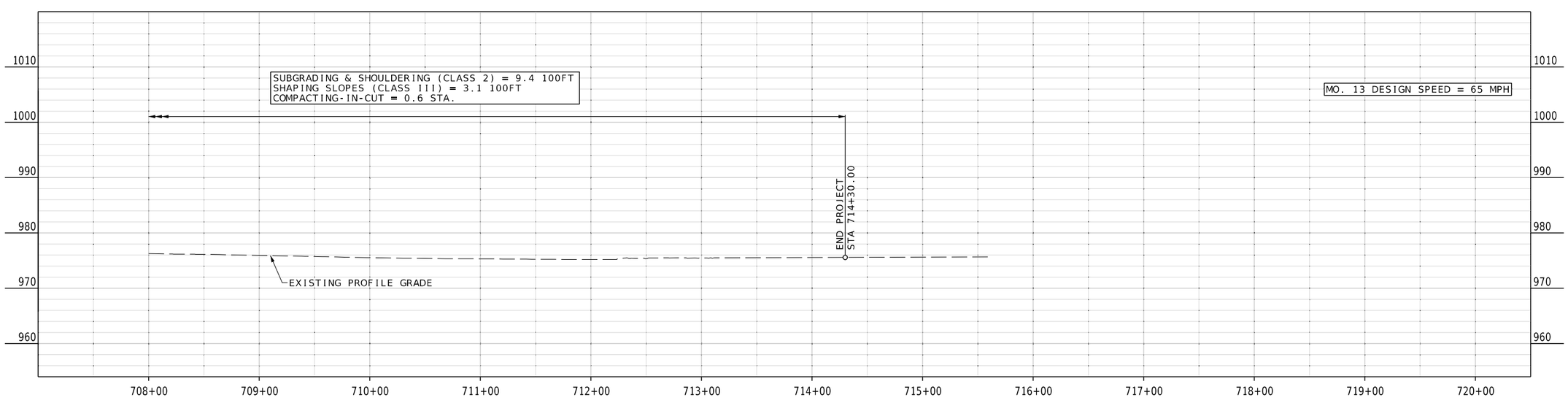

PLAN-PROFILE
SHEET 2 OF 2

STATE OF MISSOURI
SCOTT MICHAEL MCDONALD NUMBER PE-2018000240
PROFESSIONAL ENGINEER

THIS SHEET HAS BEEN SIGNED, SEALED AND DATED ELECTRONICALLY.

DATE PREPARED	
12/1/2025	
ROUTE 13	STATE MO
DISTRICT SW	SHEET NO. 5
COUNTY POLK	
JOB NO. JSR0183	
CONTRACT ID.	
PROJECT NO.	
BRIDGE NO. A26812	

DESCRIPTION	DATE

MISSOURI HIGHWAYS AND TRANSPORTATION COMMISSION
105 WEST CAPITOL
JEFFERSON CITY, MO 65102
1-888-ASK-MODOT (1-888-275-6636)

VEENSTRA & KIMM INC.
A Kleinfelder Company
9788 N Ash Avenue Kansas City, Missouri 64157
816-781-6182 816-781-0643 (FAX)
Certificate of Authority No. 2002006347

004_PP_01-02_JSR0183_PlanProf.dgn 2:23:04 PM 12/1/2025

ELEV. 980.54

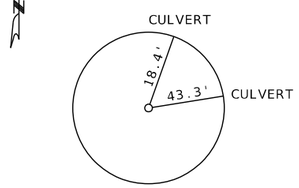

CONTROL POINT - 101
REBAR WITH CAP

ELEV. 986.12

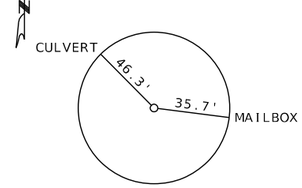

CONTROL POINT - 102
COTTON PICKER SPINDLE

ELEV. 976.25

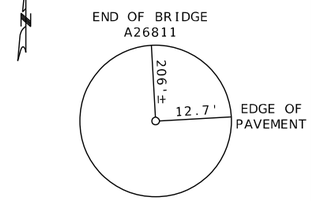

CONTROL POINT - 103
REBAR WITH CAP

REFERENCE POINTS
SHEET 1 OF 1

STATE OF MISSOURI
SCOTT MICHAEL MCDONALD
NUMBER
PE-2018000240
PROFESSIONAL ENGINEER

THIS SHEET HAS BEEN SIGNED, SEALED AND DATED ELECTRONICALLY.

DATE PREPARED	
12/1/2025	
ROUTE	STATE
13	MO
DISTRICT	SHEET NO.
SW	6
COUNTY	
POLK	
JOB NO.	
JSR0183	
CONTRACT ID.	
PROJECT NO.	
BRIDGE NO.	
A26812	

DESCRIPTION	DATE

MISSOURI HIGHWAYS AND TRANSPORTATION COMMISSION
MoDOT
105 WEST CAPITOL
JEFFERSON CITY, MO 65102
1-888-ASK-MODOT (1-888-275-6636)

VEENSTRA & KIMM INC.
A Kleinfelder Company
9788 N Ash Avenue Kansas City, Missouri 64157
816-781-6182 816-781-0643 (FAX)
Certificate of Authority No. 2002006347

006_RP_01_JSR0183_ReferencePoints.dgn 2:23:05 PM 12/1/2025

ALL PROJECT COORDINATES HAVE BEEN PROJECTED FROM THE MISSOURI STATE PLANE COORDINATE (SPC) SYSTEM OF 1983 USING AN AVERAGE PROJECT PROJECTION (GRID TO GROUND) FACTOR. TO GET BACK TO STATE PLANE COORDINATES MULTIPLY THE PROJECT COORDINATES BY THE AVERAGE GRID FACTOR AS SHOWN IN THE "REFERENCE CONTROL INFORMATION" PORTION OF THIS TABLE.

PROJECT COORDINATE INFORMATION

COORDINATE SYSTEM	MODIFIED STATE PLANE
HORIZONTAL DATUM	NAD83
VERTICAL DATUM	NAVD88
GEOID MODEL	GEOID18
ELEVATIONS DETERMINED BY	GNSS
PROJECT PROJECTION FACTOR	1.0000442

REFERENCE CONTROL INFORMATION

COORDINATE SYSTEM	MODIFIED STATE PLANE
CONTROL STATION	
DESIGNATION	MODOT SPRINGFIELD CORS ARP
CORS_ID	MOSF
PID	DL5388
LATITUDE	37°14'30.33454"
LONGITUDE	93°13'47.54333"
NORTHING (M)	156,530.873
EASTING (M)	435,242.882
ZONE	2402 (MO-CENTRAL)
PROJECT AVERAGE GRID FACTOR	0.99992269

EXAMPLE OF PROJECT COORDINATE TO S.P.C.

PROJECT NORTHING X AVERAGE GRID FACTOR
= STATE PLANE NORTHING
PROJECT EASTING X AVERAGE GRID FACTOR
= STATE PLANE EASTING

EXAMPLE: CONTROL POINT #101
N 582,442.79 X 0.99992269 = N 582,397.76
E 1,392,266.89 X 0.99992269 = E 1,392,159.25

LINEAR UNIT CONVERSION

1 METER = 3.280833333 US SURVEY FEET (USFT)

COORDINATE POINT LISTING

SHEET NO	STATION	LOCATION	OFFSET (USFT)	MODIFIED STATE PLANE (GROUND) NORTHING (US SURVEY FT)	EASTING (US SURVEY FT)	ELEVATION (US SURVEY FT)	DESCRIPTION	GPK POINT ID
PROJECT CONTROL POINTS								
4	698+95.46	℄ MEDIAN MO 13	80.0 LT	582,442.79	1,392,266.89	980.54	REBAR WITH CAP	101
4	698+31.04	℄ MEDIAN MO 13	120.7 LT	582,510.87	1,392,301.09	986.12	COTTON PICKER SPINDLE	102
4	706+72.28	℄ MEDIAN MO 13	15.0 LT	581,663.34	1,392,278.07	976.25	REBAR WITH CAP	103
ALIGNMENTS								
4	698+80.00	℄ MEDIAN MO 13	0.0	582,450.36	1,392,185.77	-	BEGIN PROJECT	
4	714+30.00	℄ MEDIAN MO 13	0.0	580,922.19	1,392,417.54	-	END PROJECT	

COORDINATE POINTS
SHEET 1 OF 1

STATE OF MISSOURI
SCOTT MICHAEL MCDONALD
NUMBER PE-2018000240
PROFESSIONAL ENGINEER

THIS SHEET HAS BEEN SIGNED, SEALED AND DATED ELECTRONICALLY.

DATE PREPARED	12/1/2025
ROUTE 13	STATE MO
DISTRICT SW	SHEET NO. 7
COUNTY	POLK
JOB NO.	JSR0183
CONTRACT ID.	
PROJECT NO.	
BRIDGE NO.	A26812

DESCRIPTION
DATE

MISSOURI HIGHWAYS AND TRANSPORTATION COMMISSION
105 WEST CAPITOL
JEFFERSON CITY, MO 65102
1-888-ASK-MODOT (1-888-275-6636)

VEENSTRA & KIMM INC.
A Kleinfelder Company
9788 N Ash Avenue Kansas City, Missouri 64157
816-781-6182 816-781-0643 (FAX)
Certificate of Authority No. 2002006347

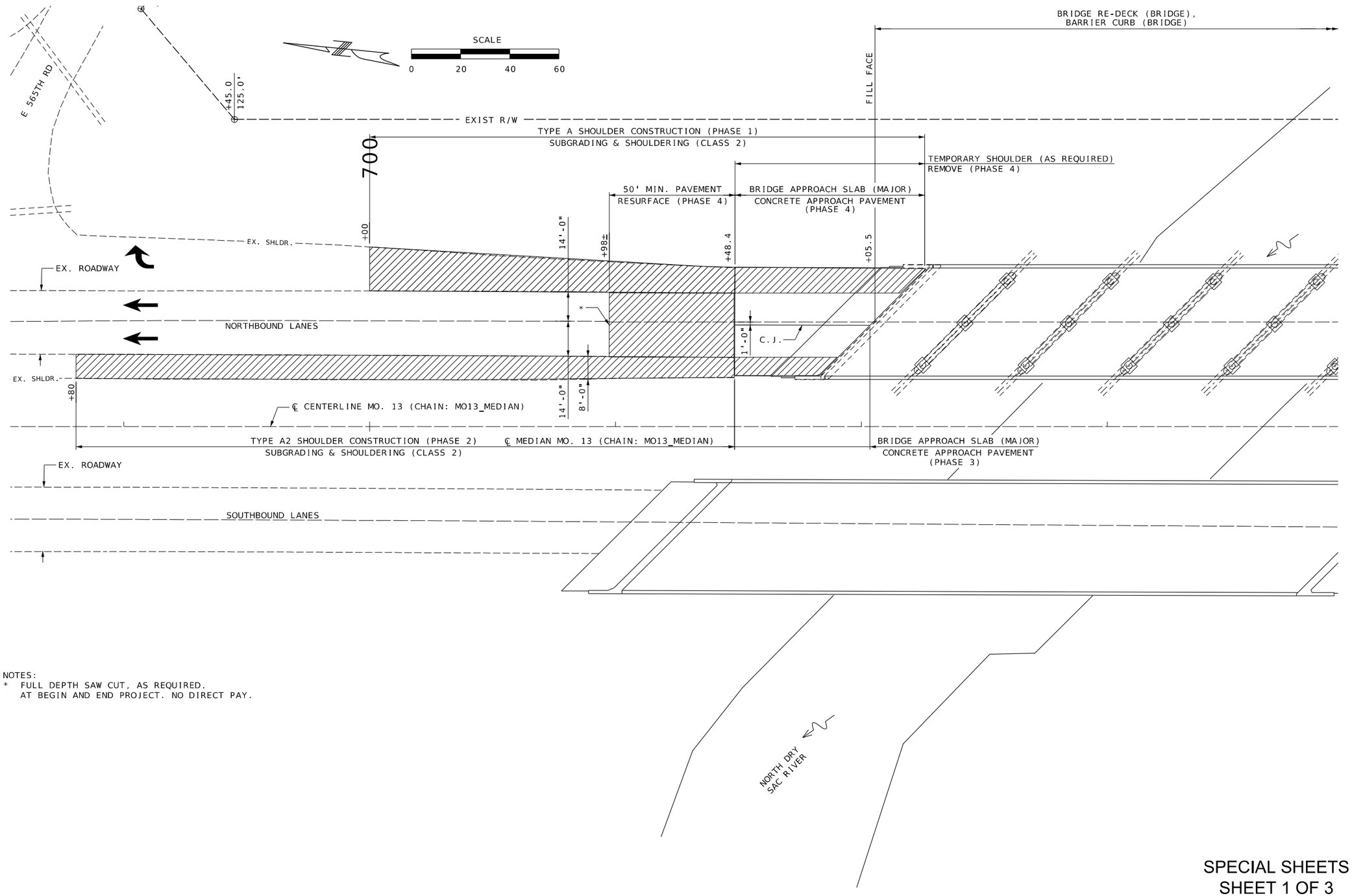

NOTES:
* FULL DEPTH SAW CUT, AS REQUIRED.
AT BEGIN AND END PROJECT. NO DIRECT PAY.

SPECIAL SHEETS
SHEET 1 OF 3

STATE OF MISSOURI
DAVID ERMILAS ANDERSEN
NUMBER
PE-2006031832
12/01/2025
62-0250
PROFESSIONAL ENGINEER

DATE PREPARED	12/1/2025
ROUTE	13
STATE	MO
DISTRICT	SW
SHEET NO.	8
COUNTY	POLK
JOB NO.	JSR0183
CONTRACT ID.	
PROJECT NO.	
BRIDGE NO.	A26812

DATE	DESCRIPTION

MISSOURI HIGHWAYS AND TRANSPORTATION COMMISSION
105 WEST CAPITOL
JEFFERSON CITY, MO 65102
1-888-ASK-MODOT (1-888-275-6636)

Taliaferro & Browne, Inc.
Civil / Structural Engineering
Landscape Architecture & Surveying
1020 E. 8th STREET
KANSAS CITY, MISSOURI 64106
PH (816) 283-5456 FAX (816) 283-0810
PROFESSIONAL ENGINEERING CORPORATION
MISSOURI LICENSE NO. 000446 KANSAS LICENSE NO. E-1481
PROFESSIONAL LANDSCAPE ARCHITECTURAL CORPORATION
MISSOURI LICENSE NO. 000094

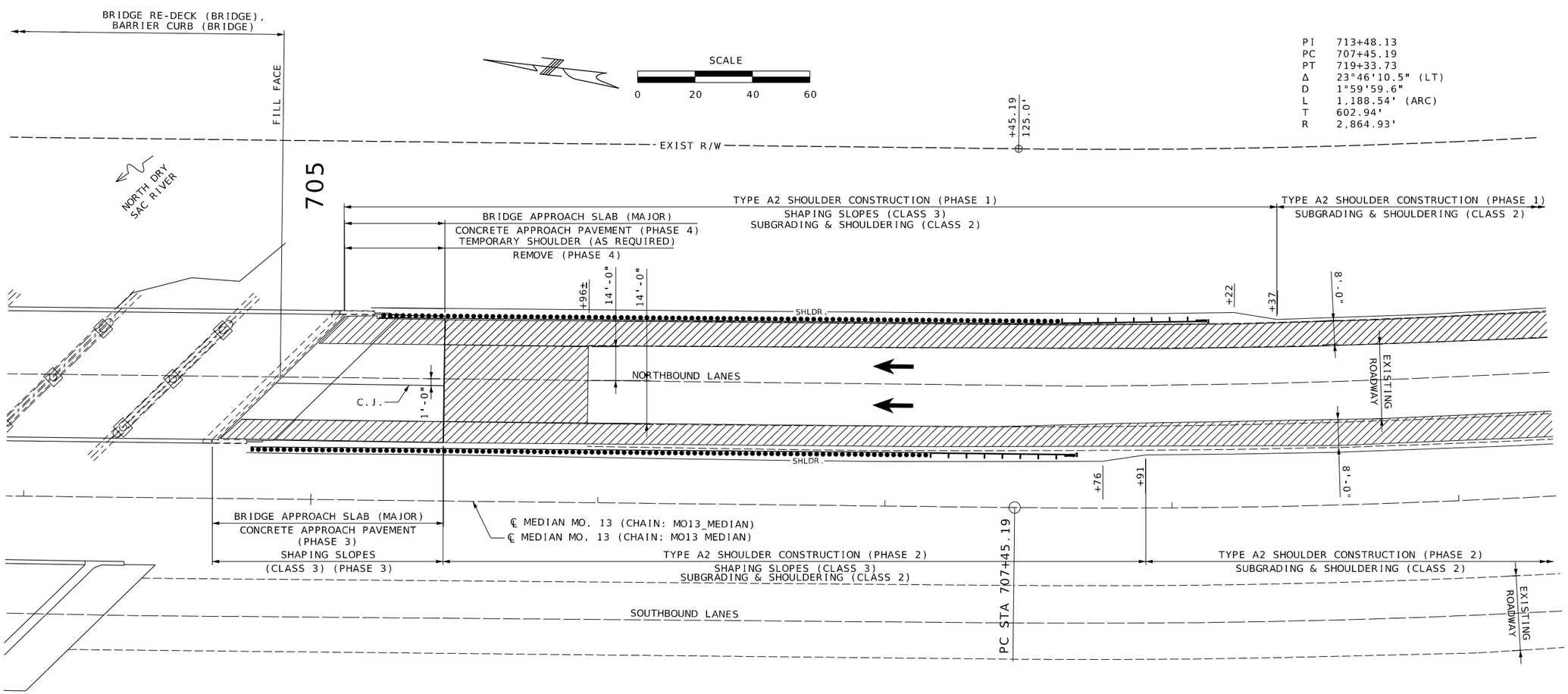

GUARDRAIL INSTALLATION (EACH SIDE):

1 EACH - MGS BRIDGE APPROACH TRANSITION (SHORTENED CURB) (37.5')
1 EACH - TYPE A CRASHWORTHY END TERMINAL (MASH 50.8')
16 EACH - MGS GUARDRAIL (200.00')

SPECIAL SHEETS
SHEET 2 OF 3

STATE OF MISSOURI
DAVIN ERMIAS ANDERSHAN
SUNGHER
PE-2006011832
12/01/2025
62-0250
PROFESSIONAL ENGINEER

DATE PREPARED	12/1/2025
ROUTE	13
STATE	MO
DISTRICT	SW
SHEET NO.	9
COUNTY	POLK
JOB NO.	JSR0183
CONTRACT ID.	
PROJECT NO.	
BRIDGE NO.	A26812

DATE	DESCRIPTION

MISSOURI HIGHWAYS AND TRANSPORTATION COMMISSION
105 WEST CAPITOL
JEFFERSON CITY, MO 65102
1-888-ASK-MODOT (1-888-275-6636)

Taliaferro & Browne, Inc.
Civil / Structural Engineering,
Landscape Architecture & Surveying
1020 E. 8th STREET
KANSAS CITY, MISSOURI 64106
PH (816) 283-2456 FAX (816) 283-0810
PROFESSIONAL ENGINEERING CORPORATIONS
MISSOURI LICENSE NO. 000846 KANSAS LICENSE NO. E-1481
PROFESSIONAL LANDSCAPE ARCHITECTURAL CORPORATIONS
MISSOURI LICENSE NO. 000094

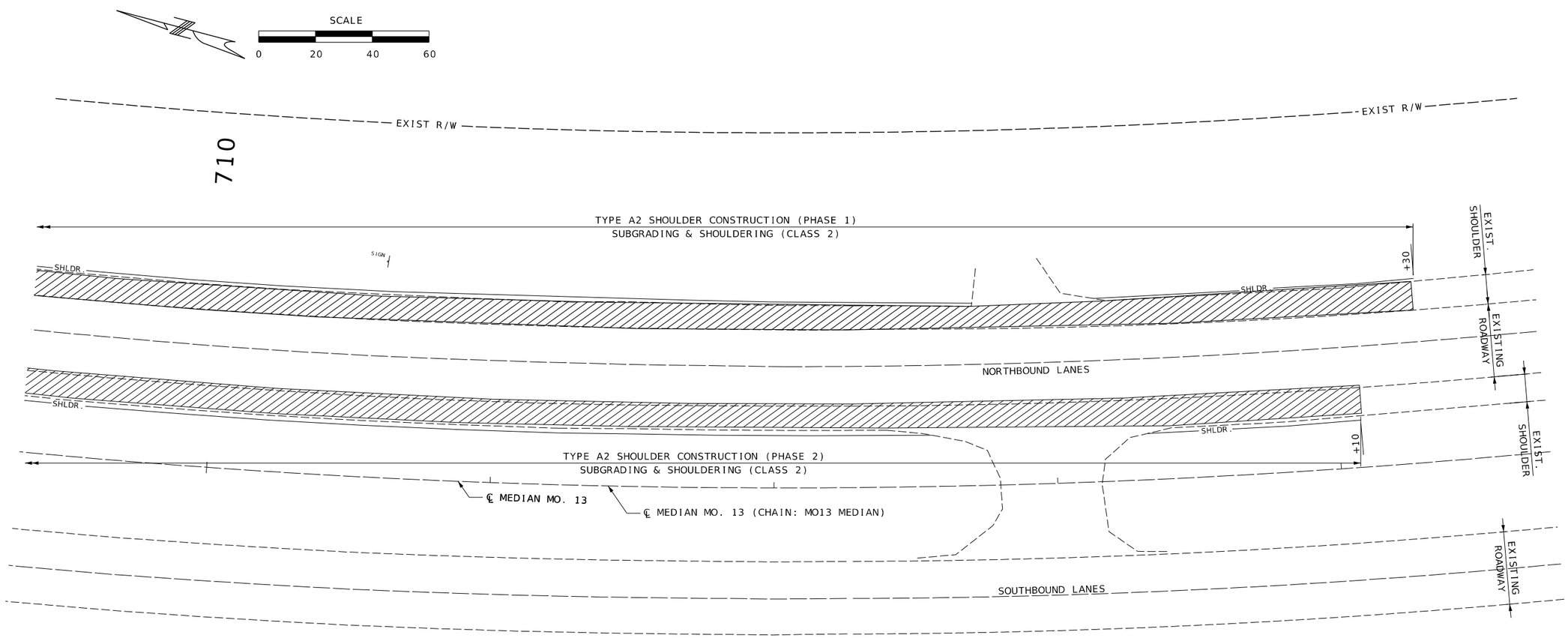

SPECIAL SHEETS
SHEET 3 OF 3

STATE OF MISSOURI
DAGON ERMLAS ANDERSLAN
NUMBER
PE-2004011822
12/01/2025
62-0250
PROFESSIONAL ENGINEER

DATE PREPARED	12/1/2025
ROUTE	13
STATE	MO
DISTRICT	SW
SHEET NO.	10
COUNTY	POLK
JOB NO.	JSR0183
CONTRACT ID.	
PROJECT NO.	
BRIDGE NO.	A26812

DATE	DESCRIPTION

MISSOURI HIGHWAYS AND TRANSPORTATION COMMISSION
105 WEST CAPITOL
JEFFERSON CITY, MO 65102
1-888-ASK-MODOT (1-888-275-6636)

Taliaferro & Browne, Inc.
Civil / Structural Engineering
Landscape Architecture & Surveying
1020 E. 8th STREET
KANSAS CITY, MISSOURI 64106
PH (816) 283-5456 FAX (816) 283-0810
PROFESSIONAL ENGINEERING CORPORATION
MISSOURI LICENSE NO. 000846 KANSAS LICENSE NO. E-1481
PROFESSIONAL LANDSCAPE ARCHITECTURE CORPORATION
MISSOURI LICENSE NO. 000094

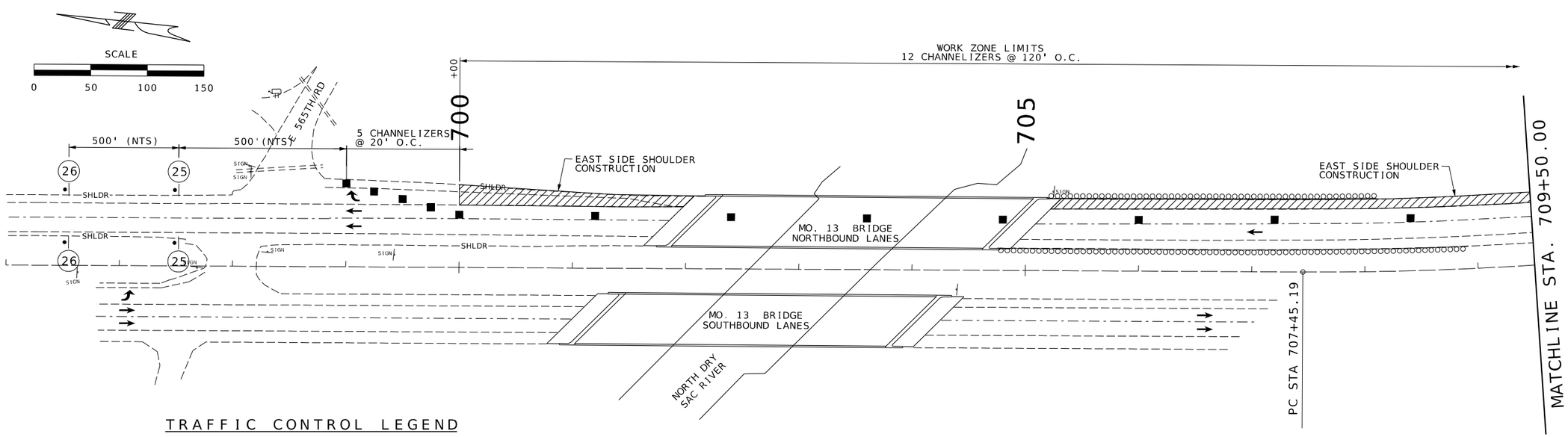

TRAFFIC CONTROL LEGEND

- PROPOSED SIGN (SINGLE SIDED)
- EXISTING SIGN (SINGLE SIDED)
- CHANNELIZER
- DIRECTIONAL INDICATOR BARRICADE
- TUBULAR MARKERS
- TYPE III MOVEABLE BARRICADE
- SEQUENTIAL FLASHING WARNING LIGHT
- TEMPORARY CONCRETE TRAFFIC BARRIER (TYPE F)
- IMPACT ATTENUATOR 65 MPH (SAND BARRELS)
- VEHICLE WITH TRAILER MOUNTED ATTENUATOR
- CHANGEABLE MESSAGE BOARD
- FLASHING ARROW PANEL
- TEMPORARY LONG-TERM RUMBLE STRIPS

CONSTRUCTION PHASING: NORTHBOUND LANES BRIDGE NO. A26812

PHASE 1- CONSTRUCT NEW ROADWAY SHOULDERS ON EAST SIDE OF ROADWAY, SHOULDERS TO BE UTILIZED FOR TEMPORARY CONSTRUCTION TRAFFIC. USE STATIONARY LANE CLOSURE ON EAST SIDE OF ROADWAY, EPG FIGURE 616.8.33S (TA-33S).

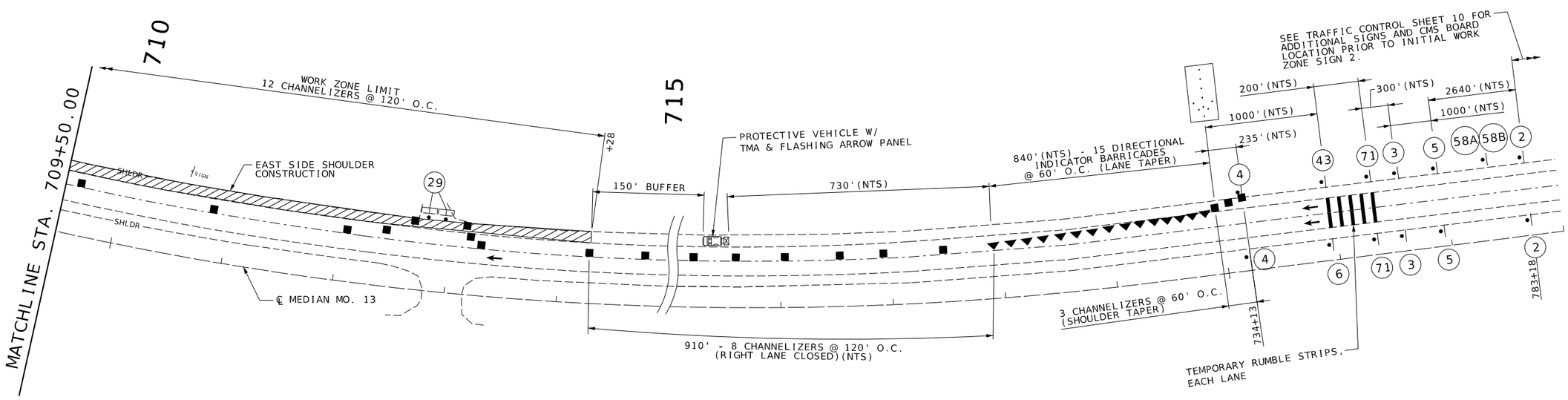

PHASE 1 TRAFFIC CONTROL

(NTS): NOT TO SCALE

PHASE 1

TRAFFIC CONTROL SHEET 1 OF 11

STATE OF MISSOURI
HAGON ERMIAS ANDEBRHAN
NUMBER PE-2003011822
12/01/2025
62-0250
PROFESSIONAL ENGINEER

DATE PREPARED	
12/1/2025	
ROUTE 13	STATE MO
DISTRICT SW	SHEET NO. 11
COUNTY POLK	
JOB NO. JSR0183	
CONTRACT ID.	
PROJECT NO.	
BRIDGE NO. A26812	

DATE	DESCRIPTION

MISSOURI HIGHWAYS AND TRANSPORTATION COMMISSION
105 WEST CAPITOL
JEFFERSON CITY, MO 65102
1-888-ASK-MODOT (1-888-275-6636)

Taliaferro & Browne, Inc.
Civil / Structural Engineering
Landscape Architecture & Surveying
1020 E. 8th STREET
KANSAS CITY, MISSOURI 64106
PH (816) 283-5456 FAX (816) 283-0810
PROFESSIONAL ENGINEERING CORPORATION
MISSOURI LICENSE NO. 000846 KANSAS LICENSE NO. E-1481
PROFESSIONAL LANDSCAPE ARCHITECTURE
MISSOURI LICENSE NO. 000094

CONSTRUCTION PHASING: NORTHBOUND LANES BRIDGE NO. A26812

PHASE 2- CONSTRUCT NEW ROADWAY SHOULDERS ON WEST SIDE OF ROADWAY. SHOULDERS TO BE UTILIZED FOR TEMPORARY CONSTRUCTION TRAFFIC. USE STATIONARY LANE CLOSURE ON WEST SIDE OF ROADWAY. EPG FIGURE 616.8.33S (TA-33S).

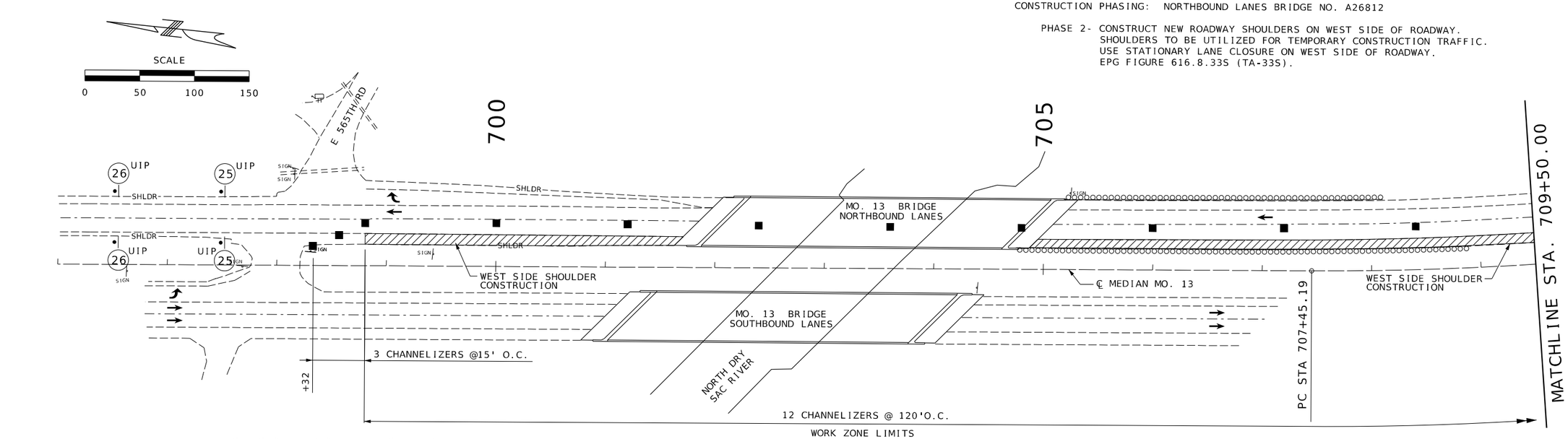

TRAFFIC CONTROL LEGEND

- PROPOSED SIGN (SINGLE SIDED)
- EXISTING SIGN (SINGLE SIDED)
- CHANNELIZER
- DIRECTIONAL INDICATOR BARRICADE
- TUBULAR MARKERS
- TYPE III MOVEABLE BARRICADE
- SEQUENTIAL FLASHING WARNING LIGHT
- TEMPORARY CONCRETE TRAFFIC BARRIER (TYPE F)
- IMPACT ATTENUATOR 65 MPH (SAND BARRELS)
- VEHICLE WITH TRAILER MOUNTED ATTENUATOR
- CHANGEABLE MESSAGE BOARD
- FLASHING ARROW PANEL
- TEMPORARY LONG-TERM RUMBLE STRIPS

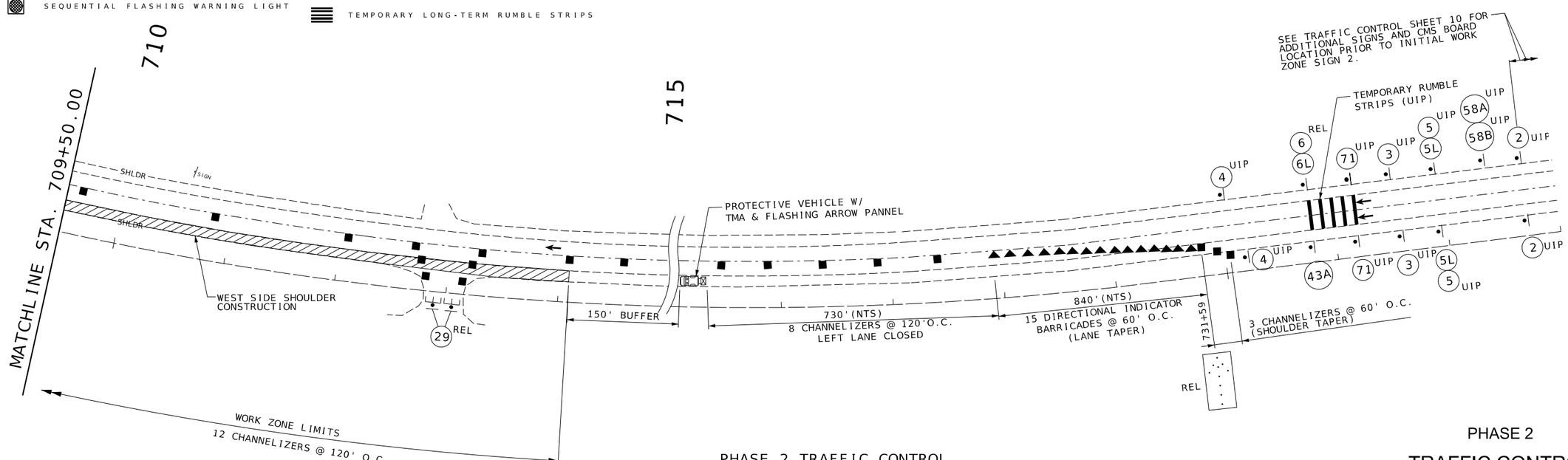

PHASE 2 TRAFFIC CONTROL

(NTS):NOT TO SCALE

PHASE 2

TRAFFIC CONTROL SHEET 2 OF 11

DATE PREPARED	12/1/2025
ROUTE	13
STATE	MO
DISTRICT	SW
SHEET NO.	12
COUNTY	POLK
JOB NO.	JSR0183
CONTRACT ID.	
PROJECT NO.	
BRIDGE NO.	A26812

DESCRIPTION

DATE

MISSOURI HIGHWAYS AND TRANSPORTATION COMMISSION
105 WEST CAPITOL
JEFFERSON CITY, MO 65102
1-888-ASK-MODOT (1-888-275-6636)

Taliaferro & Browne, Inc.
Civil / Structural Engineering
Landscape Architecture & Surveying
1020 E. 8th STREET
KANSAS CITY, MISSOURI 64106
PH (816) 283-5456 FAX (816) 283-0810
PROFESSIONAL ENGINEERING CORPORATION
MISSOURI LICENSE NO. 000646 KANSAS LICENSE NO. E-481
PROFESSIONAL LANDSCAPE ARCHITECTURE
MISSOURI LICENSE NO. 000094

SCALE

0 50 100 150

STATIONARY LANE CLOSURE WITH TEMPORARY TRAFFIC BARRIER						
SPEED	SIGN SPACING (FT.)	TAPER LENGTH (FT.)		RECOMMENDED	CHANNELIZER SPACING (FT.)	
PERMANENT POSTED (MPH)	DIVIDED (S)	SHOULDER (1) (T1)	LANE (2) (T2)	BUFFER LENGTH (FT.) (B)	TAPERS	BUFFER/ WORK AREAS
0-35	200	70	245	250	35	40
40-45	500	150	540	360	40	80
50-55	1000	185	660	495	50	80
60-70	SA - 1000 SB - 1500 SC - 2640	235	840	730	60	120
1. SHOULDER TAPER LENGTH BASED ON 10 FT. (STANDARD SHOULDER WIDTH) OFFSET. 2. LANE TAPER LENGTH BASED ON 12 FT. (STANDARD LANE WIDTH) OFFSET.						

TRAFFIC CONTROL LEGEND

- PROPOSED SIGN (SINGLE SIDED)
- EXISTING SIGN (SINGLE SIDED)
- CHANNELIZER
- DIRECTIONAL INDICATOR BARRICADE
- TUBULAR MARKERS
- TYPE III MOVEABLE BARRICADE
- SEQUENTIAL FLASHING WARNING LIGHT
- TEMPORARY CONCRETE TRAFFIC BARRIER (TYPE F)
- IMPACT ATTENUATOR 65 MPH (SAND BARRELS)
- VEHICLE WITH TRAILER MOUNTED ATTENUATOR
- CHANGEABLE MESSAGE BOARD
- FLASHING ARROW PANEL
- TEMPORARY LONG-TERM RUMBLE STRIPS

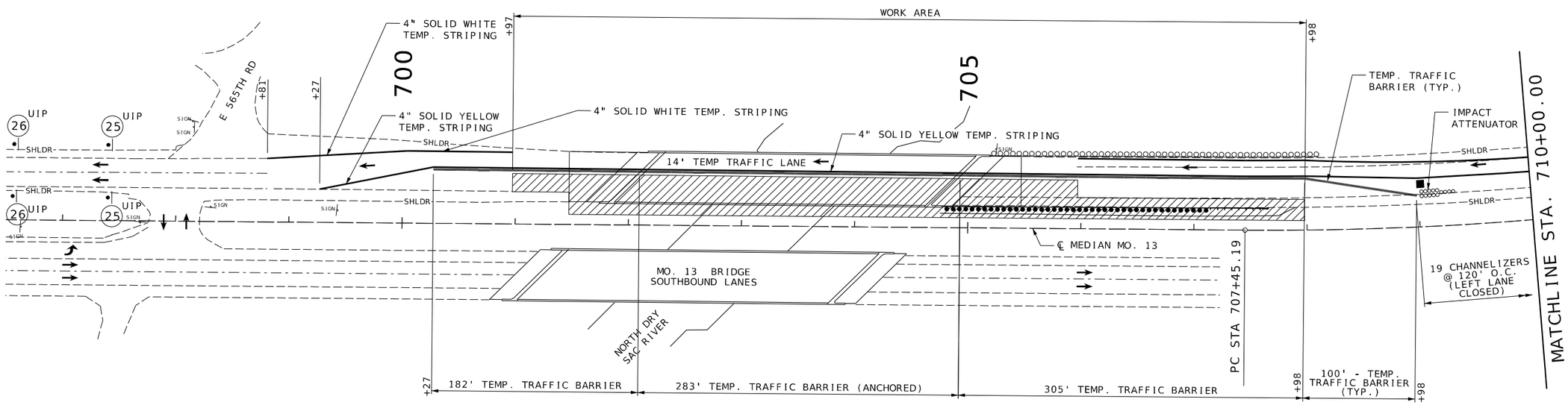

CONSTRUCTION PHASING: NORTHBOUND LANES BRIDGE NO. A26812

PHASE 1- CONSTRUCT NEW ROADWAY SHOULDERS ON EAST SIDE OF ROADWAY.
SHOULDERS TO BE UTILIZED FOR TEMPORARY CONSTRUCTION TRAFFIC.
USE STATIONARY LANE CLOSURE ON EAST SIDE OF ROADWAY.
EPG FIGURE 616.8.33S (TA-33S).

PHASE 2- CONSTRUCT NEW ROADWAY SHOULDERS ON WEST SIDE OF ROADWAY.
SHOULDERS TO BE UTILIZED FOR TEMPORARY CONSTRUCTION TRAFFIC.
USE STATIONARY LANE CLOSURE ON WEST SIDE OF ROADWAY.
EPG FIGURE 616.8.33S (TA-33S).

PHASE 3- CONSTRUCT BRIDGE IMPROVEMENTS ON WEST SIDE OF BRIDGE.
USE STATIONARY LANE CLOSURE WITH TEMPORARY TRAFFIC BARRIER
ON WEST SIDE OF NORTHBOUND LANES.
EPG FIGURE 616.8.34B (TA-34B).

PHASE 4- CONSTRUCT BRIDGE IMPROVEMENTS ON EAST SIDE OF BRIDGE.
USE STATIONARY LANE CLOSURE WITH TEMPORARY TRAFFIC BARRIER
ON EAST SIDE OF NORTHBOUND LANES.
EPG FIGURE 616.8.34B (TA-34B).

PHASE 3 TRAFFIC CONTROL

PHASE 3

TRAFFIC CONTROL
SHEET 3 OF 11

STATE OF MISSOURI
BRIAN ERMIAS ANDERBRIAN
NUMBER PE-2004011822
12/01/2025
62-0250
PROFESSIONAL ENGINEER

DATE PREPARED	12/1/2025
ROUTE 13	STATE MO
DISTRICT SW	SHEET NO. 13
COUNTY	POLK
JOB NO.	JSR0183
CONTRACT ID.	
PROJECT NO.	
BRIDGE NO.	A26812

DESCRIPTION

DATE

MISSOURI HIGHWAYS AND TRANSPORTATION COMMISSION

105 WEST CAPITOL
JEFFERSON CITY, MO 65102
1-888-ASK-MODOT (1-888-275-6636)

Taliaferro & Browne, Inc.
Civil / Structural Engineering
Landscape Architecture & Surveying
1020 E. 8th STREET
KANSAS CITY, MISSOURI 64106
PH (816) 283-2456 FAX (816) 283-0810
PROFESSIONAL ENGINEERING CORPORATION
MISSOURI LICENSE NO. 000846 KANSAS LICENSE NO. E-1481
PROFESSIONAL LANDSCAPE ARCHITECTURE CORPORATION
MISSOURI LICENSE NO. 000094

TRAFFIC CONTROL LEGEND

- PROPOSED SIGN (SINGLE SIDED)
- EXISTING SIGN (SINGLE SIDED)
- CHANNELIZER
- DIRECTIONAL INDICATOR BARRICADE
- TUBULAR MARKERS
- TYPE III MOVEABLE BARRICADE
- SEQUENTIAL FLASHING WARNING LIGHT
- TEMPORARY CONCRETE TRAFFIC BARRIER (TYPE F)
- IMPACT ATTENUATOR 65 MPH (SAND BARRELS)
- VEHICLE WITH TRAILER MOUNTED ATTENUATOR
- CHANGEABLE MESSAGE BOARD
- FLASHING ARROW PANEL
- TEMPORARY LONG-TERM RUMBLE STRIPS

SCALE

0 50 100 150

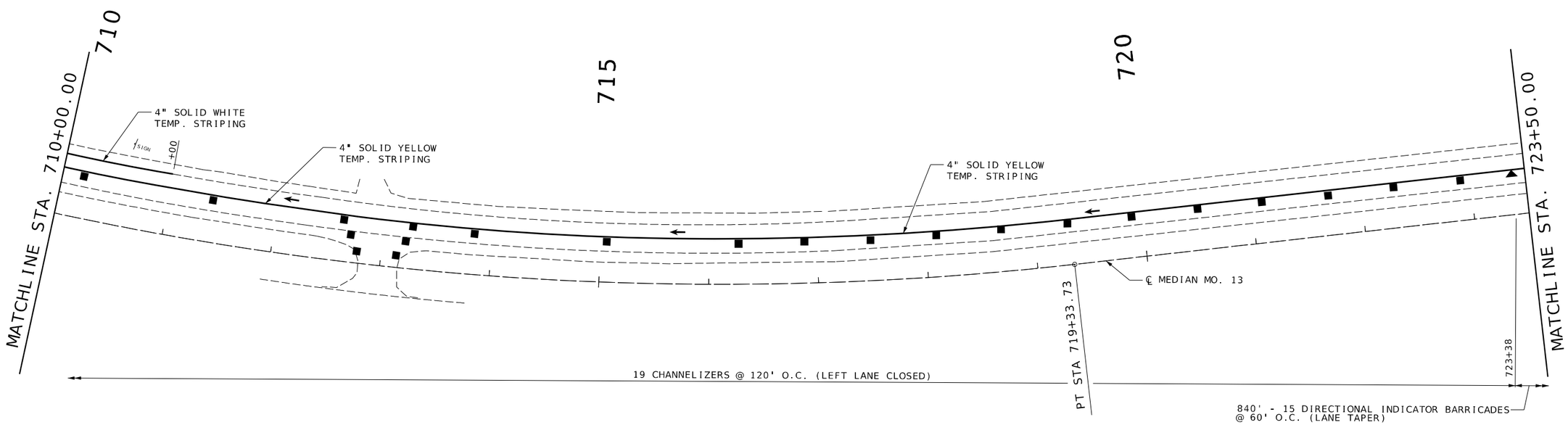

CONSTRUCTION PHASING: NORTHBOUND LANES BRIDGE NO. A26812

PHASE 1- CONSTRUCT NEW ROADWAY SHOULDERS ON EAST SIDE OF ROADWAY.
SHOULDERS TO BE UTILIZED FOR TEMPORARY CONSTRUCTION TRAFFIC.
USE STATIONARY LANE CLOSURE ON EAST SIDE OF ROADWAY.
EPG FIGURE 616.8.33S (TA-33S).

PHASE 2- CONSTRUCT NEW ROADWAY SHOULDERS ON WEST SIDE OF ROADWAY.
SHOULDERS TO BE UTILIZED FOR TEMPORARY CONSTRUCTION TRAFFIC.
USE STATIONARY LANE CLOSURE ON WEST SIDE OF ROADWAY.
EPG FIGURE 616.8.33S (TA-33S).

PHASE 3- CONSTRUCT BRIDGE IMPROVEMENTS ON WEST SIDE OF BRIDGE.
USE STATIONARY LANE CLOSURE WITH TEMPORARY TRAFFIC BARRIER
ON WEST SIDE OF NORTHBOUND LANES.
EPG FIGURE 616.8.34B (TA-34B).

PHASE 4- CONSTRUCT BRIDGE IMPROVEMENTS ON EAST SIDE OF BRIDGE.
USE STATIONARY LANE CLOSURE WITH TEMPORARY TRAFFIC BARRIER
ON EAST SIDE OF NORTHBOUND LANES.
EPG FIGURE 616.8.34B (TA-34B).

PHASE 3 TRAFFIC CONTROL

PHASE 3

TRAFFIC CONTROL
SHEET 4 OF 11

STATE OF MISSOURI
DERICK ERMIAS ANDEBRHAN
NUMBER PE-2004011822
12/01/2025
62-0250
PROFESSIONAL ENGINEER

DATE PREPARED	12/1/2025
ROUTE	13
STATE	MO
DISTRICT	SW
SHEET NO.	14
COUNTY	POLK
JOB NO.	JSR0183
CONTRACT ID.	
PROJECT NO.	
BRIDGE NO.	A26812

DESCRIPTION	DATE

MISSOURI HIGHWAYS AND TRANSPORTATION COMMISSION
105 WEST CAPITOL
JEFFERSON CITY, MO 65102
1-888-ASK-MODOT (1-888-275-6636)

Taliaferro & Browne, Inc.
Civil / Structural Engineering
Landscape Architecture & Surveying
1020 E. 9th STREET
KANSAS CITY, MISSOURI 64106
PH (816) 283-2456 FAX (816) 283-0810
PROFESSIONAL ENGINEERING CORPORATION
MISSOURI LICENSE NO. 000446 KANSAS LICENSE NO. E-1481
PROFESSIONAL LANDSCAPE ARCHITECTURE CORPORATION
MISSOURI LICENSE NO. 000094

TRAFFIC CONTROL LEGEND

- PROPOSED SIGN (SINGLE SIDED)
- EXISTING SIGN (SINGLE SIDED)
- CHANNELIZER
- DIRECTIONAL INDICATOR BARRICADE
- TUBULAR MARKERS
- TYPE III MOVEABLE BARRICADE
- SEQUENTIAL FLASHING WARNING LIGHT
- TEMPORARY CONCRETE TRAFFIC BARRIER (TYPE F)
- IMPACT ATTENUATOR 65 MPH (SAND BARRELS)
- VEHICLE WITH TRAILER MOUNTED ATTENUATOR
- CHANGEABLE MESSAGE BOARD
- FLASHING ARROW PANEL
- TEMPORARY LONG-TERM RUMBLE STRIPS

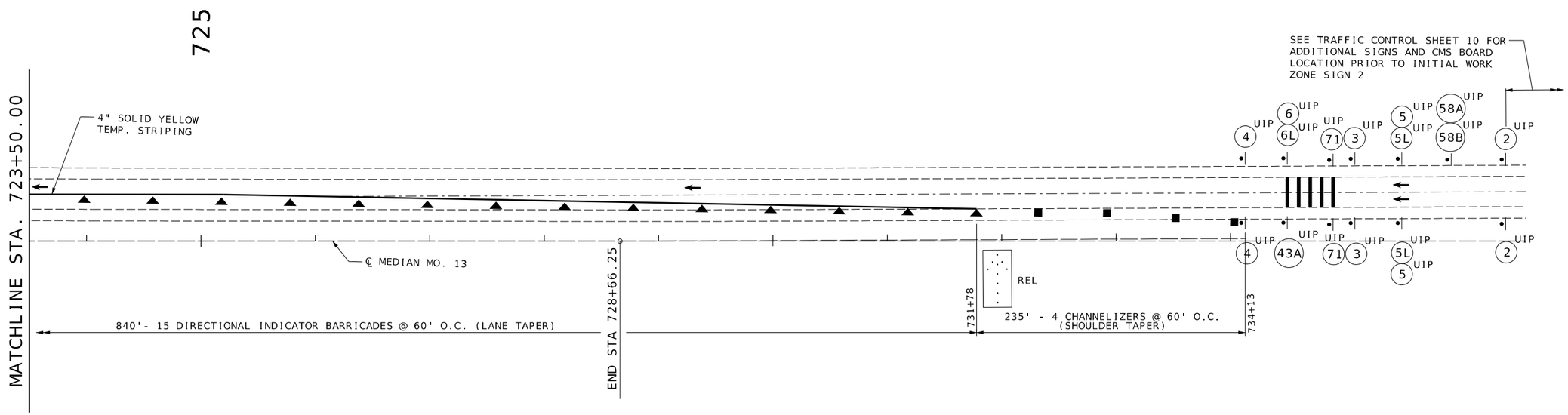

CONSTRUCTION PHASING: NORTHBOUND LANES BRIDGE NO. A26812

PHASE 1- CONSTRUCT NEW ROADWAY SHOULDERS ON EAST SIDE OF ROADWAY. SHOULDERS TO BE UTILIZED FOR TEMPORARY CONSTRUCTION TRAFFIC. USE STATIONARY LANE CLOSURE ON EAST SIDE OF ROADWAY. EPG FIGURE 616.8.33S (TA-33S).

PHASE 2- CONSTRUCT NEW ROADWAY SHOULDERS ON WEST SIDE OF ROADWAY. SHOULDERS TO BE UTILIZED FOR TEMPORARY CONSTRUCTION TRAFFIC. USE STATIONARY LANE CLOSURE ON WEST SIDE OF ROADWAY. EPG FIGURE 616.8.33S (TA-33S).

PHASE 3- CONSTRUCT BRIDGE IMPROVEMENTS ON WEST SIDE OF BRIDGE. USE STATIONARY LANE CLOSURE WITH TEMPORARY TRAFFIC BARRIER ON WEST SIDE OF NORTHBOUND LANES. EPG FIGURE 616.8.34B (TA-34B).

PHASE 4- CONSTRUCT BRIDGE IMPROVEMENTS ON EAST SIDE OF BRIDGE. USE STATIONARY LANE CLOSURE WITH TEMPORARY TRAFFIC BARRIER ON EAST SIDE OF NORTHBOUND LANES. EPG FIGURE 616.8.34B (TA-34B).

PHASE 3 TRAFFIC CONTROL

PHASE 3

TRAFFIC CONTROL
SHEET 5 OF 11

STATE OF MISSOURI
BRIGIN ERMIAS ANDERHAN
NUMBER PE-2009011822
12/01/2025
62-0250
PROFESSIONAL ENGINEER

DATE PREPARED	12/1/2025
ROUTE	13
STATE	MO
DISTRICT	SW
SHEET NO.	15
COUNTY	POLK
JOB NO.	JSR0183
CONTRACT ID.	
PROJECT NO.	
BRIDGE NO.	A26812

DESCRIPTION

DATE

MISSOURI HIGHWAYS AND TRANSPORTATION COMMISSION
105 WEST CAPITOL
JEFFERSON CITY, MO 65102
1-888-ASK-MODOT (1-888-275-6636)

Taliaferro & Browne, Inc.
Civil/Structural Engineering
Landscape Architecture & Surveying
1020 E. 9th STREET
KANSAS CITY, MISSOURI 64106
PH (816) 283-2456 FAX (816) 283-0810
PROFESSIONAL ENGINEERING CORPORATION
MISSOURI LICENSE NO. 000446 KANSAS LICENSE NO. E-481
PROFESSIONAL LANDSCAPE ARCHITECTURE CORPORATION
MISSOURI LICENSE NO. 000094

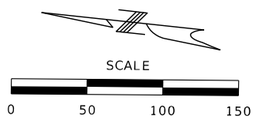

STATIONARY LANE CLOSURE WITH TEMPORARY TRAFFIC BARRIER						
SPEED	SIGN SPACING (FT.)	TAPER LENGTH (FT.)		RECOMMENDED	CHANNELIZER SPACING (FT.)	
PERMANENT POSTED (MPH)	DIVIDED (S)	SHOULDER (1) (T1)	LANE (2) (T2)	BUFFER LENGTH (FT.) (B)	TAPERS	BUFFER/ WORK AREAS
0-35	200	70	245	250	35	40
40-45	500	150	540	360	40	80
50-55	1000	185	660	495	50	80
60-70	SA - 1000 SB - 1500 SC - 2640	235	840	730	60	120

1. SHOULDER TAPER LENGTH BASED ON 10 FT. (STANDARD SHOULDER WIDTH) OFFSET.
2. LANE TAPER LENGTH BASED ON 12 FT. (STANDARD LANE WIDTH) OFFSET.

TRAFFIC CONTROL LEGEND

- PROPOSED SIGN (SINGLE SIDED)
- EXISTING SIGN (SINGLE SIDED)
- CHANNELIZER
- DIRECTIONAL INDICATOR BARRICADE
- TUBULAR MARKERS
- TYPE III MOVEABLE BARRICADE
- SEQUENTIAL FLASHING WARNING LIGHT
- TEMPORARY CONCRETE TRAFFIC BARRIER (TYPE F)
- IMPACT ATTENUATOR 65 MPH (SAND BARRELS)
- VEHICLE WITH TRAILER MOUNTED ATTENUATOR
- CHANGEABLE MESSAGE BOARD
- FLASHING ARROW PANEL
- TEMPORARY LONG-TERM RUMBLE STRIPS

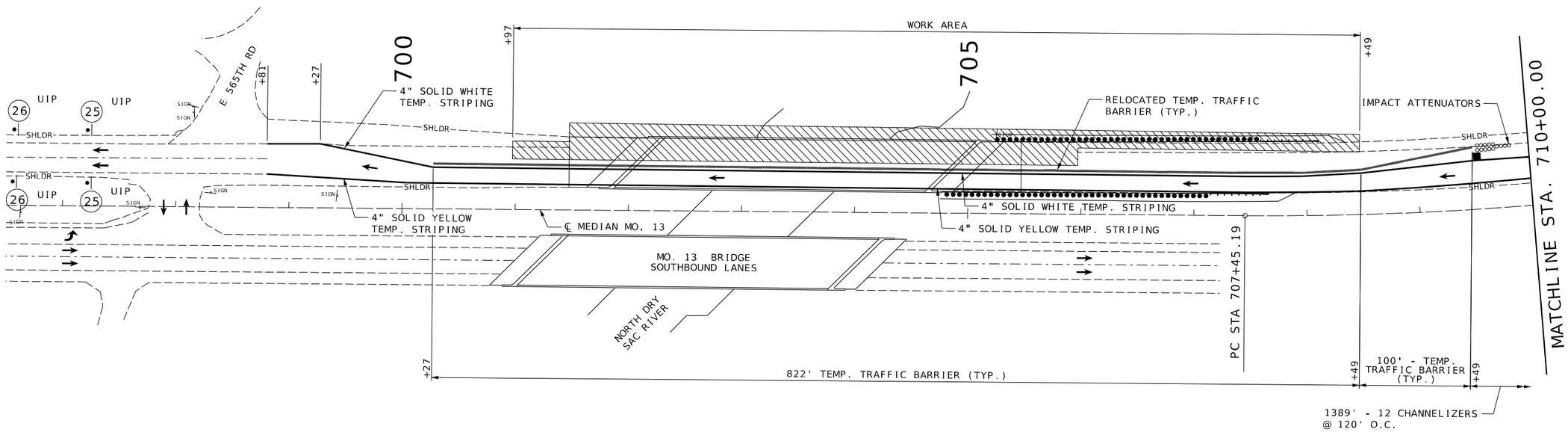

CONSTRUCTION PHASING: NORTHBOUND LANES BRIDGE NO. A26812

PHASE 1- CONSTRUCT NEW ROADWAY SHOULDERS ON EAST SIDE OF ROADWAY.
SHOULDERS TO BE UTILIZED FOR TEMPORARY CONSTRUCTION TRAFFIC.
USE STATIONARY LANE CLOSURE ON EAST SIDE OF ROADWAY.
EPG FIGURE 616.8.33S (TA-33S).

PHASE 2- CONSTRUCT NEW ROADWAY SHOULDERS ON WEST SIDE OF ROADWAY.
SHOULDERS TO BE UTILIZED FOR TEMPORARY CONSTRUCTION TRAFFIC.
USE STATIONARY LANE CLOSURE ON WEST SIDE OF ROADWAY.
EPG FIGURE 616.8.33S (TA-33S).

PHASE 3- CONSTRUCT BRIDGE IMPROVEMENTS ON WEST SIDE OF BRIDGE.
USE STATIONARY LANE CLOSURE WITH TEMPORARY TRAFFIC BARRIER
ON WEST SIDE OF NORTHBOUND LANES.
EPG FIGURE 616.8.34B (TA-34B).

PHASE 4- CONSTRUCT BRIDGE IMPROVEMENTS ON EAST SIDE OF BRIDGE.
USE STATIONARY LANE CLOSURE WITH TEMPORARY TRAFFIC BARRIER
ON EAST SIDE OF NORTHBOUND LANES.
EPG FIGURE 616.8.34B (TA-34B).

PHASE 4 TRAFFIC CONTROL

NOTE:

PHASE 4 TEMPORARY TRAFFIC BARRIER IS NON-ANCHORED.

PHASE 4

TRAFFIC CONTROL
SHEET 6 OF 11

STATE OF MISSOURI
IRAGON ERMIAS ANDEBRHAN
NUMBER PE-2004011822
12/01/2025
62-0250
PROFESSIONAL ENGINEER

DATE PREPARED	12/1/2025
ROUTE 13	STATE MO
DISTRICT SW	SHEET NO. 16
COUNTY	POLK
JOB NO.	JSR0183
CONTRACT ID.	
PROJECT NO.	
BRIDGE NO.	A26812

DATE	DESCRIPTION

MISSOURI HIGHWAYS AND TRANSPORTATION COMMISSION
105 WEST CAPITOL
JEFFERSON CITY, MO 65102
1-888-ASK-MODOT (1-888-275-6636)

Taliaferro & Browne, Inc.
Civil / Structural Engineering
Landscape Architecture & Surveying
1020 E. 8th STREET
KANSAS CITY, MISSOURI 64106
PH (816) 283-2456 FAX (816) 283-0810
PROFESSIONAL ENGINEERING CORPORATION
MISSOURI LICENSE NO. 000846 KANSAS LICENSE NO. F-1481
PROFESSIONAL LANDSCAPE ARCHITECTURAL CORPORATION
MISSOURI LICENSE NO. 000094

SCALE

0 50 100 150

TRAFFIC CONTROL LEGEND

- PROPOSED SIGN (SINGLE SIDED)
- EXISTING SIGN (SINGLE SIDED)
- CHANNELIZER
- DIRECTIONAL INDICATOR BARRICADE
- TUBULAR MARKERS
- TYPE III MOVEABLE BARRICADE
- SEQUENTIAL FLASHING WARNING LIGHT
- TEMPORARY CONCRETE TRAFFIC BARRIER (TYPE F)
- IMPACT ATTENUATOR 65 MPH (SAND BARRELS)
- VEHICLE WITH TRAILER MOUNTED ATTENUATOR
- CHANGEABLE MESSAGE BOARD
- FLASHING ARROW PANEL
- TEMPORARY LONG-TERM RUMBLE STRIPS

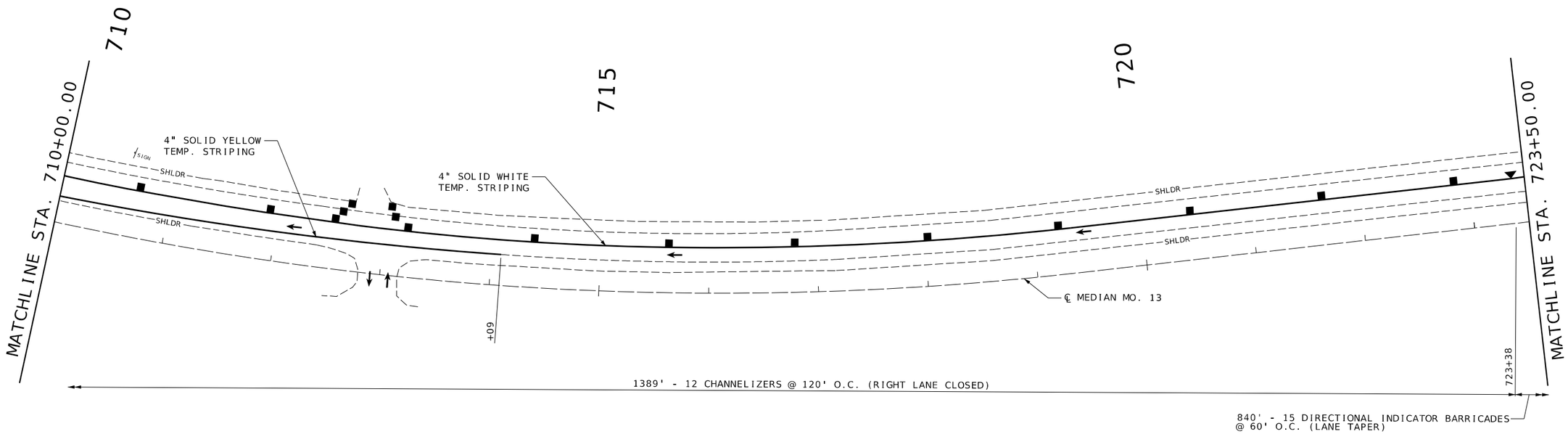

CONSTRUCTION PHASING: NORTHBOUND LANES BRIDGE NO. A26812

PHASE 1- CONSTRUCT NEW ROADWAY SHOULDERS ON EAST SIDE OF ROADWAY.
SHOULDERS TO BE UTILIZED FOR TEMPORARY CONSTRUCTION TRAFFIC.
USE STATIONARY LANE CLOSURE ON EAST SIDE OF ROADWAY.
EPG FIGURE 616.8.33S (TA-33S).

PHASE 2- CONSTRUCT NEW ROADWAY SHOULDERS ON WEST SIDE OF ROADWAY.
SHOULDERS TO BE UTILIZED FOR TEMPORARY CONSTRUCTION TRAFFIC.
USE STATIONARY LANE CLOSURE ON WEST SIDE OF ROADWAY.
EPG FIGURE 616.8.33S (TA-33S).

PHASE 3- CONSTRUCT BRIDGE IMPROVEMENTS ON WEST SIDE OF BRIDGE.
USE STATIONARY LANE CLOSURE WITH TEMPORARY TRAFFIC BARRIER
ON WEST SIDE OF NORTHBOUND LANES.
EPG FIGURE 616.8.34B (TA-34B).

PHASE 4- CONSTRUCT BRIDGE IMPROVEMENTS ON EAST SIDE OF BRIDGE.
USE STATIONARY LANE CLOSURE WITH TEMPORARY TRAFFIC BARRIER
ON EAST SIDE OF NORTHBOUND LANES.
EPG FIGURE 616.8.34B (TA-34B).

PHASE 4 TRAFFIC CONTROL

PHASE 4

TRAFFIC CONTROL
SHEET 7 OF 11

STATE OF MISSOURI
HELIOS ERMIAS ANDEMARIAM
NUMBER PE-2004011822
12/01/2025
82-0250
PROFESSIONAL ENGINEER

DATE PREPARED	12/1/2025
ROUTE 13	STATE MO
DISTRICT SW	SHEET NO. 17
COUNTY	POLK
JOB NO.	JSR0183
CONTRACT ID.	
PROJECT NO.	
BRIDGE NO.	A26812

DATE	DESCRIPTION

MISSOURI HIGHWAYS AND TRANSPORTATION COMMISSION
105 WEST CAPITOL
JEFFERSON CITY, MO 65102
1-888-ASK-MODOT (1-888-275-6636)

Taliaferro & Browne, Inc.
Civil/Structural Engineering
Landscape Architecture & Surveying
1020 E. 9th STREET
KANSAS CITY, MISSOURI 64106
PH (816) 283-2456 FAX (816) 283-0810
PROFESSIONAL ENGINEERING CORPORATION
MISSOURI LICENSE NO. 000446 KANSAS LICENSE NO. E-481
PROFESSIONAL LANDSCAPE ARCHITECTURE CORPORATION
MISSOURI LICENSE NO. 000094

TRAFFIC CONTROL LEGEND

- PROPOSED SIGN (SINGLE SIDED)
- EXISTING SIGN (SINGLE SIDED)
- CHANNELIZER
- DIRECTIONAL INDICATOR BARRICADE
- TUBULAR MARKERS
- TYPE III MOVEABLE BARRICADE
- SEQUENTIAL FLASHING WARNING LIGHT
- TEMPORARY CONCRETE TRAFFIC BARRIER (TYPE F)
- IMPACT ATTENUATOR 65 MPH (SAND BARRELS)
- VEHICLE WITH TRAILER MOUNTED ATTENUATOR
- CHANGEABLE MESSAGE BOARD
- FLASHING ARROW PANEL
- TEMPORARY LONG-TERM RUMBLE STRIPS

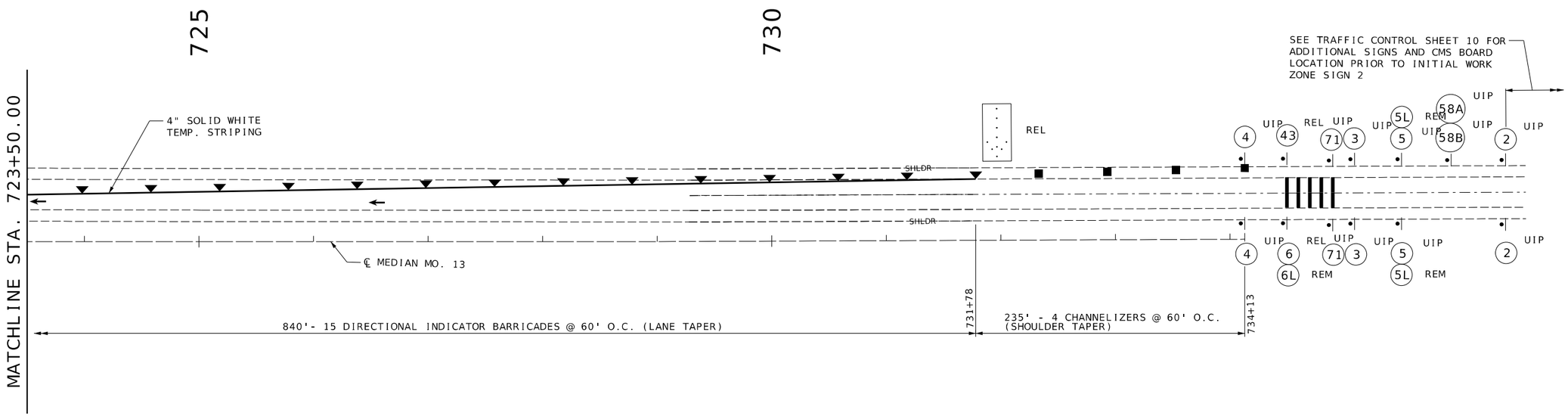

CONSTRUCTION PHASING: NORTHBOUND LANES BRIDGE NO. A26812

PHASE 1- CONSTRUCT NEW ROADWAY SHOULDERS ON EAST SIDE OF ROADWAY. SHOULDERS TO BE UTILIZED FOR TEMPORARY CONSTRUCTION TRAFFIC. USE STATIONARY LANE CLOSURE ON EAST SIDE OF ROADWAY. EPG FIGURE 616.8.33S (TA-33S).

PHASE 2- CONSTRUCT NEW ROADWAY SHOULDERS ON WEST SIDE OF ROADWAY. SHOULDERS TO BE UTILIZED FOR TEMPORARY CONSTRUCTION TRAFFIC. USE STATIONARY LANE CLOSURE ON WEST SIDE OF ROADWAY. EPG FIGURE 616.8.33S (TA-33S).

PHASE 3- CONSTRUCT BRIDGE IMPROVEMENTS ON WEST SIDE OF BRIDGE. USE STATIONARY LANE CLOSURE WITH TEMPORARY TRAFFIC BARRIER ON WEST SIDE OF NORTHBOUND LANES. EPG FIGURE 616.8.34B (TA-34B).

PHASE 4- CONSTRUCT BRIDGE IMPROVEMENTS ON EAST SIDE OF BRIDGE. USE STATIONARY LANE CLOSURE WITH TEMPORARY TRAFFIC BARRIER ON EAST SIDE OF NORTHBOUND LANES. EPG FIGURE 616.8.34B (TA-34B).

PHASE 4 TRAFFIC CONTROL

PHASE 4

TRAFFIC CONTROL
SHEET 8 OF 11

STATE OF MISSOURI
HECTOR ERMIAS ANDUGHLAN
NUMBER PE-2004011822
12/01/2025
62-0250
PROFESSIONAL ENGINEER

DATE PREPARED	12/1/2025
ROUTE	13
STATE	MO
DISTRICT	SW
SHEET NO.	18
COUNTY	POLK
JOB NO.	JSR0183
CONTRACT ID.	
PROJECT NO.	
BRIDGE NO.	A26812

DESCRIPTION

DATE

MISSOURI HIGHWAYS AND TRANSPORTATION COMMISSION
105 WEST CAPITOL
JEFFERSON CITY, MO 65102
1-888-ASK-MODOT (1-888-275-6636)

Taliaferro & Browne, Inc.
Civil/Structural Engineering
Landscape Architecture & Surveying
1020 E. 9th STREET
KANSAS CITY, MISSOURI 64106
PH (816) 283-3456 FAX (816) 283-0810
PROFESSIONAL ENGINEERING CORPORATION
MISSOURI LICENSE NO. 000446 KANSAS LICENSE NO. E-481
PROFESSIONAL LANDSCAPE ARCHITECTURE CORPORATION
MISSOURI LICENSE NO. 000094

016-018_TC_06-08_JSR0183_Traffic Control.dgn 2:23:17 PM 12/1/2025

Bridge Improvements

Fall 2026

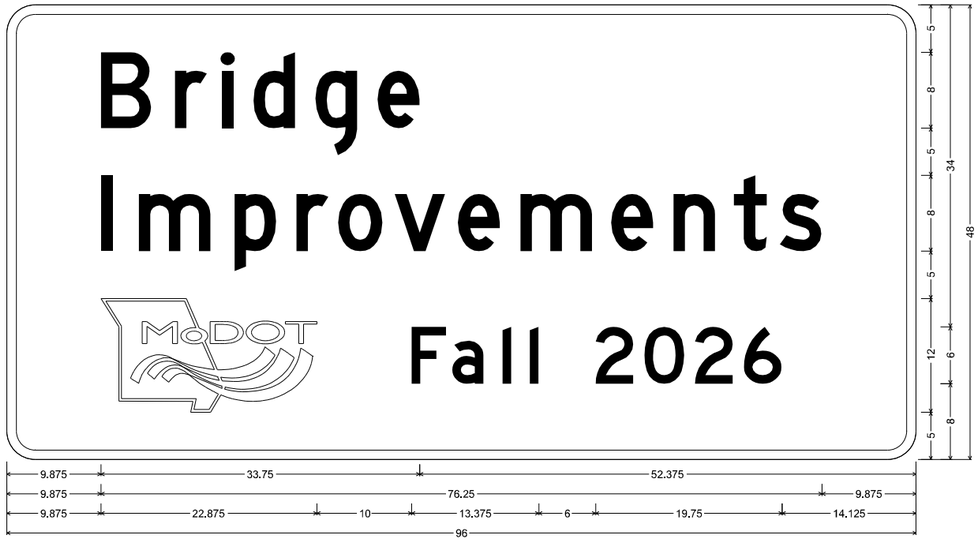

CONST-5 SH-FLAT SHEET;
3.000" Radius, 1.000" Border, White on, Blue;
"Bridge", D; "Improvements", D; "Fall 2026", D;
Table of letter and object lefts

B 9.875	r 17.750	i 22.750	d 26.000	g 32.625	e 39.125

I 9.875	m 14.000	p 24.000	r 30.625	o 35.000	v 41.000	e 47.625	m 54.250	e 63.750	n 70.375	t 76.750	s 81.625	

9.875	F 42.750	a 47.000	l 52.375	l 55.250	2 62.125	0 67.375	2 72.625	6 77.875	

58A

Completed as Promised

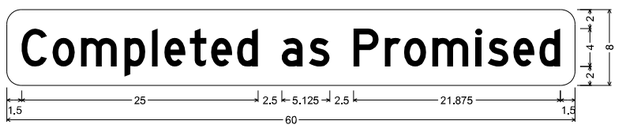

CONST-5P-60 SHF-FLAT SHEET FLUORESCENT;
1.500" Radius, No border, Yellow;
"Completed as Promised" Black, D 65% spacing;
Table of letter and object lefts

C 1.500	o 4.875	m 7.875	p 12.375	l 15.375	e 16.625	t 19.375	e 21.500	d 24.250	a 29.000	s 31.875	

P 36.625	r 39.875	o 41.875	m 44.875	i 49.500	s 50.750	e 53.500	d 56.250	

58B

NOTES:

ANY EXISTING WARNING OR REGULATORY SIGNS (NOT SHOWN) THAT INTERFERE WITH THE TRAFFIC CONTROL SIGNING SHALL BE REMOVED OR COMPLETELY COVERED.

ALL TRAFFIC CONTROL SIGNS ARE TO BE NON-PORTABLE UNLESS NOTED OTHERWISE.

MODIFICATIONS TO EXISTING SIGN LEGENDS MAY INCLUDE REMOVAL, COVERING AND UNCOVERING OF LEGENDS. NO DIRECT PAY WILL BE MADE FOR THE LABOR OR MATERIALS REQUIRED TO MAKE THESE MODIFICATIONS.

ALL SPACING AND DISTANCES SHOWN ARE APPROXIMATE. DISTANCES MAY BE ADJUSTED BY THE ENGINEER TO ACCOMODATE SPECIFIC FIELD CONDITIONS.

SEE STANDARD PLAN DRAWINGS 616.10, 903.02, AND 903.03 FOR ADDITIONAL DETAILS REGARDING TRAFFIC CONTROL AND HIGHWAY SIGNING.

"POINT OF PRESENCE" SIGN 68 TO BE FURNISHED BY THE CONTRACTOR.

ALL RELOCATED TRAFFIC SIGNS ARE TO BE NON-PORTABLE UNLESS NOTED OTHERWISE. EXISTING POST(S) & MOUNTINGS MAY BE USED FOR TEMPORARY SIGN RELOCATIONS.

TRAFFIC CONTROL LEGEND

- PROPOSED SIGN (SINGLE SIDED)
- EXISTING SIGN (SINGLE SIDED)
- CHANNELIZER
- TYPE III MOVEABLE BARRICADE
- SEQUENTIAL FLASHING WARNING LIGHT
- TEMPORARY CONCRETE TRAFFIC BARRIER (TYPE F)
- IMPACT ATTENUATOR 55 MPH (SAND BARRELS)
- PORTABLE TRAFFIC SIGNAL AND LUMINARE
- VEHICLE WITH TRAILER MOUNTED ATTENUATOR
- CHANGEABLE MESSAGE BOARD
- TEMPORARY LONG-TERM RUMBLE STRIPS
- FLASHING ARROW PANEL

ADVANCE WARNING RAIL SYSTEM

WO20-1

2

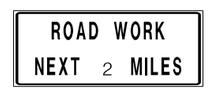

GO20-1

1

WO3-5

3

R2-1
(REDUCED SPEED)

4

WO20-5

5

LEFT LANE

5L

WO20-6a

6

LEFT

6L

R2-1
(NORMAL SPEED)

25

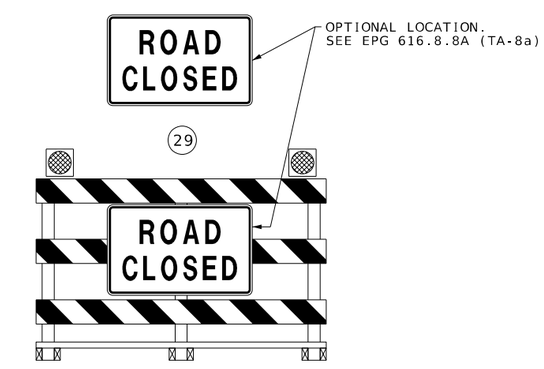

29

TYPE III
MOVEABLE BARRICADE

GO20-2

26

WO4-1aL

43

43A

GO22-1
(ARROW PIVOTS)

62

CONST-8

70

SPECIAL

71

TRAFFIC CONTROL
SHEET 9 OF 11

STATE OF MISSOURI
JASON ERMIAS ANDERSON
NUMBER
PE-2004011322
12/01/2025
62-0250
PROFESSIONAL ENGINEER

DATE PREPARED 12/1/2025	
ROUTE 13	STATE MO
DISTRICT SW	SHEET NO. 19
COUNTY POLK	
JOB NO. JSR0183	
CONTRACT ID.	
PROJECT NO.	
BRIDGE NO. A26812	

DATE	DESCRIPTION

MISSOURI HIGHWAYS AND TRANSPORTATION COMMISSION
105 WEST CAPITOL
JEFFERSON CITY, MO 65102
1-888-ASK-MODOT (1-888-275-6636)

Taliaferro & Browne, Inc.
Civil / Structural Engineering
Landscape Architecture & Surveying
1020 E. 8th STREET
KANSAS CITY, MISSOURI 64106
PH (816) 283-5456 FAX (816) 283-0810
PROFESSIONAL ENGINEERING CORPORATION
MISSOURI LICENSE NO. 000846 KANSAS LICENSE NO. E-1481
PROFESSIONAL LAND SURVEYING CORPORATION
MISSOURI LICENSE NO. 000094

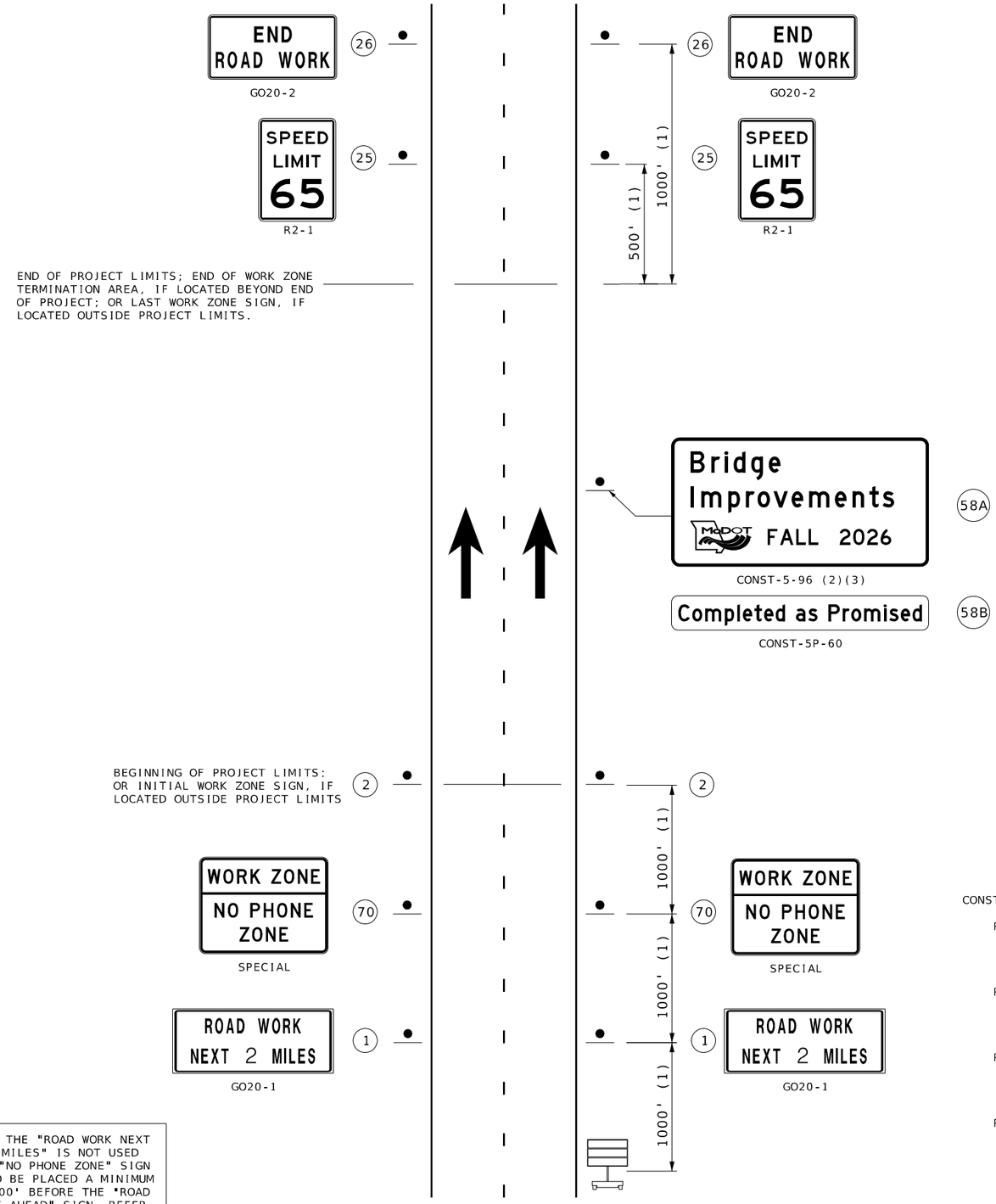

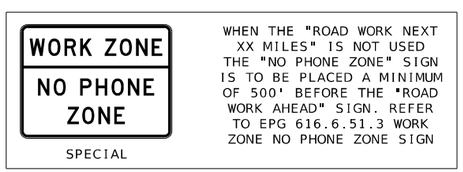

WHEN THE "ROAD WORK NEXT XX MILES" IS NOT USED THE "NO PHONE ZONE" SIGN IS TO BE PLACED A MINIMUM OF 500' BEFORE THE "ROAD WORK AHEAD" SIGN. REFER TO EPG 616.6.51.3 WORK ZONE NO PHONE ZONE SIGN

MULTI-LANE DIVIDED
BEGIN/END OF PROJECT SIGNING
(FOR USE ON ALL PROJECTS)

NOT TO SCALE. FOLLOW DIMENSIONS.

TRAFFIC CONTROL LEGEND

- PROPOSED SIGN (SINGLE SIDED)
- EXISTING SIGN (SINGLE SIDED)
- CHANNELIZER
- DIRECTIONAL INDICATOR BARRICADE
- TUBULAR MARKERS
- TYPE III MOVEABLE BARRICADE
- SEQUENTIAL FLASHING WARNING LIGHT
- IMPACT ATTENUATOR 65 MPH (SAND BARRELS)
- VEHICLE WITH TRAILER MOUNTED ATTENUATOR
- CHANGEABLE MESSAGE BOARD
- FLASHING ARROW PANEL
- TEMPORARY CONCRETE TRAFFIC BARRIER (TYPE F)
- TEMPORARY LONG-TERM RUMBLE STRIPS

NOTES:

SIGN G020-1 IS REQUIRED PER EPG 616.6.56.

SIGN G020-2 IS USED ON ALL PROJECTS WHERE SIGN G020-1 IS USED.

OTHER SIGNS SUCH AS DETOUR OR ALTERNATE ROUTE SIGNING MAY BE USED OUTSIDE THE PROJECT LIMITS.

ANY EXISTING SIGNING THAT CONFLICTS WITH THE TRAFFIC CONTROL SIGNING SHALL BE COMPLETELY CONVERED OR REMOVED.

(1) DISTANCE MAY BE ADJUSTED ACCORDING TO FIELD CONDITIONS. WHERE TRAFFIC BACKUPS ARE EXPECTED BEYOND THE ADVANCE WARNING AREA. ADDITIONAL SIGNING MAY BE NEEEDED.

(2) SIGN CONST-5-96 OR CONST-5-48 IS PLACED IN A VISIBLE AREA WITHIN THE PROJECT LIMITS PROVIDED ITS PLACEMENT DOES NOT DISRUPT A SEQUENCE OF SIGNS. IF A VISIBLE LOCATION WITHIN THE PROJECT IS NOT AVAILABLE, THE SIGN MAY BE PLACED 500 FEET BEFORE SIGN 70.

(3) THE "POINT OF PRESENCE" SIGN IS AVAILABLE IN TWO SIZES DEPENDING ON ROADWAY CONDITION. THE 48 IN. X 36 IN. SIGN IS USED ON LOW VOLUME ROUTES THAT CARRY 400 AADT OR LESS, ON PROJECTS THAT HAVE A DURATION OF 4 WEEKS OR LESS OR IN URBAN AREAS WHERE THERE IS INSUFFICIENT RIGHT OF WAY FOR AN EIGHT FOOT WIDE SIGN. THE 96 IN. X 48 IN. VERSION OF THE SIGN IS USED IN ALL OTHER APPLICATIONS, BUT CAN ALSO BE USED IN PLACE OF THE 48 IN. X 36 IN. SIGN IF ADDED EMPHASIS IS DEEMED NECESSARY.

CONSTRUCTION PHASING: NORTHBOUND LANES BRIDGE NO. A26812

PHASE 1- CONSTRUCT NEW ROADWAY SHOULDERS ON EAST SIDE OF ROADWAY. SHOULDERS TO BE UTILIZED FOR TEMPORARY CONSTRUCTION TRAFFIC. USE STATIONARY LANE CLOSURE ON EAST SIDE OF ROADWAY. EPG FIGURE 616.8.33S (TA-33S).

PHASE 2- CONSTRUCT NEW ROADWAY SHOULDERS ON WEST SIDE OF ROADWAY. SHOULDERS TO BE UTILIZED FOR TEMPORARY CONSTRUCTION TRAFFIC. USE STATIONARY LANE CLOSURE ON WEST SIDE OF ROADWAY. EPG FIGURE 616.8.33S (TA-33S).

PHASE 3- CONSTRUCT BRIDGE IMPROVEMENTS ON WEST SIDE OF BRIDGE. USE STATIONARY LANE CLOSURE WITH TEMPORARY TRAFFIC BARRIER ON WEST SIDE OF NORTHBOUND LANES. EPG FIGURE 616.8.34B (TA-34B).

PHASE 4- CONSTRUCT BRIDGE IMPROVEMENTS ON EAST SIDE OF BRIDGE. USE STATIONARY LANE CLOSURE WITH TEMPORARY TRAFFIC BARRIER ON EAST SIDE OF NORTHBOUND LANES. EPG FIGURE 616.8.34B (TA-34B).

TRAFFIC CONTROL
SHEET 10 OF 11

STATE OF MISSOURI
BRIAN FIRMAS ANDERSON
NUMBER PE-2004011822
12/01/2025
62-0250
PROFESSIONAL ENGINEER

DATE PREPARED	
12/1/2025	
ROUTE 13	STATE MO
DISTRICT SW	SHEET NO. 20
COUNTY POLK	
JOB NO. JSR0183	
CONTRACT ID.	
PROJECT NO.	
BRIDGE NO. A26812	

DATE	DESCRIPTION

MISSOURI HIGHWAYS AND TRANSPORTATION COMMISSION
105 WEST CAPITOL
JEFFERSON CITY, MO 65102
1-888-ASK-MODOT (1-888-275-6636)

Taliaferro & Browne, Inc.
Civil/Structural Engineering,
Landscape Architecture & Surveying
1020 E. 8th STREET
KANSAS CITY, MISSOURI 64106
PH (816) 283-2456 FAX (816) 283-0810
PROFESSIONAL ENGINEERING CORPORATION
MISSOURI LICENSE NO. 000846 KANSAS LICENSE NO. E-1481
PROFESSIONAL LANDSCAPE ARCHITECTURE
MISSOURI LICENSE NO. 000094

020_TC_10_JSR0183_Traffic Control.dgn 2:23:21 PM 12/1/2025

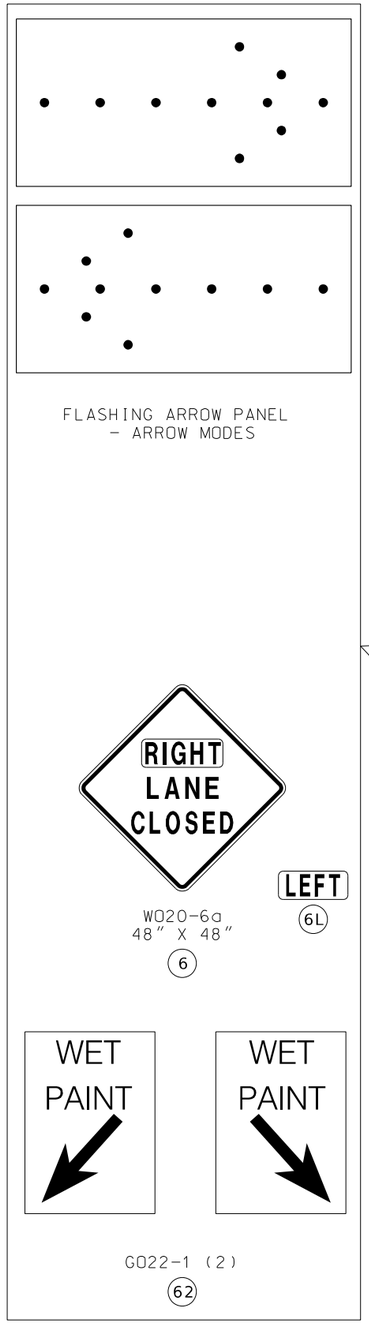

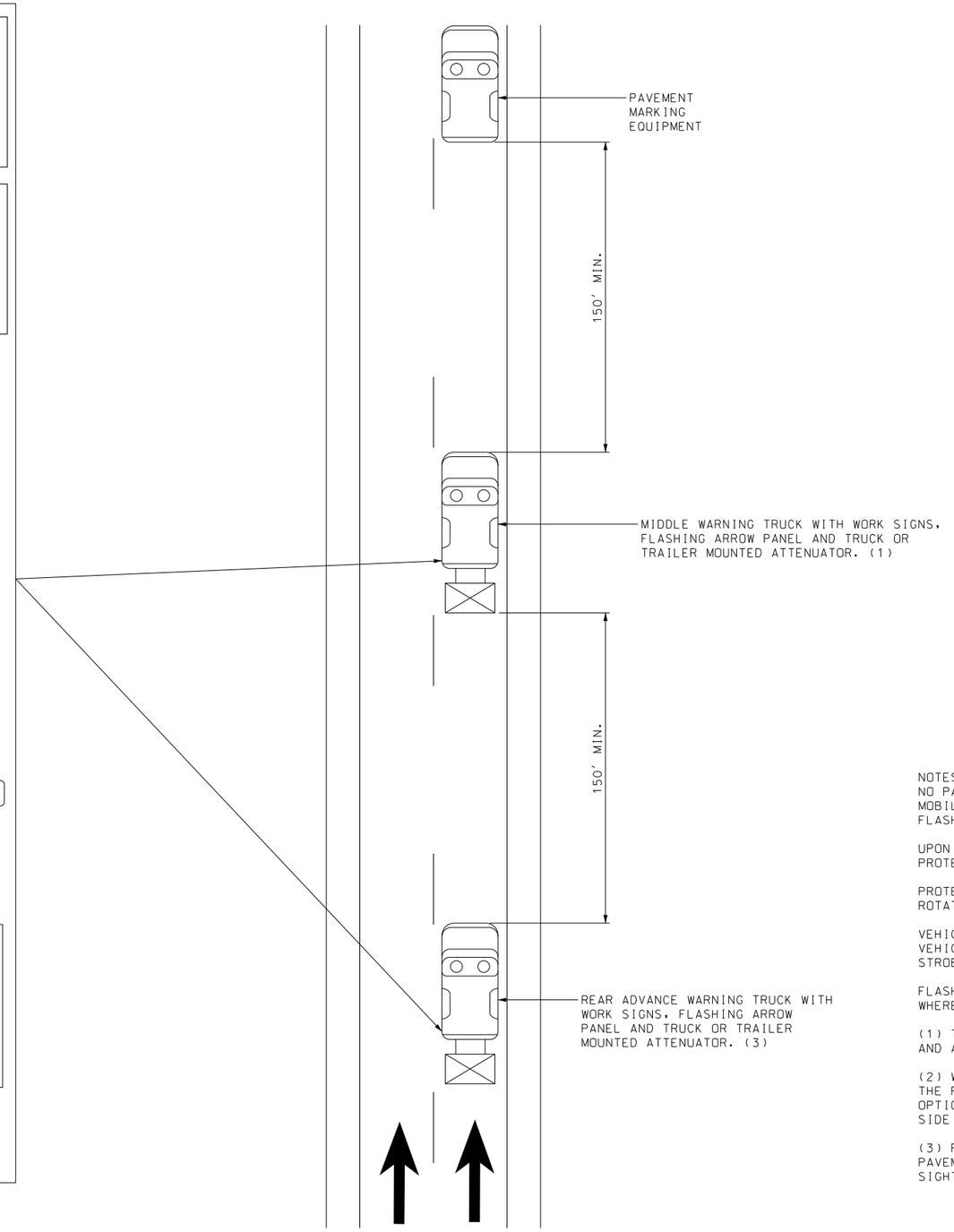

STRIPING ON MULTI-LANE DIVIDED HIGHWAY

TRAFFIC CONTROL LEGEND

- PROPOSED SIGN (SINGLE SIDED)
- EXISTING SIGN (SINGLE SIDED)
- CHANNELIZER
- DIRECTIONAL INDICATOR BARRICADE
- TUBULAR MARKERS
- TYPE III MOVEABLE BARRICADE
- SEQUENTIAL FLASHING WARNING LIGHT
- IMPACT ATTENUATOR 65 MPH (SAND BARRELS)
- VEHICLE WITH TRAILER MOUNTED ATTENUATOR
- CHANGEABLE MESSAGE BOARD
- FLASHING ARROW PANEL
- TEMPORARY CONCRETE TRAFFIC BARRIER (TYPE F)
- TEMPORARY LONG-TERM RUMBLE STRIPS

NOTES:
NO PAYMENT WILL BE MADE FOR TRUCK MOUNTED ATTENATORS (TMA) USED IN MOBILE OPERATIONS OR FOR ANY TMAS DESIGNATED AS OPTIONAL. THIS INCLUDES FLASHING ARROW PANEL AND PROTECTIVE VEHICLE ASSOCIATED WITH TMA.

UPON APPROVAL OF THE ENGINEER, THE CONTRACTOR MAY PROVIDE ADDITIONAL PROTECTIVE TRUCK EQUIPPED WITH PROPER WARNING DEVICES.

PROTECTIVE TRUCK AND WORK VEHICLES SHALL DISPLAY HIGH-INTENSITY ROTATING, FLASHING, OSCILLATING, OR STROBE LIGHTS.

VEHICLE HAZARD WARNING SIGNALS SHALL NOT BE USED INSTEAD OF THE VEHICLE'S HIGH-INTENSITY ROTATING, FLASHING, OSCILLATING, OR STROBE LIGHTS.

FLASHING ARROW PANELS SHALL BE INCIDENTAL TO TRUCK MOUNTED ATTENUATORS, WHEREVER USED. NO ADDITIONAL PAYMENT SHALL BE MADE.

(1) TRUCK IS OPTIONAL ON TWO-LANE UNDIVIDED HIGHWAYS IF SIGNING AND ARROW BOARD IS MOUNTED ON THE PAVEMENT MARKING EQUIPMENT.

(2) WET PAINT SIGNS ARE INSTALLED TO INDICATE THE SIDE IN WHICH THE PAVEMENT MARKING MATERIAL IS BEING APPLIED. AT THE CONTRACTOR'S OPTION, A FRONT FACING WET PAINT SIGN MAY BE INSTALLED ON THE LEFT SIDE OF THE PAVEMENT MARKING EQUIPMENT.

(3) REAR ADVANCE WARNING TRUCK IS POSITIONED AT THE NO TRACK POINT OF THE PAVEMENT MARKING MATERIAL, OR VERTICAL OR HORIZONTAL CURVES THAT RESTRICT SIGHT DISTANCE, OR SPACING SHOWN.

TRAFFIC CONTROL
SHEET 11 OF 11

STATE OF MISSOURI
JASON ERMIAS ANDERSON
NUMBER PE-2004011822
12/01/2025
62-0250
PROFESSIONAL ENGINEER

DATE PREPARED	12/1/2025
ROUTE	13
STATE	MO
DISTRICT	SW
SHEET NO.	21
COUNTY	POLK
JOB NO.	JSR0183
CONTRACT ID.	
PROJECT NO.	
BRIDGE NO.	A26812

DATE	DESCRIPTION

MISSOURI HIGHWAYS AND TRANSPORTATION COMMISSION
105 WEST CAPITOL
JEFFERSON CITY, MO 65102
1-888-ASK-MODOT (1-888-275-6636)

Taliaferro & Browne, Inc.
Civil / Structural Engineering
Landscape Architecture & Surveying
1020 E. 8th STREET
KANSAS CITY, MISSOURI 64106
PH (816) 283-3456 FAX (816) 283-0810
PROFESSIONAL ENGINEERING CORPORATION
MISSOURI LICENSE NO. 000406 KANSAS LICENSE NO. E-1481
PROFESSIONAL LAND SURVEYING CORPORATION
MISSOURI LICENSE NO. 000094

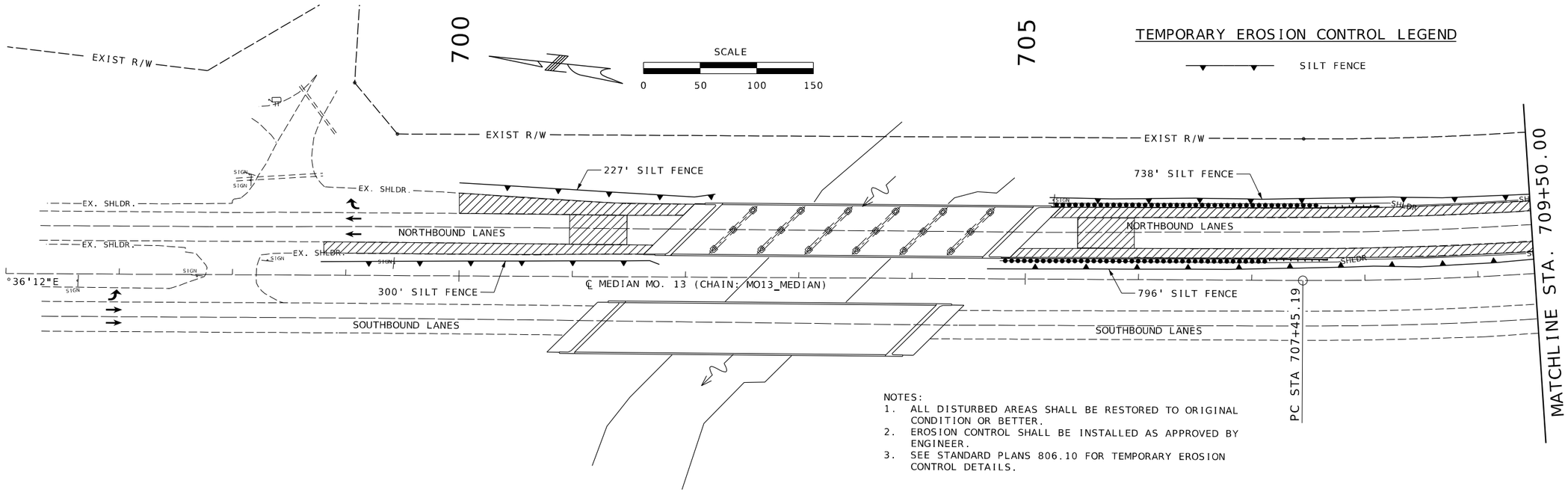

TEMPORARY EROSION CONTROL LEGEND

SILT FENCE

NOTES:
1. ALL DISTURBED AREAS SHALL BE RESTORED TO ORIGINAL CONDITION OR BETTER.
2. EROSION CONTROL SHALL BE INSTALLED AS APPROVED BY ENGINEER.
3. SEE STANDARD PLANS 806.10 FOR TEMPORARY EROSION CONTROL DETAILS.

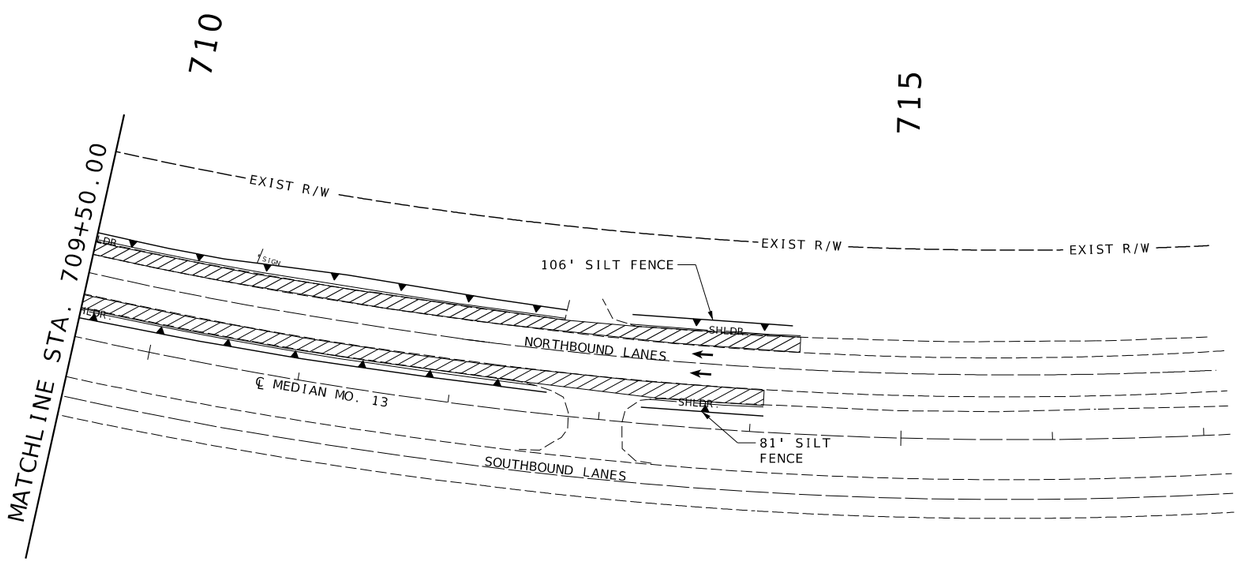

EROSION CONTROL
SHEET 1 OF 1

STATE OF MISSOURI
HUGO ERMIAS ANDEBRHAN
NUMBER PE-2004011822
12/01/2025
62-0250
PROFESSIONAL ENGINEER

DATE PREPARED	12/1/2025
ROUTE	13
STATE	MO
DISTRICT	SW
SHEET NO.	22
COUNTY	POLK
JOB NO.	JSR0183
CONTRACT ID.	
PROJECT NO.	
BRIDGE NO.	A26812

DATE	DESCRIPTION

MISSOURI HIGHWAYS AND TRANSPORTATION COMMISSION
105 WEST CAPITOL
JEFFERSON CITY, MO 65102
1-888-ASK-MODOT (1-888-275-6636)

Taliaferro & Browne, Inc.
Civil / Structural Engineering
Landscape Architecture & Surveying
1020 E. 9th STREET
KANSAS CITY, MISSOURI 64106
PH (816) 283-5456 FAX (816) 283-0810
PROFESSIONAL ENGINEERING CORPORATION
MISSOURI LICENSE NO. 000446 KANSAS LICENSE NO. E-1481
PROFESSIONAL LANDSCAPE ARCHITECTURE CORPORATION
MISSOURI LICENSE NO. 000094

022_EC_01_JSR0183_i50_Erosion Control.dgn 2:24:00 PM 12/1/2025

SCALE

0 50 100 150

SIGNING LEGEND

EXISTING SIGN (SINGLE SIDED)

PROPOSED SIGN (SINGLE SIDED)

(REM) - "REMOVE"
(UIP) - "USE IN PLACE"

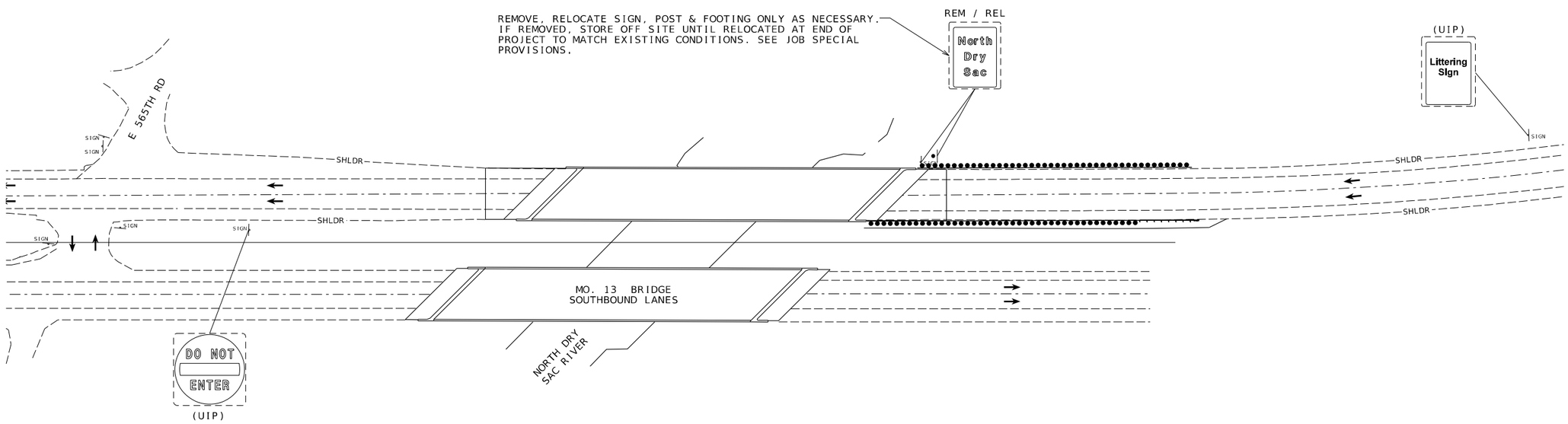

SIGNING
SHEET 1 OF 1

STATE OF MISSOURI
SCOTT MICHAEL MCDONALD NUMBER PE-2018000240
PROFESSIONAL ENGINEER

THIS SHEET HAS BEEN SIGNED, SEALED AND DATED ELECTRONICALLY.

DATE PREPARED	12/1/2025
ROUTE 13	STATE MO
DISTRICT SW	SHEET NO. 23
COUNTY	POLK
JOB NO.	JSR0183
CONTRACT ID.	
PROJECT NO.	
BRIDGE NO.	A26812

DESCRIPTION

DATE

MISSOURI HIGHWAYS AND TRANSPORTATION COMMISSION
105 WEST CAPITOL
JEFFERSON CITY, MO 65102
1-888-ASK-MODOT (1-888-275-6636)

VEENSTRA & KIMM INC.
A Kleinfelder Company
9788 N Ash Avenue Kansas City, Missouri 64157
816-781-6182 816-781-0643 (FAX)
Certificate of Authority No. 2002006347

023_SN_01_JSR0183_Signing.dgn 2:24:01 PM 12/1/2025

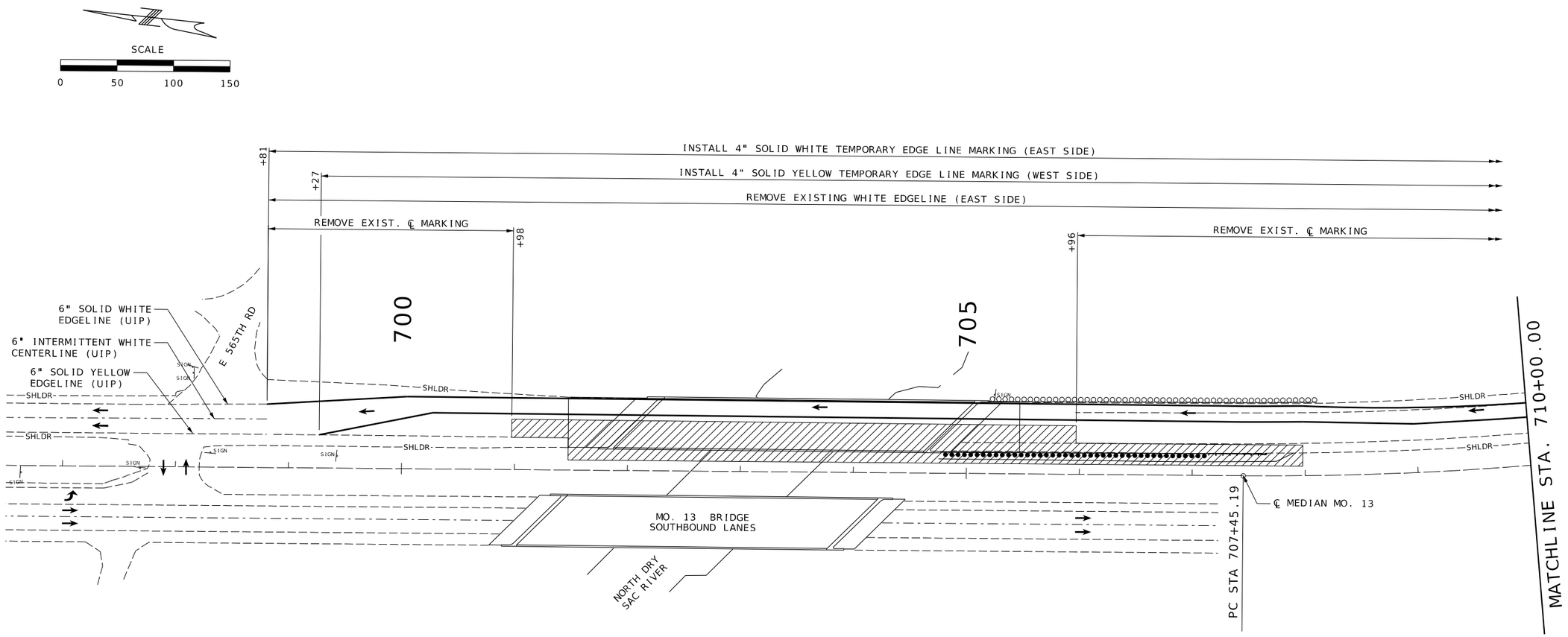

CONSTRUCTION PHASING: NORTHBOUND LANES BRIDGE NO. A26812

PHASE 1- CONSTRUCT NEW ROADWAY SHOULDERS ON EAST SIDE OF ROADWAY.
SHOULDERS TO BE UTILIZED FOR TEMPORARY CONSTRUCTION TRAFFIC.
USE STATIONARY LANE CLOSURE ON EAST SIDE OF ROADWAY.

PHASE 2- CONSTRUCT NEW ROADWAY SHOULDERS ON WEST SIDE OF ROADWAY.
SHOULDERS TO BE UTILIZED FOR TEMPORARY CONSTRUCTION TRAFFIC.
USE STATIONARY LANE CLOSURE ON WEST SIDE OF ROADWAY.

PHASE 3- CONSTRUCT BRIDGE IMPROVEMENTS ON WEST SIDE OF BRIDGE.
USE STATIONARY LANE CLOSURE WITH TEMPORARY TRAFFIC BARRIER
ON WEST SIDE OF NORTHBOUND LANES.

PHASE 4- CONSTRUCT BRIDGE IMPROVEMENTS ON EAST SIDE OF BRIDGE.
USE STATIONARY LANE CLOSURE WITH TEMPORARY TRAFFIC BARRIER
ON EAST SIDE OF NORTHBOUND LANES.

PHASE 3 - TEMPORARY

PAVEMENT MARKING
SHEET 1 OF 7

STATE OF MISSOURI
SCOTT MICHAEL MCDONALD
NUMBER
PE-2018000240
PROFESSIONAL ENGINEER

THIS SHEET HAS BEEN SIGNED, SEALED AND DATED ELECTRONICALLY.

DATE PREPARED	
12/1/2025	
ROUTE 13	STATE MO
DISTRICT SW	SHEET NO. 24
COUNTY POLK	
JOB NO. JSR0183	
CONTRACT ID.	
PROJECT NO.	
BRIDGE NO. A26812	

DATE	DESCRIPTION

MISSOURI HIGHWAYS AND TRANSPORTATION COMMISSION
105 WEST CAPITOL
JEFFERSON CITY, MO 65102
1-888-ASK-MODOT (1-888-275-6636)

VEENSTRA & KIMM INC.
A Kleinfelder Company
9788 N Ash Avenue Kansas City, Missouri 64157
816-781-6182 816-781-0643 (FAX)
Certificate of Authority No. 2002006347

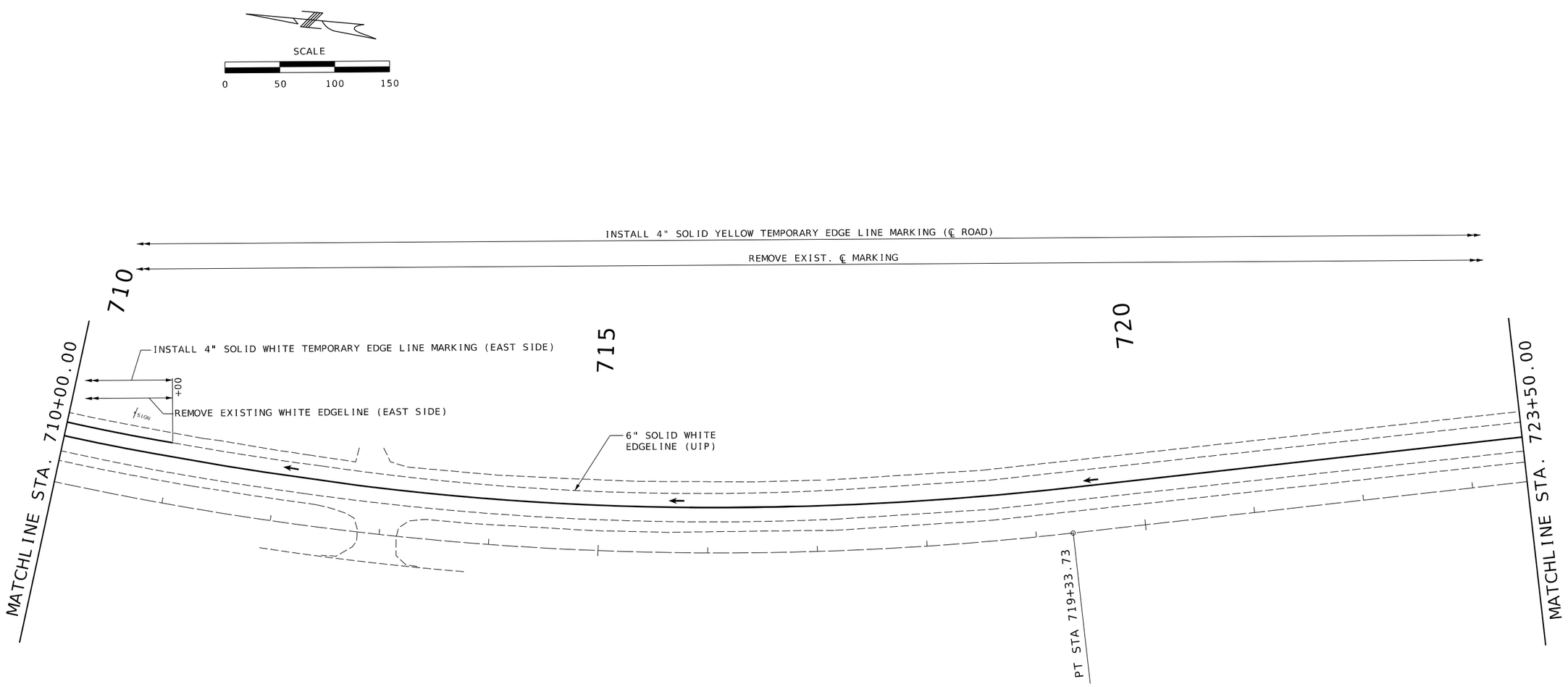

CONSTRUCTION PHASING: NORTHBOUND LANES BRIDGE NO. A26812

PHASE 1- CONSTRUCT NEW ROADWAY SOULDERS ON EAST SIDE OF ROADWAY.
SHOULDERS TO BE UTILIZED FOR TEMPORARY CONSTRUCTION TRAFFIC.
USE STATIONARY LANE CLOSURE ON EAST SIDE OF ROADWAY.

PHASE 2- CONSTRUCT NEW ROADWAY SOULDERS ON WEST SIDE OF ROADWAY.
SHOULDERS TO BE UTILIZED FOR TEMPORARY CONSTRUCTION TRAFFIC.
USE STATIONARY LANE CLOSURE ON WEST SIDE OF ROADWAY.

PHASE 3- CONSTRUCT BRIDGE IMPROVEMENTS ON WEST SIDE OF BRIDGE.
USE STATIONARY LANE CLOSURE WITH TEMPORARY TRAFFIC BARRIER
ON WEST SIDE OF NORTHBOUND LANES.

PHASE 4- CONSTRUCT BRIDGE IMPROVEMENTS ON EAST SIDE OF BRIDGE.
USE STATIONARY LANE CLOSURE WITH TEMPORARY TRAFFIC BARRIER
ON EAST SIDE OF NORTHBOUND LANES.

PHASE 3 - TEMPORARY

PAVEMENT MARKING
SHEET 2 OF 7

STATE OF MISSOURI
SCOTT MICHAEL MCDONALD
NUMBER
PE-2018000240
PROFESSIONAL ENGINEER

THIS SHEET HAS BEEN SIGNED, SEALED AND DATED ELECTRONICALLY.

DATE PREPARED	12/1/2025
ROUTE	13
STATE	MO
DISTRICT	SW
SHEET NO.	25
COUNTY	POLK
JOB NO.	JSR0183
CONTRACT ID.	
PROJECT NO.	
BRIDGE NO.	A26812

DATE	DESCRIPTION

MISSOURI HIGHWAYS AND TRANSPORTATION COMMISSION
105 WEST CAPITOL
JEFFERSON CITY, MO 65102
1-888-ASK-MODOT (1-888-275-6636)

VEENSTRA & KIMM INC.
A Kleinfelder Company
9788 N Ash Avenue Kansas City, Missouri 64157
816-781-6182 816-781-0643 (FAX)
Certificate of Authority No. 2002006347

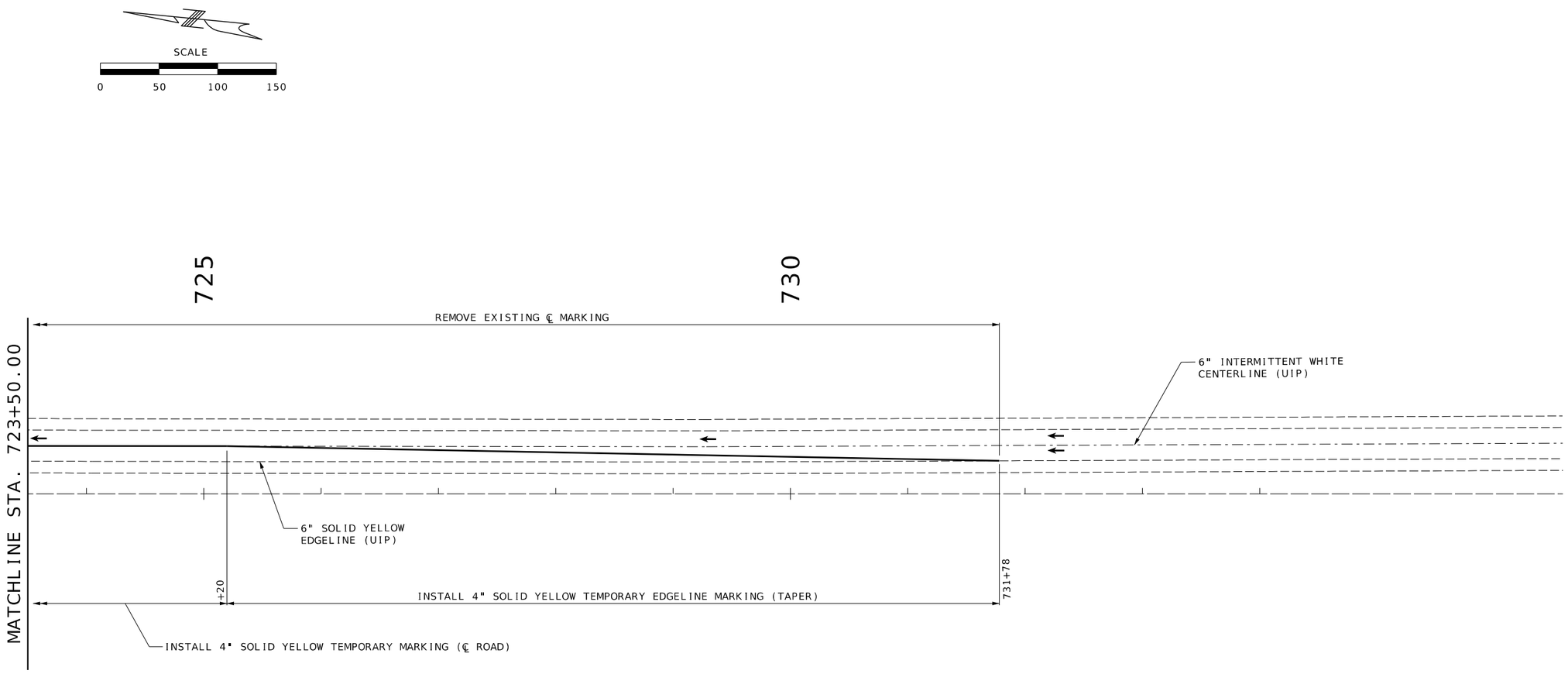

CONSTRUCTION PHASING: NORTHBOUND LANES BRIDGE NO. A26812

PHASE 1- CONSTRUCT NEW ROADWAY SOULDERS ON EAST SIDE OF ROADWAY.
SHOULDERS TO BE UTILIZED FOR TEMPORARY CONSTRUCTION TRAFFIC.
USE STATIONARY LANE CLOSURE ON EAST SIDE OF ROADWAY.

PHASE 2- CONSTRUCT NEW ROADWAY SOULDERS ON WEST SIDE OF ROADWAY.
SHOULDERS TO BE UTILIZED FOR TEMPORARY CONSTRUCTION TRAFFIC.
USE STATIONARY LANE CLOSURE ON WEST SIDE OF ROADWAY.

PHASE 3- CONSTRUCT BRIDGE IMPROVEMENTS ON WEST SIDE OF BRIDGE.
USE STATIONARY LANE CLOSURE WITH TEMPORARY TRAFFIC BARRIER
ON WEST SIDE OF NORTHBOUND LANES.

PHASE 4- CONSTRUCT BRIDGE IMPROVEMENTS ON EAST SIDE OF BRIDGE.
USE STATIONARY LANE CLOSURE WITH TEMPORARY TRAFFIC BARRIER
ON EAST SIDE OF NORTHBOUND LANES.

PHASE 3 - TEMPORARY

PAVEMENT MARKING
SHEET 3 OF 7

STATE OF MISSOURI
SCOTT MICHAEL MCDONALD
NUMBER
PE-2018000240
PROFESSIONAL ENGINEER

THIS SHEET HAS BEEN SIGNED, SEALED AND DATED ELECTRONICALLY.

DATE PREPARED	12/1/2025
ROUTE	13
STATE	MO
DISTRICT	SW
SHEET NO.	26
COUNTY	POLK
JOB NO.	JSR0183
CONTRACT ID.	
PROJECT NO.	
BRIDGE NO.	A26812

DATE	DESCRIPTION

MISSOURI HIGHWAYS AND TRANSPORTATION COMMISSION
105 WEST CAPITOL
JEFFERSON CITY, MO 65102
1-888-ASK-MODOT (1-888-275-6636)

VEENSTRA & KIMM INC.
A Kleinfelder Company
9788 N Ash Avenue Kansas City, Missouri 64157
816-781-6182 816-781-0643 (FAX)
Certificate of Authority No. 2002006347

024_PM_01-03_JSR0183_Pavement Marking.dgn 2:24:04 PM 12/1/2025

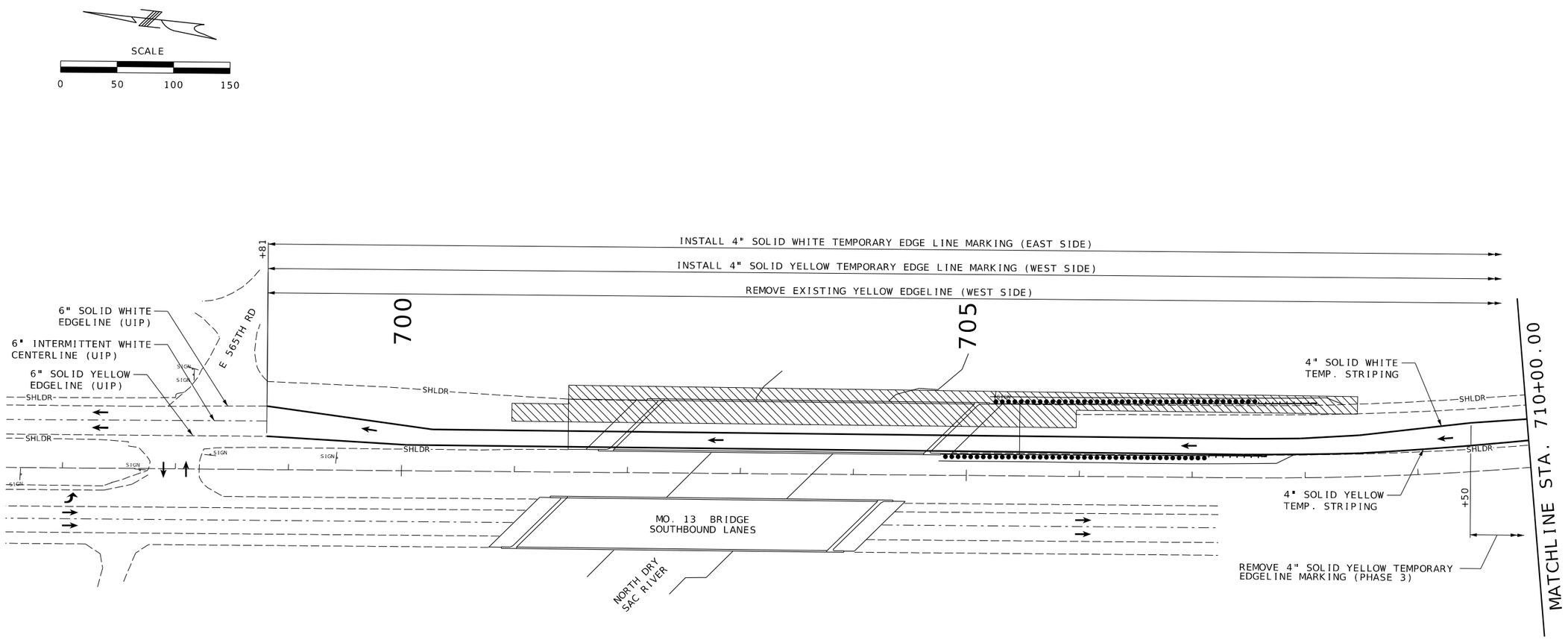

CONSTRUCTION PHASING: NORTHBOUND LANES BRIDGE NO. A26812

PHASE 1- CONSTRUCT NEW ROADWAY SHOULDERS ON EAST SIDE OF ROADWAY. SHOULDERS TO BE UTILIZED FOR TEMPORARY CONSTRUCTION TRAFFIC. USE STATIONARY LANE CLOSURE ON EAST SIDE OF ROADWAY.

PHASE 2- CONSTRUCT NEW ROADWAY SHOULDERS ON WEST SIDE OF ROADWAY. SHOULDERS TO BE UTILIZED FOR TEMPORARY CONSTRUCTION TRAFFIC. USE STATIONARY LANE CLOSURE ON WEST SIDE OF ROADWAY.

PHASE 3- CONSTRUCT BRIDGE IMPROVEMENTS ON WEST SIDE OF BRIDGE. USE STATIONARY LANE CLOSURE WITH TEMPORARY TRAFFIC BARRIER ON WEST SIDE OF NORTHBOUND LANES.

PHASE 4- CONSTRUCT BRIDGE IMPROVEMENTS ON EAST SIDE OF BRIDGE. USE STATIONARY LANE CLOSURE WITH TEMPORARY TRAFFIC BARRIER ON EAST SIDE OF NORTHBOUND LANES.

PHASE 4 - TEMPORARY

PAVEMENT MARKING
SHEET 4 OF 7

STATE OF MISSOURI
SCOTT MICHAEL MCDONALD
NUMBER
PE-2018000240
PROFESSIONAL ENGINEER

THIS SHEET HAS BEEN SIGNED, SEALED AND DATED ELECTRONICALLY.

DATE PREPARED	
12/1/2025	
ROUTE 13	STATE MO
DISTRICT SW	SHEET NO. 27
COUNTY POLK	
JOB NO. JSR0183	
CONTRACT ID.	
PROJECT NO.	
BRIDGE NO. A26812	

DESCRIPTION	DATE

MISSOURI HIGHWAYS AND TRANSPORTATION COMMISSION
105 WEST CAPITOL
JEFFERSON CITY, MO 65102
1-888-ASK-MODOT (1-888-275-6636)

VEENSTRA & KIMM INC.
A Kleinfelder Company
9788 N Ash Avenue Kansas City, Missouri 64157
816-781-6182 816-781-0643 (FAX)
Certificate of Authority No. 2002006347

027_PM_04-06_JSR0183_Pavement Marking.dgn 2:24:06 PM 12/1/2025

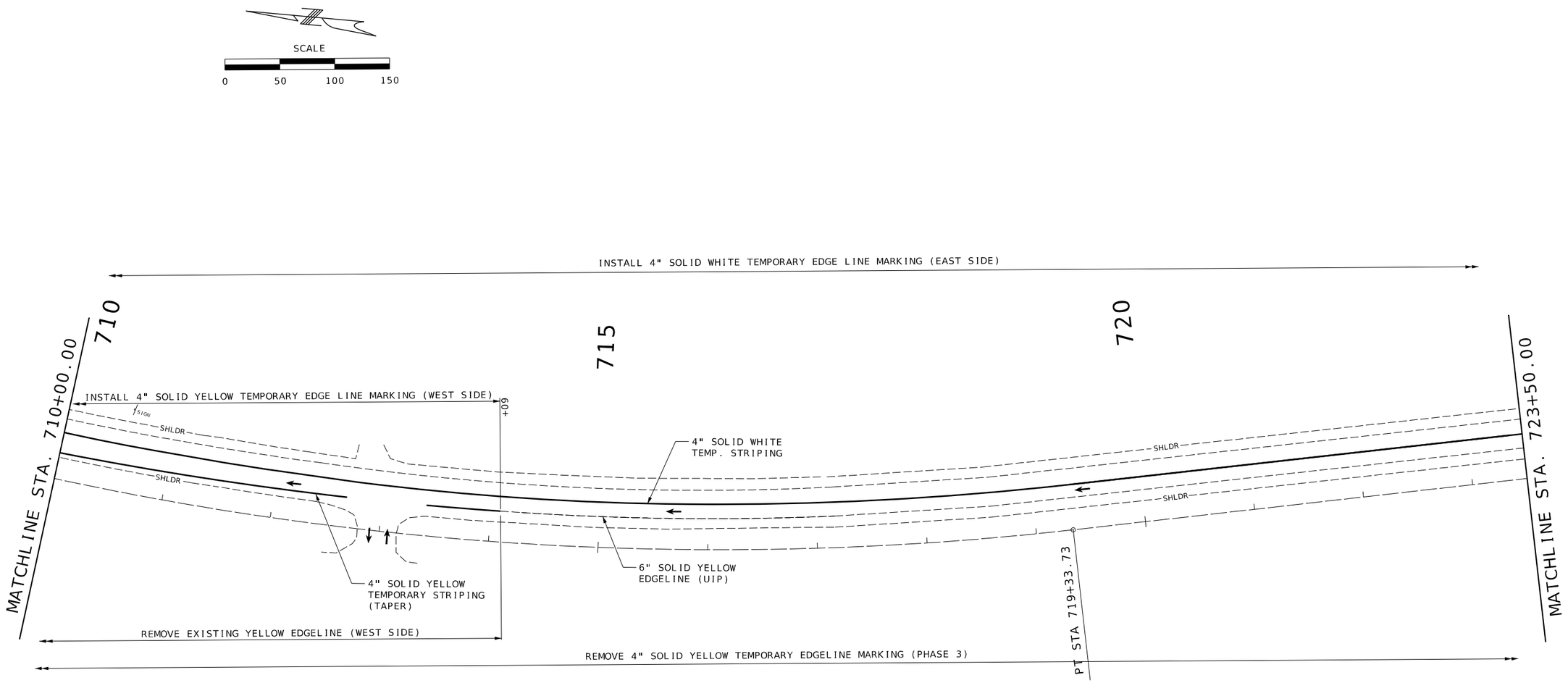

CONSTRUCTION PHASING: NORTHBOUND LANES BRIDGE NO. A26812

PHASE 1- CONSTRUCT NEW ROADWAY SHOULDERS ON EAST SIDE OF ROADWAY.
SHOULDERS TO BE UTILIZED FOR TEMPORARY CONSTRUCTION TRAFFIC.
USE STATIONARY LANE CLOSURE ON EAST SIDE OF ROADWAY.

PHASE 2- CONSTRUCT NEW ROADWAY SHOULDERS ON WEST SIDE OF ROADWAY.
SHOULDERS TO BE UTILIZED FOR TEMPORARY CONSTRUCTION TRAFFIC.
USE STATIONARY LANE CLOSURE ON WEST SIDE OF ROADWAY.

PHASE 3- CONSTRUCT BRIDGE IMPROVEMENTS ON WEST SIDE OF BRIDGE.
USE STATIONARY LANE CLOSURE WITH TEMPORARY TRAFFIC BARRIER
ON WEST SIDE OF NORTHBOUND LANES.

PHASE 4- CONSTRUCT BRIDGE IMPROVEMENTS ON EAST SIDE OF BRIDGE.
USE STATIONARY LANE CLOSURE WITH TEMPORARY TRAFFIC BARRIER
ON EAST SIDE OF NORTHBOUND LANES.

PHASE 4 - TEMPORARY

PAVEMENT MARKING
SHEET 5 OF 7

STATE OF MISSOURI
SCOTT MICHAEL MCDONALD
NUMBER
PE-2018000240
PROFESSIONAL ENGINEER

THIS SHEET HAS BEEN SIGNED, SEALED AND DATED ELECTRONICALLY.

DATE PREPARED	12/1/2025
ROUTE 13	STATE MO
DISTRICT SW	SHEET NO. 28
COUNTY	POLK
JOB NO.	JSR0183
CONTRACT ID.	
PROJECT NO.	
BRIDGE NO.	A26812

DATE	DESCRIPTION

MISSOURI HIGHWAYS AND TRANSPORTATION COMMISSION
105 WEST CAPITOL
JEFFERSON CITY, MO 65102
1-888-ASK-MODOT (1-888-275-6636)

VEENSTRA & KIMM INC.
A Kleinfelder Company
9788 N Ash Avenue Kansas City, Missouri 64157
816-781-6182 816-781-0643 (FAX)
Certificate of Authority No. 2002006347

027_PM_04-06_JSR0183_Pavement Marking.dgn 2:24:06 PM 12/1/2025

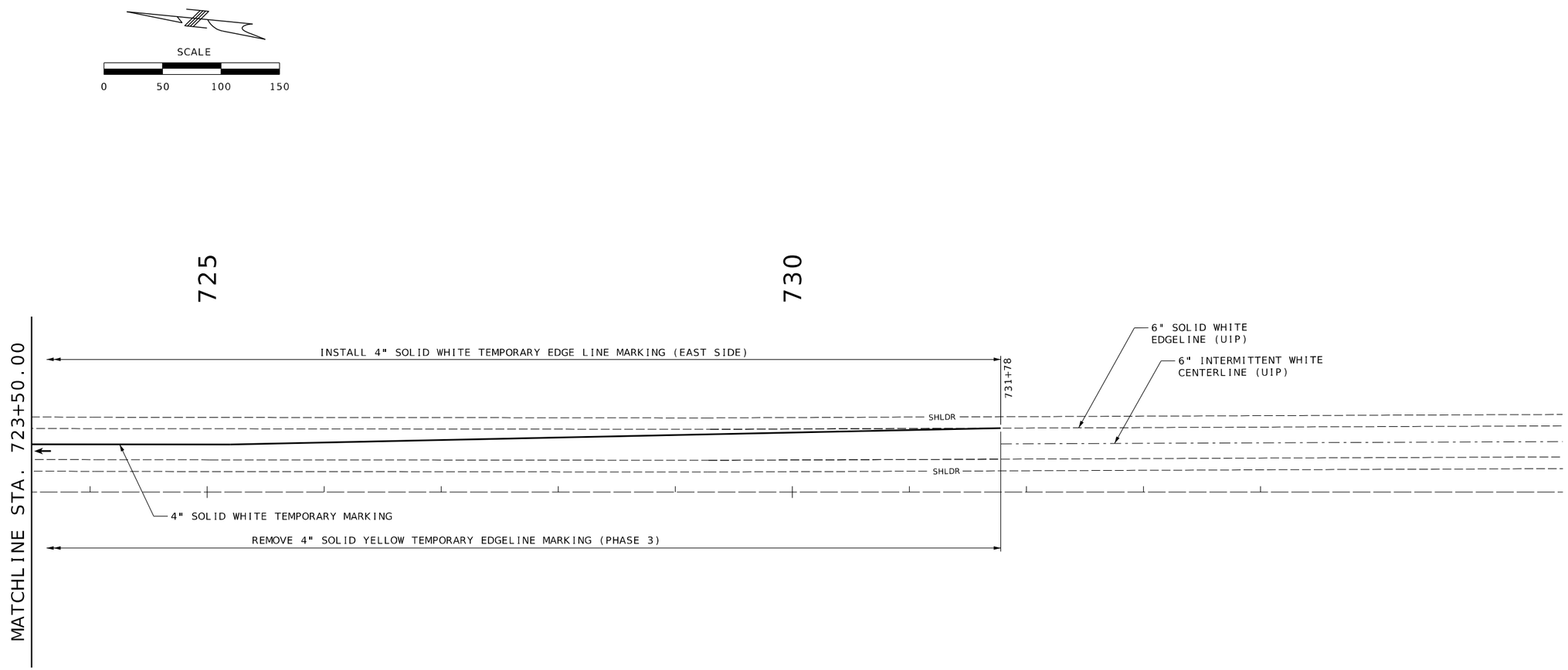

CONSTRUCTION PHASING: NORTHBOUND LANES BRIDGE NO. A26812

PHASE 1- CONSTRUCT NEW ROADWAY SHOULDERS ON EAST SIDE OF ROADWAY. SHOULDERS TO BE UTILIZED FOR TEMPORARY CONSTRUCTION TRAFFIC. USE STATIONARY LANE CLOSURE ON EAST SIDE OF ROADWAY.

PHASE 2- CONSTRUCT NEW ROADWAY SHOULDERS ON WEST SIDE OF ROADWAY. SHOULDERS TO BE UTILIZED FOR TEMPORARY CONSTRUCTION TRAFFIC. USE STATIONARY LANE CLOSURE ON WEST SIDE OF ROADWAY.

PHASE 3- CONSTRUCT BRIDGE IMPROVEMENTS ON WEST SIDE OF BRIDGE. USE STATIONARY LANE CLOSURE WITH TEMPORARY TRAFFIC BARRIER ON WEST SIDE OF NORTHBOUND LANES.

PHASE 4- CONSTRUCT BRIDGE IMPROVEMENTS ON EAST SIDE OF BRIDGE. USE STATIONARY LANE CLOSURE WITH TEMPORARY TRAFFIC BARRIER ON EAST SIDE OF NORTHBOUND LANES.

PHASE 4 - TEMPORARY

PAVEMENT MARKING
SHEET 6 OF 7

STATE OF MISSOURI
SCOTT MICHAEL MCDONALD
NUMBER
PE-2018000240
PROFESSIONAL ENGINEER

THIS SHEET HAS BEEN SIGNED, SEALED AND DATED ELECTRONICALLY.

DATE PREPARED	
12/1/2025	
ROUTE	STATE
13	MO
DISTRICT	SHEET NO.
SW	29
COUNTY	
POLK	
JOB NO.	
JSR0183	
CONTRACT ID.	
PROJECT NO.	
BRIDGE NO.	
A26812	

DATE	DESCRIPTION

MISSOURI HIGHWAYS AND TRANSPORTATION COMMISSION
105 WEST CAPITOL
JEFFERSON CITY, MO 65102
1-888-ASK-MODOT (1-888-275-6636)

VEENSTRA & KIMM INC.
A Kleinfelder Company
9788 N Ash Avenue Kansas City, Missouri 64157
816-781-6182 816-781-0643 (FAX)
Certificate of Authority No. 2002006347

027_PM_04-06_JSR0183_Pavement Marking.dgn 2:24:07 PM 12/1/2025

NOTES:
1. REMOVE ALL TEMPORARY PAVEMENT MARKINGS PRIOR TO INSTALLING PERMANENT PAVEMENT MARKINGS.
2. ALL DISTANCES SHOWN FOR PAVEMENT MARKINGS ARE APPROXIMATE AND MAY BE REVISED TO FIT FIELD CONDITIONS AS DIRECTED BY THE ENGINEER.

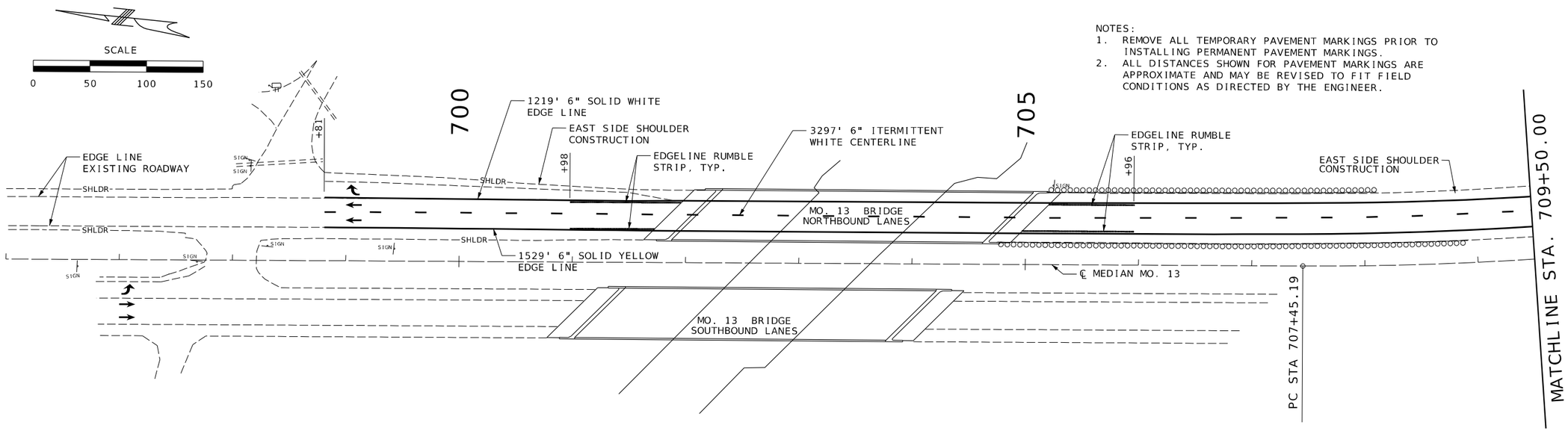

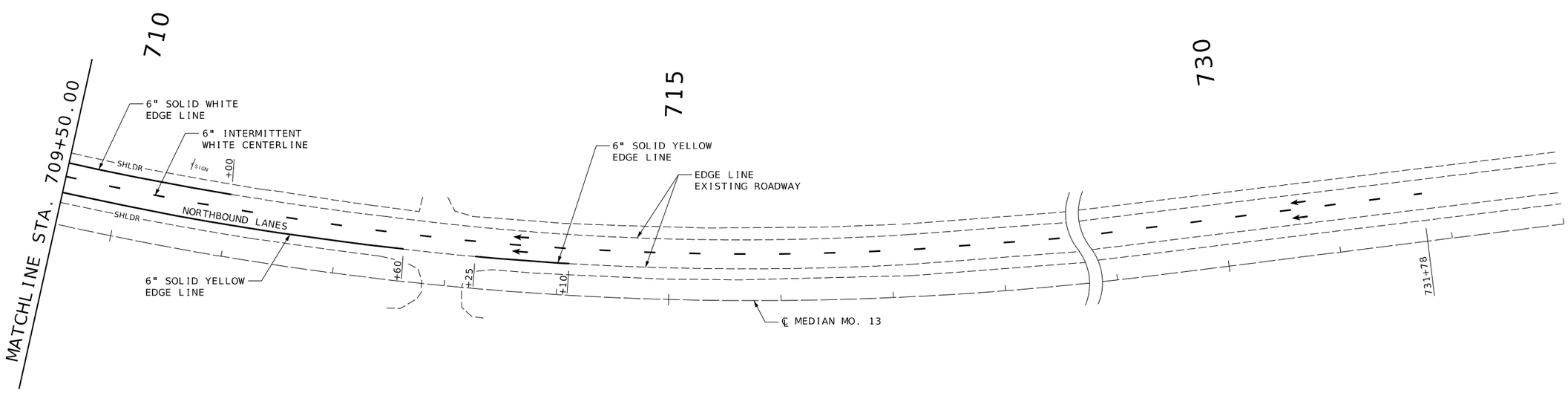

PHASE 4 - PERMANENT

PAVEMENT MARKING
SHEET 7 OF 7

DATE PREPARED	12/1/2025
ROUTE 13	STATE MO
DISTRICT SW	SHEET NO. 30
COUNTY	POLK
JOB NO.	JSR0183
CONTRACT ID.	
PROJECT NO.	
BRIDGE NO.	A26812

DATE	DESCRIPTION

MISSOURI HIGHWAYS AND TRANSPORTATION COMMISSION
105 WEST CAPITOL
JEFFERSON CITY, MO 65102
1-888-ASK-MODOT (1-888-275-6636)

Taliaferro & Browne, Inc.
Civil / Structural Engineering
Landscape Architecture & Surveying
1020 E. 8th STREET
KANSAS CITY, MISSOURI 64106
PH (816) 283-8456 FAX (816) 283-0810
PROFESSIONAL ENGINEERING CORPORATION
MISSOURI LICENSE NO. 000446 KANSAS LICENSE NO. E-1481
PROFESSIONAL LANDSCAPE ARCHITECTURAL CORPORATION
MISSOURI LICENSE NO. 000094

SEC/SUR 9 TWP 31N RGE 22W

Required Lap Length For Bar Splices ***	
Bar Size	Splice Length
4	2'-7"
5	3'-3"
6	3'-10"
7	4'-11"

*** Unless otherwise shown.

U.I.P. AND REDECK EXISTING (34'-5 @ 42'-34') CONTINUOUS COMPOSITE WIDE FLANGE BEAM SPANS (SKEW: 45°00'00" L.A.)

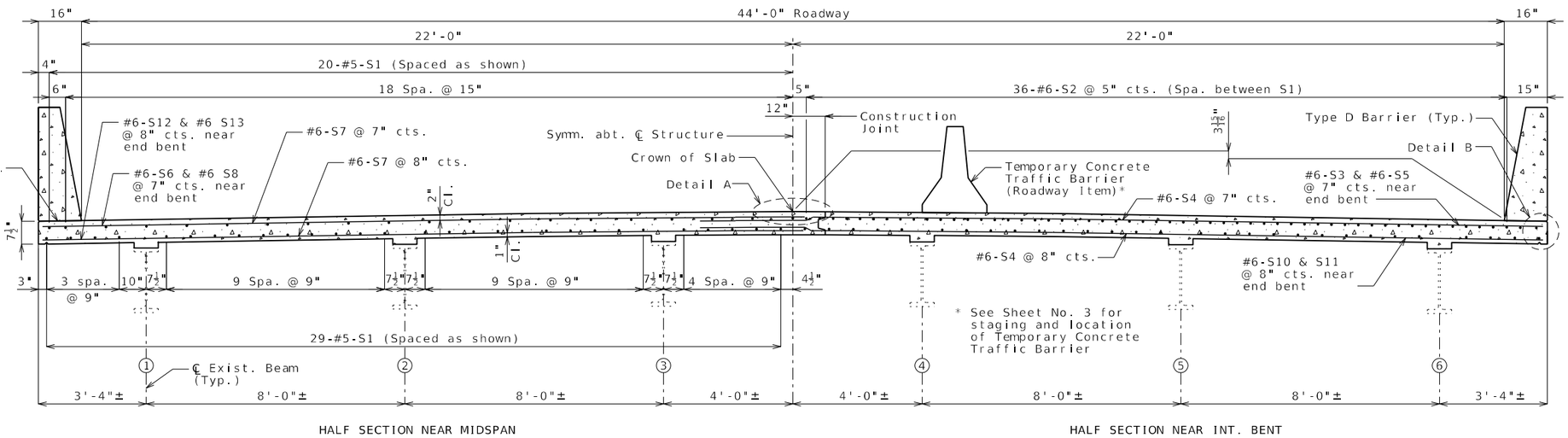

TYPICAL SECTION THRU SLAB

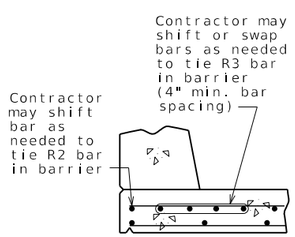

OPTIONAL SHIFTING TOP BARS AT BARRIER

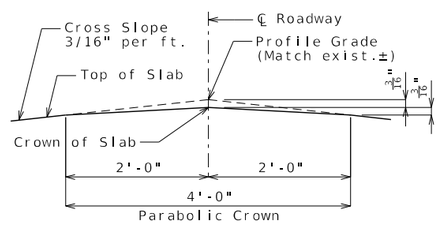

DETAIL A

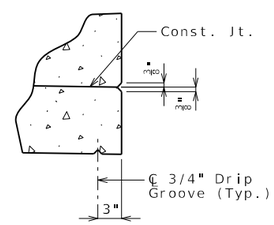

DETAIL B

General Notes:

Design Specifications:
- 2002 AASHTO LFD (17th Ed.) Standard Specifications
- Seismic Performance Category A

Design Loading:
- HS20-44 (1969) (Existing)
- HS20-44 (New Construction)
- 35 lb/sf Future Wearing Surface
- Earth - 120 lb/cf, Equivalent Fluid Pressure 45 lb/cf
- Fatigue Stress - Case III

Design Unit Stresses:
- Class B-1 Concrete (Barrier) f'c = 4,000 psi
- Class B-2 Concrete (End Bents & Superstructure, except Barrier) f'c = 4,000 psi
- Reinforcing Steel (ASTM A615 Grade 60) fy = 60,000 psi

Joint Filler:
All joint filler shall be in accordance with Sec 1057 for preformed sponge rubber expansion and partition joint filler, except as noted.

Reinforcing Steel:
Minimum clearance to reinforcing steel shall be 1 1/2", unless otherwise shown.

Miscellaneous:
Protective coating for concrete bents and piers (Urethane or Epoxy) shall be applied as shown on the bridge plans and in accordance with Sec 711.

Bars bonded in existing concrete not removed shall be cleanly stripped and embedded into new concrete where possible. If length is available, existing bars shall extend into new concrete at least 40 diameters for plain bars and 30 diameters for deformed bars, unless otherwise noted.

Roadway surfacing adjacent to bridge ends shall match new bridge slab surface. (Roadway item)

Outline of existing work is indicated by light dashed lines. Heavy lines indicate new work.

Contractor shall verify all dimensions in field before finalizing the shop drawings.

The area exposed by the removal of concrete and not covered with new concrete shall be coated with an approved qualified special mortar in accordance with Sec 704.

Traffic Handling:
Traffic to be maintained on Structure during construction. See roadway plans for traffic control and Sheet No. 3 for staged construction details.

Estimated Quantities for Slab on Steel		
Item		Total
Class B-2 Concrete	cu. yard	314
Reinforcing Steel (Epoxy Coated)	pound	105,570

The table of Estimated Quantities for Slab on Steel represents the quantities used by the State in preparing the cost estimate for concrete slabs. The area of the concrete slab will be measured to the nearest square yard longitudinally from end of slab to end of slab and transversely from out to out of bridge slab (or with the horizontal dimensions as shown on the plan of slab). Payment for stay-in-place corrugated steel forms, conventional forms, all concrete and epoxy coated reinforcing steel will be considered completely covered by the contract unit price for the slab. Variations may be encountered in the estimated quantities but the variations cannot be used for an adjustment in the contract unit price.

Method of forming the slab shall be in accordance with Sec 703. All hardware for forming the slab to be left in place as a permanent part of the structure shall be coated in accordance with ASTM A123 or ASTM B633 with a thickness Class SC 4 and a finish Type I, II or III.

Slab shall be cast-in-place with conventional forming or stay-in-place corrugated steel forms. Precast prestressed panels will not be permitted.

For Optional Stay-In-Place Form Details, see Sheet No. 12.

Estimated Quantities		
Item		Total
Removal of Miscellaneous ACM (Non-Friable)	sq. foot	26
Class 1 Excavation	cu. yard	155
Temporary Shoring	lump sum	1
Removal of Existing Bridge Deck	sq. foot	13,250
Removal of Existing Bearings	each	12
Bridge Approach Slab (Major)	sq. yard	198
Slab on Steel	sq. yard	1470
Type D Barrier	linear foot	609
Substructure Repair (Formed)	sq. foot	60
Epoxy Pressure Injecting	linear foot	25
** Protective Coating-Concrete Bents and Piers (Epoxy)	lump sum	1
Fabricated Structural Low Alloy Steel (Misc.)	pound	470
Slab Drain	each	52
Surface Preparation for Recoating Structural Steel	sq. foot	800
Field Application of Inorganic Zinc Primer	sq. foot	800
Intermediate Field Coat (System G)	sq. foot	800
Finish Field Coat (System G)	sq. foot	800
Vertical Drain at End Bents	each	2
Laminated Neoprene Bearing Pad Assembly	each	12
Strip Seal Expansion Joint System	linear foot	130

** Exposed concrete surface of End Bents No. 1 and 8, including wing walls. Columns (full height), Intermediate Bents No. 2, 3, 4, 5, 6 & 7. Estimated quantity of 4300 sq. ft.

REPAIRS TO BRIDGE:
ROUTE 13 NB OVER DRY SAC RIVER

ROUTE 13 FROM ROUTE AE TO ROUTE 215
ABOUT 0.9 MILES NORTH OF ROUTE AE
BEGINNING STATION 702+05.50 ± (MATCH EXISTING)

Detailed Apr. 2025
Checked Jul. 2025

Note: This drawing is not to scale. Follow dimensions.

STATE OF MISSOURI
SCOTT MICHAEL MCDONALD
NUMBER PE-2018000240
PROFESSIONAL ENGINEER

THIS SHEET HAS BEEN SIGNED, SEALED AND DATED ELECTRONICALLY.

DATE PREPARED 12/01/2025
ROUTE 13 | STATE MO
DISTRICT BR | SHEET NO. 1
COUNTY POLK
JOB NO. JSR0183
CONTRACT ID.
PROJECT NO.
BRIDGE NO. A26812

DESCRIPTION
DATE

MISSOURI HIGHWAYS AND TRANSPORTATION COMMISSION
105 WEST CAPITOL
JEFFERSON CITY, MO 65102
1-888-ASK-MODOT (1-888-275-6636)

VEENSTRA & KIMM INC.
A Kleinfelder Company
9788 N Ash Avenue Kansas City, Missouri 64157
816-781-6182 816-781-0943 (FAX)
Certificate of Authority No. 2002006347

Resin Anchor System

The contractor shall use one of the qualified resin anchor systems in accordance with Sec 1039.

The minimum embedment depth in concrete with f'c = 4000 psi for the resin anchor systems shall be that required to meet the minimum ultimate pullout strength in accordance with Sec 1039 but shall not be less than 6".

An epoxy coated #5 Grade 60 reinforcing bar shall be substituted for the 5/8" Ø threaded rod.

Cost of furnishing and installing Resin Anchor Systems A and B, complete in place, will be considered completely covered by the contract unit price for Bridge Approach Slab (Major).

For Resin Anchor System C, see Sheet No. 14.

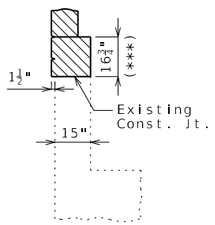

DETAILS OF WINGWALL REMOVAL AT END BENTS

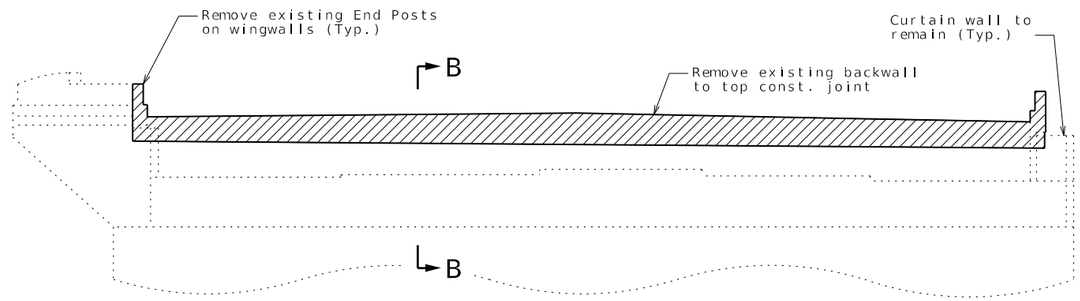

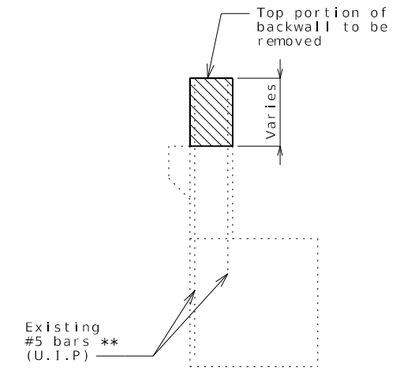

SECTION B-B

DETAILS OF CONCRETE REMOVAL AT END BENTS

The cost of concrete removal as shown will be considered completely covered by the contract unit price for Removal of Existing Bridge Deck.

A smooth, level surface shall be provided at removal lines.

** #5 vertical bars shall be cleaned, straightened and reused.

*** Verify dimension in field.

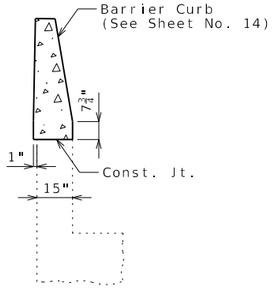

DETAILS OF WINGWALL REPLACEMENT AT END BENTS

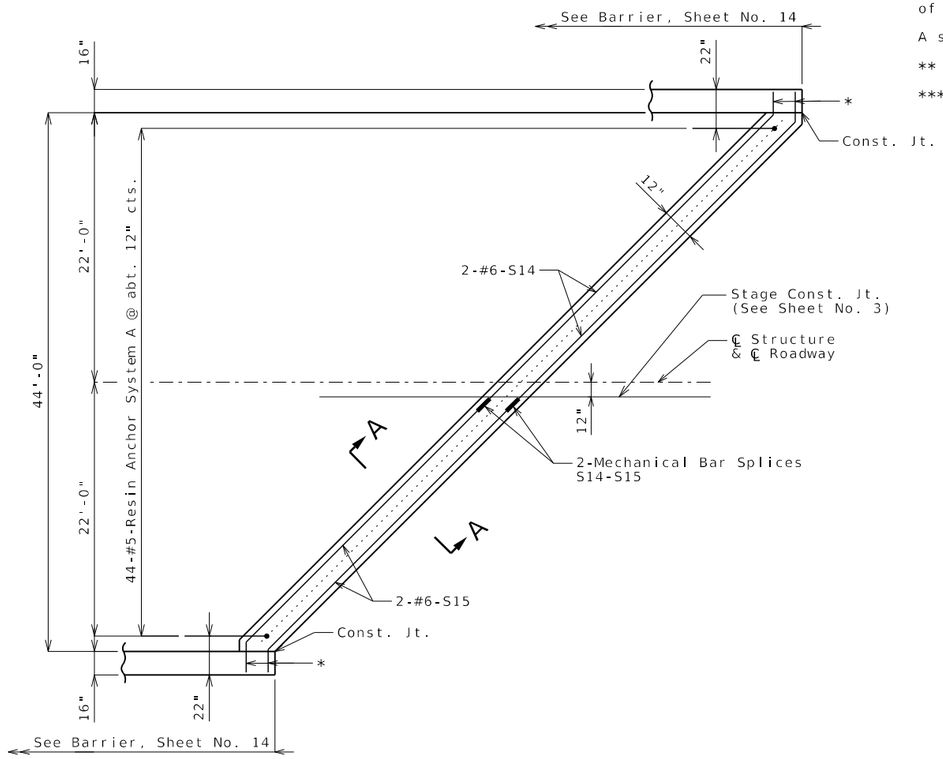

PART PLAN OF SLAB SHOWING REINFORCEMENT AT END BENT

Existing reinforcement not shown for clarity.

* Field Bend S14 and S15 bars as necessary.

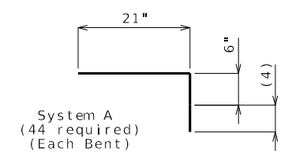

DETAILS OF RESIN ANCHOR SYSTEM

(4) Manufacturer's recommended embedment length (5" min.)

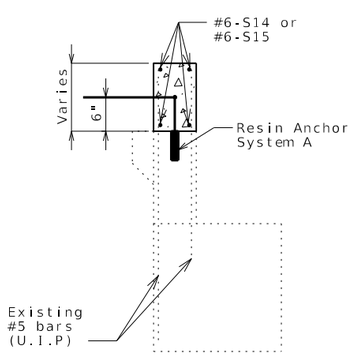

SECTION A-A

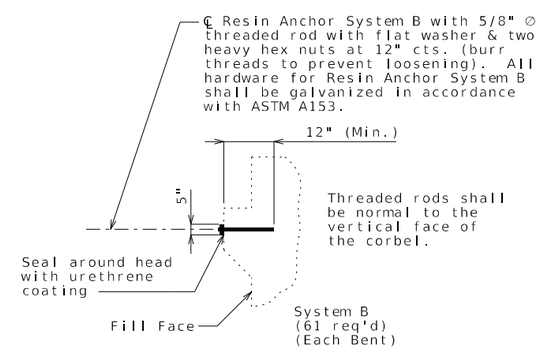

DETAILS OF CORBEL STRENGTHENING

Detailed Aug. 2025
Checked Aug. 2025

Note: This drawing is not to scale. Follow dimensions.

STATE OF MISSOURI
SCOTT MICHAEL MCDONALD
NUMBER PE-2018000240
PROFESSIONAL ENGINEER

THIS SHEET HAS BEEN SIGNED, SEALED AND DATED ELECTRONICALLY.

DATE PREPARED	12/01/2025
ROUTE 13	STATE MO
DISTRICT BR	SHEET NO. 2
COUNTY	POLK
JOB NO.	JSR0183
CONTRACT ID.	
PROJECT NO.	
BRIDGE NO.	A26812

DESCRIPTION	DATE

MISSOURI HIGHWAYS AND TRANSPORTATION COMMISSION
105 WEST CAPITOL
JEFFERSON CITY, MO 65102
1-888-ASK-MODOT (1-888-275-6636)

VEENSTRA & KIMM INC.
A Kleinfelder Company
9788 N Ash Avenue Kansas City, Missouri 64157
816-781-6182 816-781-0643 (FAX)
Certificate of Authority No. 2002006347

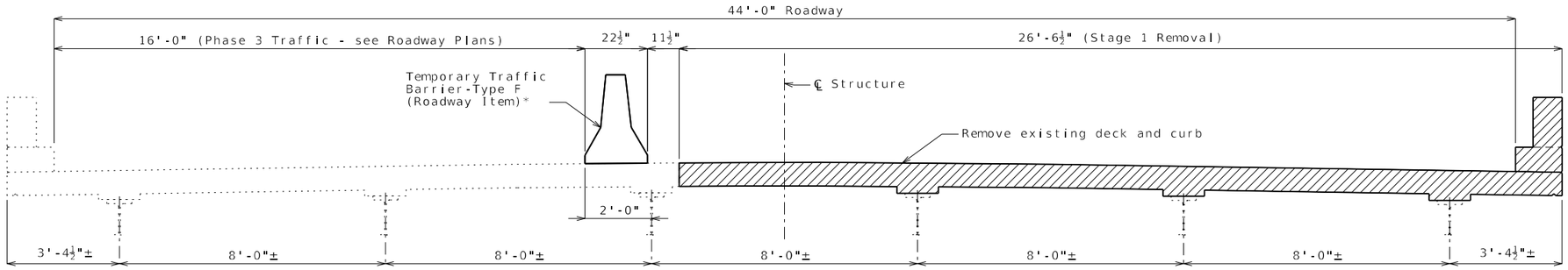

STAGE 1 REMOVAL

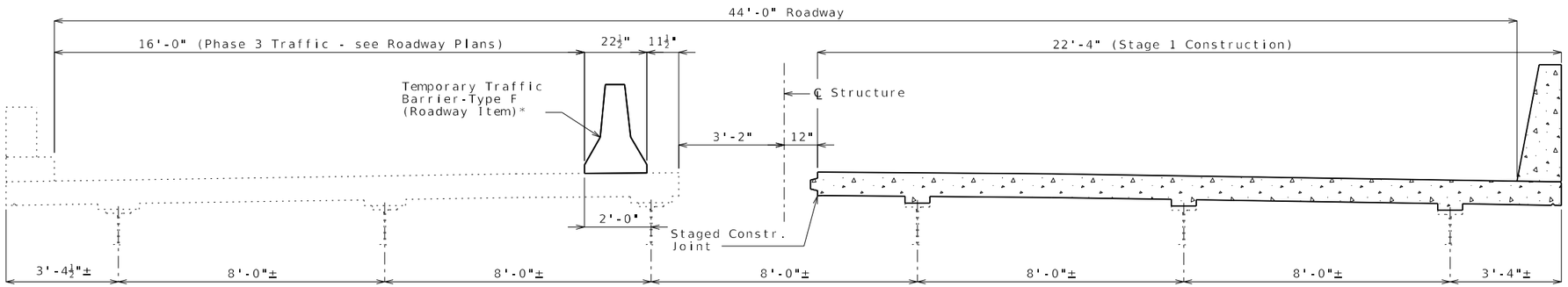

STAGE 1 CONSTRUCTION

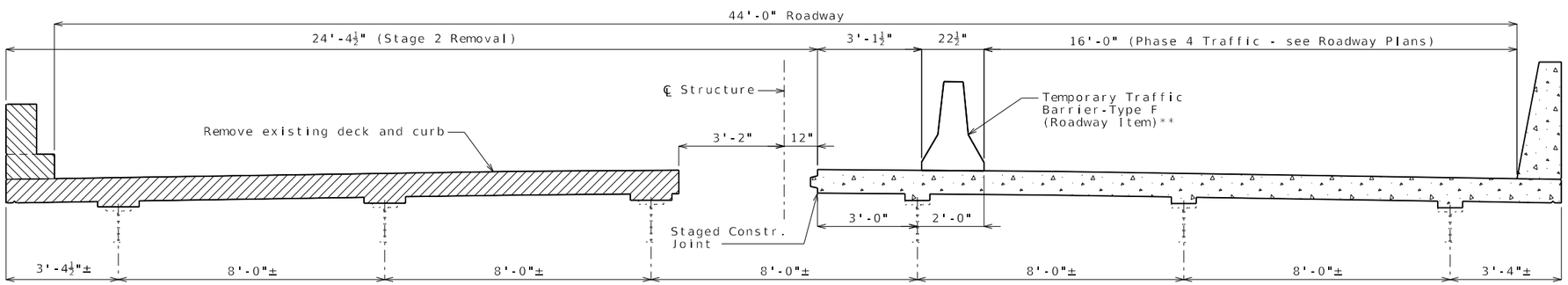

STAGE 2 REMOVAL

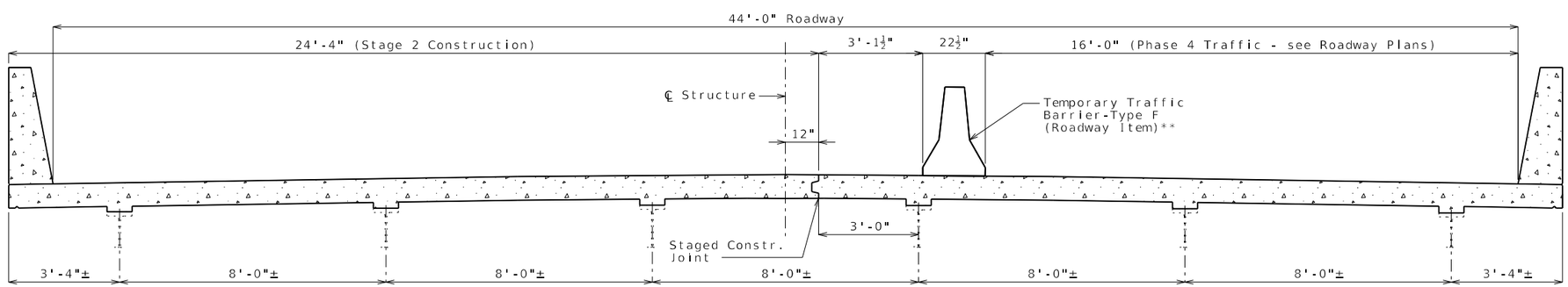

STAGE 2 CONSTRUCTION

DETAILS SHOWING STAGED CONSTRUCTION

Notes:

Existing bolts on intermediate diaphrams and cross frames that connect beams under different construction staged slab pours shall be removed and replaced with new kind high strength bolts installed snug tight and in accordance with Sec 712. The high strength bolts shall be tightened after both adjacent slab pours are completed. Cost will be considered incidental to other pay items.

*Method of attachments for temporary barrier shall be bolt through deck.

**Temporary barrier shall not be attached to the bridge.

Detailed Jul. 2025
Checked Jul. 2025

Note: This drawing is not to scale. Follow dimensions.

STATE OF MISSOURI
SCOTT MICHAEL MCDONALD
NUMBER PE-2018000240
PROFESSIONAL ENGINEER

THIS SHEET HAS BEEN SIGNED, SEALED AND DATED ELECTRONICALLY.

DATE PREPARED	12/01/2025
ROUTE 13	STATE MO
DISTRICT BR	SHEET NO. 3
COUNTY	POLK
JOB NO.	JSR0183
CONTRACT ID.	
PROJECT NO.	
BRIDGE NO.	A26812

DESCRIPTION

DATE

MISSOURI HIGHWAYS AND TRANSPORTATION COMMISSION
105 WEST CAPITOL
JEFFERSON CITY, MO 65102
1-888-ASK-MODOT (1-888-275-6636)

VEENSTRA & KIMM INC.
A Kleinfelder Company
9788 N Ash Avenue Kansas City, Missouri 64157
816-781-6182 816-781-0643 (FAX)
Certificate of Authority No. 2002006347

Notes:

Structural Steel Protective Coating:

Protective Coating: System G in accordance with Sec 1081.

Surface Preparation: Surface preparation of the existing steel shall be in accordance with Sec 1081 for Recoating of Structural Steel (System G) with inorganic zinc primer. The cost of surface preparation will be considered completely covered by the contract unit price per sq. foot for Surface Preparation for Recoating Structural Steel.

Prime Coat: The cost of the prime coat will be considered completely covered by the contract unit price per sq. foot for Field Application of Inorganic Zince Primer.

Field Coat(s): The color of the field coat shall be Gray (Federal Standard #26373). The cost of the intermediate field coat will be considered completely covered by the contract unit price per sq. foot for Intermediate Field Coat (Sytem G). The cost of the finish field coat will be considered completely covered by the contract unit price per sq. foot for Finish Field Coat (System G).

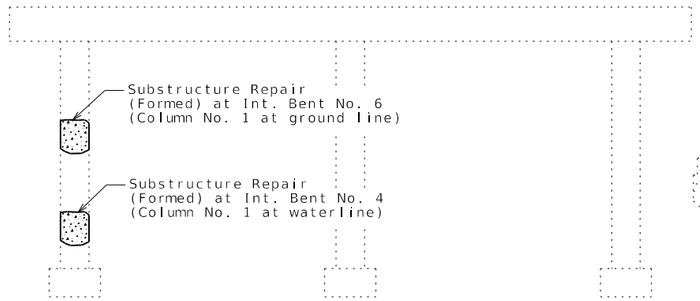

SUBSTRUCTURE REPAIR (FORMED)
AT INT. BENTS NO. 4 AND 6

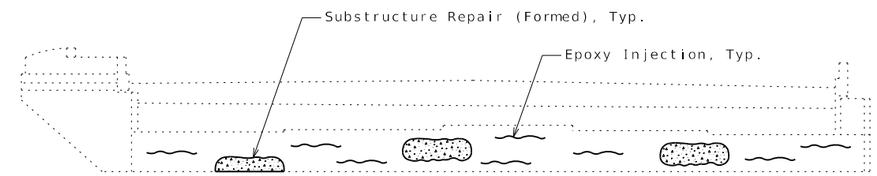

SUBSTRUCTURE REPAIR AT END BENT NO. 8

Note:

All new fabricated structural steel shall be ASTM A709 Grade 50.

The cost of furnishing and installing 3/8" plates for Girder No. 3, 5, and 6, complete in place, will be considered completely covered by the contract unit price for Fabricated Structural Low Alloy Steel (Misc.).

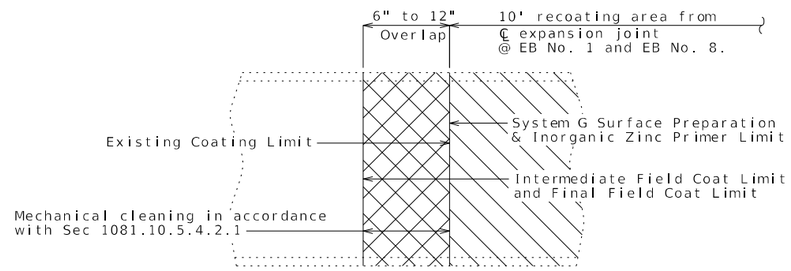

Note:

Limits of Paint Overlap: System G shall overlap the existing coating between 6 inches and 12 inches in order to achieve maximum coverage at the paint limit of each complete system near the expansion and contraction areas. The final field coating shall be masked to provide crisp, straight lines and to prevent overspray beyond the overlap required.

PART ELEVATION SHOWING LIMITS OF PAINT OVERLAP

(Vertical or horizontal paint limit. Horizontal limit shown)

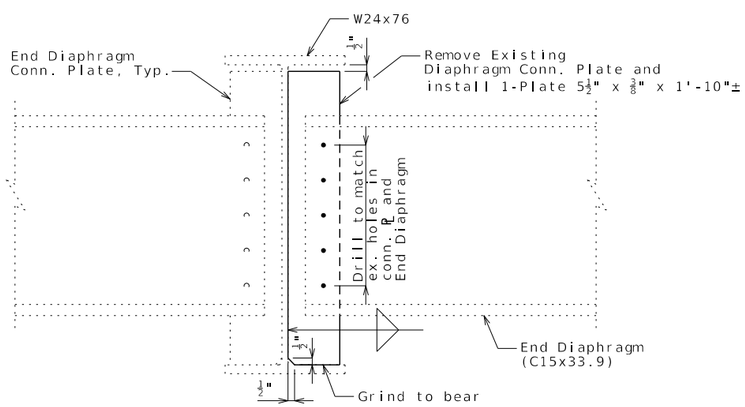

END DIAPHRAGM CONNECTION REPAIR

Notes:

Remove and grind existing weld material flush with beam web.

Steel Diaphragm Conn. Plate replacement shall be at End Bent No. 1 (Girder No. 3, left), and End Bent No. 8 (Girder No. 5, right, and Girder No. 6, right). Replace bolts with high strength bolts in accordance with note on Sheet No. 3.

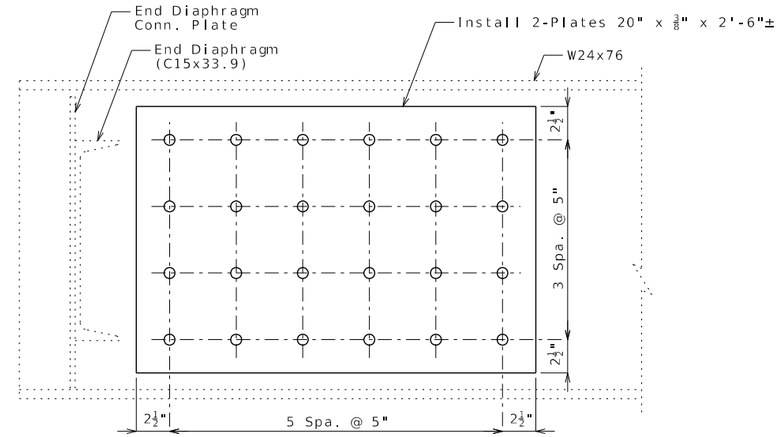

STEEL PLATE WEB REPAIR

Notes:

Steel plate web repairs shall be near End Bent No. 1 (Girder 3) and End Bent No. 8 (Girder No. 5, and Girder No. 6) Exact location to be determined in the field.

Field drill 13/16" ○ holes in existing web for 3/4"○ bolts.

Bolts shall be 3/4" ⌀ ASTM F3125, Grade A325 high strength bolts with heavy hex nut and hardened washer.

Detailed Aug. 2025
Checked Aug. 2025

Note: This drawing is not to scale. Follow dimensions.

STATE OF MISSOURI
SCOTT MICHAEL MCDONALD
NUMBER
PE-2018000240
PROFESSIONAL ENGINEER

THIS SHEET HAS BEEN SIGNED, SEALED AND DATED ELECTRONICALLY.

DATE PREPARED	
12/01/2025	
ROUTE 13	STATE MO
DISTRICT BR	SHEET NO. 4
COUNTY POLK	
JOB NO. JSR0183	
CONTRACT ID.	
PROJECT NO.	
BRIDGE NO. A26812	

DATE	DESCRIPTION

MISSOURI HIGHWAYS AND TRANSPORTATION COMMISSION
105 WEST CAPITOL
JEFFERSON CITY, MO 65102
1-888-ASK-MODOT (1-888-275-6636)

VEENSTRA & KIMM INC.
A Kleinfelder Company
9788 N Ash Avenue Kansas City, Missouri 64157
816-781-6182 816-781-0643 (FAX)
Certificate of Authority No. 2002006347

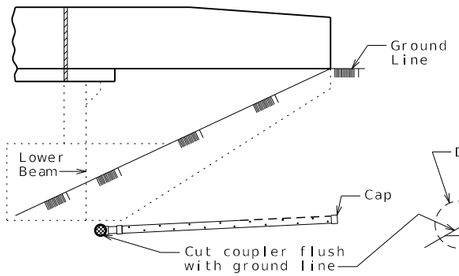

ELEVATION OF WING
(End Bent No. 1)

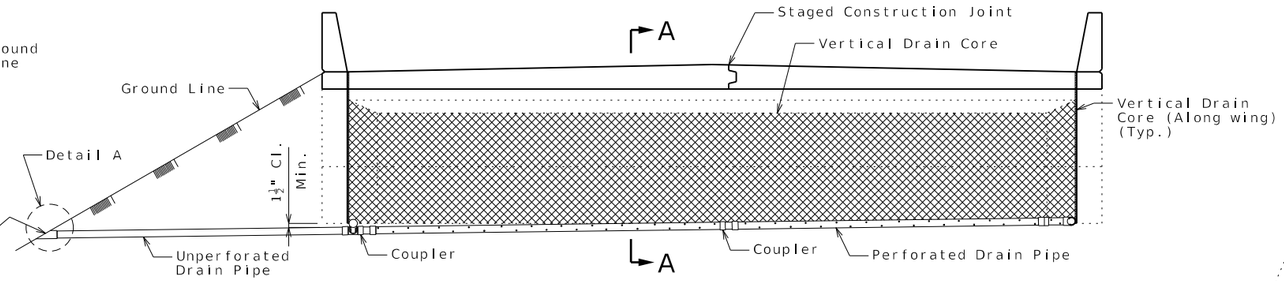

ELEVATION OF END BENT NO. 1

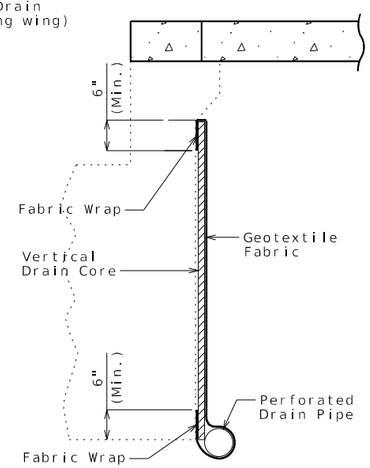

PART SECTION A-A
(Section thru wing similar)

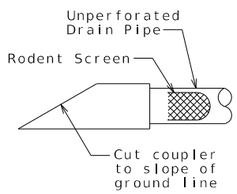

DETAIL A

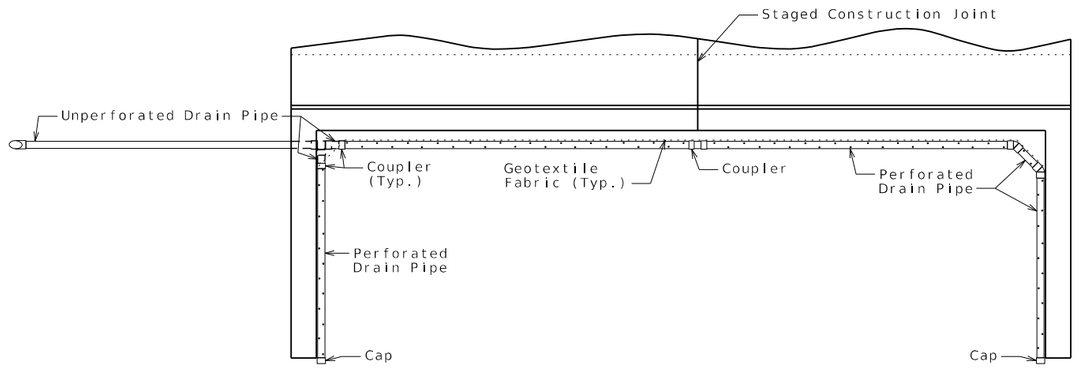

PLAN OF END BENT NO. 1

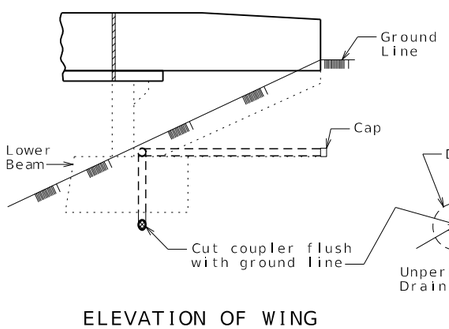

ELEVATION OF WING
(End Bent No. 8)

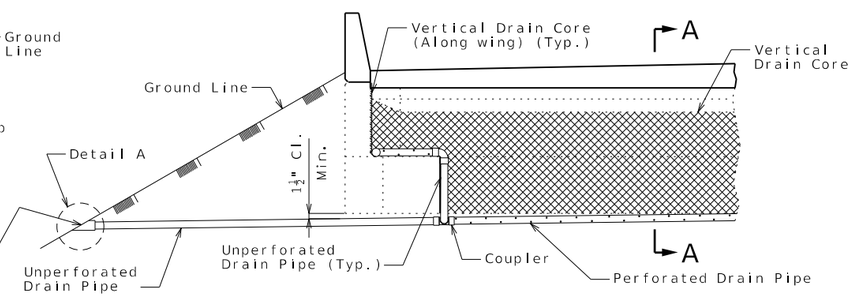

PART ELEVATION OF END BENT NO. 8

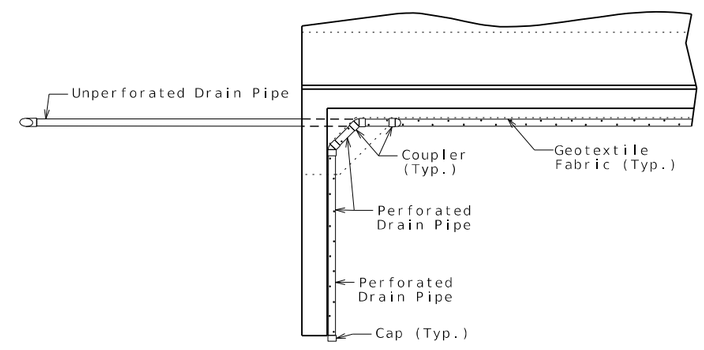

PART PLAN OF END BENT NO. 8

General Notes:

All drain pipe shall be sloped 1 to 2 percent.

Drain pipe may be either 6-inch diameter corrugated metallic-coated steel pipe underdrain, 4-inch diameter corrugated polyvinyl chloride (PVC) drain pipe, or 4-inch diameter corrugated polyethylene (PE) drain pipe.

Drain pipe shall be placed at fill face of end bent and inside face of wings. The pipe shall slope to lowest grade of ground line, also missing the lower beam of end bent by a minimum of 1 1/2 inches.

Perforated pipe shall be placed at fill face side and inside face of wings at the bottom of end bent and plain pipe shall be used where the vertical drain ends to the exit at ground line.

VERTICAL DRAIN AT END BENTS

(Squared end bent shown, skewed end bent similar)

Detailed Jul. 2025
Checked Jul. 2025

Note: This drawing is not to scale. Follow dimensions.

STATE OF MISSOURI
SCOTT MICHAEL MCDONALD
NUMBER PE-2018000240
PROFESSIONAL ENGINEER

THIS SHEET HAS BEEN SIGNED, SEALED AND DATED ELECTRONICALLY.

DATE PREPARED	12/01/2025
ROUTE 13	STATE MO
DISTRICT BR	SHEET NO. 5
COUNTY	POLK
JOB NO.	JSR0183
CONTRACT ID.	
PROJECT NO.	
BRIDGE NO.	A26812

DESCRIPTION | DATE

MISSOURI HIGHWAYS AND TRANSPORTATION COMMISSION
105 WEST CAPITOL
JEFFERSON CITY, MO 65102
1-888-ASK-MODOT (1-888-275-6636)

VEENSTRA & KIMM INC.
A Kleinfelder Company
9788 N Ash Avenue Kansas City, Missouri 64157
816-781-6182 816-781-0643 (FAX)
Certificate of Authority No. 2002006347

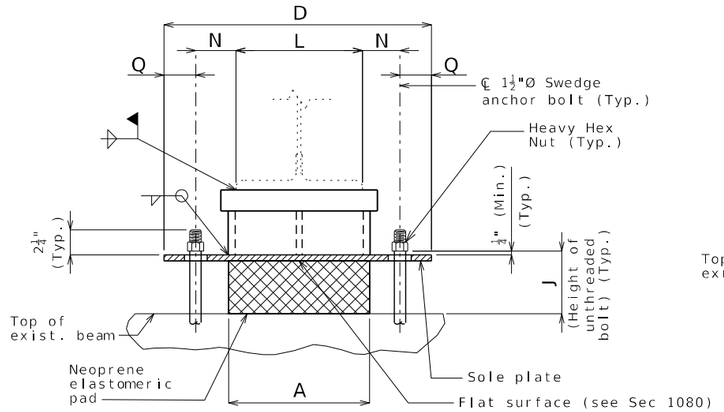

END VIEW

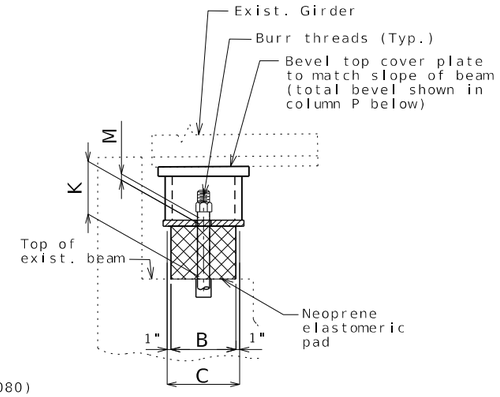

SIDE VIEW

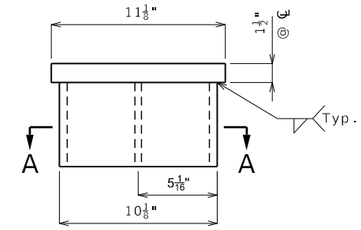

END ELEVATION OF BEARING EXTENSION

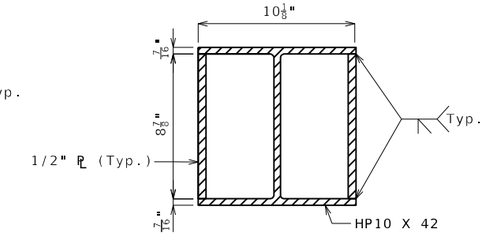

SECTION A-A

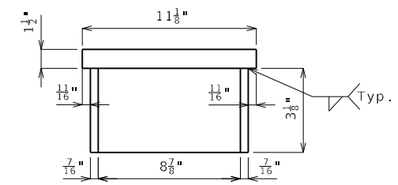

SIDE ELEVATION OF BEARING EXTENSION

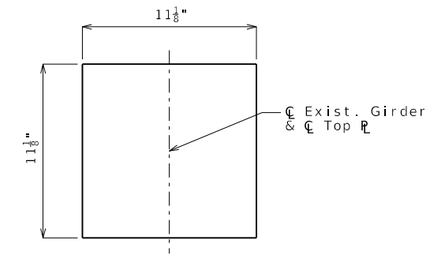

PLAN OF 1½" TOP PLATE

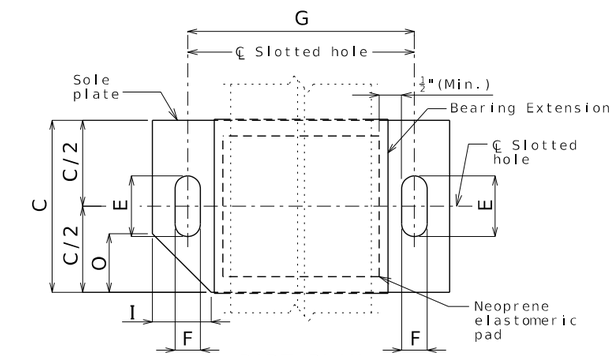

PART PLAN

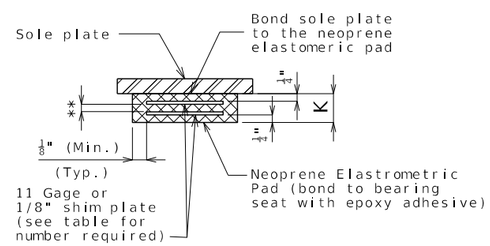

** Layers of 1/2" elastomer alternating with 11 gage or 1/8" shim plate

NEOPRENE ELASTOMERIC PAD

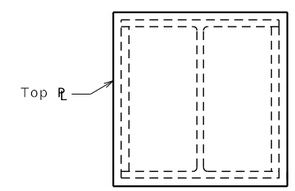

PLAN OF BEARING EXTENSION

EXPANSION BEARINGS																			
BENT NO.	A	B	C	D	E	F	G	I	J	K	L	M	N	O	P	Q	R	NUMBER OF SHIM PLATES *	NUMBER REQUIRED
1&8	10"	9"	11"	19"	3⅞"	1⅝"	14½"	3¾"	5½"	3¾"	9"	1½"	2¾"	3¾"	0"	2¼"	1/16"	6	12
																		TOTAL BEARINGS	12

* The required shim plate shall be placed between layers of elastomer and molded together to form an integral unit.

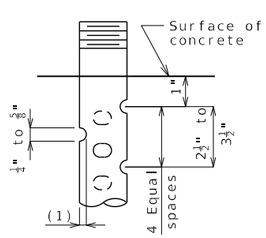

DETAIL OF 3/4"Ø THRU 2 1/2"Ø ANCHOR BOLTS

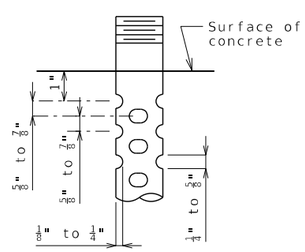

OPTIONAL DETAIL OF 1 3/8"Ø THRU 2 1/2"Ø ANCHOR BOLTS

SWEDGE ANCHOR BOLT DETAILS

(1) ⅛" for ¾"Ø thru 1¼"Ø anchor bolts

⅛" to ¼" for 1⅜"Ø thru 2½"Ø anchor bolts

Note:

Required temporary support load of 19 kips per girder is a service load without a factor of safety. It includes the dead load with slab and a construction load of 50 psf applied to deck area. Live Load without impact is 41 kips. (See Special Provisions)

GENERAL NOTES:

Anchor bolts shall be 1½"Ø ASTM F1554 Grade 55 swedged bolts and shall extend 15" into the concrete with ASTM A563 Grade A DH Heavy Hex nuts. Actual manufacturer's certified mill test reports (chemical and mechanical) shall be provided. Swedging shall be 1" less than extension into the concrete.

Anchor bolt shall be at the centerline of slotted hole at 60°F. Bearing position shall be adjusted R for each 10° fall or rise in temperature at installation.

Anchor bolts and heavy hex nuts shall be coated with a minimum of two coats of inorganic zinc primer to provide a total dry film thickness of 4 mils minimum, 6 mils maximum, or galvanized in accordance with AASHTO M 232 (ASTM A153), Class C.

Neoprene Elastomeric Pads shall be 60 Durometer.

Structural steel for sole plate shall be ASTM A709 Grade 50 and bearing extensions shall be coated with a minimum of two coats of inorganic zinc primer to provide a total dry film thickness of 4 mils minimum, 6 mils maximum.

Laminated Neoprene Bearing Pad Assembly shall be in accordance with Sec 716.

Cost of anchor bolts, drilling, grouting and bearing extension, complete-in place, will be considered completely covered by the contract unit price for Laminated Neoprene Bearing Pad Assembly.

LAMINATED NEOPRENE BEARING PAD ASSEMBLY

Detailed Aug. 2025
Checked Aug. 2025

Note: This drawing is not to scale. Follow dimensions.

STATE OF MISSOURI
SCOTT MICHAEL MCDONALD
NUMBER PE-2018000240
PROFESSIONAL ENGINEER

THIS SHEET HAS BEEN SIGNED, SEALED AND DATED ELECTRONICALLY.

DATE PREPARED	
12/01/2025	
ROUTE 13	STATE MO
DISTRICT BR	SHEET NO. 6
COUNTY POLK	
JOB NO. JSR0183	
CONTRACT ID.	
PROJECT NO.	
BRIDGE NO. A26812	

DESCRIPTION

DATE

MISSOURI HIGHWAYS AND TRANSPORTATION COMMISSION
105 WEST CAPITOL
JEFFERSON CITY, MO 65102
1-888-ASK-MODOT (1-888-275-6636)

VEENSTRA & KIMM INC.
A Kleinfelder Company
9788 N Ash Avenue Kansas City, Missouri 64157
816-781-6182 816-781-0643 (FAX)
Certificate of Authority No. 2002006347

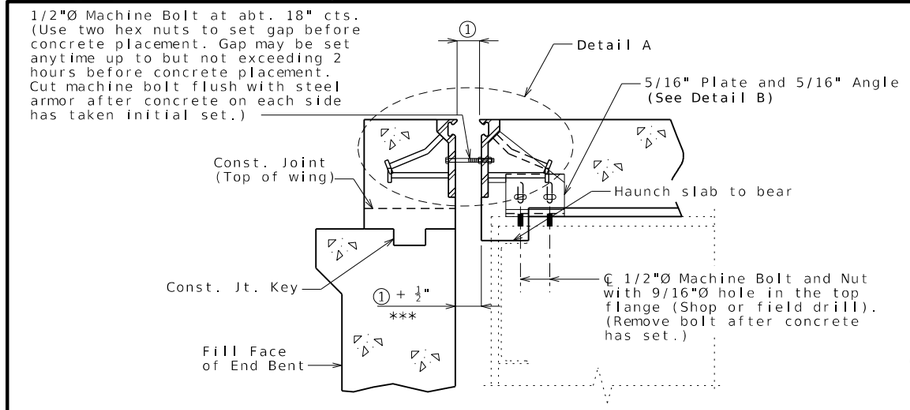

SECTION A-A

Strip seal gland not shown for clarity.

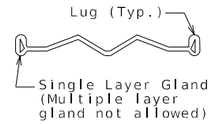

DETAIL OF GLAND

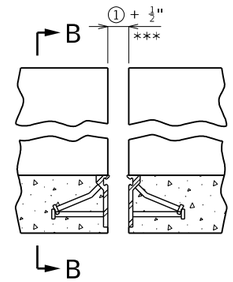

PART ELEVATION OF BARRIER

Strip seal gland not shown for clarity.

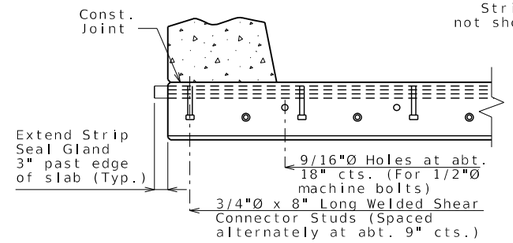

PART SECTION B-B

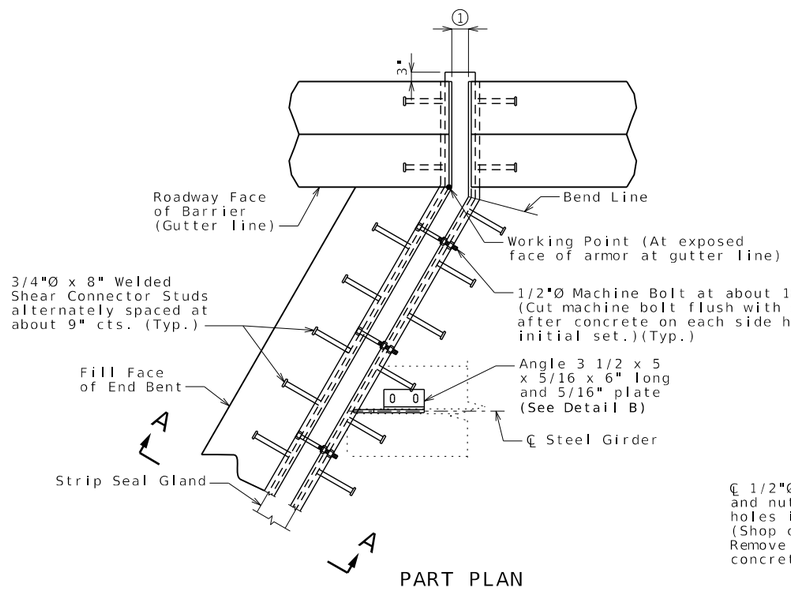

PART PLAN

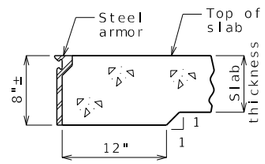

PART SECTION THRU EXPANSION JOINT IN SLAB CANTILEVER

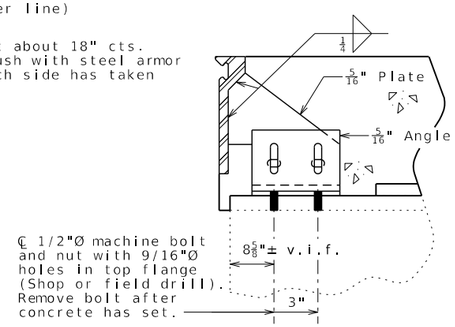

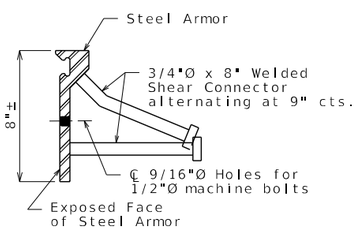

DETAIL OF JOINT ARMOR

(P Rail)

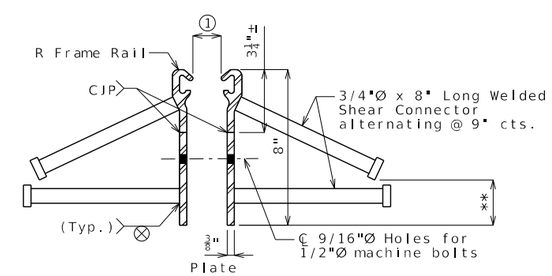

** Bend stud in shop if necessary to maintain 1" min. from bottom of vertical plate.

OPTIONAL R RAIL DETAIL

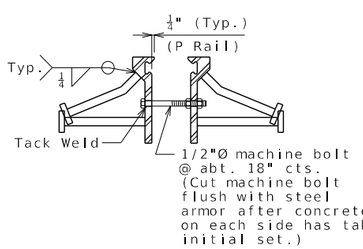

DETAIL A

(P Rail shown, R Rail similar)

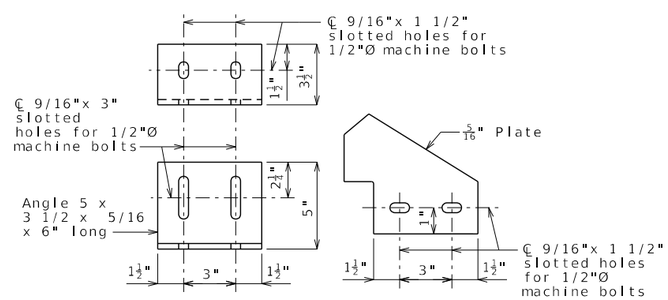

DETAIL B

GENERAL NOTES:

Expansion joint system shall be fabricated in one section, except for staged construction and when the length is over 50 feet. A complete joint penetration groove welded splice shall be required. Welds shall be ground flush to provide a smooth surface. The expansion joint system shall be fabricated and installed to the crown and grade of the roadway.

The strip seal gland shall be installed in joints in one continuous piece without field splices. Factory splicing will be permitted for joints in excess of 53 feet.

Structural steel for the expansion joint system shall be ASTM A709 Grade 36 except the steel armor may be ASTM A709 Grade 50W. Anchors for the expansion joint system shall be in accordance with Sec 1037. Strip seal expansion joint system shall be in accordance with Sec 717.

Structural steel for the expansion joint system shall be coated with a minimum of two coats of inorganic zinc primer to provide a total dry film thickness of 4 mils minimum, 6 mils maximum, or galvanized in accordance with ASTM A123. Anchors need not be protected from overspray.

Longitudinal and transverse reinforcing steel shall be placed so that ends shall be 1" from the vertical leg of the steel armor at the expansion joint system.

Concrete shall be forced under and around steel armor and anchors. Proper consolidation of the concrete shall be achieved by localized internal vibration.

② The installation temperature shall be taken as the actual air temperature averaged over the 24-hour period immediately preceding installation.

③ MoDOT Construction personnel will indicate the strip seal expansion joint system installed.

Steel armor may also be referred to as extrusion or rail.

The terms P and R rail are used for identification only, and are not endorsements for any particular manufacturer.

*** Because of variation in armor dimensions, the concrete opening will vary if the optional R rail is used. Dimensions shown are based on the P rail option.

v.i.f. denotes "verify in field"

Table of Allowed Transverse Strip Seal Expansion Joint System

Manufacturer	Strip Seal System (Designated Name)	Movement Parallel to RDWY	Allowed Installation Gap ① Normal to Joint at RDWY Surface @ Air/Surface Temperature ②						③
			@ 40°F	@ 50°F	@ 60°F	@ 70°F	@ 80°F	@ 90°F	
D S Brown	Strip seal L2-400	2¼"	2 1/16"	2"	1⅞"	1¾"	1⅝"	1 9/16"	☐
D S Brown	Strip seal L2-500	2¼"	2 1/16"	2"	1⅞"	1¾"	1⅝"	1 9/16"	☐

STRIP SEAL EXPANSION JOINT SYSTEM AT END BENT NO. 1

Detailed Jul. 2025
Checked Jul. 2025

Note: This drawing is not to scale. Follow dimensions.

STATE OF MISSOURI
SCOTT MICHAEL MCDONALD NUMBER PE-2018000240
PROFESSIONAL ENGINEER

THIS SHEET HAS BEEN SIGNED, SEALED AND DATED ELECTRONICALLY.

DATE PREPARED	
12/01/2025	
ROUTE 13	STATE MO
DISTRICT BR	SHEET NO. 7
COUNTY POLK	
JOB NO. JSR0183	
CONTRACT ID.	
PROJECT NO.	
BRIDGE NO. A26812	

DATE	DESCRIPTION

MISSOURI HIGHWAYS AND TRANSPORTATION COMMISSION
105 WEST CAPITOL
JEFFERSON CITY, MO 65102
1-888-ASK-MODOT (1-888-275-6636)

VEENSTRA & KIMM INC.
A Kleinfelder Company
9788 N Ash Avenue Kansas City, Missouri 64157
816-781-6182 816-781-0643 (FAX)
Certificate of Authority No. 2002006347

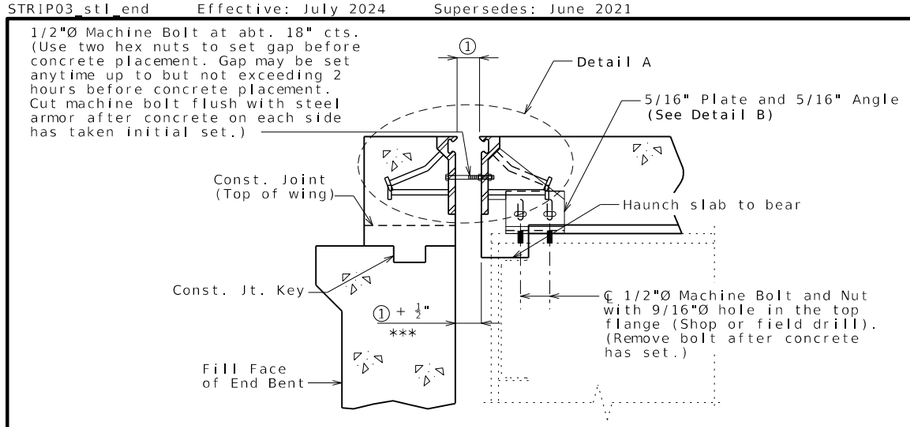

SECTION A-A

Strip seal gland not shown for clarity.

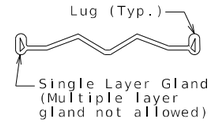

DETAIL OF GLAND

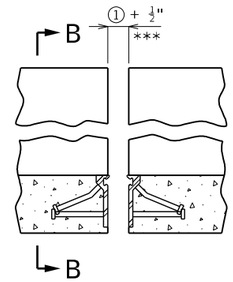

PART ELEVATION OF BARRIER

Strip seal gland not shown for clarity.

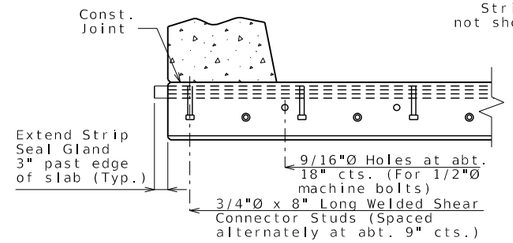

PART SECTION B-B

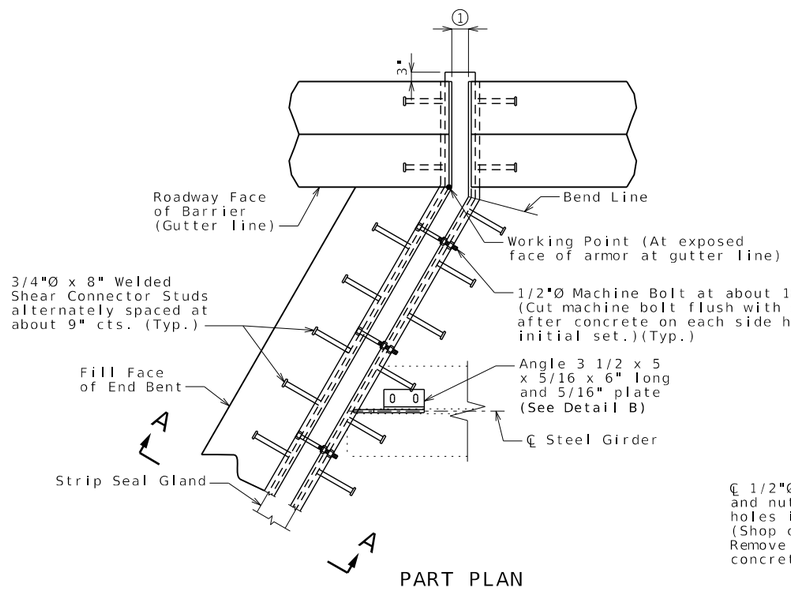

PART PLAN

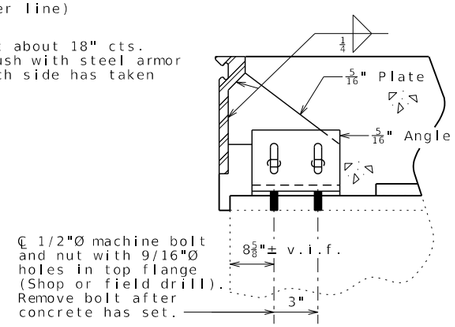

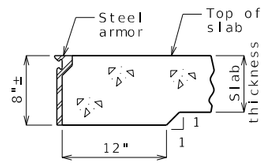

PART SECTION THRU EXPANSION JOINT IN SLAB CANTILEVER

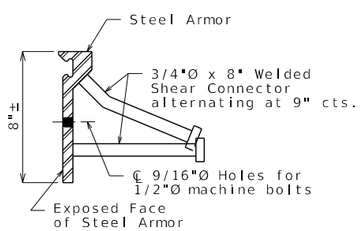

DETAIL OF JOINT ARMOR

(P Rail)

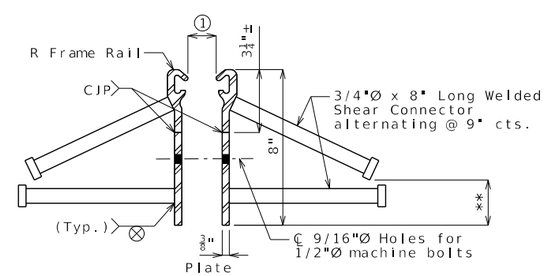

** Bend stud in shop if necessary to maintain 1" min. from bottom of vertical plate.

OPTIONAL R RAIL DETAIL

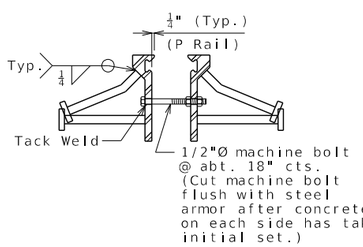

DETAIL A

(P Rail shown, R Rail similar)

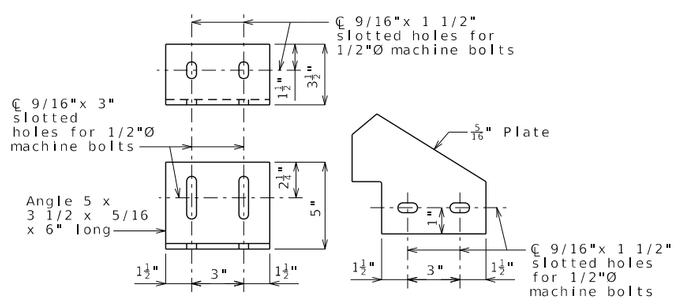

DETAIL B

GENERAL NOTES:

Expansion joint system shall be fabricated in one section, except for staged construction and when the length is over 50 feet. A complete joint penetration groove welded splice shall be required. Welds shall be ground flush to provide a smooth surface. The expansion joint system shall be fabricated and installed to the crown and grade of the roadway.

The strip seal gland shall be installed in joints in one continuous piece without field splices. Factory splicing will be permitted for joints in excess of 53 feet.

Structural steel for the expansion joint system shall be ASTM A709 Grade 36 except the steel armor may be ASTM A709 Grade 50W. Anchors for the expansion joint system shall be in accordance with Sec 1037. Strip seal expansion joint system shall be in accordance with Sec 717.

Structural steel for the expansion joint system shall be coated with a minimum of two coats of inorganic zinc primer to provide a total dry film thickness of 4 mils minimum, 6 mils maximum, or galvanized in accordance with ASTM A123. Anchors need not be protected from overspray.

Longitudinal and transverse reinforcing steel shall be placed so that ends shall be 1" from the vertical leg of the steel armor at the expansion joint system.

Concrete shall be forced under and around steel armor and anchors. Proper consolidation of the concrete shall be achieved by localized internal vibration.

② The installation temperature shall be taken as the actual air temperature averaged over the 24-hour period immediately preceding installation.

③ MoDOT Construction personnel will indicate the strip seal expansion joint system installed.

Steel armor may also be referred to as extrusion or rail.

The terms P and R rail are used for identification only, and are not endorsements for any particular manufacturer.

*** Because of variation in armor dimensions, the concrete opening will vary if the optional R rail is used. Dimensions shown are based on the P rail option.

v.i.f. denotes "verify in field"

Table of Allowed Transverse Strip Seal Expansion Joint System

Manufacturer	Strip Seal System (Designated Name)	Movement Parallel to RDWY	Allowed Installation Gap ① Normal to Joint at RDWY Surface @ Air/Surface Temperature ②						③
			@ 40°F	@ 50°F	@ 60°F	@ 70°F	@ 80°F	@ 90°F	
D S Brown	Strip seal L2-400	1 11/16"	2 1/8"	2 1/16"	2"	1 7/8"	1 13/16"	1 3/4"	☐
D S Brown	Strip seal L2-500	1 11/16"	2 1/8"	2 1/16"	2"	1 7/8"	1 13/16"	1 3/4"	☐

STRIP SEAL EXPANSION JOINT SYSTEM AT END BENT NO. 8

Detailed Jul. 2025
Checked Jul. 2025

Note: This drawing is not to scale. Follow dimensions.

STATE OF MISSOURI
SCOTT MICHAEL MCDONALD
NUMBER PE-2018000240
PROFESSIONAL ENGINEER

THIS SHEET HAS BEEN SIGNED, SEALED AND DATED ELECTRONICALLY.

DATE PREPARED	
12/01/2025	
ROUTE 13	STATE MO
DISTRICT BR	SHEET NO. 8
COUNTY POLK	
JOB NO. JSR0183	
CONTRACT ID.	
PROJECT NO.	
BRIDGE NO. A26812	

DATE	DESCRIPTION

MISSOURI HIGHWAYS AND TRANSPORTATION COMMISSION
105 WEST CAPITOL
JEFFERSON CITY, MO 65102
1-888-ASK-MODOT (1-888-275-6636)

VEENSTRA & KIMM INC.
A Kleinfelder Company
9788 N Ash Avenue Kansas City, Missouri 64157
816-781-6182 816-781-0643 (FAX)
Certificate of Authority No. 2002006347

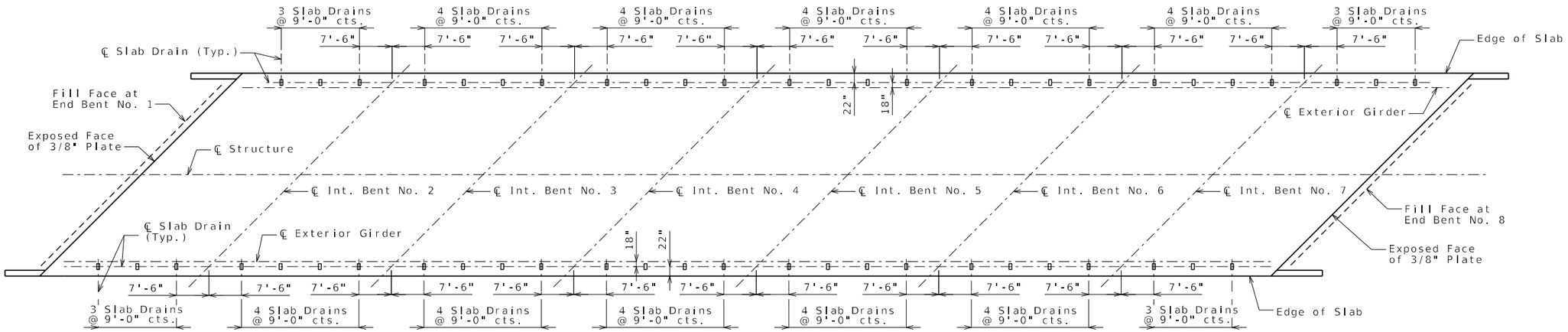

PLAN OF SLAB SHOWING SLAB DRAIN LOCATIONS

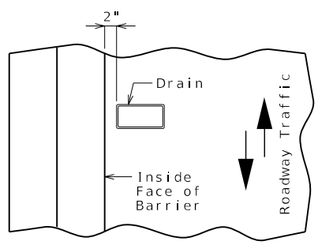

PART PLAN OF SLAB AT DRAIN

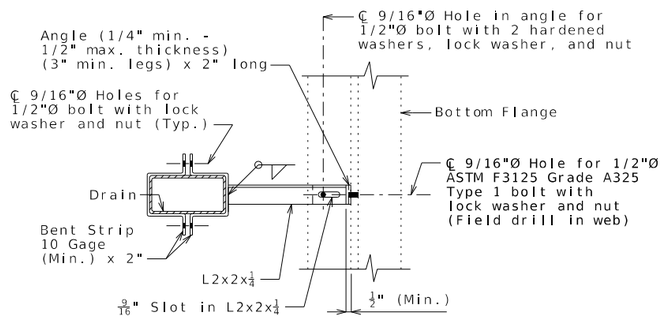

PART SECTION SHOWING BRACKET ASSEMBLY

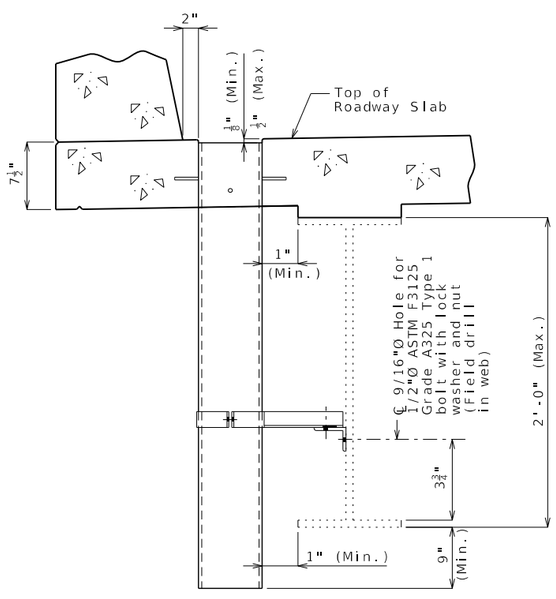

PART SECTION NEAR DRAIN

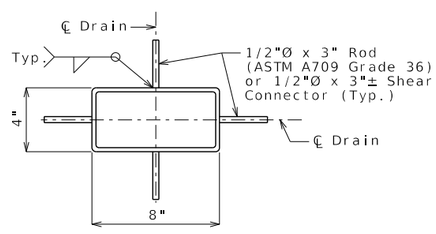

PLAN OF STEEL DRAIN OPTION

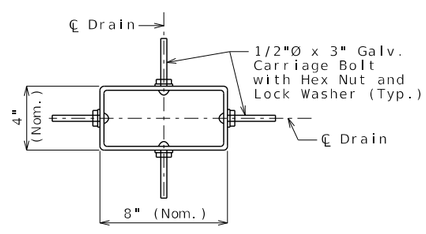

PLAN OF FRP DRAIN OPTION

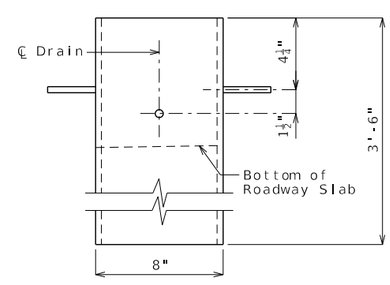

ELEVATION OF DRAIN

General Notes:

Contractor shall have the option to construct either steel or FRP slab drains. All drains shall be of same type.

Slab drain bracket assembly shall be ASTM A709 Grade 36 steel.

Locate drains in slab by dimensions shown in Part Section Near Drain.

Reinforcing steel shall be shifted to clear drains.

The bracket assembly shall be galvanized in accordance with ASTM A123.

All bolts, hardened washers, lock washers and nuts shall be galvanized in accordance with AASHTO M 232 (ASTM A153), Class C.

All 1/2-inch diameter bolts shall be ASTM A307, except as shown.

Shop drawings will not be required for the slab drains and the bracket assembly.

The bolt hole for the bracket assembly attachment shall be shifted to the minimum extent necessary to field drill in the existing web.

Notes for Steel Drain:

Slab drains may be fabricated of either 1/4-inch welded sheets of ASTM A709 Grade 36 steel or from 1/4-inch structural steel tubing ASTM A500 or A501.

Outside dimensions of drains are 8" x 4".

The drains shall be galvanized in accordance with ASTM A123.

Notes for FRP Drain:

Drains shall be machine filament-wound thermosetting resin tubing meeting the requirements of ASTM D2996 with the following exceptions:

Shape of drains shall be rectangular with outside nominal dimensions of 8" x 4".

Minimum reinforced wall thickness shall be 1/4 inch.

The resin used shall be ultraviolet (UV) resistant and/or have UV inhibitors mixed throughout. Drains may have an exterior coating for additional UV resistance.

The color of the slab drain shall be gray (Federal Standard #26373). The color shall be uniform throughout the resin and any coating used.

The combination of materials used in the manufacture of the drains shall be tested for UV resistance in accordance with ASTM D4329 Cycle A. The representative material shall withstand at least 500 hours of testing with only minor discoloration and without any physical deterioration. The contractor shall furnish the results of the required ultraviolet testing prior to acceptance of the slab drains.

At the contractor's option, drains may be field cut. The method of cutting FRP slab drain shall be as recommended by the manufacturer to ensure a smooth, chip free cut.

SLAB DRAINS

Detailed Aug. 2025
Checked Aug. 2025

Note: This drawing is not to scale. Follow dimensions.

STATE OF MISSOURI
SCOTT MICHAEL MCDONALD
NUMBER PE-2018000240
PROFESSIONAL ENGINEER

THIS SHEET HAS BEEN SIGNED, SEALED AND DATED ELECTRONICALLY.

DATE PREPARED	12/01/2025
ROUTE 13	STATE MO
DISTRICT BR	SHEET NO. 9
COUNTY	POLK
JOB NO.	JSR0183
CONTRACT ID.	
PROJECT NO.	
BRIDGE NO.	A26812

DATE	DESCRIPTION

MISSOURI HIGHWAYS AND TRANSPORTATION COMMISSION
105 WEST CAPITOL
JEFFERSON CITY, MO 65102
1-888-ASK-MODOT (1-888-275-6636)

VEENSTRA & KIMM INC.
A Kleinfelder Company
9788 N Ash Avenue Kansas City, Missouri 64157
816-781-6182 816-781-0643 (FAX)
Certificate of Authority No. 2002006347

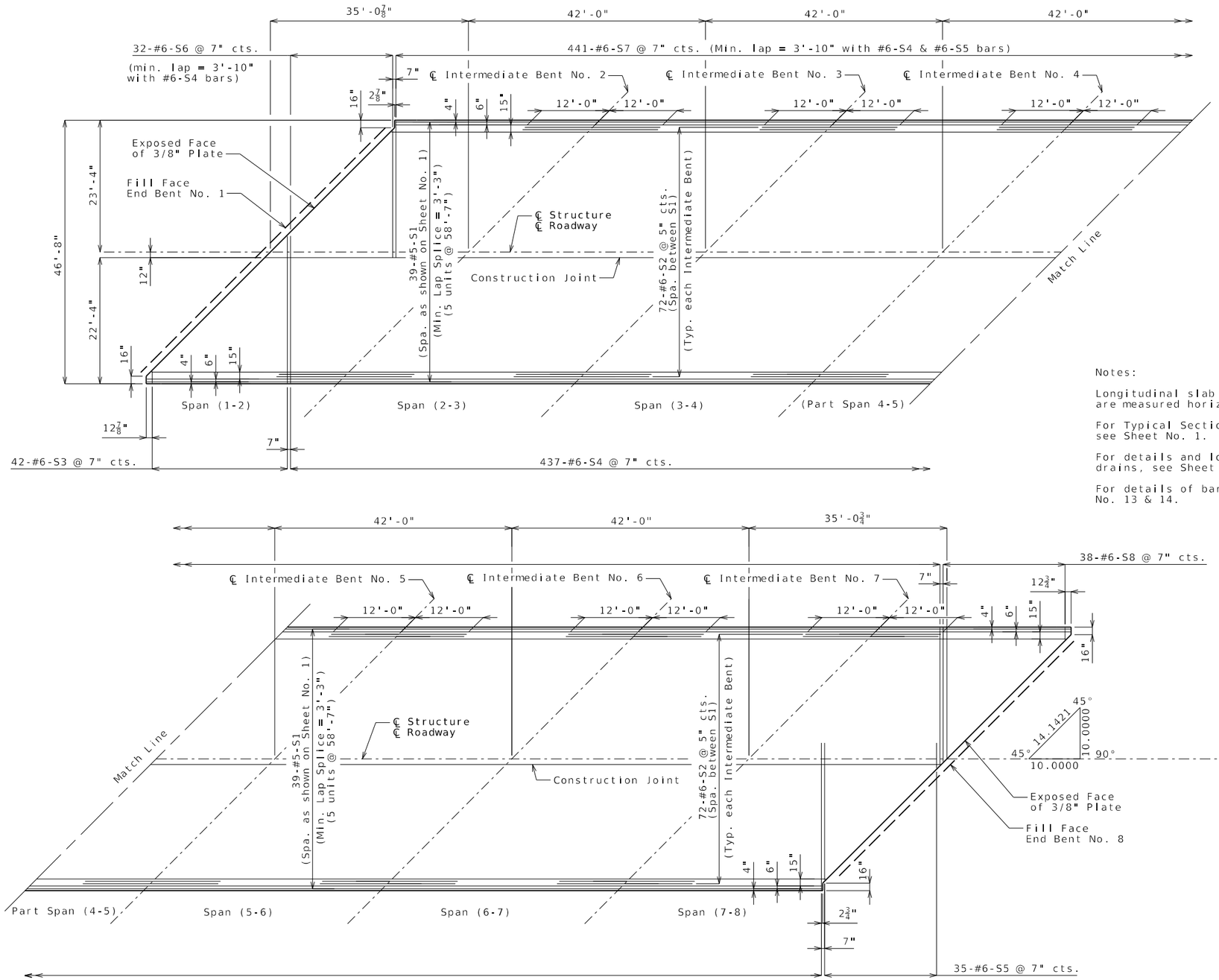

Notes:

Longitudinal slab dimensions are measured horizontally.

For Typical Section Thru Slab, see Sheet No. 1.

For details and locations of slab drains, see Sheet No. 9.

For details of barrier, see Sheets No. 13 & 14.

PLAN OF SLAB SHOWING TOP REINFORCEMENT

Detailed Jul. 2025
Checked Jul. 2025

Note: This drawing is not to scale. Follow dimensions.

STATE OF MISSOURI
SCOTT MICHAEL MCDONALD
NUMBER PE-2018000240
PROFESSIONAL ENGINEER

THIS SHEET HAS BEEN SIGNED, SEALED AND DATED ELECTRONICALLY.

DATE PREPARED	12/01/2025
ROUTE	13
STATE	MO
DISTRICT	BR
SHEET NO.	10
COUNTY	POLK
JOB NO.	JSR0183
CONTRACT ID.	
PROJECT NO.	
BRIDGE NO.	A26812

DESCRIPTION

DATE

MISSOURI HIGHWAYS AND TRANSPORTATION COMMISSION
105 WEST CAPITOL
JEFFERSON CITY, MO 65102
1-888-ASK-MODOT (1-888-275-6636)

VEENSTRA & KIMM INC.
A Kleinfelder Company
9788 N Ash Avenue Kansas City, Missouri 64157
816-781-6182 816-781-0643 (FAX)
Certificate of Authority No. 2002006347

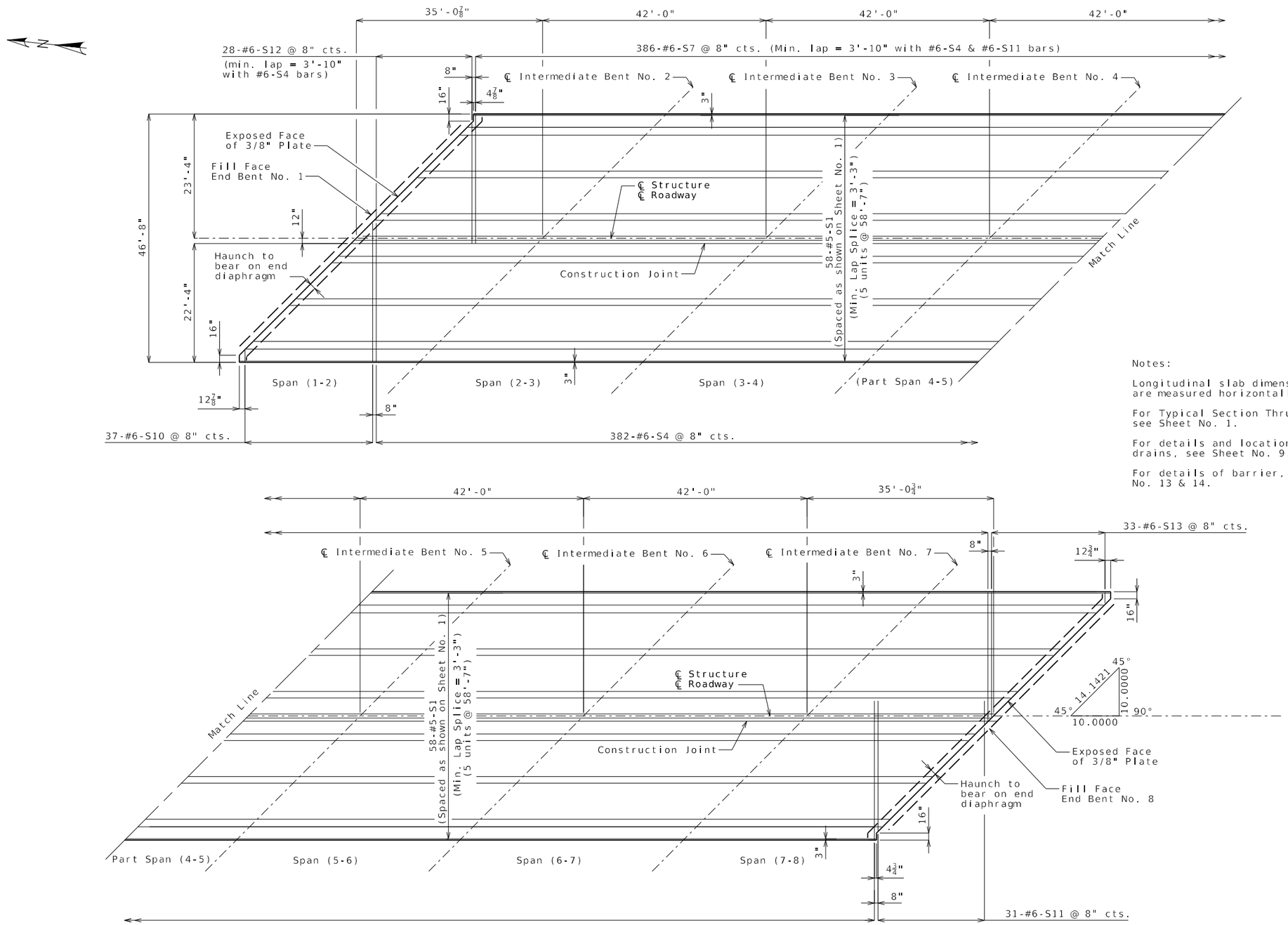

Notes:

Longitudinal slab dimensions are measured horizontally.

For Typical Section Thru Slab, see Sheet No. 1.

For details and locations of slab drains, see Sheet No. 9.

For details of barrier, see Sheets No. 13 & 14.

PLAN OF SLAB SHOWING BOTTOM REINFORCEMENT

Detailed Jul. 2025
Checked Jul. 2025

Note: This drawing is not to scale. Follow dimensions.

STATE OF MISSOURI
SCOTT MICHAEL MCDONALD
NUMBER PE-2018000240
PROFESSIONAL ENGINEER

THIS SHEET HAS BEEN SIGNED, SEALED AND DATED ELECTRONICALLY.

DATE PREPARED	12/01/2025
ROUTE 13	STATE MO
DISTRICT BR	SHEET NO. 11
COUNTY	POLK
JOB NO.	JSR0183
CONTRACT ID.	
PROJECT NO.	
BRIDGE NO.	A26812

DESCRIPTION

DATE

MISSOURI HIGHWAYS AND TRANSPORTATION COMMISSION
105 WEST CAPITOL
JEFFERSON CITY, MO 65102
1-888-ASK-MODOT (1-888-275-6636)

VEENSTRA & KIMM INC.
A Kleinfelder Company
9788 N Ash Avenue Kansas City, Missouri 64157
816-781-6182 816-781-0643 (FAX)
Certificate of Authority No. 2002006347

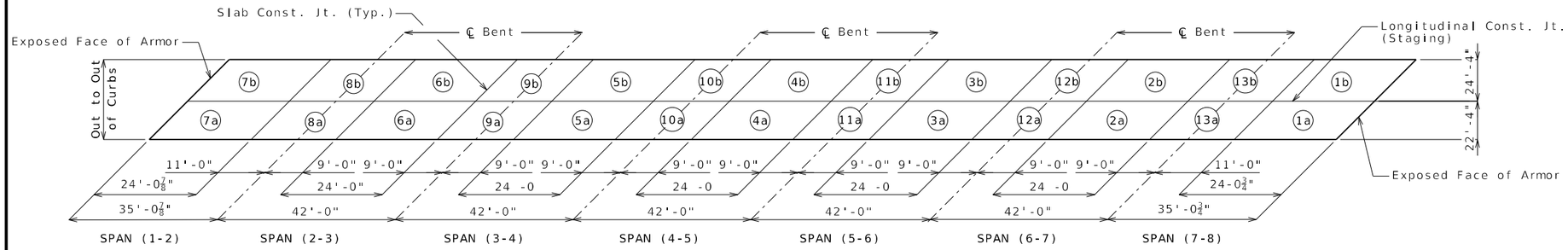

	Sequence of Pours													Min. Rate of Pour Cu. Yds./Hr.			
	Direction													With Retarder		No Retarder	
														a	b	a	b
Basic Sequence	1	2	3	4	5	6	7	8	9	10	11	12	13	25	25	25	25
	Either Direction																
Alternate pours to the basic skip sequence are subject to the approval of the engineer in accordance with Sec 703.																	
Alternate A Pours	1 + 13 + 2		12 + 3		11 + 4		10 + 5		9 + 6		8 + 7			25	25	25	25
	End to 12		2 to 11		3 to 10		4 to 9		5 to 8		6 to End						
Alternate B Pours	1 + 13 + 2		12 + 3 + 11 + 4				10 + 5 + 9 + 6				8 + 7			25	25	25	25
	End to 12		2 to 10				4 to 8				6 to End						
Alternate C Pours	1 + 13 + 2 + 12 + 3 + 11 + 4						10 + 5 + 9 + 6 + 8 + 7							25	25	25	25
	End to 10						4 to End										
Alternate D Pours	1 + 13 + 2 + 12 + 3 + 11 + 4 + 10 + 5 + 9 + 6 + 8 + 7													25	25	25	25
	End to End																

The contractor shall pour and satisfactorily finish the slab pours at the rate given. Retarder, if used, shall be an approved type and retard the set of concrete to 2.5 hours.

SLAB POURING SEQUENCE

Notes:

The contractor shall provide bracing necessary for lateral and torsional stability of the beams during construction of the concrete slab and remove the bracing after the slab has attained 75% design strength. Contractor shall not weld on or drill holes in the beams. The cost for furnishing, installing, and removing bracing will be considered completely covered by the contract unit price for Slab on Steel.

The contractor shall determine dead load deflections and haunching based on field measurements and / or existing bridge plans and these may be adjusted based on the difference between the new and existing dead load weights.

The contractor shall pour and satisfactorily finish the slab pour at the rate given. Retarder, if used, shall be an approved type and retard the set of concrete to 2.5 hours.

Alternate pour sequences may be submitted to the engineer for approval. Keyed construction joints shall be provided between pours.

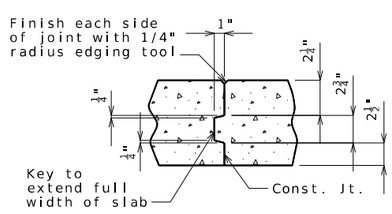

SLAB CONSTRUCTION JOINT

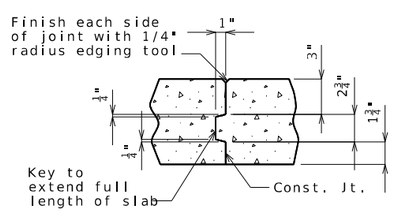

LONGITUDINAL CONSTRUCTION JOINT

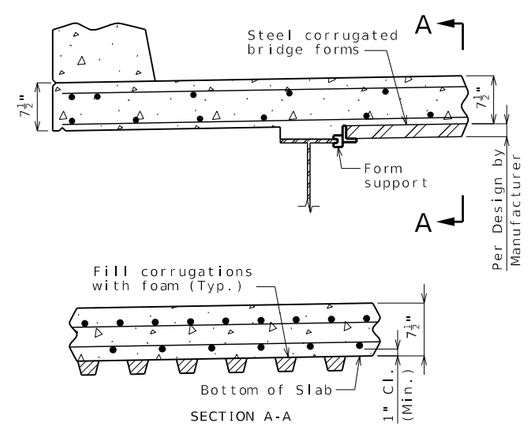

OPTIONAL STAY-IN-PLACE FORM DETAILS

Stay-In-Place Forms:

Corrugated steel forms, supports, closure elements and accessories shall be in accordance with grade requirement and coating designation G165 of ASTM A653. Complete shop drawings of the permanent steel deck forms shall be required in accordance with Sec 1080.

Corrugations of stay-in-place forms shall be filled with an expanded polystyrene material. The polystyrene material shall be placed in the forms with an adhesive in accordance with the manufacturer's recommendations.

Form sheets shall not rest directly on the top of beam. Sheets shall be securely fastened to form supports with a minimum bearing length of one inch on each end. Form supports shall be placed in direct contact with the top of beam. Welding on or drilling holes in the beam will not be permitted. All steel fabrication and construction shall be in accordance with Sec 1080 and 712. Certified field welders will not be required for welding of the form supports.

The design of stay-in-place corrugated steel forms is per manufacturer which shall be in accordance with Sec 703 for false work and forms. Maximum actual weight of corrugated steel forms allowed shall be 4 psf assumed for beam loading.

SLAB POURING SEQUENCE & MISCELLANEOUS SLAB DETAILS

Detailed Jul. 2025
Checked Jul. 2025

Note: This drawing is not to scale. Follow dimensions.

STATE OF MISSOURI
SCOTT MICHAEL MCDONALD
NUMBER PE-2018000240
PROFESSIONAL ENGINEER

THIS SHEET HAS BEEN SIGNED, SEALED AND DATED ELECTRONICALLY.

DATE PREPARED	12/01/2025
ROUTE 13	STATE MO
DISTRICT BR	SHEET NO. 12
COUNTY	POLK
JOB NO.	JSR0183
CONTRACT ID.	
PROJECT NO.	
BRIDGE NO.	A26812

DESCRIPTION	DATE

MISSOURI HIGHWAYS AND TRANSPORTATION COMMISSION
105 WEST CAPITOL
JEFFERSON CITY, MO 65102
1-888-ASK-MODOT (1-888-275-6636)

VEENSTRA & KIMM INC.
A Kleinfelder Company
9788 N Ash Avenue Kansas City, Missouri 64157
816-781-6182 816-781-0643 (FAX)
Certificate of Authority No. 2002006347

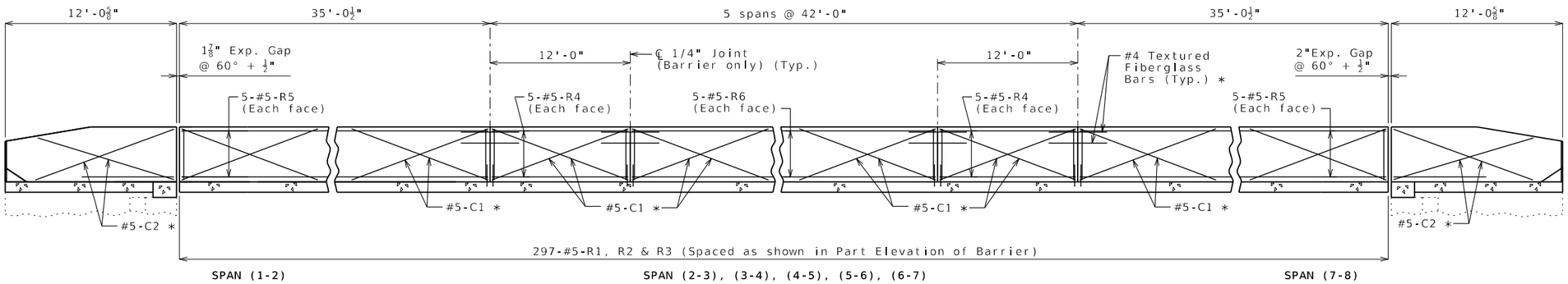

ELEVATION OF BARRIER

(Left barrier shown, right barrier similar)

Longitudinal dimensions are horizontal.

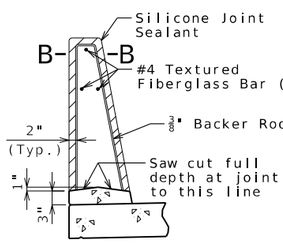

SECTION THRU SAW CUT JOINT

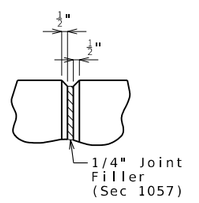

PART ELEVATION AT FORMED JOINT

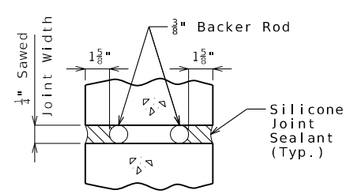

SECTION B-B

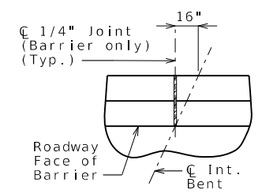

PART PLAN SHOWING JOINT LOCATION

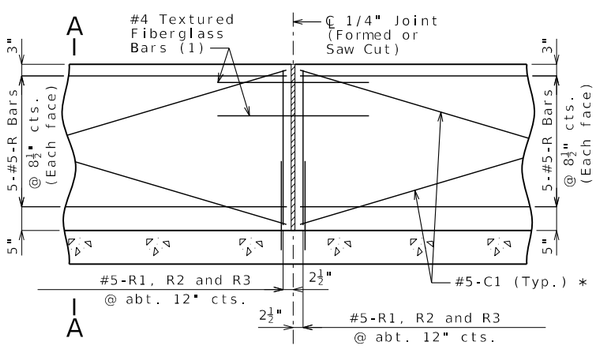

PART ELEVATION OF BARRIER

(1) Four feet long, centered on joint, slip-formed option only.

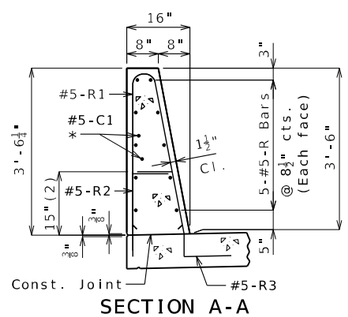

SECTION A-A

Use a minimum lap of 2'-6" for #5 horizontal barrier bars.

The cross-sectional area above the slab is 3.52 square feet.

(2) To top of bar.

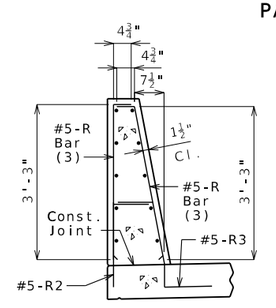

R-BAR PERMISSIBLE ALTERNATE SHAPE

(3) The R1 bar may be separated into two bars as shown, at the contractor's option, only when slip forming is not used. (All dimensions are out to out.)

General Notes:

* Slip-formed option only.

Conventional forming or slip forming may be used. Saw cut joints may be used with conventional forming.

Top of barrier shall be built parallel to grade and barrier joints (except at end bents) normal to grade.

All exposed edges of barrier shall have either a 1/2-inch radius or a 3/8-inch bevel, unless otherwise noted.

Payment for all concrete and reinforcement, complete in place, will be considered completely covered by the contract unit price for Type D Barrier per linear foot.

Concrete in barrier shall be Class B-1.

Measurement of barrier is to the nearest linear foot for each structure, measured along the outside top of slab from end of wing to end of wing.

Concrete traffic barrier delineators shall be placed on top of the barrier as shown on Missouri Standard Plan 617.10 and in accordance with Sec 617. Delineators on bridges with two-lane, two-way traffic shall have retroreflective sheeting on both sides. Concrete traffic barrier delineators will be considered completely covered by the contract unit price for Type D Barrier.

Joint sealant and backer rods shall be in accordance with Sec 717 for silicone joint sealant for saw cut and formed joints.

For slip-formed option, both sides of barrier shall have a vertically broomed finish and the top shall have a transversely broomed finish.

TYPE D BARRIER

Detailed Aug. 2025
Checked Aug. 2025

Note: This drawing is not to scale. Follow dimensions.

STATE OF MISSOURI
SCOTT MICHAEL MCDONALD
NUMBER PE-2018000240
PROFESSIONAL ENGINEER

THIS SHEET HAS BEEN SIGNED, SEALED AND DATED ELECTRONICALLY.

DATE PREPARED	
12/01/2025	
ROUTE 13	STATE MO
DISTRICT BR	SHEET NO. 13
COUNTY POLK	
JOB NO. JSR0183	
CONTRACT ID.	
PROJECT NO.	
BRIDGE NO. A26812	

DESCRIPTION	DATE

MISSOURI HIGHWAYS AND TRANSPORTATION COMMISSION
105 WEST CAPITOL
JEFFERSON CITY, MO 65102
1-888-ASK-MODOT (1-888-275-6636)

VEENSTRA & KIMM INC.
A Kleinfelder Company
9788 N Ash Avenue Kansas City, Missouri 64157
816-781-6182 816-781-0643 (FAX)
Certificate of Authority No. 2002006347

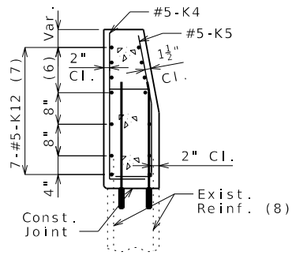

SECTION A-A

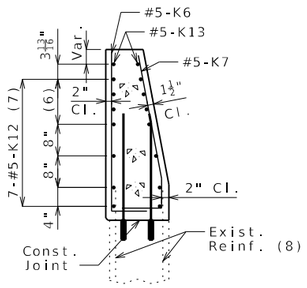

SECTION B-B

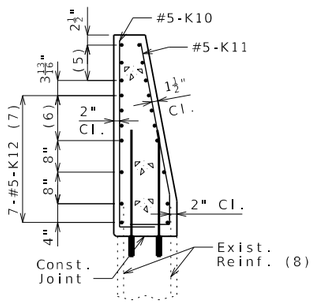

SECTION C-C

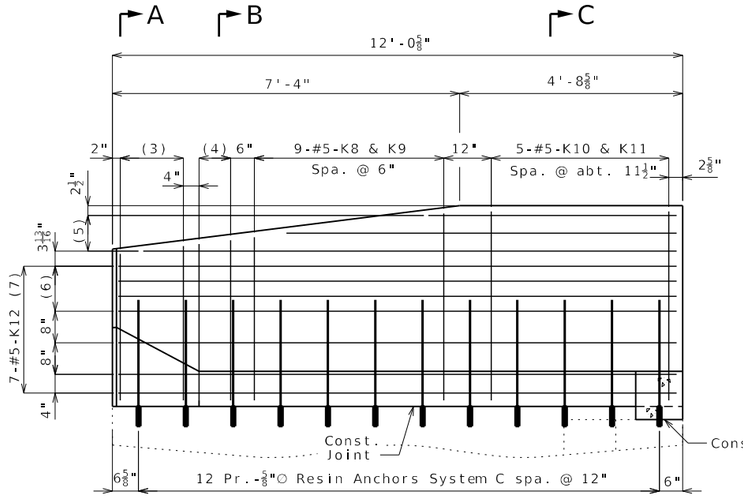

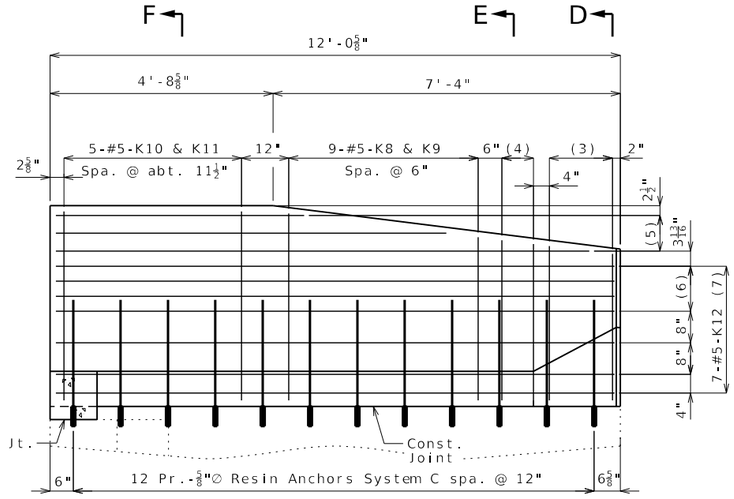

PART ELEVATION

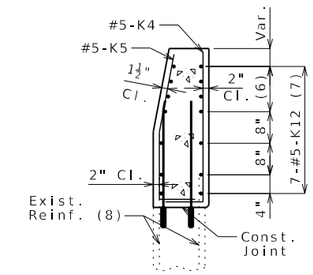

SECTION D-D

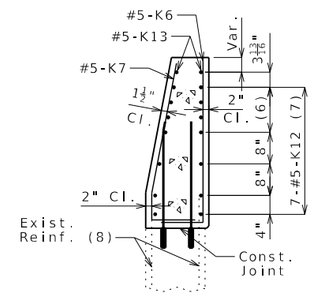

SECTION E-E

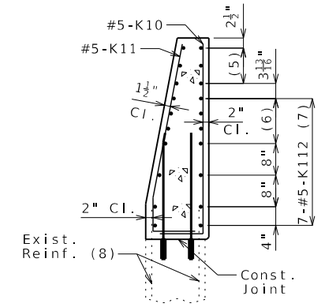

SECTION F-F

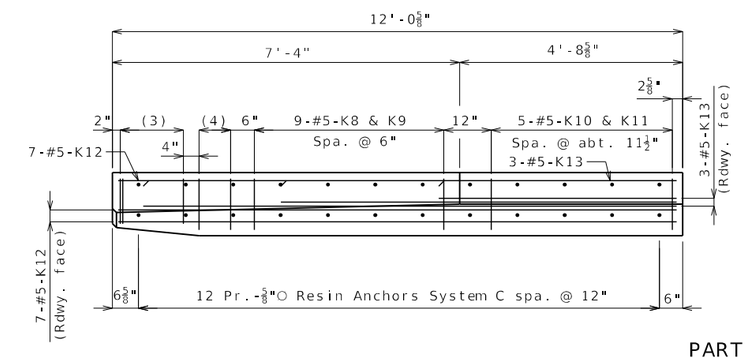

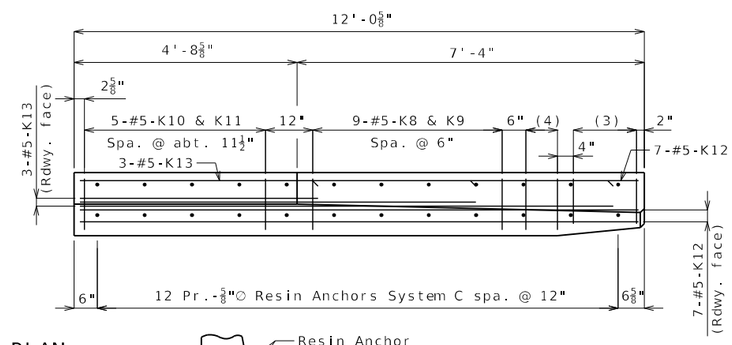

PART PLAN

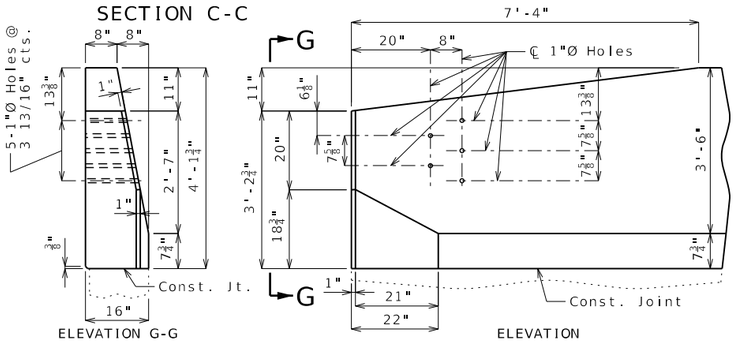

* Transition to zero at Type A curb for gutter lines to match.

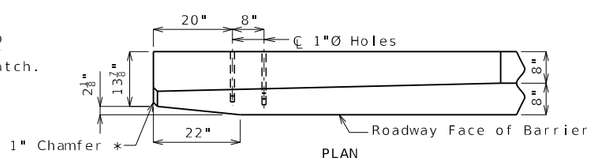

DETAILS OF GUARD RAIL ATTACHMENT

(3) 5-#5-K4 & K5, Spaced @ 4" ctrs.

(4) 3-#5-K6 & K7, Spaced @ 4" ctrs.

(5) 3-#5-K13 @ 4½" cts., each face

(6) 3 Spaces @ 3 13/16"

(7) Spaced as shown, each face

(8) Existing Reinforcing bars to be cleaned and straightened. Bend as required.

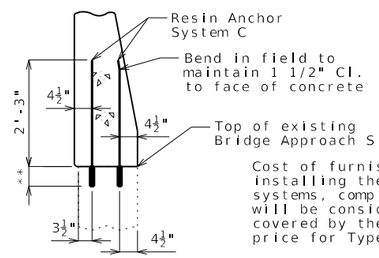

DETAILS OF RESIN ANCHOR SYSTEM C

(48 Req'd)

** Manufacturer's recommended embedment length (5" min.)

Cost of furnishing and installing the resin anchor systems, complete in place, will be considered completely covered by the contract unit price for Type D Barrier.

An epoxy coated #5 Grade 60 reinforcing bar 2'-8" long shall be substituted for the ⅝"Ø threaded rod.

For additional resin anchor notes, see Sheet No. 2.

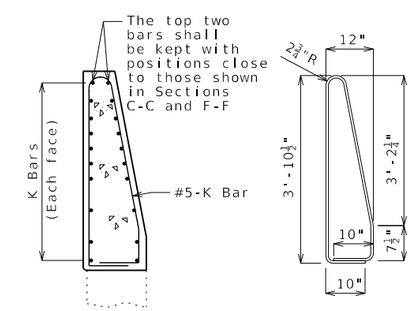

K10-K11 BAR PERMISSIBLE ALTERNATE SHAPE

(Other K bars not shown for clarity)

The K10-K11 bar combination may be furnished as one bar as shown, at the contractor's option.

All dimensions are out to out.

General Notes:

Concrete traffic barrier delineators shall be placed on top of the barrier as shown on Missouri Standard Plan 617.10 and in accordance with Sec 617. Delineators on bridges with two-lane, two-way traffic shall have retroreflective sheeting on both sides. Concrete traffic barrier delineators will be considered completely covered by the contract unit price for Type D Barrier.

Minimum clearance to reinforcing steel shall be 1 1/2" except as shown for bars embedded into end bent.

TYPE D BARRIER AT END BENTS

(Left barrier shown, right barrier similar)

Detailed Aug. 2025
Checked Aug. 2025

Note: This drawing is not to scale. Follow dimensions.

STATE OF MISSOURI
SCOTT MICHAEL MCDONALD NUMBER PE-2018000240
PROFESSIONAL ENGINEER

THIS SHEET HAS BEEN SIGNED, SEALED AND DATED ELECTRONICALLY.

DATE PREPARED	
12/01/2025	
ROUTE 13	STATE MO
DISTRICT BR	SHEET NO. 14
COUNTY POLK	
JOB NO. JSR0183	
CONTRACT ID.	
PROJECT NO.	
BRIDGE NO. A26812	

DATE	DESCRIPTION

MISSOURI HIGHWAYS AND TRANSPORTATION COMMISSION
105 WEST CAPITOL
JEFFERSON CITY, MO 65102
1-888-ASK-MODOT (1-888-275-6636)

VEENSTRA & KIMM INC.
A Kleinfelder Company
9788 N Ash Avenue Kansas City, Missouri 64157
816-781-6182 816-781-0643 (FAX)
Certificate of Authority No. 2002006347

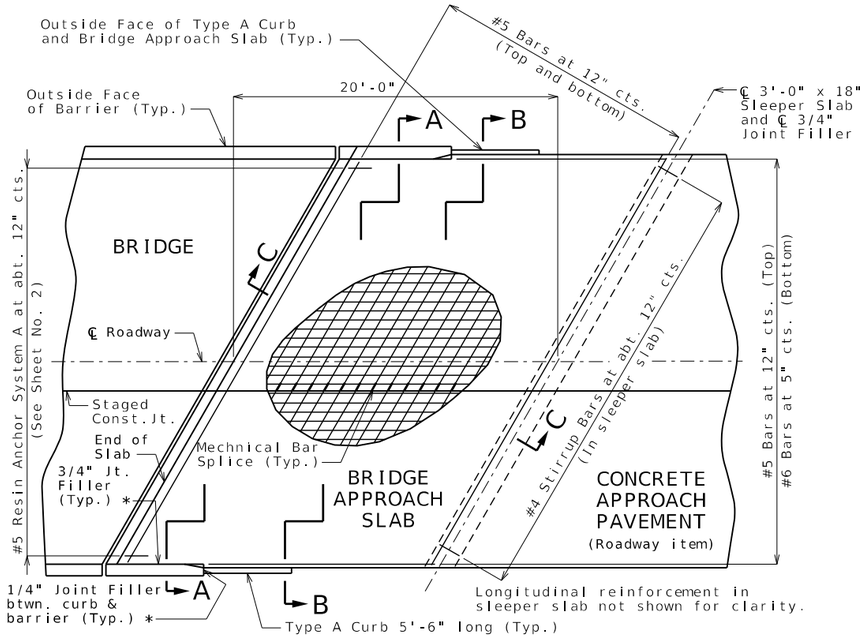

PART PLAN SHOWING REINFORCEMENT

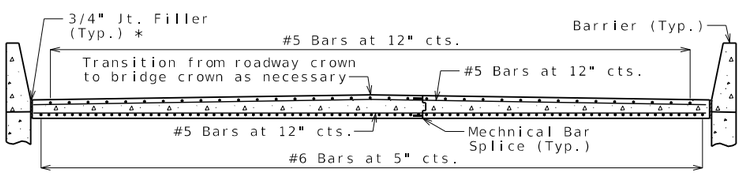

SECTION A-A

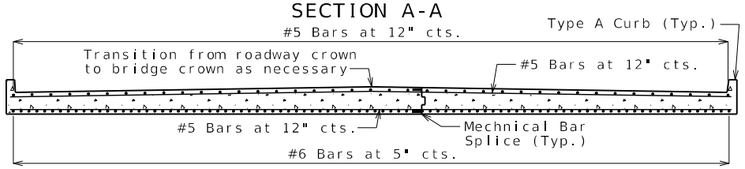

SECTION B-B

With the approval of the engineer, the contractor may crown the bottom of the approach slab to match the crown of the roadway surface.

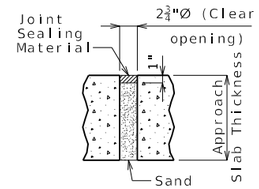

UNDERSEAL ACCESS HOLE DETAIL

(If required)

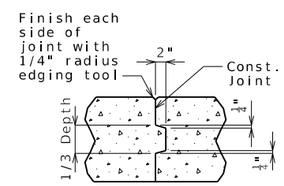

CONSTRUCTION JOINT DETAIL

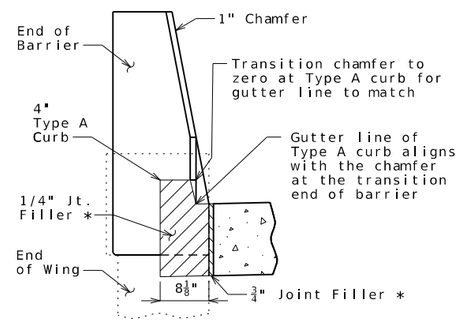

SECTION BETWEEN CURB AND BARRIER

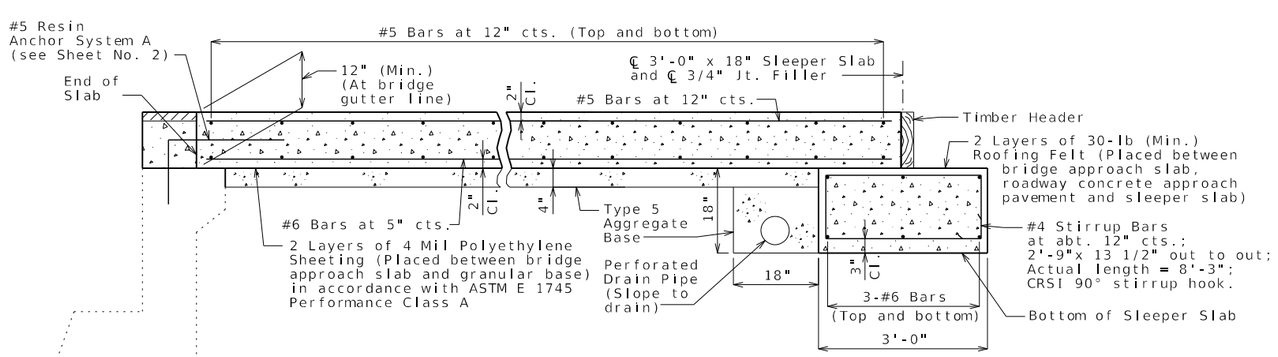

SECTION C-C

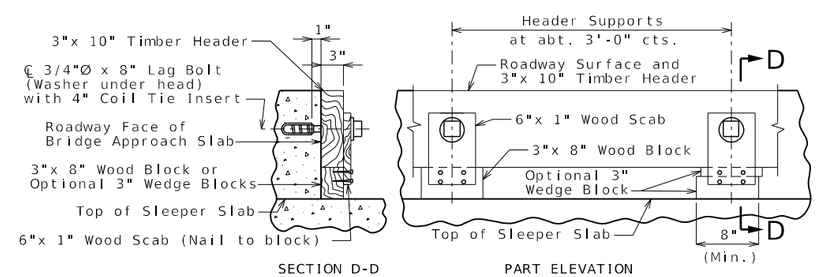

SECTION D-D PART ELEVATION

DETAILS OF TIMBER HEADER

Remove timber header when concrete pavement is placed.

General Notes:

All concrete for the bridge approach slab and sleeper slab shall be in accordance with Sec 503 (f'c = 4,000 psi).

The reinforcing steel in the bridge approach slab and the sleeper slab shall be epoxy coated Grade 60 with fy = 60,000 psi.

Drain pipe may be either 6" diameter corrugated metallic-coated pipe underdrain, 4" diameter corrugated polyvinyl chloride (PVC) drain pipe, or 4" diameter corrugated polyethylene (PE) drain pipe.

Minimum clearance to reinforcing steel shall be 1 1/2", unless otherwise shown.

The reinforcing steel in the bridge approach slab and the sleeper slab shall be continuous. The transverse reinforcing steel may be made continuous by providing a minimum lap splice of 24 inches for #5 bars and 40 inches for #6 bars, or by mechanical bar splice.

Mechanical bar splices shall be in accordance with Sec 710. (Estimated 36 splices per slab).

All joint filler shall be in accordance with Sec 1057 for preformed fiber expansion joint filler except as noted.

The contractor shall pour and satisfactorily finish the bridge slab before placing the bridge approach slab.

Longitudinal construction joints in approach slab and sleeper slab shall be aligned with longitudinal construction joints in bridge slab.

For concrete approach pavement details, see roadway plans.

See Missouri Standard Plan 609.00 for details of Type A curb.

Payment for furnishing all materials, labor and excavation necessary to construct the approach slab, including the timber header, sleeper slab, underdrain, Type 5 aggregate base, joint filler and all other appurtenances and incidental work as shown on this sheet, complete in place, will be considered completely covered by the contract unit price for Bridge Approach Slab (Major) per square yard.

* Seal joint between vertical face of approach slab and wing with sealant in accordance with Sec 717 for silicone joint sealant for saw cut and formed joints.

The cost for #5 Resin Anchor System A complete in place, will be considered completely covered by the contract unit price for Bridge Approach Slab (Major).

For additional resin anchor system details and notes, see Sheet No. 2.

STATE OF MISSOURI
SCOTT MICHAEL MCDONALD
NUMBER PE-2018000240
PROFESSIONAL ENGINEER

THIS SHEET HAS BEEN SIGNED, SEALED AND DATED ELECTRONICALLY.

DATE PREPARED	
12/01/2025	
ROUTE 13	STATE MO
DISTRICT BR	SHEET NO. 15
COUNTY POLK	
JOB NO. JSR0183	
CONTRACT ID.	
PROJECT NO.	
BRIDGE NO. A26812	

DATE	DESCRIPTION

MISSOURI HIGHWAYS AND TRANSPORTATION COMMISSION
105 WEST CAPITOL
JEFFERSON CITY, MO 65102
1-888-ASK-MODOT (1-888-275-6636)

VEENSTRA & KIMM INC.
A Kleinfelder Company
9788 N Ash Avenue Kansas City, Missouri 64157
816-781-6182 816-781-0643 (FAX)
Certificate of Authority No. 2002006347

Detailed Aug. 2025
Checked Aug. 2025

Note: This drawing is not to scale. Follow dimensions.

BRIDGE APPROACH SLAB (MAJOR)

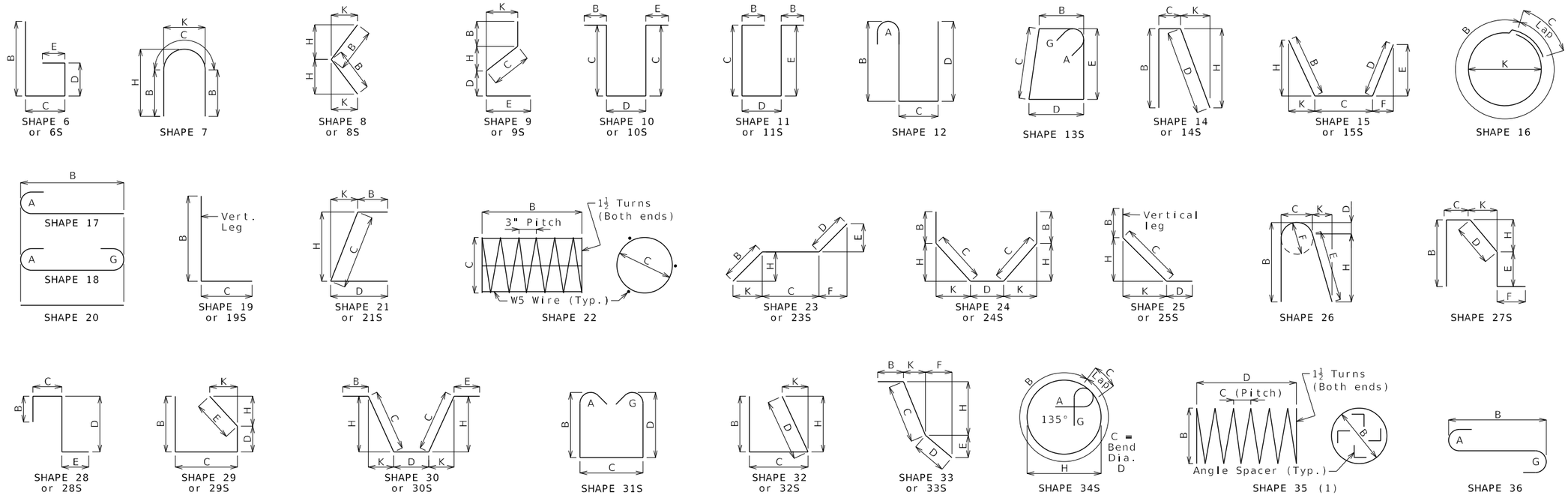

Finished Bend Diameters D and Hook Dimensions

Standard Pin Bend Shapes

Size	Case	D	A or G 90°	A or G 180°	J 180°
#4	1	3"	8"	6"	4"
#5	1	3¾"	10"	7"	5"
#6	1	4½"	12"	8¼"	6"
#7	2	5¼"	14"	9¾"	7"
	3	7"	15"	11½"	8¾"
#8	2	6"	16"	11"	8"
	3	8"	17"	13¼"	10"
#9	1	9½"	19½"	15½"	11¾"
#10	1	10¾"	22"	17½"	13¼"
#11	1	12"	24½"	19½"	14⅞"
#14	1	18¼"	31¼"	27½"	21⅝"
#18	1	24"	41½"	36¼"	28½"

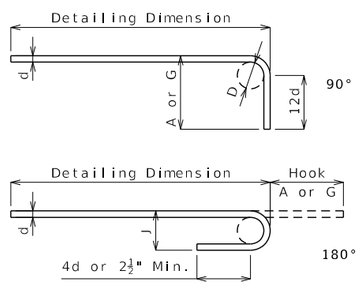

Stirrup Pin Bend Shapes (S)

Size	Case	D	A or G 90°	A or G 135°	A or G 180°	H 135°	J 180°
#4	2	2"	4½"	4½"	5"	2⅝"	3"
	3	3"	5"	5¼"	6"	3"	4"
#5	2	2½"	5¾"	5¾"	5¾"	3⅝"	3¾"
	3	3¾"	6¼"	6½"	7"	3⅞"	5"
#6	1	4½"	12"	7¾"	8¼"	4⅜"	6"

Applicable for all grades of steel.

Case 1 applies to all reinforcement. Case 2 applies to all reinforcement except for galvanized bars. Case 3 applies to galvanized bars only.

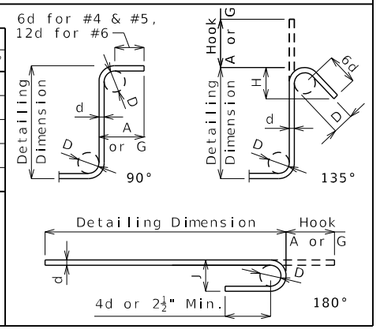

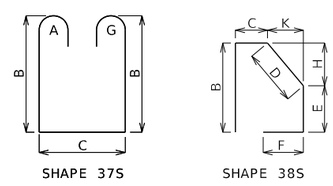

BENDING DIAGRAMS

All dimensions are out to out.

Shapes ending with an S shall be bent in accordance with stirrup pin bend shapes.

Unless otherwise noted, finished bending diameter D is the same for all bends of a shape.

(1) Shall be a deformed or plain spiral bar or wire.

Four angle or channel spacers are required for each column spiral. Spacers are to be placed on inside of spirals. Length and weight of column spirals do not include splices or spacers.

Reinforcing Steel Totals (Pounds)

	Size	Substructure Plain	Substructure Epoxy	Superstructure Slab Plain	Superstructure Slab Epoxy	Superstructure Barrier	Superstructure Slip Form	Entire Bridge Plain	Entire Bridge Epoxy
By Size	W5	0	0	0	0	0	0	0	0
	4	0	0	0	0	0	0	0	0
	5	0	0	0	29,635	15,104	1284	0	46,023
	6	0	0	0	75,935	0	0	0	75,935
	7	0	0	0	0	0	0	0	0
	8	0	0	0	0	0	0	0	0
	9	0	0	0	0	0	0	0	0
	10	0	0	0	0	0	0	0	0
	11	0	0	0	0	0	0	0	0
	14	0	0	0	0	0	0	0	0
	18	0	0	0	0	0	0	0	0
By Type		0	0	0	105,570	15,104	1284	0	121,958

All superstructure reinforcing steel shall be epoxy coated unless otherwise specified.

BENDING DIAGRAMS AND REINFORCING STEEL TOTALS

Detailed Aug. 2025
Checked Aug. 2025

Note: This drawing is not to scale. Follow dimensions.

STATE OF MISSOURI
SCOTT MICHAEL MCDONALD NUMBER PE-2018000240
PROFESSIONAL ENGINEER

THIS SHEET HAS BEEN SIGNED, SEALED AND DATED ELECTRONICALLY.

DATE PREPARED	12/01/2025
ROUTE 13	STATE MO
DISTRICT BR	SHEET NO. 16
COUNTY	POLK
JOB NO.	JSR0183
CONTRACT ID.	
PROJECT NO.	
BRIDGE NO.	A26812

DESCRIPTION

DATE

MISSOURI HIGHWAYS AND TRANSPORTATION COMMISSION
105 WEST CAPITOL
JEFFERSON CITY, MO 65102
1-888-ASK-MODOT (1-888-275-6636)

VEENSTRA & KIMM INC.
A Kleinfelder Company
9788 N Ash Avenue Kansas City, Missouri 64157
816-781-6182 816-781-0643 (FAX)
Certificate of Authority No. 2002006347

Bill of Reinforcing Steel

No. Req.	Size/ Mark	Location	Codes C	SH	V	Dimensions B ft in.	C ft in.	D ft in.	E ft in.	F ft in.	H ft in.	K ft in.	Nom. Length ft in.	Actual Length ft in.	Weight lb
		SUPERSTRUCTURE													
		BRIDGE SLAB													
485	5 S1	SLAB	E	20		58 7.000							58 7	58 7	29635
432	6 S2	SLAB	E	20		12 0.000							12 0	12 0	7786
42	6 S3	SLAB	E	20	1	2 0.000							2 0	2 0	
		INCREMENT = 7.00 INCH				26 0.000							26 0	26 0	883
819	6 S4	SLAB	E	20		26 2.000							26 2	26 2	32189
35	6 S5	SLAB	E	20	1	24 5.000							24 5	24 5	
		INCREMENT = 7.00 INCH				4 7.000							4 7	4 7	762
32	6 S6	SLAB	E	20	1	4 3.000							4 3	4 3	
		INCREMENT = 7.00 INCH				22 4.000							22 4	22 4	639
827	6 S7	SLAB	E	20		24 1.000							24 1	24 1	29915
38	6 S8	SLAB	E	20	1	23 7.000							23 7	23 7	
		INCREMENT = 7.00 INCH				2 0.000							2 0	2 0	730
37	6 S10	SLAB	E	20	1	2 0.000							2 0	2 0	
		INCREMENT = 8.00 INCH				26 0.000							26 0	26 0	778
31	6 S11	SLAB	E	20	1	24 6.000							24 6	24 6	
		INCREMENT = 8.00 INCH				4 6.000							4 6	4 6	675
28	6 S12	SLAB	E	20	1	4 4.000							4 4	4 4	
		INCREMENT = 8.00 INCH				22 4.000							22 4	22 4	561
33	6 S13	SLAB	E	20	1	23 4.000							23 4	23 4	
		INCREMENT = 8.00 INCH				2 0.000							2 0	2 0	628
4	6 S14	SLAB	E	20		33 9.000							33 9	33 9	203
4	6 S15	SLAB	E	20		30 11.000							30 11	30 11	186

Bill of Reinforcing Steel

No. Req.	Size/ Mark	Location	Codes C	SH	V	Dimensions B ft in.	C ft in.	D ft in.	E ft in.	F ft in.	H ft in.	K ft in.	Nom. Length ft in.	Actual Length ft in.	Weight lb
		BARRIER													
20	5 K4	BARRIER	E	19S	4	2 11.625	10.000						3 10	3 9	
		INCREMENT = 0.500 INCH				3 1.625	10.000						4 0	3 11	80
20	5 K5	BARRIER	E	38S	4			18.500	16.875	8.250	18.000	4.000	3 8	3 7	
		INCREMENT = 0.500 INCH						20.500	16.875	8.250	20.000	4.500	3 10	3 9	76
12	5 K6	BARRIER	E	19S		3 2.125	10.000						4 0	3 11	49
12	5 K7	BARRIER	E	38S				2 6.375	7.625	10.00	2 5.750	6.250	4 0	3 11	49
36	5 K8	BARRIER	E	19S	4	3 3.875	10.000						4 2	4 1	
		INCREMENT = 0.750 INCH				3 9.875	10.000						4 8	4 7	163
36	5 K9	BARRIER	E	38S	4			2 8.250	7.625	10.00	2 7.500	6.750	4 2	4 1	
		INCREMENT = 0.750 INCH						3 2.250	7.625	10.00	3 1.500	7.750	4 8	4 7	163
20	5 K10	BARRIER	E	19S		3 10.375	10.000						4 9	4 8	97
20	5 K11	BARRIER	E	38S				3 2.750	7.625	10.00	3 2.000	7.750	4 8	4 7	96
56	5 K12	BARRIER	E	20		11 9.000							11 9	11 9	686
24	5 K13	BARRIER	E	20	8	11 0.000							11 0	11 0	
		INCREMENT = 36.00 INCH				5 0.000							5 0	5 0	200
594	5 R1	BARRIER	E	26S		3 3.000	5.500	2.250	3 1.375	5.500	3 0.750	6.750	6 10	6 10	4234
594	5 R2	BARRIER	E	19S		20.500	9.500						2 6	2 5	1497
594	5 R3	BARRIER	E	27S			9.500	15.250	4.000	12.000	15.000	3.000	3 5	3 2	1962
200	5 R4	BARRIER	E	20		11 9.000							11 9	11 9	2451
40	5 R5	BARRIER	E	20		34 9.000							34 9	34 9	1450
100	5 R6	BARRIER	E	20		17 9.000							17 9	17 9	1851
		SLIP FORM OPTION													
96	5 C1	SLIP FORM	E	20		12 0.000							12 0	12 0	1202
8	5 C2	SLIP FORM	E	20		9 9.000							9 9	9 9	82

Nominal lengths are based on out to out dimensions shown in bending diagrams and are listed to the nearest inch for fabricator's use. Actual lengths are measured along centerline bar to the nearest inch. Weights are based on actual lengths.

For bending diagrams and steel reinforcing totals, see Sheet No. 16.

Detailed Aug. 2025
Checked Aug. 2025

All bars shall be ASTM A615 Grade 60.

Codes: C = Required coatings, where E = Epoxy Coated and G = Galvanized.

SH = Required shape, see bending diagrams.

V = Sets of varied bars and number of bars of each length. Bar dimensions vary in equal increments between dimensions shown on this line and the following line and the actual length dimension shown on this line and the following line vary by the specified increment.

BILL OF REINFORCING STEEL

Note: This drawing is not to scale. Follow dimensions.

STATE OF MISSOURI
SCOTT MICHAEL MCDONALD
NUMBER PE-2018000240
PROFESSIONAL ENGINEER

THIS SHEET HAS BEEN SIGNED, SEALED AND DATED ELECTRONICALLY.

DATE PREPARED 12/01/2025
ROUTE 13 | STATE MO
DISTRICT BR | SHEET NO. 17
COUNTY POLK
JOB NO. JSR0183
CONTRACT ID.
PROJECT NO.
BRIDGE NO. A26812

DESCRIPTION | DATE

MISSOURI HIGHWAYS AND TRANSPORTATION COMMISSION
105 WEST CAPITOL
JEFFERSON CITY, MO 65102
1-888-ASK-MODOT (1-888-275-6636)

VEENSTRA & KIMM INC.
A Kleinfelder Company
9788 N Ash Avenue Kansas City, Missouri 64157
816-781-6182 816-781-0643 (FAX)
Certificate of Authority No. 2002006347